TECHNICAL MANUAL

# OPERATOR'S UNIT, DIRECT SUPPORT AND GENERAL SUPPORT MAINTENANCE MANUAL FOR

# CONTAINER, REFRIGERATED 20 FEET MODEL KR020A180G NSN: 8145-01-388-4966

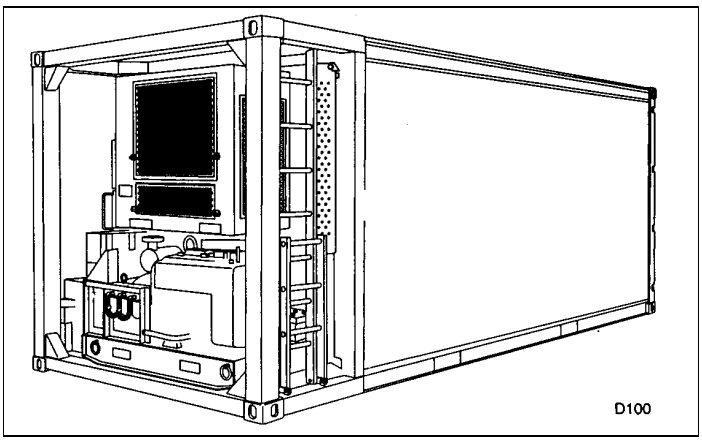




DISTRIBUTION STATEMENT A: Approved for public release; distribution is unlimited.

HEADQUARTERS, DEPARTMENT OF THE ARMY
3 MARCH 1997

**WARNING**

**REFRIGERATION UNIT HAZARD!**

**Never work on electrical equipment unless there is another person nearby who is familiar with the operation and hazards of the equipment and who is competent in administering first aid. When the technician is aided by operators, he must warn them about dangerous areas.**

**WARNING**

**ELECTROCUTION HAZARD**

**Be careful not to contact high-voltage connections of 208 volts AC input connections when installing or operating the refrigeration unit.**

**Whenever the nature of the operation permits, keep one hand away from the equipment to reduce the hazard of current flowing through vital organs of the body.**

**Do not disconnect power cables when power is on or generator set is operating.**

**WARNING**

**SOLVENT HAZARD**

**Dry-cleaning solvent, P-D-680, Type II, used to clean parts is potentially dangerous to personnel and property. Avoid repeated and prolonged skin contact by wearing rubber or nonporous gloves when handling the solvent or material wet with dry-cleaning solvent. Wash hands immediately after exposure with soap and water and use a lanolin based skin cream to prevent skin drying. Do not use near open flame or excessive heat. Flash point of solvent is 140°F (60°C). Do not work with solvent in a closed room. Be sure there is good ventilation or the solvent vapors will build up in the air and become a poisonous mixture which can cause physical injury or even death.**

**WARNING**

**CONTAINER HAZARD**

**Make sure rear doors are secured to container frame when in the open position. A gust of wind can cause unsecured doors to slam shut with great force causing serious injury.**

**A loaded refrigerated container is extremely heavy. Use a hoist and sling rated at a minimum capacity of 40 tons (80,000 lbs) (36.3 metric Tons; 36,300 kg) when lifting refrigerated container.**

**WARNING I**

**HEAVY EQUIPMENT HAZARD**

**Lifting or moving heavy equipment incorrectly can cause serious injury. Do not try to lift or move more than 50 lbs (22.6 kg) by yourself. Get an assistant. Bend legs while lifting. Do not support heavy weight with your back.**

**Always use assistants during lifting operations. Use guide ropes to move hanging assemblies.**

**A lack of attention or being in an improper position during lifting operations can result in serious injury or death. Pay close attention to movements of assemblies being lifted. Do not stand under lifted assembly or in a position where you could be pinned against another object. Watch your footing.**

**WARNING**

**LIFTING HAZARD**

**To prevent slippage of hoisting slings during lifting operations, always use spreader bars.**

**Never lift, move or push refrigerated container with a regular forklift. Refrigerated container can fall from regular forklift tines or cause forklift to flip over. Use only equipment designed for use with the MIL-VAN.**

**WARNING**

**RIVET HAZARD**

**Rivets can shatter during removal or installation and cause serious injury to eyes. Wear eye protections whenever working with rivets.**

**WARNING**

**FIRE HAZARD**

**To prevent injury to personnel and damage to equipment, do not over fill fuel tank. Movement of refrigerated container during transport will cause fuel to spill if tank is over filled. Make sure a fire extinguisher is nearby when refueling or operating the generator set or fuel tank.**

**For Artificial Respiration, refer to FM 21-11.**

**CHANGE NO. 1**

**HEADQUARTERS DEPARTMENT OF THE ARMY WASHINGTON, DC, 30 SEPTEMBER 2005**

# TECHNICAL MANUAL

## OPERATOR'S, UNIT, DIRECT SUPPORT AND GENERAL SUPPORT MAINTENANCE MANUAL FOR CONTAINER, REFRIGERATED 20 FEET, MODEL KR020A180G NSN 8145-01-388-4966

**DISTRIBUTION STATEMENT A:** - Approved for public release; distribution is unlimited.

TM 55-8145-202-14, dated 03 March 1997, is changed as follows:

1. File this sheet in front of the manual for reference.

2. This change implements the Army Maintenance Transformation and changes the Maintenance Allocation Chart (MAC) to support Field and Sustainment Maintenance.

3. New or updated text is indicated by a vertical bar in the outer margin of the page.

4. Added illustrations are indicated by a vertical bar adjacent to the figure number. Changed illustrations are indicated by a miniature pointing hand adjacent to the updated area and a vertical bar adjacent to the figure number.

5. Remove old pages and insert new pages as indicated below:

| Remove Pages | Insert Pages |
|---|---|
| | A/(B blank) |
| B-1 through B-7/(8 blank) | B-1 through B-7/(8 blank) |
| Electronic 2028 Instructions/(blank) | Electronic 2028 Instructions/(blank) |
| | Sample DA Form 2028 Front/Back |
| DA Form 2028 | DA Form 2028 Front/Back |
| | DA Form 2028 Front/Back |

By Order of the Secretary of the Army:

PETER J. SCHOOMAKER
General, United States Army
*Chief of Staff*

Official:

SANDRA R. RILEY
*Administrative Assistant to the*
*Secretary of the Army*
0525511

**Distribution:** To be distributed in accordance with initial distribution number (IDN) 256233 requirements for TM 55-8145-202-14

INSERT LATEST CHANGED PAGES. DESTROY SUPERSEDED PAGES.

**LIST OF EFFECTIVE PAGES**

NOTE: The portion of text affected by the changes is indicated by a vertical line in the outer margins of the page. Changes to illustrations are indicated by shaded or screened areas, or by miniature pointing hands. Zero in the "Change No." column indicates an original page.

Dates of issue for original and changed pages are:

Original .. 0 .. 03 March 1997
Change .. 1 .. 30 September 2005

**TOTAL NUMBER OF PAGES FOR THIS PUBLICATION IS 192, CONSISTING OF THE FOLLOWING:**

| Page No. | Change No. |
|---|---|
| Front Cover | 0 |
| a/b | 0 |
| i - iv | 0 |
| 1-0 - 1-7/(8 blank) | 0 |
| 2-1 - 2-37/(2-38 blank) | 0 |
| 3-1 - 3-3/(3-4 blank) | 0 |
| 4-1 - 4-54 | 0 |
| 5-1 - 5-32 | 0 |
| 6-1/(6-2 blank) | 0 |
| A-1 - A-2 | 0 |
| B-1 - B-7/(8 blank) | 1 |
| C-1 - C-3/(C-4 blank) | 0 |
| D-1 - D-2 | 0 |
| E-1 - E-2 | 0 |
| F-1/(F-2 blank) | 0 |
| G-1/(G-2 blank) | 0 |
| H-1/(H-2 blank) | 0 |
| Index-1 - index-2 | 0 |
| Back Cover | 0 |

TECHNICAL MANUAL

NO. 55-8145-202-14

HEADQUARTERS
DEPARTMENT OF THE ARMY
**WASHINGTON, D.C., 3 March 1997**

# OPERATOR'S, UNIT, DIRECT SUPPORT AND GENERAL SUPPORT MAINTENANCE MANUAL FOR CONTAINER, REFRIGERATED 20 FEET MODEL KR020AI80G NSN: 8145-01-388-4966

**REPORTING ERRORS AND RECOMMENDING IMPROVEMENTS**

You can help improve this manual. If you find any mistakes or if you know of a way to improve these procedures, please let us know. Mail your letter or DA Form 2028 (Recommended Changes to Publications and Blank Forms), or DA Form 2028-2 located in the back of this manual directly to: Commander, US Army Aviation and Troop Command, ATTN: AMSAT-I-MP, 4300 Goodfellow Blvd., St. Louis, MO 63120-1798. You may also submit your recommended changes by E-Mail directly to **<mpmt%avma28@st-louis-emh7.army.mil>**. A reply will be furnished directly to you. Instructions for sending an electronic 2028 may be found at the back of this manual immediately preceding the hard copy 2028.

**DISTRIBUTION STATEMENT A**: **Approved for public release; distribution is unlimited**

**TABLE OF CONTENTS** **Page**

## TABLE OF CONTENTS - Continued

## HOW TO USE THIS MANUAL

Spend a few minutes looking through this manual. It has a new look that is very different from the manuals you have been using. You will find the new look is a lot easier to use and you can find what you are looking for a lot faster.

Each chapter begins with an index that lists each paragraph or section in the chapter. Each section in the maintenance chapter also has an index that lists the procedures in the section and gives page numbers. Or you can look for the information you want in the alphabetical subject index at the back of the manual.

We got rid of as many words as we could and put in a lot of illustrations to show just about everything you will be doing to maintain your equipment.

The words are keyed to the illustrations with callout numbers (sometimes words). The callout numbers are in parentheses in the text.

So, HOW DO YOU USE THIS MANUAL?

Like This:

1. Suppose you want to know how to maintain the unit.
2. Look at the cover and you will see index boxes near the right edge with subject titles in them. You will find "UNIT MAINTENANCE INSTRUCTIONS ... 4-1." You can skip over to page 4-1.

OR

3. Bend the pages a bit and look at the edges. You will see black bars on some of the pages that are lined up with the index boxes on the cover.

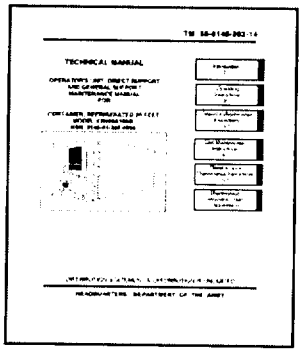


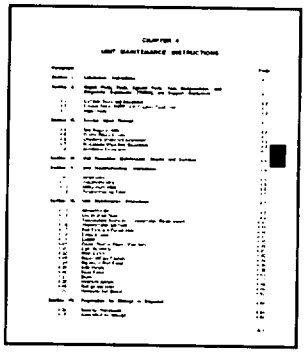

4. If you put your thumbnail on the black bar that is lined up with the box on the cover for UNIT MAINTENANCE INSTRUCTIONS 4-1 and open the manual, you will be on page 4-1.

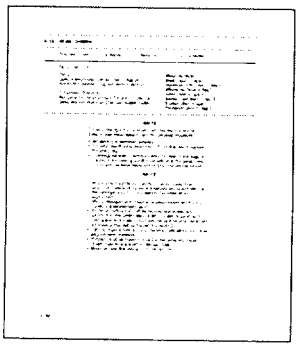

5. On page 4-1, you will find Section IV, UNIT MAINTENANCE PROCEDURES ... 4-12. A major item in the section is 4-22 REAR DOORS ... 4-26. Turning to page 4-26, you will find Section 4-22. REAR DOORS. Following this heading are instructions on for Repair, Removal and Installation of the REAR DOORS.

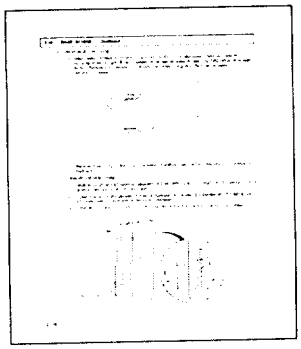

6. Turning to page 4-28, you will find the procedure for "Removal of Inner Lining."

7. As you following this procedure, you will find all of the information required to remove the Inner Lining from the Foam Insulation.

8. The next procedure found on page 4-28 "Installation of Inner Lining," details how the Inner Lining which you just removed is to be replaced.

9. The procedures have pictures to show you where to look and what to look at, plus the steps you will perform to complete the task.

10. Notice the numbered arrows. These are the callout numbers. As you read each step, we tell you where to look by including the callout number (in parentheses) after the name of each component we call out.

11. Do the procedure, then check to see if you have corrected the problem.

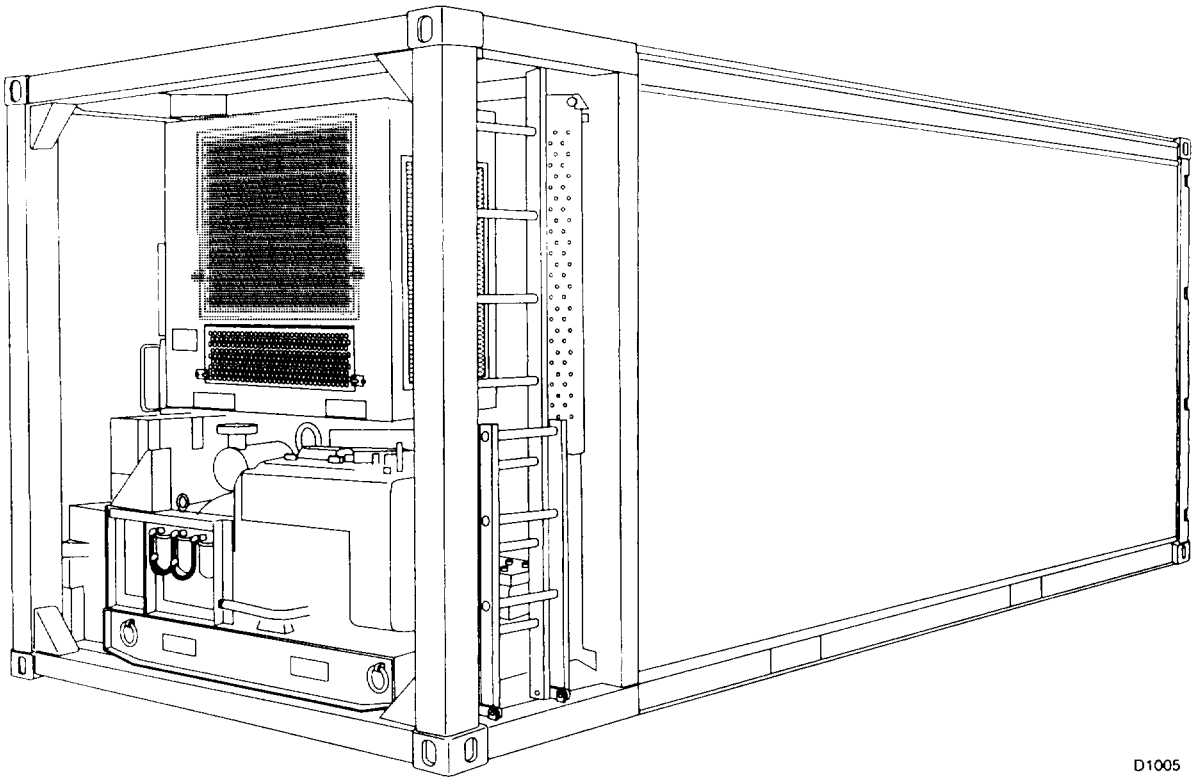


*Figure 1-1. Refrigerated Container*

# CHAPTER 1

# INTRODUCTION



## Section I. GENERAL INFORMATION

### 1-1. SCOPE.

This manual covers Operating Instructions and Unit, and Direct Support maintenance procedures required to **operate and maintain the Refrigerated Container, Model KR020A180G, less generator and refrigeration unit. The refrigerated container is designed to be used with the Refrigeration Unit, Model F9000RE, mounted on the front wall panel. The refrigerated container provides storage and transport of perishable material.**

### 1-2. MAINTENANCE FORMS, RECORDS, AND REPORTS.

Department of the Army Forms and procedures used for equipment maintenance will be those prescribed by DA Pam 738-750, The Army Maintenance Management System (TAMMS).

### 1-3. DESTRUCTION OF ARMY MATERIEL TO PREVENT ENEMY USE.

Methods and procedures for destruction of Army materiel to prevent enemy use are covered in TM 750-244-3.

### 1-4. PREPARATION FOR STORAGE OR SHIPMENT.

Refer to paragraph 2-12, Preparation for Movement, for information on storage and shipment.

## 1-5. QUALITY ASSURANCE.

No specific quality assurance (QA) procedures are required for this equipment.

## 1-6. NOMENCLATURE CROSS-REFERENCE LIST.

| Common Name | Official Nomenclature |
|---|---|
| Container | **Container, Refrigerated, Model KRO2OA180G** |

## 1-7. LIST OF ABBREVIATIONS

| Abbreviation | Nomenclature |
|---|---|
| °F | Degrees Fahrenheit |
| Hz | Hertz |
| Kw | Kilowatt |

## 1-8. GLOSSARY

| Term | Description |
|---|---|
| Stylus | A point used to mark or write on paper. The temperature recorder stylus marks the paper chart to record the temperature changes inside the container. |

## 1-9. REPORTING EQUIPMENT IMPROVEMENT RECOMMENDATIONS.

If your refrigerated container needs improvement, let us know. Send us an EIR. You, the user, are the only one who can tell us what you don't like about your equipment. Let us know why you don't like the design or performance. Put it on an SF 368 (Product Quality Deficiency Report). Mail it to us at:

Commander
U.S. Army Aviation and Troop Command
ATTN: AMSAT-I-MDO
4300 Goodfellow Boulevard
St. Louis, MO 63120-1798

We'll send you a reply.

## 1-10. CORROSION PREVENTION CONTROL.

a. Corrosion Prevention and Control (CPC) of Army materiel is a continuing concern. It is important that any corrosion problems with this item be reported so that the problem can be corrected and improvements can be made to prevent the problem in future items.

b. While corrosion is typically associated with rusting of metals, it can also include deterioration of other materials, such as rubber and plastic. Unusual cracking, softening, swelling, or breaking of these materials may be a corrosion problem.

c. If a corrosion problem is identified, it can be reported using Standard Form 368, Product Quality Deficiency Report. Use of keywords such as "corrosion," "rust," "deterioration," or "cracking" will ensure that the information is identified as a CPC problem. The form should be submitted to the address specified in DA Pam 738-750.

## Section II. EQUIPMENT DESCRIPTION

### 1-11. EQUIPMENT CHARACTERISTICS, CAPABILITIES, AND FEATURES.

**a. Characteristics.**

(1) Easily transportable. Can be transported on flatbed truck, railway car or ship.

(2) Operates from 10Kw generator set or external electrical power sources.

(3) Fully operational during transport.

(4) Stand alone operation when equipped with generator set.

(5) Can be stacked for transporting or storage.

(6) Operator controlled internal lighting.

(7) Escape hatch permits emergency exit from container interior.

(8) Provides both heating and cooling.

**b. Capabilities.**

(1) Will maintain internal temperatures of 0° to +40°F (-18° to + 4.5°C) in ambient temperature of +100°F (38°C).

(2) Will maintain internal temperature of 0°F to +40°F (-18°C to +4.5°C) in ambient temperatures of -40°F (-40°C).

(3) Conforms to MIL-C-52788 and associated standards for handling, securing and storage of military container.

## 1-12. LOCATION AND DESCRIPTION OF MAJOR COMPONENTS.

**a. Corner Fittings (1).** Four upper corner fittings provide hoist points during lifting operations. Four lower corner fittings mate with coupling hardware on transport vehicle. Corner fittings also allow stacking of refrigerated containers during shipment and storage.

**b. Ladder (2).** Permits personnel to access equipment and roof of container. Lower section of ladder folds down during use when the container is on a chassis trailer and up for storage.

**c. Refrigeration Unit (3).** Cools/heats container interior. Refer to TM 9-4110-258-13 for additional information on the refrigeration unit.

**d. Generator Set (4).** Provides electrical power to operate refrigeration unit and container interior light. Refer to TM 5-6115-585-12/34 for additional information on the generator set.

**e. Fuel Tank (5).** Stores and supplies fuel to the generator set.

**f. Temperature Recorder (6).** Spring operated mechanical plotter records container interior temperatures over a 31 day period.

**g. Manual Holder (7).** Provides waterproof storage for technical manuals, temperature recorder paper charts and related documentation.

**h. Exhaust Pipe (8).** Connects to Gen Set to remove exhaust gases.

**i. Power Cable (9).** Five-foot long cable adapter connects 10Kw generator set to refrigeration unit power cable.

**j. Right Door (10).** Provides access to container interior. Seals cargo inside container. Always open the right door first.

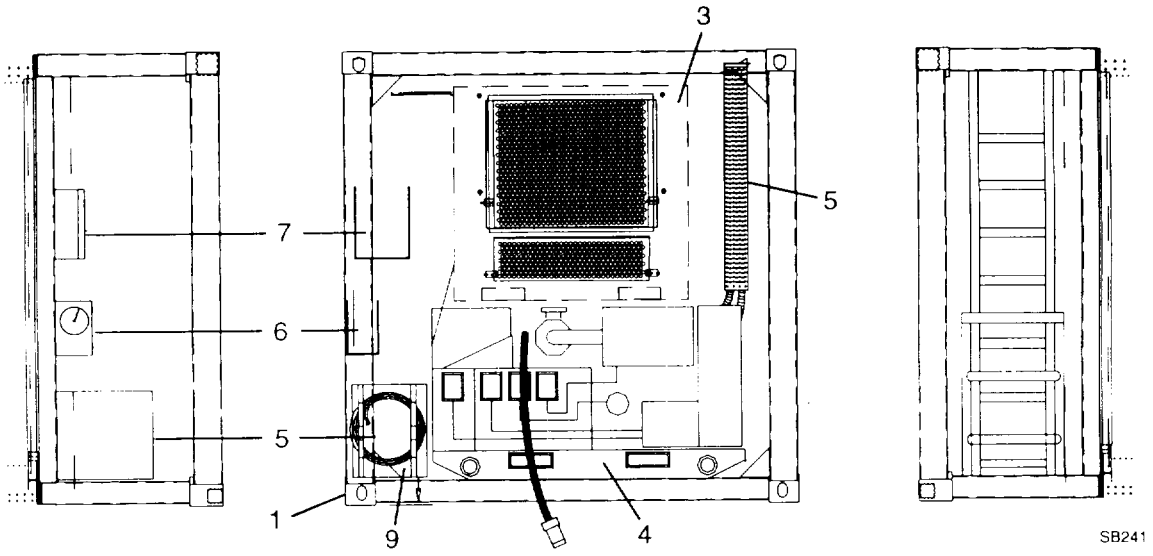


*Figure 1-2. Major Components (Front*

**k. Escape Door (11).** Permits emergency escape from container interior. Can only be opened from inside container.

**l. Left Door (12).** Provides access to container interior. Seals cargo inside container. Always close the left door first.

**m. Light (13).** Provides light inside container.

**n. Light Switch (14).** Hand operated switch on container wall turns light on or off.

**o. Spacer Strips (15).** Prevent cargo from blocking air circulation along walls when container is full.

**p. Ribbed Floor (16).** Ribs built into the floor permit air circulation between floor and cargo and aid drainage of condensation.

**q. Floor Drains (17).** Four floor drains allow water and condensation to drain from container interior.

**r. Evaporator Coil (18).** The evaporator coil is part of refrigeration unit that extends into the container. The coil provides cold air to cool container.

**s. Thermal Sensing Bulb (19).** The thermal sensing bulb is part of the temperature recorder system. It is connected to the recorder by a small stainless steel sensing line.

**t. Restraint System (20).** Consists of E-Trak Rails (20) and restraint bars (21). The restraint system secures cargo inside the container. Twenty bars are provided with the system.

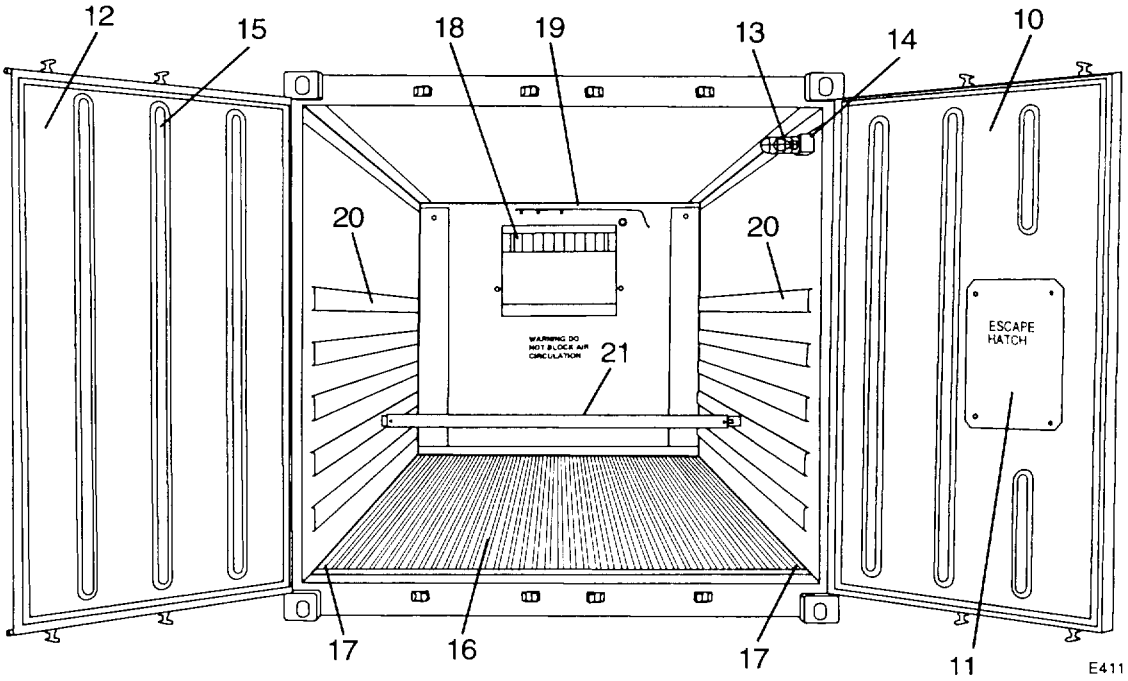


*Figure 1-3. Major Components (Rear/inside Container)*

## 1-13. EQUIPMENT DATA.

### REFRIGERATED CONTAINER

### CONTAINER

| | |
|---|---|
| Model No. | 288-1 |
| Manufacturer | Finsam (N1305) |
| Length | 20 ft (6.10 m) |
| Height | 8 ft (2.44 m) |
| Width | 8 ft (2.44 m) |
| Empty Weight (Tare) | 7,965 lbs (3,612 kg) |
| Maximum Gross Weight | 44,800 lbs (20,320 kg) |
| Shipping Cube | 1,280 cu ft (36.25 cu m) |
| Interior Light | 100 watts, 110 volts |

### TEMPERATURE RECORDER

| | |
|---|---|
| Model No. | SR102100 |
| Manufacturer | Partlow |
| Drive Mechanism | Spring wound |
| Temperature Range | -20°F to 80°F (-29°C to 27°C) |
| Recording Period | 31 days |

### FUEL TANK

| | |
|---|---|
| Capacity | 26 Gallons (US) |

### REFRIGERATION UNIT

**NOTE**

**Data for the refrigeration unit is provided for reference only. Refer to TM 9-4110-258-13 for specific equipment data on the refrigeration unit.**

| | |
|---|---|
| Model | F9000RE |
| Manufacturer | Keco |
| Type | Air-Cooled |
| Power | 208 volts, 3 phase 50/60 Hz |
| Amperes | |
| Cooling | 20amp |
| Heating | 7 amp |
| Weight | 1000 lbs (454 kg) |
| Cooling Capacity | |
| 0°F (-18°C) | 10,000 Btu/Hr |
| 40°F (4°C) | 17,000 Btu/Hr |
| Heating Capacity | |
| -40°F (-40°C) | 8,000 Btu/Hr |
| Refrigerant Type | R-134a |
| Refrigerant Charge | 14 lb (6 kg) |

### GENERATOR SET

Refer to TM 5-6115-585-12/34 for equipment data on the generator set.

## Section III. PRINCIPLES OF OPERATION

### 1-14. SYSTEM TECHNICAL PRINCIPLES OF OPERATION.

**a. Refrigerated Container.** The refrigerated container is designed for use with the model (F9000RE) Refrigeration Unit installed on the front wall panel. Power to operate the refrigeration unit and the container interior light is provided by the 10 Kw generator set or outside source. The refrigerated container is a framed, insulated box that prevents the thermal transfer of heat into or out of the container. The floor is ribbed to permit proper air circulation around cargo when the container is fully loaded. Two insulated and sealed exterior door panels open the full width of the container to allow easy loading and unloading. A light inside the container is controlled by a switch mounted on the interior wall. A fuel tank, mounted on the front of the container, stores extra fuel for the generator set.

**b. Refrigeration System.** Interior container temperature is controlled and maintained by the refrigeration unit mounted on and through the front wall section of the refrigerated container. The refrigeration unit consists of a condenser section and evaporator section which extends into the container. The evaporator section provides cooling by heat absorption, and heating through the use of electrical resistance elements (TM 9-4110-258-13). Electrical power to operate the refrigeration unit is supplied by the 10 Kw generator set. An external power source may also be used in place of the generator set.

### 1-15. COMPONENT TECHNICAL PRINCIPLES OF OPERATION.

**a. Container.** Insulation built into the walls, floor, and ceiling reduces the gain and/or loss of heat between the container interior and ambient conditions.

**b. Doors.** Two doors provide access to the container interior. Each door is insulated and seals tightly against the container frame when closed. The right access door contains an emergency escape door to prevent personnel from being trapped inside. The emergency door can only be removed from inside the container.

**c. Light**. The 100 watt, 110 volt interior light receives electrical power from 10 kw Gen Set or external power source. The light is controlled by a hand operated switch mounted overhead near the right door.

**d. Fuel Tank.** The metal 26 gallon fuel tank stores fuel for the generator set. Fuel level is indicated by the float actuated fuel gage. Fuel lines connect the tank to the generator set (refer to TM 5-6115-585-12/34 for fuel line connection).

**e. Temperature Recorder.** The temperature recorder maintains a 24 hour record of the container's internal temperature. A thermal sensing bulb, mounted on the inside container wall, causes the cartridge pen to move up or down on the paper chart. At the same time, a spring driven timer turns the chart paper. As the pen moves along the paper, a permanent record of the time and temperature is made. The timer must be wound at least every 30 days.

**f. Power Adapter Cable.** The power adapter cable distributes electrical power from the generator set to the refrigeration unit. The receptacle end of the cable connects to the refrigeration unit power cable. The electrical leads on the opposite end connect to the generator set terminal box (refer to TM 5-6115-585-12/34).

**g. Exhaust Extension.** The exhaust extension diverts exhaust gases from the generator set to the top of the container frame. A rain cap on top of the exhaust tube prevents rain, birds, and contaminants from entering the exhaust tube.

**h. Refrigeration Unit.** For detailed Refrigeration Unit component principles of operation, refer to TM 9-4110-258-13.

**i. Generator Set**. For detailed Generator Set component principles of operation, refer to TM 5-6115-585-12/34

# CHAPTER 2
# OPERATING INSTRUCTIONS



## Section I. DESCRIPTION AND USE OF OPERATOR'S CONTROLS AND INDICATORS

This section provides the operator with information needed to locate, identify, and use the controls and indicators on the refrigerated container.

Refer to TM 9-4110-258-13 for description and use of operator's controls and indicators for the Refrigeration Unit.

Refer to TM 5-6115-585-12/34 for description and use of operator's controls and indicators for the Generator Set.

## 2-1. REAR DOORS.

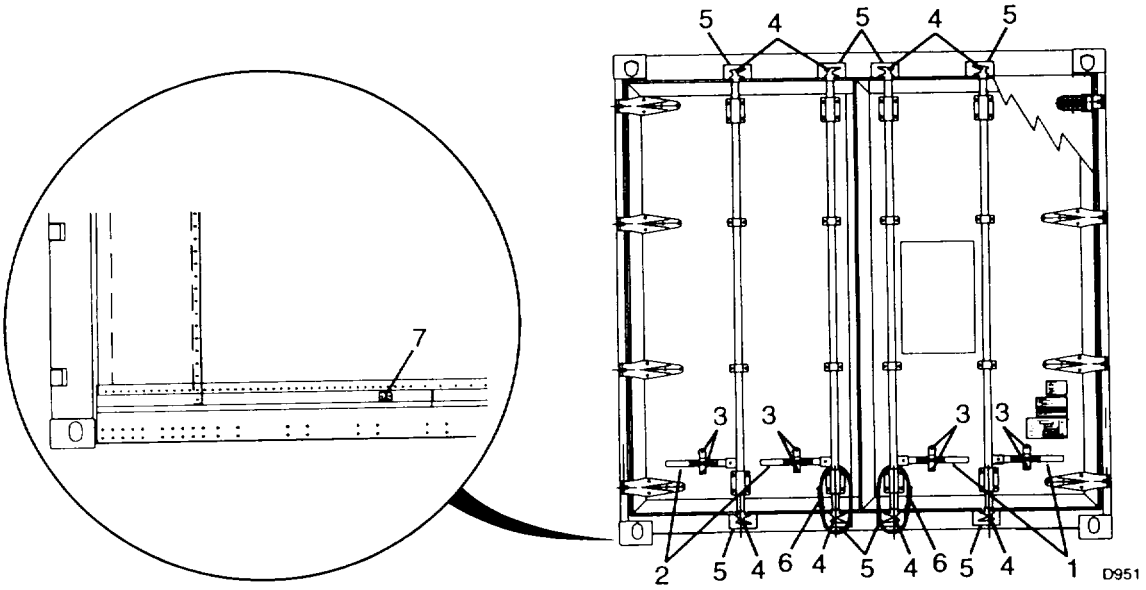


**a. Right Door Release Handles (1)**. Control right door locking and unlocking. Manually lift handle and rotate left to unlock, or right to lock. Always open right rear door first, and close last.

**b. Left Door Release Handles (2).** Control left door locking and unlocking. Rotate handle lock counterclockwise until it catches. Manually lift handle and rotate right to unlock, or left to lock.

**c Handle Locks (3).** Secure left and right rear door release handles in locked position. Hole in top and bottom of lock permits installation of padlock, clasp or similar equipment. Rotate handle lock clockwise to lock handle.

**d. Locking Bar Cams (4).** Couple with container frame locking bar keepers (5) when door release handles are moved to lock position.

**e. <u>Door Cable Rope (6) and Hooks (7).</u>** Attach to container hook eyes to secure left and right doors when doors are fully open.

## 2-2. ESCAPE HATCH.

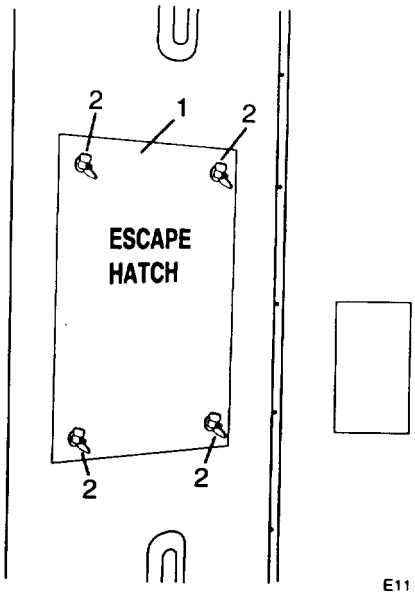


**a. Escape Hatch (1).** Provides emergency personnel exit from inside refrigerated container.

**b. Escape Hatch Wing Nuts (2).** Threaded wing nuts secure escape hatch onto right rear cargo door. To remove escape hatch, unscrew and remove four wing nuts. Pull off the stainless steel cover. Push escape hatch out from rear cargo door.

## 2-3. LIGHT SWITCH.

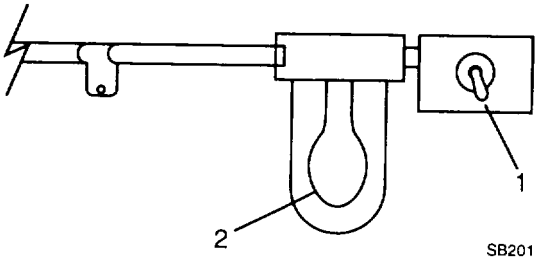


**a. Light Switch (1).** Controls interior light. Rotate switch left to turn light (2) off. Rotate switch right to turn light on.

## 2-4. TEMPERATURE RECORDER.

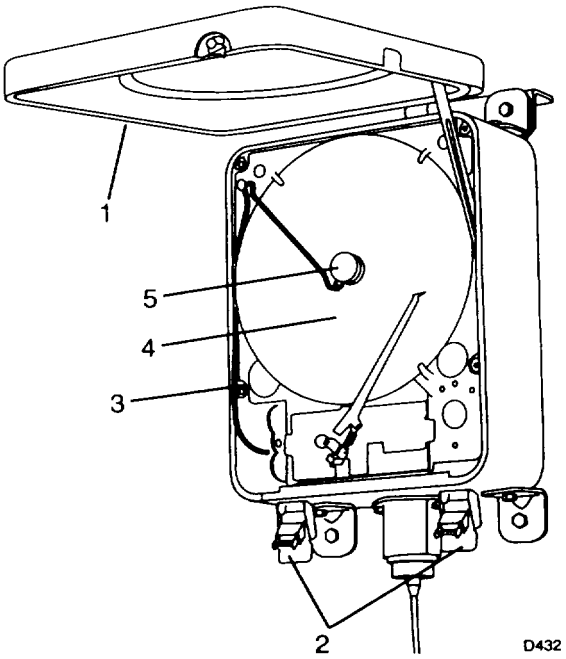


**a. Cover (1).** Protects temperature recorder from damage.

**b. Latches (2).** Fastens cover to temperature recorder frame. Lift latch handle to unfasten.

**c. Key (3).** Used to wind movement of temperature recorder. Insert key into recorder plate (behind the chart) and turn right (clockwise) to wind.

**d. Chart (4).** Pressure sensitive paper chart indicates temperature of container interior and time readings were made. To replace chart, remove knurled knob and remove old chart. Position new chart in recorder and install knurled knob.

**e. Knurled Knob (5).** Secures paper chart to temperature recorder. Remove knob to replace paper chart.

## 2-5. FUEL TANK.

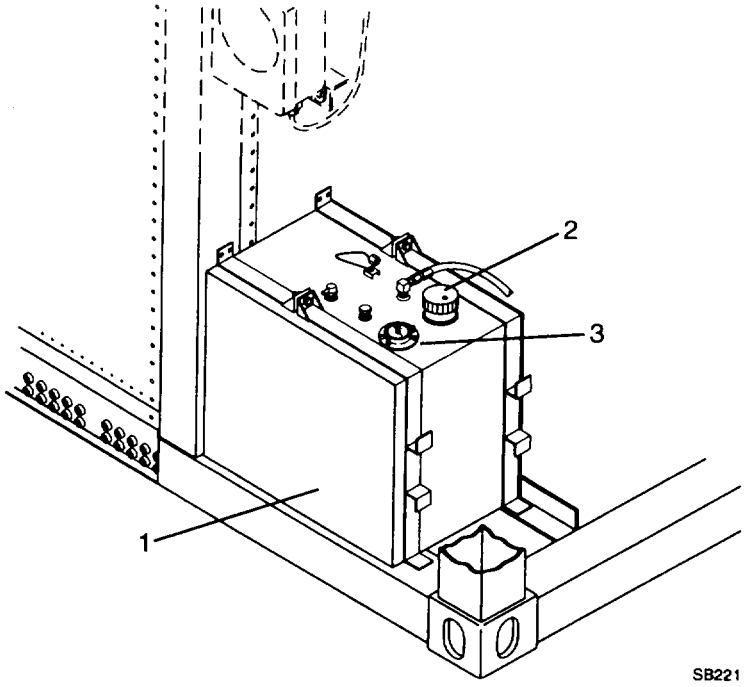


**a. Fuel Tank (1).** Stores diesel fuel for use by generator set. Refill tank before empty.

**b. Filler Cap (2).** Turn left (counterclockwise) to remove, turn right (clockwise) to install.

**c. Fuel Gage (3).** Indicates fuel level in fuel tank.

# Section II. OPERATOR PREVENTIVE MAINTENANCE CHECKS AND SERVICES (PMCS)

## 2-6. GENERAL.

Preventive maintenance checks and services are essential to the efficient operation of the container and to prevent possible damage that might occur through neglect or failure to observe warning symptoms in a timely manner. Checks and services performed by operators are limited to those functions which are described in Table 2-1.

a. Before You Operate. Always keep in mind and observe the WARNINGS and CAUTIONS. Perform your BEFORE PMCS.

b. While You Operate. Always keep in mind and observe the WARNINGS and CAUTIONS. Perform your DURING PMCS.

c. After You Operate. Be sure to perform your AFTER PMCS.

d. If Your Equipment Fails to Operate, Troubleshoot with proper equipment. Report any deficiencies using DA form 2404. See DA PAM 738-750 for instructions.

e. Perform weekly as well as before operations PMCS if:

(1) You are the assigned operator and have not operated the item since the last weekly.

(2) You are operating the item for the first time.

**NOTE**

**If the equipment must be kept in continuous operation, check and service only those items that can be checked and serviced without disturbing operation. Make the complete checks and services when the equipment can be shut down.**

## 2-7. PMCS TABLE.

Refer to Table 2-1 for Preventive Maintenance Checks and Services.

**NOTE**

**Be sure to observe all special information and notes that appear in your table.**

**a. Item Number Column:** Numbers in this column are for reference. When completing DA Form 2404 (Equipment Maintenance and Inspection Worksheet), include the item number for the check/service indicating a fault. Item numbers also appear in the order that you must do checks and services for the intervals listed.

**b. Interval Columns:** This column tells you when you must do the procedure in the procedure column. BEFORE procedures must be done before you operate or use the equipment for its intended mission. DURING procedures must be done during the time you are operating or using the equipment for its intended mission. AFTER procedures must be done immediately after you have operated or used the equipment.

**c. Location, Item to Check/Service Column:** This column provides the location and the item to be checked or serviced. The item location is underlined.

**d. Procedure Column:** This column gives the procedure you must do to check or service the item listed in the Check/Service column to know if the equipment is ready or available for its intended mission or for operation. You must do the procedure at the time stated in the interval column.

**e. Not Fully Mission Capable If:** Column: Information in this column tells you what faults will keep your equipment from being capable of performing its mission. If you perform check and service procedures that show faults listed in this column, do not operate the equipment. Follow standard operating procedures for maintaining the equipment or reporting equipment failure.

**Table 2-1. Operator Preventive Maintenance Checks and Services.**

**NOTE**

**If the equipment must be kept in continuous operation, do only the procedures that can be done without disturbing operation. Make complete checks and services when the equipment is shutdown.**

| ITEM NO. | INTERVAL | LOCATION ITEM TO CHECK/ SERVICE | PROCEDURE | NOT FULLY MISSION CAPABLE IF: |
|---|---|---|---|---|
| | | **MANUAL HOLDER AND PLATES** | | |
| 1 | Before | Manual Holder | Check latch (1)<br><br>Check for Refrigeration Unit Manual TM 9-4110-258-13;<br><br>Container manual TM 55-8145-202-13;<br><br>and Gen Set manual TM 5-6115-585-12 | Broken latch.<br><br>Missing Manual(s). |
| | | | 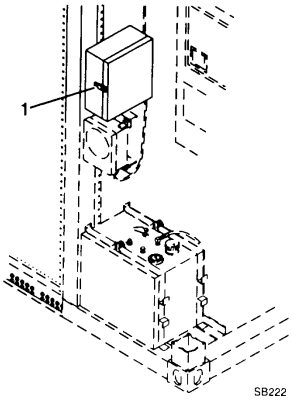 | |
| | | | Check for loose or missing plastic safety edge. | Missing safety edge trim |

**Table 2-1. Operator Preventive Maintenance Checks and Services - Continued**

| ITEM NO. | INTERVAL | LOCATION ITEM TO CHECK/ SERVICE | PROCEDURE | NOT FULLY MISSION CAPABLE IF: |
|---|---|---|---|---|
| 2 | Before | Identification plate | Check for missing or damaged plates(s) (1). | Missing or damaged plates(s). |

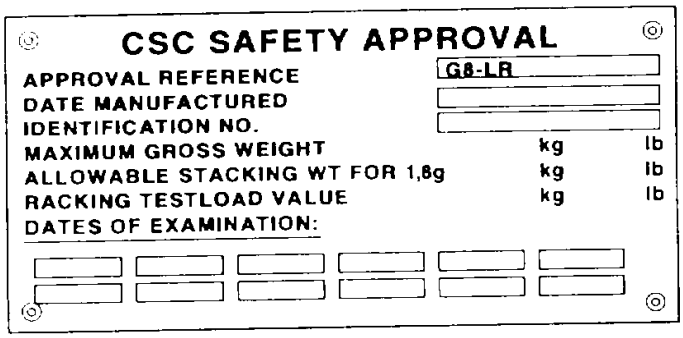


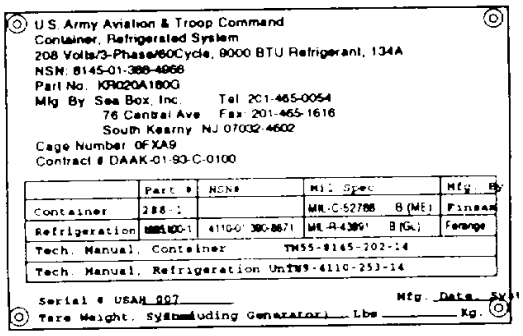


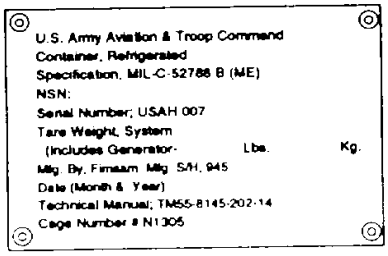


E532

**Table 2-1. Operator Preventive Maintenance Checks and Services - Continued**

| ITEM NO. | INTERVAL | LOCATION ITEM TO CHECK/ SERVICE | PROCEDURE | NOT FULLY MISSION CAPABLE IF: |
|---|---|---|---|---|
| | | **TEMPERATURE RECORDER** | | |
| 3 | Before | Temperature Recorder | Check for new chart (1) and that is properly filled out with date and other information. | Old chart or incorrect information. |
| | | | Check that recorder is wound. | Recorder not working because it is not wound. |
| | | | Check for missing or damaged stylus (2). | Missing or damaged stylus. |
| | | | Check that cover latches (3) are secure. | Missing or damaged latches. |
| | | | Check cover for broken glass (4). | Broken glass on cover. |
| | | | Check for missing or broken temperature bulb inside container. | Missing or broken Temperature bulb. |
| | | | Door gasket pinched in door groove. D421 | Missing or damaged gasket. |

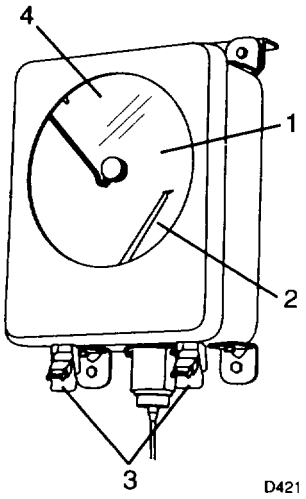

**Table 2-1. Operator Preventive Maintenance Checks and Services-Continued**

| ITEM NO. | INTERVAL | LOCATION ITEM TO CHECK/ SERVICE | PROCEDURE | NOT FULLY MISSION CAPABLE IF: |
|---|---|---|---|---|
| | | **FUEL SYSTEM** | | |
| 4 | Before | Fuel Tank and Fuel Hoses | Check for full fuel tank, Check gage (1) and fuel level mark on side of tank. | No fuel in tank, empty gage. |
| | | | Check for missing/damaged fuel hose. (2) | Missing/damaged fuel hose. |
| | | | Check fuel hose connections between tank (3) and Gen Set. | Loose connection. |
| | | | Check for secure filler cap (4) | Missing filler cap. |

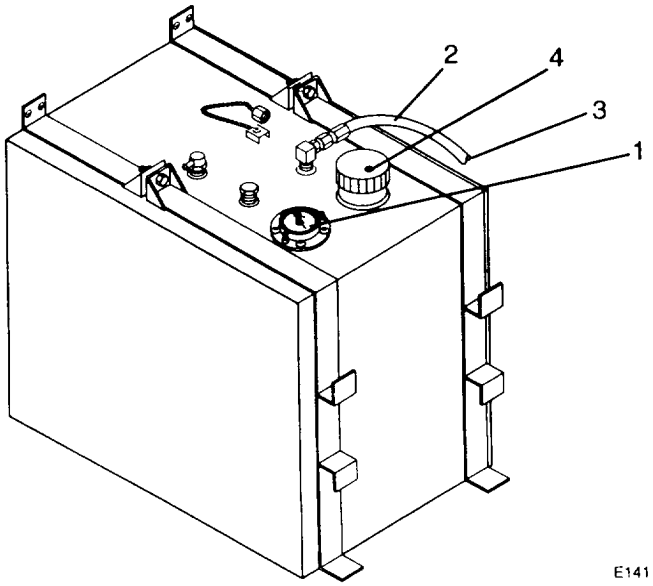

**Table 2-1. Operator Preventive Maintenance Checks and Services - Continued**

| ITEM NO. | INTERVAL | LOCATION ITEM TO CHECK/ SERVICE | PROCEDURE | NOT FULLY MISSION CAPABLE IF: |
|---|---|---|---|---|
| | | **EXHAUST LINE EXTENSION** | | |
| 5 | Before | Exhaust Lines | Check connections (1) at back of Gen Set.<br><br>Check for damaged/missing exhaust pipe (2) | Loose connections.<br><br>Damaged/missing exhaust pipe. |
| | | | 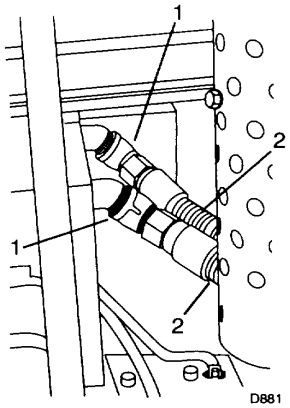 <br> 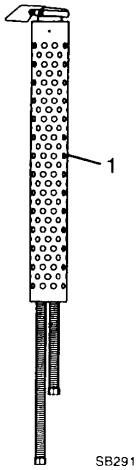 | |
| | | | | |

**Table 2-1. Operator Preventive Maintenance Checks and Services - Continued**

| ITEM NO. | INTERVAL | LOCATION ITEM TO CHECK/ SERVICE | PROCEDURE | NOT FULLY MISSION CAPABLE IF: |
|---|---|---|---|---|
| | | **LADDER (SECTION** | | |
| 6 | Before | Ladder | Check that ladder (1) is secured to frame (2).<br><br>Check that folding section (3) of ladder is secured and that it folds down.<br><br>Check rungs (4) for damage/corrosion | Loose/missing mounting hardware.<br><br>Missing fold down portion and Not tied down.<br><br>Damaged/corroded rungs |
| | | | 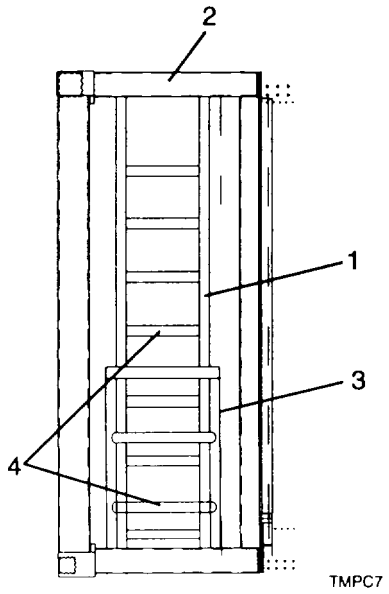 | |
| | | | | |

**Table 2-1. Operator Preventive Maintenance Checks and Services - Continued**

| ITEM NO. | INTERVAL | LOCATION ITEM TO CHECK/ SERVICE | PROCEDURE | NOT FULLY MISSION CAPABLE IF: |
|---|---|---|---|---|
| | | **ELECTRICAL EQUIPMENT** | | |
| 7 | Before | Cable, Electric Power (Gen Set) | Check connections at Gen Set. Refer to TM5-6115-585-12.<br><br>Check connection to Refrigeration Unit power connector (1). | Loose connections<br><br>Loose Connections. |
| | | | 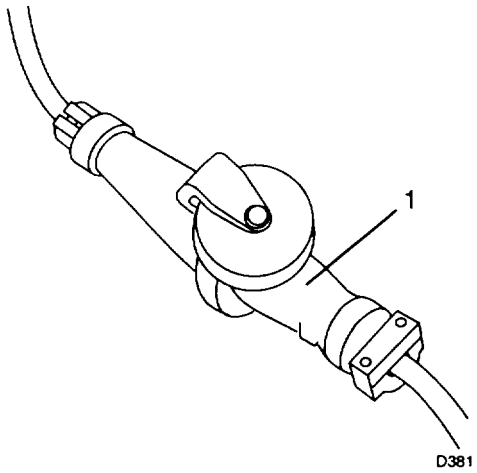 | |
| | | | | |

**Table 2-1. Operator Preventive Maintenance Checks and Services - Continued**

| ITEM NO. | INTERVAL | LOCATION ITEM TO CHECK/ SERVICE | PROCEDURE | NOT FULLY MISSION CAPABLE IF: |
|---|---|---|---|---|
| 8 | Before | Light Assembly | Check on/Off switch (1) operation | Faulty switch. |
| | | | Check junction box wire connection inside Refrigeration Unit. | Loose connection. |
| | | | Check for damaged wiring (2) inside container. | Damaged wiring. |
| | | | Check for damaged/missing guard (3) around bulb. | Damaged/missing guard. |
| | | | Check that base (4) is secured. | Base loose or hanging. |
| | | | Check for missing/broken/burned out bulb (5). | Missing/broken/burned out bulb. |

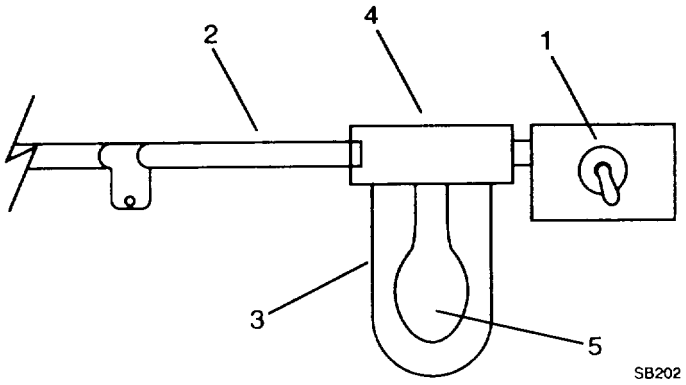

**Table 2-1. Operator Preventive Maintenance Checks and Services - Continued**

| ITEM NO. | INTERVAL | LOCATION ITEM TO CHECK/ SERVICE | PROCEDURE | NOT FULLY MISSION CAPABLE IF: |
|---|---|---|---|---|
| | | **BOX ASSEMBLY** | | |
| 9 | Before | Door Gaskets | Check door seals (gaskets) (1).<br><br>Check that emergency hatch (2) is properly installed with four wing nuts (3) | Damaged/missing door seals (gaskets).<br><br>Door does not fit properly; handles loose or missing. |

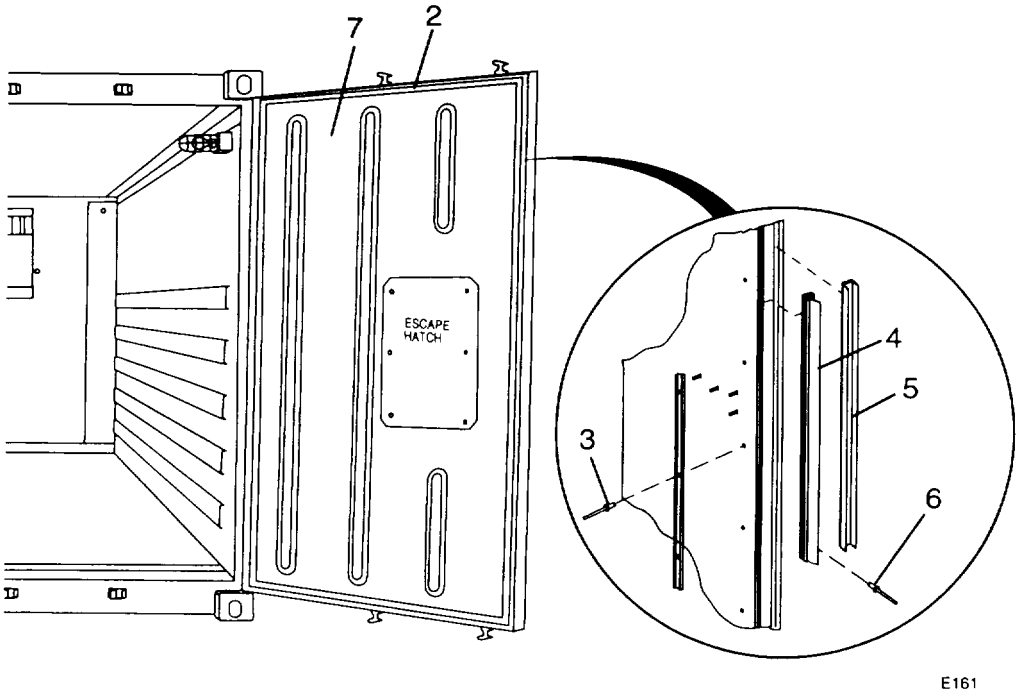

**Table 2-1. Operator Preventive Maintenance Checks and Services - Continued**

| ITEM NO. | INTERVAL | LOCATION ITEM TO CHECK/ SERVICE | PROCEDURE | NOT FULLY MISSION CAPABLE IF: |
|---|---|---|---|---|
| 10 | Before | Door Hardware | Check door hardware/hinges (1), locking bars (2), cams (3).<br><br>Check that door (4) closes fully. | Damaged/missing door seals (gaskets).<br><br>Any door hardware missing or damaged.<br><br>Door does not close. |
| | | | | |

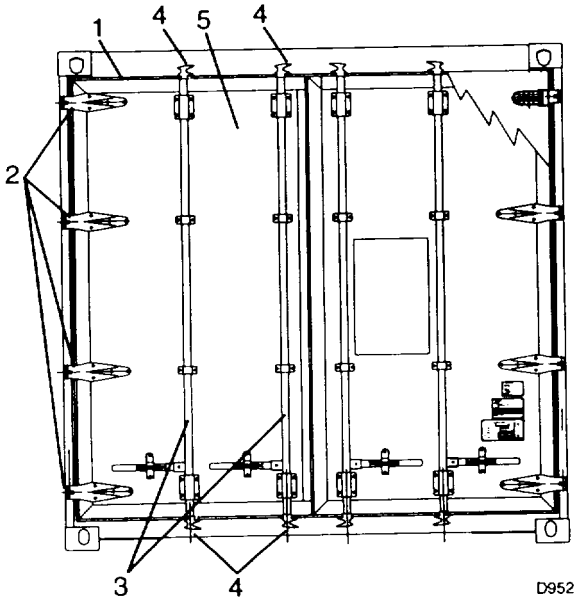




TM 55-8145-202-14

**Table 2-1. Operator Preventive Maintenance Checks and Services - Continued**

| ITEM NO. | INTERVAL | LOCATION ITEM TO CHECK/ SERVICE | PROCEDURE | NOT FULLY MISSION CAPABLE IF: |
|---|---|---|---|---|
| 11 | Before | Roof Panel | Check for damage to the roof panel (1) | Damaged roof panel. |

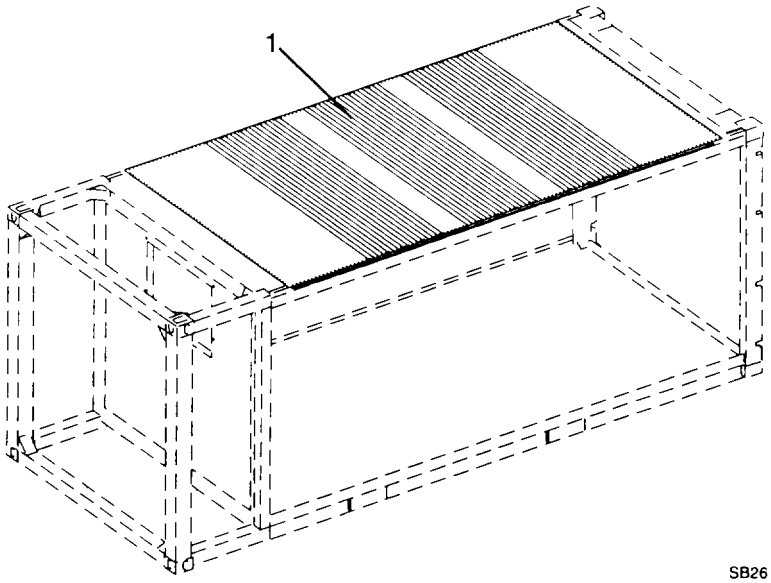

**Table 2-1. Operator Preventive Maintenance Checks and Services - Continued**

| ITEM NO. | INTERVAL | LOCATION ITEM TO CHECK/ SERVICE | PROCEDURE | NOT FULLY MISSION CAPABLE IF: |
|---|---|---|---|---|
| 12 | Before | Side Panels | Check for damage to side panels (1). | Damaged side panels. |

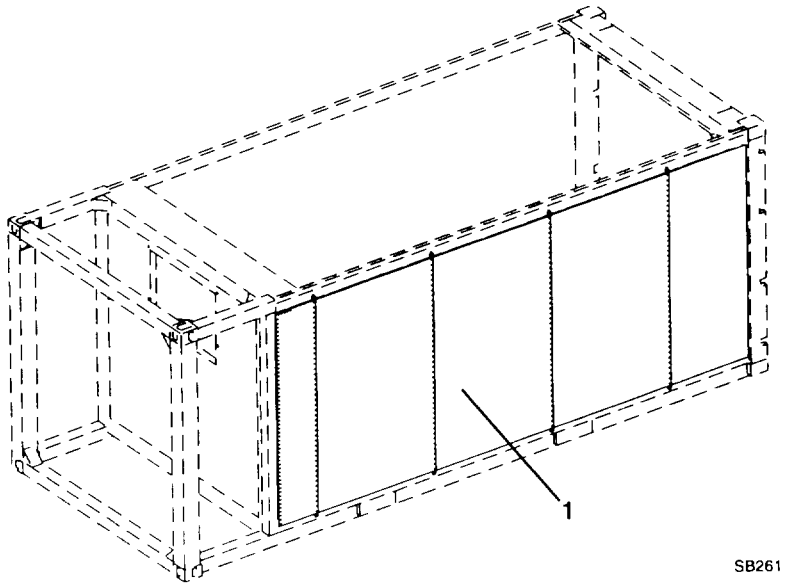

**Table 2-1. Operator Preventive Maintenance Checks and Services - Continued**

| ITEM NO. | INTERVAL | LOCATION ITEM TO CHECK/ SERVICE | PROCEDURE | NOT FULLY MISSION CAPABLE IF: |
|---|---|---|---|---|
| 13 | Before | Front Panel | Check for damage to the front panel (1)<br><br>Check for secure Refrigeration Unit mounting hardware. Refer to TM9-4110-258-13 | Damaged front panel.<br><br>Loose/missing mounting hardware. |

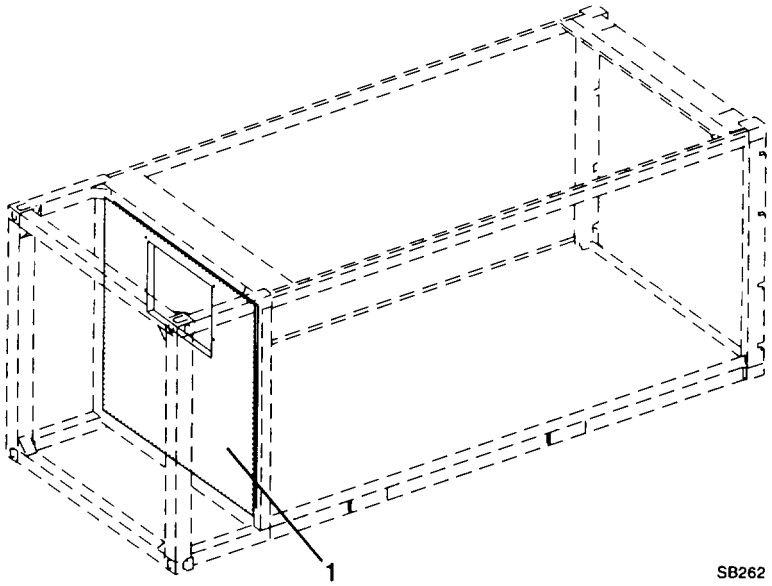

**Table 2-1. Operator Preventive Maintenance Checks and Services - Continued**

| ITEM NO. | INTERVAL | LOCATION ITEM TO CHECK/ SERVICE | PROCEDURE | NOT FULLY MISSION CAPABLE IF: |
|---|---|---|---|---|
| 14 | Before | Drain | Drain screen (1) is clear of debris (four drains)<br>Cap (2) is in place after use (four drains).<br>Drain valve is in place under container corner | Clogged screen(s).<br>Missing drain caps(s).<br>Missing/damaged valve. |

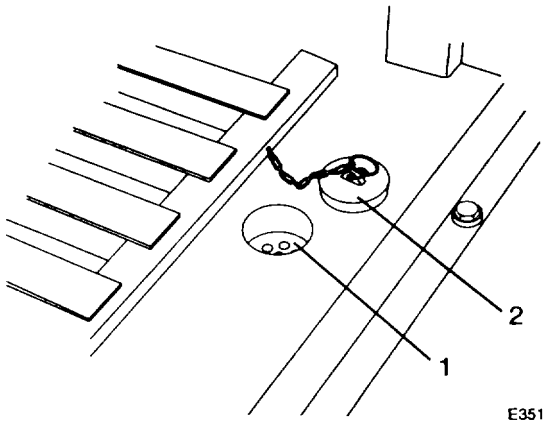

**Table 2-1. Operator Preventive Maintenance Checks and Services - Continued**

| ITEM NO. | INTERVAL | LOCATION ITEM TO CHECK/ SERVICE | PROCEDURE | NOT FULLY MISSION CAPABLE IF: |
|---|---|---|---|---|
| 15 | Before | Floor | Check for damaged floor (1). | Damaged floor cannot support load. |

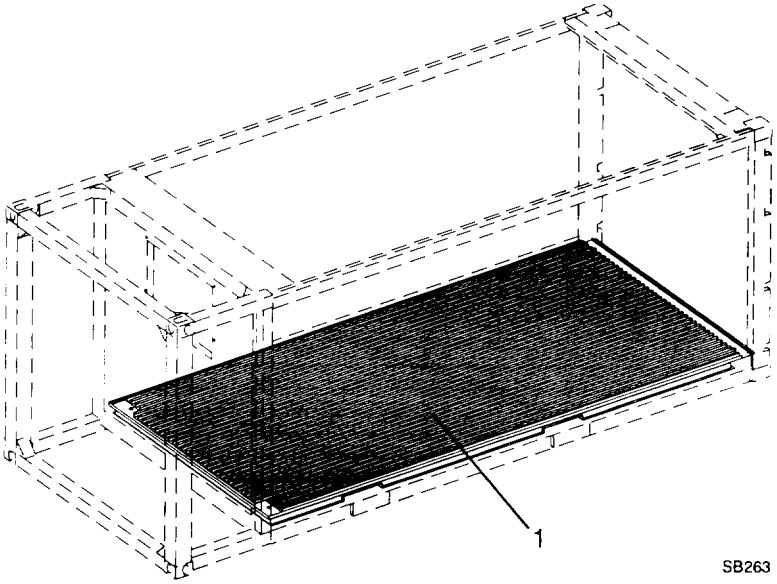

**Table 2-1. Operator Preventive Maintenance Checks and Services - Continued**

| ITEM NO. | INTERVAL | LOCATION ITEM TO CHECK/ SERVICE | PROCEDURE | NOT FULLY MISSION CAPABLE IF: |
|---|---|---|---|---|
| 16 | Before | Frame | Check for bent or damaged frame (1). | Bent or damaged frame |

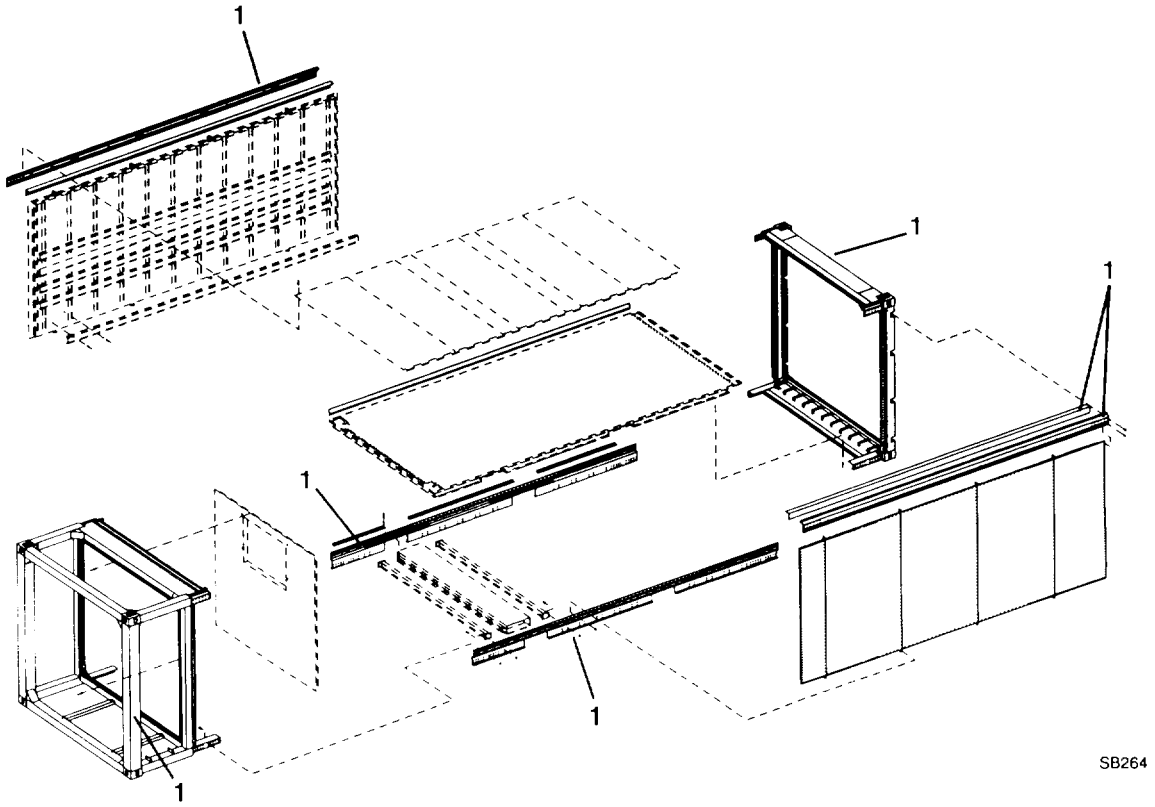

**Table 2-1. Operator Preventive Maintenance Checks and Services - Continued**

| ITEM NO. | INTERVAL | LOCATION ITEM TO CHECK/ SERVICE | PROCEDURE | NOT FULLY MISSION CAPABLE IF: |
|---|---|---|---|---|
| 17 | During | Chart | Check temperature on chart (1).<br>Check that is there is enough space on chart (1). | Incorrect temperature.<br>Chart space is full. |
| | | | 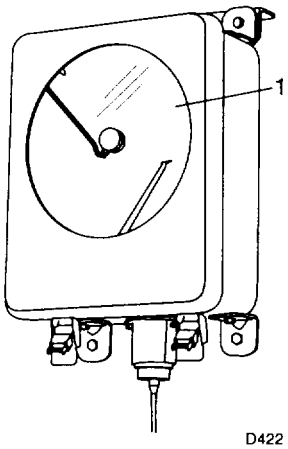 | |

**Table 2-1. Operator Preventive Maintenance Checks and Services - Continued**

| ITEM NO. | INTERVAL | LOCATION ITEM TO CHECK/ SERVICE | PROCEDURE | NOT FULLY MISSION CAPABLE IF: |
|---|---|---|---|---|
| | | **EXHAUST LINE EXTENSION** | | |
| 18 | During | Rain Cap | Check that rain cap (1) is attached. | |
| | | | 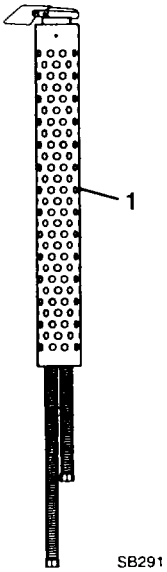  | |
| | | | | |

**Table 2-1. Operator Preventive Maintenance Checks and Services - Continued**

| ITEM NO. | INTERVAL | LOCATION ITEM TO CHECK/ SERVICE | PROCEDURE | NOT FULLY MISSION CAPABLE IF: |
|---|---|---|---|---|
| 19 | During | Drain | Drain screen (1) is clear of debris (four drains).<br>Cap (2) is in place after use (four drains).<br>Drain valve is in place under container corner. | Clogged screen(s).<br>Missing drain cap(s).<br>Missing/damaged valve. |

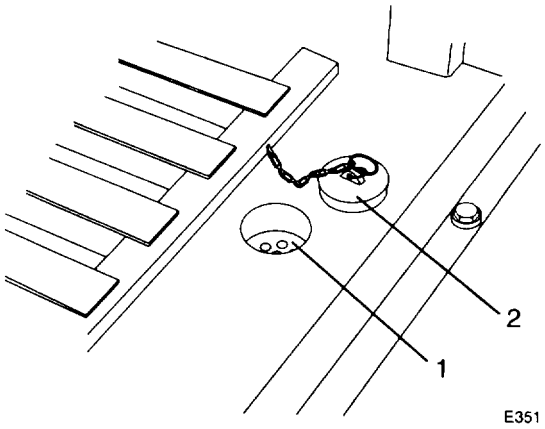

**Table 2-1. Operator Preventive Maintenance Checks and Services - Continued**

| ITEM NO. | INTERVAL | LOCATION ITEM TO CHECK/ SERVICE | PROCEDURE | NOT FULLY MISSION CAPABLE IF: |
|---|---|---|---|---|
| 20 | After | Drain | Drain screen (1) is clear of debris (four drains).<br>Cap (2) is in place after use (four drains).<br>Drain valve is in place under container corner. | Clogged screen(s).<br>Missing drain cap(s).<br>Missing/damaged valve. |

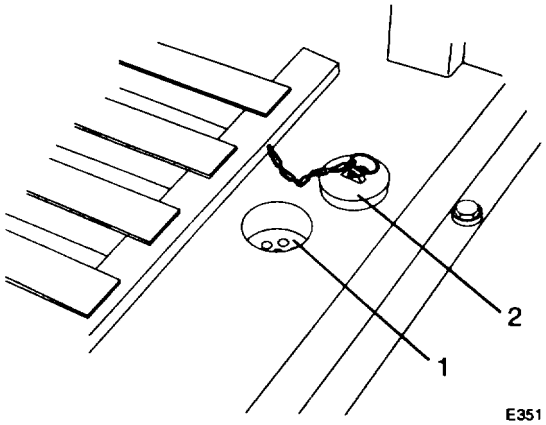

## Section III. OPERATION UNDER USUAL CONDITIONS

### 2-8. ASSEMBLY AND PREPARATION FOR USE.

**a. Fuel Tank.** Before using the refrigerated container, fill the generator fuel tank (1) as follows:

(1) Remove fuel tank filler cap (2).

**WARNING**

**To prevent injury to personnel and damage to equipment, do not fill fuel tank above line marked on side of tank. Movement of refrigerated container during transport will cause fuel to spill if tank is over filled.**

**CAUTION**

**To prevent damage to generator set, use only fuels specified in the generator set manual (TM 5-6114-585-12/34).**

(2) Fill fuel tank (1) to level marked on side of tank.

(3) Install fuel tank filler cap (2).

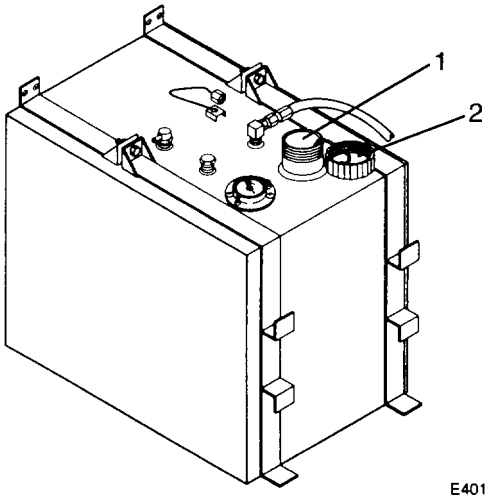


**b. Temperature Recorder.** Before using the refrigerated container, prepare temperature recorder as follows:

(1) Unfasten latch (1) and open cover (2).

(2) Press stylus lifter (3). Make sure stylus (4) clears paper chart (5).

(3) Remove knurled knob (6) from chart platten (7).

(4) If installed, remove old paper chart (5).

**CAUTION**

**To prevent damage to temperature recorder, do not over wind timer movement.**

(5) Insert winding key (8) into winder hole (9) and wind timer movement clockwise. Be careful not to over wind.

**NOTE**

**Spare charts are stored in the document holder.**

(6) Position new chart (5) on chart platten (7). Make sure chart fits under four guide tabs (10) on face plate (11 ).

(7) Rotate chart (5) so that correct day (1 to 31) and morning (M) or night (N) is aligned with STARTING TIME arrow on face plate (11).

(8) Install knurled knob (6) on chart platten (7).

(9) Slowly release stylus lifter (3) so that stylus rests on chart (5).

(10) Close cover (2) and fasten latch (1).

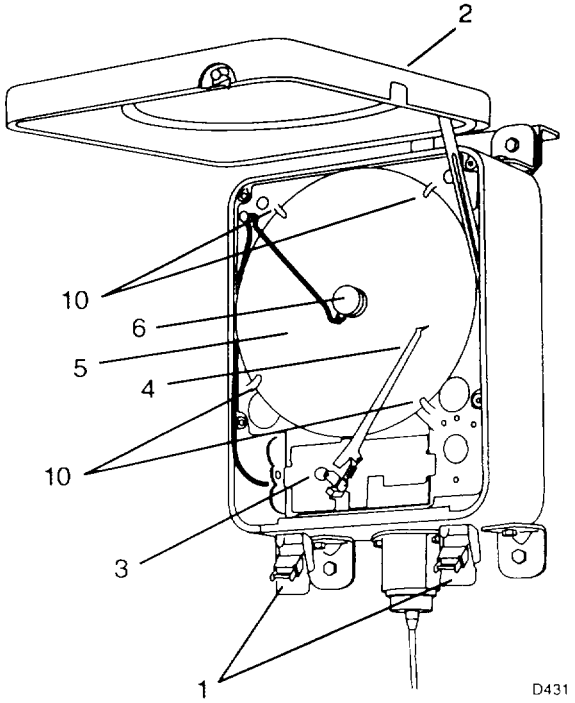


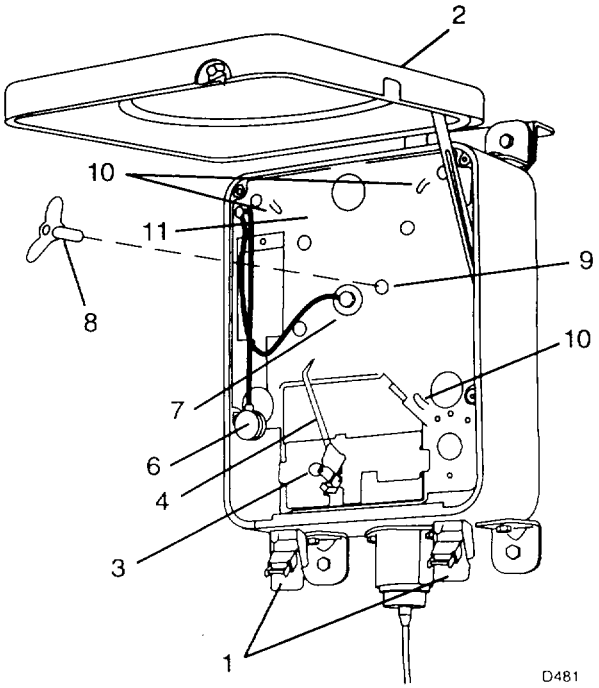


**c. Refrigeration Unit.** Perform assembly and preparation for use instructions from TM 9-4110-258-13.

**d. Power Source.**

(1) Generator Set. If generator set is being used to power the refrigeration unit, perform assembly and preparation for use instructions contained in TM 5-6115-585-12/34.

(2) External Power Source. If an external electrical source is being used to power the refrigeration unit, perform assembly and preparation for use instructions contained in the applicable power source manual. Refer to TM 9-4110-258-13 for external power requirements.

## 2-9. INITIAL ADJUSTMENTS, CHECKS AND SELF TEST.

**a. Refrigerated Container.** No initial adjustment of the refrigerated container is required.

**b. Refrigeration Unit.** Perform initial adjustment instructions in accordance with TM 9-4110-258-13.

**c. Power Source.**

(1) Generator Set. Perform initial adjustment instructions in accordance with TM 5-6115-585-12/34.

(2) External Power Source. Perform initial adjustment instructions in accordance with the applicable power source manual. (Refer to TM9-4110-258-13 for external power source requirements.)

## 2-10. OPERATING PROCEDURES.

**a. Starting.**

(1) Verify that both rear doors are closed.

(2) Connect the Gen Set power cable to the refrigeration unit connector. Start and operate generator set (refer to TM 5-6115-585-12/34). If external power is being used, verify that power cable is connected to refrigeration unit (TM 9-4110-258-13).

(3) Start and operate refrigeration unit (refer to TM 9-4110-258-13).

**NOTE**

**Temperature inside the refrigerated container may take up to five hours to reach selected thermostat setting.**

(4) Check temperature indication on temperature recorder and refrigeration unit (TM 9-4110-258-13). Allow refrigeration unit to operate until container interior reaches setpoint temperature (thermostat setting).

**b. Open Rear Doors.**

**NOTE**

**Always open the right rear door first.**

(1) On right door (1), rotate top handle lock (2) upward to clear door release handle (3).

(2) Rotate door release handle (3) until clear of bottom handle lock (4).

(3) Rotate door release handle (3) to left until lock cams (5 and 6) are clear of container frame keepers (7).

(4) Repeat steps 1, 2 and 3 for other release handle (8).

**WARNING**

**To prevent injury to personnel and damage to the equipment, make sure doors are secured to container frame hold back hooks (17) with ropes when in the open position.**

(5) Open right door (1) and secure to hook (9) with rope (10).

(6) On left door (11), rotate top handle lock (12) upward to clear door release handle.

(7) Lift door release handle (13) until clear of bottom handle lock (14).

(8) Swing door release handle (13) to right until lock cams (15 and 16) are clear of container frame keeper.

(9) Repeat steps 6, 7 and 8 for other release handle (17).

(10) Open left door (11) and secure to hook (9) with the rope (10).

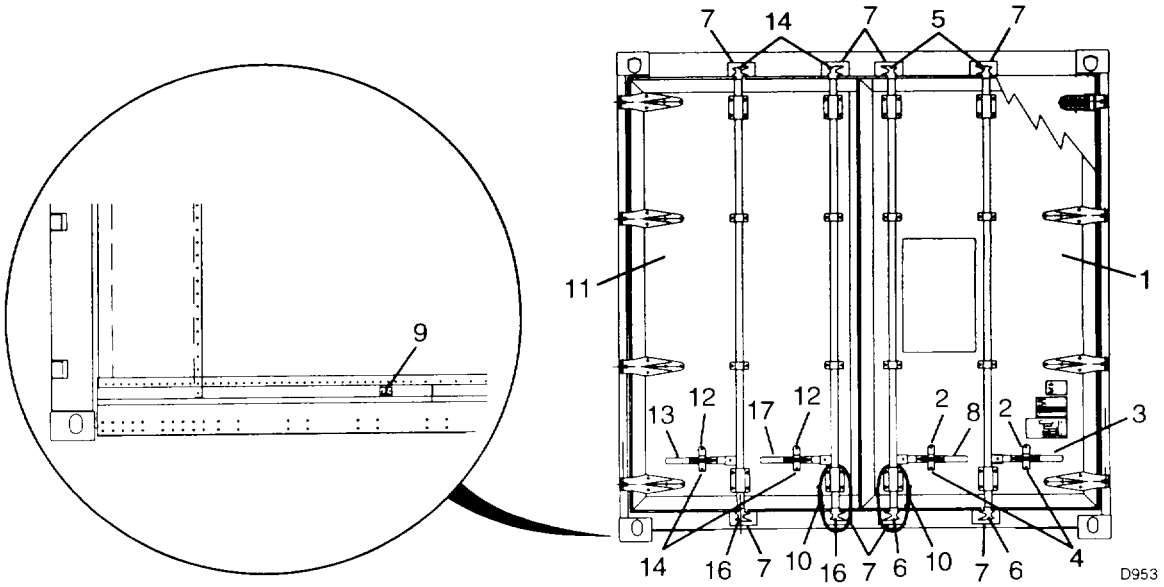


**c. Load Container.**

**CAUTION**

- **To prevent heavy sweating and frosting of evaporator coils and container walls, shut down refrigeration unit if doors must be open for a long time.**
- **To ensure proper operation of the refrigerated container, air flow around cargo must be clear of obstructions. Observe the following precautions when loading cargo in the container:**

**CAUTION**

- **Leave a one foot space between the top of the cargo and the ceiling of the container.**
- **Make sure that cargo does not block refrigeration unit evaporator coil on container front wall.**
- **Make sure that air from the refrigeration unit can flow under and around cargo,**

Load container with cargo.

**d. Close Rear Doors.**

**WARNING**

**To prevent death or injury to personnel, make sure all personnel are clear of container before closing rear doors.**

(1) Inspect container interior. Verify that all personnel are out of container.

**CAUTION**

**Left rear door must be closed before right rear door. Failure to close left door first can result in damage to door frames and will prevent proper sealing.**

(2) Release left door rope (10) from hook (9) and close left door (11).

(3) Swing door release handle (13) to left until lock cams (15 and 16) mate with container frame keepers (7).

(4) Push door release handle (13) down into bottom of handle lock (14).

(5) Rotate top handle lock (12) down over door release handle (13).

(6) Repeat steps 3, 4, and 5 for other left door release handle (17).

(7) Release door rope (10) from hook (9) and close right door (1).

(8) Swing door release handle (3) to right until lock cams (5 and 6) mate with container frame keepers (7).

(9) Push door release handle (3) down into bottom of handle lock (4).

(10) Rotate top handle lock (2) down over door release handle (3).

(11) Repeat steps 8, 9 and 10 for other release handle (8).

**e. Continuous Operation.**

(1) Monitor temperature indication on temperature recorder. Make sure temperature is correct for the type of cargo being stored in container.

(2) Check operation of refrigeration unit. Refer to TM 9-4110-258-13 for normal indications.

(3) Check operation of generator set or external power source. Refer to TM 5-6115-585-12/34 for generator set normal indications.

(4) Monitor fuel level in generator fuel tank. Add fuel as required.

**f. Stopping.**

(1) Shutdown refrigeration unit (TM 9-4110-258-13).

(2) Shutdown generator set (TM 5-6115-585-12/34).

**g. Unloading.**

(1) Open rear doors (1) and lock into position (para. 2-10b).

(2) Unload refrigerated container (2).

(3) Close rear doors (para. 2-10d).

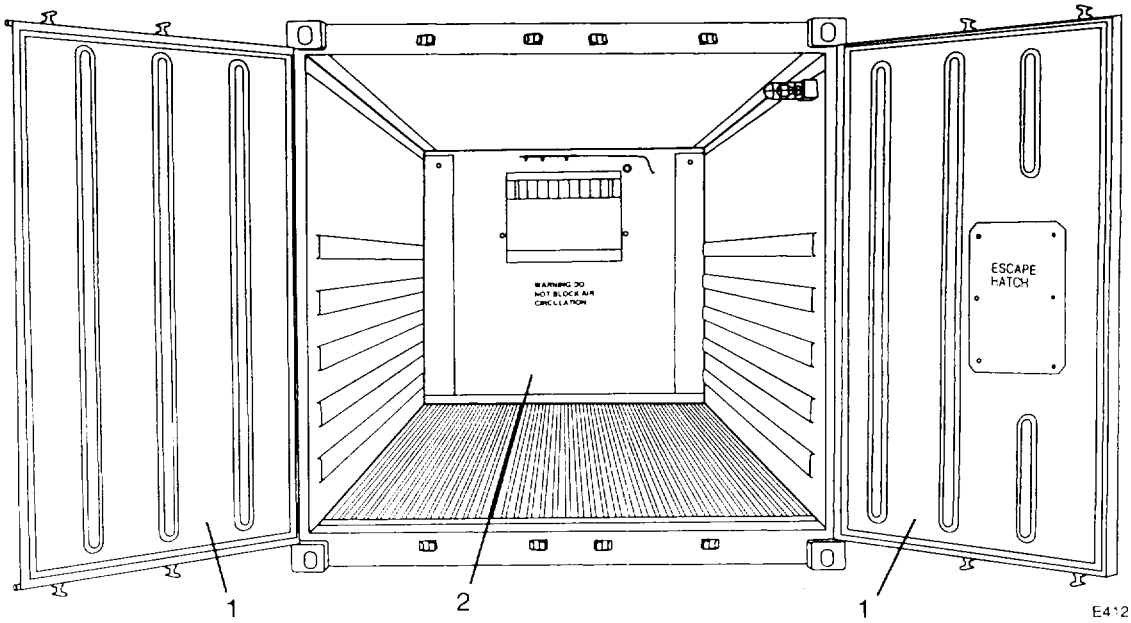

## 2-11. DECALS AND INSTRUCTION PLATES.

a. Instruction plates are found on the right door. They are mounted using rivets.

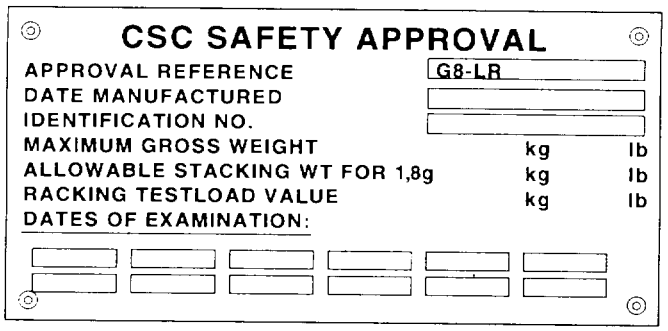


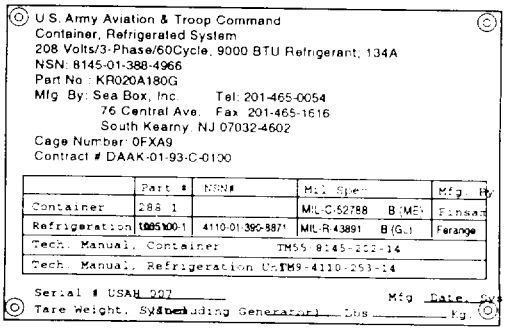


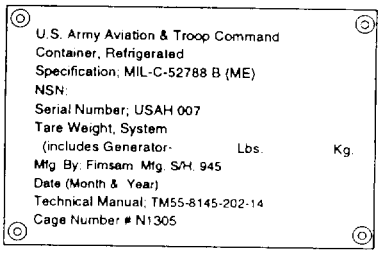


E533

b. White stenciling is found on the exterior of the container.

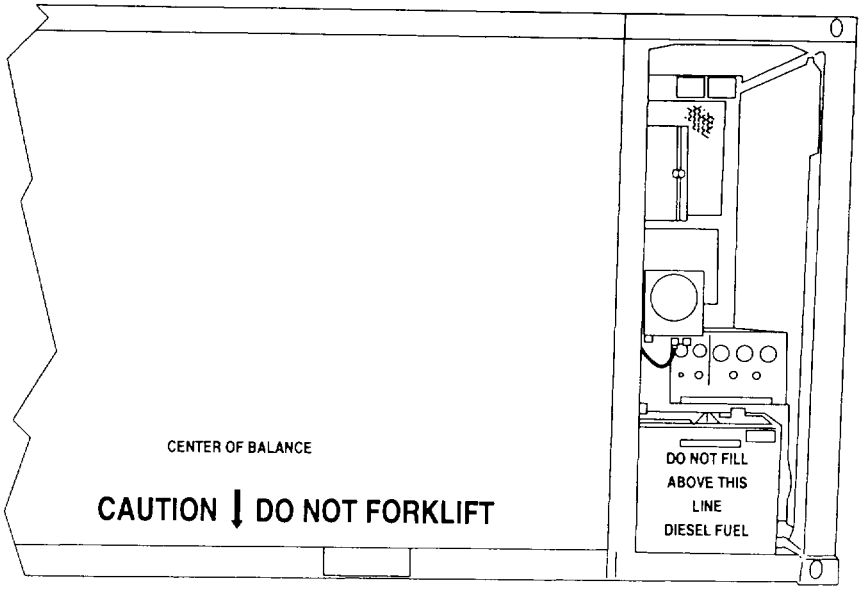


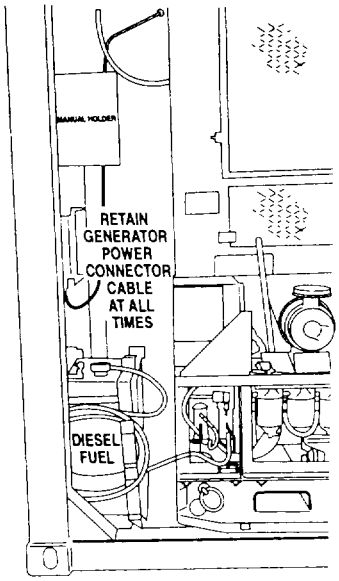


F39

c. Black stenciling can be found on the interior of the container.

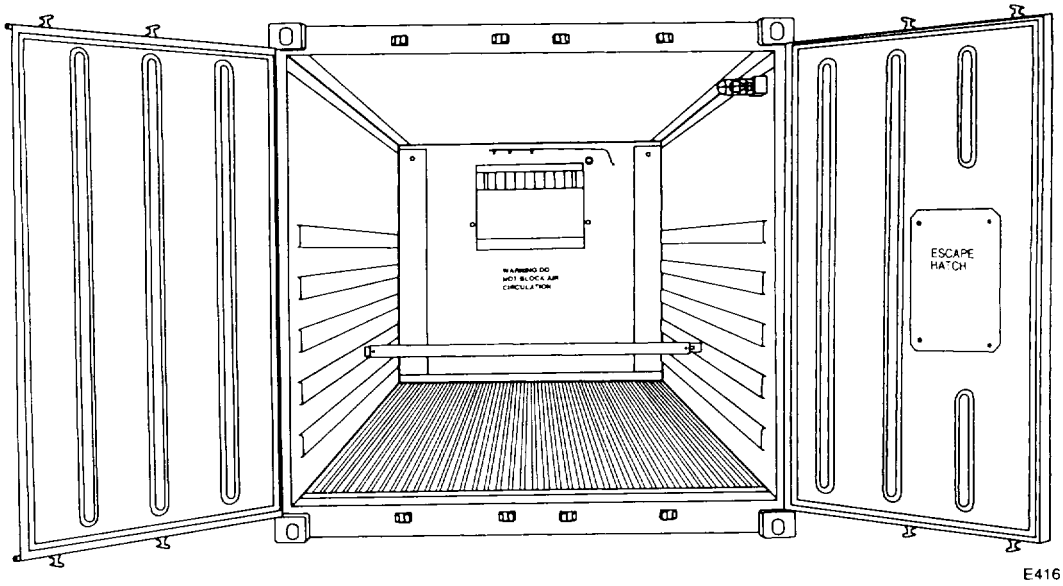


## 2-12. PREPARATION FOR MOVEMENT.

a. Preparation.

**CAUTION**

**To prevent damage to container cargo, make sure cargo is securely packed in container.**

(1) Check container cargo. Make sure all boxes and packages are properly secured.

(2) Verify that no personnel are inside the container.

(3) Verify that all doors and restraint bars are installed and securely fastened.

(4) Check temperature recorder indication. Verify container temperature is correct for cargo being stored. If required, allow refrigeration unit to operate until temperature has stabilized.

**CAUTION**

**To prevent damage to cargo, make sure electrical power, external or generator set, is available at new work site. Refrigeration unit should only be shutdown for short periods of time as required to load/unload container from transport vehicle.**

(5) Shutdown refrigeration unit (TM 9-4110-258-13).

(6) If generator set is being used, shutdown generator set (TM 5-6115-585-12/34).

(7) If external power is being used, shutdown power source (power source manual). Disconnect refrigeration unit external power cable from power source (TM 9-4110-258-13).

**b. Movement.**

**WARNING**

- **A loaded refrigerated container is extremely heavy. To prevent injury to personnel and damage to equipment, use a hoist and sling. rated at a minimum capacity of 40 tons (80,000 pounds).**
- **Commercial container handling equipment (cranes, top-lift devices, front and side loaders and self loading transporters) is suitable for handling the refrigerated container.**
- **Always use spreader frame when top lifting container.**
- **Do not lift container with cable slings at an angle.**
- **Never use fork lift to move, lift or push container unless forklift is designed for use with MIL-VAN.**

(1) Have refrigerated container loaded onto trailer/chassis, railway car, or ship as required.

(2) If container will be operated off external power, connect refrigeration unit power cable to power source.

(3) If container will be operated off generator set, start generator (TM 5-6115-585-12/34).

(4) Start refrigeration unit (TM 9-4110-258-13).

## Section IV. OPERATION UNDER UNUSUAL CONDITIONS

### 2-13. OPERATION IN EXTREME COLD (BELOW 0°F (-18°C)).

**CAUTION**

**In extremely cold weather, if the rear doors remain open for a long period of time, the door seals become hard and brittle. The rear doors will be difficult to close and the seals will be damaged. Warm seals before closing rear doors.**

To warm the rear doors seals during extremely cold weather, proceed as follows:

(1) Start generator set (TM 5-6115-585-12/34) or external power source (power source manual).

(2) Start refrigeration unit and operate in heating mode (TM 9-4110-258-13).

(3) Close rear doors as much as possible without compressing door seals. Do not close door release handles.

(4) Allow refrigeration unit to operate in heating mode until door seals warm up. When warm, door seals will be soft and flexible.

**CAUTION**

**To prevent damage to rear door seals, keep doors closed during extremely cold weather. Open only for loading or unloading.**

(5) Close rear doors.

(6) Refer to TM 9-4110-258-13 for operation of the refrigeration unit in extreme cold.

(7) Refer to TM 5-6115-585-12/34 for operation of the generator set in extreme cold.

## 2-14. OPERATION IN EXTREME HEAT

Observe the following precautions when operating the refrigerated container in extreme heat.

(1) If possible, keep container out of direct sunlight. Shade container with a tarp or similar type cover.

(2) Do not block air circulation around refrigeration unit. Keep area clear of equipment and other obstructions.

(3) Periodically inspect refrigeration unit condenser coils. Coils must be kept clean. Refer to TM 9-4110-258-13 for cleaning instructions.

(4) Periodically inspect refrigeration unit evaporator coils (inside container). If frost becomes 1/8 to 1/2 inch (3.2 to 12.7 mm) thick before unit defrosts, place temperature controller in defrosting mode (TM 9-4110-258-13).

(5) Refer to TM 9-4110-258-13 for operation of the refrigeration unit in extreme heat.

(6) Refer to TM 5-6115-585-12/34 for operation of the generator set in extreme heat.

## 2-15. OPERATION IN RAINY OR HUMID CONDITIONS.

Observe the following precautions when operating the refrigerated container in rainy or humid conditions:

(1) To prevent frosting of container interior, rear doors should be opened only for loading or unloading.

(2) If possible, keep refrigeration unit and generator set sheltered from rain.

(3) Make sure generator set is properly grounded to prevent electrical shock (TM 5-6115-585-12/34).

(4) Periodically inspect refrigeration unit evaporator coils (inside container). If frost becomes 1/8 to 1/2 inch (3.2 to 12.7 mm) thick before unit defrosts, place temperature controller in defrosting mode (TM 9-4110-258-13).

(5) Refer to TM 9-4110-258-13 for operation of the refrigeration unit in rainy or humid conditions.

(6) Refer to TM 5-6115-585-12/34 for operation of the generator set in rainy or humid conditions.

## 2-16. OPERATION IN SALT WATER AREAS.

Operation in salt water areas accelerates corrosion on bare metal surfaces. Observe the following precautions when operating the refrigerated container in saltwater areas:

(1) Carefully inspect container before use. If bare metal is found, notify unit maintenance to preserve or paint the metal as required.

(2) Following operation in salt water areas, rinse outside of refrigerated container with clean fresh water to remove salt spray and/or deposits. Use care not to get water in refrigeration unit, generator set, or wiring.

(3) Refer to TM 9-4110-258-13 for operation of the refrigeration unit in salt water areas.

(4) Refer to TM 5-6115-585-12/34 for operation of the generator set in salt water.

## 2-17. OPERATION IN HIGH ALTITUDES.

**a. Elevations Up To 5.000 Feet (1,524 m).** The refrigerated container and refrigeration unit are designed to operate at elevations up to 5,000 feet (1,524 m) above sea level without special servicing or adjustments.

**b. Elevations Above 5,000 Feet (1,524 m).** At elevations greater than 5,000 feet (1,524 m) above sea level output of the refrigeration unit will be reduced. The refrigeration unit will take longer to cool down the container during startup, and it will run longer during each cooling cycle. Refer to TM 9-4110-258-13 for operating the refrigeration unit at high altitudes.

## 2-18. EMERGENCY PROCEDURES.

a. If personnel are trapped in container use emergency hatch.

b. Shut down refrigeration unit and gen set if problems arise.

c. See Refrigeration Unit manual TM 9-4110-258-13 for additional emergency procedures.

d. See Gen Set manual TM 5-6115-585-12 for additional emergency procedures.

## 2-19. NUCLEAR, BIOLOGICAL, AND CHEMICAL (NBC) DECONTAMINATION PROCEDURES.

General Cleaning and Decontamination.

(1) Wash the exterior of the refrigerated container with any suitable detergent. Thoroughly rinse with fresh water and allow to air dry.

**NOTE**

**Each deck stored container must be washed by using organization after each ocean voyage to retard deterioration.**

(2) For decontamination, procedures required by TM 743-200 and FM 3-5 shall apply.

THIS PAGE MISSING NOT AVAILABLE FOR DIGITIZATION.

# CHAPTER 3
# OPERATOR MAINTENANCE INSTRUCTIONS



## Section I. OPERATOR LUBRICATION INSTRUCTIONS

a. There are no operator lubrication requirements for the refrigerated container.

b. Refer to TM 9-4110-258-13 for lubrication requirements on the refrigeration unit.

c. Refer to TM 5-6115-585-12/34 for lubrication requirements on the generator set.

## Section II. OPERATOR TROUBLESHOOTING INSTRUCTIONS

### 3-1. INTRODUCTION.

a. The troubleshooting table lists the common malfunctions which you may find during operation of the refrigerated container. You should perform the tests, inspections and corrective actions in the order they appear in the table.

b. This table cannot list all the malfunctions that may occur, all the tests or inspections needed to find fault, or all the corrective actions needed to correct the fault. If the equipment malfunction is not listed or actions listed do not correct the fault, notify your supervisor.

c. Refer to TM 9-4110-258-13 for troubleshooting malfunctions on the refrigeration unit.

d. Refer to TM 5-6115-585-12/34 for troubleshooting malfunctions on the generator set.

### 3-2. MALFUNCTION INDEX.

## 3-3. TROUBLESHOOTING TABLE.

Refer to Table 3-1.

**Table 3-1. Operator Troubleshooting Instructions.**

**WARNING**

**Be sure to read ALL Warnings in front of manual before troubleshooting.**

**MALFUNCTION**
**TEST OR INSPECTION**
**CORRECTIVE ACTION**

### 1. REAR DOORS WILL NOT CLOSE.

Step 1. Verify that left rear door was closed before right door.

Close left door, then right door.

Step 2. Inspect for cargo, rocks, or packaging material between doors and container frame.

Remove obstructions from container opening.

Step 3. Inspect for bent, broken, or twisted door latch hardware.

Notify Unit Maintenance.

### 2. WATER WILL NOT DRAIN FROM CONTAINER FLOOR.

Step 1. Check for clogged floor drain screens.

Clear floor drain screens.

**NOTE**

**Drain hose is flat. Do not mistake flat hose for kinks.**

Step 2. Check for kinked, twisted, flat surfaces sticking together or folded drain hoses under corners of container.

Straighten drain hose. Hose should hang straight down.

### 3. TEMPERATURE RECORDER DOES NOT RECORD OR DOES NOT RECORD PROPERLY.

Step 1. Verify that temperature recorder has been wound.

Wind temperature recorder (para. 2-5b).

Step 2. Check for loose knurled nut securing paper chart to recorder platen.

Tighten knurled nut.

Step 3. Check that stylus is in contact with paper chart.

If stylus is bent, damaged or defective, notify unit maintenance.

**Table 3-1. Operator Troubleshooting Instructions - Continued**

**4. TEMPERATURE INSIDE CONTAINER WILL NOT STABILIZE.**

Step 1. Check for improperly stacked cargo inside container.

Restack cargo as required so that:

a. Cargo does not block refrigeration unit evaporator coil (on container front wall).

b. Cargo is stacked no higher than one foot from container ceiling.

c. Air can circulate between cargo and container side walls.

Step 2. Check for open or unlatched rear doors.

Close and latch doors.

Step 3. Check for loose escape door.

Open rear doors.

Tighten escape door handles.

Step 4. Inspect rear doors for damaged or missing seals.

If doors are damaged or defective, notify unit maintenance.

Step 5. Check operation of refrigeration unit (TM 9-4110-258-13).

Troubleshoot refrigeration unit malfunctions in accordance with TM 9-4110-258-13.

Step 6. Check generator set for proper power output (TM 5-6115-585-12/34).

Troubleshoot generator set malfunctions in accordance with TM 5-6115-585-12/34.

**5. GENERATOR SET NOT OPERATING PROPERLY.**

Troubleshoot generator set malfunctions in accordance with TM 5-6115-585-12/34.

## Section III. OPERATOR MAINTENANCE PROCEDURES

a. There are no operator maintenance task requirements on the refrigerated container.

b. Refer to TM 9-4110-258-13 for operator maintenance procedures applicable to the refrigeration unit.

c. Refer to TM 5-6115-585-12/34 for operator maintenance procedures applicable to the generator set.

# CHAPTER 4

## UNIT MAINTENANCE INSTRUCTIONS

## Section I. LUBRICATION INSTRUCTIONS

There are no lubrication requirements for the refrigerated container. Refer to the generator set (TM 5-6115-585-12) and refrigeration unit (TM 9-4110-258-13) for lubrication instructions.

## Section II. REPAIR PARTS, TOOLS, SPECIAL TOOLS; TEST, MEASUREMENT, AND DIAGNOSTIC EQUIPMENT (TMDE); AND SUPPORT EQUIPMENT

### 4-1. COMMON TOOLS AND EQUIPMENT.

4.1.1 For authorized common tools and equipment, refer to the Modified Table of Organization and Equipment (MTOE), CTA 5-970, or CTA 8-100, as applicable to your unit.

4.1.2 The General Mechanics Tool Kit (SC 5180-90-CL-N26) will be used for all maintenance tasks. Any additional tools required for an individual maintenance task will be identified in the setup information for that task.

### 4-2. SPECIAL TOOLS, TMDE, AND SUPPORT EQUIPMENT.

4.2.1 The Repair Parts and Special Tools List (RPSTL) (TM 55-8145-202-24P) as well as the Maintenance Allocation Chart (MAC) (Appendix B) identify any tools and support equipment needed to maintain the refrigerated container.

4.2.2 There are no special or fabricated tools required to maintain the refrigerated container.

### 4-3. REPAIR PARTS.

4.3.1 Any mandatory replacement parts needed for the maintenance tasks are identified in the mandatory replacement parts list located in Appendix I.

4.3.2 Repair parts are listed and illustrated in the repair parts and special tools list (TM 55-8145-20224P) covering unit maintenance for this equipment.

## Section III. SERVICE UPON RECEIPT

### 4-4. SITE REQUIREMENTS.

a. Transport. The refrigerated container is designed for highway, railway and water transport of perishable materials. Load and transport the refrigerated container only on equipment compatible with MIL-VAN transport requirements.

b. Fixed Site. When operating the refrigerated container at a fixed site, select an area that is flat, level, and provides good water drainage away from container. If the refrigeration unit will be powered by an external electrical source, the refrigerated container must be located within 20 feet (6 m) of the electrical source.

c. Refrigeration Unit. Refer to TM 9-4110-258-13 for applicable refrigeration unit siting requirements.

d. Generator Set. Refer to TM 5-6115-585-12/34 for applicable generator set siting requirements.

## 4-5. SHELTER REQUIREMENTS.

The refrigerated container does not require special sheltering. If shelter is available, storing container under cover will minimize routine maintenance.

## 4-6. CHECKING UNPACKED EQUIPMENT.

a. Inspect container frame, corner posts, and upper and lower fittings for damage. Containers damaged in these areas should not be used.

b. Inspect container exterior wall panels and roof for punctures, tears, cracks, delamination of panels and loose or missing fasteners.

c. Inspect for loose, missing, or broken door hardware.

d. Inspect container interior for punctures, tears, cracks, and delamination of wall and ceiling panels.

e. Inspect container stencils, markings and information plates. All items should be clear and readable.

f. Inspect the equipment for damage incurred during shipment. If the equipment has been damaged, report the damage on SF 364, Report of Discrepancy.

g. Check the equipment against the packing slip to see if the shipment is complete. Report all discrepancies in accordance with the instructions of DA Pam 738-750.

h. Check to see if the equipment has been modified.

i. Refer to TM 9-4110-258-13 for unpacking the refrigeration unit.

j. Refer to TM 5-6115-585-12/34 for unpacking the generator set.

## 4-7. PROCESSING UNPACKED EQUIPMENT.

a. Remove all preservative coatings, grease, tape and packing materials.

b. Refer to TM 9-4110-258-13 for processing and servicing of the refrigeration unit.

c. Refer to TM 5-6115-585-12/34 for processing and servicing of the generator set.

## 4-8. INSTALLATION PROCEDURES.

### a. General.

(1) Electrical power required to operate the refrigeration unit can be supplied by the generator set or an external power source. Conversion of the refrigeration unit from one power source to the other is accomplished by changing power cable connections.

(2) A 5 foot (1.5 m) long generator power cable is supplied with the refrigerated container to connect the generator set to the refrigeration unit. A 40 foot (12 m) long power cable is supplied with the refrigeration unit for connection to an external power source or the generator set.

(3) Connect 5 foot (1.5 m) power cable (10) to generator set (9) as follows:

(4) Install cover on generator set terminal box (TM 5-6115-585-12/34).

**b. Installation.**

(1) Connect 5 foot (1.5 m) power cable (1) to refrigeration unit cable (2).

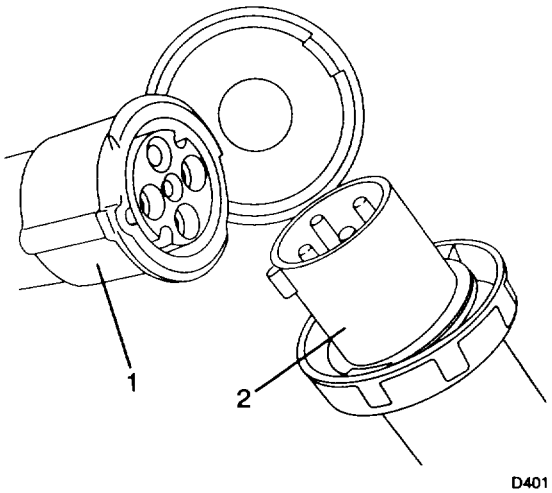


(2) Check that interior light cable is connected to 110 VAC junction box in the refrigeration unit.

**CAUTION**

**To prevent damage to refrigeration unit, stop operation immediately if fan motor runs backwards.**

(3) Service, start, and operate generator set (TM 5-6115-585-12/34).

(4) Service, start, and operate refrigeration unit (TM 9-4110-258-13).

(5) Check rotation of fan motor on refrigeration unit (TM 9-4110-258-13). If motor runs backwards, shutdown refrigeration unit (TM 9-4110-258-13) and generator set (TM 5-6115-585-12/34). Refer to refrigeration unit (TM 9-4110-258-14) and reverse input power leads.

## Section IV. UNIT PREVENTIVE MAINTENANCE CHECKS AND SERVICES (PMCS)

There are no unit preventive maintenance checks and services for the refrigerated container. Refer to generator set (TM5-6115-585-12) and refrigeration unit (TM 9-4110-258-13) for PMCS instructions.

## Section V. UNIT TROUBLESHOOTING INSTRUCTIONS

### 4-9. INTRODUCTION.

This section provides the troubleshooting information for the Refrigerated Container at the Unit Maintenance level. It consists of the symptom index, listing the most common malfunction symptoms, and the troubleshooting table, Table 4-2. This table repeats the malfunctions, and provides the procedural steps and corrective actions necessary to return the system to operational readiness.

### 4-10. TROUBLESHOOTING.

a. The troubleshooting table lists the common malfunctions which you may find during operation of the refrigerated container. You should perform the tests, inspections and corrective actions in the order they appear in the table.

b. This table cannot list all the malfunctions that may occur, all the tests or inspections needed to find the fault, or all the corrective actions needed to correct the fault. If the equipment malfunction is not listed or actions listed do not correct the fault, notify your supervisor.

c. Refer to TM 9-4410-258-13 for troubleshooting malfunctions on the refrigeration unit.

d. Refer to TM 5-6115-585-12/34 for troubleshooting malfunctions on the generator set.

### 4-11. MALFUNCTION INDEX.

## 4-12. TROUBLESHOOTING TABLE.

Refer to Table 4-1.

**Table 4-1. Unit Troubleshooting Instructions.**

**MALFUNCTION**
**TEST OR INSPECTION**
**CORRECTIVE ACTION**

**1. REAR DOORS WILL NOT CLOSE.**

Step 1. Inspect for torn, loose or damaged door seals in door closure area.

Repair rear door (para. 4-22).

Step 2. Inspect doors for bent, cracked, or worn latch handles and door locking hardware.

Repair rear door (para. 4-22).

Step 3. Inspect door for cracked, bent, or frozen hinges.

If door is damaged or defective, notify direct support maintenance.

**2. WATER WILL NOT DRAIN FROM CONTAINER FLOOR.**

Check for clogged or damaged floor drains.

Remove dirt and debris from floor drain. Open rubber drain tube under container floor.

If clog cannot be removed or drain is damaged, replace floor drain (para. 4-27).

**3. TEMPERATURE RECORDER DOES NOT RECORD OR DOES NOT RECORD PROPERLY.**

Step 1. Check for loose thermometer element coupling at temperature recorder.

Tighten thermometer element screws on bottom of temperature recorder.

Test and adjust thermometer (para. 4-16).

Step 2. Check that temperature recorder stylus is in contact with paper chart.

If stylus is bent or broken, replace temperature recorder (para. 4-15).

Step 3. Inspect thermometer element sensing line for damage.

Replace thermometer element (para. 4-16).

Step 4. Inspect thermometer bulb (mounted on container front wall) for damage.

Replace thermometer element (para. 4-16).

**4. TEMPERATURE INSIDE CONTAINER WILL NOT STABILIZE.**

Check operation of refrigeration unit (TM 9-4110-258-13).

Troubleshoot refrigeration unit malfunctions in accordance with TM 9-4110-258-13.

**4-12. TROUBLESHOOTING TABLE - Continued**

**5. GENERATOR SET NOT OPERATING PROPERLY.**

Check generator set for proper power output (TM 5-6115-585-12/34).

Troubleshoot generator set malfunctions in accordance with TM 5-6115-585-12/34.

## Section VI. UNIT MAINTENANCE PROCEDURES

---

**4-13. MANUAL HOLDER.**

---

This task covers: a. Removal b. Disassembly c. Cleaning d. Inspection e. Repair f. Assembly g. Installation

---

INITIAL SET-UP:

*Tools:*
General Mechanics Tool Kit (Item 1, App B)
Automotive Vehicle Shop Set (Item 2, App B)

*Materials/Parts:*
Pop Rivets (4) (Item 11, App E)
Gasket (Item 1, App H)
Adhesive (A/R) (Item 1, App E)
Dry-cleaning solvent (Item 7, App E)
Wiping rag (Item 6, App E)
Pop Rivets (10) (Item 12, App E)

---

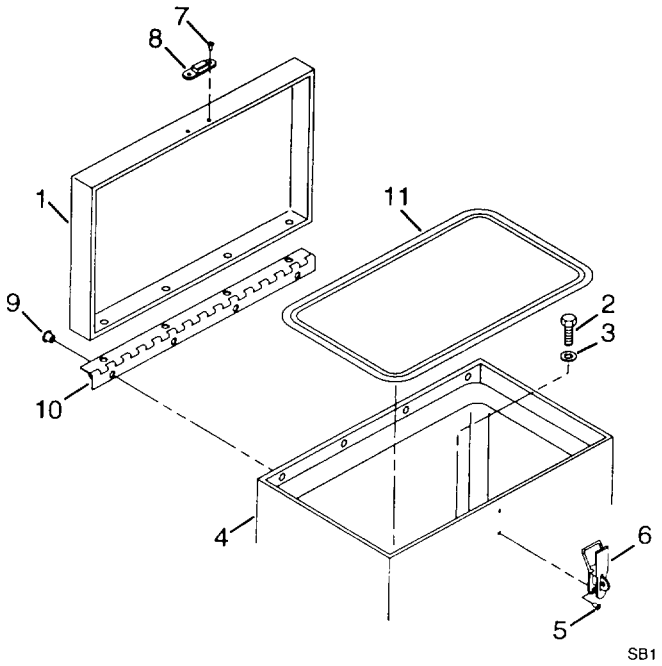

## 4-13. MANUAL HOLDER - Continued

**a. Removal.**

(1) Unfasten latch and open cover (1).

(2) Remove four cap screws (2), washers (3) and box (4) from container wall.

**b. Disassembly.**

**NOTE**

**Disassemble components only to the level required to perform repair.**

(1) Using drill and bit, remove two rivets (5) and separate latch (6) from box (4).

(2) Using drill and bit, remove two rivets (7) and separate latch hook (8) from cover (1).

(3) Using drill and bit, remove ten rivets (9), hinge (10) and cover (1) from box (4).

(4) If necessary, remove gasket (11) from box (4).

**c. Cleaning.**

**WARNING**

**To prevent injury to personnel and damage to equipment, use dry cleaning solvent only in well ventilated areas. Avoid repeated or prolonged contact with skin. Do not use near sparks, open flame or excessive heat.**

(1) Clean all parts with dry cleaning solvent.

(2) Wipe parts dry with wiping rag.

**d. Inspection.**

(1) Inspect box (4) and cover (1) for cracks.

(2) Inspect latched parts (6 and 8) for cracks.

**e. Repair**. Replace defective components.

**f. Assembly.**

(1) Apply adhesive to gasket surface of box (4).

(2) When adhesive becomes tacky, press gasket (10) in place on box (4).

(3) Using rivet tool, install latch hook (8) on cover (1) with two rivets (7).

(4) Using rivet tool, install latch (6) on box with two rivets. (5).

(5) Using rivet tool, install cover (1) on box (4) with ten rivets (9).

**g. Installation.**

(1) Position box (4) on container wall and install four cap screws (2) and washers (3).

(2) Close cover (1) on box (4) and fasten latch.

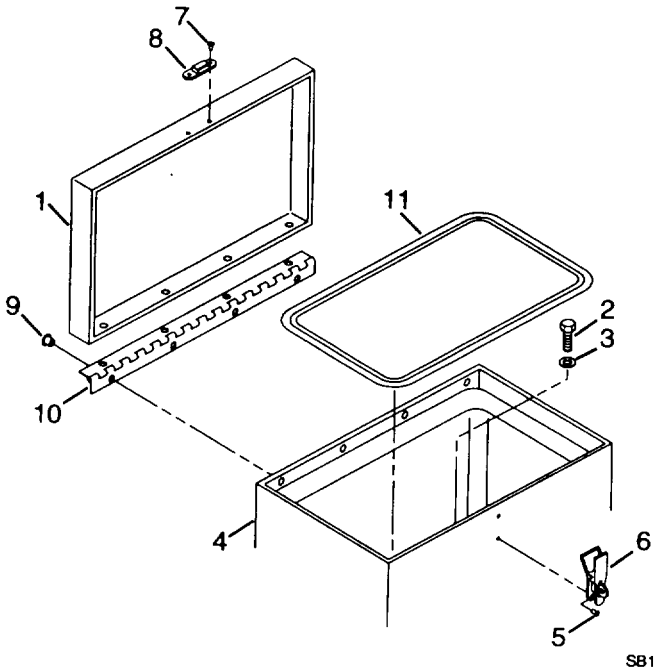


## 4-14. IDENTIFICATION PLATE.

This task covers: a. Removal b. Installation

INITIAL SET-UP:

*Tools:*
General Mechanics Tool Kit (Item 1, App B)

*Materials/Parts:*
Pop Rivet (Item 13, App E)

**NOTE**

**This procedure applies to all identification plates.**

**a. Removal.**

(1) Remove four drive rivets (1) from identification plate (2).

(2) Remove identification plate (2).

**b. Installation.**

(1) Position identification plate (2).

## 4-14. IDENTIFICATION PLATE - Continued

(2) Align mounting holes in identification plate (2). Install four drive rivets (1) and identification plate (2).

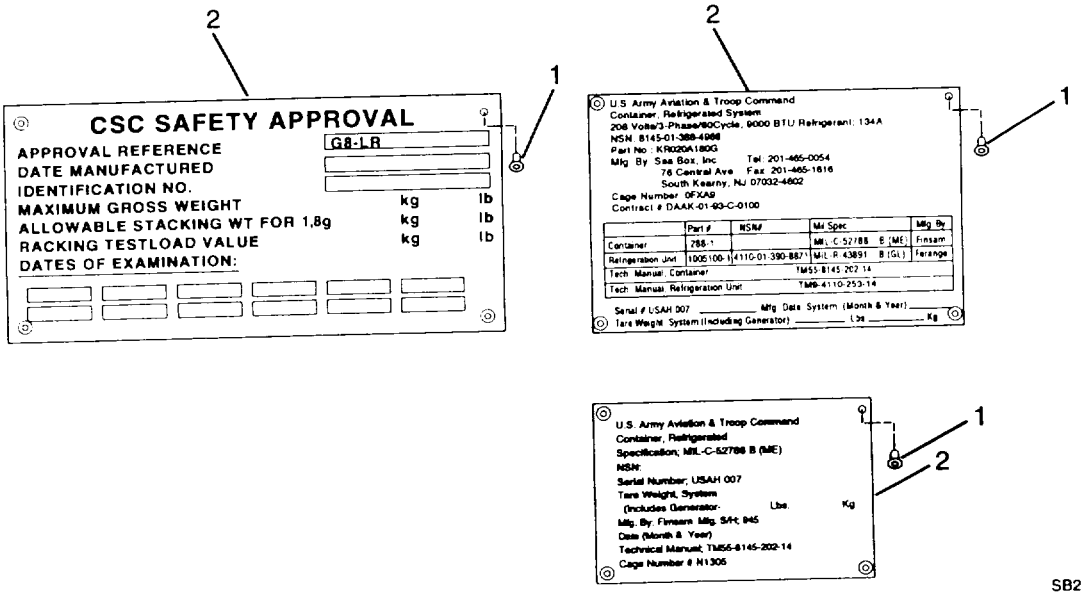


## 4-15. TEMPERATURE RECORDER (THERMOMETER) REPLACEMENT.

This task covers: a. Removal b. Installation c. Adjustment

INITIAL SET-UP:

*Tools:*
General Mechanics Tool Kit (Item 1, App B)

*Equipment Condition:*
Refrigeration unit shutdown (TM 9-4110-258-13)
Generator set shutdown (TM 5-6115-585-12/34)

*Materials/Parts:*
Lockwashers (4) (Item 13, App H)
Locknuts (4) (Item 14, App H)

### a. Removal.

**CAUTION**

**To prevent damage to sensing element, do not bend or kink element tubing.**

(1) Remove two screws (1) from thermometer element (2) from temperature recorder (3).

(2) Remove four cap screws (4), lock nuts (5) and temperature recorder (3) from container.

(3) Remove four cap screws (6), lockwashers (7) and L-brackets (8) from temperature recorder (3).

**b. Installation.**

(1) Install four L-brackets (8), lockwashers (7) and cap screws (6) on temperature recorder (3).

(2) Position temperature recorder (3) and attach with four caps screws (4) and lock nuts (5).

(3) Install thermometer element (2) on temperature recorder (3) with two screws (1).

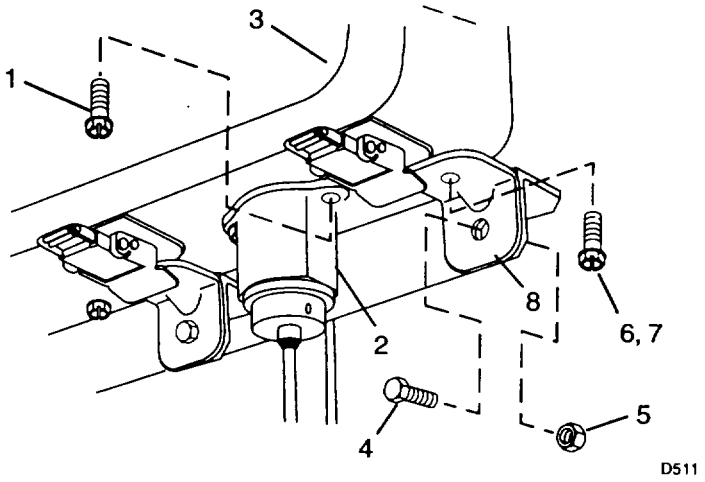


**NOTE**

**FOLLOW-ON MAINTENANCE**
**Adjust temperature recorder (para. 4-16).**

---

## 4-16. THERMOMETER ELEMENT.

This task covers: a. Testing b. Adjustment c. Removal d. Installation

INITIAL SET-UP:

*Tools:*
General Mechanics Tool Kit (Item 1, App B)
Refrigeration Unit Service Tool Kit (Item 4, App B)

*Equipment Condition:*
Refrigeration unit shutdown (TM 9-4110-258-13)
Generator set shutdown (TM 5-6115-585-12/34)

---

**a. Testing.**

(1) Position test thermometer next to thermometer element bulb (1).

**4-16. THERMOMETER ELEMENT - Continued**

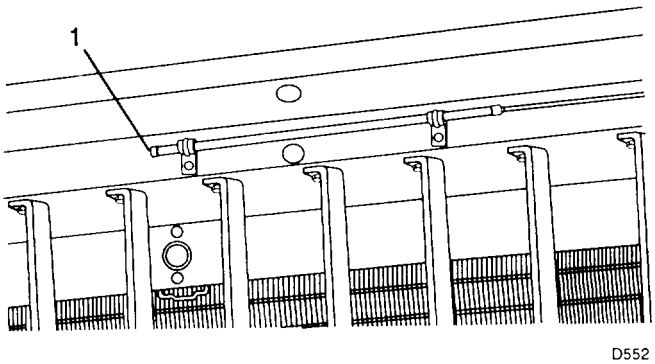


(2) Close container doors.

(3) Allow time (20 minutes minimum) for temperature to stabilize inside container.

(4) Compare indication on temperature recorder paper chart with temperature indicated by test thermometer.

(5) If temperature indications on test thermometer and temperature recorder are not within ±2°F, temperature recorder must be adjusted.

**b. Adjustment.**

(1) Unfasten two latches (2) and open cover (3).

(2) Loosen setscrew (4).

**NOTE**

**Turning pinion shaft left (counterclockwise) raises temperature indication. Turning pinion shaft right (clockwise) lowers temperature indication.**

(3) Turn pinion shaft (5) as required to match temperature recorder indication with test thermometer indication.

(4) Tighten setscrew (4).

(5) Close cover (3) and fasten two latches (2).

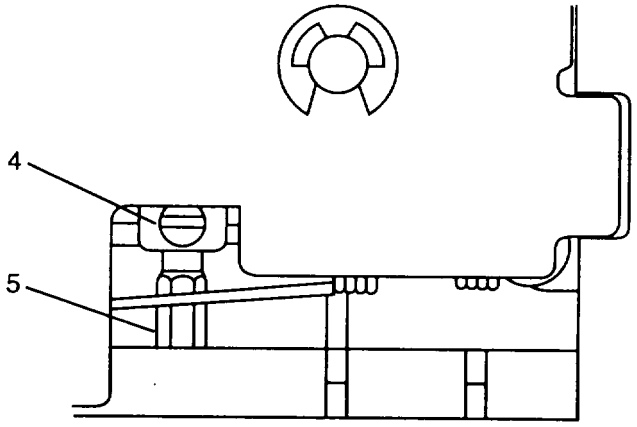


SB27

**c. Removal.**

(1) Remove two screws (6) from thermometer element (7).

**CAUTION**

**To prevent damage to thermometer element, do not bend or kink element tubing.**

(2) Separate thermometer element (7) from temperature recorder (8).

(3) Remove two sheet metal screws (9) and clamps (10) from element bulb (11).

**NOTE**

**Element bulb must be pushed through wall grommet to remove from inside container thermometer element.**

(4) Remove element tubing (12) with bulb (11) and push through wall grommet (13).

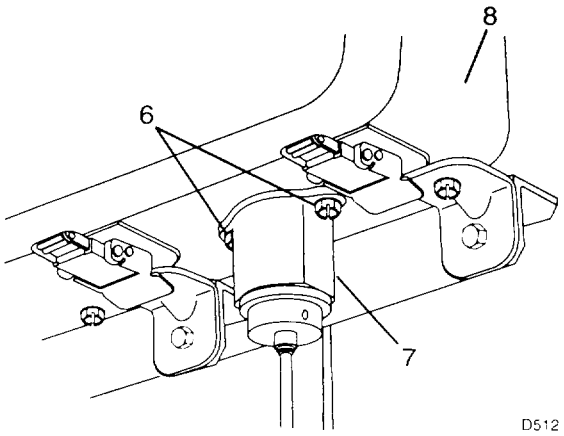


D512

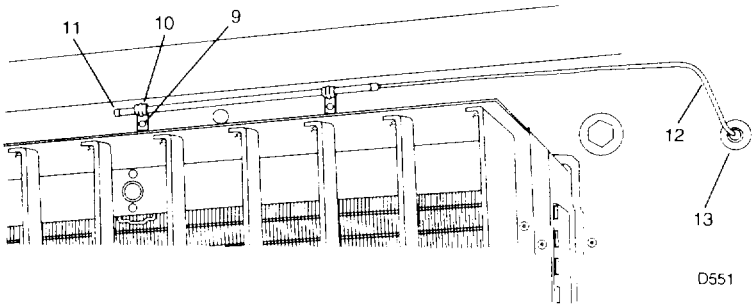


D551

## 4-16. THERMOMETER ELEMENT - Continued

### d. Installation.

**CAUTION**

**To prevent damage to thermometer element, do not bend or kink element tubing.**

(1) Carefully push element bulb (11) and tubing (12) through wall grommet (13). Carefully bend tubing to position bulb on container wall.

(2) Install two clamps (10) on element bulb (11) and secure two sheet metal screws (9).

(3) Position thermometer element (7) on temperature recorder (8).

(4) Install two screws (6) on thermometer element (7).

**NOTE**

**FOLLOW-ON MAINTENANCE**
**Adjust temperature recorder (para 4-16)**

---

## 4-17. FUEL TANK AND CONNECTIONS.

---

This task covers: a. Removal b. Disassembly c. Cleaning d. Inspection e. Repair f. Assembly g. Installation

---

INITIAL SET-UP:

*Tools:*
General Mechanics Tool Kit (Item 1, App B)

*Equipment Condition:*
Refrigeration unit shutdown (TM 9-4110-258-13)
Generator set shutdown (TM 5-6115-585-12/34)

*Materials/Parts:*
Lock nut (2) (Item 3, App H)
Lockwasher (5) (Item 2, App H)
Gasket (Item 4, App H)
Dry cleaning solvent (Item 7, App E)
Wiping rag (Item 6, App E)

---

### a. Removal.

**WARNING**

**To prevent injury to personnel, damage to equipment, or fire make sure fuel tank is empty before working on fuel tank.**

**NOTE**

**Fuel line is not supplied with container. Refer to TM 5-6115-58512/34 for specific fuel line maintenance instructions.**

(1) Disconnect fuel line (1) from elbow (2). Cap elbow (2) and plug fuel line.

(2) Remove two lock nuts (3) and machine screws (4) from the top two straps (5). Remove four nuts (6) on front of straps.

(3) Separate straps (5) from tank (7).

(4) Remove fuel tank (7) and attached parts from frame (8).

**b. Disassembly.**

(1) Remove cap (9) from fuel tank (7).

(2) Remove elbow (2) and reducer (10) from fuel tank (7).

(3) Remove five screws (11) and lockwashers (12) from fuel gage (13).

(4) Carefully remove fuel gage (13) and gasket (14) from fuel tank (7).

(5) Remove plug (15) from top of fuel tank (7).

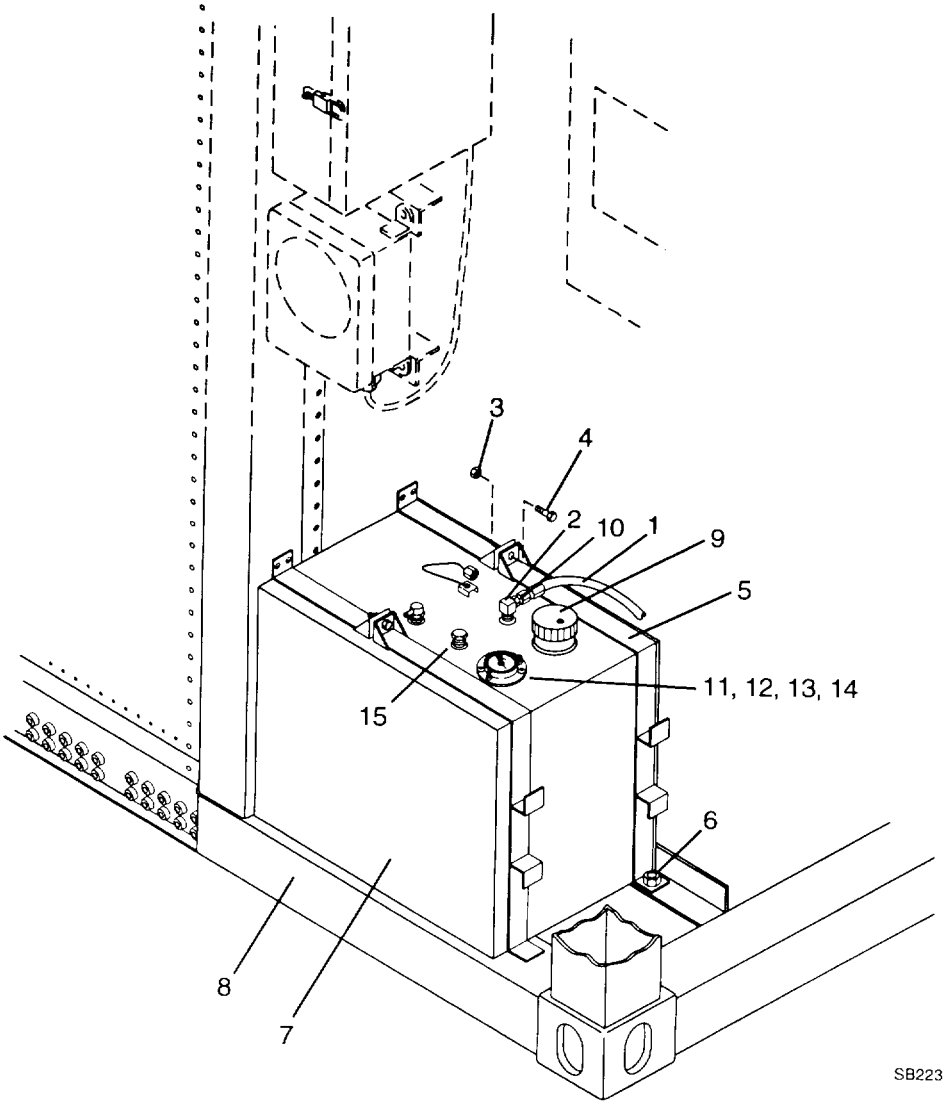

## 4-17. FUEL TANK AND CONNECTIONS - Continued

**c. Cleaning.**

**WARNING**

**To prevent injury to personnel and damage to equipment, use dry cleaning solvent only in well ventilated areas. Avoid repeated or prolonged contact with skin. Do not use near sparks, open flame or excessive heat.**

(1) Clean components with dry cleaning solvent and wiping rag. Pay close attention to inside of tank.

(2) Dry components with wiping rag.

**d. Inspection.**

(1) Inspect fuel tank (7) for cracks, punctures and pin holes caused by corrosion.

(2) Inspect straps (5) for cracks.

(3) Inspect machine screws (4) and nuts (3) for stripped threads.

(4) Inspect fuel gage (13) for cracks and deformed or worn components.

**e. Repair**. Replace defective components.

**f. Assembly.**

(1) Install plug (15) on top of fuel tank (7).

(2) Install gasket (14) and fuel gage (13) on fuel tank (7).

(3) Install five lockwashers (12) and screws (11) to secure fuel gage (13).

(4) Install reducer (10) and elbow (2) on fuel tank (7).

(5) Install cap (9) on fuel tank (7).

g. Installation.

**NOTE**

**Fuel line is not supplied with container. Refer to TM 5-6115-58512/34 for specific fuel line maintenance instructions.**

(1) Separate straps (5) and lift fuel tank (7) with attached parts onto frame (8).

(2) Install two machine screws (4) and two lock nuts (3) on the top two straps.

(3) Remove cap and plug and connect fuel line (1) on elbow (2).

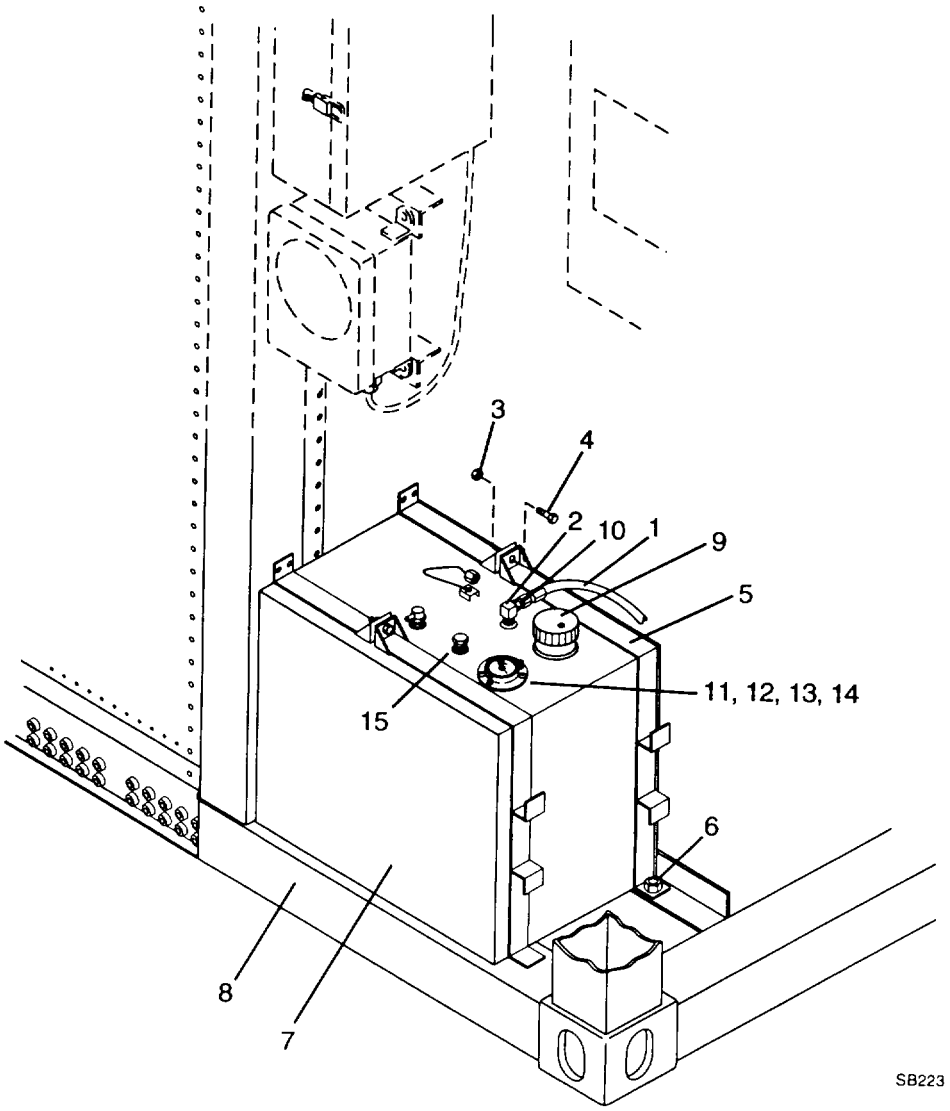
3
4
2
10
1
9
5
11, 12, 13, 14
15
6
8
7
SB223

## 4-18. EXHAUST LINES.

This task covers: a. Removal b. Installation

INITIAL SET-UP:

*Tools:*
General Mechanics Tool Kit (Item 1, App B)

*Equipment Condition:*
Refrigeration unit shutdown (TM 9-4110-258-13)
Generator set shutdown (TM 5-6115-585-12/34)

### a. Removal.

**WARNING**

**To prevent injury to personnel, allow generator set and exhaust lines to cool before removal.**

(1) Disconnect exhaust couplings (1 and 2) from generator set (TM 5-6115-585-12/34).

(2) Remove two nuts (3), cap screws (4), and exhaust assembly from container.

(3) Remove six cap screws (5) and remove anti-burn guard (6) from exhaust stack.

(4) Loosen nut (7) and remove rain cap (8) from exhaust stack.

### b. Installation.

(1) Place rain cap (8) on top of the exhaust stack and tighten nut (7).

(2) Install the anti-burn guard (6) on the exhaust stack and with six cap screws (5).

(3) Position exhaust assembly on container wall. Install two cap screws (4), and nuts (3), to secure exhaust assembly.

(4) Connect exhaust couplings (1 and 2) to the generator set (TM 5-6115-585-12/34).

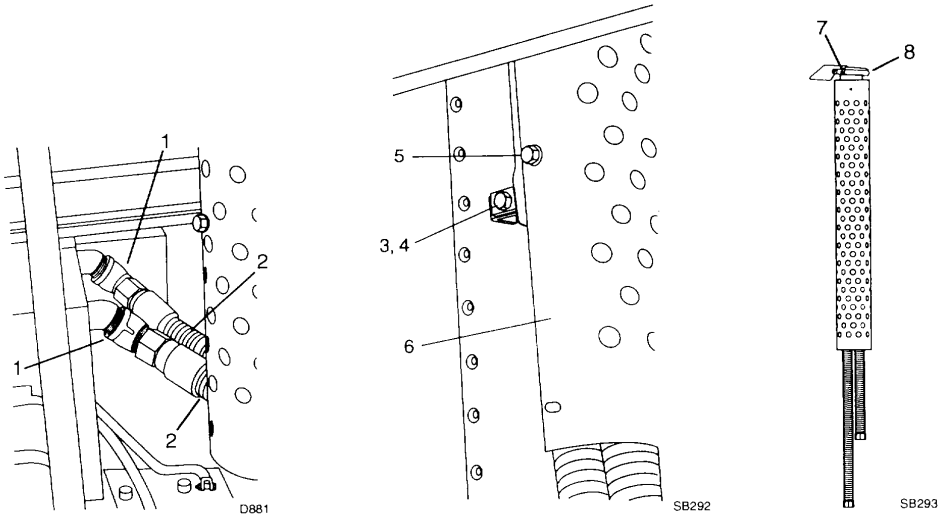

## 4-19. LADDER.

This task covers: a. Removal b. Disassembly c. Assembly d. Installation

INITIAL SET-UP:

*Tools:*
General Mechanics Tool Kit (Item 1, App B)

MATERIALS/PARTS:

Pop Rivet (15) (Item 14, App E)
Lockwasher (Item 5, App H)
Lock Nut (Item 6, App H)
Lock Nut (Item 7, App H)
Lock Nut (Item 8, App H)

**a. Removal.**

**WARNING**

**Ladder assembly is heavy/difficult to handle. Use two personnel when removing ladder.**

(1) Remove two nuts (1), lockwashers (2) and capscrews (3) at bottom of ladder (4).

(2) Support ladder (4). Remove two nuts (5), lockwashers (6) and capscrews (7) at top of ladder.

(3) Remove ladder (4).

(4) Remove two nuts (8), lockwashers (9) and capscrews (10) from folding ladder section (11).

**b. Disassembly.**

(1) On fixed ladder (4) remove nut (12) and screw (13) securing retainer (14).

(2) Remove three rivets (15) and retainer bracket (16).

(3) On folding ladder (11) remove two rivets (17) and retainer clip (18).

(4) Remove four nuts (19), machine screws (20) and two plates (21).

**c. Assembly.**

(1) On folding ladder (11) secure two plates (21) to left hand side of ladder with four machine screws (20) and nuts (21).

(2) Install retainer clip (18) with two rivets (17).

(3) On fixed ladder (4) install retainer bracket (16) with three rivets (15).

(4) Position retainer (14) in bracket (16) and install screw (13) and nut (12).

**4-19. LADDER - Continued**

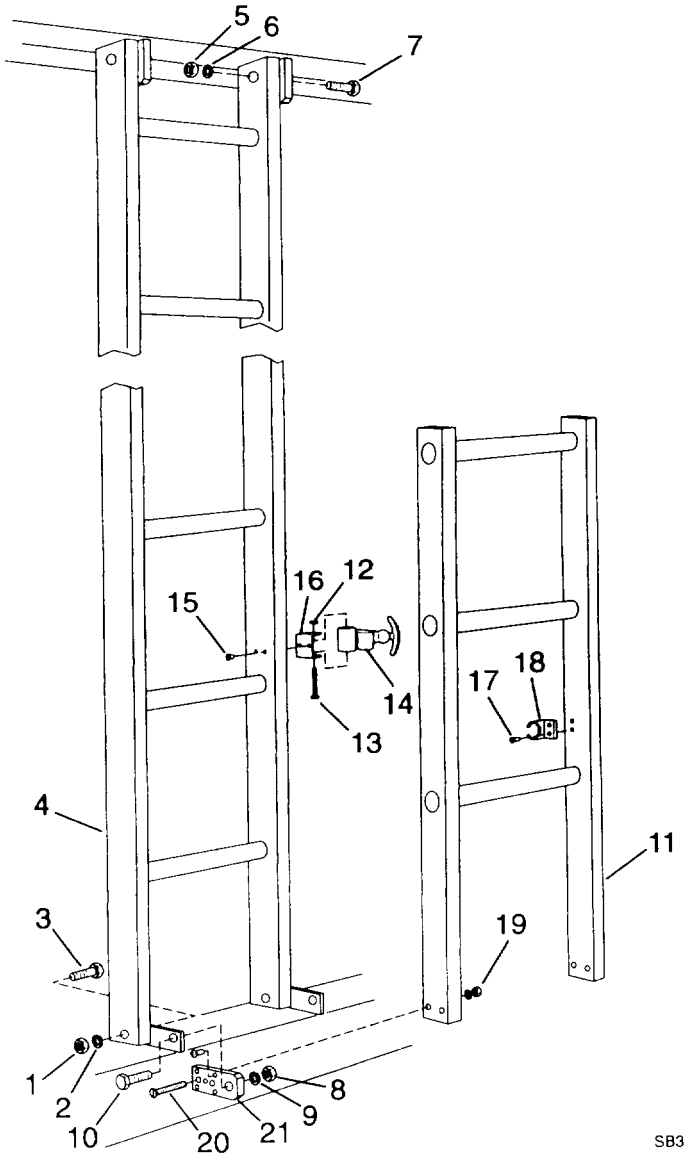


**d. Installation.**

**WARNING**

**Ladder assembly is heavy/difficult to handle. Use two personnel when installing ladder.**

(1) Place ladder (4) into position on the container frame (6).

(2) Support ladder (4). Install two capscrews (7), lockwashers (6) and nuts (5) to secure top of ladder.

(3) Install two capscrews (3), lockwashers (2) and nuts (1) at bottom of ladder (4).

## 4-20. CABLE, ELECTRIC POWER (GEN SET)

This task covers: a. Removal b. Disassembly c. Cleaning d. Inspection e. Repair f. Assembly

INITIAL SET-UP:

*Tools:*
General Mechanics Tool Kit (Item 1, App B)
Electrical Repair Kit (Item 2, App B)

*Equipment Condition:*
Refrigeration unit shutdown (TM 9-4110-258-13)
Generator set shutdown (TM 5-6115-585-12/34)

*Materials/Parts*:
Wiping rag (Item 6, App E)

**a. Removal.**

(1) Remove generator set (para. 4-37).

(2) Tag and disconnect cable wires at terminal box on generator set (TM 5-6115-585-12)

**b. Disassembly.**

(1) Remove two screws (1) and cord clamps (2) from gland cap (3).

(2) Remove two screws (4) and gland cap (3) from housing (5).

(3) Loosen self-tapping screws (6), to release terminal block (7) from housing (5).

(4) Pull the terminal block with wiring (8) from the housing (5). Loosen the four terminal screws (9). Tag disconnected wiring (8).

(5) Pull terminal block (7) from housing and gland (11), and slide the housing (4) off the cable (10).

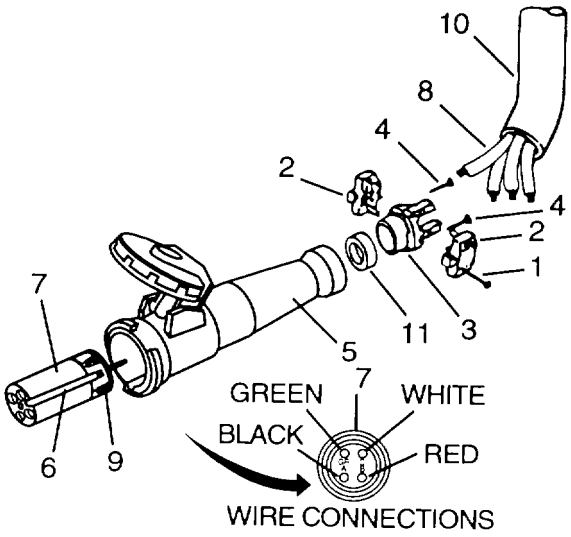

## 4-20. CABLE, ELECTRIC POWER - Continued

### c. Cleaning.

Wipe dirt, grease, oil and contaminants from cable using wiping rag.

### d. Inspection.

(1) Inspect power cable (10) insulation for cuts, tears, cracks and deep scratches.

(2) Inspect wiring (8) for cut, tom or burned insulation.

(3) Inspect housing (5) gland cap (3) and cord clamp (2) for cracks.

(4) Inspect terminal block (7) for cracks, corrosion and missing terminal screws (9).

(5) Inspect gland (11) for cracks, tears and deterioration.

### e. Repair.

**NOTE**

**If any connector component is defective, replace entire connector.**

Replace defective components.

### f. Assembly.

(1) Slide gland cap (3) up on cable (10).

(2) Slide gland (11) up the cable (10).

(3) Slide the housing (5) up on the cable (10).

(4) If required, strip cable (10) jacket six inches and each conductor wire (8)1/2 inch. Remove tags and insert wiring (8) to terminal block (7) and tighten terminal screws (9).

(5) Align terminal block (7) with housing (5) and push block into housing.

(6) Secure terminal block (7) to housing (5) by tightening two self tapping screws for terminal block (6) until terminal block is firmly seated in housing. Screws may continue to turn after terminal block is seated. This is normal and harmless.

(7) Slide gland (11) and gland cap (3) down cable (10) to housing and tighten self tapping screws (4) for gland cap until gland clamp is flush with housing. Assemble cord clamps (2) and tighten cord clamp screws (1).

(8) Connect power 5' cable to generator set (TM 5-6115-585-12/34).

## 4-21. LIGHT ASSEMBLY.

| This task covers: | a. Removal | b. Disassembly | c. Cleaning | d. Inspection |
|---|---|---|---|---|
| | e. Repair | f. Assembly | g. Installation | |

INITIAL SET-UP:

*Tools:*
General Mechanics Tool Kit (Item 1, App B)

*Equipment Condition:*
Refrigeration unit shutdown (TM 9-4110-258-13)
Generator set shutdown (TM 5-6115-585-12/34)

*Materials/Parts:*
Wiping rag (Item 6, App E)
Rivet (Item 15, App E)

**a. Removal.**

(1) Loosen screw (1) and remove guard (2) from fixture base (3).

(2) Unscrew globe (4) and remove gasket (5).

(3) Unscrew bulb (6).

**b. Disassembly.**

**NOTE**

**Disassemble components only to the level required to perform repair.**

(1) Remove two screws (7) from fixture base (3).

(2) Tag three wires (8). Remove three screws (9) to disconnect wires.

(3) Remove gasket (10) from junction box (11).

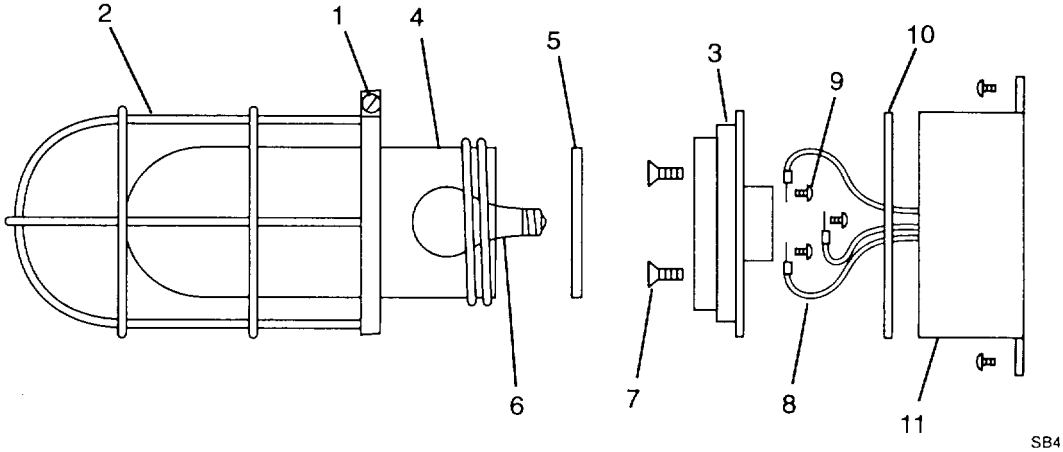


(4) Remove the two outer screws (12) and switch cover (13) from box (14).

(5) Tag and disconnect wiring (15) from switch (16).

(6) Remove two screws (17) to remove switch (16) from switch cover (13).

**4-21. LIGHT ASSEMBLY - Continued**

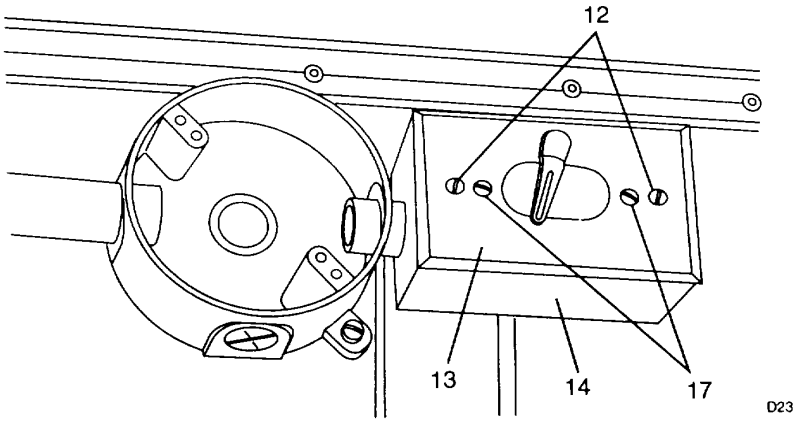


(7) Tag and disconnect wire (18).

(8) If necessary, loosen fitting (19) at outside, front of container and pull wiring (20) as far as needed.

(9) Remove five screws (21) and clamps (22) securing conduit (23).

(10) Remove two screws (24) from fixture base (25). Lower assembled components from container wall.

(11) Unscrew switch box (26) from base (25).

(12) Unscrew base (25) from conduit (23).

(13) Unscrew conduit (23) from coupling(s) (27) as required.

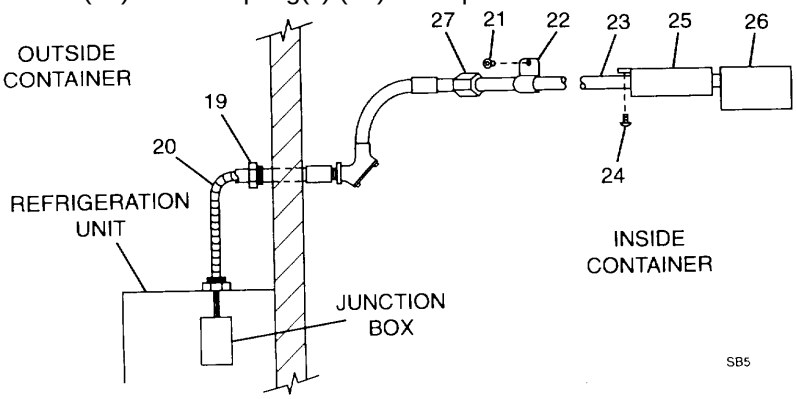


**c. Cleaning**. Remove dirt from all components using clean wiping rag.

**d. Inspection.**

(1) Inspect globe (4) for cracked or broken glass.

(2) Inspect switch (16) for sign of overheating, shorting, and corrosion.

(3) Inspect wiring (20) for cut, burned, or deteriorated insulation.

(4) Inspect conduit (23) for corrosion.

**e. Repair**. Replace defective components.

(1) Install new switch (16) and secure with two screws (17) on switch cover (13).

**f. Assembly.**

(1) Pull wire through front of container and through conduit sections and couplings.

(2) Screw in conduit (23) to coupling(s) (27) as required.

(3) Screw base (25) into conduit (23).

(4) Screw switch box (26) into fixture base (25).

(5) Raise assembled components to container wall and insert two screws (24) into fixture base (25).

(6) Secure the conduit (23) using the clamps removed during disassembly (22) and screw in using the five screws (21) previously removed during disassembly.

(7) If necessary, loosen fitting (19) at outside, front of container and pull wiring (20) out as far as is necessary.

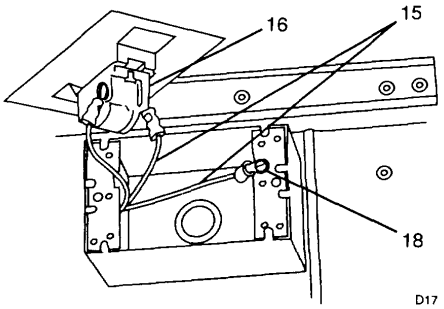


(8) Remove tag and reconnect ground wire (18).

(9) Reconnect wires (15) to switch (16).

(10) Reattach switch (16) to switch cover (13) using the two screws (17) removed during disassembly.

(11) Carefully repack the wires into the switch box and mount the switch cover (13) on the switch box (14) using the two screws (12) removed during disassembly.

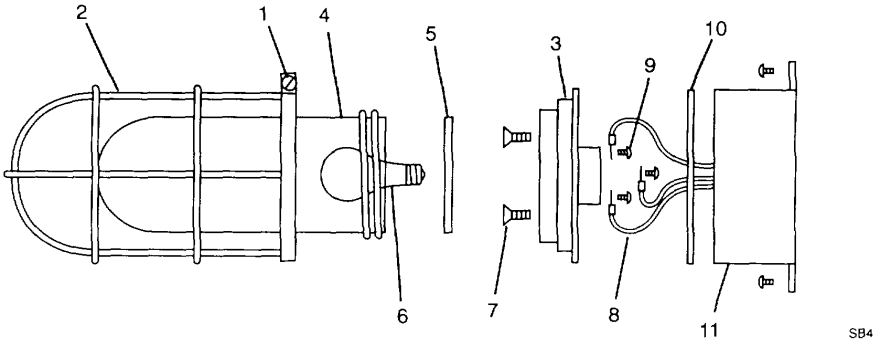


(12) Replace the gasket (10) on the junction box (11).

(13) Reattach the three wires (8) to the fixture base (3) using the three screws (9) which were removed during disassembly.

(14) Reattach the fixture base (3) to the junction box (11) using the two screws (7) removed during disassembly.

**g. Installation.**

(1) Install bulb (6) by screwing into fixture.

(2) Install gasket (5) and globe (4) on fixture (3).

(3) Install guard (2) on fixture (3) and tighten using screw (1)

## 4-22. REAR DOORS.

This task covers: a. Repair b. Removal c. Installation

INITIAL SET-UP:

*Tools:*
General Mechanics Tool Kit (Item 1, App B)
Automotive Vehicle Shop Set (Item 2, App B)

*Equipment Condition:*
Refrigeration unit shutdown (TM 9-4110-258-13)
Generator set shutdown (TM 5-6115-585-12/34)
Detergent (Item 2, App E)

*Materials/Parts:*
Rivet (Item 16, App E)
Adhesive (A/R) (Item 1, App E)
Wiping rag (Item 6, App E)
Foam (Item 4, App E)
Barrier Tape (Item 3, App E)
Sealant (Item 8, App E)

**NOTE**

**Repair to the right door is shown, left door repair is similar.**
**Exterior door panel repairs have the following limitations:**

- **No welding of aluminum patches.**
- **If a patch would cover more than 75% of door panel, replace the entire door.**
- **If damage extends to within 2 inches (50 mm) of the edge of the panel, the overlay patch must extend to the panel edge Use original fastener holes and original overlapping pattern.**

**NOTE**

- **Replacement panels and patches must be made from aluminum material of the same thickness and specification as the damaged panel. Use prepainted patches when appropriate.**
- **Wet or damaged foam must be replaced before patching or installing a replacement panel.**
- **Aluminum patches should be cleaned and coated with adhesive primer before application. The part of panel to be overlapped by the patch must also be cleaned and coated with adhesive primer before the patch is applied.**
- **Patches must adhere to the underlying foam with solvent-free polyurethane adhesive.**
- **Patches must be properly riveted to the remaining panel.**
  **Rivets must be of a weather-resistant type.**
- **Minimum rivet diameter is 3/16 inch (4.5 mm).**

**a. Repair: Mid-Panel Patch Overlay.**

(1) Flatten the panel surface to remove distortion, wrinkles and creases. If necessary, cut away damage until the surface is flat, leaving a smooth hole with even edges.
(2) Check foam insulation for moisture and damage. If foam is damaged, cut out damaged portion notify Direct Support Maintenance.
(3) Prepare a rectangular patch with rounded corners to overlap the damaged area by 2 inches (50 mm) on all sides. The patch material must be of the same specification as the damaged panel, and pre-painted if the damaged panel is painted. Clean and sand the portion of panel to be overlapped.
(4) If the patch is to be fitted over rivets securing a side post in place, remove the rivets to be covered by the patch. Measure the diameter of the holes and the distance (pitch) between rivets.
(5) Center patch over damage and drill four holes, one in each corner of the patch, 1/2 inch (13 mm) from the edge. To reduce damage to the foam insulation, use a stop on the drill bit to limit depth of drill to 3/4 inch (20 mm).
(6) Secure the patch with clips or clamps and drill remaining holes around the border of the patch. Holes should be on 1 inch (25 mm) centers, 1/2 inch (13 mm) from the edge.
(7) Remove the patch. De-burr the holes. Apply foam adhesive primer to the inside of the patch.
(8) Apply a continuous bead of sealant to the patch between the line of rivet holes and the edge; OR use adhesive tape around the inner perimeter of the patch. The tape must be mitered or overlap at the corners of the patch. Tape should be measured to reach all edges of the patch.
(9) Position patch, align holes and smooth patch to expel excess sealant. Rivet patch using appropriate rivets meeting requirements in the corners of the patch, and blind fasteners around the rest. On larger patches, it may be necessary to support the patch with a piece of wood, pressing firmly until the adhesive is cured.
(10) If tape was used, trim any excess. Be careful not to score paint. Replace decals if damaged. If drive rivets were used, coat with sealant.

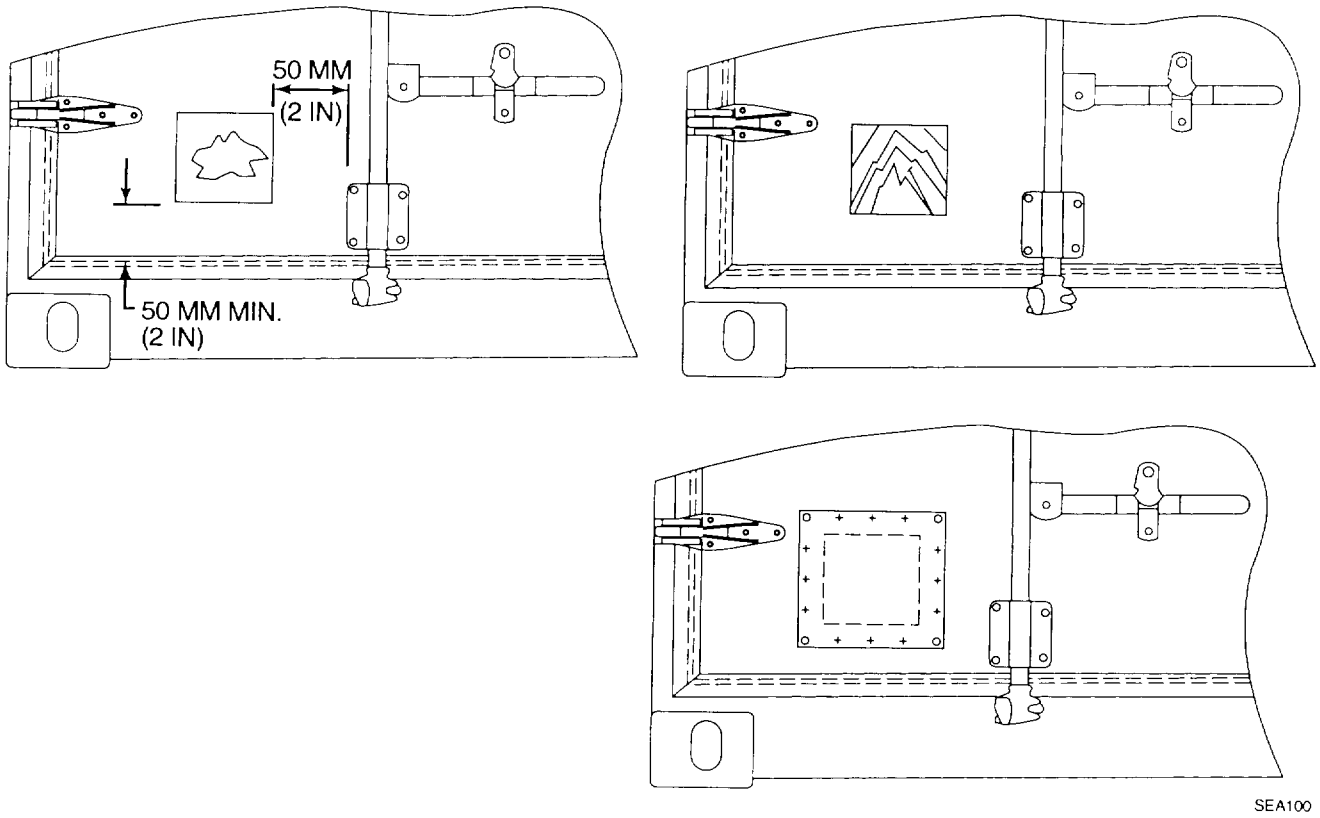

**4-22. REAR DOORS - Continued**

**b. Removal of Inner Lining.**

(1) Open doors, remove hinge pins (1) and remove door (2) if necessary. Remove rivets (3) securing gasket keeper (4) and gaskets (5), as well as rivets (6) securing PVC extrusion to door frame. Remove PVC extrusion on at least two sides if required. Remove old sealant in the extrusion grooves.

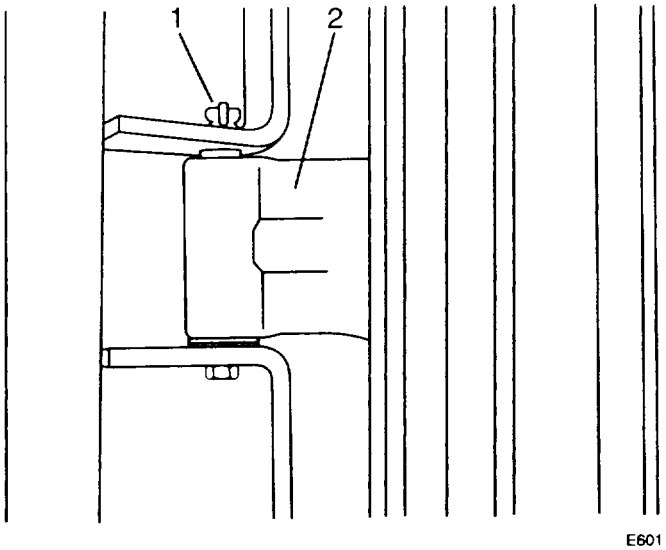


(2) Remove inner lining (7) from foam insulation. Carefully examine foam insulation for damage and moisture.

**c. Installation of Inner Lining.**

(1) Apply polyurethane adhesive to replacement inner door lining (7). Install the PVC extrusion (4) if removed and rivet (3 and 6) into place.

(2) Install inner and outer gaskets. It may be necessary to moisten the gaskets and the extrusions with soapy water (Detergent) to facilitate installation.

(3) Install door (2) and hinge pins (1) if removed. Verify that the seal is tight with no light leaks.

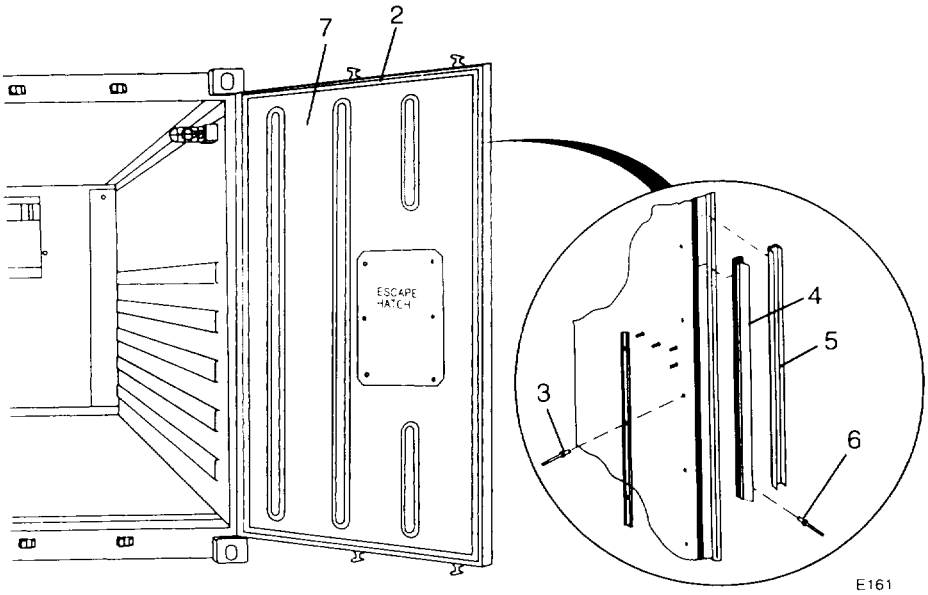

## 4-23. REPAIR OF DOOR GASKETS.

This task covers: a. Bonding b. Sectioning c. Replacement

INITIAL SET-UP:

*Tools:*
General Mechanics Tool Kit (Item 1, App B)
Refrig Tool Set
Portable Drill (Item 2, App B)
Drill Bit Set (Item 2, App B)

*Materials/Parts:*
Adhesive (Item 5, App E)
Sealant (Item 8, App E)
Rivet (Item 16, App E)

*Equipment Condition:*
Refrigeration unit shutdown (TM 9-4110-258-13)
Generator set shutdown (TM 5-6115-585-12/34)

**CAUTION**

**The repair methods described in this manual for door gaskets require the use of an adhesive. Cyanoacrylate adhesives are recommended for binding door gasket material. Other types of adhesives may also be acceptable.**

**CAUTION**

**Cyanoacrylate adhesives will bond skin or clothing upon contact. Read and observe all manufacturer's cautionary information and instructions.**

**a. Bonding.**

Door gaskets that are cut may be repaired by bonding together the cut edges of the gasket providing that no gasket material is missing and the cut edges mate together.

**NOTE**

**Adhesives will not fill a void.**

(1) Roughen the cut edges of the gasket and wipe clean with detergent.

**NOTE**

**Rubbing time must be minimal because adhesive can set in 2-3 seconds.**

(2) Apply a very thin film of the adhesive to one cut edge of the gasket and immediately mate to the other cut edge spreading the adhesive by slightly rubbing the two surfaces together.

**4-23. REPAIR OF DOOR GASKETS - Continued**

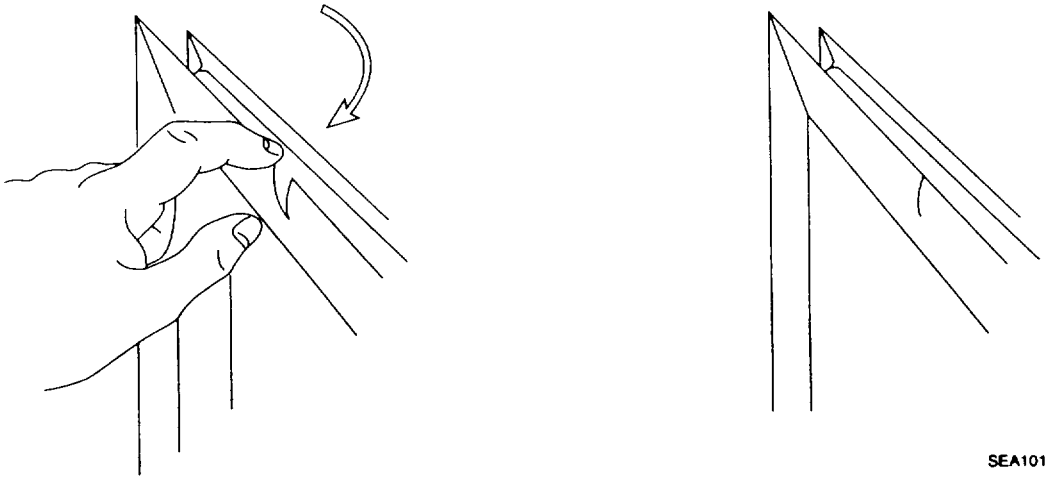


**NOTE**

**On gasket material, a bond of handling strength will usually be obtained in less than 10 seconds. A bond of 80% strength will be obtained in one hour and maximum strength, chemical and water resistance will be obtained after 12 to 24 hours cure. Cured adhesive is extremely difficult to remove but is gradually soluble in nitromethane, methyl ethyl ketone (MEK) or acetone.**

**CAUTION**

**Adhesives can bond skin or clothing upon contact. Read and observe all manufacturer's cautionary information and instructions.**

(3) Apply light pressure for a few seconds until the bond cures sufficiently to hold the cut gasket edges together.

(4) Light leak test the door gasket.

**b. Sectioning.**

Damage to the door gasket that cannot be repaired by bonding or installing an insert may be repaired by installing a section. A door gasket section extends through the complete cross sectional profile of the gasket.

(1) Remove the fasteners holding the damaged gasket in place.

(a) The fasteners along the entire length of the door edge containing the damaged gasket should be removed.

(b) Remove rivets by drilling out the rivet heads.

(2) Remove the gasket retaining strip. If undamaged, keep the retaining strip for installation.

(3) Cut and remove the damaged portion of the gasket.

(a) The replacement portion of gasket material must be a minimum of 12 inches (30.5 cm) long with a minimum 12 inches (30.5 cm) between full profile joints in the gasket.

(b) The cut area should have straight edges and square corners.

(c) If the damage extends along the door edge to the corner of the door, cut along the 45 degree angle seam fused by the manufacturer.

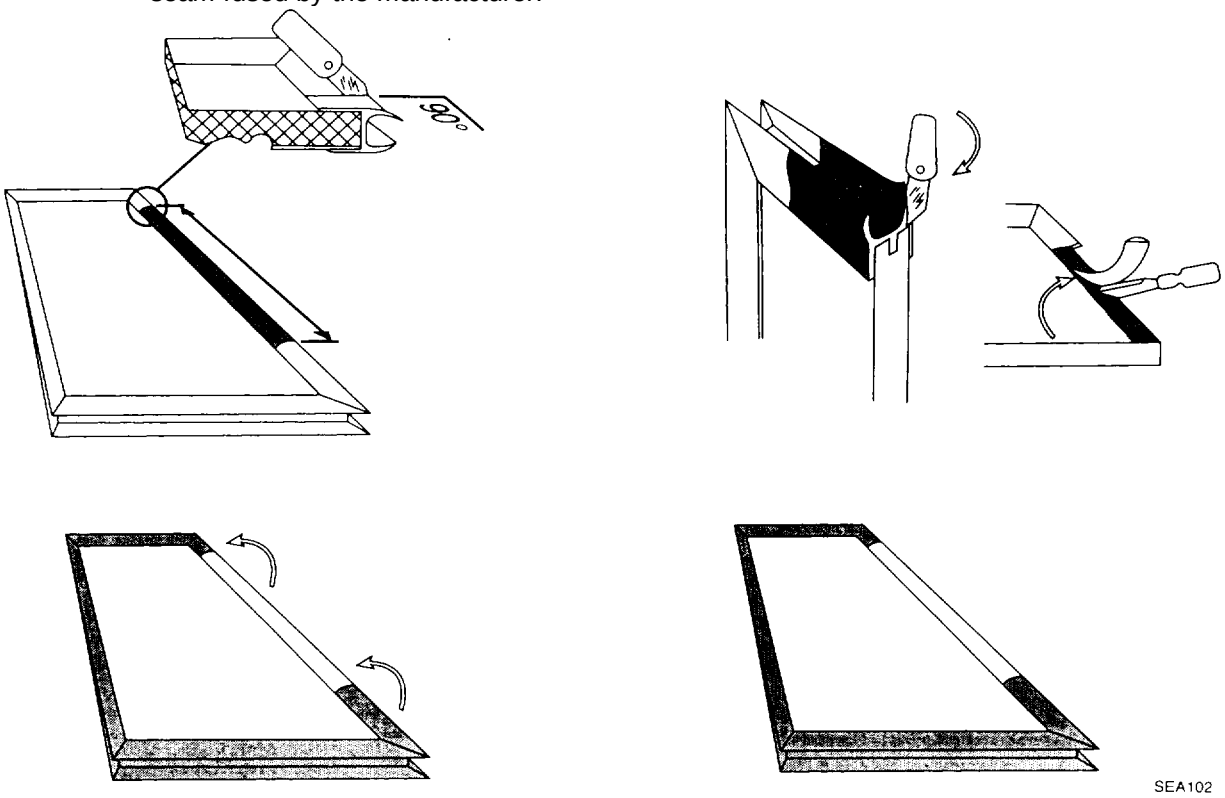


(4) Remove any adhesive from the exposed door edge.

(5) Check the exposed door edge for corrosion. If necessary, clean the door edge with a grinding disc and then prime and top coat the repaired area.

(6) Measure the length of replacement gasket required and cut it to length.

(a) If the replacement section extends to a corner of the door, cut that end of the gasket at a 45 degree angle.

(b) It is important that the section mate exactly with the remaining gasket without any gaps.

**NOTE**

**Adhesives will not fill voids.**

**4-23. REPAIR OF DOOR GASKETS - Continued**

(7) Roughen the ends of the replacement section and the remaining gasket where they butt together. Clean the roughened edges with detergent

**NOTE**

**Rubbing time must be minimal because adhesive can set in 2-3 seconds.**

(8) Apply a very thin film of adhesive to one cut edge of the gasket section.

**NOTE**

**On gasket material a bond of handling strength will usually be obtained in less than 10 seconds. A bond of 80% strength will be obtained in one hour and maximum strength, chemical and water resistance will be obtained in 12 to 24 hours cure.**

**CAUTION**

**Adhesives can bond skin or clothing upon contact. Read and observe all cautionary information and instructions.**

(9) Immediately mate that edge of the section to the remaining gasket spreading the adhesive by slightly rubbing the two surfaces together.

(10) Apply light pressure for a few seconds until the bond cures sufficiently to hold the gasket section in place.

(11) Bond the other end of the replacement section to the remaining gasket.

(12) Fit the gasket into position.

(a) Align the gasket and retainer strip with the door edge. The holes in the door edge should be aligned with those in the gasket and retainer strip.

(b) Drill holes through the gasket section using the holes in the retainer strip as a guide.

(13) Remove the retainer strip and gasket.

(14) Apply sealant to the mating areas of the door edge.

(15) Fit the gasket and retainer strip into position.

(a) Ensure that the holes in the door edge are aligned with those in the gasket and retainer strip.

(b) Secure the retainer strip and gasket to the door with sheet metal screws or other appropriate fasteners.

(16) Light leak test the door gasket.

**c. Replacement.**

(1) Remove the fasteners (1) holding the damaged gasket (2) in place. Remove rivets by drilling out the rivet heads.

(2) Remove the gasket retaining strip (3). If undamaged, keep the retaining strip for installation.

(3) Remove the damaged gasket (2).

(4) Remove any old adhesive from the exposed door edge (4).

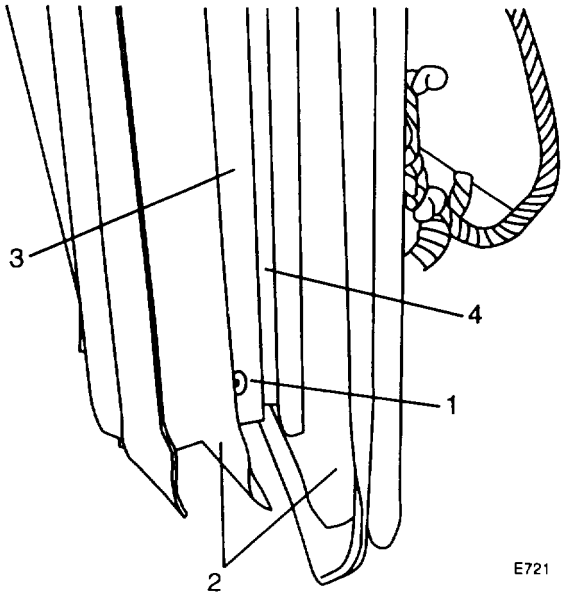


(5) Check the exposed door edge for corrosion. If necessary, clean the door edge with a grinding disc and then paint.

(6) Fit the replacement gasket into position.

(a) Align the gasket (2) and retainer strip (3) with the door edge (4). The holes in the door edge should be aligned with those in the retainer strip.

(b) Using the hole in the retainer strip as a guide, drill through the replacement gasket.

(7) Remove the retainer strip (3) and replacement gasket (2).

(8) Apply sealant to the mating areas of the door (4).

(9) Fit the replacement gasket into position.

(10) Place the retainer strip (3) along the door edge, ensuring that the holes in the door edge (4) are aligned with those in the gasket and the retainer strip.

(11) Secure the retainer strip (3) and gasket to the door (4) with rivets (1).

(12) Light leak and water test the gasket to ensure that there is no leakage.

## 4-24. REPAIRS TO ROOF PANEL.

This task covers: a. Patching b. Sectioning

INITIAL SET-UP:

*Tools:*
General Mechanics Tool Kit (Item 1, App B)

*Equipment Condition:*
Refrigeration unit shutdown (TM 9-4110-258-13)
Generator set shutdown (TM 5-6115-585-12/34)

*Materials/Parts:*
Rivets (Item 11, App E)
Sealant (Item 8, App E)
Barrier Tape (Item 3, App E)

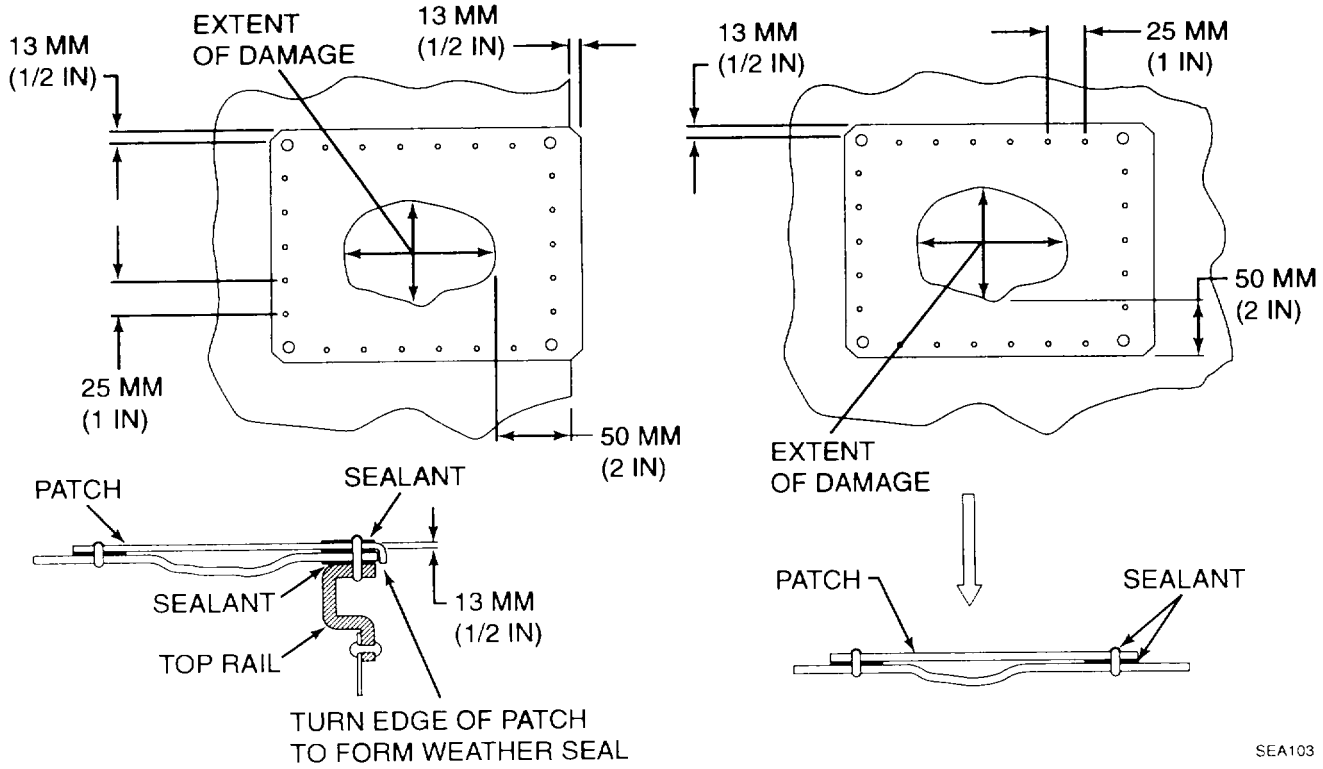


**a. Repair: Overlay Patches.**

Patching an aluminum roof is subject to the following limitations:

- Patches must not be placed upon nor overlap other patches, unless the underlying patch is full container width.
- Do not patch over corrosion or electrolytic damage.

- If damage extends to within 2 inches (50 mm) of the roof edge or the header extension plate, extend the patch to the edge of the roof or header extension plate and use the original fastener holes.
- If a patch will terminate within 2 inches (50 mm) of another patch, combine the two patches into one patch.
- Patches must adhere to the underlying foam.
- Do not drill through or rivet through roof bows when securing patches.

(1) Flatten the panel surface free from distortion, wrinkles and creases. If necessary, cut away damage until the surface is flat, leaving a rectangular hole with even edges.

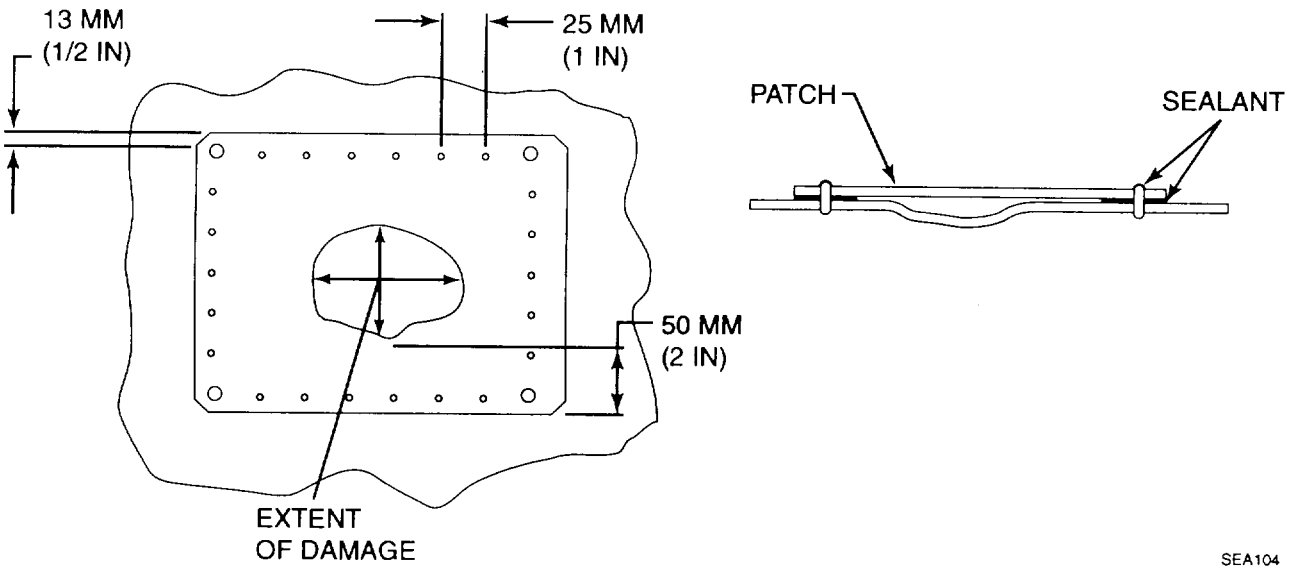


(2) Check foam insulation for moisture and damage. If foam is damaged, notify Direct Support Maintenance.

**NOTE**

**The patch material must be of the same type and thickness of material as the original roof panel.**

(3) Prepare a rectangular patch with rounded or chamfered corners so that the patch will overlap the damaged area by at least 2 inches (50 mm) on all sides.

If the damage to be repaired is within 2 inches (50 mm) of the roof edge, the patch must extend to the roof edge and overlap the roof edge by 1/2 inch (13 mm) so the patch can be turned down over the rail to form a seal. The side edge will be secured to the rail by drilling holes using the original rivet holes in the top rail as a template.

(4) Center patch over damage and drill four holes, one in each corner of the patch, 1/2 inch (13 mm) in from the edge. To reduce damage to the foam insulation, use a stop on the drill bit to limit depth of drill to 3/4 inch (20 mm). Be certain that drill holes and fasteners will miss roof bows.

(5) Secure the patch with clips or clamps and drill the remaining holes around the border of the patch. Holes should be drilled on 1 inch (25 mm) centers, 1/2 inch (13 mm) in from the edge.

**4-24. REPAIRS TO ROOF PANEL - Continued**

**NOTE**

**Tape may be used between the patch and the roof sheet instead of sealant.**

(6) Remove the patch

(a) De-burr the holes.

(b) Apply adhesive to the inside of the patch.

(c) Apply a continuous bead of sealant between the line of rivet holes and the edge.

(7) Carefully position the patch over the prepared area with rivet holes properly aligned. Apply even pressure to the patch to squeeze out excess sealant.

(8) Rivet patch to roof panel. Bend any excess patch down over the rail to form a watertight seal.

**b. Full-Width Roof Panel Section.**

Damage too extensive to be repaired by patching can be repaired by installing a full-width panel section.

**NOTE**

**The repair should begin and terminate at the first roof bows beyond the limit of damage. If the damage extends to the end of the container, begin the repair at the extension plate.**

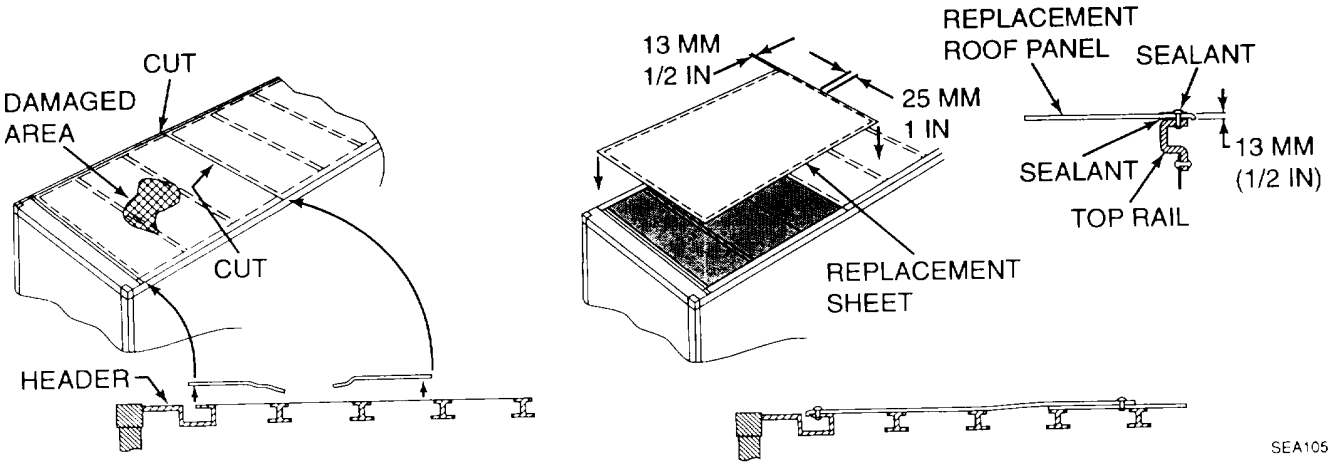


(1) Mark the area of roof panel to be replaced.

(2) Remove the original fasteners from headers and rails as far as the second roof bow beyond the damaged area.

(3) Cut away the damaged roof sheet using saw. Leave the cut edge flat and free of wrinkles or distortion.

(4) Check foam for moisture and damage. Repair as necessary.

(5) Clean all surfaces, including headers, if applicable, top side rails and remaining roof sheet edges.

(6) Prepare an aluminum patch of the same material specification and thickness as the original roof panel. The section should be cut to overlap the top side rails by 1/2 inch (13 mm) on each side.

(7) Position the replacement sheet.

(a) Be sure that the pattern of forward roof sheet overlapping rearward roof sheet is maintained.

(b) Drill a sufficient number of rivet holes to temporarily secure the sheet.

(c) Use existing holes in top side rails and headers as guides if applicable.

(8) Clamp or clip the sheet in place. Drill the remaining holes around the perimeter of the sheet. Holes should be drilled on 1 inch (25 mm) centers, 1/2 inch (13 mm) in from the edge. Do not drill through roof bows.

(9) Remove the sheet. De-burr the drill holes and clean all mating surfaces.

(10) Apply barrier tape wherever steel and aluminum might come in contact.

(11) Apply double-sided adhesive tape or a continuous bead of adhesive over the entire length of each exposed roof bow.

(12) Apply a continuous bead of sealant between the row of rivet holes and the edge of the sheet.

(13) Install sheet and apply even pressure to flatten and smooth the sheet and to expel surplus sealant around the perimeter.

(14) Rivet replacement sheet in place.

(15) Bend the overlapping 1/2 inch (13 mm) material down over each top side rail and header extension plate if applicable, to form a watertight seal. Apply a bead of self-leveling sealant to the exterior line of rivets to fully seal the repair.

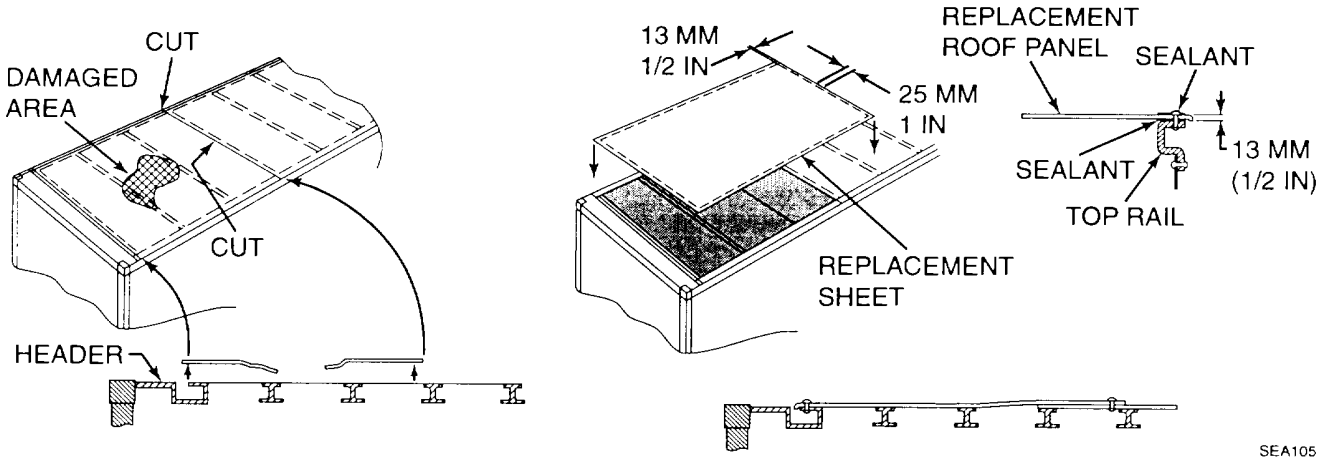

## 4-25. SIDE PANELS.

| This task covers: | a. Straightening | b. Patching, Mid Panel | c. Patching, Joint |
|---|---|---|---|
| | d. Replacement, Full Panel Including Inside | e. Replacement, Lining Full Panel | |

INITIAL SET-UP:

*Tools:*
General Mechanics Tool Kit (Item 1, App B)

*Equipment Condition:*
Refrigeration unit shutdown (TM 9-4110-258-13)
Generator set shutdown (TM 5-6115-585-12/34)

*Materials/Parts:*
Wiping rag (Item 6, App E)
Sealant (Item 8, App E)
Barrier Tape (Item 3, App E)
Rivets (Item 12, App E)

**NOTE**

**Side panel repairs have the following limitations:**

- **No welding of aluminum patches is permitted.**
- **Replace entire panel if patch would cover 75% of panel.**
- **If damage extends to within 2 inches (50 mm) of the edge of the panel, the overlay patch must extend to the panel edge. Use original fastener holes and original overlapping pattern.**
- **Damage which extends across two adjoining side panels requires two overlapping patches.**

**NOTE**

- **Replacement panels and patches must be made from aluminum material of the same thickness and specification as the damaged panel.**
  **Use prepainted patches when appropriate.**
- **Wet or damaged foam must be replaced before patching or installing a replacement panel.**
- **Aluminum patches should be cleaned and coated with adhesive primer before application. The part of panel to be overlapped by the patch must also be cleaned and coated with adhesive primer before the patch is applied.**
- **Patches must adhere to the underlying foam with adhesive.**
- **Patches must be properly riveted to the remaining panel. Rivets must be of a weather-resistant type.**

**a. Straightening.**

**NOTE**

**Dents and compression lines are to be straightened without heating. It should not be necessary to use heat.**

(1) Dents may be straightened without heating by using a flat hammer or mallet backed by a heavy flat object.

**NOTE**

**Care must be taken to avoid stretching the metal during the forming operation. If the material is stretched or if a proper backing device is not used, multiple hammer marks may be left in the panel. This is unacceptable; it weakens the panel and does not restore its original profile.**

(2) If a flat hammer and backing plate are used, the concave side of the dent should be supported by the backing plate. The convex side of the dent is forced back into the flat surface of the backing plate using the flat hammer.

**NOTE**

**Ball-peen or other round headed hammers must not be used.**

(3) If any exterior surface coating is damaged during the repair operation, the affected areas must be cleaned, masked, and primed. Apply a top coat to the exterior, notify Direct Support Maintenance.

**b. Mid-Panel Patch Overlay**

(1) Flatten the panel surface to remove distortion, wrinkles and creases. If necessary, cut away damage until the surface is flat, leaving a smooth hole with even edges.

(2) Check foam insulation for moisture and damage. If foam is damaged notify Direct Support Maintenance.

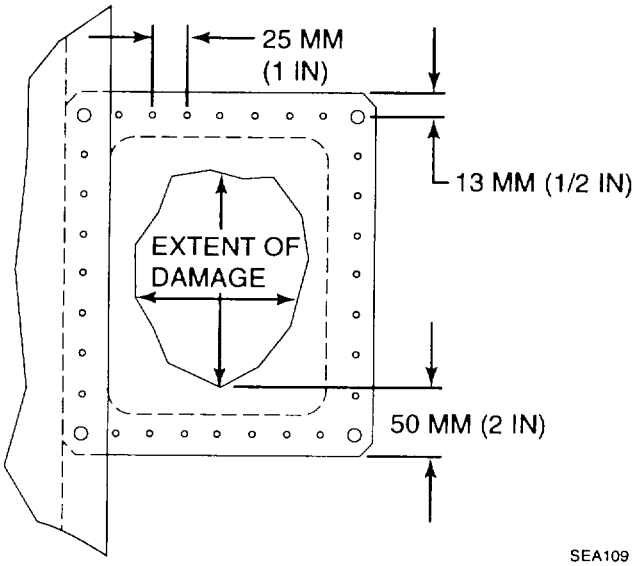


(3) Prepare a rectangular patch with rounded or chamfered corners to overlap the damaged area by 2 inches (50 mm) on all sides.

(a) The patch material must be of the same specification as the damaged panel, and pre-painted if the damaged panel is painted.
(b) Clean and sand the portion of panel to be overlapped.

**4-25. SIDE PANEL - Continued**

(4) If the patch is to be fitted over rivets securing a side post in place, remove the rivets to be covered by the patch. Measure the diameter of the holes and the distance (pitch) between rivets.

(5) Center patch over damage and drill four holes, one in each corner of the patch, 1/2 inch (13 mm) from the edge. To reduce damage to the foam insulation, use a stop on the drill bit to limit depth of drill to 3/4 inch (20 mm).

(6) Secure the patch with clips or clamps and drill remaining holes around the border of the patch. Holes should be on 1 inch (25 mm) centers, 1/2 inch (13 mm) from the edge.

(7) Remove the patch.

(8) De-burr the holes.

(9) Apply foam adhesive primer to the inside of the patch.

(10) Apply a continuous bead of sealant to the patch between the line of rivet holes and the edge; OR use adhesive tape around the inner perimeter of the patch. The tape must be mitered or overlap at the corners of the patch. Tape should be measured to reach all edges of the patch.

(11) Position patch, align holes and smooth patch to squeeze out excess sealant.

**NOTE**

**On larger patches, it may be necessary to support the patch with a piece of wood, pressing firmly until the adhesive is cured.**

(12) Rivet patch using appropriate rivets meeting TIR requirements in the corners of the patch, and blind fasteners around the rest of the periphery of the patch.

(13) If tape was used, trim any excess. Be careful not to score paint.

(14) Replace decals if damaged.

(15) If drive rivets were used, coat with sealant.

**c. Patches At Panel Joint.**

(1) After flattening and/or cutting out the damaged area, repair any side post and/or foam insulation damage.

(2) After preparing both patches, remove the rivets which attach the panels in the damaged area.

(3) Install the first patch on top of the underlying side panel. Butt the edge of this patch against the edge of the existing overlying panel. Secure the edge furthest from the joint, using appropriate blind fasteners.

(4) The second patch should overlap the vertical joint and include a sufficient portion of the first patch to allow installation of a row of rivets. Use the existing rivet holes as a template for locating holes for the patches. Fasten the second patch, the first patch and the underlying panel together, using appropriate fasteners.

**NOTE**

**The length of the fasteners is critical. Ensure that fasteners are of adequate length to fasten patches securely.**

(5) Complete the patch as described in paragraph 4-25b. Apply sealant between adjoining edges of patch and original panels and over drive rivets, if used.

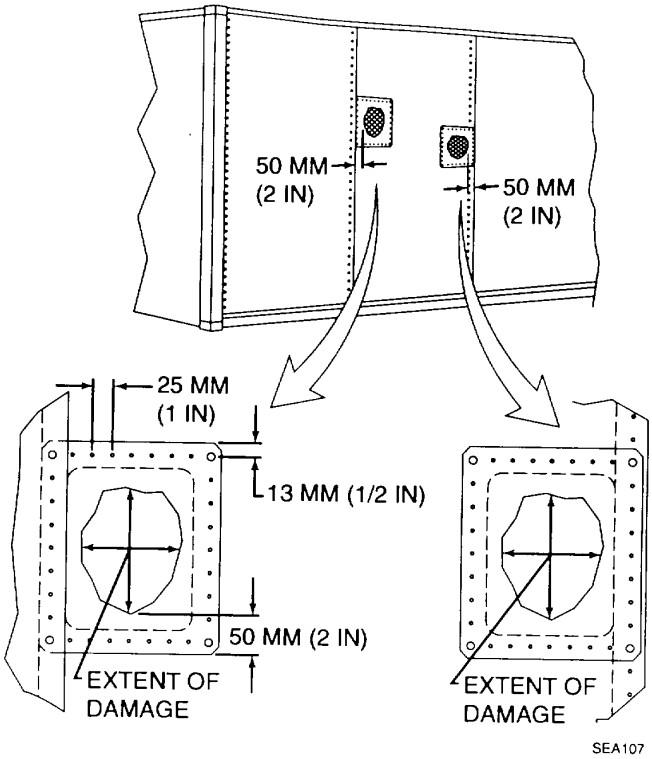


**d. Replacement of a Full Panel.**

(1) Remove all rivets which secure the damaged panel. Remove panel.

(2) Check foam insulation for moisture and damage. Repair minor foam damage as necessary. If foaming is required, it should be completed after installation of the new panel.

(3) Mark lines on the container to show location of rivet holes from the top and bottom rails and adjoining panel(s) or post frame.

(4) Prepare and position a replacement panel of same specification and thickness as the original panel. Apply foam adhesive primer to the inside face of the panel. Be certain to maintain the original lap pattern.

(5) Insert the forward edge of the replacement panel under the adjoining panel and the top edge under the top rail.

(6) Position the trailing edge on top of the adjoining panel and the bottom edge over the bottom rail.

(7) Using the original rivet holes in the adjoining edge and top rail as a guide, drill holes in the replacement panel. Use a stop on the drill to limit the depth of the holes to 3/4 inch (20 mm).

**4-25. SIDE PANEL - Continued**

(8) Clamp the replacement panel in place. Mark holes in the trailing and bottom edges of replacement panel. Drill pilot holes for alignment. Then drill holes.

(9) Remove panel. De-burr holes and clean all mating surfaces. Be certain foam insulation is free from drilling debris. Apply one coat of adhesive primer to the inside surface of the panel.

(10) Apply barrier tape to the mating surfaces of the replacement panel and the top and bottom rails to prevent electrolysis. Apply a continuous bead of sealant around the perimeter of the replacement panel (apply additional beads of sealant if required). Adhesive tape may be used instead of sealant. Use tape around the perimeter of the mating surfaces. The tape should be mitered or overlap at the corners of the panel.

(11) Position the replacement panel using clamps. Using plywood blocks if necessary, apply firm, even pressure to keep the panel flat and to expel excess sealant.

(12) Rivet panel in place using appropriate fasteners meeting TIR requirements at the corners and at 24 inch (600mm) spacing. Using the same type of rivets as were originally installed, insert remaining rivets into the drilled holes. If alignment is difficult, secure replacement panel in place with adhesive tape before riveting.

(13) Be sure the perimeter of the panel and fasteners are fully sealed. Replace decals if required. Coat any drive rivets used with sealant.

**e. Replacement of a Full Panel (Including the Interior Lining Panel).**

(1) Remove interior cove molding in area of damaged sidewall.
(2) Remove all rivets securing interior lining to side posts and rails.
(3) Remove interior panel.
(4) Detach all rivets securing damaged exterior panel to side posts and rails. Remove exterior panel.
(5) Remove all damaged insulation between the two panels to be replaced.
(6) Examine side post(s) for damage. Prepare and fit new side post and plastic spacer, if required.
(7) Drill rivet holes in replacement panel to mate with replacement post.
(8) Mark vertical lines of rivet holes from the top and bottom rails and adjoining panel(s) or post frame on the container to show location.
(9) Follow procedures for replacement of a full panel.
(10) Prepare and position interior replacement panel of the same type and thickness of material as original panel. Be certain to maintain the original lap pattern. Clip temporarily in place.
(11) Using original rivet holes as guides, drill holes.
(12) Remove replacement lining panel. Be-burr holes and clean all mating surfaces.
(13) Install existing insulating foam if usable.
(14) Position lining panel.
  (a) Insert rivets in holes if necessary to maintain alignment.
  (b) Secure lining panel using appropriate fasteners.
(15) Replace cove molding. Secure with same type of fasteners as were originally installed.
(16) Apply sealant to the entire perimeter of the lining panel and molding. Verify proper sealing and watertightness.

## 4-26. FRONT PANEL.

This task covers: a. Straightening b. Mid-Panel Patch c. Patching at Panel Joint d. Full Panel Replace

INITIAL SET-UP:

*Tools:*
General Mechanics Tool Kit (Item 1, App B)

*Equipment Condition:*
Refrigeration unit shutdown (TM 9-4110-258-13)
Generator set shutdown (TM 5-6115-585-12/34)

*Materials/Parts:*
Wiping rag (Item 6, App E)
Sealant (Item 8, App E)
Barrier Tape (Item 3, App E)
Rivets (Item 12, App E)

**NOTE**

**Exterior door panel repairs have the following limitations:**

- **No welding of aluminum patches is permitted.**
- **If a patch would cover more than 75% of door panel, the entire door must be replaced.**
- **If damage extends to within 2 inches (50 mm) of the edge of the panel, the overlay patch must extend to the panel edge.**
  **Use original fastener holes and original overlapping pattern.**
- **Replacement panels and patches must be made from aluminum material of the same thickness and specification as the damaged panel. Use prepainted patches when appropriate.**
- **Wet or damaged foam must be replaced before patching or installing a replacement panel.**
- **Aluminum patches should be cleaned and coated with adhesive primer before application. The part of panel to be overlapped by the patch must also be cleaned and coated with adhesive primer before the patch is applied.**
- **Patches must adhere to the underlying foam with adhesive.**
- **Patches must be properly riveted to the remaining panel.**
  **Rivets must be of a weather-resistant type.**

### a. Straightening.

**NOTE**

**Dents and compression lines are to be straightened without heating. It should not be necessary to use heat.**

(1) Dents may be straightened without heating by using a flat hammer or mallet backed by a heavy flat object.

**4-26. FRONT PANEL - Continued**

**NOTE**

**Care must be taken to avoid stretching the metal during the forming operation. If the material is stretched or if a proper backing device is not used, multiple hammer marks may be left in the panel. This is unacceptable; it weakens the panel and does not restore its original profile.**

(2) If a flat hammer and backing plate are used, the concave side of the dent should be supported by the backing plate. The convex side of the dent is forced back into the flat surface of the backing plate using the flat hammer.

**NOTE**

**Ball-peen or other round headed hammers must not be used.**

(3) If any exterior surface coating is damaged during the repair operation, the affected areas must be cleaned, masked, and primed. Apply a top coat to the exterior only notify Direct Support Maintenance.

**b. Mid-Panel Patch Overlay.**

(1) Flatten the panel surface to remove distortion, wrinkles and creases. If necessary, cut away damage until the surface is flat, leaving a smooth hole with even edges.

(2) Check foam insulation for moisture and damage. If foam is damaged notify Direct Support Maintenance.

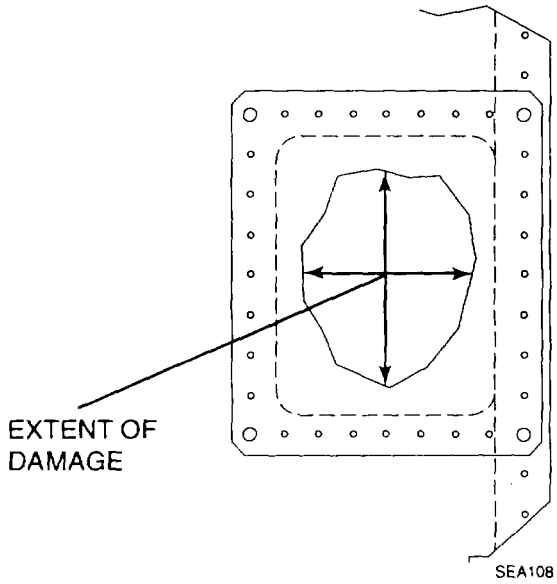


(3) Prepare a rectangular patch with rounded corners to overlap the damaged area by 2 inches (50 mm) on all sides.

(a) The patch material must be of the same specification as the damaged panel, and pre-painted if the damaged panel is painted.
(b) Clean and sand the portion of panel to be overlapped.

(4) If the patch is to be fitted over rivets securing a side post in place, remove the rivets to be covered by the patch. Measure the diameter of the holes and the distance (pitch) between rivets.

(5) Center patch over damage and drill four holes, one in each corner of the patch, 1/2 inch (13 mm) from the edge. To reduce damage to the foam insulation, use a stop on the drill bit to limit depth of drill to 3/4 inch (20 mm).

(6) Secure the patch with clips or clamps and drill remaining holes around the border of the patch. Holes should be on 1 inch (25 mm) centers, 1/2 inch (13 mm) from the edge.

(7) Remove the patch.

(8) De-burr the holes.

(9) Apply foam adhesive primer to the inside of the patch.

(10) Apply a continuous bead of sealant to the patch between the line of rivet holes and the edge; OR use adhesive tape around the inner perimeter of the patch. The tape must be mitered or overlap at the corners of the patch. Tape should be measured to reach all edges of the patch.

(11) Position patch, align holes and smooth patch to squeeze out excess sealant.

**NOTE**

**On larger patches, it may be necessary to support the patch with a piece of wood, pressing firmly until the adhesive is cured.**

(12) Rivet patch using appropriate rivets meeting in the corners of the patch, and blind fasteners around the rest of the periphery of the patch.

(13) If tape was used, trim any excess. Be careful not to score paint.

(14) Replace decals if damaged.

(15) If drive rivets were used, coat with sealant.

**c. Patches At Panel Joint.**

(1) After flattening and/or cutting out the damaged area, repair any side post and/or foam insulation damage.

(2) After preparing both patches, remove the rivets which attach the panels in the damaged area.

**4-26. FRONT PANEL - Continued**

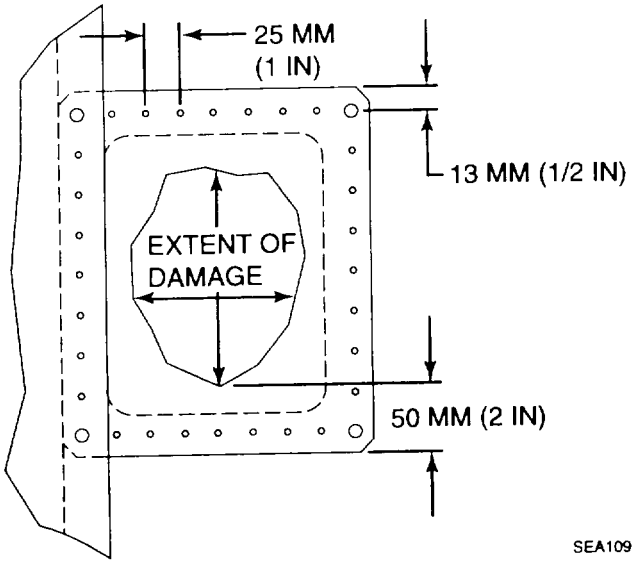


(3) Install the first patch on top of the underlying side panel. Butt the edge of this patch against the edge of the existing overlying panel. Secure the edge furthest from the joint, using appropriate blind fasteners.

(4) The second patch should overlap the vertical joint and include a sufficient portion of the first patch to allow installation of a row of rivets. Use the existing rivet holes as a template for locating holes for the patches. Fasten the second patch, the first patch and the underlying panel together, using appropriate fasteners.

**NOTE**

**The length of the fasteners is critical. Ensure that fasteners are of adequate length to fasten patches securely.**

(5) Complete the patch as described in the repair procedures for mid-panel patches, see paragraph 4-26b. Apply sealant between adjoining edges of patch and original panels and over drive rivets, if used.

## 4-27. DRAIN

This task covers: a. Removal b. Installation

INITIAL SET-UP:

*Tools:*
General Mechanics Tool Kit (Item 1, App B)

*Materials/Parts:*
Tie Strap (Item 10, App E)

*Equipment Condition:*
Refrigeration unit shutdown (TM 9-4110-258-13)
Generator set shutdown (TM 5-6115-585-12/34)

**NOTE**

**There are four drains in the container floor. Removal of one drain is shown, the others are similar.**

**a. Removal.**

(1) Open rear doors.

(2) Pull cap (1) out of drain (2).

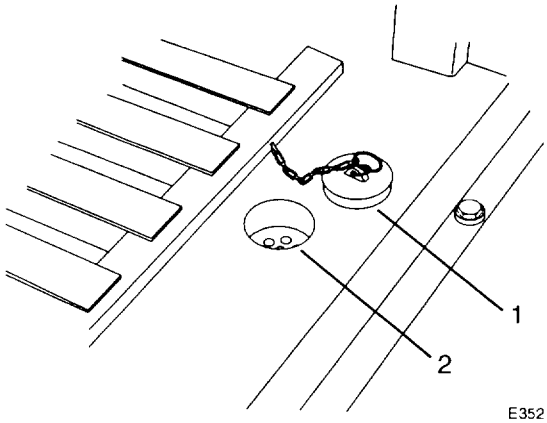


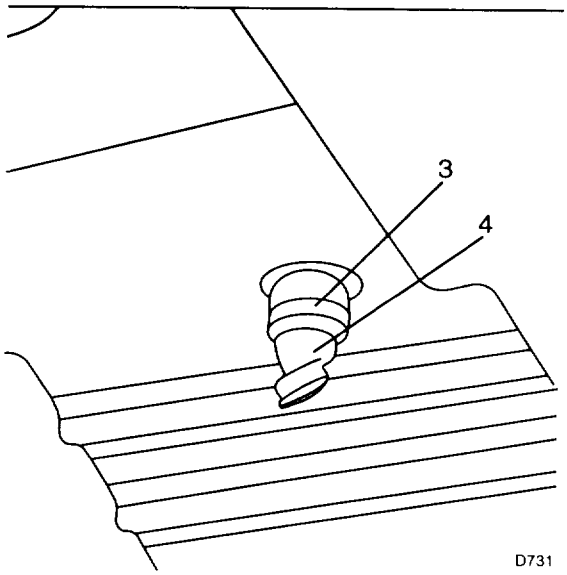


(3) Cut tie strap (3) from rubber tube (4) under drain and remove tube.

**b. Installation.**

(1) Attach rubber hose (4) to drain and secure with tie strap (3).

(2) Insert drain cap into drain if needed.

(3) Close rear doors.

## 4-28. RESTRAINT SYSTEM.

This task covers: a. Removal b. Installation c. Repair

INITIAL SET-UP:

*Tools:*
General Mechanics Tool Kit (Item 1, App B)

*Materials/Parts:*
Barrier Tape, (Item 3, App E)
Rivets (Item 17, App E)

*Equipment Condition:*
Refrigeration unit shutdown (TM 9-4110-258-13)
Generator set shutdown (TM 5-6115-585-12/34)

**a. Removal.**

(1) Drill out rivets (1) securing E-track rail (2) to side wall (3).

(2) Remove rail (2).

(3) Remove barrier tape from container side wall (3).

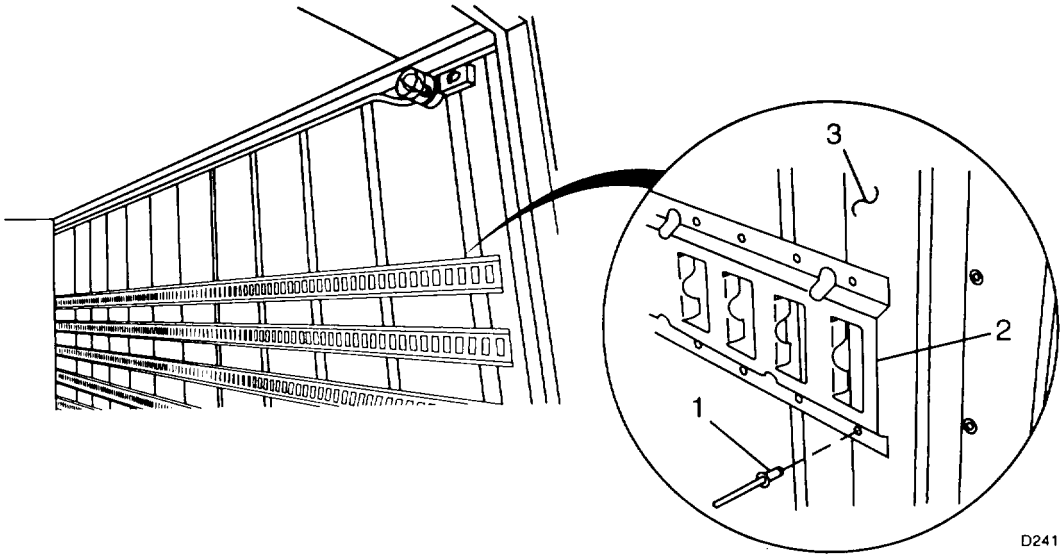


**b. Installation.**

(1) Place tape along container side wall where E-track rail is to be installed.

(2) Press rail (2) against wall (3).

(3) Install rivets (1) in every second hole of the rail.

**c. Repair.**

(1) Drill out rivets (1) in the damaged area of E-track (2).

(2) Cut damaged area away from the wall.

(3) Place barrier tape on the wall.

(4) Press rail (2) against wall (3).

(5) Install rivets (1) in every second hole of the rail.

## 4-29. REFRIGERATION UNIT.

This task covers: a. Removal b. Installation

INITIAL SET-UP:

*Tools:*
General Mechanics Tool Kit (Item 1, App B)

*Materials/Parts:*
Sealant (Item 8, App E)

*Equipment Condition:*
Refrigeration unit shutdown (TM 9-4110-258-13)
Generator set shutdown (TM 5-6115-585-12/34)

**a. Removal.**

(1) Open access panels on refrigeration unit (TM 9-4110-258-13).

(2) Disconnect refrigeration unit power cable (1) from power source (2).

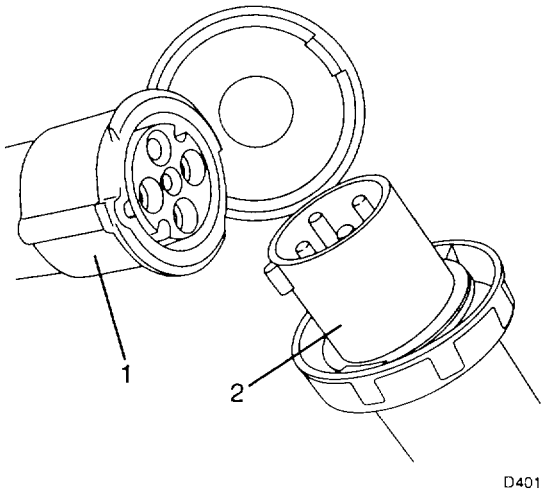

**4-29. REFRIGERATION UNIT - Continued**

3) Loosen two screws (3) and open junction box cover (4) located in the refrigeration unit. Access through left hand panel.

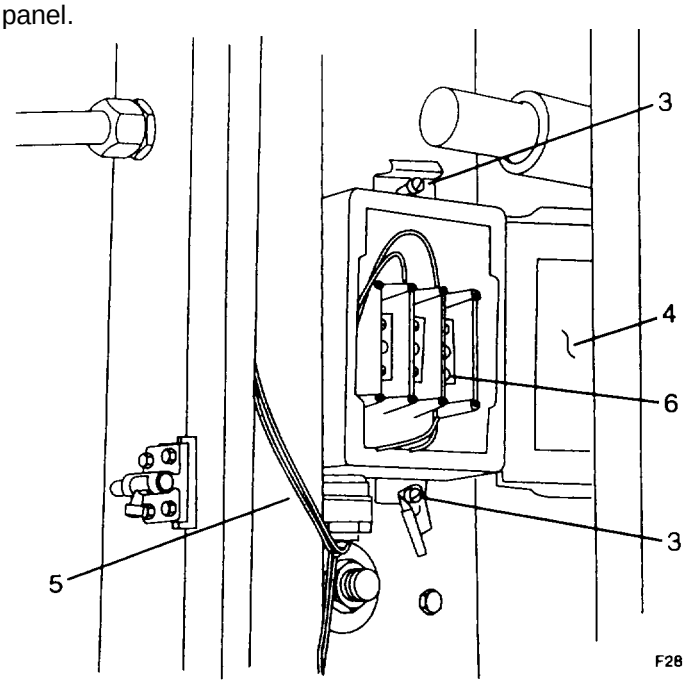


(4) Tag and disconnect wires (5) by loosening terminal screws (6).

(5) Store power cable inside refrigeration unit (TM 9-4110-258-13).

(6) Position tines (7) of forklift under refrigeration unit (8).

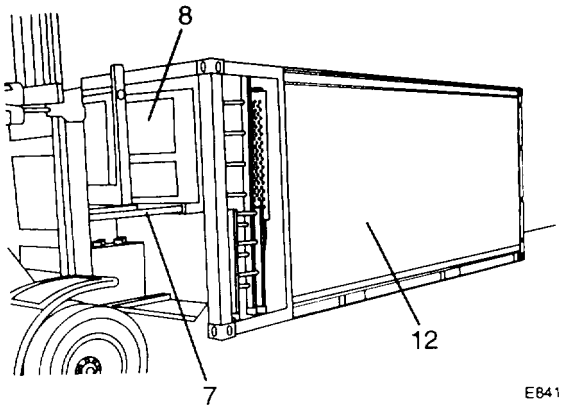

**WARNING**

**To prevent injury to personnel and damage to equipment, make sure refrigeration unit is secured to forklift tines. Refrigeration unit is top heavy. Weight of evaporator coil (inside container) may cause unit to tip forward when removed. Make sure top of refrigeration unit is tied back and bottom of unit is secured to forklift.**

(7) Secure refrigeration unit (8) to fork lift tines (7).

(8) Remove sealant around refrigeration unit inside container.

(9) Remove four nuts (9), eight flat washers (10) and four cap screws (11).

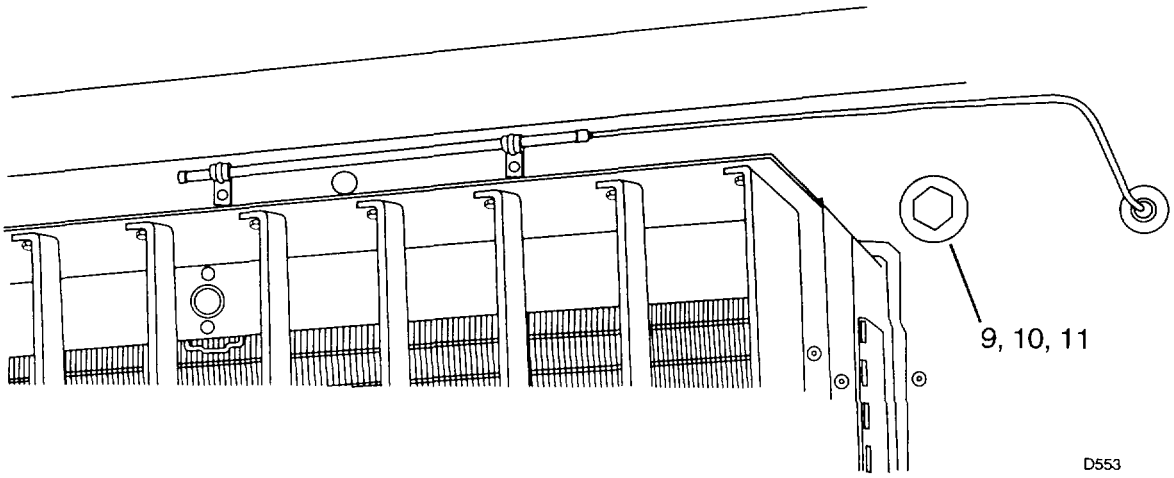


(10) Carefully remove refrigeration unit (8) from container (12).

**b. Installation.**

**WARNING**

**To prevent injury to personnel and damage to equipment, make sure refrigeration unit is secured to forklift tines. Refrigeration unit is top heavy. Weight of evaporator coil (inside container) may cause unit to tip forward when removed. Make sure top of refrigeration unit is tied back and bottom of unit is secured to forklift. Unit may fall off forklift if not properly secured.**

(1) Using the forklift, carefully reset the refrigeration unit back in the container.

(2) Attach the refrigeration unit to the container using the four cap screws (11), flat washers (10, and the four nuts (9).

(3) Clean the inside container of the refrigeration unit of any previously applied sealant. Apply fresh sealant.

(4) Unfasten the refrigeration unit from the forklift tines.

(5) Remove the forklift tines.

(6) Remove power cable stored inside the refrigeration unit. (TM-9-4110-258-13)

(7) Reconnect the wire to the terminal screws and remove the tags.

(8) Close the junction box cover contained within the left hand panel and secure using the two screws removed during disassembly.

(9) Connect refrigeration unit power cable (1) to the power source (2).

(10) Close left access panel of the refrigeration unit (TM 9-4110-258-13).

(11) Start and operate the refrigeration unit. Check refrigeration unit operation and performance.

## 4-30. GENERATOR SET, DIESEL.

This task covers: a. Removal b. Installation

INITIAL SET-UP:
*Tools:*
General Mechanics Tool Kit (Item 1, App B)

*Equipment Condition:*
Refrigeration unit shutdown (TM 9-4110-258-13)
Generator set shutdown (TM 5-6115-585-12/34)
Container raised for
access to mounting bolts

### a. Removal.

**NOTE**

**The container must be raised off the ground (using hardwood blocking or a crane) the allow access to the generator set mounting hardware.**

(1) Unplug power cable (1).

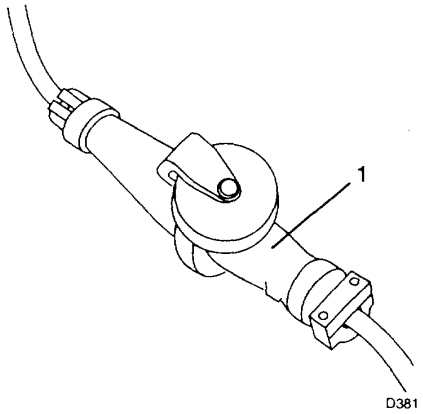

(2) Disconnect auxiliary fuel line (2). Cap fitting and plug fuel line.

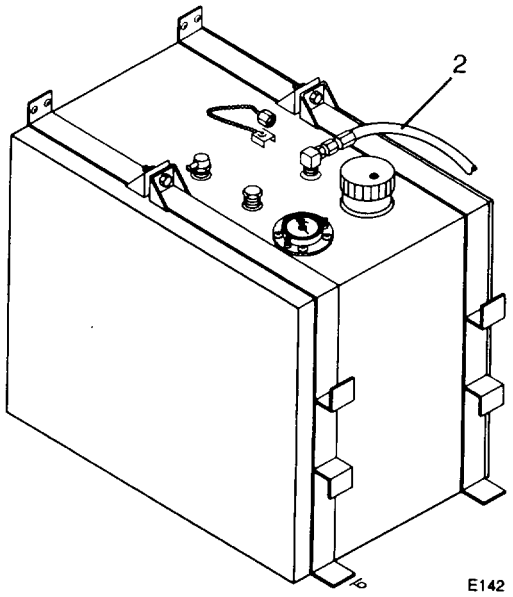


(3) Disconnect exhaust lines from the generator set (para. 4-18).

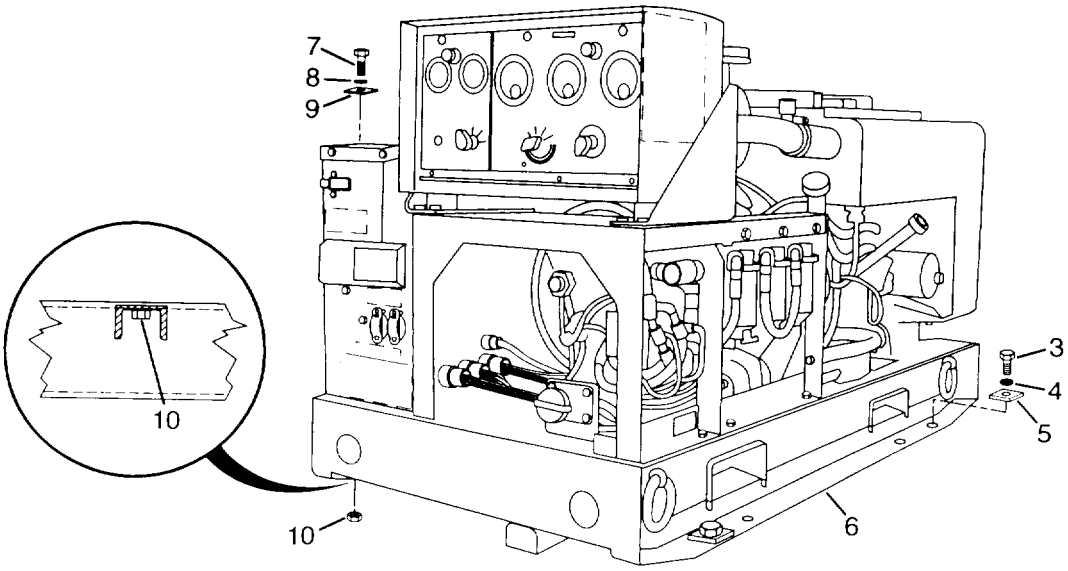


(4) Remove two capscrews (3), lockwashers (4) and plates (5) securing generator skid to front container frame.

(5) From below the rear generator skid, remove two capscrews (7), lockwashers (8), plates (9) and nuts (10) attaching gen set (6) to container.

(6) Attach lifting device rated for 1 ton to the generator set lifting eyes and lifting eyes and lift generator set from the container

**4-30. GENERATION SET, DIESEL - Continued**

**b. Installation.**

(1) Attach lifting device rated for 1 ton to the generator set lifting eyes and lift generator set onto the container.

(2) Install rear mounting hardware consisting of two capscrews (7), lockwashers (8), plates (5) to secure the front of the generator set (6) to container

(3) Install to capscrews (3), lockwashers (4) and plates (5) to secure the front of the generator set to container.

(4) Connect exhaust lines to the generator set (para. 4-18).

(5) Remove cap from fitting and plug from fuel line. Connect auxiliary fuel line (2).

(6) Connect power cable (1).

## Section VII. PREPARATION FOR STORAGE OR SHIPMENT

**4-31. SECURITY PROCEDURES.**

Refer to AR 190-11 or AR 190-13.

**4-32. ADMINISTRATIVE STORAGE**

a. Placement of equipment in administrative storage should be for short periods of time when a shortage of maintenance effort exists. Item should be mission ready within 24 hours or within the time factors as determined by the directing authority. During the storage period, appropriate maintenance records will be kept.

b. Before placing equipment in administrative storage, current maintenance services and equipment serviceable criteria (ECS) evaluation should be completed, shortcomings and deficiencies should be corrected, and all modification work orders (MWOs) should be applied.

c. Remove all cargo, containers, and packaging materials from refrigerated container.

d. Wash container interior with fresh, clean water and detergent. Rinse with clean water and allow container interior to dry before closing rear doors.

e. If container was used in a salt air environment, wash container exterior with detergent and fresh water. Rinse with clean water and allow to dry.

f. Storage Site Selection. Inside storage is preferred for items selected for administrative storage. If inside storage is not available keep container away from corrosive materials, such as saltwater spray.

**Special instructions for administrative storage.**

Placement of equipment in administrative storage should be for short periods of time when a shortage of mainetenance efforts exists. Items should be in mission readiness within 24 hours of within the time factors as determined by the directing authority. During the storage period, appropriate maintenance records will be kept.

Before placing the equipment in administrative storage, current preventive maintenance checks and services should be completed, shortcomings and deficiencies should be corrected, and all Modifications Work Order (MWO) should be applied.

Storage site selection. Inside storage is preferred for items selected for administrative storage. If Inside storage is not available , trucks, vans, conex container, and other containers may be used.

THIS PAGE MISSING NOT AVAILABLE FOR DIGITIZATION.

# CHAPTER 5

# DIRECT SUPPORT MAINTENANCE INSTRUCTIONS



## Section I. REPAIR PARTS, TOOLS, SPECIAL TOOLS; TEST, MEASUREMENT AND DIAGNOSTIC EQUIPMENT (TMDE); AND SUPPORT EQUIPMENT

### 5-1. COMMON TOOLS AND EQUIPMENT.

For authorized common tools and equipment, refer to the Modified Table of Organization and Equipment (MTOE), CTA 50-970 or CTA 8-100, applicable to your unit.

### 5-2. SPECIAL TOOLS, TMDE, AND SUPPORT EQUIPMENT.

Refer to the Appendix B of this manual for special tools, TMDE, and support equipment.

### 5-3. REPAIR PARTS.

Repair parts are listed and illustrated in the repair parts and special tools list, TM 55-8145-202-24P, covering unit and direct support maintenance of this equipment.

## Section II. DIRECT SUPPORT MAINTENANCE PROCEDURES

### 5-4. GENERAL.

This section contains procedures and methods for the repair of the refrigerated container to permit its safe return to service after minor damage. It does not attempt to describe repairs necessary for return to service after major damage. Such repairs should be performed only at an approved container repair facility.

For the purpose of this manual, major damage is considered as anything greater than superficial damage to corner fittings, corner posts, roof stringers, main rails (top and bottom), and underframe. Minor damage is considered to be damage to isolated portions of the side panels, front panels, roof assembly, flooring, or insulation. Damage which requires the repair of large portions of any of these parts of the container are considered major repair, and should be attempted only at qualified container repair facilities. Repaired containers should meet all applicable requirements of ISO specifications and the International Convention for Safe Containers (CSC).

The purpose of any repair is to restore the container to its original structural integrity and thermal efficiency to enable it to function as an instrument of international transportation. The repair method selected must always be the most economical for this purpose. Whenever possible, damaged components must be straightened rather than partly or completely replaced.

After repair, the repaired area should be of equal or greater strength than the original. Materials and parts used should be of the same or better quality, strength and thickness than those used in the original manufacture. A proper repair restores the original size and profile of a component.

---

### 5-5. SURFACE PREPARATION AND PAINTING.

---

This task covers: a. Cleaning b. Undercoating c. Exterior Marking d. Interior Marking

---

INITIAL SET-UP:

*Tools:*
General Mechanics Tool Kit (Item 1, App B)

---

#### a. Cleaning, Treating, and Painting.

Metal surfaces of the container shall be cleaned, treated, and primed in accordance with MIL-T-704, type F or G as applicable. After cleaning, treating and priming, all exterior surfaces shall be painted in accordance with MIL-C-53039, color camouflage green 383.

#### b. Undercoating.

The entire underside of the container floor, including crossmembers, floor, side rails, and bottom rails, shall be coated after painting of the metal surfaces, with a type I coating conforming to MIL-C-62218. Floor drains shall remain free and open.

**c. Exterior Marking.**

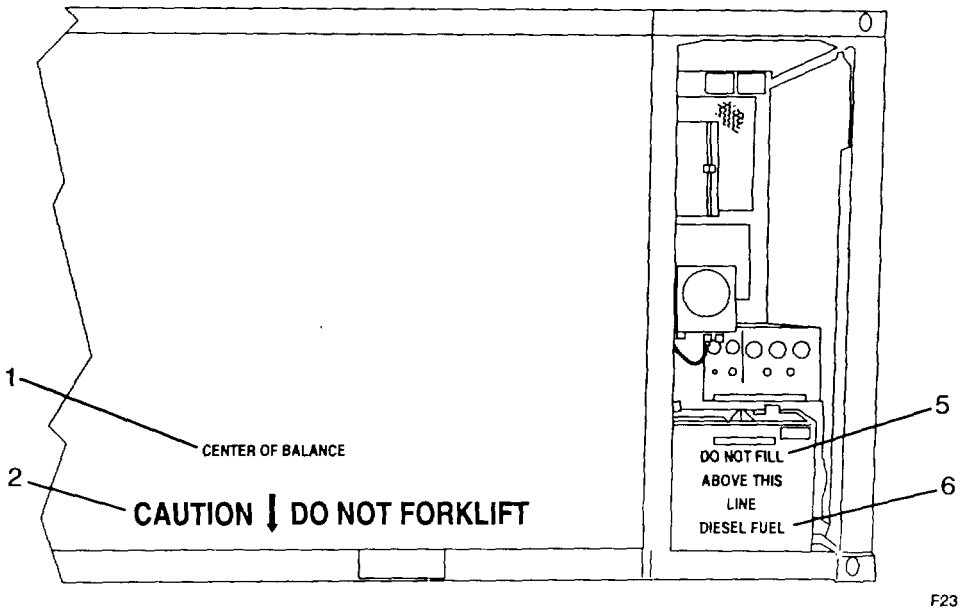


The container shall be identified and marked with white stencil paint conforming to A-A-1558 in accordance with ISO 6346 with the following additional requirements:

(1) The owner's code and serial number.

(2) The maximum net cargo weight in pounds and kilograms shall be stenciled in characters not less than 2 inches proportional width and thickness on the right hand door of the container.

(3) "CENTER OF BALANCE" shall be stenciled at the longitudinal center of balance of the empty container (1) equipped with restraint system, refrigeration unit, and generator set. The container shall be stenciled on both sides with a 4 inch high vertical arrow and letters 2 inches high at the longitudinal center of balance.

**5-5. SURFACE PREPARATION AND PAINTING - Continued**

(4) "CAUTION: DO NOT FORKLIFT" shall be stenciled on each side of the container above the bottom frame (2) in 4 inch high lettering.

(5) "DO NOT FILL ABOVE THIS LINE" shall be stenciled in letters 2 inches high on the auxiliary fuel tank. Two horizontal white lines, one on each side, not less than 10 inches long and 1 inch wide shall also be stenciled on the tank and located 2 inches below the bottom of the tank neck.

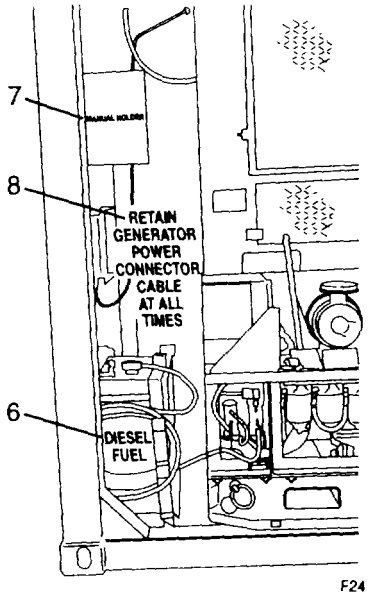


(6) "DIESEL FUEL" shall be stenciled on the auxiliary fuel tank in letters 2 inches high.

(7) "MANUAL HOLDER" shall be stenciled on the manual holder in white lettering 0.50 inch high.

(8) "RETAIN GENERATOR POWER CONNECTOR CABLE AT ALL TIMES" shall be stenciled above the cable in letters 2 inches high.

**d. Interior marking.**

The owners identification code and the container serial number shall be stenciled with black stencil paint in characters at least 0.50 inch high on an area 18 inches from the corner post where it will not be obscured. The following additional markings will be stenciled in 2 inch high black lettering on the interior:

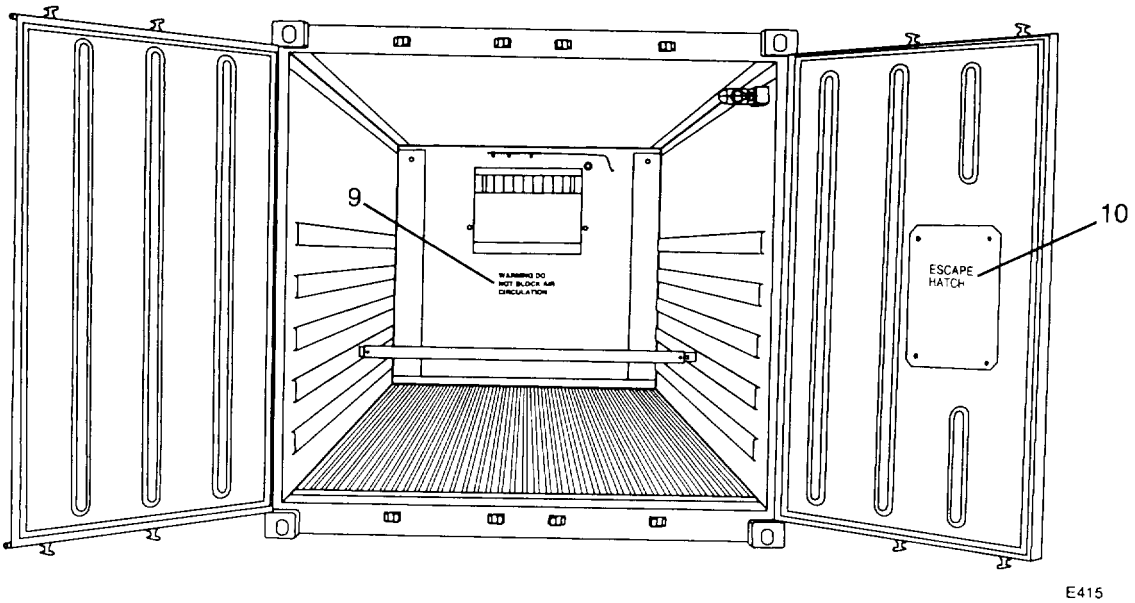


(1) "WARNING: DO NOT BLOCK AIR CIRCULATION" shall be stenciled below the refrigeration unit, centered on the front wall (9) in characters at least 2 inches high.

(2) "ESCAPE HATCH" shall be stenciled on the top half of the hatch (10) in characters at least 3 inches high.

## 5-6. WELDING.

INITIAL SET-UP:

*Tools:*
General Mechanics Tool Kit (Item 1, App B)
Welding Shop, Trailer Mounter (Item 3, App B)

*Equipment Condition:*
Refrigeration unit shutdown (TM 9-4110-258-13)
Generator set shutdown (TM 5-6115-585-12/34)

The surfaces of parts to be welded shall be free from rust, scale, paint, grease, and other foreign matter. Weld penetration shall be such as to provide transference of maximum design stress through the base metal juncture. Fillet welds shall be provided when necessary to reduce stress concentration. Welding procedures shall be qualified in accordance with American Society of Mechanical Engineers (ASME) or American Welding Society (AWS) code, and all welding and welds shall be in accordance with ASME or AWS code. Integrity of welds can easily be verified by visual inspection. The inspection should determine that the weld is:

- Watertight and free of porosity.
- Smooth in appearance (no roughness, weld spatter, etc.).
- Free of craters.
- Dimensionally accurate (including warpage).
- Free of undercutting.

Inspection should also determine that full weld penetration is achieved. If welding one side of the joint does not achieve full weld penetration, both sides of the joint must be welded.

## 5-7. FASTENERS.

INITIAL SET-UP:

*Tools:*
General Mechanics Tool Kit (Item 1, App B)

*Materials/Parts:*
Pop Rivet (Item 11, App E)
Pop Rivet (Item 12, App E)
Pop Rivet (Item 13, App E)
Pop Rivet (Item 14, App E)
Pop Rivet (Item 15, App E)
Pop Rivet (Item 16, App E)
Pop Rivet (Item 17, App E)
Pop Rivet (Item 18, App E)

Dissimilar metals should be avoided in attachments to minimize electrolysis. Cadmium plated fasteners shall not be used unless absolutely necessary.

Two types of rivets are used in construction of this unit, **Drive Rivets** and **Blind Pull-Thru Rivets.** Both are generically known as pop rivets and will be referred to as "appropriate rivets" in these procedures.

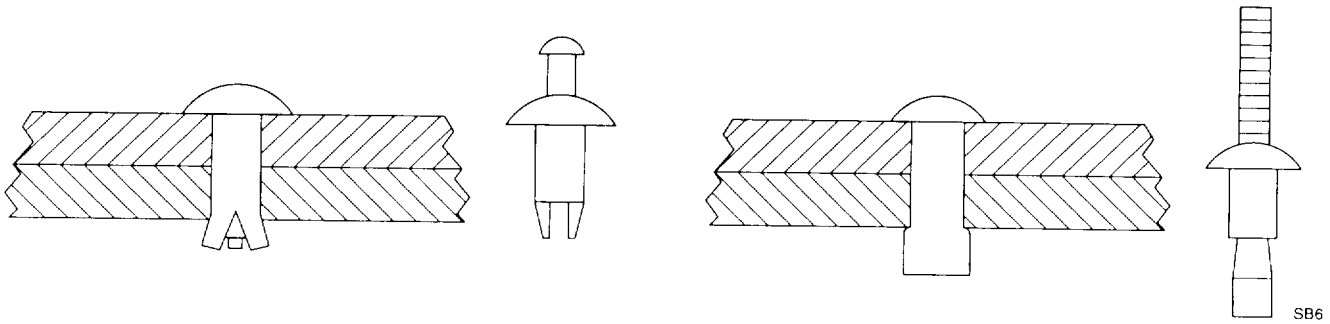


The **Drive Rivet** is used for repairs where only one side of the unit may be accessed. Drive Rivets have a hollow center through which a pin is pulled expanding the diameter of the rivet. Drive Rivets are made of an aluminum alloy and is formed with a domed head. It contains a headed stainless steel pin.

The second type of rivet used in the construction of this unit is the **Blind Pull-Thru Rivet**. As with the drive rivet, this rivet is used when only one side of the part being joined can be accessed. It is a hollow rivet which contains a pin which expands the rivet as it is pulled through. Like the Drive Rivet, the body of this rivet is made of aluminum, however the center pin is also made of aluminum. This type of rivet is used where one of the pieces being attached is made of stainless steel. Because rivet is made of aluminum, it will not cause an electrolytic reaction with the stainless steel metal.

**Specifications:**

| Rivet Diameter | Hole Size | Drill Size |
|---|---|---|
| **5 mm (3/16 in)** | **4.9 - 5.1 mm (0.191 - 0.200 in)** | **4.9 mm (3/16 in)** |
| **6 mm (1/4 in)** | **6.6 - 7.0 mm (0.260 - 0.275 in)** | **6.5 - 7 mm (1/4 in)** |

## 5-8. DOOR ASSEMBLY.

This task covers: a. Removal b. Installation

INITIAL SET-UP:

*Tools:*
General Mechanics Tool Kit (Item 1, App B)

*Equipment Condition:*
Refrigeration unit shutdown (TM 9-4110-258-13)
Generator set shutdown (TM 5-6115-585-12/34)

*Materials/Parts:*
Hinge Pins (Item 10, App H)

**NOTE**

**Right door is shown. The left door is similar.**

**a. Rear Door Removal.**

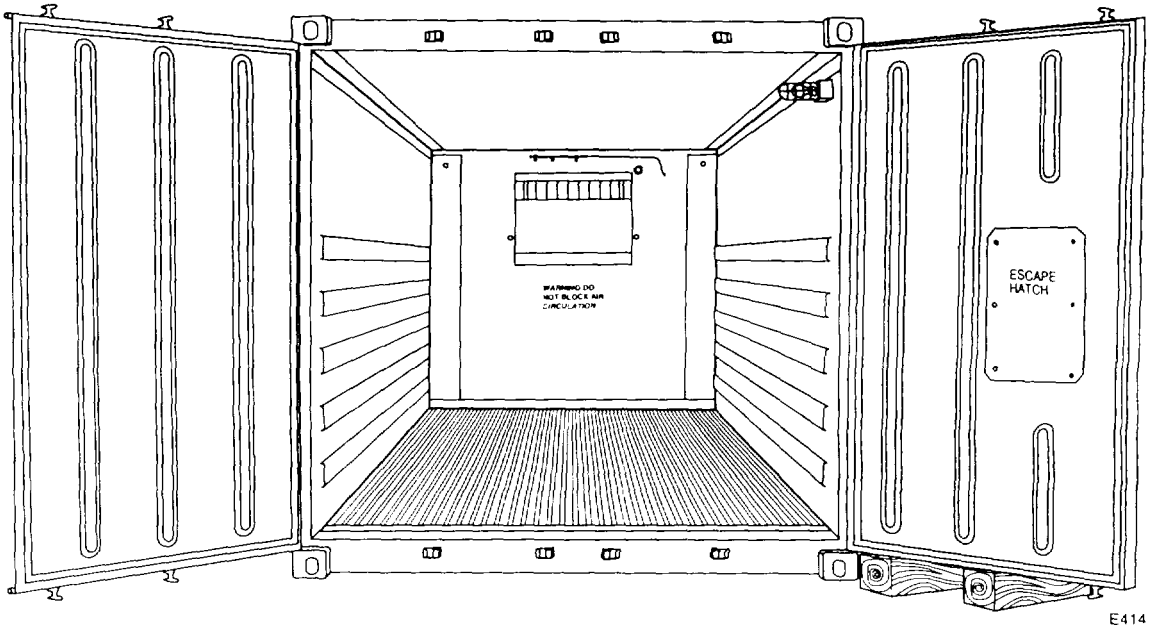


(1) If the hinges are damaged, see paragraph 5-9, Repair of Door Hinges.

(2) If hinges are not damaged:

(a) Place hardwood blocking under the door.

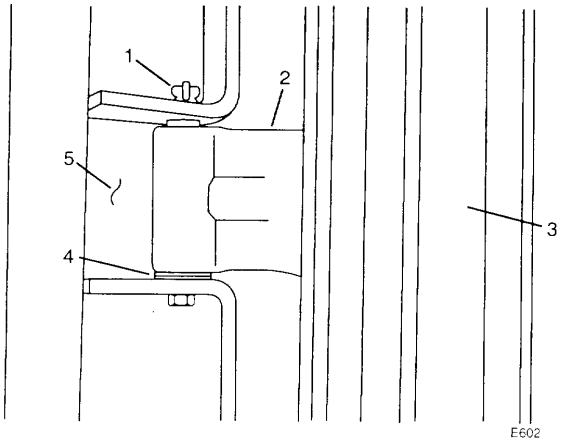


(b) Cut or chisel the four hinge pins (1) from the hinge blade (2), see paragraph 5-9.

**NOTE**

**A forklift truck will help door removal**.

(3) Carefully lift the door (3) clear using a fork lift truck.

(4) Remove any undamaged gaskets, liners, extrusions or hardware and plates. Refer to para 4-23 to remove these parts.

**b. Rear Door Installation.**

(1) Carefully lift door into position and place a support under the door.

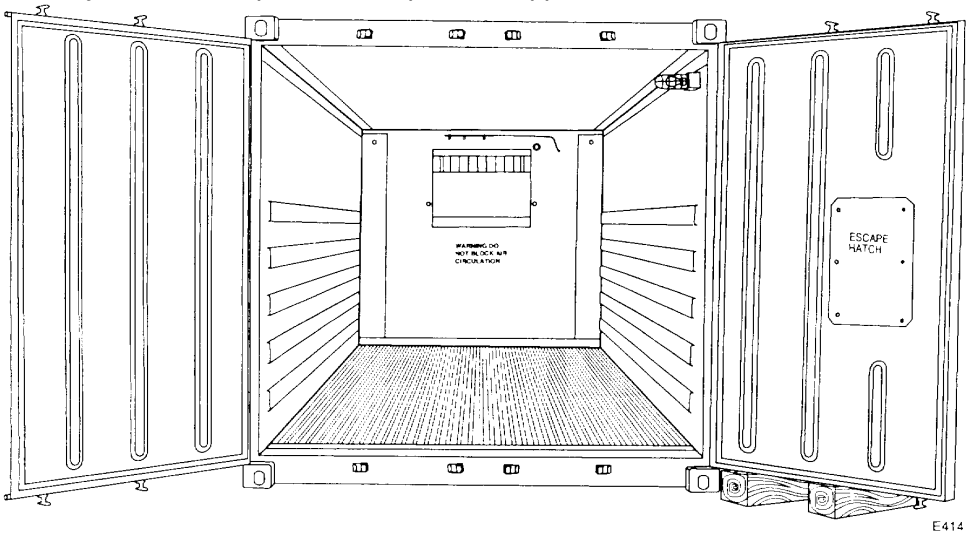


(2) Align hole in hinge blade (2) with cutouts in corner post (5).

(3) Insert eight shim washers (4), two at bottom of each hinge blade (2).

(4) Attach gaskets, liners, extrusion or hardware and plates. Refer to para 4-23 to install these parts.

(5) Install four hinge pins (1).

(6) Replace any decals and markings, refer to paragraph 4-22 and 5-5. Perform light and water tests to verify that there are no light leaks and that the door is watertight.

## 5-9. REPAIR OF DOOR HINGES.

This task covers: a. Servicing b. Remove c. Installation

INITIAL SET-UP:

*Tools:*
General Mechanics Tool Kit (Item 1, App B)

*Equipment Condition:*
Refrigeration unit shutdown (TM 9-4110-258-13)
Generator set shutdown (TM 5-6115-585-12/34)

*Materials/Parts*
Hinge Pin **(Item 10, App H)**
Bushings (Item 12, App H)
Lock Collar (Item 11. App H)

**a. Servicing.**

If possible, hinge pins should be freed by using a penetrating oil to lubricate the hinge. Use heat if necessary. If the door hinge is heated, protect the door gasket to prevent damage by burning. After heating, clean, mask, prime and top coat the repaired area.

**b. Replacement of Hinge Pin and Hinge Blade.**

**NOTE**

**Remove hinge pins only from hinge blades being replaced.**

(1) Drive the hinge pin (1) out of the hinge blade (2).

(a) Cut the crimped head off of the hinge pins (1).

(b) Drive the middle two hinge pins out first with a hammer and punch,

(c) Start to drive the bottom pin out.

(d) Drive the top hinge pin out and finish removing the bottom pin.

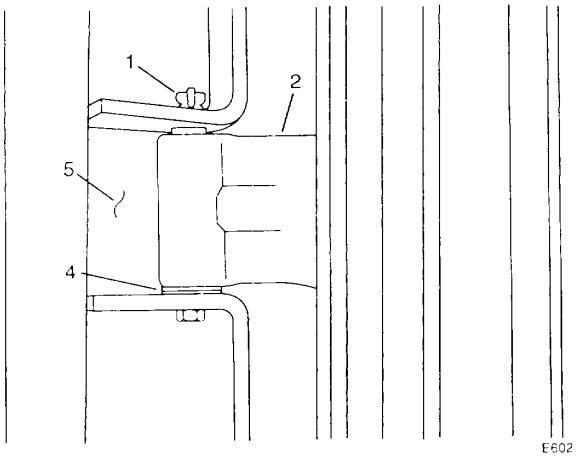

(2) When the pin (1) cannot be driven out of the hinge blade (2), remove the hinge blade from the door by cutting or chiseling the fasteners (3).

(a) Cut the hinge pin above and below the hinge blade.

(b) Remove the hinge blade. Apply penetrating oil and drive the hinge pin out of the blade with a hammer and punch.

(c) Remove the damaged bushing (4) from the hinge blade (2) and clean the hinge pin hole in the hinge blade.

(3) Lubricate the hinge pin hole in the blade (2) and install replacement bushing in the hinge blade.

(4) Fit the hinge blade (2) into the corner post cutout (4) and insert the replacement pin (1).

(5) Fasten the hinge blade (2) to the door.

(6) Clean, mask, prime and top coat the repaired area.

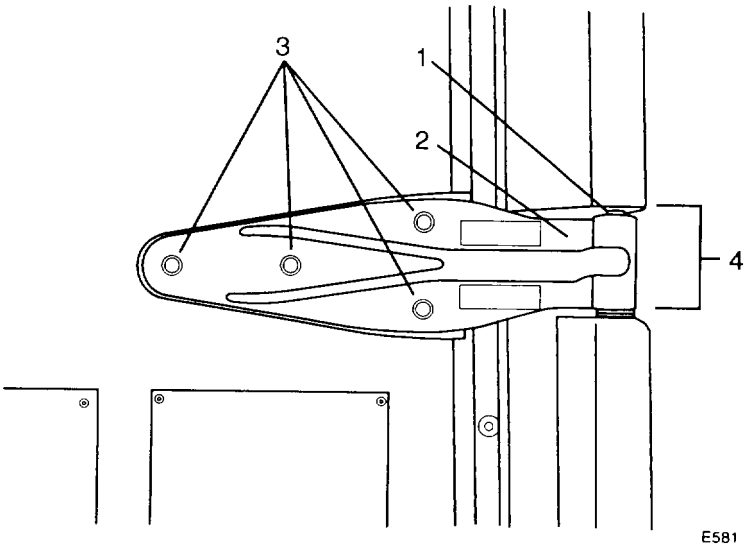

## 5-10. REPAIR OF LOCKING BARS (RODS).

This task covers: a. Straightening b. Replacement

INITIAL SET-UP:

*Tools:*
General Mechanics Tool Kit (Item 1, App B)

*Materials/Parts:*
Barrier Tape (Item 3, App E)

*Equipment Condition:*
Refrigeration unit shutdown (TM 9-4110-258-13)
Generator set shutdown (TM 5-6115-585-12/34)

**a. Straightening.**

(1) When a locking bar (1) is distorted between locking bar mounting brackets (2), it should be straightened without heating, if possible.

(2) If heating is necessary, place a sheet of steel or aluminum between bar and door face (3).

(3) Straighten locking bar (1).

(4) Clean, prime and paint.

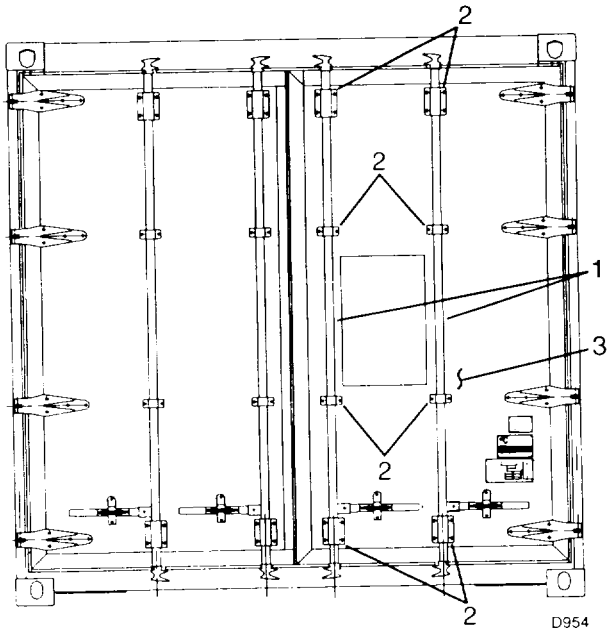

**b. Replacement.**

**NOTE**

**Bent locking rods that cannot be straightened while mounted must be replaced.**

(1) Remove damaged rod and fit replacement. Remove existing undamaged door handles (4), two cams (5) and four mounting brackets (2) when replacing damaged locking rods (1).

(2) If necessary, apply new barrier tape (6) between door panel and locking bar brackets and guides.

(3) Clean, prime and paint repaired area in matching colors where necessary.

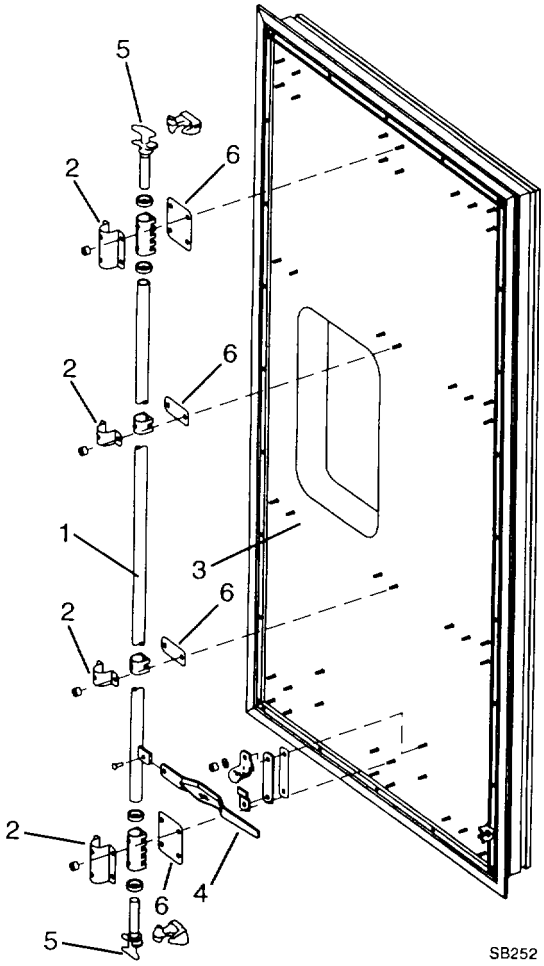

## 5-11. FRAME

This task covers: Repair

INITIAL SET-UP:

*Tools:*
General Mechanics Tool Kit (Item 1, App B)
Welding Shop, Trailer Mounted (Item 3, App B)

*Equipment Condition:*
Refrigeration unit shutdown (TM 9-4110-258-13)
Generator set shutdown (TM 5-6115-585-12/34)

**Repair.**

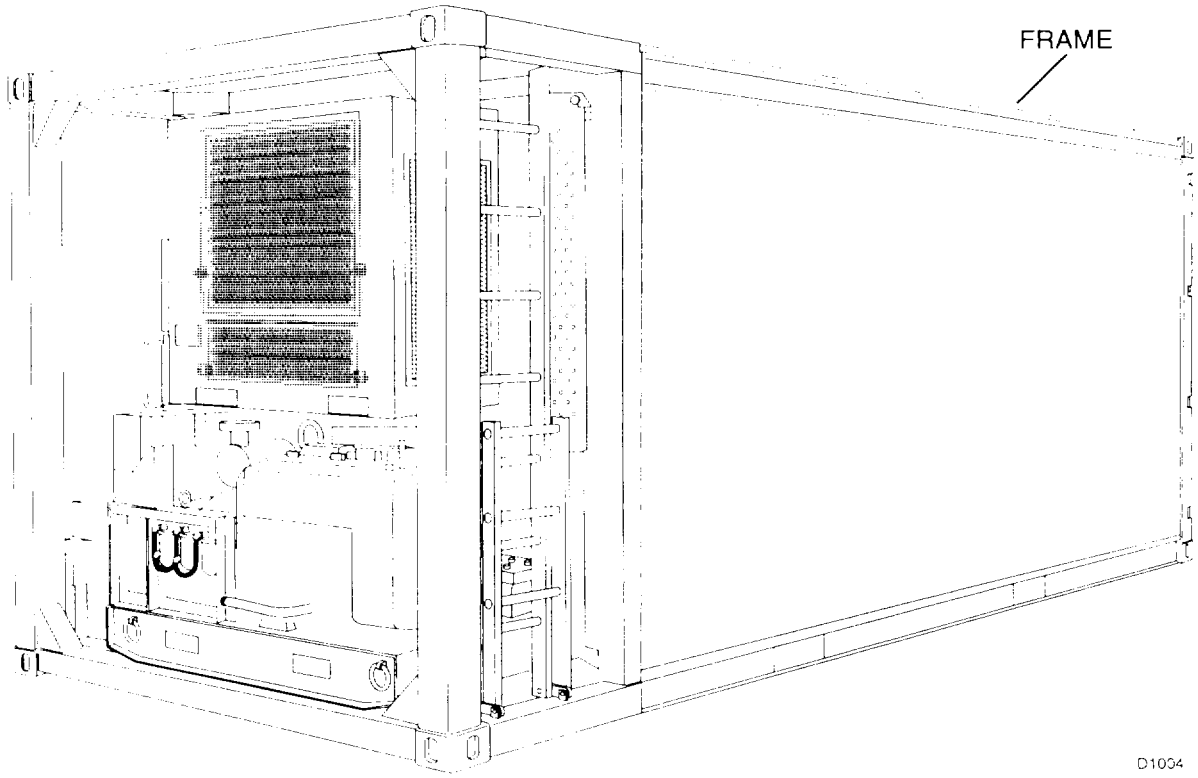


(1) Repair minor bends and dents in container frame in accordance with TM 9-450.

(2) Weld minor cracks in container frame in accordance with TM 9-237.

(3) Remove corrosion and paint bare metal surfaces of frame components in accordance with TM 9-213.

## 5-12. CORNER FITTINGS.

This task covers: a. Removal b. Installation

INITIAL SET-UP:

*Tools:*
General Mechanics Tool Kit (Item 1, App B)
Welding Shop, Trailer Mounted (Item 3, App B)

*Equipment Condition:*
Refrigeration unit shutdown (TM 9-4110-258-13)
Generator set shutdown (TM 5-6115-585-12/34)

**a. Removal.**

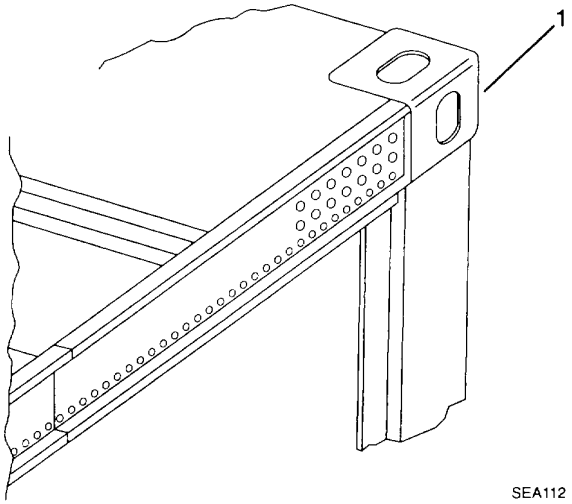


Damaged corner fittings must be replaced.

(1) Cut out the damaged fitting (1) along existing welds.

(2) Carefully grind all existing welds back to base metal.

**b. Installation.**

(1) To ensure complete penetration of welds, edges of metal next to fittings should be ground to a 45° bevel.

**NOTE**

**To ensure proper engagement of container handling devices, it is important that the distance between hole centers be the same as it was with the old fitting, and that the fitting is properly positioned horizontally.**

(2) Position corner fitting (1) with gaps of no more than 5/64 in (2 mm) before welding.

(3) When possible, connections to the fitting should be fully welded on both sides of the joint. Welds must be uniform, free of scale, pin and blow holes, and with full penetration. All welds to corner fittings must be made with low hydrogen welding rods.

## 5-13. TOP RAILS.

This task covers: a. Straightening b. Straightening and Welding c. Inserting d. Sectioning or Full Length Replacement

INITIAL SET-UP:

*Tools:*
General Mechanics Tool Kit (Item 1, App B)
Welding Shop, Trailer Mounted (Item 3, App B)

*Equipment Condition.:*
Refrigeration unit shutdown (TM 9-4110-258-13)
Generator set shutdown (TM 5-6115-585-12/34)

*Materials/Parts:*
Rivets (Item 18, App E)
Barrier Tape (Item 3, App E)
Sealant (Item 8, App E)
Foam (Item 4, App E)

**a. Repair by Straightening.**

(1) Whenever possible, straighten any dents or distortions mechanically without heating.

(2) If it is necessary to apply heat to assist in straightening, the steel should be heated only to a dull cherry-red color (1200°F or 650°C) and only in damaged area.

**b. Repair by Straightening and Welding.**

(1) Straighten the torn area.

(2) Weld the edges of the cut material.

(3) Clean, mask, prime and top coat the repaired area.

**c. Repair by Inserting.**

When damage cannot be repaired by straightening, an insert may be installed. The following limitations apply:

- Inserts must be a minimum of 6 in (150 mm) in length.
- If an insert would end within 6 in (150 mm) of another vertical rail weld, it must be extended to that weld.
- If an insert on a top side rail would end within 12 in (300 mm) of a corner fitting, it must be extended to the fitting.
- Inserts must have the same cross sectional profile as the original rail.
- Inserts must be fitted flush with the original rail.

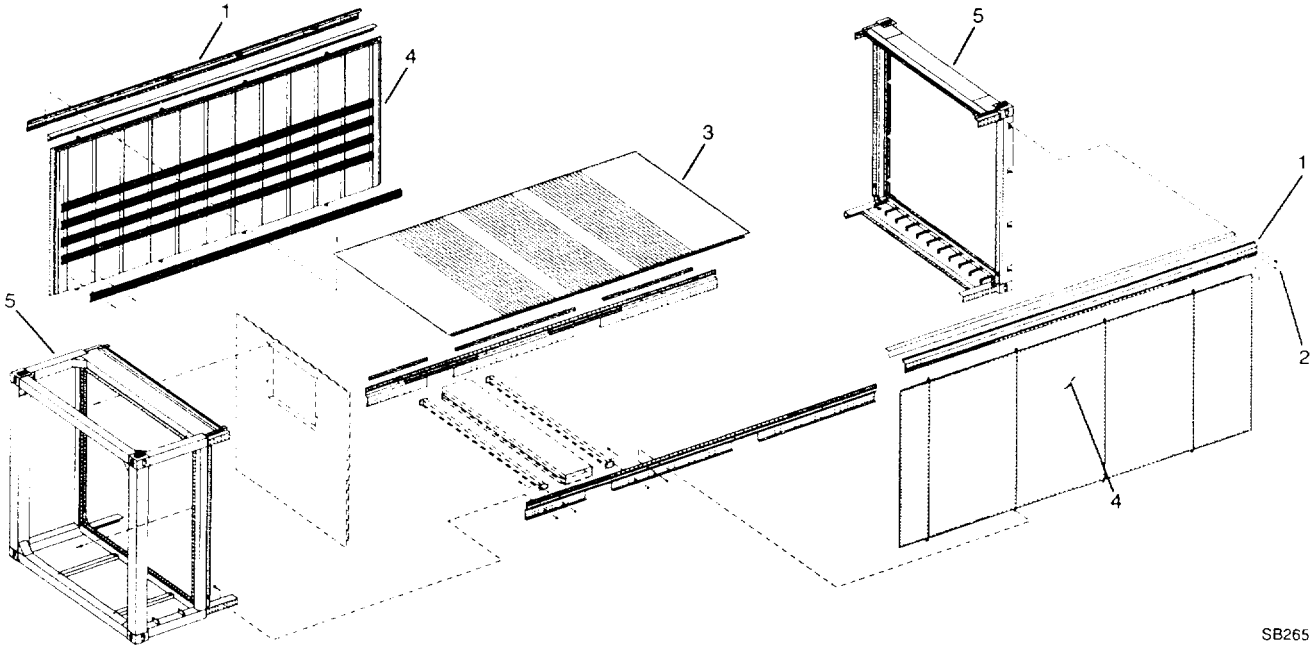


(1) Determine the length of rail (1) to be removed and mark where the cut is to be made.

(2) Remove rivets (2) securing the top rail to side panel (3) and roof stringers as required. Remove any foam, lining and/or other parts which block access to the repair area.

(3) Separate top rail (1) from roof (3) and side panels (4) with wedges no more than 5/32 in (4 mm) thick.

(4) Using a disc grinder, cut out the damaged area. Be careful not to damage adjoining component parts.

(5) Straighten the remaining rail edges if bent.

(6) Clean and smooth all cut edges with a disc grinder.

(7) Cut to size, clean and fit replacement insert. The insert must fit flush with the original rail. Allow no more than 5/64 in (2 mm) clearance between adjoining surfaces.

(8) Tack weld into position, check alignment and continuously weld.

(9) Fasten rail (1) to side panels (4) and roof (3) with rivets (2). Install barrier tape to prevent contact between dissimilar metals.

(10) Clean, mask, prime and top coat the repaired area.

**5-13. TOP RAILS - Continued**

**d. Replacement Sectioning or Full Length Replacement.**

**NOTE**

**When installing a replacement section, the entire cross section of the rail must be removed. The following limitations apply:**

- **No more than 2 full-profile vertical welds are permitted in a 20-foot rail.**

**NOTE**

**The limitations above do not include the weld connections between rail and corner fittings or other welds performed as part of original manufacture.**

- **Replacement material must be of the same specification, gauge and profile as the original.**
- **Sections must be at least 6 in (150 mm) in length.**
- **If a section in a top side rail would end within 12 in (300 mm) of a corner fitting, it must be extended to the fitting.**
- **If a section would end within 6 in (150 mm) of an existing vertical weld, it must be extended to that weld.**
- **If the damage extends over a distance equivalent to 50% or more of the container length, the complete rail must be replaced.**

(1) Determine the length of original rail (1) to be removed. Mark where the cuts are to be made.

(2) Remove any foam, lining and/or other parts which block access to the repair area.

(3) Remove fasteners (2) attaching top rail (1) to end frame brackets (5) (if section extends to the corner fitting), side posts, side panels, roof and roof bows as appropriate.

(4) Separate side panel (4) and top rail (1) with wedges no more than 3/32 in (4 mm) thick.

(5) Use a disc cutter to free the damaged part of the rail.

(6) Straighten the remaining rail edges if bent and grind all areas smooth.

(7) Remove any old barrier tape.

(8) Cut to size, clean and fit replacement section or new rail into position. The section must fit flush with the remaining rail profile. Allow no more than 5/64 in (2 mm) clearance between adjoining edges. If the roof or side panels are made of aluminum, prepaint and apply new barrier tape to prevent electrolytic corrosion.

(9) Position new rail or section and tack weld into place. Check alignment to ensure that ISO dimensional tolerances are maintained.

(10) Continuously weld the replacement section or new rail in place.

(11) Grind off sufficient weld bead from the top and bottom of the top rail to assure proper alignment with roof sheet (3) and side panel (4).

(12) If previously detached from the end frame (5), fasten top rail (1) to end frame bracket with rivets (2).

(a) Attach the roof panel (3) and the front or side panel (4) to the top rail (1).

(b) If the roof (3) and front or side panels (4) are made of aluminum, use appropriate rivets.

(c) Install barrier tape to prevent contact between dissimilar metals.

(13) Clean, mask, prime and topcoat the repaired area or new rail.

**NOTE**

**Any damaged foam discovered during the rail repair procedure must be repaired.**

(14) Apply sealant along the interior seam between the roof panel and the top rail.

(15) Verify that all fasteners are tight and that the repair is watertight. Also check to ensure that all dissimilar metals have been protected from electrolysis with barrier tape.

## 5-14. BOTTOM RAILS.

This task covers: a. Straightening b. Straightening and Welding c. Inserting d. Sectioning or Full Replacement

INITIAL SET-UP:

*Tools:*
General Mechanics Tool Kit (Item 1, App B)
Welding Shop, Trailer Mounted (Item 3, App B)

*Equipment Condition:*
Refrigeration unit shutdown (TM 9-4110-258-13)
Generator set shutdown (TM 5-6115-585-12/34)

*Materials/Parts:*
Rivets (Item 18, App E)
Barrier Tape (Item 3, App E)
Sealant (Item 8, App E)
Foam (Item 4, App E)

### a. Straightening.

(1) Whenever possible, straighten any dents or distortions mechanically, preferably without heating.
(2) If it is necessary to apply heat to assist in straightening, the steel should be heated only to a dull cherry-red color (1200°F or 650°C) and only in the damaged area.

### b. Straightening and Welding.

(1) Straighten the torn area.
(2) Weld the edges of the cut material.
(3) Clean, mask, prime and topcoat the repaired area.

**5-14. BOTTOM RAILS - Continued**

**c. Inserting.**

Damage that cannot be repaired by straightening may be repaired by replacing the damaged area with an insert. The following limitations apply:

- Inserts can be any profile that does not extend through the entire cross section of the rail.
- Inserts must be a minimum of 6 in (150 mm) in length.
- Inserts must be fitted flush with the original material.
  - If an insert would end within 6 in (150 mm, of another vertical rail weld, it must be extended to that weld or to the fitting.
  - If an insert in a bottom side rail would end within 12 in (300 mm) of a corner fitting, it must be extended to the fitting.
- Insets must have the same cross sectional profile as the original rail.

(1) Determine the length of rail (1) to be removed. Mark where the area is to be cut.

(2) Remove rivets (2) securing the bottom rail (1) to side panel (3) and crossmembers (4). Remove any foam, lining and/or other parts which block access to the repair area.

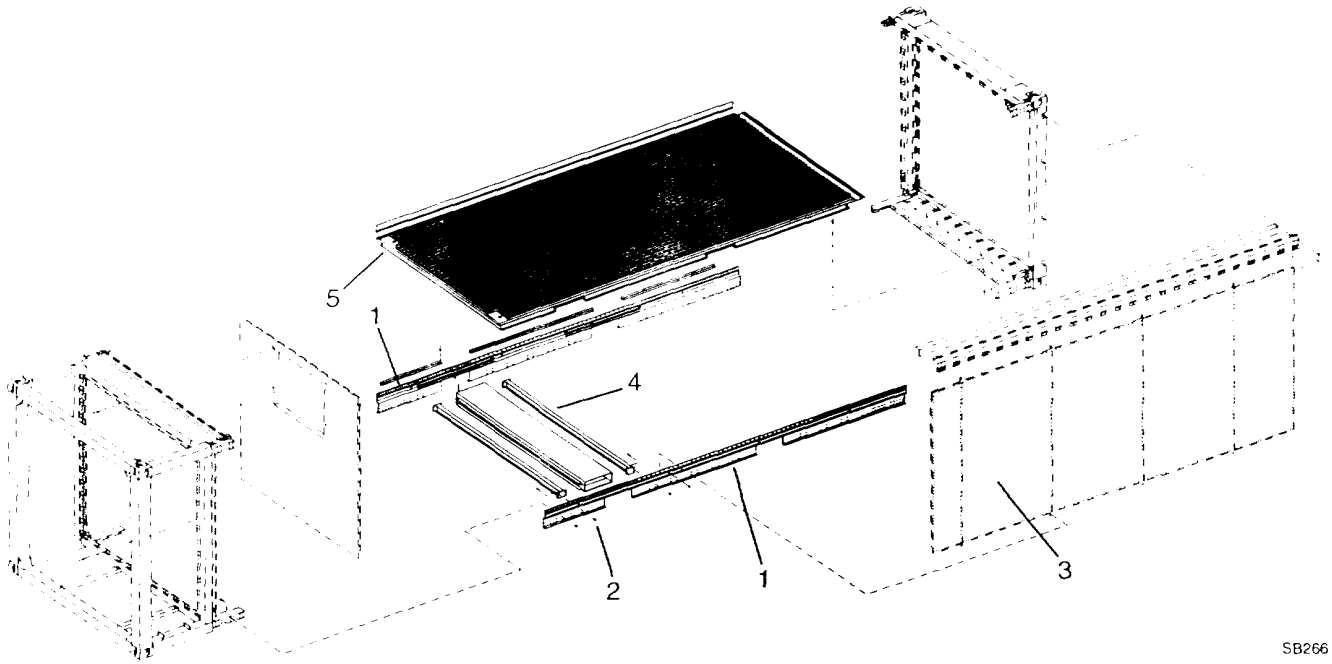


(3) Separate side panel (3) from bottom rail (1) with wedges no more than 5/32 in (4 mm) thick.

(4) Using a disc grinder, cut out the damaged area. Grind all cut areas smooth and clean.

(5) Straighten the remaining rail edges if bent. Clean and smooth all cut edges with a disc grinder.

(6) Cut to size, clean and fit replacement insert into position. The insert must fit flush with original rail. Allow no more than 5/64 in (2 mm) clearance between adjoining surfaces.

(7) Angle edges of insert and rail at 30° for weld groove.

(8) Make sure to prime interior of insert before installing in bottom rail.

(9) Tack weld, check alignment and continuously weld.

(10) Rivet rail (1) to side panels (3) and cross members (4). Install barrier tape to prevent contact between dissimilar metals. Leave appropriate holes for refoaming.

(11) Clean, mask, prime and top coat the repaired area.

**d. Sectioning or Full Length Replacement.**

**NOTE**

**When installing a replacement section, the entire cross sectional profile of the rail must be removed.**

(1) Determine the length of rail (1) to replace. Mark where cuts are to be made.

(2) If necessary, remove the refrigeration unit (para. 4-29). Remove any foam, lining, and/or other parts which block access to the repair area.

(3) Remove fasteners (2) securing floor lining (5) to the front bottom rail.

(4) Remove enough foam insulation to access the heads of the fasteners securing the subfloor panel to the front bottom rail. Remove these fasteners.

(5) Remove fasteners securing side panel (3) and cross members (4) to bottom rail (1).

(6) Separate side panel and bottom rail with wedges no more than 5/32 in (4 mm) thick.

(7) Use a disc cutter to free the damaged part of the rail.

(8) Grind all cut areas smooth and clean.

(9) Straighten the remaining rail edges if bent.

**NOTE**

**Allow no more than 5/64 in (2 mm) clearance between adjoining edges to be butt welded. The ends of the replacement rail should be chamfered to allow proper weld penetration.**

(10) Cut to size, clean and fit replacement section or new rail into position. The section must fit flush with the remaining rail profile.

(11) Angle edges of insert and rail at 30° for weld groove. Make sure to prime interior of insert before installing.

(12) Position new rail or section and tack weld.

(13) Check alignment to ensure that dimensional tolerance are maintained. Make any corrections before installing section.

**5-14. BOTTOM RAILS - Continued**

(14) Continuously weld the replacement section or new rail in place.

(15) As applicable, attach the subfloor panel and/or the front or side panel to the bottom rail.

(16) Use appropriate fasteners. Apply barrier tape to prevent contact between dissimilar metals.

(17) Clean, mask, prime and top coat the interior and exterior.

(18) Replace/refoam any foam insulation removed previously.

(19) Apply sealant along the interior seam between the subfloor and the bottom rail.

(20) Drill and secure subfloor panel using fasteners of the original type. Drill and secure floor lining using rivets at 24 in (600 mm) intervals.

(21) Replace refrigeration unit if removed. Verify that all fasteners are tight and that the repair is watertight. Check to ensure that all dissimilar metals have been protected from electrolysis with barrier tape.

---

**5-15. CORNER POSTS.**

---

This task covers: a. Straightening b. Inserting c. Replacement

---

INITIAL SET-UP:

*Tools:*
General Mechanics Tool Kit (Item 1, App B)
Welding Shop, Trailer Mounted (Item 3, App B)

*Material/Parts:*
Foam (Item 4, App E)

*Equipment Condition:*
Refrigeration unit shutdown (TM 9-4110-258-13)
Generator set shutdown (TM 5-6115-585-12/34)

---

**NOTE**

**Sections are not allowed in comer posts.**

**NOTE**

**Damage to posts which results in accompanying damage to other container parts may have to be repaired in a different manner than is described in this section.**

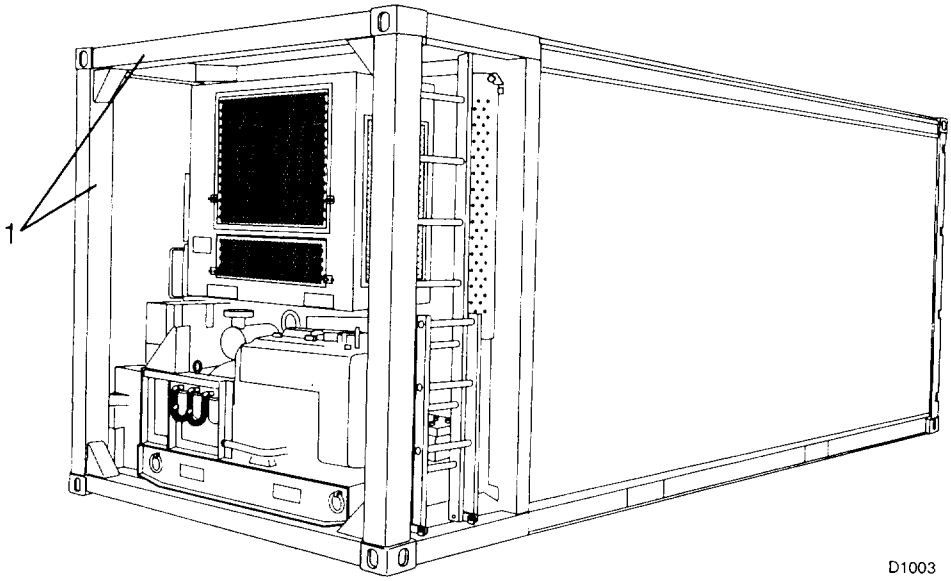


**a. Straightening.**

(1) Whenever possible, straighten any dents or distortions in corner posts (1) by mechanical or hydraulic means without heating.

(2) If the dent cannot be straightened without heating, heat may be applied to assist in straightening the damaged area.

(3) When heat is used, the steel should be heated only in the damaged area and must not be heated beyond a dull cherry-red color (1200°F or 650°C).

**5-15. CORNER POSTS - Continued**

**b. Inserting.**

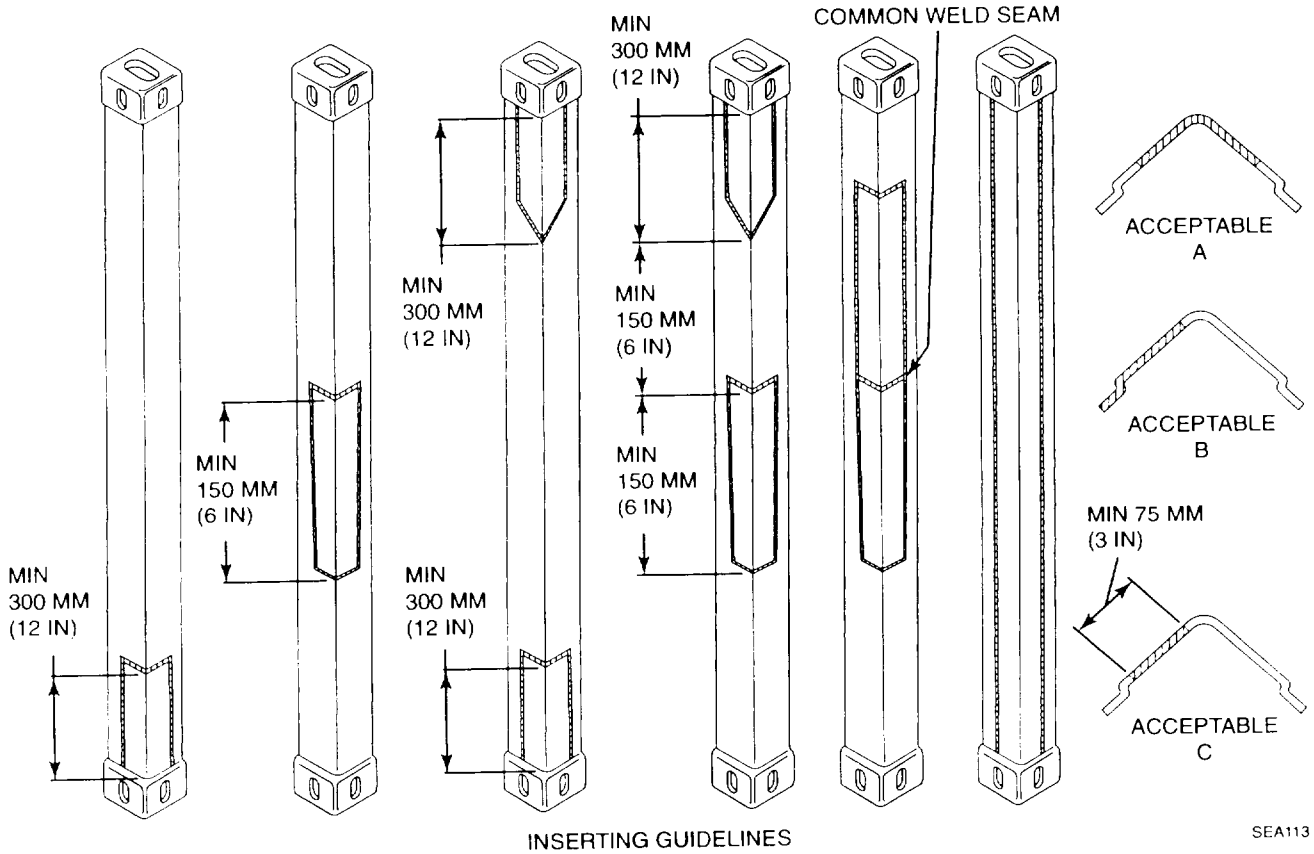


INSERTING GUIDELINES

(1) Determine the length and profile of the area to be replaced and mark around its perimeter. Refer to figure INSERTING GUIDELINES for minimum requirements.

(2) Position and tack weld guide bars to ensure straight cuts with an oxygen acetylene torch. This procedure will avoid creating excessive gaps, created by irregular cuts, between the replacement insert and the remaining portion of the corner post.

(3) Carefully shield any areas of adjacent panels or foam which might be damaged by the heat.

(4) Cut out the damaged area of the post. Do not cut vertically on any formed edge.

(5) Clean and smooth all flame cut area with a grinding disc. Check that any visible foam is free of damage.

(6) Cut a replacement insert. It should be made from the same material as the original post.

**NOTE**

**The radii of the formed edges of the insert must be identical to the radii of the original post so that the surface of the insert and corner post can be properly aligned.**

**NOTE**

**To ensure full weld penetration at the joint, bevel adjoining surfaces to a 30° angle to create a minimum inclusive angle of 60° around the entire perimeter of the insert seam.**

(7) Fit the replacement insert flush with the original post, tack weld, check alignment and, if accessible, continuously weld from both the exterior and interior.

(8) Clean, mask, prime and top coat the repaired area.

**c. Corner Post Replacement.**

(1) Remove all rivets from adjacent panels.

(2) If necessary, pry panels away from post with wedges.

(3) Remove any sections of damaged foam, as well as any foam that will be damaged by the repair process.

**NOTE**

**Direct the cutting torch flame away from the corner fittings, rails and side panels to prevent damaging any of these adjacent parts.**

(4) Cut out the damaged post. If the post is at the door end, cut the hinge lugs from the post and remove the door.

(5) Remove the post and clean all cut edges with a grinding disc.

(6) Check alignment by measuring the height, width, length and diagonal dimensions of the container.

(7) Bevel the edges of the corner post that are to be welded to the corner fitting to allow complete weld penetration.

(8) Check for damage to adjacent foam. If foam is damaged, repair.

(9) Fit the replacement post into position, tack weld and check alignment.

**NOTE**

**Ensure that dimensions and tolerances are maintained. When replacing a rear corner post, install the door by fully welding the hinge lugs to the corner post.**

(10) Continuously weld new post to corner fittings and attach to panels using the original method of attachment.

(11) Clean, mask, prime and top coat the repaired area.

## 5-16. CROSS MEMBER REPAIR.

This task covers: a. Straightening b. Replacement

INITIAL SET-UP:

*Tools:*
General Mechanics Tool Kit (Item 1, App B)

*Equipment Condition:*
Refrigeration unit shutdown (TM 9-4110-258-13)
Generator set shutdown (TM 5-6115-585-12/34)

*Materials/Parts:*
Rivets (Item 18, App E)
Barrier Tape (Item 3, App E)

The following limitations apply:

- Inserts, sections, welded repairs and doubler plates are NOT allowed for cross members.
- Replacement cross members and rivets should be of the same thickness and material specification as the original.

**a. Straightening.**

**NOTE**

**Do not use heat.**

(1) Use a mechanical device such as a jack or straightening wrench.

(2) Back the jacking device against an adjacent cross member supported with timber. Do not jack against the subfloor (underfloor panel).

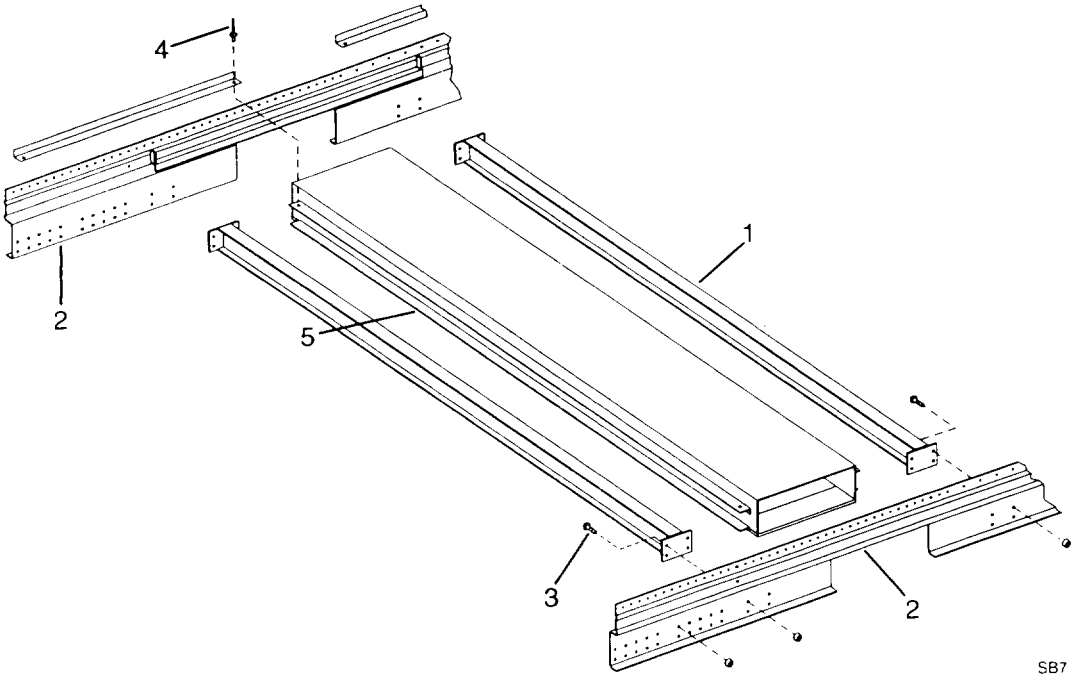

**b. Replacement.**

(1) Aluminum cross members (1) are fastened to the lower rails (2) with rivets (3). Remove the rivets securing the cross member to the rail.

(2) Remove floor rivets (4) from the underside of the container.

(3) Remove cross member (1) or fork pocket (5).

(4) Drill six equally spaced holes through the top flange of the cross member.

(5) Apply barrier tape to prevent contact between dissimilar metals (steel and aluminum).

(6) Secure one end of the cross member using rivets of the same size and specifications as the originals.

(7) Clamp the other side of the cross member and fit the cross member into place. The cross member must make full contact with the floor.

(8) Temporarily secure the clamp end to the lower rail using the existing holes.

(9) Secure the other end to the lower rail using rivets. Fit, adjust and secure the clamped end using rivets.

(10) Clean prime and top coat the repaired area.

---

## 5-17. FOAM INSULATION.

---

This task covers: a. General b. Half Panel c. Full Panel

---

INITIAL SET-UP:

*Tools:* *Materials/Parts:*
General Mechanics Tool Kit (Item 1, App B)
Wiping Cloths (Item 6, App E)
Sealant (Item 8, App E)
*Equipment Condition:* Foam (Item 4, App E)
Refrigeration unit shutdown (TM 9-4110-258-13)
Polyurethane Adhesive (Item 1, App E)
Generator set shutdown (TM 5-6115-585-12/34)

---

**a. General Repair Policy for Foam Insulation.**

Foam can be cut with power saws or cutters and shaped with rotary tools, drills and planes. Be careful to avoid damaging or contaminating the foam when repairing or replacing foam insulation.

- When working with foam chemicals, adhesives and sealants, take precautions against breathing noxious vapors or allowing foam to contact skin and eyes. In addition, some of these products are flammable or combustible. Read and follow carefully all manufactures' recommendations and safety precautions before proceeding with repairs. Wear protective goggles and clothing. Wash skin extensively with soap and water, and seek professional medical attention should chemicals come in contact with eyes or skin.

**5-17. FOAM INSULATION - Continued**

- Surfaces to be bonded or foamed MUST be clean. Metals should be cleaned with solvents, " using clean wiping cloths (use only once), followed by an abrasive cleaning of steel or suitable cleaning of aluminum. Remove blast with dry compressed air.

- Chemicals should be stored in a cool and dry location. Before using, check that shelf lives of chemicals have not been exceeded. Carefully cover and seal partially used chemicals.

- After performing foam procedures, check whether the proper foam penetration and expansion has taken place, so that all voids are filled. Use suitable bracing to prevent bulging during the foam's expansion.

- All surfaces which contact foam must be primed for proper bond strength and corrosion resistance.

- When grinding with rotating wire wheels, be sure to direct residue away from the surface being prepared.

- After foam has cured, cut away excess foam and seal any exposed foam to reduce the opportunity for dirt to accumulate and bacteria to grow, to prevent entrance of moisture, and to improve cosmetic appearance of the container.

- In general, all materials involved in a foaming procedure should be at the same temperature. Note carefully the curing time of foam and adhesives. As a rule, curing time is reduced as ambient (outside) temperature increases. This may affect the manner in which the repair is planned. Calculations regarding the proper volume and mix of chemicals generally assume a minimum temperature of 68°F (20°C). The temperature of panels during foaming must not be less than 50°F (10°C).

- When panels do not properly adhere to foam, air pockets develop and water vapor can condense. In addition to decreasing the insulating property of the foam, vapor invites bacteria, fungi and corrosion.

- Bulges in panels do not necessarily mean that the foam has been damaged. Careful visual examination and probing is recommended to avoid unnecessary repairs. Air pockets can be repaired using liquid adhesives injected into the skin.

**b. Foaming Panels Less Than Half Height.**

(1) When foaming in a closed cavity, the panels on both sides must be supported. The foam expands naturally, but is restrained by pressure from the panels. Use plywood back-up plates pressed against the repair panels by mechanical or hydraulic means.

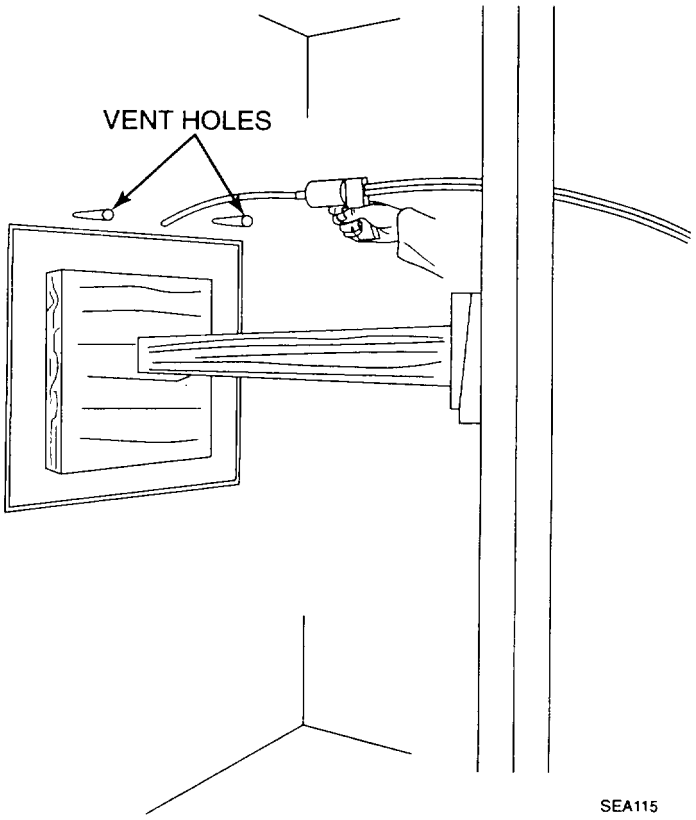


(2) Drill two holes through the support plywood and repaired panels. The hole diameter must be large enough to accommodate the foam nozzle. Position the holes a maximum of 24 inches (600 mm) apart on a horizontal line below the upper edge of the repair patch.

(3) Prepare proper density foam according to manufacturer's recommendations. Pour or inject the foam into the cavity. When foam emerges from the second hole, close both holes with an approved blind fastener. If foam does not come out of the hole(s), foaming is not complete and must be repeated.

(4) When all the holes have been closed, check for air pockets by tapping on the panel. If air pockets are suspected, additional holes must be drilled, and the foaming process repeated.

(5) After curing for manufacturer's specified time, remove the supports and complete the repair.

## 5-17. FOAM INSULATION - Continued

### c. Foaming Panels of Full Height.

(1) After removing the damaged panel, cut battens from the proper density foam block. The battens should be 2 inches (50 mm) wide and exactly as deep as the original foam. Overall height of the battens should be 12 inches (300 mm) shorter than the height of the cavity being filled. The number of battens to be used depends on the width of the panel section repair. Battens should be on 12 inch (300 mm) centers (approximate).

(2) Apply two component polyurethane adhesive full length to the 2 inch (50 mm) side of each batten, and press into position against the inner panel on 12 inch (300 mm) centers, leaving 6 inches (150 mm) above and below.

(3) Close the patch with prepared panel. Support the panel on both sides using plywood sheets 1 inch (25 mm) thick cut to fit the panel. Use mechanical or hydraulic means to achieve the necessary bracing.

(4) Drill two 1/4 inch (6 mm) vent holes through the plywood and panel 3 inches (75 mm) down from the top of the panel at the upper outside corners of the repair; drill one hole large enough to fit the injection nozzle centrally between the two vent holes.

(5) Prepare the proper density foam according to manufacturer's recommendations. Inject the foam into the cavity until the foam escapes from the vent holes. Temporarily plug holes.

(6) After curing in accordance with manufacturer's instructions, remove supports, clean the surface and close holes by welding, riveting or filling, depending on material.

---

## 5-18. FLOOR.

---

This task covers: a. Straightening b. Partial Replacement

---

INITIAL SET-UP:

*Tools: Materials/Parts:*
General Mechanics Tool Kit (Item 1, App B)
Polyurethane Adhesive (Item 1, App E)
Welding Shop, Trailer Mounted
(Item 3, App B)

*Equipment Condition:*
Refrigeration unit shutdown (TM 9-4110-258-13)
Generator set shutdown (TM 5-6115-585-12/34)

---

**NOTE**

**The following limitations apply when repairing an aluminum "T" floor.**

- **Cuts to remove damaged sections should be made with a disc cutter.**
- **Longitudinal cuts should be made in the middle between "T" section webs.**
- **Lateral cuts must cut through the base metal.**
- **Wet and damaged foam must be removed down to the subfloor.**
- **All welding must be MIG or TIG using appropriate filling material.**

- **Welds on top of the "T" section must be smooth. Grind if necessary.**
- **All aluminum edges to be welded must be prepared for welding by cleaning with stainless steel wire brush and solvent.**

**a. Straightening.**

**NOTE**

**Minor distortions less than 1/4 in (6 mm) deep can be straightened cold. Use a wooded wedge and mallet for straightening.**

(1) Place the wedge between "T" sections beyond the damaged (distorted) area.

(2) Using the mallet, drive the wedge forward through the distorted area until the profile has been restored to original shape.

(3) If straightening causes cracks, weld the cracks after straightening.

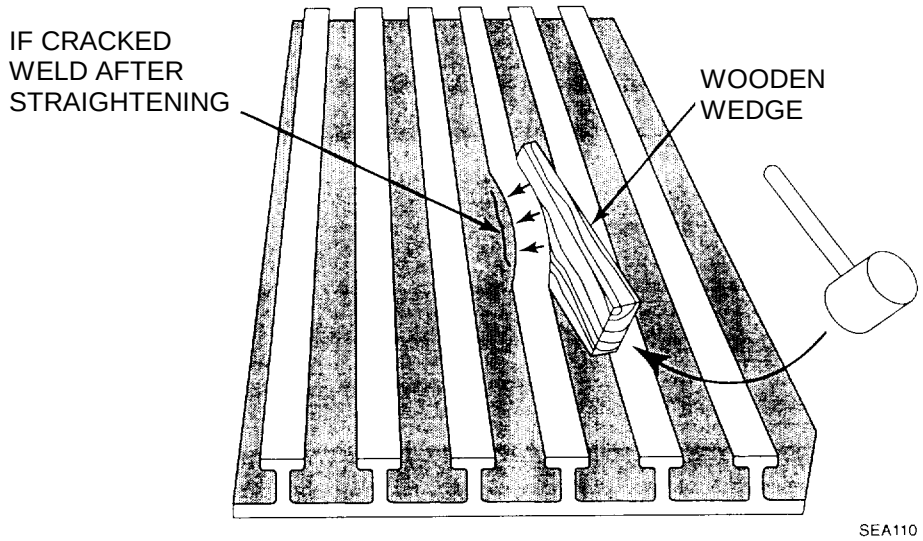


**b. Partial Replacement of "T" Floor.**

**NOTE**

**Do not plan a longitudinal cut along a weld joint. If damaged section includes a welded joint, mark for an adjacent cut which will expose fasteners.**

(1) Mark the damaged area to be replaced.

(2) Cut along the edge of the marked area using a reciprocating saw.

(a) The depth of the cut should be the minimum necessary to cut through the floor without excessive damage to the insulation or underlying structure.

(b) Cuts should be straight and vertical.

**5-18. FLOOR - Continued**

(3) Examine insulation for damage and moisture.

(4) Grind the cut edges smooth and square, and remove any contamination.

**NOTE**

**Weld-backing strips must be used to protect the foam insulation.**

(5) Prepare aluminum strips 5/64" (2 mm) thick and 2" (50 mm) wide.

(a) Place the strips between the foam and the original floor on all four sides of the cut.

(b) Allow 1" (25 mm) of the strips to show all around.

(6) Prepare a replacement “T" section from material of the same dimensions, profile, and specifications as the original floor. Allow a maximum clearance of 5/64" (2 mm).

(7) Apply adhesive primer to the back of the replacement section.

(8) Apply polyurethane adhesive to the face of the foam, and insert the new replacement section.

(a) It may be necessary to apply weight to the replacement section in order to position the section flush with the original floor.

(b) Use a straight edge to verify flush fit.

(9) Tack weld the section, notify Direct Support Maintenance.

(10) Check for correct alignment.

(11) Continuously weld into position. Verify that welds are continuous with no pin holes.

(12) Grind smooth all welds made on the top face of “T" profiles.

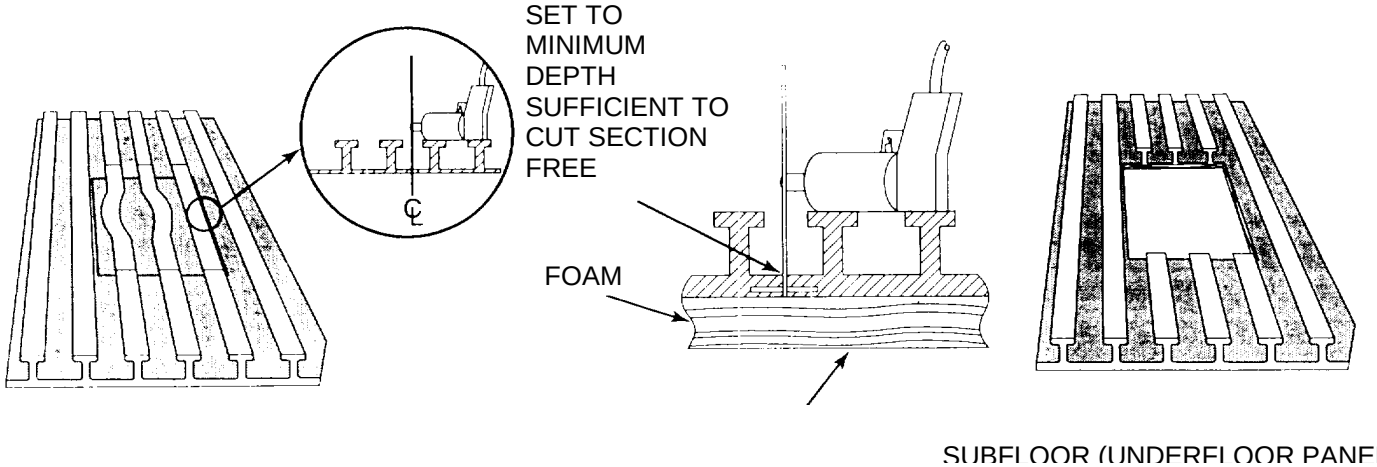

THIS PAGE MISSING NOT AVAILABLE FOR DIGITIZATION.

Section III.

# CHAPTER 6

## GENERAL SUPPORT MAINTENANCE INSTRUCTIONS

There are no General Support Maintenance Instructions for the refrigerated container.

# APPENDIX A

# REFERENCES

## A-1. SCOPE.

This appendix contains all forms, pamphlets and technical manuals, and miscellaneous publications referenced in this manual.

## A-2. FORMS.

Discrepancy in Shipment Report ..... Form SF 361

Recommended Changes to Publications and Blank Forms ..... DA Form 2028

Packaging Improvement Report ..... DD Form 6

Recommended Changes to Equipment Technical Manuals ..... DA Form 2028-2

Report of Discrepancy ..... Form SF 364

Quality Deficiency Report ..... Form SF 368

## A-3. TECHNICAL MANUALS.

Destruction of Army Materiel to Prevent Enemy Use ..... TM 750-244-3

Operation and Organizational Maintenance Manual for Generator Set ..... TM 5-6115-585-12

General Support and Direct Support Maintenance Manual for Generator Set ..... TM 5-6115-585-34

Metal Body Repair and Related Operations ..... TM 9-450

Operator's Manual: Welding Theory and Application ..... TM 9-237

Unit, Direct Support and General Support Maintenance Repair Parts and Special Tools List for Refrigerated Container ..... TM 55-8145-202-24P

Operator, Unit, Direct Support and General Support Maintenance Manual for Refrigeration Unit ..... TM 9-4110-258-13

Unit and Direct Support Maintenance Repair Parts and Special Tools List for Refrigeration Unit ..... TM 9-4110-258-23P

Painting Instructions for Field Use ..... TM 9-213

Painting Instructions for Field Use ..... TM 43-0139

Painting, Preservation, and Waterproofing Instructions ..... TM 740-90-1

Preservation, Packaging and Packing of Military Supplies and Equipment ..... TM 38-230-1/-2

Storage and Materials Handling ..... TM 743-200

## A-4. MISCELLANEOUS.

Camouflage of Vehicles ..... FM 5-20B

First Aid for Soldiers ..... FM 21-11

Nuclear, Biological and Chemical Decontamination ..... FM 3-5

Packaging of Army Materiel for Shipment and Storage ..... AR 246-1

Packaging of Materiel ..... AR 700-15

Packaging Improvement Reporting ..... AR 735-11-2

Reporting of Transportation Discrepancies in Shipment ..... AR 55-38

Security Procedures ..... AR 190-11, AR 190-13

The Army Maintenance Management System (TAMMS) ..... DA Pam 738-750

# APPENDIX B

# MAINTENANCE ALLOCATION CHART (MAC)

## Section I. INTRODUCTION

### B-1. The Army Maintenance System MAC

This introduction provides a general explanation of all maintenance and repair functions authorized at the two maintenance levels under the Two-Level Maintenance System concept.

This MAC (immediately following the introduction) designates overall authority and responsibility for the performance of maintenance functions on the identified end item or component. The application of the maintenance functions to the end item or component levels, which are shown on the MAC in column (4) as:

Field - includes two columns, Unit Maintenance and Direct Support maintenance. The Unit maintenance column is divided again into two more subcolumns, C for Operator or Crew and O for Unit maintenance.

Sustainment – includes two subcolumns, general support (H) and depot (D)

The tools and test equipment requirements (immediately following the MAC) list the tools and test equipment (both special tools and common tool sets) required for each maintenance function as referenced from the MAC.

The remarks (immediately following the tools and test equipment requirements) contain supplemental instructions and explanatory notes for a particular maintenance function.

### B-2. Maintenance Functions

Maintenance functions will be limited to and are defined as follows:

1. Inspect. To determine the serviceability of an item by comparing its physical, mechanical, and/or electrical characteristics with established standards through examination (e.g., by sight, sound, or feel.) This includes scheduled inspection and gagings and evaluation of cannon tubes.

2. Test. To verify serviceability by measuring the mechanical, pneumatic, hydraulic, or electrical characteristics of an item and comparing those characteristics with prescribed standards on a scheduled basis, i.e., load testing of lift devices and hydrostatic testing of pressure hoses.

3. Service. Operations required periodically to keep an item in proper operating condition; e.g., to clean (includes decontaminate, when required), to preserve, to drain, to paint, or to replenish fuel, lubricants, chemical fluids, or gases. This includes scheduled exercising and purging of recoil mechanisms. The following are examples of service functions:

   a. Unpack. To remove from packing box for service or when required for the performance of maintenance operations.

   b. Repack. To return item to packing box after service and other maintenance operations.

   c. Clean. To rid the item of contamination.

d. Touch up. To spot paint scratched or blistered surfaces.

e. Mark. To restore obliterated identification.

4. Adjust. To maintain or regulate, within prescribed limits, by bringing into proper position, or by setting the operating characteristics to specified parameters.

5. Align. To adjust specified variable elements of an item to bring about optimum or desired performance

6. Calibrate. To determine and cause corrections to be made or to be adjusted on instruments of test, measuring, and diagnostic equipment used in precision measurement. Consists of comparisons of two instruments, one of which is a certified standard of known accuracy, to detect and adjust any discrepancy in the accuracy of the instrument being compared.

7. Remove/install. To remove and install the same item when required to perform service or other maintenance functions. Install may be the act of emplacing, seating, or fixing into position a spare, repair part, or module (component or assembly) in a manner to allow the proper functioning of an equipment or system.

8. Paint. To prepare and spray color coats of paint so that the ammunition can be identified and protected. The color indicating primary use is applied, preferably, to the entire exterior surface as the background color of the item. Other markings are to be repainted as original so as to retain proper ammunition identification.

9. Replace. To remove an unserviceable item and install a serviceable counterpart in its place. “Replace” is authorized by the MAC and assigned maintenance level is shown as the third position code of the Source, Maintenance and Recoverability (SMR) code.

10. Repair. The application of maintenance services, including fault location/troubleshooting, removal/installation, disassembly/assembly procedures and maintenance actions to identify troubles and restore serviceability to an item by correcting specific damage, fault, malfunction, or failure in a part, subassembly, module (component or assembly), end item, or system.

## NOTE

The following definitions are applicable to the “repair” maintenance function:

Services. Inspect, test, service, adjust, align, calibrate, and/or replace.

Fault location/troubleshooting. The process of investigating and detecting the cause of equipment malfunctioning; the act of isolating a fault within a system or Unit Under Test (UUT).

Disassembly/assembly. The step- by- step breakdown (taking apart) of a spare/functional group coded item to the level of its least component, that is assigned an SMR code for the level of maintenance under consideration (i.e. identified as maintenance significant).

Actions. Welding, grinding, riveting, straightening, facing, machining, and/or resurfacing.

11. Overhaul. That maintenance effort (service/action) prescribed to restore an item to a completely serviceable/operational condition as required by maintenance standards in appropriate technical publications. Overhaul is normally the highest degree of maintenance performed by the Army. Overhaul does not normally return an item to like new condition.

12. Rebuild. Consists of those services/actions necessary for the restoration of unserviceable equipment to a like new condition in accordance with original manufacturing standards. Rebuild is the highest degree of material maintenance applied to Army equipment. The rebuild operation includes the act of returning to zero those age measurements (e.g., hours/miles.) considered in classifying Army equipment/components.

**B-3. Explanation of Columns in the MAC, Section II.**

Column (1) Group Number. Column (1) lists FGC numbers, the purpose of which is to identify maintenance significant components, assemblies, subassemblies, and modules with the Next Higher Assembly (NHA).

Column (2) Component/Assembly. Column (2) contains the names of components, assemblies, subassemblies, and modules for which maintenance is authorized.

Column (3) Maintenance Function. Column (3) lists the functions to be performed on the item listed in column (2). (For a detailed explanation of these functions refer to "Maintenance Functions" outlined above).

Column (4) Maintenance Level. Column (4) specifies each level of maintenance authorized to perform each function listed in column (3), by indicating work time required (expressed as man-hours in whole hours or decimals) in the appropriate subcolumn. This work time figure represents the active time required to perform that maintenance function at the indicated level of maintenance. If the number or complexity of the tasks within the listed maintenance function varies at different maintenance levels, appropriate work time figures are to be shown for each level. The work time figure represents the average time required to restore an item (assembly, subassembly, component, module, end item, or system) to a serviceable condition under typical field operating conditions. This time includes preparation time (including any necessary disassembly/assembly time), troubleshooting/fault location time, and quality assurance time in addition to the time required to perform the specific tasks identified for the maintenance functions authorized in the MAC. The system designations for the various maintenance levels are as follows:

Field:

C Operator or Crew maintenance
O Unit maintenance
F Direct Support maintenance

Sustainment:

L Specialized Repair Activity
H General Support maintenance
D Depot maintenance

## NOTE

The “L” maintenance level is not included in column (4) of the MAC. Functions to this level of maintenance are identified by work time figure in the “H” column of column (4), and an associated reference code is used in the REMARKS column (6). This code is keyed to the remarks and the SRA complete repair application is explained there.

Column (5) Tools and Equipment Reference Code. Column (5) specifies, by code, those common tool sets (not individual tools), common Test, Measurement and Diagnostic Equipment (TMDE), and special tools, special TMDE and special support equipment required to perform the designated function. Codes are keyed to the entries in the tools and test equipment table.

Column (6) Remarks Code. When applicable, this column contains a letter code, in alphabetic order, which is keyed to the remarks table entries.

**B-4. Explanation of Columns in the Tools and Test Equipment Requirements, Section III.**

Column (1) - Tool or Test Equipment Reference Code. The tool or test equipment reference code correlates with a code used in column (5) of the MAC.

Column (2) - Maintenance Level. The lowest level of maintenance authorized to use the tool or test equipment.

Column (3) - Nomenclature. Name or identification of tool or test equipment.

Column (4) - National Stock Number (NSN). The NSN of the tool or test equipment.

Column (5) - Tool Number. The manufacturer’s part number, model number, or type number.

**B-5. Explanation of Columns in Remarks, Section IV.**

Column (1) - Remarks Code. The code recorded in Column (6) of the MAC.

Column (2) - Remarks. This column lists information pertinent to the maintenance function being performed as indicated in the MAC.

## Section II. MAINTENANCE ALLOCATION CHART FOR CONTAINER, REFRIGERATED

| (1) GROUP NUMBER | (2) COMPONENT/ ASSEMBLY | (3) MAINTENANCE FUNCTION | (4) MAINTENANCE LEVEL | | | | | (5) TOOLS AND EQUIPMENT REFERENCE CODE | (6) REMARKS CODE |
|---|---|---|---|---|---|---|---|---|---|
| | | | FIELD | | | SUSTAINMENT | | | |
| | | | UNIT | | DIRECT SUPPORT | GENERAL SUPPORT | DEPOT | | |
| | | | C | O | F | H | D | | |
| 00 | CONTAINER, REFRIGERATED | | | | | | | | |
| 01 | MANUAL HOLDER AND PLATES | | | | | | | | |
| | MANUAL HOLDER | Inspect | 0.1 | | | | | | |
| | | Replace | | 0.5 | | | | 1,2 | |
| | IDENTIFICATION PLATE | Inspect | 0.1 | | | | | | |
| | | Replace | | 0.5 | | | | 1,2 | |
| 02 | TEMPERATURE RECORDER ASSEMBLY | | | | | | | | |
| | TEMPERATURE RECORDER | Inspect | 0.1 | | | | | | |
| | | Adjust | | 1.0 | | | | 4 | |
| | | Replace | | 2.0 | | | | 1 | |
| | THERMOMETER ELEMENT | Test | | 2.0 | | | | 2 | |
| | | Replace | | 2.0 | | | | 1 | |
| 03 | FUEL SYSTEM ASSEMBLY | | | | | | | | |
| | FUEL TANK AND CONNECTIONS | Inspect | 0.1 | | | | | | |
| | | Replace | | 0.5 | | | | 1 | |
| | | Repair | | 1.5 | | | | 1 | |
| 04 | EXHAUST LINE EXTENSION | | | | | | | | |
| | EXHAUST LINES | Inspect | 0.1 | | | | | | |
| | | Replace | | 1.0 | | | | 1 | |
| 05 | LADDER (SECTION) | Inspect | 0.1 | | | | | | |
| | | Replace | | 0.5 | | | | 1 | |
| | | Repair | | 0.5 | | | | 1 | |
| 06 | ELECTRICAL EQUIPMENT | | | | | | | | |
| | CABLE, ELECTRIC POWER (GEN SET) | Inspect | 0.1 | | | | | | |
| | | Replace | | 1.0 | | | | 1 | |
| | | Repair | | 1.5 | | | | 2 | |
| | LIGHT ASSEMBLY | Inspect | 0.1 | | | | | | |
| | | Replace | | 1.0 | | | | 1 | |
| | | Repair | | 0.5 | | | | 2 | |
| 07 | BOX ASSEMBLY | | | | | | | | |

## Section II. MAINTENANCE ALLOCATION CHART FOR CONTAINER, REFRIGERATED - Continued

| (1) GROUP NUMBER | (2) COMPONENT/ ASSEMBLY | (3) MAINTENANCE FUNCTION | (4) MAINTENANCE LEVEL | | | | | (5) TOOLS AND EQUIPMENT REFERENCE CODE | (6) REMARKS CODE |
|---|---|---|---|---|---|---|---|---|---|
| | | | FIELD | | | SUSTAINMENT | | | |
| | | | UNIT | | DIRECT SUPPORT | GENERAL SUPPORT | DEPOT | | |
| | | | C | O | F | H | D | | |
| | DOOR ASEMBLY | Inspect | 0.1 | | | | | | |
| | | Replace | | | 1.5 | | | 1,3 | |
| | | Repair | | 3.0 | | | | 1,2 | |
| | DOOR GASKET | Inspect | 0.1 | | | | | | |
| | | Replace | | 2.0 | | | | 1,2 | |
| | | Repair | | 1.5 | | | | 1,2 | |
| | DOOR HINGES | Inspect | 0.1 | | | | | | |
| | | Replace | | | 1.5 | | | 1,2 | |
| | LOCKING BARS | Inspect | 0.1 | | | | | | |
| | | Replace | | | 1.5 | | | 1,2 | |
| | | Repair | | | 1.0 | | | 1,3 | A |
| | ROOF PANEL | Inspect | 0.1 | | | | | | |
| | | Repair | | 2.5 | | | | 1,2 | B |
| | SIDE PANELS | Inspect | 0.1 | | | | | | |
| | | Repair | | 2.0 | | | | 1,2 | B |
| | FRONT PANEL | Inspect | 0.1 | | | | | | |
| | | Repair | | 3.0 | | | | 1,2 | B |
| | DRAIN | Inspect | 0.1 | | | | | | |
| | | Repair | | 0.5 | | | | 1 | |
| | FLOOR | Inspect | 0.1 | | | | | | |
| | | Repair | | | 2.0 | | | 1,2 | B |
| | RESISTANT SYTEM | Inspect | 0.1 | | | | | | |
| | | Replace | | 1.0 | | | | 1 | |
| | | Repair | | 0.5 | | | | 1 | |
| | FRAME | Inspect | 0.1 | | | | | | |
| | | Repair | | | 2.5 | | | 1,3 | A |
| | CORNER FITTINGS | Inspect | 0.1 | | | | | | |
| | | Replace | | | 2.5 | | | 1,3 | |
| | TOP RAILS | Inspect | 0.1 | | | | | | |
| | | Replace | | | 3.0 | | | 1,3 | A |
| | BOTTOM RAILS | Inspect | 0.1 | | | | | | |
| | | Replace | | | 3.0 | | | 1,3 | A |
| | CORNER POSTS | Inspect | 0.1 | | | | | | |
| | | Replace | | | 2.0 | | | 1,3 | |
| | CROSSMEMBER | Inspect | 0.1 | | | | | | |
| | | Replace | | | 3.0 | | | 1,2 | |
| | | Repair | | | 1.5 | | | 1,2 | |

## Section II. MAINTENANCE ALLOCATION CHART FOR CONTAINER, REFRIGERATED - Continued

| (1) GROUP NUMBER | (2) COMPONENT/ ASSEMBLY | (3) MAINTENANCE FUNCTION | (4) MAINTENANCE LEVEL | | | | | (5) TOOLS AND EQUIPMENT REFERENCE CODE | (6) REMARKS CODE |
|---|---|---|---|---|---|---|---|---|---|
| | | | FIELD | | | SUSTAINMENT | | | |
| | | | UNIT | | DIRECT SUPPORT | GENERAL SUPPORT | DEPOT | | |
| | | | C | O | F | H | D | | |
| | FOAM INSULATION | Replace | | | 0.5 | | | 1,2 | |
| 08 | REFRIGERATION UNIT | Replace | | 1.5 | | | | 1 | D |
| 09 | GENERATOR SET, DIESEL | Replace | | 1.5 | | | | 1 | C |

## Section III. TOOLS AND TEST EQUIPMENT REQUIREMENTS FOR CONTAINER, REFRIGERATED

| (1) TOOLS OR TEST EQUIPMENT REFERENCE CODE | (2) MAINTENANCE LEVEL | (3) NOMENCLATURE | (4) NATIONAL STOCK NUMBER | (5) TOOL NUMBER |
|---|---|---|---|---|
| 1 | 0 | Tool Kit, General Mechanic's | 5180-00-177-7033 | SC5180-90-CL-N26 |
| 2 | 0 | Shop Set, Automotive Vehicle | 4910-00-754-0654 | SC4910-95-CL-A74 |
| 3 | 0 | Welding Shop, Trailer Mounted | 3431-01-090-1231 | SC3431-95-CL-A04 |
| 4 | F | Tool Kit, Service Refrigeration Unit | 5180-00-597-1474 | SC 5180-90-CL-N18 |

## Section IV. REMARKS FOR CONTAINER, REFRIGERATED

| (1) REMARKS CODE | (2) REMARKS |
|---|---|
| A | Repair limited to straightening and welding frame components. |
| B | Repair limited to patching. |
| C | Reference TM 9-4110-258-13 for Refrigeration Unit. |
| D | Reference for TM 5-6115-585-12 and TM 5-6115-585-34 for 10Kw Generator Set. |

# APPENDIX C

# COMPONENTS OF END ITEM AND BASIC ISSUE ITEMS LIST

## Section I. INTRODUCTION

### C-1. SCOPE.

This appendix lists components of end item and basic issue items for the refrigerated container to help you inventory the items required for safe and efficient operation of the equipment.

### C-2. GENERAL.

The Components of End Item and Basic Issue Items (BII) are divided into the following sections:

a. **Section II Components of End Item.** This listing is for informational purposes only, and is not authority to requisition replacements. These items are part of the refrigerated container, but they are to be removed and separately packaged for transportation or shipment. As part of the end item, these items must be with the end item whenever it is issued or transferred between property accounts. Illustrations are furnished to help you find and identify the items.

b. **Section III Basic Issue Items.** These are the minimum essential items required to place refrigerated container in operation, to operate it, and to do emergency repairs. Although shipped separately packaged, BII must be with the refrigerated container during operation and when it is transferred between property accounts. Listing these items is your authority to request/requisition them for replacement based on authorization of the end item by the TOE/MTOE. Illustrations are furnished to help you find and identify these items.

### C-3. EXPLANATION OF COLUMNS.

The following provides and explanation of columns found in the tabular listing:

a. **Column (1) - Illustration Number (Illus. Number).** This column indicates the number of the illustration in which the item is shown.

b. **Column (2) - National Stock Number.** Indicates the national stock number assigned to the item and will be used for requisitioning purposes.

c. **Column (3) - Description and Usable On Code.** Indicates the Federal item name and, if required, a minimum description to identify and locate the item. The last line for each item indicates the Commercial and Government Entity Code CAGEC (in parentheses) followed by the part number.

d. **Column (4) - Unit of Issue (UI).** Indicates how the item is issued for the NSN shown in column 2.

e. **Column (5) Quantity required (Qty rqd).** Indicates the quantity of the item authorized to be used with/on the equipment.

## Section II. COMPONENTS OF END ITEM

| (1) Illus Number | (2) National Stock Number | (3) Description CAGEC and Part Number | (4) U/M | (5) Qty rqd |
|---|---|---|---|---|
| 1 | | Cable Assembly (OFXA9) SB-288-6 | EA | 1 |
| 2 | | Locking Bars ;(IP346) FE8000-1 | EA | 20 |

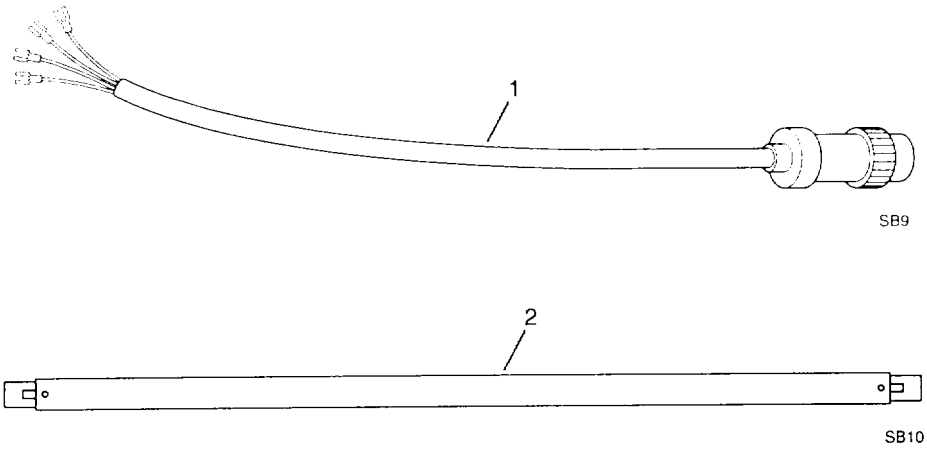

## Section III. BASIC ISSUE ITEMS

| (1) Illus Number | (2) National Stock Number | (3) Description CAGEC and Part Number | (4) U/M | (5) Qty rqd |
|---|---|---|---|---|
| 1 | | Chart (45809) 00150603 | EA | 100 |
| 2 | | ARMY TECHNICAL MANUAL<br>Operator's, Unit, Direct Support and<br>General Support Maintenance Manual<br>for Refrigerated Container<br>TM 55-8145-202-14 | EA | 1 |

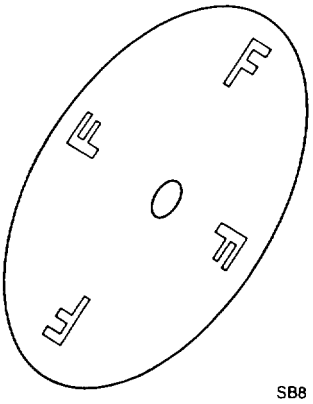


(1)

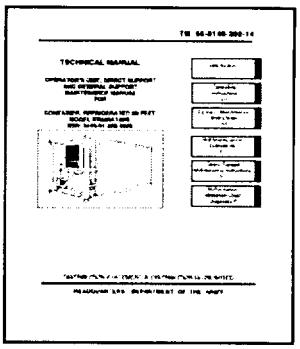

(2)

# APPENDIX D

## ADDITIONAL AUTHORIZATION LIST

There are no additional authorized items required for the refrigerated container.

# APPENDIX E

# EXPENDABLE AND DURABLE ITEMS LIST

## Section I. INTRODUCTION

### E-1. SCOPE.

This appendix lists expendable/durable supplies and materials you will need to operate and maintain the Refrigerated Container. This listing is for informational purpose only and is not authority to requisition the listed items. These items are authorized to you by CTA 50-970, Expendable/Durable Items (Except Medical, Class V, Repair Parts, and Heraldic Items), or CTA 8-100, Army Medical Department Expendable/Durable Items.

### E-2. EXPLANATION OF COLUMNS.

**a. Column 1 Item Number.** This number is assigned to the entry in the listing and is referenced in the task Initial Setup instructions to identify the material; e.g., "Lint-free rag (Appendix E)."

**b. Column 2 - Level.** This column identifies the lowest category of maintenance that requires the listed item:

C - Operator/Crew
O - Unit Maintenance
F - Direct Support Maintenance
G - General Support Maintenance

**c. Column 3 National Stock Number.** This is the national stock number assigned to the item; use it to request or requisition the items.

**d. Column 4 Description.** Indicates the federal item name and, if required, a description to identify the item. The last line for each item indicates the part number followed by the Commercial And Government Entity Code (CAGEC) for Manufacturer in parentheses, if applicable.

**e. Column 5 Unit of Measure (U/M).** Indicates the measure used in performing the actual maintenance function. This measure is expressed by a two character alphabetical abbreviation (e.g., ea, in, pr). If the unit of measure differs from the rest of the issue, requisition the lowest unit of issue that will satisfy your requirements.

## Section II. EXPENDABLE AND DURABLE ITEMS LIST

| (1)<br>ITEM NUMBER | (2)<br>LEVEL | (3)<br>NATIONAL STOCK NUMBER | (4)<br>DESCRIPTION | (5)<br>U/M |
|---|---|---|---|---|
| 1 | O | 8030-00-080-2171 | Polyurethane Adhesive<br>(04963) EC800 | TB |
| 2 | O | 7930-00-282-9699 | Detergent, GP Llg, WS, A<br>(81349) MILL-D-16791 | GL |
| 3 | O | | Tape, barrier<br>(6A669) PF5422 | RL |
| 4 | O | | Foam, Urethane<br>(OCPD6) InstaFoam | EA |
| 5 | O | 8040-00-978-1407 | Adhesive, contact<br>(25999) 2672-5 | PT |
| 6 | O | 7920-00-205-1711 | Rags, wiping<br>(58536) A-A-531 | LB |
| 7 | O | 6850-00-110-4498 | Solvent, dry-cleaning<br>(81349) PD-680, Type II | PT |
| 8 | O | 8040-00-078-9774 | Sealant, silastic<br>(71984) 732RTV | TU |
| 9 | O | 8040-01-126-1422 | Adhesive<br>(049463) 1099 | QT |
| 10 | O | | Strap, tie | EA |
| 11 | O | | Rivet, Pop<br>(19738) 603348 | EA |
| 12 | O | | Rivet, Pop<br>(OFXA9) SB-M307 | EA |
| 13 | O | | Rivet, Pop<br>(N1305) 603738 | EA |
| 14 | O | | Rivet, Pop<br>(N1305) 603398 | EA |
| 15 | O | | Rivet, Pop<br>(N1305) 703738 | EA |
| 16 | O | | Rivet, Pop<br>(N1305) 603347 | EA |
| 17 | O | | Rivet, Pop<br>(N1305) 603739 | EA |
| 18 | O | | Rivet, Pop<br>(N1305) BE61-0516 | EA |

# APPENDIX F

## LUBRICATION INSTRUCTIONS

There are no lubrication instructions required for the refrigerated container.

# APPENDIX G

## ILLUSTRATED LIST OF MANUFACTURED ITEMS

There are no manufactured items required for the refrigerated container.

# APPENDIX H

## MANDATORY REPLACEMENT PARTS

| ITEM NO. | NOMENCLATURE | PART NUMBER |
|---|---|---|
| 1 | Gasket | SB-M306 (OFXA9) |
| 2 | Lockwasher | Assm SB-8741 (OFXA9) |
| 3 | Locknut | 337075182 (N1305) |
| 4 | Gasket | Assm SB-8741 (OFXA9) |
| 5 | Lockwasher | 92148A214 (39428) |
| 6 | Locknut | 90576A119 (39428) |
| 7 | Locknut | 90576A114 (39428) |
| 8 | Locknut | 90576A113 (39428) |
| 9 | Gasket | 603622 (N1305) |
| 10 | Hinge Pin | BCP24524 (N1305) |
| 11 | Lock Collar | 603386 (N1305) |
| 12 | Bushing | BCP12536 (N1305) |
| 13 | Lockwasher | 92147A029 (OFXA9) |
| 14 | Locknut | 91831A029 (OFXA9) |

# ALPHABETICAL INDEX

**N**



**O**



**P**



**Q**



**R**



**S**



**T**



**U**



**W**

**By Order of the Secretary of the Army:**

DENNIS J. REIMER
*General, United States Army*
*Chief of Staff*

Official:

**JOEL B. HUDSON**
*Administrative Assistant to the*
*Secretary of the Army*
03361

DISTRIBUTION:
To be distributed in accordance with DA Form 12-25-E, block no. 6233, requirements for TM 55-8145-202-14.

*U.S. GOVERNMENT PRINTING; OFFICE: 1997 - 554-024/60152

## *These are the instructions for sending an electronic 2028*

The following format must be used if submitting an electronic 2028. The subject line must be exactly the same and all fields must be included; however only the following fields are mandatory: 1, 3, 4, 5, 6, 7, 8, 9, 10, 13, 15, 16, 17, and 27.

From: "Whomever" <whomever@avma27.army.mil>
To: amssbriml@natick.army.mil

Subject: DA Form 2028

1. From: Joe Smith
2. Unit: home
3. Address: 4300 Park
4. City: Hometown
5. St: MO
6. Zip: 77777
7. Date Sent: 19-OCT-93
8. Pub no: 55-2840-229-23
9. Pub Title: TM
10. Publication Date: 04-JUL-85
11. Change Number: 7
12. Submitter Rank: MSG
13. Submitter FName: Joe
14. Submitter MName: T
15. Submitter LName: Smith
16. Submitter Phone: 123-123-1234
17. Problem: 1
18. Page: 2
19. Paragraph: 3
20. Line: 4
21. NSN: 5
22. Reference: 6
23. Figure: 7
24. Table: 8
25. Item: 9
26. Total: 123
27. Text:

This is the text for the problem below line 27.

| RECOMMENDED CHANGES TO PUBLICATIONS AND BLANK FORMS<br>For use of this form, see AR 25-30; the proponent agency is ODISC4. | Use Part II *(reverse)* for Repair Parts and Special Tool Lists (RPSTL) and Supply Catalogs/Supply Manuals (SC/SM). | **DATE**<br>*21 October 2003* |
|---|---|---|

| **TO:** *(Forward to proponent of publication or form) (Include ZIP Code)*<br>COMMANDER<br>U.S. ARMY TANK-AUTOMOTIVE AND ARMAMENT COMMAND<br>ATTN: AMSTA-LC-CECT<br>15 KANSAS STREET<br>NATICK, MA 01760-5052 | **FROM:** *(Activity and location) (Include ZIP Code)*<br>*PFC Jane Doe*<br>*CO A 3rd Engineer BR*<br>*Ft. Leonardwood, MO 63108* |
|---|---|

**PART I – ALL PUBLICATIONS (EXCEPT RPSTL AND SC/SM) AND BLANK FORMS**

| PUBLICATION/FORM NUMBER | DATE | TITLE |
|---|---|---|
| TM 10-1670-296-23&P | 30 October 2002 | Unit Manual for Ancillary Equipment for Low Velocity Air Drop Systems |

| ITEM NO. | PAGE NO. | PARA-GRAPH | LINE NO. * | FIGURE NO. | TABLE NO. | RECOMMENDED CHANGES AND REASON *(Provide exact wording of recommended changes, if possible).* |
|---|---|---|---|---|---|---|
| | *0036 00-2* | | | | *1* | *In table 1, Sewing Machine Code Symbols, the second sewing machine code symbol should be MD ZZ not MD 22.*<br><br>*Change the manual to show Sewing Machine, Industrial: Zig-Zag; 308 stitch; medium-duty; NSN 3530-01-181-1421 as a MD ZZ code symbol.* |

**Reference to line numbers within the paragraph or subparagraph.*

| TYPED NAME, GRADE OR TITLE | TELEPHONE EXCHANGE/AUTOVON, PLUS EXTENSION | SIGNATURE |
|---|---|---|
| Jane Doe, PFC | 508-233-4141 | Jane Doe *Jane Doe* |

SAMPLE

| TO: (*Forward direct to addressee listed in publication*) | FROM: (*Activity and location*) (*Include ZIP Code*) | DATE |
|---|---|---|
| COMMANDER<br>U.S. ARMY TANK-AUTOMOTIVE AND ARMAMENT COMMAND<br>ATTN: AMSTA-LC-CECT<br>15 KANSAS STREET<br>NATICK, MA 01760-5052 | *PFC Jane Doe*<br>*CO A 3rd Engineer BR*<br>*Ft. Leonardwood, MO 63108* | *21 October 2003* |

**PART II – REPAIR PARTS AND SPECIAL TOOL LISTS AND SUPPLY CATALOGS/SUPPLY MANUALS**

| PUBLICATION NUMBER | DATE | TITLE |
|---|---|---|
| TM 10-1670-296-23&P | 30 October 2002 | Unit Manual for Ancillary Equipment for Low Velocity Air Drop Systems |

| PAGE NO. | COLM NO. | LINE NO. | NATIONAL STOCK NUMBER | REFERENCE NO. | FIGURE NO. | ITEM NO. | TOTAL NO. OF MAJOR ITEMS SUPPORTED | RECOMMENDED ACTION |
|---|---|---|---|---|---|---|---|---|
| *0066 00-1* | | | | | *4* | | | *Callout 16 in figure 4 is pointed to a D-Ring. In the Repair Parts List key for figure 4, item 16 is called a Snap Hook. Please correct one or the other.* |

**PART III – REMARKS** (*Any general remarks or recommendations, or suggestions for improvement of publications and blank forms. Additional blank sheets may be used if more space is needed.*)

| TYPED NAME, GRADE OR TITLE | TELEPHONE EXCHANGE/AUTOVON, PLUS EXTENSION | SIGNATURE |
|---|---|---|
| | | |

SAMPLE

| RECOMMENDED CHANGES TO PUBLICATIONS AND BLANK FORMS<br>For use of this form, see AR 25-30; the proponent agency is ODISC4. | Use Part II *(reverse)* for Repair Parts and Special Tool Lists (RPSTL) and Supply Catalogs/Supply Manuals (SC/SM). | DATE |
|---|---|---|
| **TO:** *(Forward to proponent of publication or form) (Include ZIP Code)*<br>Commander<br>U.S. Army Tank-automotive and Armament Command<br>ATTN: AMSTA-LC-CECT<br>Kansas Street, Natick, MA 01760-5052 | **FROM:** *(Activity and location) (Include ZIP Code)* | |

**PART I – ALL PUBLICATIONS (EXCEPT RPSTL AND SC/SM) AND BLANK FORMS**

| PUBLICATION/FORM NUMBER | DATE | TITLE |
|---|---|---|
| TM 55-8145-202-14 | 03 March 1997 | Operator's, Unit, Direct Support and General Support Maintenance Manual for Container, Refrigerated 20 Feet, Model KRO20A180G |

| ITEM NO. | PAGE NO. | PARA-GRAPH | LINE NO. * | FIGURE NO. | TABLE NO. | RECOMMENDED CHANGES AND REASON<br>*(Provide exact wording of recommended changes, if possible).* |
|---|---|---|---|---|---|---|
| | | | | | | |

**Reference to line numbers within the paragraph or subparagraph.*

| TYPED NAME, GRADE OR TITLE | TELEPHONE EXCHANGE/AUTOVON, PLUS EXTENSION | SIGNATURE |
|---|---|---|
| | | |

**DA FORM 2028, FEB 74** REPLACES DA FORM 2028, 1 DEC 68, WHICH WILL BE USED. USAPPC V3.00

| TO: (*Forward direct to addressee listed in publication*)<br>Commander<br>U.S. Army Tank-automotive and Armament Command<br>ATTN: AMSTA-LC-CECT<br>Kansas Street, Natick, MA 01760-5052 | FROM: (*Activity and location) (Include ZIP Code)* | DATE |
|---|---|---|

**PART II – REPAIR PARTS AND SPECIAL TOOL LISTS AND SUPPLY CATALOGS/SUPPLY MANUALS**

| PUBLICATION NUMBER | DATE | TITLE |
|---|---|---|
| TM 55-8145-202-14 | 03 March 1997 | Operator's, Unit, Direct Support and General Support Maintenance Manual for Container, Refrigerated 20 Feet, Model KRO20A180G |

| PAGE NO. | COLM NO. | LINE NO. | NATIONAL STOCK NUMBER | REFERENCE NO. | FIGURE NO. | ITEM NO. | TOTAL NO. OF MAJOR ITEMS SUPPORTED | RECOMMENDED ACTION |
|---|---|---|---|---|---|---|---|---|
| | | | | | | | | |

**PART III – REMARKS** (*Any general remarks or recommendations, or suggestions for improvement of publications and blank forms. Additional blank sheets may be used if more space is needed.)*

| TYPED NAME, GRADE OR TITLE | TELEPHONE EXCHANGE/AUTOVON, PLUS EXTENSION | SIGNATURE |
|---|---|---|
| | | |

| RECOMMENDED CHANGES TO PUBLICATIONS AND BLANK FORMS<br>For use of this form, see AR 25-30; the proponent agency is ODISC4. | Use Part II *(reverse)* for Repair Parts and Special Tool Lists (RPSTL) and Supply Catalogs/Supply Manuals (SC/SM). | DATE |
|---|---|---|
| **TO:** *(Forward to proponent of publication or form) (Include ZIP Code)*<br>Commander<br>U.S. Army Tank-automotive and Armament Command<br>ATTN: AMSTA-LC-CECT<br>Kansas Street, Natick, MA 01760-5052 | **FROM:** *(Activity and location) (Include ZIP Code)* | |

**PART I – ALL PUBLICATIONS (EXCEPT RPSTL AND SC/SM) AND BLANK FORMS**

| PUBLICATION/FORM NUMBER | DATE | TITLE |
|---|---|---|
| TM 55-8145-202-14 | 03 March 1997 | Operator's, Unit, Direct Support and General Support Maintenance Manual for Container, Refrigerated 20 Feet, Model KRO20A180G |

| ITEM NO. | PAGE NO. | PARA-GRAPH | LINE NO. * | FIGURE NO. | TABLE NO. | RECOMMENDED CHANGES AND REASON<br>*(Provide exact wording of recommended changes, if possible).* |
|---|---|---|---|---|---|---|
| | | | | | | |

**Reference to line numbers within the paragraph or subparagraph.*

| TYPED NAME, GRADE OR TITLE | TELEPHONE EXCHANGE/AUTOVON, PLUS EXTENSION | SIGNATURE |
|---|---|---|
| | | |

**DA FORM 2028, FEB 74** REPLACES DA FORM 2028, 1 DEC 68, WHICH WILL BE USED. USAPPC V3.00

| TO: (*Forward direct to addressee listed in publication*)<br>Commander<br>U.S. Army Tank-automotive and Armament Command<br>ATTN: AMSTA-LC-CECT<br>Kansas Street, Natick, MA 01760-5052 | FROM: (*Activity and location) (Include ZIP Code)* | DATE |
|---|---|---|

**PART II – REPAIR PARTS AND SPECIAL TOOL LISTS AND SUPPLY CATALOGS/SUPPLY MANUALS**

| PUBLICATION NUMBER | DATE | TITLE |
|---|---|---|
| TM 55-8145-202-14 | 03 March 1997 | Operator's, Unit, Direct Support and General Support Maintenance Manual for Container, Refrigerated 20 Feet, Model KRO20A180G |

| PAGE NO. | COLM NO. | LINE NO. | NATIONAL STOCK NUMBER | REFERENCE NO. | FIGURE NO. | ITEM NO. | TOTAL NO. OF MAJOR ITEMS SUPPORTED | RECOMMENDED ACTION |
|---|---|---|---|---|---|---|---|---|
| | | | | | | | | |

**PART III – REMARKS** (*Any general remarks or recommendations, or suggestions for improvement of publications and blank forms. Additional blank sheets may be used if more space is needed.)*

| TYPED NAME, GRADE OR TITLE | TELEPHONE EXCHANGE/AUTOVON, PLUS EXTENSION | SIGNATURE |
|---|---|---|
| | | |

# The Metric System and Equivalents

***Linear Measure***

1 centimeter = 10 millimeters = .39 inch
1 decimeter = 10 centimeters = 3.94 inches
1 meter = 10 decimeters = 39.37 inches
1 dekameter = 10 meters = 32.8 feet
1 hectometer = 10 dekameters = 328.08 feet
1 kilometer = 10 hectometers = 3,280.8 feet

***Weights***

1 centigram = 10 milligrams = .15 grain
1 decigram = 10 centigrams = 1.54 grains
1 gram = 10 decigram = .035 ounce
1 dekagram = 10 grams = .35 ounce
1 hectogram = 10 dekagrams = 3.52 ounces
1 kilogram = 10 hectograms = 2.2 pounds
1 quintal = 100 kilograms = 220.46 pounds
1 metric ton = 10 quintals = 1.1 short tons

***Liquid Measure***

1 centiliter = 10 milliters = .34 fl. ounce
1 deciliter = 10 centiliters = 3.38 fl. ounces
1 liter = 10 deciliters = 33.81 fl. ounces
1 dekaliter = 10 liters = 2.64 gallons
1 hectoliter = 10 dekaliters = 26.42 gallons
1 kiloliter = 10 hectoliters = 264.18 gallons

***Square Measure***

1 sq. centimeter = 100 sq. millimeters = .155 sq. inch
1 sq. decimeter = 100 sq. centimeters = 15.5 sq. inches
1 sq. meter (centare) = 100 sq. decimeters = 10.76 sq. feet
1 sq. dekameter (are) = 100 sq. meters = 1,076.4 sq. feet
1 sq. hectometer (hectare) = 100 sq. dekameters = 2.47 acres
1 sq. kilometer = 100 sq. hectometers = .386 sq. mile

***Cubic Measure***

1 cu. centimeter = 1000 cu. millimeters = .06 cu. inch
1 cu. decimeter = 1000 cu. centimeters = 61.02 cu. inches
1 cu. meter = 1000 cu. decimeters = 35.31 cu. feet

# Approximate Conversion Factors

| *To change* | *To* | *Multiply by* | *To change* | *To* | *Multiply by* |
|---|---|---|---|---|---|
| inches | centimeters | 2.540 | ounce-inches | newton-meters | .007062 |
| feet | meters | .305 | centimeters | inches | .394 |
| yards | meters | .914 | meters | feet | 3.280 |
| miles | kilometers | 1.609 | meters | yards | 1.094 |
| square inches | square centimeters | 6.451 | kilometers | miles | .621 |
| square feet | square meters | .093 | square centimeters | square inches | .155 |
| square yards | square meters | .836 | square meters | square feet | 10.764 |
| square miles | square kilometers | 2.590 | square meters | square yards | 1.196 |
| acres | square hectometers | .405 | square kilometers | square miles | .386 |
| cubic feet | cubic meters | .028 | square hectometers | acres | 2.471 |
| cubic yards | cubic meters | .765 | cubic meters | cubic feet | 35.315 |
| fluid ounces | milliliters | 29,573 | cubic meters | cubic yards | 1.308 |
| pints | liters | .473 | milliliters | fluid ounces | .034 |
| quarts | liters | .946 | liters | pints | 2.113 |
| gallons | liters | 3.785 | liters | quarts | 1.057 |
| ounces | grams | 28.349 | liters | gallons | .264 |
| pounds | kilograms | .454 | grams | ounces | .035 |
| short tons | metric tons | .907 | kilograms | pounds | 2.205 |
| pound-feet | newton-meters | 1.356 | metric tons | short tons | 1.102 |
| pound-inches | newton-meters | .11296 | | | |

# Temperature (Exact)

| | | | | |
|---|---|---|---|---|
| °F | Fahrenheit temperature | 5/9 (after subtracting 32) | Celsius temperature | °C |

**PIN: 075366-000**

# This fine document...

Was brought to you by me:

## Liberated Manuals -- free army and government manuals

Why do I do it? I am tired of sleazy CD-ROM sellers, who take publicly available information, slap “watermarks” and other junk on it, and sell it. Those masters of search engine manipulation make sure that their sites that sell free information, come up first in search engines. They did not create it... They did not even scan it... Why should they get your money? Why are not letting you give those free manuals to your friends?

I am setting this document FREE. This document was made by the US Government and is NOT protected by Copyright. Feel free to share, republish, sell and so on.

I am not asking you for donations, fees or handouts. If you can, please provide a link to liberatedmanuals.com, so that free manuals come up first in search engines:

<A HREF=http://www.liberatedmanuals.com/>Free Military and Government Manuals</A>

- Sincerely
  Igor Chudov
  http://igor.chudov.com/
- Chicago Machinery Movers