TECHNICAL MANUAL

OPERATOR'S, AVIATION UNIT AND INTERMEDIATE MAINTENANCE MANUAL (INCLUDING REPAIR PARTS AND SPECIAL TOOLS LIST)

TEST STAND, AIRCRAFT HYDRAULIC SYSTEMS, ELECTRIC MOTOR DRIVEN, TYPE MK-1

NSN 4920-01-033-8318

PART NUMBER 2-01-6

This copy is a reprint which includes current pages from Change 1.

HEADQUARTERS, DEPARTMENT OF THE ARMY

9 APRIL 1980

CHANGE No. 1

HEADQUARTERS
DEPARTMENT OF THE ARMY
WASHINGTON, D.C., 13 October 1980

Operator's, Aviation Unit and Intermediate
Maintenance Manual
(Including Repair Parts and Special Tools List)

TEST STAND, AIRCRAFT HYDRAULIC SYSTEMS,
ELECTRONIC MOTOR DRIVEN, TYPE MK-1

NSN 4920-01-033-8318

PART NUMBER 2-01-6

TM 55-4920-394-13&P, 9 April 1980, is changed as follows:

1. Remove and insert pages as indicated below.

	Remove pages	Insert pages
Appendix C	C-1/C-2	C-1 thru C-32

2. New or changed text material is indicated by a vertical bar in the margin. An illustration change is indicated by a miniature pointing hand.

3. Retain this sheet in front of manual for reference purposes.

By Order of the Secretary of the Army:

E. C. MEYER
General, United States Army
Chief of Staff

Official:

J. C. PENNINGTON
Major General, United States Army
The Adjutant General

DISTRIBUTION:
To be distributed in accordance with DA Form 12-31 Organizational MaintenanceRequirements for All Fixed and Rotor Wing Aircraft.

WARNING

Release all system pressure prior to removal of components from hydraulic systems, and ensure that input power cable is disconnected to avoid possible injury to personnel.

WARNING

To avoid injury to personnel, cleaning operations shall be performed in a well ventilated area, away from open flames, heat and sparks. Disconnect input power cable before beginning cleaning procedures.

WARNING

Wheel rims under pressure. Completely deflate tire during removal and installation to prevent possible personal injury.

TECHNICAL MANUAL
TM 55-4920-394-13&P

HEADQUARTERS
DEPARTMENT OF THE ARMY
WASHINGTON, DC., 9 April 1980

Operator's, Aviation Unit and Intermediate
Maintenance Manual

For

TEST STAND, AIRCRAFT HYDRAULIC SYSTEMS,
ELECTRONIC MOTOR DRIVEN, TYPE MK-1

NSN 4920-01-033-8318

PART NUMBER 2-01-6

REPORTING ERRORS AND RECOMMENDING IMPROVEMENTS

You can help improve this manual. If you find any mistake or if you know of a way to improve the procedures, please let us know. Mail your letter, DA Form 2028 (Recommended Changes to Publications and Blank Forms), or DA Form 2028-2 located in the back of this manual direct to: Commander, U. S. Army Troop Support & Aviation Materiel Readiness Command, ATTN: DRSTS-MTPS, 4300 Goodfellow Boulevard, St. Louis, MO 63120. A reply will be furnished directly to you.

TABLE OF CONTENTS

LIST OF ILLUSTRATIONS

CHAPTER 1

INTRODUCTION

SECTION I. GENERAL INFORMATION

1-1. Scope. This manual is for use by Aviation Unit and Intermediate Maintenance personnel to operate and maintain the Aircraft Hydraulic Systems, Electric Motor Driven, Type MK-1 Test Stand, Part Number 2-01-6. The test stand determines the performance and operating characteristics of aircraft hydraulic systems. The test stand is illustrated in figure 1-1.

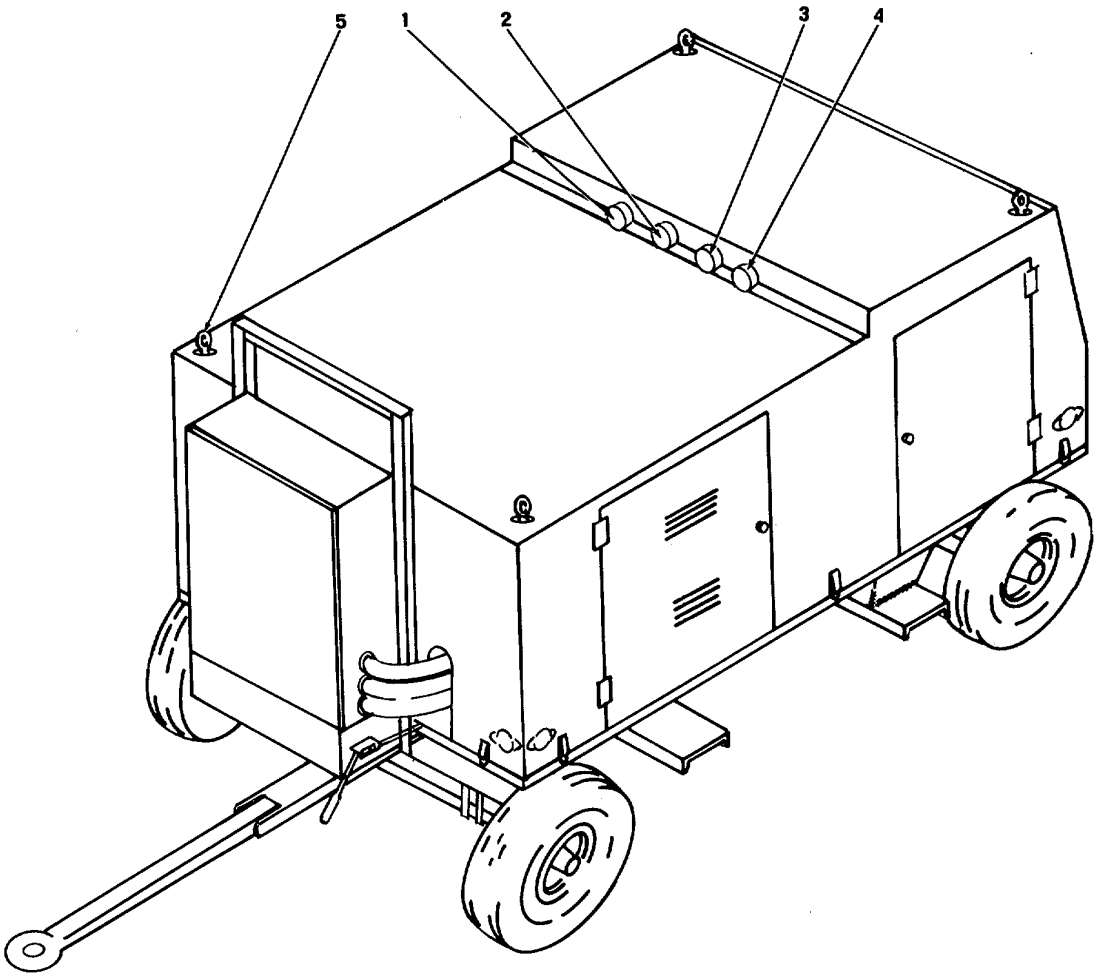

1. Suction Return Outlet, ¾”
2. Suction Return Outlet 1 ½”
3. Pressure Outlet, 1”
4. Pressure Outlet, ½”
5. Lifting Eyes

Figure 1-1. Aircraft Hydraulic System (Single) Test Stand Electric Motor Driven, Type MK-1.

1-2. Maintenance Forms, Records, and Reports. Department of the Army forms and procedures used for equipment maintenance will be those pre- scribed by TM 38-750, The Army Maintenance Management System.

1-3. Destruction of Army Materiel to Prevent Enemy Use. Procedures for destroying Army materiel to prevent enemy use are listed in TM 750-244-1-4.

1-4. Administrative Storage of Equipment. Refer to TM 740-90-1 for administrative storage of equipment instructions.

1-5. Reporting Equipment Improvement Recommendations (EIR). EIR can and must be submitted by anyone who is aware of an unsatisfactory condition with the equipment design or use. It is not necessary to show a new design or list a better way to perform a procedure, just simply tell why the design is unfavorable or why a procedure is difficult. EIR may be submitted on SF 368 (Quality Deficiency Report). Mail directly to Commander, US Army Troop Support and Aviation Materiel Readiness Command, ATTN: DRSTS-MPM, 4300 Goodfellow Boulevard, St. Louis, MO, 63120. A reply will be furnished to you.

SECTION II. DESCRIPTION AND LEADING PARTICULARS

1-6. Purpose. The test stand is a trailer-mounted mobile testing unit, for rapidly and accurately determining the performance and operating characteristics of aircraft hydraulic systems. The test stand incorporates the following systems to perform the following test and service operations:

a. Test function and operation of aircraft hydraulic systems components.

b. Test the aircraft systems for internal and external leakages.

c. Drain, flush, and refill the aircraft hydraulic systems with micronically-filtered hydraulic fluid.

d. Bleed air from aircraft hydraulic systems.

1-7. Capabilities. The test stand (fig. 1-1) will operate under ambient temperature conditions ranging from 40 degrees F to 125 degrees F, and will withstand storage at temperatures ranging from -65 degrees F to 140 degrees F. The stand will function satisfactorily at a relative humidity of 95 to 100 percent. The entire test stand may be inclined a maximum of 8 ½ degrees in any direction from its horizontal operating plane without impairing its functional capability.

1-8. Table of Leading Particulars. Refer to Table 1-1.

.

1-9. General Description. The terms "left side" and "right side" as used below are as viewed when facing the rear of the test stand looking at the panel.

Table 1-1. Leading Particular

HYDRAULIC SYSTEMS	
Fluid Reservoir	
Capacity (@ incline of 8 ½ degrees)	25 Useable U.S. Gallons
Material	Aluminum
Hydraulic Fluid	MIL-H-5606 or MIL-H-82382
Hydraulic Pumps	
Type	High pressure, axial piston, variable stroke, pressure compensated with integral low pressure boost section
Capacity	0-27 gpm up to 3000 psig; 0-15 gpm up to 5000 psig
Discharge pressure	2700 + 50 psig when delivering 30 gpm with zero flow pressure setting at 3000 psig
Pressure compensator	Adjustable at control panel from 500 to 5000 psig
Boost pump capacity	33 gpm at 150 psi
Fill Pump	
Type	Motor driven internal gear
Capacity	2 gpm at 150 psig
High Pressure Filter	
Rating	30 gpm at 5000 psig
Size of element	5 micron
Specification	MIL-F-27656
Low Pressure Filter	
Element	10 micron, two element/ filter AN6236-3
Oil Cooler	
Type	Air-to-oil, fan cooled, Electric Motor Driven

Table 1-1. Leading Particulars (cont'd)

Capacity	140 degrees F maximum with 30 gpm at 750 psig and 100 degrees F ambient air temperature
Power Plan	
Main Pump Motor	60 H.P., 3550 RPM, 440 volt, 3 phase, 60 HZ, AC
Controls and Instrumentation	Panel mounted convenient to operator; identified by nameplates
Transformer	Allows operation from 220V or 440V source by physical interchange of connections
Lubrication	
Running Gear (Wheel Bearings)	MIL-G-10924
Miscellaneous (Door Hinges, Steering and Braking Mechanism)	MIL-L-15016A
Trailer and Cabinet	
Construction	Welded steel
Wheels	Four pneumatic tires, 6.00 X 9.00 inch
Springs	Leaf type
Brake	Hand operated, mechanical type on rear wheels
Steering	Knuckle type on front wheels; with towbar and pintle hook
Cabinet	Metal enclosure with access panels; hinged doors; hose storage; weather-resistant properties
Physical Data	
Dimensions (Approximate)	
Length	96 inches
Width	60 inches
Height	68 inches
Weight (dry)	2930 pounds

1-10. Test Stand. The test stand as illustrated in Figure 1-1, incorporates the controls to operate the hydraulic system, designated as System. No. 1, Operator's controls and instruments are located at the rear of the test stand. These controls and instruments are functionally grouped and color coded on the control panel as follows:

Hydraulic Panel No. 1-red (center)
System Control Panel-yellow (right side)

External test connections are located on top of the test stand to the rear of the control panel. Hoses are supplied with the test stand for connection to the aircraft. Hose retainer hooks are provided on the front of the test stand to store the hoses.

1-11. Test Stand Operating Components. The test stand operating components, including the control panel are enclosed in a steel, weather resistant cabinet, mounted on a four wheel trailer, capable to being towed by a vehicle at speeds up to 20 miles per hour. Hand-operated, mechanical-type parking brakes which act upon the rear wheels, hold the test stand in a fixed position while in operation or when parked on a grade. The unit may be fork lifted by inserting fork lift under the unit frame at marked channels. The major components and systems of the test stand are as follows: trailer and running gear, housings, electric motors, main hydraulic pump, oil cooler, fill pump and bleed system, hydraulic reservoir, hydraulic filters, instruments and controls and the electrical system.

1-12. Detail Description.

1-13. Trailer And Running Gear Assembly (3, Fig. 1-2). The trailer frame is of welded steel construction. The trailer rolls easily on four steel wheels equipped with 6.00 x 9.00 inch, 6 ply tires. Individual leaf springs for each wheel give the stand good cushioning against road shocks and rough terrain, protecting the components of the test stand. A hinged towbar (7, fig. 1-3) permits ease of positioning of the test stand and towing. The front wheel steering is the conventional type with steering knuckles, tie rods, and king pins. A hand lever (6, fig. 1-3) sets the rear wheel brakes, holding the test stand in a fixed position during test operation or in parking on a grade. Two tie-down rings are provided on both the front and rear of the trailer frame to permit tie-down of the test stand for storage or shipment.

1-14. Housing. Hinged doors on the sides of the cabinet permit access to all internal components. A hinged instrument panel cover-protects the controls when the test stand is not in use. A screened air inlet panel is also provided for the oil cooler (3, fig. 1-4). The tool box is located above the hydraulic fluid reservoir. Sound deadening polyurethane foam is adhesively bonded to the inside of the housing in order to reduce noise levels. The entire housing may be removed by releasing all the suitcase latches and lifting up using four eyebolts in the top corners.

1-15. Electric Motor. Power for each test stand system is supplied by a 60 HP, 440 Volt, 3 Phase, 60 Cycle, 3550 RPM electric motor (1, fig. 1-3) directly coupled to the main pump (4, fig. 1-2).

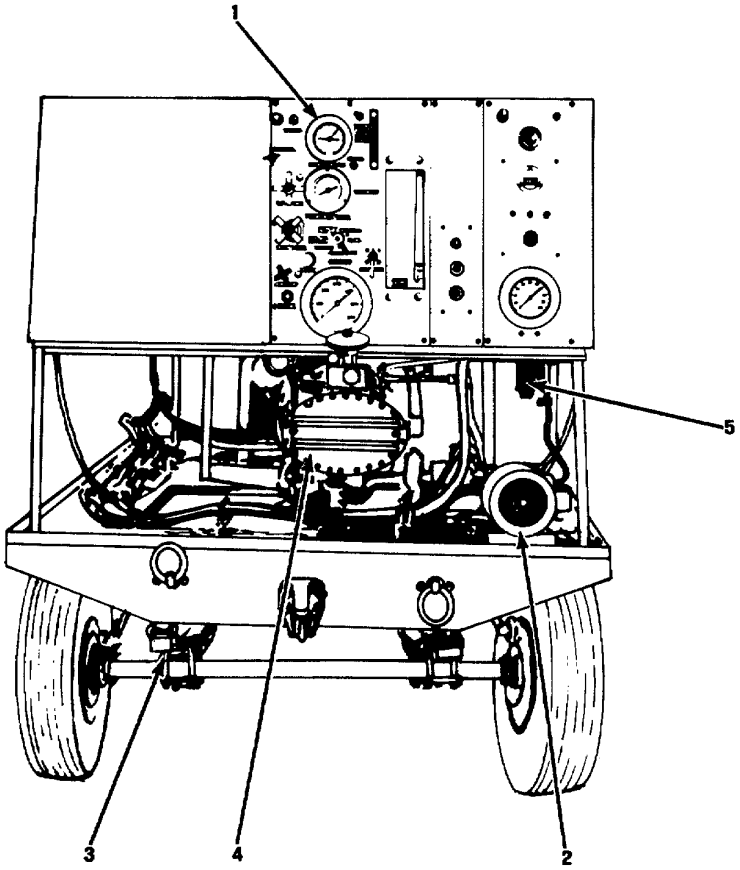

Figure 1-2. Major Components, Rear View.

1-16. Main Hydraulic Pump (4, Fig. 1-2). The main hydraulic pump supplies fluid at high pressure for testing of aircraft hydraulic circuits. The pump consists of a high pressure pump section and integral boost pump section. The pump contains a manual volume control for varying the output volume and a compensator control to regulate the output volume by changing the stroke length of the pumping pistons. Change in piston stroke length is controlled by system pressure so that when the pump is operating at a pressure less than the maximum setting of the compensator control, the pump delivers full volume. When the system pressure reaches the compensator control setting, the pump output is automatically reduced to the amount of flow required to maintain this pressure throughout the system. The compensator control provides an adjustable range of 500 to 5000 psig with flow varying to 27 gpm maximum. The volume control permits regulation of maximum volume output by limiting the angle of a cam plate through a threaded mechanism within the pump. The return line for the test system also includes a flowmeter to monitor fluid flow.

1-17. Hydraulic Fluid Reservoir (2, Fig. 1-4). The reservoir is designed to supply fluid to the system during operation in “stand" position of the reservoir selector valve and to supply fluid to the fill system. A filler neck-cleanup cover is located on the top of the reservoir allowing manual filling. A fluid level indicator is also provided on the control panel.

1-18. Oil Cooler (3, Fig. 1-4). The oil cooler consists of a heat exchanger type cooler with a cooling fan. The fan draws air through the cooler for cooling the hydraulic oil. Air is exhausted through vents in the cabinet.

1-19. High Pressure Filter (3, Fig. 1-3). A filter is located in the output line of the system. A five micron filter element gives the pressurized fluid a final cleaning before outlet to the aircraft.

1-20. Low Pressure Filter (2, Fig. 1-3). A low pressure filter in the outlet line from the boost pump is incorporated to clean hydraulic fluid of contamination before entering the high pressure pump section. The filter is readily maintained through access doors for replacement of filtering elements. A drain is provided for the low pressure filter.

1-21. Fill Pump System. This system is used to fill the test stand hydraulic system with fluid in the preparatory operation of readying the test stand for scheduled operations. It also functions to fill the aircraft reservoir with pressurized fluid from the stand reservoir. The system includes an electric motor driven fill pump (2, fig. 1-2) with filter (5), system actuating valves (30, fig. 1-5), relief valve (33) and check valve (14).

NOTE

Reservoir selector valve must be in "ship" reservoir position when performing filling operation.

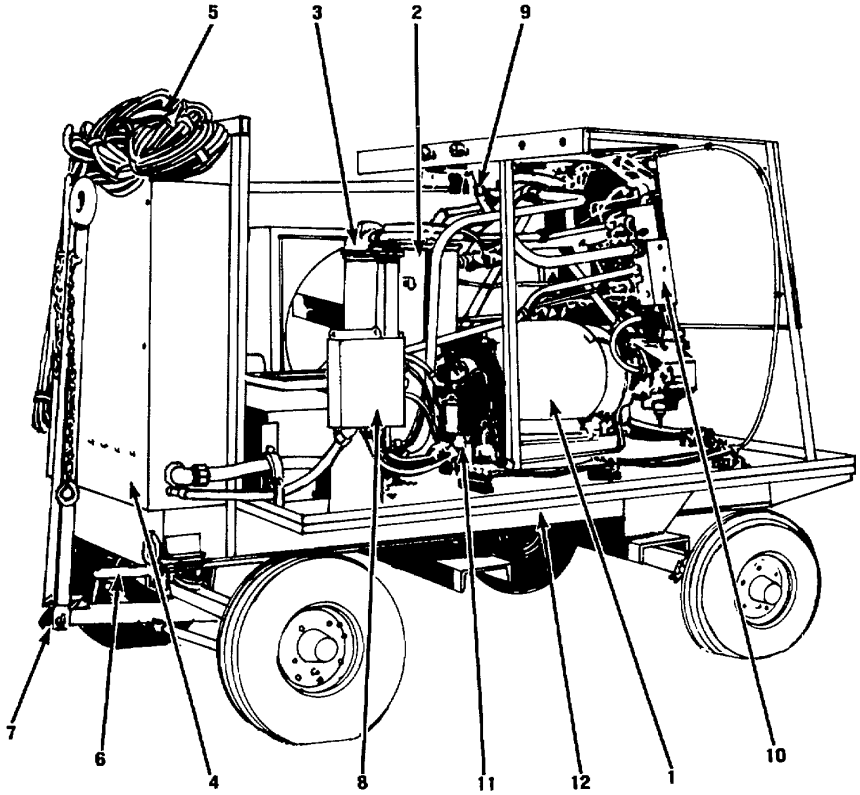

1. Main Pump Motor
2. Low Pressure Filter
3. High Pressure Filter
4. Main Electrical Control Enclosure
5. Power Input Cable
6. Parking Brake Lever
7. Towbar
8. Junction Box
9. Return Manifold
10. High Pressure Manifold
11. Low Pressure Manifold
12. Low Pressure Filter Drain

Figure 1-3. Major Components, Left Front View.

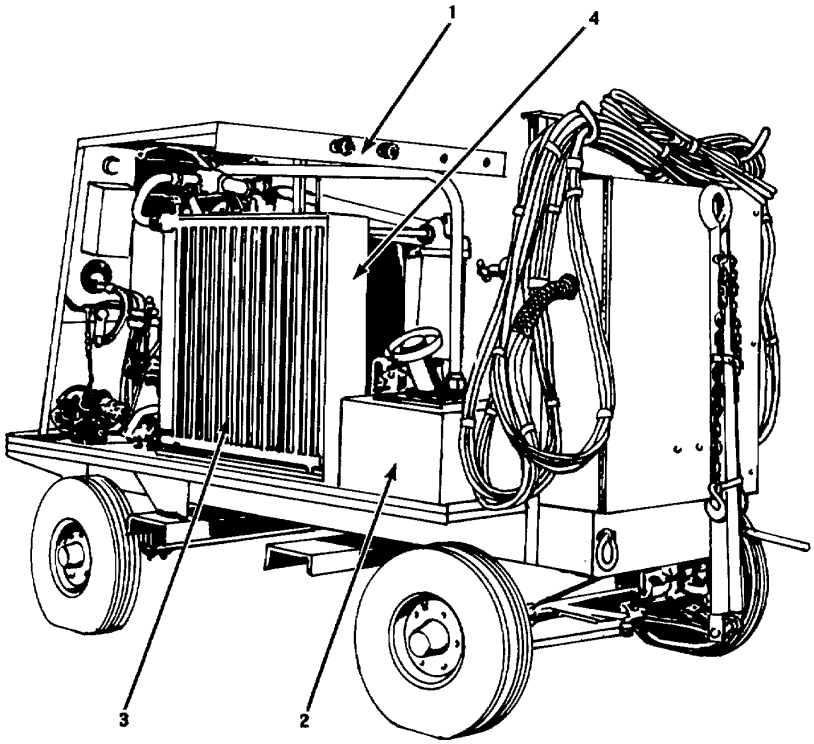

1. Hose connection panel
2. Hydraulic fluid reservoir
3. Oil cooler
4. Fan and fan motor

Figure 1-4. Major Components, Right Front View.

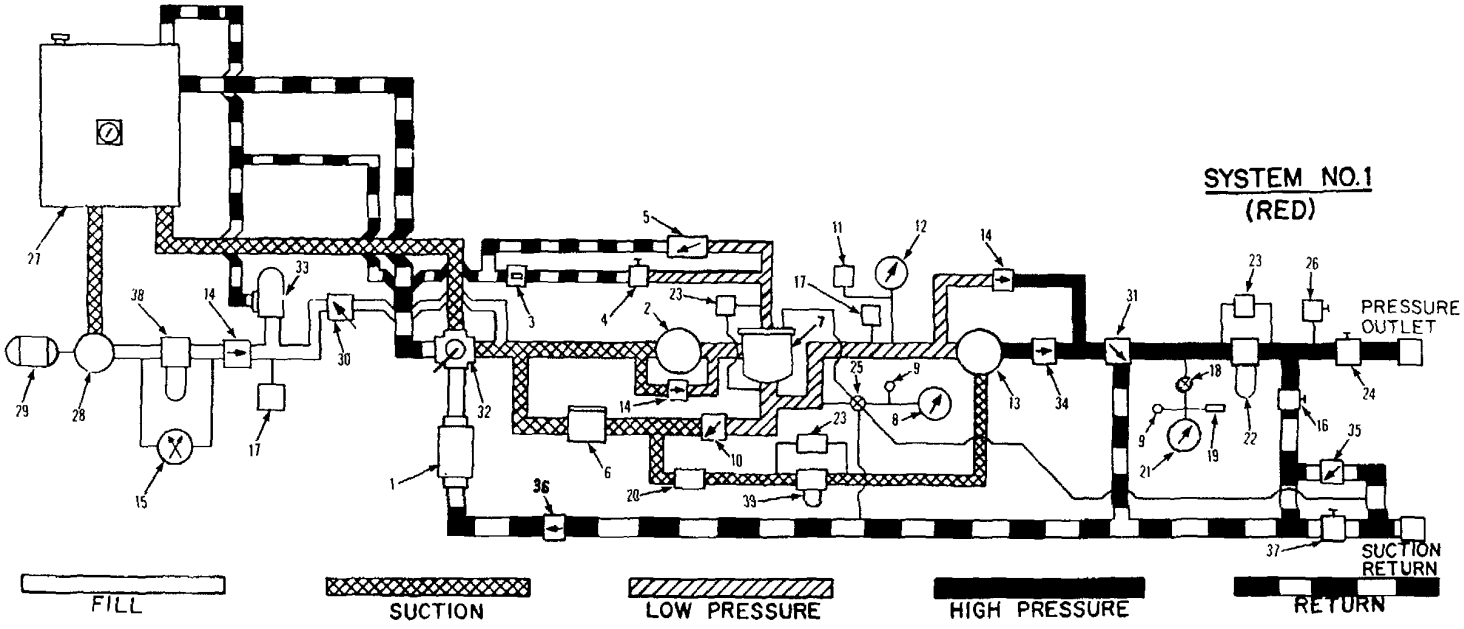

Figure 1-5. Hydraulic Schematic Diagram.

1-22. Bleed System (Fig. 1-5). The test stand hydraulic system incorporates a push button bleed valve and sight tube (3, 4) to bleed air from the system. Air and oil is bled from the low pressure filter (7) in the system and routed to the reservoir (27).

1-23. Protective Devices And Instrumentation (Fig. 1-5).

a. Relief valve (5) in the low pressure section protects the filter cooler and flowmeter from over pressurization.

b. Thermoswitch (11) in the high pressure pump actuates to sound a warning horn when the fluid temperature reaches 160-170 degrees F.

c. Low pressure switch (17) protects the high pressure pump against cavitation due to low inlet pressure or boost pump failure. If the pressure drops below 40 psig, the motor will shut off.

d. Check valve (14) allows fluid to bypass the boost pump in the event of pump failure, preventing fluid starvation of high pressure pump.

e. Differential pressure switch (23) across the inlet and outlet ports of the high pressure filter illuminates red warning light on control panel to indicate clogged filter element. A duplex gauge (15) across the fill system filter (38) monitors inlet and outlet pressures at all times. Low pressure filter is monitored with selector at all times. Low pressure filter is monitored with selector valve (25) positions of boost pump outlet and high pressure pump inlet.

f. Check valves (14, 20, 34, 36) are located in the hydraulic lines to prevent any back flow between hydraulic circuits.

g. Circuit breakers are provided for overload protection of various circuits.

h. Complete instrumentation and controls are located on the control panels. Refer to Table 2-1 for description of function and location.

1-24. Electrical System (Fig. 1-6). The system provides the circuits and controls for test stand functioning of electrical components. The controls of the electrical system are mounted in a Nema 12 control box at the front of the test stand, with a hinged access door to permit facility of maintenance and inspection. The test stand is designed to operate on 220/440 volts, AC, 3 phase, 60 cycle. Circuit breakers are incorporated in the line power circuit for motor protection with manual reset buttons extending through the control box door. The main pump motor is started by part winding magnetic contactors in order to reduce in rush currents. A time delay relay is incorporated to sequence the pulling in of the starting and running contactors. The cooler fan and fill pump motors are started across the line. All contactors are furnished with overload heater coils and externally operated reset buttons. A reverse phase relay is incorporated in the circuit to protect the motors from damage by improper wiring. Transformers and rectifiers are used to provide 110 volts to the motor control circuits and 24 V.D.C. to the instrumentation circuits.

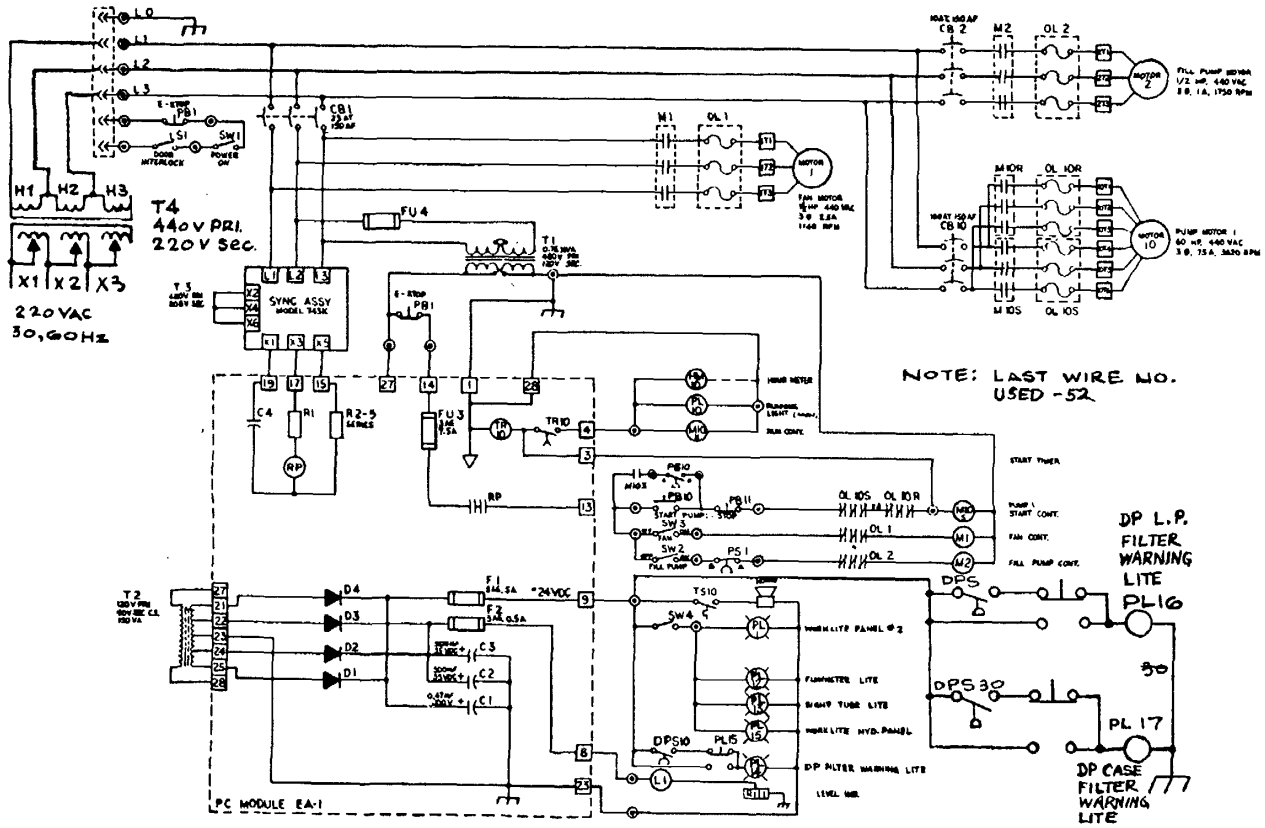

Figure 1-6. Electrical Schematic.

Motor start push buttons and switches are mounted on the instrument and control panel at the rear of the test stand. An elapsed time meter is mounted on the instrument panel (12, fig. 2-1) to record stand operating hours. A warning horn provides audible warning in the event of high fluid temperatures.

CHAPTER 2

OPERATING INSTRUCTIONS

SECTION I. CONTROLS AND INSTRUMENTS

2-1. Controls and Instruments. All controls and instruments are identified and described in Table 2-1 and Figure 2-1. Fill system, cooler fan and instrumentation controls are located on the right side of the control panel.

SECTION II. OPERATING PROCEDURES

2-2. Preliminary Procedures. Make the following checks before operating the test stand.

CAUTION

Check whether voltage supply is 220V to 440V.
Check transformer connections and interchange if necessary for appropriate voltage as shown in figure 2-2.

a. Housing doors shall be closed per stenciled instructions on doors. Open panel door.

b. Connect power plug properly to power supply source.

c. Check hydraulic reservoir fluid level. For proper operation of test stand maintain hydraulic fluid level in reservoir ¾ full minimum.

NOTE

Power "ON" switch must be ON to energize Reservoir Level Indicator (13, fig. 2-1).

2-3. Pre-Operation Control Settings. Place the controls listed below in the positions indicated (fig. 2-1).

Control	Position
H.P. Gauge Shutoff valve (26)	¼ turn from full closed
Pressure Selector valve (6)	H.P. pump inlet
Pressure Control (30)	Opened to lowest pressure setting
Flow Control valve	Closed
H.P. Relief valve (27)	Lowest pressure setting

Volume Control (29)	To be set to 'zero' flow
Fluid Bypass valve (24)	Open
Reservoir Selector valve (28)	Ship reservoir

2-4. Pre-Operation Fill And Bleed Procedure. With controls in the positions specified in paragraph 2-3, proceed as follows:

a. Remove the hoses from the top of the test stand.

b. Check that the connector fittings on the hoses and outlet and return fittings on the top of the test stand are clean. If the fittings are dirty, wash the fittings with solvent, Federal Specification P-D-680.

c. Connect hoses to corresponding outlet and return fittings (fig. 1-1). Connect high pressure hose to low pressure hose using adapters.

d. Place FILL PUMP switch (16, fig. 2-1) in ON Position.

e. Place SYSTEM FILL valve in ON position.

Table 2-1. Controls and Instruments

CONTROL OR INSTRUMENT	DESCRIPTION AND LOCATION	FUNCTION OR OPERATION
Flowmeter	Tubular type; 0-30 gpm capacity; panel	Indicates the volume of fluid returning to the system circuit.
Output pressure gauge	0-6000 psig located on panel	Indicates system pressure of fluid at stand outlets.
BOOST PUMP PRESSURE gauge	Compound gauge; 0-30 in hg vacuum 0-300 psig on panel	Indicates pressure at point selected by valve.
SIGHT TUBE	Lighted sight tube on pan	Flow of air-free fluid is observed.
FILTER BLEED valve button valve	Spring loaded push	Bleeds air in cooler and filter.
PRESSURE SELECTOR valve	4-Way selector valve on panel	Selects pressure readings at boost pump outlet, H.P. pump inlet suction return line (boost pump inlet) and back pressure.

Table 2-1. Controls and Instruments

CONTROL OR INSTRUMENT	DESCRIPTION AND LOCATION	FUNCTION OR OPERATION
LOW PRESSURE TEST	Test connection on panel	External calibration of low pressure gauge.
SYSTEM FILL valve	Valve on panel	Permits filling of system from reservoir.
Panel Light	Three clear incandescent lamps across top of panel	Illuminate control panel.
High Pressure Filter	Red lamp on panel	Lights in event of high differential pressure across high pressure filter.
FILL SYSTEM gauge	Duplex 0-200 psig on panel	Indicates pressure on both sides of fill system filter simultaneously.
HOURMETER	On panel; rotating drum type; 0-9.999 hours	Total test stand operating hours.
FLUID LEVEL	Zero to full on right side of panel	Indicates level (amount) of fluid in test stand reservoir; electrically actuated.
MOTOR RUNNING LIGHT	Amber light on panel is running.	Indicates pump motor
LIGHTS ON	Toggle switch on panel	Turns panel illuminating lights on and off.
FILL PUMP SWITCH	Toggle switch on panel	Starts fill pump motor.
PUMP ON SWITCH	Black push button on panel	Starts pump motor.
PUMP OFF SWITCH	Red push button on panel	Stops pump motor.
POWER ON SWITCH	Off-On toggle type on panel	Energizes supply power (thru power cord) to control panel on test stand.
EMERGENCY STOP	Red mushroom head push button	Cuts all power to stand.

Table 2-1. Controls and Instruments

CONTROL OR INSTRUMENT	DESCRIPTION AND LOCATION	FUNCTION OR OPERATION
FAN SWITCH	Off-On toggle type on panel	Starts fan motor on cooler
FLOW CONTROL valve	Plug type throttling valve on main control panel	Control flow of fluid to test stand outlets.
Fluid sampling valves	Needle valve on panel of pressurized fluid at output if desired.	Permit taking sample
FLUID BYPASS valve	Plug type throttling valve on main control panel	Bypasses fluid from pressure outlet to suction return line.
HIGH PRESSURE TEST	Test connection on panel	External calibration on high pressure gauge.
HIGH PRESSURE GAUGE SHUT OFF valve	Needle type on panel	Isolates fluid pressure gauge from system outlets for positive reading and external calibration.
HIGH PRESSURE RELIEF valve	Adjustable pilot-operated type with lock nut on panel	Selects pressure at which high pressure fluid is bypassed to suction return line.
RESERVOIR SELECTOR	Handle at top of control panel	Selects test stand or ship reservoir.
VOLUME CONTROL	Manual control with lock ring on high pressure pump on lower sub-panel	Regulates maximum high pressure fluid delivery from 0 to 30 gpm.
PRESSURE CONTROL	Screw shaft adjustment on high pressure pump on lower sub-panel	Maintains constant pressure in hydraulic system as delivered by pump.
Fluid Temperature gauge	-20 degree to 200 degrees F temperature indicator on panel	Indicates fluid temperature at high pressure pump inlet.

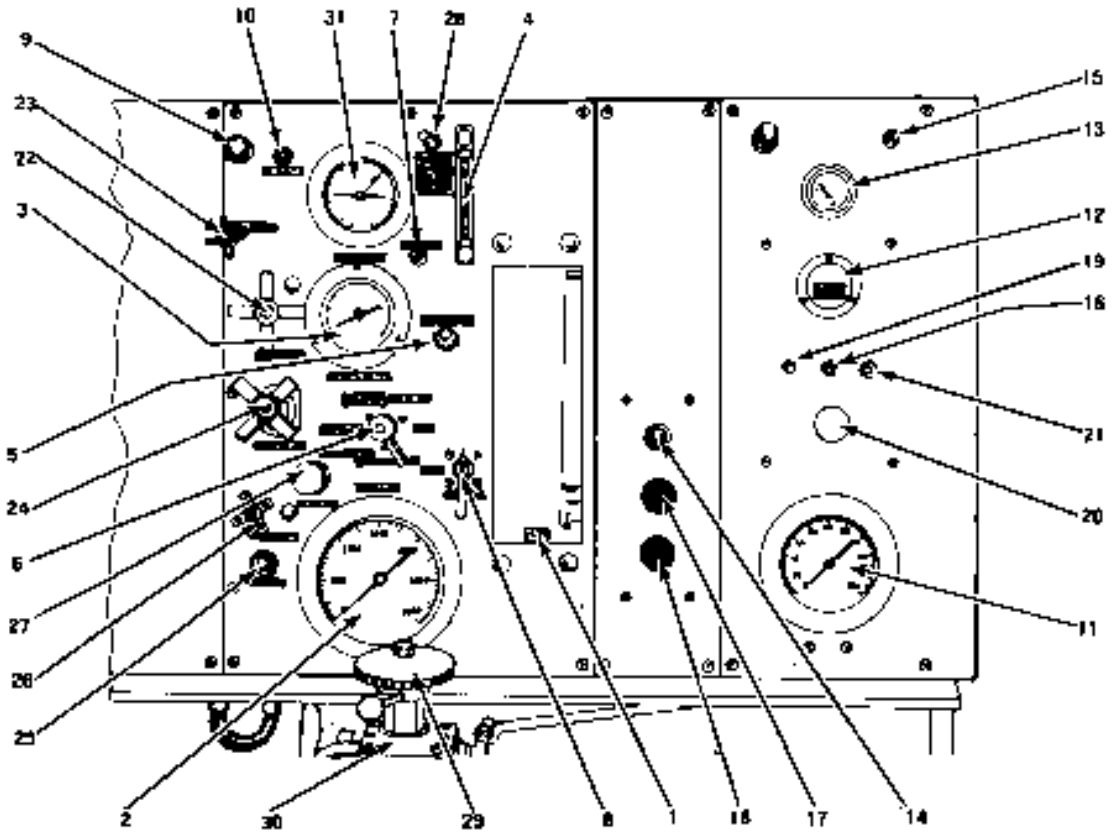

1. Flowmeter
2. Output Pressure gage
3. Boost Pump Pressure gage
4. Sight Tube
5. Filter Bleed valve
6. Pressure Selector valve
7. Low Pressure Test
8. System Fill valve
9. Panel Light
10. High Pressure Filter
11. Fill System gage
12. Hourmeter
13. Fluid Level
14. Motor Running Light
15. Lights On
16. Fill Pump Switch
17. Pump On Switch
18. Pump Off Switch
19. Power On Switch
20. Emergency Stop
21. Fan Switch
22. Flow Control valve
23. Fluid Sampling valves
24. Fluid Bypass valve
25. High Pressure Test
26. High Pressure Gage Shut Off valve
27. High Pressure Relief valve
28. Reservoir Selector
29. Volume Control
30. Pressure Control
31. Fluid Temperature gage

Figure 2-1. Controls and Instruments.

X = INPUT(PRIMARY)
H = OUTPUT(SECONDARY)
L = MOTOR LEADS
C = INPUT CABLE

NOTE: DO NOT MOVE INPUT CABLE CONNECTIONS C_0, C_1, C_2, C_3, AND MOTOR LEADS L_0 .

HOOK-UP WHEN EXTERNAL POWER SOURCE IS 440 V:

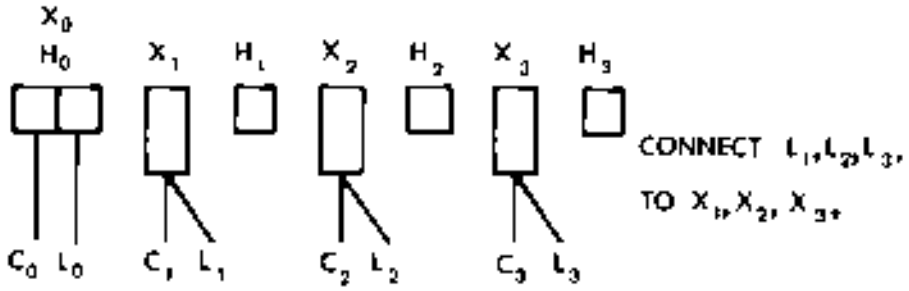

HOOK—UP WHEN EXTERNAL POWER SOURCE IS 220V:

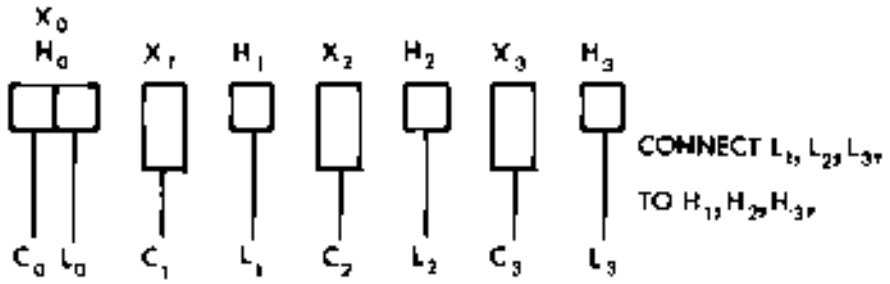

Figure 2-2. Transformer Connections.

NOTE

Reservoir selector valve must be in ship reservoir position to perform fill and bleed procedures.

f. Press and hold FILTER BLEED valve (5) until system is free of air (bubbles) as shown on sight gauge.

g. Place FILL PUMP switch (16) in OFF position.

h. When the hydraulic systems have been prefilled, check RESERVOIR LEVEL INDICATOR. Refill the oil reservoir if necessary with hydraulic oil, Military Specification MIL-H-5606 or MIL-H-82382.

2-5. Main Pump Motor Starting Procedure.

a. Perform preliminary procedures (paras. 2-2, 2-3, 2-4).

CAUTION

Do not impose a load on high pressure pump when starting motor. Fluid Bypass Valve (24) shall be open at starting.

b. Place Power On switch (19) in ON Position.

c. Push Pump On button (17).

NOTE

When operating in TEST STAND RESERVOIR position, observe H.P. pump inlet pressure. When indicated pressure is below 40 psi, push and hold start button in an engaged position until pressure exceeds 40 psi. This is required in order to override the low boost pressure shutdown switch.

d. Press FILTER BLEED valve (5) to free system of entrained air.

NOTE

Any fluid bled from system must be replaced using fill pump and system fill valve. Monitor system pressure on compound gauge with gauge selector valve in H.P. Pump Inlet position. Pressure shall not exceed 175 psi.

2-6. Adjusting Volume And Pressure Settings. The following procedure shall be performed on the test stand system.

a. Perform preliminary procedures (paras. 2-2, 2-3, 2-4, 2-5).

b. Open FLOW CONTROL valve (22).

c. Slowly close FLUID BYPASS valve (24).

d. Press FILTER BLEED valve (5) to free system of entrained air.

e. Observe output pressure gauge (2) for reading of 100 to 500 psig.

f. Check condition of flow in flowmeter (1). If air is still present, bleed system per preceding step (d).

g. Adjust VOLUME CONTROL (29) to desired rate of flow.

h. Slowly close FLOW CONTROL valve (22) to check or reset HIGH PRESSURE RELIEF valve (27) and/or set COMPENSATOR CONTROL.

CAUTION

Before hydraulic fluid passes through high pressure filter, warm fluid to 80 degrees F minimum by circulating fluid within the test stand. HIGH PRESSURE RELIEF valve shall be open and FLUID BYPASS VALVE shall be closed. When the fluid temperature reaches 80 degrees F, flow fluid through filter at not more than ½ gallon per minute until filter housing is warmed. At fluid temperatures below 80 degrees F, the high viscosity of the hydraulic fluid will cause excessive differential pressure which actuates the differential pressure switch and may rupture the primary filter element.

i. Reset HIGH PRESSURE RELIEF valve (27) setting to 200/250 psig above desired COMPENSATOR CONTROL setting.

j. Adjust COMPENSATOR CONTROL setting to desired value. Readjust flow if necessary.

k. Shut down test stand and stop motor (para. 2-7).

2-7. Stopping The Test Stand. To stop the test stand:

a. Reduce volume control setting to minimum.

b. Open FLUID BYPASS valve (24, fig. 2-1).

c. Close FLOW CONTROL valve (22).

d. Position RESERVOIR SELECTOR valve (28) to test stand reservoir.

e. Push pump motor stop button (18).

f. Disconnect hoses and place on hose retainer hooks. Cap all external connections. Do not disconnect hoses from test stand, unless necessary.

2-8. Emergency Stop.

a. Open FLUID BYPASS valve (24).

b. Push emergency stop button (20). (Red mushroom button on panel.)

2-9. Fluid Sampling. A needle type sampling valve is provided to aid in taking samples for fluid contamination analysis. The valve is located on the control panel.

To take fluid samples, operate the unit with the FLUID BYPASS valve open and open sample valve.

2-10. Aircraft Fill And Test Procedures.

2-11. Positioning And Connecting The Test Stand To Aircraft. Position and connect the test stand for aircraft test as follows:

a. Move the test stand to the operating site using a suitable towing vehicle.

b. Position the test stand with respect to the aircraft so that the hoses can be connected between the aircraft and the test stand without sharp bends or kinks.

c. Set the brakes by pulling up on the brake lever.

d. Raise the tow bar and secure it in its vertical position using the tow bar latch.

e. Remove the hoses from-the front of the test stand.

f. Check that the connector fittings on the hoses and the outlet and return fittings on the top of the test stand are clean. If the fittings are dirty, wash the fittings with solvent, Federal Specification P-D-680.

g. Make the necessary hose connections between the aircraft and the outlet and return fittings on the top of the test stand.

2-12. Filling The Aircraft Reservoir. The following procedure can be used to fill an aircraft reservoir or to replace any fluid lost when connecting the hoses. To completely fill and bleed an aircraft system that has been drained, refer to paragraph 2-13.

NOTE

Refer to the applicable aircraft publication for proper fill procedures.

a. Turn the PRESSURE SELECTOR valve (6, fig. 2-1) to the BOOST OUTLET position.

b. Position RESERVOIR SELECTOR valve (28) to ship reservoir.

NOTE

The fill system pressure switch is set at 80 psig.

c. Start fill pump.

d. Fill the aircraft reservoir by opening the system fill valve (8). Leave the system fill valve opened until the filling operation is complete.

NOTE

The fill system output pressure can be monitored by observing the BOOST PUMP PRESSURE gage (3).

e. Bleed the air from the system by pressing the FILTER BLEED VALVE (6). Observe the FILTER BLEED valve sight tube and hold the FILTER BLEED valve depressed until clear fluid flows through the sight tube with no air bubbles.

f. After the bleeding operation is complete, check the aircraft fluid level. Refill the aircraft reservoir as necessary by opening the system fill valve.

2-13. Aircraft Filling Procedure. If the aircraft system has been drained, fill and air bleed the aircraft system as follows:

NOTE

Two people are needed for this operation; one to operate the test stand and one in the aircraft to observe the filling operation.

a. Perform all procedures described in paragraphs 2-2 through 2-5.

b. Open flow control valve (22).

c. Slowly close fluid bypass valve (24).

d. With fill system operating, press filter bleed valve (5) while continually cycling the aircraft controls until all air is bled from the aircraft system.

NOTE

When the pressure indicated by the BOOST PUMP PRESSURE gage (3) drops below 45 psig, release the filter bleed valve and allow pressure to build up to at least 50 psig before again pressing the FILTER BLEED valve.

e. Slowly close the FLUID BYPASS valve (24).

f. Slowly increase the volume output of the test stand system and repeat the air bleed operation at one-quarter turn increments of the pump volume control until the rated flow of the aircraft system has been reached.

CAUTION

Do not exceed the rated gpm of the individual system aircraft pumps. Refer to the applicable aircraft publication for flow capacities of the respective systems.

2-14. Aircraft Testing Procedures. To test an aircraft hydraulic system, proceed as follows:

a. Perform all procedures described in paragraphs 2-2 through 2-5. If the aircraft system has been drained, fill and air bleed the aircraft system as described in paragraph 2-13.

CAUTION

If the warning horn sounds, refer to Chapter 3, Section IV for trouble shooting before attempting to operate the test stand for testing an aircraft system.

b. Open the FLOW CONTROL valve (22).

c. Slowly close the FLUID BYPASS valve (24).

d. Position RESERVOIR SELECTOR valve (28) as required per the applicable aircraft publication.

e. Proceed with tests in accordance with the applicable aircraft publication.

f. System output pressure is indicated by the output pressure gage (2). To vary the output pressure, refer to paragraph 2-6.

g. System volume is indicated by the flowmeter (1). To vary the output volume, refer to paragraph 2-6.

h. Fluid temperature is indicated by the FLUID TEMPERATURE gage (31).

i. To check the return pressure from the aircraft, set the PRESSURE SELECTOR valve (6) to the return position.

j. To operate return back pressure system on aircraft with this requirement, set PRESSURE SELECTOR valve (6) to back pressure position. Close return flow control valve (37, fig. 1-5). Back pressure may be adjusted at back pressure relief valve (35, fig.1-5).

k. Shut down test stand after test (para. 2-7).

CHAPTER 3
AVIATION UNIT MAINTENANCE INSTRUCTIONS

SECTION I. PREPARATION FOR USE, STORAGE OR SHIPMENT

3-1. Preparation For Use.

3-2. Unpacking And Installation. The test stand is shipped completely assembled on fully inflated tires and requires no major assembly of components prior to preparing the stand for use other than the following procedures:

a. Strip the waterproof tape from seams, doors and other openings of the cabinet.

b. Open all cabinet doors and thoroughly inspect interior of the test stand to remove all extraneous packing or cushioning material used to protect internal components during shipment. Small areas of normally exposed metal surfaces may be wrapped with protective covering or tape during shipment. Be certain all such coverings are removed.

3-3. Initial Inspection. It is important to carefully inspect the complete test stand for any possible damage which may have occurred during shipment. The following initial inspection procedures are recommended:

a. Check the data appearing on the test stand nameplate to verify it is the unit designated in paragraph 1-6 of this manual. If there is any doubt, do not attempt to operate the test stand in accordance with the instructions contained in this manual.

b. Remove the hose assemblies from the inside of the test stand. Inspect the hose assemblies carefully for evidence of damage, breaks or loose fittings.

WARNING

The output hose assemblies are subjected to extremely high pressure. Repair any defective hose assembly before using the hose assembly during operation of the test stand.

c. Open the control and instrument panel access door. Inspect all gages, indicators and controls for evidence of shipping damage. Check that all parts are securely mounted. Check that all manually operated switches and controls operate freely.

d. Open access doors. Inspect the plumbing installation for damaged tube assemblies, fittings and hose assemblies. Check that all fittings are securely connected and hoses are not deteriorated.

e. Carefully inspect the electrical wiring for broken wires or frayed insulation. Check that all electrical connections are secure.

f. Inspect the oil reservoir for evidence of physical damage during shipment. Check that the gage sensors are securely mounted in the oil reservoir. Check that the electrical wiring to the sending unit is not damaged.

g. Check tires for proper inflated pressure. Normal tire pressure should be 60 pounds with tires cold. Inspect tire treads and casings for cuts or abrasions and remove any imbedded objects from treads.

h. Check the towbar and steering assemblies. Make certain that tie rods have not been bent or damaged and that the steering apparatus swings freely.

i. Check hand brake assembly by setting the hand brake and testing rear wheels for braking action.

j. Inspect the test stand trailer and cabinet for any damage, making certain that all bolts and screws are secured. Check doors and door latches for proper closing and locking.

3-4. Servicing Hydraulic System. To service the hydraulic system for use, proceed as outlined in the following steps.

a. Position the test stand convenient to 220/440 V, 3 phase, 60 HZ power outlet.

b. If the hydraulic fluid reservoir (2, fig. 1-4) has been filled with a preservative fluid for shipment, drain the reservoir by removing the reservoir drain cap in the bottom of the reservoir. Make certain drain cap is installed after reservoir has been completely drained.

c. Drain the preservative fluid (if necessary) from the hydraulic system at each filter drain for the low pressure filters. When completely drained, replace drain caps.

d. If necessary, drain the preservative fluid from the high pressure pump, (4, fig. 1-2) by removing the drain plug located in the corner of the pump case. When completely drained, replace plug. Refill pump case with MIL-H-5606 or MIL-H-82382.

e. Connect power cord plug to 220/440 V, 3 phase, 60 HZ outlet. Place power on switch located on the electrical control panel in ON position. This will energize the reservoir level gage located on the control panel.

f. Fill the test stand reservoir at the filler neck with hydraulic fluid, Specification MIL-H-5606 or MIL-H-82382 until the reservoir level gage indicates 3/4 to 7/8 full.

3-5. Preliminary Lubrication. Carefully inspect the test stand lubricating points referred to in Table 3-3. Be sure that initial

lubrication exists at all specified points.

3-6. Preparation For Storage.

3-7. Test Stand. Prepare the test stand as follows:

a. Drain the reservoir (2, fig. 1-4) by removing the reservoir drain plug. Make certain drain plug is installed after reservoir has been completely drained.

b. Drain hydraulic fluid from the hydraulic system at the low pressure filter drain (12, fig. 1-3). When completely drained, replace drain cap.

c. Drain the fluid from the high pressure pump (4, fig. 1-2) by removing the drain plug located in the corner of the pump case. When completely drained, replace plug. Refill pump case with MIL-H-6083A.

d. Fill the test stand reservoir at the filler neck with preservative fluid Specification MIL-H-6083A, until the reservoir level gage indicates 7/8 full.

e. Operate test stand for approximately 10 minutes. Operate system fill valve to fill hydraulic system with preservative oil.

f. Disconnect input power cable from external power source and coil over hooks at front of stand.

g. Place several bags of activated desiccant MIL-D-3464 inside test stand cabinet and near electrical components.

h. Fasten doors and latches securely; taping seams and openings with pressure-sensitive, water resistant tape, Specification PPP-T-60.

i. Secure hoses on retainer hooks. Be sure all external hydraulic connections are capped.

3-8. Preparation For Shipment.

3-9. Test Stand. The test stand does not require an external packing container. For shipment, prepare the test stand in the same way as for storage, paragraph 3-7, steps (a) through (j).

SECTION II. INSPECTION, REPAIR AND REPLACEMENT

3-10. Inspection Instructions.

3-11. General. Instructions for general inspections are given in paragraphs 3-12 through 3-14 as a general guide. Specific inspection instructions for components and parts are given in subsequent paragraphs and tables.

3-12. Visual And Mechanical Inspection. Because the purpose of inspections is generally to determine serviceability, it is extremely important to visually inspect parts, particularly those for which no special requirements can be specified. The judgment factor is

inherent in all inspections other than dimensional or operational inspections. If a part appears defective, correct the defect or replace V the part at the point at which the defect is noted, before performing additional inspections. Do not disassemble equipment merely to perform inspections of components if performance of the equipment or component assembly is satisfactory.

3-13. Inspect All Equipment. Inspect all equipment prior to disassembly, when disassembled, and after final reassembly for visible defects. The inspection will check tangible and visible mechanical conditions of the equipment and its components. Pay particular attention to loose, broken or dirty connections and cracked, chipped or broken housing, bases or mounting brackets. Check manually for positive mechanical action of moving parts. Check for binding or rotating equipment. Inspect for freedom from dust and dirt, particularly in air passages, and oil or grease, particularly on coils or contacts. Inspect lamps and indicators for broken filaments, loose indicators, broken cases, or bases.

3-14. Dimensional Inspection. Where dimensional inspection is required, make measurements indicated with standard shop measuring devices. Dimensional tolerances are not critical in most of the electrical components, and the inspection may be ignored if visual and mechanical inspection is satisfactory and the equipment is operating properly. Do not disassemble equipment merely to perform dimensional or operational inspections.

3-15. Operational Inspection. For operational inspection, tolerances and procedures, refer to Chapter 1, Section II and Chapter 2, Section II. Do not disassemble equipment merely to perform operational inspections.

Where operational inspection is indicated, satisfactory operation at rated specifications is generally acceptable, and minimum and maximum performance is not critical, unless specifically called for.

3-16. Inspection Tables. Inspection procedures are tabulated for electrical parts, mechanical parts and related groups of parts for which specific data is required. (See Tables 3-1 through 3-5.) All other parts can be adequately inspected by visual inspection.

3-17. Component Inspection.

3-18. Motors. Inspect all motors visually for cleanliness, broken, cracked, or bent frames, end bells or shafts, and loose or damaged contacts or leads. Watch for evidence of discoloration, spattered solder, or burned insulation, indicative of overheating. Do not disassemble sealed bearings for inspection. If bearings are badly discolored due to overheating, or if oxidized (red) dust indicates lack of lubrication, replace the bearings. Use a tachometer to check motor rpm under specified power supply.

Table 3-1. General Inspection

PART	INSPECT FOR
Tubing	Thin spots from improper flaring, cracks and binds. Nicks and dents are permissable to a depth of 10% of the tube wall thickness.
Threaded fittings, screws, bolts, nuts	Worn or damaged threads.
Oil seals, preformed packing, grommets, gaskets	Cuts or nicks on sealing surface, deterioration, or loss of elasticity.
Springs	Cracks, pitting, broken ends and lack of tension.
Brackets, panels, mounts, covers, sheet metal structures, clamps	Dents, distortion, punctures, bends, kinks, cuts.
Hoses	Deterioration, cracks, cuts, damaged fittings.
Electrical leads, wiring, cable	Damaged insulation, cuts, breaks, open and short circuits.
Keys	Wear, distortion, looseness in shaft.
Chain	Breaks, corrosion.
Castings	Magnaflux or fluorescent penetrant inspection for cracks.

Table 3-2. Inspection of Electrical Parts

PART	INSPECT FOR
All equipment and components	General condition of parts; cracks, chips and breaks.
	Mechanical action of moving parts.
	Condition of terminals and connections.
	Condition of leads and cables.
	Lamps and indicators, for broken filaments or bases. Indicator needles or cases.
Indicator Lights	Apply 28Vdc to pins 1 and 2 with tested lamp (part number 1822) in place. Lamp should light.
	Apply 28Vdc to pins 1 and 3 with test lamp in place. Depress test ring, and lamp should light until test ring is released.
Panel and Illumination lights	Apply 28Vdc to pins to check light and lamp. Inspect socket and jewel.
Circuit Breaker	Apply 28Vdc and check continuity with contacts actuated and deactuated.
Toggle switches	Apply 28Vdc and check continuity across terminals in both open and closed positions.
Hourmeter	Check counter cycling with an accurate chronometer with pump on.
	Apply 28Vdc and check cycling with a chronometer.
Fluid Gage	Indicator at rest position at left of dial under no current, moving to right to full indication under power, with full tank, and dropping to empty with tank empty.
Sending Unit	Check terminals for clean, tight connections.
	Check sending unit float for damage causing leakage.
	Apply 24Vdc with variable resistance, 0 to 30 ohms, for reading of "Empty" to "Full".
Motors	Refer to paragraph 3-18 for inspection data.
Horn	Apply 28Vdc to horn terminals to sound horn.

Table 3-3. Inspection of Mechanical Parts

PART	INSPECT FOR
Ball Bearings	Out-of-round, scoring and rough, noisy operation.
Needle Bearings	Out-of-round, scoring and rough, noisy operation.
Tapered roller bearings and races	Out-of-round, scoring and rough, noisy operation.
Sleeve bearings	Out-of-round, scoring and wear.
Gears	Worn, chipped or broken teeth. Fluorescent penetrant inspection for cracks.
Shafts	Wearing, scoring, bent condition, damaged teeth if applicable.
Port Plate	Scoring and wear.
Sleeve and spool	Scoring and wear.
Piston	Distortion and wear.
Sleeve	Scoring and wear.
Barrel	Scoring and wear.
Roller	Scoring and wear.
Piston-shoe set	Scoring and wear.
Brake drum	Scoring and wear.
Brake shoes	Scoring and wear.
Springs	Broken leaf and damage.
Tie rod ends	Distortion and wear.
Wheels spindles	Inspect for cracks with fluorescent penetrant method.
Tool Box	Dents, punctures and corrosion.
Brake lever assembly	Misalignment, distortion, wear and corrosion.
Oil cooler fan	Cracks in hub area, bent blades and unbalance.
Oil cooler	Test for obstructed flow and leakage under 150 psig. There should be no external leakage.

Table 3-4. Inspection of Gages

PART	INSPECT FOR
Temperature gage	Broken or cracked glass, broken or distorted pointer, illegibility of dial, punctured or distorted case, temperature bulb, or capillary.
Low Pressure gage	Punctured or distorted case, worn or damaged inlet fitting threads, broken or distorted pointer, illegibility of dial, and leakage.
	Broken or cracked glass.
	Fractured or distorted bezel.
Duplex gage	Punctured or distorted case, broken or distorted pointer, illegibility of dial, broken or cracked glass, worn or damaged inlet fitting threads, and leakage.
Pressure gage	Punctured or distorted case, broken or distorted pointer, illegibility of dial, broken or cracked glass, worn or damaged inlet fitting threads and leakage.
Flowmeter, 30 gpm	Punctured or distorted case, broken or cracked tube, illegibility of scale, damaged float, worn or damaged fitting threads and leakage.

Table 3-5. Inspection of Valves

PART	INSPECT FOR
Check valves	Scratches and scoring of running and seating surfaces of the poppets and valve bodies. Inspect springs for pitting, cracks, broken ends, and lack of tension.
Relief valves	Scratches and scoring of running and seating surfaces of valve discs, poppets, stems, needle valves and valve bodies. Pitting, cracks, lack of tension and broken ends on springs.
Fill valve	Scratches and scoring of running and seating surfaces of end fitting, stem, side fitting, and knob.
Sight Tube Bleed valve	Scratches and scoring of running and seating surfaces of knob, stem, seat, poppet, and nut. Pitting, cracks, lack of tension and broken ends on springs. Cracked or chipped edges on window.
Selector Four-Way valve	Scratches and scoring of running and seating surfaces on plug, handle, ball, valve body, and bearing.
Flow Control valve	Scratches and scoring of running and seating surfaces of handle, stem, retainer, spool and valve seat.

SECTION III. MAINTENANCE INSTRUCTIONS

3-19. General.

3-20. Maintenance. Maintenance of the portable hydraulic test stand consists of periodic inspection, cleaning, service adjustments, minor repairs, replacement of parts and components, and lubrication. The procedures described in this section must be performed regularly and thoroughly, even though test stand is operating satisfactorily. Through proper inspection, maintenance, and lubrication, equipment that is not in continuous use is kept ready for operation when necessary, and the test stand is maintained for peak performance for the maximum service life of the equipment.

3-21. Maintenance.

3-22. General. Maintenance is generally limited to cleaning, service adjustments and minor repairs, or replacement of parts and components that require periodic attention through normal service use. Generally, instructions for minor repair or replacement consists essentially of carefully noting method of installation when removing defective parts or components, performing the necessary repair or adjustments, and installing parts in the reverse order of removal.

WARNING

Release all system pressure prior to removal of components from hydraulic systems, and ensure that input power cable is disconnected to avoid possible injury to personnel.

3-23. Cleaning. The test stand should be cleaned whenever there is an accumulation of dust or dirt on the exterior of the cabinet or control panel, or whenever grease, oil or similar foreign matter is inadvertently spilled within the unit. Clean the unit in accordance with the following procedures:

WARNING

To avoid injury to personnel, cleaning operations shall be performed in a well ventilated area, away from open flames, heat and sparks. Disconnect input power cable before beginning cleaning procedures.

a. Clean exterior of cabinet and control panel, using a clean cloth dampened with cleaning solvent, Federal Specification P-D-680. Dry surfaces with a clean, dry cloth. Do not return test stand to use until solvent has been completely dried.

CAUTION

Do not allow solvent to enter gauges, switches, or electrical receptacle of input power cable.

b. Clean interior of unit, wipe up spilled hydraulic fluid, grease, or similar foreign matter with a clean, dry, lint-free cloth.

NOTE

If contaminated area is not accessible through access panels and doors provided in housing, remove housing as described in paragraph 3-29.

c. For surfaces which cannot be cleaned with a dry, lint-free cloth, use a clean cloth saturated with trichlorethylene, Federal Specification MIL-T-7003.

CAUTION

Take precautions to prevent trichlorethylene from contacting rubber parts, as rapid deterioration can result. Do not allow trichlorethylene to enter switches, electrical motors, or receptacles.

3-24. Removal and Installation Of Fill System Filter Element . (Refer to Fig. 3-13). Remove and install fill system filter element in accordance with the following instructions:

a. Relieve system pressure.

b. Unscrew filter bowl from cap. Remove element and discard if contaminated.

c. Examine packing between filter bowl and head; replace if defective.

d. Install new element in the reverse order of removal.

e. Tighten bowl to torque of 75 inch-pounds (lubricated).

f. Bleed test stand hydraulic system as described in Chapter 3, Section IV. 3-25. Removal And Installation Of Low Pressure Filter Elements. (Fig. 3-6). Remove and-install low pressure filter elements as follows:

a. Relieve system pressure and drain filter bowl (12, fig. 1-3).

b. Remove bands securing cap to filter bowl.

c. Disconnect tube and fitting at Tee of pressure switch to allow coverassembly and check valve, with hoses, to be placed to one side. This provides clearance to remove filter elements.

d. Lift filter elements and gaskets from filter bowl. Discard elements if contaminated.

e. Examine gaskets for deterioration or damage; replace if defective.

f. Install new filter elements in reverse order of removal.

g. Bleed test stand system as described in Chapter 3, Section IV before operating high pressure pump.

3-26. Removal And Installation Of High Pressure Filter Elements. (Refer to Fig. 3-7). Remove and install high pressure filter elements in accordance with the following instructions:

a. Exhaust all test stand system pressure.

b. Remove bleeder plug (1), crack drain plug (1) and allow filter to drain.

c. Unscrew filter bowl (3).

d. Remove filter element (4) and replace with a new element.

NOTE

This element is a throwaway type. No attempt should be made to clean it.

e. Reinstall filter bowl, tighten drain plug and bleederplug. Reset differential switch (10) by pressing reset button with a blunt instrument punch or pencil and proceed with normal operation of test stand.

3-27. Removal And Installation Of Structural Housing . (Refer to fig. 1-1). Remove and install housing as follows:

a. Attach suitable lifting device to four lifting eyes on top of housing.

b. Release latches securing housing to structure.

c. Lift housing while carefully guiding to prevent it from damaging functional components during removal.

d. Install housing in the reverse order of removal.

3-28. Hydraulic Reservoir Inspection Required Every 60 Days. Do not operate test stand for one hour or more prior to inspection of the hydraulic reservoir.

a. Remove the reservoir drain cap and drain out approximately one gallon fluid. This will remove water and or other contaminates collected in the reservoir sump. If the fluid still shows visible evidence of contamination after draining a minimum of one gallon of fluid, flush the system, drain and clean the reservoir.

b. Refill with hydraulic oil conforming to Military Specification MIL-H-5606 or MIL-H-82382.

NOTE

If test stand is operated in a hot humid climate, remove reservoir drain cap and check for water every 15 days.

3-29. Removal And Installation Of Tires. Remove and install tires in accordance with the following instructions:

a. Jack up test stand and remove five nuts and washers securing wheel to hub.

b. Remove wheel from the hub and release air pressure from tire.

WARNING

Wheel rims under pressure. Completely deflate tire to prevent possible personal injury.

c. Remove eight nuts, bolts, and washers to separate halves of wheel rims and, at the same time, free tire and tube.

d. Reinstall tire and tube on wheel rims in the reverse order of removal, ensuring that tube is not pinched.

e. Inflate tire to 60 pounds.

f. Reinstall wheel on hub in reverse order of removal.

3-30. Removal And Installation Of Wheel Hubs. Remove and install wheel hubs in accordance with the following instructions:

a. Jack up test stand and remove five nuts and washers securing wheel to hub; remove wheel from hub.

b. Remove grease cap from wheel hub.

c. Remove cotter pin, nut, and washer securing hub to stub axle.

d. Slide hub, bearings, and inner and outer races from stub axle.

e. Wash off old grease using clean filtered solvent, Federal Specification P-D-680. Examine bearings and races for evidence of wear or pitting. Rotate bearings by hand and check for roughness.

WARNING

Use solvent in well ventilated area. Avoid contact with open flames, as injury could result.

NOTE

If bearings or races are worn or pitted, replace complete bearing and race assembly.

f. Pack bearings with grease.

g. Reinstall bearings and hub, and adjust castellated nut just until all end play is removed. Then back off nut until cotter pin hole is exposed and install cotter pin.

h. If rear wheel hub has been removed, examine brake shoes for worn linings. If necessary, replace brake shoes.

SECTION IV. TROUBLE SHOOTING

3-31. Trouble Shooting. The following table provides a quick check list of possible troubles which may be encountered in the operation of the test stand, their probable cause and suggested remedy.

Table 3-6. Trouble Shooting

TROUBLE	PROBABLE CAUSE	REMEDY
Main Pump Motor will not start	Power cable not connected or plug not seated in receptacle	Plug in properly.
	Circuit Breakers Tripped to OFF/ Control Master Switch OFF (Refer to fig. 3-16)	Reset Switches on ON.
	Incorrect Power Line phasing, causing reverse phase relay to remain inoperative	Check and correct power line phasing.
	Wrong Voltage applied, starter will not respond	Connect to specified power source; reset starter button.
	Defective Control Circuit Wiring (fig. 1-6)	Inspect Wiring, repair or replace defective wire leads.
	High Pressure Pump inlet below 40 psig	Press and hold pump on button until pressure builds up to 40 psig.
Main Pump Motor stops during operation	Overloaded; starters tripped OFF	Wait for 30 seconds, press starter button. If motor continues to cut out, check for cause of overload condition; check heater coils in starter.
	Low Boost pressure to high pressure pump	Check cause of pressure failure to high pressure pump. Filter element clogs, fluid level indication low.

Table 3-6. Trouble Shooting (cont'd)

TROUBLE	PROBABLE CAUSE	REMEDY
Main Pump Motor stops during operation (Continued)	Defective low pressure switch (fig. 1-6)	Check switches.
Oil Cooler Fan Motor Inoperative	Circuit breaker tripped to OFF	Reset circuit breaker.
	Fan motor defective	Replace.
Reservoir level indicator does not operate	Power on switch not ON	Position switch to ON.
	Defective sending unit	Check or replace.
	Reservoir empty	Fill.
Pump fails to deliver sufficient volume	Insufficient fluid supply (test stand will shut down)	Fill Reservoir. Fill System (para. 2-4).
	Air or suction line	Bleed (para. 2-4).
	Dirty, clogged low pressure filter	Replace elements (Chapter 3, Section III).
	Pump volume control set too low (Refer to para. 2-6)	Adjust.
Pump fails to deliver sufficient pressure	Low boost pump pressure (Unit will shut down)	Check boost pump pressure.
	Clogged low pressure and high pressure filters	Clean or replace (Chapter 3, Section III).
	Pump compensator not set properly	Reset (Refer to para. 2-5).
	High pressure relief valve set too low (dumping before compensator setting)	Reset (Refer to para. 2-5).
	Defective pressure gage	Check gage (Chapter 3, Section II).
Noisy Operation	Pump cavitating; insufficient fluid supply, low boost pressure, pump case not filled with fluid	Check for adequate fluid supply; boost pressure, check filters; fill pump case with fluid.

Table 3-6. Trouble Shooting (cont'd)

TROUBLE	PROBABLE CAUSE	REMEDY
Noisy Operation (Continued)	Contaminated fluid; ferrous (metal) particles in fluid	Check filter elements of high pressure filter, fill system filter, use clean filtered fluid.
	Defective boost pump	Check and replace, if necessary.
	Defective check valve (34, fig. 1-5) in high pressure line	Inspect and replace, if necessary.
	Pressure outlet closed or flow control valve and bypass valves closed	Open bypass valve; or, if pressure hose connected to outlet and aircraft, flow control valve.
	Chattering high pressure relief valve (31, fig. 1-5)	Remove valve and disassemble, clean and replace worn or defective parts.
	Defective Pump Compensator (30, fig. 2-1)	Check and repair or replace.
Insufficient Back Pressure	Air in system	Bleed (Refer to para. 2-4).
	Insufficient fluid supply from aircraft reservoir	Check aircraft reservoir; add fluid by using fill system (Refer to para. 2-4). Fill stand system.
Control Circuit Inoperative	Control circuit breakers OFF	Reset circuit breakers.
	Power on Switch OFF	Switch ON.
	Faulty Control Circuit transformer (fig. 1-6)	Test and replace.
	Defective Relays	Test and replace; if necessary.
Indicating Lights fail to glow on "press to test"	Defective Lamps (Refer to fig. 1-6)	Test and replace.
	Defective Switches (Refer to fig. 1-6)	Test and replace.

Table 3-6. Trouble Shooting (cont'd)

TROUBLE	PROBABLE CAUSE	REMEDY
Indicating Lights fail to glow on "press to test" (Continued)	Defective Wire Leads (Refer to fig. 1-6)	Test, repair or replace.
Hourmeter does not register	Defective Wire Leads (Refer to fig. 1-6)	Repair or replace.
	Defective Instrument	Replace.
Trailer does not track properly when being towed	Damaged or misadjusted steering apparatus, probably tie rods and tie rod ends	Adjust or replace tie rods and tie rod ends if there is evidence of damage. Keep wheels, wheel spindles and steering apparatus lubricated (Table 3-3).
Trailer does not brake properly	Worn brake linings	Adjust brakes for wear. Replace linings if worn excessively.

SECTION V. PARTS LISTING

3-32. General. The parts listing describes the parts for the Aircraft Hydraulic Systems Test .Stand, part number 2-01-6, manufactured by Uni-Systems, Inc., Albuquerque, New Mexico.

a. The quantities listed in the "Units Per Assy" column are the total quantity used per assembly at the location indicated.

b. The "Description" column lists the items by the proper nomenclature which should be used when ordering an item.

c. Parts are listed in the "Part Number" column by their manufacturer's or government part number.

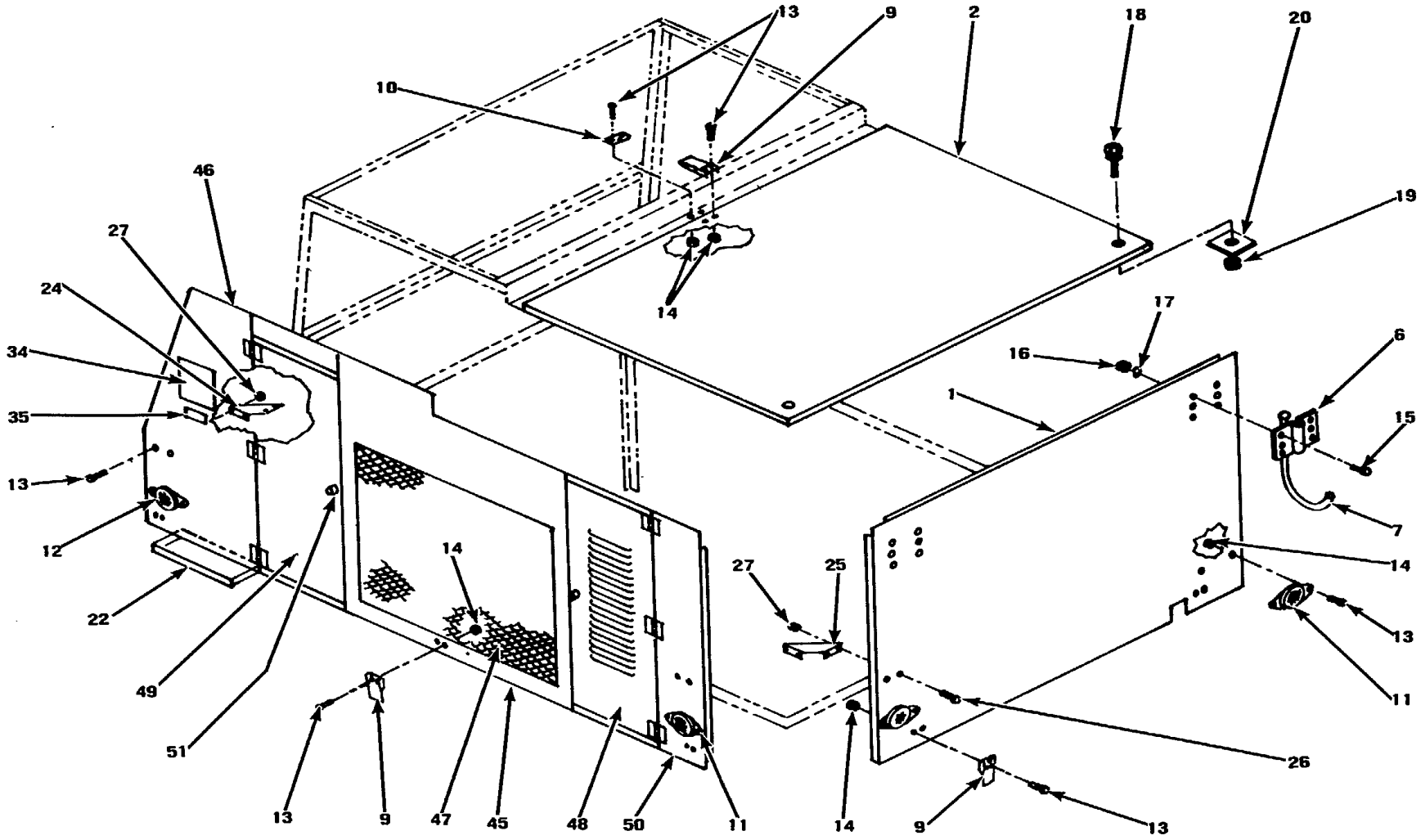

Figured 3-1. External Housing Assembly (Sheet 1 of 2).

FIG. & INDEX NO.	PART NUMBER	1 2 3 4 5 6 7 DESCRIPTION	UNITS PER ASSY
3-1		EXTERNAL HOUSING ASSEMBLY	
	2-02-3-6000	HOUSING ASSY, External (30946)	1
-1	2-02-3-6001	PANEL, Front (30946)	1
-2	2-02-3-6002	TOP COVER, Rear (30946)	1
-3	2-02-3-6003	TOP COVER, Main (30946)	1
-4	2-02-3-6004	PANEL, Pump Cover (30946)	1
-5	2-02-3-6005	PANEL, Control Cover (30946)	1
-6	2-02-3-6006	BRACKET, Hose Hook (30946)	2
-7	2-02-3-6007	HOOK, Hose Storing (30946)	2
-8	16-10-201-11	LATCH, Door (94222)	2
	16-0-2345-16	LOCKWASHER (94222)	2
-9	TL100A	LATCH, Suitcase (72794)	11
-10	TL100-5	STRIKE, Latch	11
-11	MS35387-2	REFLECTOR, Amber	4
-12	MS35387-1	REFLECTOR, Red	4
-13	MS9316-04	SCREW, Hex Mach (AP)	164
-14	MS21044-N3	LOCKNUT (AB)	164
-15	MS90725-6	SCREW, Hex Hd. (AP)	12
-16	MS35690-402	NUT, Hex (AP)	12
-17	MS35338-44	LOCKWASHER (AP)	12
-18	MS51937-2	BOLT, Eye	4
-19	MS35690-502	NUT, Hex (AP)	4
-20	2-02-3-6008	WASHER, Special (AP)	8
	2-02-3-6009	ANGLE, Lower	2
-21	2-02-3-6010	SUPPORT, Side Right Hand	1
-22	2-02-3-6303	SUPPORT, Side Left Hand	1
-23	2-02-3-6012	SUPPORT, Corner Right (30946)	1
-24	2-02-3-6013	SUPPORT, Corner Left (30946)	1
-25	2-02-3-6014	SUPPORT, Front (30946)	2
-26	MS35223-63	SCREW, Pan Hd. (AP)	6
-27	MS21044N3	LOCKNUT (AP)	6
-28	2-10-3-6301-2	PLATE, Identification (30946)	1
-29	2-10-3-6301-4	PLATE, Identification (30946)	1
	2-10-3-6301-5	PLATE, Identification (30946)	1
-30	2-02-3-6303	PLATE, Hydraulic Schematic (30946)	1
-31	2-03-1-7304	PLATE, Temperature Correction (30946)	1
-32	2-02-3-6305	PLATE, Horn Warning (30946)	1
-33	2-02-3-6306	PLATE, Cold Weather Operation (30946)	1
-34	2-02-3-6307	PLATE, Identification (30946)	1
-35	2-03-1-7308	PLATE, Registration (30946)	1
-36	2-02-3-6309	PLATE, Lube (30946)	1
-37	2-03-1-E7310	PLATE, General Operating (30946)	1
	MS20604-AD3E2	RIVET, Blind (AP)	60
-38	2-02-3-6100	PANEL ASSY, Right Hand (30946)	1
-39	2-02-3-6101	PANEL, Right Rear (30946)	1
-40	2-02-3-6102	DOOR, Left Hand (30946)	1
-41	2-02-3-6103	DOOR, Right Hand (30946)	1

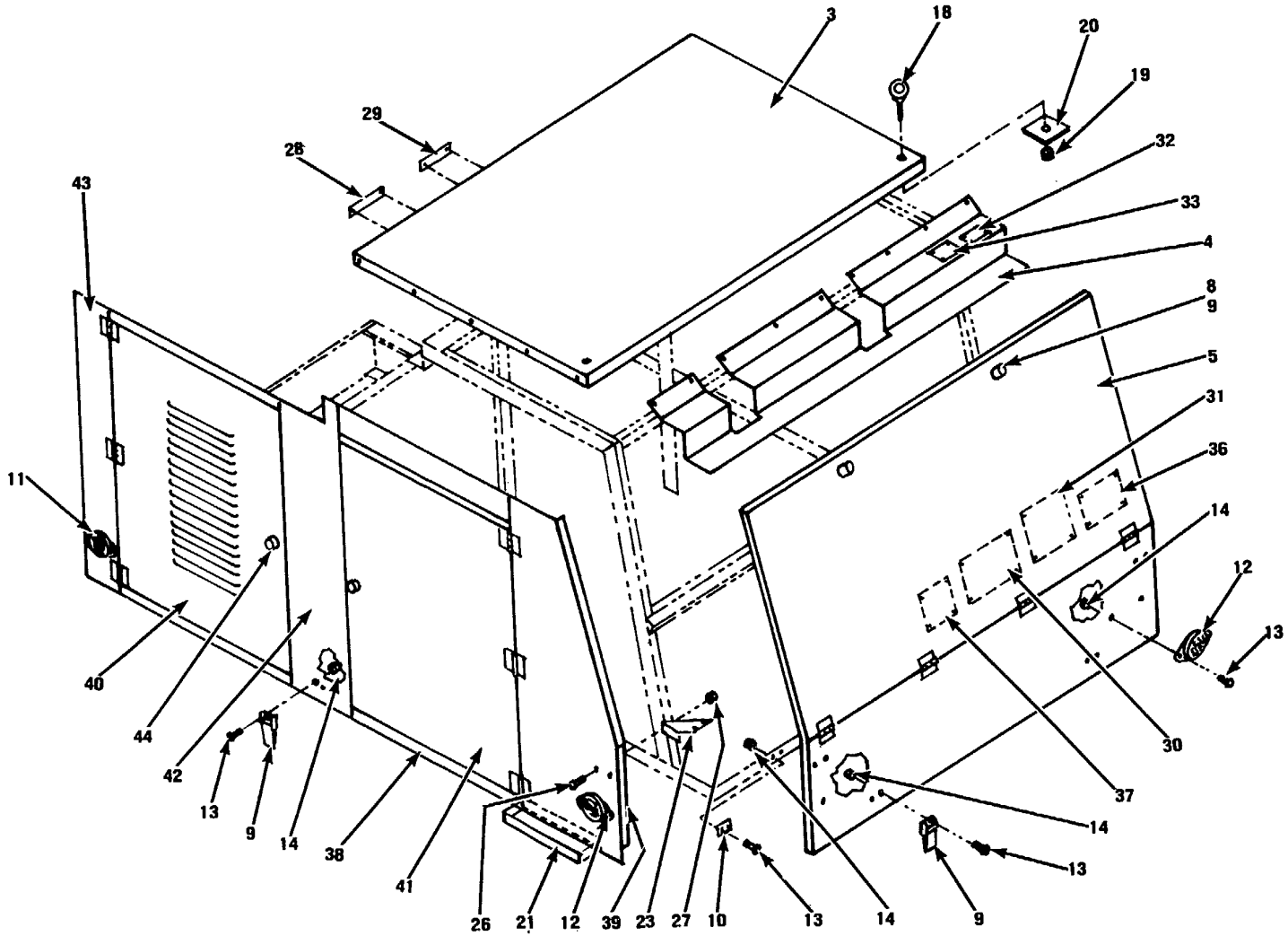

Figure 3-1. External Housing Assembly (Sheet 2 of 2).

FIG. & INDEX NO.	PART NUMBER	1 2 3 4 5 6 7 DESCRIPTION	UNITS PER ASSY
3-1		EXTERNAL HOUSING ASSEMBLY (CONT)	
-42	2-02-3-6104	PANEL, Center Right Hand (30946)	1
-43	2-02-3-6105	PANEL, Front Right Hand (30946)	1
	2-02-3-6106	ANGLE, Rear Top (30946)	1
	2-02-3-6107	ANGLE, Lower Right Hand (30946)	1
	2-02-3-6108	ANGLE, Upper Right Hand (30946)	1
-44	16-10-203-11	LATCH, Door (94222)	2
	16-0-2345-16	LOCKWASHER (94222)	2
	2-03-1-7108	HINGE, Locking Left (30946)	1
	2-03-1-7109	HINGE, Locking Right (30946)	1
	MS35223-63	SCREW, Pan Hd. (AP)	6
	MS21044N3	LOCKNUT (AP)	6
-45	2-02-3-6200	PANEL ASSY, Left Hand (30946)	1
-46	2-02-3-6201	PANEL, Left Rear (30946)	1
-47	2-02-3-6202	PANEL, Center Left Hand (30946)	1
-48	2-02-3-6203	DOOR, Right Hand (30946)	1
-49	2-02-3-6204	DOOR, Left Hand (30946	1
-50	2-02-3-6205	PANEL, Front Left Hand (30946)	1
	2-02-3-6206	ANGLE, Rear Top (30946)	1
	2-02-3-6207	ANGLE, Upper Left Hand (30946)	1
	2-02-3-6208	ANGLE, Lower Left Hand (30946)	1
-51	16-10-203-11	LATCH, Door (94222)	2
	16-0-2345-16	LOCKWASHER (94222)	2
	2-03-1-7108	HINGE, Locking Left (30946)	1
	2-03-1-7109	HINGE, Locking Right (30946)	1
	MS35223-63	SCREW, Pan Hd. (AP)	6
	MS21044N3	LOCKNUT (AP)	6

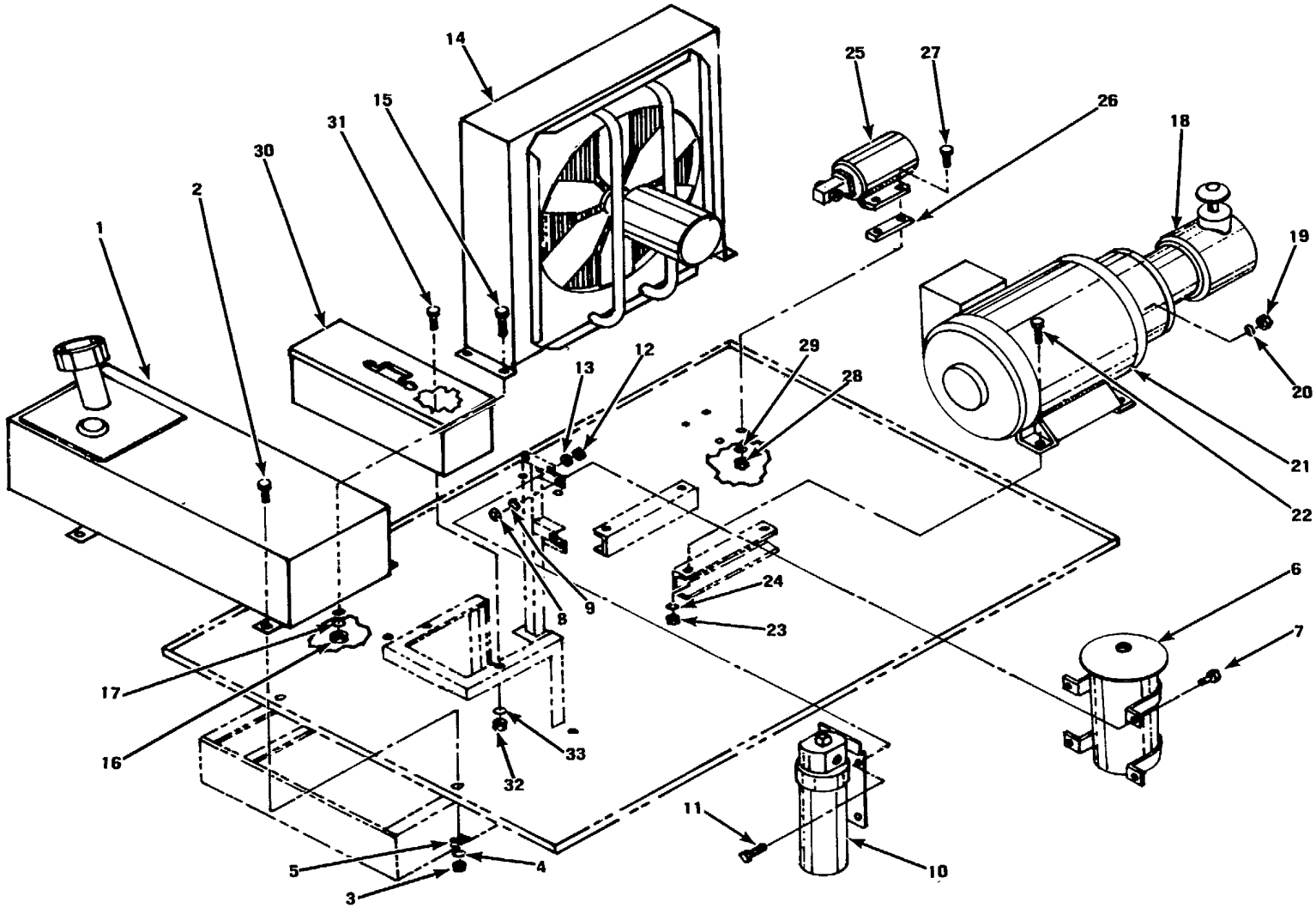

Figure 3-2. Internal Components Assembly.

FIG. & INDEX NO.	PART NUMBER	1 2 3 4 5 6 7 DESCRIPTION	UNITS PER ASSY
3-2		INTERNAL COMPONENTS ASSEMBLY	
	2-02-3-4000	COMPONENTS ASSY, Internal (30946)	1
-1	2-02-3-4100	TANK ASSY, Oil (30946)	1
		(Refer to fig. 3-5 for breakdown)	
-2	MS90725-114	SCREW, Hex Cap (AP)	4
-3	MS35690-802	NUT, Hex (AP)	4
-4	MS35338-48	LOCKWASHER (AP)	4
-5	NAS1099-8	WASHER, Bevel (AP)	4
-6	PR32-53	FILTER ASSY, Low Pressure (05228)	2
		(Refer to fig. 3-6 for breakdown)	
-7	MS90725-60	SCREW, Hex Cap (AP)	8
-8	MS35690-602	NUT, Hex (AP)	8
-9	MS35338-46	LOCKWASHER (AP)	8
-10	ADHT5458E9716	FILTER, High Pressure (01414)	2
	MDB	(Refer to fig. 3-7 for breakdown)	
-11	MS90725-34	SCREW, Hex Cap (AP)	8
-12	MS35690-502	NUT, Hex (AP)	8
-13	MS35338-45	LOCKWASHER (AP)	8
-14	2-02-3-3000	COOLER FAN ASSY (30946)	1
		(Refer to fig. 3-8 for breakdown)	
-15	MS90725-109	SCREW, Hex Hd. (AP)	4
-16	MS35690-802	NUT, Hex (AP)	4
-17	MS35338-48	LOCKWASHER (AP)	4
-18	015-25634.	PUMP, High Pressure (16954)	2
		(Refer to fig. 3-9 for breakdown)	
	2-03-1-1114	STUD (30946)	24
-19	MS35690-622	NUT, Hex	24
-20	MS35338-46	LOCKWASHER	24
-21	ASS28678-1400	MOTOR, Main Pump (30946)	2
		(Refer to fig. 3-11 for breakdown)	
-22	MS90725-163	SCREW, Hex Cap (AP)	4
-23	MS35690-1002	NUT, Hex (AP)	4
-24	MS35338-50	LOCKWASHER (AP)	4
-25	MPG50BT43YB	PUMP, Fill (64294)	1
-26	2-02-3-4001	SPACER, Mounting (30946)	2
-27	MS90725-40	SCREW, Hex Cap (AP)	2
-28	MS35690-502	NUT, Hex (AP)	2
-29	MS35338-45	LOCKWASHER (AP)	2
-30	2-02-3-4104	BOX, Tool (30946)	1
-31	MS90725-60	SCREW, Hex Cap (AP)	2
-32	MS35690-602	NUT, Hex (AP)	2
-33	MS35338-46	LOCKWASHER (AP)	2

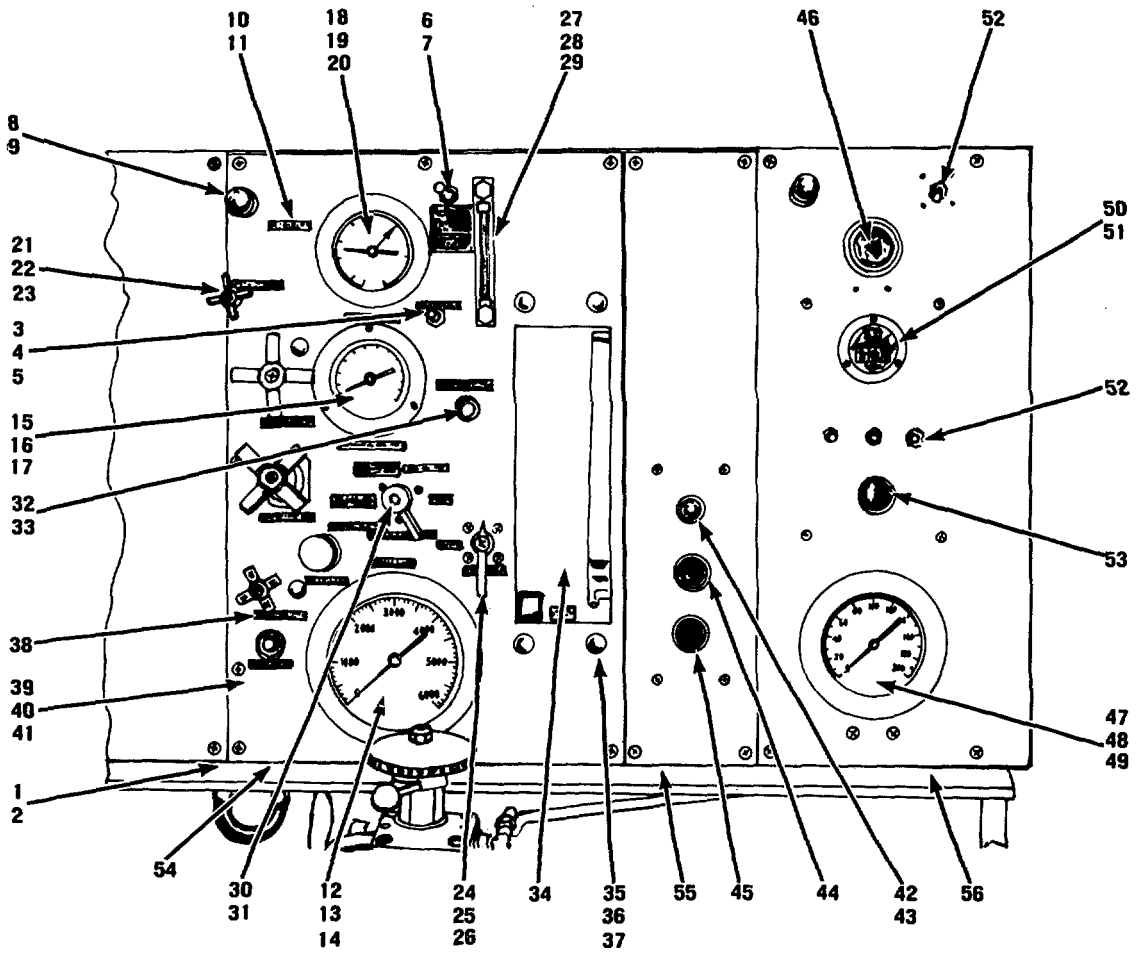

Figure 3-3. Control Panel Assembly.

FIG. & INDEX NO.	PART NUMBER	1 2 3 4 5 6 7 DESCRIPTION	UNITS PER ASSY
3-3		CONTROL PANEL ASSEMBLY	
	2-02-3-5000	PANEL ASSY, Control (30946)	1
-1	MS9316-04	SCREW, Hex. Head (AP)	28
-2	MS21044N3	NUT, Lock (AP)	28
-3	AN832-4D	UNION, Bulkhead	1
-4	AN924-4D	NUT, Bulkhead	1
-5	AN929-4D	CAP ASSY	1
-6	2-02-3-5010	BUSHING (30946)	1
-7	2-02-3-5011	NUT (30946)	1
-8	47-3402-2900-301	LIGHT, Panel (72619)	2
-9	6S6DC24V	LAMP, Incandescent (08806)	2
-10	MS25331-6	LIGHT, Push-to-test	1
-11	1820	LAMP, Incandescent (08806)	1
-12	1377D02B	GAGE, High Pressure (38056)	1
-13	2-02-3-5006	GASKET, Mounting (30946)	1
-14	MS35239-72	SCREW, Flat Head (AP)	3
-15	2-03-1-6004	GAGE, Low Pressure (30946)	1
-16	2-02-3-5007	GASKET, Mounting (30946)	1
-17	AN515-6-10	SCREW, Round Head (AP)	3
-18	6440TWQ	GAGE, Temperature (38056)	1
-19	1278A	MOUNTING RING (38056)	1
-20	2-02-3-5008	GASKET, Mounting (30946)	1
	2-02-3-5011	COVER, Flowmeter	1
	AN515-6-8	SCREW, Rd. Head (AP)	4
	MS27183-6	WASHER, Flat (AP)	4
-21	4WGTX-S	UNION, Female Bulkhead (30780)	1
-22	AN924-4	NUT, Bulkhead	1
-23	145-1-8B	VALVE, Sample (86768)	1
-24	72OHTX6D	VALVE, Fill (86768)	1
-25	AN515-8-6	SCREW, Rd. Head (AP)	4
-26	MS35338-43	WASHER, Lock (AP)	4
-27	2-03-1-6003	SIGHT TUBE (30946)	1
-28	AN894D5-4	BUSHING (AP)	2
-29	MS28778-5	O-RING (AP)	2
-30	2-03-1-6002	VALVE, Pressure Selector (30946)	1
-31	AN515-8-6	SCREW, Rd. Head (AP)	3
-32	689B1-1-4D2	VALVE, Filter Bleed (86768)	1
-33	MS35223-45	SCREW, Pan Head (AP)	4
-34	20-4101SPEC	FLOWMETER (53553)	1
-35	MS90725-6	SCREW, Hex. Head (AP)	4
-36	MS27183-10	WASHER, Flat (AP)	4
-37	MS35338-44	WASHER, Lock (AP)	4
-38	2-10-3-5100	MANIFOLD ASSY. (30946)	1
		(Refer to fig. 3-12 for breakdown)	

FIG. & INDEX NO.	PART NUMBER	1 2 3 4 5 6 7 DESCRIPTION	UNITS PER ASSY
3-3		CONTROL PANEL ASSEMBLY (CONT)	
-39	MS90725-6	SCREW, Hex Head (AP)	4
-40	MS27183-10	WASHER, Flat (AP)	4
-41	MS35338-44	WASHER, Lock (AP)	4
-42	80-0901-0533-301	LIGHT, Indicator (72619)	1
-43	6S6-125V	LAMP, Incandescent (08806)	1
-44	R1-1AAB1	PUSHBUTTON (52830)	1
-45	R1-1BAR1	PUSHBUTTON (52830)	1
-46	6431059	GAGE, Level (70040)	1
-47	1339-02B	GAGE, Duplex (38056)	1
-48	2-02-3-5009	GASKET, Mounting (30946)	1
-49	MS35190	SCREW, Flat Head (AP)	3
-50	12NG1	HOURMETER (07446)	1
-51	AN515-6-8	SCREW, Rd Head (AP)	3
-52	MS35058-22	SWITCH, Toggle	4
-53	R4-2BAR7	PUSHBUTTON (52830)	1
-54	2-02-3-5102	PANEL, Hyd. Red (30946)	1
-55	2-10-3-5403	PANEL, Elec. Red (30946)	1
-56	2-10-3-5502	PANEL, Yellow (30946)	1

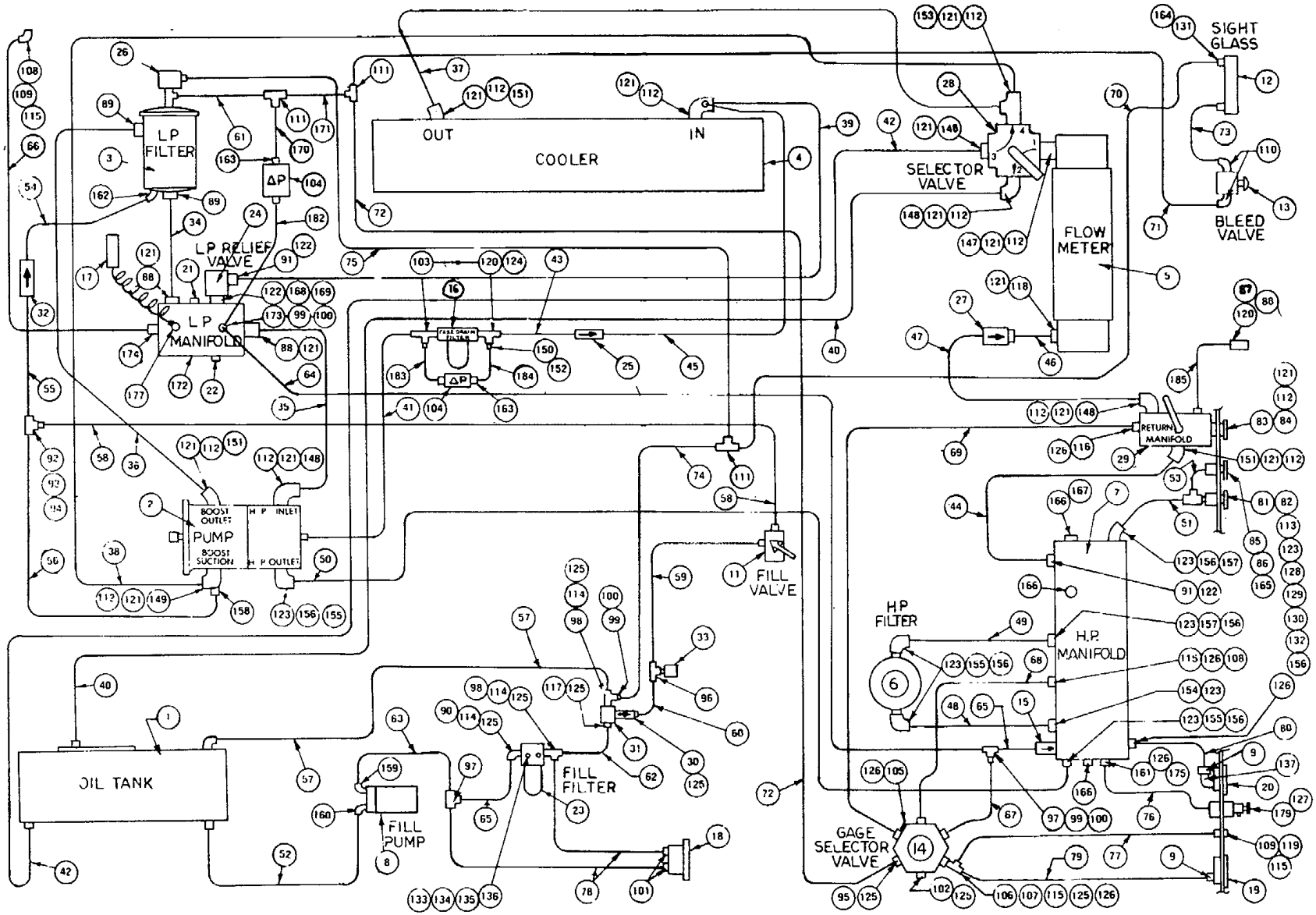

Figure 3-4. Hydraulic-Piping Diagram.

FIG. & INDEX NO.	PART NUMBER	1 2 3 4 5 6 7 DESCRIPTION	UNITS PER ASSY
3-4		HYDRAULIC COMPONENTS ASSEMBLY	
-1	2-02-3-4111	RESERVOIR, Hydraulic (30946)	REF
-2	PV22P-010-3UL-06U-S6	PUMP, High Pressure (16954)	REF
-3	PR-32-53	FILTER, Low Pressure (05228)	REF
-4	11530X1	COOLER, Oil (50184)	REF
-5	2-03-1-6302	FLOWMETER (30946)	REF
-6	MIL-F-27656B	FILTER, High Pressure (96906)	REF
-7	2-02-3-5101	MANIFOLD, High Pressure (30946)	REF
-8	MPG-50BT-43YB	PUMP, Fill System (64296)	REF
-9	78B04	GAGE SNUBBER (76906)	2
-10			
-11	72OHTX-6-D-LUBE	VALVE, Fill (86768)	2
-12	2-03-1-6003	TUBE, Sight (30946)	2
-13	689B-1-1/4-D2	VALVE, Pushbutton Bleed (86768)	2
-14	2-03-1-6002	VALVE, Gage Selector (30946)	2
-15	458-6S2-6	VALVE, High Pressure Check (86768)	REF
-16	MS28720-12	FILTER, Case Drain (96906)	1
-17	6440TWQ	THERMOMETER (38056)	REF
-18	1339-02B	GAGE, Duplex (38056)	REF
-19	2-03-1-6004	GAGE, Low Pressure (38056)	REF
-20	1377D-02B	GAGE, High Pressure (38056)	REF
-21	17121-0	SWITCH, Temperature (73168)	REF
-22	611G2678S	SWITCH, Pressure (09049)	REF
-23	30017	FILTER, Fill System (05228) (Refer to Fig 3-13 for breakdown)	1
-24	1AR41-R-20-T-5-S	RELIEF VALVE, Low Pressure (96259)	1
-25	458-12D27-6	*CHECK VALVE, Case Drain (86768)	1
-26	CR-400-S-10-10	FILTER-RELIEF VALVE (45722)	REF
-27	MS28885-24D	CHECK VALVE, Return	1
-28	744-24D	SELECTOR VALVE, Four Way (86768)	REF
-29	2-02-3-7210	RETURN MANIFOLD (30946) (Refer to Fig 3-14 for breakdown)	1
-30	404HTX-6D-3	CHECK VALVE, Fill System (86768)	1
-31	1360-6-SAE	RELIEF VALVE, Fill System (10129)	1
-32	404HTX-8D-3	CHECK VALVE, Pump Bypass (86768)	1
-33	611G2766S	PRESSURE SWITCH, Fill System (09049)	1
-34	2-10-3-7002	TUBE (30946)	1
-35	2-10-3-7003	TUBE (30946)	1
-36	2-10-3-7004	TUBE (30946)	1
-37	2-02-3-7081	TUBE (30946)	1
-38	2-02-3-7082	TUBE (30946)	1
-39	2-02-3-7083	TUBE (30946)	1
-40	2-02-3-7061	TUBE (30946)	1
-41	2-02-3-7084	TUBE (30946)	1
-42	2-10-3-7016	TUBE (30946)	1

FIG. & INDEX NO.	PART NUMBER	1 2 3 4 5 6 7 DESCRIPTION	UNITS PER ASSY
3-4		HYDRAULIC COMPONENTS ASSEMBLY (CONT)	
-43	2-02-3-7085	TUBE (30946)	1
-44	2-10-3-7012	TUBE (30946)	1
-45	2-02-3-7086	TUBE (30946)	1
-46	2-10-3-7014	TUBE (30946)	1
-47	2-10-3-7104	TUBE (30946)	1
-48	2-10-3-7022	TUBE (30946)	1
-49	2-10-3-7023	TUBE (30946)	1
-50	2-10-3-7024	TUBE (30946)	1
-51	2-02-3-7087	TUBE (30946)	1
-52	2-10-3-7026	TUBE (30946)	1
-53	2-02-3-7088	TUBE (30946)	1
-54	2-10-3-7028	TUBE (30946)	1
-55	2-10-3-7029	TUBE (30946)	1
-56	2-10-3-7030	TUBE (30946)	1
-57	2-10-3-7031	TUBE (30946)	1
-58	2-10-3-7032	TUBE (30946)	1
-59	2-02-3-7062	TUBE (30946)	1
-60	2-10-3-7034	TUBE (30946)	1
-61	2-02-3-7089	TUBE (30946)	1
-62	2-10-3-7036	TUBE (30946)	1
-63	2-10-3-7037	TUBE (30946)	1
-64	2-10-3-7038	TUBE (30946)	1
-65	2-10-3-7039	TUBE (30946)	2
-66	2-10-3-7040	TUBE (30946)	1
-67	2-10-3-7041	TUBE (30946)	1
-68	2-10-3-7042	TUBE (30946)	1
-69	2-10-3-7043	TUBE (30946)	1
-70	2-02-3-7090	TUBE (30946)	1
-71	2-10-3-7045	TUBE (30946)	1
-72	2-10-3-7046	TUBE (30946)	1
-73	2-10-3-7047	TUBE (30946)	1
-74	2-02-3-7091	TUBE (30946)	1
-75	2-02-3-7092	TUBE (30946)	1
-76	2-10-3-7050	TUBE (30946)	1
-77	2-10-3-7051	TUBE (30946)	1
-78	MS28741-6-0160	HOSE, Duplex Gage (96906)	2
-79	MS28741-4-0160	HOSE, Low Pressure Gage (96906)	1
-80	MS28759-4-0160	HOSE, High Pressure Gage (96906)	1
-81	TA155-S4-16D	PRESSURE BULKHEAD FITTING (00624)	1
-82	155-S7-16D	PRESSURE FITTING DUST CAP (00624)	1
-83	B145-S4-24D	RETURN BULKHEAD FITTING (00624)	1
-84	145-S7-24D	RETURN FITTING DUST CAP (00624)	1
-85	TB155-S4-8D	COUPLING HALF, Bulkhead (00624)	1
-86	155-S7-8D	DUST CAP (00624)	1
-87	TA155-S4-12D	COUPLING HALF, Bulkhead (00624)	1
-88	155-S7-12D	DUST CAP (00624)	1
-89	AN816-25D	NIPPLE, Pipe to Tube (00624)	1

FIG. & INDEX NO.	PART NUMBER	1 2 3 4 5 6 7 DESCRIPTION	UNITS PER ASSY
3-4		HYDRAULIC COMPONENTS ASSEMBLY (CONT)	
-90	AN833-6D	ELBOW, Flared Tube Bulkhead (00624)	1
-91	AN919-27D	REDUCER, External Thread Flared Tube (00624) 4	REF
-92	AN824-8D	TEE, Flared Tube (00624)	1
-93	NAS1564-D8-6	REDUCER, Flared Tube (00624)	1
-94	AN818-8D	NUT, Coupling (00624)	1
-95	2062-6-4S	ELBOW, Straight Thread to Tube (00624)	4
-96	6-OTX-S	TEE, Female Pipe Branch (45722)	1
-97	AN824-6D	TEE, Flared Tube (88044)	2
-98	AN804-6D	TEE, Flared Tube Bulkhead on Run (88044)	2
-99	NAS1564-D6-4	REDUCER, Flared Tube (88044)	3
-100	AN818-6D	NUT, Coupling (88044)	3
-101	108-04	SNUBBER, Gage (76906)	2
-102	AN814-6D	PLUG, Screw Thread (76906)	2
-103	AN804-12D	TEE, Bulkhead Run (88044)	2
-104	1201PS-1-1	DIFFERENTIAL PRESSURE SWITCH	2
-105	4HP50N-S	PLUG, Straight Thread (45722)	1
-106	AN893-2D	BUSHING, Screw Thread Reducing (88044)	1
-107	AN804-4D	TEE, Flared Tube Bulkhead on Run (88044)	1
-108	AN833-4D	ELBOW, Flared Tube Bulkhead 900 (88044)	1
-109	AN929-4D	CAP, Flared Tube Fitting (88044)	2
-110	AN822-4-4D	ELBOW, 900 Pipe to Tube (88044)	2
-111	AN824-4D	TEE, Flared Tube (88044)	3
-112	AN924-24D	NUT, Bulkhead (88044)	1
-113	AN924-16D	NUT, Bulkhead (88044)	1
-114	AN924-6D	NUT, Bulkhead (88044)	3
-115	AN924-4D	NUT, Bulkhead (88044)	2
-116	AN815-4D	UNION, Flared Tube (88044)	REF
-117	AN815-6D	UNION, Flared Tube (88044)	1
-118	AN815-24D	UNION, Flared Tube88044 Tube	REF
-119	AN832-4D	UNION, Flared Tube Bulkhead (88044)	REF
-120	AN924-12D	NUT, Bulkhead (88044)	3
-121	MS28778-24	0 RING (96906)	1
-122	MS28778-20	0 RING (96906)	REF
-123	MS28778-16	0 RING (96906)	2
-124	MS28778-12	0 RING (96906)	2
-125	MS28778-6	0 RING (96906)	12
-126	MS28778-4	0 RING (96906)	REF
--127	4-WGBTX-S	FITTING, Female Bulkhead (45722)	REF
-128	NAS424-16	COUPLING, Screw Thread (88044)	1
-129	AN804-16	TEE, Bulkhead Run (88044)	1
-130	NAS1564-16-8	REDUCER, Flared Tube (88044)	1
-131	MS28778-5	0 RING (96906)	REF
-132	AN818-16	NUT, Coupling (88044)	1
-133	2-02-3-7065	SPACER, Fill Filter Mounting (30946)	2
-134	MS90725-20	SCREW, Cap Hex Head (96906)	2
-135	MS35690-402	NUT, Hex (96906)	2

FIG. & INDEX NO.	PART NUMBER	1 2 3 4 5 6 7 DESCRIPTION	UNITS PER ASSY
3-4		HYDRAULIC COMPONENTS ASSEMBLY (CONT)	
-136	No Number	LOCKWASHER (96906)	2
-137	AN915-2	ELBOW, 450 External Thread to Female (88044)	1
-138	MS21919DG-24	ADEL TUBING CLAMP (96906)	12
-139	MS21919DG-16	ADEL TUBING CLAMP (96906)	6
-140	MS21919DG-12	ADEL TUBING CLAMP (96906)	2
-141	MS21919DG-8	ADEL TUBING CLAMP (96906)	6
-142	MS21919DG-6	ADEL TUBING CLAMP (96906)	10
-143	MS21919DG-4	ADEL TUBING CLAMP (96906)	10
-144	AN515-8-16	SCREW, Round Head Machine (96906)	A/R
-145	MS35649-82	NUT, Hex (96906)	A/R
-146	MS34338-42	LOCKWASHER, Spring (96906)	A/R
-147	AN832-24D	UNION, Flared Tube Bulkhead (88044)	REF
-148	AN833-24D	ELBOW, 900 Flared Tube Bulkhead (88044)	REF
-149	2-02-3-1001	ELBOW, 900 Bulkhead Special (30946)	REF
-150	NAS1564-D12-4	REDUCER, Flared Tube	2
-151	AN837-24D	ELBOW, 450 Flared Tube Bulkhead (88044)	REF
-152	AN818-12D	NUT, Coupling (88044)	2
-153	AN804-24D	TEE, Bulkhead (30946)	REF
-154	AN815-16	UNION, Flared Tube (88044)	REF
-155	AN833-16	ELBOW, 900 Flared Tube (88044)	REF
-156	AN6289-16	NUT, Bulkhead (88044)	1
-157	AN837-16	ELBOW, 450 Flared Tube Bulkhead (88044)	REF
-158	AN823-8D	ELBOW, 450 Flared Tube and Pipe (88044)	REF
-159	AN816-6-6D	NIPPLE, Flared Tube and Pipe (88044)	REF
-160	AN816-12-8D	NIPPLE, Flared Tube and Pipe (88044)	REF
-161	AN833-4	ELBOW, 900 Flared Tube Bulkhead (88044)	REF
-162	AN822-8-8D	ELBOW, 900 Flared Tube and Pipe (88044)	REF
-163	AN822-4D	ELBOW, 900 Flared Tube and Pipe (88044)	4
-164	AN894-D5-4	EXPANDER BUSHING (88044)	REF
-165	AN924-8D	NUT, Bulkhead	11
-166	8HP50N-S	PLUG, Straight Thread (45722)	REF
-167	MS28778-8	0 RING (96906)	REF
-168	AN924-20D	NUT, Flared Tube Bulkhead (88044)	REF
-169	AN832-20D	BULKHEAD UNION, Flared Tube (88044)	REF
-170	2-02-3-7093	TUBE (30946)	1
-171	M528741-4-0330	HOSE, Low Pressure Filter to Tee (96906)	71
-172		MANIFOLD, Low Pressure (30946)	REF
-173	AN826-6D	TEE, Flared Tube and Pipe (88044)	REF
-174	AN816-4-4D	NIPPLE, Flared Tube (88044)	REF
-175	AN924-4	NUT, Bulkhead (88044)	REF
-176	Not Used		
-177	6440 TWQ	THERMOWELL (38056)	REF
-178	Not Used		
-179	145-1/8 B	FLUID SAMPLE VALVE (86768)	REF

FIG. & INDEX NO.	PART NUMBER	1 2 3 4 5 6 7 DESCRIPTION	UNITS PER ASSY
3-4		HYDRAULIC COMPONENTS ASSEMBLY (CONT)	
-180	Not Used		
-181	Not Used		
-182	2-02-3-7094	TUBE (30946)	1
-183	2-02-3-7095	TUBE (30946)	1
-184	2-02-3-7096	TUBE (30946)	1
-185	MS28777-16	BACK UP RING (88044)	1

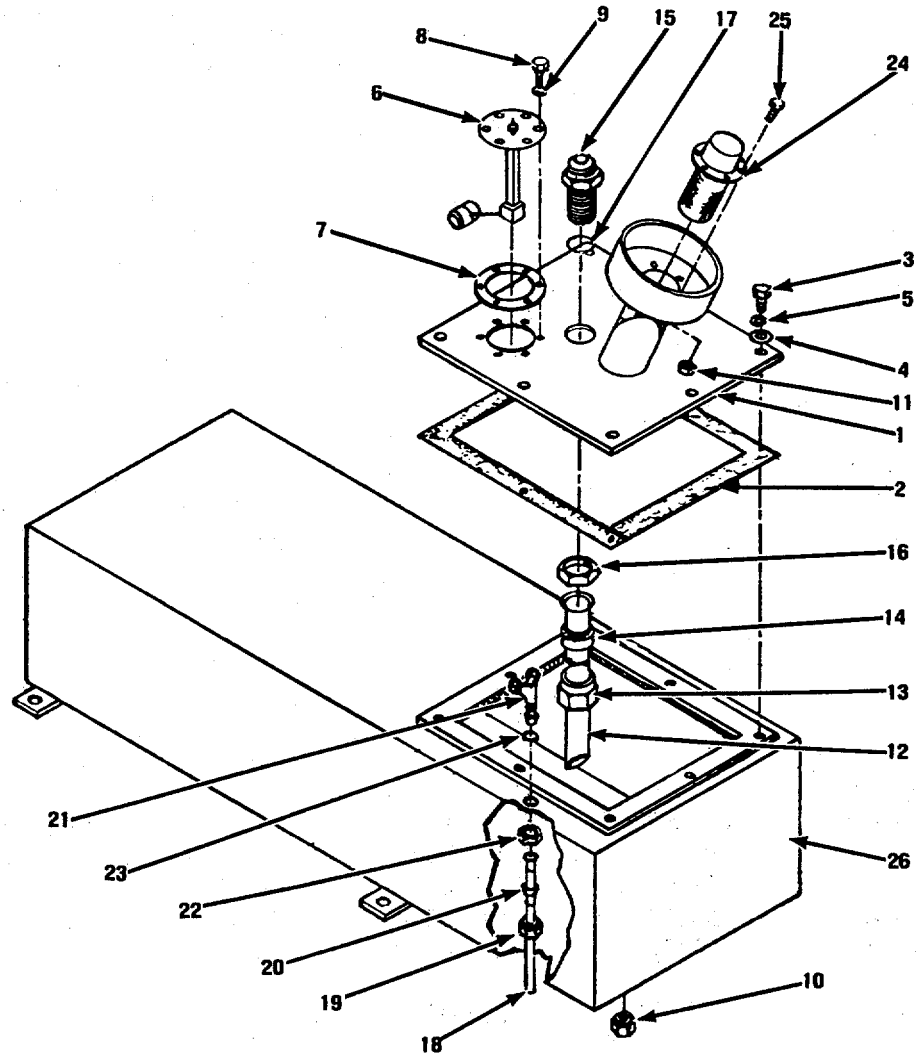

Figure 3-5. Hydraulic Reservoir.

FIG. & INDEX NO.	PART NUMBER	1 2 3 4 5 6 7 DESCRIPTION	UNITS PER ASSY
3-5		HYDRAULIC RESERVOIR	
		TANK ASSY, Oil (30946)	REF
-1	2-02-3-4102	COVER, Filler (30946)	1
-2	202-1-4103	GASKET, Filler Cover (30946)	1
-3	MS90725-3	SCREW, Hex Cap (96906)	8
-4	MS27183-10	WASHER, Flat (96906)	8
-5	MS35338-44	LOCKWASHER (96906)	8
-6	6426396	TRANSMITTER, Level (70040)	1
-7	1516395	GASKET (70040)	1
-8	AN515-10-8	SCREW, Rd Hd (88044)	5
-9	MS35338-43	LOCKWASHER (96908)	5
-10	AN929-8D	CAP ASSY (88044)	1
-11	AN929-4D	CAP ASSY (88044)	1
-12	2-10-3-4104	TUBE, 24 Return (30946)	1
-13	AN818-24D	NUT, Coupling (88044)	1
-14	AN819-24D	SLEEVE, Coupling (88044)	1
-15	AN832-24D	UNION, Bulkhead (88044)	1
-16	AN924-24D	NUT, Bulkhead (88044)	1
-17	MS28778-24	O-RING (96906)	1
-18	2-10-3-4105	TUBE, 6 Return (30946)	1
-19	AN818-6D	NUT, Coupling (88044)	1
-20	AN819-6D	SLEEVE, Coupling (88044)	1
-21	AN804-6D	TEE, Bulkhead (88044)	1
-22	AN924-6D	NUT, Bulkhead (88044)	1
-23	MS28778-6	O-RING (96906)	1
-24	A1OOW	CAP, Filter (12190)	1
-25	AN515-10-8	SCREW, Rd Hd (88044)	6
-26	2-10-3-4101	TANK, Oil (30946)	1

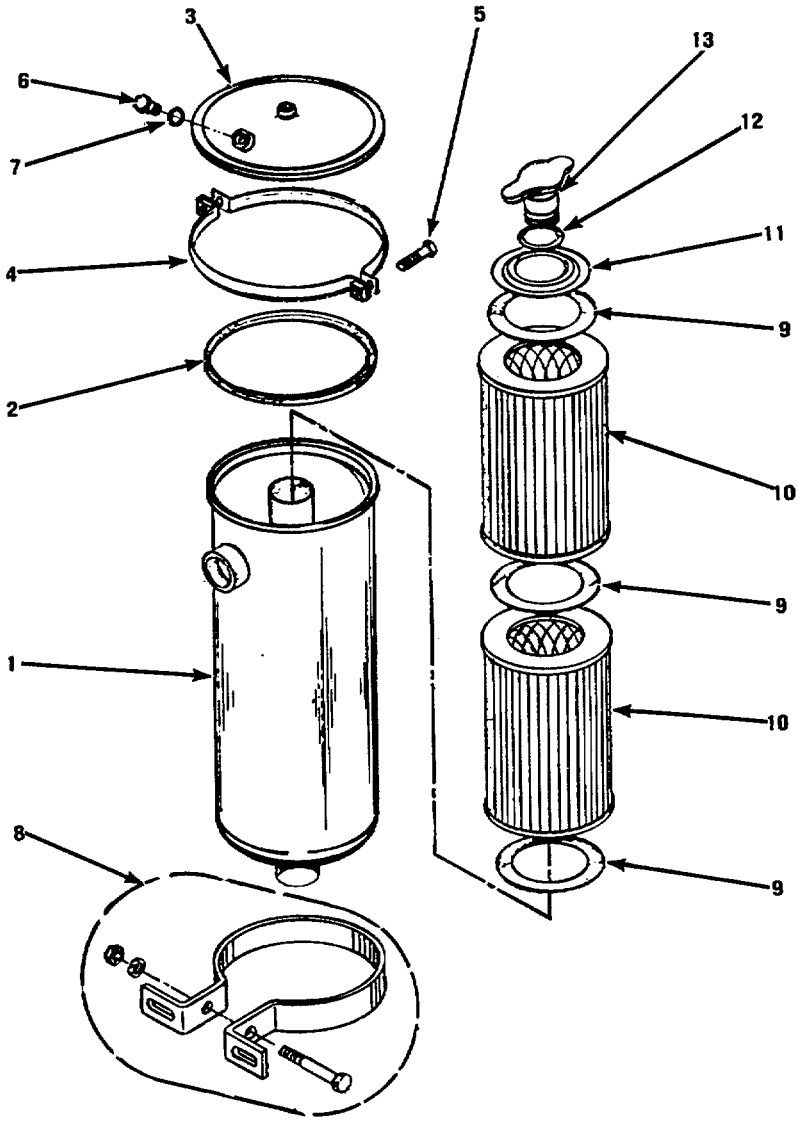

Figure 3-6. Low Pressure Filter Assembly .

FIG. & INDEX NO.	PART NUMBER	1 2 3 4 5 6 7 DESCRIPTION	UNITS PER ASSY
3-6		LOW PRESSURE FILTER ASSEMBLY	
	PR32-53	FILTER ASSY, Low Pressure (05228)	REF
-1	63387	CASE ASSY (05228)	1
-2	6653463	GASKET (05228)	1
-3	60260	COVER ASSY (05228)	1
-4	6654655	RING, Clamping (05228)	2
-5	6653481	BOLTING ASSY (05228)	2
-6	7335	PLUG, Filler (05228)	1
-7	7494	GASKET (05228)	1
-8	22202	BRACKET ASSY (05228)	2
-9	30102	GASKET (05228)	3
-10	AN6236-3A	ELEMENT	2
-11	60263	END GUIDE (05228)	1
-12	6658157	GASKET (05228)	1
-13	6670117	RETAINER, Element (05228)	1

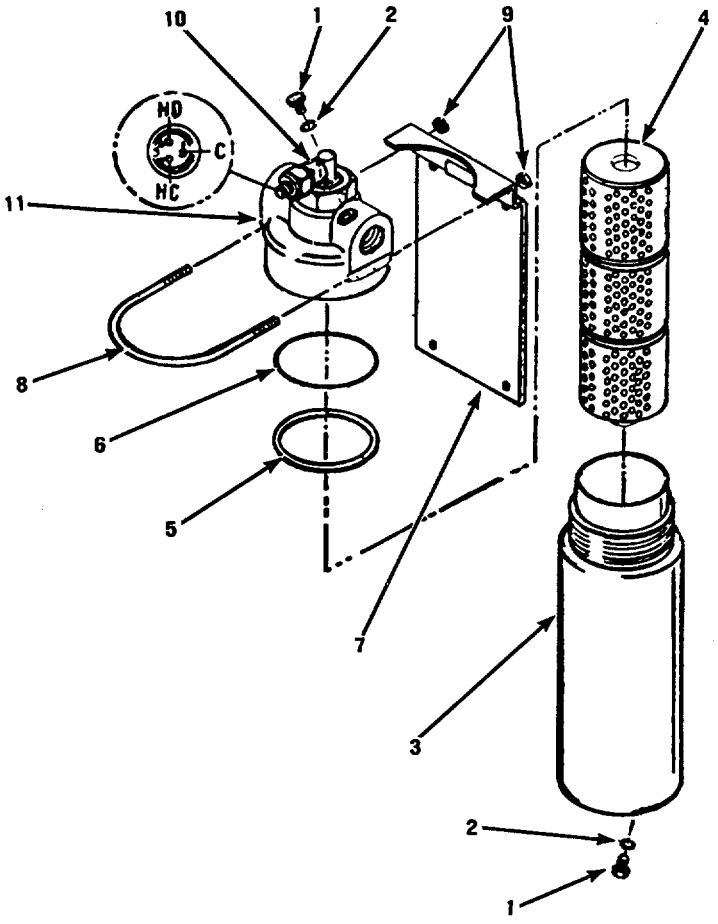

Figure 3-7. High Pressure Filter Assembly

FIG. & INDEX NO.	PART NUMBER	1 2 3 4 5 6 7 DESCRIPTION	UNITS PER ASSY
3-7		HIGH PRESSURE FILTER	
	ADHT5458 E9716MDB	FILTER ASSY, High Pressure (01414)	REF
-1	AN814-4D	PLUG, Bleed (88044)	2
-2	MS28778-4	O RING	2
-3	AC5457TD-2A	BOWL (01414)	1
-4	AC9516F1	ELEMENT (01414)	1
-5	MS28774-243	RING, Backup	1
-6	MS28775-243	0 RING	1
-7	AC5457-1D8	BRACKET (01414)	1
-8	AA5457-ID9	U BOLT (01414)	1
-9	AN335-4	NUT	2
-10	MC606-EH097	SWITCH, Press (01414)	1
-11	AC5458-1D116A	HEAD (01414)	1

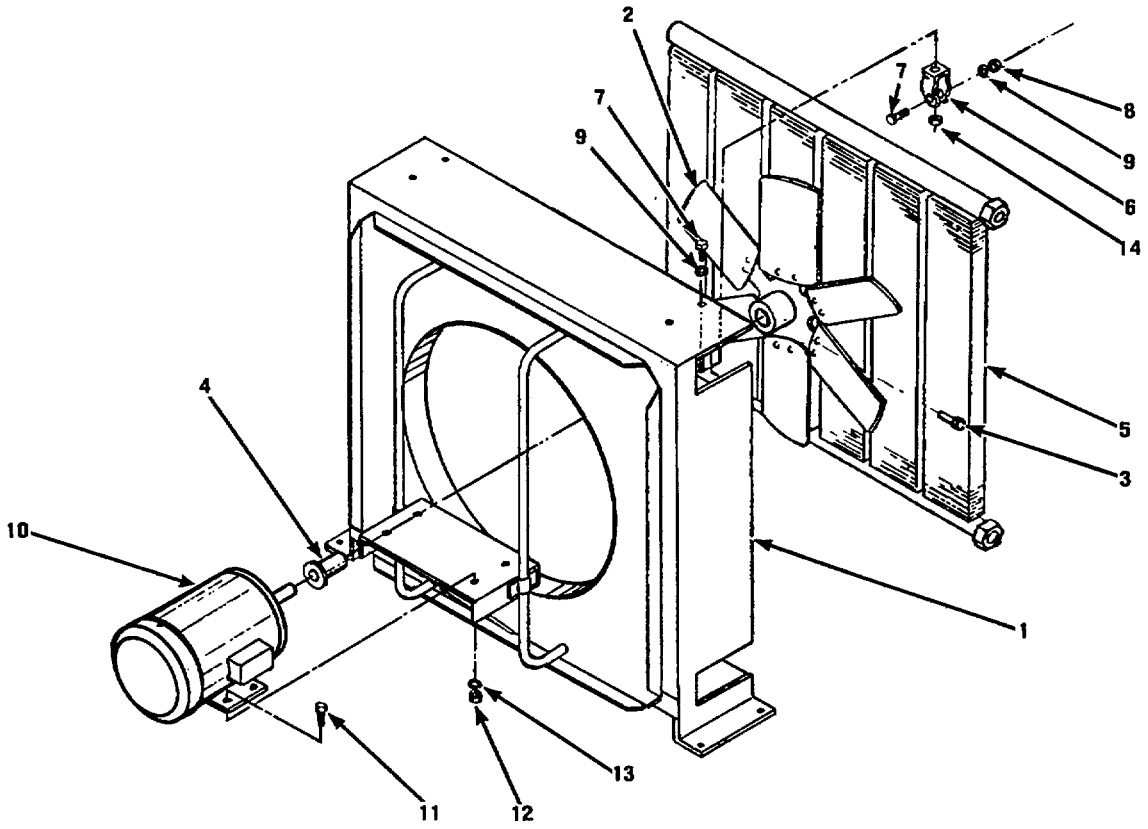

Figure 3-8. Cooler-Fan Assembly.

FIG. & INDEX NO.	PART NUMBER	1 2 3 4 5 6 7 DESCRIPTION	UNITS PER ASSY	USABLE ON CODE	SMR
3-8		COOLER FAN ASSEMBLY			
	2-10-3-3010	COOLER-FAN ASSY (30946) ..... (Ref to fig. 2 for NHA)	REF		AFFFF
-1	2-02-3-3002	HOUSING, Cooler (30946)	1		XBFFF
-2	4C372	FAN (16327)	1		PAFFF
-3	MS51955-18	SCREW, Set (96906)	2		PAFZZ
-4	2-02-3-3003	BUSHING, Adapter (30946).....	1		PAFBZ
-5	11530X1	COOLER (50184)	2		PAFDD
-6	2-02-3-3004	BRACKET (30946).....	4		PAFZZ
-7	MS90725-6	SCREW, Hex Hd (96906)	16		PAFZZ
-8	MS35690-402	NUT, Hex (96906)	16		PAFZZ
-9	MS35338-44	LOCKWASHER (96906)	16		PAFZZ
-10	M3557	MOTOR, Fan (05472)	1		PAFDD
-11	MS90725-34	SCREW, Hex Cap (96906)	4		PAFZZ
-12	MS35690-502	NUT, Hex (96906)	4		PAFZZ
-13	MS35338-45	LOCKWASHER (96906)	4		PAFZZ
-14	MS27183-10 .	WASHER, Flat	4		

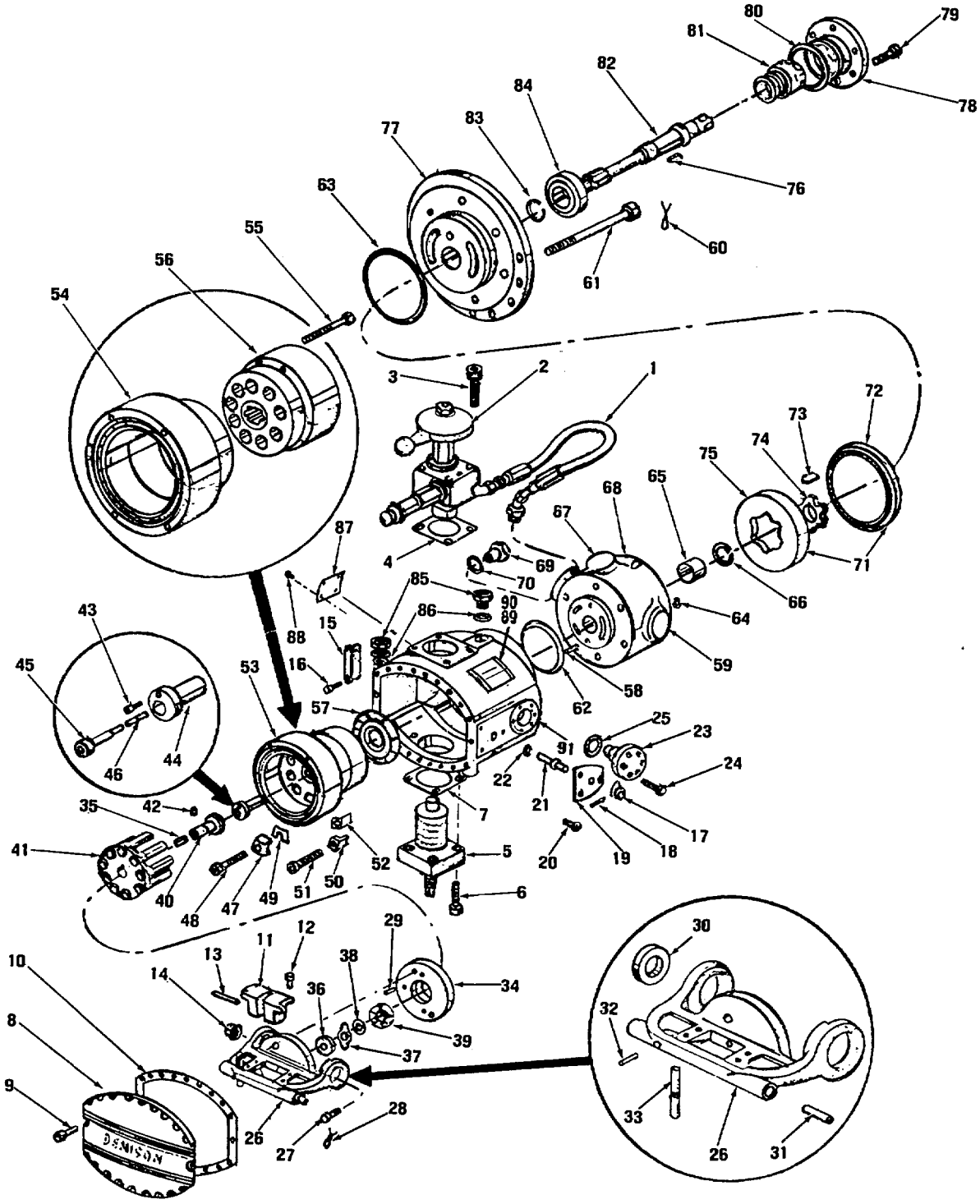

Figure 3-9. High Pressure Pump.

FIG. & INDEX NO.	PART NUMBER	1 2 3 4 5 6 7 DESCRIPTION	UNITS PER ASSY
3-9		HIGH PRESSURE PUMP	
	015-25634	PUMP, High Pressure (16954)	REF
-1	486-15011	HOSE ASSEMBLY (16954)	REF
-2	S15-20935-S6	*PRESSURE COMPENSATOR ASSY, Maximum volume (16954) (Refer to fig 3-10 for breakdown)	1
-3	358-18280	SCREW, Cap, Socket Head (16954) (AP)	4
-4	035-17751-Z	*GASKET (16954)	1
-5	S15-20935-S6	PRESSURE COMPENSATOR ASSY, Minimum volume (16954) (Refer to fig 3-10 for breakdown)	REF
-6	358-12120	SCREW, Cap, Socket Head (16954) (AP)	4
-7	035-17751-Z	GASKET (16954)	1
-8	035-26377-X	CAP, End (16954)	1
-9	358-12100	SCREW, Cap, Socket Head (16954) (AP)	20
-10	035-19029-X	GASKET, End Cap (16954)	1
-11	035-19080-Y	ROLLER, Clevis (16954)	1
-12	358-18280	SCREW, Cap, Socket Head (16954) (AP)	4
-13	324-23232	PIN, Dowel (16954)	2
-14	230-10033	BEARING, Needle (16954)	2
-15	035-19023-Z	LINK, Indicator (16954)	1
-16	359-09160	*SCREW, Cap, Socket Head (16954) (AP)	1
-17	035-19032-Z	INDICATOR, Volume (16954)	1
-18	323-10812	PIN, Drive-loc (16954) (AP)	1
-19	035-19026Z	PLATE, Indicator (16954)	1
-20	310-10060	SCREW, Machine, Round Head (16954) (AP)	3
-21	035-13000-Z	SHAFT, Indicator (16954)	1
-22	676-00010	O-Ring (16954)	1
-23	035-17470-Z	TRUNNION, Hanger (16954)	2
-24	358-14120	SCREW, Cap, Socket Head (16954) (AP)	12
-25	676-00222	O-Ring (16954)	2
-26	035-23500X	HANGER (16954)	1
-27	035-23419-Z	SCREW (16954) (AP)	2
-28	233-00001	LOCKWIRE (16954)	AR
-29	324-21608	PIN, Dowel (16954)	2
-30	230-10028	BEARING, Needle (16954)	2
-31	325-24160	*PIN, Roll (16954)	1
-32	325-12220	*PIN, Roll (16954)	1
-33	035-19045-Z	STOP, Hanger (16954)	1
-34	035-23418-Y	PLUG, Pipe, Hex Socket (16954)	1
-35	431-90100	PLATE, Wear (16954)	1
-36	035-25530-Z	NUT, Lock (16954) (AP)	1
-37	350-01003-Z	WASHER, Lock (16954) (AP)	1
-38	035-25513-Z	WASHER, Lock (16954) (AP)	1
-39	230-20203	BEARING, Radial, Single Row (16954)	1
-40	035-23417-Z	PIN, Retainer (16954)	1
-41	S15-02540-Y	RETAINER ASSY, Piston and Shoe (16954)	1
-42	324-20806	PIN, Dowel (16954)	1
-43	358-04040	SCREW, Cap, Socket Head (16954)	1

FIG. & INDEX NO.	PART NUMBER	1 2 3 4 5 6 7 DESCRIPTION	UNITS PER ASSY
3-9		HIGH PRESSURE PUMP (CONT)	
-44	035-22468-Z	RETAINER, Spring (16954)	1
-45	S15-02534-Z	SCREW AND NUT ASSY (16954)	1
-46	035-22468-Z	SPRING, Compression	1
-47	035-19682-Y	STOP, Barrel (16954)	2
-48	358-16260	SCREW, Cap Socket (16954) (AP)	2
-49	035-19669-Z	SHIM, Barrel (16954)	2
-50	035-17464-Z	SPACER, Hanger (16954)	2
-51	358-16260	SCREW, Cap Socket (16954) (AP)	2
-52	035-25939-Z	SHIM, Hanger Spacer (16954)	2
-53	S15-10775-X	BARREL AND BEARING ASSY (16954)	1
-54	035-17457-Y	BEARING, Barrel (16954)	1
-55	358-12140	SCREW, Cap Socket Head (16954)	10
-56	035-26379-W	BARREL, Cylinder (16954)	1
-57	035-19588-Y	PLATE, Port (16954)	1
-58	324-20806	PIN, Dowel (16954)	1
-59	035-27387-W	BLOCK, Port (16954)	1
-60	233-00001	WIRE, Lock (16954)	AR
-61	358-20380	SCREW, Cap, Socket Head (16954)	6
-62	676-00238	O-RING, (16954)	1
-63	676-00259	O-RING, (16954)	1
-64	676-00113	O-RING, (16954)	6
-65	230-82009	BEARING, Sleeve (16954)	1
-66	356-30175	RING, Snap (16954)	1
-67	035-15003-Z	PLATE, Rotation (16954)	1
-68	320-10203	SCREW, Drive (16954) (AP)	2
-69	AN814-6	PLUG, Drain	1
-70	MS28778-6	O-RING	1
-71	S15-18390	GEROTOR (16954)	1
-72	035-29434-Y	RING, Eccentric (16954)	1
-73	324-21612	PIN, Dowel (16954)	1
-74	035-27389-X	GEROTOR, Inner (16954)	1
-75	035-27388-X	GEROTOR, Outer (16954)	1
-76	211-10009	KEY, Lock (16954)	1
-77	035-27386-W	FLANGE, Mounting (16954)	1
-78	035-26372-Y	RETAINER, Seal (16954)	1
-79	358-12080	SCREW, Cap, Socket Head (16954) (AP)	6
-80	676-00230	O-RING (16954)	1
-81	623-08981	SEAL, Shaft (16954)	1
-82	035-48206-C	SHAFT, Pump (16954)	1
-83	356-31137	RING, Snap (16954)	1
-84	230-00207	BEARING (16954)	1
-85	AN814-8	PLUG, Drain	2
-86	AN6290-8	O-RING (16954)	2
-87	035-19068-Z	PLATE (16954)	1
-88	320-10203	SCREW, Drive (16954) (AP)	4
-89	035-19110-Z	PLATE (16954)	1
-90	320-10203	SCREW, Drive (16954) (AP)	4
-91	035-26381-W	HOUSING, Hanger (16954)	1

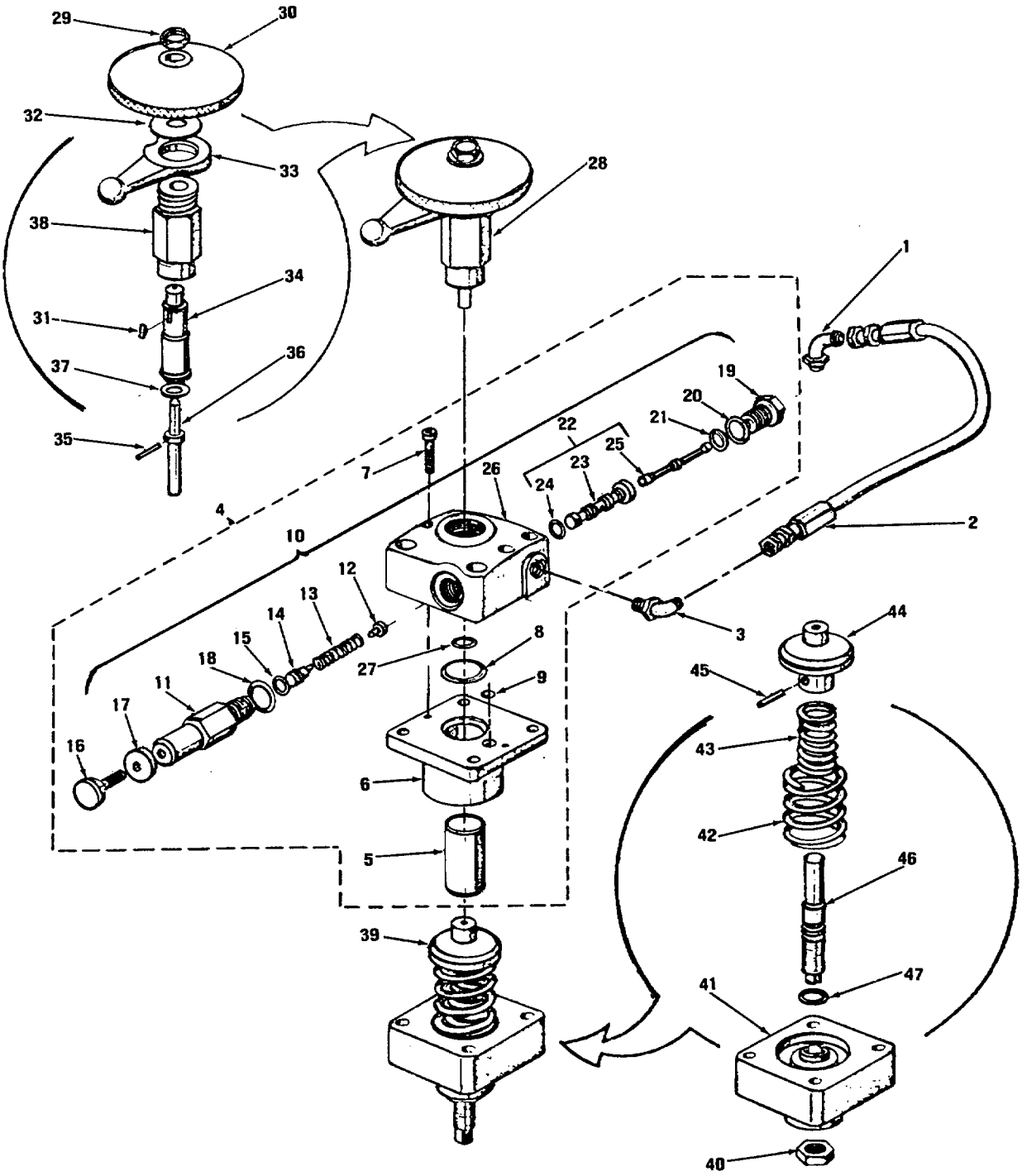

Figure 3-10. Pressure Compensator Control.

FIG. & INDEX NO.	PART NUMBER	1 2 3 4 5 6 7 DESCRIPTION	UNITS PER ASSY
3-10		PRESSURE COMPENSATOR CONTROL	
	S15-20935-S6	CONTROL, PRESSURE COMPENSATOR REF	
-1	495-00609	ELBOW, 450 (16954)	1
-2	486-15011	HOSE (16954)	1
-3	494-00609	ELBOW, 900 (16954)	1
-4	S15-14282-W-S6	CAP AND CYLINDER ASSY (16954)	1
-5	035-19323-Z	PISTON (16954)	1
-6	S15-10776-Y	BUSHING AND CYLINDER ASSY (16954)	1
-7	308-10200	SCREW, Cap, Socket Head (16954) (AP)	2
-8	676-00220	GASKET, O-Ring (16954)	1
-9	767-00110	GASKET, O-Ring (16954)	1
-10	S15-99971-X-S6	CAP ASSY (16954)	1
-11	035-19073-Y	HOUSING, Adjustment (16954)	1
-12	035-19072-Z	RETAINER, Spring (16954)	1
-13	035-19058-Z	SPRING, Compensator (16954)	1
-14	035-19071-Z	PISTON, Seal (16954)	1
-15	AN6227-10	GASKET, O-Ring	1
-16	035-17115-Z	SCREW, Adjustment (16954)	1
-17	035-17116-Z	NUT, Knurled, Lock (16954)	1
-18	AN6290-12	GASKET, O-Ring	1
-19	AN814-8	PLUG AND BLEEDER	1
-20	AN6290-8	GASKET, O-Ring	1
-21	035-19061-Z	WASHER, Tension (16954)	1
-22	S15-13292-Z	SPOOL AND SLEEVE ASSY (16954)	1
-23	035-19060-Z	SLEEVE (16954)	1
-24	AN6227-7	GASKET, O-R i n g	2
-25	035-19059-Z	SPOOL (16954)	1
-26	035-19056-X	CAP, Compensator (16954)	1
-27	AN6227-7	GASKET, O-Ring	1
-28	S15-02500-Y	CONTOL ASSY, Maximum volume (16954)	1
-29	331-20100	NUT (16954)	1
-30	035-14007-Z	HANDWHEEL (16954)	1
-31	211-30003	KEY, Woodruff (16954)	1
-32	035-14076-Z	WASHER (16954)	1
-33	035-14714-Y	LEVER (16954)	1
-34	035-18001-Z	SCREW, Adjusting (16954)	1
-35	035-14008-Z	GUIDE (16954)	1
-36	035-17914-Z	STOP (16954)	1
-37	345-10024	WASHER, Flat (16954)	2
-38	035-14090-Z	HOUSING (16954)	1
-39	S15-01402-Y-S6	CONTROL ASSY, Minimum Volume Stop (16954)	1
-40	335-26101	NUT, Hex, Jam (16954)	1
-41	035-26373-Y	CAP, Control (16954)	1
-42	035-19101-Z	SPRING, Compression (16954)	1
-43	035-19100-Z	SPRING, Compression (16954)	1
-44	035-19094-Z	GUIDE, Spring (16954)	1
-45	325-12160	ROLL P IN (16954) (AP)	1
-46	035-19095-Y	STOP, Minimum Volume (16954)	1
-47	676-00115	GASKET, O-Ring (16954)	1

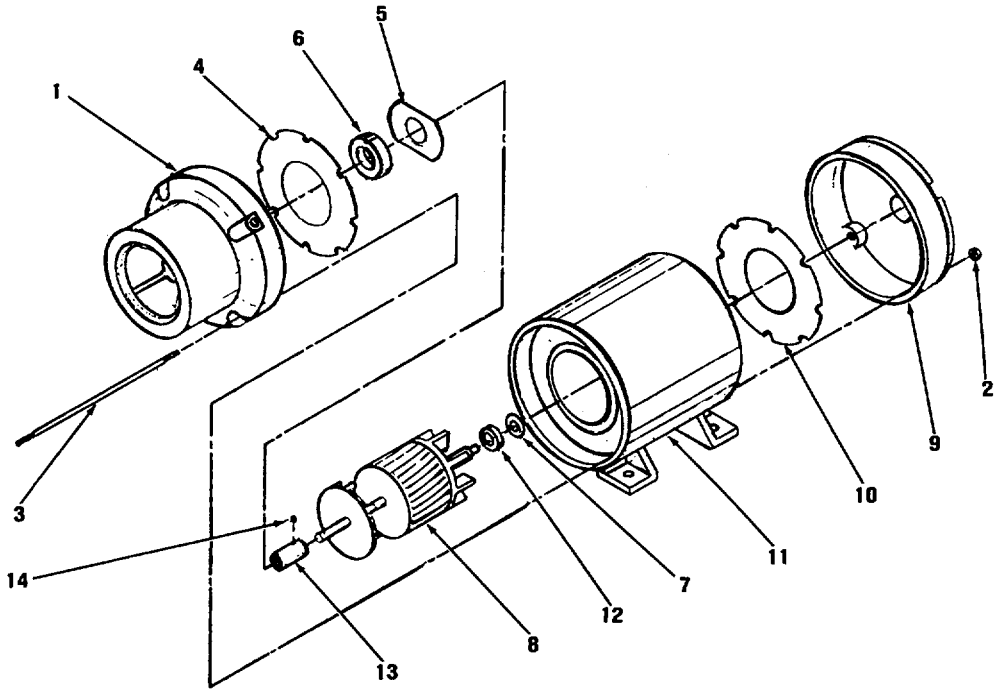

Figure 3-11. Main Pump Motor.

FIG. & INDEX NO.	PART NUMBER	1 2 3 4 5 6 7 DESCRIPTION	UNITS PER ASSY	USABLE ON CODE	SMR
3-11		MAIN PUMP MOTOR			
	ASS28678-1400	MOTOR, Main Pump (38151).....	REF		PBFDD
-1		BELL, Front.....	1		XBFBZ
-2	MS35690-46	NUT, Hex (96906).....	8		PAFZZ
-3		STUD, Through (38151).....	4		PAFZZ
-4		GUIDE, Air	1		XBFBZ
-5		CAP, Bearing	2		XBFBZ
-6	63112Z	BEARING, Ball (21760).....	1		PAFBZ
-7		SPRING (38151)	2		PAFZZ
-8	AAC142H60GG-19	ROTOR ASSY (38151).....	1		PAFDD
-9		BELL, Rear.....	1		XBFBZ
-10		GUIDE, Air	1		XBFBZ
-11	AC24066-54	FRAME-STATOR	1		XA-----
-12	6209 2Z	BEARING, Ball (21760).....	1		PAFBZ
-13	2-10-3-1002	SPLINE, Coupling (30946).....	1		PAFBZ
-14	MS35671-58	PIN, Roll (96906)	1		PAFZZ

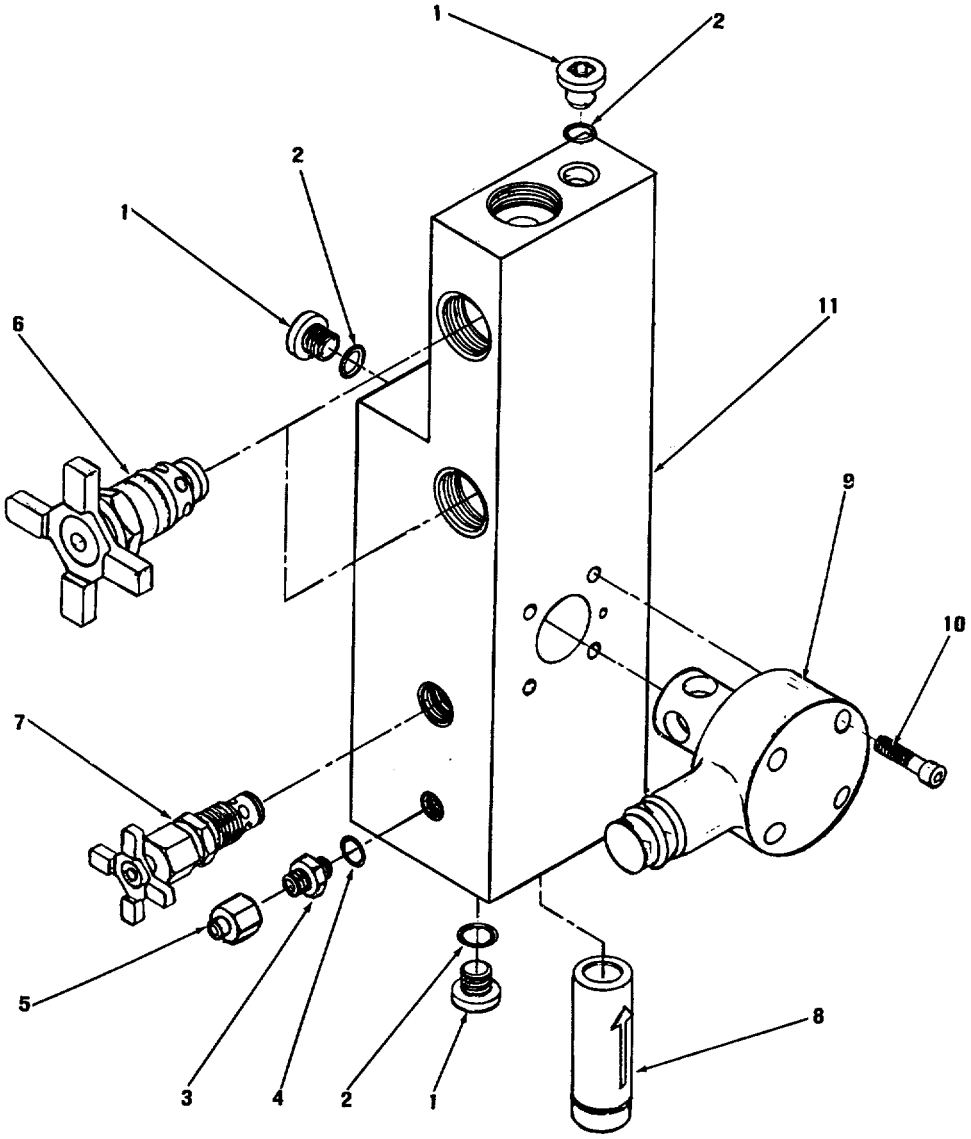

Figure 3-12. High Pressure Manifold Assembly.

FIG. & INDEX NO.	PART NUMBER	1 2 3 4 5 6 7 DESCRIPTION	UNITS PER ASSY
	3-12	HIGH PRESSURE MANIFOLD ASSEMBLY	
	2-10-3-5100	MANIFOLD ASSY, High Pressure (30946)	REF
-1	8HP50N-S	PLUG (30780)	3
-2	MS28778-8	O-RING	3
-3	AN815-4	UNION	1
-4	MS28778-4	O-RING	1
-5	AN929-4	CAP ASSY	1
-6	V1165-515-1	VALVE, Cartridge Flow Control and Bypass (26337)	2
-7	MV1-400S	VALVE, Needle Gage Shut-of (09990)	1
-8	409-16D2-6	VALVE, Check High Pressure (86768)	1
-9	RV12-51Y	VALVE, Relief High Pressure (16954)	1
-10	MS16997-124	SCREW, Socket Cap (AP)	4
-11	2-02-3-5101	MANIFOLD, High Pressure (30946)	1

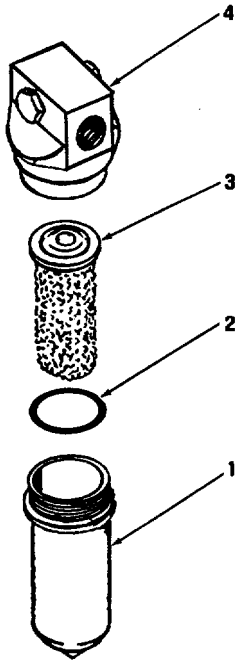

Figure 3-13. Fill System Filter.

FIG. & INDEX NO.	PART NUMBER	1 2 3 4 5 6 7 DESCRIPTION	UNITS PER ASSY
	3-13	FILL SYSTEM FILTER	
	30017	FILTER, Fill System (05228)	REF
-1	30589	BOWL (05228)	1
-2	MS28775-224	0 RING	1
-3	AN6235-2A	ELEMENT ASSY	1
-4	30125	HEAD (05228)	1

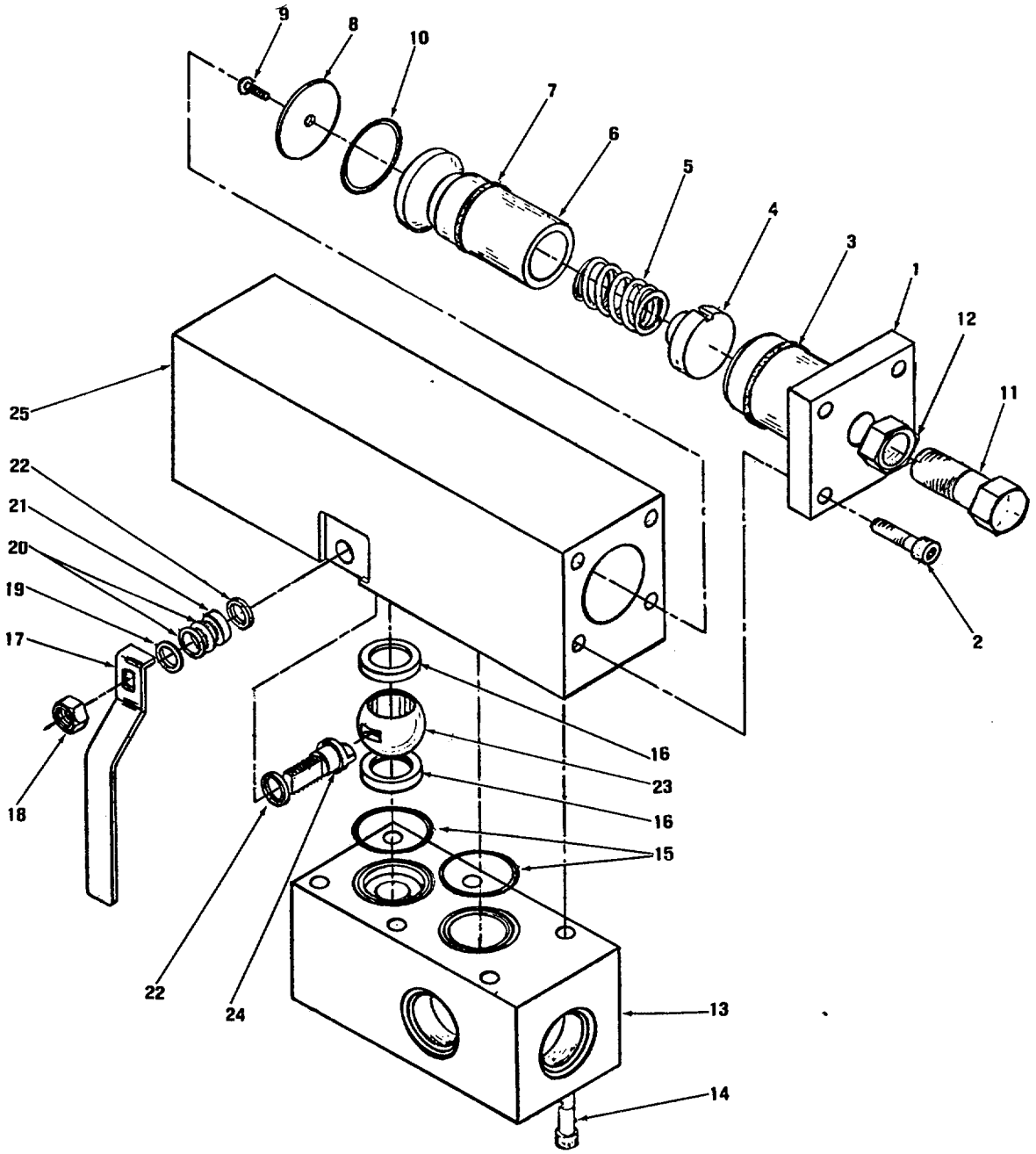

Figure 3-14. Return Manifold Assembly.

FIG. & INDEX NO.	PART NUMBER	1 2 3 4 5 6 7 DESCRIPTION	UNITS PER ASSY
3-14		RETURN MANIFOLD ASSEMBLY	
	2-02-3-7200	MANIFOLD ASSY, Return (30946)	REF
-1	2-02-3-7203	CAP (30946)	1
-2	MS16997-81	SCREW, Socket Hd	4
-3	MS29513-226	O-RING	1
-4	2-02-3-7208	RETAINER (30946)	1
-5	2-02-3-7206	SPRING (30946)	1
-6	2-02-3-7204	POPPET (30946)	1
-7	MS29513-218	O-RING	1
-8	2-02-3-7205	KEEPER (30946)	1
-9	MS35214-55	SCREW	1
-10	MS 29 513-220	O- RING	1
-11	2-02-3-7207	SCREW, Adjusting (30946)	1
-12	M835690-1202	NUT, Hex	1
-13	2-02-3-7202	LOWER BLOCK (30946)	1
-14	MS16997-90	SCREW, Socket Hd	6
-15	MS29513-226	O-RING	REF
-16	002-0527-50	SEAT (01029)	2
-17	012-0515-22	HANDLE (01029)	1
-18	043-0182-22-24	NUT (01029)	1
-19	MS27183-18	WASHER, Flat	1
-20	041-0154-22-24	WASHER, Spring (01029)	1
-21	006-0457-00	RING, Compression (01029)	1
-22	004-0208-50	SEAL, Stem (01029)	2
-23	001-0548-00	BALL (01029)	1
-24	003-0592-00	STEM (01029)	1
-25	2-02-3-7201	UPPER BLOCK (30946)	1

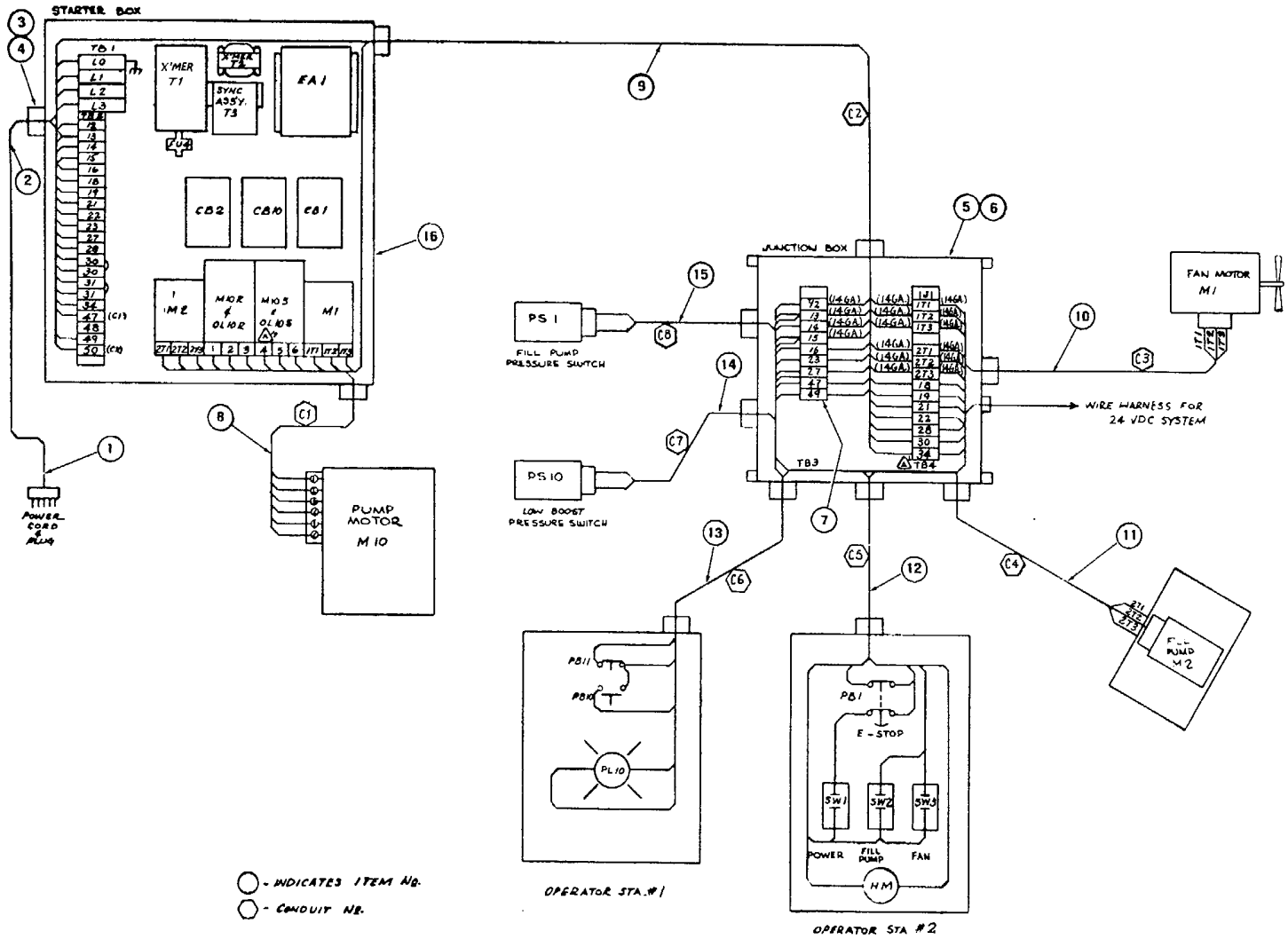

Figure 3-15. Electrical Components Assembly.

FIG. & INDEX NO.	PART NUMBER	1 2 3 4 5 6 7 DESCRIPTION	UNITS PER ASSY
3-15		ELECTRICAL COMPONENTS ASSEMBLY	
	2-02-3-8000	COMPONENT ASSY, Electrical (30946)	1
-1	462-6744940	POWER CORD (94138)	1
-2	074-01-035	STRAIN RELIEF	1
-3	5267	RING, Seal	1
-4	146	LOCKNUT	1
-5	2-10-3-8214	JUNCTION BOX (30946)	1
-6	A10P8	COVER PANEL	1
-7	072516	TERMINAL BLOCK (89020)	2
		SCREW, Machine	4
	MS35338-43	LOCKWASHER (96906)	4
-8	2-02-3-8201	CONDUIT ASSY, C1 (30946)	1
	2-02-3-8201A	CONDUIT (30946)	1
	5265	RING, Seal (59730)	1
	5355	CONNECTOR (59730)	2
	3717	WASHER, Reducer (59730)	2
	2-02-3-8201B	WIRE, No. 4AW B (96906)	6
	R5001B	RING TERMINAL (14726)	12
	MS90725-3	SCREW, Hex Hd (96906)	6
	MS27183-10	WASHER, Flat (96906)	12
	MS35690-402	NUT, Hex (96906)	6
	373	HUB, Connector (59730)	1
-9	2-02-3-8202	CONDUIT ASSY, C2 (30946)	1
	2-02-3-8202A	CONDUIT, 3/4" (30946)	1
	5343	CONNECTOR (59730)	2
	5263	RING, Sealing (59730)	2
	2-02-3-8202B	WIRE, 16 AWG (96906)	12
	2-02-7-8202C	WIRE, 14 AWG (96906)	6
-10	2-02-3-8203	CONDUIT ASSY, C3 (30946)	1
	2-02-3-8203A	CONDUIT, 1/22" (30946)	1
	5362	CONNECTOR (59730)	1
	2-02-3-8203B	WIRE, 14 AWG896906)	3
	R1903S	RING TERMINAL (14726)	3
	MS35225-63	SCREW, Pan Hd (96906)	3
	MS27183-8	WASHER, Flat (96906)	6
	M835649-102	NUT, Hex (96906)	3
-11	2-02-3-8204	CONDUIT ASSY, C4 (30946)	1
	2-02-3-8204A	CONDUIT, 1/2" (30946)	1
	5362	CONNECTOR	1
	2-02-3-8204B	WIRE, 14 AWG (96906)	3
	R1903S	RING TERMINAL	6
	MS35225-63	SCREW, Hex Hd	3
	MS27183-8	WASHER, Flat	6
	MS35649-102	NUT, Hex	3
-12	2-02-3-8205	CONDUIT ASSY, C5 (30946)	1
	2-02-3-8205A	CONDUIT, 1/2" (30946)	1
	5362	CONNECTOR (96906)	1
	5352	CONNECTOR (59730)	1
	2-02-3-8205B	WIRE, 16 AWG (96906)	7

FIG. & INDEX NO.	PART NUMBER	1 2 3 4 5 6 7 DESCRIPTION	UNITS PER ASSY
		3-15 ELECTRICAL COMPONENTS ASSEMBLY (CONT)	
	2-02-3-8205C	WIRE, 14 AWG (96906)	2
	R1902S	RING TERMINAL (14726)	8
	S2174S	SPADE TERMINAL (14726)	3
-13	2-02-3-82060	CONDUIT ASSY (30946)	1
	2-02-3-8206A	CONDUIT, 1/2" (30946)	1
	5362	CONNECTOR (96906)	2
	2-02-3-8206B	WIRE, 16 AWG (96906)	5
	R1902S	RING, Terminal (96906)	2
	S2174S	SPADE TERMINAL	5
-14	2-02-3-8207	CABLE ASSY, C7 (30946)	1
	2-02-3-8207A	WIRE, 2/C-18 AWG (96906)	1
	2632	CONNECTOR (59730)	1
	MS3106-10SL-3SC	CONNECTOR (96906)	1
-15	2-02-3-8208	CABLE ASSY, C8 (30946)	1
	2-02-3-8208A	WIRE, 2/C-18 AWG (96906)	1
	2632	CONNECTOR (96906)	1
	MS3106-10SL-3SC	CONNECTOR (96906)	1
	HC32-2	CLAMP, Conduit (23619)	6
	HC10-4	CLAMP, Conduit (23619)	2
	G32-24	CLAMP, Bushing (23619)	7
	G32-32	CLAMP, Bushing (23619)	4
	G32-12	CLAMP, Bushing (23619)	1
	G32-16	CLAMP, Bushing (23619)	1
	G10-12	CLAMP, Bushing (23619)	6
	G10-6	CLAMP, Bushing (23619)	2
	MS90725-74	SCREW, Hex Hd (96906)	6
	MS36690-602	NUT, Hex (96906)	6
	MS35338-46	LOCKWASHER (96906)	6
	MS90725-41	SCREW, Hex Hd (96906)	4
	MS35690-502	NUT, Hex (96906)	4
	MS35338-45	LOCKWASHER (96906)	4
-16	2-02-3-8100	MOTOR CONTROL CENTER (30946)	1
		(Refer to fig. 3-16 for breakdown)	
	MS90725-60	SCREW, Hex Hd. (96906) (AP)	4
	MS35690-602	NUT, Hex (96906) (AP)	4
-17	2-02-3-8301	WIRE HARNESS (30946)	1
	2-02-3-8301A	WIRE, 16 AWG (96906)	1
	H4848	CONNECTOR (14726)	5
	A3WC	CONNECTOR, 3 WAY (14726)	1
	A2WC	CONNECTOR, 2 WAY (14726)	1
	S09174F	TERMINAL SO (14726)	4
	R1903S	TERMINAL RING	1
	MS1306E10SL3SC	CONNECTOR (96906)	1
	DV14-111	TERMINAL SO (14726)	3
	R5113	TERMINAL RING (14726)	8
	R1902S	TERMINAL RING	8

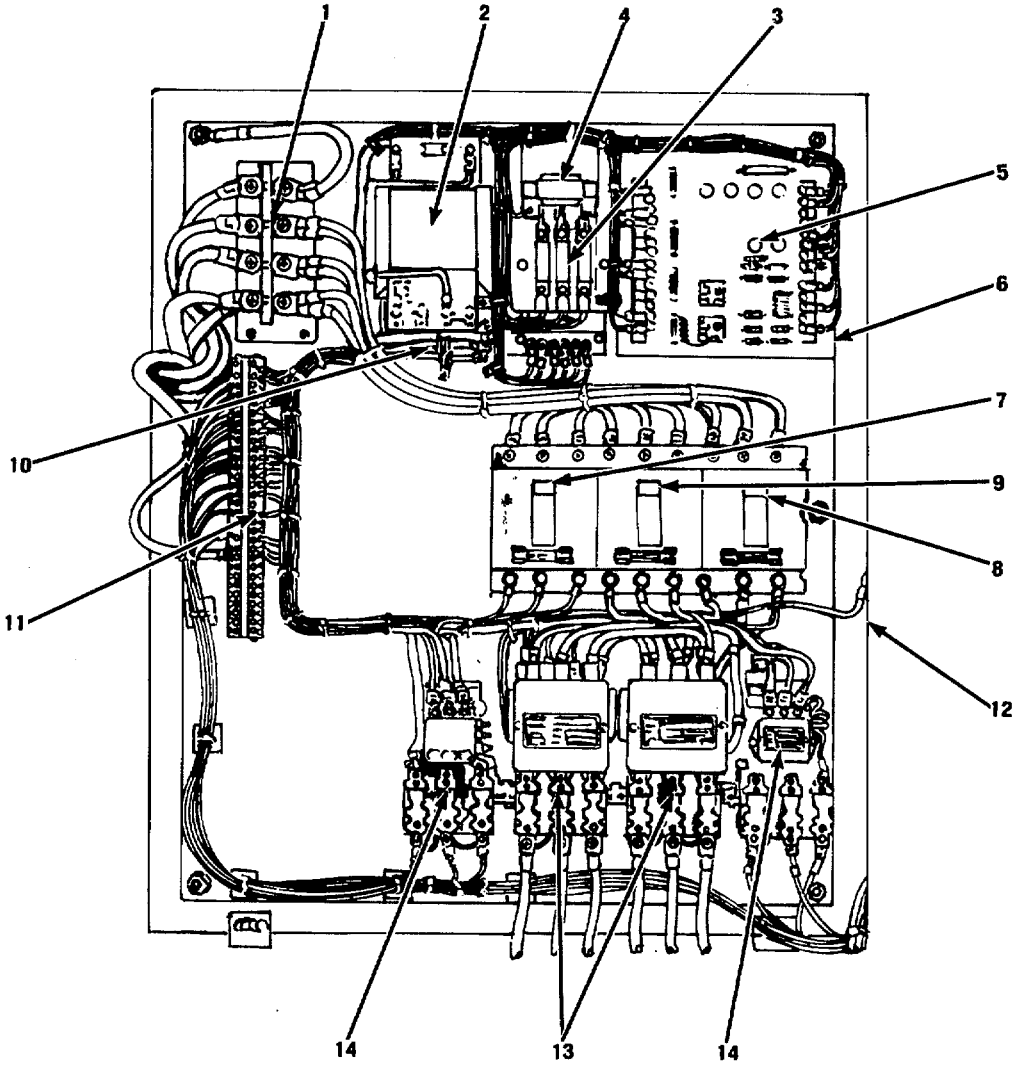

Figure 3-16. Motor Control Center.

FIG. & INDEX NO.	PART NUMBER	1 2 3 4 5 6 7 DESCRIPTION	UNITS PER ASSY
		3-16 MOTOR CONTROL CENTER	
	2-02-3-8100	CONTROL CENTER, Motor (30946)	1
-1		TB MAIN LINE	1
		SCREW, Round Hd (AP)	2
	MS35338-45	LOCKWASHER (96906) (AP)	2
-2	9T56Y2811	TRANSFORMER (93201)	1
	AN515-6-8	SCREW, Round Hd (88044) (AP)	4
	MS27183-4	WASHER, Flat (96906) (AP)	4
-3	743	SYNC ASSY (30430)	1
	AN515-6-8	SCREW, Round Hd (88044) (AP)	2
	MS27183-4	WASHER, Flat (96906) (AP)	2
	G0122	TRANSFORMER (30430)	1
	3743	FUSE BLOCK (71400)	3
	3742	END SHIELD (71400)	1
	KTK-1	FUSE (71400)	3
	671Y6	TERMINAL BLOCK (75382)	1
	71D1207M8	PLATFORM, Mounting (30430)	1
	71D1207M12	PLATFORM, Insulating (30430)	1
	71D1207M7	MOUNTING FEET (30430)	2
-4	G1074	TRANSFORMER (30430)	1
	AN515-6-8	SCREW, Round Hd (88044) (AP)	4
	MS27183-4	WASHER, Flat (96906) (AP)	4
-5	PWS1AA100	PC BOARD (30430)	1
	AN515-6-12	SCREW, Round Hd (88044) (AP)	23
	2-10-3-8101	SLEEVE, Mounting (30946) (AP)	23
	76R2-24VDC	RELAY (78277)	2
	76R2-120V	RELAY (78277)	1
	AGC5	FUSE (75915)	2
	3AG	FUSE (75915)	1
-6	671-14	TERMINAL BLOCK (75382)	2
	AN515-6-10	SCREW, Round Hd (88044) (AP)	4
	MS27183-4	WASHER, Flat (96906) (AP)	4
-7	EHB3010	CIRCUIT BREAKER (88416)	1
	AN515-6-8	SCREW, Round Hd (88044) (AP)	4
	MS27183-4	WASHER, Flat (96906) (AP)	4
-8	EHB3025	CIRCUIT BREAKER (88416)	1
	AN515-6-8	SCREW, Round Hd (88044) (AP)	4
	MS27183-4	WASHER, Flat (96906) (AP)	4
-9	EHB3100	CIRCUIT BREAKER (88416)	1
	AN515-6-8	SCREW, Round Hd (88044) (AP)	3
	MS27183-4	WASHER, Flat (96906) (AP)	3
-10	3743	FUSE BLOCK	1
	3742	END SHIELD	1
	AN515-6-8	SCREW, Round Hd (88044) (AP)	2
	MS27183-4	WASHER, Flat (96906) (AP)	2
	KTK5	FUSE (71400)	1
-11	725	SECTIONAL TB (89020)	30
	730	TB END SECTION (89020)	1
-12	SS12ET10-20Y3	SWITCH, Interloc (27193)	1
	MS35239-37	SCREW, Flat Hd (96906) (AP)	2

FIG. & INDEX NO.	PART NUMBER	1 2 3 4 5 6 7 DESCRIPTION	UNITS PER ASSY
3-16		MOTOR CONTROL CENTER (CONT)	
	42555-300	RESET BUTTON (04009)	4
-13	ACV7303U20S1	MOTOR CONTACTOR (04009)	2
	AN515-6-8	SCREW, Round Hd (88044) (AP)	12
	MS27183-4	WASHER, Flat (96906) (AP)	12
	34600-301	CONTACT SET (04009)	3
	34530-501	COIL (04009)	1
	34300-332	AUX CONTACT NO (04009)	1
	42230	OVERLOAD HEATER (04009)	3
-14	ACV2303U20S1	MOTOR CONTACTOR (04009)	2
	AN515-6-8	SCREW, Round Hd (88044) (AP)	6
	MS27183-4	WASHER, Flat (96906) (AP)	6
	34220-301	CONTACT SET (04009)	3
	34220-501	COIL (04009)	1
	34220-332	AUX CONTACT NO. (04009)	1
	42003	OVERLOAD HEATER (04009)	3
-15	A36C30BLP	ENCLOSURE, Nema 12	1
-16	A36P30	PANEL MOUNTING	1

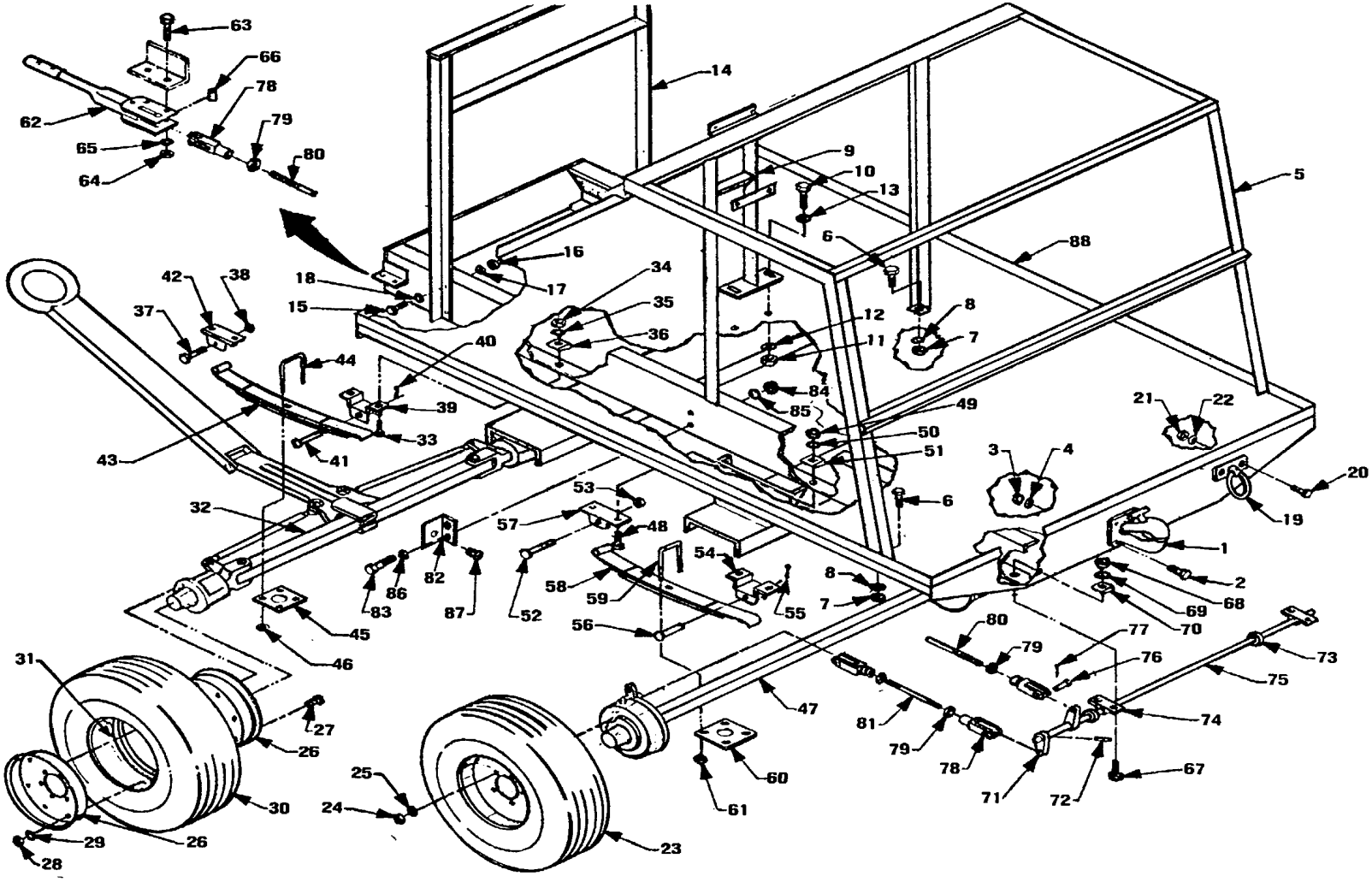

Figure 3-17. Main Frame Assembly.

FIG. & INDEX NO.	PART NUMBER	1 2 3 4 5 6 7 DESCRIPTION	UNITS PER ASSY
3-17		MAIN FRAME ASSEMBLY	
	2-10-3-2000	MAIN FRAME ASSY (30946)	REF
-1	MS51335-2	PINTLE HOOK	1
-2	MS90725-114	SCREW, Hex Hd. (AP)	4
-3	MS35690-802	NUT, Hex (AP)	4
-4	MS35338-48	LOCKWASHER (AP)	4
-5	2-10-3-2102	UPPER FRAME (30946)	1
-6	MS90725-60	SCREW, Hex Hd (AP)	4
-7	MS35690-602	NUT, Hex (AP)	4
-8	MS35338-46	LOCKWASHER (AP)	4
-9	2-02-3-2103	FILTER SUPPORT (30946)	1
-10	MS90725-109	SCREW, Hex Hd (AP)	2
-11	MS35690-802	NUT, Hex (AP)	2
-12	MS35338-48	LOCKWASHER (AP)	2
-13	MS27183-18	WASHER, Flat (AP)	2
-14	2-02-3-2104	ELECTRIC PANEL SUPPORT (30946)	1
-15	MS90725-109	SCREW, Hex Hd (AP)	4
-16	MS35690-802	NUT, Hex (AP)	4
-17	MS35338-48	LOCKWASHER (AP)	4
-18	MS27183-18	WASHER, Flat (AP)	4
-19	48B7796	TIE DOWN RING (98750)	4
-20	MS90725-62	SCREW, Hex Hd (AP)	8
-21	MS35690-602	NUT, Hex (AP)	8
-22	MS35338-46	LOCKWASHER (AP)	8
-23	2-10-3-2000-1	WHEEL ASSY (30946)	4
-24	MS35690-822	NUT, Hex (AP)	20
-25	MS35338-48	LOCKWASHER (AP)	20
-26	MS24325-1	WHEEL DISC	2
-27	MS35392-58	SCREW, Hex, Hd	5
-28	MS35690-622	NUT, Hex	5
-29	MS35338-46	LOCKWASHER	5
-30	MS35389-6	TIRE	1
-31	MS35392-52	TUBE	1
-32	239-1396	AXLE ASSY, Front (22938)	1
		(Refer to fig. 3-18 for breakdown)	
-33	MS90725-114	SCREW, Hex Hd (AP)	8
-34	MS35690-802	NUT, Hex (AP).	8
-35	MS35338-48	LOCKWASHER (AP)	8
-36	NAS1099-8	WASHER, Bevel (AP)	8
-37	MS90725-147	SCREW, Hex Hd	2
-38	MS51922-41	NUT, Hex SL	2
-39	4250	BRACKET, Spring (22938)	2
-40	MS24665-353	PIN, Cotter	2
-41	5403-1	PIN, Clevis (22938)	2
-42	4251	BRACKET, Spring (22938)	2
-43	1-4001	SPRING, Leaf (22938)	2
-44	5100-5	U- BOLT (22938)	4
-45	5600-9	PLATE, Spring (22938)	2
-46	MS51922-37	NUT, Hex SL.	8

FIG. & INDEX NO.	PART NUMBER	1 2 3 4 5 6 7 DESCRIPTION	UNITS PER ASSY
3-17		MAIN FRAME ASSEMBLY (CONT)	
-47	239-1346	AXLE ASSY, Rear (22938)	1
		(Refer to fig. 3-19 for breakdown)	
-48	MS90725-114	SCREW, Hex Hd (AP)	8
-49	MS35690-802	NUT, Hex (AP)	8
-50	MS35338-48	LOCKWASHER (AP)	8
-51	NA81099-8	WASHER, Bevel (AP)	8
-52	MS90725-147	SCREW, Hex Hd	2
-53	MS51922-41	NUT, Hex SL	2
-54	4250	BRACKET, Spring (22938)	2
-55	MS24665-353	PIN, Cotter	2
-56	5403-1	PIN, Clevis	2
-57	4251	BRACKET, Spring (22938)	2
-58	1-4001	SPRING, Leaf (22938)	2
-59	5100-5	U-BOLT (22938)	4
-60	5600-9	PLATE, Spring (22938)	2
-61	MS51922-37	NUT, Hex SL	8
-62	5904	HANDBRAKE LEVER (22938)	1
-63	MS90725-65	SCREW, Hex Rd (AP)	2
-64	MS35690-602	NUT, Hex (AP)	2
-65	MS35338-46	LOCKWASHER (AP)	2
-66	5204	SPACER (22938)	2
	2-10-3-2200-1	CROSS SHAFT ASSY (30946)	1
-67	MS90725-60	SCREW, Hex Hd (AP)	4
-68	MS35690-602	NUT, Hex (AP)	4
-69	MS35338-46	LOCKWASHER (AP)	4
-70	NAS1099-6	WASHER, Bevel (AP)	4
-71	5909	LEVER (22938)	3
-72	5000-2	PIN, Roll (22938)	3
-73	6319-2	COLLAR (22938)	2
-74	5908	BEARING (22938)	2
-75	5910-239	CROSS SHAFT (22938)	1
-76	5206	PIN, Clevis (22938)	5
-77	MS24665-283	PIN, Cotter	5
-78	5205	CLEVIS (22938)	6
-79	MS35338-622	NUT, Hex	6
-80	8300-040	BRAKE ROD (22938)	2
-81	8300-830	BRAKE ROD (22938)	1
-82	2-02-3-2201	ROD SUPPORT (30946)	1
-83	MS90725-60	SCREW, Hex Hd (AP)	2
-84	MS35690-602	NUT, Hex (AP)	2
-85	MS35338-46	LOCKWASHER (AP)	2
-86	MS27183-14	WASHER, Flat (AP)	2
-87	SB562-7	BUSHING (28520)	1
-88	2-10-3-2101	MAIN FRAME (30946)	1

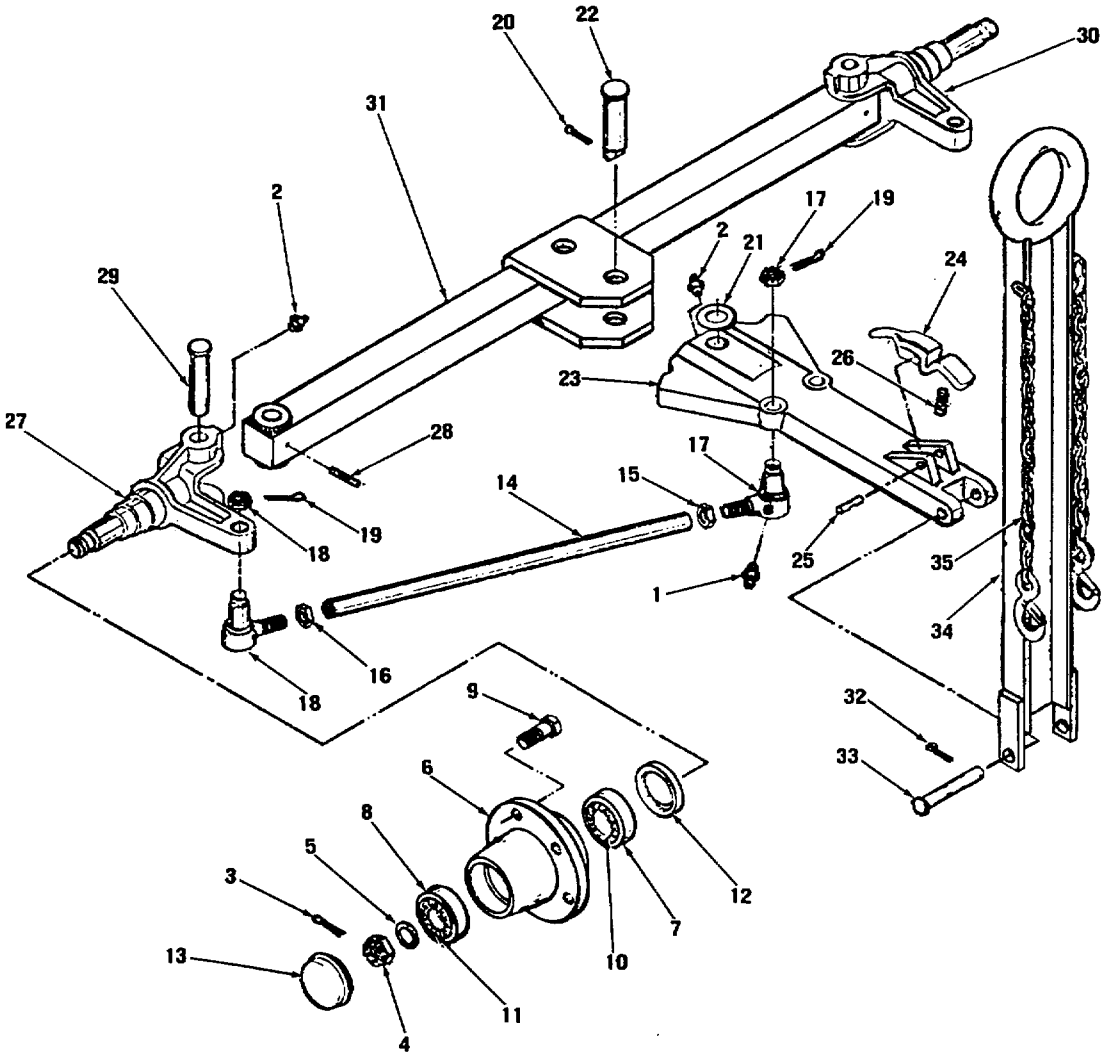

Figure 3-18. Front Axle Assembly.

FIG. & INDEX NO.	PART NUMBER	1 2 3 4 5 6 7 DESCRIPTION	UNITS PER ASSY
3-18		FRONT AXLE ASSEMBLY	
	239-1396	AXLE ASSY Front (22938)	REF
-1	5801	FITTING, Lube (22938)	4
-2	5800	FITTING, Lube (22938)	6
-3	MS24665-360	PIN, Cotter	2
-4	4600-2	NUT, Spindle (22938)	2
-5	4702-2	WASHER (22938)	2
	MS24328-2	HUB ASSY	1
-6	3613	HUB (22938)	1
-7	6152	BEARING CUP, Inner (22938)	1
-8	6151	BEARING CUP, Outer (22938)	1
-9	6251-10	STUD (22938)	5
-10	6057	CONE, Inner (22938)	1
-11	6058	CONE, Outer (22938)	1
-12	6311	GREASE SEAL (22938)	1
-13	6312	GREASE CAP (22938)	1
	3906-204	TIE ROD ASSY (22938)	2
-14	3900-167	TUBE (22938)	1
-15	4602-1	JAM NUT, Righthand (22938)	1
-16	4602-2	JAM NUT, Lefthand (22938)	1
-17	3950-1	BALL JOINT (22938)	1
-18	3950-2	BALL JOINT (22938)	1
-19	MS24665-285	PIN, Cotter	2
	1-3854	ARM ASSY, Center (22938)	1
-20	MS24665-360	PIN, Cotter	1
-21	4701-3	WASHER, Flat (22938)	1
-22	5400-1	PIN, Center (22938)	1
-23	3854	CENTER ARM (22938)	1
-24	3855	LATCH, Pedal (22938)	1
-25	MS35671-66	PIN, Roll	1
-26	4006	SPRING (22938)	1
-27	3-3806	KNUCKLE ASSY (22938)	1
-28	5000-1	PIN, Roll (22938)	2
-29	5401	PIN, King (22938)	2
	6016	SPINDLE (22938)	1
	3800-1	KNUCKLE (22938)	1
-30	4-3806	KNUCKLE ASSY (22938)	1
	6016	SPINDLE (22938)	1
	3800-2	KNUCKLE	1
-31	239-139X1	BEAM ASSY (22938)	1
		DRAW BAR ASSY (22938)	1
-32	MS24665-267	PIN, Cotter	1
-33	5416	PIN, Hinge (22938)	1
-34	4-3502-1	DRAW BAR (22938)	1
-35	1-5275	CHAIN ASSY, Safety (22938)	2
	5275-1	HOOK, Safety (22938)	1
	5275-2	END LINK (22938)	1
	5275-3	CHAIN (22938)	1

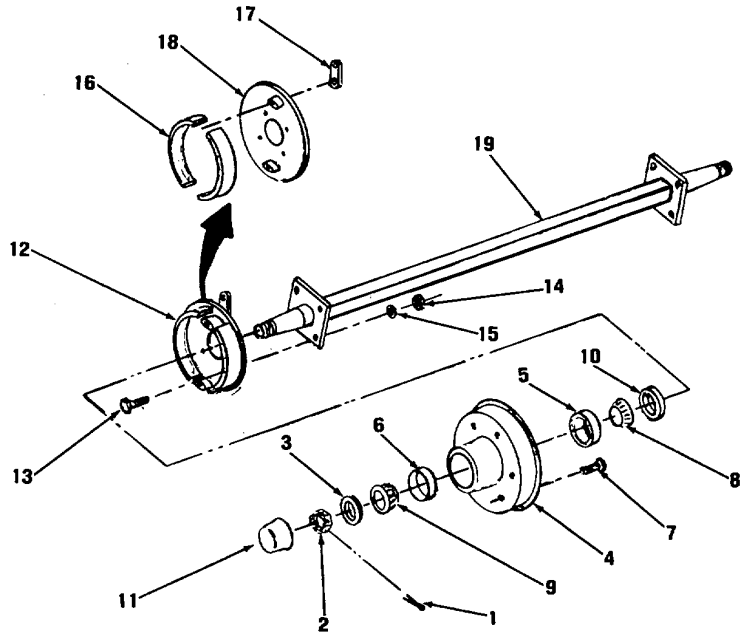

Figure 3-19. Rear Axle Assembly.

FIG. & INDEX NO.	PART NUMBER	1 2 3 4 5 6 7 DESCRIPTION	UNITS PER ASSY
3-19		REAR AXLE ASSEMBLY	
	239-1346	AXLE ASSY, Rear (22938)	REF
-1	MS24665-360	PIN, Cotter	2
-2	4600-2	NUT, Spindle (22938)	2
-3	4702-2	WASHER (22938)	2
-4	2-3613	HUB AND DRUM ASSY (22938)	1
	3613-2	HUB SUB ASSY (22938)	1
	3613-1	CUP SUB ASSY (22938)	1
	3613	HUB (22938)	1
-5	6152	BEARING CUP, Inner (22938)	1
-6	6151	BEARING CUP, Outer (22938)	1
-7	6251-9	STUD (22938)	10
	8221	DRUM (22938)	1
-8	6057	CONE, Inner (22938)	1
-9	6058	CONE, Outer (22938)	1
-10	6311	GREASE SEAL (22938)	1
-11	6312	GREASE CAP (22938)	1
-12	1-8209	BRAKE ASSY (22938)	2
-13	MS90726-60	SCREW, Hex Hd. (AP)	8
-14	MS51968-8	NUT, Hex (AP)	8
-15	MS35338-46	LOCKWASHER (AP)	8
-16	8209	BRAKE (22938)	2
-17	8225	LEVER ASSY (22938)	1
-18	8210	DUST SHIELD (22938)	1
-19	239-1346-2	BEAM ASSY (22938)	1

CHAPTER 4
AVIATION INTERMEDIATE MAINTENANCE INSTRUCTIONS

SECTION I. PREPARATION FOR USE, STORAGE OR SHIPMENT

4-1 through 4-9. Refer to Chapter 3, Section I, in its entirety.

SECTION II. REPAIR INSTRUCTIONS

4-10. General.

4-11. This Section contains essential repair and replacement instructions for using personnel. This includes replacement of high pressure, low pressure fill system hydraulic filter elements and repair of hydraulic and electrical components.

4-12. **Component Removal And Installation** .

4-13. When it is necessary to remove any component of the test stand for repair or overhaul purposes, observe the following precautions and general practices:

a. Make certain that all hydraulic pressure is completely relieved before removing hydraulic system components.

b. Do not attempt to remove or repair any electrical component unless input power cable is disconnected from ac power source.

c. If it is necessary to remove system lines connected to hydraulic components, loosen fitting at end of each line, and, if applicable, remove attaching parts securing component to structure. Do not bend system lines on removal as thread damage or misalignment may result. Cap or plug open lines with protective closures, Military Specification MIL-C-5501, or equivalent.

CAUTION

Do not use adjustable jaw-type wrenches on hydraulic tube fittings. Slippage or incorrect adjustment of wrench may result in damage to hexagonal fitting surfaces.

d. When removing electrical components, disconnect electrical leads from terminals and tag each lead for ease of identification during reassembly.

e. After performing the necessary repair or overhaul, install components in test stand in the reverse order of removal.

f. After reinstalling components, perform a functional test as described in Section III.

4-14. Component Repair.

4-15. General. Component repair consists of performing any repair or part replacement necessary to restore the component to a serviceable condition. The instructions contained in the following paragraphs cover complete overhaul of components; however, perform only the procedures necessary to make the required repair of part replacement. The following general procedures and practices should be observed during repair and overhaul of components:

a. Clean all disassembled components, except electrical parts and prelubricated bearings with solvent, Federal Specification P-D-680. Use a stiff bristle, non-metallic brush to ensure that all orifices, packing grooves, and ports are thoroughly clean.

WARNING

Use solvent in well ventilated area. Avoid contact with open flames and avoid inhalation of fumes as injury could result.

b. Dry all cleaned parts using compressed air at approximately 20 psig, or a clean, lint-free cloth.

c. After cleaning, inspect all parts for wear and defects such as nicks, burrs, scoring, cracks, corrosion or similar defects. Inspect all threaded areas for stripped, crossed, or broken threads. Inspect mounting holes for elongation which would affect component performance.

d. Polish out minor defects from non-critically dimensioned surfaces using abrasive cloth, Federal Specification P-C-458 for ferrous alloy parts, and abrasive cloth, Federal Specification P-C-451 for aluminum and magnesium alloy parts. Ensure that precision fits, and seating or sealing surfaces are not destroyed. Reclean any repaired parts.

CAUTION

Do not use abrasive cloth, Federal Specification P-C-458 on aluminum or magnesium alloy parts as it contains an iron oxide which causes rapid oxidation of these metals.

e. Replace all preformed packings, backup rings, gaskets and seals at each overhaul regardless of condition.

f. During reassembly of hydraulic components, assemble parts wet, dipping them in hydraulic fluid, Military Specification MIL-H5606 or MIL-H-82382. If components are not to be immediately reinstalled on test stand reassemble wet using preservative fluid, Military Specification MIL-H-6083.

g. Perform hydraulic component tests using a clean source of hydraulic fluid, Military Specification MIL-H-5606 or MIL-H-82382, filtered to 10 microns or better.

4-16. Removal And Installation Of Structural Housing . (Refer to Fig. 1-1). Remove and install housing as follows:

a. Attach-suitable lifting device to lifting eyes on top of housing.

b. Release latches securing housing to structure.

c. Lift housing while carefully guiding to prevent it from damaging functional components during removal.

d. Install housing in the reverse order of removal.

4-17. High Pressure Filter.

NOTE

Hydraulic filter elements shall be replaced at periodic service intervals or anytime corresponding gage or warning light indicates excessive differential pressure.

4-18. Replacing Filter Element. (Refer to para. 3-26).

4-19. Testing High Pressure Filter.

a. Remove element per instructions in paragraph 3-26, but do not discard.

b. Install an AN814-12 fitting with a boss seal in place of the element onto the threaded connection in the filter head and install filter bowl. Do not install elements for this test.

c. Check the reset button to determinethat it is depressed.

d. Apply minimum hydraulic pressure, 84 psig to inlet port of filter. If switch does not actuate warning light, increase to maximum 115 psig. Switch is preset for 100 ± 15 psig.

e. During above test, after switch has actuated, depress red reset button, the warning light should go off. When reset button is released, it should rise and the warning light should illuminate. Reduce pressure to zero and depress reset button. The warning light should go off and the, reset button remain depressed.

f. There should be continuity between switch connector pins B and A. Pin A on light should be connected to "ON" side of stand ignition switch and pin "C" to ground. Pin A on pressure switch should be connected to Pin B on panel light; pin C to ground, leaving pin B on switch open.

CAUTION

Do not exceed the current ratings of the differential pressure switch: 5 amp at 110V ac, 28V dc (resistive), 3 amp 110V ac, 28V dc (inductive).

g. If the switch does not meet test requirement, replace with a serviceable item.

h. After completion of tests, relieve system pressure. Remove fitting with boss seal and reinstall element and filter bowl.

4-20. Low Pressure Filter.

4-21. Replacing Low Pressure Filter Element. (Refer to para. 3-25).

4-22. Replacing Fill System Filter Element. (Refer to para. 3-24).

4-23. High Pressure Pump. Dimensional tolerances for moving parts of the high pressure pumps are critical. Repair is limited to lapping the port plate to clean up the flat surfaces. Use an abrasive equal to Carborundum finishing compound Grade A 280V8WS. Port plate face flatness must be within three helium light bands with faces parallel within 0.0001 inch. Minimum plate thickness after lapping is 0.302 inch.

4-24. Disassembly Of High Pressure Pump. (Refer to Fig. 3-9).

a. Remove one end of hose assembly (1) from fitting on port block (59).

b. Remove four socket head cap screws (3) and remove pressure compensator with handwheel control assembly (2) and gasket (4) from hanger housing (91). Refer to paragraph 4-28 for disassembly of pressure compensator control.

c. Remove four socket head screws (6) and remove pressure compensator assembly minimum volume control section (5) and gasket (7) from hanger housing (91).

d. Remove twenty socket head screws (9) and remove end cap (8) and gasket (10) from hanger housing (91).

e. Reach inside hanger housing (91) and lower hanger (26) to expose four socket head cap screws (12). Rescrew (12) and remove clevis assembly (11).

f. Disassemble clevis assembly (11) as required by removing dowel pins (13) and needle bearings (14).

g. Remove socket head cap screws (16) from indicator link (15) and remove indicator link.

h. Remove drive pin (18) and remove indicator pointer (17) from indicator shaft (21).

i. Remove three screws (20) and remove indicator plate (19) from hanger housing.

j. Pull indicator shaft (21) out of hanger housing and remove O Ring (22) from indicator shaft (21).

k. Remove six socket head cap screws (24) from each hanger trunnion (23). Withdraw both trunnion hangers from hanger housing. Remove dowel pins (29).

l. Cut safety wire (28) and remove two screws (27) securing hanger (26) to wear plate (34). Withdraw hanger from hanger housing. Remove dowel pins (29).

m. Disassemble hanger if required by removing bearings (30), and roll pin (31). Do not remove roll pin (32) and stop (33) unless absolutely necessary.

n. Grasp lock nut (36) and carefully withdraw piston and shoe retainer assembly (41) with wear plate (34) attached from barrel and bearing assembly (53).

o. Unthread socket head pipe plug (35) from pin (40).

p. Bend tangs of lockwasher (37) out from slots on lock nut (36) and unthread lock nut from pin (40).

q. Remove lockwashers (37 and 38) and separate wear plate (34) from piston and shoe retainer (41).

r. Withdraw pin (40) from piston and shoe retainer assembly (41) and remove dowel pin (42) from pin (40).

s. Remove socket head cap screw (43) from spring retainer.

t. Unthread spring retainer (44) from end of pump shaft (82).

u. Remove screw and nut assembly (45) and spring (46) from spring retainer (44).

v. Remove four socket head cap screws (48 and 51), two barrel stops (47), two hanger spacers (50) and shims (49 and 52) from hanger housing (91).

w. Pull barrel and bearing assembly (53) off spline of pump shaft (82), taking care not to damage spline teeth or lapped surface of barrel.

x. Remove six socket head cap screws (61) and separate barrel bearing (54) from cylinder barrel (56).

y. Withdraw port plate (57) from pilot bore of hanger housing. Port plate is secured by dowel pin (58) in port block (59) and may require slight rotating movement to free.

z. Remove drive screws (68) and remove plate (67).

aa. Remove plug (69) and O Ring (70) from port block (59).

ab. Remove O Ring (62) and dowel pin (58) from port block (59).

ac. Carefully separate mounting flange (77) from port block (59). Remove dowel pin (73) and O Ring (63).

ad. Remove key (76) from shaft (82) and withdraw gerotor assembly (71) from port block (59). Remove dowel pin (73).

ae. Disassemble gerotor assembly (71) as required by separating eccentric ring (72) from pump cartridge elements (74 and 75).

af. Remove six O Rings (64), snap ring (66), and bearing sleeve (65) from port block (59).

ag. Remove six socket head cap screws (79) from seal retainer (78) and remove retainer from mounting flange (77). Remove O Ring (80) from retainer.

ah. Taking care not to damage inner sealing surface of shaft seal (81) slide seal off end of pump shaft (82).

ai. Remove pump shaft (82) with bearing (84) and snap ring (83) attached from mounting flange (77).

aj. Remove snap ring (83) and bearing (84) from shaft (82).

ak. Remove plugs (85) and O Rings (86) from hanger housing (91).

al. Remove Identification Plate (87) by removing drive screws (88).

am. Remove drive screws (90) and name plate (89).

4-25. Reassembly Of High Pressure Pump.

CAUTION

Be very careful not to damage packing and seals during reassembly procedure.

4-26. Preparation Of Parts For Assembly.

a. Clean all parts with suitable cleaning fluid and blow out oil passages with compressed air.

b. Inspect all parts for material defects, dirt, scratches, or foreign material.

c. Coat all parts with a light film of oil and protect from dirt and excessive handling during assembly. During assembly, keep lapped surfaces lubricated with clean oil.

4-27. Reassembly Of Pump. (Refer to Fig. 3-9).

a. Install bearing (84) on pump shaft (82). Press bearing snugly against shaft shoulder and secure with snap ring (83).

b. Insert shaft and bearing into mounting flange (77). Seat bearing snugly against shoulder in flange.

c. Place O Ring (80) on seal retainer (78) and insert shaft seal (81) into bore of seal retainer. Take care not to cut or scratch inner sealing of shaft seal.

d. Again using care not to damage shaft seal, insert seal retainer into pilot bore of mounting flange while slipping shaft seal over shaft.

e. Secure seal retainer to mounting flange with six socket head cap screws (79). Tighten screws 18 to 20 inch pounds each. Do not overtighten. There should be clearance between seal retainer and mounting flange.

f. Insert bearing (65) into port block (59) and secure with snap ring (66).

g. Install O Ring (63) on mounting flange (77).

h. Insert six O Rings (64) into port block (59).

i. Install pump cartridge driver member (74) inside driven member (75) and insert pump cartridge assembly into eccentric ring (77) of gerotor assembly (71).

j. Install gerotor assembly (71) in port block (59) and secure with dowel pin (73).

k. Insert key (76) into key way in pump shaft (82) and assemble mounting flange (77) and shaft to port block (59). Take care to align key (76) in slot of gerotor assembly driver (74) and dowel pin (73) in slot in pilot mounting flange (77).

l. Place O Ring (62) over pilot on port block (69).

m. Insert dowel pin (58) into port block face in proper position to obtain desired shaft rotation; pin at top of block for clockwise rotation; pin at bottom of block for counterclockwise rotation.

n. Slip hanger housing (91) over pilot on port block, orienting housing so that machined surface for indicator plate (19) is on left side of pump when viewed from shaft end.

o. Secure port block (59) and mounting flange (77) to hanger housing (91) with six socket head cap screws (61). Torque screws 22 to 25 foot pounds. Check that 0. 0001 to 0. 0125 clearance remains between face of mounting flange (77) and port block (59). Secure with lock wire (60).

p. Press inner race of barrel bearing (54) onto cylinder barrel (56), seating bearing against shoulder of barrel and making certain that tapped holes in bearing align with holes in barrel.

q. Secure barrel to bearing with six socket head screws (55). Tighten screws securely.

r. Slip port plate (57) over shaft (82) and into pilot bore of hanger housing (91), making sure that center hole in port plate goes over dowel pin (58) in face of port block (59). Check to ensure that port plate is firmly seated against port block face by trying to rotate port plate radially. Slight movement obtainable indicates that port plate is properly installed.

s. Liberally lubricate barrel and bearing assembly (53), spline of shaft (82), and port plate (57), and, taking care not to damage lapped surface of cylinder barrel, slip barrel into shaft spline and seat gently.

t. Install two screws (48) one at top and one at bottom of barrel and bearing assembly (53), along with two shims (49) and two barrel stops (47). Clearance between barrel stops and inner race of barrel bearing should be 0. 010 to 0. 015 inch. Shim as required to obtain proper clearance. Tighten screws securely against port plate.

u. Press needle bearings (30) into hanger (26) and press down pin (29) into hanger face.

v. Press roll pin (31) into hanger. Press stop pin (33) into hanger until hole in stop pin aligns with hole in hanger then insert roll pin (32) to lock stop (33) in place.

w. Slip O Ring (25) into groove on trunnion pin (23). Do this for both pins.

x. Position hanger (26) in hanger housing (91). Align trunnion bores on hanger with trunnion pin holes in housing and slip trunnion bearings. Insert one screw (24) into each trunnion pin to hold pin in place.

y. Position hanger spacers (50) on each side of barrel and bearing assembly (53) with one shim (52) under each spacer. Secure spacers and shims with screws (51).

z. Slide hanger (26) against spacer on one side and measure clearance between hanger and spacer. Hanger should swing freely and should be centered within 0.010 inch on barrel and bearing assembly. Insert required combination of shims under each spacer to achieve this clearance, always striving for an equal number of shims under each
spacer.

aa. Swing hanger up until stop pin (33) contacts machined pad in hanger housing. Maximum hanger angle measure from horizontal pump centerline should be 15 degrees, 30 minutes.

ab. Remove hanger from pump and continue reassembly.

ac. Slip spring (46) over screw (45) and insert screw into spring retainer (44).

ad. Thread this entire assembly into tapped hole in end of pump shaft (82), making certain that top of spring retainer and small tapped hole falls between spline teeth in cylinder barrel (56). Insert, socket head cap screw (43) and tighten securely.

ae. To set spring, load screw (45) into spring retainer (44) until top of screw is flush with top of spring retainer and small tapped hole falls between spline teeth in cylinder barrel (56). Insert socket head cap screw (43) and tighten securely.

af. Press dowel pin (42) into pin (40).

ag. Aligning dowel pin (42) with key way in piston and shoe retainer (41), press pin (40) into hole in retainer.

ah. Press bearing (39) into wear plate (34). Bearing must have widest gap between inner and outer race toward hanger side of wear plate.

ai. Slip on (40) into bearing bore and set wear plate (34) gently against shoes of piston and shoe retainer assembly (41). Lubricate wear faces liberally.

aj. Slip lockwasher (38) over threaded end of pin (40) placing tang of lockwasher in key way of pin.

ak. Slip second lockwasher (37) over pin, making tang of washer fit into the second pin key way.

al. Thread lock nut (36) onto pin (40) until nut is snug against lockwashers and bearing. Do not overtighten.

am. Back off lock nut 1/16 to 1/8 turn to give 0.002 to 0.004 clearance between lock nut and bearing. Turn nut so that slot in nut lines up with tang on washer (37).

an. Check adjustment by rotating each shoe in piston and shoe retainer assembly (41). Slight movement should be felt. Since shoe sole thickness is not quite uniform, some shoes may be tighter than others but all should move without requiring excess force.

ao. Bend tang of lockwasher (37) into slot in lock nut (36).

ap. Thread hex socket pipe plug (35) into end of pin (40) and tighten securely. Check locking action of plug by trying to loosen lock nut with a slight wrench force.

aq. Insert pistons of piston and shoe retainer assembly (41) into bores of cylinder barrel (56), then slide assembly into barrel. Lubricate all parts liberally.

ar. Press dowel pin (29) into face of hanger (26).

as. Position hanger (26) in hanger housing (91), sliding dowel pin (29) into hole in wear plate. Slip trunnion pins (23) through

holes in both side of hanger housing and into hanger trunnion bearings (30).

at. Insert two socket head cap screws (27) through hanger (26) and into wear plate (34). Tighten screws securely and secure with lockwire (28).

au. Secure each trunnion pin (23) to hanger housing (91) with six socket head cap screws (24). Tighten screws securely.

av. Place indicator plate (19) in position on hanger housing (91) and secure plate with three round head machine screws (20).

aw. Place volume indicator (17) on shaft (21) and insert drivelock pin (18) through indicator and shaft.

ax. Inside hanger housing (91), slip indicator link (15) over indicator shaft (21) and then over roll pin (31) in hanger.

ay. Position link (15) so that it engages hanger roll pin (31)at full volume, then insert socket head cap screw (16) and tighten securely.

az. Insert two needle bearings (14) into slot in roller clevis (11) and secure with two dowel pins (13).

ba. Install clevis (11) on hanger (26) with open end (bearings) toward exterior. Secure with four socket head cap screws (12).

bb. Place gasket (7) over pressure compensator assembly minimum volume control section (5) and insert assembly up through bottom hole in hanger housing (91). Secure with four socket head cap screws (6).

bc. Place gasket (4) on machine mounting surface on top of hanger housing (91) and position pressure compensator control assembly handwheel section (2) on hanger housing. Secure with four socket head cap screws (3).

bd. Reconnect hose assembly (1) between pressure compensator assembly (2) and port block (59).

be. Lightly grease end cap gasket (10) and place gasket in position on hanger housing (91).

bf. Place end cap (8) over gasket and secure end cap to hanger housing with 20 socket head cap screws (9). Tighten screws evenly.

bg. Install plugs (85) and O Ring (86). Tighten plugs securely.

4-28. Compensator Control. (Refer to Fig. 3-10).

4-29. If the compensator is hunting, turn the control knob slowly through its entire control range several times. If this procedure does not eliminate the malfunction, remove and repair compensator (Refer to para. 4-30).

4-30. Compensator Removal.

a. Make certain all pressure is dumped from the hydraulic system.

CAUTION

Introduction of dirt or other foreign matter to the pump will cause erratic pump operation and in some instances premature pump failures. Always exercise extreme caution when removing component to prevent the intrusion of such matter.

b. Disconnect the hose assembly (2) from 45 degree elbow (3) and plug both openings.

c. Remove the compensator cap assembly by removing the four cap screws securing it to the pump.

d. Lift compensator from pump.

NOTE

The piston (5) must come out with the compensator. If it does not, remove.

e. Provide a suitable cover for the compensator mounting pad to prevent introduction of foreign matter into the pump.

4-31. Disassembly Of Compensator Assembly. (Refer to Fig. 3-10).

a. Drop piston assembly (5) out of control cylinder (6).

b. Unscrew the adjustment housing (11) from compensator cap (26). Remove the spring retainer (12), spring (13), seal piston (14) and O Ring (15). Remove the O Ring (18) from the threaded portion of the adjustment housing (11).

c. Unscrew the plug (19) and remove the O Ring (20). Tap the compensator cap (26) on a wooden block and drop out the tension washer (21), sleeve (23) and spool (25). Remove the O Ring (24).

d. Remove screws (7) to separate the control cylinder (6) from the cap (26). Remove O Rings (8 and 9).

e. Unscrew the maximum volume control (28) from compensator cap (26).

f. Unscrew nut (29) and remove handwheel (30), key (31), washer (32) and lever (33).

g. Remove the adjusting screw (34). Unscrew the stop (36) and remove the guide (35). Remove the O Ring (27) from the compensator cap (26).

4-32. Cleaning.

4-33. All parts must be absolutely clean and free from dirt, lint or other foreign matter. Wash all parts with cleaning solvent Federal Specification P-D-680 or equivalent, and dry-using compressed air.

4-34. After all parts are clean, each part must be protected by a light coat of fluid. Use the same fluid as will be used in the hydraulic system when it is placed in operation. Use of fluids which are physically or chemically incompatible with either the system fluid or O Rings may result in serious damage.

4-35. Inspection.

a. Inspect all components for undue wear, scratches, or damage. Replace any component that shows indications of damage.

b. The spool and sleeve (22) must move freely without binding when installed. If they are too loose, they must be replaced. Check for pitting and scoring, replace if any evidence of damage is found.

c. Remove minor nicks and scratches with No. 600 crocus cloth, Federal Specification P-C-458.

4-36. Compensator Cap Assembly Reassembly.

NOTE

All reference in this paragraph to O Ring(s), gasket(s) indicate new material.

a. Install 0 Ring (27) in internal groove of compensator cap (26).

b. Install seal piston (14) and O Ring (15) in adjustment housing (11). Drop compensator spring (13) into housing and install spring retainer (12). Install O Ring (18) on adjustment housing (11). Thread in adjustment screw (16) and lock nut (17). Make certain screw is turned completely into adjustment housing (11). Screw the adjustment housing (11) into compensator cap (26).

c. Coat spool (25) with hydraulic fluid Federal Specification MIL-H-5606 or MIL-H-82382, and insert into sleeve (23). The small end of the spool must be inserted into the end of the sleeve which has a flat ground on it. Spool must move freely without binding. Install O Ring (24) on the sleeve. Insert spool with sleeve, flat end first into compensator cap (26) in the opening directly opposite of the adjustment housing (11).

d. Install O Ring (20) on plug (19). Position tension washer (21), rounded end first, on back of sleeve and thread plug into compensator cap (26).

e. Position O Ring (8) in compensator cap (26) and O Ring (9) in compensator cylinder (6). Assemble the compensator cap to the compensator cylinder making certain that the O Ring (9) aligns with the hole on the compensator.

f. Install guide (35) in stop (36). Thread guide into the adjusting screw (34). Insert adjusting screw in housing (38) so that guide fits housing slots. Check operation of guide in housing if guide is properly centered, it will travel easily in housing slots with no evidence of binding.

g. Place lever (33) and washer (32) on housing (38). Install key (31) in slot of adjustment screw (34). Position handwheel (30) and install nut (29).

h. Thread the maximum volume control (28) into the top of the compensator cap (26).

i. Install the piston (5) in the control cylinder (6).

CAUTION

The piston may fall out of the cylinder and be damaged. Handle carefully to prevent scratching or damage. Hold piston in cylinder by wrapping masking tape around compensator.

4-37. Installation Of Compensator Cap Assembly.

a. Install new compensator cap mounting pad gasket.

b. Remove masking tape from compensator cap assembly if installed.

CAUTION

The piston may fall out of the cylinder and may be damaged. Handle carefully.

c. Place compensator cap assembly on mounting pad. Thread the four screws securing it to the pump.

d. Remove plugs from 45 degree elbow (3) and hose (2) fitting and connect hose.

e. For test refer to Chapter 4, Section III.

4-38. Main Pump Motor. (Refer to Fig. 3-11). Repair main pump motor as follows:

a. Disassemble in order of key index numbers assigned to figure 3-11.

b. Clean and dry all non-electrical parts. Clean electrical parts with clean, lint-free cloth moistened with solvent.

c. Inspect all parts for wear and damage. Check bearings (6) for roughness and excessive play. Check cap (5, 8) for wear. Inspect rotor (10) for obvious wear, damage and shaft distortion. Inspect coils in frame assembly (4) for worn or damaged insulation, evidence of flashing or overheating, and security of terminals.

d. Reassemble in reverse order of disassembly. Pack bearings with lubricant.

e. After reassembly, apply 500 volts ac between each lead and frame (4) for one minute. There shall be no evidence of burning, flashing, or insulation breakdown.

f. Reinstall motor in test stand without reinstalling main pump.

g. Run motor and check to ensure that there is no evidence of unusual noise, or excessive vibration. If any of these conditions are evident, disassemble motor and check bearings (6) for roughness or excessive play. Replace bearings if required and repeat test.

SECTION III. TEST AFTER REPAIR

4-39. General.

4-40. Inspection. Prior to any testing or operation, the test stand shall be thoroughly inspected for proper interconnection and installation of all components. Check electrical connections and hydraulic connections in particular. During testing observe the following:

a. Check for signs of hydraulic leaks. A hot hydraulic line may indicate a leak, or indicate that the high pressure relief valve is set below the pressure compensator control setting of the high pressure pump.

b. Check for excessive vibration of assemblies or hydraulic lines. Make certain that all hydraulic lines are properly supported and clamped.

c. Check for chafing or rubbing of tubing or hoses.

d. Check all instrument lights on panel for operation, including lights behind filter bleed sight tubes and flowmeters.

e. Check for erratic indication on gages and meters.

f. Check for unusual noise in pumps, gears, or other mechanical parts.

4-41. Service. Prior to any testing or operation, prepare the test stand for use as given in Chapter 2, Section II.

4-42. Testing.

4-43. General Procedure. The test stand shall be operated in accordance with instructions in Chapter 2, Section II. The test procedures in subsequent paragraphs give basic data only.

4-44. Run-In And Temperature Test.

a. Operate test stand using an external reservoir as follows:

Flow Rate - 20 gpm
Pressure - 1500 psig
(dumped over stand relief valve)

b. Close all doors and allow test stand to run. When temperature rises to 165 degrees F± 5 degrees, horn should sound to indicate excessive temperature. Observe FLUID TEMPERATURE gage during operations.

c. Open all doors, and reduce pressure to minimum to allow test stand to cool down. Horn shall stop sounding when temperature drops below 160 degrees F.

4-45. Flow Tests.

a. Operate test stand using an external reservoir as follows:

Flow rate - 6 gpm
Pressure - 800 psig

b. Raise pressure to 1500 psig and observe flow. Flow must remain approximately the same.

c. Raise pressure to 3000 psig and observe flow. Flow must remain approximately the same.

d. Adjust flow to 12 gallons per minute and pressure to 800 psig.

e. Repeat steps b and c and observe flow. It must remain approximately the same.

f. Adjust flow to 20 gallons per minute and pressure to 800 psig.

g. Repeat steps b and c and observe flow. It must remain approximately the same.

h. Adjust flow to 30 gallons per minute and pressure to 800 psig.

i. Repeat steps b and c and observe flow. It must remain approximately the same.

4-46. Load Test.

NOTE

Use external heat exchanger for fluid cooling.

a. Operate test stand as follows:

Pressure - 500 psig
Flow rate - 15 gpm
Compensator
Control - 1500 psig O flow

b. Increase system pressure to 1000 psig. Volume must remain the same.

c. Increase system pressure to 1200 psig. Volume must remain the same.

d. Increase system pressure to 1400 psig. Volume must remain the same.

e. Attempt to increase system pressure above 1500 psig to check pump for compensation control. Volume should drop to zero.

f. Readjust VOLUME CONTROL to give 30 gallons per minute at 500 psig.

g. Repeat steps b through e at this pressure.

h. Close FLOW CONTROL valve and readjust COMPENSATOR CONTROL knob until OUTPUT PRESSURE gage reads 3000 psig.

i. Open FLOW CONTROL valve and adjust VOLUME CONTROL to give a flow of 15 gallons per minute at 1000 psig.

j. Increase system pressure to 2000 psig. Volume should remain approximately the same.

k. Increase system pressure to 2700 psig. Volume should remain approximately the same.

l. Attempt to increase system pressure above 3000 psig to check pump for compensation control. Volume should drop to zero.

m. Readjust VOLUME CONTROL to give 30 gallons per minute to 500 psig.

n. Repeat steps j, k and l at this pressure.

o. Reduce flow to below 15 gpm. Close FLOW CONTROL valve and turn COMPENSATOR CONTROL all the way in and readjust high pressure relief valve to 5000 psig. Then adjust COMPENSATOR CONTROL until OUTPUT PRESSURE gage reads 5000 psig.

p. Open FLOW CONTROL valve and adjust VOLUME CONTROL to give a flow of 15 gallons per minute.

q. Operate stand for one hour and check for fluid leaks.

4-47. Service After Test.

4-48. Service test stand after test as instructed in Chapter 2, Section II.

APPENDIX A

REFERENCES

1.	Publication Indexes.	The following indexes should be consulted frequently for latest changes or revisions and for new publications relating to material covered in this technical manual.
	DA Pam 310-1	Index of Administrative Publications
	DA Pam 310-2	Index of Blank Forms
	DA Pam 310-5	Index of Graphic Training Aids and Devices
	DA Pam 310-7	Index of Modification Work Orders
	DA Pam 310-9	Index of Supply Manuals - Ordnance Corps
	DA Pam 310-4	Index of Technical Manuals, Technical Regulations, Technical Bulletins, Supply Bulletins, and Lubrication Orders
	DA Pam 310-3	Index of Training Publications
2.	Forms.	Refer to TM 38-750, The Army Equipment Record System and Procedures, for instructions on the use of maintenance forms pertaining to this material.
3.	Publications.	
	FM 5-25	a. Destruction to Prevent Enemy Use. Explosives for Demolition
	FM 31-70	b. Maintenance. Basic Cold-Weather Manual
	FM 5-20	Camouflage, Basic Principles and Field Camouflage
	TM 9-1870-1	Care and Maintenance of Pneumatic Tires
	TM 9-1825E	Electrical Equipment (Bendix Scintilla)
	TM 9-214	Inspection, Care and Maintenance of Anti-friction Bearings
	TM 9-237	Operator's Manual Welding Theory and Application

3. Publications (Continued).

TM 9-213	Painting Instructions for Field Use
TB ORD 1044	Application Instructions for Vehicle Marking with Pressure-Sensitive Adhesive Vinyl
TB 746-93-1	Color and Marking of Military Vehicles, Construction Equipment, and Materials Handling Equipment
TB 9-299/1	Processing of Unboxed Self-Propelled and Towed Class II Ordnance General Supplies and Related Materiel for Shipment and Storage
MIL-V-62038	Shipment and Limited Storage
TB 9-300-2/1	Wheeled Vehicles: Inspection, Care and Preservation during Storage

APPENDIX B

MAINTENANCE ALLOCATION CHART

B-1. Maintenance Allocation Chart.

a. This Maintenance Allocation Chart (MAC) assigns maintenance functions in accordance with the Three Levels of Maintenance concept for army aircraft. These maintenance levels: Aviation Unit Maintenance (AVUM), Aviation Intermediate Maintenance (AVIM) and Depot Maintenance are depicted on the MAC as:

AVUM which corresponds to the O code in the Repair Parts and Special Tools List (RPSTL).

AVIM which corresponds to the F code in the Repair Parts and Special Tools List (RPSTL).

DEPOT which corresponds to the D code in the Repair Parts and Special Tools List (RPSTL).

b. The maintenance to be performed below depot and in the field is described as follows:

(1) Aviation Unit Maintenance (AVUM). AVUM activities will be staffed and equipped to perform high frequency "On Equipment" maintenance tasks required to retain or return equipment to a serviceable condition. The maintenance capability of the AVUM will be governed by the MAC and limited by the amount and complexity of support equipment, facilities required, and number of spaces and critical skills available. The range and quantity of authorized spare modules/components will be consistent with the mobility requirements dictated by the air mobility concept. (Assignment of maintenance tasks to divisional company size aviation units will consider the overall maintenance capability of the division, the requirement to conserve personnel and equipment resources and air mobility requirements).

(a) Company Size Aviation Units. Perform those tasks which consist primarily of preventive maintenance and maintenance repair and replacement functions associated with sustaining a high level of equipment operational readiness. Perform maintenance inspections and servicing to include daily, intermediate, periodic and special inspections as authorized by the MAC or higher headquarters. Identify the cause of equipment/system malfunctions using applicable technical manual troubleshooting instructions, Built-In-Test Equipment (BITE), installed instruments, or easy to use Test Measurement and Diagnostic Equipment (TMDE). Replace worn or damaged modules/components which do not require complex adjustments or system alignment and which can be removed/installed with available skills tools and equipment. Perform operational and continuity checks and make minor repairs. Perform servicing, functional adjustments, and minor repair/replacement. Evacuate unserviceable modules/components and end items beyond the repair capability of AVUM to the supporting AVIM.

(b) Less than Company Size Aviation Units. Aviation elements organic to brigade, group, battalion headquarters and detachment size units are normally small and have less than ten aircraft assigned. Maintenance tasks performed by the aircraft crew chief or assigned aircraft repairman will normally be limited to preventive maintenance, inspections, servicing, spot painting, stop drilling, minor adjustments, module/component fault diagnosis and replacement of selected modules/components. Repair functions will normally be accomplished by the supporting AVIM unit.

(2) Aviation Intermediate Maintenance (AVIM). AVIM provides mobile, responsive "One Stop" maintenance support. (Maintenance functions which are not conducive to sustaining air mobility will be assigned to depot maintenance). Performs all maintenance functions authorized to be done at AVUM. Repair of equipment for return to user will emphasize support or operational readiness requirements. Authorized maintenance includes replacement and repair of modules/components and end items which can be accomplished efficiently with available skills, tools, and equipment. Establishes the Direct Exchange (DX) program for AVUM units be repairing selected items for return to stock when such repairs cannot be accomplished at the AVUM level. Inspects, troubleshoots, tests, diagnoses, repairs, adjusts, calibrates, and aligns system modules/components. Module/component disassembly and repair will support the DX program and will normally be limited to tasks requiring cleaning and the replacement of seals, fittings and items of common hardware. Unserviceable reparable modules/components and end items which are beyond the capability of AVIM to repair will be evacuated to Depot Maintenance. This level will perform special inspections which exceed AVUM capability. Provides quick response maintenance support, on-the-job-training, and technical assistance through the use of mobile maintenance contact teams. Maintains authorized operational readiness float. Provides collections and classification services for serviceable/unserviceable material. Operates a cannibalization activity in accordance with AR 750-50. (The aircraft maintenance company within the maintenance battalion of a division will perform AVIM functions consistent with air mobility requirements and conservation of personnel and equipment resources. Additional intermediate maintenance support will be provided by the supporting non-divisional AVIM unit).

B-2. Use of the Maintenance Allocation Chart.

a. The MAC assigns maintenance functions to the lowest level of maintenance based on past experience and the following consideration:

(1) Skills available.

(2) Time required.

(3) Tools and test equipment required and/or available.

b. Only the lowest level of maintenance authorized to perform a maintenance function is indicated. If the lowest level of maintenance cannot perform all tasks of any single maintenance function (e.g., test, repair), then the higher maintenance level(s) that can accomplish additional tasks will also be indicated.

c. A maintenance function assigned to a maintenance level will automatically be authorized to be performed at any higher maintenance level.

d. A maintenance function that cannot be performed at the assigned level of maintenance for any reason may be evacuated to the next higher maintenance organization. Higher maintenance levels will perform the maintenance functions of lower maintenance levels when required or directed by the appropriate commander.

e. The assignment of a maintenance function will not be construed as authorization to carry the associated repair parts in stock. Authority to requisition, stock, or otherwise secure necessary repair parts will be-as specified in the repair parts and special tools list appendix.

f. Normally there will be no deviation from the assigned level of maintenance. In cases of operational necessity, maintenance functions assigned to a maintenance level may, on a one-time basis and at the request of the lower maintenance level, be specifically authorized by the maintenance officer of the level of maintenance to which the function is assigned. The special tools, equipment, etc. required by the lower level of maintenance to perform this function will be furnished by the maintenance level to which the function is assigned. This transfer of a maintenance function to a lower maintenance level does not relieve the higher maintenance level of the responsibility of the function. The higher level of maintenance will provide technical supervision and inspection of the function being performed at the lower level.

g. Organizational through depot maintenance of the US Army Electronics Command equipment will be performed by designated US Army Electronics Command personnel.

h. Changes to the MAC will be based on continuing evaluation and analysis by responsible technical personnel and on reports received from field activities.

B-3. Definitions.

a. Inspect. To determine serviceability of an item by comparing its physical, mechanical and electrical characteristics with established standards.

b. Test. To verify serviceability and detect incipient failure by measuring the mechanical or electrical characteristics of an item and comparing those characteristics with prescribed standards.

c. Service. To clean, to preserve, to charge, and to add fuel, lubricants, cooling agents and air.

d. Adjust. To rectify to the extent necessary to bring into proper operating range.

e. Aline. To adjust specified variable elements of an item to bring to optimum performance.

f. Calibrate. To determine the corrections to be made in the readings of instruments or test equipment used in precise measurement. Consists of the comparison of two instruments, one of which is a certified standard of known accuracy, to detect and adjust any discrepancy in the accuracy of the instrument or test equipment being compared with the certified standard.

g. Install. To set up for use in an operational environment such as an emplacement, site or vehicle.

h. Replace. To replace unserviceable items with serviceable assemblies, subassemblies or parts.

i. Repair. To restore an item to serviceable condition through correction of a specific failure or unserviceable condition. This includes, but is not limited to, inspection, cleaning, preserving, adjusting, replacing, welding, riveting, and strengthening.

j. Overhaul. To restore an item to a completely serviceable condition as prescribed by maintenance serviceability standards prepared and published for the specific item to be overhauled.

k. Rebuild. To restore an item to a standard as nearly as possible to the original or new condition in appearance, performance, and life expectancy. This is accomplished through the maintenance technique of complete disassembly of the item, inspection of all parts or components, repair or replacement of worn or unserviceable elements (items) using original manufacturing tolerances and specifications, and subsequent reassembly of the item.

B-4. Functional Groups.

Standard functional groupings are not considered feasible for aviation ground support equipment due to variation and complexity. Therefore, variations to functional groupings may occur.

B-5. Maintenance Categories and Work Times.

The maintenance categories (levels) AVUM, AVIM, and DEPOT are listed on the Maintenance Allocation Chart with individual columns that indicate the work times for maintenance functions at each maintenance level. Work time presentations such as 0.1 indicate the average time it requires a maintenance level to perform a specified maintenance function. If a work time has not been established, the columnar presentation shall indicate "-•-". Maintenance levels higher than the level of maintenance indicated are authorized to perform the indicated function.

B-6. Tools and Test Equipment (Section III).

Common tool sets (not individual tools), special tools, test and, support equipment required to perform maintenance functions are listed alphabetically with a reference number to permit cross-referencing to column 5 in the MAC. In addition, the maintenance category authorized to use the device is listed along with the item National Stock Number (NSN) and, if applicable, the tool number to aid in identifying the tool/device.

SECTION II. MAINTENANCE ALLOCATION CHART

NOMENCLATURE OF END ITEMS

HYD TEST STAND-TYPE MK-1

(1) GROUP NUMBER	(2) COMPONENT/ASSEMBLY	(3) MAINTENANCE FUNCTION	(4) MAINTENANCE CATEGORY AVUM	AVIM	DEPOT	(5) TOOLS AND EQUIPMENT	(6) REMARKS
00	TEST STAND AIRCRAFT						
	Hydraulic Systems-						
	(Single)						
	Elect. Motor Driven						
	Type MK-1						
02	MAINFRAME ASSY						
	(Cabinet)	Inspect	0.1				
0201	Doors, Latches, Hinges	Adjust	0.2			102	
		Repair	1.0			102	
03	CHASSIS						
0301	Axle & Steering Assy	Inspect	0.1				
	(Front)	Service	0.2			102	
		Repair		2.0		102	
		Replace		2.0		102	
0302	Axle Assy Rear	Inspect	0.1				
		Service	0.2			102	
		Repair		2.0		102	
		Replace		2.0		102	
0303	Brake Assy	Inspect	0.2				
		Service	0.2			102	
		Adjust	0.5			102	
		Repair	0.8			102	
		Replace	1.0			102	
0304	Wheel Assy	Inspect	0.1				
		Service	0.5			102	
		Repair	0.5			102	
		Replace	1.0			102	
07	HYDRAULIC SYSTEMS						
0701	Reservoir	Inspect	0.2				
		Service	0.4			110	
		Replace		1.5		110	
		Repair		1.0		110	
0702	Pumps	Inspect	0.3				
		Test	0.2			110	A
		Replace		2.5		110	
		Repair			15.0	110	

SECTION II. MAINTENANCE ALLOCATION CHART

NOMENCLATURE OF END ITEMS

HYD TEST STAND-TYPE MK-1

(1) GROUP NUMBER	(2) COMPONENT/ASSEMBLY	(3) MAINTENANCE FUNCTION	(4) MAINTENANCE CATEGORY AVUM	AVIM	DEPOT	(5) TOOLS AND EQUIPMENT	(6) REMARKS
0703	Compensator Pressure Control	Inspect	0.1				
		Test		0.5		110	A
		Replace	1.0			110	
		Repair		2.0		110	
0704	Filters (High & Low Pressure) (Fill System)	Inspect	0.1				
		Replace	1.0			110	
		Repair	0.5			110	
0705	Oil		0.1				
		Service	0.2			110	
		Replace		1.0		110	
		Repair		2.0		110	
0706	Manifold Assy, & Valves (High Pressure & Return)	Inspect	0.1				
		Test		0.5		110	A
		Service	0.2			110	
		Replace		1.0		110	
		Repair		1.5		110	
0707	Lines, Tubing, Fittings & Hose Assemblies	Inspect	0.1				
		Replace	0.5			110	
08	INSTRUMENTS SYSTEM						
0801	Flowmeter (Tubular Type)	Inspect	0.2				
		Replace	0.5			105	
0802	Hourmeter	Inspect	0.3				
		Repair			1.0	105	
		Replace	0.5			105	
0803	Fluid Temperature Gages Inspect		0.1				
		Test	0.3			105	A
		Service	0.2			105	
		Repair		1.0		105	
		Replace		1.0		105	

SECTION II. MAINTENANCE ALLOCATION CHART

NOMENCLATURE OF END ITEMS

HYD TEST STAND-TYPE MK-1

(1) GROUP NUMBER	(2) COMPONENT/ASSEMBLY	(3) MAINTENANCE FUNCTION	(4) MAINTENANCE CATEGORY AVUM	AVIM	DEPOT	(5) TOOLS AND EQUIPMENT	(6) REMARKS
09	ELECTRICAL SYSTEM						
0901	Motor, Main Pump	Inspect	0.3				
		Test		0.5			A
		Service	0.3			106	
		Replace		1.5		106	
		Repair		0.8(B)	2.0	106	B
0902	Electrical Components Transformer Relays Circuit Breakers	Inspect	0.4				
		Test		0.5			A
		Service	0.5			106	
		Replace		1.0		106	
		Repair		1.5		106	
0903	Terminals & Connectors	Inspect	0.5				
		Service	0.5			106	
		Replace		0.8		106	
0904	Lamps	Inspect	0.5				
		Replace	0.5			106	
0905	Electrical Wiring, Cables, & Switches	Inspect	0.2				
		Test		0.5		109	
		Replace		0.5		106	
		Repair		1.0		106	

SECTION III. TOOL AND TEST EQUIPMENT REQUIREMENT

REF NO	MAINT. CAT.	NOMEN.	NSN	TOOL NO.
100	O	Tool Set, AVUM, Set No.1	4920-00-159-8727	SC492099CLA90
101	O	Tool Set, AVUM, Set No.2	4920-00-567-0476	SC492099CLA92
102	O	Tool Kit, Acft Mech Gen	5180-00-323-4692	SC518099CLA01
103	O	Tool Kit, Arfrm Rpmn	5180-00-323-4876	SC518099CLA02
104	O	Tool Kit, Hyd Rpmn	5180-00-323-4891	SC518099CLA03
105	O	Tool Kit, Instr Rpmn	5180-00-323-4913	SC518099CLA05
106	O	Tool Kit, Elec Rpmn	5180-00-323-4915	SC518099CLA06
107	O	Tool Kit, Eng Rpmn	5180-00-323-4944	SC518099CLA07
108	O	Tool Kit, Pwr Trn	5180-00-003-5267	SC518099CLA13
109	F	Shop Set, AVIM, Elec-Instr	4920-00-165-1453	SC492099CLA91ELAM
110	F	Shop Set, AVIM, Hyd	4920-00-165-1454	SC492099CLA91HYAM
111	F	Shop Set, AVIM, Machine Shop	4920-00-405-9279	SC492099CLA91MAAM
112	F	Shop Set, AVIM, Pwr Tern	4920-00-001-4132	SC492099CLA91PTAM
113	AVIM	Shop Set, AVIM, Rtr Shop	4920-00-405-9270	SC492099CLA91ROAM
114	AVIM	Shop Set, AVIM, Sheet Metal	4920-00-166-5505	SC492099CLA91SMAM
115	AVIM	Shop Set, AVIM, Tool Crib	4920-00-472-4183	SC492099CLA91TCAM
116	AVIM	Shop Set, AVIM, Turbine Eng	4920-00-224-3684	SC492099CLA91ENTAM
117	AVIM	Shop Set, AVIM, Welding	4920-00-163-5093	SC492099CLA91WEAM

SECTION IV. REMARKS

Reference Code	Remarks
A	Operational test on unit
B	Repair limited to replacement of brushes
C	Use Available Motor Pool Tools

APPENDIX C
REPAIR PARTS AND SPECIAL TOOLS LIST
(Current as of 14 April 1980)
SECTION I. INTRODUCTION

C-1. Scope. This appendix lists spares and repair parts; required for performance of Aviation Unit Maintenance (AVUM) and Aviation Intermediate Maintenance (AVIM) of the Test Stand, Hydraulic P/N 2-01-6. It authorizes. the requisitioning and issue of spares and repair parts as indicated by the source and maintenance codes.

C-2. General. This Repair Parts and Special Tools List is divided into the following sections:

a. Section II. Repair Parts List. A list of spares and repair parts authorized for use in the performance of maintenance. The list also includes parts which must be removed for replacement of the authorized parts.

b. Section III. Special Tools List. Not applicable.

c. Section IV. National Stock Number and Part Number Index. A list, in National Item Identification Number (NIIN) sequence of all National Stock numbers (NSN) appearing in the listings, followed by a list, in alphanumeric sequence, of all part numbers appearing in the listings. National stock numbers and part numbers are cross-referenced to each illustration figure and item number appearance.

C-3. Explanation of Columns.

a. Illustration. This column is divided as follows:

(1)Figure Number. Indicates the figure number of the illustration on which the item is shown.

(2) Item Number. The number used to identify each item called out in the illustration.

b. Source, Maintenance and Recoverability Codes (SMR).

(1) Source Code. Source codes indicate the manner of acquiring support items for maintenance, repair or overhaul of end items. Source codes are entered in the first and second positions of the Uniform SMR Code format as follows:

Code	Definition
PA	Item procured and stocked for anticipated or known usage.
PB	Item procured and stocked for insurance purpose because essentially dictates that a minimum quantity be available in the supply systems.
PC	Item procured and stocked and which otherwise would be coded PA except that it is deteriorative in nature.
PD	Support item, excluding support equipment, procured for initial issue or outfitting and stocked only for subsequent or additional initial issues or outfittings. Not subject to automatic replenishment.
PE	Support equipment procured and stocked for initial issue or outfitting to specified maintenance repair activities.
PF	Support equipment which will not be stocked but which will be centrally procured on demand.
PG	Item procured and stocked to provide for sustained support for the life of the equipment. It is applied to an item peculiar to the equipment which, because of probable discontinuance or shutdown of production facilities, would prove uneconomical to reproduce at a later time.
KD	An item of a depot overhaul/repair kit and not purchased separately. Depot kit defined as a kit that provides items required at the time of overhaul or repair.
KF	An item of a maintenance kit and not purchased separately. Maintenance kit defined as a kit that provides an item that can be replaced at Aviation Unit or Aviation Intermediate levels of maintenance.
KB	Item included in both a depot overhaul/repair kit and a maintenance kit procured on demand.

MO	Item to be manufactured or fabricated at the Aviation Unit Maintenance level.
MF	Item to be manufactured or fabricated at the Aviation Intermediate maintenance level.
MD	Item to be manufactured or fabricated at the depot maintenance level.
AO	Item to be assembled at the Aviation Unit Maintenance level.
AF	Item to be assembled at the Aviation Intermediate Maintenance level.
AD	Item to be assembled at depot maintenance level.
XA	Item is not procured or stocked because the requirements for the item will result in the replacement of the next higher assembly.
XB	Item is not procured or stocked. If not available through salvage, requisition.
XD	A support item that is not stocked. When required, item will be procured through normal supply channels.
XC	Installation drawing, diagram, instruction sheet, field service drawing, that is identified by manufacturer's part number.

NOTE

Cannibalization or salvage may be used as a source of supply for any items source coded above except those coded XA and aircraft support items as restricted by AR 700-42.

(2) Maintenance Code. Maintenance codes are assigned to indicate the levels of maintenance authorized to USE and REPAIR support items. The maintenance codes are entered in the third and fourth positions of the Uniform SMR Code format as follows:

(a) The maintenance code entered in the third position will indicate the lowest maintenance level authorized to remove, replace and use the support item. The maintenance code entered in the third position will indicate one of the following levels of maintenance:

Code	Application/Explanation
O	Support item is removed, replaced, used at the Aviation Unit Maintenance level.
F	Support item is removed, replaced, used at the Aviation Intermediate Maintenance level.
D	Support items that are removed, replaced, used at depot, mobile depot, specialized repair activity only.

(b) The maintenance code entered in the fourth position indicates whether the item is to be repaired and identifies the lowest maintenance level with the capability to perform complete repair (i.e., all authorized maintenance functions). This position will contain one of the following maintenance codes:

Code	Application/Explanation
O	The lowest maintenance level capable of complete repair of the support item is the Aviation Unit Maintenance level.
F	The lowest maintenance level capable of complete repair of the support item is the Aviation Intermediate Maintenance level.
D	The lowest maintenance level capable of complete repair of the support item is the depot level.
L	Repair restricted to designated specialized repair activity.
Z	Nonreparable. No repair is authorized.
B	No repair is authorized. The item may be reconditioned by adjusting, lubricating, etc., at the user level. No parts or special tools are procured for the maintenance of this item.

(3) Recoverability Code. Recoverability codes are assigned to support items to indicate the disposition action on unserviceable items. The recoverability code is entered in the fifth position of the Uniform SMR Code format as follows:

Code	Definition
Z	Nonreparable item. When unserviceable, condemn and dispose at the level indicated in position 3.
O	Reparable item. When economically reparable, condemn and dispose at Aviation Unit Maintenance level.
F	Reparable item. When uneconomically reparable, condemn and dispose at the Aviation Intermediate Maintenance level.
D	Reparable item. When beyond lower level repair capability, return to depot. Condemnation and disposal not authorized below depot level.

L	Reparable item. Repair, condemnation and disposal not authorized below depot/specialized repair activity level.
A	Item requires special handling or condemnation procedures because of specific reasons (i.e., precious metal content, high dollar value, critical material or hazardous material). Refer to appropriate manuals/directives for specific instructions.

c. National Stock Number. Indicates the National stock number assigned to the item and which will be used for requisitioning purposes.

d. Part Number. Indicates the primary number used by the manufacturer (individual, company, firm, corporation, or Government activity), which controls the design and characteristics of the item by means of its engineering drawings, specifications standards and inspection requirements, to identify an item or range of items.

NOTE

When a stock numbered item is requisitioned, the item received may have a different part number than the part being replaced.

e. Federal Supply Code for Manufacturer (FSCM). The FSCM is a 5-digit numeric code listed in SB 708-42 which is used to identify the manufacturer, distributor, or Government agency, etc.

f. Description. Indicates the Federal item name and, if required, a minimum description to identify the item. Items that are included in kits and sets are listed below the name of the kit or set with the quantity of each item in the kit or set indicated in the quantity incorporated in unit column. In the Special Tools List, the initial basis of issue (BOI) appears as the last line in the entry for each special tool, special TMDE, and other special support equipment. When density of equipments supported exceeds density spread indicated in the basis of issue, the total authorization is increased accordingly.

g. Unit of Measure (U/M). Indicates the standard of the basic quantity of the listed item as used in performing the actual maintenance function. This measure is expressed by a two-character alphabetical abbreviation (e.g., ea, in., pr, etc.). When the unit of measure differs from the unit of issue, the lowest unit of issue that will satisfy the required units of measure will be requisitioned.

h. Quantity Incorporated in Unit. Indicates the quantity of the item used in the breakout shown on the illustration figure, which is prepared for a functional group, subfunctional group, or an assembly. A "V" appearing in this column in lieu of a quantity indicates that no specific quantity is applicable (e. g. , shims, spacers, etc.).

C-4. Special Information. Not applicable.

C-5. How to Locate Repair Parts

a. When National Stock Number or Part Number is Unknown.

(1) First. Find the illustration covering the assembly to which the item belongs.

(2) Second. Identify the item on the illustration and note the illustration figure and item number of the item.

(3) Third. Using the Repair Parts Listing, find the figure and item number noted on the illustration.

b. When National Stock Number or Part Number is Known.

(1) First. Using the Index of National Stock Numbers and Part Numbers, find the pertinent National stock number or part number. This index is in ascending NIIN sequence followed by a list of part numbers in alphanumeric sequence, cross-referenced to the illustration figure number and item number.

(2) Second. After finding the figure and item number, locate the figure and item number in the repair parts list.

C-6. Abbreviations. Not applicable.

(1) ILLUSTRATION (a) FIG NO.	(b) ITEM NO.	(2) SMR CODE	(3) NATIONAL STOCK NUMBER	(4) PART NUMBER	(5) FSCM	(6) DESCRIPTION *USABLE ON CODE*	(7) U/M	(8) QTY INC IN UNIT
						SECTION II.		
						REPAIR PARTS		
						GROUP 02 EXTERNAL HOUSING ASSEMBLY		
3-1		XDFFF		2-02-3-6000	30946	HOUSING ASSEMBLY EXTERNAL	EA	1
3-1	1	XDFZZ		2-02-3-6001	30946	PANEL, FRONT	EA	1
3-1	2	XDFZZ		2-02-3-6002	30946	COVER, TOP REAR	EA	1
3-1	3	XDFZZ		2-02-3-6003	30946	COVER, TOP MAIN	EA	1
3-1	4	XDFZZ		2-02-3-6004	30946	PANEL, PUMP A	EA	1
3-1	5	XDFZZ		2-02-3-6005	30946	COVER, CONTROL PANEL	EA	1
3-1	6	XDFZZ		2-02-3-6006	30946	BRACKET, HOSE	EA	2
3-1	7	XDFZZ		2-02-3-6007	30946	HOOK, HOSE STORING	EA	2
3-1	8	XDFZZ		16-10-201-11	94222	LATCH, DOOR	EA	2
3-1		XDFZZ		16-0-2345-16	9422Z	LOCKWASHER	EA	2
3-1	9	XDFZZ		TL100A	72794	LATCH, SUITCASE	EA	11
3-1	10	XDFZZ		TL100-5	72794	STRIKE, LATCH	EA	11
3-1	11	XDFZZ	9905-00-202-3635	MS35387-2	96906	REFLECTOR, AMBER	EA	4
3-1	12	XDFZZ	9905-00-205-2795	MS35387-1	96906	REFLECTOR, REC	EA	4
3-1	13	XDFZZ	5305-00-849-3943	MS9316-04	96906	SCREW, MACHINE	EA	150
3-1	14	XDFZZ	5310-00-877-5757	MS21044N3	96906	NUT, SELF LOCKING	EA	150
3-1	15	XDFZZ	5305-00-068-0502	MS90725-6	96906	SCREW, CAP, HEXAGON	EA	12
3-1	16	XDFZZ	5310-00-761-6882	MS35690-402	96006	NUT, PLAIN, HEXAGON	EA	12
3-1	17	XDFZZ	5310-00-582-5965	MS35338-44	96906	WASHER, LOCK	EA	12
3-1	19	XDFZZ		MS51937-2	96906	BOLT, EYE	EA	4
3-1	19	XDFZZ		MS35690-502	96906	NUT	EA	4
3-1	20	XDFZZ		2-02-3-6008	30946	WASHER	EA	4
3-1		XDFZZ		2-02-3-6009	30946	STIFFENER, BOTTOM	EA	2
3-1	21	XDFFF		2-02-3-6010	30946	SUPPORT, SIDE RH	EA	1
3-1	22	XDFZZ		2-02-3-6011	30946	SUPPORT, SIDE LH	EA	1
3-1	23	XDFZZ		2-02-3-6012	30946	SUPPORT, CORNER, RH	EA	1
3-1	24	XDFZZ		2-02-3-6013	30946	SUPPORT, CORNER LH	EA	1
3-1	29	XDFZZ		2-02-3-6014	30946	SUPPORT. FRONT	EA	2
3-1	26	XDFZZ		M535223-63	96906	SCREW, MACHINE	EA	6
3-1	27	XDFZZ	5310-00-877-5757	MS21044N3	96906	NUT, SELF-LOCKING	EA	6
3-1	38	XDFFF		2-02-3-6100	30946	PANEL ASSEMBLY RH	EA	1
3-1	39	XDFZZ		2-02-3-6106	30046	PANEL, REAR, RH	EA	1
3-1	40	XDFZZ		2-02-3-6102	30946	DOOR, LH	EA	1
3-1	41	XDFZZ		2-02-3-6103	30946	DOOR, RH	EA	1
3-1	42	XDFZZ		2-02-3-6104	30946	PANEL, CENTER	EA	1
3-1		XDFZZ		2-02-3-6106	30946	ANGLE, REAR TOP	EA	1

(1) ILLUSTRATION (a) FIG NO.	(b) ITEM NO.	(2) SMR CODE	(3) NATIONAL STOCK NUMBER	(4) PART NUMBER	(5) FSCM	(6) DESCRIPTION USABLE ON CODE	(7) U/M	(8) QTY INC IN UNIT
3-1		XDFZZ		2-02-3-6107	30946	ANGLE, LOWER, RH	EA	1
3-1		XDFZZ		2-02-3-6108	30946	ANGLE, UPPER RH	EA	1
3-1	43	XDFZZ		2-02-3-6105	30946	PANEL, FRONT	EA	1
3-1	44	XDFZZ		16-10-203-11	94222	LATCH, DOOR	EA	2
3-1		XDFZZ		16-0-2345-16	94222	LOCKWASHER	EA	2
3-1		XDFZZ		2-03-1-7108	30946	HINGE, LOCKING LH	EA	1
3-1		XDFZZ		2-03-1-7109	30946	HINGE, LOCKING RH	EA	1
3-1		XDFZZ		MS35223-63	96906	SCREW, MACHINE	EA	6
3-1		XDFZZ	5310-00-877-5797	MS21044N3	96906	NUT, SELF-LOCKING	EA	6
3-1	45	XDFFF		2-02-3-6200	30946	PANEL, ASSY LH	EA	1
3-1	46	XDFZZ		2-02-3-6201	30946	PANEL, LEFT REAR	EA	1
3-1	47	XDFZZ		2-02-3-6202	30946	PANEL, CENTER	EA	1
3-1	48	XDFZZ		2-02-3-6203	30946	DOOR, RH	EA	1
3-1	49	XDFZZ		2-02-3-6204	30946	DOOR, LH	EA	1
3-1	50	XDFZZ		2-02-3-6205	30946	PANEL, FRONT LH	EA	1
3-1		XDFZZ		2-02-3-6206	30946	ANGLE, REAR TOP	EA	1
3-1		XDFZZ		2-02-3-6207	30946	ANGLE, LOWER LH	EA	1
3-1		XDFZZ		2-02-3-6208	30946	ANGLE, UPPER LH	EA	1
3-1	51	XDFZZ		16-10-203-11	94222	LATCH, DOOR	EA	2
3-1		XDFZZ		16-0-2345-16	94222	LOCKWASHER	EA	2
3-1		XDFZZ		2-03-1-7108	30946	HINGE, LOCKING LH	EA	1
3-1		XDFZZ		2-03-1-7109	30946	HINGE, LOCKING RH	EA	1
3-1		XDFZZ		MS35223-63	96906	SCREW, MACHINE	EA	6
3-1		XDFZZ	5310-00-877-5797	MS21044N3	96906	NUT, SELF-LOCKING	EA	6
						GROUP 03 INTERNAL COMPONENTS		
3-2		XDFFF		2-02-3-4010	30946	COMPONENT ASSEMBLY, INTERNAL	EA	1
3-2	1	XDFFF		2-02-3-4110	30946	OIL TANK ASSY SEE FIG. 3-5 FOR BREAKDOWN	EA	1
3-2	2	XDFZZ		MS90725-114	96906	SCREW, MACHINE	EA	4
3-2	3	XDFZZ		MS35690-802	96906	NUT, HEX	EA	4
3-2	4	XDFZZ		MS35338-48	96906	LOCKWASHER	EA	4
3-2	5	XDFZZ	5310-00-819-2441	NAS1099-8	80205	WASHER, BEVEL	EA	4
3-2	6	XDOOO		P32-53	05228	LP FILTER SEE FIG. 3-6 FOR BREAKDOWN	EA	1
3-2	7	PBOZZ	5305-00-006-6574	MS90725-60	96906	SCREW, CAR, HEXAGON	EA	4
3-2	8	XDOZZ		MS35690-602	96906	NUT HEX	EA	4
3-2	9	PBOZZ	5310-00-006-6574	MS35338-46	96906	WASHER, LOCK	EA	4
3-2	10	XDOOO		ADHT5458E9716MD8	01414	FILTER SEE FIG.3-7 FOR BREAKDOWN	EA	1
3-2	11	XDOZZ	5306-00-225-8499	MS90725-34	96906	SCREW, MACHINE	EA	4
3-2	12	XDOZZ		MS35690-502	96906	NUT, HEX	EA	4

(1) ILLUSTRATION (a) FIG NO.	(b) ITEM NO.	(2) SMR CODE	(3) NATIONAL STOCK NUMBER	(4) PART NUMBER	(5) FSCM	(6) DESCRIPTION *USABLE ON CODE*	(7) U/M	(8) QTY INC IN UNIT
3-2	13	XDOFF	5310-00-407-9566	MS35338-45	96906	LOCKWASHER	EA	4
3-2	14	XDFFF		2-02-3-3010	30946	COOLER FAN ASSEMBLY		
						SEE FIG.3-8 FOR BREAKDOWN	EA	1
3-2	15	XDFFF	5305-00-044-4153	MS90725-109	96906	SCREW	EA	4
3-2	16	XDFZZ		MS35690-802	96906	NUT, HEX	EA	4
3-2	17	XDFZZ		MS35338-48	96906	LOCKWASHER	EA	4
3-2	18	XDFFF		015-25634	16954	PUMP, HIGH PRESS		
						SEE FIG.3-9 FOR BREAKDOWN	EA	1
3-2		XDFZZ		2-03-1-1114	30946	STUD	EA	12
3-2	19	XDFZZ		MS35690-622	96906	NUT, HEX	EA	12
3-2	20	XDFZZ		MS35338-46	69606	LOCKWASHER	EA	12
3-2	21	PBFFF		ASS28678-1250	38151	MOTOR, ELECTRIC SEE FIG.3-11		
						FOR BREAKDOWN	EA	1
3-2	22	PBFZZ	5305-00-724-5911	MS9C725-163	96906	SCREW, CAP, HEXAGON	EA	4
3-2	23	XDFZZ		MS3560-1002	96906	NUT HEX	EA	4
3-2	24	XDFZZ		MS35338-50	96906	WASHER, LOCK	EA	4
3-2	25	XDFFF		MPG50BT43YB	64294	FILL MOTOR PUMP	EA	1
3-2		PBFZZ	4320-01-046-4052	43YBC33L	64294	PUMP, ROTARY	EA	1
3-2		PBFZZ	5306-00-225-8497	MS90725-32	96906	BOLT, MACHINE	EA	4
3-2		XDFZZ		36156	64294	BODY	EA	1
3-2		XDFZZ		AD6C3205-00	92940	MOTOR	EA	1
3-2	26	XDFZZ		2-02-3-4001	30946	SPACER	EA	2
3-2	27	PBFZZ	5306-00-225-8504	MS90725-40	96906	BOLT, MACHINE	EA	2
3-2	28	XDFZZ		MS35690-502	96906	NUT HEX	EA	2
3-2	29	XDFZZ	5310-00-269-3241	MS90725-60	96906	SCREW HEX CAP	EA	2
3-2	30	XDFZZ		2-02-3-4104	30946	TOOL BOX	EA	1
3-2	31	PBFZZ	5306-00-269-3241	MS90725-60	96906	SCREW HEX CAP	EA	2
3-2	32	XDFZZ		MS35690-602	96906	NUT HEX	EA	2
3-2	33	XDFZZ		MS35338-46	96906	LOCKWASHER	EA	2
						GROUP 0302 CONTROL PANEL		
3-3		XDFFF		2-02-3-5020	30946	PANEL ASSY CONT	EA	1
3-3	1	PBFZZ	5305-00-849-3943	MS9316-04	96906	SCREW, MACHINE	EA	19
3-3	2	XDFZZ		MS21044-N3	96906	LOCKNUT	EA	19
3-3	3	PBFZZ	4730-00-715-0018	MS2439304	96906	NIPPLE, TUBE	EA	1
3-3	4	PBFZZ	5310-00-159-6339	AN924-4D	88044	NUT, PLAIN HEXAGON	EA	1
3-3	5	PBFZZ	4730-00-278-5006	AN929-4D	88044	CAP, TUBE	EA	1
3-3	6	XDFZZ		2-02-3-5010	30946	BUSHING	EA	1
3-3	7	XDFZZ		3/8-18NPS	30946	NUT, PLAIN, HEXAGON	EA	2
3-3	8	XDOZZ		47-34C2-2900-301	72619	LIGHT, PANEL	EA	1

(1) ILLUSTRATION (a) FIG NO.	(b) ITEM NO.	(2) SMR CODE	(3) NATIONAL STOCK NUMBER	(4) PART NUMBER	(5) FSCM	(6) DESCRIPTION USABLE ON CODE	(7) U/M	(8) QTY INC IN UNIT
3-3	9	XDOFF		656D024V	08806	LAMP INCANDESCENT	EA	1
3-3	10	PBOZZ	6210-00-299-4104	MS25331-6	96906	LIGHT INDICATOR	EA	1
3-3	11	PBOZZ	6240-00-143-3173	1820	08806	LAMP INCANDESCENT	EA	1
3-3	12	XDOZZ		1377D02B	38056	GAGE, HIGH PRESSURE	EA	1
3-3	13	XDOZZ		2-02-3-5006	30946	GASKET	EA	1
3-3	14	XDOZZ		MS35239-72	96906	SCREW, MACHINE	EA	3
3-3	15	XDFZZ		2-03-1-6004	30946	GAGE LOW PRESSURE	EA	1
3-3	16	XDOZZ		2-02-3-5007	30946	GASKET	EA	1
3-3	17	XDOZZ	5305-00-899-3001	AN515-6-10	88044	SCREW, MACHINE	EA	3
3-1	18	PBOZZ	6685-01-017-2417	644CTW0	38056	GAGE, TEMPERATURE	EA	1
3-3	19	PBOZZ	6695-00-497-1630	1278A	38056	BEZEL, INSTRUMENT	EA	1
3-3	20	XDOZZ		2-02-3-5008	30946	GASKET	EA	1
3-3		XDOZZ		2-02-3-5011	30946	COVER, FLOWMETER	EA	1
3-3		PAOZZ	5305-00-889-3000	MS35206-230	96906	SCREW, MACHINE	EA	4
3-3		PBOZZ	5310-00-082-1404	MS27183-6	96906	WASHER, FLAT	EA	4
3-3		XDOFF		57-41	95263	LAMPHOLDER	EA	2
3-3		PBOZZ		1252	08806	LAMP, INCANDESCENT	EA	2
3-3		XDOZZ		AN515-10-6	88044	SCREW, MACHINE	EA	2
3-3		XDOZZ		MS35640-102	96906	NUT, PLAIN HEXAGON	EA	2
3-3		PBOZZ	5310-00-045-3296	MS35338-43	96906	WASHER, LOCK	EA	2
3-3	21	XDOZZ		4WGTX-S	30780	UNION, PIPE	EA	1
3-3	22	PBOZZ	5310-00-208-5769	AN924-4	88044	NUT, PLAIN, HEXAGON	EA	1
3-3	23	XDFZZ		145-1-88	86768	VALVE	EA	1
3-3	24	XDFZZ		720HTX6D	86768	VALVE, FILL	EA	1
3-3	25	XDFZZ		AN515-8-6	88044	SCREW, MACHINE	EA	4
3-3	26	XDFZZ	5310-00-045-3296	MS35338-43	96906	WASHER, LOCK	EA	4
3-3	27	XDFFF		2-03-1-6003	30946	SIGHT TUBE	EA	1
3-3	28	XDFZZ	4730-00-060-5754	AN89405-4	88044	BUSHING	EA	2
3-3	29	XDFZZ	5330-00-833-7491	MS28778-5	96906	PACKING, PREFORMED	EA	2
3-3	30	XDFZZ		2-03-1-6002	30946	VALVE, PRESSURE	EA	1
3-3	31	XDFZZ		AN515-8-6	88044	SCREW, MACHINE	EA	3
3-3	32	XDFZZ		68981-1-402	86768	VALVE, FILTER BLEED	EA	1
3-3	33	XDFZZ		MS35223-45	96906	SCREW, MACHINE	EA	4
3-3	34	PBOZZ	6680-01-016-5807	20-4101 SPEC	53553	FLOWMETER	EA	1
3-3	35	XDOZZ	5305-00-068-0502	MS90725-6	96906	SCREW, CAP, HEXAGON	EA	4
3-3	36	XDOZZ	5310-00-809-4058	MS27183-10	96906	WASHER, FLAT	EA	4
3-3	37	XDOZZ	5310-00-582-5965	MS35338-44	96906	WASHER, LOCK	EA	4
3-3	38	XDFFF		2-10-3-5100	30946	MANIFOLD ASSEMBLY SEE FIG.3-12 FOR BREAKDOWN	EA	1
3-3	39	PBFZZ	5305-00-068-0502	MS90725	96906	SCREW, CAP, HEXAGON	EA	4
3-3	40	PBFZZ	5310-00-809-4058	MS27183-10	96906	WASHER, FLAT	EA	4

(1) ILLUSTRATION (a) FIG NO.	(b) ITEM NO.	(2) SMR CODE	(3) NATIONAL STOCK NUMBER	(4) PART NUMBER	(5) FSCM	(6) DESCRIPTION *USABLE ON CODE*	(7) U/M	(8) QTY INC IN UNIT
3-3	41	PBFZZ	5310-00-582-5965	MS35338	96906	WASHER, LOCK	EA	4
3-3	42	XDOZZ		RC-0901-0533-301	52830	INDICATOR, LIGHT	EA	1
3-3	43	PBOZZ		686-125V	08806	LAMP, INCANDESCENT	EA	1
3-3	44	XDFZZ		R1-1A-AB1	52830	PUSHBUTTON, BLUE	EA	1
3-3	45	XDFZZ		R1-1B-AB1	52830	PUSHBUTTON, RED	EA	1
3-3	46	PBFZZ	6680-00-221-1037	6431059	70040	INDICATOR, LIGHT	EA	1
3-3	47	PBFZZ	6685-00-585-4430	BB14WPH14RW	64467	GAGE, PRESSURE, DIAL	EA	1
3-3	48	XDFZZ		2-02-3-5009	30946	GASKET	EA	1
3-3	49	XDFZZ		MS35239-72	96906	SCREW, MACHINE	EA	3
3-3	50	XDFZZ		R4-28-44B7	52830	HOUR METER	EA	1
3-3	51	PAFZZ	5305-00-889-3000	MS35206-230	96906	SCREW, MACHINE	EA	3
3-3	52	PBFZZ	5930-00-655-1514	MS35058-22	96906	SWITCH, TOGGLE	EA	4
3-3	53	XDFZZ		R4-2B-4B7	52830	PUSHBUTTON	EA	1
3-3	54	XDFZZ		2-02-3-5102	30946	PANEL, HYDRAULIC, RED	EA	1
3-3	55	XDFZZ		2-10-3-5403	30946	PANEL, ELECTRICAL	EA	1
3-3	56	XDFZZ		2-10-3-5502	30946	PANEL, YELLOW	EA	1
						GROUP 0303 HYDRAULIC COMPONENTS		
3-4		XDFFF		2-02-3-7001	30946	HYDRAULIC ASSEMBLY	EA	1
3-4	1	XDFZZ		2-023-4111	30946	OIL, TANK	EA	1
3-4	2	XDOFF		015-25634	16954	PUMP, HIGH PRESSURE SEE FIG.3-9 FOR BREAKDOWN	EA	1
3-4	3	XDOOO		P32-53	05228	LP FILTER SEE FIG.3-6 FOR BREAKDOWN	EA	1
3-4	4	XDFZZ		11530X1	50184	COOLER	EA	1
3-4	5	XDOZZ		2-03-1-6302	30946	FILTER, HIGH PRESSURE SEE FIG.3-7 FOR BREAKDOWN	EA	1
3-4	6	XDOOO		ADHT5458E9716MD3	05228	LP FILTER SEE FIG.3-6 FOR BREAKDOWN	EA	1
3-4	7	XDFZZ		2-02-3-5101	30946	MANIFOLD	EA	1
3-4	8	XDFZZ		MPG50BT43YB	64294	FILL MOTOR PUMP	EA	1
3-4	9	XDOFF		78804	76906	GAGE SNUBBER	EA	1
3-4	11	XDFZZ		720HTX6D	86768	VALVE FILL	EA	1
3-4	12	XDFFF		2-03-1-6003	30946	VALVE PRESS SEL	EA	1
3-4	13	XDFZZ		689B1-1-4D2	86768	VALVE BLEED	EA	1
3-4	14	XDFZZ		2-03-1-6002	30946	VALVE PRESS SEL	EA	1
3-4	15	XDFZZ		458-6S2-6	86768	VALVE CHECK	EA	1
3-4	16	XDOZZ	4330-00-288-6907	MS28720-12	96906	FILTER, FLUID, PRESSURE	EA	1
3-4	17	PBOZZ	6685-01-017-2417	6440TW0	38056	THERMOMETER, INDICATOR	EA	1
3-4	18	PBFZZ	6685-00-585-4430	BB14WPH14RW	64467	GAGE, PRESSURE	EA	1
3-4	19	XDFZZ		2-03-1-6004	30946	GAGE	REF	1
3-4	20	XDOFF		1377D02B	38056	GAGE, HP	EA	1
3-4	21	XDFZZ	5930-00-259-9496	17121-0	73168	SWITCH TEMP	EA	1

(1) ILLUSTRATION (a) FIG NO.	(b) ITEM NO.	(2) SMR CODE	(3) NATIONAL STOCK NUMBER	(4) PART NUMBER	(5) FSCM	(6) DESCRIPTION USABLE ON CODE	(7) U/M	(8) QTY INC IN UNIT
3-4	22	XDFZZ		611G2678S	090491	SWITCH PRFSS	EA	1
3-4	23	XD000		3C017	05228	FILTER FILL SEE FIG.3-13 FOR BREAKDOWN	EA	1
3-4	24	XDFZZ		1AR41-R-20-T-5-S	96259	RELIEF VALVE LP	EA	1
3-4	25	XDFZZ		458-12D27-6	86768	VALVE CHECK	EA	1
3-4	26	XDFZZ		CR4COS10-10	09990	RELIEF VALVE	EA	1
3-4	27	XDFZZ		MS28885-24D	96906	VALVE CHECK RE	EA	1
3-4	28	XDFZZ		744-24D	86768	VALVE 4-WAY	EA	1
3-4	29	XDFFF		2-02-3-7210	30946	RET MANIFOLD SEE FIG.3-14 FOR.. BREAKDOWN	EA	1
3-4	30	XDFZZ		404HTX6D3	86768	VALVE CHECK	EA	1
3-4	31	XDFZZ		1360-6 SAE	10129	VALVE RELIEF	EA	1
3-4	32	XDFZZ		4C4HTX803	86768	VALVE CHECK	EA	1
3-4	33	XDFZZ		611G27665	09049	SWITCH PRESS	EA	1
3-4	34	XD0ZZ		2-10-3-7002	30946	TUBE NO 24	EA	1
3-4	35	XD0ZZ		2-10-3-7003	30946	TUBE NO 24	EA	1
3-4	36	XD0ZZ		2-10-3-7004	30946	TUBE NO 24	EA	1
3-4	37	XD0ZZ		2-02-3-7081	30946	TUBE	EA	1
3-4	38	XD0ZZ		2-02-3-7082	30946	TUBE	EA	1
3-4	39	XD0ZZ		2-02-3-7061	30946	TUBE	EA	1
3-4	40	XD0ZZ		2-02-3-7061	30946	TUBE NO 24	EA	1
3-4	41	XD0ZZ		2-02-3-7084	30946	TUBE	EA	1
3-4	42	XD0ZZ		2-10-3-7016	30946	TUBE NO 24	EA	1
3-4	43	XD0ZZ		2-02-3-7085	30946	TUBE	EA	1
3-4	44	XD0ZZ		2-10-3-7012	30946	TUBE NO 24	EA	1
3-4	45	XDZZZ		2-02-3-7086	30946	TUBE	EA	1
3-4	46	XD0ZZ		2-10-3-7014	30946	TUBE NO 24	EA	1
3-4	47	XD0ZZ		2-10-3-7104	30946	TUBE	EA	1
3-4	48	XD0ZZ		2-10-3-7022	30946	TUBE NO 16	EA	1
3-4	49	XD0ZZ		2-10-3-7023	30946	TUBE NO 16	EA	1
3-4	50	XD0ZZ		2-10-3-7024	30946	TUBE NO 16	EA	1
3-4	51	XD0ZZ		2-02-3-7087	30946	TUBE	EA	1
3-4	52	XD0ZZ		2-10-3-7026	30946	TUBE NO 1	EA	1
3-4	53	XD0ZZ		2-02-3-7088	30946	TUBE	EA	1
3-4	54	XD0ZZ		2-10-3-7028	30946	TUBE NO 8	EA	1
3-4	55	XD0ZZ		2-10-3-7029	30946	TUBE NO 8	EA	1
3-4	56	XD0ZZ		2-10-3-7030	30046	TUBE NO 8	EA	1
3-4	57	XD0ZZ		2-10-3-7031	30946	TUBE NO 6	EA	1
3-4	58	XD0ZZ		2-1-03-7037	30946	TUBE NO 6	EA	1
3-4	59	XD0ZZ		2-02-3-7062	30946	TUBE NO 6	EA	1
3-4	60	XD0ZZ		2-10-3-7034	30946	TUBE NO 6	EA	1
3-4	61	XD0ZZ		2-02-3-7089	30946	TUBE	EA	1

(1) ILLUSTRATION (a) FIG NO.	(b) ITEM NO.	(2) SMR CODE	(3) NATIONAL STOCK NUMBER	(4) PART NUMBER	(5) FSCM	(6) DESCRIPTION USABLE ON CODE	(7) U/M	(8) QTY INC IN UNIT
3-4	62	XD0ZZ		2-10-3-7036	30946	TUBE NO 6	EA	1
3-4	61	XD0ZZ		2-10-3-7037	30946	TUBE NO 6	EA	1
3-4	64	XD0ZZ		2-10-3-7038	30946	TUBE NO 6	EA	1
3-4	65	XD0ZZ		2-10-3-7039	30946	TUBE NO 6	EA	1
3-4	66	XD0ZZ		2-10-3-7040	30946	TUBE NO 4	EA	1
3-4	67	XD0ZZ		2-10-3-7041	30946	TUBE NO 4	EA	1
3-4	68	XD0ZZ		2-10-3-7042	30946	TUBE NO 4	EA	1
3-4	69	XD0ZZ		2-10-3-7043	30946	TUBE NO 4	EA	1
3-4	70	XD0ZZ		2-02-3-7090	30946	TUBE	EA	1
3-4	71	XD0ZZ		2-10-3-7045	30946	TUBE NO 4	EA	1
3-4	72	XD0ZZ		2-10-3-7046	30946	TUBE NO 4	EA	1
3-4	73	XD0ZZ		2-10-3-7047	30946	TUBE NO 4	EA	1
3-4	74	XD0ZZ		2-02-3-7091	30946	TUBE	EA	1
3-4	75	XD0ZZ		2-02-3-7092	30946	TUBE	EA	1
3-4	76	XD0ZZ		2-10-3-7050	30946	TUBE NO 4	EA	1
3-4	77	XD0ZZ		2-10-3-7051	30946	TUBE NO 4	EA	1
3-4	78	XD0ZZ		MS28741-6-0160	96906	HOSE LP NO 6	EA	1
3-4	79	XD0ZZ		MS28741-4-0160	96906	HOSE LP NO 4	EA	1
3-4	80	XD0ZZ		MS28759-4-0160	96906	HOSE HP NO 4	EA	1
3-4	81	XD0ZZ		TA155-54-160	00624	COUPLING HALF	EA	1
3-4	82	PB0ZZ	4730-00-546-4736	15557-16D	00624	CAP, QUICK DISCONNECT	EA	1
3-4	83	XD0ZZ		B145-S4-24D	00624	COUPLING HALF	EA	1
3-4	84	XD0ZZ		145-S7-24D	006241	CAP, DUST	EA	1
3-4	85	XD0ZZ		TBI55-S4-8D	00624	COUPLING HALF, BULK H	EA	1
3-4	86	XD0ZZ		155-S7-8D	00624	DUST CAP	EA	1
3-4	87	XD0ZZ		TA155-S4-12D	00624	COUPLING HALF	EA	1
3-4	88	PB0ZZ	4730-00-561-1544	155S7-12D	00624	CAP, QUICK DISCONNECT	EA	1
3-4	89	XD0ZZ		TA155-S4-12D	00624	NIPPLE	EA	2
3-4	90	PB0ZZ	4730-00-197-2911	AN833-6D	88044	ELBOW, TUBE	EA	1
3-4	91	XD0ZZ		AN919-27D	88044	REDUCER	EA	1
3-4	92	PB0ZZ	4730-00-722-0086	MS24402D8	96906	TEE, TUBE	EA	1
3-4	93	XD0ZZ		NAS1564D8-6	88044	REDUCER TUBE	EA	1
3-4	94	PB0ZZ	4730-00-287-0288	AN818-8D	88044	NUT, TUBE COUPLING	EA	1
3-4	95	XD0ZZ		2062-6-4S	00624	ELBOW SWIVEL	EA	4
3-4	96	XD7ZZ		60TX-S	30780	TEE-FEMALE	EA	1
3-4	97	PB0ZZ	4730-00-722-120	MS24402D6	96906	TEE, TUBE	EA	1
3-4	98	XD0ZZ		AN804-60	88044	TEE BULKHEAD	EA	2
3-4	99	PB0ZZ	4730-00-754-6209	NAS156406-4	80205	REDUCER, TUBE	EA	2
3-4	100	PB0ZZ	4730-00-147-2167	AN818-6D	88044	NUT, TUBE COUPLING	EA	22
3-4	101	XD0ZZ		108-04	76906	SNUBBER, GAGE	EA	2

(1) ILLUSTRATION (a) FIG NO.	(b) ITEM NO.	(2) SMR CODE	(3) NATIONAL STOCK NUMBER	(4) PART NUMBER	(5) FSCM	(6) DESCRIPTION *USABLE ON CODE*	(7) U/M	(8) QTY INC IN UNIT
3-4	102	PB0ZZ	5365-00-146-0155	AN814-60	88044	PLUG, MACHINE THREAD	EA	1
3-4	103	XD0ZZ		AN804-120	88044	TEE, BULKHEAD RUN	EA	2
3-4	104	XD0ZZ		1201PS-1-1	30946	PRESSURE SWITCH, DIF	EA	2
3-4	105	XD0ZZ		4HPCN-S	30780	PLUG	EA	1
3-4	106	PB0ZZ	5365-00-804-7915	M524397D2	96906	BUSHING, MACHINE	EA	1
3-4	107	XD0ZZ		AN804-4D	88044	TEE BULKHEAD	EA	1
3-4	108	PB0ZZ	4730-00-402-4404	AN833-4D	88044	ELBOW, TUBE	EA	1
3-4	109	PB0ZZ	4730-00-278-5006	AN929-40	88044	CAP, TUBE	EA	1
3-4	110	XD0ZZ		MS20823-4-4D	96906	ELBOW	EA	2
3-4	111	PB0ZZ	4730-00-722-1207	MS24402D4	96906	TEE, TUBE	EA	2
3-4	112	PB0ZZ	5310-00-208-4134	AN924-24D	88044	NUT, PLAIN, HEXAGON	EA	1
3-4	113	PB0ZZ	5310-00-202-7830	MS24400-16	96906	NUT, PLAIN, HEXAGON	EA	1
3-4	114	PB0ZZ	5310-00-638-2605	M5244C0D06	96906	NUT, PLAIN, HEXAGON	EA	2
3-4	115	PB0Z	5310-00-282-7823	MS244C0D4	96906	NUT, PLAIN, HEXAGON	EA	4
3-4	116	PB0ZZ	4730-00-925-4752	AN815-4D	88044	NIPPLE, TUBE	EA	1
3-4	117	PB0ZZ	4730-00-186-9828	AN815-6D	88044	NIPPLE, TUBE	EA	1
3-4	118	XD0ZZ		AN815-24D	88044	UNION TUBE	EA	3
3-4	119	XD0ZZ	4730-00-277-6445	AN832-4D	88044	NIPPLE, TUBE	EA	1
3-4	120	PB0ZZ	5310-00-282-7831	MS24400-12	96906	NUT, PLAIN, HEXAGON	EA	1
3-4	121	XDFZZ	5330-00-819-5111	MS28778-24	96906	PACKING, PREFORMED	EA	15
3-4	122	PB0ZZ	5330-00-816-3546	MS778-20	96906	PACKING, PREFORMED	EA	3
3-4	123	PB0ZZ	5330-00-804-5694	MS28778-16	96906	PACKING, PREFORMED	EA	9
3-4	124	PB0ZZ	5330-00-251-8839	MS28778-12	96906	PACKING, PREFORMED	EA	2
3-4	125	XD0ZZ		MS28778-6	96906	O-RING	EA	12
3-4	126	XD0ZZ		MS28778-4	96906	O-RING	EA	1
3-4	127	XC0ZZ		4-WGBTX-S	45722	FITTING, FEMALE BULK	EA	1
3-4	128	XD0ZZ		NAS424-16	80205	COUPLING	EA	1
3-4	129	XD0ZZ		AN804-16	88044	TEE, BULKHEAD RUN	EA	1
3-4	130	XD0ZZ		NAS1564-16-8	80205	REDUCER	EA	1
3-4	131	XD0ZZ	5330-00-833-7491	MS28778-5	96906	PACKING, PREFORMED	EA	1
3-4	132	PB0ZZ	4730-00-287-0278	AN818-16	88044	NUT, TUBE COUPLING	EA	8
3-4	133	XD0ZZ		2-02-3-7065	30946	SPACER	EA	2
3-4	134	XD0ZZ	5305-00-071-2231	MS90725-20	96906	SCREW HEX CAP	EA	2
3-4	135	XD0ZZ	5310-00-761-6882	MS35590-402	96906	NUT HEX	EA	2
3-4	136	XD0ZZ	5310-00-582-5965	MS35338-44	96906	LOCKWASHER	EA	2
3-4	137	PB0ZZ	4730-00-231-3904	AN915-2	88044	ELBOW, PIPE	EA	1
3-4	138	XD0ZZ		MS21919DG24	96906	TUBE CLAMP	EA	12
3-4	139	XD0ZZ	5340-00-598-4195	MS21919DG16	96906	TUBE CLAMP	EA	6
3-4	140	XD0ZZ		MS2191DG12	96906	TUBE CLAMP	EA	2
3-4	141	XD0ZZ		MS21919DG8	96906	TUBE CLAMP	EA	6

(1) ILLUSTRATION (a) FIG NO.	(b) ITEM NO.	(2) SMR CODE	(3) NATIONAL STOCK NUMBER	(4) PART NUMBER	(5) FSCM	(6) DESCRIPTION *USABLE ON CODE*	(7) U/M	(8) QTY INC IN UNIT
3-4	142	PB0ZZ	5340-99-543-4384	MS21919DG6	96906	CLAMP, LOOP	EA	10
3-4	143	XD0ZZ		MS21919DG4	96906	TUBE CLAMP	EA	10
3-4	144	XD0ZZ	5305-00-054-6674	MS51957-49	96906	SCREW RD HD	EA	25
3-4	145	XD0ZZ	5310-00-012-0622	MS35549-82	96906	NUT, HEX	EA	25
3-4	146	XD0ZZ	5310-00-045-3299	MS35338-42	96906	LOCKWASHER	EA	25
3-4	147	PB0ZZ	4730-00-277-6423	AN832-240	88044	NIPPLE, TUBE	EA	1
3-4	148	PB0ZZ	4730-00-197-2922	AN833-24D	88044	ELBOW, TUBE	EA	4
3-4	149	XD0ZZ		2-02-3-1001	30946	ELBOW, SPECIAL	EA	1
3-4	150	XD0ZZ		NAS1564-D12-14	80205	REDUCER	EA	2
3-4	151	XD0ZZ		AN837-24D	88044	ELBOW 45 BHEAD	EA	3
3-4	152	PB0ZZ	4730-00-287-0285	AN818-12D	88044	NUT, TUBE COUPLING	EA	2
3-4	153	XD0ZZ		AN804-24	88044	TEE BULKHEAD	EA	1
3-4	154	PB0ZZ	4730-00-187-0490	AN815-16	88044	NIPPLE, TUBE	EA	1
3-4	155	PB0ZZ	4730-00-843-4645	MS24394-16	96906	ELBOW, TUBE	EA	4
3-4	156	XD0ZZ	4730-00-277-5096	AN6289-16	88044	LOCKNUT, TUBE	EA	1
3-4	157	PB0ZZ	4730-00-231-3021	AN837-16	88044	ELBOW, TUBE	EA	2
3-4	158	PB0ZZ	4730-00-990-1759	MS20823-8D	96906	ELBOW, PIPE TO TUBE	EA	2
3-4	159	PB0ZZ	4730-00-196-9584	AN816-6-6D	88044	ADAPTER, STRAIGHT	EA	1
3-4	160	XD0ZZ		AN816-12-8D	88044	NIPPLE	EA	1
3-4	161	PB0ZZ	4730-00-720-0288	MS24394-14	96906	ELBOW, TUBE	EA	2
3-4	162	XD0ZZ		MS20823-8-8D	96906	ELBOW	EA	1
3-4	163	PB0ZZ	4730-00-186-9961	MS20822-4D	96906	ELBOW, PIPE TO TUBE	EA	1
3-4	164	XD0ZZ	4730-00-060-5754	AN894D5-4	88044	ADAPTER, STRAIGHT	EA	1
3-4	165	XD0ZZ	5310-00-282-7835	AN924-8D	88044	NUT, PLAIN, HEXAGON	EA	1
3-4	166	XD0ZZ		8HP50N-S	45722	PLUG	EA	3
3-4	167	XD0ZZ	5330-00-808-0794	MS28778-8	96906	PACKING, PREFORMED	EA	1
3-4	168	PB0ZZ	5310-00-208-4135	AN924-20D	88044	NUT, PLAIN, HEXAGON	EA	1
3-4	169	PB0ZZ	4730-00-879-2362	MS24393D20	96906	NIPPLE, TUBE	EA	1
3-4	170	XD0ZZ		2-02-3-7093	30946	TUBE	EA	1
3-4	171	XDD0ZZ		MS28741-4-C330	96906	HOSE LP NO 4	EA	1
3-4	172	XDFZZ		2-10-3-4300	30946	MANIFOLD LP	EA	1
3-4	173	XD0ZZ		AN826-6D	88044	TEE	EA	1
3-4	174	PB0ZZ	4730-00-187-0087	AN816-4-4D	88044	ADAPTER, STRAIGHT	EA	1
3-4	175	PB0ZZ	5310-00-208-5769	AN924-4	88044	NUT, PLAIN, HEXAGON	EA	2
3-4	177	PB0ZZ	6685-01-017-2417	6544CTW0	38056	THERMOMETER	EA	1
3-4	179	XDFZZ		145-1-88	86768	VALVE, SAMPLE	EA	1
3-4	182	XD0ZZ		2-02-3-7094	30946	TUBE	EA	1
3-4	183	XD0ZZ		2-02-3-7095	30946	TUBE	EA	1
3-4	184	XD0ZZ		2-02-3-7096	30946	TUBE	EA	1
3-4	185	XD0ZZ	5330-00-805-6478	MS28777-16	96906	BACK UP RING	EA	1

(1) ILLUSTRATION (a) FIG NO.	(b) ITEM NO.	(2) SMR CODE	(3) NATIONAL STOCK NUMBER	(4) PART NUMBER	(5) FSCM	(6) DESCRIPTION *USABLE ON CODE*	(7) U/M	(8) QTY INC IN UNIT
3-5		XDFFF		2-02-3-411C	30946	OIL TANK ASSY	EA	1
3-5	1	XOFZZ		2-02-3-4102	30946	COVER, FILLER	EA	1
3-5	2	XDFZZ		2-02-3-4103	30946	GASKET	EA	1
3-5	3	XDFZZ	5305-00-068-0500	MSQC725-3	96906	SCREW, MACHINE	EA	8
3-5	4	XDFZZ	5310-00-809-4058	MS27183-10	96906	WASHER, FLAT	EA	8
3-5	5	XDFZZ	5310-00-582-5965	MS35338-44	96906	WASHER, LOCK	EA	8
3-5	6	XOFZZ		6426396	70040	TRANSAMITTERDLLEVE	EA	1
3-5	7	XDFZZ		1516355	70040	GASKET	EA	1
3-5	8	XDFZZ		ANS15-1C-8	88044	SCREW, MACHINE	EA	5
3-5	9	XDFZZ	5310-00-045-3296	MS35338-43	96906	LOCKWASHER.	EA	5
3-5	10	XOFZZ	4730-00-541-8296	AN925-8D	88044	CAP	EA	1
3-5	11	XOFZZ	4730-00-278-5006	AN'929-4D	88044	CAP	EA	1
3-5	12	XDFZZ		2-1O-3-4104	30946	TUBE, RETURN	EA	1
3-5	13	XDFZZ	4730-00-287-272	AN818-24D	88044	NUT, COUPLING	EA	1
3-5	14	XDFZZ		AN81 9-24D	88044	SLEEVE, COUPLING	EA	1
3-5	15	XDFZZ	4730-00-277-6423	AN832-24D	8044	UNION, BULKHEAD	EA	1
3-5	16	XDFZZ	5310-00-208-4134	ANE24-24C	88044	NUT, BULKHEAD	EA	1
3-5	17	XDFZZ	5330-00-819-5111	MS28778-24	9690	PACKING PREFORMED	EA	1
3-5	18	XDFZZ		2-10-3-4105	309461	TUBE, RETURN	EA	1
3-5	19	XDFZZ	43-00-142-2167	AN818-6D	88044	NUT, COUPLING	EA	1
3-5	20	XOFZZ		AN819-6D	88044	SLEEVE, COUPLING	EA	1
3-5	21	XOFZZ		AN804-6D	88044	FITTING, TEE	EA	1
3-5	22	XOFZZ	5310-00-638-2605	AN924-6D	88044	NUT	EA	1
3-5	23	XDFZZ		MS28778-6	96906	PACKING, PREFORM	EA	1
3-5	24	PBFZZ	2805-00-989-1496	A100W	12190	PARTS KIT, BREATHER	EA	1
3-5		PBFZZ	3930-00-140-3874	A100-lW	121901	CAP ASSY	EA	1
3-5		P8FZZ	3930-00-140-3875	A100-2	12190	ADAPTER, RESERVOIR	EA	1
3-5		PBFZZ	5330-00-477-6111	A100-4	12190	GASKET	EA	2
3-5		XDFZZ	I4730-00-477-611	A100-3	12190	STRAINER ELEMENT	EA	1
3-5	25	PEFZZ	5305-00-984-6211	MS352C6-263	96906	SCREW, MACHINE	EA	6
3-5	26	XDFZZ		2-023-4111	30946	OIL TANK	EA	1
						GROUP 0305 L06 PRESSURE FILTER		
3-6		XD000		P32-53	05226	FILTER ASSEMBLY , LOW PRESSURE	EA	1
3-6	1	XD0ZZ		63387	05228	CASE- ASSY	EA	1
3-6	2	PB0ZZ	5330-00-843-1156	6653463	05228	GASKET	EA	1

(1) ILLUSTRATION (a) FIG NO.	(b) ITEM NO.	(2) SMR CODE	(3) NATIONAL STOCK NUMBER	(4) PART NUMBER	(5) FSCM	(6) DESCRIPTION *USABLE ON CODE*	(7) U/M	(8) QTY INC IN UNIT
3-6	3	XD0ZZ		60260	05228	COVER	EA	1
3-6	4	XD0ZZ		6654655	05228	CLAMPING RING	EA	2
3-6	5	XD0ZZ		6653481	05228	BOLTING	EA	2
3-6	6	XDDZZ		7335	05228	PLUG, FILLER	EA	1
3-6	7	XDDZZ		7404	05228	GASKET	EA	1
3-6	8	XDZZ		22202	05228	BRACKET ASSY	EA	2
3-6	9	PB0ZZ	5310-00-196-6695	30102	05228	GASKET	EA	3
3-6	10	PBOZZ	4330-00-804-1541	AN6236-3	88044	ELEMENT FILTER	EA	2
3-6	11	XD0ZZ		60263	05228	RETAINER	EA	1
3-6	12	XDOZZ		6658157	81321	GASKET	EA	1
3-6	13	XDOZZ		6670117	05228	RETAINER	EA	1
						GROUP 0306 HIGH PRESSURE FILTER		
3-7		XD000		ADHT5468E9716MDB	01414		EA	1
3-7	1	XD0ZZ	5365-00-287-0094	AN814-4D	88044	PLUG	EA	2
3-7	2	XD0ZZ		MS28778-4	96906	PACKING, PREFORMED	EA	1
3-7	3	XD0ZZ		AC5457TD2A	01414	B0WL, FILTER	EA	1
3-7	4	PB0ZZ	4330-00-406-3898	AC9516F1	01414	FILTER ELEMENT	EA	1
3-7	5	XD0ZZ		MS28774-243	96906	RING, BACKUP	EA	1
3-7	6	XD0ZZ	5330-00-579-7544	Y528775-243	96906	PACKING, PREFORMED	EA	1
3-7	7	XD0ZZ		AC5457-1D8	01414	BRACKET	EA	1
3-7	8	XD0ZZ		AA5457-109	01414	U-BOLT	EA	1
3-7	9	XD0ZZ		AN335-4	88044	NUT	EA	2
3-7	10	XDOZZ		MC606EH097	01414	SWITCH. PRESSURE	EA	1
3-7		XD0ZZ	5306-00825 3815	AA2100-11D99	01414	SCREW, SOCKET HEAD	EA	4
3-	11	XD0ZZ		A05458-1D116A	0141t	HEAD, FILTER	EA	1
						GROUP 0307 COOLER FAN ASSEMBLY		
3-8		XDFFF		2-02-3-3010	30946	COCLER FAN ASSY	EA	1
3-8	1	XDFZZ		2-02-3-3002	30946	HOUSING, COOLER	EA	1
3-8	2	XDFZZ		4C372	16327	FAN	EA	1
3-8	3	XDFZZ		MS51955-18	96906	SETSCREW	EA	2
3-8	4	XDFZZ		2-02-3-3003	30946	BUSHING, ADAPTER	EA	1
3-8	5	XDFZZ		11530X1	50184	COOLER	EA	1
3-8	6	XDFZZ		2-02-3-3004	30946	BRACKET	EA	4
3-8	7	PBFZZ	5305-00-068-0502	MS90725-6	96906	SCREW, CAP, HEXAGON	EA	8
3-8	8	PBFZZ	5310-00-761-6882	MS51967-2	96906	NUT, PLAIN, HEXAGON	EA	8

(1) ILLUSTRATION (a) FIG NO.	(b) ITEM NO.	(2) SMR CODE	(3) NATIONAL STOCK NUMBER	(4) PART NUMBER	(5) FSCM	(6) DESCRIPTION *USABLE ON CODE*	(7) U/M	(8) QTY INC IN UNIT
3-8	9	PBFZZ	5310-00-582-596S	MS35338-44	96906	WASHER, LOCK	EA	8
3-8	10	PBFZZ	6105-01-020-9006	M3557	D5472	MOTOR FAN	EA	1I
3-8	11	P8FZZ	5306-00-225-8499	MS90725-34	96906	BOLT, MACHINE	EA	4
3-8	12	XDFZZ		MS3569O-502	96906	NUT HEX	EA	4
3-8	13	P8FZZ	5310-00-407-9566	M$35338-45	96906	WASHER.LOCK	EA	4
3-8	14	P8FZZ	5310-00-809-4058	MS27183-10	96906	WASHER, FLAT	EA	4
						GROUP 0308 HIGH PRESSURE PUMP		
3-9		XDOFF		015-25634	16954	PUMP, HIGH PRESSURE	EA	1
3-9	1	XDOZZ		48615011	16954	HOSE ASSEMBLY	EA	1
3--9	2	PBOFF		S15-2C93-S6	16954	COMPENSATOR, PRESSURE MAXIMUM-MINIMUM VOLUME SEE FIG 3-10 FOR BREAKDOWN	EA	1
3-9	4	PBDZZ	5330-O1-008-6568	C35-17751-Z	16954	GASKET	EA	2
3-9	10	PBOZZ	5330-01-009-7055	035-19029-X	16954	GASKET	EA	1
						GROUP 0309 PRESSURE COMPENSATOR CONTROL		
3-10		PBOFF		S15-20935-56	16954	COMPENSATOR, PRESSURE, MAXIMUM-MINIMUM	REF	1
3-10		PBFZZ	4730-00-906-8999	495-C0609	16954	ELBOW, TUBE TO BOSS	EA	1
3-10		PBFZZ	4720-01-012-3421	486-15011	16954	HOSE ASSEMBLY	EA	1
3-10		XDFZZ	4730-00-815-0271	4S4-CC6CS	16954	ELBCW	EA	1
3-10		XDFZZ		S15-14282-U-56	16954	CAP AND COMP ASSY	EA	1
						GROUP 0310 PUMP MOTOR, MAIN		
3-11		PBFFF		ASS28678-1250	38151	MOTOR, ELECTRIC	REF	1
3-11	2	XDFZZ		MS356S0-46	96906	NUT HEX	EA	8
3-11		PBFZZ	3110-00-516-5491	1209	21760	BEARING, BALL, ANNULA	EA	1
3-11	12	PBFZZ	3110-00-554-5302	1208	217601	BEARING, BALL, ANNULA	EA	1
3-11	13	XDFZZ		2-10-3-1002	30946	SPLING CPLG	EA	1
3-11	14	XDFZZ		MS35671-58	96906	RCLL PIN	EA	1
						GROUP 0311 HIGH PRESSURE MANIFOLD		
3-12		XDFFF		2-103-5100	309 46	MANIFOLD ASSEMBLY	EA	1
3-12	1	XDFZZ		8HP5CN5-S	30780	PLUG	EA	3
3-12	2	PBFZZ	5330-00-808-0794	MS28778-8	96906	PACKING, PREFORMED	EA	3
3-12	3	PBFZZ	4730-00-278-3242	AN 815-4	88044	NIPPLE, TUB	EA	1
3-12	4	PBFZZ	5330-00-805-2966	M528778-4	96906	PACKING, PREFORMED	EA	1
3-12		PBFZZ	4730-00-812-7192	AN929-4	88044	CAP, TUBE	EA	1

(1) ILLUSTRATION (a) FIG NO.	(b) ITEM NO.	(2) SMR CODE	(3) NATIONAL STOCK NUMBER	(4) PART NUMBER	(5) FSCM	(6) DESCRIPTION *USABLE ON CODE*	(7) U/M	(8) QTY INC IN UNIT
3-12	6	XDFZZ		VIL65-515-1	26337	THROTTLING VALVE	EA	2
3-12	7	XDFZZ		MV1-400-S	09990	VALVE NEEDLE	EA	1
3-12	9	XDFZZ	4820-00-273-9090	RVO615C3A	16954	VALVE, SAFETY RELIEF	EA	1
3-12	10	XDFZZ		MS16998-124	96906	SCREW, SOC CAP	EA	4
3-12	11	XDFZZ		2-02-3-5101	30946	MANIFOLD	EA	1
						GROUP 0312 FILTER, FILL SYSTEM		
3-13		XDOOO		30017	05228	FILTER FILL	EA	1
3-13l	1	XDOZZ		3C589	052228	BOWL	EA	1
3-13	2	PBOZZ	5330-00-641-3407	MS28775-224	96096	PACKING, PREFORMED	EA	1
3-13	3	PBDZZ	4330-00-542-2060	AN6235-2A	88044	FILTER,	EA	1
3-13	4	XDOZZ		3Ct25	5228	HEAD	EA	1
						GROUP 0313 RETURN MANIFOLD SYSTEM		
3-14		XDFFF		2-02-3-7210	30946	RET MANIFOLD	EA	1
3-14	1	XDFZZ		2-02-3-7203	309461	CAP	EA	1
3-14	2	XDFZZ	5305-00-983-6622	MS169S7-81	96906	SCREW SCC HC	EA	4
3-14	3	XDFZZ	5330-00-263-5173	MS29513-226	96906	O-RING	EA	1
3-14	4	XDFZZ		2-02-3-7208	30946	RETAINER	EA	1
3-14	5	XDFZZ		2-02-3-7206	30946	SPRING	EA	1
3-14	6	XDFZZ		2-02-3-7204	30946	POPPET	EA	1
3-14	7	XDFZZ	5330-00-265-1075	MS29513-218	96906	C-RING	EA	1
3-14	8	XDFZZ		2-02-3-7205	30946	KEEPER	EA	1
3-14	9	XDFZZ	5305-00-059-8280	MS35214-55	96906	SCREW	EA	1
3-14	10	XDFZZ	5330-00-265-1077	MS29513-220	96906	C-RING.	EA	1
3-14	11	XDFZZ		2-02-3-7207	30946	SCREW AOJ	EA	1
3-14	12	XDFZZ		MS35690-1202	96906	NUT HEX	EA	1
3-14	13	XDFZZ		2-02-3-7202	30946	LOWER BLOCK.	EA	1
3-14	14	XDFZZ		MS1-6997-90	96906	SCREW SOC HC	EA	6
3-14	15	XDFZZ	5330-00-263-5173	MS29513-226	96906	O-RING	EA	2
3-14	16	XDOFZZ		002-527-50	01029	SEAT	EA	2
3-14	17	XDFZZ		C12-0515-22	01029	HANDLE	EA	1
3-14	18	XDFZZ		C43-0182-22-24	01329	NUT	EA	1
3-14	19	XDFZZ	5310-00-809-5998	MS27183-18	96906	WASHER FLAT	EA	1
3-14	20	XDFZZ		041-0154-22-24	01029	SPRING WASHER	EA	1
3-14	21	XDFZZ		006-0457-00	01029	RING COMPRESS	EA	1

(1) ILLUSTRATION (a) FIG NO.	(b) ITEM NO.	(2) SMR CODE	(3) NATIONAL STOCK NUMBER	(4) PART NUMBER	(5) FSCM	(6) DESCRIPTION *USABLE ON CODE*	(7) U/M	(8) QTY INC IN UNIT
3-14	22	XDFZZ		004-0208-S5	01029	SEAL STEM	EA	1
3-14	23	XDFZZ		001-0548-00	01029	BALL	EA	1
3-14	24	XDFZZ		003-0592-00	01029	STEM	EA	1
3-14	25	XDFZZ		2-02-3-7201	30946	UPPER BLOCK	EA	1
						GROUP 0401 ELECTRICAL COMPONENTS ASSEMBLY		
3-15	1	XDFZZ		462-6744940	94138	POWER CORD	EA	1
3-15	2	XDFZZ		074-01-035	81992	STRAIN RELIEF	EA	1
3-15	3	XDFZZ		5267	59730	SEAL RING	EA	1
3-15	4	XDFZZ	5975-0642-7263	146	59730	LOCKNUT	EA	1
3-15	5	XDFZZ		2-0-3-8214	30946	JUNCTION BOX	EA	1
3-15	6	XDFZZ		A10P8	00843	COVER PANEL	EA	1
3-15	7	XDFZZ		072516	89020	TERMINAL BLOCK	EA	2
3-15		XDFZZ		MS35223-63	96906	SCREW MACH	EA	4
3-15		XDFZZ	5310-00-045-3296	M535338-43	96906	LOCKWASHER	EA	4
3-15	8	XDFFF		2-10-3-8201	30946	CONDUIT ASSEMBLY, C1	EA	1
3-15		XDFZZ		2-02-3-8201A	30946	CONDUIT	EA	1
3-15		XDFZZ	5330-00-861-0526	5265	59730	SEAL RING	EA	1
3-15		XDFZZ		5355	59736	CONNECTOR	EA	2
3-15		XDFZZ		3713	59730	REDUCER WASHER	EA	2
3-15		XDFZZ		2-02-3-8208	30946	WIRE NO 4	EA	4
3-15		XDFZZ		R50013	14726	RING TERMINAL	EA	12
3-15		XDFZZ	5305-00-068-0500	MS90725-3	36946	SCREW HEX HD	EA	6
3-15		XDFZZ	5310-00-809-4058	MS27183-1	96906	WASHER FLAT	EA	12
3-15		XDFZZ	5310-00-761-6882	S356C905-402	96906	NUT HEX	EA	6
3-15		XDFZZ		373	59731	HUB CONNECTOR	EA	1
3-15	9	XDFFF		2-02-3-8202	30946	CONDUIT ASSY C2	EA	1
3-15		XDFZZ		2-02-3-8202A	30946	CONDUIT 3/4 IN	EA	1
3-15		XDFZZ		5343	59730	CONNECTOR	EA	2
3-15		XDFZZ	5330-00-802-4966	5263	59730	SEALING RING	EA	2
		XDFZZ		2-02-3-8202B	30946	WIRE 16	EA	12
3-15		XDFZZ		2-023-8202C	30946	WIRE 14	EA	6
3-15	10	XDFZZ		2-02-3-8203	30946	CONDUIT ASSY C3	EA	1
3-15		XDFZZ		2-0203-8203A	30946	CONDUIT 1/2 IN	EA	1
3-15		XDFZZ		5362	59730	CONNECTOR	EA	1
3-15		XDFZZ		2-02-3-82038	30946	WIRE #14	EA	3
3-15		XDFZZ	5940-00-617-2896	R1903S	14726	RING TERMINAL	EA	3

(1) ILLUSTRATION (a) FIG NO.	(b) ITEM NO.	(2) SMR CODE	(3) NATIONAL STOCK NUMBER	(4) PART NUMBER	(5) FSCM	(6) DESCRIPTION USABLE ON CODE	(7) U/M	(8) QTY INC IN UNIT
3-15		XDFZZ		MS35225-63	96906	SCREW PAN HD	EA	3
3-15		XDFZZ	5310-00-809-8546	MS27183-8	96906	FLAT WASHER	EA	6
3-15		XDFZZ	5310-00-934-9758	MS35649-102	96906	NUT HEX	EA	3
3-15		XDFFF		2-02-3-0204	30946	CONDUIT ASSY C4	EA	1
3-15		XDFZZ		2-02-3-8204A	30946	CONDUIT 1/2 IN	EA	1
3-15		XDFZZ		5362	59730	CONNECTOR	EA	1
3-15		XDFZZ		2-02-3-8204B	30946	WIRE 14	EA	3
3-15		XDFZZ	5940-00-617-2896	R19035	14726	RING TERMINAL	EA	6
3-15		XDFZZ		MS35225-63	96906	SCREW HEX HD	EA	3
3-15		XDFZZ	5310-00-809-8548	MS27103-8	96906	WASHER FLAT	EA	6
3-15		XDFZZ	5310-00-934-9758	PS35649-102	96906	NUT HEX	EA	3
3-15	12	XDFZZ		2-02-3-8205	30946	CONDUIT ASSY C5	EA	I
3-15		XDFZZ		2-02-3-8205A	30946	CONDUIT 1/2 IN	EA	1
3-15		XDFZZ		5362	59730	CONNECTOR	EA	2
3-15		XDFZZ		2-02-3-82058	30946	WIRE 16	EA	7
3-15		XDFZZ		2-02-3-8205C	30946	WIRE 14	EA	2
3-15		XDFZZ	5940 -00-557-121	R1902S	14726	RING TERMINAL	EA	8
3-15		XDFZZ		S2174S	14726	SPADE TERMINAL	EA	3
3-15	13	XDFFF		2-02-3-8206	30946	CONDUIT ASSY C6	EA	1
3-15		XDFZZ		2-02-3-8206A	30946	CONDUIT 1/2 IN	EA	1
3-L1		XDFZZ		5362	59730	CONNECTOR	EA	2
3-15		XDFZZ		2-02-3-82068	30946	WIRE 16A	EA	5
3-15		XDFZZ	5940-00-557-1621	R19025	14726	RING TERMINAL	EA	2
3-15		XDFZZ		52174S	14726	SPADE TERMINAL	EA	5
3-15	14	XDFFF		2-02-3-8207	30946	CABLE ASSY C	EA	1
3-15		XDFZZ		2-02-3-8207A	30946	WIRE 2/C-18	EA	1
3-15		XDFZZ		2633	59730	CONNECTOR	EA	1
3-15		XDFZZ		MS3106E10SL-3SC	96906	CONNECTOR	EA	1
3-15	15	XDFFF		2-02-3-8308	30946	CABLE ASSY CO	EA	I
3-15		XDFZZ		2-02-3-8208A	30946	WIRE 2C-18	EA	I
3-15		XDFZZ		2633	59730	CONNECTOR	EA	1
3-15		XDFZZ		MS2106E1SL-3SC	96906	CONNECTOR	EA	1
3-15		XDFZZ		2-10-3-0209	30946	JUMPER ASSY	EA	1
3-15		XDFZZ		2-10-3-S210	30946	JUMPER ASSY	EA	1
3-15		PBFZZ	5975-00-892-9256	5352	59730	BOX CONNECTOR, ELECT	EA	2
3-15		PBFZZ	5330-00-588-0892	5262	59730	PACKING, PREFORMED	EA	4
3-15		XDFZZ		HC32-2	23619	CONDUIT CLAMP	EA	6
3-15		XDFZZ		HC10-4	23619	CONDUIT CLAMP	EA	2
3-15		XDFZZ		G32-24	23619	CLAMP BUSHING	EA	7
3-15		PBFZZ	5365-00-931-7844	G32-32	23619	BUSHING, RUBBER	EA	4

(1) ILLUSTRATION (a) FIG NO.	(b) ITEM NO.	(2) SMR CODE	(3) NATIONAL STOCK NUMBER	(4) PART NUMBER	(5) FSCM	(6) DESCRIPTION USABLE ON CODE	(7) U/M	(8) QTY INC IN UNIT
3-15		XDFZZ		G32-12	23619	CLAMP BRUSHING	EA	1
3-15		XDFZZ		G32-16	23619	CLAMP BRUSHING	EA	1
3-15		PBFZZ	5365-00-244-3781	G10-12	23619	BRUSHING, RUBBER	EA	2
3-15		PBFZZ	5305-00-269-3224	MS90725-74	96906	SCREW, CAP, HEXAGON	EA	6
3-15		XDFZZ		MS35690-602	96906	NUT HEX	EA	6
3-15		PBFZZ	5310-00-407-9566	MS35338-46	96906	WASHER, LOCK	EA	6
3-15		PBFZZ	5306-00-225-8505	MS90725-41	96906	B0LT, MACHINE	EA	4
3-15		XDFZZ		MS35690-502	96906	NUT HEX	EA	4
3-15		PBFZZ	5310-00-407-9566	MS35338-45	96906	WASHER.LOCK	EA	4
3-15	16	XDFFF		2-02-3-8100	30946	MOTCR CONT CENT SEE FIG.3-16 FOR BREAKDOWN.	EA	1
3-15		XDFZZ		MS90725-60	96906	SCREW HEX HD	EA	4
3-15		XDFZZ		FS35690-602	96906	NUT HEX	EA	1
3-15		XDFZZ		MS35338-46	96906	LOCKWASHER	EA	1
3-15		XDFFF		2-02-3-8310	30946	24 VDC WIRING	EA	1
3-15		XDFZZ		S1	21003	HORN WARNING	EA	1
3-15		XOFZZ		2631	59730	CONNECTOR	EA	1
3-15	17	XDFFF		2-02-3-8301	30946	WIRE HARNESS	EA	1
3-15		XDFZZ		2-02-3-8301A	30946	WIRE 16	EA	1
3-15		XDFZZ		H4848 14726		CONNECTOR	EA	5
3-15		PBF7Z	5940-00-239-9021	A3WC	14726	TERMINAL, QUICK DISC 3-WAY	EA	1
3-15		PBFZZ	5940-00-291-0004	S09174F	14726	TERMINAL, QUICK DISC	EA	4
3-15		PBFZZ	5940-00-617-2896	R1903S	14726	TERMINAL, LUG	EA	1
3-15		XDFZZ		MS1306E10SL3SC	96906	CONNECTOR	EA	1
3-15		XDFZZ		DV14-111	14726	TERMINAL SO	EA	3
3-15		XDFZZ		R5113	14726	TERMINAL RING	EA	8
3-15		XDFZZ	5940-00-557-1627	R1902S	14726	TERMINAL RING	EA	8
						GROUP 0402 MOTOR CONTROL CENTER		
3-16		XDFFF		2-02-3-8100	30946	MOTOR CONT CENT	EA	1
3-16	1	XDFZZ		HP-C4	75382	TB MAIN LINE	EA	1
3-16		XDFZZ		MS35223-61	96906	SCREW RD HD	EA	2
3-16		XDFZZ	5310-00-407-9566	M535338-45	96906	LOCKWASHER	EA	2
3-16	2	XDFZZ		9T56Y2811	93201	TRANSFORMER	EA	1
3-16		PBFZZ	5305-00-889-3000	MS35206-230	96906	SCREW, MACHINE	EA	4
3-16		PBFZZ	5310-00-951-1310	MS27183-4	96906	WASHER, FLAT	EA	4
3-16		XDFZZ	5305-00-206-0512	AN515-6-8	88044	SCREW RC HD	EA	2
3-16		XDFZZ	5310-00-950-1310	MS27183-4	96606	FLAT WASHER	EA	7

(1) ILLUSTRATION (a) FIG NO.	(b) ITEM NO.	(2) SMR CODE	(3) NATIONAL STOCK NUMBER	(4) PART NUMBER	(5) FSCM	(6) DESCRIPTION USABLE ON CODE	(7) U/M	(8) QTY INC IN UNIT
3-16	3	XDFFF		743	30430	SYNC ASSY	EA	1
3-16		XDFZZ		G0122	30430	TRANSFORMER	EA	1
3-16		XDFZZ		3743	71400	BLOCK.FUSE	EA	3
3-16		XDFZZ		3742	71400	END SHIELD	EA	1
3-16		XDFZZ		KTK-1	71400	FUSE	EA	3
3-16		XDFZZ		671Y6	75382	TERMINAL BLOCK	EA	1
3-16		XDFZZ		71D1207M8	30430	MTG PLATFORM	EA	1
3-16		XDFZZ		71D1207M12	30430	PLATFORM INSUL	EA	1
3-16		XDFZZ		7AD1207M7	30430	MTG FEET	EA	2
3-16	4	XDFZZ		G1074	30430	TRANSFORMER	EA	1
3-16		XDFZZ	5305-00-206-0512	AN515-6-8	88044	SCREW RD HD	EA	4
3-16		XDFZZ	5310-00-950-131C	MS27183-4	96906	FLAT WASHER	EA	4
3-16		XDFZZ		AN515-6-12	88044	SCREW RD HD	EA	23
3-16		XDFZZ		2-10-3-101	30946	MTG SLEEVE	EA	23
3-16	5	XDFFF		PWS1AA100	30430	PC BOARD	EA	1
3-16		XDFZZ		76R2-24VDC	78277	RELAY	EA	1
3-16		XDFZZ		76R2-124V120V	78277	RELAY	EA	1
3-16		XDFZZ		AGC5	75915	FUSE	EA	2
3-16		XDFZZ		3AG	75915	FUSE	EA	1
3-16	6	PBFZZ	5940-00-557-4341	MS25036-123	96906	TERMINAL, LUG	EA	2
3-16		PBFZZ	5305-00-889-3001	MS35206-231	96906	SCREW, MACHINE	EA	4
3-16		XDFZZ	5310-00-950-3104	MS27183-4	96906	FLAT WASHER	EA	4
3-16	7	XDFZZ		EHB3010	88416	CIRCUIT BREAKER	EA	1
3-16		PBFZZ	5305-00-206-0512	AN515-6-8	88044	SCREW.MACHINE	EA	4
3-16		XDFZZ	5310-00-950-1310	MS27183-4	96906	WASHER, FLAT	EA	4
3-16	8	XDFZZ		EHB3025	884161	CIRCUIT BREAKER	EA	1
3-16		XDFZZ	5305-00-206-0512	AN515-6-8	88044	SCREW RD HD	EA	4
3-16		XDFZZ	5310-00-950-1310	MS27183-4	96906	FLAT WASHER	EA	4
3-16	9	XDFZZ		EHB3100	88416	CIRCUIT BREAKER	EA	1
3-16		XDFZZ	5305-00-206-0512	AN515-6-8	88044	SCREW RD HD	EA	3
3-16		XDFZZ	5310-00-950-1310	MS27183-4	96906	FLAT WASHER	EA	3
3-16	10	XDFZZ	5920-00-865-9622	3743	71400	FUSE BLOCK	EA	1
3-16		XDFZZ		3742	71400	END SHIELD	EA	1
3-16		XDFZZ	5305-00-206-0512	AN515-6-8	88044	SCREW RC HD	EA	2
3-16		XDFZZ	5310-00-950-1310	MS27183-4	96906	FLAT WASHER	EA	2
3-16		XDFZZ		KTK5	71400	FUSE	EA	1
3-16	11	XDFZZ		725	89020	SECTIONAL TB	EA	30
3-16		XDFZZ		730	89020	TB END SECTION	EA	1
3-16	12	XDFZZ		SS12ET10-20Y3	27193	SWITCH INTERLOCK	EA	1

(1) ILLUSTRATION (a) FIG NO.	(b) ITEM NO.	(2) SMR CODE	(3) NATIONAL STOCK NUMBER	(4) PART NUMBER	(5) FSCM	(6) DESCRIPTION USABLE ON CODE	(7) U/M	(8) QTY INC IN UNIT
3-16		XDFZZ		MS35239-37	96906	SCREW FT HD	EA	2
3-16		PBFZZ	6110-00-994-8356	42555-300	04009	BUTTON, RESET	EA	4
3-16		XDFZZ	5305-00-206-0512	AN515-6-8	88044	SCREW RD HD	EA	6
3-16		XDFZZ	5310-00-950-1310	MS27183-4	96906	FLAT WASHER	EA	6
3-16	13	XDFFF		ACV7303U20S1	04009	MOTOR CONTACTOR	EA	2
3-16		XDFZZ		34600-301	04009	CONTACT SET	EA	1
3-16		XDFZZ		34530-501	04009	COIL	EA	1
3-16		XDFZZ		S1	04009	AUX CONTACT NO	EA	1
3-16		XDFZZ		42230	04009	OVERLOAD HEATER	EA	3
3-16		XDFZZ	5305-00-206-0512	AN515-6-8	88044	SCREW RD HD	EA	6
3-16		XDFZZ	5310-00-950-1310	MS27183-4	96906	FLAT WASHER	EA	6
3-16	14	XDFFF		ACV23C3U20S1	04009	MOTOR CONTACTOR	EA	2
3-16		XDFZZ		34600-301	04009	CONTACT SET	EA	1
3-16		XDFZZ		34530-501	04009	COIL	EA	1
3-16		XDFZZ		S1	04009	OVERLOAD HEATER	EA	3
3-16		XDFZZ		A36C30BLP	00843	NEMA 12 ENCL	EA	1
3-16		XDFZZ		A36P3C	00843	PANEL MTG	EA	1
						GROUP 0501 MAIN FRAME ASSEMBLY		
3-17		XDFFF		2-02-3-2C1C	30946	MAIN FRAME ASSY	EA	1
3-17	1	XDFZZ	2540-00-835-9039	MS51335-2	96906	PINTLE HOOK	EA	1
3-17	2	XDFZZ		MS90725-114	96906	SCREW HEX HD	EA	4
3-17	3	XDFZZ		MS35690-802	96906	NUT HEX	EA	4
3-17	4	PBFZZ	5310-00-003-4094	MS35338-48	96906	WASHER, LOCK	EA	4
3-17	5	XDFZZ		2-02-3-2112	30946	UPPER FRAME	EA	1
3-17	6	XDFZZ		MS90725-60	96906	SCREW HEX HD	EA	4
3-17	7	XDFZZ		MS35690-602	96906	NUT HEX	EA	4
3-17	8	XDFZZ		MS35338-46	96906	LOCKWASHER	EA	4
3-17	9	XDFZZ		2-02-3-2103	30946	FILTER SUPPORT	EA	1
3-17	10	PBFZZ	5305-00-044-4153	MS90725-109	96906	SCREW, CAP, HEXAGON	EA	2
3-17	11	XDFZZ		MS35690-802	96906	NUT HEX	EA	2
3-17	12	XDFZZ		MS35338-48	96906	LOCKWASHER	EA	2
3-17	13	XDFZZ	5310-00-809-5998	MS27183-18	96906	FAT WASHER	EA	2
3-17	14	XDFZZ		2-02-3-2104	30946	ELEC PANEL SUPP	EA	1
3-17	15	XDFZZ	5305-00-044-4153	MS90725-109	96906	SCREW HEX HD	EA	4
3-17	16	XDFZZ		MS35690-802	96906	NUT HEX	EA	4

(1) ILLUSTRATION (a) FIG NO.	(b) ITEM NO.	(2) SMR CODE	(3) NATIONAL STOCK NUMBER	(4) PART NUMBER	(5) FSCM	(6) DESCRIPTION *USABLE ON CODE*	(7) U/M	(8) QTY INC IN UNIT
3-17	17	XDFZZ		MS35338-48	96906	LOCKWASHER	EA	4
3-17	18	XDFZZ	5310-00-809-5998	MS27183-18	96906	FLAT WASHER	EA	4
3-17	19	PBFZZ	1670-00-294-2954	48B7796	98750	RING ASSY, CARGO TIE	EA	4
3-17	20	XDFZZ		MS90625-62	96906	SCREW HEX HD	EA	8
3-17	21	XDFZZ		MS35690-602	96906	NUT HEX	EA	8
3-17	22	XDFZZ		MS35338-46	96906	LOCKWASHER.	EA	8
3-17	23	XDOFF		2-10-3-2000-1	30946	WHEEL ASSY	EA	4
3-17	24	XDOZZ		MS35690-822	96906	NUT HEX	EA	20
3-17	25	XDOZZ		MS35338-48	96906	LOCKWASHER	EA	20
3-17	26	PBOZZ	2530-00-528-7224	MS24325-1	96906	WHEEL, PNEUMATIC	EA	2
3-17	27	XDOZZ		M535392-58	96906	SCREW, MACHINE	EA	5
3-17	28	XDOZZ		MS35690-622	96906	NUT, HEXAGON	EA	5
3-17	29	XDOZZ		MS35338-46	96906	WASHER, LOCK	EA	5
3-17	30	PBOZZ	2610-00-050-9840	MS35389-6	96906	TIRE, PNEUMATIC	EA	1
3-17	31	PBOZZ	2610-00-269-7354	MS35392-52	96906	INNER TUBE, PNEUMATIC	EA	1
3-17	32	XDFFF		239-1396	22938	FRONT AXLE ASSY SEE FIG. 3-18 FOR BREAKDOWN	EA	1
3-17	33	XDFZZ		MS90725-114	96906	SCREW HEX HD	EA	8
3-17	34	XDFZZ		MS35690-802	96906	NUT HEX	EA	8
3-17	35	XDFZZ		MS35338-48	96906	LOCKWASHER	EA	8
3-17	36	XDFZZ		NAS1099-8	80225	BEVEL WASHER	EA	8
3-17	37	XDFZZ		MS90725-147	96906	SCREW HEX HD	EA	2
3-17	38	XDFZZ		MS51922-41	96906	NUT HEX SL	EA	2
3-17	39	XDFZZ		4250	22938	SPRING BRKT	EA	2
3-17	40	PBFZZ	5315-00-839-5822	MS24665-353	96906	PIN, COTTER	EA	2
3-17	41	XDFZZ		5403-1	22938	CLEVIS PIN	EA	2
3-17	42	XDFZZ		4251	22938	SPRING BRKT	EA	2
3-17	43	XDFZZ		1-4001	22938	SPRINRG LEAF	EA	2
3-17	44	XDFZZ		5100-5	22938	U-BOLT	EA	4
3-17	45	XDFZZ		5600-9	22938	SPRING PLATE	EA	2
3-17	46	PBFZZ	5310-00-067-9507	MS51922-37	96906	NUT, SELF-LOCKING	EA	8
3 -17	47	XDFFF		239-1346	22938	REAR AXLE ASSY SEE FIG. 3-19 FOR, BREAKDOWN	EA	1
3-17	48	XDFZZ		MS90725-114	96906	SCREW HEX HD	EA	8
3-17	49	XDFZZ		MS35690-802	96906	NUT HEX	EA	8
3-17	50	XDFZZ		MS35338-48	96906	LOCKWASHER	EA	8
3-17	51	XDFZZ		NAS1099-8	88044	BEVEL WASHER	EA	8
3-17	52	XDFZZ		MS90725-147	96906	SCREW HEX HD	EA	2
3-17	53	XDFZZ		MS51922-41	96906	NUT HEX SL	EA	2
3-17	54	XDFZZ		4250	22938	COTTER PIN	EA	2
3-17	56	XDFZZ		5403-1	22938	PIN, HEADED	EA	2

(1) ILLUSTRATION (a) FIG NO.	(b) ITEM NO.	(2) SMR CODE	(3) NATIONAL STOCK NUMBER	(4) PART NUMBER	(5) FSCM	(6) DESCRIPTION *USABLE ON CODE*	(7) U/M	(8) QTY INC IN UNIT
3-17	57	XDFZZ		4251	27938	SPRING BRKT	EA	2
3-17	58	XDFZZ		1-4001	22938	SPRING LEAF	EA	2
3-17	59	XDFZZ		5100-5	22938	U-BOLT	EA	4
3-17	60	XDFZZ		5600-S	2293	SPRING PLATE	EA	2
3-17	61	XDFZZ	5310-00-067-9507	M351922-37	96906	NUT HEX SL	EA	8
3-17	62	XDFZZ		5904	229381	HAND8RAKE LEVER	EA	1
3-17	63	PBFZZ	5305-00-269-3215	MS90725-65	96906	SCREW, CAP, HEXAGON	EA	2
3-17	64	XDFZZ		MS35690-602	96906	NUT HEX	EA	7
3-17	65	XDFZZ		MS35338-46	96906	LOCKWASHER	EA	2
3-17	66	XDFZZ		5204	22938	SPACER	EA	1
3-17		XDFFF		2-10-3-2200-1	30946	CROSS SHAFT ASSY	EA	1
3-17	67	XDFZZ		MS90725-60	96906	SCREW HEX HD	EA	4
3-17	68	XDFZZ		MS35690-602	96906	NUT HEX	EA	41
3-17	69	XDFZZ		MS535338-46	96906	LOCKWASHER	EA	41
3-17	70	XDF7Z		NAS1099-6	802051	BEVEL WASHER	EA	4
3-17	71	XDFZZ		5909	22938	LEVER	EA	3
3-17	72	XDFZZ		5000-2	22938	PIN, ROLL	EA	3
3-17	73	XDFZZ		6319-2	22938	COLLAR	EA	2
3-17	74	XDFZZ		5908	22938	BEARING	EA	2
3-17	75	XDFZZ		5910-239	22938	CROSS SHAFT	EA	1
3-17	76	XDFZZ		5206	22938	CLEVIS PIN	EA	5
3-17	77	PBFZZ	5315-00-842-3044	MS24665-283	96906	PIN, COTTER	EA	5
3-17	78	XDFZZ		5205	22938	YOKE AXLE	EA	6
3-17	79	XDFZZ		8535338-622	96906	NUT HEX	EA	6
3-17	80	XDFZZ		8300-040	22938	BRAKE ROD	EA	2
3-17	81	XDFZZ		8300-830	22938	BRAKE ROD	EA	1
3-17	82	XDFZZ		2-02-3-2201	309461	SUPPORT, ROD	EA	1
3-17	83	XDFZZ		MS90725-60	96906	SCREW HEX FD	EA	7
3-17	84	XDFZZ		MS35690-602	96906	NUT HFX	EA	2
3-17	85	XDFZZ		M535338-46	96906	LOCKWASHER	EA	2
3-17	86	PBFZZ	5310-00-C80-6004	MS27183-14	96906	WASHER, FLAT	EA	2
3-17	87	XDFZZ		SB562-7	28520	BUSHING	EA	1
3-17	88	XDFZZ		2-02-3-2101	30946	MAIN FRAME	EA	1
						GROUP 0502 FRONT AXLE ASSEMBLY		
3-18		XDFFF		239-1396	22938	FRONT AXLE ASSY	EA	1
3-18	1	XDFZZ		5801	22938	FITTING LUBE	EA	4
3-18	2	XDFZZ		5800	22938	FITTING LUBE	EA	6

(1) ILLUSTRATION (a) FIG NO.	(b) ITEM NO.	(2) SMR CODE	(3) NATIONAL STOCK NUMBER	(4) PART NUMBER	(5) FSCM	(6) DESCRIPTION *USABLE ON CODE*	(7) U/M	(8) QTY INC IN UNIT
3-18	3	PBFZZ	5315-00-298-1499	MS24665-360	96906	PIN, COTTER	EA	2
3-18	4	XDFZZ		4600-2	22938	NUT SPINDLE	EA	2
3-18	5	XDFZZ		4702-2	22938	WASHER	EA	2
3-18		XDFZZ		MS24328-2	96906	HUB ASSEMBLY	EA	1
3-18		XDFZZ		3613-1	22938	HUB SUB ASSY	EA	1
3-18	6	XDFZZ		3613	22938	HUB	EA	1
3-18	7	XDFZZ	3110-01-024-2234	6152	22938	BEARING CUP INNER	EA	1
3-18	8	XDFZZ	3110-01-024-2235	6151	22938	BEARING CUP OUTER	EA	1
3-18	9	XDFZZ	5307-01-021-1779	6251-10	22938	STUD	EA	5
3-18	10	XDFZZ		6057	22938	CONE INNER	EA	1
3-18	11	XDFZZ	3110-00-198-2169	6058	22938	CONE CUTER	EA	1
3-18	12	XDFZZ	5330-00-213-8921	63I	22938	GREASE SEAL	EA	1
3-18	13	XDFZZ		6312	22938	GREASE CAP	EA	1
3-18		XDFFF		3906-204	22938	TIE ROD ASSY	EA	2
3-18	14	XDFZZ		3900-167	22938	TUBE	EA	1
3-18	15	XDFZZ		4602-1	22938	JAM NUT RH	EA	1
3-18	16	XDFZZ		4602-2	22938	JAM NUT LH	EA	1
3-18	17	XDFZZ		3950-1	22938	BALL JOINT	EA	1
3-18	18	XDFZZ		3950-2	22938	BALL JOINT	EA	1
3-18	19	XDFZZ	5315-00-816-1794	MS24665-285	96906	COTTER PIN	EA	2
3-18		XDFFF		1-3854	22938	CENTER ARM ASSY	EA	1
3-18	20	XDFZZ	5315-00-298-1499	MS24665-360	96906	COTTER PIN	EA	1
3-18	21	XDFZZ		4701-3	2293S	FLAT WASHER	EA	1
3-18	22	XDFZZ		5400-1	22938	CENTER PIN	EA	1
3-18	23	XDFZZ		3854	22938	ARM, CENTER	EA	1
3-18	24	XDFZZ		3855	22938	LATCH DRAWBAR	EA	1
3-18	25	XDFZZ		5000-1	22938	ROLL PIN	EA	1
3-18	26	XDFZZ		4006	22938	SPRING HELICAL	EA	1
3-18	27	XDFFF		3-3006	22938	KNUCKLE ASSY R H	EA	1
3-18	28	XDFZZ		5000-1	22938	ROLL PIN	EA	1
3-18	29	XDFZZ		5401	22938	KING PIN	EA	1
3-18		XDFZZ		6016	22938	SPINDLE	EA	1
3-18		XDFZZ		3800-1	22938	KNUCKLE	EA	1
3-18	30	XDFFF		4-3806	22938	KNUCKLE ASSY L H	EA	1
3-18		XDFZZ		5000-1	22938	ROLL PIN	EA	1
3-18		XDFZZ		5401	22938	KING PIN	EA	1
3-18		XDFZZ		6016	22938	SPINDLE	EA	1
3-18		XDFZZ		3800-2	22938	KNUCKLE	EA	1
3-18	31	XDFZZ		239-139X1	2293	BEAM ASSY	EA	1
3-18		XDFFF		4-3502	22938	DRAW BAR ASSY	EA	1

(1) ILLUSTRATION (a) FIG NO.	(b) ITEM NO.	(2) SMR CODE	(3) NATIONAL STOCK NUMBER	(4) PART NUMBER	(5) FSCM	(6) DESCRIPTION *USABLE ON CODE*	(7) U/M	(8) QTY INC IN UNIT
3-18	32	XDFZZ		MS24665-267	96906	COTTER PIN	EA	1
3-18	33	XDFZZ		5416	22938	HINGE PIN	EA	1
3-18	34	XDFZZ		4-3502-1	22938	DRAW BAR	EA	1
3-18	35	XDFFF		1-5275	22938	CHAIN, SAFETY	EA	2
3-18		XDFZZ		5275-1	22938	HOOK, SAFETY	EA	1
3-18		XDFZZ		5275-2	22938	LINK, END	EA	1
3-18		XDFZZ		5275-3	22938	CHAIN	EA	1
						GROUP 0503 REAR AXLE ASSEMBLY		
3-19		XDFFF		239-1346	22938	REAR AXLE ASSEMBLY	EA	1
3-19	1	XDFZZ	5315-00-298-1499	MS24665-360	96906	COTTER PIN	EA	2
3-19	2	XDFZZ		4600-2	22938	NUT, SPINDLE	EA	2
3-19	3	XDFZZ		4702-2	22938	WASHER	EA	2
3-19	4	XDFFF		2-3613	22938	HUB AND DRUM ASSEMBLY	EA	1
3-19		XDFZZ		3613-2	22938	HUB-ASSEMBLY	EA	1
3-19		XDFZZ		3613-1	22938	CAP SUBASSEMBLY	EA	1
3-19		XDFZZ		3613	22938	HUB	EA	1
3-19	5	XDFZZ		6152	22938	BEARING, CUP, INNER	EA	1
3-19	6	XDFZZ		6151	22938	BEARING, CUP, OUTER	EA	1
3-19	7	XDFZZ		6251-9	22938	STUD, WHEEL	EA	10
3-19		XDFZZ		8221	22938	DRUM	EA	1
3-19	8	XDFZZ		6057	22938	CONE, INNER	EA	1
3-19	9	XDFZZ		6058	22938	CONE, OUTER	EA	I
3-19	10	XDFZZ		6311	22938	SEAL, GREASE	EA	1
3-19	11	XDFZZ		6312	22938	CAP, GREASE	EA	1
3-19	12	XDFZZ		1-8209	22938	BRAKE ASSEMBLY	EA	2
3-19	13	PBFZZ	5305-00-269-2803	MS90726-60	96906	SCREW, CAP, HEXAGON	EA	8
3-19	14	PBFZZ	5310-00-732-0559	MS51968-8	96906	NUT, PLAIN, HEXAGON	EA	8
3-19	15	XDFZZ		MS35338-46	96906	LOCKWASHER	EA	8
3-19	16	XDFZZ		8209	22938	BRAKE	EA	2
3-19	17	XDFZZ		8225	22938	LEAVER ASSEMBLY	EA	1
3-19	18	XDFZZ		8210	22938	SHIELD, DUST	EA	1
3-19	19	XDFZZ		239-1346-2	22938	BEAM ASSEMBLY	EA	1

SECTION III SPECIAL TOOL LIST

(NOT APPLICABLE)

NATIONAL STOCK NUMBER AND PART NUMBER INDEX

STOCK NUMBER	FIGURE NO.	ITEM NO.
5310-00-003-4094	3-17	4
5310-00-004-5033	3-15	
5305-00-006-6574	3-2	7
5310-00-012-0622	3-4	145
5305-00-044-4153	3-17	15
5305-00-044-4153	3-2	15
5310-00-045-3296	3-15	
5310-00-045-3296	3-3	
5310-00-045-3296	3-3	26
5310-00-045-3296	3-5	9
5310-00-045-3299	3-4	146
2610-00-050-9840	3-17	30
5305-00-054-6674	3-4	144
5305-00-059-8280	3-14	9
4730-00-060-5754	3-3	28
4730-00-060-5754	3-4	164
5310-00-067-9507	3-17	46
5310-00-067-9507	3-17	61
5305-00-068-0500	3-15	
5305-00-068-0500	3-5	3
5305-00-068-0502	3-1	1
5305-00-068-0502	3-3	35
5305-00-068-0502	3-3	39
5305-00-068-0502	3-8	7
5305-00-071-2231	3-4	134
5310-00-080-6004	3-17	86
5310-00-082-1404	3-3	
3930-00-140-3874	3-5	
3930-00-140-3875	3-5	
4730-00-142-2167	3-4	100
4730-00-142-2167	3-5	19
6240-00-143-3173	3-3	11
5365-00-146-0153	3-4	102
5310-00-159-6339	3-3	4
4730-00-186-9826	3-4	117
4730-00-186-9961	3-4	163
4730-00-187-0087	3-4	174
4730-00-187-0490	3-4	154
4730-00-196-9584	3-4	159
4730-00-117-2916	3-4	90
4730-00-117-2922	3-4	48
3110-00-118-2169	3-18	11
9905-00-202-3639	3-1	
9905-00-205-2795	3-1	12
5305-00-206-0512	3-16	
5305-00-206-0512	3-16	
5305-00-206-0512	3-16	
5305-00-205-0512		3-16
5305-00-206-0512	3-16	
5305-00-206-0512	3-16	
5305-00-206-0512	3-16	
5305-00-206-0512	3-16	
5310-00-200-4134	3-4	112
5310-00-208-4134	3-5	16
5310-00-200-4135	3-4	168
5310-00-208-5769	3-3	22
5310-00-208-5769	3-4	175
5330-00-213-8921	3-18	12
6680-00-221-1037	3-3	46
5306-00-225-8497	3-2	
5306-00-225-8499	3-2	11
5306-00-225-8499	3-8	11
5306-00-225-8504	3-2	27
5306-00-225-8505	3-15	
4730-00-231-3021	3-4	157
4730-00-231-3904	3-4	137
5940-00-239-9021	3-15	
5365-00-244-3781	3-15	
5330-00-251-8839	3-4	124
5930-00-259-9496	3-4	21
5330-00-263-5173	3-14	3
5330-00-263-5173	3-14	15
5330-00-265-1075	3-14	7
5330-00-265-1077	3-14	10
5305-00-269-2803	3-19	13
5305-00-269-3215	3-17	63
5305-00-269-3224	3-15	
2610-00-269-7354	3-17	31
4820-00-273-9090	3-12	9
4730-00-277-5096	3-4	156
4730-00-277-6423	3-4	147
4730-00-277-6423	3-5	15
4730-00-277-6445	3-4	3
4730-00-278-5006	3-3	5
4730-00-278-5006	3-4	109
4730-00-278-5006	3-5	11
5310-00-282-7823	3-4	115
5310-00-282-7113	3-4	113
5310-00-282-7831	3-4	120
5310-00-282-7835	3-4	165
5365-00-287-0094	3-7	1
4730-00-287-0272	3-5	13
4730-00-287-0278	3-4	132
4730-00-287-0285	3-4	152
4730-00-287-0288	3-4	94
4330-00-288-6907	3-4	16
5940-00-291-0004	3-15	
1670-00-294-2954	3-17	19
5315-00-298-1499	3-18	3
5315-00-298-1499	3-18	20
5315-00-298-1499	3-19	1
6210-00-299-4104	3-3	10
4730-00-402-4404	3-4	108
4330-00-406-3898	3-7	4
5310-00-407-9566	3-15	
5310-00-407-9566	3-16	
5310-00-407-9566	3-2	13
5310-00-407-9566	3-2	29
5310-00-407-9566	3-8	13
4730-00-477-6116	3-5	
5330-00-477-6117	3-3	
6695-00-497-1630	3-3	I0
3110-00-516-5491	3-11	6
2530-00-528-7224	3-17	26
4730-00-541-8296	3-5	10
4330-00-542-2060	3-13	3
5340-00-543-4394	3-4	142
4730-00-546-4736	3-4	82
3110-00-554-5302	3-11	12
5940-00-557-1627	3-15	
5940-00-557-1627	3-15	
5940-00-557-1627	3-15	
5940-00-557-4341	3-16	6
4730-00-561-1544	3-4	88
5330-00-579-7544	3-7	6
5310-00-582-5965	3-1	17
5310-00-582-5965	3-3	37
5310-00-582-5965	3-3	41
5310-00-582-5965	3-4	136
5310-00-582-1965	3-5	5
5310-00-582-5965	3-8	9
6685-00-585-4430	3-3	47
6685-00-585-4430	3-4	18
5330-00-583-0892	3-15	
5340-00-598-4195	3-4	139
5940-00-617-2896	3-15	
5490-00-617-2896	3-15	
5940-00-617-2896	3-15	
5310-00-637-9541	3-2	9
5310-00-638-2605	3-4	114
5310-00-638-2605	3-5	22
5330-00-641-3407	3-13	2
5975-00-642-7263	3-15	4
5930-00-655-1514	3-3	52
4730-00-715-0018	3	3
4730-00-720-0288	3-4	161
4730-00-722-0086	3-4	92
4730-00-722-1207	3-4	111
4730-00-722-1209	3-4	97
5305-00-724-5911	3-2	22
5310-00-732-0599	3-19	14
4730-00-754-6209	3-4	99
5310-00-761-6882	3-1	16
5310-00-761-6882	3-15	
5310-00-761-6882	3-4	135
5310-00-761-6882	3-8	8
5330-00-802-4966	3-15	
5330-00-804-5694	3-4	12

NATIONAL STOCK NUMBER AND PART NUMBER INDEX

STOCK NUMBER	FIGURE NO.	ITEM NO.
5365-00-804-7915	3-4	106
5330-00-805-2966	3-12	4
5330-00-805-6478	3-4	185
5330-00-808-0794	3-12	2
533o-00-808-0794	3-4	167
5310-00-809-4058	3-15	
5310-00-809-4058	3-3	36
5310-00-809-4058	3-3	40
5310-00-809-4058	3-5	4
5310-00-809-4058	3-8	14
5310-00-800-5998	3-14	19
5310-00-805-5998	3-17	13
5310-00-809-5998	3-17	18
5310-00-809-8546	3-15	
5310-00-809-8546	3-15	
4730-00-812-7192	3-12	5
4730-00-815-0271	3-10	3
5315-00-816-1794	3-18	19
5330-00-816-3546	3-4	122
5310-00-819-2441	3-2	5
5330-00-819-5111	3-4	121
5330-00-819-5111	3-5	17
5306-00-825-3815	3-7	
5330-00-833-7491	3-3	29
5330-00-833-7491	3-4	131
2540-00-835-9039	3-17	1
5315-00-839-5822	3-17	40
5315-00-839-5822	3-17	55
5315-00-842-3044	3-17	77
5330-00-843-1156	3-6	2
4730-00-843-4645	3-4	155
5305-00-849-3943	3-1	13
5305-00-849-3943	3-3	1
5330-00-861-0526	3-15	88
5920-00-865-9622	3-16	10
5310-00-877-5797	3-1	
5310-00-877-5797	3-1	
5310-00-877-5797	3-1	14
5310-00-877-5797	3-1	27

STOCK NUMBER	FIGURE NO.	ITEM NO.
4730-00-879-2362	3-4	169
5305-00-889-3000	3-16	
5305-00-889-3000	3-3	208
5305-00-889-3000	3-3	51
5305-00-889-3001	3-16	
5305-00-889-3001	3-3	17
5975-00-892-9256	3-15	
4730-00-906-8599	3-10	1
4730-00-925-4752	3-4	116
5365-00-931-7038	3-15	
5365-00-931-7844	3-15	
5310-00-934-9758	3-15	
5310-00-934-9758	3-15	
5310-00-950-1310	3-16	
5310-00-950-1310	3-16	
5310-00-950-1310	3-16	
5310-00-950-1310	3-16	
5310-00-950-1310	3-16	
5310-00-950-1310	3-16	
5310-00-950-1310	3-16	
5310-00-950-1310	3-16	
5310-00-950-1310	3-16	
5310-00-950-1310	3-16	
5305-00-983-6622	3-14	2
5305-00-984-6210	3-5	25
2805-00-989-1496	3-5	24
4730-00-990-1759	3-4	158
6110-00-994-8356	3-16	
5330-01-008-6568	3-9	4
5330-01-009-7055	3-9	10
4720-01-012-3421	3-10	2
6680-01-016-5007	3-3	34
6685-01-017-2417	3-3	18
6685-01-017-2417	3-4	17
6685-01-017-2417	3-4	177
6105-01-020-9006	3-8	10
5307-01-021-1779	3-18	9
3110-01-024-2234	3-18	7
3110-01-024-2235	3-18	8

PART NUMBER	FSCM	FIG. NO.	ITEM NO.
-2-02-3-6012	30946	3-1	23
AA2l00-11D99	01414	3-7	
AA5457-1D9	01414	3-7	8
ACV2303U20S1	04009	3-16	14
ACV7303U20S1	04009	3-16	13
AC5457-1D8	01414	3-7	7
AC5457TD2A	01414	3-7	3
AC5458-1D116A	01414	3-7	11
AC9516F1	01414	3-7	4
ADHT 5458E9716MDB	01414	3-2	10
ADHT 5458E9716MDB	01414	3-7	
AD603205-00	92940	3-2	
AGC5	75915	3-16	
AN335-4	88044	3-7	9
AN515-10-6	88044	3-3	
AN515-10-8	88044	3-5	8
AN515-6-10	88044	3-3	17
AN515-6-12	88044	3-16	
AN515-6-8	88044	3-16	
AN515-6-8	88044	3-16	
AN515-6-8	88044	3-16	
AN515-6-8	88044	3-16	
AN515-6-8	88044	3-16	
AN515-6-8	88044	3-16	
AN515-6-8	88044	3-16	
AN515-6-8	88044	3-16	
AN515-8-6	88044	3-3	25
AN515-8-6	88044	3-3	31
AN6235-2A	88044	3-13	3
AN6236-3	88044	3-6	10
AN628916	88044	3-4	156
AN804-12D	88044	3-4	103
AN804-16	88044	3-4	129
AN804-24	88044	3-4	153
AN804-4D	88044	3-4	107
AN804-6D	88044	3-4	98

PART NUMBER	FSCM	FIG. NO.	ITEM NO.
AN804-6D	88044	3-5	21
AN814-4D	88044	3-7	1
AN814-6D	88044	3-4	102
AN815-16	88044	3-4	154
AN815-24D	88044	3-4	118
AN815-4	88044	3-12	3
AN815-4D	88044	3-4	116
AN815-6D	88044	3-4	117
AN816-12-8D	88044	3-4	160
AN816-250	88044	3-4	89
AN816-4-4D	88044	3-4	174
AN816-6-6D	88044	3-4	159
AN818-12D	88044	34	152
AN818-16	88044	3-4	132
AN818-24D	88044	3-5	13
AN818-6D	88044	3-4	100
AN818-6D	88044	3-5	19
AN818-8D	88044	3-4	94
AN819-24D	88044	3-5	14
AN819-6D	88044	3-5	20
AN826-6D	88044	3-4	173
AN832-24D	88044	3-4	147
AN832-24D	88044	3-5	15
AN832-4D	88044	3-4	119
AN833-24D	88044	3-4	148
AN833-4D	88044	3-4	108
AN833-6D	88044	3-4	90
AN837-16	88044	3-4	157
AN837-24D	88044	3-4	151
AN894D5-4	88044	3-3	28
AN894D5-4	88044	3-4	164
AN915-2	88044	3-4	137
AN919-27D	88044	3-4	91
AN924-20D	88044	3-4	168
AN924-24D	88044	3-4	112
AN924-24D	88044	3-5	16

NATIONAL STOCK NUMBER AND PART NUMBER INDEX

PART NUMBER	FSCM	FIG. NO.	ITEM NO.
AN924-4	88044	3-3	22
AN4924-4	88044	3-4	175
AN924-4D	88044	3-3	4
AN924-6D	88044	3-5	22
AN924-8D	88044	3-4	165
AN924-4	88044	3-12	5
AN929-4D	88044	3-3	5
AN929-4D	88044	3-4	109
AN929-4D	88044	3-5	11
AN929-8D	88044	3-5	10
ASS28678-1250	38151	3-11	
ASS28678-1250	38151	3-2	21
A10PS	00843	3-15	6
A100-1W	12190	3-5	
A100-2	12190	3-5	
A100-3	12190	3-5	
A100-4	12190	3-5	
A100W	12190	3-5	24
A3WC	14726	3-15	
A36C30BLP	00843	3-16	15
A36P30	00843	3-16	16
BB14WPH14RW	64467	3-3	47
BB14WPH14RW	64467	3-4	18
B145-S4-24D	00624	3-4	83
CR400S10-10	09990	3-4	26
DV14-111	14726	3-15	
EHB3010	88416	3-16	7
EHB3025	88416	3-16	8
EH83100	88416	3-16	9
G0122	30430	3-16	
G10-12	23619	3-15	
G10-6	23619	3-15	
G1074	30430	3-16	4
G32-12	23619	3-15	
G32-16	23619	3-15	
G32-24	23619	3-15	
G32-32	23619	3-15	
HC10-4	23619	3-15	
HC32-2	23619	3-15	
HP-C4	75382	3-16	1
H4848	14726	3-15	
KTK-1	71400	3-16	
KTK5	71400	3-16	
MC636EH097	01414	3-7	10
MPG50BT43YB	64294	3-2	25
MPG50BT43YB	64294	3-4	8
MS1306E10SL3SC	96906	3-15	
MS16997-81	96906	3-14	2
MS16997-90	96906	3-14	14
MS16998-124	96906	3-12	10
MS20822-4D	96906	3-4	163
MS20823-4-4D	96906	3-4	110
MS20823-8-8D	96906	3-4	162
MS20823-8D	96906	3-4	158
MS21044-N3	96906	3-3	2
MS21044-N3	96906	3-1	
MS21044N3	96906	3-1	
MS21044N3	96906	3-1	14
MS21044N3	96906	3-1	27
MS2106E10SL-3SC	96906	3-15	
MS21919DG12	96906	3-4	140
MS21919DG16	96906	3-4	139
MS21919DG24	96906	3-4	138
MS21919DG4	96906	3-4	143
MS21919DG6	96906	3-4	142
MS21919DG8	96906	3-4	141
MS24325-1	96906	3-17	26
MS24393D20	96906	3-4	169
MS24393D4	96906	3-3	3
MS24394-16	96906	3-4	155
MS24394-4	96906	3-4	161
MS24397D2	96906	3-4	106
MS24400-12	96906	3-4	120
MS24400-16	96906	3-4	113
MS24400D4	96906	3-4	115
MS24400D6	96906	3-4	114
MS24402D4	96906	3-4	111
MS24402D6	96906	3-4	97
MS24402D8	96906	3-4	92
MS24665-267	96906	3-18	32
MS24665-283	96906	3-17	77
MS24665-285	96906	3-19	19
MS24665-353	96906	3-17	40
MS24665-353	96906	3-17	55
MS24665-360	96906	3-18	3
MS24665-360	96906	3-18	20
MS24665-360	96906	3-19	1
MS25036-123	96906	3-16	6
MS25331-6	96906	3-3	10
MS27183-10	96906	3-15	
MS27183-10	96906	3-3	36
MS27183-10	96906	3-3	40
MS27183-10	96906	3-5	4
MS27183-10	96906	3-8	14
MS27183-14	96906	3-17	86
MS27183-18	96906	3-14	19
MS27183-18	96906	3-17	13
MS27183-18	96906	3-17	18
MS27183-4	96906	3-16	
MS27183-4	96906	3-16	
MS27183-4	96906	3-16	
MS27183-4	96906	3-16	
MS27183-4	96906	3-16	
MS27183-4	96906	3-16	
MS27183-4	96906	3-16	
MS27183-4	96906	3-16	
MS27183-4	96906	3-16	
MS27183-4	96906	3-16	
MS27183-6	96906	3-3	
MS27183-8	96906	3-15	
MS27183-8	96906	3-15	
MS28720-12	96906	3-4	16
MS28741-4-0160	96906	3-4	79
MS28741-4-0330	96906	3-4	171
MS28741-6-0160	96906	3-4	78
MS28759-4-0160	96906	3-4	80
MS28774-243	96906	3-7	5
MS28775-224	96906	3-13	2
MS28775-243	96906	3-7	6
MS28777-16	96906	3-4	185
MS28778-12	96906	3-4	124
MS28778-16	96906	3-4	12
MS28778-20	96906	3-4	122
MS28778-24	96906	3-4	121
MS28778-24	96906	3-5	17
MS28778-4	96906	3-12	4
MS28778-4	96906	3-4	126
MS28778-4	96906	3-7	2
MS28778-5	96906	3-3	29
MS28778-5	96906	3-4	131
MS28778-6	96906	3-4	125
MS28778-6	96906	3-5	23
MS28778-8	96906	3-12	2
MS28778-8	96906	3-4	167
MS28885-240	96906	34	27
MS29513-218	96906	3-t4	7
MS29513-220	96906	3-14	10
MS29513-226	96906	3-14	3
MS29513-226	96906	3-14	15
MS3106B10SL-3SC	96906	3-15	
MS35058-22	96906	33	52
MS35206-230	96906	3-16	
MS35206-230	96906	3-3	208
MS35206-230	96906	3-3	51
MS35206-231	96906	3-16	
MS35206-263	96906	3-5	25
MS35214-55	96906	3-14	9
MS35223-45	96906	3-3	33
MS35223-61	96906	3-16	
MS35223-63	96906	3-15	7
MS35223-63	96906	3-1	
MS35223-63	96906	3-1	
MS35223-63	96906	3-1	26
MS35225-63	96906	3-15	
MS35225-63	96906	3-15	
MS35239-37	96906	3-16	
MS35239-72	96906	3-3	14
MS35239-72	96906	3-3	49
MS35338-42	96906	3-4	146
MS35338-43	96906	3-15	

NATIONAL STOCK NUMBER AND PART NUMBER INDEX

PART NUMBER	FSCM	FIG. NO.	ITEM NO.
MS35338-43	96906	3-3	
MS35338-43	96906	3-3	26
MS35338-43	969C6	3-5	9
MS35338-44	96906	3-1	17
MS35338-44	96906	3-3	37
MS35338-44	96906	3-3	41
MS35338-44	96906	3-4	136
MS35338-44	96906	3-5	5
MS35338-44	96906	3-8	9
MS35338-45	96906	3-15	
MS35?38-45	96906	3-16	
MS35338-45	96906	3-2	13
MS35338-45	96906	3-2	29
MS35338-45	90606	3-R	13
MS35338-46	69606	3-2	20
MS35338-46	96906	3-15	
MS35338-46	96906	3-15	
MS35338-46	96906	3-17	8
MS35338-46	96906	3-17	22
MS35339-46	96906	3-17	29
MS35338-46	96906	3-17	65
MS35338-46	96906	3-17	69
MS35338-46	96906	3-17	85
MS35338-46	96906	3-t9	15
MS35338-46	96906	3-2	9
MS35338-46	96906	3-2	33
MS35338-48	96906	3-17	4
MS35338-48	96906	3-17	12
MS35338-48	96906	3-17	17
MS35338-48	96906	3-17	25
MS35338-48	969C6	3-17	35
MS35338-48	96906	3-17	50
MS35338-48	96906	3-2	4
MS35338-48	96906	3-2	17
MS35338-622	96906	3-11	79
MS35387-1	96906	3-1	12
MS35387-2	96906	3-1	11
MS35389-6	96906	3-17	30
MS35392-52	96906	3-17	31
MS35392-58	96906	3-17	27
MS35640-1002	96906	3-3	
MS35649-1202	96906	3-15	
MS35649-102	96906	3-15	
MS35649-82	96906	3-4	145
MS35671-50	96906	3-11	14
MS35690-1002	96906	3-2	23
MS35690-1202	96906	3-14	12
MS35690-402	96906	3-15	
MS35690-402	96906	3-1	16
MS35690-402	96906	3-4	135
MS35690-46	96906	3-11	2
MS35690-502	96906	3-15	
MS35690-502	96906	3-1	19
MS35690-502	96906	3-2	12
MS35690-502	96906	3-2	28
MS35690-502	96906	3-8	12
MS35690-602	96906	3-15	
MS35690-602	96906	3-15	
MS35690-602	96906	3-17	7
MS35690-602	96906	3-17	21
MS35690-602	96906	3-17	64
MS35690 602	96906	3-17	68
MS35690-602	96906	3-17	84
MS35690-602	96906	3-2	8
MS35690-602	96906	3-2	32
MS35690-622	96906	3-17	28
MS35690-622	96906	3-2	19
MS35690-802	96906	3-17	3
MS35690-802	96906	3-17	11
MS35690-802	96906	3-17	16
MS35690-802	96906	3-17	34
MS35690-802	96906	3-17	49
MS35690-802	96906	3-2	3
MS35690-802	96906	3-2	16
MS35690-822	96906	3-17	24
MS51335-2	96906	3-17	1
MS51922-37	96906	3-17	46
MS51922-37	96906	3-[7	61
MS51922-41	96906	3-17	38
MS51922-41	96906	3-17	53
MS51937-2	96906	3-1	18
MS51955-18	96906	3-8	3
MS51957-49	96906	3-4	144
MS51967-2	96906	3-8	8
MS51968-8	96906	3-19	14
MS90625-62	96906	3-17	20
MS90725-109	96906	3-17	10
MS90725-109	96906	3-17	15
MS90725-109	96906	3-2	15
MS90725-114	96906	3-17	2
MS90725-114	96906	3-17	33
MS90725-114	96906	3-17	48
MS90725-114	96906	3-2	2
MS90725-147	96906	3-17	37
MS90725-147	96906	3-17	52
MS90725-163	96906	3-2	22
MS90725-20	96906	3-4	134
MS90725-3	96906	3-15	
MS90725-3	96906	3-5	3
MS90725-32	96906	3-2	
MS90725-34	96906	3-2	11
MS90725-34	96906	3-8	11
MS90725-40	96906	3-2	27
MS90725-41	96906	3-15	
MS90725-6	96906	3-1	15
MS90725-6	96906	3-3	35
MS90725-6	96906	3-3	39
MS90725-6	96906	3-8	7
MS90725-60	96906		
MS90725-60	96906	3-15	
MS90725-60	96906	3-17	6
MS90725-60	96906	3-17	67
MS90725-60	96906	3-17	83
MS90725-60	96906	3-2	7
MS90725-65	96906	3-17	63
MS90725-74	96906	3-15	
MS90726-60	96906	3-19	13
MS9316-04	96906	3-1	13
MS9316-04	96906	3-3	1
MV1-400-S	09990	3-12	7
M3557	05472	38	10
NAS1099-6	80205	3-17	70
NAS1099-8	80205	3-2	5
NAS1099-8	80225	3-17	36
NAS1099-8	88044	3-17	51
NAS1564-012-4	80205	3-4	150
NAS1564-16-8	80205	3-4	130
NAS1564D6-4	80205	3-4	99
NAS1564D8-6	88044	3-4	93
NAS424-16	80205	3-4	128
PWS1AA100	30430	3-16	5
P32-53	05228	3-2	6
P32-53	05228	3-4	3
RV061503A	16954	3-12	9
R1-1A-AB1	52B30	3-3	44
R1-1B-AR1	92830	3-3	45
R1902S	14726	3-15	
R1902S	14726	3-15	
R1902S	14726	3-15	
R1903S	14726	3-15	
R1903S	14726	3-15	
R1903S	14726	3-15	
R4-2B-4R7	52830	3-3	53
R5001B	14726	3-15	
R5113	14726	3-15	
SB562-7	28520	3-17	87
SS12ET10-20Y3	27193	3-16	12
S09174F	14726	3-15	
S1	04009	3-16	
S1	04009	3-16	
S1	21003	3-15	
S15-14282-W-S6	16954	3-10	4
S15-20935-S6	16954	3-9	2
S2174S	14726	3-15	
S2174S	14726	3-15	
TA155-S4-12D	00624	3-4	87
TA155-S4-16D	00624	3-4	81
TB155-S4-8D	00624	3-4	85
TL100-5	72704	3-1	10
TL100A	12704	3-1	9

NATIONAL STOCK NUMBER AND PART NUMBER INDEX

PART NUMBER	FSCM	FIG. NO.	ITEM NO.	PART NUMBER	FSCM	FIG. NO.	ITEM NO.
V1165-515-1	26337	3-12	6	2-02-3-6004	30946	3-1	4
001-0548-00	01029	3-14	23	2-02-3-6005	30946	3-1	5
002-527-50	01029	3-14	16	2-02-3-6006	30946	3-1	6
003-0592-00	01029	3-14	24	2-02-3-6007	30946	3-1	7
004-0208-50	01029	3-14	22	2-02-3-6008	30946	3-1	70
006-0457-00	01029	3-14	21	2-02-3-6009	30946	3-1	
012-0515-22	01029	3-14	17	2-02-3-6010	30946	3-1	21
015-25634	16954	3-2	18	2-02-3-6011	30946	3-1	22
015-25634	16954	3-4	2	2-02-3-6013	30946	3-1	74
035-17751-Z	16954	3-9	4	2-02-3-6014	30946	3-1	25
035-19029-X	16954	3-9	10	2-02-3-6100	30946	3-1	38
041-0154-22-24	01029	3-14	20	2-02-3-6102	30946	3-1	4f)
043-0182-22-24	01029	3-14	18	2-02-3-6103	30946	3-1	41
072516	89020	3-15	7	2-02-3-6104	30946	3-1	42
074-01-035	81992	3-15	2	2-02-3-6105	30946	3-1	43
1-3854	22938	3-18		2-02-3-6106	30946	3-1	
1-4001	22938	3-17	43	2-02-3-6106	30946	3-1	39
1-4001	22938	3-17	58	2-02-3-6107	30946	3-1	
1-5275	22938	3-18	35	2-02-3-6108	30946	3-1	
1AR41-R-20-T-5-S	96259	3-4	24	2-02-3-6200	30946	3-1	45
108-04	76906	3-4	101	2-02-3-6201	30946	3-1	46
11530X1	50184	3-4	4	2-02-3-6202	30946	3-1	47
11530X1	50184	3-8	5	2-02-3-6203	30946	3-1	48
12NGIt	07446	3-3	50	2-02-3-6204	30946	3-1	49
1201PS-1-1	30946	3-4	104	2-02-3-6205	30946	3-1	50
1208	21760	3-11	12	2-02-3-6206	30946	3-1	
1209	21760	3-11	6	2-02-3-6207	30946	3-1	
1252	08806	3-3		2-02-3-6208	30946	3-1	
1278A	38056	3-3	19	2-02-3-7061	30946	3-4	39
1360-6 SAE	10129	3-4	31	2-02-3-7061	30946	3-4	40
1377D028	38056	3-3	12	2-02-3-7062	30946	3-4	59
1377D028	38056	3-4	20	2-02-3-7065	30946	3-4	133
145-S7-24D	00624	3-4	84	2-02-3-7081	30946	3-4	37
145-1-8B	86768	3-3	23	2-02-3-7082	30946	3-4	38
L45-1-8B	86768	3-4	179	2-02-3-7084	30946	3-4	41
146	59730	3-15	4	2-02-3-7085	30946	3-4	43
1516395	70404	3-5	7	2-02-3-7086	30946	3-4	45
155-S7-00	00624	3-4	86	2-02-3-7087	30946	3-4	51
155S7-12D	00624	3-4	88	2-02-3-7088	30946	3-4	53
155S7-16D	00624	3-4	82	2-02-3-7089	30946	3-4	61
16-0-2345-16	94222	3-1		2-02-3-7090	30946	3-4	70
16-0-2345-16	94222	3-1		2-02-3-7091	30946	3-4	74
16-0-2345-16	94222	3-1		2-02-3-7092	30946	3-4	75
16-10-201-11	94222	3-1	8	2-02-3-7093	30946	3-4	170
16-10-203-11	94222	3-1	44	2-02-3-7094	30946	3-4	182
16-10-203-11	94222	3-1	51	2-02-3-7095	30946	3-4	183
17121-0	73168	3-4	21	2-02-3-7096	30946	3--4	184
1020	08806	3-3	11	2-02-3-7201	30946	3-14	25
2-02-3-1001	30946	3-4	149	2-02-3-7202	30946	3-14	13
2-02-3-2010	30946	3-17		2-02-3-7203	30946	3-14	1
2-02-3-2101	30946	3-17	88	2-02-3-7204	30946	3-14	6
2-02-3-2103	30946	3-17	9	2-02-3-7205	30946	3-14	8
2-02-3-2104	30946	3-17	14	2-02-3-7206	30946	3-14	5
2-02-3-2112	39946	3-17	5	2-02-3-7207	30946	3-14	11
2-02-3-2201	30946	3-17	82	2-02-3-7208	30946	3-14	4
2-02-3-3002	30946	3-8	1	2-02-3-7210	30946	3-14	
2-02-3-3003	30946	3-8	4	2-02-3-7210	30946	3-4	29
2-02-3-3304	30946	3-8	6	2-02-3-8010	30946	3-15	00
2-02-3-3010	30946	3-2	14	2-02-3-8100	30946	3-15	16
2-02-3-3010	30946	3-8		2-02-3-8100	30946	3-15	
2-02-3-4001	30946	3-2	26	2-02-3-8201A	30946	3-15	
2-02-3-4102	30946	3-5	1	2-02-3-8201B	30946	3-15	
2-02-3-4103	30946	3-1	2	2-02-3-8202	30946	3-15	9
2-02-3-4104	30946	3-2	30	2-02-3-8202A	30946	3-15	9A
2-02-3-4110	30946	3-2	1	2-02-3-82028	30946	3-15	
2-02-3-4110	30946	3-5		2-02-3-8203	30946	3-15	10
2-02-3-5006	30946	3-3	13	2-02-3-82038	30946	3-15	
2-02-3-5007	30946	3-3	16	2-02-3-8204	30946	3-15	11
2-02-3-5008	30946	3-3	20	2-02-3-8204A	30946	3-15	
2-02-3-5009	30946	3-3	48	2-02-3-82048	30946	3-15	
2-02-3-5010	30946	3-3	6	2-02-3-8205	30946	3-15	12
2-02-3-5011	30946	3-3		2-02-3-8205A	30946	3-15	
2-02-3-5020	30946	3-3		2-02-3-82058	30046	3-15	
2-02-3-5101	30946	3-12	11	2-02-3-8205C	30946	3-15	
2-02-3-5101	30946	3-4	7	2-02-3-8206	30946	3-15	13
2-02-3-5102	30946	3-3	54	2-02-3-8206A	30946	3-15	
2-02-3-6000	30946	3-1		2-02-3-8206B	30946	3-15	
2-02-3-6001	30946	3-1	1	2-02-3-8207	30946	3-15	14
2-02-3-6002	30946	3-1	2	2-02-3-8207A	30946	3-15	
2-02-3-6003	30946	3-1	3	2-02-3-820BA	30946	3-15	

NATIONAL STOCK NUMBER AND PART NUMBER INDEX

PART NUMBER	FSCM	FIG. NO.	ITEM NO.
2-02-3-8301	30946	3-15	17
2-02-3-8301A	30946	3-15	
2-02-3-8308	30946	3-15	15
2-02-3-8310	30946	3-15	
2-0203-8202C	30946	3-15	
2-0203-8203A	30946	3-15	
2-023-4111	30946	3-4	1
2-023-4111	30946	3-5	26
2-03-1-1114	30946	3-2	
2-03-1-6002	30946	3-3	30
2-03-1-6002	30946	3-4	14
2-03-1-6003	30946	3-3	27
2-03-1-6003	30946	3-4	12
2-03-1-6004	30946	3-3	15
2-03-1-6004	30946	3-4	19
2-03-1-6302	30946	3-4	5
2-03-1-7108	30946	3-1	
2-03-1-7108	30946	3-1	
2-03-1-7109	30946	3-1	
2-03-1-7109	30946	3-1	
2-1-03-7032	30946	3-4	58
2-10-3-1002	30946	3-11	13
2-10-3-2000-1	30946	3-17	23
2-10-3-2200-1	30946	3-17	
2-10-3-4104	30946	3-5	12
2-10-3-4105	30946	3-5	18
2-10-3-4300	30946	3-4	172
2-10-3-5100	30946	3-12	
2-10-3-5403	30946	3-3	55
2-10-3-5502	30946	3-3	56
2-10-3-7002	30946	3-4	34
2-10-3-7003	30946	3-4	35
2-10-3-7004	30946	3-4	36
2-10-3-7012	30946	3-4	44
2-10-3-7014	30946	3-4	46
2-10-3-7016	30946	3-4	42
2-10-3-7022	30946	3-4	48
2-10-3-7023	30946	3-4	49
2-10-3-7024	30946	3-4	5Q
2-10-3-7026	30946	3-4	52
2-10-3-7028	30946	3-4	54
2-10-3-7029	30946	3-4	55
2-10-3-7030	30946	3-4	56
2-10-3-7031	30946	3-4	57
2-10-3-7034	30946	3-4	60
2-10-3-7036	30946	3-4	62
2-10-3-7037	30946	3-4	63
2-10-3-7038	30946	3-4	64
2-10-3-7039	30946	3-4	65
2-10-3-7040	30946	3-4	66
2-10-3-7041	30946	3-4	67
2-10-3-7042	30946	3-4	68
2-10-3-7043	30946	2-4	69
2-10-3-7045	30946	3-4	71
2-10-3-7046	30946	3-4	72
2-10-3-7047	30946	3-4	73
2-10-3-7050	30946	3-4	76
2-10-3-7051	30946	3-4	77
2-10-3-7104	30946	3-4	47
2-10-3-8101	30946	3-16	
2-10-3-8209	30946	3-15	
2-10-3-8210	30946	3-15	
2-10-3-8214	30946	3-15	5
2-3613	22938	3-19	4
20-4101 SPEC	53553	3-3	34
2062-6-4S	00624	3-4	95
22202	05228	3-6	8
239-1346	22938	3-17	47
239-1346	22938	3-19	
239-1346-2	22938	3-19	19
239-139X1	22938	3-18	31
239-1396	22938	3-17	32
239-1396	22938	3-18	
2631	59730	3-15	
2633	59730	3-15	
2633	59730	3-15	
3-3806	22938	3-18	27
3/8-18NPS	30946	3-3	7
3AG	75915	3-16	
30017	05228	3-13	

PART NUMBER	FSCM	FIG. NO.	ITEM NO.
30017	05228	3-4	23
30102	05228	3-6	9
30125	05228	3-13	4
30589	05228	3-13	1
345301-501	04009	3-16	
34530-501	04009	3-16	
34600-301	04009	3-16	
34600-301	04009	3-16	
3613	22938	3-18	6
3613-1	2293B	3-18	
36156	64294	3-2	
3713	59730	3-15	
373	59730	3-15	
3742	71400	3-16	
3742	71400	3-16	
3743	71400	3-16	10
3800-1	22938	3-18	
3800-2	22938	3-18	
3854	22938	3-18	23
3855	22938	3-18	24
3900-167	22938	3-18	14
3906-204	22938	3-18	
3950-1	22938	3-18	17
3950-2	22938	3-18	18
4-WGBTX-S	45722	3-4	127
4-3502	22938	3-18	
4-3502-1	22938	3-18	34
4-3806	22936	3-18	30
40372	16327	3-8	2
4HPON-S	30780	3-4	105
4WGTX-S	30780	3-3	21
4006	22938	3-18	26
404HTX6D3	86768	3-4	30
404HTX803	86768	3-4	32
409-16D2-6	86768	3-12	8
42003	04009	3-16	
42230	04009	3-16	
4250	22938	3-17	39
4250	22938	3-17	54
4251	22939	3-17	2
4251	22038	3-17	7
42555-300	04009	3-16	
43YB033L	64294	3-2	
458-12D27-6	86768	3-4	25
458-6S2-6	86768	3-4	15
4600-2	22938	3-18	4
4600-2	22938	3-18	2
4602-1	22938	3-18	15
4602-2	22938	3-18	16
462-6744940	94138	3-15	1
47-3402-2900-301	72619	3-3	8
4701-3	22938	3-18	21
4702-2	22938	3-18	5
4702-2	22938	3-19	3
48B7796	98750	3-17	19
486-15011	16954	3-10	2
494-00609	16954	3-10	3
495-00609	16954	3-10	1
5000-1	22938	3-18	
5000-1	22938	3-18	25
5000-1	22938	3-18	28
5000-2	2293B	3-17	72
5100-5	22938	3-17	44
5100-5	2293B	3-17	59
5204	22938	3-17	66
5205	22938	3-17	78
5206	22938	3-17	76
5262	59730	3-15	
5263	59730	3-19	
5265	59730	3-15	88
5267	59730	3-15	3
5275-1	72938	3-18	
5275-2	22938	3-18	
5275-3	22938	3-18	
5343	59730	3-15	
5352	59730	3-15	
9355	59730	3-15	
5362	59730	3-15	
5362	50730	3-15	
5362	S9730	3-15	

NATIONAL STOCK NUMBER AND PART NUMBER INDEX

PART NUMBER	FSCM	FIG. NO.	ITEM NO.
5362	59730	3-15	
5400-1	22938	3-18	22
5401	22938	3-18	
5401	22938	3-18	29
5403-1	22938	3-17	41
5403-1	22S38	3-17	56
5416	22938	3-18	33
5600-9	22938	3-17	45
5600-9	22938	3-17	60
57-41	95263	3-3	
5800	22938	3-18	2
5801	22938	3-19	1
5904	22938	3-17	62
5908	22938	3-17	74
5909	22338	3-17	71
5910-239	22938	3-17	75
656-125V	08806	3-3	43
656DC24V	08806	3-3	9
60TX-S	30780	3-4	96
6016	22938	3-18	
6016	22938	3-18	
60260	05228	3-6	3
60263	05228	3-6	11
6057	22938	3-18	10
6058	22938	3-18	11
611G2678S	09049	3-4	22
611G2766S	09049	3-4	33
6151	22938	3-18	8
6152	22938	3-18	7
6251-10	22938	3-18	9
6311	22938	3-18	12
6312	22938	3-18	13
6319-2	22938	3-17	73
63387	05228	3-6	1
6426396	70040	3-5	6
6431059	70040	3-3	46
6440TWC	38056	3-3	18
6440TWC	38056	3-4	17
6440TWQ	38056	3-4	177
6653463	05228	3-6	2
6653481	05228	3-6	5
6654655	05228	3-6	4
6658157	81321	3-6	12
6670117	05228	3-6	13
671Y6	75382	3-16	
689B1-1-4D2	86768	3-3	32
689B1-1-4D2	86768	3-4	13
71D1207M12	30430	3-16	
71D1207M7	30430	3-16	
71D1207M8	30430	3-16	
720HTX6D	86768	3-3	24
720HTX6D	86768	3-4	11
725	89020	3-16	11
730	89020	3-16	
7335	05228	3-6	6
743	30430	3-16	3
744-24D	86768	3-4	28
7494	05228	3-6	7
76R2-124V120V	78277	3-16	
76R2-24VDC	78277	3-16	
78B04	76906	3-4	9
8HP50N-S	30780	3-12	1
8HP50N-S	45722	3-4	166
80-0901-0533-301	52830	3-3	42
8209	22938	3-19	16
8210	22938	3-19	18
8225	22938	3-19	17
8300-040	22938	3-17	80
8300-830	22938	3-17	81
9T56Y2811	93201	3-16	2

*U.S. GOVERNMENT PRINTING OFFICE: 1994 - 300-421/81987

TEAR ALONG PERFORATED LINE

RECOMMENDED CHANGES TO EQUIPMENT TECHNICAL PUBLICATIONS

THEN...JOT DOWN THE DOPE ABOUT IT ON THIS FORM. CAREFULLY TEAR IT OUT, FOLD IT AND DROP IT IN THE MAIL.

SOMETHING WRONG WITH PUBLICATION

FROM: (PRINT YOUR UNIT'S COMPLETE ADDRESS)

DATE SENT

PUBLICATION NUMBER	PUBLICATION DATE	PUBLICATION TITLE

BE EXACT PIN-POINT WHERE IT IS

PAGE NO.	PARA-GRAPH	FIGURE NO.	TABLE NO.

IN THIS SPACE, TELL WHAT IS WRONG AND WHAT SHOULD BE DONE ABOUT IT.

PRINTED NAME, GRADE OR TITLE AND TELEPHONE NUMBER	SIGN HERE

DA FORM 1 JUL 79 2028-2

PREVIOUS EDITIONS ARE OBSOLETE.

P.S.--IF YOUR OUTFIT WANTS TO KNOW ABOUT YOUR RECOMMENDATION MAKE A CARBON COPY OF THIS AND GIVE IT TO YOUR HEADQUARTERS.

The Metric System and Equivalents

Linear Measure

1 centimeter = 10 millimeters = .39 inch
1 decimeter = 10 centimeters = 3.94 inches
1 meter = 10 decimeters = 39.37 inches
1 dekameter = 10 meters = 32.8 feet
1 hectometer = 10 dekameters = 328.08 feet
1 kilometer = 10 hectometers = 3,280.8 feet

Weights

1 centigram = 10 milligrams = .15 grain
1 decigram = 10 centigrams = 1.54 grains
1 gram = 10 decigram = .035 ounce
1 dekagram = 10 grams = .35 ounce
1 hectogram = 10 dekagrams = 3.52 ounces
1 kilogram = 10 hectograms = 2.2 pounds
1 quintal = 100 kilograms = 220.46 pounds
1 metric ton = 10 quintals = 1.1 short tons

Liquid Measure

1 centiliter = 10 milliters = .34 fl. ounce
1 deciliter = 10 centiliters = 3.38 fl. ounces
1 liter = 10 deciliters = 33.81 fl. ounces
1 dekaliter = 10 liters = 2.64 gallons
1 hectoliter = 10 dekaliters = 26.42 gallons
1 kiloliter = 10 hectoliters = 264.18 gallons

Square Measure

1 sq. centimeter = 100 sq. millimeters = .155 sq. inch
1 sq. decimeter = 100 sq. centimeters = 15.5 sq. inches
1 sq. meter (centare) = 100 sq. decimeters = 10.76 sq. feet
1 sq. dekameter (are) = 100 sq. meters = 1,076.4 sq. feet
1 sq. hectometer (hectare) = 100 sq. dekameters = 2.47 acres
1 sq. kilometer = 100 sq. hectometers = .386 sq. mile

Cubic Measure

1 cu. centimeter = 1000 cu. millimeters = .06 cu. inch
1 cu. decimeter = 1000 cu. centimeters = 61.02 cu. inches
1 cu. meter = 1000 cu. decimeters = 35.31 cu. feet

Approximate Conversion Factors

To change	*To*	*Multiply by*	*To change*	*To*	*Multiply by*
inches	centimeters	2.540	ounce-inches	newton-meters	.007062
feet	meters	.305	centimeters	inches	.394
yards	meters	.914	meters	feet	3.280
miles	kilometers	1.609	meters	yards	1.094
square inches	square centimeters	6.451	kilometers	miles	.621
square feet	square meters	.093	square centimeters	square inches	.155
square yards	square meters	.836	square meters	square feet	10.764
square miles	square kilometers	2.590	square meters	square yards	1.196
acres	square hectometers	.405	square kilometers	square miles	.386
cubic feet	cubic meters	.028	square hectometers	acres	2.471
cubic yards	cubic meters	.765	cubic meters	cubic feet	35.315
fluid ounces	milliliters	29,573	cubic meters	cubic yards	1.308
pints	liters	.473	milliliters	fluid ounces	.034
quarts	liters	.946	liters	pints	2.113
gallons	liters	3.785	liters	quarts	1.057
ounces	grams	28.349	liters	gallons	.264
pounds	kilograms	.454	grams	ounces	.035
short tons	metric tons	.907	kilograms	pounds	2.205
pound-feet	newton-meters	1.356	metric tons	short tons	1.102
pound-inches	newton-meters	.11296			

Temperature (Exact)

°F	Fahrenheit temperature	5/9 (after subtracting 32)	Celsius temperature	°C

PIN: 045240-000

This fine document...

Was brought to you by me:

Liberated Manuals -- free army and government manuals

Why do I do it? I am tired of sleazy CD-ROM sellers, who take publicly available information, slap “watermarks” and other junk on it, and sell it. Those masters of search engine manipulation make sure that their sites that sell free information, come up first in search engines. They did not create it... They did not even scan it... Why should they get your money? Why are not letting you give those free manuals to your friends?

I am setting this document FREE. This document was made by the US Government and is NOT protected by Copyright. Feel free to share, republish, sell and so on.

I am not asking you for donations, fees or handouts. If you can, please provide a link to liberatedmanuals.com, so that free manuals come up first in search engines:

<A HREF=http://www.liberatedmanuals.com/>Free Military and Government Manuals</A>

- Sincerely
  Igor Chudov
  http://igor.chudov.com/
- Chicago Machinery Movers