TM 5-6675-244-15

DEPARTMENT OF THE ARMY TECHNICAL MANUAL

ORGANIZATIONAL, DS, GS, AND DEPOT MAINTENANCE MANUAL
INCLUDING REPAIR PARTS AND SPECIAL TOOL LISTS

TARGET SET, SURVEYING: CIRCULAR LEVEL AND OPTICAL PLUMMET IN TRIBRACH W/(QUICK RELEASE MECHANISM (WILD HEERBRUGG MODEL T-2)

FSN 6675-543-1439

HEADQUARTERS, DEPARTMENT OF THE ARMY

APRIL 1966

CHICAGO 10139A

CHANGE
No. 1

HEADQUARTERS
DEPARTMENT OF THE ARMY
WASHINGTON, D. C., *18 April 1973*

Organizational, Direct Support and General Support and Depot Maintenance Manual Including Repair Parts and Special Tool Lists

TARGET SET, SURVEYING: CIRCULAR LEVEL AND OPTICAL PLUMMET IN TRIBRACH W/QUICK RELEASE MECHANISM (WILD HEERBRUGG MODEL T-2)

FSN 6675-543-1439

TM 5-6675-244-15, 12 April 1966, is changed as follows:

Page 27. Appendix II is deleted.

By Order of the Secretary of the Army:

CREIGHTON W. ABRAMS
General, United States Army
Chief of Staff

Official:

VERNE L. BOWERS
Major General, United States Army
The Adjutant General

Distribution:

To be distributed in accordance with DA Form 12-25A (qty rqr block No. 174) Organizational Maintenance requirements for Surveying Equipment.

☆ U.S. GOVERNMENT PRINTING OFFICE: 1973-769619/624

TECHNICAL MANUAL
No. 5-6675-244-15

HEADQUARTERS
DEPARTMENT OF THE ARMY
WASHINGTON, D. C., 12 April 1966

ORGANIZATIONAL, DS, GS, AND DEPOT MAINTENANCE MANUAL INCLUDING REPAIR PARTS SPECIAL TOOL LISTS

TARGET SET, SURVEYING: CIRCULAR LEVEL AND OPTICAL PLUMMET IN TRIBRACH W/QUICK RELEASE MECHANISM (WILD HEERBRUGG MODEL T-2) FSN 6675-543-1439

CHAPTER 1

INTRODUCTION

Section I. GENERAL

1. Scope

a. These instructions are published for the use of the personnel to whom the surveying target set is issued. Chapters 1 through 3 provide information on the operation, preventive maintenance services, and organizational maintenance of the equipment. Chapters 4 and 5 provide information for direct and general support and depot maintenance. Also included are descriptions of the main units and their functions in relationship to other components.

b. Appendix I contains a list of publications applicable to this manual. Appendix II contains the basic issue items authorized for the initial operation. Appendix III contains the maintenance allocation chart. The organizational, direct and general support and depot maintenance repair parts and special tool lists are listed in appendix IV of this manual.

c. Numbers in parentheses on illustrations indicated quantity.

d. The direct reporting by the individual user of errors, omissions, and recommendations for improving this manual is authorized and encouraged. DA Form 2028 (Recommended Changes to DA Publications) will be used for reporting these improvement recommendations. This form will be completed using pencil, pen, or typewriter and forwarded direct to Commanding General, U.S. Army Mobility Equipment Center, ATTN: SMOME-MPD, 4300 Goodfellow Boulevard, St. Louis, Mo. 63120

e. Report all equipment improvement recommendations as prescribed by TM 38-750.

2. Record and Report Forms

For record and report forms applicable to the operator and organizational maintenance, refer to TM 38-750.

Note. Applicable forms, excluding Standard Form 46 which is carried by the operator, will be kept in a canvas bag mounted on the equipment.

Section II. DESCRIPTION AND DATA

3. Description

a. General. The Wild Heerbrugg Model T-2 Surveying Target Set (figs. 1 and 2) is designed to eliminate centering errors and to increase accuracy in traversing. The equipment consists of two tribrachs, two targets, two illumination assemblies and two reflectors. The target set is used with a tripod and battery both of which normally are supplied with the T2-63MIL, T-2-56-C-MIL, or T-2-56-M-MIL theodolites.

b. Tribrach. The tribrach is connected to the target or theodolite by means of a coupling device which consists of three slanted slotted feet on the target and three grip holders on the tribrach. These engage in the slots when the target is mounted; the lockplate lever at the tribrach's periphery is shifted to the left until it is locked in position by means of a notch. On pressing the lock plate lever downwards and then to the right, the target may be removed and replaced by a theodolite or subtense bar and the vertical axis will be automatically centered.

c. Target. The target consists of a base with 3 feet for clamping to the tribrach, a vertical

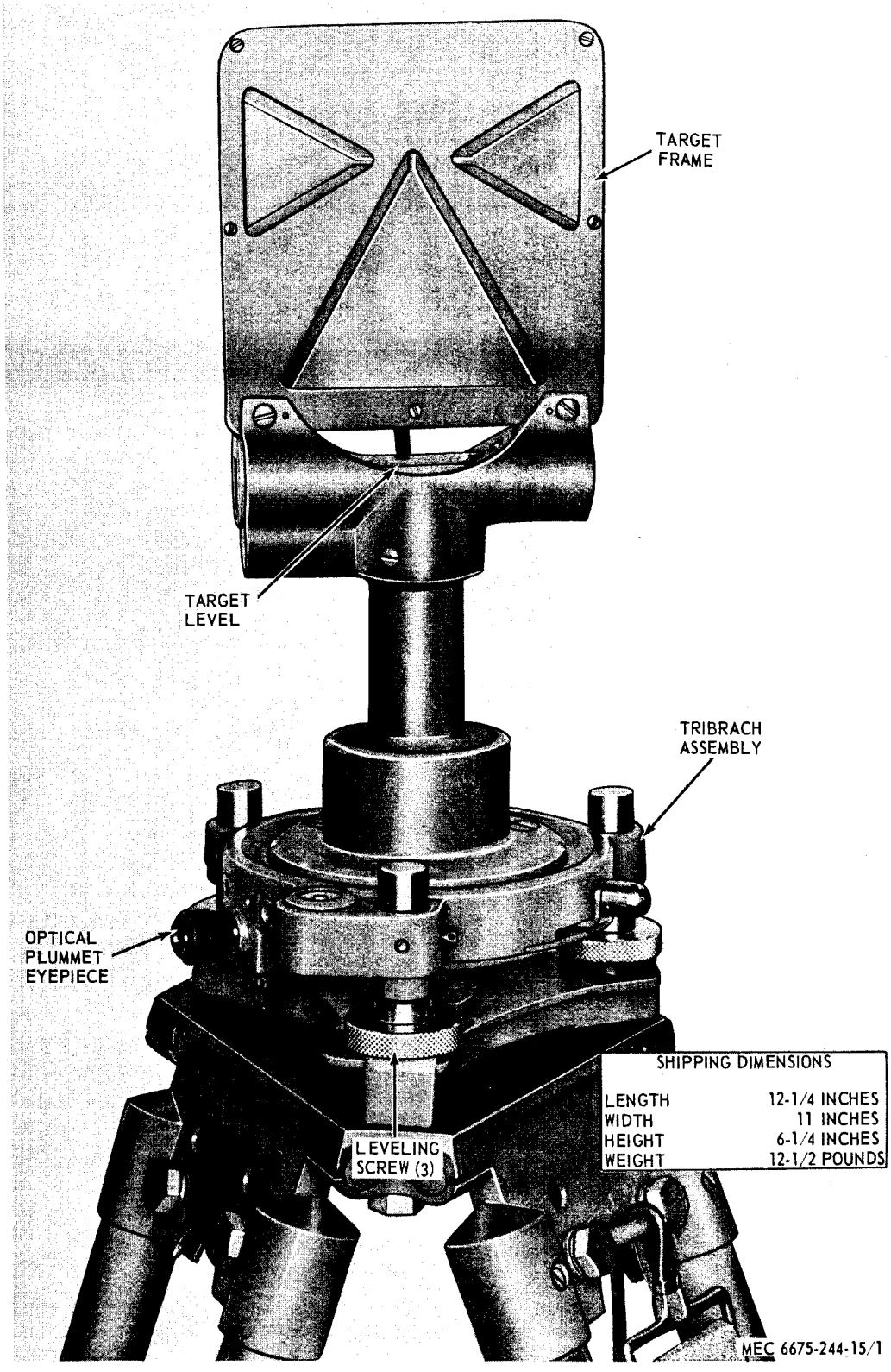

Figure 1. Surveying target set, front view, with shipping dimensions.

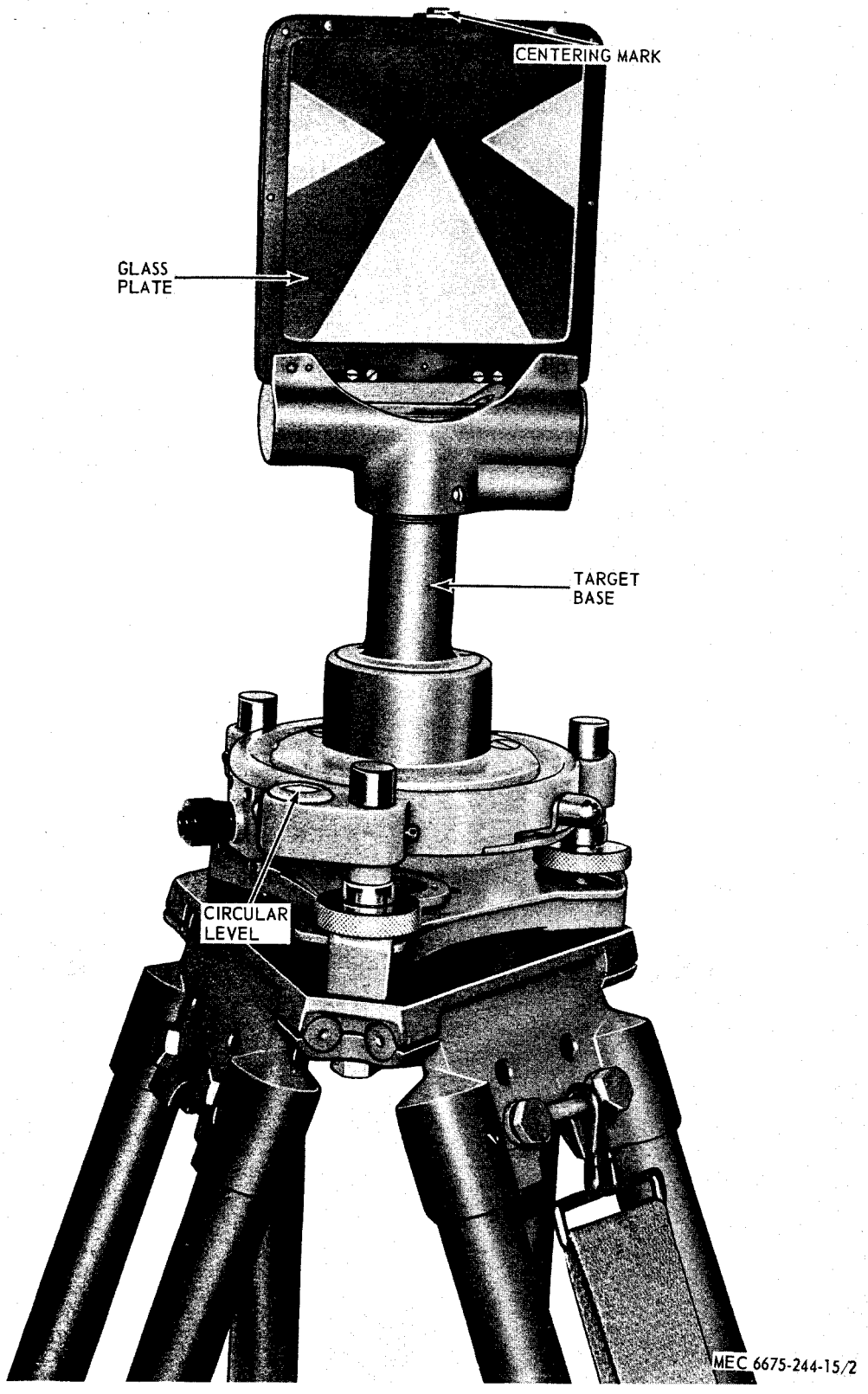

Figure 2. Surveying target set, rear view,

column, a target level and the target pattern which includes a centering mark.

d. Illumination Assembly and Reflector. The illumination assembly is used for night work and consists of a lamp and cable. This assembly is attached to a reflector mounted behind the target to give diffused illumination. The illumination assembly is powered by the battery case which is attached to the tripod.

4. Identification and Tabulated Data

a. Identification. The surveying target set has no identification plates. The tabulated data for the surveying target set can be found in tabulated data (b below).

b. Tabulated Data.

(1) *General.*

Manufacturer	Wild Heerbrugg, Ltd.
Model	T-2
Contract No.	DA-11-184-AMC-504 (T)

(2) *Dimensions and weight.*

Length	12¼ in. (inch)
Width	11 in.
Height	6¼ in.
Weight	12½ lb (pound)

5. Difference in Models

This manual covers the Surveying Target Set, Wild Heerbrugg Model T-2 only. No known unit differences exist for the model covered by this manual.

CHAPTER 2

INSTALLATION AND OPERATION INSTRUCTIONS

Section I. SERVICE UPON RECEIPT OF EQUIPMENT

6. Unpacking the Equipment

a. Remove the tape securing the packing carton.

b. Remove the packing carton from the carrying case.

c. Unlock the carrying case and remove the surveying target set.

7. Inspecting and Servicing Equipment

a. Inspect the entire unit for loose or missing mounting hardware.

b. Check the equipment against the packing list and make sure all items are with the unit.

c. Inspect the entire unit to make sure no damage was incurred during shipment.

d. Correct all deficiencies or report to organizational maintenance.

8. Installation of Separately Packed Components

There are no separately packed components with the surveying target set.

9. Installation or Setting-up Instructions

a. Mount the tribrach onto the tripod issued with the theodolite.

b. Mount the target onto the tribrach.

c. Center the target precisely over the station.

Section II. CONTROLS AND INSTRUMENTS

10. General

This section describes, locates, illustrates, and furnishes the operator sufficient information about the various controls for proper operation of the surveying target set.

11. Controls and Instruments

Refer to figure 3 for the purpose and location of all controls and instruments.

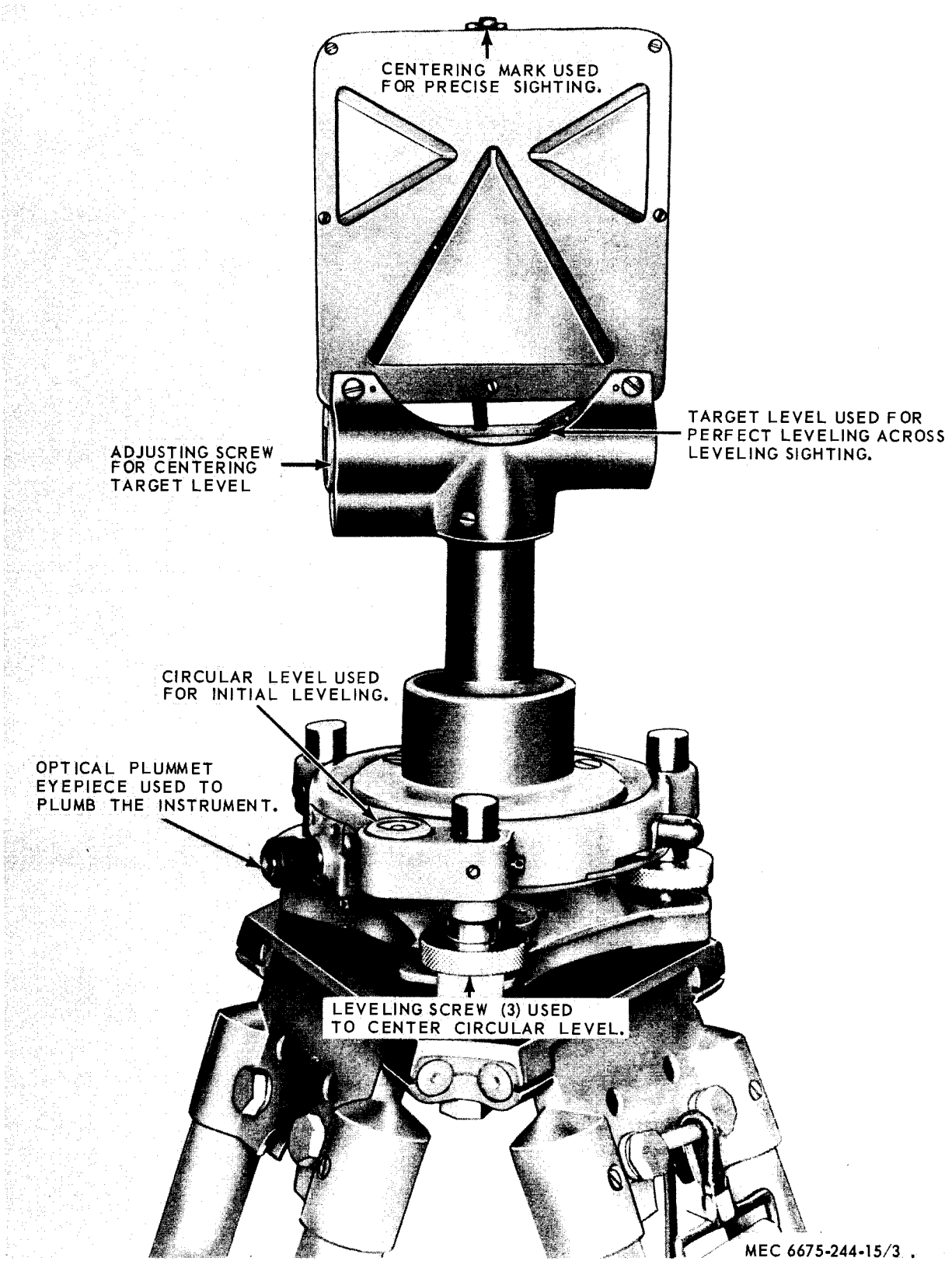

Figure 3. Controls and instruments.

Section III. OPERATION OF EQUIPMENT

12. General

a. The instructions in this section are published for the information and guidance of the personnel responsible for the operation of the surveying target set.

b. The operator must know how to perform every operation of which the surveying target set is capable. This section gives instruction on centering the optical plummet, centering below apex mark, checking the optical plummet and checking the target. Since nearly every job presents a different problem, the operator may have to vary given procedures to fit the individual job.

13. Centering With Optical Plummet

a. The eyepiece of the optical plummet (fig. 3) must be turned until its plumbing mark appears in focus. At the same time the station mark on the ground will be seen, over which the instrument must be centered.

b. Loosen the fixing screw of the tripod slightly to allow the tribrach to be shifted until the ground mark appears in the center of the plumbing mark.

c. During the shifting, the bubble in the circular level must be maintained exactly in the center.

d. Tighten the fixing screw.

e. Center the target level. Then turn the target through 90° and center the level bubble with the third leveling screw. Repeat this procedure until the bubble remains central throughout a 360° rotation of the target. The bubble should now be centered in any position. If not, adjust the circular level.

14. Centering Below apex Mark

In galleries, the station points are often marked by hooks cemented in the roof. In this case, fix a plumb line on the hook, so that the point of the plumb will be just at the height of the upper center mark (fig. 12) of the target. Shift the target on the tripod until its mark is vertically below the plumb point when the bubble of the circular level is centered. Then level the target with reference to the target level (para 13e).

15. Surveying Target Set Operation

a. Setting Up Tripod. For angular measurements, the instruments must be set up over a point of the terrain which has been determined previously. The plug-in sleeve of the plumb line is plugged into the central fixing screw from below and secured by a quarter turn to the right. The tripod is then set up so that the plumb-bob, which hangs from the middle of the central opening, points to the station point from within ½ inch, and the tripod's plate is approximately horizontal. To achieve this, the leg, whose turning axis at the tripod plate is inclined most, must be displaced laterally. Any other method will affect the centering. The leg points are set firmly into the soil, with care being taken to maintain the centering within ½ to 1 inch. Now the plumb-bob may be removed if the final centering is to be done optically. Otherwise in calm weather the plumb-bob may be used on its own.

b. Securing Base Plate of Tribrach. The tribrach itself is located on a star shaped base plate, where the three leveling screws (fig. 4) are kept fast by a rotatable spring plate. The spring plate is normally held in position from below by means of a lock screw. Withdrawing this screw allows the spring plate to be rotated a few degrees. The base plate is thus released and can be separated from the tribrach. For normal use, the spring plate should always be secured to prevent the tribrach from falling out.

c. Fixing and Leveling the Tribrach. The tribrach is fixed to the tripod with the central fixing screw. The circular level bubble is centered by turning the leveling screws.

d. Fixing the Target. 'Turn the lock plate level (fig. 4) towards the right. Insert the feet of the target into the corresponding holes of the tribrach and turn the lever firmly towards the left until it snaps over the clutch and holds the target fast.

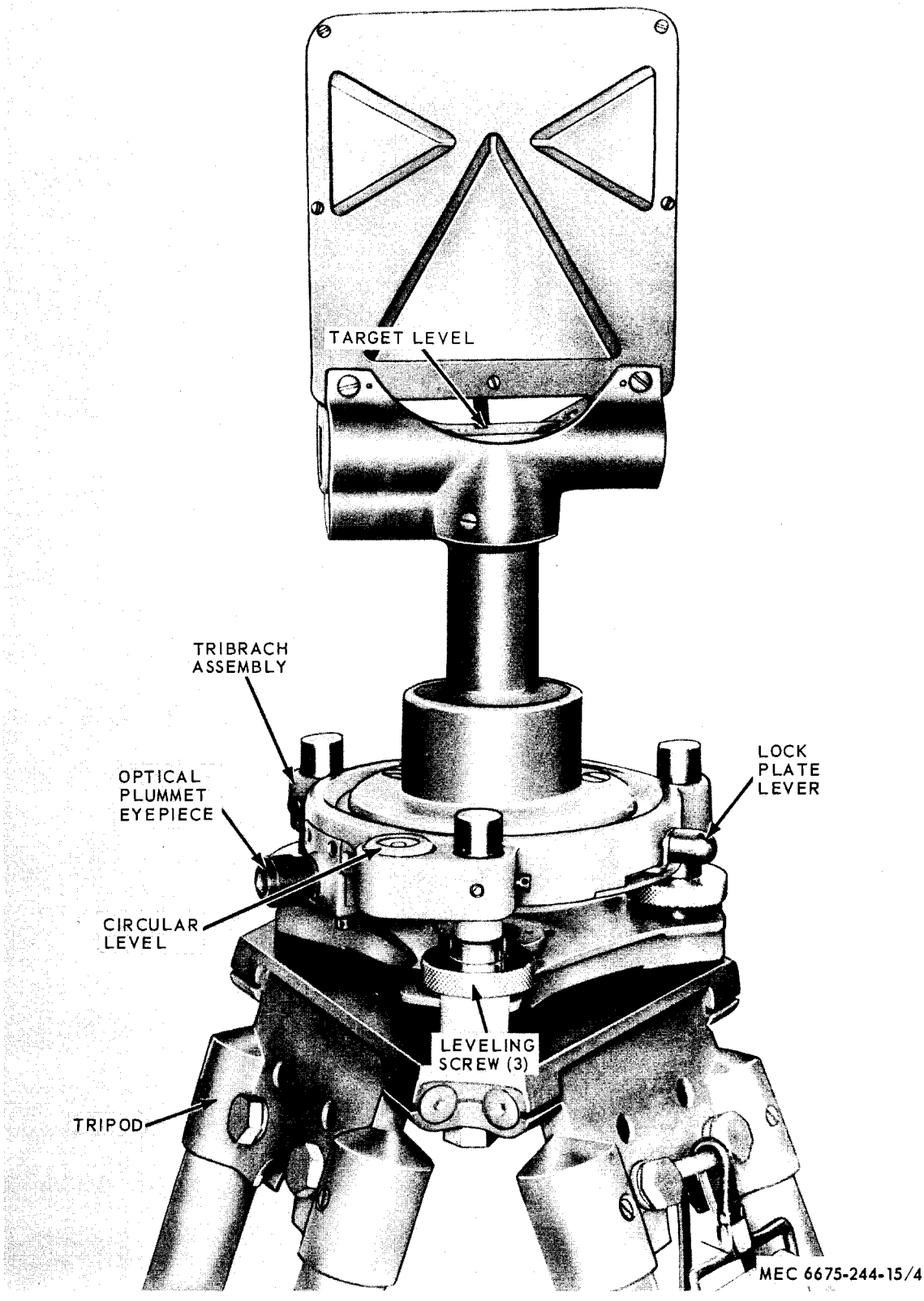

Figure 4. Surveying target set operating instructions.

CHAPTER 3

OPERATOR AND ORGANIZATIONAL MAINTENANCE INSTRUCTIONS

Section I. OPERATOR AND ORGANIZATIONAL MAINTENANCE TOOLS AND EQUIPMENT

16. Special Tools and Equipment

No special tools or equipment are required by the operator and organizational maintenance personnel to perform maintenance on the surveying target set.

17. Basic Issue Tools and Equipment

Tools and repair parts issued with or authorized for the surveying target set are listed in the basic issue item list, appendix II of this manual.

18. Organizational Maintenance Repair Parts

Organizational maintenance repair parts are listed and illustrated in appendix IV of this manual.

Section II. OPERATORS MAINTENANCE

19. General

This section describes maintenance functions which the operator must perform on components of the surveying target set. The only maintenance function which is the operator's responsibility is replacement of the incandescent lamp.

20. Lamp

a. Removal. Refer to figure 5 and remove the lamp.

b. Cleaning and Inspection.

(1) Clean the lamp with a clean cloth.

(2) Inspect for cracks, breaks, and a burned-out condition.

(3) Replace a defective lamp.

c. Installation. Refer to figure 5 and install the lamp.

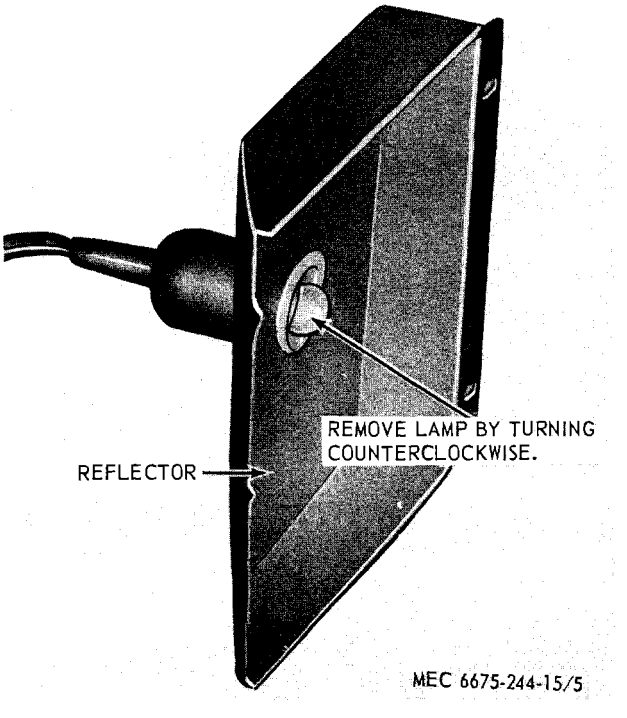

Figure 5. Lamp, removal and installation.

Section III. TROUBLESHOOTING

21. General

This section contains information useful in diagnosing and correcting unsatisfactory operation or failure of the surveying target set. Each trouble symptom stated is followed by a list of probable causes of the trouble. The possible remedy recommended is described opposite the probable cause. Any trouble beyond the scope of organizational maintenance will be reported to direct support maintenance.

22. No Illumination on Target

Probable cause	*Possible remedy*
Incandescent lamp defective	Replace lamp (para 20).

23. Target Set Frame Does Not Seat Properly on Tribrach

Probable cause	*Possible remedy*
Tribrach assembly defective	Replace tribrach assembly (para 27).

Section IV. TARGET SET CARRYING CASE

24. General

The carrying case provides a convenient means for carrying the target set in the field, and serves as a dustproof and moistureproof container for the set when it is in storage. This section contains maintenance functions which organizational maintenance personnel must perform on the carrying case.

25. Carrying Case

a. Repair. The only components of the case that can be replaced are the handle (9, fig. 6) the spring lock (7), and the lock assembly (3).

(1) *Removal.* Refer to figure 6 and remove a defective handle, spring lock, or lock assembly.

(2) *Installation.* Refer to figure 6 and install a serviceable handle, spring lock, or lock assembly.

b. Replace. Replace a carrying case damaged beyond repair with a serviceable case.

---

1 Screw
2 Screw
3 Lock assembly
4 Washer
5 Nut
6 Case
7 Spring lock
8 Screw
9 Handle
10 Washer
11 Screw
12 Nut

Figure 6. Target *set carrying case,* removal and installation.

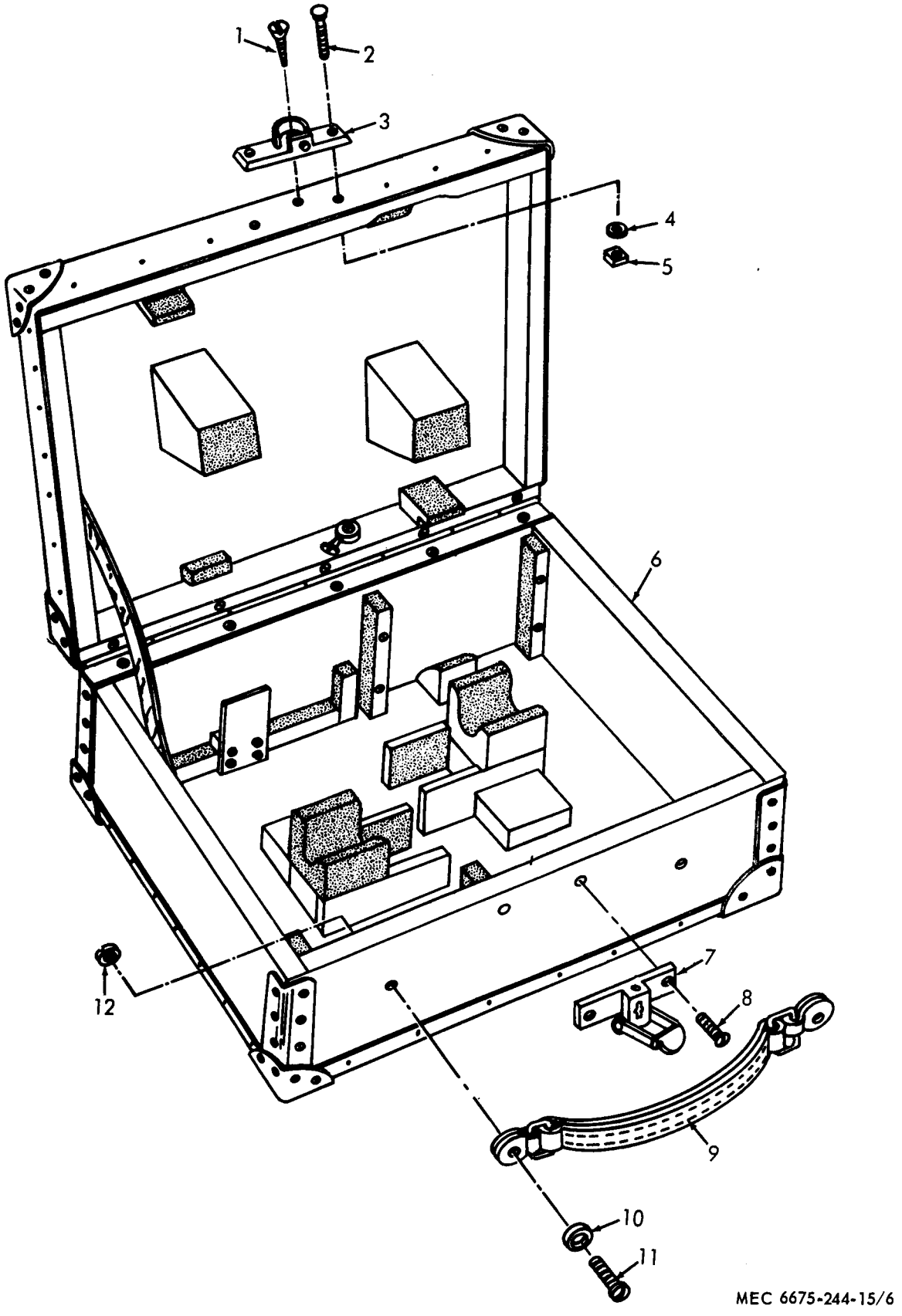

Figure 6 - Continued.

Section V. TRIBRACH ASSEMBLY

26. General

The tribrach assembly, on which the target assembly is mounted, consists of the tribrach assembly and base plate assembly. The tribrach assembly enables the operator quickly and accurately to secure the target set to, and remove it from, the preleveled base attached to the tripod head. This section contains maintenance functions which organizational 'maintenance personnel must perform on the tribrach assembly.

27. Tribrach Assembly

a. *Removal.* Refer to figure 4 and remove the tribrach assembly as follows.

(1) Press the lock plate lever downward and to the right, and remove the target assembly from the tribrach assembly.

(2) Unscrew and remove the tribrach assembly from the tripod central fixing screw.

b. Replace. Replace a defective tribrach assembly with a serviceable one.

c. *Installation.* Reverse the procedures described in *a* above.

Section VI. ILLUMINATION ASSEMBLY AND REFLECTOR

28. General

The illumination assembly consists of a cable, lamp housing, incandescent lamp, male plug, cable sleeve, and lamp socket. The reflector (fig. 5) is square shaped and made of pressed steel. This section contains maintenance functions which organizational maintenance personnel must perform on the illumination assembly and the reflector.

29. Illumination Assembly

a. Repair. Replace a defective lamp (para 20).

b. Replacement. Replace a defective illumination assembly with a serviceable assembly.

30. Reflector

a. Repair. Repaint worn spots.

b. Replacement. Replace a defective reflector with a serviceable one.

CHAPTER 4

DIRECT AND GENERAL SUPPORT AND DEPOT MAINTENANCE INSTRUCTIONS

Section I. GENERAL

31. Scope

a. These instructions are published for the use of direct and general support and depot maintenance personnel maintaining the surveying target set. They provide information on the maintenance of the equipment that is beyond the scope of tools, equipment, personnel, or supplies normally available to organizational maintenance.

b. Report all equipment improvement recommendations as prescribed by TM 38-750.

32. Record and Report Forms

For record and report forms applicable to direct and general support and depot maintenance, refer to TM 38-750.

Note. Applicable forms, excluding Standard Form 46 which is carried by the operator, will be kept in a canvas bag mounted on the equipment.

Section II. DESCRIPTION AND DATA

33. Description

For a complete description of the surveying target set, refer to paragraph 3.

34. Tabulated Data

a. General. Tabulated data for the surveying target for direct and general support and depot maintenance is not required.

b. Time Standards. Table 1 lists the number of man-hours required under normal conditions for various operations in the maintenance and repair of the surveying target set. The man-hours listed are not intended to be rigid standards. Under adverse conditions, the operations will take longer; but under ideal conditions with highly-skilled mechanics, most of the operations can be accomplished in considerably less time.

Table 1. Time Standards

Removal and replace	*Hours*
18 BODY, CAB, HOOD AND HULL	
1808 Carrying Cases:	
Case, carrying	0.2
67 PRECISION INSTRUMENTS AND SYSTEMS	
6700 Target Set:	
Tribrach assembly (includes leveling)	0.6
6702 Optics:	
Objective assembly, tribrach	0.6
Target frame assembly (includes alinement)	0.6
Plummet eyepiece assembly (includes removing and installation of tribrach and lock plate) (includes adjustment)	1.6
Reticle assembly, tribrach	0.3
6703 Mechanical, Structural, and Precision Parts:	
Base assembly, target (with tribrach removed)	0.3
6705 Lamps:	
Lamp	0.1
6713 Miscellaneous Wiring and Fittings:	
Illumination assembly	0.2
Cable assembly, extension	0.1
6718 Level:	
Level assembly, circular (with tribrach and base plate removed)	0.2
Level assembly, horizontal	0.3

CHAPTER 5

GENERAL MAINTENANCE INSTRUCTIONS

Section I. SPECIAL TOOLS AND EQUIPMENT

35. Special Tools and Equipment

No special tools or equipment are required by direct and general support and depot maintenance personnel to perform maintenance on the surveying target set.

36. Direct and General Support and Depot Maintenance Repair Parts

Direct and general support and depot maintenance repair parts and special tool lists are listed and illustrated in appendix IV.

37. Specially Designed Tools and Equipment

No specially designed tools or equipment are required by direct and general support and depot maintenance personnel to perform maintenance on the surveying target set.

Section II. TROUBLESHOOTING

38. General

This section provides information useful in diagnosing and correcting unsatisfactory operation or failure of the surveying target set and its components. Each trouble symptom stated is followed by a list of probable causes of the trouble. The possible remedy recommended is described opposite the probable cause.

39. Leveling Screws Too Tight or Too Loose

Probable cause	*Possible remedy*
Leveling screws worn	Replace leveling screws (para 44)
Leveling screws out of adjustment	Adjust leveling screws (para 44)

40. Circular Level Bubble Does Not Stay in Center

Probable cause	*Possible remedy*
Circular level out of adjustment	Adjust circular level (para 46)
Defective level	Replace level (para 46)

41. Target Level Bubble Does Not Stay in Center

Probable cause	*Possible remedy*
Circular level out of adjustment	Adjust circular level (para 46)
Target level assembly out of adjustment	Adjust target level assembly (para 50)
Defective vial	Replace vial (para 50)

Section III. TRIBRACH ASSEMBLY REPAIR INSTRUCTIONS

42. General

The tribrach assembly consists of the base plate assembly, leveling screws, optical plumbing assembly, circular level and tribrach. The base plate provides a means for securing the target set to the tripod. Leveling is accomplished by means of the leveling screws. Precise location of the target set over the station point is verified by sighting through the optical plummet eyepiece.

43. Base Plate Assembly

a. Removal and Disassembly.

(1) Remove the tribrach assembly from the tripod and target set (para 27).

(2) Loosen the lock screw (8, fig. 7) and push the spring plate (3) clockwise as far as possible.

(3) Lift the base plate assembly from the tribrach.

(4) Refer to figure 7 and disassemble the base plate assembly.

b. Repair and Replacement. Remove burs and straighten minor dents. Refinish and polish scratched or scored bearing surfaces. Replace parts damaged beyond repair with serviceable parts.

c. Reassembly and Installation.

(1) Refer to figure 7 and reassemble the base plate assembly.

(2) Position the base plate assembly on the tribrach making sure the feet of the leveling screws engage the larger part of the slots in the spring plate (3).

(3) Push the spring plate counterclockwise until it engages the leveling screw feet and tighten the lock screw (8).

(4) Install the tribrach assembly on the tripod and target set (para 27).

44. Leveling Screws

a. Removal and Disassembly.

(1) Remove the base plate assembly from the tribrach (para 43).

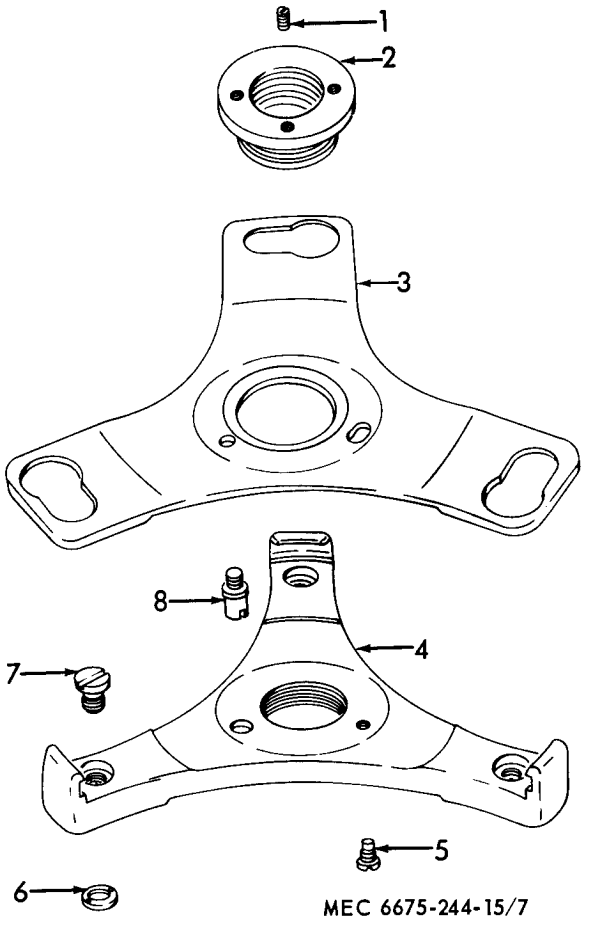

1 Setscrew	5 Screw, guide
2 Nut	6 Nut
3 Plate, spring	7 Bearing
4 Plate, base	8 Screw, lock

Figure 7. Base plate assembly, disassembly and reassembly.

(2) Refer to figure 8 and remove and disassemble the leveling screw.

b. Repair. Straighten out minor bends and dents. File smooth all burs. Replace parts damaged beyond repair with serviceable parts.

c. Reassembly and Installation.

(1) Refer to figure 8 and reassemble and install the leveling screw.

(2) Install the loose plate assembly (para 40).

d. Adjustment. If the leveling screw does not turn smoothly, adjust the pressure by turning the adjusting screw (4, fig. 8).

45. Optical Plumbing Objective Assembly, Plummet Eyepiece Assembly, and Reticle Assembly

a. Removal and Disassembly.

(1) Remove the base plate assembly from the tribrach (para 43).

(2) Refer to figure 9 and remove and disassemble the optical plumbing objective, eyepiece, and reticle assemblies.

b. Repair. Straighten minor bends and remove burs. Replace parts damaged beyond repair with serviceable parts.

c. Reassemble and Installation.

(1) Refer to figure 9 and reassemble and install the optical plumbing objective, eyepiece, and reticle assemblies on the tribrach.

(2) Install the base plate assembly (para 41).

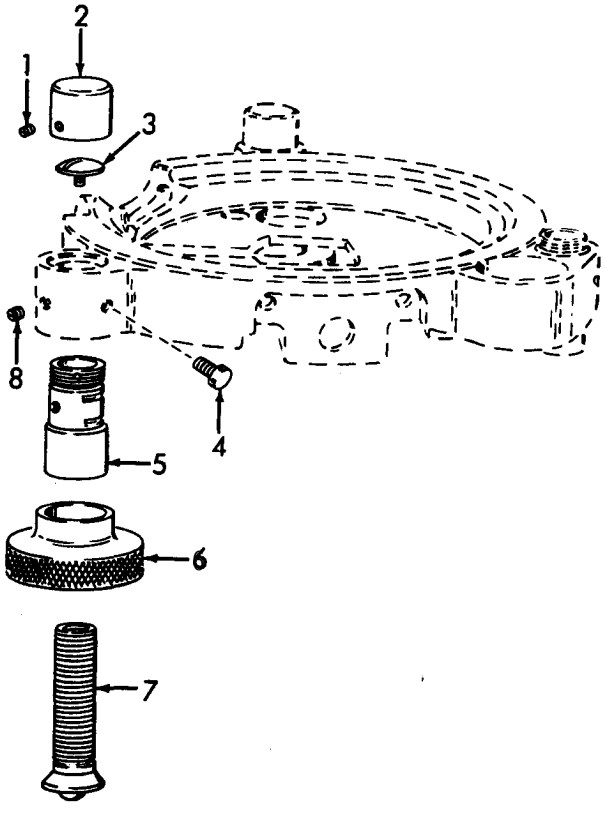

MEC 6675-244-15/8

1 Setscrew, cover retaining
2 Cover
3 Screw, pointscrew retaining
4 Screw, adjusting
5 Nut, leveling screw
6 Knob
7 Screw, leveling
8 Setscrew, nut retaining

Figure 8. Leveling screw assembly, disassembly and reassembly.

46. Circular Level

a. Removal and Disassembly.

(1) ***Remove the*** base plate assembly (para 43).

(2) Refer to figure 10, callouts 1 through 7, and remove and disassemble the circular level.

b. Repair and Replacement. Remove all burs and straighten minor bends. Replace parts damaged beyond repair with serviceable parts.

c. Reassembly and Installation.

(1) Refer to figure 10, callouts 1 through 7, and reassemble and install the circular level.

(2) Install the base plate assembly (para 41).

d. Adjustment. If the level bubble is not centered in the vial, the circular level is out of adjustment. Tighten or loosen the three adjusting screws (7, fig. 10) to bring the level bubble to center.

47. Tribrach Base

a. Removal and Disassembly.

(1) Remove the base plate (para 43).

(2) Remove the leveling screws (para 44).

(3) Remove the optical plumbing assembly (para 45).

(4) Remove the circular level (para 46).

(5) Refer to figure 10, callouts 8 through 17 and remove and disassemble the lock plate (8) from the tribrach base (17).

b. Repair and Replacement. Remove burs and straighten minor bends on the base. Replace parts damaged beyond repair with serviceable parts.

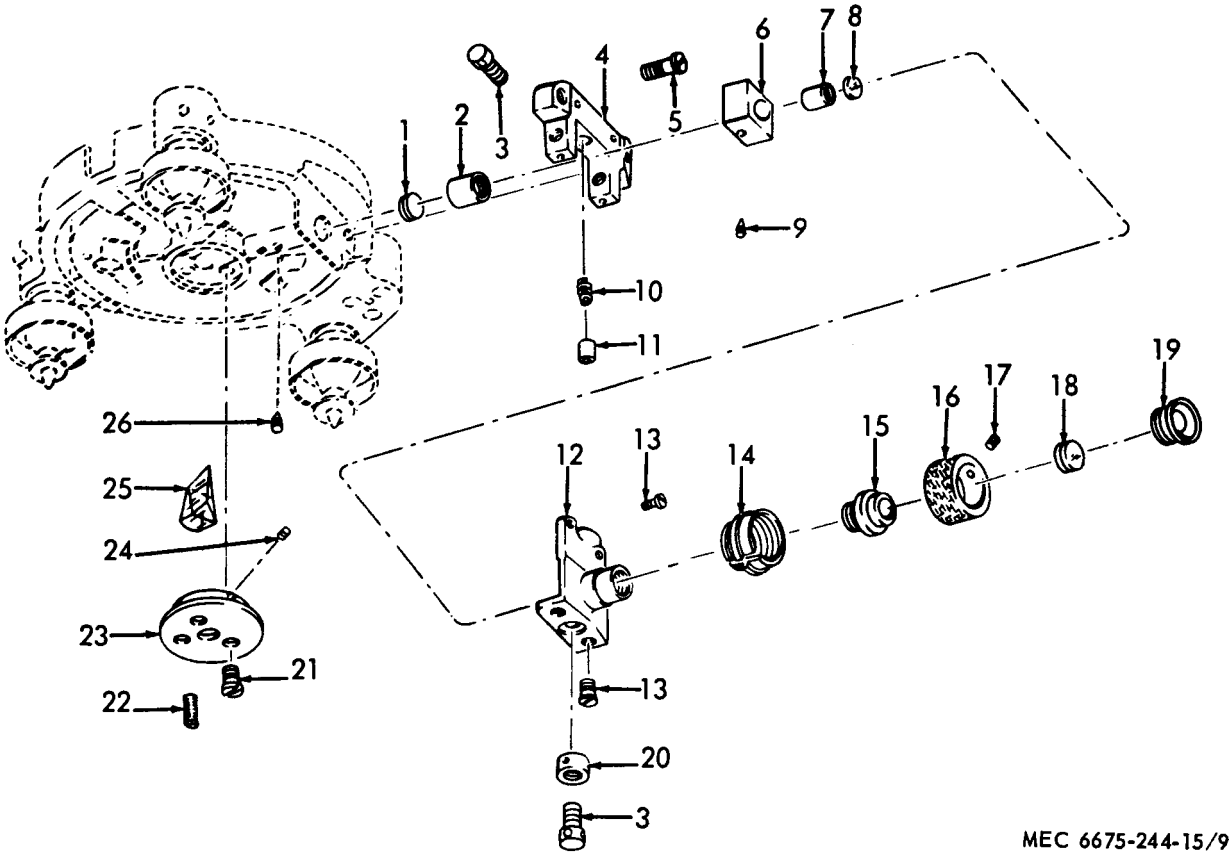

1 Lens assembly
2 Mount
3 Screw, reticle adjusting
4 Housing, spring
5 Screw
6 Sleeve
7 Housing
8 Reticle
9 Setscrew, leveling
10 Spring
11 Puffer
12 Bracket, mounting
13 Screw
14 Collar
15 Tube
16 Collar
17 Setscrew
18 Lens assembly
19 Nut
20 Nut
21 Screw
22 Setscrew
23 Housing, prism
24 Setscrew
25 Prism
26 Setscrew

Figure 9. Optical plumbing objective, plummet eyepiece, and reticle assemblies, [illegible], disassembly, reassembly, and installation.

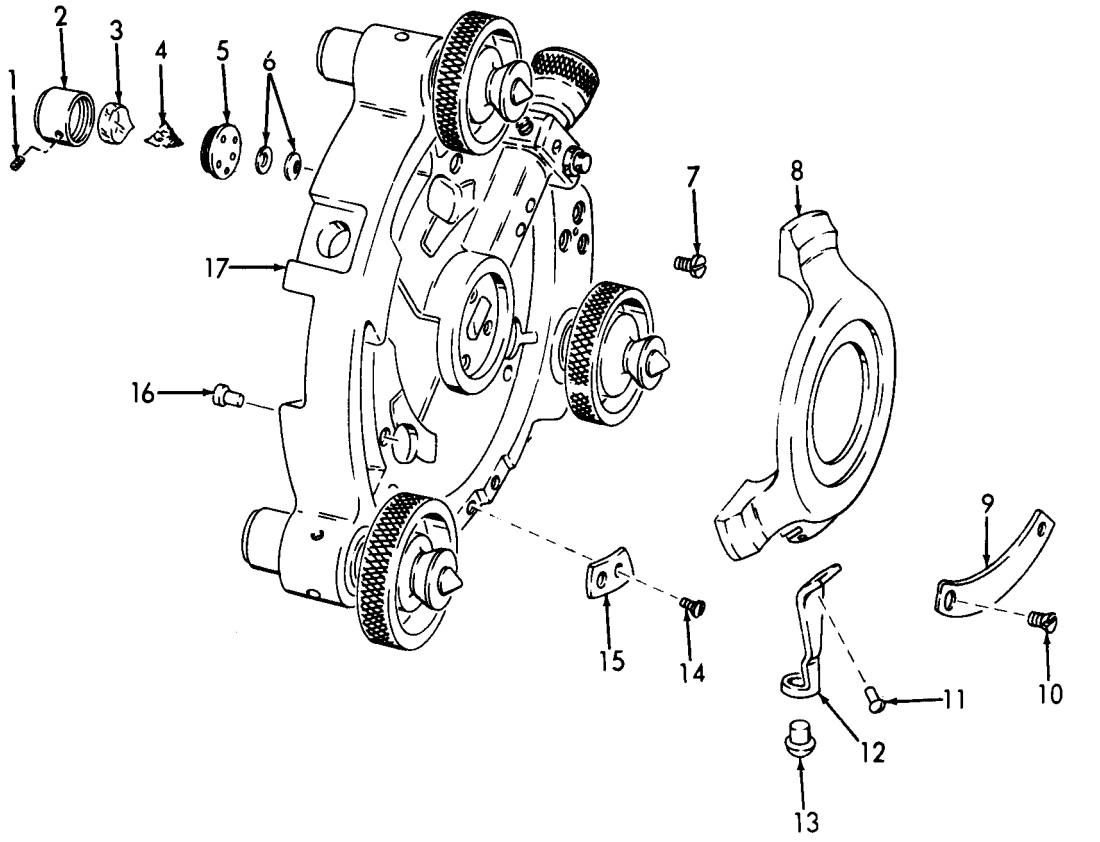

1	Setscrew	7	Screw	13	Knob, lever
2	Housing	8	Plate, lock	14	Screw
3	Level, circular	9	Plate	15	Plate, lever stop lock
4	Plaster	10	Screw	16	Rivet
5	Base, level	11	Rivet	17	Base, tribrach
6	Washer	12	Lever, lock plate		

Figure 10. Circular level and tribrach, disassembly and reassembly.

c. Reassembly and Installation.

(1) Refer to figure 10, callouts 8 through 17, and reassemble and install the lock plate on the base.

(2) Install the circular level (para 44).

(3) Install the optical plumbing assembly (para 43).

(4) Install the leveling screws (para 42).

(5) Install the base plate (para 41).

Section IV. TARGET ASSEMBLY REPAIR INSTRUCTIONS

48. General

The target assembly consists of a target frame, a target level, a base with 3 feet for clamping to the tribrach, a base sleeve, and a bracket.

49. Target Frame

a. Removal.

(1) Refer to paragraph 27 and remove the target assembly from the tribrach.

(2) Refer to figure 11 and remove the frame from the target assembly.

b. Disassembly, Replacement, and Reassembly.

(1) Refer to figure 12 and disassemble the frame assembly.

(2) Replace defective parts with serviceable parts.

(3) Refer to figure 12 and reassemble the frame assembly.

c. Installation. Reverse the procedures in *a* above.

50. Target Level

a. Removal. Refer to figure 13 and remove the level assembly from the target assembly.

b. Disassembly, Repair, and Reassembly,

(1) Refer to figure 14 and disassemble the level assembly.

(2) Replace defective parts with serviceable parts.

(3) Refer to figure 14 and reassemble the level assembly.

c. Installation. Refer to figure 13 and install the level assembly on the bracket.

d. Adjustment. If, after the circular level has been adjusted (para 46), the target level bubble is far off center, the target level is out of adjustment. Tighten or loosen the adjusting screw (11, fig. 14) to bring the bubble to center.

51. Target Base

a. Removal.

(1) Refer to paragraph 27 and remove the target assembly from the tribrach.

(2) Refer to figure 15 and remove the base from the sleeve.

b. Disassembly, Replacement, and Reassembly.

(1) Refer to (13), (15), (16), and (17), figure 16 and disassemble the base.

(2) Replace defective parts with serviceable ones.

(3) Refer to figure 16 and reassemble the base.

c. Installation. Reverse the procedures in *a* above.

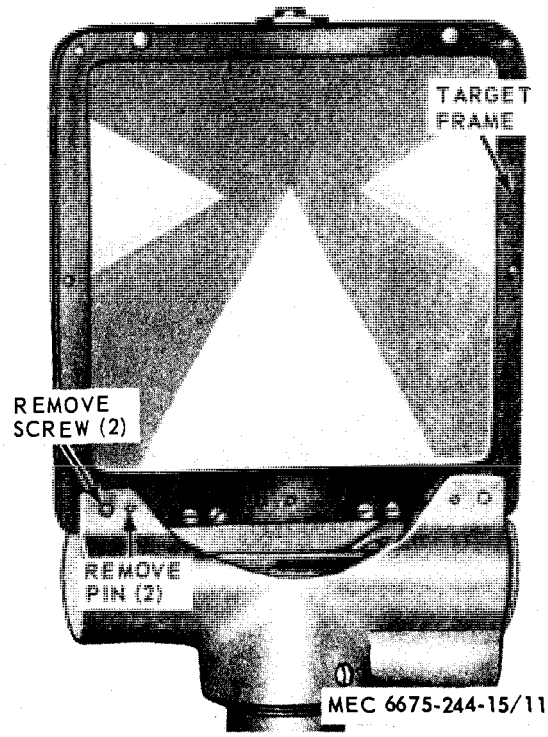

Figure 11. Target frame, removal, and installation.

52. Base Sleeve

a. Removal.

(1) Remove the base (para 51).

(2) Refer to figure 16, and remove the setscrew (12).

b. Disassembly, Replacement, and Reassembly.

(1) Remove the sleeve (8), spring (9), cover (10), and nut (11) from the bracket shaft.

(2) Replace defective parts with serviceable parts.

(3) Refer to (8) through (11), figure 16 and reassemble the sleeve.

c. Installation.

(1) Refer to (12), figure 16 and install the sleeve on the bracket shaft.

(2) Install the base (para 51).

53. Bracket

a. Removal.

(1) Remove the target frame (para 49).

(2) Remove the target level assembly (para 50).

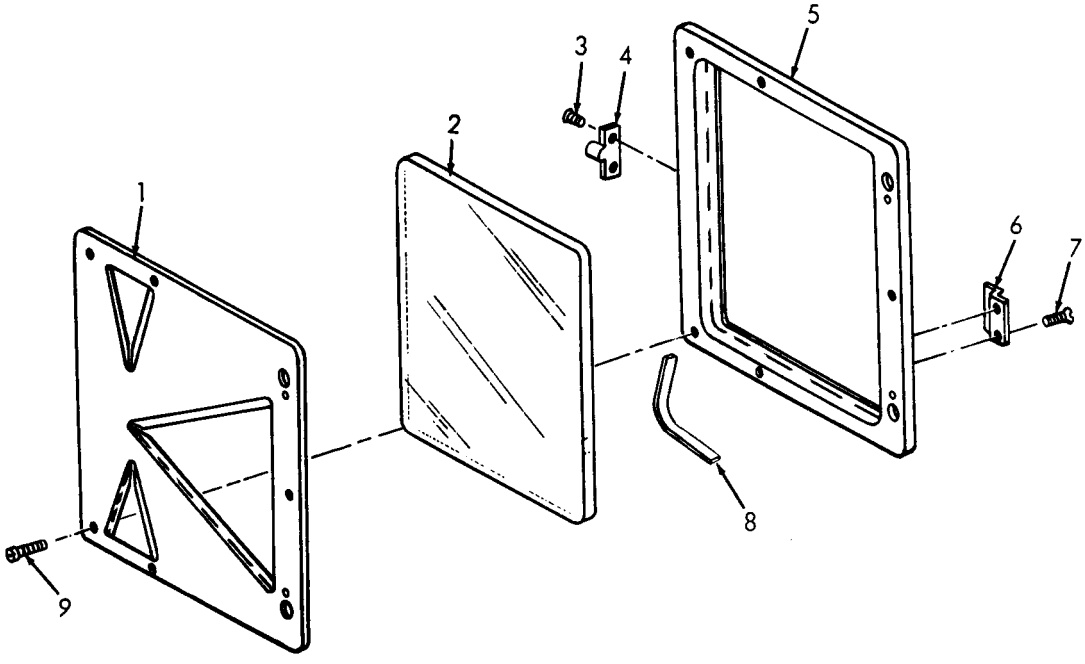

MEC 6675-244-15/12

1 Plate, cover
2 Plate, glass
3 Screw
4 Center
5 Frame
6 Brace
7 Screw
8 Pivot
9 Screw

Figure 12. Target frame, disassembly and reassembly.

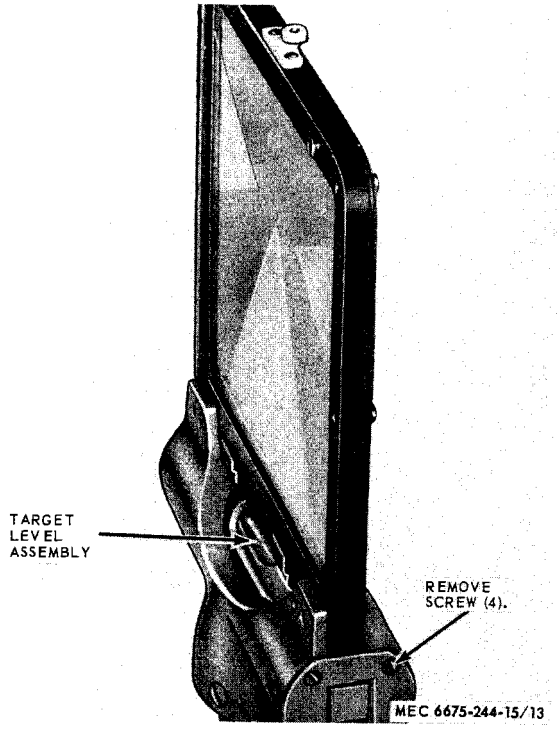

Figure 13. Target level assembly, removal and installation.

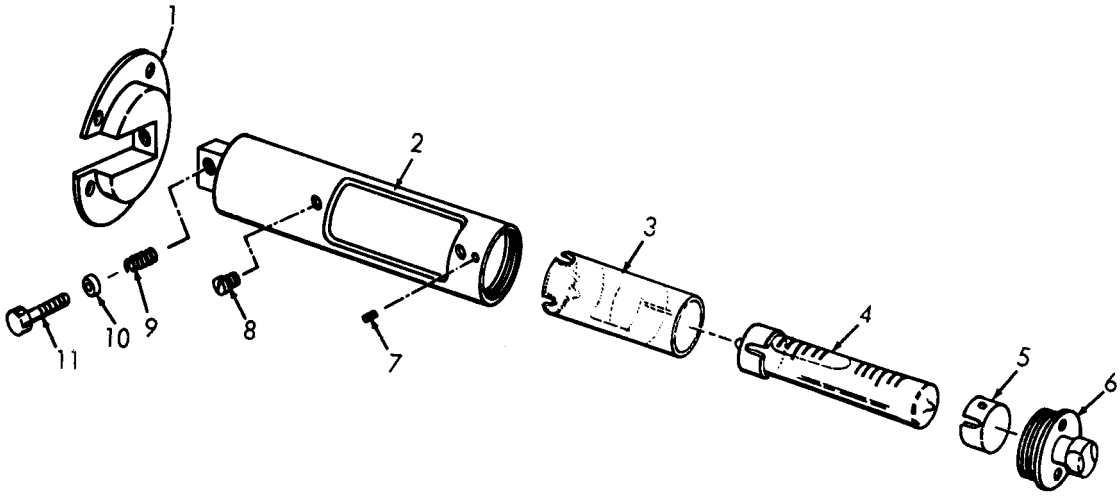

MEC 6675-244-15/14

1 Bracket
2 Housing
3 Cover
4 Vial
5 Cap, vial
6 Bearing
7 Setscrew
8 Screw, vial retaining
9 Spring, vial housing
10 Washer
11 Screw, adjusting

Figure 14. Target level assembly, disassembly and *reassembly.*

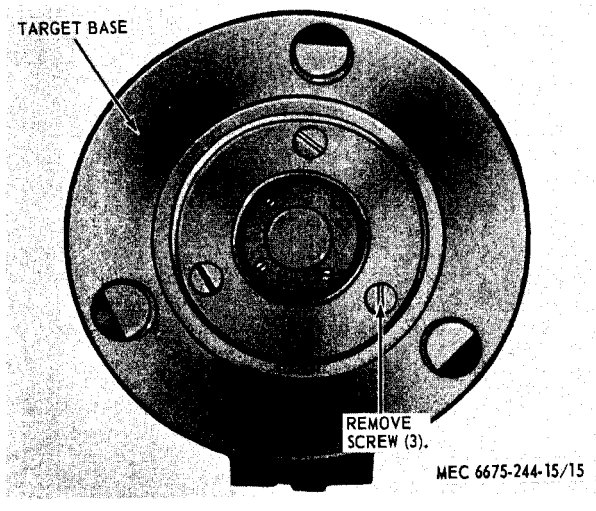

Figure 15. Target base, removal and installation.

(3) Remove the target base (para 51).

(4) Remove the sleeve (para 52).

b. Disassembly, Replacement, and Reassembly.

(1) Refer to (2) through (7), (18) and (21), figure 16, and disassemble the bracket (6).

(2) Replace defective parts with serviceable parts.

(3) Refer to (2) through (7), (18) and (21) and reassemble the bracket.

c. Installation.

(1) Install the sleeve (para 52).

(2) Install the target base (para 51).

(3) Install the target level assembly (para 50).

(4) Install the target frame (para 49).

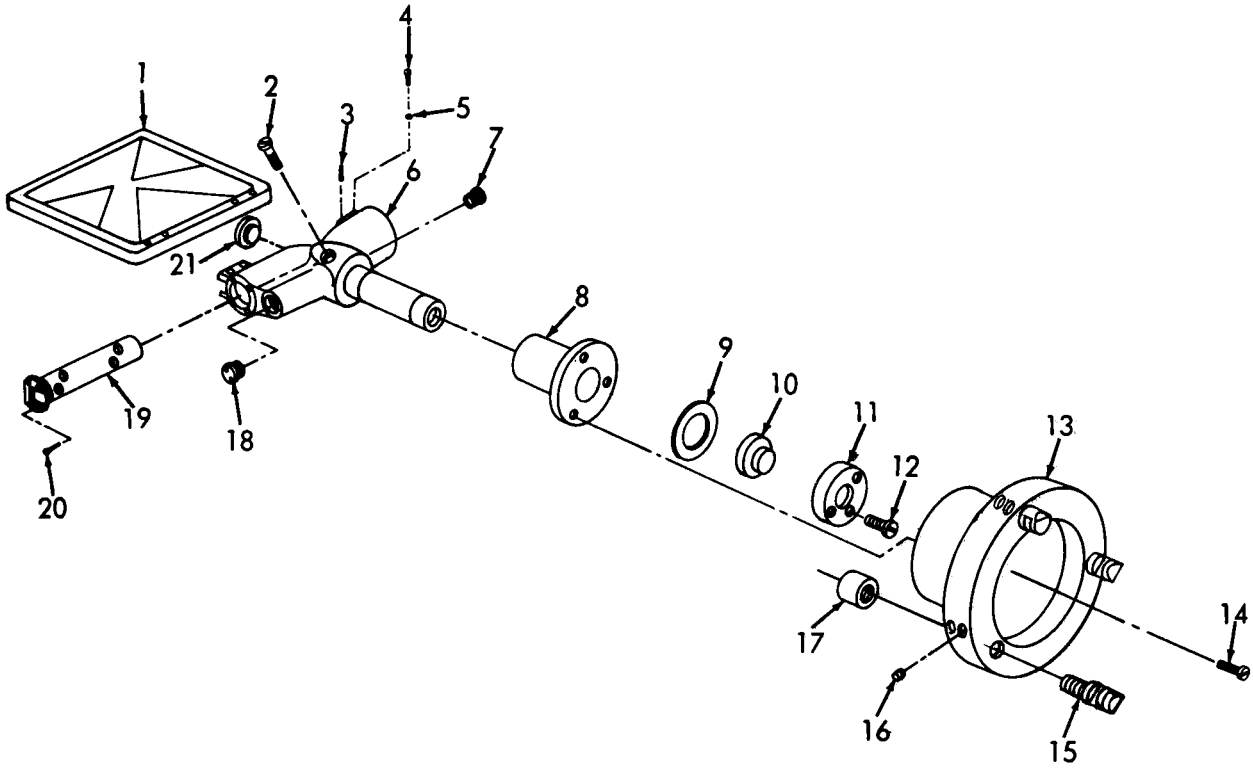

MEC 6675-244-15/16

1	**Frame assembly, target**	8	Sleeve, base	15	Bolt, clutch foot
2	**Screw**	9	Spring, sleeve	16	Setscrew
3	**Pin**	10	Cover, sleeve nut	17	Locknut
4	**Screw**	11	Nut	18	Screw
5	**Washer**	12	Setscrew	19	Level assembly
6	**Bracket**	13	Base	20	Screw
7	**Screw**	14	Screw	21	Screw

Figure 16. Target assembly, disassembly and reassembly.

APPENDIX I

REFERENCES

1. Preventive Maintenance

TM 38-750	The Army Equipment Record Procedures.

2. Technical Manuals

TM 5-6675-205-15	Theodolite: Directional; 0.002 MIL Graduation; 5.9-in. Long Telescope; Detachable Tribrach; w/Accessories and Tripod (Wild Heerbrugg Model T-2-56-C-MIL) FSN 6675-682-4635 (Wild Heerbrugg Model T-2-56-M-MIL) FSN 6675-796-9439.
TM 5-6675-233-15	Theodolite: Directional; 0.002 MIL Graduation; 5.9-in. Long Telescope; Detachable Tribrach; w/Accessories and Tripod (Wild Heerbrugg Model T2-63MIL) FSN 6675-983-8027.

APPENDIX II

BASIC ISSUE ITEMS LIST

Section I. INTRODUCTION

1. General

Section II lists the accessories, tools, and publications required for maintenance and operation by the operator, initially issued with, or authorized for the surveying target set.

2. Explanation of Columns Contained in Section II

a. Source Codes. The information provided in each column is as follows:

(1) *Materiel.* This column is left blank. For identification of agencies assigned supply responsibility for parts refer to appropriate Federal and Department of Army suply catalogs.

(2) *Source.* The selection status and source of supply for each part are indicated by the following code symbol:

P—applied to high-mortality repair parts which are stocked in or supplied from the army supply system, and authorized for use at indicated maintenance categories.

(3) *Maintenance.* The lowest maintenance level authorized to use, stock, install, or manufacture the part is indicated by the following code symbol:

O-Organizational Maintenance

(4) *Recoverability.*

Note. When no code is shown in the recoverability column the part is considered expendable.

b. Federal Stock Number. The Federal stock number will be shown in this column, and will be used for requisitioning purposes.

c. Description.

(l) The item name and a brief description of the part are shown.

(2) A five-digit Federal supply code for manufacturers and/or other supply services is shown in parentheses followed by the manufacturer's part number. This number will be used for requisitioning purposes when no Federal stock number is indicated in the Federal stock number column.

Example: (08645) 86453.

d. Unit of Issue. If no abbreviation is shown in this column, the unit of issue is "each".

e. *Quantity Authorized.* This column lists the quantities of repair parts, accessories, tools, or publications authorized for issue to the equipment operator or crew as required.

f. Quantity Issued with Equipment. This column lists the quantities of repair parts, accessories, tools, or publications that are initially issued with each item of equipment.

g. Illustrations. This column is subdivided into two columns which provide the following information:

(1) *Figure number.* Provides the identifying number of the illustration.

(2) *Item number.* Provides the referenced number for the parts shown in the illustration.

Section II. BASIC ISSUE ITEMS LIST

Source codes				Federal stock No.	Description	Unit of issue	Quantity authorized	Quantity issued with equipment	Illustration	
Materiel	Source	Maintenance	Recoverability						Figure No.	Item No.
					GROUP 31-BASIC ISSUE ITEMS, MANUFACTURER INSTALLED					
					3100-BASIC ISSUE ITEMS, MANUFACTURER OR DEPOT INSTALLED					
					DEPARTMENT OF THE ARMY OPERATOR, ORGANIZATIONAL, DIRECT AND GENERAL SUPPORT AND DEPOT MAINTENANCE AND REPAIR PARTS MANUAL TM 5-6675-244-15.	-----	2	2		
					GROUP 32-BASIC ISSUE ITEMS, TROOP INSTALLED					
					3200-BASIC ISSUE ITEMS, TROOP INSTALLED OR AUTHORIZED					
	P	O	---	6675-859-5936	INCANDESCENT LAMP, ILLUMINATION ASSEMBLY (89905) HEG3-64. (Repair Parts Manual Group 6705)	-----	2	4	24	2

APPENDIX III

MAINTENANCE ALLOCATION CHART

Section I. INTRODUCTION

1. General

a. Section I provides a general explanation of all maintenance and repair functions authorized at various maintenance levels.

b. Section II designates overall responsibility for the performance of maintenance operations on the identified end item or component. The implementation of the maintenance tasks upon the end item or component will be consistent with the assigned maintenance operations.

c. Section III lists the special tools and test equipment required for each maintenance operation as referenced from section II.

d. Section IV contains supplemental instructions, explanatory notes, and/or illustrations required for a particular maintenance function.

2. Explanation of Columns in Section II

a. Functional Group Number. The functional group is a numerical group set up on a functional basis. The applicable functional grouping indexes (obtained from TB 750-93-1 Functional Grouping Codes) are listed on the MAC in the appropriate numerical sequence. These indexes are normally set up in accordance with their function and proximity to each other.

b. Component Assembly Nomenclature. This column contains a brief description of the components of each functional group.

c. Maintenance Operations and Maintenance Levels. This column lists the various maintenance operations (A through J) and indicates the lowest maintenance level authorized to perform these operations.

The symbol designations for the various maintenance levels areas follows:

O/C - Operator or crew
O - Organizational maintenance
F - Direct support maintenance
H - General support maintenance
D - Depot maintenance

The Maintenance Operations are defined as follows:

A-SERVICE: Operations required periodically to keep the item in proper operating condition, i.e., to clean, preserve, drain, paint, and replenish fuel, lubricants, hydraulic, and deicing fluids, or compressed air supplies.

B—ADJUST: Regulate periodically to prevent malfunction. Adjustments will be made commensurate with adjustment procedures and associated equipment specifications.

C-ALINE: Adjust two or more components of an electrical or mechanical system so that their functions are properly synchronized or adjusted.

D-CALIBRATE: Determine, check, or rectify the graduation of an instrument, weapon, or weapons system or components of a weapons system.

E-INSPECT: Verify serviceability and detect incipient electrical or mechanical failure by close visual examination.

F-TEST: Verify serviceability and detect incipient electrical or mechanical failure by measuring the mechan-

ical or electrical characteristics of the item and comparing those characteristics with authorized standards. Tests will be made commensurate with test procedures and with calibrated tools and/or test equipment referenced in the MAC.

G-REPLACE: Substitute serviceable components, assemblies and subassemblies for unserviceable counterparts or remove and install the same item when required for the performance of other maintenance operations.

H-REPAIR: Restore to a serviceable condition by replacing unserviceable parts or by any other action required using available tools, equipment and skills-to include welding, grinding, riveting, straightening and facing.

I-OVERHAUL: Restore an item to a completely serviceable condition (as prescribed by serviceability standards developed and published by the commodity commands) by employing techniuqes of "Inspect and Repair Only as Necessary" (IROAN). Maximum use of diagnostic and test equipment is combined with minimum disassembly during overhaul. "Overhaul" may be assigned to any level of maintenance except organizational, provided the time, tools, equipment, repair parts authorization, and technical skills are available at that level. Normally, overhaul as applied to end items, is limited to depot maintenance level.

J-REBUILD: Restore to a condition comparable to new by disassembling to determine the condition of each component part and reassembling using serviceable, rebuilt, or new assemblies, subassemblies, and parts.

e. Reference Note. This column, subdivided into columns K and L, is provided for referencing the SPECIAL TOOL AND TEST EQUIPMENT REQUIREMENTS (See III) and REMARKS (Sec IV) that may be associated with maintenance operations (Sec H).

3. Explanation of Columns in Section III

a. Reference Code. This column consists of a number and a letter separated by a dash. The number references the T and TE requirements column on the MAC.

The letter represents the specific maintenance operation the item is to be used with. The letter is representative of columns A through Jon the MAC.

b. Maintenance Level. This column shows the lowest level of maintenance authorized to use the special tool or test equipment.

c. Nomenclature. This column lists the name or identification of the tool or test equipment.

d. Tool Number. This column lists the manufacturer's code and part number, or Federal Stock Number, of tools and test equipment.

5. Explanation of Columns in Section IV

a. Reference Code. This column consists of two letters separated by a dash, both of which are references to section H. The first letter references column L and the second letter references a maintenance operation, column A through J.

b. Remarks. This column lists information pertinent to the maintenance operation being performed, as indicated on the MAC section II.

Section II. MAINTENANCE ALLOCATION CHART

Functional group No.	Component assembly nomenclature	Essentiality	Maintenance operation: A Service	B Adjust	C Aline	D Calibrate	E Inspect	F Test	Maintenance levels: G Replace	H Repair	I Overhaul	J Rebuild	Note reference: K T&TE rqmt
18	BODY, CAB, HOOD AND HULL												
1808	Carrying Cases:												
	Case, target set	---	---		---	---		---	O	O			
67	PRECISION INSTRUMENTS AND SYSTEMS, MECHANICAL ELECTRICAL, ELECTRONIC												
6700	Target Set:												
	Tribrach assembly				---			---	O	D			
	Base plate assembly		---	---		---	---		F	F			
6702	Optics:												
	Objective assembly; tribrach	---	---	---		---	---		D	D			
	Target frame assembly	---	---		---	---			H	H			
	Reticle assembly, tribrach	---	---		---		---		D	D			
	Plummet eyepiece assembly	---		---	---	---			D	D			
6703	Mechanical, Structural, and Precision Parts:												
	Base, target assembly			---	---		---	-	H				
6705	Lamps:												
	Lamp	E	---			---	---	-	O				
6713	Miscellaneous Wiring and Fittings:												
	Illumination assembly	---	---				---		O				
6718	Levels:												
	Level assembly, circular				---			-	H	H			
	Level assembly, horizontal	---	---	---	---				H	H			

Section III. SPECIAL TOOL AND SPECIAL TEST EQUIPMENT REQUIREMENTS

Reference code	Maintenance level	Nomenclature	Tool No.
		No special tools or test equipment required.	

Section IV. REMARKS

Reference code	Remarks
	No remarks required.

APPENDIX IV

ORGANIZATIONAL, DIRECT AND GENERAL SUPPORT AND DEPOT MAINTENANCE REPAIR PARTS AND SPECIAL TOOL LISTS

Section I. INTRODUCTION

1. General

a. This appendix lists repair parts and special tools for organizational, direct and general support, and depot maintenance. It indicates the quantity of repair parts required to be stocked by organizational maintenance as their prescribed load. It indicates the guide quantity factors to be used for initial repair parts stockage by direct and general support, and recommends quantities of repair parts for depot maintenance. Information and data contained herein serve as requisitioning reference material, and as a guide to determine stockage quantities of repair parts.

b. Price information for stock-type repair parts may be obtained from applicable Federal Supply Catalogs and/or Supply Management Data and Price List (ML) of the Department of Defense Supply agencies.

c. Repair parts lists are arranged as follows:

(1) Individual parts and major assemblies are listed alphabetically by item name within the functional groups.

(2) Assembly components and subassemblies are indented and listed alphabetically by item name under major assemblies.

(3) Bulk material and parts peculiar with more than one application are listed in functional groups 9501 and 9901 respectively.

d. Allowances are based on 700 hours operational per year.

2. Explanation of Repair Parts, Tools Lists, and Prescribed Load listing (Table 1).

a. Source Codes. This column is subdivided into four columns. The titles and information provided in each column are as follows:

(1) *Materiel.* This column is left blank. For identification of agencies assigned supply responsibility for parts, refer to appropriate Federal and Department of Army supply catalogs.

(2) *Source.* The selection status and source of supply for each part are indicated by one of the following code symbols:

(a) P-applied to high-mortality repair parts which are stocked in or supplied from the Army supply system, and authorized for use at indicated maintenance categories.

(b) X1-applied to repair parts which are not procured or stocked, the requirement for which will be supplied by use of next higher assembly or components.

(c) X2-applied to repair parts which are not stocked. The indicated maintenance category requiring such repair parts will attempt to obtain them through cannibalization; if not obtainable through cannibalization, such repair parts will be requisitioned with supporting justification through normal supply channels.

Note. Source coding is not shown on common hardware items known to be readily available in Army supply channels and through local procurement.

(3) *Maintenance.*

(a) The lowest maintenance level authorized to manufacture, assembly, and/or install the part is indicated by one of the following code symbols:

O-Organizational Maintenance
F-Direct Support Maintenance (DS)
H-General Support Maintenance (GS)
D-Depot Maintenance

(b) This column is left blank when components of kits or sets are listed that are not applicable to the item of equipment, or when an item is source coded Xl.

(4) *Recoverability.*

Note. When no code is shown in the recoverability column the part is considered expendable.

b. Federal Stock Number. The Federal stock number will be shown in this columm and will be used for requisitioning purposes.

c. Description.

(1) The item name and a brief description of the part are shown.

(2) A five-digit Federal supply code for manufacturers and/or other supply serve is shown in parentheses, followed by the manufacturer's part number. This number will be used for requisitioning purposes when no Federal stock number is indicated in the Federal stock number column.

Example: (08645) 86453.

d. Unit of Issue. If no abbreviation is shown in this column, the unit of issue is "each."

e. Quantity Incorporated in Unit. The actual number of parts used in the application indicated is shown in this column.

f. 15-Day Organizational Maintenance Allowance. Shown for each repair part is either a quantity or an asterisk allocation which indicates the following:

(1) A guide quantity factor is shown for each repair part authorized to be stocked by organizational maintenance. This quantity is based on past experience with similar items and the latest mortality data for 700 hours operation per year. It is the average quantity required to provide one prescribed load for 1-5 and/or 6-10 items of equipment for a 15-day period under average combat conditions.

Note. Combat essential items which must be stocked or on order at organizational maintenance at all times, regardless of demand, will be identified in the allowance column by a quantity in parentheses.

(2) The quantity of repair parts authorized for stockage in accordance with the number of prescribed loads by the major commander are determined by using table 1.

(3) Table 1 is a consolidation of items quantitatively allocated in this manual. Quantities listed are for one prescribed load for a 15-day period. A minimum stockage sufficient to repair one item and/or assembly is authorized (e.g., if 3 belts are required, then 3 belts are allocated as the minimum stockage). This quantity will be indicated in the minimum stockage authorization column.

Table 1. Prescribed Load Listing

Federal stock No.	Description	Functional group	Minimum stockage authorization	Unit of issue	15-day organizational maintenance allowances	
					1–5	6–10
6675–859–5936	LAMP, INCANDESCENT: illumination assembly (89905) HEG3–64.	6705	----------	----------	(2)	(2)

(4) Units and organizations authorized more than one prescribed load will multiply the quantity listed in the appropriate end item density spread column of 1-5 or 6-10 by the number of prescribed loads.

(5) When more than 10 equipments require support, multiply the quantity listed in the 6-10 column by the number of equipments and the number of authorized prescribed loads, divide by 10, and round to the nearest whole number.

Example: If the quantity listed in the 6-10 column is 4, the number of equipments is 17, and the number of authorized prescribed loads is 1, the following formula would be used:

$$4 \times 17 \times 1 \div 10 = 6.8$$

The resulting fraction is 0.8 therefore the authorized stockage is 7.

Example: If the quantity listed in the 6-10 column is 4, the number of equipments is 17, and the number of authorized prescribed loads is 3, the following formula. would be used:

$$4 \times 17 \times 3 \div 10 = 20.4$$

The resulting fraction is 0.4; therefore the authorized stockage is 20.

Note. An exception is made for those units and organizations required to have on hand, boxed or packaged prescribed load(s) pursuant to a special mission assignment. Such prescribed load(s) will be computed or selected separately from quantities authorized for stockage at permanent station.

(6) Repair parts required to perform organizational maintenance, which are not authorized for stockage are identified by an asterisk, and are to be requisitioned for immediate use only.

(7) Subsequent changes to allowances will be limited as follows:

(a) No decrease in the stated quantity of combat essential items is authorized.

(b) No change in the range of items is authorized. If exception to the prescribed load listing or revision to allowance is considered necessary, a recommendation should be forwarded to the U.S. Army Mobility Equipment Center (para 6).

(c) Decreases in the stated quantity of items other than combat essential items are authorized to a minimum quantity sufficient to repair one item and/or assembly and increases in the stated quantity are authorized for all items when justified by demand and usage experience. Detailed procedures for performing these adjustments are prescribed in AR 735-35.

g. Guide Quantities Per 100 Equipments. Shown for each repair part applicable direct and general support, and/or depot maintenance is either an allowance factor or an asterisk allocation which indicates the following:

(1) A guide quantity factor is shown for each part authorized to be stocked by direct and general support maintenance and supply support activities, and the number of repair parts recommended for depot maintenance. This factor is based on the latest mortality data for 700 hours operation per year and is the average quantity required by the various maintenance activities to provide maintenance and supply support for 100 items of equipment for a 15-day period under average combat conditions.

(2) The quantities of repair parts authorized for stockage are determined using the following mathematical formula:

Quantity of equipment to be supported, multiplied by the listed allowance factor, divided by 100.

Fractions derived from the use of the above formula will be rounded to whole numbers as follows: If the result is 1 or more and includes a fraction that is 0.5 or more, the quantity is rounded to the next higher number.

Example: If the number of equipment supported is 30 and the allowance factor for 100 equipments is 5, the following formula would be used:

$$30 \times 5 \div 100 = 1.5$$

The resulting fraction is 0.5; therefore, the stockage is 2. If the result is 1 or more and includes a fraction of less than 0.5, the quantity is rounded to the next lower number. When the computed result is less than 0.5, no quantity is authorized for direct and general support, and depot maintenance. However, if the item is combat essential, a quantity of 1 is authorized.

Example: If the number of equipment supported is 30 and the allowance factor for 100 equipments is 28, the following formula would be used:

$$30 \times 28 \div 100 = 8.4$$

The resulting fraction is less than 0.5; therefore, the stockage is 8.

(3) In the guide quantity columns for direct and general support maintenance, additional repair parts authorized for use but not for initial stockage, are listed without a guide quantity factor. These items are identified by an asterisk and maybe added to or deleted from stock when recorded demand experience justifies a change in stockage objective.

(4) Parts that may be required for depot maintenance, in addition to those allocated, are identified by a asterisk. These parts are to be requisitioned, when required, if not obtainable from reclamation, fabrication, or local procurement.

(5) Combat essential items of a critical nature which must be stocked at direct and general support maintenance at all times, regardless of demand are identified in the allowance column by inclosing the allowance factor in parentheses.

h. Direct and General Support Maintenance 15-Day Level.

(1) *Direct support (DS).* This column lists the initial guide quantity allowance factors of repair parts authorized for initial stockage by direct support maintenance activities to provide direct support maintenance for Mobility Command equipment and to provide organizational maintenance repair parts for supported units for a 15-day period. Additional repair parts identified by an asterisk are explained in *g* above. Upon establishment of supply records, recorded demand experience will be used to compute stockage objectives on authorized repair parts. Review of stockage objectives will be performed in the time cycle prescribed by major commanders.

(2) *General support (GS).* This column lists initial guide quantity allocation factors of repair parts authorized for initial stockage by general support maintenance activities to provide general support maintenance for Mobility Command equipment for a 15-day period. Additional repair parts identified by an asterisk are explained in *g* above. Upon establishment of supply records, recorded demand experience will be used to compute stockage objectives on authorized repair parts. Review of the stockage objectives will be performed in the time cycle prescribed by major commanders.

(3) *Units with TOE capability of performing partial or complete Direct and General Suport maintenance for organic Mobility Command equipment.* Units with the TOE capability of performing partial or complete direct and general support maintenance for organic Mobility Command equipment will be authorized to stock direct and/or general support repair parts only when specific agreements are made between the commander of the designated parts supply activity, normally DSU (Direct Support Units) and using unit. Parts so furnished are in addition to the prescribed bad and will be adjusted as demands indicate.

(4) *Units with TOE Mission to provide maintenance for Mobility Command equipment of supported units.* Units organized under TOE's with the assigned mission to provide direct and general support maintenance for

Mobility Command equipment of supported units are authorized to stock direct and general support repair parts. These repair parts will be issued from the appropriate parts supply activity (parts depot and/or DSU). Such stockage is in addition to the prescribed lewd and will be adjusted as demands indicate.

i. Depot Maintenance. This column lists the quantity of repair parts recommended for depot maintenance shops (non-TOE) to provide depot maintenance for 100 equipments. Additional repair parts are alocated by an asterisk, for immediate use only. Explanation of the asterisk allowance is contained in *g* above.

j. Illustrations. This column is subdivided into two columns as follows:

(1) *Figure number.* Indicates the number of-the illustration in which the part is shown.

(2) Item number. Indicates the reference number used to point out the part in the illustration.

3. Abbreviations

id _____ inside diameter
in._____ inch(es)
lb _____ pound(s)
lg _____long (length)
mtg_____ mounting(s)
No. _____number
od_____outside diameter
thd_____ thread(s) (ed)
thk_____thick(ness)

4. Federal Supply Code for Manufacturers

89905 _____Wild Heerbrugg Instruments, Inc.

LINE NO.	SOURCE CODES: MATERIEL	SOURCE	MAINT	RECOVERABILITY	FEDERAL STOCK NUMBER	DESCRIPTION	MANUFACTURER'S CODE	PART NO.	UNIT OF ISSUE	QTY INCORPORATED IN UNIT	GUIDE QTY(S) PER MAJ EQUIPS: 15 DAYS MAINTENANCE: ORGANIZATION 1-5	6-10	DS	GS	DEPOT MAINT	ILLUST: FIGURE NO.	ITEM NO.
0001						SECTION II - REPAIR PARTS LIST											
0002						GROUP 18 - BODY, CAB, HOOD AND HULL											
0003						1808 - STOWAGE RACKS, BOXES, STRAPS, CARRYING CASES, CABLE REELS, HOSE REELS, ETC.											
0004	X20					CASE, CARRYING: TARGET SET	89905	XT21-406		1	*	*	*	*	*	17	6
0005	X20					HANDLE: CARRYING CASE	89905	T2-14		1	*	*	*	*	*	17	9
0006	X20					KEY: LOCK	89905	SCH2-8		2	*	*	*	*	*		
0007	X20					LOCK ASSEMBLY	89905	SCH2-20		1	*	*	*	*	*	17	3
0008	X20					SPRING, LOCK	89905	SCH2-7		1	*	*	*	*	*	17	7
0009	X20					NUT, PLAIN, SHAKE: LOCK ASSEMBLY AND SPRING LOCK MTG	89905	ACH2-11		5	*	*	*	*	*	17	5
0010	X20					NUT, ROUND: HANDLE MTG, SLOTTED, No. 10-32 THD SIZE	89905	DIN546M5		2	*	*	*	*	*	17	12
0011	X20					SCREW, MACHINE: HANDLE MTG, 10-32 THD SIZE, 3/4 IN. LG	89905	DIN88-5X20		2	*	*	*	*	*	17	11
0012	X20					SCREW: LOCK ASSEMBLY MTG	89905	SCH2-14		2	*	*	*	*	*	17	2
0013	X20					SCREW, WOOD: LOCK MTG, No. 1-28 THD SIZE, 1/4 IN. LG	89905	SCH2-15		1	*	*	*	*	*	17	1
0014	X20					SCREW: SPRING LOCK MTG	89905	SCH2-9		3	*	*	*	*	*	17	8
0015	X20					WASHER: HANDLE MTG, No. 10 SCREW SIZE	89905	ZVT5		2	*	*	*	*	*	17	10
0016	X20		5310-655-5976			WASHER, FLAT: LOCK MTG, 5/32 IN. ID, 19/32 IN. OD, 1/32 IN. THK				5	*	*	*	*	*	17	4
0017						GROUP 67 - PRECISION INSTRUMENTS AND SYSTEMS, MECHANICAL ELECTRICAL, ELECTRONIC											
0018						6700 - THEODOLITE											
0019	X20					TRIBRACH ASSEMBLY	89905	T21-2A		2	*	*	*	*	*	19	
0020	X2F		6675-374-2446			BASE PLATE ASSEMBLY	89905	XT2-50		2			*	*	*	18	
0021	X2F		6675-378-9440			BEARING, STAR FACED BASE PLATE	89905	NT3-323		6			*	*	*	18	7
0022	X2F					NUT: TRIBRACH TO TRI POD MTG	89905	NT2-153A		2			*	*	*	18	2
0023	X2F		5310-378-9441			NUT, LOCK: LEVELING SCREW BEARING	89905	NT3-324		6			*	*	*	18	6
0024	X2F		6675-377-4905			PLATE, BASE: TRIBRACH	89905	NT2-151A		2			*	*	*	18	4
0025	X2F		6675-377-4906			PLATE, SPRING	89905	NT2-152A		2			*	*	*	18	3
0026	X2F		5305-353-4088			SCREW, MACHINE: SPRING PLATE LOCKING	89905	NT2-154		2			*	*	*	18	8
0027	X2F					SCREW: SPRING PLATE GUIDE	89905	CAZ2-4X6		2			*	*	*	18	9
0028	X2F					SETSCREW: RETAINING NUT	89905	DIN553-246		2			*	*	*	18	1
0029	X20					TRIBRACH ASSEMBLY	89905	XT21-103		2	*	*	*	*	*	19	
0030	X2D					BASE, TRIBRACH	89905	T21-31A		2					*	19	17
0031	X2D					BRACKET: OPTICAL PLUMBING MTG	89905	T21-44		2	SEE GRP 6702						
0032	X2D					HOUSING, SPRING: OPTICAL PLUMBING	89905	T21-43		2	SEE GRP 6702						
0033	X2D					HOUSING: OPTICAL PLUMBING PRISM	89905	T21-42		2	SEE GRP 6702						
0034	X2H					LEVEL ASSEMBLY, CIRCULAR	89905	XT21-301		2	SEE GRP 6718						
0035	X2D					LEVER ASSEMBLY: TRIBRACH	89905	XT21-302		2					*		
0036	X1					KNOB: LEVER	89905	T21-36		2						19	13
0037	X1					LEVER: LOCK PLATE	89905	T2-133		2						19	12
0038	X1					LOCK PLATE	89905	T21-32		2						19	8
0039	X1					RIVET: LEVER TO LOCK PLATE, 3/32 IN. DIA, 3/16 IN. LG	89905	DIN660-2X45		6						19	11
0040	X2D		5310-378-9474			NUT, CHECK: OPTICAL PLUMBING DEVICE	89905	T2-467A		2	SEE GRP 6702						
0041	X2D					OBJECTIVE ASSEMBLY: OPTICAL PLUMBING	89905	XT2-305		2	SEE GRP 6702						
0042	X2D					PLATE, LOCK: LEVER STOP	89905	T21-34		2					*	19	15
0043	X2D					PLATE, STOP: LEVER RETAINING	89905	T21-35		2					*	19	9
0044	X2D					EYE PIECE ASSEMBLY: PLUMBING	89905	XT21-303		2	SEE GRP 6702						
0045	X2D					PRISM: OPTICAL PLUMBING	89905	T21-41		2	SEE GRP 6702						
0046	X2D		6675-378-9475			PUFFER, OPTICAL PLUMBING DEVICE	89905	T2-468		2	SEE GRP 6702						
0047	X2D					RETICLE ASSEMBLY: OPTICAL PLUMBING	89905	XT21-304		2	SEE GRP 6702						
0048	X2D					RIVET: TRIBRACH, 1/8 IN. DIA, 1/8 IN. LG	89905	T4-20		6					*	19	16
0049	X2H		5305-378-9274			SCREW, ADJUSTING	89905	CD9-3X55		6				*	*	20	4
0050	X2D					SCREW: RETICLE ADJUSTING	89905	CB3-4X035X75		6	SEE GRP 6702						
0051	X2D		5305-378-9221			SETSCREW: LEVELING	89905	DIN55317X15		2	SEE GRP 6702						
0052	X2H		5305-378-9542			SETSCREW: NUT RETAINING	89905	DIN553-3X4		6				*	*	20	8
0053	X2D					SCREW, MACHINE: LOCK PLATE MTG	89905	EA2-25X35		4					*	19	14
0054	X2D					SCREW, MACHINE: BRACKET MTG	89905	DIN85-2X5		8	SEE GRP 6702						
0055	X2D					SCREW, MACHINE: PRISM HOUSING MTG	89905	DIN85-26X6		6	SEE GRP 6702						
0056	X2D					SCREW: OPTICAL PLUMBING MTG	89905	CB5-3X11		4	SEE GRP 6702						
0057	X2D		5305-353-4146			SCREW: VERTICAL COLLIMATION LEVEL	89905	CB3-26X47		4					*	19	10
0058	X2H					SCREW ASSEMBLY: LEVELING	89905	XT21-102		6				*	*	20	
0059	X2H					COVER, LEVELING SCREW	89905	NT2-164A		6				*	*	20	2
0060	X2H					KNOB: LEVELING SCREW	89905	NT2-162A		6				*	*	20	6

LINE NO.	SOURCE CODES (SOURCE, MAINT, RECOVERABILITY)	FEDERAL STOCK NUMBER	DESCRIPTION	MANUFACTURER'S CODE	MANUFACTURER'S PART NO.	UNIT OF ISSUE	QTY(S) PER MAJ EQUIPS	GUIDE 15 DAYS MAINTENANCE ORGANIZATION 1-5	6-10	DS 101	GS GMI	REPAIR PARTS	FIGURE NO.	ITEM NO.
0061	X2H		NUT: LEVELING SCREW	89905	NT2-163B		6				*	*	20	
0062	X2H		SETSCREW: LEVELING, COVER RETAINING	89905	DIN553-17X15		6				*	*	20	
0063	X2H		SCREW, POINT: LEVELING SCREW	89905	NT2-160		6				*	*	20	
0064	X2H		SCREW: POINT SCREW RETAINING	89905	NT2-161B		6				*	*	20	
0065	X2D		SETSCREW: PRISM MTG	89905	DIN551-2X4		2	SEE GRP 6702						
0066	X2D		SLEEVE: OPTICAL PLUMBING RETICLE MOUNTING	89905	T21-46		2	SEE GRP 6702						
0067	X2D	6675-378-9473	SPRING: OPTICAL PLUMBING DEVICE	89905	T2-464		2	SEE GRP 6702						
0068	X2H		SCREW, MACHINE: CIRCULAR LEVEL MTG	89905	DIN84-3X8		6	SEE GRP 6718						
0069	X2H		WASHER, SPRING: CIRCULAR LEVEL MTG	89905	HD2-21		12	SEE GRP 6718						
0070			6702 - OPTICS											
0071	X2D		BRACKET: OPTICAL PLUMBING MTG	89905	T21-44		2					*	21	1
0072	X2D		HOUSING, SPRING: OPTICAL PLUMBING	89905	T21-43		2					*	21	1
0073	X2D		HOUSING: OPTICAL PLUMBING PRISM	89905	T21-42		2					*	21	2
0074	X2D	5310-378-9474	NUT, CHECK: OPTICAL PLUMBING DEVICE	89905	T2-467A		2					*	21	2
0075	X2D		OBJECTIVE ASSEMBLY: OPTICAL PLUMBING	89905	XT2-305		2					*	21	
0076	X2D		LENS ASSEMBLY: OPTICAL PLUMBING DEVICE	89905	T2-420-421		2					*	21	
0077	X1		LENS	89905	T2-420		2							
0078	X1		LENS	89905	T2-421		2							
0079	X2D	6675-378-9466	MOUNT: OPTICAL PLUMBING DEVICE	89905	T2-453A		2					*	21	
0080	X2D		EYEPIECE ASSEMBLY: PLUMBING	89905	XT21-303		2					*	21	
0081	X2D	6675-378-9327	COLLAR: OPTICAL PLUMBING DEVICE	89905	NT2-139		2					*	21	1
0082	X2D	6675-378-9454	LENS ASSEMBLY: OPTICAL PLUMBING DEVICE	89905	T2-22-23		2					*	21	1
0083	X1		LENS	89905	T2-22		2							
0084	X1		LENS	89905	T2-23		2							
0085	X2D		NUT, LOCK	89905	T2-258A		2					*	21	1
0086	X2D	5305-378-9539	SETSCREW: COLLAR	89905	DIN553-2X3		2					*	21	1
0087	X2D	6675-378-9329	COLLAR, STOP: OPTICAL PLUMBING DEVICE	89905	NT2-140		2					*	21	1
0088	X2D	6675-378-9478	TUBE: OPTICAL PLUMBING DEVICE	89905	T2-492A		2					*	21	1
0089	X2D		PRISM: OPTICAL PLUMBING	89905	T21-41		2					*	21	2
0090	X2D	6675-378-9475	PUFFER, OPTICAL PLUMBING DEVICE	89905	T2-468		2					*	21	1
0091	X2D		RETICLE ASSEMBLY: OPTICAL PLUMBING	89905	XT21-304		2					*	21	
0092	X1		HOUSING	89905	T21-47		2						21	7
0093	X1		RETICLE	89905	T21-45TA		2						21	8
0094	X2D		SCREW: RETICLE ADJUSTING	89905	CB3-4X035X75		6					*	21	3
0095	X2D		SETSCREW: PRISM HOUSING	89905	DIN551-2X15		2					*	21	22
0096	X2D	5305-375-9538	SETSCREW: LENS MTG	89905	DIN553-2X2		2					*	21	26
0097	X2D	5305-378-9221	SETSCREW: LEVELING	89905	DIN553-17X15		2					*	21	5
0098	X2D		SCREW, MACHINE: BRACKET MTG	89905	DIN85-2X5		8					*	21	15
0099	X2D		SCREW, MACHINE: PRISM HOUSING MTG	89905	DIN85-26X6		6					*	21	21
0100	X2D		SCREW, MACHINE: OPTICAL PLUMBING MTG	89905	CB5-3X11		4					*	21	8
0101	X2D		SETSCREW: PRISM MTG	89905	DIN551-2X4		2					*	21	24
0102	X2D		SLEEVE: OPTICAL PLUMBING RETICLE	89905	T21-46		2					*	21	6
0103	X2D	6675-378-9473	SPRING: OPTICAL PLUMBING DEVICE	89905	T2-464		2					*	21	10
0104	X2H		FRAME ASSEMBLY: TARGET	89905	XT21-404		2				*	*	23	1
0105	X2H		BRACE: TARGET FRAME	89905	Z17		4				*	*	22	6
0106	X2H		CENTER: TARGET	89905	Z14A		2				*	*	22	4
0107	X1		FACE: TARGET	89905	Z13B		2							
0108	X2H		FRAME: TARGET	89905	Z10AG		2				*	*	22	5
0109	X2H		PIVOT: TARGET	89905	Z15A		4				*	*	22	8
0110	X2H		PLATE: COVER	89905	Z11A		2				*	*	22	1
0111	X2H		PLATE, GLASS: TARGET	89905	Z12		2				*	*	22	2
0112	X2H		SCREW, MACHINE: CENTER MTG, BRASS, FILLISTER HEAD SLOTTED	89905	EA1-17X3		4				*	*	22	3
0113	X2H		SCREW, MACHINE: BRACE MTG, BRASS, FLAT HEAD SLOTTED, COUNTERSUNK	89905	EA1-2X41		8				*	*	22	7
0114	X2H		SCREW, MACHINE: PLATE MTG, BRASS, FILLISTER HEAD SLOTTED	89905	CB11-2X58		10				*	*	22	9
0115			6703 - MECHANICAL, STRUCTURAL, AND PRECISION PARTS											
0116	X2H		BASE: TARGET ASSEMBLY	89905	Z161G		2				*	*	23	13
0117	X2H		BOLT: CLUTCH FOOT	89905	T16-42		6				*	*	23	15
0118	X2H		COVER: SLEEVE NUT	89905	Z2B		2				*	*	23	10
0119	X2H		NUT, LOCK: CLUTCH FOOT BOLT	89905	Z122		6				*	*	23	17
0120	X2H		NUT: SLEEVE RETAINING	89905	Z114		2				*	*	23	11
0121	X2H		SETSCREW: NUT	89905	Z132		2				*	*	23	12
0122	X2H		SETSCREW: CLUTCH FOOT BOLT AND NUT, BRASS, HEADLESS SLOTTED	89905	DIN553-26X3		12				*	*	23	16
0123	X2H		SCREW, MACHINE: BASE TO SLEEVE, STEEL, FILLISTER HEAD SLOTTED	89905	DIN84-3X7		6				*	*	23	14
0124	X2H		SLEEVE: TARGET BASE	89905	Z112		2				*	*	23	8
0125	X2H		SPRING: SLEEVE	89905	Z113		2				*	*	23	9

LINE NO.	SOURCE CODES: MATERIEL	SOURCE	MAINT	RECOVERABILITY	Federal NUMBER	DESCRIPTION	MANUFACTURER'S CODE	MANUFACTURER'S PART NO.	UNIT OF ISSUE	QTY INCORPORATED IN UNIT	GUIDE QTY(S) PER MAJ EQUIPS: 15 DAYS MAINTENANCE: ORGANIZATION 1-5	ORGANIZATION 6-10	DS	GS	DEPOT MAINT	ILLUST: FIGURE NO	ITEM NO.
126						6705 - FUSES AND LAMPS											
127	P	O			6675-859-5936	LAMP, INCANDESCENT: ILLUMINATION ASSEMBLY	89905	HEG3-64		2	(2)	(2)	1	*	30	24	2
128						6713 - MISCELLANEOUS WIRING AND FITTINGS											
129	X	20				ILLUMINATION ASSEMBLY	89905	XT21-405		2	*	*	*	*	*	24	3
130	X	1				CABLE	89905	2X05-2X1000		2							
131	X	1				HOUSING: LAMP	89905	EB222		2							
132	P	O			6675-859-5936	LAMP, INCANDESCENT: ILLUMINATION ASSEMBLY	89905	HEG3-64		2	SEE GRP 6705						
133	X	1				PLUG, MALE	89905	EB125		2							
134	X	1				SLEEVE, CABLE	89905	SOFLEX35-45		2							
135	X	1				SOCKET: LAMP	89905	EB224-5-6-7		2							
136	X	20				REFLECTOR: ILLUMINATION ASSEMBLY	89905	Z22S		2	*	*	*	*	*	24	1
137						6718 - COMPASS AND LEVEL											
138	X	2H				LEVEL ASSEMBLY, CIRCULAR	89905	XT21-301		2				*	*	19	
139	X	1				BASE: LEVEL	89905	NT1-535		2						19	5
140	X	1				HOUSING: LEVEL	89905	B3-92		2						19	2
141	X	2H				LEVEL, CIRCULAR	89905	T0173		2				*	*	19	3
142	X	2H			5610-161-2672	PLASTER, GYPSUM: FINISH COAT, RAPID FINISH, 1/2 LB JAR				1				*	*	19	4
143	X	2H				SETSCREW: LEVEL HOUSING	89905	DIN553-17X2		2				*	*	19	1
144	X	2H				LEVEL ASSEMBLY: TARGET	89905	XT21-402		2				*	*	23	19
145	X	2H				BEARING	89905	T16-133		2				*	*	25	6
146	X	2H				COVER, PLASTIC	89905	NT1-636A		2				*	*	25	3
147	X	2H				HOUSING: LEVEL	89905	T16-132A		2				*	*	25	2
148	X	2H				PIN, STRAIGHT, HEADLESS: BRACKET TO TARGET FRAME	89905	VSM12771-15X12		4				*	*	23	3
149	X	2H				SETSCREW	89905	DIN553-17X15		2				*	*	25	7
150	X	2H			5305-378-9538	SETSCREW	89905	DIN553-2X2		2				*	*		
151	X	2H				SCREW, ADJUSTING	89905	CBK3-3X15		2				*	*	25	11
152	X	2H				SCREW, MACHINE: BRACKET BRASS, FILLISTER HEAD	89905	AB24-244		4				*	*	23	2
153	X	2H				SCREW, MACHINE: VIAL RETAINING, PAN HEAD SLOTTED	89905	CB4-2X3		12				*	*	25	8
154	X	2H				SCREW, MACHINE: BRACKET TO TARGET FRAME, BRASS FILLISTER HEAD	89905	DIN85-3X10		4				*	*	23	4
155	X	2H				SCREW, MACHINE: LEVEL BRACKET MTG, BRASS, FILLISTER HEAD SLOTTED	89905	CB3-38X2		8				*	*	23	20
156	X	2H				VIAL ASSEMBLY: LEVEL	89905	Z14271-75		2				*	*		
157	X	2H				CAP: LEVEL VIAL	89905	T1-75AC		4				*	*	25	5
158	X	2H				VIAL: LEVEL	89905	Z142		2				*	*	25	4
159	X	2H				SPRING, HELICAL, COMPRESSION: VIAL HOUSING	89905	NT1-634		2				*	*	25	9
160	X	2H				WASHER	89905	NT1-666		2				*	*	25	10
161	X	2H				WASHER	89905	DIN6798-321Z		4				*	*	23	5
162	X	2H				BRACKET: LEVEL AND TARGET	89905	Z111G		2				*	*	23	6
163	X	2H				BRACKET: LEVEL	89905	Z141		2				*	*	25	1
164	X	2H				SCREW, COVER	89905	Z173		2				*	*	23	21
165	X	2H				SCREW, COVER: BRACKET	89905	Z171		2				*	*	23	18
166	X	2H				SCREW, COVER: BRACKET	89905	Z172		2				*	*	23	7
167	X	2H				SCREW MACHINE: CIRCULAR LEVEL MTG	89905	DIN84-3X8		6				*	*	19	7
168	X	2H				WASHER, SPRING: CIRCULAR LEVEL MTG	89905	HD2-21		12				*	*	19	6

1 Screw
2 Screw
3 Lock assembly
4 Washer
5 Nut
6 Case
7 Spring, lock
8 Screw
9 Handle
10 Washer
11 Screw
12 Nut

Figure 17. Carrying Case.

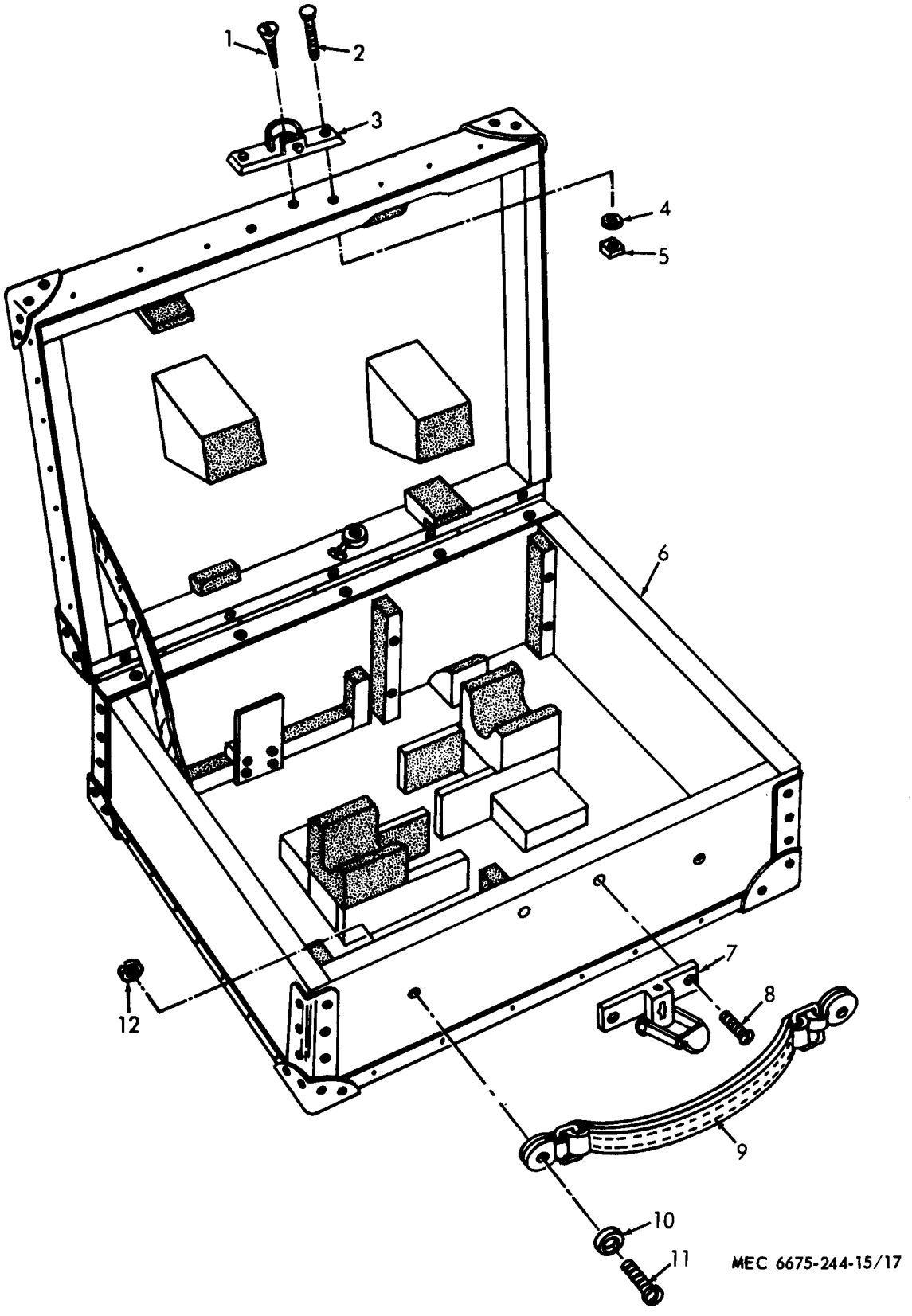

Figure 17 - Continued.

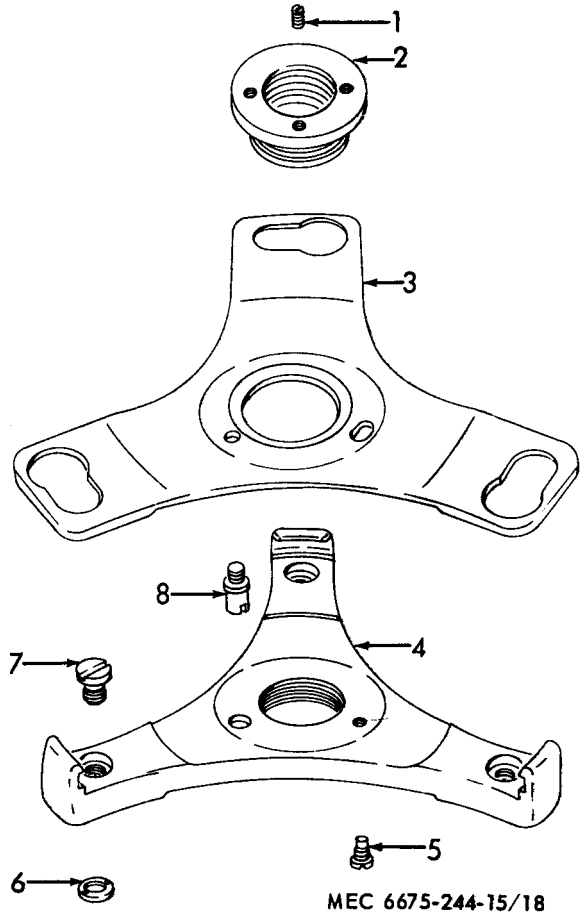

1	Setscrew	5	Screw
2	Nut	6	Nut
3	Plate	7	Bearing
4	Plate	8	Screw

Figure 18. Tribrach base plate.

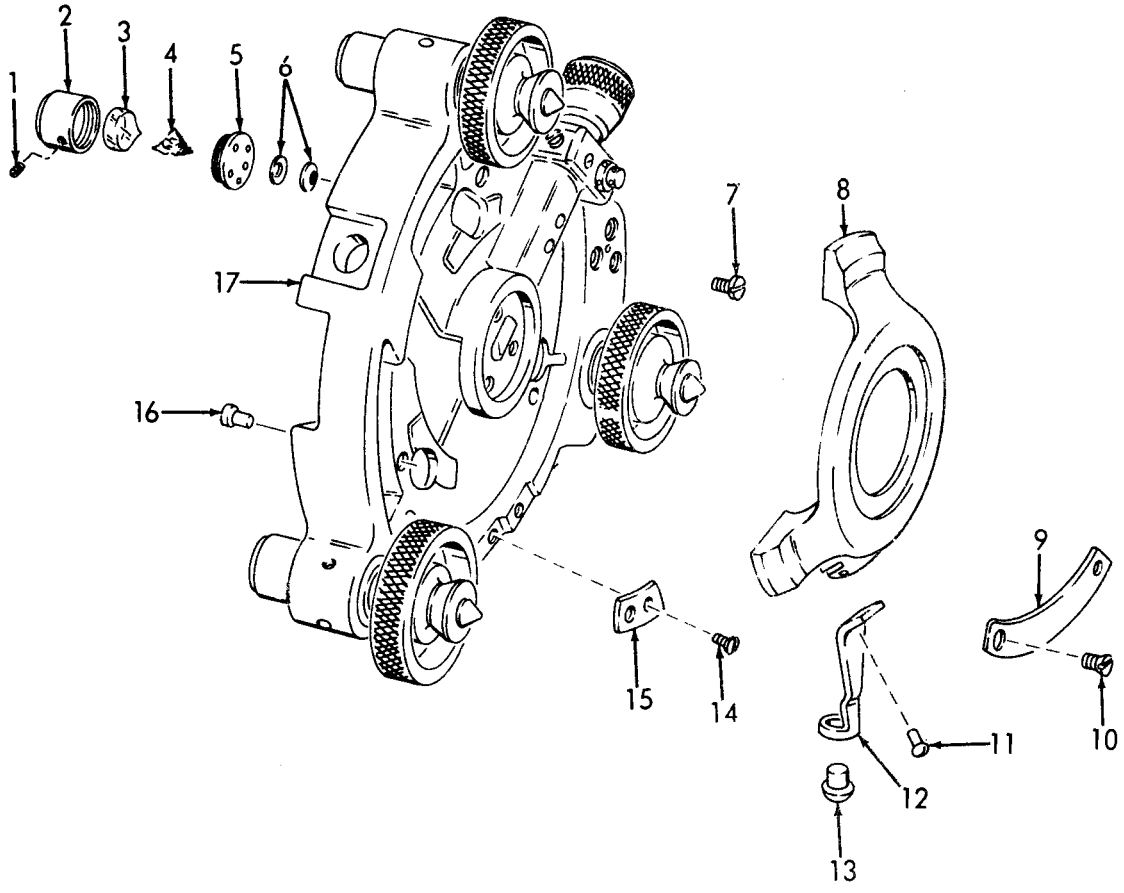

1	Setscrew	7	Screw	13	Knob
2	Housing	8	Lock plate	14	Screw
3	Level	9	Plate	15	Plate
4	Plaster	10	Screw	16	Rivet
5	Base	11	Rivet	17	Base
6	Washer	12	Lever		

Figure 19. Tribrach.

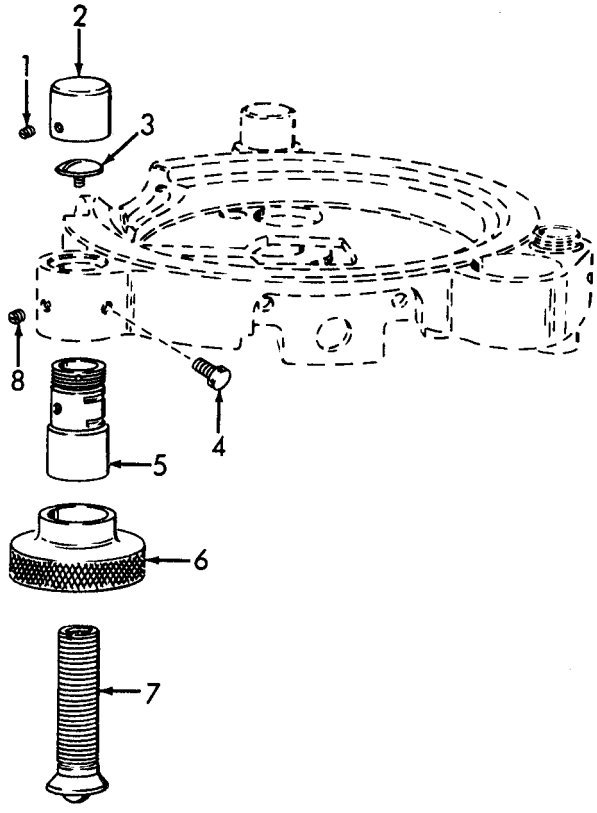

MEC 6675-244-15/20

1 Setscrew	5 Nut
2 Cover	6 Knob
3 Screw	7 Screw
4 Screw	8 Setscrew

Figure 20. Leveling screw.

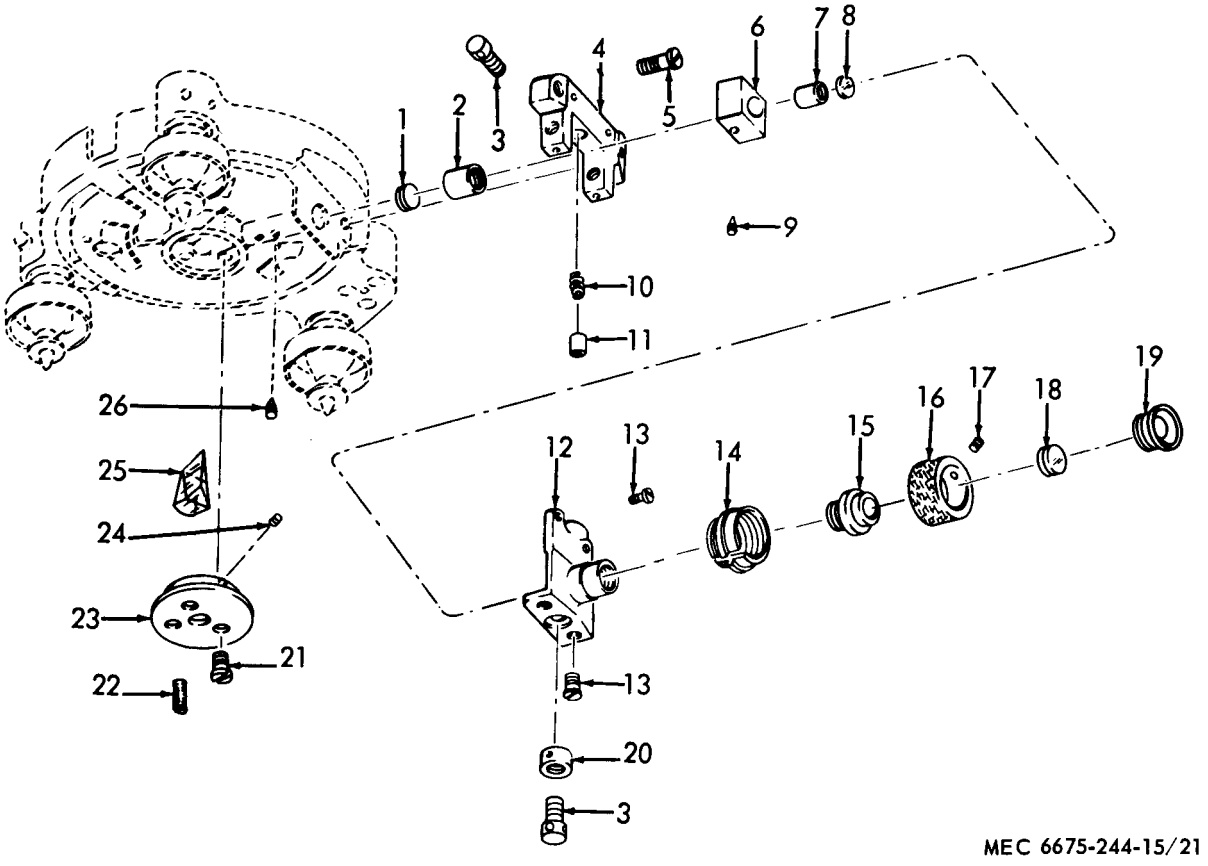

1 Lens assembly	10 Spring	19 Nut
2 Mount	11 Puffer	20 Nut
3 Screw	12 Bracket	21 Screw
4 Housing	13 Screw	22 Setscrew
5 Screw	14 Collar	23 Housing
6 Sleeve	15 Tube	24 Setscrew
7 Housing	16 Collar	25 Prism
8 Reticle	17 Setscrew	26 Setscrew
9 Setscrew	18 Lens assembly	

Figure 21. Objective, eyepiece and reticle, and optical plumbing.

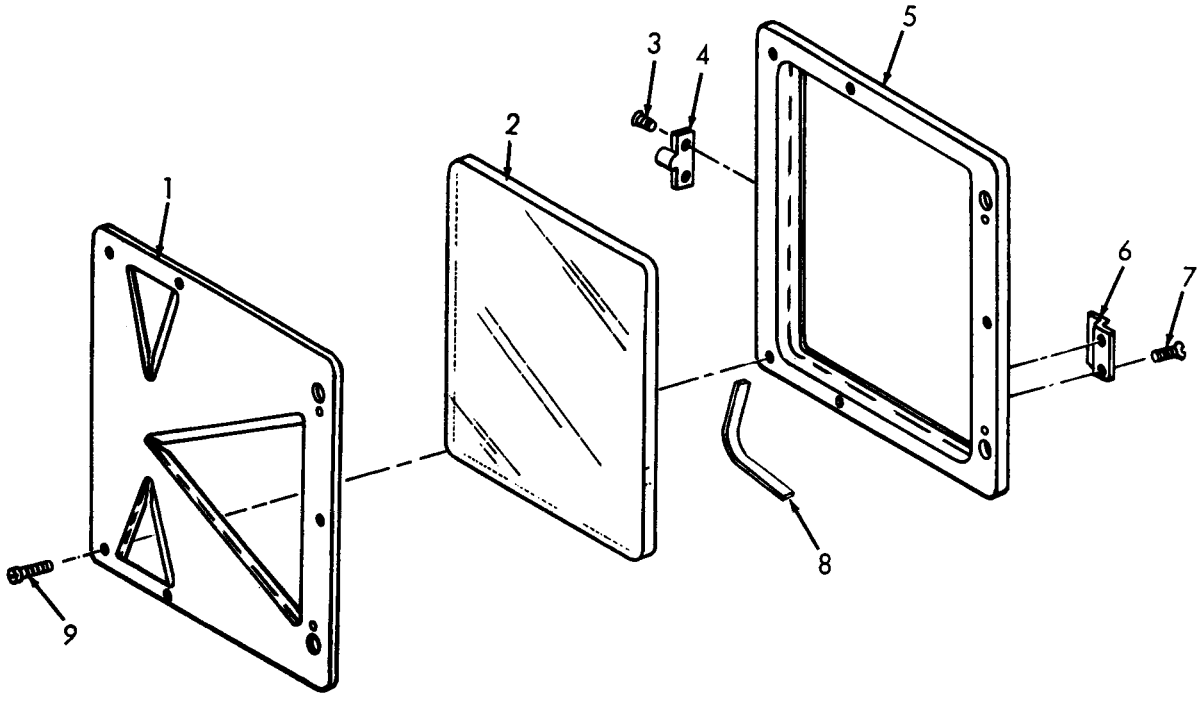

MEC 6675-244-15/22

1 Plate
2 Plate
3 Screw
4 Center
5 Frame
6 Brace
7 Screw
8 Pivet
9 Screw

Figure 22. Target frame.

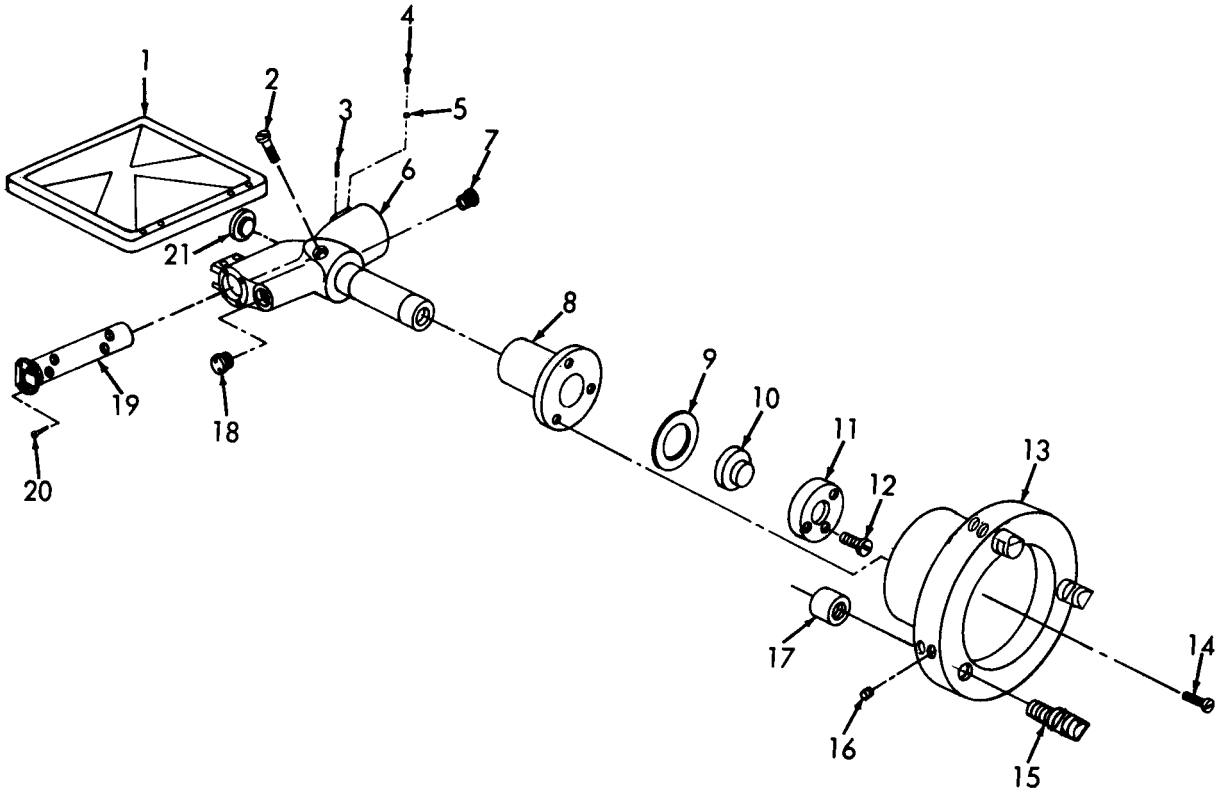

MEC 6675-244-15/23

1	Frame assembly	8	Sleeve	15	Belt
2	Screw	9	Spring	16	Setscrew
3	Pin	10	Cover	17	Locknut
4	Screw	11	Nut	18	Screw
5	Washer	12	Setscrew	19	Level assembly
6	Bracket	13	Base	20	Screw
7	Screw	14	Setscrew	21	Screw

Figure 23. Target.

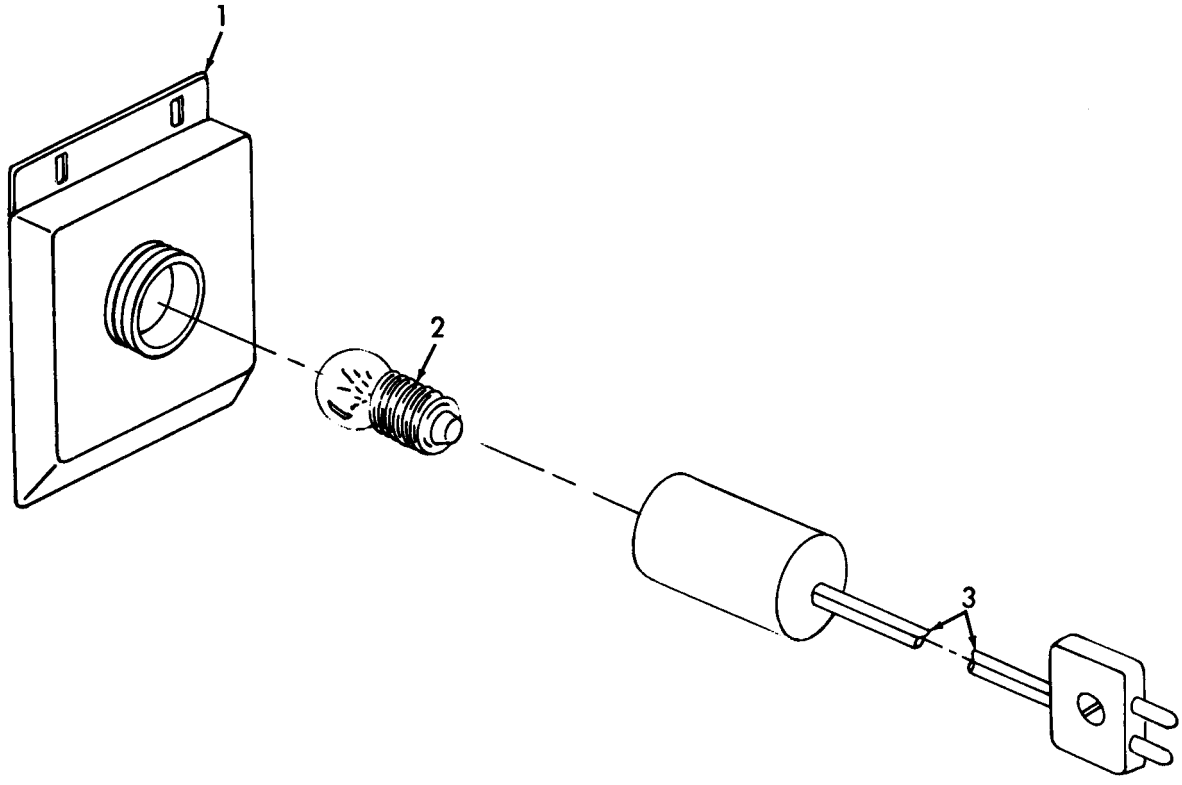

MEC 6675-244-15/24

1 Reflector 2 Lamp 3 Illumination assembly

Figure 24. Illumination assembly and reflector.

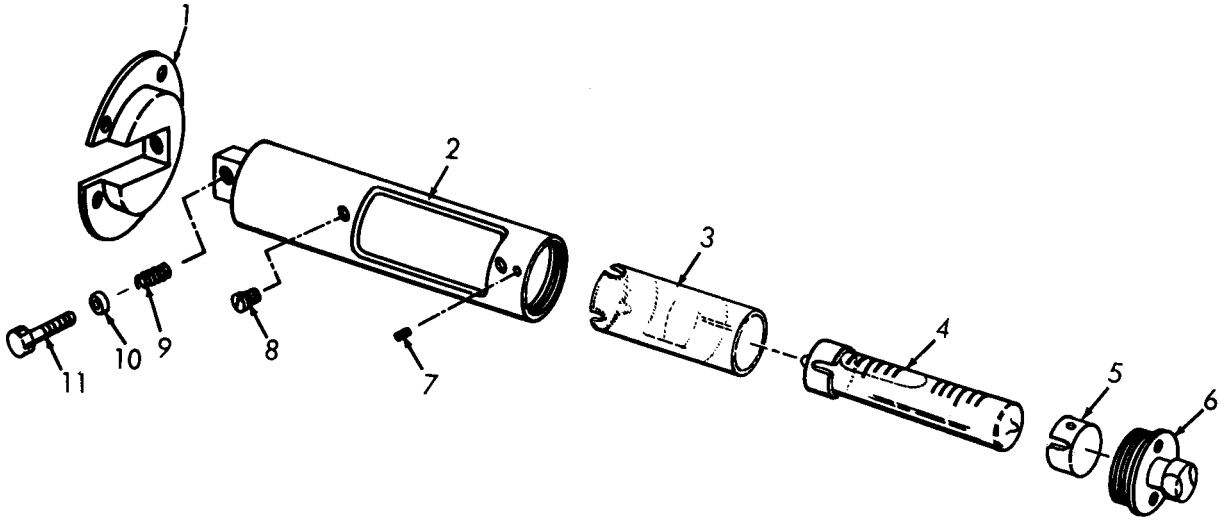

MEC 6675-244-15/25

1 **Bracket**	5 Cap	9 Spring
2 **Housing**	6 Bearing	10 Washer
3 **Cover**	7 Setscrew	11 Screw
4 **Vial**	8 Screw	

Figure 25. Target level assembly, exploded view.

By Order of the Secretary of the Army:

HAROLD K. JOHNSON,
General, United States Army,
Chief of Staff.

Official:

J. C. LAMBERT,
Major General, United States Army,
The Adjutant General.

Distribution:

Active Army:

USASA (2)
ACSI (1)
DCSLOG (1)
CNGB (1)
TSG (1)
CofEngrs (3)
CO-E (1)
Dir of Trans (1)
CofSptS (1)
USAMB (1)
USACDCARTYA (2)
USACDCARMA (2)
USAIB (2)
USA AD Bd (2)
USAAESWBD (2)
USA Avn Bd (2)
USCONARC (3)
OS Maj Comd (5) except
USASETAF (2)
USARJ (1)
USAMOCOM (2)
USASMC (1)
MDW (1)
Armies (2)
Corps (2)
USAC (1)
Div (2)
Engr Bde (1)
USMA (2)
Svc Colleges (2)
Br Svc Sch (2)
USA Engr RD Lab (3)
USACDCEC (10)
Gen Dep (10)
Engr Dep (10)
Army Dep (2) except
Tobyhanna (3)
USA Tml Cored (2)
Army Tml (1)
Div Engr (2)
Engr Dist (2)
USAMEC (46)
USAECFB (5)
USAREUR Eng Proc Cen (2)
USAREUR Engr Sup Cen Agcy (10)
Engr Fld Maint Shops (2)
Ft Knox Fld Maint Shops (10)
Fld Comd, DASA (8)
AMS (3)
USAREURCOMZ (2)
MAAG (1)
Units org under fol TOE:
5-48 (2)
5-237 (5)
5-262 (5)
5-267 (1)
5-278 (5)
5-279 (2)

NG: State AG (3).
USAR: Same as active Army except allowance is one copy to each unit.
For explanation of abbreviations used, see AR 320-50.

☆ U.S. Government Printing Office: 1966-216-733/10139A

This fine document...

Was brought to you by me:

Liberated Manuals -- free army and government manuals

Why do I do it? I am tired of sleazy CD-ROM sellers, who take publicly available information, slap “watermarks” and other junk on it, and sell it. Those masters of search engine manipulation make sure that their sites that sell free information, come up first in search engines. They did not create it... They did not even scan it... Why should they get your money? Why are not letting you give those free manuals to your friends?

I am setting this document FREE. This document was made by the US Government and is NOT protected by Copyright. Feel free to share, republish, sell and so on.

I am not asking you for donations, fees or handouts. If you can, please provide a link to liberatedmanuals.com, so that free manuals come up first in search engines:

<A HREF=http://www.liberatedmanuals.com/>Free Military and Government Manuals</A>

- Sincerely
  Igor Chudov
  http://igor.chudov.com/
- Chicago Machinery Movers