OPERATOR'S, UNIT, AND INTERMEDIATE MAINTENANCE MANUAL

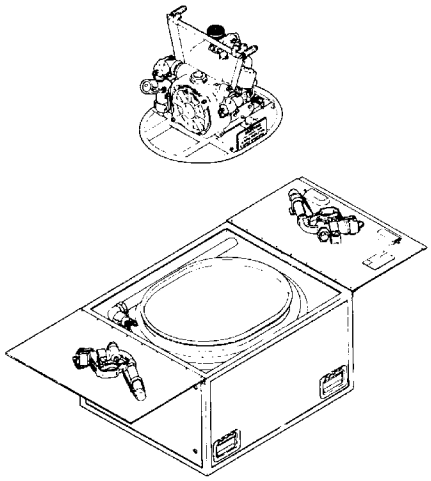

PUMPING ASSEMBLY,

FLAMMABLE LIQUID, BULK

TRANSFER, 50 GPM, CENTRIFUGAL

DIESEL ENGINE DRIVEN

NSN 4320-01-171-9726

HEADQUARTERS, DEPARTMENT OF THE ARMY

8 MAY 1987

CHANGE

No. 1

HEADQUARTERS
DEPARTMENT OF THE ARMY
WASHINGTON, D.C., 26 January 1990

Operator's, Unit and
Intermediate Maintenance Manual

PUMPING ASSEMBLY,
FLAMMABLE LIQUID, BULK
TRANSFER, 50 GPM, CENTRIFUGAL,
DIESEL ENGINE DRIVEN
NSN 4320-01-212-2166

Approved for public release; distribution is unlimited.

TM 5-4320-308-13, 8 May 1987, is changed as follows:

1. Title is changed as shown above.

2. Retain this sheet in front of manual for reference purposes.

By Order of the Secretary of the Army:

CARL E. VUONO
General, United States Army
Chief of Staff

Official:

THOMAS F. SIKORA
Brigadier General, United States Army
The Adjutant General

DISTRIBUTION:
To be distributed in accordance with DA Form 12-25A, Operator, Unit, Direct Support and General Support Maintenance requirements for Pumping Assembly, QM2D (76910CA).

***U.S. GOVERNMENT PRINTING OFFICE: 1990-754-029/20031**

WARNING

SERIOUS INJURY

may result if the engine is not turned off during service or maintenance.

EXPLOSION HAZARD

The pumping assembly must be connected to a suitable ground before operation. Arcing caused by buildup of static electricity may ignite volatile fluids and cause explosion and fire.

DEATH OR SERIOUS INJURY

could occur if fuel is not handled carefully. Use in a well-ventilated area away from open flame, arcing equipment, ignition sources, heaters, or excessive heat. Engines must be turned off and cool before refueling. Use proper refueling procedures and equipment to avoid spillage. Do not run engines near open fuel containers. Always store fuel in proper, marked containers. DO NOT SMOKE.

CARBON MONOXIDE (EXHAUST GAS) CAN KILL YOU

Exposure to exhaust gases produces symptoms of headache, dizziness, loss of muscular control, drowsiness, or coma. Brain damage or death can result from severe exposure.

Fumes from engines become concentrated with poor ventilation. Operate engine in a ventilated area only.

While running engine, be alert for fumes. Keep area ventilated. If someone is overcome, expose to fresh air; keep warm and still; give artificial respiration if needed. Seek medical attention. Administer oxygen, if available.

GOOD VENTILATION IS THE BEST DEFENSE AGAINST EXHAUST POISONING.

DEATH OR SERIOUS INJURY

could occur if unauthorized or unnecessary personnel are in the hoisting area. Permit only personnel actually engaged in the hoisting operation to be near the unit and hoisting equipment. All instructions for the hoisting operations must come from one authorized person.

WARNING

DEATH OR SERIOUS INJURY

to personnel or damage to equipment could occur from improper hoisting. Hoist the load slowly to avoid slipping slings or load shift. Do not jerk the load or swing it from side--side when hoisting. This places additional stress on hoisting components which can cause failure and loss of load. Be sure hoisting equipment is on solid footing and is suitable for the size of the load. Watch boom angle and overhead clearance when hoisting.

DEATH OR SERIOUS INJURY

to personnel or damage to equipment could occur if engine lifting strap is used to lift the pumping assembly. The lifting strap shall be used to lift only the engine.

DEATH OR SERIOUS INJURY

could occur if compressed air is directed against the skin. Do not use compressed air for cleaning or drying unless the pressure is/has been reduced to 30 psi (2.06 bar) or less. When working with compressed air always use chip guards, eye protection, and other personal protective equipment.

SEVERE BURNS

Muffler and related components get hot enough during pump operation to cause severe burns. Avoid contact with muffler and related components during checks described in this text.

HEALTH AND SAFETY HAZARD

Dry cleaning solvent P-D-680 (safety or Stoddard's Solvent) is potentially dangerous. Avoid repeated and prolonged breathing of vapors and skin contact with the liquid. Do not use near open flame, arcing equipment, or other ignition sources. Always wear eye protection and protective clothing. The flash point of P-D-680 is 100° to 138°F (38° to 59° C).

SERIOUS INJURY

could result from injector fuel spray. Keep hands away from fuel spray.

WARNING

SEVERE BURNS

could result from handling heated parts. Use proper equipment to handle heated parts.

LIVE STEAM

used for cleaning shall not exceed 100 psi (6.9 bar). Use goggles or face shield for eye protection. Do not direct live steam against skin.

SERIOUS INJURY

Before starting the engine and after making repairs or adjustments on the fuel system, a 17 mm wrench must be available to allow rapid removal of the steel fuel line at the injection pump in case of a runaway condition. Failure to heed this warning can result in injury to personnel and equipment damage.

TECHNICAL MANUAL

TM 5-4320-308-13

HEADQUARTERS
DEPARTMENT OF THE ARMY
Washington, D.C. 8 May 1987

Operator's, Unit, and Intermediate
Maintenance Manual
PUMPING ASSEMBLY, FLAMMABLE LIQUID, BULK TRANSFER,
50 GPM, CENTRIFUGAL, DIESEL-ENGINE-DRIVEN

Approved for public release; distribution is unlimited

REPORTING ERRORS AND RECOMMENDING IMPROVEMENTS

You can help improve this manual. If you find any mistake or if you know of a way to improve the procedures, please let us know. Mail your letter, DA Form 2028 (Recommended Changes to Publications and Blank Forms), or DA Form 2028-2 located in the back of this manual direct to: Commander, U.S. Army Troop Support Command, ATTN: AMSTR-MCTS, 4300 Goodfellow Boulevard, St. Louis, MO 63120-1798. A reply will be furnished directly to you.

CHAPTER 1
INTRODUCTION

Section I. GENERAL INFORMATION

1-1. SCOPE

Type of Manual: Operator's, Unit, and Intermediate Maintenance

Model Number and Equipment Name: Pumping Assembly, Flammable Liquid, Bulk Transfer, 50 GPM, Centrifugal, Diesel-Engine-Driven

Purpose of Equipment: Pumps Liquid Petroleum Fuel

1-2. MAINTENANCE FORMS, RECORDS, AND REPORTS

Department of the Army forms and procedures used for equipment maintenance will be those prescribed by DA PAM 738-750, The Army Maintenance Management System (TAMMS).

1-3. REPORTING EQUIPMENT IMPROVEMENT RECOMMENDATIONS (EIR'S)

If your pumping assembly needs improvement, let us know. Send us an EIR. You, the user, are the only one who can tell us what you don't like about your equipment. Let us know why you don't like the design or performance. Put it on an SF 368 (Quality Deficiency Report). Mail it to us at U.S. Army Troop Support Command, ATTN: AMSTR-QX , 4300 Goodfellow Blvd., St. Louis, MO 63120-1798. We'll send you a reply.

1-4. LIMITED WARRANTY

a. The pumping assemblies are warranted by Peabody Barnes, Inc. against defective workmanship and materials for 9 months after date of installation or 36 months from the date of manufacture, whichever date occurs first. The installation date may be found in block 23, DA Form 2408-9, in the logbook. The date manufactured appears on the identification plate.

b. Report all defects in material or workmanship to your supervisor who will take appropriate action through your unit maintenance shop.

c. Peabody Barnes limits its obligation under this warranty to furnishing or replacing any product found to be defective as a result of workmanship or materials. They reserve the right to have the defective product returned at the expense of the user in order to establish the claim. If the responsibility for the failure is that of Peabody Barnes, they will absorb the transportation charges. The costs of labor, such as for removal and reinstallation of the product, are not covered under this warranty.

d. Peabody Barnes does not guarantee to maintain this product in order when its capacity is too small for the requirements, or where the system is subject to extraordinary use.

e. Peabody Barnes assumes no liability for incidental and consequential damages which may result from the use or misuse of its products. Some states do not allow the exclusion or limitation of incidental or consequential damages, however, so this limitation or exclusion may not apply.

f. This warranty provides specific legal rights, and you may also have other rights which vary from state to state.

1-5. NOMENCLATURE CROSS-REFERENCE

For precise identification, simplified nomenclature has been established for clarity and is shown in the nomenclature cross-reference list.

NOMENCLATURE CROSS-REFERENCE LIST

This listing includes nomenclature cross-references used in this manual.

Common Name	Official Nomenclature
Pumping Assembly	Pumping Assembly, Flammable Liquid, Bulk Transfer, 50 GPM, Centrifugal, Diesel-Engine-Driven
Pump Assembly	Pump Assembly (Pump and Engine)
Engine	Diesel Engine
Pump	Centrifugal Pump

1-6. ABBREVIATIONS

Abbreviations used in the manual are in accordance with requirements of MIL-STD-12.

Section II. EQUIPMENT DESCRIPTION

1-7. PURPOSE OF PUMPING ASSEMBLY

Transferring liquid petroleum to and from bulk storage facilities and dispensing in 55 gallon drums, 5 gallon cans, vehicles, and aircraft.

1-8. CHARACTERISTICS

- Variable speed operation
- Frame-mounted
- Packed in storage container with hoses and nozzle
- Self-priming

1-9. CAPABILITIES AND FEATURES

- Pumps at a rate of 50 gpm
- Integral check valve retains fluid in the pump body when the pump is shut down
- Hand crank start
- Variable speed governor
- Throttle control
- Dry-type air cleaner and rain hood
- Vertical mount muffler with protective screen

1-10. LOCATION AND DESCRIPTION OF MAJOR COMPONENTS

ENGINE (1). Power source.

MUFFLER (2). Mounts vertically on engine.

PROTECTIVE SCREEN (3). Metal safety cover for muffler.

AIR CLEANER (4). Dry-type, mounts on engine.

FUEL TANK ASSEMBLY (5). Mounts on engine.

CHECK VALVE ASSEMBLY (6). Mounts to pump suction (inlet) port.

PUMP (7). Mounts to engine.

FUEL FILTER (8). Filters fuel to engine.

INJECTION PUMP (9). Pumps fuel to injection nozzle.

BASE (10). Supports engine and pump.

FUEL LIFT PUMP (11). Pumps fuel from the fuel tank to the injection pump.

OIL DIPSTICK (12). Measures engine oil level.

OIL FILLER CAP (13). Provides access to engine crankcase.

THROTTLE CONTROL HAND LEVER (14). Controls engine speed.

EXTRA FUEL BUTTON (15). Provides more fuel to engine during cold starting.

GOVERNOR (16). Maintains engine speed regardless of load.

SUCTION (INTAKE) COUPLING (17). Fuel inlet to pump.

1-10. LOCATION AND DESCRIPTION OF MAJOR COMPONENTS (Continued)

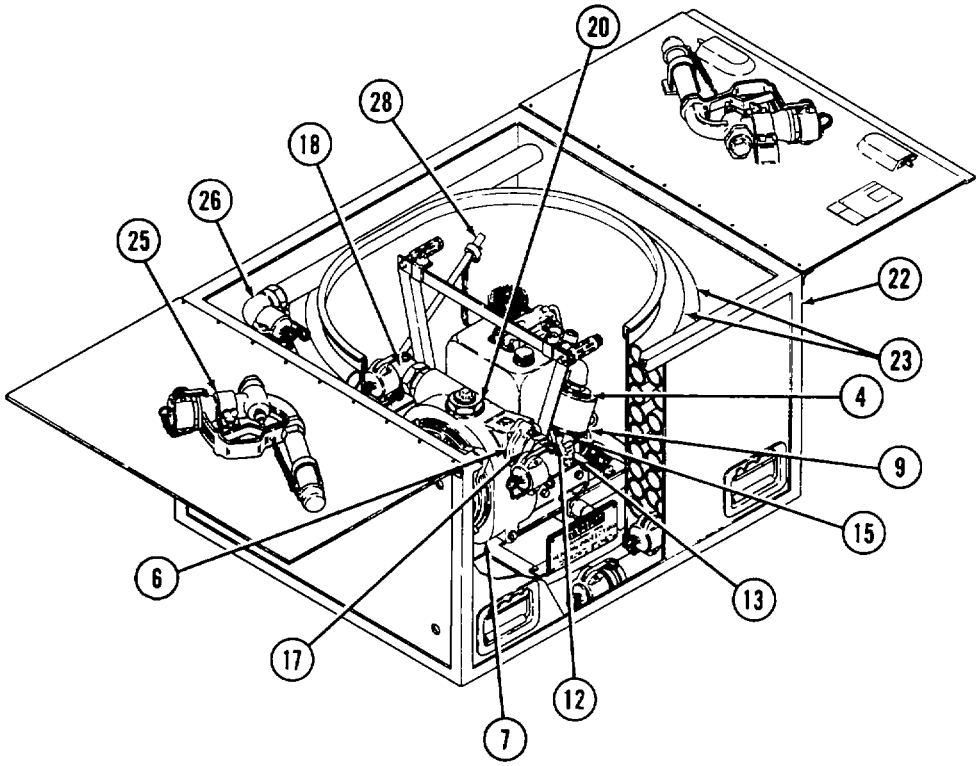

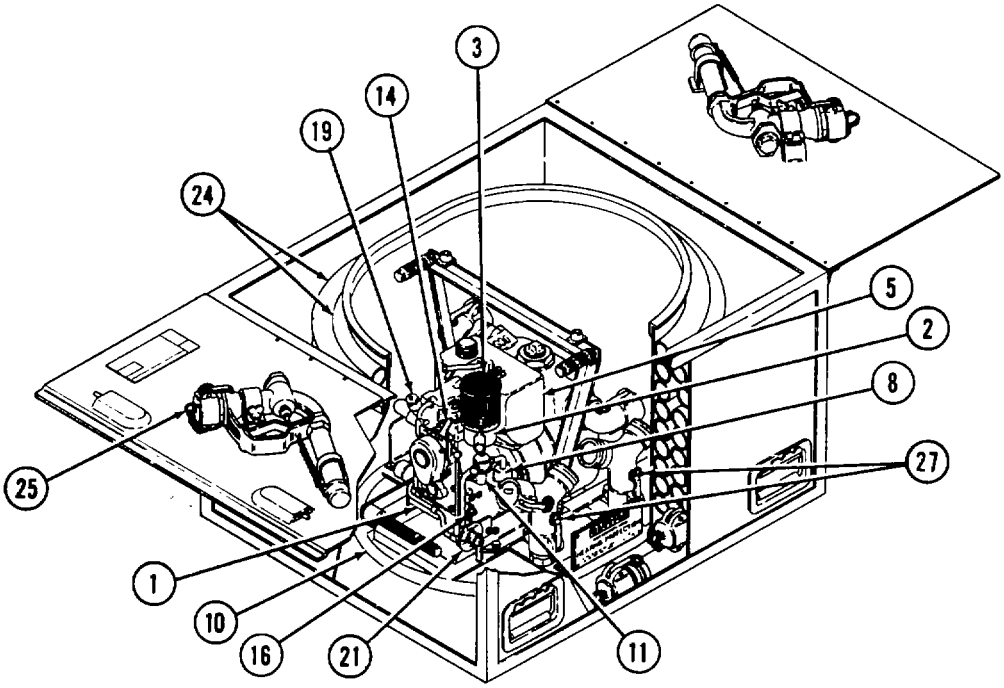

1-10. LOCATION AND DESCRIPTION OF MAJOR COMPONENTS (Continued)

DISCHARGE COUPLING (18). Fuel outlet from pump.

RESTRICTION INDICATOR (19). Shows when air cleaner is restricted and needs cleaning.

PRIMING PORT (20). Provides access to pump volute for priming.

3-WAY VALVE (21). Located in fuel line between injection pump and fuel lift pump.

STORAGE CONTAINER (22). Carrying box.

SUCTION HOSES (23). Packed in storage container.

DISCHARGE HOSES (24). Packed in storage container.

NOZZLES (25). Secured on doors of storage container.

DRUM UNLOADER (SUCTION STUB) (26). Packed in storage container. Used to pump fuel from drums.

Y-CONNECTORS (27). Packed in storage container.

GROUND ROD (28). Attached to pump. Removes built up static electricity.

1-11. DIFFERENCES BETWEEN MODELS

This technical manual covers only Pumping Assembly, Peabody Barnes Model QM2D. No known differences exist for this model number.

1-12. EQUIPMENT DATA

a. *Pump.*

Manufacturer	Peabody Barnes, Inc.
Part Number	77893CA
Type	Self-priming centrifugal
Service	Liquid petroleum fuel
Duty cycle	Continuous
Rated output	50 gpm at 100 feet total head
Suction (intake) port	2-inch NPT
Discharge port	2-inch NPT
Priming port	2-inch NPT (bushed to 1-1/2-inch NPT)
Priming method	Self-priming system
Drain port	1/2-inch NPT (bushed to 3/8-inch NPT)
Rotation	Counterclockwise (facing pump end)

1-12. EQUIPMENT DATA (Continued)

b. *Engine.*

Manufacturer ..... Hatz Diesel
Model E673LHK-216
Horsepower ..... 6 hp at 3600 rpm
Type ..... Four-stroke air-cooled diesel
Number of cylinders 1
Bore ..... 2.8740 in. (73.0 mm)
Stroke ..... 2.6378 in. (67.0 mm)
Compression ratio (nominal) ..... 19 to 1
Total displacement ..... 17.09 cu in. (280 cm^3)
Direction of rotation (facing throttle control) ..... Clockwise
Number of main bearings 2

c. *Engine accessories.*

Air cleaner
- Manufacturer ..... Air-Maze
- Part number 204-302
- Type ..... Dry
- Filter number 1 DM-007

d. Capacities.

Fuel ..... tank
Engine crankcase ..... 1.1 qt (1 liter)

e. Dimensions and weight.

Overall width ..... 34.0 in. (0.86 meter)
Overall length ..... 40.0 in. (1.02 meter)
Overall height ..... 23.0 in. (0.58 meter)
Gross weight ..... 455 lb (206 kg)
Shipping volume ..... 18 cu ft (0.51 m3)
Shipping weight ..... 160 lb (73 kg)

Section III. TECHNICAL PRINCIPLES OF OPERATION

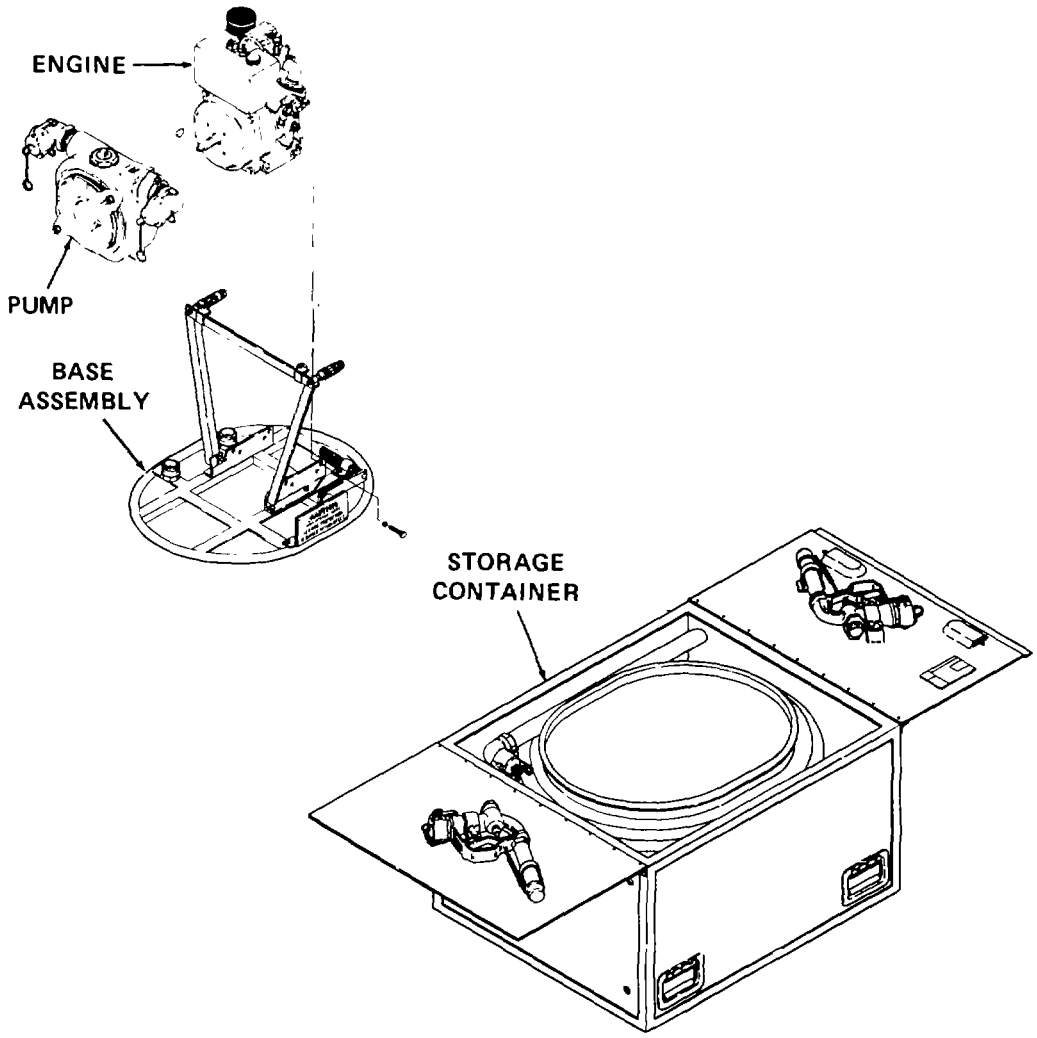

1-13. PUMPING ASSEMBLY

ENGINE - bolted to base assembly. Provides the power necessary to drive the pump. Includes:

LUBRICATION SYSTEM - pressure lubricates the entire drive and governor mechanisms.

COOLING SYSTEM - includes a blower ring, mounted to the flywheel, which blows cool air through crankcase housing ports onto the cylinder.

FUEL SYSTEM - includes a fuel lift pump, fuel injection pump, venting pipe, fuel tank, filter, and fuel pressure pipe. The fuel lift pump pumps fuel from the fuel tank, through its filter, to the fuel injection pump, then to the injector through the fuel pressure pipe.

1-13. PUMPING ASSEMBLY (Continued)

EXHAUST SYSTEM - includes a muffler and protective screen. The exhaust system transfers exhaust gases from the engine to the muffler. The muffler quiets the sound and reduces the temperature of the exhaust.

PUMP bolted to the engine. Uses power from the engine to pump fuel from the suction (intake) coupling to the discharge coupling. Includes a volute, impeller, check valve, ground rod assembly, and pump case with suction (intake) and discharge couplings. The volute houses the impeller which draws fuel in through the suction (intake) coupling and forces it out of the pump through the discharge coupling. The check valve prevents discharged fuel from running back through the suction (intake) coupling. The ground rod assembly prevents buildup of static electricity.

BASE ASSEMBLY - provides a movable mounting platform for the engine and pump assemblies.

STORAGE CONTAINER - contains hose assemblies, drum unloader, nozzle assembly, and Y-connectors. The storage container houses the pump assembly and servicing equipment and serves as a carrying box.

CHAPTER 2
OPERATING INSTRUCTIONS

Section I. DESCRIPTION AND USE OF OPERATOR'S CONTROLS AND INDICATORS

WARNING

Personal injury may result if the engine is not turned off during service or maintenance.

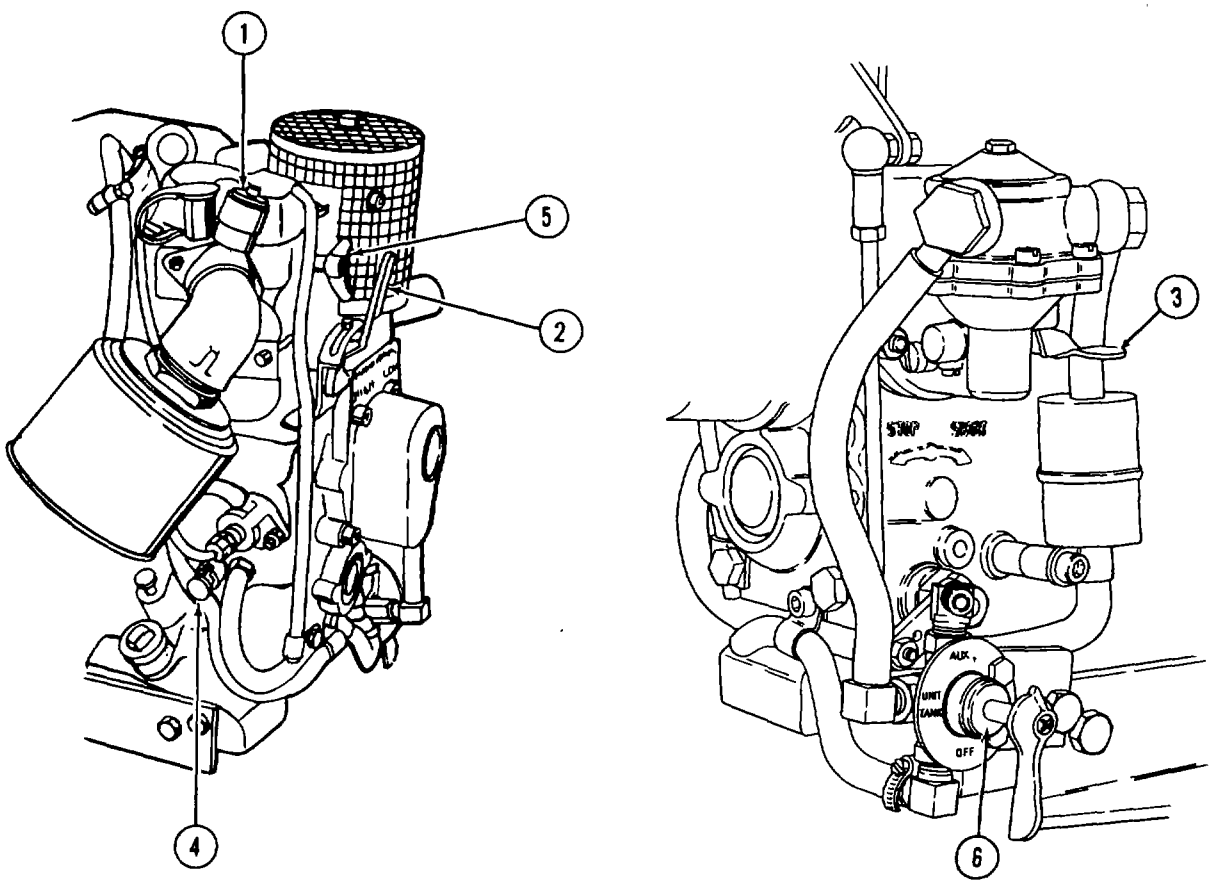

Table 2-1. Operator's Controls and Indicators

Key	Control or Indicator	Function
1	Restriction indicator	Indicates blockage of air filter. A red band appears in window to indicate the need for cleaning or replacement. Indicator is threaded into air cleaner adapter, and is actuated by high negative pressure. Indicator can be reset.

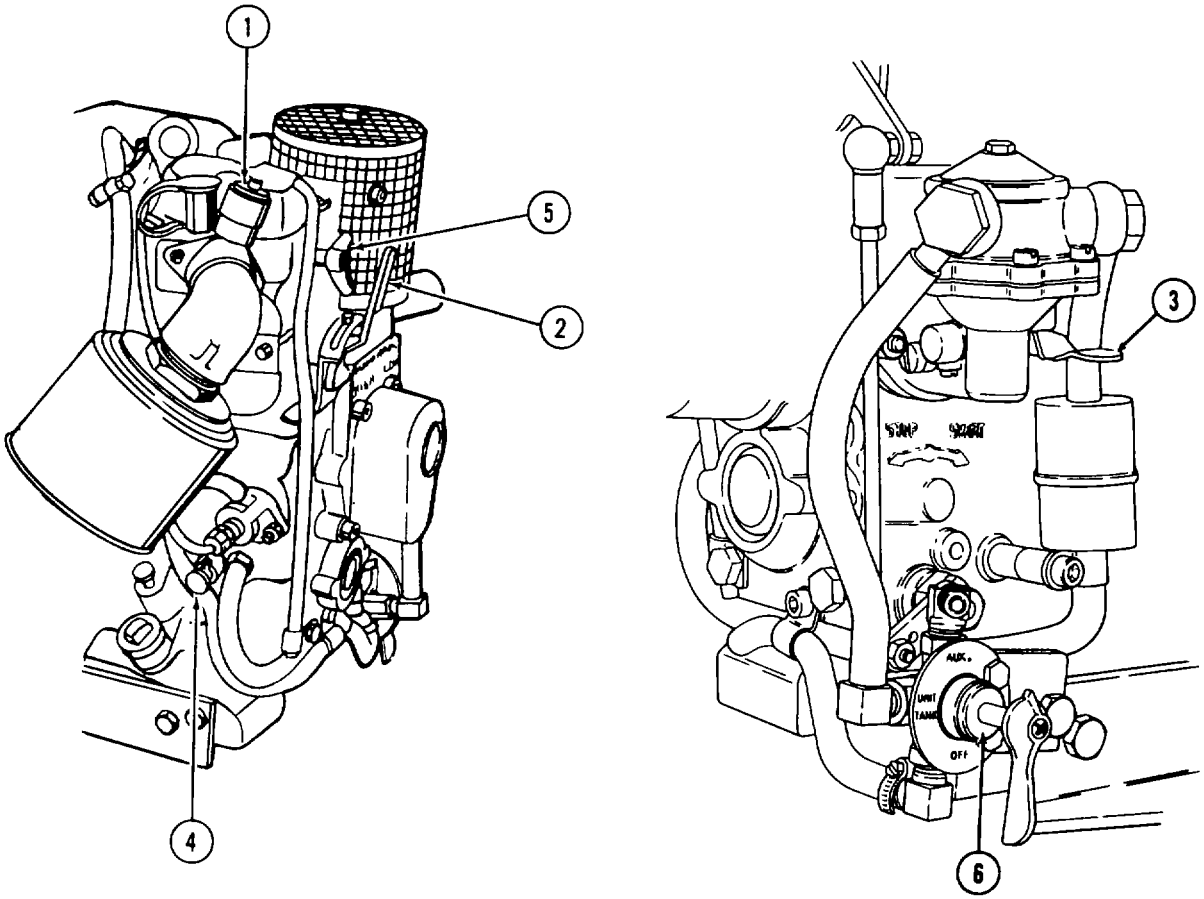

Table 2-1. Operator's Controls and Indicators - Continued

Key	Control or Indicator	Function
2	Throttle control hand lever	Controls engine speed. With the hand lever in START position, the engine is at highest operating speed. By moving the lever between START and STOP, the desired engine speed can be obtained.
3	Fuel primer lever	Mechanically connected to fuel lift pump. Used to prime engine by forcing fuel from fuel tank into fuel system.
4	Extra fuel button	Provides more fuel to engine during starting. Pulling button out allows more fuel to engine. Button returns to normal position when engine reaches operating speed.
5	Decompression lever	Controls engine compression. Lever is placed in decompression position during engine starting and returns to compression when engine reaches operating speed.
6	3-way valve	Controls fuel to fuel lift pump. With the handle in UNIT TANK position, fuel is delivered to the fuel lift pump from the fuel tank. By moving the handle to the AUX position, an alternate fuel supply can be used. When the handle is in the OFF position, fuel supply is shut off.

Section II. OPERATION UNDER USUAL CONDITIONS

2-1. ASSEMBLY AND PREPARATION FOR USE

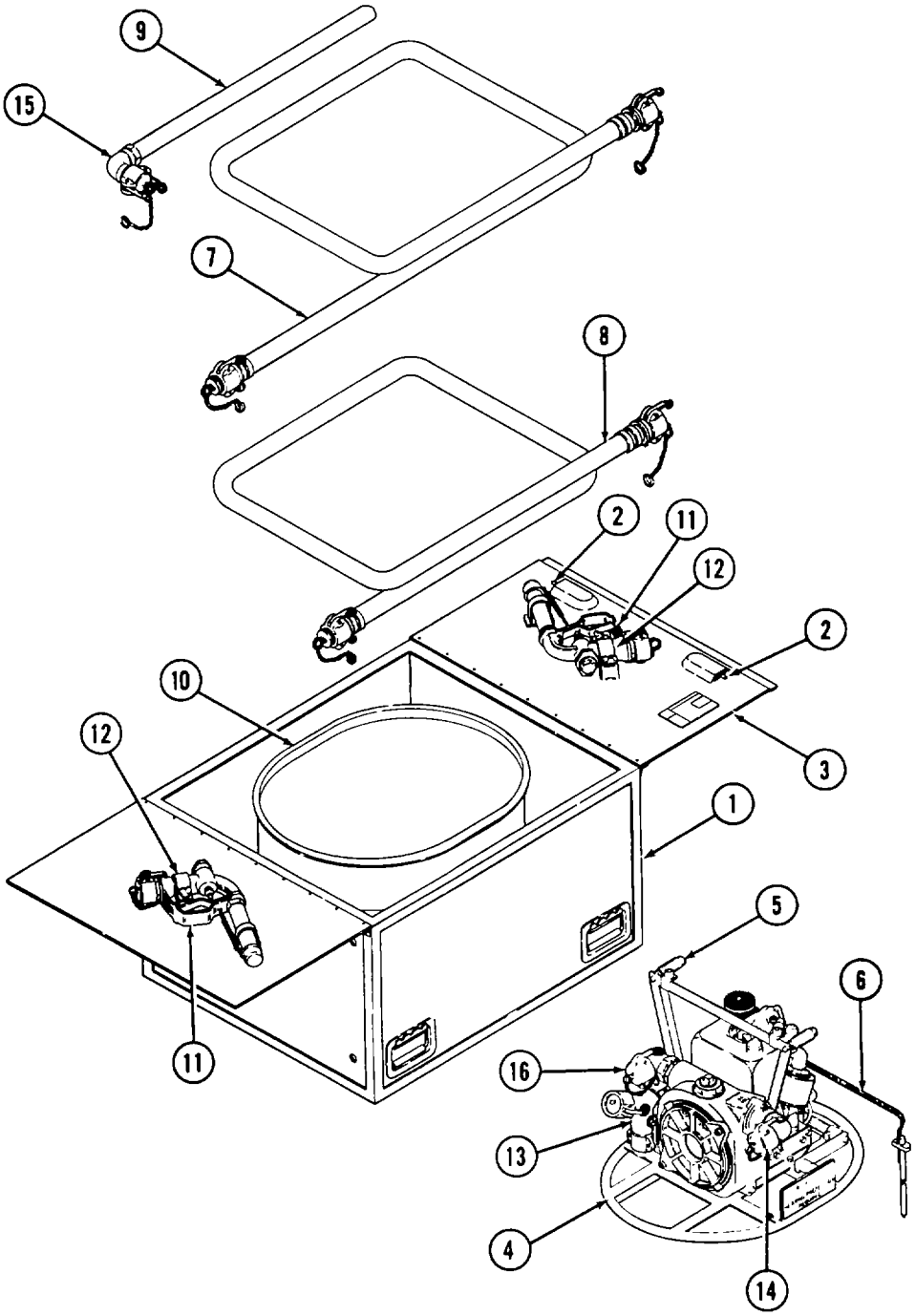

2-1. ASSEMBLY AND PREPARATION FOR USE (Continued)

a. The pumping assembly is shipped in its storage container which is fitted with four carrying handles. Use handles to lift the pumping assembly from the carrier. The gross weight of the pumping assembly is 455 pounds (206 kg) so that it can easily be lifted by four men.

b. The storage container (1) houses the pump assembly, hoses, nozzles, ground rod, drum unloader, and Y-connectors.

(1) Unlatch the two lock bolts (2) that secure the covers (3). Raise the covers.

(2) Grasp the pump assembly (4) by the rubber grip handles (5) and lift the pump assembly and ground rod assembly (6) from the storage container (1). The ground rod assembly is attached to the pump.

(3) Remove three suction hose assemblies (7), three discharge hose assemblies (8), and drum unloader (9) from around hose positioner (10) in the storage container (1).

(4) Remove two nozzle assemblies (11) from nozzle assembly mounting brackets (12) on storage container cover (3) by loosening fasteners on nozzle assembly bracket clamps and lifting nozzle assemblies from brackets.

(5) Remove Y-connectors (13) from base assembly of pump assembly (4).

c. The pump assembly (4) comes fully assembled, ready for use after attaching suction (intake) and discharge hoses. Locate pumping assembly on firm, moderately level area as close as conveniently possible to source of fuel supply. Choose an area which will provide enough room around pumping assembly to allow convenient servicing.

WARNING

The pumping assembly must be connected to a suitable ground before operation. Arcing caused by buildup of static electricity may ignite volatile fluids and cause explosion and fire.

(1) Drive ground rod (6) into earth. Make sure grounding cable makes metal-to-metal contact with pump and rod.

(2) Remove dust caps from suction (intake) female coupling (14) and suction hose assembly (7) adapter. Connect male end of suction hose assembly to suction (intake) female coupling. Highest point in suction hose assembly should be at the pump.

(3) Remove dust caps from suction hose assembly (7) coupler and drum unloader 90 degree elbow (15). Connect suction hose assembly coupler to drum unloader 90 degree elbow.

(4) Remove dust caps from discharge male coupling (16) and discharge hose assembly (8) coupler. Connect female end of discharge hose assembly to discharge male coupling.

2-1. ASSEMBLY AND PREPARATION FOR USE (Continued)

(5) Remove dust caps from discharge hose assembly (8) adapter and nozzle assembly (11) coupler. Connect discharge hose assembly adapter to nozzle assembly coupler. Remove cap from nozzle assembly.

NOTE

Use Y-connectors and hoses as needed for multiple nozzle assembly connections.

(6) Make sure that connections are tight.

d. Perform category B (before operation) PMCS contained in table 3-1 or verify that category B PMCS was performed. Report any problems to unit maintenance.

WARNING

Death or serious injury could occur if fuel is not handled carefully. Use in a well-ventilated area away from open flame, arcing equipment, ignition sources, heaters, or excessive heat. Always store fuel in proper, marked containers. DO NOT SMOKE.

e. The following paragraphs contain instructions for starting, operating, and stopping the pump assembly.

2-2. OPERATING PROCEDURE

WARNING

CARBON MONOXIDE (EXHAUST GAS) CAN KILL YOU Exposure to exhaust gases produces symptoms of headache, dizziness, loss of muscular control, drowsiness, or coma. Brain damage or death can result from severe exposure. Fumes from engines become concentrated with poor ventilation. Operate engine in a ventilated area only.

While running engine, be alert for fumes. Keep area ventilated. If someone is overcome, expose to fresh air; keep warm and still; give artificial respiration if needed. Seek medical attention. Administer oxygen, if available.

GOOD VENTILATION IS THE BEST DEFENSE AGAINST EXHAUST POISONING.

a. *Preparation for Starting.*

(1) Move throttle control hand lever (1) to HIGH position on throttle plate (2).

2-2. OPERATING PROCEDURE (Continued)

(2) Pull out extra fuel device button (3) until fully extended.

(3) Turn decompression lever (4) clockwise to 12 o'clock position (position 2).

(4) Turn 3-way valve handle (5) clockwise to position UNIT TANK.

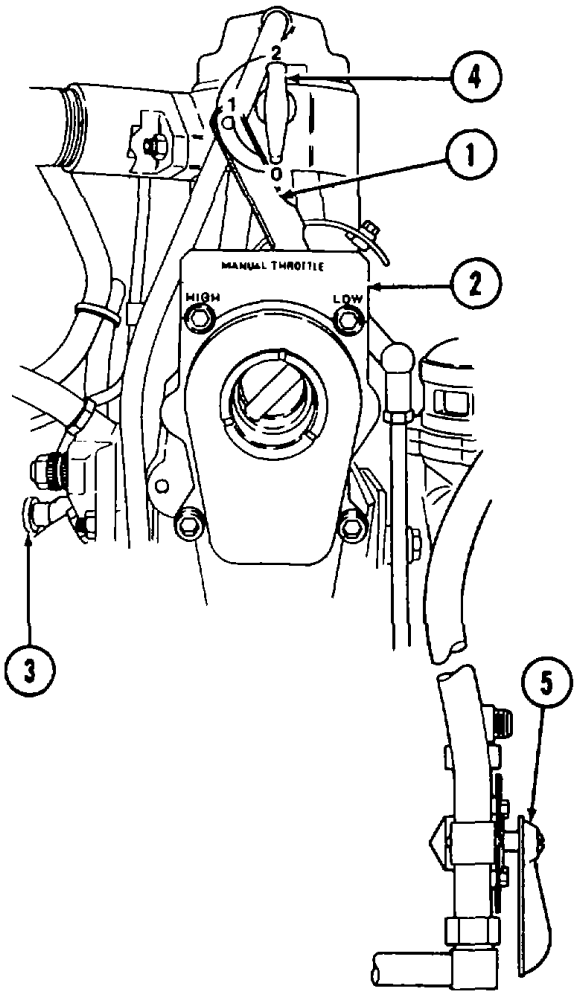

b. *Priming Centrifugal Pump*.

WARNING

CARBON MONOXIDE (EXHAUST GAS) CAN KILL YOU

Exposure to exhaust gases produces symptoms of headache, dizziness, loss of muscular control, drowsiness, or coma. Brain damage or death can result from severe exposure.

Fumes from engines become concentrated with poor ventilation. Operate engine in a ventilated area only.

While running engine, be alert for fumes. Keep area ventilated. If someone is overcome, expose to fresh air; keep warm and still; give artificial respiration if needed. Seek medical attention. Administer oxygen, if available.

GOOD VENTILATION IS THE BEST DEFENSE AGAINST EXHAUST POISONING.

2-2. OPERATING PROCEDURE (Continued)

(1) Remove pipe plug (1) from priming port (2).

(2) Pour fuel into priming port (2) to fill volute (3).

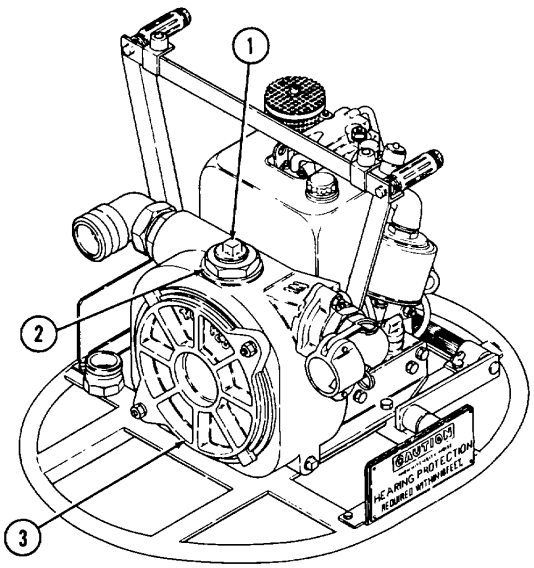

CAUTION

If volute does not fill with liquid, check suction hose assembly and suction hose connection at suction (intake) coupling for leaks. Be sure that suction hose end or drum unloader is completely immersed in fuel.

NOTE

As fuel fills volute, air is removed through discharge coupling. As the air is removed, fuel from the suction side of the pump is drawn into the volute and the pump will then draw on its own.

(3) Install pipe plug (1) in priming port (2) and tighten securely.

2-2. OPERATING PROCEDURE (Continued)

c. *Starting*.

CAUTION

If engine does not start on initial attempt, allow engine rotation to stop completely before again engaging crank handle. Prime the pump. Rotation of pump impeller without liquid in volute can reduce service life of pump.

(1) Engage crank handle (1) in gear housing (2).

(2) With both hands, turn crank handle (1) clockwise with increasing speed.

(3) When decompression lever (3) reaches 0 position, the highest possible speed must be obtained. Engine will start and go to maximum operating speed. Extra fuel device button (4) will return to normal position by itself.

(4) Adjust throttle control hand lever (5) to desired speed.

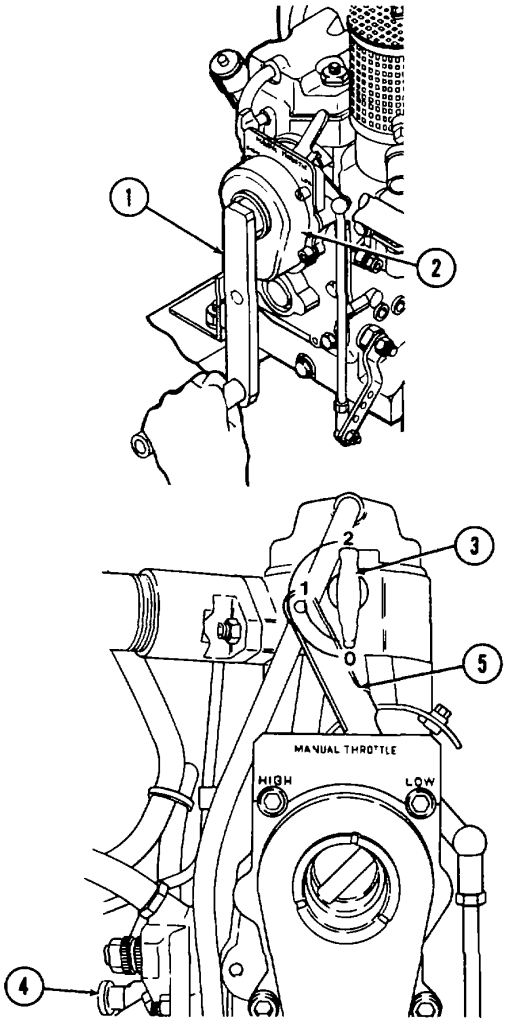

2-2. OPERATING PROCEDURE (Continued)

d. *Stopping*.

CAUTION

Immediate shutdown of the engine without a 5-minute idle time may cause damage to engine. Do so only when made necessary by overriding system requirements or emergency conditions.

(1) Slowly move throttle control hand lever toward LOW position to idle speed. Allow engine to idle for 5 minutes to allow engine operating temperature to stabilize.

NOTE

If pumping assembly is to be reused in its present placement and alignment, be prepared to close suction and discharge couplers and adapters on hoses attached to the pump. This will retain liquid in pump volute and reduce or eliminate priming requirements.

(2) Move throttle control hand lever to extreme right (LOW) position.

(3) Close any suction and discharge couplers or adapters that are installed on hoses.

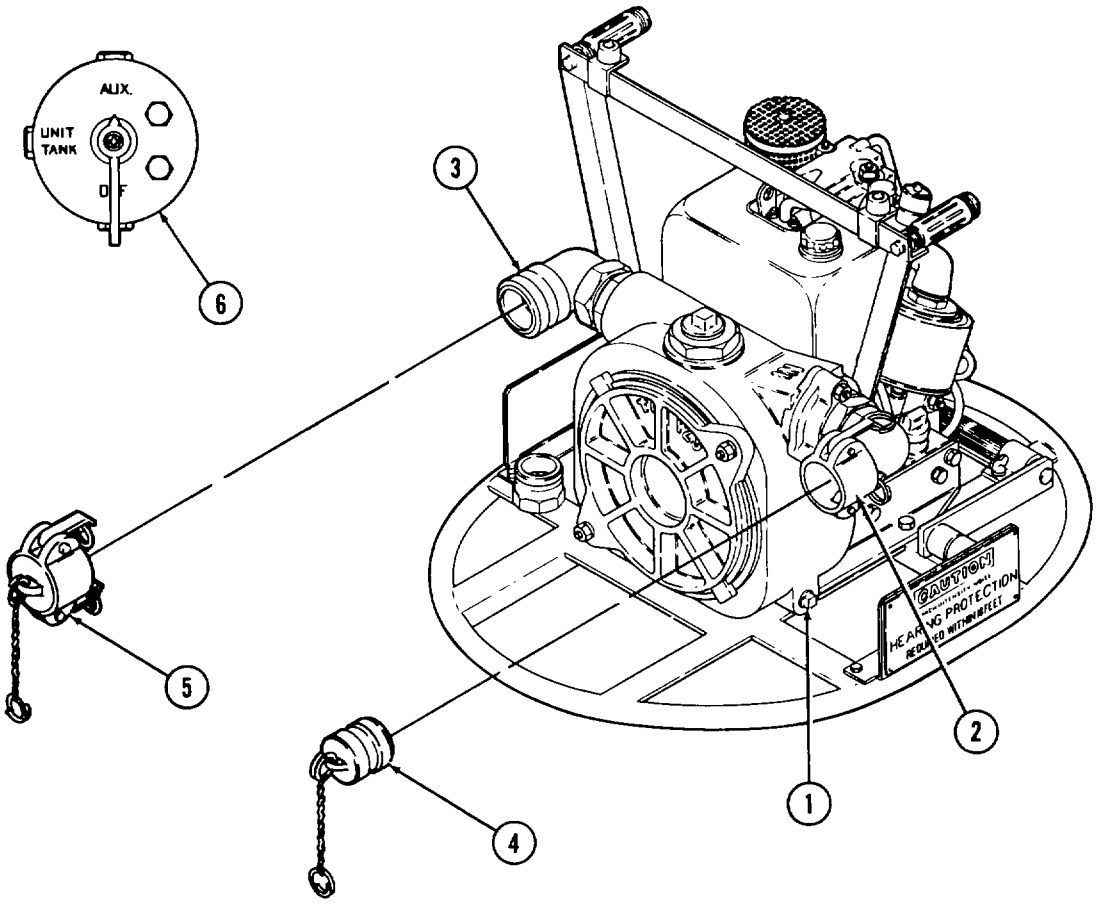

2-2. OPERATING PROCEDURE (Continued)

(4) If pump is to be removed from system, remove pipe plug (1) and drain pump.

(5) Remove suction hose from suction (intake) female coupling (2).

(6) Remove discharge hose from discharge male coupling (3).

(7) Cover suction (intake) female coupling (2) with dust plug (4).

(8) Cover discharge male coupling (3) with dust cap (5).

(9) Turn 3-way valve handle (6) counterclockwise to OFF position.'

2-3. IDENTIFICATION AND CAUTION PLATES

The pumping assembly has the following identification and instruction plates.

a. *Identification plate*. Located on the storage container. Provides the pump identification number, serial number, dimensions, weight, and shipping information.

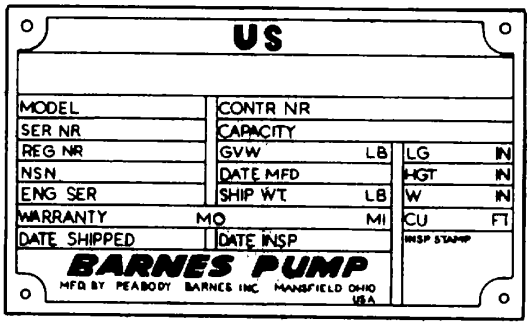

b. *Throttle plate*. Located on top of gear housing. Indicates throttle lever position for high and low engine speed.

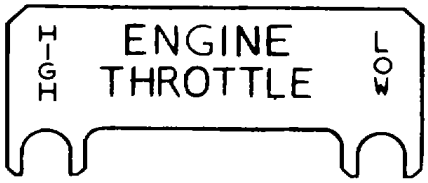

c. *Engine nameplate*. Located on the flywheel end, left side of the engine. Provides engine identification.

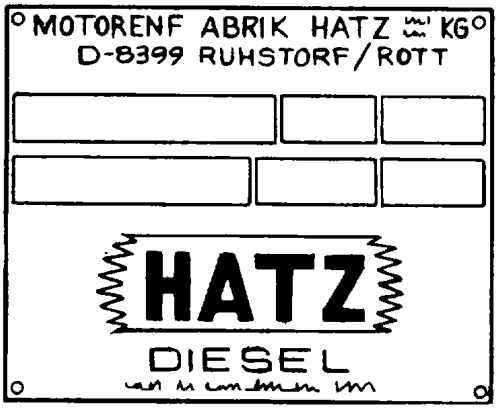

2-3. IDENTIFICATION AND CAUTION PLATES (Continued)

d. *Fuel line plate*. Located behind 3-way valve. Indicates source of fuel.

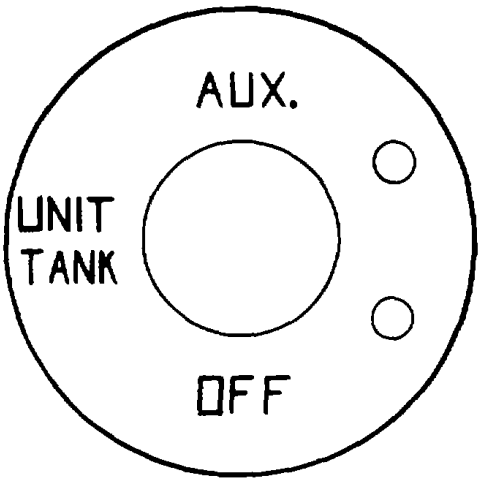

e. *Caution plates*. Located on both sides of pump assembly. Provides information for the safety of personnel operating the unit.

f. Engine oil maintenance tag. Located on storage container. Provides information for lubrication and maintenance.

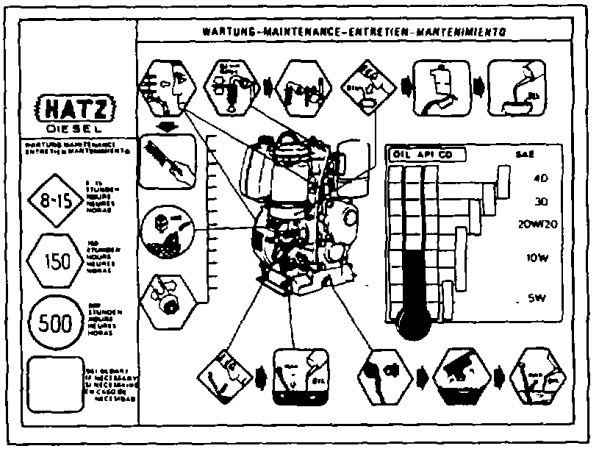

Section III. OPERATION UNDER UNUSUAL CONDITIONS

2-4. OPERATION IN COLD

a. Use proper engine oil for cold weather. See lubrication instructions in Chapter 3.

WARNING

Death or serious injury could occur if fuel is not handled carefully. Use in a well-ventilated area away from open flame, arcing equipment, ignition sources, heaters, or excessive heat. Engines must be turned off and cool before refueling. Use proper refueling procedures and equipment to avoid spillage. Do not run engines near open fuel containers. Always store fuel in proper, marked containers. DO NOT SMOKE.

b. Keep fuel tank full to prevent condensation. Condensation can freeze and clog lines, filters, and injectors.

c. Cold weather starting can be improved by the addition of engine oil to the cold start assist.

(1) With engine stopped, remove closing plug (1) from cold start assist (2).

CAUTION

Engine lockup could occur if oil is poured into center of cold start assist. Take care to fill cold start assist cup from the side.

(2) Fill cold start assist cup with clean engine oil. To prevent engine lockup, carefully pour oil in the side of the cup.

(3) Replace closing plug (1) into cold start assist (2) and press it in firmly.

(4) Start engine immediately using instructions in paragraph 2-2.

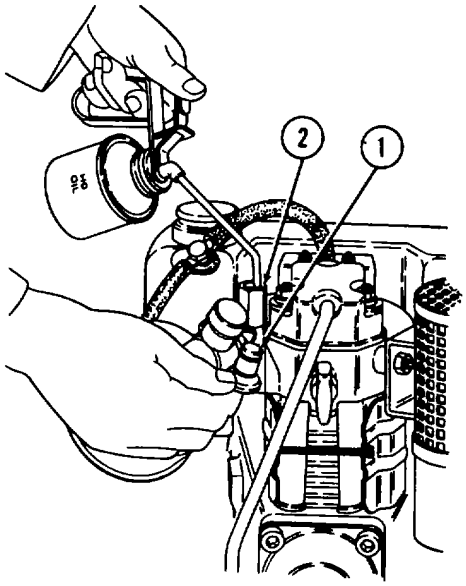

2-5. OPERATION IN EXTREME HEAT

The engine of the pumping assembly is air cooled. Heat can be removed from an engine in three ways; engine exhaust, engine oil, and the passage of air across and through cylinder cooling fins. Therefore, when operating in high ambient temperatures, observe the following:

a. With engine stopped, inspect frequently to be sure that cylinder cooling fins are clean and free of dirt that inhibits cooling.

b. With engine stopped, inspect frequently to be sure that blower ring is clean and free of dirt.

c. With engine stopped, inspect frequently to be sure that engine oil is to top mark on dipstick (1). Add oil, if necessary, at oil filler cap (2) to bring level up to top mark.

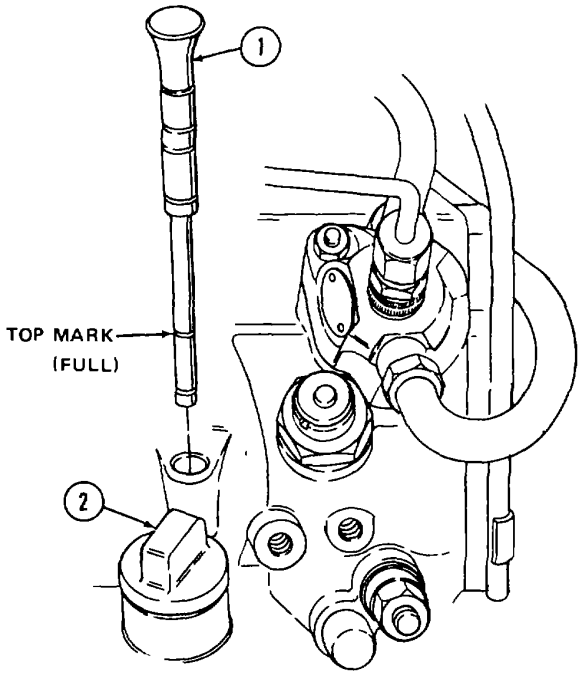

d. Check the air cleaner restriction indicator (1). If red band appears in window of restriction indicator, change the air filter in the air cleaner (2). Refer to paragraph 3-22.

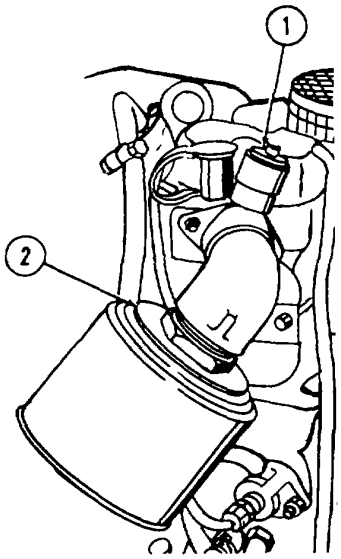

2-6. OPERATION IN HIGH ALTITUDES

The operating efficiency of the engine diminishes at higher altitudes. Be sure that engine is operating at peak efficiency.

2-7. OPERATION IN SANDY OR DUSTY AREAS

CAUTION

Monitor air cleaner intake restriction indicator more closely in sandy or dusty locations. At first sign of restriction, change air filter.

a. If red band appears in window of air cleaner restriction indicator and rain hood is not blocked and no damage to system components is found, replace air filter. Refer to paragraph 3-22.

b. With engine stopped, inspect frequently to be sure that cylinder cooling fins are clean and free of dirt that inhibits cooling.

c. With engine stopped, inspect frequently to be sure that blower ring is clean and free of dirt.

d. With engine stopped, inspect frequently to be sure that engine oil is to top mark on dipstick. Add oil, if necessary, to bring level up to top mark.

e. During fueling and PMCS, be sure that sand or dust is not allowed to enter fuel or lubrication system.

f. If pumping assembly is not in use and suction and/or discharge hoses are not installed, be sure that suction (intake) and discharge couplings are covered with dust caps.

g. Be sure that frequency of PMCS is increased in accordance with local conditions and requirements.

2-8. OPERATION UNDER RAINY OR HUMID CONDITIONS

WARNING

Death or serious injury could occur if fuel is not handled carefully. Use in a well-ventilated area away from open flame, arcing equipment, ignition sources, heaters, or excessive heat. Engines must be turned off and cool before refueling. Use proper refueling procedures and equipment to avoid spillage. Do not run engines near open fuel containers. Always store fuel in proper, marked containers. DO NOT SMOKE.

Check that fuel tank cap (1) is tight. Fill fuel tank (2) immediately after every operating period to prevent condensation.

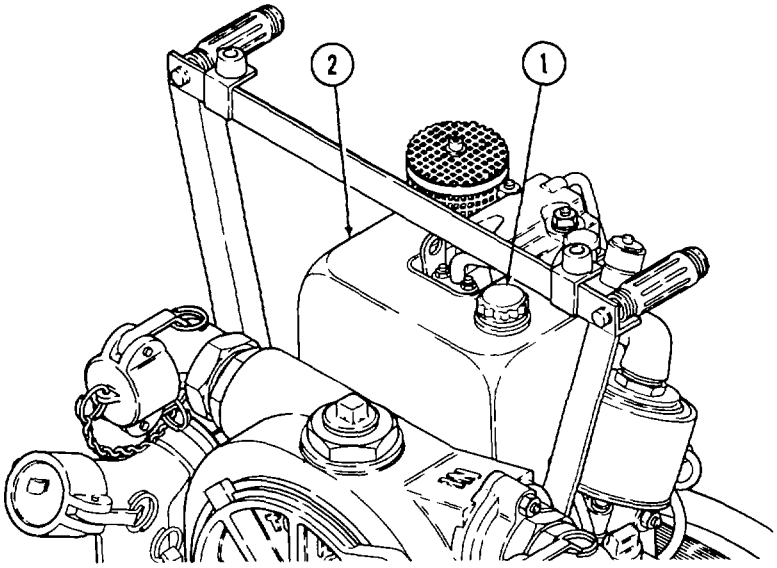

2-9. OPERATION IN SALT WATER AREAS

Salt water causes corrosion. Use fresh water to wash off any salt water that comes in contact with the equipment.

CHAPTER 3

UNIT MAINTENANCE INSTRUCTIONS

Section I. LUBRICATION INSTRUCTIONS

3-1. CHECKING ENGINE OIL

a. With engine level, check oil level. Remove oil dipstick (1) and wipe with a lintless cloth. Insert oil dipstick all the way into engine. Withdraw dipstick. Engine oil should coat oil dipstick to top mark (2).

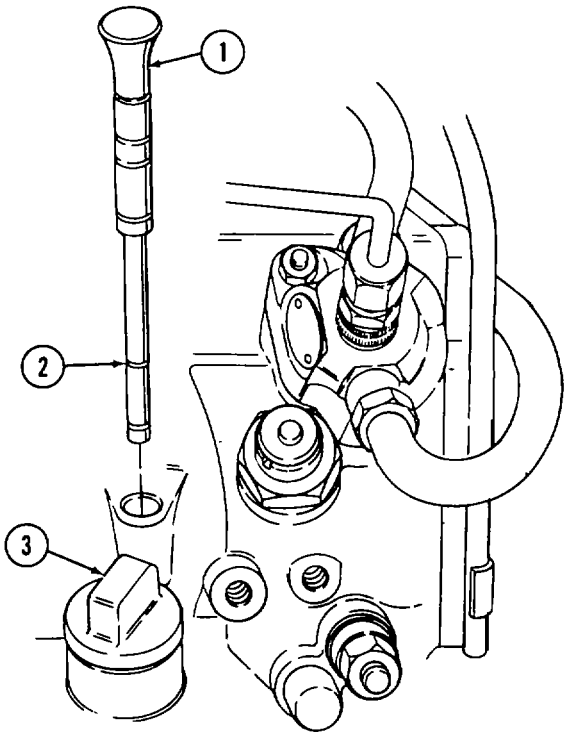

CAUTION

Do not overfill. Engine damage could result.

b. If oil coating is below top mark (2), remove oil cap (3) and add oil of proper viscosity required by ambient temperature. See following chart.

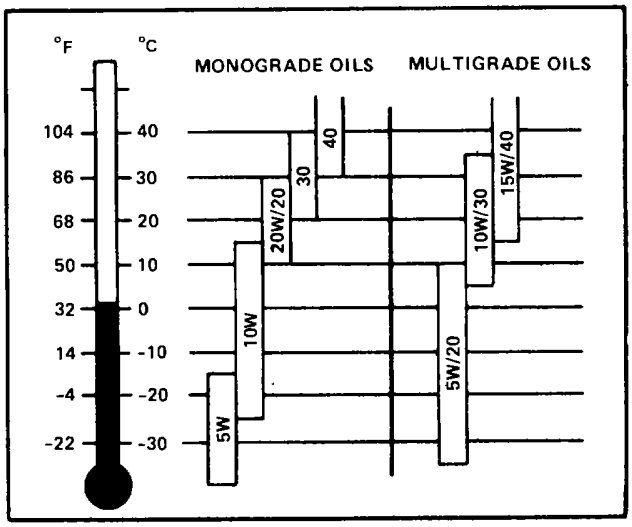

c. Again check oil level to be sure oil coats dipstick (1) to top mark (2). Check that cap (3) is tightly closed.

3-1. CHECKING ENGINE OIL (Continued)

d. If oil coating extends above top mark, loosen drain plug (1), drain enough oil to lower oil level to top mark on dipstick, then tighten drain plug securely.

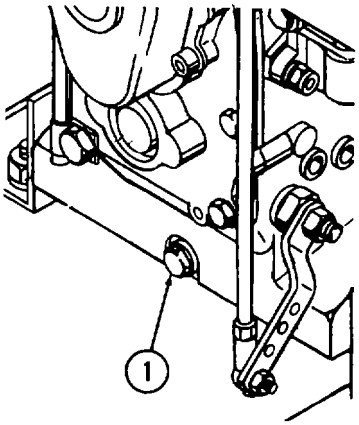

Section II. REPAIR PARTS, SPECIAL TOOLS TMDE, AND SUPPORT EQUIPMENT

3-2. COMMON TOOLS AND EQUIPMENT

For authorized common tools (standard and metric) and equipment, refer to the Modified Table of Organization and Equipment (MTOE) applicable to your unit.

3-3. SPECIAL TOOLS, TMDE, AND SUPPORT EQUIPMENT

The special tools required to service the pumping assembly are listed and illustrated in TM 5-4320-308- 23P, Repair Parts and Special Tools List (RPSTL).

3-4. REPAIR PARTS

Repair parts are listed and illustrated in TM 5-4320-308-23P.

Section III. SERVICE UPON RECEIPT OF EQUIPMENT

3-5. UNLOADING EQUIPMENT

a. Before attempting to unload the pumping assembly, make sure that the unloading facility is capable of handling 455 pounds (206 kilograms).

b. Remove shipping tiedowns.

3-5. UNLOADING EQUIPMENT (Continued)

WARNING

Death or serious injury could occur if unauthorized or unnecessary personnel are in the hoisting area. Permit only personnel actually engaged in the hoisting operation to be near the unit and hoisting equipment. All instructions for the hoisting operations must come from one authorized person.

Injury to personnel or damage to equipment could occur from improper hoisting. Hoist the load slowly to avoid slipping slings or load shift. Do not jerk the load or swing it from side-to-side when hoisting. This places additional stress on hoisting components which can cause failure and loss of load. Be sure hoisting equipment is on solid footing and is suitable for the size of the load. Watch boom angle and overhead clearance when hoisting.

Death or serious injury to personnel or damage to equipment could occur if engine lifting strap is used to lift the pumping assembly. The lifting strap shall be used to lift only the engine.

c. Unload the pumping assembly with a lifting device secured to the base assembly.

3-6. INSPECTING EQUIPMENT

a. Inspect the equipment for damage incurred during shipment. If the equipment has been damaged, report the damage on DD Form 6, Packaging Improvement Report.

b. Check the equipment against the packing slip to see if the shipment is complete. Report all discrepancies in accordance with the instructions of DA PAM 738-750.

c. Check to see whether the equipment has been modified.

3-7. PRELIMINARY SERVICING AND ADJUSTMENT OF EQUIPMENT

WARNING

Death or serious injury could occur if fuel is not handled carefully. Use in a well-ventilated area away from open flame, arcing equipment, ignition sources, heaters, or excessive heat. Engines must be turned off and cool before refueling. Use proper refueling procedures and equipment to avoid spillage. Do not run engines near open fuel containers. Always store fuel in proper, marked containers. DO NOT SMOKE.

a. Be sure fuel tank has sufficient fuel.

b. Be sure engine has sufficient oil. Refer to paragraph 3-1 for lubrication instructions.

c. Refer to table 3-1 and perform preventive maintenance checks and services.

Section IV. PREVENTIVE MAINTENANCE CHECKS AND SERVICES (PMCS)

3-8. PMCS PROCEDURES

Table 3-1 lists preventive maintenance checks and services which shall be performed at specified intervals by unit maintenance personnel (operator and organizational). The columns, codes, and location designations used in the table are as follows:

a. Item numbers are assigned to each check or service task. The numbers are to be used as a source of item numbers for the TM Number column on DA Form 2404, Equipment Inspection and Maintenance Worksheet, in recording results of PMCS.

b. The service intervals are divided into five categories: B Before Operation; D During Operation; A After Operation; W Weekly; and M Monthly. A dot (•) is placed in the Interval column for each check or service. If the same check or service is made in two or more intervals, a dot is placed in each applicable column.

c. The ITEM TO BE INSPECTED column lists the item to be checked or serviced.

d. The PROCEDURE column describes the procedure by which the check or service is to be performed. Illustrations are included to assist in locating that part of the equipment requiring the check or service.

e. The Equipment is Not Ready/Available If: column contains the basis for classifying the equipment as not ready/available because it is unable to perform its primary mission. An entry in this column will:

(1) Identify conditions that make the equipment not ready/available for readiness reporting purposes.

(2) Deny use of the equipment until corrective maintenance has been performed.

f. The designations left, right, front, and rear as used in the preventive maintenance checks and services (PMCS) indicate the side or end of the pump assembly as viewed when facing the throttle control.

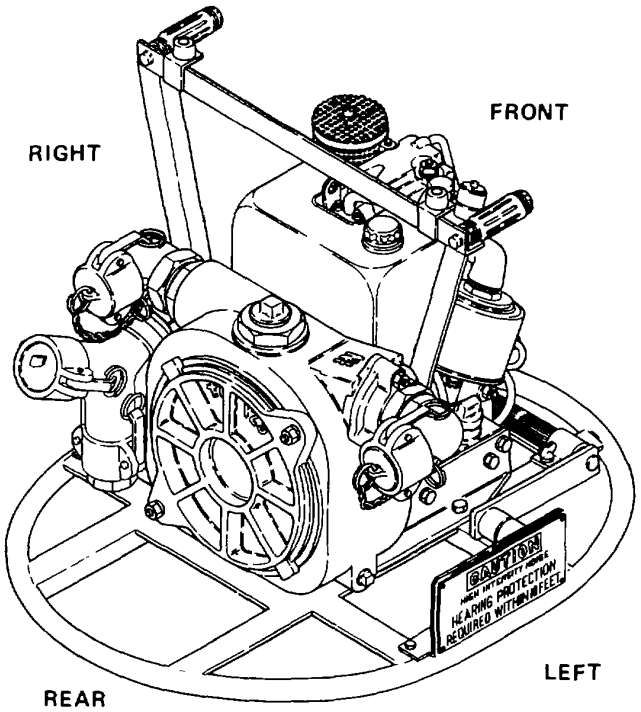

3-8. PMCS PROCEDURES (Continued)

g. Leakage definitions for PMCS shall be classified as follows:

Class I	Seepage of fluid (as indicated by wetness or discoloration) not great enough to form drops.
Class II	Leakage of fluid great enough to form drops but not enough to cause drops to drip from item being checked/inspected.
Class III	Leakage of fluid great enough to form drops that fall from the item being checked/ inspected.

CAUTION

Equipment operation is allowable with minor leakage (Class I or II). Of course, you must consider the fluid capacity in the item/system being checked/inspected. When in doubt, notify your supervisor.

When operating with Class I or Class II leaks, continue to check fluid levels as required in your PMCS.

Class III leaks should be reported to your supervisor or unit maintenance.

Table 3-1. Unit Preventive Maintenance Checks and Services

CAUTION

During PMCS it may be necessary to run the engine. Since the pump is directly coupled to the engine, the pump will run when the engine runs. Running the pump for longer than a few seconds without liquid in the volute will damage the pump. When necessary to run the pump for longer than a few seconds, make sure that suction and discharge hoses are installed and a source of fuel is available. Start engine, prime and operate pump to duplicate normal operation and prevent pump from overheating.

NOTE

If the equipment must be kept in continuous operation, check and service only those items that can be checked and serviced without disturbing operation. Make the complete checks and services when the equipment can be shut down. Perform weekly as well as before operation PMCS if:

(1) You are the assigned operator and have not operated the item since the last weekly.

(2) You are operating the item for the first time.

Within designated interval, these checks are to be performed in the order listed.

Table 3-1. Unit Preventive Maintenance Checks and Services - Continued

B - Before Operation **A - After Operation** **M - Monthly**
D - During Operation **W - Weekly**

Item No.	INTERVAL B	D	A	W	M	ITEM TO BE INSPECTED PROCEDURE	Equipment is Not Ready/ Available If:
1						*Storage Container.*	
					•	Inspect for cracks, dents, distortion, broken weldments, hard to operate hinges, or other shipping damage.	
2						*Suction Hose Assemblies.*	Cracks, abrasions, collapsed walls, or other damage is detected.
		•				Check for evidence of leaking and collapsed walls. Tighten loose connections.	
3						*Discharge Hose Assemblies*.	Cracks, abrasions, collapsed walls, or other damage is detected.
		•				Check for evidence of leaking and collapsed walls. Tighten loose connections.	
4						*Nozzle Assemblies.*	Cracks, distortion, or other damage is detected.
		•				Inspect the nozzles for cracks, distortion, or other visible damage.	
		•				Press operating handle (1) of nozzle assembly several times to assure that it operates freely without binding or sticking.	

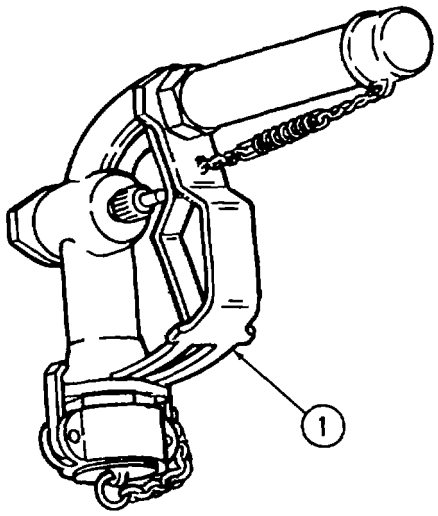

Table 3-1. Unit Preventive Maintenance Checks and Services - Continued

B - Before Operation **A - After Operation** **M - Monthly**
D - During Operation **W - Weekly**

Item No.	INTERVAL B	D	A	W	M	ITEM TO BE INSPECTED PROCEDURE	Equipment is Not Ready/ Available If:
5						*Base Assembly and Caution Plates*.	
					•	Check attaching hardware used to mount components of pump assembly. Attaching hardware shall be tight and free of corrosion and damage. Components of pump assembly attached directly to base (1) are: Caution plates (2) Mounting brackets (3) Handle (4)	Cracks are detected, or engine is loose.
					•	Visually inspect all base welds for cracks. Inspect only those welds that can be seen without disassembly.	
					•	Check that caution plates (2) and throttle plate (5) can be read.	
					•	Check that crank handle (7) is secure. Inspect Y-connectors (6) for obvious damage.	

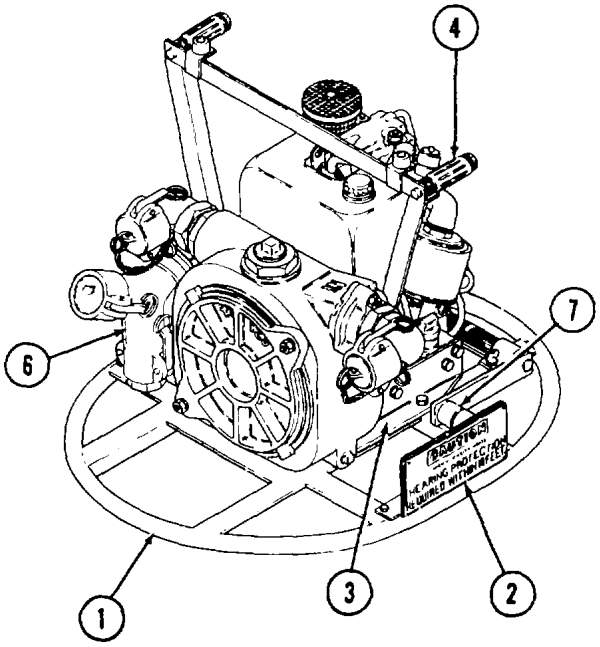

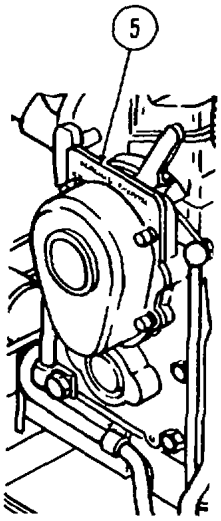

Table 3-1. Unit Preventive Maintenance Checks and Services - Continued

B - Before Operation **A - After Operation** **M - Monthly**
D - During Operation **W - Weekly**

Item No.	INTERVAL B	D	A	W	M	ITEM TO BE INSPECTED PROCEDURE	Equipment is Not Ready/ Available If:
5						*Base Assembly and Caution Plates - Continued.*	
					•	Check visible areas of base (1) for corrosion and damage.	
					•	Check shock mounts for splitting.	
					•	Check for indications of corrosion in areas between all mated parts.	
6						Lifting Strap (1).	
						WARNING **Death or serious injury to personnel or damage to equipment could occur if engine lifting strap is used to lift the centrifugal pump unit. The lifting strap shall be used to lift only the engine.**	
					•	Check for cracks in base metal and/or welds.	
					•	Check eye (2) for wear and cracks.	

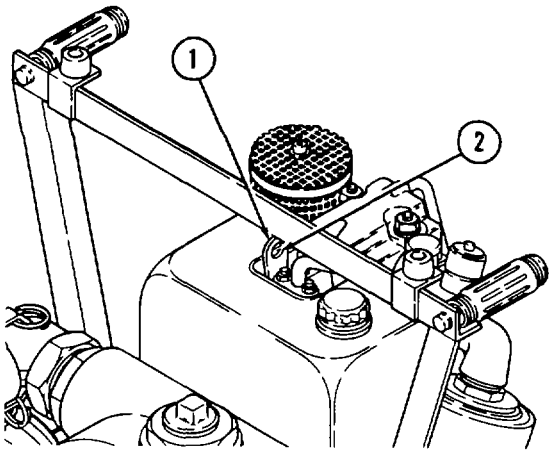

Table 3-1. Unit Preventive Maintenance Checks and Services - Continued

B - Before Operation **A - After Operation** **M - Monthly**
D - During Operation **W - Weekly**

Item No.	INTERVAL B	D	A	W	M	ITEM TO BE INSPECTED PROCEDURE	Equipment is Not Ready/ Available If:
6						*Lifting Strap (1) - Continued.* Check for corrosion, especially at mating areas.	
7	•		•			*Oil Level.* With engine level, remove oil dipstick (1). Wipe with lintless cloth. Insert oil dipstick all the way into engine, then withdraw. Engine oil should coat oil dipstick to top mark. If oil coating is below top mark, remove cap (2) and add oil to bring level up to top mark. Again check oil level. Be sure oil coats dipstick to top mark. Check that cap (2) is tightly closed. 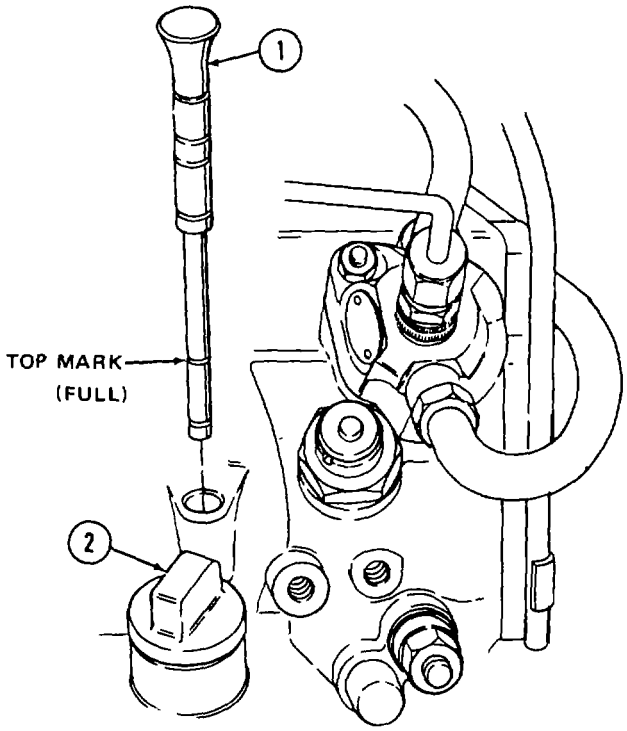	Oil level is low or Class III oil leak present.

Table 3-1. Unit Preventive Maintenance Checks and Services - Continued

B - Before Operation **A - After Operation** **M - Monthly**
D - During Operation **W - Weekly**

Item No.	INTERVAL B	D	A	W	M	ITEM TO BE INSPECTED PROCEDURE	Equipment is Not Ready/ Available If:
8						*Timing Cover and Gear Housing*.	Class III oil leakage is present.
					•	Check for oil leak at joint between timing cover (1) and crankcase (2).	
					•	Check for grease leak at joint between timing cover (1) and gear housing (3).	

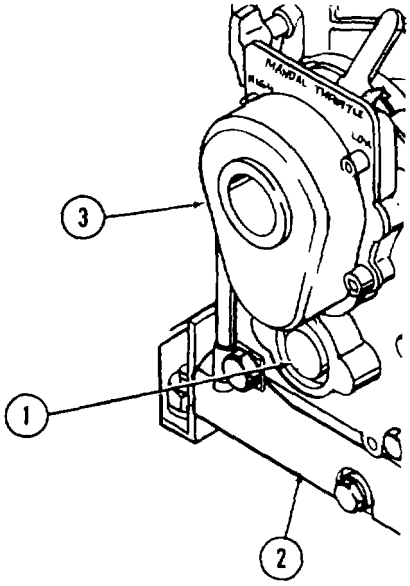

Table 3-1. Unit Preventive Maintenance Checks and Services - Continued

B - Before Operation **A - After Operation** **M - Monthly**
D - During Operation **W - Weekly**

Item No.	INTERVAL B	D	A	W	M	ITEM TO BE INSPECTED PROCEDURE	Equipment is Not Ready/ Available If:
9						*Breather Pipe.*	
		•			•	Check for damaged or restricted breather pipe (1). Be sure bottom of breather pipe is not clogged.	
		•			•	Check that pipe clip (2) is tight.	

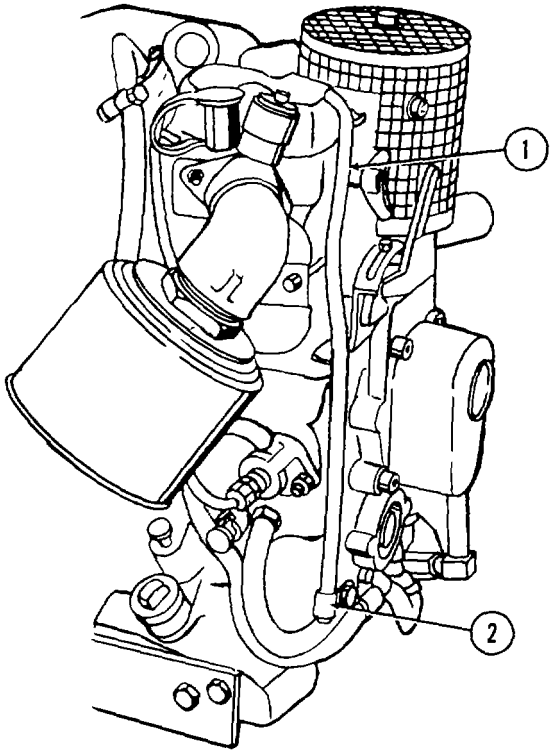

Table 3-1. Unit Preventive Maintenance Checks and Services - Continued

B - Before Operation **A - After Operation** **M - Monthly**
D - During Operation **W - Weekly**

Item No.	INTERVAL B	D	A	W	M	ITEM TO BE INSPECTED PROCEDURE	Equipment is Not Ready/ Available If:
10						*Air Filter Assembly*.	
	•		•			Check for red band in window of restriction indicator (2).	Dirt in air filter blocks air flow enough to cause red band to appear in window of restriction indicator.
	•			•		Check rain hood (2) for damage that could prevent the replacement of air filter, allow dirt to enter air flow after the air filter, cause restriction indicator (2) to provide inaccurate readings, or obstruct air flow to the engine.	Damage or block-age prevents air flow to engine and trips re-striction indi-cator.

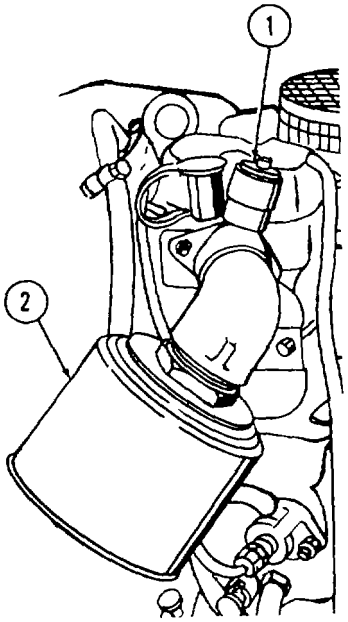

Table 3-1. Unit Preventive Maintenance Checks and Services - Continued

B - Before Operation **A - After Operation** **M - Monthly**
D - During Operation **W - Weekly**

Item No.	INTERVAL B	D	A	W	M	ITEM TO BE INSPECTED PROCEDURE	Equipment is Not Ready/ Available If:
11						*Fuel System.* **WARNING** **Death or serious injury could occur if fuel is not handled carefully. Use in a well-ventilated area away from open flame, arcing equipment, ignition sources, heaters, or excessive heat. Always store fuel in proper, marked containers. DO NOT SMOKE.**	
		•				Check for leaks in fuel pressure pipe (1) and in fittings (2 and 3) at injector and at injection pump. 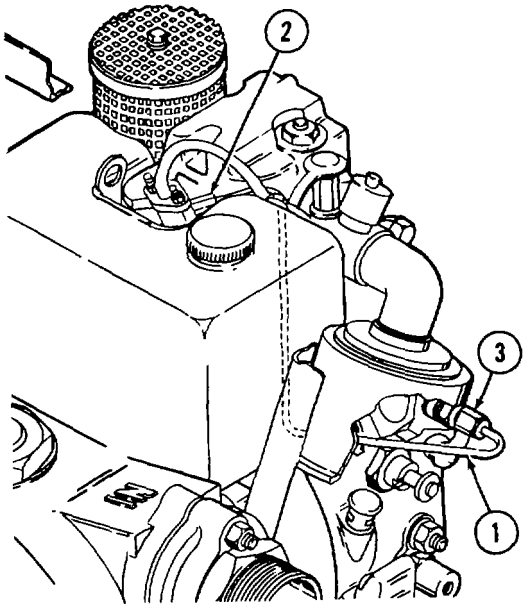 	Leakage is present.

Table 3-1. Unit Preventive Maintenance Checks and Services - Continued

B - Before Operation **A - After Operation** **M - Monthly**
D - During Operation **W - Weekly**

Item No.	INTERVAL B	D	A	W	M	ITEM TO BE INSPECTED PROCEDURE	Equipment is Not Ready/ Available If:
11						*Fuel System - Continued.*	
	•	•	•			Check for fuel leakage at fittings (1) securing hoses (2) to injection pump (3). 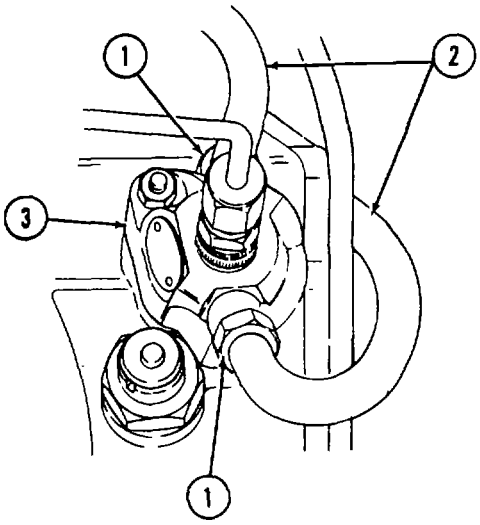	Injection pump hose connec-tion leaks.

Table 3-1. Unit Preventive Maintenance Checks and Services - Continued

B - Before Operation **A - After Operation** **M - Monthly**
D - During Operation **W - Weekly**

Item No.	INTERVAL B	D	A	W	M	ITEM TO BE INSPECTED PROCEDURE	Equipment is Not Ready/ Available If:
11						*Fuel System - Continued.*	
	•	•	•			Check fuel hoses (1) for leaks at ring pieces (2) and banjo bolts (3).	Class III leakage is present or fire hazard exists.
	•	•	•			Check for fuel leaks at mating parts of fuel lift pump (4).	
	•	•	•			Check for fuel leaks at fuel filter (5).	
					•	Check fuel hoses (1) for leaks, cracks, holes, and abrasions.	
					•	Check for oil leak between fuel lift pump (4) and crankcase (6).	

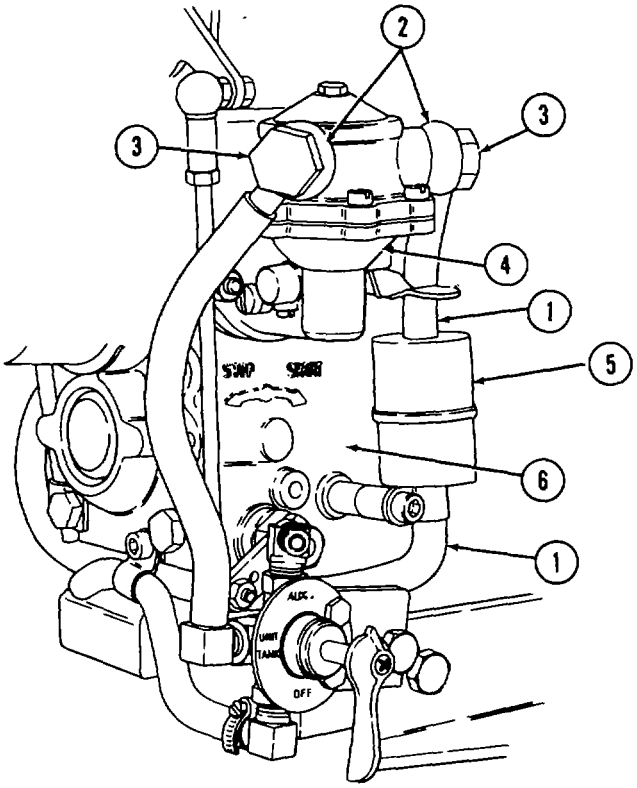

Table 3-1. Unit Preventive Maintenance Checks and Services - Continued

B - Before Operation **A - After Operation** **M - Monthly**
D - During Operation **W - Weekly**

Item No.	INTERVAL B	D	A	W	M	ITEM TO BE INSPECTED PROCEDURE	Equipment is Not Ready/ Available If:
11						*Fuel System - Continued.*	
					•	Check fuel lift pump (4) for cracks, and for loose nuts (7) securing pump to crankcase (6).	
		•				Check operation of fuel primer lever (8) at next startup. Fuel primer lever shall operate without binding to make sure fuel system is properly primed.	
				•	•	Check operation of 3 way valve (9). Valve shall operate without binding.	Valve leaks, is inoperative, or cracked.

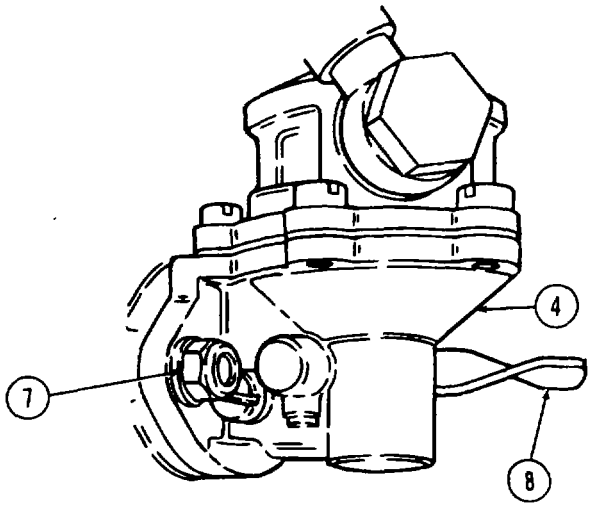

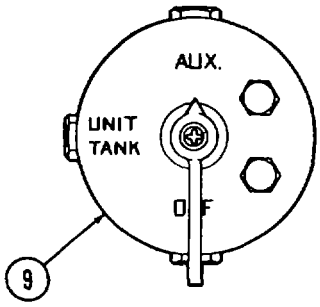

Table 3-1. Unit Preventive Maintenance Checks and Services - Continued

B - Before Operation **A - After Operation** **M - Monthly**
D - During Operation **W - Weekly**

Item No.	INTERVAL B	D	A	W	M	ITEM TO BE INSPECTED PROCEDURE	Equipment is Not Ready/ Available If:
11						*Fuel System - Continued.* **WARNING** **Death or serious injury could occur if fuel is not handled carefully. Use in a well-ventilated area away from open flame, arcing equipment, ignition sources, heaters, or excessive heat. Engines must be turned off and cool before refueling. Use proper refueling procedures and equipment to avoid spillage. Do not run engines near open fuel containers. Always store fuel in proper, marked containers. DO NOT SMOKE**.	
	•					Remove fuel tank cap (1). Check for adequate fuel level. Add fuel to fuel tank (2) as required. 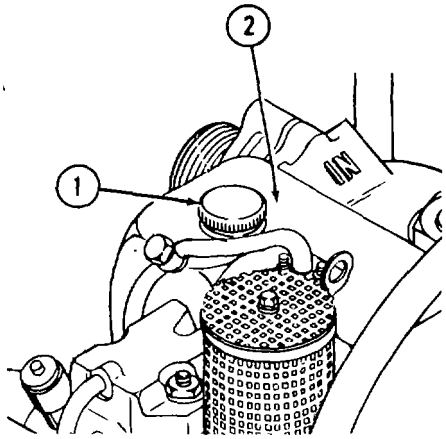 	Fuel cannot be supplied to engine.

Table 3-1. Unit Preventive Maintenance Checks and Services - Continued

B - Before Operation **A - After Operation** **M - Monthly**
D - During Operation **W - Weekly**

Item No.	INTERVAL B	D	A	W	M	ITEM TO BE INSPECTED PROCEDURE	Equipment is Not Ready/ Available If:
11						*Fuel System - Continued.*	
					•	Visually check fuel tank (2) for physical damage that could cause leaks or contamination of fuel supply.	Fuel cannot be supplied to engine. Class III fuel leaks or fire hazard resulting from leakage present.
					•	Check fuel tank for deterioration.	
		•				Check fuel hoses (1) for leaks at banjo bolt (2) and double ring piece (3).	

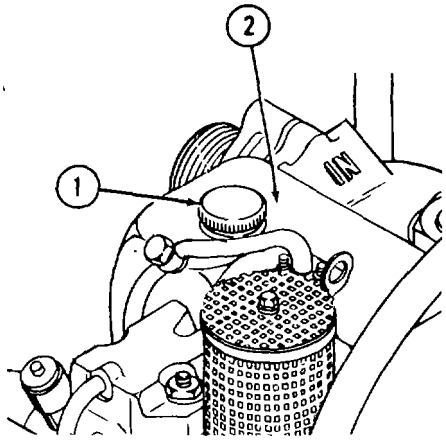

Table 3-1. Unit Preventive Maintenance Checks and Services - Continued

B - Before Operation **A - After Operation** **M - Monthly**
D - During Operation **W - Weekly**

Item No.	INTERVAL B	D	A	W	M	ITEM TO BE INSPECTED PROCEDURE	Equipment is Not Ready/ Available If:
12						*Muffler and Protective Screen*. **WARNING** **Muffler and related components get hot enough during pump operation to cause severe burns. Avoid contact with muffler and related components during checks described in this text.** • Visually check protective screen (1) on muffler (2) for excessive vibration during operation. • Listen for leaking exhaust gases. Locate leaking components. 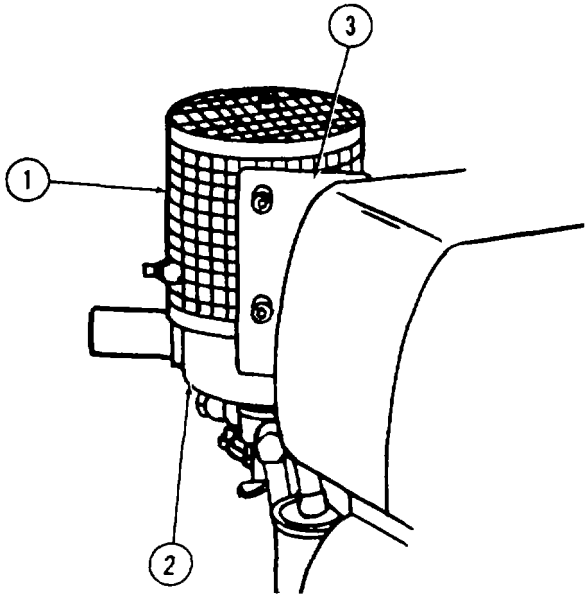	Personnel hazard exists as a result of escaping exhaust gases or engine exhaust is restricted causing excessive back pressure.

Table 3-1. Unit Preventive Maintenance Checks and Services - Continued

B - Before Operation **A - After Operation** **M - Monthly**
D - During Operation **W - Weekly**

Item No.	INTERVAL B	D	A	W	M	ITEM TO BE INSPECTED PROCEDURE	Equipment is Not Ready/ Available If:
12						*Muffler and Protective Screen - Continued.*	
						WARNING	
						Prior to touching portions of exhaust system, make sure that equipment has cooled.	
					•	Check that protective screen (1) and heat shield (3) are mounted securely to engine.	
					•	Visually inspect muffler (2) for exhaust leaks caused by damage or corrosion.	
13					•	*Oil Drain Plug.*	Class III oil leak is found.
						Check oil drain plug (1) for oil leaks.	

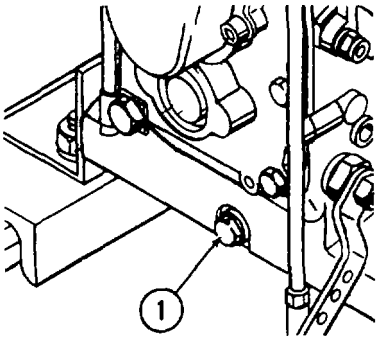

Table 3-1. Unit Preventive Maintenance Checks and Services - Continued

B - Before Operation **A - After Operation** **M - Monthly**
D - During Operation **W - Weekly**

Item No.	INTERVAL B	D	A	W	M	ITEM TO BE INSPECTED PROCEDURE	Equipment is Not Ready/ Available If:
14						*Pump Case Assembly, Volute, and Suction (Intake) Flange.*	Pump case assembly and volute nuts or studs loose or broken. Foreign material, capable of damaging pump, found in pump, found in suction (intake) flange or check valve.
	•		•			Check that volute (1) is securely mounted to pump case (2) with studs (3) and nuts (4').	
	•		•			Check that pipe plugs (5 and 6) are securely installed in pump case.	
	•		•			Check that suction (intake) flange (7) and check valve (8) are securely mounted to pump case assembly with studs (9) and nuts (10). Check for damaged threads on studs (9).	
	•		•			Visually check interior of suction (intake) flange (7) for foreign matter that could enter into pump case (2) and volute (1) during operation.	
						Check female coupling (11) for damage.	

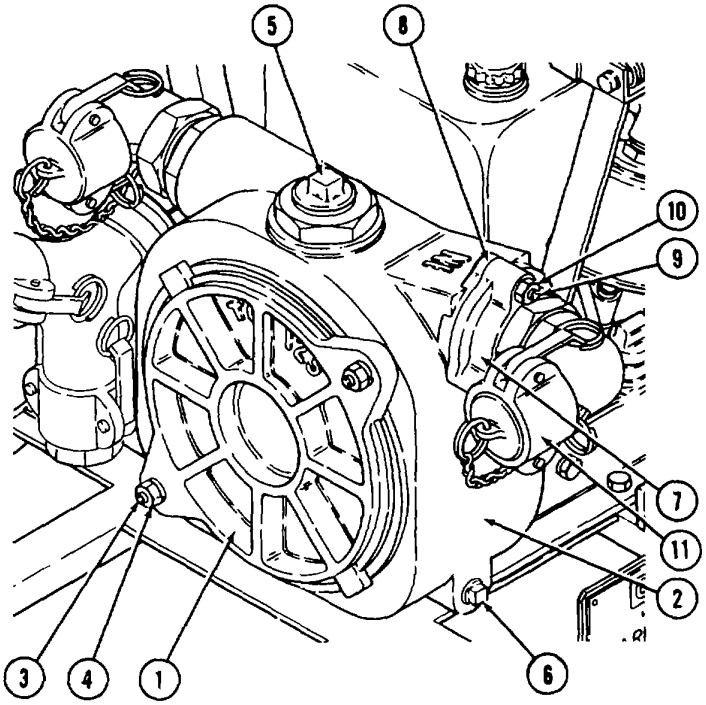

Table 3-1. Unit Preventive Maintenance Checks and Services - Continued

B - Before Operation **A - After Operation** **M - Monthly**
D - During Operation **W - Weekly**

Item No.	INTERVAL B	D	A	W	M	ITEM TO BE INSPECTED PROCEDURE	Equipment is Not Ready/ Available If:
14						*Pump Case Assembly, Volute, and Suction (Intake) Flange - Continued.*	
		•				Listen for unusual noise during pump operation. indicates damage to pump case assembly and volute.	Unusual noise
					•	Check volute (1), pump case assembly (2), and suction (intake) flange (3) for cracks and corrosion.	Pump case assembly components are cracked or damaged severely enough to prevent safe use.
					•	Check studs (4 and 5) for damaged or corroded threads.	
					•	Check condition of paint. Paint shall be in good condition with no bare metal or corrosion.	Inspection indicates pump may bind during operation.

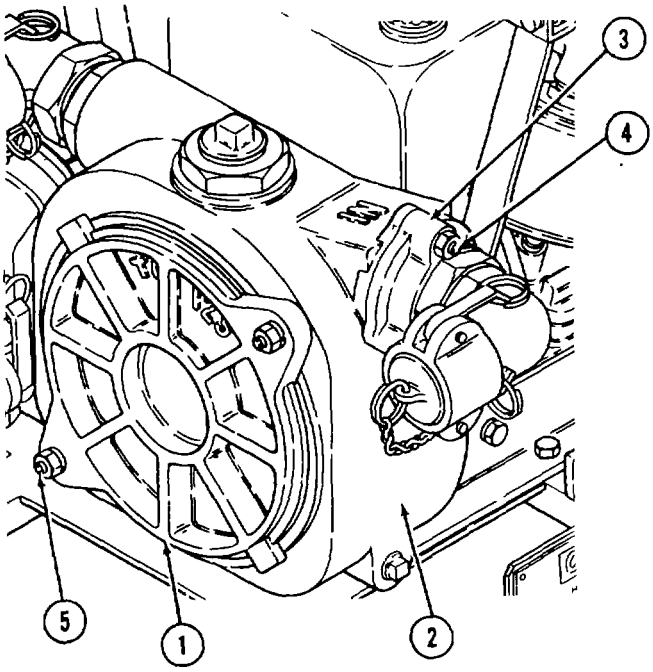

Table 3-1. Unit Preventive Maintenance Checks and Services - Continued

B - Before Operation **A - After Operation** **M - Monthly**
D - During Operation **W - Weekly**

Item No.	INTERVAL B	D	A	W	M	ITEM TO BE INSPECTED PROCEDURE	Equipment is Not Ready/ Available If:
15					•	*Check Valve Assembly*. Inspect suction (intake) flange (1) for cracks, damaged threads, or studs. Check that nuts (2) are tight and free of corrosion. Inspect check valve assembly (3) for evidence of leakage or gasket (4) for damage, and presence of outer check valve weight (5). Screw (6) should be tight. All components shall be free of corrosion. When in closed position, gasket shall appear to make an airtight seal on pump outlet. Gasket shall be free to open with pump flow. 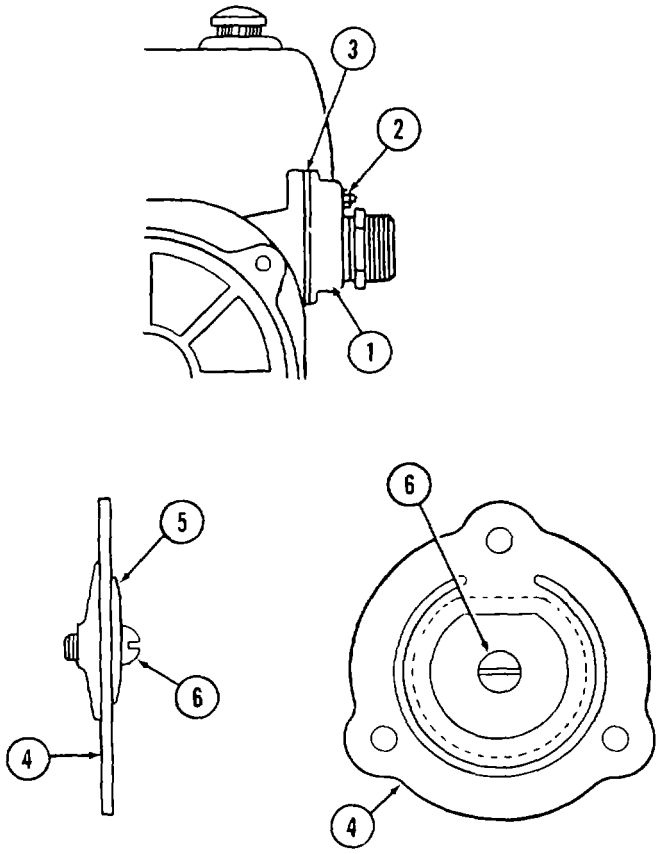	

Section V. TROUBLESHOOTING

3-9. TROUBLESHOOTING

a. Table 3-2 contains troubleshooting information for locating and correcting most of the operating troubles which are the responsibility of unit maintenance. Each malfunction for an individual component, unit, or system is followed by a list of tests or inspections which will help you to determine probable causes and corrective actions to take. Perform the tests/inspections and corrective actions in the order listed.

b. This manual cannot list all malfunctions that may occur, nor all tests or inspections and corrective actions. If a malfunction is not listed or is not corrected by listed corrective actions, notify your supervisor.

c. Only those functions within the scope of unit maintenance are listed.

3-10. SYMPTOM INDEX

Refer to the Symptom Index below. Locate the malfunction which is the same, or most nearly the same, as the trouble you are having with the pump. The Symptom Index lists the first page of troubleshooting information for that malfunction. Follow the steps one by one, and perform the corrective actions listed.

Table 3-2. Unit Maintenance Troubleshooting

MALFUNCTION
TEST OR INSPECTION
CORRECTIVE ACTION

1. ENGINE HARD TO CRANK

Step 1. Check for proper oil viscosity.

Refer to chart in paragraph 3-1.

2. ENGINE CRANKS BUT FAILS TO START

Step 1. Check that extra fuel button has been pulled out prior to starting.

Pull out extra fuel button and attempt to start engine (para 2-2.c.).

Step 2. Check window of air cleaner restriction indicator for red band indicating blocked air cleaner.

If red band appears in window of air cleaner restriction indicator and rain hood is not blocked and no damage to system components is found, replace air filter (para 3-22).

Step 3. Check for empty fuel tank.

WARNING

Death or serious injury could occur if fuel is not handled carefully. Use in a well-ventilated area away from open flame, arcing equipment, ignition sources, heaters, or excessive heat. Engines must be turned off and cool before refueling. Use proper refueling procedures and equipment to avoid spillage. Do not run engines near open fuel containers. Always store fuel in proper, marked containers. DO NOT SMOKE.

If fuel tank is empty, fill with fuel.

Table 3-2. Unit Maintenance Troubleshooting - Continued

MALFUNCTION TEST OR INSPECTION CORRECTIVE ACTION

Step 4. Check non-return valve for proper function.

WARNING

Death or serious injury could occur if fuel is not handled carefully. Use in a well-ventilated area away from open flame, arcing equipment, ignition sources, heaters, or excessive heat. Always store fuel in proper, marked containers. DO NOT SMOKE.

a. Disconnect hose from double ring piece at fuel tank. Turn engine with starting handle.

b. If fuel does not flow from hose, remove non-return valve. Check valve by shaking for free movement of internal valve ball.

c. If necessary, clean with fuel. If unserviceable, replace non-return valve (para 3-25).

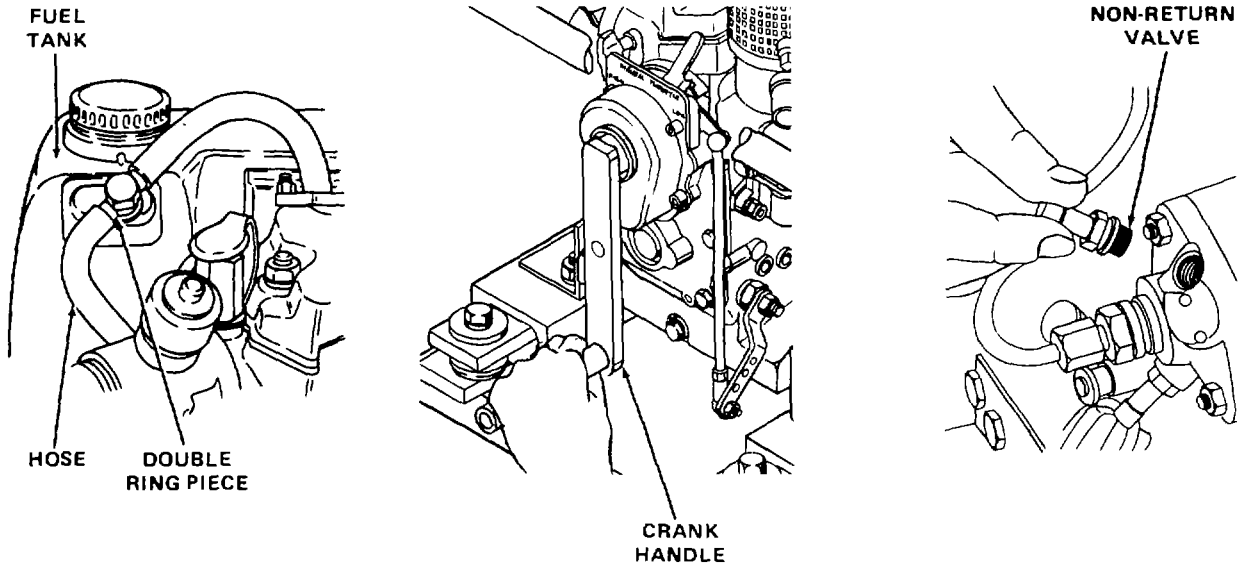

Step 5. Check starting procedures under prevailing conditions. If starting procedures have been performed correctly but engine still fails to start, notify intermediate maintenance.

Table 3-2. Unit Maintenance Troubleshooting - Continued

MALFUNCTION TEST OR INSPECTION CORRECTIVE ACTION

3. ENGINE RUNS UNSTEADILY AND POWER OUTPUT IS LOW

CAUTION

A high temperature condition may cause abnormal engine operation.

Step 1. Check window of air cleaner restriction indicator for red band indicating blocked air cleaner.

If red band appears in window of air cleaner restriction indicator and rain hood is not blocked and no damage to system components is found, replace air filter (para 3-22).

Step 2. See Malfunction 2, step 4.

Step 3. Notify intermediate maintenance.

4. DENSE SMOKE FROM EXHAUST AFTER WARMUP

Step 1. Shut down engine. With engine level, check oil level (para 3-1.). Add oil if necessary.

Step 2. Check window of air cleaner restriction indicator for red band indicating blocked air cleaner.
If red band appears in window of air cleaner restriction indicator and rain hood is not blocked and no damage to system components is found, replace air filter (para 3-22).

Step 3. Notify intermediate maintenance.

5. ENGINE OVERHEATS

Step 1. Check cooling air ducting for damage and dirt.

a. Check cylinder cooling fins for damage or dirt.

b. Check blower ring blades for damage or dirt.

Remove accumulated dust and dirt with a stiff-bristled brush.

Start engine after cleaning. Allow engine to run until all indications of moisture have evaporated.

Table 3-2. Unit Maintenance Troubleshooting - Continued

MALFUNCTION	TEST OR INSPECTION	CORRECTIVE ACTION

Step 2. Shut down engine. With engine level, check oil level (para 3-1.).

Add oil if necessary.

Step 3. Check muffler for obstruction.

Remove obstruction.

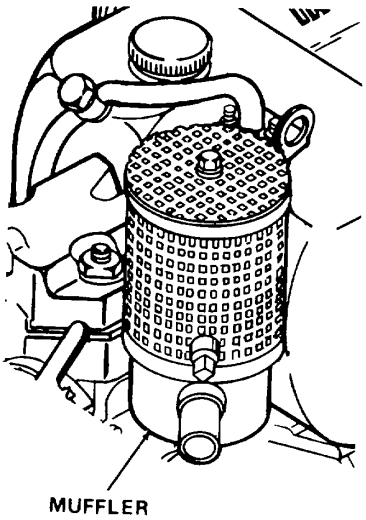

Step 4. Notify intermediate maintenance.

6. PUMP MAKES EXCESSIVE NOISE

Step 1. Check volute for foreign material.

With engine stopped and suction hose removed, inspect interior of suction (intake) flange for foreign material or obstruction.

CAUTION

Excessive pump noise can indicate that pump is running dry. This condition can cause serious pump damage.

Step 2. Check that suction hose is immersed in fuel or properly connected to container from which fuel is being pumped. Fuel level in container shall be above suction hose connection.

Relocate suction hose connection below surface of fuel.

Table 3-2. Unit Maintenance Troubleshooting - Continued

MALFUNCTION TEST OR INSPECTION CORRECTIVE ACTION

Step 3. Check suction hoses, connections, or parting surface of suction flange for leaks. Check pipe plugs are not leaking.

Step 4. Check that pump has been properly primed.

If necessary, prime the pump (para 2-2.b.).

Step 5. Inspect check valve assembly for proper operation. Perform the checks and services of table 3-1, item 15. Replace check valve assembly (para 3-19).

Step 6. Notify intermediate maintenance.

7. PUMP OUTPUT LOW

Step 1. Check that engine speed is properly adjusted.

Adjust throttle lever to increase engine speed (para 2-2.d.).

Step 2. See Malfunction 6, steps 1 thru 5.

8. LACK OF POWER

Step 1. Check for low engine speed. Adjust throttle lever to increase engine speed.

WARNING

Death or serious injury could occur if fuel is not handled carefully. Use in a well-ventilated area away from open flame, arcing equipment, ignition sources, heaters, or excessive heat. Engines must be turned off and cool before refueling. Use proper refueling procedures and equipment to avoid spillage. Do not run engines near open fuel containers. Always store fuel in proper, marked containers. DO NOT SMOKE.

Step 2. Check for insufficient fuel supply. Fill fuel tank.

Table 3-2. Unit Maintenance Troubleshooting - Continued

MALFUNCTION TEST OR INSPECTION CORRECTIVE ACTION
Step 3. Check air cleaner restriction indicator. If red band appears in window of restriction indicator, and rain hood is not blocked and no damage to system components is found, replace air filter (para 3-22).
Step 4. Check for loose connections or a restricted or damaged line between fuel lift pump and tank, between fuel lift pump and injection pump, and between injection pump and injector. Tighten loose connections. Report damaged lines to intermediate maintenance.
Step 5. Check for restrictions in suction or discharge hoses or hose end. Clean away debris. If hoses are severely damaged or restricted, replace.
9. ENGINE STOPS RUNNING
WARNING **Death or serious injury could occur if fuel is not handled carefully. Use in a well-ventilated area away from open flame, arcing equipment, ignition sources, heaters, or excessive heat. Engines must be turned off and cool before refueling. Use proper refueling procedures and equipment to avoid spillage. Do not run engines near open fuel containers. Always store fuel in proper, marked containers. DO NOT SMOKE**.
Step 1. Check for insufficient fuel supply. Fill fuel tank.
Step 2. Check air cleaner restriction indicator for indication of restrictions or excessive dirt in air filter. If red band appears in window of restriction indicator, and rain hood is not blocked and no damage to system components is found, replace air filter (para 3-22).

Table 3-2. Unit Maintenance Troubleshooting - Continued

MALFUNCTION	TEST OR INSPECTION	CORRECTIVE ACTION
10. EXCESSIVE LUBRICATING OIL CONSUMPTION		
	Step 1. Check for leakage at oil drain plug or oil filler cap. If drain plug or oil filler cap is leaking, try to tighten.	If leak continues, notify intermediate maintenance.
	Step 2. Check for leakage at joint between timing cover and crankcase.	Notify intermediate maintenance.
	Step 3. Check for leakage around cylinder head.	Notify intermediate maintenance.
	Step 4. Check for smoky exhaust. If exhaust discharge contains oil, excessive oil is being burned in engine cylinder or around cylinder valve stems.	Notify intermediate maintenance.
11. PUMP FAILS TO PRIME		
	Step 1. Check for low engine speed.	Adjust throttle lever to increase engine speed.
	Step 2. Check for air-locked pump.	Vent the pump volute and fill with fuel (para 2-2.b.).
	Step 3. Check for leaks at the suction (intake) flange and gasket.	Tighten nuts on suction (intake) flange at pump case.
12. NOISY PUMP OPERATION		Notify intermediate maintenance.
13. LOW DISCHARGE PRESSURE		
	Step 1. Check for low engine speed.	Adjust throttle lever to increase engine speed.
	Step 2. Check suction (intake) line for leaking connections.	Tighten loose connections.

Section VI. MAINTENANCE PROCEDURES

INDEX

3-11. GENERAL INSTRUCTIONS

Maintenance instructions in this section will list resources required, personnel required, and equipment condition for the start of the procedure. Note the following:

- Resources required are not listed unless they apply to the procedure.
- Personnel required are listed only if the task requires more than one. If PERSONNEL is not listed, it means one person can do the task.
- The normal standard equipment condition to start a maintenance task is engine stopped. EQUIPMENT CONDITION is not listed unless some other condition is required.
- Refer to Appendix F to determine torque requirements when tightening threaded fasteners, unless a specific torque value is given in procedure. Standard torque values given in Appendix F are determined by thread size.

3-12. REPLACE SUCTION HOSE ASSEMBLY

This task covers: Cleaning/Inspection

INITIAL SETUP

Equipment Condition		**General Safety Instructions**
Para	**Condition Description**	Well-ventilated area required.
2-1	Suction hose assembly removed from pump.	

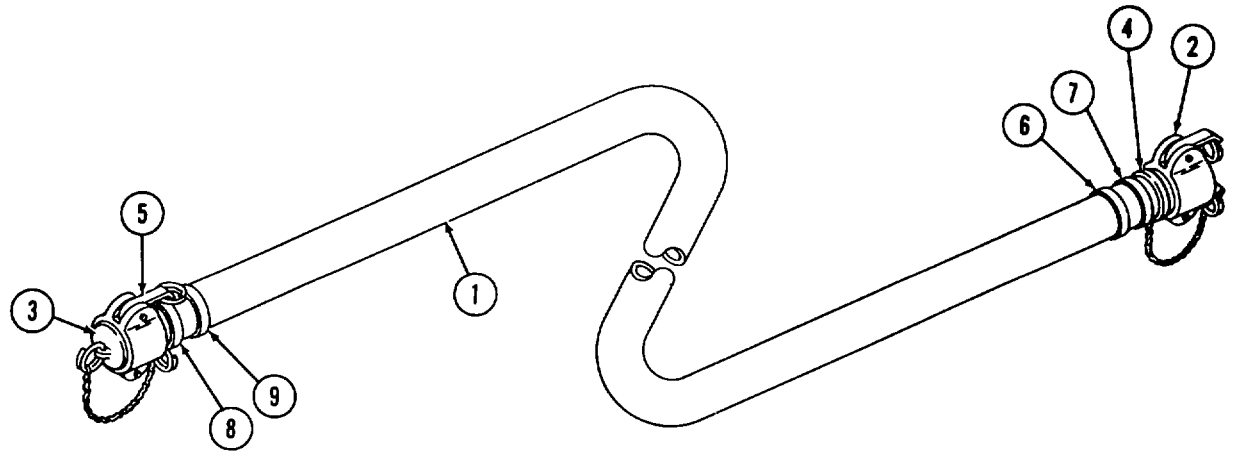

CLEANING/INSPECTION:

WARNING

Death or serious injury could occur if fuel is not handled carefully. Use in a well-ventilated area away from open flame, arcing equipment, ignition sources, heaters, or excessive heat. Always store fuel in proper, marked containers. DO NOT SMOKE.

Death or serious injury could occur if compressed air is directed against the skin. Do not use compressed air for cleaning or drying unless the pressure is/has been reduced to 30 psi (2. 06 bar) or less. When working with compressed air always use chip guards, eye protection, and other personal protective equipment.

1 Flush hose (1) with clean diesel fuel. Wipe exterior of hose with a cloth dampened with diesel fuel.
2 Clean dust caps (2 and 3), adapter (4), coupler (5), and clamps (6, 7, 8, and 9) with clean diesel fuel and dry with compressed air.
3 Inspect hose (1) for cracks, leaks, signs of deterioration, collapsed walls, and obvious damage. If hose is damaged, replace suction hose assembly.
4 Inspect adapter (4), clamps (6, 7, 8, and 9), and coupler (5) for obvious wear or damage. If adapter (4), clamps (6, 7, 8, or 9), or coupler (5) are damaged, replace suction hose assembly.

3-13. REPLACE DISCHARGE HOSE ASSEMBLY

This task covers: Cleaning/Inspection

INITIAL SETUP

Equipment Condition		**General Safety Instructions**
Para	**Condition Description**	Well-ventilated area required.
2-1	Discharge hose assembly removed from pump.	

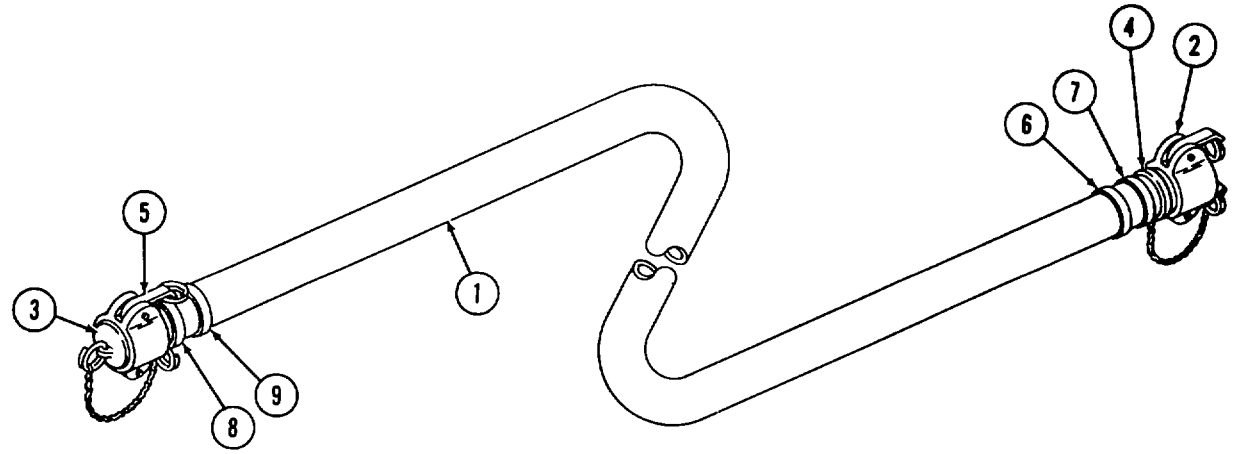

CLEANING/INSPECTION:

WARNING

Death or serious injury could occur if fuel is not handled carefully. Use in a well-ventilated area away from open flame, arcing equipment, ignition sources, heaters, or excessive heat. Always store fuel in proper, marked containers. DO NOT SMOKE.

Death or serious injury could occur if compressed air is directed against the skin. Do not use compressed air for cleaning or drying unless the pressure is/has been reduced to 30 psi (2. 06 bar) or less. When working with compressed air always use chip guards, eye protection, and other personal protective equipment.

1 Flush hose (1) with clean diesel fuel. Wipe exterior of hose with a cloth dampened with diesel fuel.

2 Clean dust caps (2 and 3), adapter (4), coupler (5), and clamps (6, 7, 8, and 9) with clean diesel fuel and dry with compressed air.

3 Inspect hose (1) for cracks, leaks, signs of deterioration, collapsed walls, and obvious damage. If hose is damaged, replace discharge hose assembly.

4 Inspect adapter (4), clamps (6, 7, 8, and 9), and coupler (5) for obvious wear or damage. If adapter (4), clamps (6, 7, 8, or 9), or coupler (5) are damaged, replace discharge hose assembly.

3-14. REPLACE DRUM UNLOADER ASSEMBLY

This task covers: Cleaning/Inspection

INITIAL SETUP

Equipment Condition		**General Safety Instructions**
Para	**Condition Description**	**Well-ventilated area required.**
2-1	Drum unloader assembly removed from storage container.	

CLEANING/INSPECTION:

WARNING

Death or serious injury could occur if fuel is not handled carefully. Use in a well-ventilated area away from open flame, arcing equipment, ignition sources, heaters, or excessive heat. Always store fuel in proper, marked containers. DO NOT SMOKE.

Death or serious injury could occur if compressed air is directed against the skin. Do not use compressed air for cleaning or drying unless the pressure is/has been reduced to 30 psi (2. 06 bar) or less. When working with compressed air always use chip guards, eye protection, and other personal protective equipment.

1 Flush suction unloader stub (1) with clean diesel fuel. Wipe exterior of stub with a cloth dampened with diesel fuel.

2 Clean dustcap (2) and 90-degree elbow (3) with clean diesel fuel and dry with compressed air.

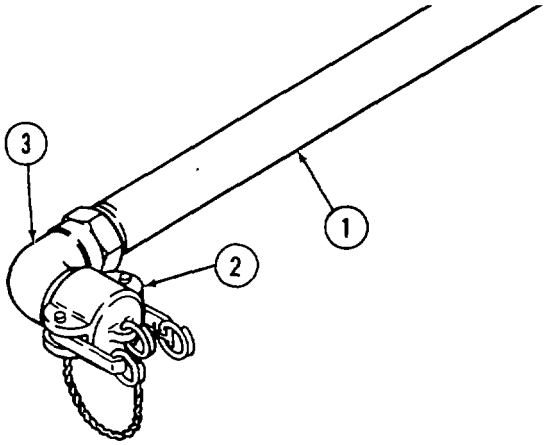

3-14. REPLACE DRUM UNLOADER ASSEMBLY (Continued)

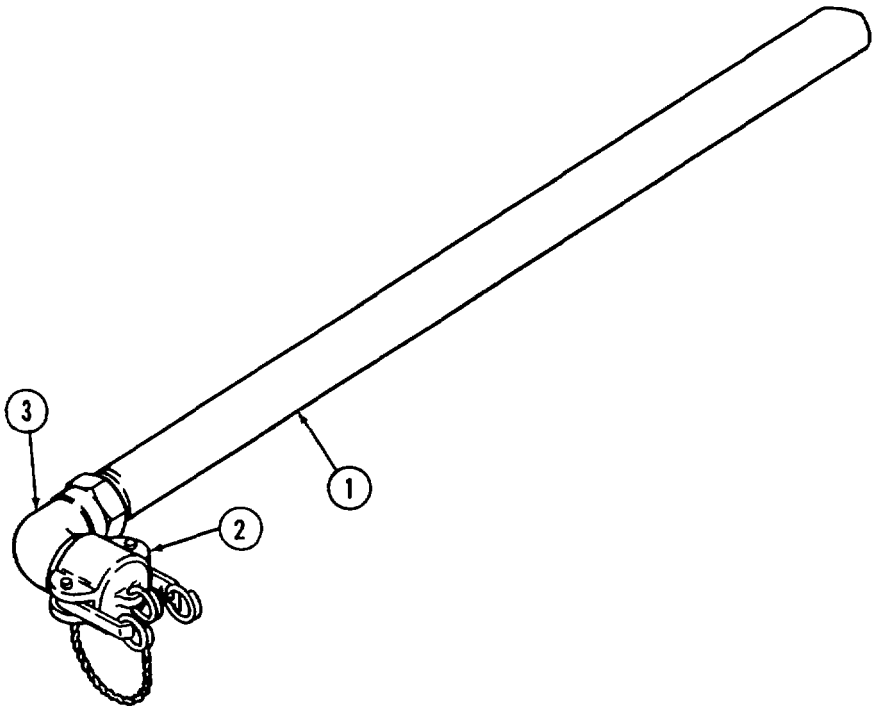

3 Inspect 90-degree elbow (3) and suction unloader stub (1) for cracks, leaks, signs of deterioration, damaged threads, and obvious damage. Replace drum unloader assembly if unloader stub (1) or ,l 90-degree elbow (3) is damaged.

4 Inspect dust cap (2) for obvious wear or damage. Replace unloader assembly if dust cap (2) is damaged.

3-15. REPLACE STORAGE CONTAINER

This task covers: Cleaning/Inspection

INITIAL SETUP

Equipment Condition		**General Safety Instructions**
Para	**Condition Description**	Well-ventilated area required.
2-1	Pumping assembly removed from storage container.	

CLEANING/INSPECTION:

WARNING

Death or serious injury could occur if fuel is not handled carefully. Use in a well-ventilated area away from open flame, arcing equipment, ignition sources, heaters, or excessive heat. Always store fuel in proper, marked containers. DO NOT SMOKE.

Death or serious injury could occur if compressed air is directed against the skin. Do not use compressed air for cleaning or drying unless the pressure is/has been reduced to 30 psi (2. 06 bar) or less. When working with compressed air always use chip guards, eye protection, and other personal protective equipment.

1 Clean all components with clean diesel fuel and dry with compressed air.

3-15. REPLACE STORAGE CONTAINER (Continued)

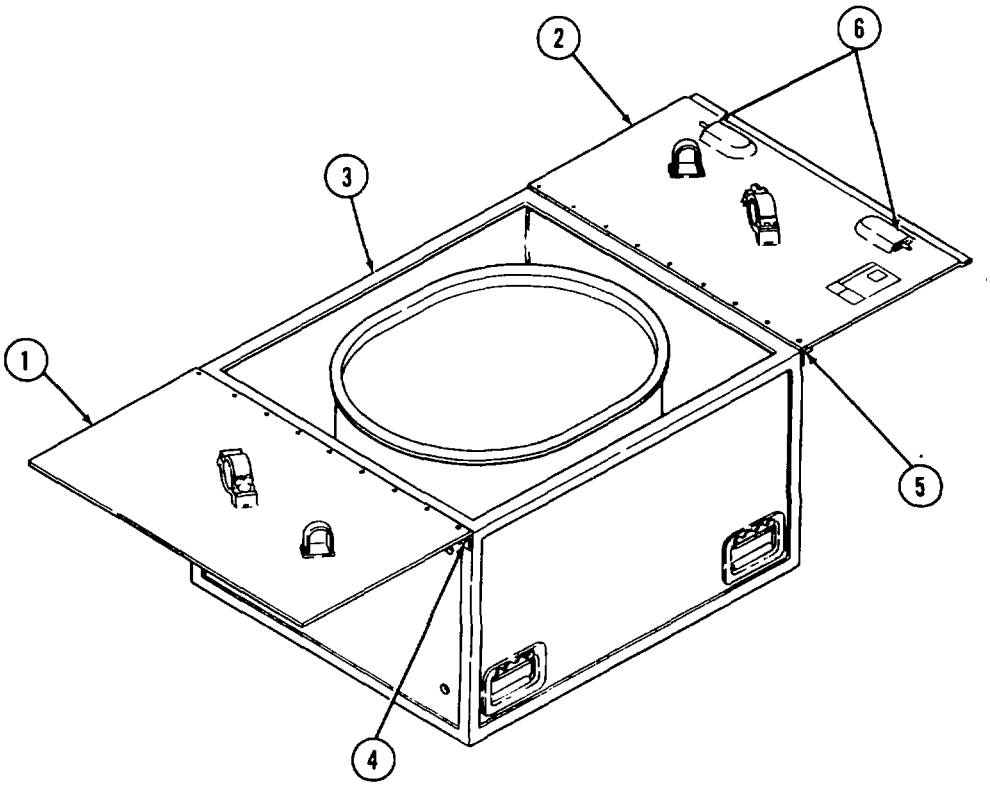

2 Inspect covers (1 and 2) and storage container (3) for cracks, holes, leaks, signs of deterioration, damaged welds, and obvious damage. Replace storage container if damaged.

3 Inspect hinges (4 and 5) and lock bolts (6) for obvious wear or damage. Replace storage container if damaged.

3-16. REPLACE NOZZLE ASSEMBLY

This task covers: Cleaning/Inspection

INITIAL SETUP

Tools

Equipment Condition

Para	Condition Description
2-1	Nozzle assembly removed from storage container.

General Safety Instructions

Well-ventilated area required.

CLEANING/INSPECTION:

WARNING

Death or serious injury could occur if fuel is not handled carefully. Use in a well-ventilated area away from open flame, arcing equipment, ignition sources, heaters, or excessive heat. Always store fuel in proper, marked containers. DO NOT SMOKE.

Death or serious injury could occur if compressed air is directed against the skin. Do not use compressed air for cleaning or drying unless the pressure is/has been reduced to 30 psi (2. 06 bar) or less. When working with compressed air always use chip guards, eye protection, and other personal protective equipment

1 Clean all components with clean diesel fuel and dry with compressed air.

2 Inspect all components for wear, cracks, leaks, signs of deterioration, damaged threads, and obvious damage. Replace nozzle assembly if damaged.

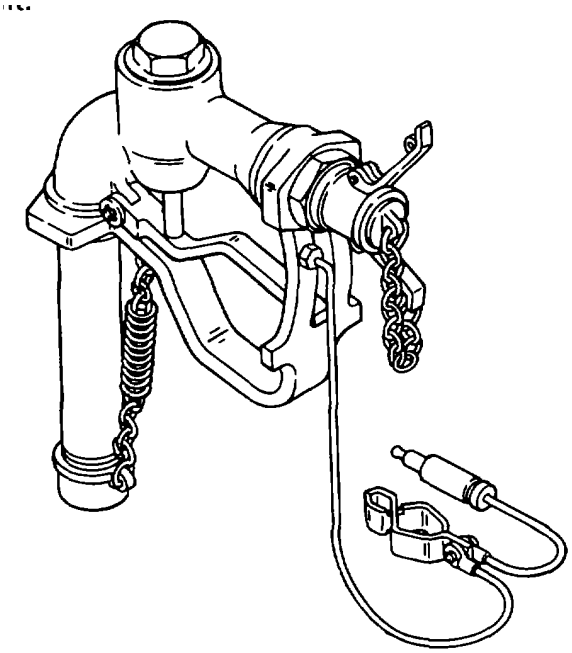

3-17. REPLACE Y-CONNECTORS

This task covers: Cleaning/Inspection

INITIAL SETUP

Materials/Parts

Diesel fuel oil (Item 2, Appendix E)

Equipment Condition

Para	Condition Description
2-1	Y-Connectors removed from pumping assembly

General Safety Instructions

Well-ventilated area required.

CLEANING/INSPECTION:

WARNING

Death or serious injury could occur if fuel is not handled carefully. Use in a well-ventilated area away from open flame, arcing equipment, ignition sources, heaters, or excessive heat. Always store fuel in proper, marked containers. DO NOT SMOKE.

Death or serious injury could occur if compressed air is directed against the skin. Do not use compressed air for cleaning or drying unless the pressure is/has been reduced to 30 psi (2. 06 bar) or less. When working with compressed air always use chip guards, eye protection, and other personal protective equipment.

1 Clean Y-connectors with clean diesel fuel and dry with compressed air.

2 Inspect for cracks, signs of deterioration, and obvious damage. Replace Y-connectors if' damaged.

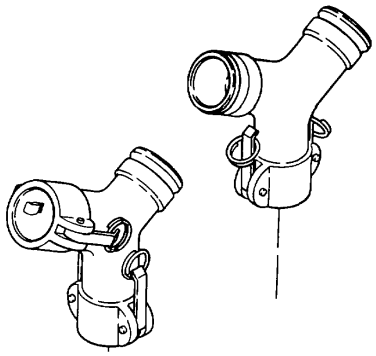

3-18. REPLACE GROUND ROD

This task covers: Cleaning/Inspection

INITIAL SETUP

Materials/Parts

Diesel fuel oil (Item 2, Appendix E)

Equipment Condition

Para	Condition Description
2-1	Ground rod removed from storage container.

General Safety Instructions

Well-ventilated area required.

CLEANING/INSPECTION:

WARNING

Death or serious injury could occur if fuel is not handled carefully. Use in a well-ventilated area away from open flame, arcing equipment, ignition sources, heaters, or excessive heat. Always store fuel in proper, marked containers. DO NOT SMOKE.

Death or serious injury could occur if compressed ail is directed against the skin. Do not use compressed air for cleaning or drying unless the pressure is/has been reduced to 30 psi (2. 06 bar) or less. When working with compressed air always use chip guards, eye protection, and other personal protective equipment.

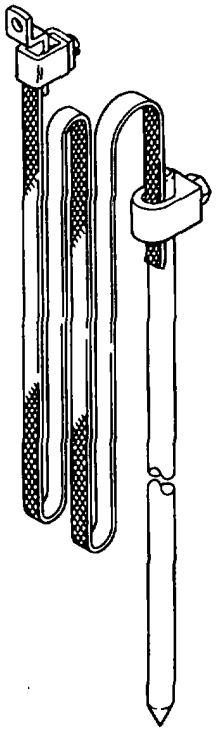

1 Clean all components with clean diesel fuel and dry with compressed air.

2 Inspect for cracks, signs of deterioration, and obvious damage. Replace ground rod if damaged.

3-19. REPLACE/REPAIR CHECK VALVE ASSEMBLY

This task covers: **a. Removal** **b. Cleaning** **c. Inspection** **d. Installation** **e. Installation**

INITIAL SETUP

Tools	Equipment Condition
Tool kit general mechanics automotive	Engine shut down, discharge hose removed, and fuel drained from pump via drain port at bottom of pump assembly.

REMOVAL:

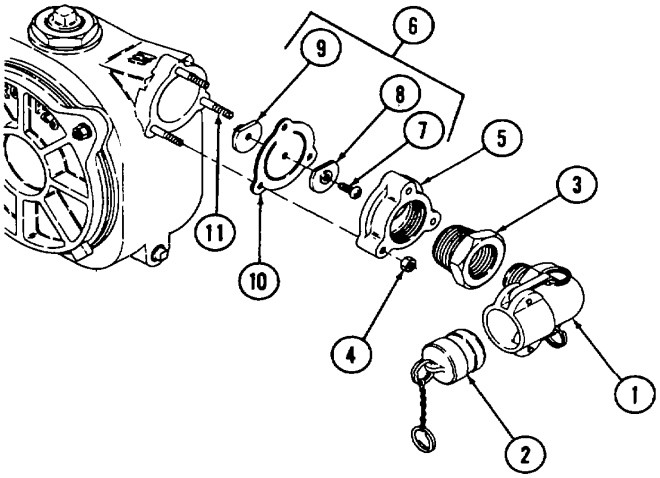

1 Remove female coupling (1) and dust cap (2).

2 Remove reducer bushing (3).

3 Remove three nuts (4).

4 Remove suction (intake) flange (5) and check valve assembly (6).

5 Remove check valve assembly (6) from suction (intake) flange (5).

DISASSEMBLY:

1 Remove screw (7) from check valve assembly (6).

2 Remove small weight (8), large weight (9), and gasket (10).

REPAIR:

1 Inspect female coupling (1), dust cap (2), reducer bushing (3), nuts (4), flange (5), screw (7), small weight (8), large weight (9), and gasket (10) for wear, damage, rust, or corrosion.

2 Replace any worn or damaged parts.

ASSEMBLY:

1 Assemble large weight (9), gasket (10), and small weight (8).

2 Secure assembled parts with screw (7).

INSTALLATION:

1 Install check valve (6) on suction (intake) flange (5).

2 Install check valve (6) and suction (intake) flange (5) on stud (11).

3 Secure with three nuts (4).

4 Install reducer bushing (3).

5 Install female coupling (1) and dust cap (2).

3-20. REPLACE VOLUTE, IMPELLER, WEAR PLATE, SHAFT SEAL, AND ADAPTER SHAFT

This task covers: **a. Removal** **c. Inspection**
b. Cleaning **d. Installation**

INITIAL SETUP

Tools

Tool kit, general mechanics automotive

Shop equipment, automotive maintenance and repair

Materials/Parts

Dry cleaning solvent (Item 9, Appendix E)

Pump repair kit

Equipment Condition

Para	**Equipment Condition**
3-19	Suction (intake) flange and check valve removed from pump case assembly.

General Safety Instructions

Well-ventilated area required during cleaning.

REMOVAL:

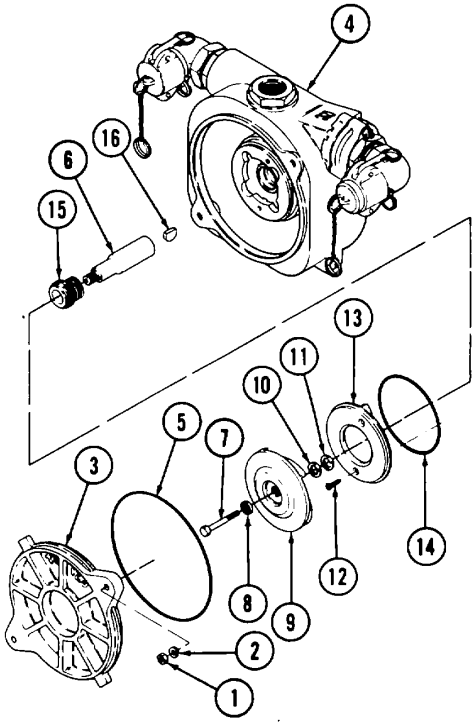

1 Remove nuts (1) and washers (2) securing volute (3) to pump case assembly (4).

2 Remove packing (5) and discard.

3 Prevent adapter shaft (6) from moving and remove screw (7) and lock washer (8).

3-20. REPLACE VOLUTE, IMPELLER, WEAR PLATE, SHAFT SEAL, AND ADAPTER SHAFT (Continued)

4 Unscrew impeller (9) counterclockwise and remove shims (10 and 11).

5 Remove screws (12). Remove wear plate (13) and packing (14). Discard packing.

6 Remove shaft seal (15) from pump case assembly (4). Discard shaft seal.

7 Remove adapter shaft (6) from pump case assembly (4). Remove key (16).

CLEANING:

WARNING

Dry cleaning solvent P-D-680 (safety or Stoddard's Solvent) is potentially dangerous. Avoid repeated and prolonged breathing of vapors and skin contact with the liquid. Do not use near open flame, arcing equipment, or other ignition sources. Always wear eye protection and protective clothing. The flash point of P-D-680 is 100° to 138°F (38° to 59°C).

Death or serious injury could occur if compressed air is directed against the skin. Do not use compressed air for cleaning or drying unless the pressure is/has been reduced to 30 psi (2. 06 bar) or less. When working with compressed air always use chip guards, eye protection, and other personal protective equipment.

Clean volute (3), adapter shaft (6), impeller (9), and wear plate (13) with P-D-680 dry cleaning solvent and dry with compressed air.

INSPECTION:

1 Inspect volute (3), impeller (9), and wear plate (13) for excessive wear, rust, corrosion, or other damage. Replace any worn or damaged parts.

2 Inspect adapter shaft (6) for excessive wear, rust, corrosion, or other damage. Replace shaft if damaged in any way.

3-20. REPLACE VOLUTE, IMPELLER, WEAR PLATE, SHAFT SEAL, AND ADAPTER SHAFT (Continued)

INSTALLATION:

1 Install new shaft seal (15) on adapter shaft (6). Install key (16).

2. Install adapter shaft with shaft seal into pump case assembly (4).

3. Install new packing (14) in pump case assembly (4).

4. Install wear plate (13) and screws (12). Tighten screws securely.

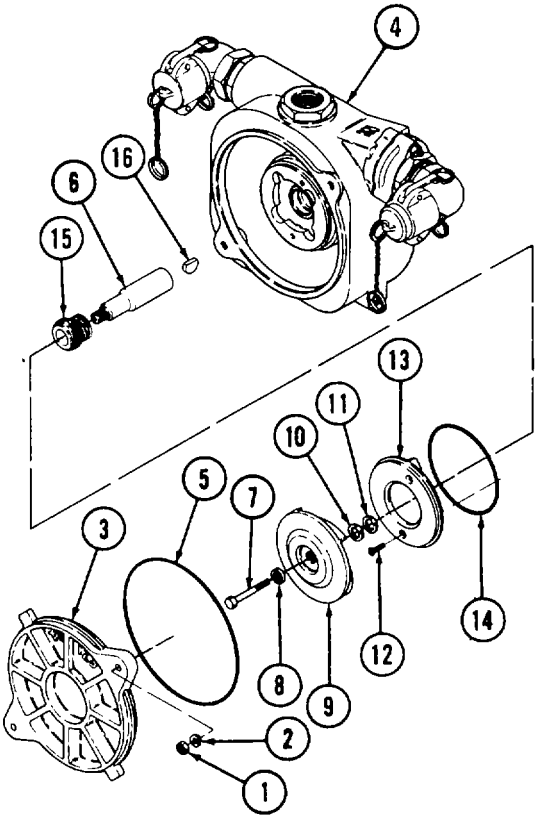

NOTE

If the same impeller and wear plate are reassembled and no clearance change is indicated, make sure that the same thickness of shims is used.

5 If a new impeller and/or wear plate is to be installed, or if the impeller clearance is to be changed, determine the shim thickness required to obtain a clearance of 0. 010 to 0. 020 inch (0. 254 to 0. 508 mm) between the impeller and wear plate as follows:

a. Screw impeller (9) clockwise on shaft (6) without shims. Be sure that it is seated firmly against the shaft shoulder. Secure impeller with lock washer (8) and screw (7).

b. Measure from the face of the impeller (9) to the face of the wear plate (13) using a feeler gage.

c. Select shims (10 and 11) to equal the dimension obtained less 0.010 to 0.020 inch (0.254 to 0.508 mm) for clearance.

6 Install impeller (9), lock washer (8), and screw (7). Tighten screw securely.

7 Install new packing (5) on. volute (3). Install volute on pump case assembly (4).

8 Install washers (2) and nuts (1). Tighten nuts securely.

3-21. REPLACE PUMP CASE ASSEMBLY

This task covers: a. Removal b. Cleaning c. Inspection d. Installation

Tools

Shop equipment, automotive maintenance and repair common No. 1

Materials/Parts

Dry cleaning solvent (Item9, Appendix E)

Equipment Condition

Para	Equipment Condition
3-20	Volute, impeller, wear plate, shaft seal, and adapter shaft removal.

General Safety Instructions

Well-ventilated area required during cleaning.

REMOVAL:

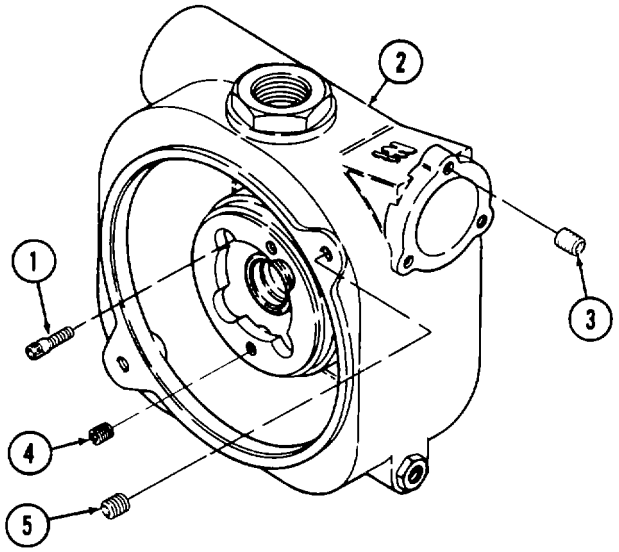

Remove screws (1) securing pump case assembly (2).

3-21. REPLACE PUMP CASE ASSEMBLY (Continued)

CLEANING:

WARNING

Dry cleaning solvent P-D-680 (safety or Stoddard's Solvent) is potentially dangerous. Avoid repeated and prolonged breathing of vapors and skin contact with the liquid. Do not use near open flame, arcing equipment, or other ignition sources. Always wear eye protection and protective clothing. The flash point of P-D-680 is 100° to 138°F (38° to 59°C).

Death or serious injury could occur if compressed air is directed against the skin. Do not use compressed air for cleaning or drying unless the pressure is/has been reduced to 30 psi (2. 06 bar) or less. When working with compressed air always use chip guards, eye protection, and other personal protective equipment.

Clean with solvent and dry with compressed air.

INSPECTION:

1. Inspect pump case assembly (2) for rust, corrosion, cracks, or other damage. Replace pump case assembly if damaged.

2. Inspect threaded holes for damage to threaded inserts (3, 4, and 5). If threads are damaged, notify intermediate maintenance.

INSTALLATION:

Install screws with inserts (1) in pump case assembly (2). Tighten evenly in an alternating pattern. Torque to 32 to 35 foot-pounds (4.43 to 4.84 mkg).

3-22. REPLACE AIR FILTER ASSEMBLY

This task covers:	a. Removal	c. Repair	e. Installation
	b. Disassembly	d. Assembly	f. Operational Check

INITIAL SETUP

Tools	General Safety Instructions
Tool kit, general mechanics automotive	Unit must be cool. Well-ventilated area required during operational check.

REMOVAL:

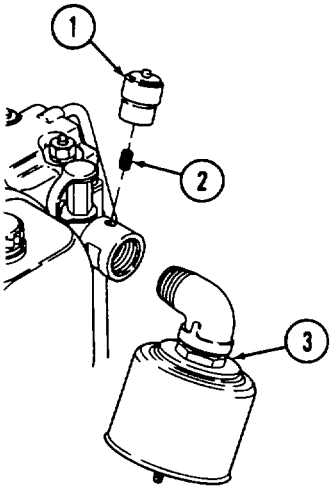

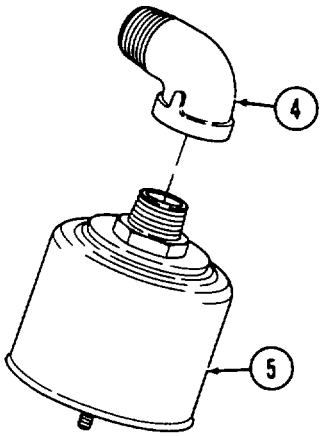

1 Unscrew restriction indicator (1) from nipple (2).

2 Unscrew air cleaner assembly (3) from engine.

3-22. REPLACE AIR FILTER ASSEMBLY (Continued)

DISASSEMBLY:

1 Unscrew street elbow (4) from air cleaner (5).

2 Remove wing nut (6) and sealing washer (7). Remove top (8) and air filter (9).

3 Separate base connector (10), gasket (11), and rain hood (12).

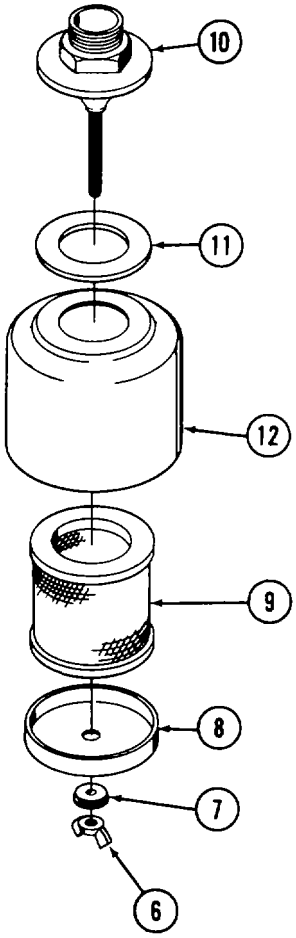

REPAIR:

Replace all damaged parts.

ASSEMBLY:

1 Place gasket (11) on rain hood (12). Insert base connector (10) into rain hood.

2 Insert air filter (9) into rain hood. Place top (8) over air filter.

3 Install sealing washer (7) and secure with wing nut (6).

INSTALLATION:

1 Install street elbow (4) on air cleaner (5).

2 Install restriction indicator (1).

3-22. REPLACE AIR FILTER ASSEMBLY (Continued)

OPERATIONAL CHECK:

WARNING

Muffler and related components get hot enough during pump operation to cause severe burns. Avoid contact with muffler and related components during checks described in this text.

Exposure to exhaust gases produces symptoms of headache, dizziness, loss of muscular control, drowsiness, or coma. Brain damage or death can result from severe exposure.

Fumes from engines become concentrated with poor ventilation. Operate engine in a ventilated area only.

While running engine, be alert for fumes. Keep area ventilated. If someone is overcome, expose to fresh air; keep warm and still; give artificial respiration if needed. Seek medical attention. Administer oxygen, if available.

GOOD VENTILATION IS THE BEST DEFENSE AGAINST EXHAUST POISONING.

1 Start engine and observe air cleaner assembly and restriction indicator for looseness, rattles, or leaks. Tighten.

2 If red band is visible in window of restriction indicator, shut down engine.

3 Recheck installation and air filter. Reset indicator.

4 Restart engine. If red band is still visible, replace indicator.

5 Restart engine and check indicator. If indicator still shows red band, refer to direct support.

3-23. REPAIR/REPLACE 3-WAY VALVE

This task covers: **a. Removal** **b. Repair** **c. Insulation**

INITIAL SETUP

Tools
Shop equipment, automotive maintenance and repair, common no.1

Materials/Parts
Diesel fuel oil (Item 2, Appendix E)
Lubricating oil (Item 6, Appendix E)

General Safety Instructions

Engine cool.

Well-ventilated area required.

REMOVAL:

WARNING

Death or serious injury could occur if fuel is not handled carefully. Use in a well-ventilated area away from open flame, arcing equipment, ignition sources, heaters, or excessive heat. Always store fuel in proper, marked containers. DO NOT SMOKE.

1 Remove fuel hoses.

2 Remove 90-degree elbows (1 and 2).

3 Remove screw and handle (3).

4 Remove cap screws (4), hex nuts (5), and lockwashers (6).

5 Remove fuel line plate (7) and 3-way valve (1) from bracket (9).

6 Remove compression elbow (10).

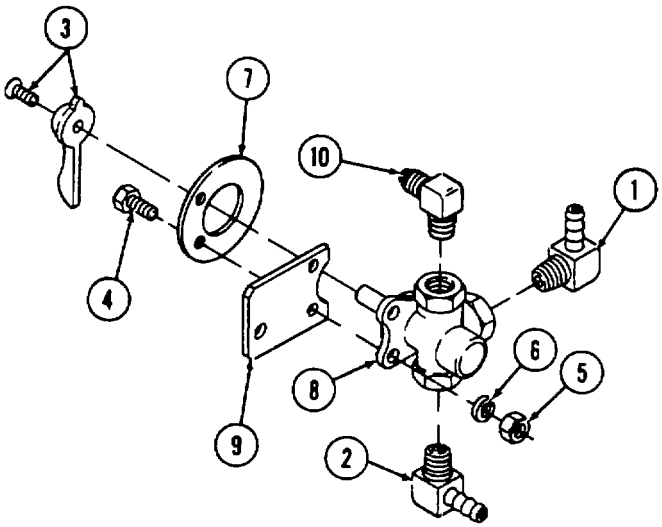

3-23. REPAIR/REPLACE 3-WAY VALVE (Continued)

REPAIR:

1 Inspect all components for damage or damaged threads. Replace components as necessary.

2 Inspect for rust, corrosion, or for frozen or sticking valve. Lubricate frozen or sticking valve with lubricating oil.

3 If valve components are severely damaged or valve remains frozen, replace valve.

INSTALLATION:

1 Install compression elbow (10).

2 Position 3-way valve (8) and fuel line plate (7) on bracket (9).

3 Install cap screws (4), lockwashers (6), and hex nuts (5). Tighten nuts securely.

4 Install handle and screw (3). Tighten screw.

5 Install 90-degree elbows (1 and 2) in valve and tighten securely.

6 Install hoses.

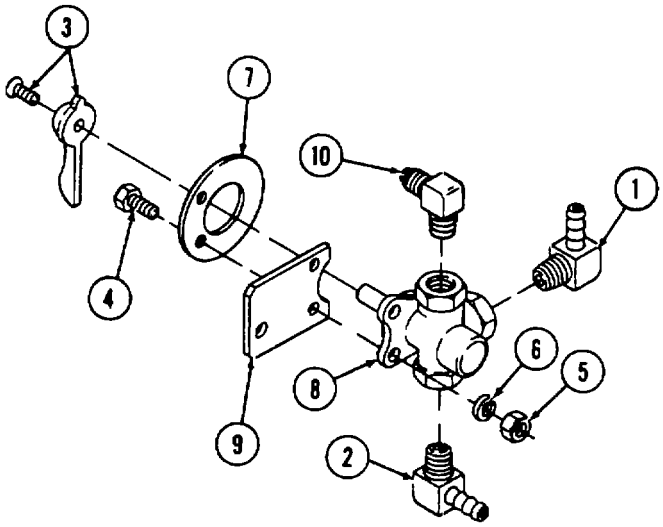

3-24. REPLACE COLD START ASSIST

This task covers: a. Removal b. Cleaning/inspection c. Installation

INITIAL SETUP

Tools

Tool kit, general mechanics automotive

Materials/Parts

Dry cleaning solvent (Item 9, Appendix E)
Grease (Item 3, Appendix E)

Equipment Condition

Engine shut down and cool.

General Safety Instructions

Well-ventilated area required.

REMOVAL:

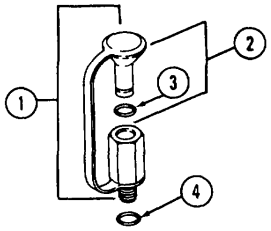

1 Remove cold start assist (1) and closing plug (2) from engine.

2 Discard joint (3) and performed packing (4).

CLEANING:

WARNING

Dry cleaning solvent P-D-680 (safety or Stoddard's Solvent) is potentially dangerous. Avoid repeated and prolonged breathing of vapors and skin contact with the liquid. Do not use near open flame, arcing equipment, or other ignition sources. Always wear eye protection and protective clothing. The flash point of P-D-680 is 100° to 138°F (38° to 59°C).

Death or serious injury could occur if compressed air is directed against the skin. Do not use compressed air for cleaning or drying unless the pressure is/has been reduced to 30 psi (2. 06 bar) or less. When working with compressed air, always use chip guards, eye protection, and other personal protective equipment.

1 Clean cold start assist (1) and closing plug (2) with dry cleaning solvent and dry with low-pressure compressed air.
2 Inspect cold start assist (1) and closing plug (2) for rust, corrosion, or other damage. Replace damaged components.

INSTALLATION:

1 Lubricate performed packing (4) with grease and install into performed packing groove of closing plug (2).

2 Install cold start assist (1) by sliding the looped end of closing plug (2) and joint (3) over cold start assist and screwing it into engine.

3-25. REPLACE FUEL FILTER, FUEL PRESSURE LINE, HOSES, AND FITTINGS

This task covers: a. Removal b. Cleaning/inspection c. Installation

INITIAL SETUP

Tools

Tool kit, general mechanics automotive

Materials/Parts

Diesel fuel oil (Item 2, Appendix E)

General Safety Instructions

Unit must be cool. Fuel tank must be empty.

Well-ventilated area required.

REMOVAL:

WARNING

Death or serious injury could occur if fuel is not handled carefully. Use in a well-ventilated area away from open flame, arcing equipment, ignition sources, heaters, or excessive heat. Engines must be turned off and cool before refueling. Use proper refueling procedures and equipment to avoid spillage. Do not run engine near open fuel containers. Always store fuel in proper, marked containers. DO NOT SMOKE.

CAUTION

As each fuel hose, connection, or connection port is removed, be sure to tape over or plug each open connection to prevent contaminants from entering fuel system.

1 Remove screw (1), spacers (2), and clamp (3).

2 Remove fuel filter (4) from fuel hose (5) (lift pump to fuel filter).

3 Remove fuel filter (4) from fuel hose (6) (fuel filter to injection pump).

4 Discard fuel filter (4) and tape or plug fuel hoses (5 and 6).

5 Remove fuel hose (5) from lift pump discharge fitting.

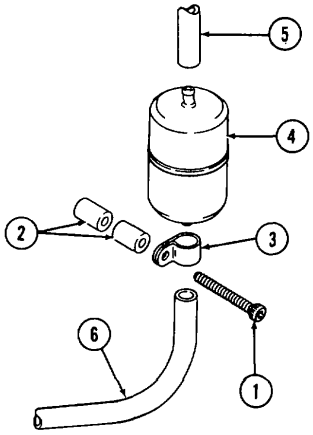

3-25. REPLACE FUEL FILTER, FUEL PRESSURE LINE, HOSES, AND FITTINGS (Continued)

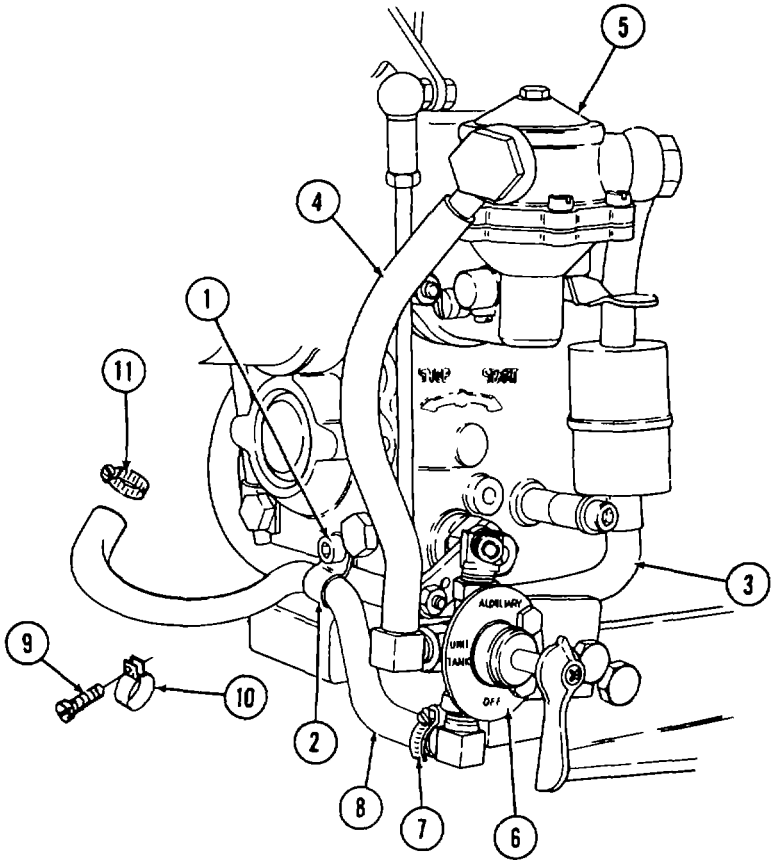

6 Remove screw (1) and clamps (2).

7 Remove fuel hose (3) from injection pump.

8 Remove fuel hose (4) from lift pump (5) and 3-way valve (6).

9 Remove hose clamp (7) and fuel hose (8) from 3-way valve (6).

10 Remove screw (9) and clamp (10).

11 Remove hose clamp (11) and fuel hose (8) from fuel tank.

3-25. REPLACE FUEL FILTER, FUEL PRESSURE LINE, HOSES, AND FITTINGS (Continued)

12 Remove fuel hose (1) (injection pump to double ring piece) from double ring piece (2). Tape or plug injection pump fitting.

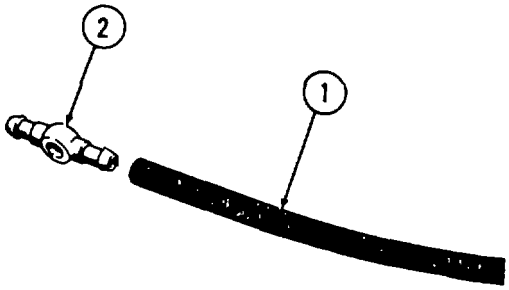

13 Remove fuel hose (1) (double ring piece to injector) from double ring piece (2). Tape or plug injector fitting.

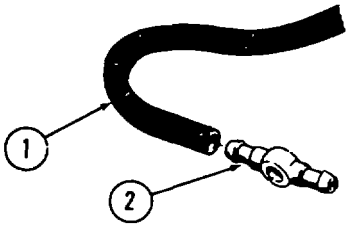

14 Remove fuel pressure line (1) from injector (2) and injection pump (3). Tape or plug fittings.

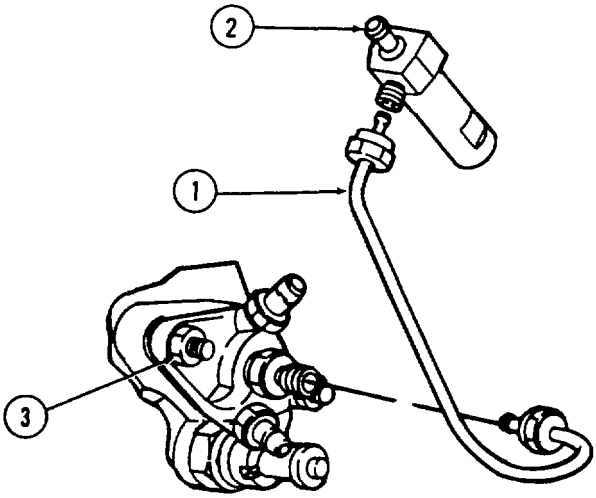

3-25. REPLACE FUEL FILTER, FUEL PRESSURE LINE, HOSES, AND FITTINGS (Continued)

15 Remove non-return valve (1) and gasket (2). Discard gasket (2).

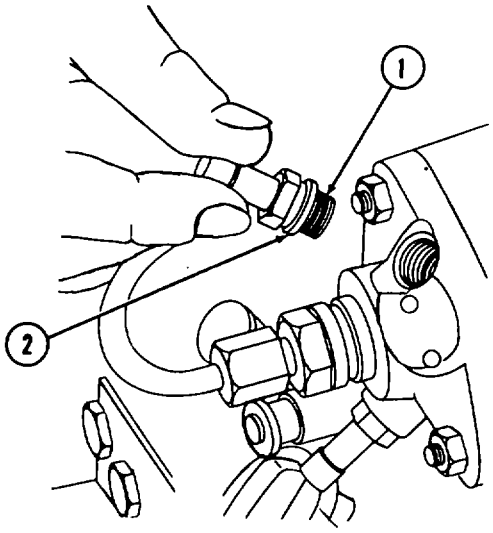

INSPECTION:

WARNING

Death or serious injury could occur if fuel is not handled carefully. Use in a well-ventilated area away from open flame, arcing equipment, ignition sources, heaters, or excessive heat. Always store fuel in proper, marked containers. DO NOT SMOKE.

1 Inspect all fuel hoses for cracks, abrasions, or restrictions. Replace as necessary.

2 Inspect fuel pressure line for damage, rust, corrosion, or restrictions. Replace if necessary.

3 Check non-return valve by shaking for free movement of internal valve ball. If necessary, clean with fuel. If internal valve ball does not have free movement, replace non-return valve.

3-25. REPLACE FUEL FILTER, FUEL PRESSURE LINE, HOSES, AND FITTINGS (Continued)

INSTALLATION:

WARNING

Death or serious injury could occur if fuel is not handled carefully. Use in a well-ventilated area away from open flame, arcing equipment, ignition sources, heaters, or excessive heat. Always store fuel in proper, marked containers. DO NOT SMOKE.

1 Install fuel pressure line (1) on injection pump (3) and injector (2).

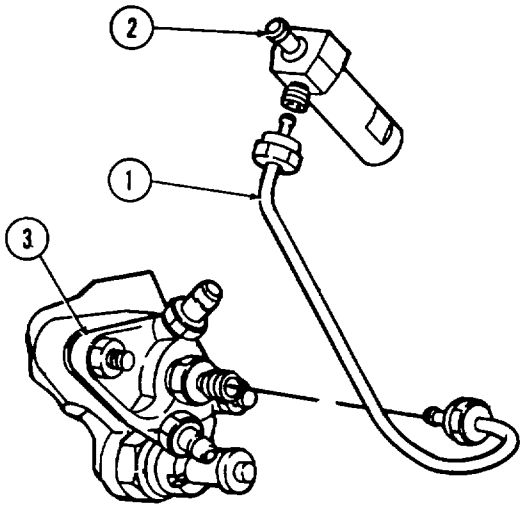

2 Install fuel hose (1) (double ring piece to injector) on double ring piece (2).

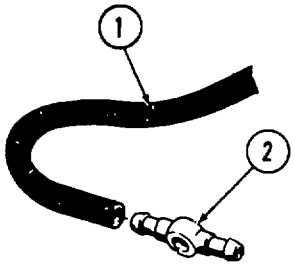

3 Install fuel hose (1) (injection pump to double ring piece) on double ring piece (2).

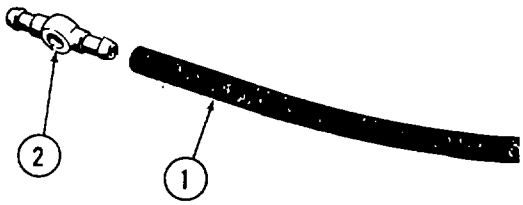

3-25. REPLACE FUEL FILTER, FUEL PRESSURE LINE, HOSES, AND FITTINGS (Continued)

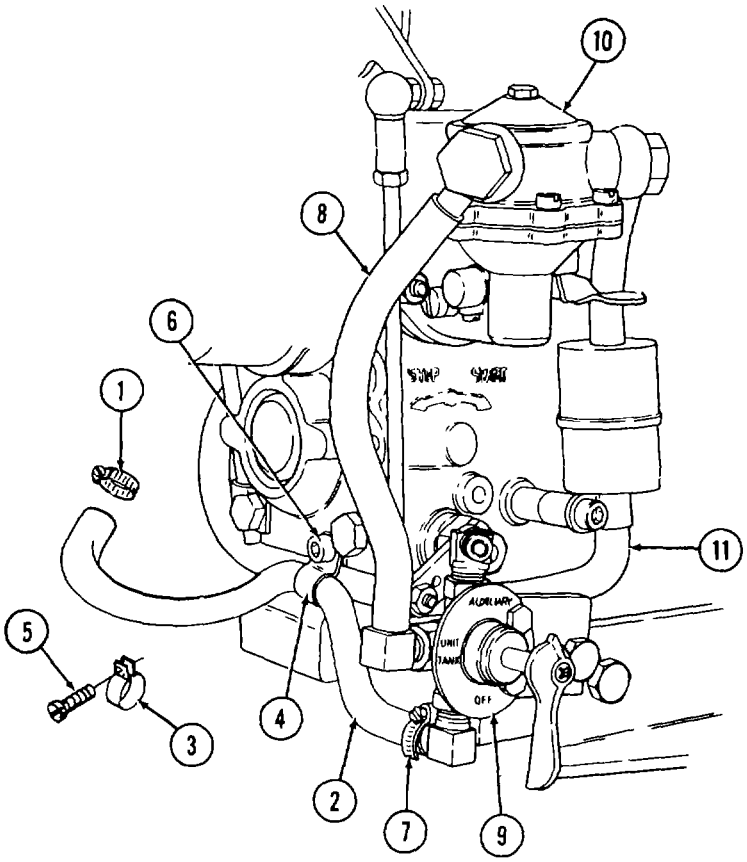

4 Install clamp (1) on fuel hose (2) (fuel tank to 3-way valve).

5 Install clamps (3 and 4) with screws (5 and 6).

6 Install hose clamp (7) on fuel hose (2) (fuel tank to 3-way valve).

7 Install fuel hose (8) from 3-way valve (9) to lift pump (10).

8 Install fuel hose (11) on injection pump.

3-25. REPLACE FUEL FILTER, FUEL PRESSURE LINE, HOSES, AND FITTINGS (Continued)

9 Install fuel hose (1) (lift pump to fuel filter) and fuel hose (2) (fuel filter to injection pump) on a new fuel filter (3). Secure hose (2) with spacers (6), clamp (5), and screw (4).

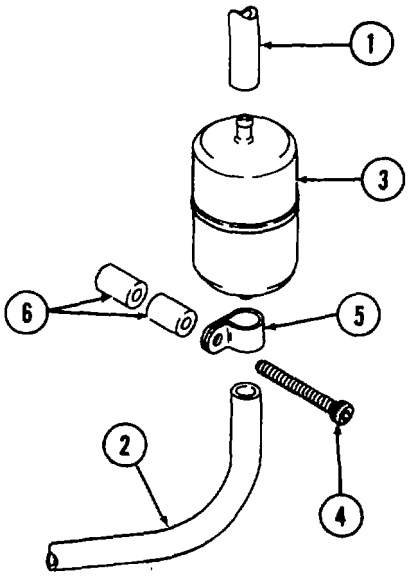

10 Install new gasket (2) and non-return vent valve (1).

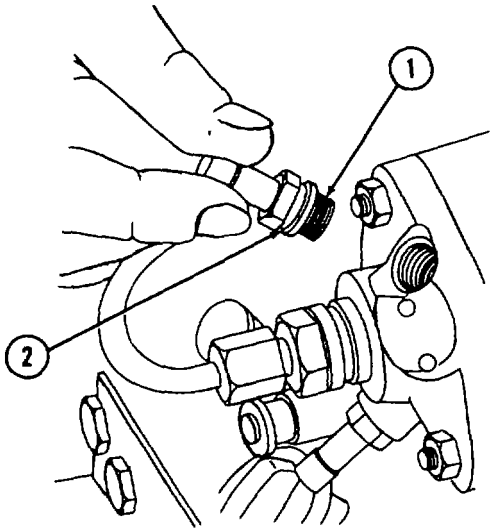

3-26. REPLACE FUEL LIFT PUMP

This task covers:

a. Removal
b. Installation
c. Operational Check

INITIAL SETUP

Tools

Tool kit, general mechanics automotive

General Safety Instructions

Well-ventilated area required.

Equipment Condition

Para	Condition Description
3-25	Fuel hoses removed from fuel lift pump.

REMOVAL:

WARNING

Death or serious injury could occur if fuel is not handled carefully. Use in a well-ventilated area away from open flame, arcing equipment, ignition sources, heaters, or excessive heat. Always store fuel in proper, marked containers. DO NOT SMOKE.

1 Remove two hex nuts (1).

2 Remove fuel lift pump (2) and gasket (3). Discard gasket.

3 Remove inlet and outlet ring pieces (5).

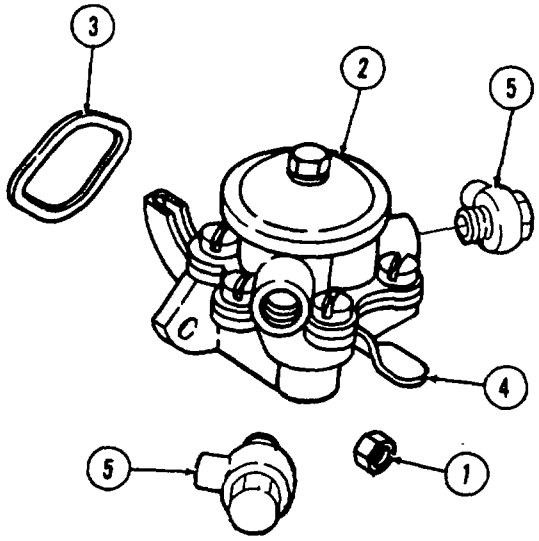

3-26. REPLACE FUEL LIFT PUMP (Continued)

INSTALLATION:

WARNING

Death or serious injury could occur if fuel is not handled carefully. Use in a well-ventilated area away from open flame, arcing equipment, ignition sources, heaters, or excessive heat. Always store fuel in proper, marked containers. DO NOT SMOKE.

1 Install new gasket (3) and fuel lift pump (2).

2 Install two hex nuts (1).

3 Install inlet and outlet ring pieces (5).

OPERATIONAL CHECK:

1 Check that fuel lift pump is operational by operating primer lever (4).

NOTE

The fuel lift pump is cam driven. If high point of camshaft cam is in contact with fuel lift pump cam lever, fuel system cannot be primed using fuel lift pump.

2 Engage crank handle in gear housing and rotate clockwise to change camshaft position.

3 Operate primer lever (4) on fuel lift pump and check for pumping action. If pumping action is not felt, continue to rotate hand crank until cam position allows hand priming.

3-27. REPLACE FUEL TANK

This task covers:

a. Removal
b. Installation

INITIAL SETUP

Tools	**General Safety Instructions**
Tool kit, general mechanics automotive	Well-ventilated area required.

Equipment Condition

Para	**Condition Description**
3-25	Fuel hoses removed from fuel tank.

REMOVAL:

WARNING

Death or serious injury could occur if fuel is not handled carefully. Use in a well-ventilated area away from open flame, arcing equipment, ignition sources, heaters, or excessive heat. Always store fuel in proper, marked containers. DO NOT SMOKE.

1 Remove two Allen screws (1), two Allen screws (2), four spacers (3), and two tube spacers (4).

2 Remove fuel tank (5) from engine.

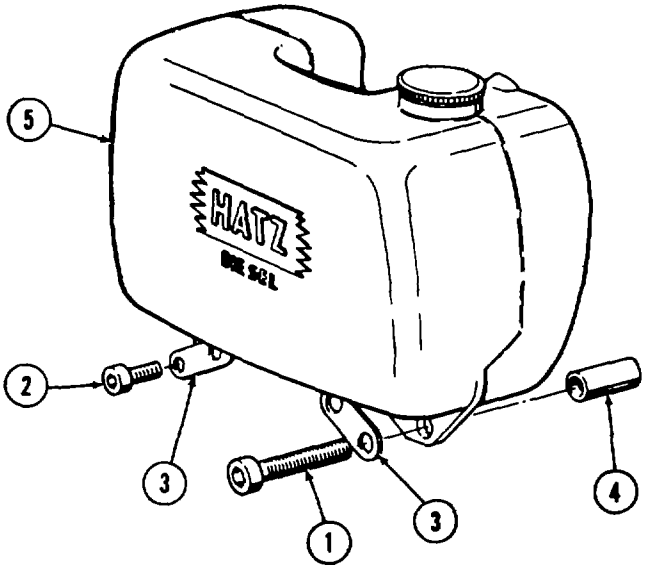

3-27. REPLACE FUEL TANK (Continued)

INSTALLATION:

WARNING

Death or serious injury could occur if fuel is not handled carefully. Use in a well-ventilated area away from open flame, arcing equipment, ignition sources, heaters, or excessive heat. Always store fuel in proper, marked containers. DO NOT SMOKE.

1 Position fuel tank (5) on engine.

2 Install two tube spacers (4) between fuel tank (5) and engine. Install four spacers (3), two Allen screws (2), and two Allen screws (1). Tighten screws securely.

3-28. REPLACE MUFFLER

This task covers:

a. Removal
c. Installation
c. Operational Check

INITIAL SETUP

Tools

Tool kit, general mechanics automotive

General Safety Instructions

Unit must be cool.

REMOVAL:

WARNING

Handling a hot muffler can cause severe burns. Allow unit to cool before handling.

1 Remove two screws (1) and washers (2).

2 Remove heat shield (3).

3 Remove three screws (4) and washers (5).

4 Remove protective screen (6).

5 Remove two nuts (7).

6 Remove muffler (8) and gasket (9). Discard gasket (9).

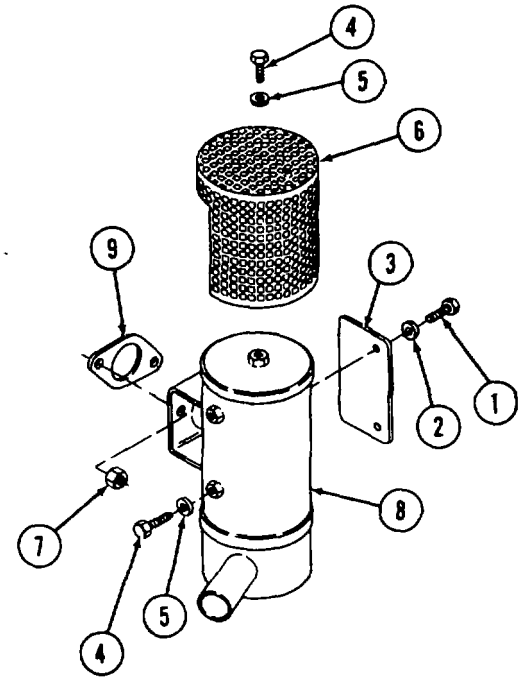

INSPECTION:

Inspect screws, nuts, washers, heat shield, protective screen, and muffler 'for rust, corrosion, or other damage. Replace if necessary.

INSTALLATION:

1 Install new gasket (9) and muffler (8).

2 Install two nuts (7). Tighten nuts (7) securely.

3 Install protective screen (6).

3-28. REPLACE MUFFLER (Continued)

4 Install three washers (5) and screws (4).

5 Install heat shield (3).

6 Install two washers (2) and screws (1).

OPERATIONAL CHECK:

WARNING

Touching exhaust system during test can cause severe burns.

Exposure to exhaust gases produces symptoms of headache, dizziness, loss of muscular control, drowsiness, or coma. Brain damage or death can result from severe exposure. Fumes from engines become concentrated with poor ventilation. Operate engine in a ventilated area only.

While running engine, be alert for fumes. Keep area ventilated. If someone is overcome, expose to fresh air; keep warm and still; give artificial respiration if needed. Seek medical attention. Administer oxygen, if available. GOOD VENTILATION IS THE BEST DEFENSE AGAINST EXHAUST POISONING.

Start engine and observe muffler (8) for leaks and/or rattles. Tighten screws (1 and 4) and nuts (7) as necessary to prevent rattles. If muffler leaks, replace it.

3-29. REPLACE/ADJUST THROTTLE CONTROL

This task covers:

a. Removal **b. Adjustments**
b. Installation

INITIAL SETUP

Tools	Equipment Condition
Tool kit, general mechanics automotive	Engine shut down.

REMOVAL:

1 Remove nut (1), disc (2), and nut (3). Remove lever (4).

2 Loosen nuts (5 and 6). Unscrew angular joint (7) from adjusting screw (10).

3 Remove nut (8). Unscrew angular joint (9) from adjusting screw (10).

4 Remove nut (11), disc (12), and spring washer (13).

5 Remove hand lever (14), lever (15), and screw (16).

6 Remove two screws (17), two discs (18), two nuts (19), and two fixing flaps (20).

7 Remove two screws (21). Remove console (22) and two discs (23).

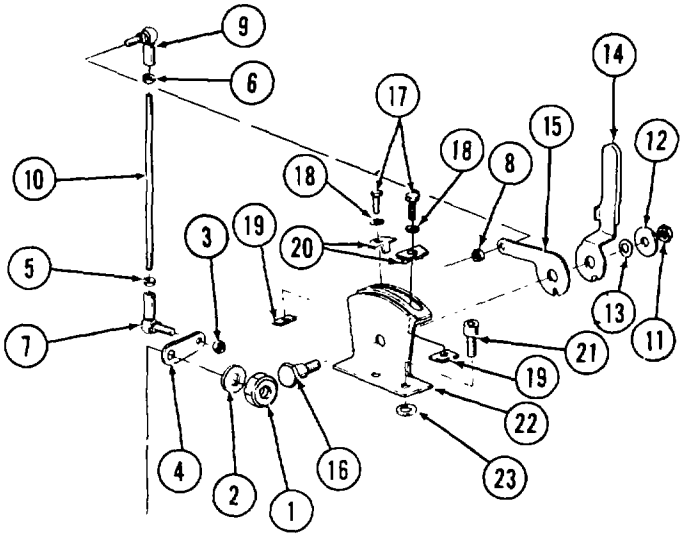

INSTALLATION:

1 Install two discs (23) and console (22).

2 Install two screws (21). Tighten securely.

3 Install two screws (17), two discs (18), two nuts (19), and two fixing flaps (20).

4 Install screw (16) into console (22).

5 Install lever (15) on screw (16).

6 Install hand lever (14) on screw (16) and engage tang on hand lever (14) with notch on lever (15).

3-29. REPLACE/ADJUST THROTTLE CONTROL (Continued)

7 Install washer (13), disc (12), and nut (11). Tighten nut (11) securely.

8 Install nuts (5 and 6), if they were removed from the adjusting screw (10).

9 Install angular joints (7 and 9) on adjusting screw (10).

10 Install angular joint (9) on lever (15). Secure with nut (8).

11 Install angular joint (7) on lever (4). Secure with nut (3).

12 Tighten nuts (5 and 6).

13 Install lever (4) on engine. Secure with disc (2) and nut (1).

ADJUSTMENTS:

1 IDLE ADJUSTMENT. With engine running, loosen screw (17) and slide fixing flap (20) toward fuel lift pump side of engine. Move hand lever (14) to desired idle speed. Slide fixing flap (20) against hand lever (14) and tighten screw (17).

2 TOP SPEED ADJUSTMENT. With engine running, loosen second screw (17) located closest to injection pump. Slide second fixing flap (20) toward injection pump side of engine. Move hand lever (14) to engine top speed. Slide fixing flap (20) against hand lever (14) and tighten screw (17).

3 If idle or top speed of engine cannot be obtained, loosen nuts (5 and 6) and turn adjusting screw to increase or decrease travel of hand lever (14). Tighten nuts (5 and 6) after adjusting.

3-30. ADJUST CYLINDER HEAD AND VALVE ASSEMBLY

This task covers:

Adjustments

INITIAL SETUP

Tools

Tool kit, general mechanics automotive
Torque wrench
Torque wrench
612 088 00
Allen socket, 8 mm
612 095 00
Box wrench, 10 mm
618 306 00

Equipment Condition

Engine shut down and cool.

General Safety Instructions

Well-ventilated area required.

ADJUSTMENT:

1 Remove screw (1) and pipe clip (2).

2 Remove two nuts (3) and two spring washers (4).

3 Lift cylinder head cover (5) from cylinder head.

4 Remove and discard gasket (6).

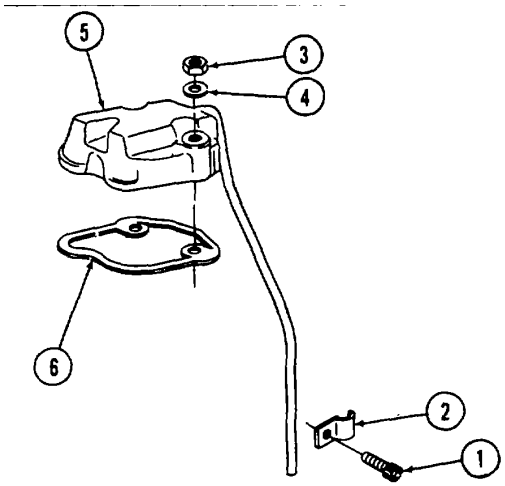

5 Adjust tappet clearance and decompression mechanism.

a. Put decompression lever (1) in position 0.

b. Crank engine clockwise when viewed from throttle control lever until compression resistance can be felt.

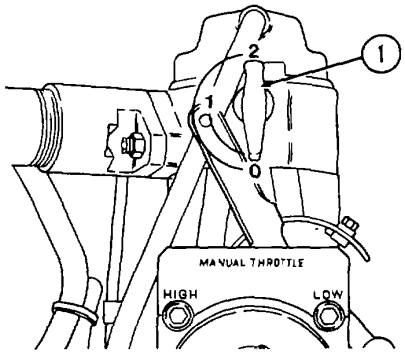

3-30. ADJUST CYLINDER HEAD AND VALVE ASSEMBLY (Continued)

c. Check clearance between rocker and valve stem with a feeler gage. Tappet clearance cold should be 0. 004 inch (0. 10 mm). To correct clearance loosen nut (2).

d. Adjust screw (3) with screwdriver until feeler gage can be pulled between rocker and valve stem with very slight resistance after nut (2) has been tightened.

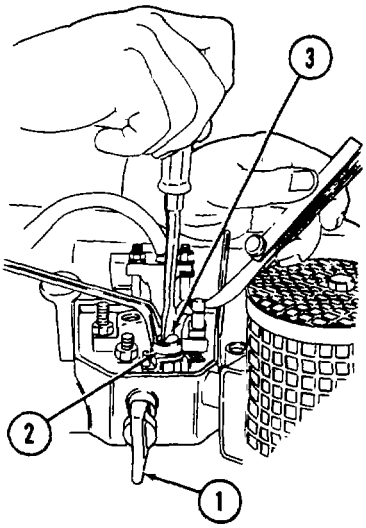

6 The adjustment of decompression adjustment screw is required if the engine does not decompress when the decompression lever is in position 1.

a. Crank engine in same direction as for adjusting tappet clearance (see step 5b).

b. Put decompression lever (1) in position 1.

c. Loosen nut (2) using special 10 mm box wrench and turn adjustment screw (3) clockwise until rocker touches valve stem.

d. Turn adjustment screw (3) another half turn and secure by tightening nut (2).

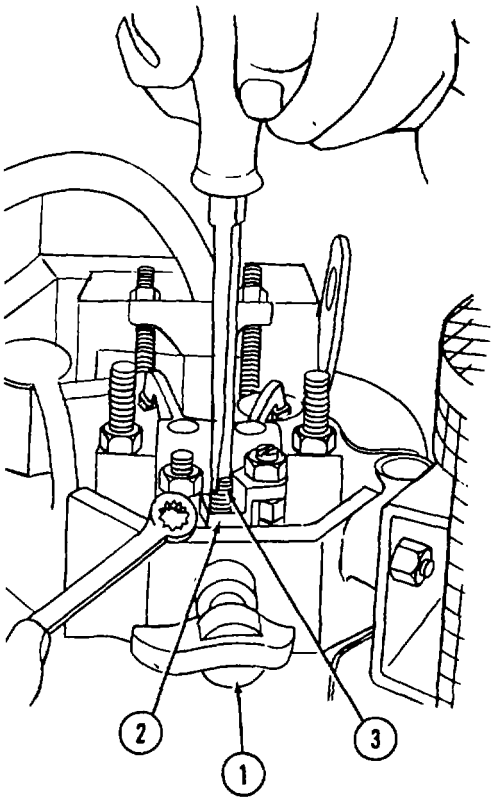

3-30. ADJUST CYLINDER HEAD AND VALVE ASSEMBLY (Continued)

7 Check clearance of complete pushrod (1) and pinion (2).

a. Use a feeler gage to check that clearance (3) between socket of complete pushrod (1) and pinion (2) is 0.039 inch (1.0 mm).

b. Check that clearance (4) is 0. 039 inch (1. 0 mm).

c. Clearances can be adjusted by adjusting complete pushrod (1) for clearance (3), and adjusting rocker shaft for clearance (4).

NOTE

During engine operation decompression shaft must not move. Assured clearances will prevent movement.

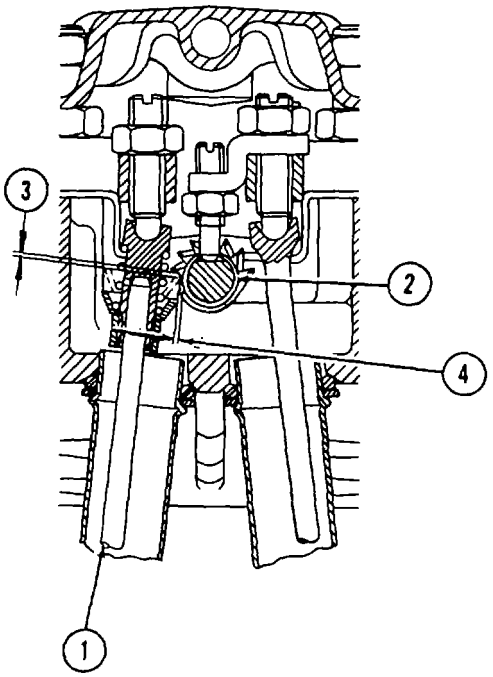

8 Install new gasket (6) on cylinder head.

9 Install cylinder head cover (5) on gasket (6).

10 Install two spring washers (4) and nuts (3). Tighten securely.

NOTE

Insure that copper washers are installed on both sides of the pipe clip to prevent oil leaks.

11 Install pipe clip (2) and screw (1).

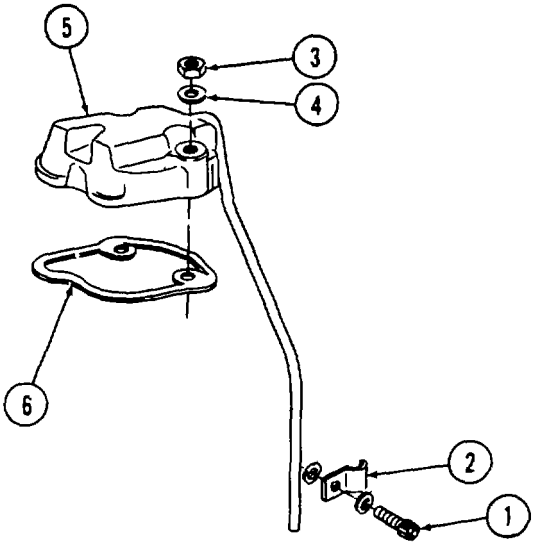

Section VII. PREPARATION FOR STORAGE OR SHIPMENT

3-31. GENERAL

This section provides instructions for preparing the pumping assembly for short term and intermediate storage or shipment.

3-32. ADMINISTRATIVE STORAGE

Administrative storage shall be in accordance with AR 750-1.

NOTE

When pumping assembly is taken out of service, take special precautions to protect the interior and exterior of the unit from rust accumulation and corrosion.

3-33. SHORT TERM STORAGE (30 days or less)

WARNING

Death or serious injury could occur if fuel is not handled carefully. Use in a well-ventilated area away from open flame, arcing equipment, ignition sources, heaters, or excessive heat. Engines must be turned off and cool before refueling. Use proper refueling procedures and equipment to avoid spillage. Do not run engines near open fuel containers. Always store fuel in proper, marked containers. DO NOT SMOKE.

a. Fill fuel tank with VV-F-800 diesel fuel oil. Connect pumping assembly to a fuel supply. Prime pump and operate the engine for 2 minutes.

NOTE

Do not drain the fuel system after this run. Remove fuel supply after this run.

3-33. SHORT TERM STORAGE (30 days or less) (Continued)

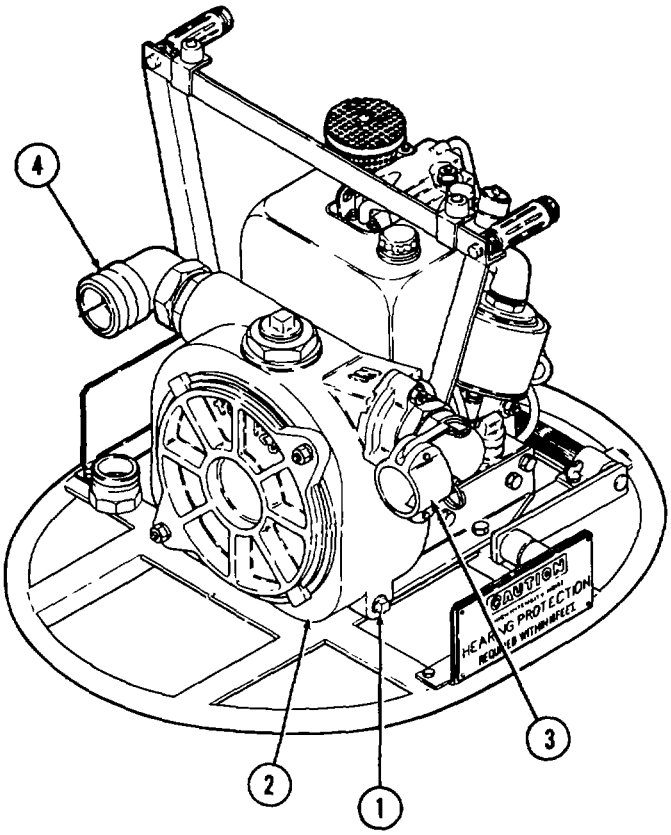

b. Remove suction hose from female coupling (3) (intake).

c. Remove discharge hose from male coupling (4) (discharge).

d. Remove pipe plug (1) and drain pump case (2). Replace pipe plug (1).

e. Clean intake and discharge port threads using a wet cloth.

f. Cover intake and discharge couplings.

g. Seal all engine openings with moistureproof, vaporproof tape, strong enough to resist puncture and damage from the expansion of entrapped air.

3-34. INTERMEDIATE TERM STORAGE (more than 30 days)

a. Connect pump assembly to a water supply. Prime pump, and allow to operate for 10 to 12 minutes or until normal operating temperature is reached. Shut down engine.

b. Drain crankcase oil. Then fill crankcase to proper level using MIL-L-21260 preservative lubricating oil, Grade 2, or equivalent.

3-34. INTERMEDIATE TERM STORAGE (more than 30 days) (Continued)

WARNING

Death or serious injury could occur if fuel is not handled carefully. Use in a well-ventilated area away from open flame, arcing equipment, ignition sources, heaters, or excessive heat. Always store fuel in proper, marked containers. DO NOT SMOKE.

c. Remove fuel tank cap (1) and hose connected to bottom of fuel tank (2). Collect fuel in a suitable metal container.

d. Replace fuel filter.

e. Replace hose to bottom of tank (2) and pour approximately one pint of MIL-L-46002 preservative oil, Grade 1, in fuel tank.

f. Start engine and allow to operate for not less than 5 to 7 minutes. Shut down engine. g. Service air cleaner in accordance with paragraph 3-22.

h. Remove pipe plug (1) and drain pump case (2). Replace pipe plug (1).

i. Remove suction hose from suction (intake) coupling (3).

j. Remove discharge hose from discharge coupling (4).

k. Coat all accessible surfaces with MIL-L-21260 preservative oil, Type I, Grade 30. Wipe excess oil from intake and discharge threads and cover adapters.

l. Remove pipe plug (5) and pour approximately one quart of MILL-21260 preservative oil, Type I, Grade 30, into pump case (2). Replace pipe plug (5).

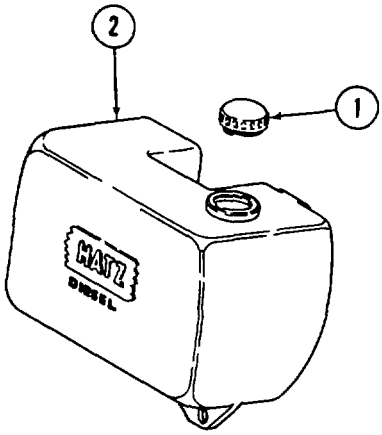

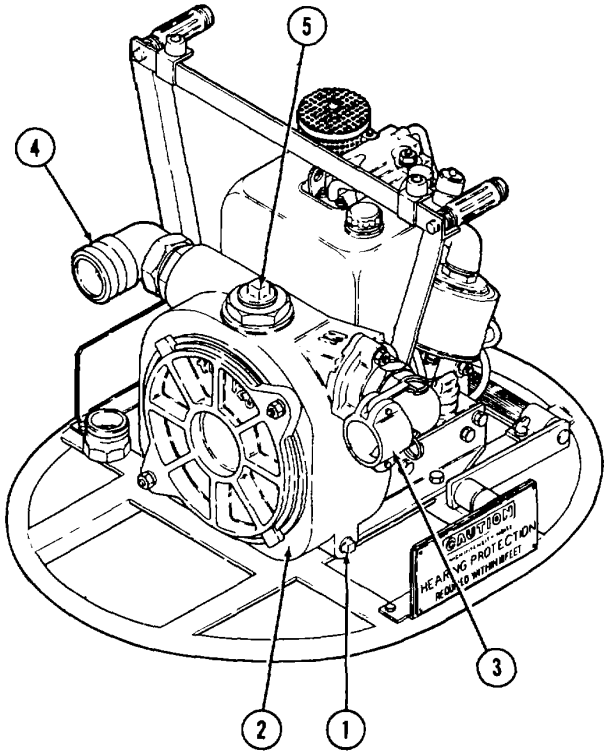

3-34. INTERMEDIATE TERM STORAGE (more than 30 days) (Continued)

WARNING

Death or serious injury could occur if fuel is not handled carefully. Use in a well-ventilated area away from open flame, arcing equipment, ignition sources, heaters, or excessive heat. Always store fuel in proper, marked containers. DO NOT SMOKE.

l. Drain engine crankcase and fuel tank into suitable metal containers.

m. Service air cleaner in accordance with paragraph 3-22.

3-35. SHIPMENT

a. Use shipping plugs, closures, or sealing tape to cover all openings in the pump and engine.

b. Attach to the pumping assembly all forms, tags, and records applicable to the unit.

CHAPTER 4
FORWARD INTERMEDIATE MAINTENANCE INSTRUCTIONS

Section I. TROUBLESHOOTING

4-1. TROUBLESHOOTING

a. Table 4-1 contains troubleshooting information for locating and correcting most of the operating troubles which are the responsibility of forward intermediate maintenance. Each malfunction for an individual component, unit, or system is followed by a list of tests or inspections which will help you to determine probable causes and corrective actions to take. Perform the tests/inspections and corrective actions in the order listed.

b. This manual cannot list all malfunctions that may occur, nor all tests or inspections and corrective actions. If a malfunction is not listed or is not corrected by listed corrective actions, notify your supervisor.

c. Only those functions within the scope of forward intermediate maintenance are listed. For troubleshooting procedures within the scope of unit maintenance, refer to table 3-1.

4-2. SYMPTOM INDEX

Refer to the Symptom Index below. Locate the malfunction which is the same, or most nearly the same, as the trouble you are having with the pumping assembly. The Symptom Index lists the first page of troubleshooting information for that malfunction. Follow the steps one by one, and perform the corrective actions listed.

Table 4-1. Forward Intermediate Troubleshooting

MALFUNCTION TEST OR INSPECTION	CORRECTIVE ACTION
1. ENGINE CRANKS BUT FAILS TO START	
Step 1. Check for loose cylinder head.	If loose, tighten nuts.
Step 2. Check for faulty lift pump.	Repair lift pump (para 4-13).
Step 3. Check for faulty injector. Remove and test injector (para 4-14).	Repair or replace faulty injector (para 4-14).
2. ENGINE STARTS BUT RUNS UNEVENLY, STALLS, OR SURGES	
Step 1. Check for faulty injector. Remove and test injector (para 4-14).	Repair or replace faulty injector (para 4-14).
Step 2. Check for air in the fuel system.	Service injector (para 4-14).
3. ENGINE STOPS RUNNING OR PRODUCES BLACK, WHITE, OR GREY SMOKE	
Step 1. Check for faulty injector. Remove and test injector (para 4-14).	Repair or replace faulty injector (para 4-14).
Step 2. Check for faulty lift pump.	Repair lift pump (para 4-13).
4. ENGINE CONSUMES EXCESSIVE LUBE OIL	
Step 1. Check for oil leaks on bottom of engine.	Tighten screws on cover located on bottom of engine.

Section II. MAINTENANCE PROCEDURES

INDEX

4-3. GENERAL INSTRUCTIONS

Most maintenance instructions in this section will list resources required, personnel required, and equipment condition for the start of the procedure. Note the following:

- Resources required are not listed unless they apply to the procedure.

- Personnel required are listed only if the task requires more than one. If PERSONNEL is not listed, it means one person can do the task.

- The normal standard equipment condition to start a maintenance task is engine stopped. EQUIPMENT CONDITION is not listed unless some other condition is required.

- Refer to Appendix F to determine torque requirements when tightening threaded fasteners, unless a specific torque value is given in procedure. Standard torque values given in Appendix F are determined by thread size.

4-4. REPAIR SUCTION HOSE ASSEMBLY

This task covers:

a. Cleaning/Inspection
b. Disassembly
c. Assembly

INITIAL SETUP

Tools

Shop set, automotive repair, field maintenance, basic

Materials Parts

Diesel fuel oil (Item 2, Appendix E)

Equipment Condition

Para	Condition Description
2-1	Suction hose assembly removed from pump.

General Safety Instructions

Well-ventilated area required.

CLEANING/INSPECTION:

WARNING

Death or serious injury could occur if fuel is not handled carefully. Use in a well-ventilated area away from open flame, arcing equipment, ignition sources, heaters, or excessive heat. Always store fuel in proper, marked containers. DO NOT SMOKE.

Death or serious injury could occur if compressed air is directed against the skin. Do not use compressed air for cleaning or drying unless the pressure is/has been reduced to 30 psi (2.06 bar) or less. When working with compressed air always use chip guards, eye protection, and other personal protective equipment.

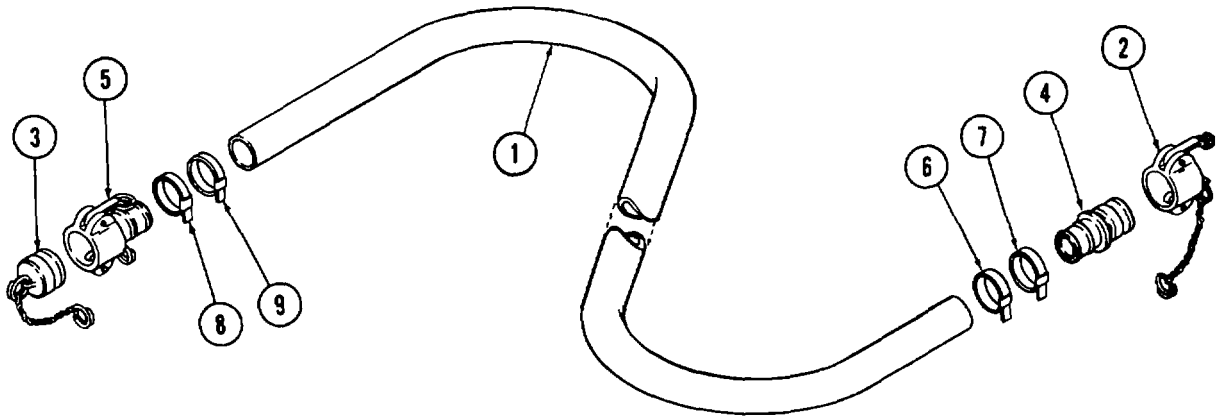

1 Flush hose (1) with clean diesel fuel. Wipe exterior of hose with a cloth dampened with diesel fuel.

2 Clean dust caps (2 and 3), adapter (4), coupler (5), and clamps (6, 7, 8, and 9) with clean diesel fuel and dry with compressed air.

4-4. SUCTION HOSE ASSEMBLY (Continued)

3 Inspect hose (1) for cracks, leaks, signs of deterioration, collapsed walls, and obvious damage. Replace hose if damaged.

4 Inspect adapter (4), clamps (6, 7, 8, and 9), and coupler (5) for obvious wear or damage. Replace damaged components.

DISASSEMBLY:

1 Remove adapter (4) and dust cap (2) by removing clamps (6 and 7) from hose (1). Remove dust cap chain from adapter.

2 Remove coupler (5) and dust cap (3) by removing clamps (8 and 9) from hose (1). Remove dust cap chain from adapter.

ASSEMBLY:

1 Install adapter (4) by sliding clamps (6 and 7) over hose (1) and inserting adapter into hose. Secure adapter with clamps. Attach dust cap (2) to adapter.

2 Install coupler (5) by sliding clamps (8 and 9) over hose (1) and inserting coupler into hose. Secure coupler with clamps. Attach dust cap (3) to adapter.

4-5. REPAIR DISCHARGE HOSE ASSEMBLY

This task covers:

a. Cleaning/Inspection
b. Disassembly
c. Assembly

INITIAL SETUP

Tools

Shop set, automotive repair, field maintenance, basic

Materials Parts

Diesel fuel oil (Item 2, Appendix E)

Equipment Condition

Para	Condition Description
2-1	Suction hose assembly removed from pump.

General Safety Instructions

Well-ventilated area required.

CLEANING/INSPECTION:

WARNING

Death or serious injury could occur if fuel is not handled carefully. Use in a well-ventilated area away from open flame, arcing equipment, ignition sources, heaters, or excessive heat. Always store fuel in proper, marked containers. DO NOT SMOKE.

Death or serious injury could occur if compressed air is directed against the skin. Do not use compressed air for cleaning or drying unless the pressure is/has been reduced to 30 psi (2.06 bar) or less. When working with compressed air always use chip guards, eye protection, and other personal protective equipment.

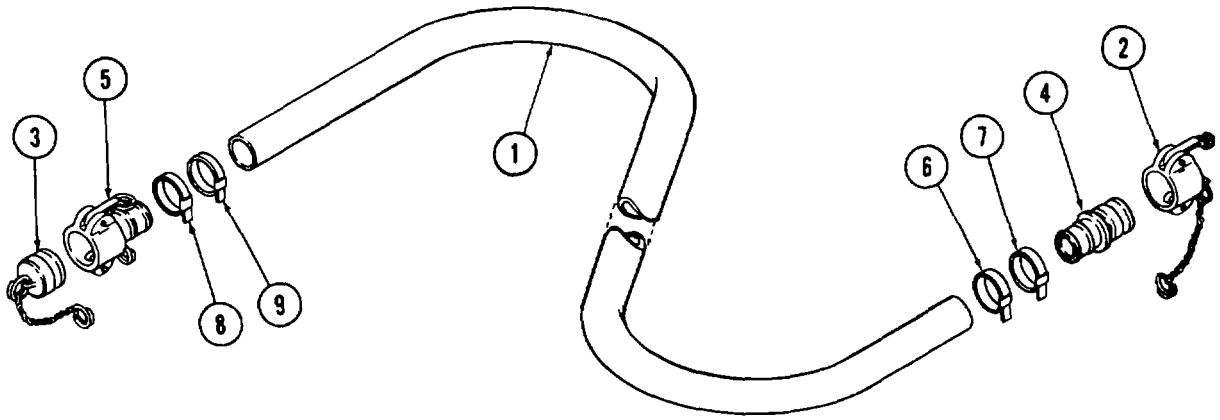

1 Flush hose (1) with clean diesel fuel. Wipe exterior of hose with a cloth dampened with diesel fuel.

2 Clean dust caps (2 and 3), adapter (4), coupler (5), and clamps (6, 7, 8, and 9) with clean diesel fuel and dry with compressed air.

4-5. REPAIR DISCHARGE ASSEMBLY (Continued)

3 Inspect hose (1) for cracks, leaks, signs of deterioration, collapsed walls, and obvious damage. Replace hose if damaged.

4 Inspect adapter (4), clamps (6, 7, 8, and 9), and coupler (5) for obvious wear or damage. Replace damaged components.

DISASSEMBLY:

1 Remove adapter (4) and dust cap (2) by removing clamps (6 and 7) from hose (1). Remove dust cap chain from adapter.

2 Remove coupler (5) and dust cap (3) by removing clamps (8 and 9) from hose (1). Remove dust cap chain from adapter.

ASSEMBLY:

1 Install adapter (4) by sliding clamps (6 and 7) over hose (1) and inserting adapter into hose. Secure adapter with clamps. Attach dust cap (2) to adapter.

2 Install coupler (5) by sliding clamps (8 and 9) over hose (1) and inserting coupler into hose. Secure coupler with clamps. Attach dust cap (3) to adapter.

4-6. REPAIR DRUM UNLOADER ASSEMBLY

This task covers:

a. Disassembly
b. Cleaning/Inspection
c. Assembly

INITIAL SETUP

Tools

Shop set, automotive repair, field maintenance, basic

Materials/Parts

Diesel fuel oil (Item 2, Appendix E)

Equipment Condition

Para	Condition Description
2-1	Drum unloader assembly removed from storage container.

General Safety Instructions

Well-ventilated area required.

DISASSEMBLY:

1 Remove dust cap (1) from 90-degree elbow (2).

2 Remove 90-degree elbow (2) from suction unloader stub (3).

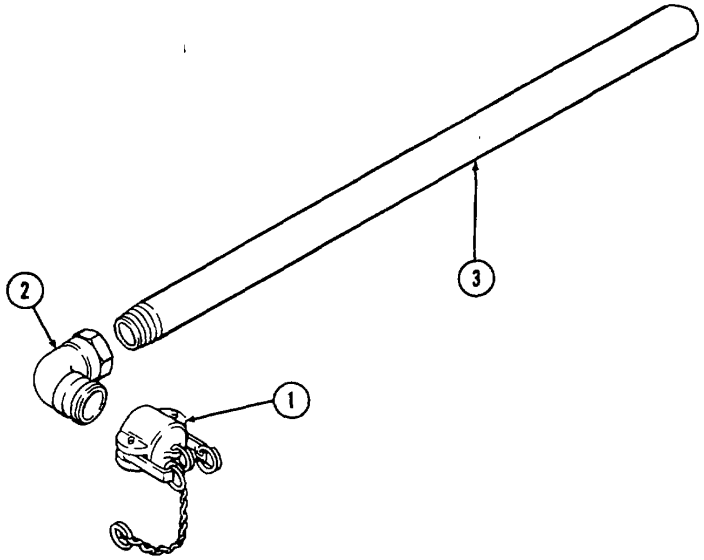

4-6. REPAIR DRUM UNLOADER ASSEMBLY (Continued)

CLEANING/INSPECTION:

WARNING

Death or serious injury could occur if fuel is not handled carefully. Use in a well-ventilated area away from open flame, arcing equipment, ignition sources, heaters, or excessive heat. Always store fuel in proper, marked containers. DO NOT SMOKE.

Death or serious injury could occur if compressed air is directed against the skin. Do not use compressed air for cleaning or drying unless the pressure is/has been reduced to 30 psi (2.06 bar) or less. When working with compressed air always use chip guards, eye protection, and other personal protective equipment.

1 Flush suction unloader stub (3) with clean diesel fuel. Wipe exterior of stub with a cloth dampened with diesel fuel.

2 Clean dust cap (1) and 90-degree elbow (2) with clean diesel fuel and dry with compressed air.

3 Inspect 90-degree elbow (2) and suction unloader stub (3) for cracks, leaks, signs of deterioration, damaged threads, and obvious damage. Replace stub or elbow if damaged.

4 Inspect dust cap (1) for obvious wear or damage. Replace if damaged.

ASSEMBLY:

1 Install suction unloader stub (3) into 90-degree elbow (2).

2 Install dust cap (1) onto 90-degree elbow (2).

4-7. REPAIR STORAGE CONTAINER

This task covers:

a. Disassembly
b. Cleaning/Inspection
c. Assembly

INITIAL SETUP

Tools

Shop set, automotive repair, field maintenance, basic

Materials/Parts

Diesel fuel oil (Item 2. Appendix E)

Equipment Condition

Para	Condition Description
2-1	Pumping assembly removed from storage container.

General Safety Instructions

Well-ventilated area required.

DISASSEMBLY:

1 Remove number one cover (1) from storage container (2) by removing hinge (3) and 18 countersunk rivets (4). Remove two lock bolts (5) by removing eight solid rivets (6).

2 Remove number two cover (7) from storage container (2) by removing hinge (8) and 18 countersunk rivets (9).

CLEANING/INSPECTION:

WARNING

Death or serious injury could occur if fuel is not handled carefully. Use in a well-ventilated area away from open flame, arcing equipment, ignition sources, heaters, or excessive heat. Always store fuel in proper, marked containers. DO NOT SMOKE.

Death or serious injury could occur if compressed air is directed against the skin. Do not use compressed air for cleaning or drying unless the pressure is/has been reduced to 30 psi (2.06 bar) or less. When working with compressed air always use chip guards, eye protection, and other personal protective equipment.

1 Clean all components with clean diesel fuel and dry with compressed air.

2 Inspect covers (1 and 7) and storage container (2) for cracks, holes, leaks, signs of deterioration, damaged welds, and obvious damage. Repair damaged welds, cracks, and holes. Replace if damaged beyond repair.

3 Inspect hinges (3 and 8) and lock bolts (5) for obvious wear or damage. Replace if damaged.

4-7. REPAIR STORAGE CONTAINER (Continued)

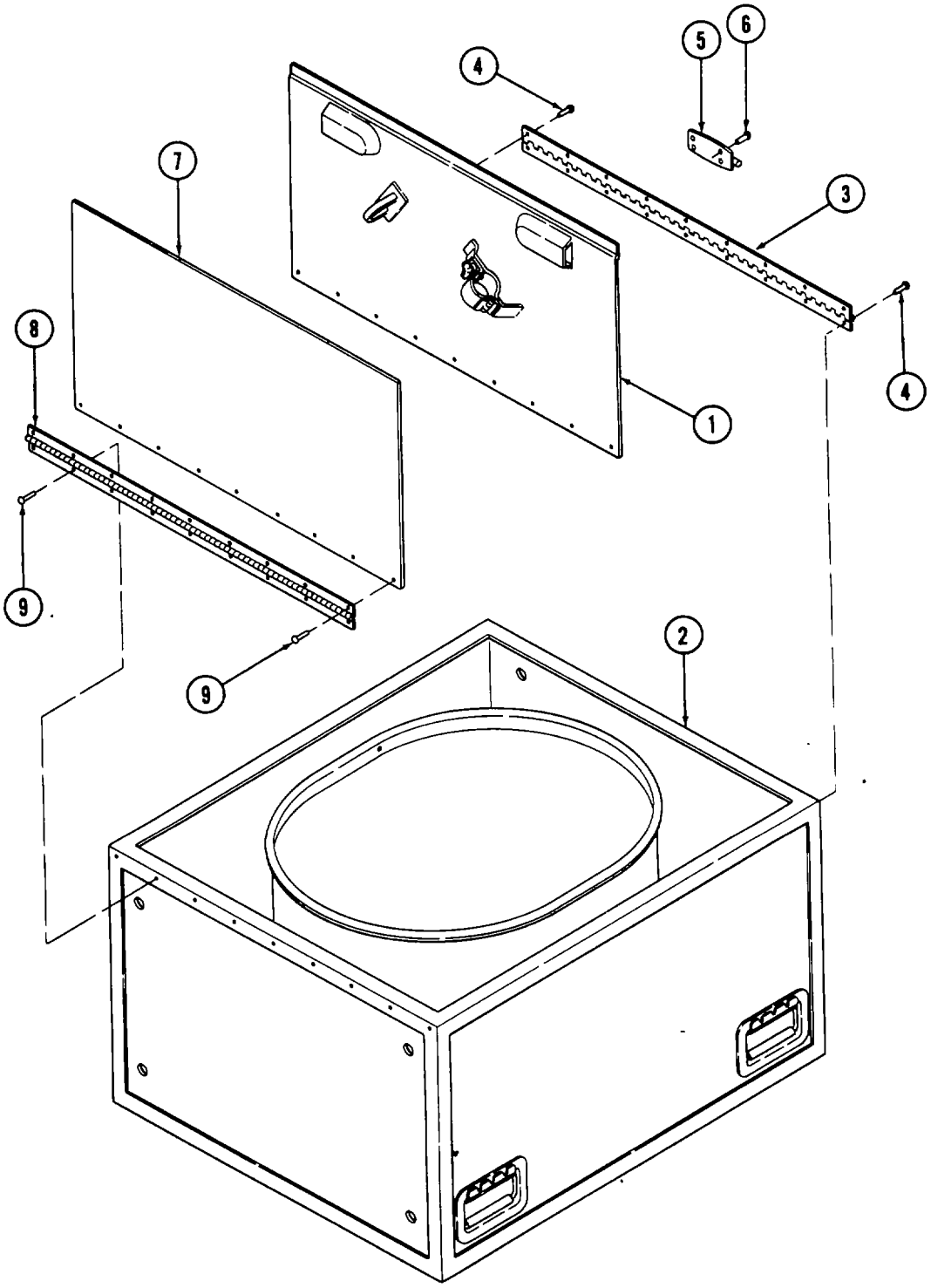

4-7. REPAIR STORAGE CONTAINER (Continued)

ASSEMBLY:

1 Attach number one cover (1) to storage container (2) by riveting hinge (3) to cover and container with 18 countersunk rivets (4). Attach two lock bolts (5) with eight solid rivets (6).

2 Attach number two cover (7) to storage container (2) by riveting hinge (8) to cover and container with 18 countersunk rivets (9).

4-8. REPAIR NOZZLE ASSEMBLY

This task covers:

a. Disassembly
b. Cleaning/Inspection
c. Assembly

INITIAL SETUP

Tools

Shop set, automotive repair, field maintenance, basic

Materials/Parts

Diesel fuel oil (Item 2, Appendix E)

Equipment Condition

Para	Condition Description
2-1	Nozzle assembly removed from storage container.

General Safety Instructions

Well-ventilated area required.

DISASSEMBLY:

1 Remove dust cap (1) and coupler (2) from bushing (3). Remove dust cap from coupler.

2 Remove cap (4) from body (5).

3 Remove spring (6), upper poppet (7), lower disc holder (8), lower disc (9), lower disc washer (10), nut (11), stem (12), and stuffing box (13) from body.

4 Remove packing nut (14) and packing gland (15) from body (5). Remove and discard packing (16).

5 Remove lever (17) by removing two pushnuts (18) and pin (19) from body (5).

6 Remove two cap chain links (20), chain (21), two drawbars (22), and compression spring (23) from cap (24) and body (5).

7 Remove spout assembly (25) and nozzle strainer assembly (26) from body (5). Remove and discard preformed packing (27).

8 Remove ground wire plug (28) and clip with screw (29) from cable (30).

4-8. REPAIR NOZZLE ASSEMBLY (Continued)

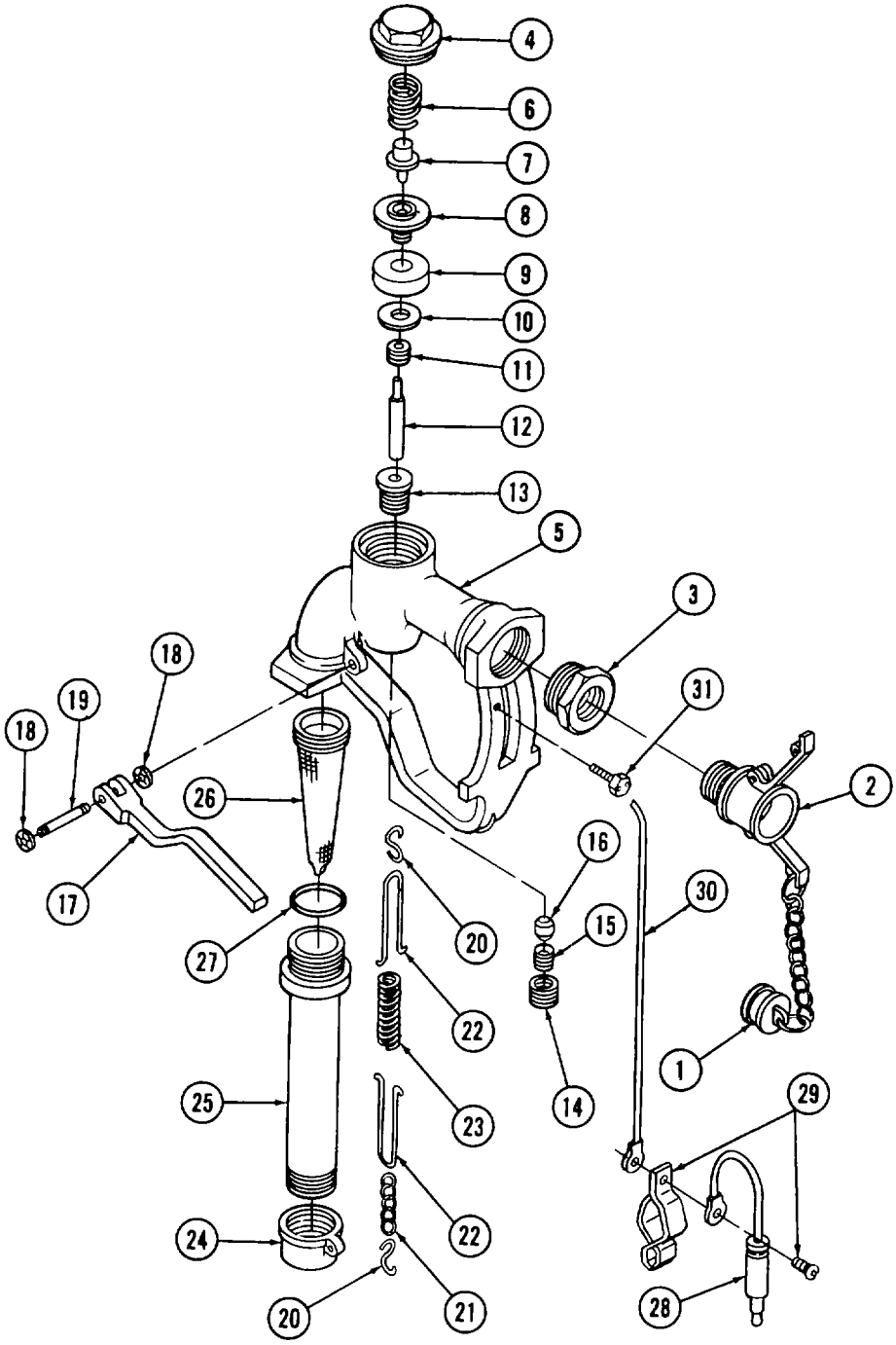

4-8. REPAIR NOZZLE ASSEMBLY (Continued)

9 Remove cable (30) by removing plug screw (31) from body (5).

10 Remove bushing (3) from body (5).

CLEANING/INSPECTION:

WARNING

Death or serious injury could occur if fuel is not handled carefully. Use in a well-ventilated area away from open flame, arcing equipment, ignition sources, heaters, or excessive heat. Always store fuel in proper, marked containers. DO NOT SMOKE.

Death or serious injury could occur if compressed air is directed against the skin. Do not use compressed air for cleaning or drying unless the pressure is/has been reduced to 30 psi (2.06 bar) or less. When working with compressed air always use chip guards, eye protection, and other personal protective equipment.

1 Clean all components with clean diesel fuel and dry with compressed air.

2 Inspect all components for wear, cracks, leaks, signs of deterioration, damaged threads, and obvious damage. Replace damaged components.

ASSEMBLY:

1 Install bushing (3) into body (5).

2 Attach ground wire plug (28) and clip with screw (29) to cable (30).

3 Attach cable (30) to body (5) with plug screw (31).

4 Install new preformed packing (27). Attach spout assembly (25) and nozzle strainer assembly (26) to body (5).

5 Attach two cap chain links (20), chain (21), two drawbars (22), and compression spring (23) to cap (24) and body (5).

6 Attach lever (17) with two pushnuts (18) and pin (19) into body (5).

7 Install new packing (16), packing nut (14), and packing gland (15) into body (5).

8 Install stuffing box (13), stem (12), nut (11), lower disc washer (10), lower disc (9), lower disc holder (8), upper poppet (7), and spring (6) into body (5).

9 Attach cap (4) to body (5).

10 Attach dust cap (1) to coupler (2). Attach dust cap and coupler to bushing (3).

4-9. REPAIR Y-CONNECTORS

This task covers:

a. Cleaning/Inspection
b. Repair

INITIAL SETUP

Materials/Parts

Diesel fuel oil (Item 2, Appendix E)

Equipment Condition

Para	Condition Description
2-1	Y-Connectors removed from pumping assembly.

General Safety Instructions

Well-ventilated area required.

CLEANING/INSPECTION:

WARNING

Death or serious injury could occur if fuel is not handled carefully. Use in a well-ventilated area away from open flame, arcing equipment, ignition sources, heaters, or excessive heat. Always store fuel in proper, marked containers. DO NOT SMOKE.

Death or serious injury could occur if compressed air is directed against the skin. Do not use compressed air for cleaning or drying unless the pressure is/has been reduced to 30 psi (2.06 bar) or less. When working with compressed air always use chip guards, eye protection, and other personal protective equipment.

1 Clean male-double female Y-connector (1) and female-double male Y-connector (2) with clean diesel fuel and dry with compressed air.

2 Inspect for cracks, score marks, burrs, signs of deterioration, and obvious damage.

REPAIR:

If parts are not repairable, replace.

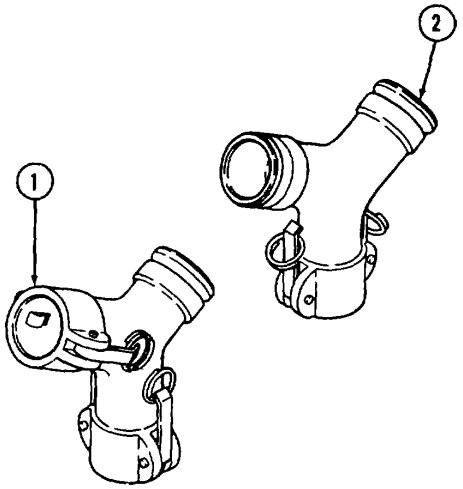

4-10. REPAIR GROUND ROD

This task covers:

a. Cleaning/Inspection
b. Repair

INITIAL SETUP

Materials/Parts

Diesel fuel oil (Item 4, Appendix E)

Equipment Condition

Para	Condition Description
2-1	Ground rod removed from storage container.

General Safety Instructions

Well-ventilated area required.

CLEANING/INSPECTION:

WARNING

Death or serious injury could occur if fuel is not handled carefully. Use in a well-ventilated area away from open flame, arcing equipment, ignition sources, heaters, or excessive heat. Always store fuel in proper, marked containers. DO NOT SMOKE.

Death or serious injury could occur if compressed air is directed against the skin. Do not use compressed air for cleaning or drying unless the pressure is/has been reduced to 30 psi (2.06 bar) or less. When working with compressed air always use chip guards, eye protection, and other personal protective equipment.

1 Clean ground lug terminal (1), ground cable (2), rod clamp (3), and grounding rod (4) with clean diesel fuel and dry with compressed air.

2 Inspect components for cracks, score marks, burrs, signs of deterioration, and obvious damage.

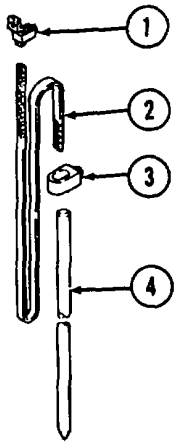

REPAIR:

If parts are not repairable, replace.

4-11. REPAIR PUMP CASE

This task covers: **Repair/Cleaning**

INITIAL SETUP

Tools

Shop set, automotive repair, field maintenance, basic

Materials/Parts

Dry cleaning solvent (Item 9, Appendix E)

Zinc chromate primer coating (Item 8, Appendix E)

Equipment Condition

Para	Condition Description
3-21 .	Pump case assembly removed.

General Safety Instructions

Well-ventilated area required.

REPAIR/CLEANING:

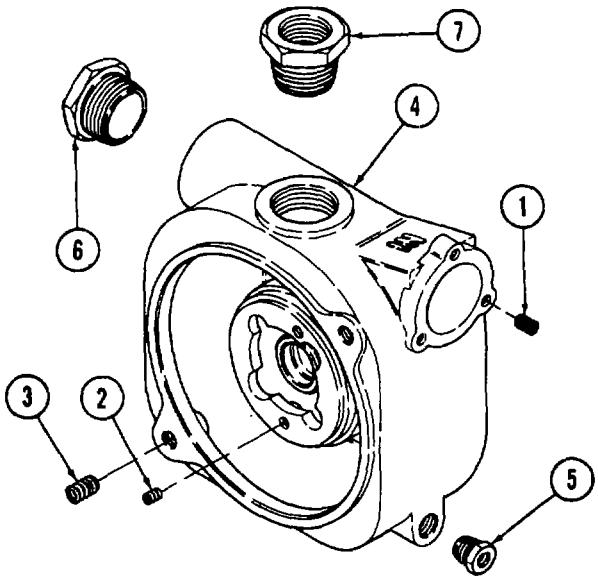

1 Remove insert (1, 2, or 3) from pump case (4) by using a scribe or other pointed instrument. Pry the last thread of insert into center of tapped hole. Grasp thread with needlenosed pliers and remove damaged insert by threading out of hole.

2 Remove bushing (5 and 6) and reducing bushing (7) from pump case (4).

4-11. REPAIR PUMP CASE (Continued)

3 Chase threaded holes using appropriate size tap.

WARNING

Dry cleaning solvent P-D-680 (safety or Stoddard's Solvent) is potentially dangerous. Avoid repeated and prolonged breathing of vapors and skin contact with the liquid. Do not use near open flame, arcing equipment, or other ignition sources. Always wear eye protection and protective clothing. The flash point of P-D-680 is 100 ° to 138°F (38° to 59°C).

Death or serious injury could occur if compressed air is directed against the skin. Do not use compressed air for cleaning or drying unless the pressure is/has been reduced to 30 psi (2.06 bar) or less. When working with compressed air always use chip guards, eye protection, and other personal protective equipment.

4 Using dry cleaning solvent and a stiff-bristled brush, clean threaded holes thoroughly.

5 Using clean compressed air at 30 psi (2.11 $kgcm^2$) maximum discharge pressure, blow out threaded holes to make sure that all solvent has been removed and no particles are left in the holes.

6 Inspect threads of bushings (5 and 6) for damage. If damaged, replace bushings.

7 Inspect reducing bushing (7) threads for damage. If damaged, replace bushing.

8 Coat new insert (1, 2, or 3) with zinc chromate primer coating.

9 Insert each insert to a depth of 1 to 1.5 pitches below the top surface of the tapped hole in pump case (4). Wipe off excess primer.

10 Remove drive tang from installed insert.

4-12. REPLACE ENGINE ASSEMBLY

This task covers:

a. Removal **b. Installation**

INITIAL SETUP

Tools

Shop equipment, automotive maintenance and repair, common no. 1

Equipment Condition

Para	Condition Description
3-21	Pump case assembly removed.
3-22	Air filter assembly removed.

General Safety Instructions

Hoisting equipment shall be used only by authorized personnel.

REMOVAL:

WARNING

Death or serious injury could occur if unauthorized or unnecessary personnel are in the hoisting area. Permit only personnel actually engaged in the hoisting operation to be near the unit and hoisting equipment. All instructions for the hoisting operations must come from one authorized person.

Death or serious injury to personnel or damage to equipment could occur from improper hoisting. Hoist the load slowly to avoid tearing out lifting strap, slipping slings, or load shift. Do not jerk the load or swing it from side-to-side when hoisting. This places additional stress on hoisting components which can cause failure and loss of load. Be sure hoisting equipment is on solid footing and is suitable for the size of the load. Watch boom angle and overhead clearance when hoisting.

CAUTION

Engine will be damaged if set on cover at bottom of engine. Provide adequate blocking to support engine after removal.

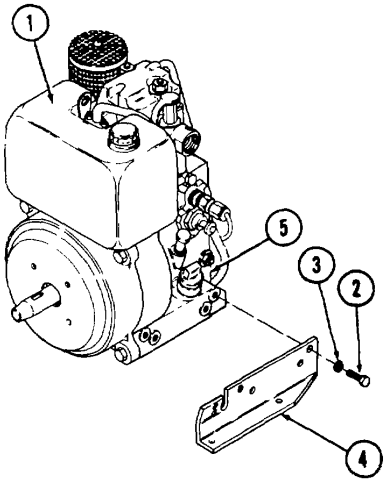

1 Position a suitable lifting device over engine assembly. Attach to lifting strap (1).

2 Put tension on slings. Make sure engine is properly supported.

3 Remove four hex screws (2) and four spring washers (3) from each engine bracket (4). Remove engine assembly (5).

4 Lift engine assembly (5) and lower onto blocks on a stable, level work platform.

4-12. REPLACE ENGINE ASSEMBLY (Continued)

INSTALLATION:

WARNING

Death or serious injury could occur if unauthorized or unnecessary personnel are in the hoisting area. Permit only personnel actually engaged in the hoisting operation to be near the unit and hoisting equipment. All instructions for the hoisting operations must come from one authorized person.

Death or serious injury to personnel or damage to equipment could occur from improper hoisting. Hoist the load slowly to avoid tearing out lifting strap, slipping slings, or load shift. Do not jerk the load or swing it from side-to-side when hoisting. This places additional stress on hoisting components which can cause failure and loss of load. Be sure hoisting equipment is on solid footing and is suitable for the size of the load. Watch boom angle and overhead clearance when hoisting.

1 Attach lifting equipment. Lift and carefully lower engine assembly (5). Aline mounting holes on engine and engine brackets.

2 Install four hex screws (2) and four spring washers (3) on each engine bracket (4). Tighten securely.

4-13. REPAIR LIFT PUMP

This task covers:

a. Disassembly
b. Repair
c. Assembly

INITIAL SETUP

Tools

Shop set, automotive repair, field maintenance, basic

Materials/Parts

Diesel fuel oil (Item 2, Appendix E)

Lubricating oil (Item 6, Appendix E)

Equipment Condition

Para	Condition Description
3-26	Fuel lift pump removed from engine.

General Safety Instructions

Well-ventilated area required.

DISASSEMBLY:

CAUTION

Do not scratch or mar mating surfaces of pump body or cover. The pump may leak or otherwise malfunction after reassembly.

1 Remove screw (1), gasket (2), and cover (3).

2 Remove and discard gasket (4).

3 Remove fuel filter (5).

4 Remove six Allen screws (6).

5 Remove upper pump chamber (7).

6 Remove diaphragm (8) from pump body (9) and discard.

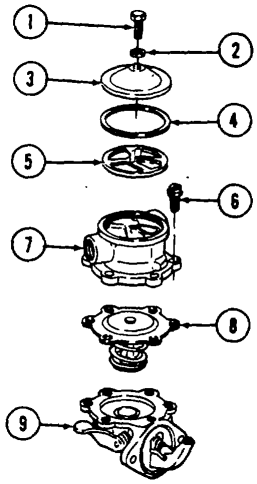

4-13. REPAIR LIFT PUMP (Continued)

REPAIR:

WARNING

Death or serious injury could occur if fuel is not handled carefully. Use in a well-ventilated area away from open flame, arcing equipment, ignition sources, heaters, or excessive heat. Always store fuel in proper, marked containers. DO NOT SMOKE.

Death or serious injury could occur if compressed air is directed against the skin. Do not use compressed air for cleaning or drying unless the pressure is/has been reduced to 30 psi (2.06 bar) or less. When working with compressed air always use chip guards, eye protection, and other personal protective equipment

1 Clean all parts except gasket (4) with clean diesel fuel and dry with low-pressure compressed air.

2 Inspect mating surface of cover (3) and pump body (9) parts for roughness or other damage. Scratches or other damage may result in pressure leaks.

3 Check for wear at contact areas. Replace pump body (9) or cover (3) if worn.

4 Inspect all parts for score marks and burrs. Parts must fit together tightly.

5 If parts are not repairable, replace.

ASSEMBLY:

CAUTION

Do not scratch or mar mating surfaces of pump body or cover. The pump may leak or otherwise malfunction after reassembly.

1 Install new diaphragm (8) into pump body (9).

2 Install upper pump chamber (7) on diaphragm (8).

3 Install six Allen screws (6) finger tight. Move fuel primer lever on pump body (9) to compress diaphragm spring. Tighten Allen screws.

4 Install fuel filter (5).

5 Lubricate gasket (4) with lubricating oil and install.

6 Install screw (1), gasket (2), and cover (3).

4-14. REPLACE INJECTOR

This task covers:

a. Removal
b. Testing
c. Disassembly
d. Cleaning
e. Assembly
f. Adjustment/Testing
g. Installation

INITIAL SETUP

Tools

Shop set, automotive repair, field maintenance, basic
Testing device for injection equipment 604 628 00

Materials/Parts

Diesel fuel (Item 2, Appendix E)
Grease (Item 3, Appendix E)

Equipment Condition

Para	Condition Description
3-25	Fuel pressure line removed.

General Safety Instructions

Well-ventilated area required.

REMOVAL:

WARNING

Death or serious injury could occur if fuel is not handled carefully. Use in a well-ventilated area away from open flame, arcing equipment, ignition sources, heaters, or excessive heat. Always store fuel in proper, marked containers. DO NOT SMOKE.

CAUTION

The fuel injection system is extremely intricate and complex. All possible care should be taken in the removal, inspection, testing, and reassembly of these components. While handling the fuel injector, be extremely careful not to touch the nozzle or the pin assembly on the nozzle end.

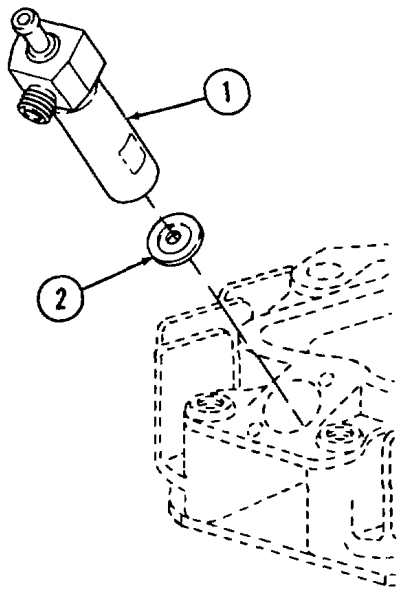

1 Remove injector (1) from cylinder head.

2 Remove joint washer (2).

4-14. REPLACE INJECTOR (Continued)

TESTING:

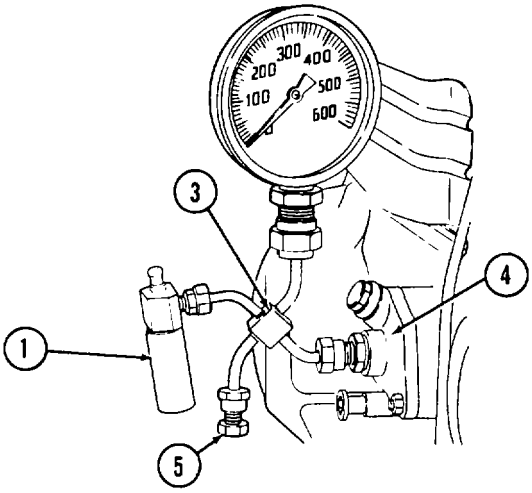

1 Visually inspect injector (1) for scoring or burning. Inspect to see if injector is bent, cracked, or damaged. If injector is damaged, replace it.

NOTE

Loosen the pressure gage connection, and crank the engine until trapped air is removed from the system.

2 Connect testing device 604 628 00 (3) to injector pump (4) and injector (1). Make sure side connection (5) is tightly locked.

WARNING

Death or serious injury could occur if fuel is not handled carefully. Use in a well-ventilated area away from open flame, arcing equipment, ignition sources, heaters, or excessive heat. Always store fuel in proper, marked containers. DO NOT SMOKE.

Serious injury could result from injector fuel spray. Keep hands away from fuel spray.

NOTE

Prior to testing injector, make sure throttle control hand lever is in the HIGH position.

3 Crank engine by hand. As the engine is cranked, read fuel injection pressure on the gage and check fuel spray pattern from injector. Injection pressure should be 1958 to 2074 psi (135 to 143 bar). Fuel should spray out in an even spray pattern. If spray pattern does not conform to above, replace injector. If injector nozzle drips fuel before or after it has reached recommended injection pressure, replace injector.

4-14. REPLACE INJECTOR (Continued)

INSTALLATION:

CAUTION

The fuel injection system is extremely intricate and complex. All possible care should be taken in the removal, inspection, testing, and reassembly of these components. While handling the fuel injector, be extremely careful not to touch the nozzle or the pin assembly on the nozzle end.

1 Be certain injector seat in cylinder head is clean. Lightly coat joint washer (2) with grease and install on nozzle end of injector (1). Make sure outside beveled edge of new joint washer points toward cylinder head.

2 Carefully install injector (1) into injector bore in cylinder head. Make sure not to damage nozzle needle. Tighten injector to 7 foot-pounds (10 N•m) using torque wrench.

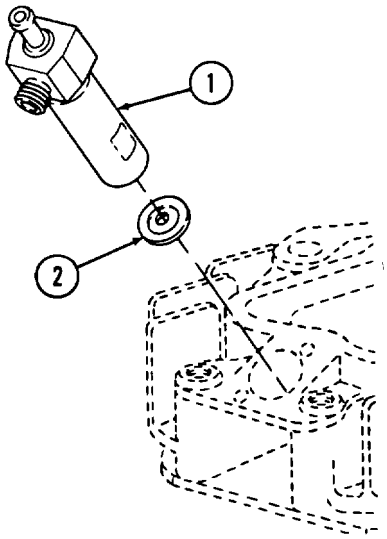

4-15. TEST/REPLACE/ADJUST INJECTION PUMP

This task covers:

a. Test **c. Installation**
b. Removal **d. Adjustment**

INITIAL SETUP

Tools

Shop set, automotive repair, field maintenance, basic
Testing device for injection equipment 604-628-00

Dial gage 612-087 00

Fuel shutoff clamp 668 383 00

Socket wrench, 30 mm 668 335 00

Special wrench 606 000 00

Spill device 604 837 00

Materials/Parts

Diesel fuel oil (Item 2, Appendix E)
Lubricating oil (Item 6, Appendix E)

Equipment Condition

Para	Condition Description
3-21	Pump case assembly removed.
3-25	Fuel hose and fuel pressure line removed.
3-25	Non-return valve removed from injection pump.

General Safety Instructions

Well-ventilated area required.

TEST:

NOTE

Perform this test before removal of injection pump and after installation.

WARNING

Death or serious injury could occur if fuel is not handled carefully. Use in a well-ventilated area away from open flame, arcing equipment, ignition sources, heaters, or excessive heat.
Always store fuel in proper, marked containers. DO NOT SMOKE.

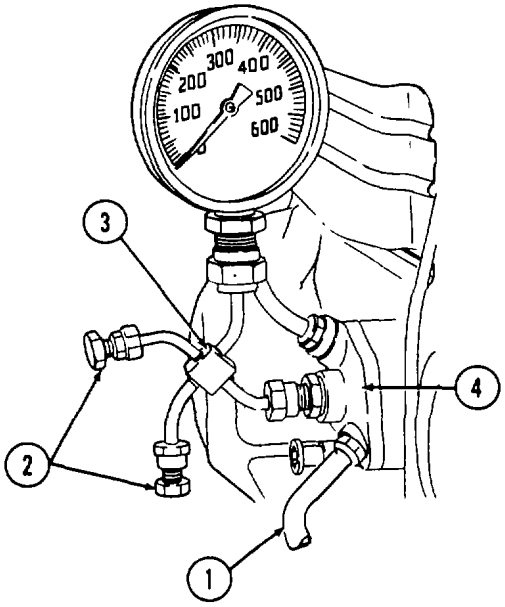

1 Connect fuel hose (1) from lift pump to injection pump (4).

2 Make sure the extra fuel device button is not pulled to the extended position. If the button is extended, move the throttle control hand lever to the LOW position and then return the lever to the HIGH position to reset the extra fuel button.

4-15. TEST/REPLACE/ADJUST INJECTION PUMP (Continued)

3 Connect testing device 604 628 00 (3) to injection pump (4). Make sure side connections (2) are tightly locked.

4 Loosen the pressure gage connection, and crank the engine until trapped air is removed from the system.

5 Tighten pressure gage connections.

CAUTION

The pressure gage can be damaged if the engine is cranked beyond the gage limits. Failure to heed this caution can damage equipment.

6 Slowly crank engine by hand. As the engine is cranked, read fuel injection pressure on the gage. Injection pressure should be 4351 to 5076 psi (300 to 350 bar). Stop cranking engine and observe whether pressure is maintained. If pressure drops below 3650 psi (250 bar) within 10 to 15 seconds, then injection pump is not in working order. Notify rear intermediate maintenance.

7 Remove testing device 604 628 00 (3).

REMOVAL:

1 Move throttle control hand lever to HIGH position and pull extra fuel button.

CAUTION

Do not scratch or mar mating surfaces of injection pump or mounting surface. The pump may leak or otherwise malfunction after reassembly.

2 Remove two hexagon nuts (1) and remove injection pump (2).

3 Remove shim(s) (3), plate (4), and tappet (5).

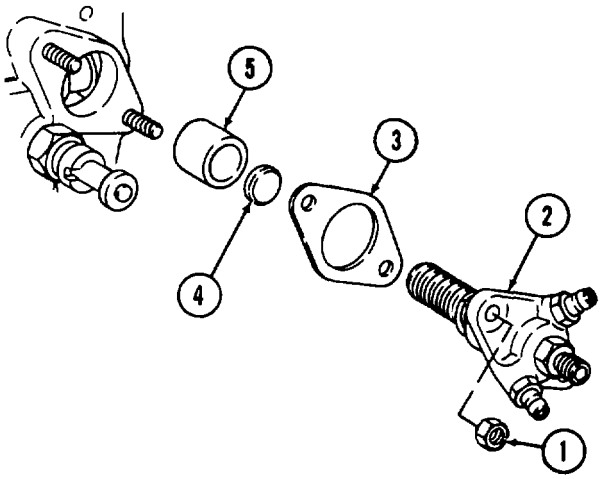

4-15. TEST/REPLACE/ADJUST INJECTION PUMP (Continued)

WARNING

Death or serious injury could occur if fuel is not handled carefully. Use in a well-ventilated area away from open flame, arcing equipment, ignition sources, heaters, or excessive heat. Always store fuel in proper, marked containers.
DO NOT SMOKE.

Death or serious injury could occur if compressed air is directed against the skin. Do not use compressed air for cleaning or drying unless the pressure is/has been reduced to 30 psi (2.06 bar) or less. When working with compressed air always use chip guards, eye protection, and other personal protective equipment.

4 Clean all parts with clean diesel fuel and dry with low-pressure compressed air.

5 Inspect mating surface of injection pump for roughness or other damage. Scratches or other damage may result in pressure leaks. Check for wear at contact areas. Replace injection pump if worn.

INSTALLATION:

1 Install tappet (1) into crankcase (2).

2 Turn engine by hand until tappet (1) reaches the lowest point of cam (3).

3 Position throttle control hand lever so that governor lever slot (4) lies exactly in the center of the tappet bore.

4. Install plate (5), with the flat surface toward the injection pump (7).

5 Place shim pack (6) on crankcase (2) studs.

6 Position control sleeve on injection pump (7) so that control sleeve pin enters slot in governor lever.

7 Insert injection pump (7) carefully without moving the control sleeve out of its roper position.

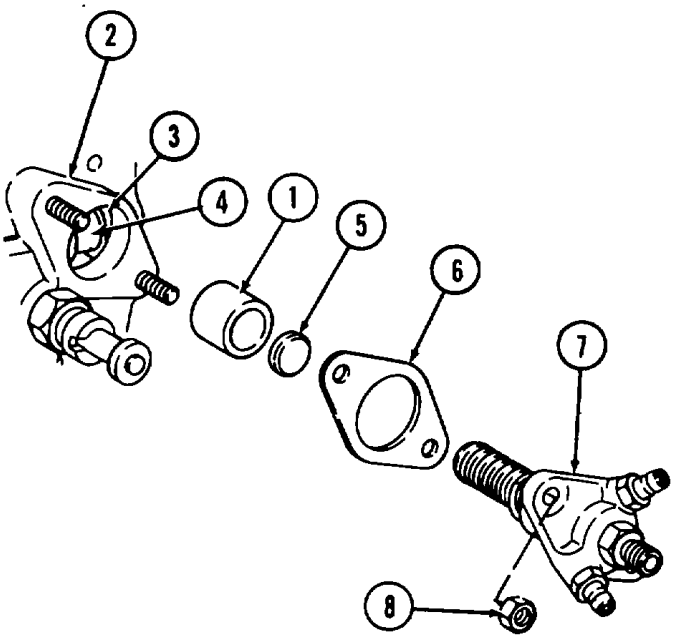

NOTE

No resistance should be felt until the pump is within 0.160 inch (4 mm) of the crankcase, then a resistance due to initial load of plunger spring can be felt.

CAUTION

Do not tighten pump if not seated properly. Damage to pump, governor lever, or engine could result if improperly installed.

8 Using hand pressure, insert injection pump (7) fully into crankcase (2) and install two hexagon nuts (8). If the pump does not seat properly, governor sleeve pin of injection pump has not entered slot (4) in governor lever.

4-15. TEST/REPLACE/ADJUST INJECTION PUMP (Continued)

ADJUSTMENTS:

WARNING

Death or serious injury could occur if fuel is not handled carefully. Use in a well-ventilated area away from open flame, arcing equipment, ignition sources, heaters, or excessive heat. Always store fuel in proper, marked containers. DO NOT SMOKE.

CAUTION

When adjusting timing, pay special attention to rotation of engine. Timing can be accomplished only when engine is rotated correctly. Correct rotation is clockwise when facing throttle control hand lever.

Preparation:

1 Remove engine adapter housing to expose engine flywheel.

2 Block fuel hose (fuel tank to 3-way valve) with fuel shutoff clamp 668 383 00.

3 Remove the fuel filter, fuel hoses, and clamps using REMOVAL steps 1 to 7 in paragraph 3-25.

4 Disconnect fuel hose (fuel tank to 3-way valve) from 3-way valve connection using REMOVAL step 9 in paragraph 3-25.

NOTE

Use the existing fuel filter for testing.

5 Install fuel hose (5) (see REMOVAL step 2 in paragraph 3-25) on injection pump.

6 Install fuel filter (2).

7 Connect fuel hose (3) (fuel tank to 3-way valve) to fuel filter (2) inlet.

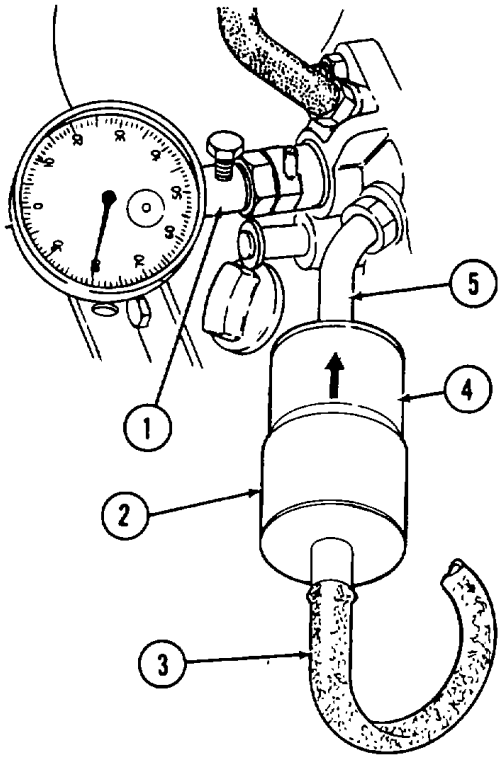

4-15. TEST/REPLACE/ADJUST INJECTION PUMP (Continued)

8 Unscrew delivery valve holder (1) and remove spring (2) filling piece with three shims (3), copper washer (4), delivery valve (5), and valve body (6).

9 Insert copper washer (4) and delivery valve body (6) only into spill device 604 837 00.

10 Thread spill device into injection pump with spill pipe in up position, and then secure in place.

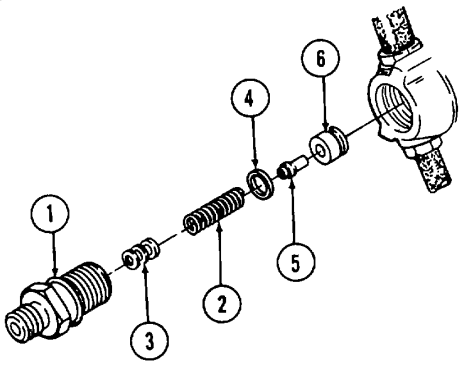

NOTE

Additional copper washers may be necessary to attain the spill pipe in the up position when the spill device is tightened.

11 Install dial indicator 612 087 00 with adapter pin 1.64-inch (41 mm) long attached, into spill device, and pre-tension approximately 1 mm (one rotation of dial indicator hand).

12 Remove fuel shutoff clamp 668 383 00 from fuel hose.

NOTE

Fuel emerging from the spill pipe on spill device 604 837 00 must be bubble free.

13 Move the throttle control hand lever to the HIGH position.

Adjustment of Delivery End:

NOTE

The position of TDC (2) and end of delivery (3) are marked on the flywheel. The corresponding (alignment) mark (4) is on the right upper side of the crankcase.

1 Slowly rotate flywheel counterclockwise (when facing flywheel) until no fuel emerges from spill pipe on spill device 604 837 00.

2 Continue to very slowly rotate flywheel, while frequently blotting spill pipe with rag to absorb fuel, until fuel just begins to weep from spill pipe.

4-15. TEST/REPLACE/ADJUST INJECTION PUMP (Continued)

NOTE

The position achieved above is the end of delivery. If the shim pack is of the correct thickness, the timing marks on flywheel (1) (11.5 to 12.5 degrees) should align with reference mark (4).

3 Block fuel hose (from fuel tank) using fuel shutoff clamp 668 383 00.

4 If timing marks do not align with reference mark (4), rotate outer face of dial gage 612 087 00 until "0" mark aligns with needle.

5 Slowly rotate flywheel (1) in either direction to align timing marks of 11.5 to 12.5 degrees with reference mark (4). Gage reading will indicate amount of reshimming (as necessary).

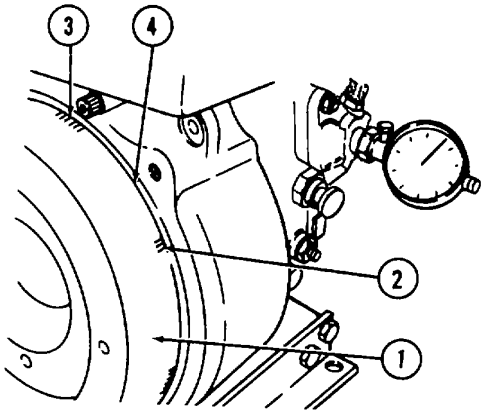

NOTE

The end of delivery is delayed or advanced by adding or removing shims (1) to injection pump (2). The general rule for shimming is as follows: More shims = end of delivery later (lower number of degrees) Less shims = end of delivery earlier (higher number of degrees)

6 Remove fuel shutoff clamp 668 383 00 from fuel hose.

7 After correction of shimming, repeat steps 1 and 2 for checking purposes.

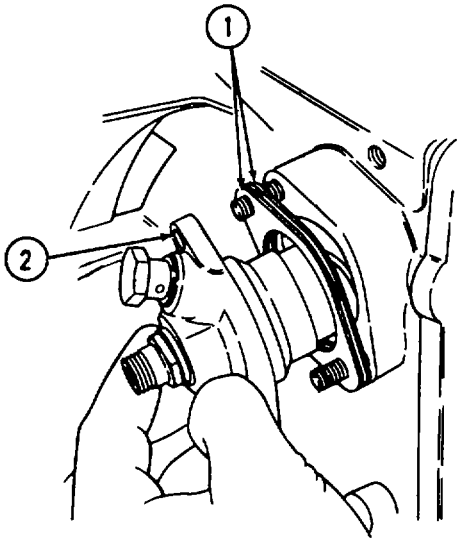

4-15. TEST/REPLACE/ADJUST INJECTION PUMP (Continued)

Adjustment of Delivery Lift:

NOTE

Delivery lift controls the quantity of fuel which is injected at full throttle (full load)

1 With flywheel timing marks (2) (11. 5 to 12. 5 degrees) aligned with reference mark (3), rotate dial gage 612 087 00 face to zero

2 Slowly rotate flywheel (1) in a clockwise direction when facing flywheel until dial gage indicates 0. 052 inch (1. 34 mm)

3 Stop flywheel at position indicated in step 2

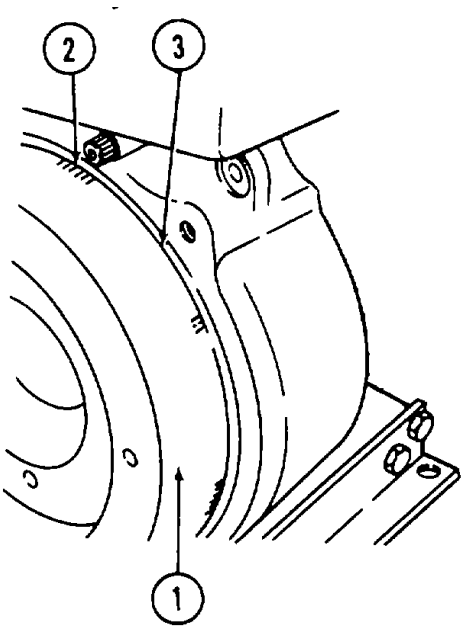

WARNING

Death or serious injury could occur if fuel is not handled carefully. Use in a well-ventilated area away from open flame, arcing equipment, ignition sources, heaters, or excessive heat. Always store fuel in proper, marked containers DO NOT SMOKE

4 At this point, fuel should emerge again from spill pipe (1) of spill device (2)

NOTE

If fuel does not emerge, turn the extra fuel device. If results are not obtained, turn the extra fuel device in the opposite direction

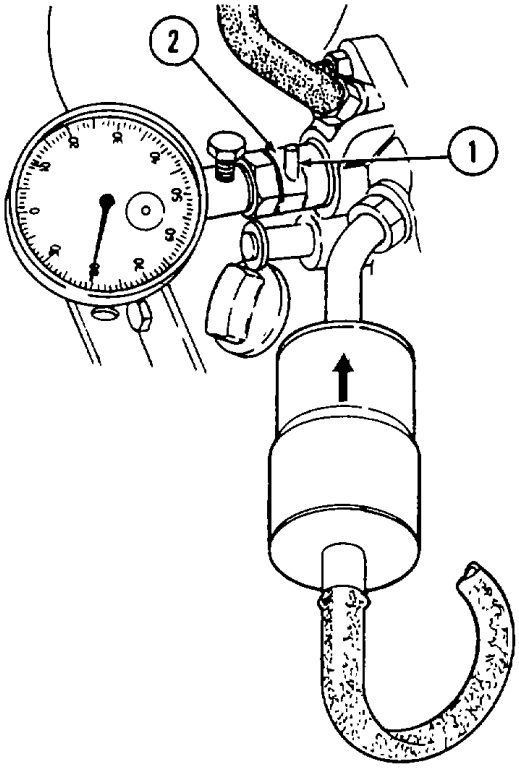

4-15. TEST/REPLACE/ADJUST INJECTION PUMP (Continued)

5 Loosen extra fuel button jam nut (2) with socket wrench, 30 mm, 668 335 00.

6 Using special wrench 606 000 00, slightly rotate eccentric (1) until fuel just starts to emerge.

7 Tighten extra fuel button jam nut (2).

8 Block fuel hose (from fuel tank) using fuel shutoff clamp 668 383 00.

9 Remove dial gage, with spill device attached.

10 Remove delivery valve body (1) and copper washer (2).

11 Install filling piece with three shims (3) in delivery valve holder (4).

12 Insert spring (5) in delivery valve holder (4).

13 Insert copper washer (2) in delivery valve holder (4).

14 Insert delivery valve (6) in valve body (1).

15 Insert delivery valve (6) and valve body (1) into delivery valve holder (4).

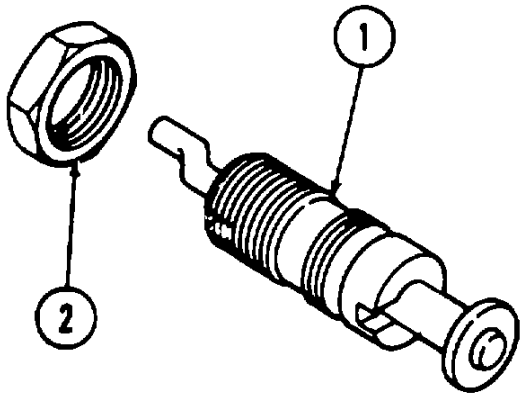

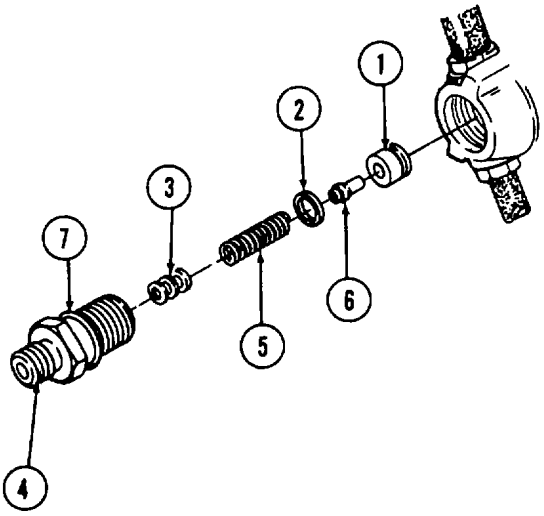

NOTE

Verify that grooved end in the valve body enters the injection pump opening first.

16 Install new preformed packing (7), and then tighten delivery valve holder assembly into injection pump.

4-15. TEST/REPLACE/ADJUST INJECTION PUMP (Continued)

WARNING

Before starting the engine and after making repairs or adjustments on the fuel system, a 17 mm wrench must be available to allow rapid removal of the steel fuel line at the injection pump in case of a runaway condition. Failure to heed this warning can result in injury to personnel and equipment damage.

17 Install fuel filter, fuel hoses, and hose clamps as described in INSTALLATION steps 5, 6, 8, and 9 of paragraph 3-25.

18 Remove fuel shutoff clamp 668 383 00 from fuel hose.

19 Install engine adapter housing.

4-16. REPLACE CRANK ASSEMBLY GEARS

This task covers:

a. Removal
b. Cleaning/Inspection
c. Assembly

INITIAL SETUP

Tools

Shop set, automotive repair, field maintenance, basic

Materials/Parts

Diesel fuel oil (Item 2, Appendix E)
Grease (Item 3, Appendix E)
Grease (Item 4, Appendix E)

General Safety Instructions

Well-ventilated area required.

REMOVAL:

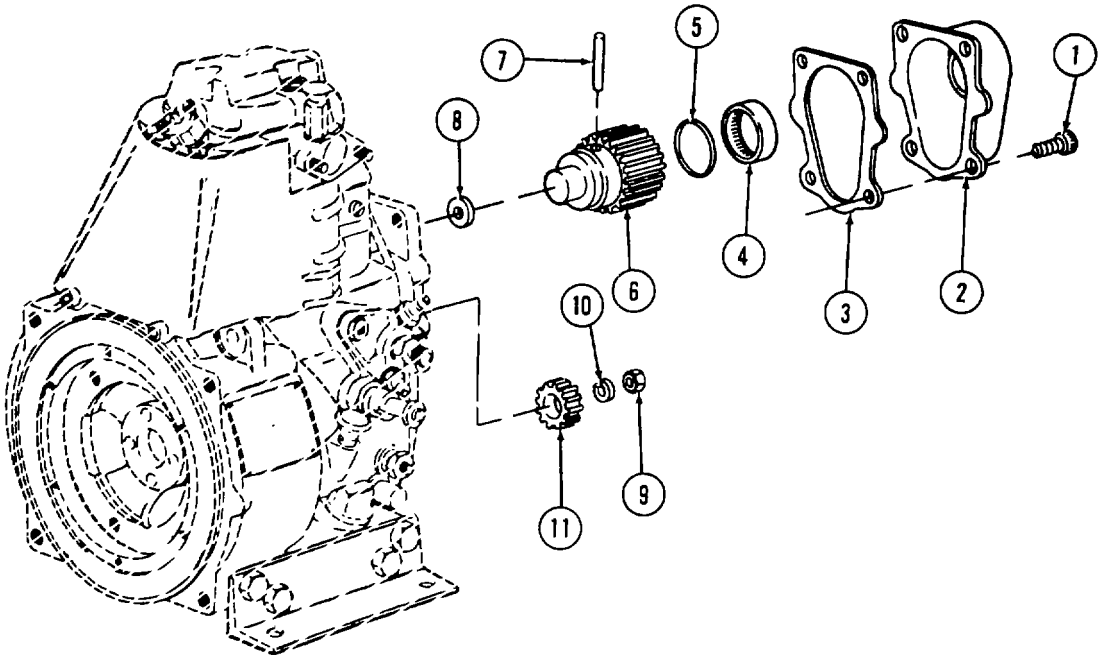

1 Remove four Allen screws (1) and remove housing (2).

2 Remove and discard gasket (3).

3 Remove needle shell (4), oil seal (5), gear wheel (6), and stud (7) as an assembly.

4 Remove needle shell (4), oil seal (5), and stud (7) from gear wheel (6).

5 Remove disc (8).

6 Remove hexagon nut (9) and spring washer (10).

7 Remove pinion (11).

4-16. REPLACE CRANK ASSEMBLY GEARS (Continued)

CLEANING:

WARNING

Death or serious injury could occur if fuel is not handled carefully. Use in a well-ventilated area away from open flame, arcing equipment, ignition sources, heaters, or excessive heat. Always store fuel in proper, marked containers. DO NOT SMOKE.

Death or serious injury could occur if compressed air is directed against the skin. Do not use compressed air for cleaning or drying unless the pressure is/has been reduced to 30 psi (2.06 bar) or less. When working with compressed air, always use chip guards, eye protection, and other personal protective equipment.

1 Clean housing (2), gear wheel (6), and pinion (11) with diesel fuel and dry with compressed air.

2 Inspect all components for damage or excessive wear. Replace any components severely damaged or worn.

ASSEMBLY:

CAUTION

If either the gear wheel or pinion needs to be replaced, replace both. Timing marks on the small pinion must be aligned with the keyway on the tapered shaft. The timing marks on the gear wheel must be aligned with the mark on the small pinion. Failure to heed this caution can damage equipment.

1 Slide pinion (11) onto camshaft. Install spring washer (10) and hexagon nut (9) and tighten securely.

2 Install disc (8) into timing cover housing with the graphite side of disc (8) facing outward.

3 Lubricate dry bushing in timing cover housing with MIL-G-10924 grease.

4 Install gear wheel (6) into dry bushing and secure gear wheel (6) with stud (7).

5 Install oil seal (5) and needle shell (4) onto gear wheel (6).

6 Fill housing (2) with 3-1/2 ounces (100 g) of warm MIL-G-10789 grease. Mount gasket (3) and housing (2) onto timing cover with four Allen screws (1).

4-17. INSPECT/REPLACE CYLINDER HEAD AND VALVE ASSEMBLY

This task covers:

a. Removal
b. Disassembly
c. Cleaning/Inspection
d. Assembly/Adjustment
e. Installation/Adjustment

INITIAL SETUP

Tools

Shop set, automotive repair, field maintenance, basic

Allen socket, 8 mm
612 095 00

Box wrench
618 306 00

Dial gage
612 087 00

Measuring device
603 114 00

Retainer bracket for cylinder
612 752 00

Materials/Parts

Diesel fuel oil (Item 2, Appendix E)

Equipment Condition

Para	Condition Description
3-21	Pump case assembly removed.
3-27	Fuel tank removed.
3-28	Muffler removed.
4-14	Injector removed from cylinder

General Safety Instructions

Well-ventilated area required.

REMOVAL:

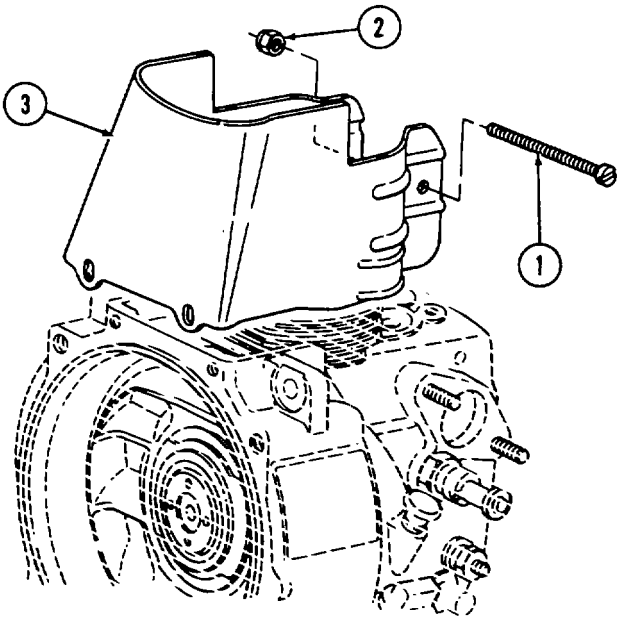

1 Remove screw (1) and hex nut (2) from cowling (3).

2 Remove cowling (3) from engine.

4-17. INSPECT/REPLACE CYLINDER HEAD AND VALVE ASSEMBLY (Continued)

3 Remove screw (1) and pipe clip (2).

4 Remove two nuts (3) and two spring washers (4).

5 Lift cylinder head cover (5) off cylinder head.

6 Remove and discard gasket (6),

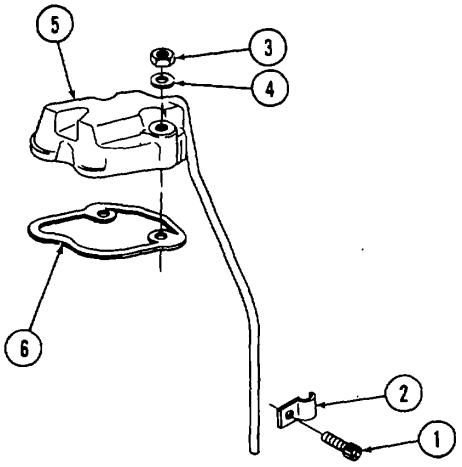

7 Remove four nuts (1) from four studs (2) and remove rocker shaft (3) with rockers, lifting eye, fuel tank bracket, and two air shields. Remove deflector (4).

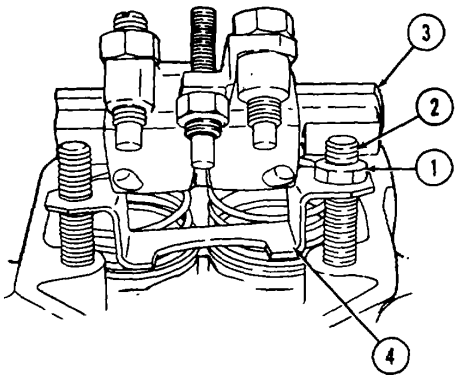

NOTE

Record thickness of gasket to aid in selection of new gasket during installation.

8 Remove cylinder head (1) and gasket (2). Discard gasket.

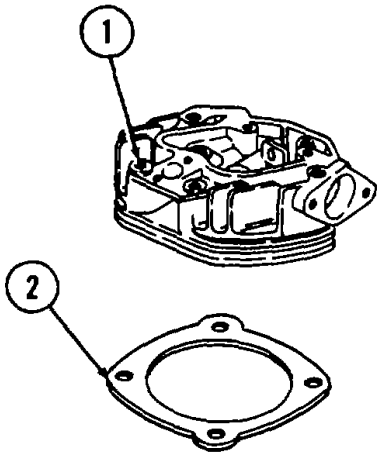

4-17. INSPECT/REPLACE CYLINDER HEAD AND VALVE ASSEMBLY (Continued)

9 Remove pushrod (1) and complete pushrod (2) from protection tubes (3).

10 Remove protection tubes (3), preformed packings (4), shims (5), and pressure springs (6).

NOTE

Complete pushrod (2) belongs to injection pump side of engine.

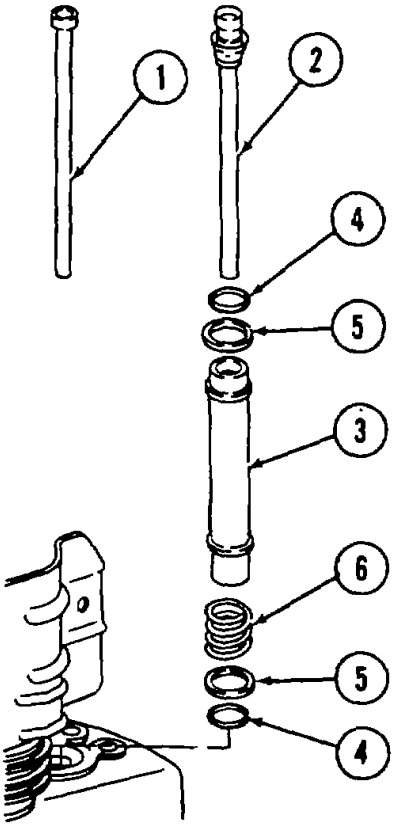

DISASSEMBLY:

CAUTION

Do not scratch the cylinder head sealing face. Scratches could cause poor sealing of cylinder head and cylinder.

1 Press down cup (1) and remove collets (2).

2 Remove valve spring (3), washer (4), and cap (5).

3 Remove valve (6) from cylinder head (7).

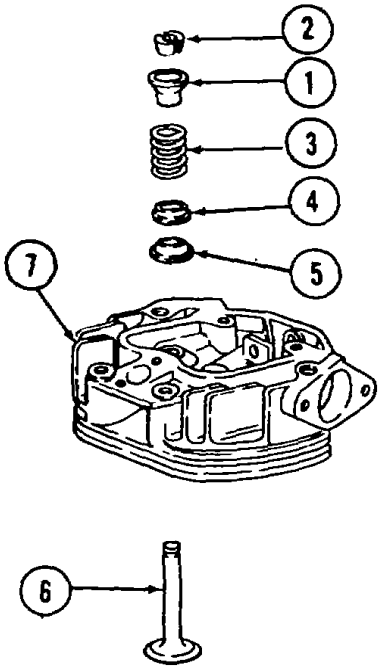

4-17. INSPECT/REPLACE CYLINDER HEAD AND VALVE ASSEMBLY (Continued)

4 Remove nut (1) from threaded pin (2).

5 Use needlenose pliers to remove pin (3) with 10 spring plates (4), and preformed packing (5) attached.

6 Remove and discard preformed packing (5).

7 Knock out pin (6) and remove decompression shaft (7) and pinion (8) from cylinder head (9).

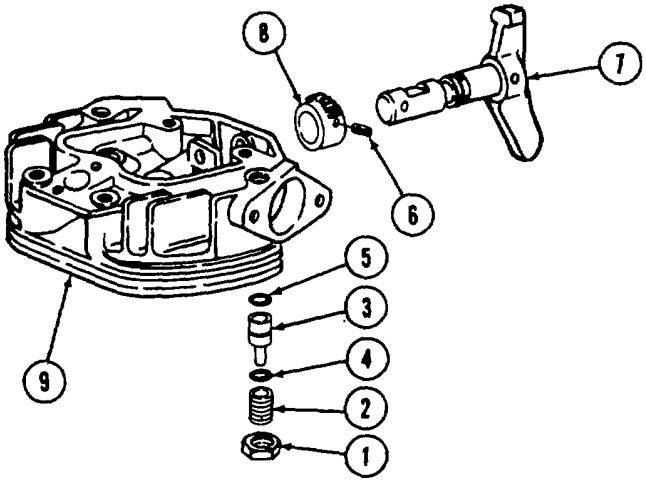

CLEANING/INSPECTION:

WARNING

Death or serious injury could occur if fuel is not handled carefully. Use in a well-ventilated area away from open flame, arcing equipment, ignition sources, heaters, or excessive heat. Always store fuel in proper, marked containers. DO NOT SMOKE.

Death or serious injury could occur if compressed air is directed against the skin. Do not use compressed air for cleaning or drying unless the pressure is/has been reduced to 30 psi (2. 06 bar) or less. When working with compressed air always use chip guards, eye protection, and other personal protective equipment.

1 Clean all parts with a clean cloth dampened with diesel fuel oil. Use wire brush where necessary. Dry with compressed air.

2 Inspect all parts for cracks, rust, corrosion, and excessive heat damage.

3 Inspect for accumulated carbon around injector seat in cylinder head.

4 Replace cylinder head if it is damaged.

4-17. INSPECT/REPLACE CYLINDER HEAD AND VALVE ASSEMBLY (Continued)

5 Measure rocker shaft (1) diameter. If rocker shaft diameter is smaller than 0.7074 inch (17. 967 mm), it must be replaced.

6 Measure rocker bore bushing (2) inside diameter. If rocker bore bushing inside diameter is greater than 0.7076 inch (17.974 mm), replace bushing (2).

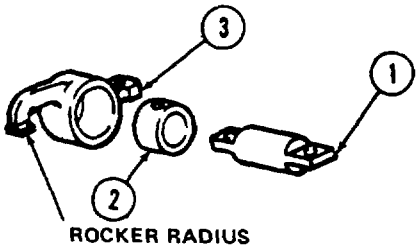

7 Measure rocker (3) radius. The radius must be 0. 315 inch (8 mm). No flattening or brinelling is permitted on the rocker radius. If there is any evidence of flattening the rocker must be replaced.

NOTE

When replacing rocker (3) you must also replace bushing (2). They are replaced as an assembly. Bushing (2), however, can be replaced separately.

8 Inspect valve seats in cylinder head. If there is any evidence of damage, replace cylinder head.

9 Inspect valves. If there is any evidence of damage or distortion, replace valve.

ASSEMBLY/ADJUSTMENT:

1 Install pinion (8) in cylinder head (9).

2 Insert decompression shaft (7) through cylinder head (9) and into pinion (8).

3 Align holes in pinion (8) and decompression shaft (7).

4 Install pin (6).

5 Install new preformed packing (5) on pin (3).

6 Install 10 spring plates (4) on pin (3). The spring plates (4) must be installed in five sets with concave sides together to create a spring action.

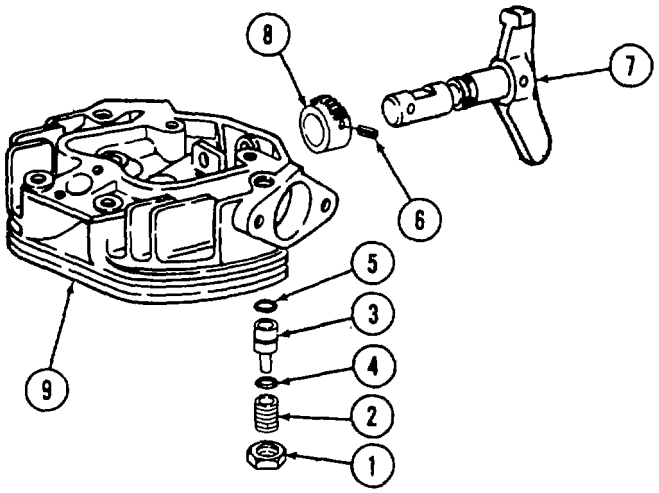

7 Install pin (3) with assembled preformed packing (5) and spring plates (4) into cylinder head (9).

8 Rotate decompression shaft (7) to horizontal position.

9 Install threaded pin (2) and tighten until snug.

10 Secure nut (1).

4-17. INSPECT/REPLACE CYLINDER HEAD AND VALVE ASSEMBLY (Continued)

CAUTION

Do not scratch the cylinder head sealing face. Scratches could cause poor sealing of cylinder head and cylinder.

11 Insert valve (6) into cylinder head (7).

12 Install cap (5), washer (4), valve spring (3), and cup (1).

13 Press down on cup (1) and install collets (2).

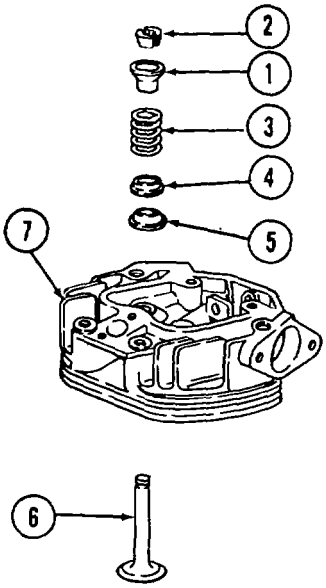

INSTALLATION/ADJUSTMENT:

CAUTION

Too small a clearance will damage piston, cylinder head, and valves. Too large a clearance will result in difficult starting.

1 Adjust cylinder head clearance.
   a. Insert dial gage 612 087 00 into measuring device 603 114 00.
   b. Put dial gage 612 087 00 with measuring device 603 114 00 on a flat surface.
   c. Pre-tension dial gage 612 087 00 (1) to 1 mm and lightly tighten in position.
   d. Set the dial gage to zero.
   e. Install retaining bracket 612 752 00 (3) to retain cylinder (4).
   f. Bring the piston to TDC position.
   g. Carefully lower dial gage 612 087 00 (1) with measuring device 603 114 00 (2) on cylinder (4).
   h. Measure the distance between the top of the cylinder and the top of the piston. Record reading on dial gage (1).

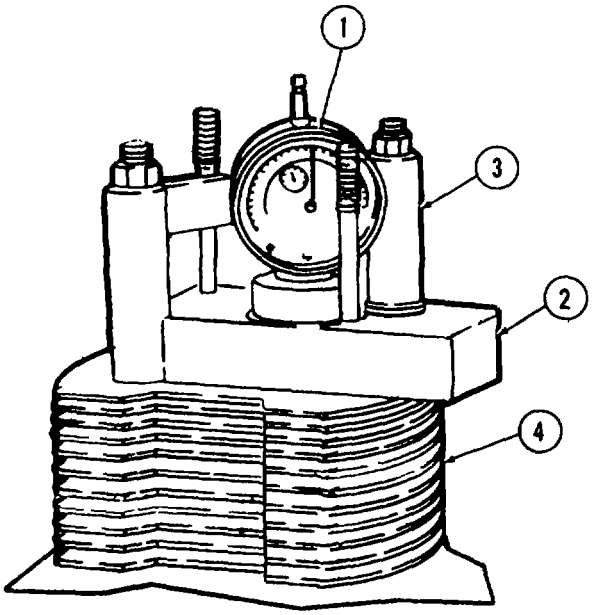

4-17. INSPECT/REPLACE CYLINDER HEAD AND VALVE ASSEMBLY (Continued)

i. Subtract reading on dial gage that was recorded from the required clearance of 0.0217/0.0256 inch (0.55/0.65 mm). This difference is the thickness of the gasket needed for proper cylinder head clearance.

NOTE

Gaskets come in various thicknesses. If you have a choice between two gaskets, it is best to use the thickest one.

j. Remove dial gage 612 087 00 with measuring device 603 114 00, and retaining bracket 612 752 00.

2 Adjust complete pushrod (1) so dimension A equals 5. 8189/5. 8268 inches (147. 8/148. 0 mm). This adjustment is required for proper engagement of complete pushrod with pinion on decompression shaft.

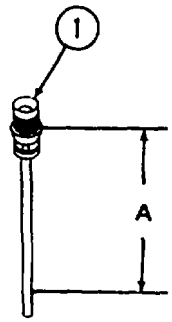

3 Install preformed packings (4), shims (5), pressure springs (6), and protection tubes (3).

4 Install complete pushrod (2) closest to injection pump side of engine.

5 Install pushrod (1).

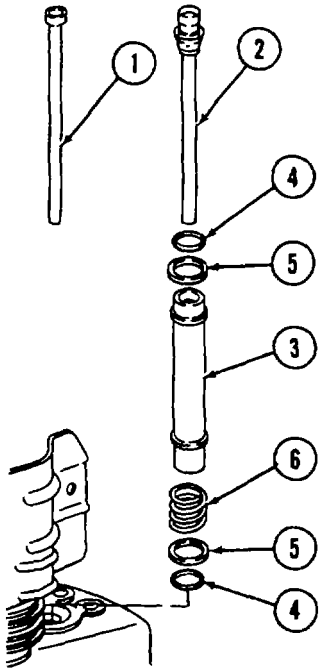

4-17. INSPECT/REPLACE CYLINDER HEAD AND VALVE ASSEMBLY (Continued)

6 Install new gasket (2) and cylinder head (1) on cylinder.

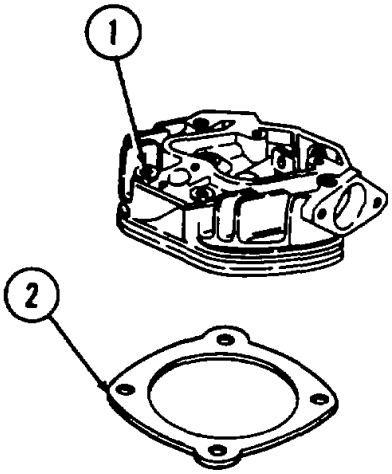

7 Install rocker shaft (3) with rockers, two air shields, fuel tank bracket, and lifting eye. Install deflector (4).

8 Install four nuts (1) on four studs (2) and tighten nuts equally and crosswise to a torque of 47 foot-pounds (6.5 m•kg).

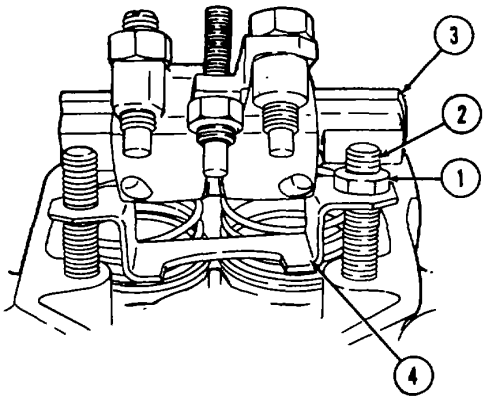

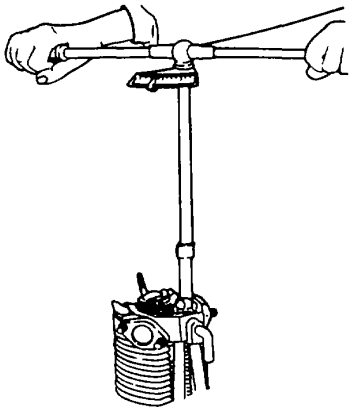

4-17. INSPECT/REPLACE CYLINDER HEAD AND VALVE ASSEMBLY (Continued)

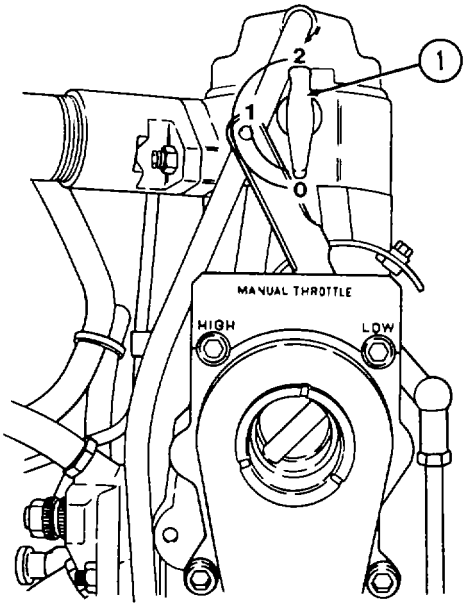

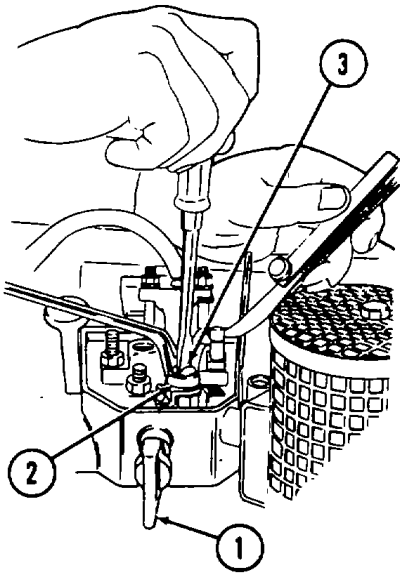

9 Adjust tappet clearance and decompression mechanism.

a. Put decompression lever (1) in position 0.

b. Turn engine clockwise when facing throttle control lever until compression resistance can be felt.

c. Check clearance between rocker and valve stem with a feeler gage. Tappet clearance cold should be 0.004 inch (0.10 mm). To correct clearance loosen nut (2).

d. Adjust screw (3) with screwdriver until feeler gage can be pulled between rocker and valve stem with very slight resistance after nut (2) has been tightened.

10. The adjustment of decompression adjustment screw (3) is required if the engine does not decompress when the decompression lever is in position 1.

a. Turn engine in same direction as for adjusting tappet clearance.

b. Put decompression lever in position 1.

4-17. INSPECT/REPLACE CYLINDER HEAD AND VALVE ASSEMBLY (Continued)

c. Loosen nut (2) using box wrench 618 306 00 and turn adjustment screw (1) clockwise until rocker touches valve stem

d. Turn adjustment screw (1) another half turn and secure by tightening nut (2)

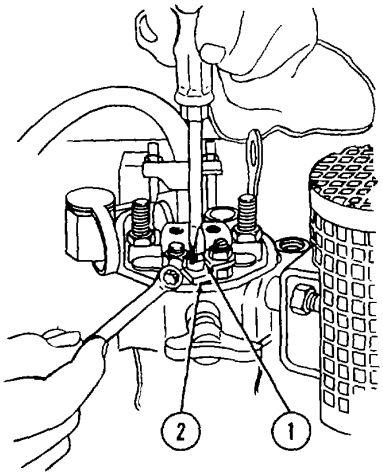

11. Check clearance of complete pushrod (1) and pinion (2).

a. Use a feeler gage to check that clearance (3) between socket of complete pushrod (1) and pinion (2) is 0.039 inch (1.0 mm)

b. Check that clearance (4) is 0.039 inch (1.0 mm)

c. Clearances can be adjusted by adjusting complete pushrod (1) for clearance (3) and adjusting rocker shaft for clearance (4)

NOTE

During engine operation decompression shaft must not move. Assured clearances will prevent movement.

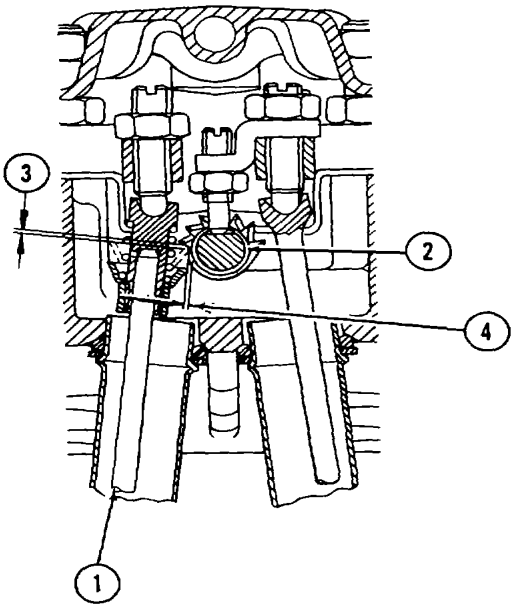

4-17. INSPECT/REPLACE CYLINDER HEAD AND VALVE ASSEMBLY (Continued)

12 Install gasket (6) on cylinder head.

13 Install cylinder head cover (5) on gasket (6)

14. Install two spring washers (4) and nuts (3). Tighten securely.

15. Install pipe clip (2) and screw (1).

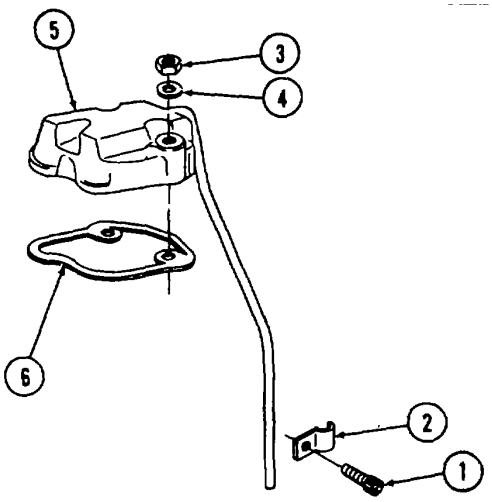

16 Install cowling (3) to engine.

17 Install screw (1) and hex nut (2).

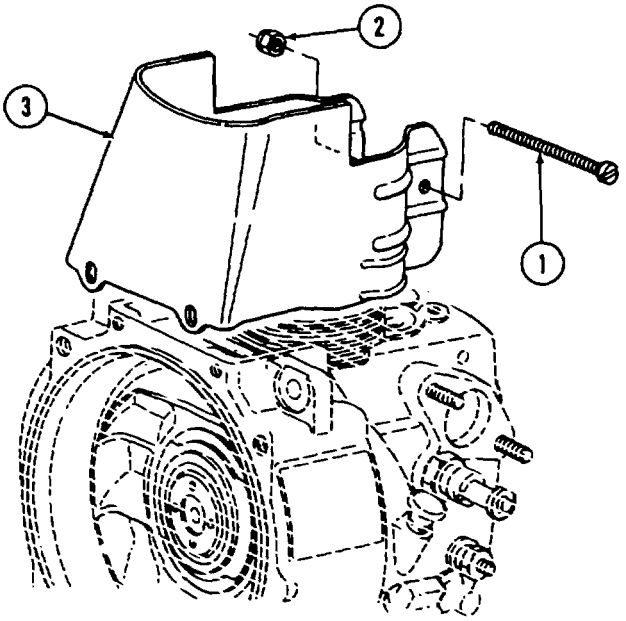

4-18. INSPECT/REPLACE CYLINDER

This task covers:
a. Removal
b. Cleaning/Inspection
c. Repair
d. Installation

INITIAL SETUP

Tools

Shop set, automotive repair, field maintenance, basic

Dial gage (1/100 to 58 mm)
612 087 00

Piston ring clamp
666 346 00

Piston ring pliers
612 090 00

Materials/Parts

Dry cleaning solvent (Item 2, Appendix E)

Lubricating oil (Item 6, Appendix E)

Marking color (Item 1, Appendix E)

References

Para 4-19	Inspect/Repair/Replace Piston

Equipment Condition

Para	Condition Description
4-17	Cylinder head removed.

General Safety Instructions

Well-ventilated area required.

REMOVAL:

CAUTION

When removing cylinder, make sure piston or connecting rod does not knock against crankcase. This could result in serious damage to piston or connecting rod

1. Matchmark cylinder (1) and crankcase (2) with marking color to make sure of proper installation during assembly.
2. Pull cylinder (1) from crankcase (2).

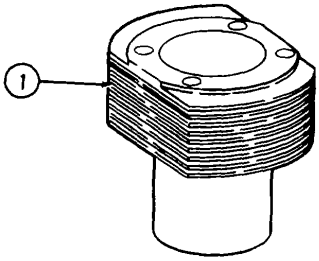

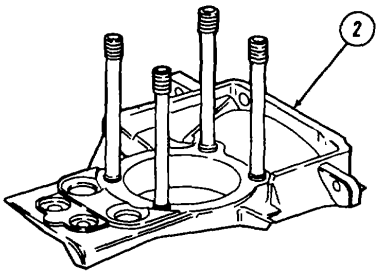

4-18. INSPECT/REPLACE CYLINDER (Continued)

CLEANING/INSPECTION:

WARNING

Dry cleaning solvent P-D-680 (safety or Stoddard's Solvent) is potentially dangerous. Avoid repeated and prolonged breathing of vapors and skin contact with the liquid. Do not use near open flame, arcing equipment, or other ignition sources. Always wear eye protection and protective clothing. The flash point of P-D-680 is 100° to 138°F (38° to 59°C)

Death or serious injury could occur if compressed air is directed against the skin. Do not use compressed air for cleaning or drying unless the pressure is/has been reduced to 30 psi (2. 06 bar) or less. When working with compressed air always use chip guards, eye protection, and other personal protective equipment

1 Clean cylinder seats in crankcase (2) with dry cleaning solvent and dry with compressed air. Check that cylinder seats are smooth and flat

2 Clean cylinder thoroughly with dry cleaning solvent. Dry with compressed air. Inspect for damage, warpage, rust, or corrosion. If severely damaged or warped, replace with new cylinder and piston

NOTE
For piston replacement instructions refer to paragraph 4-19.

3 Inspect cylinder for cracks. Inspect for scoring, glazing, or a ridge on the upper portion of inner surface. Inspect for metal particles (fretting) on outer surface. Replace damaged cylinder with new cylinder and piston.

4-18. INSPECT/REPLACE CYLINDER (Continued)

4 Measure cylinder bore at levels 1 to 4 of engine centerline axis A and crossline axis B. A normal or new bore diameter should be 2.8740 to 2.8774 inches (73.00 to 73.09 mm). If wear limits for a normal bore cylinder have been reached or exceeded, replace cylinder and piston. If measurements on axis A and axis B are different, cylinder is out-of-round or has high spots. Replace cylinder and piston

5 Check that the top and bottom joint faces are smooth and flat. If damaged, replace cylinder and piston

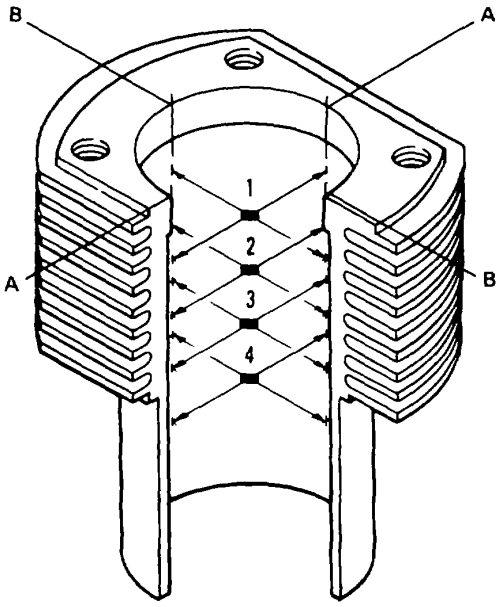

REPAIR:

1 Remove slight ridges, score marks, and glaze with a hone equipped with 20-grit stones. Work hone up and down rapidly the full length of the cylinder bore several times in a criss-cross pattern. Criss-cross pattern produces hone marks on a 45-degree axis, which aids piston movement and helps prevent formation of ridges

WARNING

Dry cleaning solvent P-D-680 (safety or Stoddard's Solvent) is potentially dangerous. Avoid repeated and prolonged breathing of vapors and skin contact with the liquid. Do not use near open flame, arcing equipment, or other ignition sources. Always wear eye protection and protective clothing. The flash point of P-D-680 is 100° to 138°F (38° to 59°C)

Death or serious injury could occur if compressed air is directed against the skin. Do not use compressed air for cleaning or drying unless the pressure is/has been reduced to 30 psi (2.06 bar) or less. When working with compressed air, always use chip guards, eye protection, and other personal protective equipment

2 Clean cylinder with dry cleaning solvent and dry with compressed air. Remove any burrs.

3 Recheck cylinder bore and out-of-round on repaired cylinder as described above. Replace if out of tolerance.

4-18. INSPECT/REPLACE CYLINDER (Continued)

INSTALLATION:

1 Install piston (1) in accordance with paragraph 4-19. Apply lubricating oil to piston rings

2 Check that piston rings are offset by 120 degrees

3 Compress piston rings with piston ring clamp 666 346 00 (2).

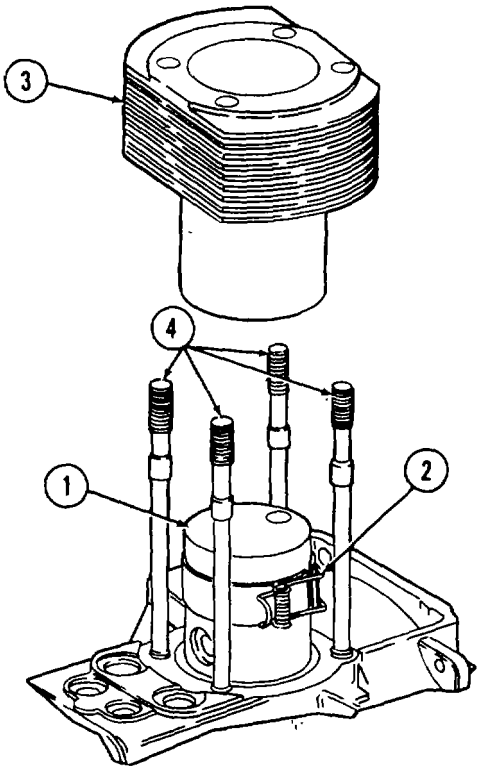

CAUTION

When installing cylinder, make sure piston or connecting rod does not knock against crankcase. This could result in serious damage to piston or connecting rod.

Use care when installing cylinder to prevent damage to piston rings.

4 Apply lubricating oil to inside of cylinder (3) and slowly mount cylinder on studs (4).

5 Remove piston ring clamp 666 346 00 (2).

4-19. INSPECT/REPAIR/REPLACE PISTON

This task covers:
a. Removal
b. Disassembly
c. Cleaning
d. Inspection
e. Repair
f. Assembly

INITIAL SETUP

Tools

Gudgeon pin extractor
614 957 00
Piston ring pliers
612 090 00

Equipment Condition

Para	Condition Description
4-18	Cylinder removed from engine.

Materials/Parts

Diesel fuel oil (Item 2, Appendix E)
Dry cleaning solvent (Item 9, Appendix E)

General Safety Instructions

Well-ventilated area required.

REMOVAL:

CAUTION

When removing piston, make sure piston or connecting rod does not knock against crankcase. This could result in serious damage to piston or connecting rod.

1 Remove and discard circlip (1)

2 Press out gudgeon pin (2) far enough to remove gudgeon pin and piston (3) from connecting rod (4).

3 Remove piston (3) and gudgeon pin (2).

4 Remove and discard circlip (5).

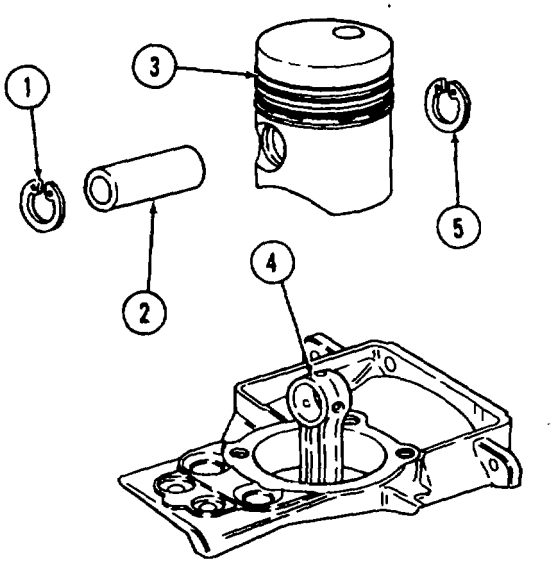

4-19. INSPECT/REPAIR/REPLACE PISTON (Continued)

DISASSEMBLY:

1 Remove gudgeon pin (2) from piston (3) using gudgeon pin extractor 614 957 00 if necessary

CAUTION

Piston ring breakage may occur if rings are opened more than necessary when removing or installing them. Do not strain rings

2 Remove piston ring set (6) from piston (3) with piston ring pliers 612 090 00.

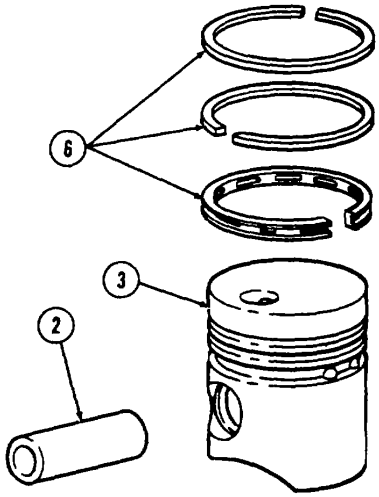

CLEANING:

WARNING

Dry cleaning solvent P-D-680 (safety or Stoddard's Solvent) is potentially dangerous. Avoid repeated and prolonged breathing of vapors and skin contact with the liquid. Do not use near open flame, arcing equipment, or other ignition sources. Always wear eye protection and protective clothing. The flash point of P-D-680 is 100° to 138°F (38° to 59°C)

Death or serious injury could occur if compressed air is directed against the skin. Do not use compressed air for cleaning or drying unless the pressure is/has been reduced to 30 psi (2.06 bar) or less. When working with compressed air, always use chip guards, eye protection, and other personal protective equipment.

1 Clean piston (3) and gudgeon pin (2) with dry cleaning solvent and dry with compressed air.

2 Remove carbon from piston ring lands and grooves.

3 Clean inside surface of piston and piston skirt.

4 Clean gudgeon pin bore.

4-19. INSPECT/REPAIR/REPLACE PISTON (Continued)

INSPECTION

1 Inspect piston, piston skirt, and piston grooves for excessive wear and damage. Replace damaged piston

NOTE

Excessively worn pistons, rings, or cylinders may be an indication of abnormal maintenance procedures or operating conditions. Check for and correct any abnormalities

2 Examine piston (1) for scoring, fretting, pitting, cracks (especially on the interior surfaces), damaged ring grooves (2) or lands (3), or for indications of overheating. Repair slight scoring according to repair procedure. Replace damaged piston

3 If piston is badly worn or damaged, check cylinder for excessive out-of-round, high spots, or other damage in accordance with paragraph 4-18.

4 Measure piston diameter (1) along axes A and B. A normal or new piston diameter should be 2.8724 inches (72.96 mm). If piston is out-of-round, replace piston.

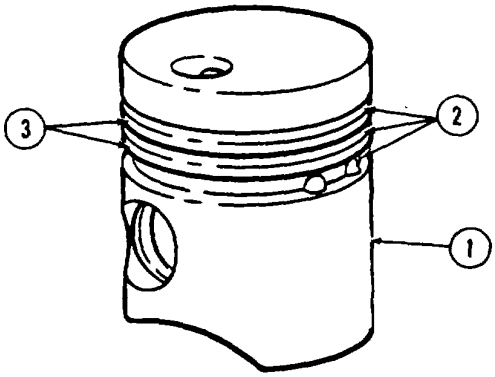

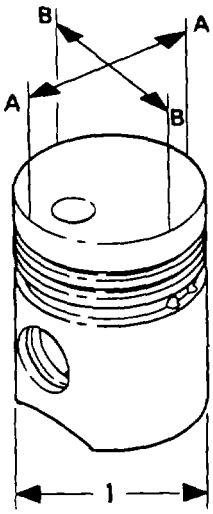

4-19. INSPECT/REPAIR/REPLACE PISTON (Continued)

5 Measure piston compression ring groove (1) width. Measurement should be 0.0826 to 0.0843 inch (2.100 to 2.143 mm). If measurement is greater than 0.0843 inch (2.143 mm), replace piston.

6 Measure piston ring groove (2) width. Measurement should be 0.0811 to 0.0908 inch (2.060 to 2.310 mm). If measurement is greater than 0.0908 inch (2. 310 mm), replace piston.

7 Measure piston oil control ring groove (3) width. Measurement should be 0.1582 to 0.1599 inch (4.020 to 4.060 mm). If measurement is greater than 0.1599 inch (4.060 mm), replace piston.

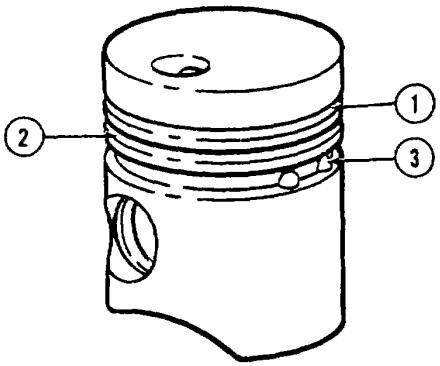

WARNING

Dry cleaning solvent P-D-680 (safety or Stoddard's Solvent) is potentially dangerous. Avoid repeated and prolonged breathing of vapors and skin contact with the liquid. Do not use near open flame, arcing equipment, or other ignition sources. Always wear eye protection and protective clothing. The flash point of P-D-680 is 100° to 138° F (38° to 59°C).

Death or serious injury could occur if compressed air is directed against the skin. Do not use compressed air for cleaning or drying unless the pressure is/has been reduced to 30 psi (2.06 bar) or less. When working with compressed air, always use chip guards, eye protection, and other personal protective equipment.

8 If any ring groove width measurements are smaller than the minimum values given above, piston ring grooves may be clogged with carbon deposits. Clean piston with dry cleaning solvent. Dry with compressed air. Take measurements again.

9 Inspect gudgeon pin for scoring, fretting, pitting, or indications of overheating. If severely damaged, replace gudgeon pin.

REPAIR:

Remove slight scoring or fretting on piston with crocus cloth. Clean and repeat procedure if necessary.

4-19. INSPECT/REPAIR/REPLACE PISTON (Continued)

ASSEMBLY:

1 If cylinder has been replaced, piston must also be replaced.

CAUTION

Piston rings are marked TOP and should be installed as marked. Piston ring breakage may occur if rings are opened more than necessary when removing or installing them. Do not strain rings.

2 If piston replacement is necessary, piston rings must also be replaced.

3 Install piston rings with piston ring pliers 612 090 00. Install oil control ring (1), cast iron compression ring (2), and chrome compression ring (3) in order. Be careful not to strain rings by opening them too wide during installation. Make sure that the piston ring gaps are equally spaced around the piston 120 degrees from each other.

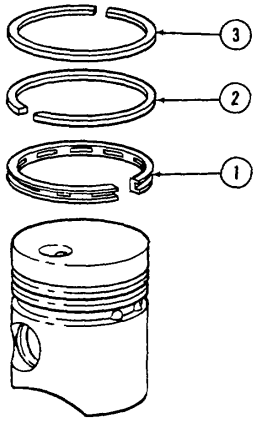

4 Install new circlip (1) in lip groove of piston (3) gudgeon bore.

CAUTION

When installing piston, make sure piston or connecting rod do not knock against crankcase. This could result in serious damage to piston or connecting rod.

5 Insert connecting rod (4) into bottom of piston (3). Make sure that opening of combustion chamber is on the flywheel side.

6 Insert gudgeon pin (2) into piston (3) gudgeon bore and through rod bushing of connecting rod (4). Push in gudgeon pin until it contacts installed circlip (1) and stops.

7 Install new circlip (5).

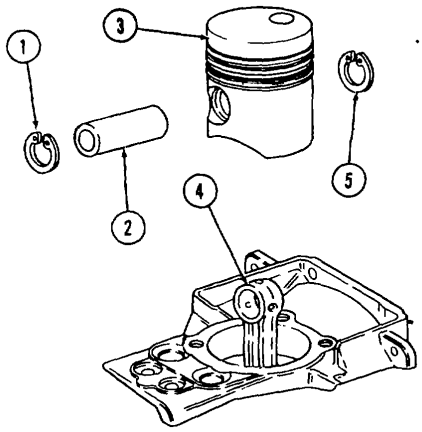

4-20. INSPECT/REPLACE/REPAIR FLYWHEEL

This task covers:
a. Removal
b. Cleaning/Inspection
c. Repair
d. Installation

INITIAL SETUP

Tools Equipment

Shop set, automotive repair, field maintenance, basic

Socket
612 099 00

Materials/Parts

Diesel fuel oil (Item 2, Appendix E)

Condition

Para	Condition Description
	Engine shut down and cool.
3-21	Pump case assembly removed.

General Safety Instructions

Well-ventilated area required for cleaning.

REMOVAL:

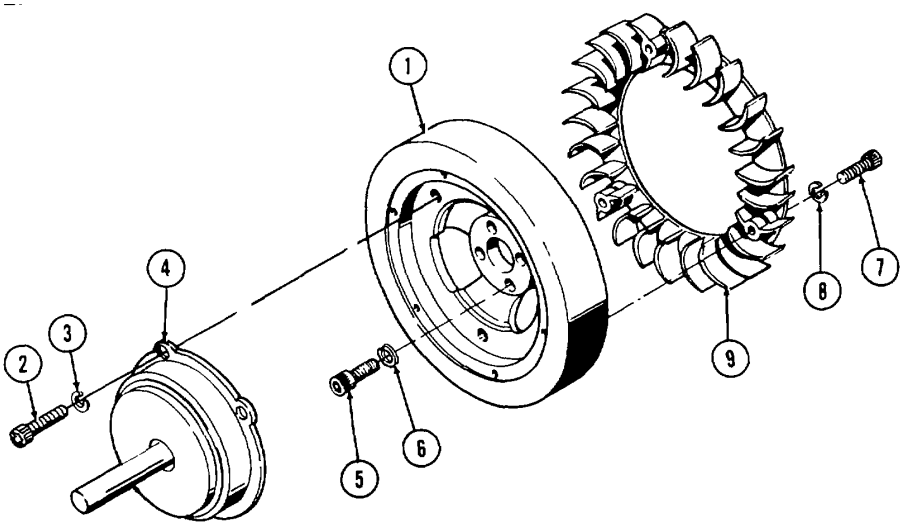

1 Remove engine adapter housing to expose engine flywheel.
2 Restrain flywheel (1).
3 Remove three screws (2) and three spring washers (3).
4 Remove stub shaft (4).
5 Remove four screws (5) and four spring washers (6).
6 Remove flywheel (1).
7 Use socket 612 099 00 to remove three screws (7).
8 Remove three spring washers (8).
9 Separate blower ring (9) from flywheel (1).

4-20. INSPECT/REPLACE/REPAIR FLYWHEEL (Continued)

CLEANING/INSPECTION:

WARNING

Death or serious injury could occur if fuel is not handled carefully. Use in a well-ventilated area away from open flame, arcing equipment, ignition sources, heaters, or excessive heat. Always store fuel in proper, marked containers. DO NOT SMOKE.

Death or serious injury could occur if compressed air is directed against the skin. Do not use compressed air for cleaning or drying unless the pressure is/has been reduced to 30 psi (2.06 bar) or less. When working with compressed air always use chip guards, eye protection, and other personal protective equipment.

1 Clean flywheel thoroughly with diesel fuel oil. Use wire brush if necessary.

2 Dry flywheel with compressed air.

3 Inspect flywheel for cracks, rust, corrosion, or other damage.

4 Replace damaged or cracked flywheel.

5 Clean blower ring thoroughly with diesel fuel oil. Use a soft-bristle brush to clean blower ring blades.

6 Dry blower ring with compressed air.

7 Inspect blower ring for cracks, rust, corrosion, or other damage.

8 Check for damaged, chipped, or broken blower blades.

9 If blades are damaged, cracked, or chipped, replace blower ring.

4-20. INSPECT/REPLACE/REPAIR FLYWHEEL(Continued)

REPAIR:

WARNING

Death or serious injury could occur if fuel is not handled carefully. Use in a well-ventilated area away from open flame, arcing equipment, ignition sources, heaters, or excessive heat. Always store fuel in proper, marked containers. DO NOT SMOKE.

Death or serious injury could occur if compressed air is directed against the skin. Do not use compressed air for cleaning or drying unless the pressure is/has been reduced to 30 psi (2.06 bar) or less. When working with compressed air, always use chip guards, eye protection, and other personal protective equipment.

1 Smooth out nicks or burrs on flywheel and blower ring. Remove rust or corrosion, then clean with diesel fuel oil.

2 Dry with compressed air.

INSTALLATION:

1 Align blower ring (9) holes with mounting holes on flywheel (1).

2 Install three spring washers (8) and three screws (7).

3 Using socket 612 099 00, tighten screws to 22.13 foot-pounds (30 N.m).

4 Install four screws (5) and spring washers (6) through flywheel (1) and into engine crankshaft.

5 Restrain flywheel.

6 Tighten screws to 51.6 foot-pounds (70 N.m).

7 Take restraint off flywheel. Make sure flywheel turns freely.

8 Install stub shaft (4), with three spring washers (3) and three screws (2).

9 Install engine adapter housing.

4-21. INSPECT/REPLACE/REPAIR BASE ASSEMBLY

This task covers:
a. Removal
b. Inspection
c. Repair
d. Installation

INITIAL SETUP

Tools

Shop set, automotive repair, field maintenance, basic

Equipment Condition

Para	**Condition Description**
3-21	Pump case assembly removed.
4-12	Engine assembly removed.

REMOVAL:

1 Remove two deluxe bumpers (1) by removing two machine screws (2), lock washers (3), and hex nuts (4).

2 Remove two rubber grip handles (5).

3 Remove handle (6) from base (7) by removing four hex head cap screws (8), hex nuts (9), and lock washers (10).

4 Remove four shock mounts (11) by removing four hex head cap screws (12), hex nuts (13), lock washers (14), and cinch washers (15).

5 Remove 1/4 turn fastener receptacle (16), countersunk rivet (17), split ring retainer (18), and 1/4 turn fastener (19).

6 Remove two caution plates (20) and eight drive screws (21).

7 Remove two mounting brackets (22), four hex head cap screws (23), regular hex nuts (24), and lock washers (25).

INSPECTION:

1 Inspect all components for dents, rust, corrosion, structural damage, broken welds, or warpage.

2 If damaged or warped, or if welds are broken, repair.

3 If foam pad (26) is damaged, replace.

4-21. INSPECT/REPLACE/REPAIR BASE ASSEMBLY (Continued)

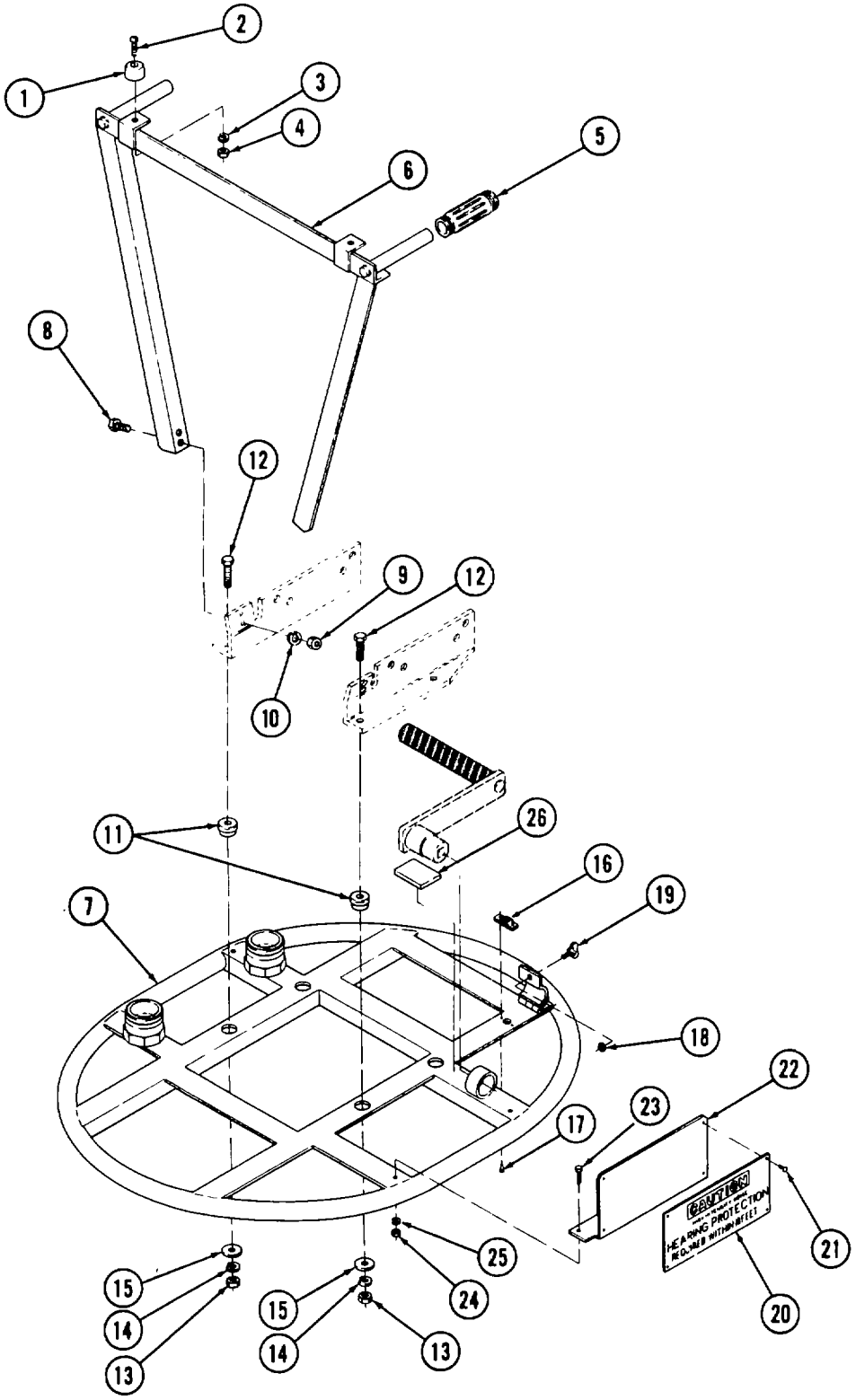

4-21. INSPECT/REPLACE/REPAIR BASE ASSEMBLY (Continued)

REPAIR:

1 Chase threaded holes using appropriate size tap.

WARNING

Dry cleaning solvent P-D-680 (safety or Stoddard's Solvent) is potentially dangerous. Avoid repeated and prolonged breathing of vapors and skin contact with the liquid. Do not use near open flame, arcing equipment, or other ignition sources. Always wear eye protection and protective clothing. The flash point of P-D-680 is 100° to 138°F (38° to 59°C).

Death or serious injury could occur if compressed air is directed against the skin. Do not use compressed air for cleaning or drying unless the pressure is/has been reduced to 30 psi (2.06 bar) or less. When working with compressed air always use chip guards, eye protection, and other personal protective equipment.

2 Using dry cleaning solvent and a stiff-bristled brush, clean threaded holes thoroughly. Dry with compressed air.

3 If base has broken welds, chip away all loose material before reworking welds.

INSTALLATION:

1 Install two mounting brackets (22), four hex head cap screws (23), regular hex nuts (24), and lock washers (25).

2 Install two caution plates (20) and eight drive screws (21).

3 Install 1/4 turn fastener receptacle (16), countersunk rivet (17), split ring retainer (18), and 1/4 turn fastener (19).

4 Install four shock mounts (11) with four hex head cap screws (12), hex nuts (13), lock washers (14), and cinch washers (15).

5 Install handle (6) to base (7) with four hex head cap screws (8), hex nuts (13), and lock washers (14).

6 Install two rubber grip handles (5).

7 Install two deluxe bumpers (1) with two machine screws (2), lock washers (3), and hex nuts (4).

CHAPTER 5

REAR INTERMEDIATE MAINTENANCE INSTRUCTIONS

Section I. TROUBLESHOOTING

No troubleshooting procedures are required.

Section II. MAINTENANCE PROCEDURES

INDEX

5-1. GENERAL INSTRUCTIONS

Most maintenance instructions in this section will list resources required, personnel required, and equipment condition for the start of the procedure. Note the following:

- Resources required are not listed unless they apply to the procedure.
- Personnel required are listed only if the task requires more than one. If PERSONNEL is not listed, it means one person can do the task.
- The normal standard equipment condition to start a maintenance task is engine stopped. EQUIPMENT CONDITION is not listed unless some other condition is required.
- Refer to Appendix F to determine torque requirements when tightening threaded fasteners, unless a specific torque value is given in procedure. Standard torque values given in Appendix F are determined by thread size.

5-2. REPAIR CYLINDER HEAD AND VALVE ASSEMBLY

This task covers:
a. Cleaning/Inspection
b. Repair
c. Test

INITIAL SETUP

Tools

Shop set, automotive repair, field maintenance, basic

Clamping holder to grind valve-valve seat
604 581 00

Valve reseating tool, 42.5 mm dia
612 103 00

Guiding pin, 7 mm dia
(valve reseating tool)
612 104 00

Hand reamer, 7 mm dia
(valve guide)
612 107 00

Press-in mandrel, 7 mm dia
(valve guide)
669 347 00

Handle for valve reseating tool
670 323 00

Materials/Parts

Diesel fuel oil (Item 2, Appendix E)

Lapping and grinding compound, 600 grit
(Item 5, Appendix E)

Equipment Condition

Para	Equipment Condition
4-14	Injector removed from cylinder head.
4-17	Cylinder head removed from engine. Rocker and valves removed from cylinder head.

General Safety Instructions

Well-ventilated area required.

CLEANING/INSPECTION:

WARNING

Death or serious injury could occur if fuel is not handled carefully. Use in a well-ventilated area away from open flame, arcing equipment, ignition sources, heaters, or excessive heat. Always store fuel in proper, marked containers. DO NOT SMOKE.

Death or serious injury could occur if compressed air is directed against the skin. Do not use compressed air for cleaning or drying unless the pressure is/has been reduced to 30 psi (2.06 bar) or less. When working with compressed air always use chip guards, eye protection, and other personal protective equipment.

1 Clean cylinder head with a clean cloth dampened with diesel fuel oil. Use wire brush where necessary. Dry with compressed air.

2 Inspect cylinder head for cracks, rust, corrosion, and excessive heat damage. Inspect for accumulated carbon.

5-2. REPAIR CYLINDER HEAD AND VALVE ASSEMBLY (Continued)

3 Replace cylinder head if any of the following conditions exist: if the cylinder contact surface is roughened, not level, and cannot be repaired; if the valve seats are so worn that recutting is no longer possible; if contact surface for cylinder head cover is rough or damaged; or if there are cracks between the valve seats.

4 Check that the inside diameter of each valve guide does not exceed 0.2780 inch (7.059 mm).

5 Check that valve seat angle does not exceed 45 degrees.

6 Clean valves with diesel fuel oil and dry with compressed air.

7 Inspect valves for warpage, burning, or other damage.

8 Inspect valve stems for scratches, scuff marks, or other damage.

9 Inspect valve tulips, faces, and heads for pitting, ridges, or cracks.

10 Check that each valve stem diameter is not less - than 0.2716 inch (6.95 mm).

11 Check that each valve head diameter is not less than 1.200 inches (30.5 mm).

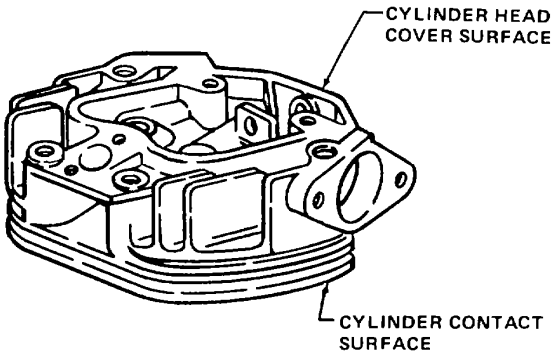

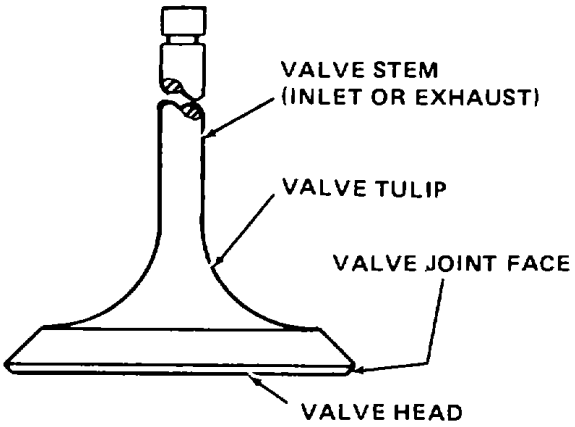

REPAIR:

1 If the inside diameter of a cylinder head valve guide (1) exceeds 0.2780 inch (7.059 mm), replace valve guide. Press out valve guide using mandrel 669 347 00.

2 From cylinder head bottom, push valve guide (1) out of cylinder head (2). Insert new valve guide (1) into cylinder head (2). Install new valve guide by pressing in with mandrel 669 347 00. Minimum inserting pressure is 220 inch-pounds (245 cm. kg).

3 Ream the inside diameter of the valve guide to 0.2756 / 0.2759 inch (7.000 / 7.009 mm) using hand reamer 612 107 00.

4 Repair defective cylinder head valve seats by recutting with a 45 degree valve seat cutter. Recut valve seats with valve reseating tool 612 103 00, guiding pin 612 104 00, and handle for valve reseating tool 670 323 00.Cut until valve seat is absolutely clean.

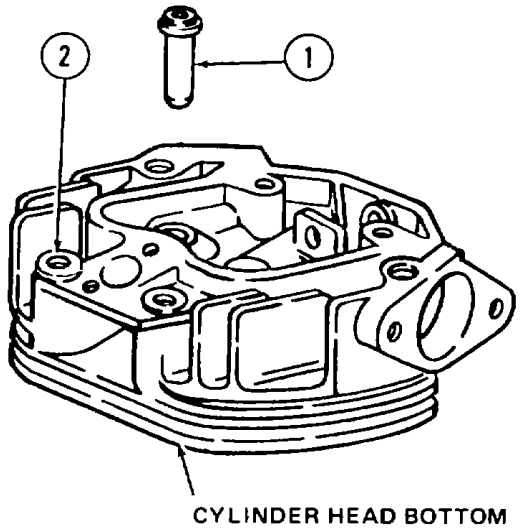

5-2. REPAIR CYLINDER HEAD AND VALVE ASSEMBLY (Continued)

5 The cylinder contact surface of the cylinder head can be repaired by machining. Remove up to a maximum of 0. 0196 inch (0.5 mm) of metal provided the minimum valve recession is maintained.

6 Replace any valves that show head warping, burning, or other damage.

7 Replace valves that have seriously scratched or scuffed stems, or pitted, ridged, or cracked tulips faces, or heads.

8 Replace valves that have a valve head diameter of less than 1.200 inch (30.5 mm).

9 Remove slight scratches or scuff marks.

10 If the cylinder head valve seats were recut, lap the valves by using tool 604 581 00 and 600 grit lapping and grinding compound.

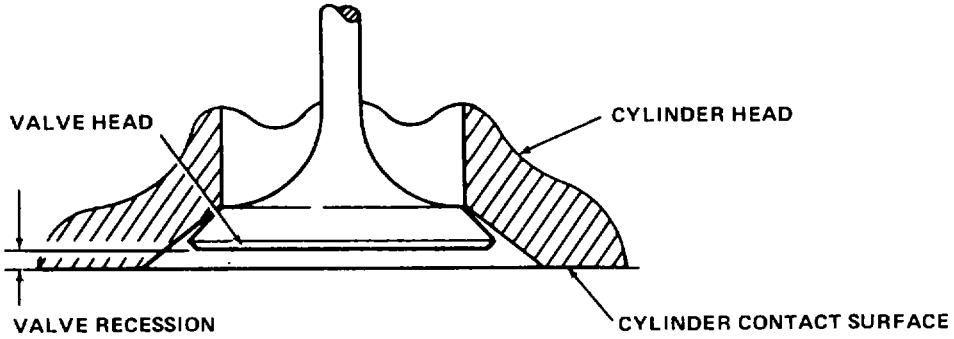

11 After lapping valves check valve recession.

CAUTION

The valve recession must not be less than 0. 018 inch (0. 45 mm), otherwise valve head may touch piston.

The valve recession shall be a maximum of 0. 0275 inch (0. 70 mm) and a minimum of 0. 0180 inch (0.45 mm).

TEST:

1 Insert valve (1) into cylinder head (2).
2 Install cap (3) over valve (1) stem.
3 Install washer (4) on cap (3).
4 Install spring (5) on washer (4).
5 Insert cup (6) into spring (5).
6 Install two collets (7) into cup (6) and over valve (1) stem.
7 Press down on collets (7) and cup (6) until spring (5) compresses and collets (7) are locked in slot in valve (1) stem.

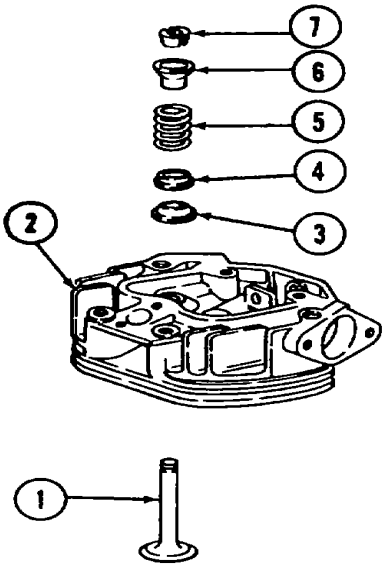

5-2. REPAIR CYLINDER HEAD AND VALVE ASSEMBLY (Continued)

WARNING

Death or serious injury could occur if fuel is not handled carefully. Use in a well-ventilated area away from open flame, arcing equipment, ignition sources, heaters, or excessive heat. Always store fuel in proper, marked containers. DO NOT SMOKE.

8 Check proper fit of valves by pouring fuel into intake and exhaust ports. Observe for leakage at valve seats. A valve fits properly if no fuel trickles through.

5-3. REPAIR/REPLACE CONNECTING ROD

This task covers:
a. Removal
b. Inspection
c. Repair
d. Installation

INITIAL SETUP

Tools

Shop set, automotive repair, field maintenance, basic

Allen socket, 6 mm
612 091 00

Materials/Parts

Diesel fuel oil (Item 2, Appendix E)

Dry cleaning solvent (Item 9, Appendix E)

Lubricating oil (Item 6, Appendix E)

References

Para 4-18	Cylinder
Para 5-7	Crankshaft Assembly
MIL-I-6868	Magnetic Particle Inspection

Equipment Condition

Para	Condition Description
4-19	Piston removed from engine.

General Safety Instructions

Well-ventilated area required.

REMOVAL:

1 Using Allen wrench, remove cover (1) with four caps (2) and Allen screws (3).
2 Remove and discard preformed packing (4).

CAUTION

When removing connecting rod, make sure it does not knock against crankcase. This could result in serious damage to connecting rod.

3 Using Allen socket 612 091 00, remove two Allen screws (5) and remove bottom half of connecting rod (6).
4 Remove top half of connecting rod (7) from top of crankcase.
5 Remove two bearing halves (8) from both halves of connecting rod (6 and 7).

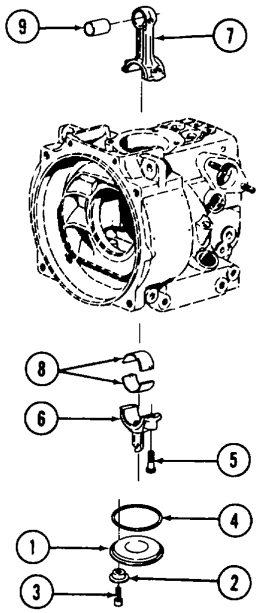

5-3. REPAIR/REPLACE CONNECTING ROD (Continued)

INSPECTION:

WARNING

Dry cleaning solvent P-D-680 (safety or Stoddard's Solvent) is potentially dangerous. Avoid repeated and prolonged breathing of vapors and skin contact with the liquid. Do not use near open flame, arcing equipment, or other ignition sources. Always wear eye protection and protective clothing. The flash point of P-D-680 is 100° to 138°F (38° to 59°C).

Death or serious injury could occur if compressed air is directed against the skin. Do not use compressed air for cleaning or drying unless the pressure is/has been reduced to 30 psi (2.06 bar) or less. When working with compressed air, always use chip guards, eye protection, and other personal protective equipment.

1 Clean connecting rod components with dry cleaning solvent. Remove any carbon deposits with a wire brush. Clean inside surface of rod bushing (9), both connecting rod halves (6 and 7), and bearing (8). Blow compressed air through the drilled oil passage in connecting rod to clean connecting rod and rod bushing.

2 Visually inspect connecting rod for bending, warping, cracking, rust, or other damage. Check for cracks using MIL-1-6868 magnetic particle inspection. Replace if twisted or bent. Grind or replace if indications of cracks are revealed by magnetic particle inspection.

3 Measure and record rod bushing (9) inside diameter. Measure at points 1 and 2 along axes A and B. Measurements should be 0. 9951 to 0. 9858 inch (25. 276 to 25. 040 mm). If any measurement is outside these limits, replace rod bushing.

4 Inspect upper and lower bearing halves (8) for excessive wear, scoring, pitting, flaking, etching, and signs of overheating. Inspect bearing backs for bright spots (bearing moving in supports).

5 Temporarily assemble connecting rod with two new Allen screws and without bearings. Using a torque wrench, tighten screws to 29. 50 foot pounds (40 N. m). Apply some oil to threads and contact surfaces.

6 Measure inside diameter of connecting rod bearing bore. Measurement should be 1. 8114 to 1. 8107 inches (46. 010 to 45. 994 mm). If measurement is outside specified limits, replace connecting rod.

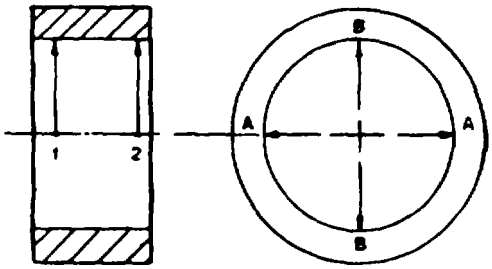

5-3. REPAIR/REPLACE CONNECTING ROD (Continued)

7 Disassemble connecting rod and carefully insert bearing halves (8). The bottom half has a hole which fits into connecting rod cup. Reassemble connecting rod with two Allen screws. Tighten screws following procedures described in preceding step 5.

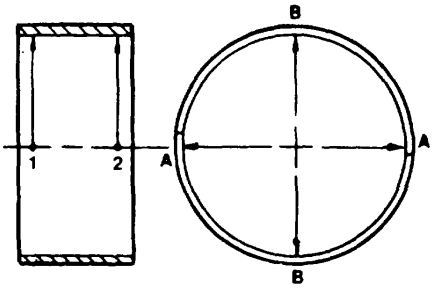

8 Measure inside diameter of bearing. Measure at points 1 and 2 along axes A and B. Measurements should be 1. 6541 to 1. 6525 inches (42.016 to 41. 974 mm).

9 If any measurement is outside the tolerance limits, replace the bearing. Make sure that measurements at points 1 and 2 are not different nor outside the tolerance limits, indicating that bearing is wearing in a conical shape.

10 Make sure measurements along axes A and B are not different nor outside the tolerance limits, indicating the bearing is wearing in an oval shape.

11 If bearing is out-of-round, replace it. Follow procedure described in paragraph 5-7. Also check cylinder and piston for unusual wear. Follow procedures described in paragraphs 4-18 and 4-19.

REPAIR:

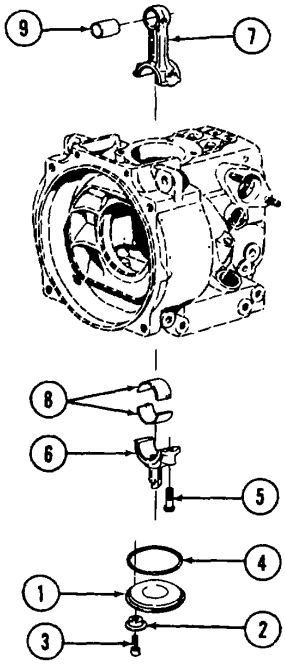

WARNING

Dry cleaning solvent P-D-680 (safety or Stoddard's Solvent) is potentially dangerous. Avoid repeated and prolonged breathing of vapors and skin contact with the liquid. Do not use near open flame, arcing equipment, or other ignition sources. Always wear eye protection and protective clothing. The flash point of P-D-680 is 100° to 138°F (38° to 59°C).

Death or serious injury could occur if compressed air is directed against the skin. Do not use compressed air for cleaning or drying unless the pressure is/has been reduced to 30 psi (2. 06 bar) or less. When working with compressed air, always use chip guards, eye protection, and other personal protective equipment.

1 Clean rod bushing (9) and connecting rod (7) bore with dry cleaning solvent and dry with compressed air.

5-3. REPAIR/REPLACE CONNECTING ROD (Continued)

2 Inspect rod bushing for scoring, overheating, or other damage. Replace if damaged.

3 Measure outside diameter of rod bushing. Measurement should be 1. 1042 to 1. 1037 inches (28. 048 to 28. 035 mm). If measurement is outside specified limits, replace rod bushing.

4 Measure inside diameter of connecting rod bushing bore. Measurement should be 1. 1028 to 1. 1024 inches (28. 013 to 28. 000 mm). If measurement is outside specified limits, replace connecting rod.

CAUTION

Be certain that the numbers on both halves of the connecting rod match.

NOTE

Clean rust preventive from replacement connecting rod. Also make sure bearing bore is thoroughly cleaned to prevent trapped contaminants from adversely affecting bearings.

5 If required, clamp connecting rod in a padded vise and install new rod bushing (9) into connecting rod bushing bore.

CAUTION

Be certain that bearing halves are installed correctly. The bottom bearing half (8) has a hole which fits into lower connecting rod half (6).

1 Carefully insert bearing halves (8) into connecting rod.

CAUTION

Be certain that the numbers on both halves of the connecting rod match. When installing connecting rod, make sure it does not knock against crankcase. This could result in serious damage to connecting rod.

2 Install top half of connecting rod (7) on crankshaft.

3 Install bottom half of connecting rod (6) (with dipper opening to dipstick side) and Allen screws (5). Using a torque wrench and Allen socket, tighten screws to 29. 50 foot-pounds (40 N.m).

4 Lubricate preformed packing (4) with lubricating oil and install into cover (1).

5 Install cover (1) with four caps (2) and Allen screws (3).

5-4. REPAIR/REPLACE TIMING COVER AND CAMSHAFT

This task covers:

a. Removal	**c. Disassembly**	**e. Assembly**
b. Cleaning	**d. Repair**	**f. Installation**

INITIAL SETUP

Tools

Shop set, automotive repair, field maintenance, basic

Auxiliary bush, timing cover oil seal (30 x 47 mm)
666 075 00

Extractor, cam follower spindle
666 324 00

Mounting device, camshaft needle bearing
666 418 00

Punch, camshaft needle bearing
666 425 00

Materials/Parts

Diesel fuel oil (Item 2, Appendix E)

Equipment Condition

Para	Condition Description
3-26	Lift pump removed.
4-15	Injection pump removed
4-16	Crank handle and gears removed.
5-3	Connecting rod removed from engine.

General Safety Instructions

Well-ventilated area required.

REMOVAL:

CAUTION

Lift both cam followers from camshaft when removing timing cover to prevent bending by cam points.

1 Remove six screws (1) and joints (2) and remove timing cover (3) and camshaft (13).

NOTE

Insertion of Allen screws in timing cover holes may aid in removal of timing cover.

2 Matchmark two teeth of camshaft gear and one tooth of crankshaft gear to make sure of proper alignment of gearing when reinstalling timing cover.

5-4. REPAIR/REPLACE TIMING COVER AND CAMSHAFT (Continued)

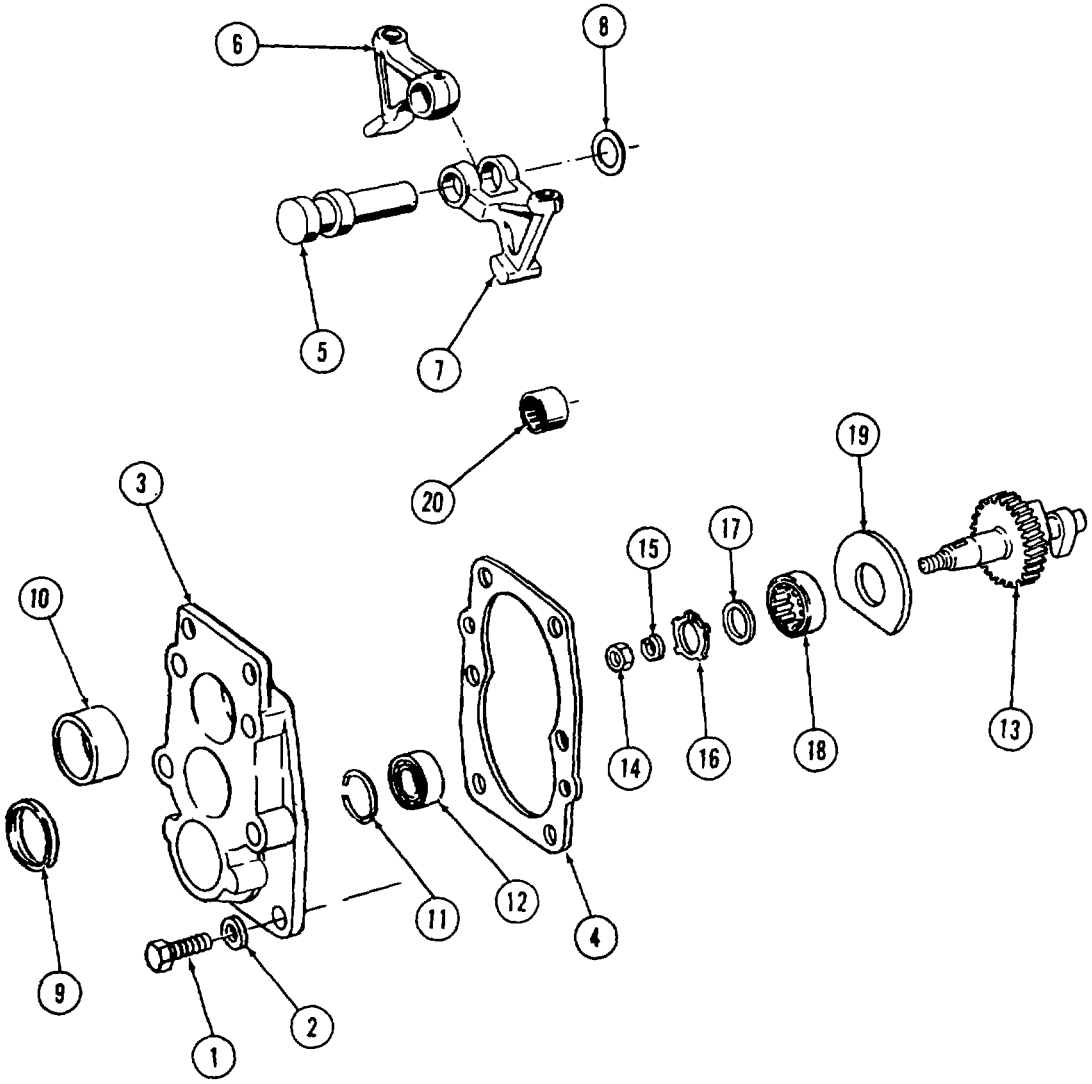

3 Remove and discard gasket (4).

4 Remove plastic plug above injection pump, and remove Allen setscrew from crankcase.

5 Remove spindle (5), cam followers (6 and 7), and shim (8) from crankcase using cam follower spindle extractor 666 324 00.

5-4. REPAIR/REPLACE TIMING COVER AND CAMSHAFT (Continued)

CLEANING:

WARNING

Death or serious injury could occur if fuel is not handled carefully. Use in a well-ventilated area away from open flame, arcing equipment, ignition sources, heaters, or excessive heat. Always store fuel in proper, marked containers. DO NOT SMOKE.

Death or serious injury could occur if compressed air is directed against the skin. Do not use compressed air for cleaning or drying unless the pressure is/has been reduced to 30 psi (2. 06 bar) or less. When working with compressed air, always use chip guards, eye protection, and other personal protective equipment.

1 Clean timing cover with diesel fuel and dry with compressed air.

2 Inspect all components for damage or excessive wear. Replace any components severely damaged or worn.

3 Inspect surface of cam followers. If damaged, replace cam followers.

4 Inspect needle bearing (20). If damaged, replace in accordance with repair procedures.

DISASSEMBLY:

1 Remove oil seal (9) from timing cover (3).

2 Collapse dry bushing (10) and remove.

WARNING

Handling heated parts can cause severe burns. Use proper equipment to handle heated parts.

3 Using an oven, heat timing cover to 120° to 160° F (50° to 70°C). Remove intermediate ring (11) and drive out ball bearing (12).

4 While timing cover is still hot, drive out camshaft (13).

5 Remove hexagon nut (14), spring washer (15), circlip (16), flanged wheel (17), roller bearing (18), and spacer (19).

5-4. REPAIR/REPLACE TIMING COVER AND CAMSHAFT (Continued)

REPAIR:

WARNING

Death or serious injury could occur if fuel is not handled carefully. Use in a well-ventilated area away from open flame, arcing equipment, ignition sources, heaters, or excessive heat. Always store fuel in proper, marked containers. DO NOT SMOKE.

Death or serious injury could occur if compressed air is directed against the skin. Do not use compressed air for cleaning or drying unless the pressure is/has been reduced to 30 psi (2. 06 bar) or less. When working with compressed air, always use chip guards, eye protection, and other personal protective equipment.

1 Reclean with diesel fuel and dry with compressed air.

2 Repair any minor damage, nicks, burrs, rust, or corrosion.

3 If needle bearing (20) is damaged, remove using camshaft needle bearing punch 666 425 00.

4 Replace new needle bearing (20) using camshaft needle bearing mounting device 666 418 00.

ASSEMBLY:

1 Assemble spacer (19), roller bearing (18), flanged wheel (17), circlip (16), spring washer (15),. and hexagon nut (14) onto camshaft (13).

WARNING

Handling heated parts can cause severe burns. Use proper equipment to handle heated parts.

2 Using an oven, heat timing cover (3) to 120° to 160°F (50° to 70°C). Drive in new ball bearing (12) and install new intermediate ring (11).

3 While timing cover is still hot, drive in camshaft (13).

4 Drive in new dry bushing (10).

5 Using timing cover oil seal auxiliary bush 666 075 00, install new oil seal (9).

5-4. REPAIR/REPLACE TIMING COVER AND CAMSHAFT (Continued)

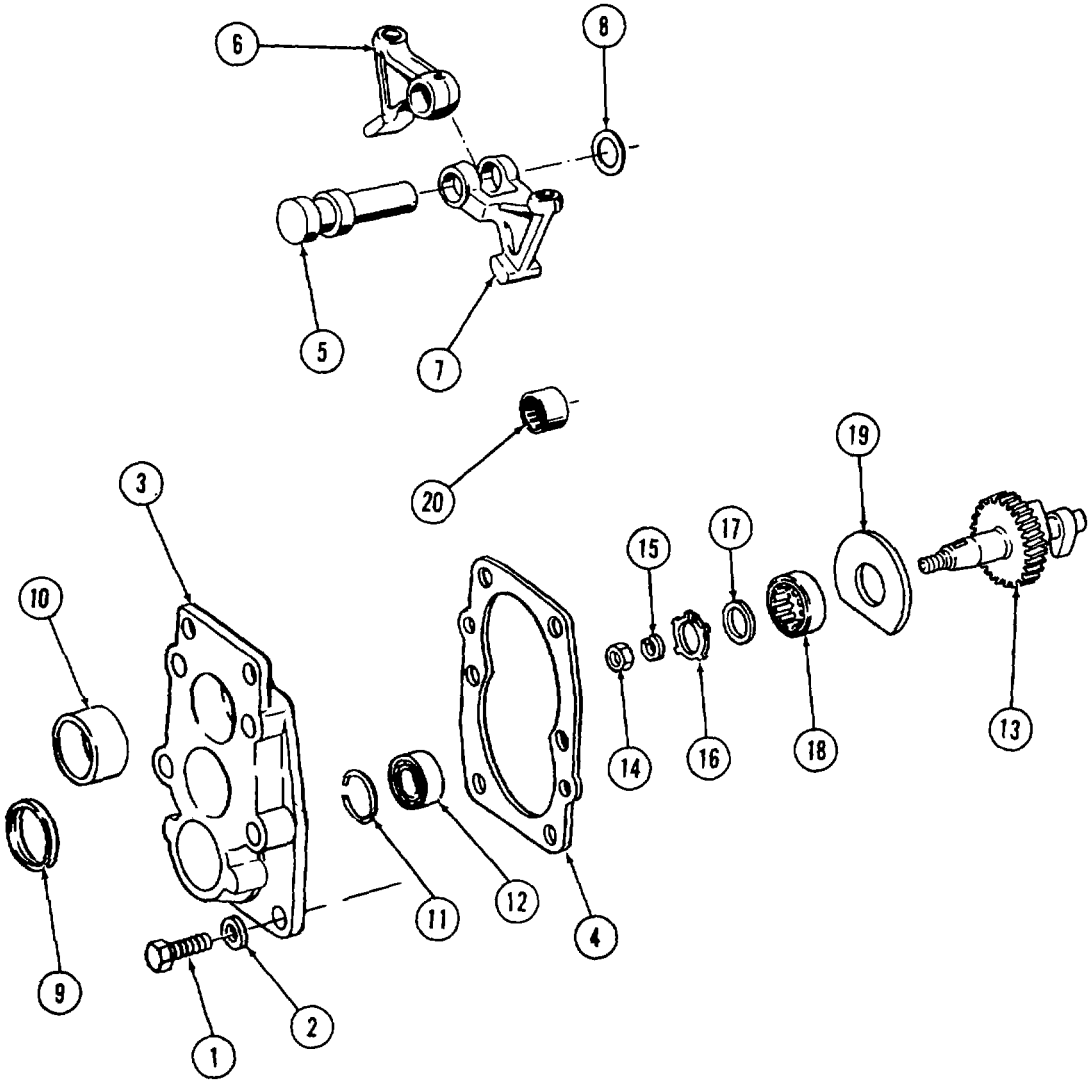

INSTALLATION:

1 Install timing cover (3).

NOTE

Make sure matchmarks on camshaft gear and crankshaft gear are aligned.

2 Install six screws (1) and joints (2).

5-5. REPAIR/REPLACE GOVERNOR

This task covers:

a. Removal
b. Cleaning
c. Disassembly

INITIAL SETUP

Tools

Shop set, automotive repair, field maintenance, basic

Extractor for gear, crankshaft 603 823 00

Impact mandrel, gear on crankshaft 666 069 00

Special tool for governor spring 618 305 00

Materials/Parts

Diesel fuel oil (Item 2, Appendix E)

Grease (Item 3, Appendix E)

Lubricating oil (Item 6, Appendix E)

References

Para 5-7 Crankshaft

Equipment Condition

Para	Condition Description
5-4	Timing cover and camshaft removed from engine.

General Safety Instructions

Well-ventilated area required.

REMOVAL:

1 Remove gearwheel (1) from crankshaft using crankshaft gear extractor 603 823 00.

2 Remove pins (2 and 3) from shaft (16).

3 Remove threaded pin (4) and hex nut (5) from governor lever (6).

4 Remove two hexagon nuts (7) and lever (8).

5 Remove hexagon nut (9) and friction disc (10).

6 Remove capsule (11), hex nut (12), plate (13), and eccentric pin (14). Discard preformed packing (15).

7 Press out shaft (16) from crankcase.

5-5. REPAIR/REPLACE GOVERNOR (Continued)

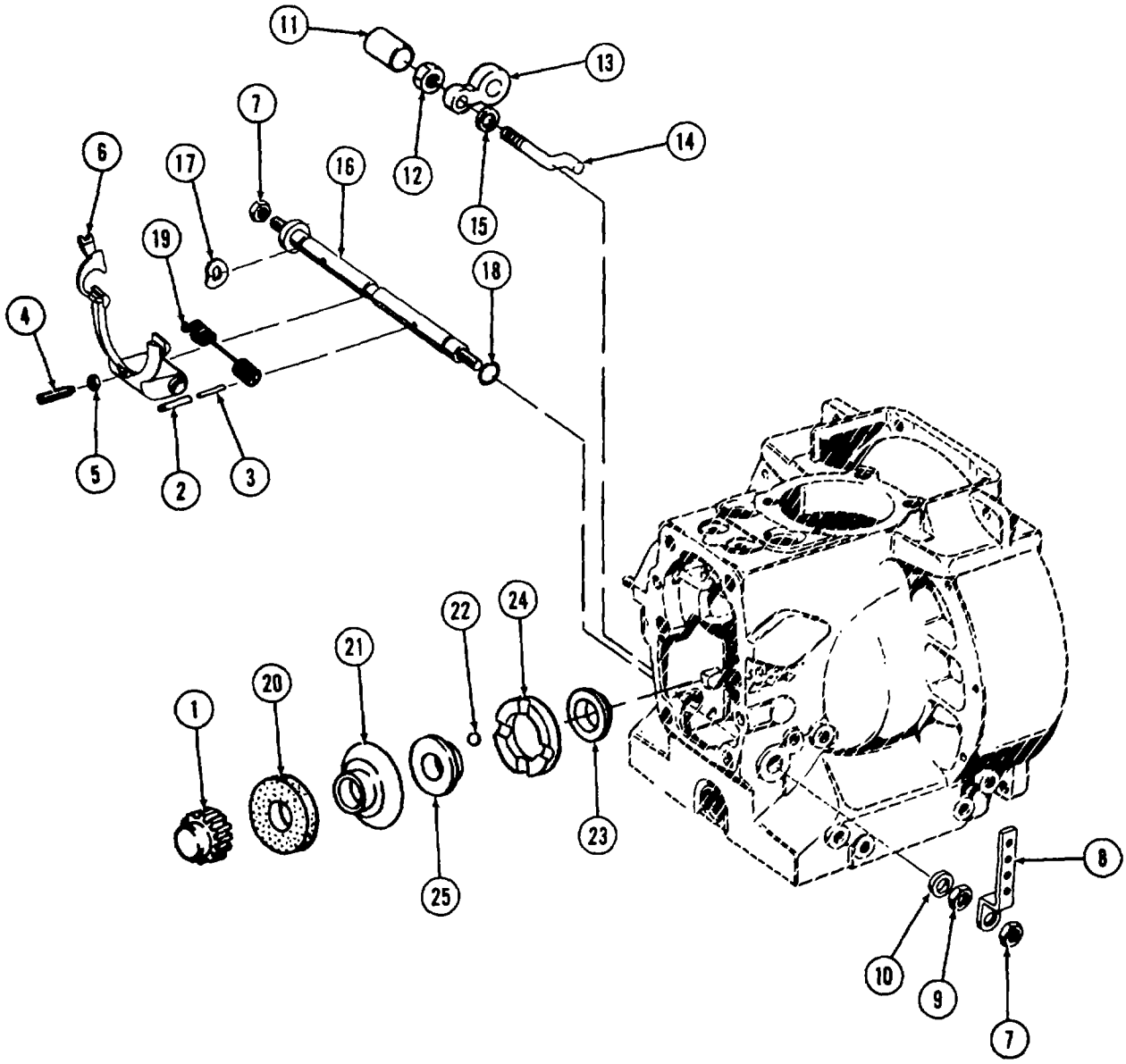

5-5. REPAIR/REPLACE GOVERNOR (Continued)

8 Remove spring washer (17) and discard two preformed packings (18).

9 Remove governor lever (6) and governor spring (19) from crankcase.

10 Pull sliding disc (20) and ball shell (21) from crankshaft.

NOTE

Ball hub disc (23), ball hub (24), and spacer (25) are removed when the crankshaft is removed. Refer to paragraph 5-7 for instructions.

CLEANING:

WARNING

Death or serious injury could occur if fuel is not handled carefully. Use in a well-ventilated area away from open flame, arcing equipment, ignition sources, heaters, or excessive heat. Always store fuel in proper, marked containers. DO NOT SMOKE.

Death of serious injury could occur if compressed air is directed against the skin. Do not use compressed air for cleaning or drying unless the pressure is/has been reduced to 30 psi (2. 06 bar) or less. When working with compressed air, always use chip guards, eye protection, and other personal protective equipment.

1 Clean all parts with diesel fuel oil and dry with compressed air.

2 Inspect all components for damage or excessive wear. Replace any components severely damaged or worn.

INSTALLATION:

1 If any of the four balls (22) were removed during disassembly, apply grease to four balls (22) and install balls in ball hub (24).

CAUTION

Ball shell (21) must slide easily over the crankshaft. Damage to crankshaft and governor could result from improper fitting of governor parts.

3 Slide ball shell (21) and sliding disc (20) onto crankshaft.

4 Lubricate preformed packing (15) with lubricating oil and install in preformed packing groove on eccentric pin (14).

5-5. REPAIR/REPLACE GOVERNOR (Continued)

5 Install eccentric pin (14), plate (13), hex nut (12), and capsule (11) into crankcase.

6 Mount governor spring (19) on governor lever (6) and install both parts into crankcase.

NOTE

The loop hole of the governor spring should point upward.

7 Lubricate two preformed packings (18) with lubricating oil and install in preformed packing grooves on shaft (16).

8 Slide spring washer (17) on shaft (16) and install shaft into crankcase.

CAUTION

Governor lever and shaft should move freely. Do not overtighten threaded pin and lock lever on shaft. (Snug pin to bottom and unscrew 1/2 turn.)

9 Drive pins (2 and 3) through shaft until approximately 0. 125 inch (3.21 mm) of roll pins protrude through reverse side of shaft (16). Using special tool 618 305 00, loop ends of governor spring over drive pins (2 and 3).

10 Drive pins (2 and 3) in shaft (16) until flush with shaft.

11 Screw threaded pin (4) into governor lever (6) and tighten hexagon nut (5).

12 Install friction disc (10), hex nut (9), lever (8), and two hexagon nuts (7) on shaft (16).

WARNING

Handling heated parts can cause severe burns. Use proper equipment to handle heated parts.

13 Using an oven, heat gearwheel (1) to 160° to 175°F (70° to 80°C). Install gearwheel onto crankshaft using impact mandrel 666 069 00.

5-6. REPLACE OIL SEAL (FLYWHEEL SIDE)

This task covers:

a. Removal
b. Cleaning
c. Installation

INITIAL SETUP

Tools

Shop set, automotive repair, field maintenance, basic
Auxiliary bush, oil seal (60 x 75 mm dia) support flywheel side 666 068 00

Materials/Parts

Grease (Item 3, Appendix E)

Equipment Condition

Para	Condition Description
4-20	Flywheel removed from engine.

General Safety Instructions

Well-ventilated area required.

REMOVAL:

1 Remove support (1) by removing two security plates (2) and four hex screws (3). Discard preformed packing (4)

2 Remove oil seal (5)

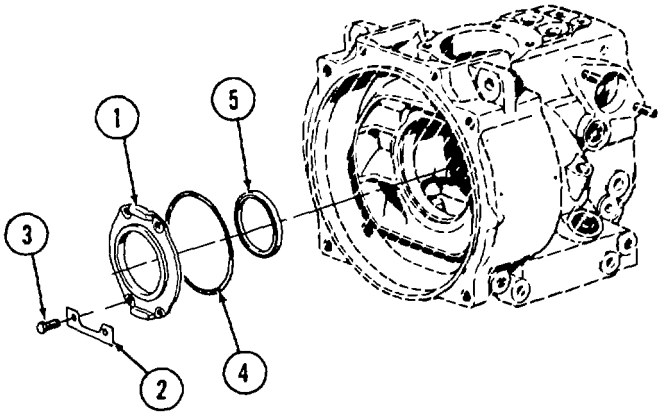

5-6. REPLACE OIL SEAL (FLYWHEEL SIDE) (Continued)

CLEANING/INSPECTION:

WARNING

Death or serious injury could occur if fuel is not handled carefully. Use in a well-ventilated area away from open flame, arcing equipment, ignition sources, heaters, or excessive heat. Always store fuel in proper, marked containers. DO NOT SMOKE

Death or serious injury could occur if compressed air is directed against the skin. Do not use compressed air for cleaning or drying unless the pressure is/has been reduced to 30 psi (2. 06 bar) or less. When working with compressed air, always use chip guards, eye protection, and other personal protective equipment

1 Clean oil seal components with diesel fuel and dry with compressed air

2 Inspect all components for damage or excessive wear. Replace any components severely damaged or worn

INSTALLATION:

1 Install auxiliary bush 666 068 00 in crankshaft

2 Install oil seal (5) into support (1)

3 Fill groove of oil seal (5) with grease.

4 Lubricate new preformed packing (4) with grease and install it in preformed packing groove in support (1).

5 Install support (1) onto crankshaft with two security plates (2) and four hex screws (3).

6 Remove auxiliary bush 666 068 00.

5-7. REPLACE CRANKSHAFT

This task covers:

a. Removal **c. Cleaning/Inspection** **e. Installation**
b. Disassembly **d. Assembly**

INITIAL SETUP

Tools

Shop set, automotive repair, field maintenance, basic

Crankshaft removing device 666 327 01

Impact mandrel, ball hub 666 067 00

Mounting device, crankshaft end play 666 074 00

Materials/Parts

Lubricating oil (Item 6, Appendix E)

Equipment Condition

Para	Condition Description
5-5	Governor removed from engine.
5-6	Oil seal removed from engine.

General Safety Instructions

Well-ventilated area required.

REMOVAL:

WARNING

Handling heated parts can cause severe burns. Use proper equipment to handle heated parts

1 Using an oven, heat crankcase to 175° to 210°F (800 to 100°C). Push out crankshaft (1) and roller bearing outer race (3) using crankshaft removing device 666 327 01. Remove key (2)

2 Remove circlip (4) and roller bearing outer race (5) from crankcase

DISASSEMBLY:

1 Remove ball hub disc (6), four balls (9), if not previously removed, ball hub (7), and spacer (8) from crankshaft (1)

NOTE

Balls (9), ball shell (10), and sliding disc (11) are governor components. Refer to paragraph 5-5 for instructions on removal of these parts

2 Remove and discard cover (12).

5-7. REPLACE CRANKSHAFT (Continued)

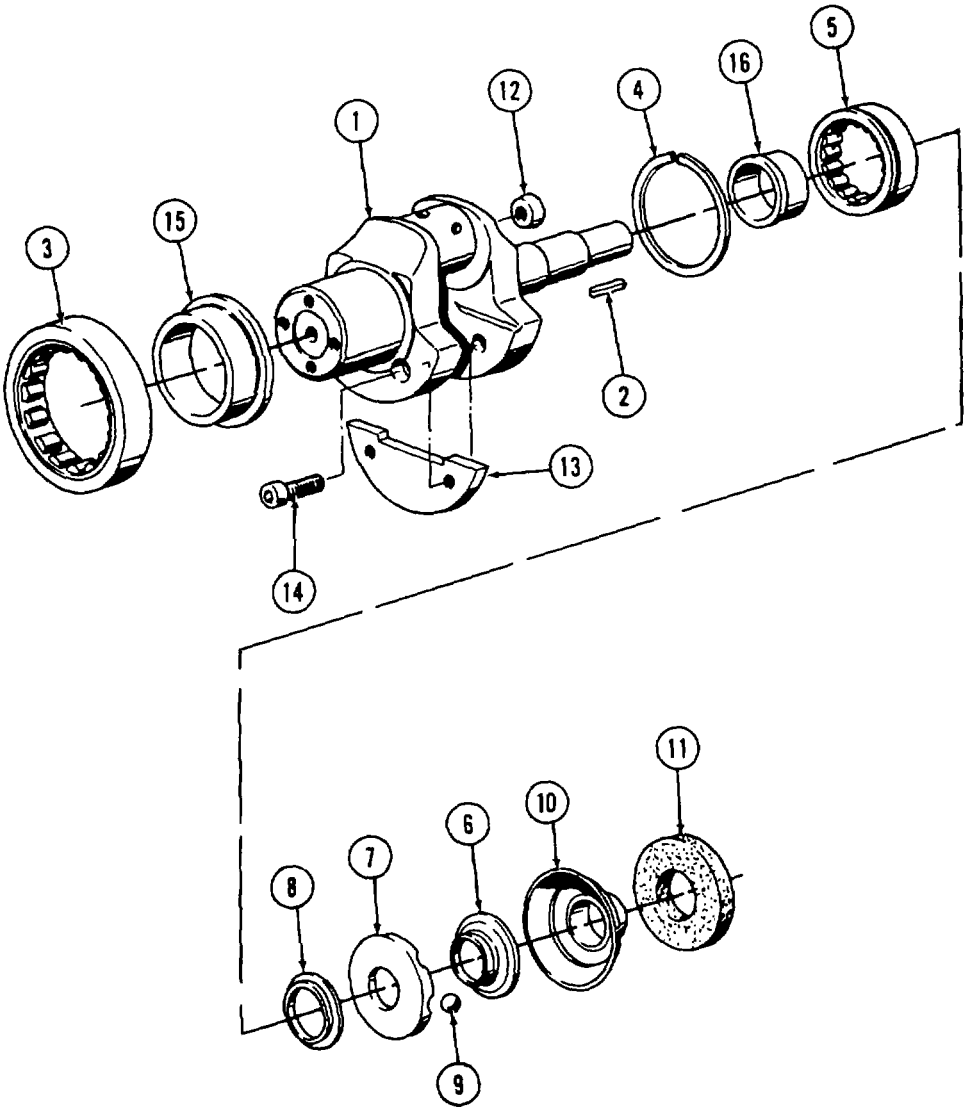

5-7. REPLACE CRANKSHAFT (Continued)

3 Remove counterweight (13) by removing two Allen screws (14)

WARNING

Handling heated parts can cause severe burns. Use proper equipment to handle heated parts

4 Using a torch, heat roller bearing inner races (15 and 16) and remove them from crankshaft (1)

CLEANING/INSPECTION:

WARNING

Death or serious injury could occur if fuel is not handled carefully. Use in a well-ventilated area away from open flame, arcing equipment, ignition sources, heaters, or excessive heat. Always store fuel in proper, marked containers. DO NOT SMOKE

Death or serious injury could occur if compressed air is directed against the skin. Do not use compressed air for cleaning or drying unless the pressure is/has been reduced to 30 psi (2. 06 bar) or less. When working with compressed air always use chip guards, eye protection, and other personal protective equipment

1 Clean crankshaft components with diesel fuel and dry with compressed air. Clean oil passages with a stiff wire brush

2 Inspect all components for damage or excessive wear. Replace any components severely damaged or worn

ASSEMBLY:

1 Install new cover (12)

2 Apply lubricating oil to the threads of two Allen screws (14) and contact surface of counterweight (13). Install counterweight and two Allen screws. Torque Allen screws to 16. 23 foot-pounds (22 N. m)

WARNING

Handling heated parts can cause severe burns. Use proper equipment to handle heated parts

3 Using an oven, heat the inner races of roller bearings (15 and 16) to 160° to 175°F (70° to 80°C) and press them onto crankshaft (1).

5-7. REPLACE CRANKSHAFT (Continued)

INSTALLATION:

1 Install circlip (4) into roller bearing outer race (5) and press bearing race into crankcase until it comes to a stop at the circlip

2 Push roller bearing outer race (3) onto crankshaft (1)

3 Install crankcase end play mounting device 666 074 00 on crankshaft

WARNING

Handling heated parts can cause severe burns. Use proper equipment to handle heated parts

4 Using an oven, heat crankcase (1) to 175° to 210°F (80° to 100°C)

5 Push in crankshaft (1) and crankcase end play mounting device 666 074 00 until mounting device stops. Allow crankcase to cool. Remove mounting device

6 Using an oven, heat ball hub disc (6), ball hub (7), and spacer (8) to 160° to 175°F (70° to 80°C)

7 Install spacer (8), ball hub (7), and ball hub disc (6) onto crankshaft using ball hub impact mandrel 666 067 00

NOTE

Balls (9), ball shell (10), and sliding disc (11) are governor components. Refer to paragraph 5-5 for instructions on installation of these parts

5-8. REPAIR/REPLACE CRANKCASE

This task covers:

a. Disassembly
b. Cleaning/Inspection
c. Repair/Assembly

INITIAL SETUP

Tools

Shop set, automotive repair, field maintenance, basic

Materials/Parts

Diesel fuel oil (Item 2, Appendix E)

Lubricating oil (Item 6, Appendix E)

References

MIL-1-6868 Magnetic Particle Inspection

Equipment Condition

Para	Condition Description
5-7	Crankshaft removed from engine.

General Safety Instructions

Well-ventilated area required.

DISASSEMBLY:

1 Remove oil dipstick (1) from crankcase (2). Remove and discard preformed packing (3).

2 Remove cap screw (4). Remove and discard preformed packing (5).

3 Remove cylinder pin (6).

4 Remove oil drain plug (7). Remove and discard joint (8).

5-8. REPAIR/REPLACE CRANKCASE (Continued)

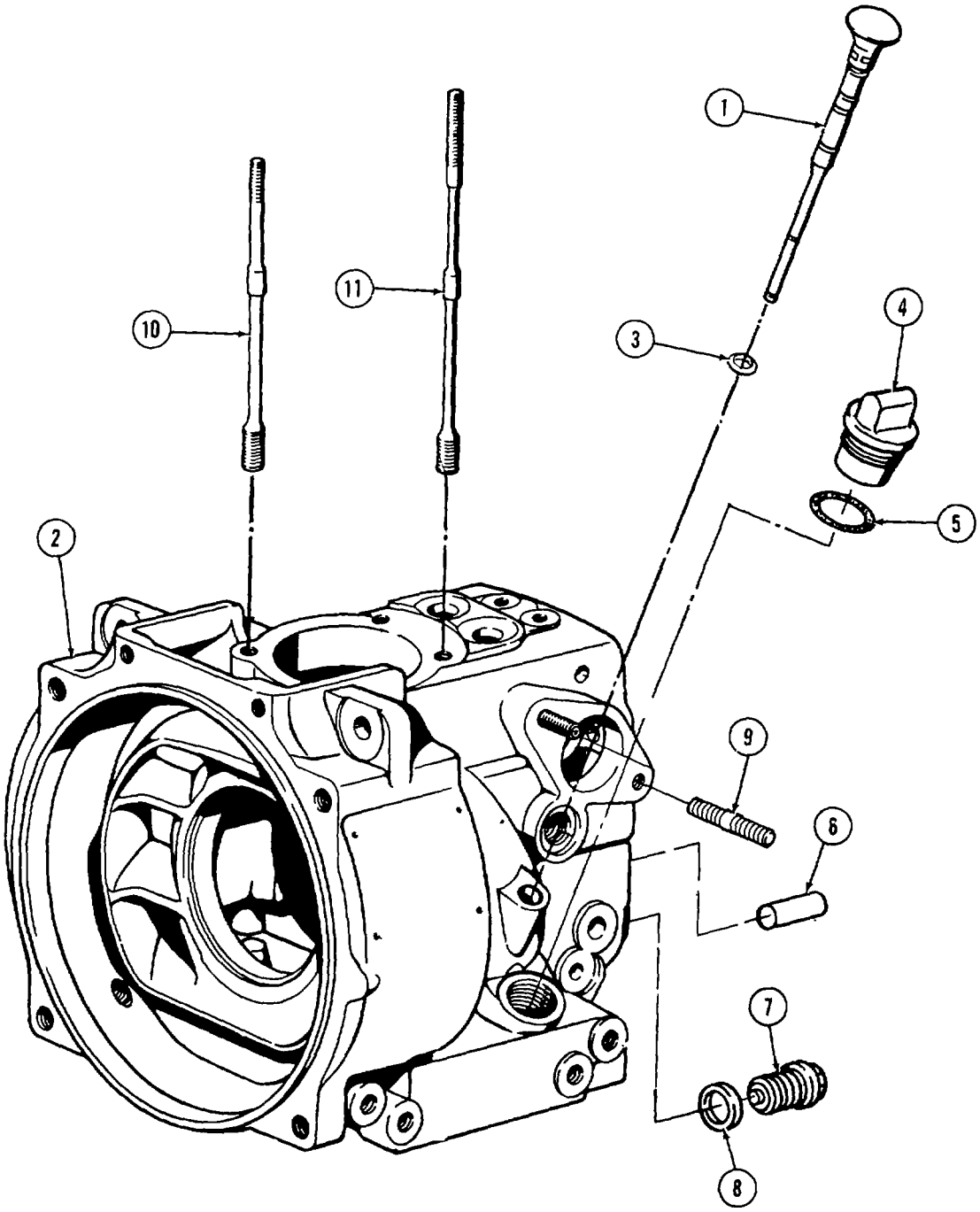

5-8. REPAIR/REPLACE CRANKCASE (Continued)

CLEANING/INSPECTION:

WARNING

Death or serious injury could occur if fuel is not handled carefully. Use in a well-ventilated area away from open flame, arcing equipment, ignition sources, heaters, or excessive heat. Always store fuel in proper, marked containers. DO NOT SMOKE

Death or serious injury could occur if compressed air is directed against the skin. Do not use compressed air for cleaning or drying unless the pressure is/has been reduced to 30 psi (2. 06 bar) or less. When working with compressed air, always use chip guards, eye protection, and other personal protective equipment

Live steam used for cleaning shall not exceed 100 psi (6. 9 bar). Use goggles or face shield for eye protection. Do not direct live steam against skin.

1 Clean crankcase thoroughly with live steam. Clean all exterior openings and surfaces. Be especially sure to clean all oil passages to make sure they are clear. Use a small and/or large wire bristle brush where necessary to remove carbon or other deposits from openings and surfaces. Use diesel fuel as necessary to soften and remove carbon or hardened oil deposits. Dry with compressed air.

2 Inspect crankcase for any cracks, discoloration, distortion, rust, corrosion, or other damage. Use MIL-1-6868 magnetic particle inspection to detect cracks. If crankcase is cracked, distorted, overheated, seriously rusted or corroded on machined surfaces, or exhibits other serious damage, replace crankcase.

3 Inspect two studs (9), two studs (10), and two studs (11) for thread damage. If damaged, replace studs

REPAIR/ASSEMBLY:

1 Lubricate joint (8) with lubricating oil and install on oil drain plug (7). Install oil drain plug

2 Install cylinder pin (6)

3 If damaged, remove two studs (10) and two studs (11) and install new studs

4 If damaged, remove two studs (9) and install new studs

5 Lubricate preformed packing (5) with lubricating oil and install on cap screw (4). Install cap screw

6 Lubricate preformed packing (3) with lubricating oil and install on oil dipstick (1). Install oil dipstick into crankcase (2)

APPENDIX A
REFERENCES

A-1. PUBLICATIONS INDEX

The following index should be consulted frequently for latest changes or revisions of references given in this appendix and for new publications relating to material covered in this manual.

Index of Administrative Publications ..... DA PAM 310-1

A-2. FORMS AND RECORDS

Recommended Changes to Publications and Blank Forms..... DA 2028-2
Equipment Inspection and Maintenance Worksheet ..... DA Form 2404
Equipment Control Record ..... DA Form 2408-9
Packaging Improvement Report ..... DD Form 6
Quality Deficiency Report..... SF 368

A-3. FIELD MANUALS

Operation and Maintenance of Ordnance Materiel in Cold Weather (0° to -65°F) ..... FM 9-207

A-4. TECHNICAL MANUALS

The Army Maintenance Management System (TAMMS) ..... DA PAM 738-750
Hand Portable Fire Extinguishers for Army Users..... TM 5-4320-200-10
Unit and Intermediate Maintenance Repair Parts and
Special Tools List, Pumping Assembly, 50 GPM ..... TM 5-4320-308-23P

A-5. MILITARY SPECIFICATIONS

Treatment and Painting of Materiel MIL-T-704

APPENDIX B
MAINTENANCE ALLOCATION CHART

Section I. INTRODUCTION

B-1. MAINTENANCE ALLOCATION CHART (MAC)

a. *General.* This MAC assigns maintenance functions in accordance with the Three Level Maintenance concept. The three levels are depicted on the MAC as:

UNIT level - corresponds to an O code in the Repair Parts and Special Tools List (RPSTL). A C code entry under UNIT denotes maintenance performed by the crew or operator within UNIT maintenance.

FORWARD INTERMEDIATE level - corresponds to an F code in the RPSTL.

REAR INTERMEDIATE level - corresponds to an H code in the RPSTL.

B-2. USE OF THE MAINTENANCE ALLOCATION CHART, SECTION II

a. The MAC assigns maintenance functions based on the following considerations:

(1) Skills available.

(2) Work time required.

(3) Tools and test equipment required and/or available.

b. If a lower level of maintenance identified in column (4) of the MAC cannot perform all tasks of a single maintenance function (e.g., test, repair), than the higher level that can perform other tasks of that function is also indicated

c. Higher maintenance levels are automatically authorized to perform maintenance functions assigned to a lower maintenance level

d. Higher maintenance levels will perform the maintenance functions of lower maintenance functions when required or directed by the Commander who has authority to direct such tasking

e. Assignment of a maintenance function in the MAC does not carry automatic authorization to carry the related spare or repair parts in stock. Information to requisition or secure parts will be as specified in the associated RPSTL

f. Normally, there will be no deviation from the assigned level of maintenance. However, in cases of operational necessity, maintenance functions assigned a higher level may, at the request of the lower level, be assigned to the lower level on a one-time basis, if specifically authorized by the maintenance officer of the higher level to which the function is assigned. In such a case, the special tools, equipment, etc. , required by the lower level to perform this function will be furnished by the higher level assigned the function. Also, transfer of a function to a lower level does not relieve the higher level of responsibility for the function, so the higher level will provide technical supervision and inspection of the function being performed at the lower level

B-3. MAINTENANCE FUNCTIONS

Maintenance functions will be limited to and defined as follows:

a. *Inspect*. To determine the serviceability of an item by comparing its physical, mechanical, and or electrical characteristics with established standards through examination (e. g. , by sight, sound, or feel)

b. *Test.* To verify serviceability by measuring the mechanical, pneumatic, hydraulic, or electrical characteristics of an item and comparing those characteristics with prescribed standards

c. *Service.* Operations required periodically to keep an item in proper operating condition, i. e. , to clean (includes decontaminate, when required), to preserve, to drain, to paint, or to replenish fuel, lubricants, chemical fluids, or gases

d. *Adjust.* To maintain or regulate, within prescribed limits, by bringing into proper or exact position, or by setting the operating characteristics to specified parameters

e. *Align.* To adjust specified variable elements of an item to bring about optimum or desired performance

f. *Calibrate*. To determine and cause corrections to be made or to be adjusted on instruments or test, measuring, and diagnostic equipments used in precision measurement. Consists of comparisons of two instruments, one of which is a certified standard of known accuracy, to detect and adjust any discrepancy in the accuracy of the instrument being compared

g. *Remove/Install.* To remove and install the same item when required to perform service or other maintenance functions. Install may be the act of emplacing, seating, or fixing into position a spare, repair part, or module (component or assembly) in a manner to allow the proper functioning of an equipment or system

h. *Replace.* To remove an unserviceable item and install a serviceable counterpart in its place. "Replace" is authorized by the MAC and is shown as the 3d position code of the SMR code

i. *Repair.* The application of maintenance services, including fault location/troubleshooting removal/installation, and disassembly/assembly procedures, and maintenance actions to identify troubles and restore serviceability to an item by correcting specific damage, fault, malfunction, or failure in a part, subassembly, module (component or assembly), end item, or system

j. *Overhaul.* That maintenance effort (service/action) necessary to restore an item to a completely serviceable/operational condition as prescribed by maintenance standards in appropriate technical publications (i.e., DMWR). Overhaul is normally the highest degree of maintenance performed by the Army. Overhaul does not normally return an item to a like new condition

k. *Rebuild.* Consists of those services/actions necessary for the restoration of unserviceable equipment to a like new condition in accordance with original manufacturing standards. Rebuild is the highest degree of materiel maintenance applied to Army equipment. The rebuild operation includes the act of returning to zero those age measurements (hours/miles, etc.) considered in classifying Army equipment/components

B-4. EXPLANATION OF COLUMNS IN THE MAC, SECTION II

a. *Group Number* (Column 1). Column 1 lists functional group code numbers which are assigned to identify maintenance significant components, assemblies, subassemblies, and modules to their next higher assembly

B-4. EXPLANATION OF COLUMNS IN THE MAC, SECTION II (Continued)

b. *Component/Assembly* (Column 2). Column 2 contains the item names of components. assemblies, subassemblies, and modules for which group numbers (column 1) are assigned and for which maintenance is authorized

c. *Maintenance Function* (Column 3). Column 3 lists the functions to be performed on items listed in column 2. (Function definitions are contained in paragraph B-3.)

d. *Maintenance Categories and Work Times* (Column 4). The maintenance levels, Unit and Intermediate, are listed on the Maintenance Allocation Chart with individual columns that include the work times for maintenance functions at each maintenance level. Work time presentations such as "0.1" indicate the average time it requires a maintenance level to perform a specified maintenance function. If a work time has not been established, the columnar presentation shall indicate "_____". Maintenance levels higher than the level of maintenance indicated are authorized to perform the indicated function

e. *Tools and Test Equipment* (Column 5 and Section III). Common tool sets (not individual tools), special tools, test, and support equipment required to perform maintenance functions are listed alphabetically in Section III with a reference number to permit cross-referencing to column 5 in the MAC. In addition, the maintenance category authorized to use the device is listed along with the item National stock number (NSN) and, if applicable, the tool number to aid in identifying the tool/device.

f. *Remarks* (Column 6 and Section IV). Remarks (identified by an alphabetic code in column 6) and other notes (identified by a number in parentheses in the applicable column) are listed in Section IV to provide a ready reference to the definition of the remark/note.

PUMPING ASSEMBLY, FLAMMABLE LIQUID, BULK TRANSFER, 50 GPM, CENTRIFUGAL, DIESEL-ENGINE-DRIVEN

(1) Group Number	(2) Component/Assembly	(3) Maintenance Function	(4) Maintenance Category* Unit C	Unit O	Intermediate F	Intermediate H	(5) Tools and Eqpt	(6) Remarks
00	Pumping Assembly							
01	Suction Hose Assembly	Inspect	0.1					
		Replace		0.1				
		Repair			1.5			
02	Discharge Hose Assembly	Inspect	0.1					
		Replace		0.1				
		Repair			1.5			
03	Drum Unloader	Inspect	0.1					
		Replace		0.1				
		Repair			0.5			
04	Storage Container	Inspect	0.1					
		Replace		0.1				
		Repair			3.0			
05	Nozzle Assembly	Inspect	0.1					
		Replace		0.1				
		Repair			2.0			
06	Y-Connectors	Inspect	0.1					
		Replace		0.1				
		Repair			0.5			
07	Ground Rod	Inspect	0.1					
		Replace		0.1				
		Repair			0.5			
08	Pump Assembly							
	Check Valve	Inspect		0.1			1	
		Repair		0.5				
		Replace		1.0				
	Volute	Inspect	0.1				1	
		Replace		1.0				

Subcolumns are as follows: C - OPERATOR/CREW: O - ORGANIZATIONAL;
F - FORWARD INTERMEDIATE MAINTENANCE; H - REAR INTERMEDIATE MAINTENANCE

PUMPING ASSEMBLY, FLAMMABLE LIQUID, BULK TRANSFER, 50 GPM, CENTRIFUGAL, DIESEL-ENGINE-DRIVEN

(1) Group Number	(2) Component/Assembly	(3) Maintenance Function	(4) Maintenance Category* Unit C	Unit O	Intermediate F	Intermediate H	(5) Tools and Eqpt	(6) Remarks
08 (cont)	Pump Assembly							
	Impeller	Inspect		0.5			1,2	
		Replace		1.0				
	Wear Plate	Inspect		0.5			1	
		Replace		1.0				
	Shaft Seal	Inspect		1.0			1,2	
		Replace		1.0				
	Adapter Shaft	Inspect		1.0			1, 2	B
		Replace		1.5				
09	Pump Case Assembly							
	Pump Case	Inspect	0.1				2, 3	
		Replace		1.0				
		Repair			3.0			
10	Air Filter Assembly							
	Air Cleaner	Inspect	0.1				1	
		Service	0.5					
		Repair		0.5				
		Replace		0.5				
11	Engine Assembly	Inspect	0.2				2	
		Service	0.2					
		Replace			2.0			
12	Fuel System							
	Fuel Filter	Inspect	0.1				1	C, E
		Replace		0.5				
	Fuel Lines, Hoses, and Fittings	Inspect	0.1				1	
		Replace		0.5				
	Fuel Lift Pump	Replace		0.5			1	B
		Repair			1.5			

Subcolumns are as follows: C - OPERATOR/CREW; O - ORGANIZATIONAL; F - FORWARD INTERMEDIATE MAINTENANCE; H - REAR INTERMEDIATE MAINTENANCE

PUMPING ASSEMBLY, FLAMMABLE LIQUID, BULK TRANSFER, 50 GPM, CENTRIFUGAL, DIESEL-ENGINE-DRIVEN

(1) Group Number	(2) Component/Assembly	(3) Maintenance Function	(4) Maintenance Category* Unit C	Unit O	Intermediate F	Intermediate H	(5) Tools and Eqpt	(6) Remarks
12 (cont)	Fuel System							
	Fuel Tank	Inspect	0.2				1	8
		Service	0.2					
		Replace		1.0				
	Injector	Inspect		1.0			3, 7	B, C
		Test			1.0			
		Replace			1.0			
	Injection Pump	Inspect		0.1			3,8,	B, E
		Adjust			0.1		9, 10,	
		Test			2.0		32, 33	
		Replace			1.0			
13	Exhaust System							
	Muffler	Inspect	0.1				1	
		Replace		0.3				
14	Crank Assembly							
	Gears	Inspect			0.5			
		Replace			1.0			
	Handle	Inspect	0.1					
		Replace		0.1				
15	Throttle							
	Throttle Control	Inspect	0.1				1	A
	Hand Lever	Adjust		0.5				
		Replace		0.5				
16	Cylinder Head and Cylinder Assembly							
	Cylinder Head and	Inspect			0.1		3, 6, 13,	A, B, H, I
	Valve Assembly	Adjust		1.0			21	
		Replace			3.0			
		Repair				3.0		

Subcolumns are as follows: C - OPERATOR/CREW; O - ORGANIZATIONAL;
F - FORWARD INTERMEDIATE MAINTENANCE; H - REAR INTERMEDIATE MAINTENANCE

PUMPING ASSEMBLY, FLAMMABLE LIQUID, BULK TRANSFER, 50 GPM, CENTRIFUGAL, DIESEL-ENGINE-DRIVEN - Continued

(1) Group Number	(2) Component/Assembly	(3) Maintenance Function	(4) Maintenance Category* Unit C	Unit O	Intermediate F	Intermediate H	(5) Tools and Eqpt	(6) Remarks
16 (cont)	Cylinder Head and Cylinder Assembly							
	Cylinder	Inspect Replace			0.1 3.0		6, 15, 16, 17, 31,33	B
	Piston Repair Replace	Inspect			1.0 3.0 3.0		4, 10, 11, 18, 19, 29	B, J
17	Crankcase Assembly							
	Connecting Rod	Inspect Repair Replace			1.0 3.0 3.0		12, 21	B, J
	Timing Cover	Inspect Repair Replace			0.2 1.0 3.0		26	B
	Camshaft	Inspect Repair Replace			1.0 4.0 4.0		5, 13, 27, 30, 31	
	Governor	Inspect Repair Replace			1.0 4.5 4.5		20, 22	
	Flywheel	Inspect Replace Repair			1.0 2.0 0.5		14	B
	Oil Seal (Flywheel Side)	Inspect Replace			1.0 2.0		23	B
	Crankshaft	Inspect Replace			1.0 5.0		5, 24, 25, 28	
	Crankcase	Inspect Replace Repair			1.0 5.0 2.0			

Subcolumns are as follows: C - OPERATOR/CREW; O - ORGANIZATIONAL:
F - FORWARD INTERMEDIATE MAINTENANCE; H - REAR INTERMEDIATE MAINTENANCE

PUMPING ASSEMBLY, FLAMMABLE LIQUID, BULK TRANSFER, 50 GPM, CENTRIFUGAL, DIESEL-ENGINE-DRIVEN - Continued

(1) Group Number	(2) Component/Assembly	(3) Maintenance Function	(4) Maintenance Category*				(5) Tools and Eqpt	(6) Remarks
			Unit		Intermediate			
			C	O	F	H		
18	Base Assembly							
	Shock Mounts	Inspect			0.2		3	
		Replace			0.5			
	Base	Inspect			0.1		3	
		Replace			2.5			
		Repair			1.0			

Subcolumns are as follows: C - OPERATOR/CREW; O - ORGANIZATIONAL;
F - FORWARD INTERMEDIATE MAINTENANCE; H - REAR INTERMEDIATE MAINTENANCE

Section III. TOOL AND TEST EQUIPMENT REQUIREMENTS

(1) Tool or Test Equipment Ref Rode	(2) Maintenance Category	(3) Nomenclature	(4) National/ NATO Stock Number	(5) Tool Number
1	O	Tool Kit, General Mechanics Automotive	5180-00-177-7033	
2	O	Shop Equipment, Automotive Maintenance and Repair, Common No. 1	4910-00-754-0654	
3	F, H	Shop Set, Automotive Repair Field Maintenance, Basic	4910-00-754-0705	
4	F	Measuring device		603 114 00
5	H	Extractor for gear - crankshaft		603 823 00
	H	Clamping holder to grind valve - valve seat		604 581 00
7	F	Testing device for injection equipment		604 628 00
8	F, H	Spill device		604 837 00
9	F, H	Special wrench		606 000 00
10	F, H	Dial gage (1/100 - 58 mm dia)		612 087 00
11	F	Piston ring pliers		612 090 00
12	H	Allen socket, 6 mm		612 091 00
13	0, F	Allen socket, 8 mm		612 095 00
14	F	Socket for screw with int. serrations		612 099 00
15	H	Valve reseating tool, 42.5 mm dia		612 103 00
16	H	Guiding pin, 7 mm dia (valve reseating tool)		612 104 00
17	H	Hand reamer, 7 mm dia H 7 (valve guide)		612 107 00

(1) Tool or Test Equipment Ref Rode	(2) Maintenance Category	(3) Nomenclature	(4) National/ NATO Stock Number	(5) Tool Number
18	F	Retaining bracket for cylinder		612 752 00
19	F	Gudgeon pin extractor		614 957 00
20	H	Special tool for governor spring		618 305 00
21	0	Box wrench, 10 mm		618 306 00
22	H	Impact mandrel - ball hub		666 067 00
23	H	Auxiliary bush - oil seal (60 x 75 mm dia) support flywheel side		666 068 00
24	H	Impact mandrel - gear on crankshaft		666 069 00
25	H	Mounting device - crankshaft end play		666 074 00
26	H	Auxiliary bush - oil seal (30 x 47 mm dia) timing cover		666 075 00
27	H	Extractor - cam follower spindle		666 324 00
28	H	Crankshaft removing device		666 327 01
29	F	Piston ring clamp		666 346 00
30	H	Mounting device - needle bear-ing camshaft		666 418 00
31	H	Punch - needle bearing camshaft		666 425 00
32	F	Socket wrench, 30 mm		668 335 00
33	F, H	Fuel shutoff clamp		668 383 00
34	H	Press-in mandrel - valve guide, 7 mm dia		669 347 00
35	H	Handle for valve reseating tool		670 323 00

Section IV. REMARKS

(1) Reference Code	(2) Remarks
A	Adjust to specifications
B	Repair by replacing defective components
C	Replace element
D	Weld
E	Repair by bleeding air from fuel system
F	Service by cleaning filter
G	Test timing and pressure output
H	Includes replacing valve seats, guides, and main bearings
I	Includes replacing bearing, valves, and gears
J	Includes replacing rings and rod bearings
K	Includes crankshaft grinding

APPENDIX C
COMPONENTS OF END ITEM AND BASIC ISSUE ITEMS LISTS

Section I. INTRODUCTION

C-1. SCOPE

This appendix lists components of end item and basic issue items for the pumping assembly to help you inventory items required for safe and efficient operation.

C-2. GENERAL

The Components of End Item and Basic Issue Items Lists are divided into the following sections:

a. *Section II. Components of End Item*. This listing is for informational purposes only, and is not authority to requisition replacements. These items are part of the end item, but are removed and separately packaged for transportation or shipment. As part of the end item, these items must be with the end item whenever it is issued or transferred between property accounts. Illustrations are furnished to assist you in identifying the items.

b. *Section III. Basic Issue Items.* These are the minimum essential items required to place the centrifugal pump unit in operation, to operate it, and to perform emergency repairs. Although shipped separately packaged, BII must be with the pumping assembly during operation and whenever it is transferred between property accounts. The illustrations will assist you with hard-to-identify items. This manual is your authority to request/requisition replacement BII, based on TOE/MTOE authorization of the end item.

C-3. EXPLANATION OF COLUMNS

The following provides an explanation of columns found in the tabular listings.

a. *Column (1) - Illustration Number (Illus Number).* This column indicates the number of the illustration in which the item is shown.

b. *Column (2) - National Stock Number.* Indicates the National stock number assigned to the item and will be used for requisitioning purposes.

c. *Column (3) - Description*. Indicates the Federal item name and, if required, a minimum description to identify and locate the item. The last line for each item indicates the FSCM (in parentheses) followed by the part number.

d. *Column (4) - Unit of Measure (U/M).* Indicates the measure used in performing the actual operational/maintenance function. This measure is expressed by a two-character alphabetical abbreviation (e.g., ea, in., pr).

e. *Column (5) - Quantity required (Oty rqr).* Indicates the quantity of the item authorized to be used with/on the equipment.

Section II. COMPONENTS OF END ITEM

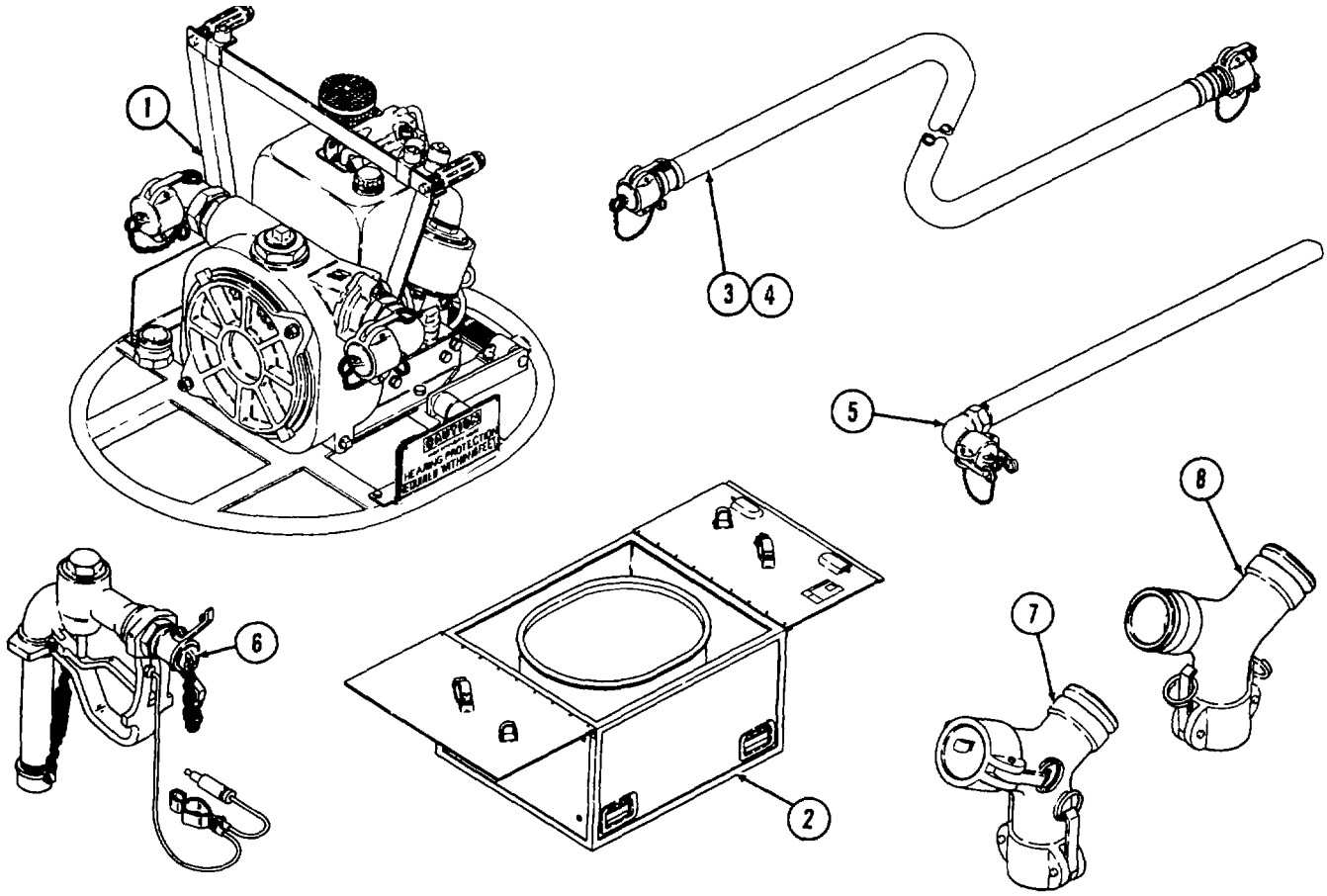

(1) Illus Number	(2) National Stock Number	(3) Description FSCM and Part Number	Usable On Code	(4) U/M	(5) Qty Rqr
1		PUMP ASSEMBLY (05748) 78687SA		1	1
2		STORAGE BOX (05748) 12189SA		1	1
3		HOSE ASSEMBLY, SUCTION (05748) 15657SA		1	3
4		HOSE ASSEMBLY, DISCHARGE (05748) 78751SA		1	3
5		UNLOADER, DRUM (05748) 78652SA		1	1
6		NOZZLES (05748) 15689SA		1	2
7		Y-CONNECTOR (05748) 78398SA		1	1
8		Y-CONNECTOR (81718) 319-K-1.50		1	1

Section III. BASIC ISSUE ITEMS

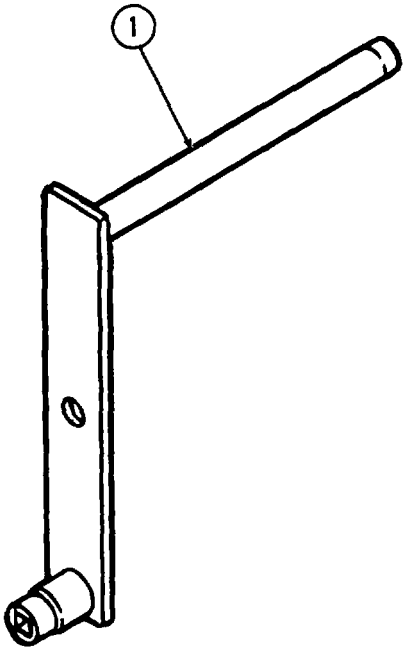

(1) Illus Number	(2) National Stock Number	(3) Description FSCM and Part Number	Usable On Code	(4) U/M	(5) Qty Rqr
		TM 5-4320-308-13	1	1	
1		HANDLE, STARTING (61080) 003 150 00	1	1	

APPENDIX D
ADDITIONAL AUTHORIZATION LIST

NOT APPLICABLE

APPENDIX E
EXPENDABLE SUPPLIES AND MATERIALS LIST

Section I. INTRODUCTION

E-1. SCOPE

This appendix lists expendable supplies and materials you will need to operate and maintain the pumping assembly. These items are authorized to you by CTA 50-970, Expendable Items (Except Medical, Class V, Repair Parts, and Heraldic Items).

E-2. EXPLANATION OF COLUMNS

a. *Column (1) - Item Number*. This number is assigned to the entry in the listing and is referenced in the narrative instructions to identify the material (e.g., Dry Cleaning Solvent, Item 11, Appendix E).

b. *Column (2) - Level*. This column identifies the lowest level of maintenance that requires the listed item.

C - Operator/Crew
0 - Organizational Maintenance Unit Level
F - Forward Intermediate Maintenance
H - Rear Intermediate Maintenance

c. *Column (3) - National Stock Number*. This is the National stock number assigned to the item; use it to request or requisition the item.

d. *Column (4) - Description*. Indicates the Federal item name and, if required, a description to identify the item. The last line for each item indicates the part number followed by Federal Supply Code for Manufacturer (FSCM) in parentheses.

e. *Column (5) - Unit of Measure (U/M).* Indicates the measure used in performing the actual maintenance function. If the unit of measure differs from the unit of issue, requisition the lowest unit of issue that will satisfy your requirements.

Section II. EXPENDABLE SUPPLIES AND MATERIALS LIST

(1) Item Number	(2) Level	(3) National Stock Number	(4) Description	(5) U/M
1	F		Color, Marking (Dykem)	
2	C, O, F, H		Fuel Oil, Diesel, VV-F-800	gal
3	H	9150-00-190-0907	Grease, Automotive and Artillery, MIL-G-10924	5 gal can
4	O	9150-00-754-2595	Grease, Ball and Roller Bearing, MIL-G-18709	1 lb can
5	H		Lapping and Grinding Compound (Valve), 600 grit, A-A-1203	
6	O, F, H	9150-00-186-6681	Oil, Lubricating, Internal Combustion Engine, MI L-L-2104	qt
7	O		Oil, Lubricating, Preservative, MI L-L-21260	qt
8	F		Primer Coating, Zinc Chromate, TT-P-1757	
9	O, F, H	6850-00-274-5421	Solvent, Dry Cleaning, P-D-680	5 gal can

APPENDIX F
TORQUE LIMITS

Self-Locking Nut Breakaway Torque Values

Thread Size	Minimum Breakaway Torque (In. Lbs.)	Thread Size	Minimum Breakaway Torque (In. Lbs.)
10-32	2.0	5/8-18	32.0
1/4-28	3.5	3/4-16	50.0
5/16-24	6.5	7/8-14	70.0
3/8-24	9.5	1-12	90.0
7/16-20	14.0	1-1/8-12	117.0
1/2-20	18.0	1-1/4-12	143.0
9/16-18	24.0		

NOTE

To determine breakaway torque, thread nut onto screw or bolt until at least two threads stick out. Nut shall not make contact with a mating part. Stop the nut. Torque necessary to begin turning nut again is the breakaway torque. Do not reuse self-locking nuts that do not meet minimum breakaway torque.

GLOSSARY

Section I. ABBREVIATIONS

°C ..... Degree Celsius
cm.kg ..... Centimeter-kilogram
cu ..... Cubic
ea ..... Each
EIR ..... Equipment Improvement Recommendations
° F ..... Degree Fahrenheit
ft ..... Foot; feet
ft-lb ..... Foot pound
gal ..... Gallon
gpm ..... Gallons per minute
hp ..... Horsepower
in ..... Inch
kg ..... Kilogram
lb ..... Pound
m^3 ..... Cubic meter
m•kg ..... Meter-kilogram
mm ..... Millimeter
N.m ..... Newton meter
NPT ..... National pipe thread
oz ..... Ounce
PMCS ..... Preventive maintenance checks and services
psi ..... Pounds per square inch
qt ..... Quart
rpm ..... Revolutions per minute
TDC ..... Top dead center
TMDE ..... Test, measurement, and diagnostic equipment

Section II. DEFINITION OF UNUSUAL TERMS

A

ABRASION - A scraped or scuffed area. A hose may become abraded if an unshielded portion of it rubs against a piece of bracket or another hose.

ALIGN - To arrange in a line vertically and/or horizontally.

APPROVED - Permitted to be used for a specific purpose by the person or group who is authorized to grant approval.

ARC - A discharge of electric current crossing a gap between two electrodes.

ASSEMBLY - A combination of parts that may be taken apart without destruction, which has no application or use of its own but is needed for the completeness of a more complex item with which it is combined, or to which it is attached.

B

BRINNELLED - A deformation of a bearing by an impact.

BUMPING CLEARANCE - Clearance between cylinder head and top of piston. Measured with piston at TDC (top dead center).

C

CAPACITY - The volume, amount, or quantity that can be held or contained.

CARBON MONOXIDE - A poisonous gas that is made while a fuel is burning, especially if there is not quite enough air. The gas is colorless, odorless, and tasteless, but it can cause illness or death. See the warnings on the Warning page at front of manual.

CAVITATION - Condition caused when engine speed is increased beyond point of maximum suction vacuum. Cavitation is indicated by loud cracking noise in pump housing and is harmful to the pump unit.

CHAMFER - A beveled edge.

COMBUSTION - A chemical change, especially oxidation, accompanied by the production of heat and light. A combustion engine functions by burning fuel to produce heat, i.e., energy.

COMPONENT - A part or a combination of parts which together accomplish a function.

COMPRESSED AIR - Air that is under pressure. When the compressed air in a hose or pipe is allowed to escape (such as when you use an air gun), the air moves very fast and is used to blow away dirt and chips for cleaning.

CONDENSATION - A liquid formed from a vapor. Moisture carried in warm air will condense when it reaches a cold area, such as the surface of a fuel tank in subzero weather.

CORROSION - A gradual wearing away caused by chemical action. Metals exposed to salt water are likely to corrode.

D

DEBRIS - The scattered remains of something broken or destroyed.

DEFLECT - To bend or move from a straight line.

DETERIORATE - A worsening of condition usually as a result of age or hostile environment, as opposed to mechanical damage.

DIAMETRIC - Measurement across the center.

DISPLACEMENT - The volume displaced by a piston in a single stroke.

DISTORTION - The bending, twisting, or any other dynamic change of a surface.

EXHAUST - The gases that leave the engine through the tailpipe while the engine is running.

EXPENDABLE - An item that is not repairable and is discarded if damaged.

EXPOSURE - Being in the presence of something, or in contact with something. Skin is exposed to cleaning solvent when the solvent contacts the skin during cleaning operations.

F

FILTER - A device which removes dirt from the air or a fluid.

FLASH POINT - The lowest temperature at which the vapors of a solvent will ignite and burn.

FLUID - A substance that can flow; that is, either a gas or a liquid.

FRAYED - Something which has been worn away or unravelled, usually by rubbing.

FRETTING - A wearing away or corroding of an area.

G

GASKET - A seal or packing used between matched machine parts or around pipe joints to prevent the escape of gas or fluid.

GOGGLES - A device used to protect the eyes from dust, dirt, flying chips, etc.

GUDGEON PIN - A pivot pin.

I

IMMERSE - To completely cover by fluid.

INHALATION - The act of breathing in. The breathing in or inhalation of carbon monoxide can cause illness or death.

INITIAL - The first or starting condition.

L

LEGIBLE-Capable of being read. A legible nameplate can be read; an illegible plate cannot.

M

MALFUNCTION-Occurs when a unit fails to operate normally

MANUFACTURER-The company which makes an item or piece of equipment for sale.

MATERIEL-Equipment, apparatus, and supplies of an organization such as an army.

O

OBSTRUCTION-An obstacle.

P

PIVOT-A short rod or shaft about which a related part rotates; the act of turning on or as if on a pivot.

PORT-A threaded hole through which fluid may pass, or pressure may be measured. Ports on the pump are used to connect hoses, and to measure pressure.

PRIME-The act of introducing a liquid into a pump to increase the pump's ability to overcome negative head pressure.

R

RACE-A grooved part of a component, such as a bearing, in which a moving part slides or rolls.

RECOMMENDATIONS-Suggestions for change; advice given usually to make an improvement.

REQUIRE-To demand or need.

RESPIRATION-The process of breathing; inhaling and exhaling.

S

SATURATED-Soaked or drenched with a liquid.

SCOPE-The extent of an activity or concept; the amount of information covered as in a book.

SCRIBE-Sharp pointed tool.

SEDIMENT-Matter that settles to the bottom of a liquid.

SOLVENT-A liquid that can dissolve another substance.

SYMPTOM-The external sign or indication of a condition.

T

TIEDOWN-Strap or fastening device used to hold an object in position.

TORQUE-Force around an axis. It produces a rotary or twisting motion, and is measured in foot-pounds (ft-lb) or meter-kilograms (m.kg).

V

VALVE-A device used to control the flow of a fluid.

VAPOR-The gaseous form of any substance which is usually a liquid; vapors are present in the air around the substance.

VENTILATE-To provide with a source of fresh or uncontaminated air.

VISUAL-Visible; detected by the unaided eye.

VOLUTE-Housing into which impeller discharges water.

ALPHABETICAL INDEX

Subject, Para

H

I

L

M

N

Subject, Para

O

P

Subject, Para

R

S

Subject, Para

T

U

V

W

Y

By Order of the Secretary of the Army:

JOHN A. WICKHAM, JR.
General, United States Army
Chief of Staff

Official:

R. L. DILWORTH
Brigadier General, United States Army
The Adjutant General

DISTRIBUTION:

To be distributed in accordance with DA Form 12-25A, Operator, Unit, and Direct Support Maintenance requirements for Pumping Assembly, QM2D (76910CA)

*U.S. GOVERNMENT PRINTING OFFICE: 1987 754-122/40150

RECOMMENDED CHANGES TO EQUIPMENT TECHNICAL PUBLICATIONS

THEN...JOT DOWN THE DOPE ABOUT IT ON THIS FORM. CAREFULLY TEAR IT OUT, FOLD IT AND DROP IT IN THE MAIL.

SOMETHING WRONG WITH PUBLICATION

FROM: (PRINT YOUR UNIT'S COMPLETE ADDRESS)

DATE SENT

PUBLICATION NUMBER	PUBLICATION DATE	PUBLICATION TITLE

BE EXACT PIN-POINT WHERE IT IS

PAGE NO.	PARA-GRAPH	FIGURE NO.	TABLE NO.

IN THIS SPACE, TELL WHAT IS WRONG AND WHAT SHOULD BE DONE ABOUT IT.

PRINTED NAME, GRADE OR TITLE AND TELEPHONE NUMBER	SIGN HERE

DA FORM 1 JUL 79 2028-2

PREVIOUS EDITIONS ARE OBSOLETE.

P.S.--IF YOUR OUTFIT WANTS TO KNOW ABOUT YOUR RECOMMENDATION MAKE A CARBON COPY OF THIS AND GIVE IT TO YOUR HEADQUARTERS.

TEAR ALONG PERFORATION ONLY

THE METRIC SYSTEM AND EQUIVALENTS

Linear Measure

1 centimeter = 10 millimeters = .39 inch
1 decimeter = 10 centimeters = 3.94 inches
1 meter = 10 decimeters = 39.37 inches
1 dekameter = 10 meters = 32.8 feet
1 hectometer = 10 dekameters = 328.08 feet
1 kilometer = 10 hectometers = 3.2808.8 feet

Weights

1 centigram = 10 milligrams = .15 grain
1 decigram = 10 centigrams = 1.54 grains
1 gram = 10 decigram = .035 ounce
1 dekagram = 10 grams = .35 ounce
1 hectogram = 10 dekagrams = 3.52 ounces
1 kilogram = 10 hectograms = 2.2 pounds
1 quintal = 100 kilograms = 220.46 pounds
1 metric ton = 10 quintals = 1.1 short tons

Cubic Measure

1 cu. centimeter = 1000 cu. millimeters = .06 cu. inch
1 cu. decimeter = 1000 cu. centimeters = 61.02 cu in.
1 cu. meter = 1000 cu. decimeters = 35.31 cu. feet

Square measure

1 sq. centimeter = 100 sq. millimeters =.155 sq. in.
1 sq. decimeter = 100 sq. centimeters = 15.5 inches
1 sq. meter (centare) = 100 sq. decimeters = 10.76 feet
1 sq. dekameter (are) = 100 sq. meters = 1.076.4 sq. ft.
1 sq. hectometer (hectare) = 100 sq. dekameters = 2.47 acres
1 sq. kilometer = 100 hectometers = .386 sq. miles

Liquid Measure

1 dekaliter = 10 liters = 2.64 gallons
1 hectoliter = 10 dekaliters = 26.42 gallons
1 kiloliter = 10 hectoliters = 264.18 gallons
1 liter = 10 deciliters = 33.81 fl. ounces
1 centiliter = 10 milliliters = .34 fl. ounce
1 deciliter = 10 centiliters = 3 38 fl. ounces
1 metric ton = 10 quintals = 1.1 short tons

Approximate Conversion Factors

To change	To	Multiply by
inches	centimeters	2.540
feet	meters	.305
yards	meters	.914
miles	kilometers	1.609
sq. inches	sq. centimeters	6.451
sq. feet	sq. meters	.093
sq. yards	sq. meters	.836
sq. miles	sq. kilometers	2.590
acres	sq. hectometers	.405
cubic feet	cubic meters	.028
cubic yards	cubic meters	.765
fluid ounces	milliliters	29.573
pints	liters	.472
quarts	liters	.946
gallons	liters	3.785
ounces	grams	28.349
pounds	kilograms	.454
short tons	metric tons	.907
pound inches	newton-meters	.11296

To change	To	Multiply by
ounce inches	newton-meters	.0070062
centimeters	inches	.394
meters	feet	3.280
meters	yards	1.094
kilometers	miles	.621
sq. centimeters	sq. inches	.155
sq. meters	sq. yards	10.764
sq. kilometers	sq. miles	1.196
sq. hectometers	acres	2.471
cubic meters	cubic feet	35.315
milliliters	fluid ounces	.034
liters	pints	2.113
liters	quarts	1.057
grams	ounces	.035
kilograms	pounds	2.205
metric tons	short tons	1.102
pound-feet	newton-meters	1.356

Temperature (Exact)

°F Fahrenheit temperature — 5/9 (after subtracting 32) — Celsius Temperature °C

This fine document...

Was brought to you by me:

Liberated Manuals -- free army and government manuals

Why do I do it? I am tired of sleazy CD-ROM sellers, who take publicly available information, slap “watermarks” and other junk on it, and sell it. Those masters of search engine manipulation make sure that their sites that sell free information, come up first in search engines. They did not create it... They did not even scan it... Why should they get your money? Why are not letting you give those free manuals to your friends?

I am setting this document FREE. This document was made by the US Government and is NOT protected by Copyright. Feel free to share, republish, sell and so on.

I am not asking you for donations, fees or handouts. If you can, please provide a link to liberatedmanuals.com, so that free manuals come up first in search engines:

<A HREF=http://www.liberatedmanuals.com/>Free Military and Government Manuals</A>

- Sincerely
  Igor Chudov
  http://igor.chudov.com/
- Chicago Machinery Movers