TM 5-4320-259-20P

DEPARTMENT OF THE ARMY TECHNICAL MANUAL

TECHNICAL MANUAL

ORGANIZATIONAL MAINTENANCE

REPAIR PARTS AND SPECIAL TOOL LISTS

PUMPING ASSEMBLY FLAMMABLE LIQUID, BULK TRANSFER, CENTRIFUGAL, GASOLINE-ENGINE-DRIVEN 100 GPM (BARNES MODEL US6ACG)

FSN 4320-150-6116

This copy is a reprint which includes current pages from Changes 1.

HEADQUARTERS, DEPARTMENT OF THE ARMY

JANUARY 1972

Change No. 1

HEADQUARTERS
DEPARTMENT OF THE ARMY
Washington, D.C. *3 July 1972*

Organizational Maintenance Repair Parts and Special Tool Lists
PUMPING ASSEMBLY, FLAMMABLE LIQUID, BULK TRANSFER, CENTRIFUGAL GASOLINE-ENGINE-DRIVEN 100 GPM (BARNES MODEL US6ACG) FSN 4320-150-6116

Current as of 9 June 1972

TM 5-4320-259-20P, 6 January 1972 is changed as follows: All changes, additions, and deletions of federal stock numbers or manufacturers part numbers should be appropriately reflected in the parts listing and index of the manual.

Page	Line	Action	(1) Federal stock number	(2) Description / Usable on Code	(3) 15-day org maint alw (A) 1-5	(B) 6-20	(C) 21-50	(D) 51-100
				Section I. PRESCRIBED LOAD ALLOWANCE GROUP 02—DISCHARGE HOSE ASSEMBLY				
1	1	Add Col 1	4720-229-9108	HOSE ASSY, DISCHARGE 38075SA (05748)				

1						2	3	4	5	6				7	
Page	Line	Action	Source Maintenance and Recoverability code			Federal stock No.	Description	Unit of issue	Qty inc in unit	15 Day organizational maint allowances				Illustrations	
			Source	Maintenance	Recoverability					1-5	6-20	21-50	51-100	Figure No.	Item or symbol No.
							Section III. REPAIR PARTS FOR ORGANIZATIONAL MAINTENANCE								
							GROUP 01— SUCTION HOSE ASSEMBLY								
2	1	Add Col 2				4720-229-910''	HOSE ASSY, SUCTION 38074SA (05748)								
							GROUP 02 — DISCHARGE HOSE ASSEMBLY								
	1	Add Col 2				4720-229-9108	HOSE ASSY, DISCHARGE 38075SA (05748)								
							GROUP 03—NOZZLE ASSEMBLY								
3	5	Add Col 2				5315-168-6443	PIN COTTER H1471M (81718)								
							GROUP 04— PUMPING UNIT AND FRAME								
4	8	Add Col 2				5306-166-1813	BOLT ASSY 38732SA (05748)								
	16	Add Col 2, Ch Col 3				2990-401-0594	MUFFLER, SPARK ARRESTING 38698 (05748)								
	17	Add Col 2				4730-187-7598	COUPLER, PIPE*** 03229 (05748)								
	18	Add Col 2				4730-196-1468	NIPPLE, PIPE*** 05840 (05748)								
							GROUP 05—PUMP ASSEMBLY								
5	1	Add Col 2				4730-826-6513	PLUG, PIPE*** 03220 (05748)								
	2	Add Col 2				4730-826-6512	PLUG, PIPE*** 03219 (05748)								
							GROUP 06— AIR BAFFLES AND EXHAUST ELBOW								
6	1	Add Col 2				2990-164-3247	ELBOW, MUFFLER 220289 (34199)								

			1			2	3	4	5	6				7	
Page	Line	Action	Source Maintenance and Recoverability code			Federal stock No.	Description	Unit of issue	Qty inc in unit	15 Day organizational maint allowances				Illustrations	
			Source	Maintenance	Recoverability					1-5	6-20	21-50	51-100	Figure No.	Item or symbol No.
							GROUP 07—GOVERNOR LINKAGE								
6	9	Add Col 2				2910-164-3253	DISK ASSY,*** A221216 (34199)								
							GROUP 08—FUEL SYSTEM								
7	2	Add Col 2				4730-231-5632	ELBOW, PIPE TO TUBE,*** X447-10 (34199)								
	3	Add Col 2				2910-164-3249	LINE ASSY, FUEL A220807 (34199)								
	5	Add Col 2				2910-164-3251	STRAP ASSY, TANK A234167 (34199)								
	12	Add Col 2				2910-164-3250	ELEMENT STRAINER 220880 (34199)								
	16	Add Col 2				2910-537-1309	FUEL TANK 220527 (34199)								
	17	Add Col 2				2910-164-3252	BRACKET ASSY, TANK A221254 (34199)								
							GROUP 09—AIR CLEANER AND MOUNTING								
8	1	Add Col 2				5310-173-3166	NUT, WING*** JZM001731T (77122)								
	3	Add Col 2				5330-166-1809	GASKET, AIR CLEANER 210469 (34199)								
							GROUP II—FLYWHEEL AND MAGNETO								
9	6	Add Col 2				2990-164-3248	PULLEY STARTER 220150 (34199)								
							GROUP 14—CYLINDER BLOCK, CRANKSHAFT, AND OIL PAN								
10	1	Add Col 2				6680-789-0522	DIPSTICK 220092 (34199)								

By Order of the Secretary of the Army:

BRUCE PALMER, JR.
General, United States Army
Acting Chief of Staff

Official:

VERNE L. BOWERS,
Major General United States Army,
The Adjutant General

Distribution:
To be distributed in accordance with DA Form 12-25A (qty rqr block No. 154) Organizational Maintenance requirement for Petroleum Distribution.

TECHNICAL MANUAL
No. 5-4320-259-20P

HEADQUARTERS
DEPARTMENT OF THE ARMY
WASHINGTON, D. C., *6 January 1972*

ORGANIZATIONAL MAINTENANCE REPAIR PARTS AND SPECIAL TOOL LISTS

PUMPING ASSEMBLY, FLAMMABLE LIQUID, BULK TRANSFER, CENTRIFUGAL, GASOLINE-ENGINE-DRIVEN, 100 GPM (BARNES MODEL US6ACG)

FSN 4320-150-6116

Current as of 30 December 1971

			Listing page	Illust fig
SECTION	I.	Introduction	iii	
	II.	Prescribed load allowance	1	
	III.	Repair parts for organizational maintenance	2	
Group	01.	Suction hose assembly	2	1
	02.	Discharge hose assembly	2	2
	03.	Nozzle assembly	2	3
	04.	Pumping unit and frame	4	4
	05.	Pump assembly	5	5
	06.	Air baffles and exhaust elbow	5	6
	07.	Governor linkage	6	7
	08.	Fuel system	6	8
	09.	Air cleaner and mounting	8	9
	10.	Breather	9	10
	11.	Flywheel and magneto	9	11
	12.	Ignition	9	12
	13.	Cylinder head, valves, and pistons	10	13
	14.	Cylinder block, crankshaft, and oil can	10	14
	15.	Kits and sets	10	
SECTION	IV.	Special tool, test and support equipment-Not Applicable	11	
	V.	Federal stock number and reference number index	26	

Section I. INTRODUCTION

1. Scope

This manual lists repair parts required for the performance of organizational maintenance of the pumping assembly.

2. General

This Repair Parts and Special Tools List is divided into the following sections:

a. Prescribed Load Allowance (PLA)-Section II. A composite listing of the repair parts having quantitative allowances for initial stockage at the organizational level.

b. Repair Parts-Section III.. A list, in figure and item number sequence, of repair parts authorized for the performance of maintenance at the organizational level, including those items which must be removed for replacement of the authorized item. Items, except kits and sets, are listed by assembly groups in top down breakdown sequence. Repair parts kits and sets are listed separately as Group 15 at the end of the Repair Parts List without regard to the assembly group to which they belong. Components of the kits and sets are listed in their proper sequence in the assembly group to which they belong and are referenced to the FSN of the kit or set.

c. *Special Tools, Test and Support Equipment-Section IV.* Not Applicable.

d. Federal Stock Number and Reference Number Index - Section V. A list of Federal stock numbers in ascending numerical sequence followed by a list of reference numbers in ascending alpha-numeric sequence, cross-referenced to the illustration figure number and item number.

3. Explanation of Columns

The following provides an explanation of columns in the tabular lists in sections II, III, and IV:

a. Source, Maintenance, and Recoverability Codes (SMR), Column (1) of Section III:

(1) Source code, indicates the selection status and source for the listed item. Source codes are:

Code	*Explanation*
P	Repair parts, Special Tools and Test Equipment supplied from the GSA/DSA, or Army supply system and authorized for use at indicated maintenance categories.
P2	Repair parts. Special Tools and Test Equipment which are procured and stocked for insurance purposes because the combat or military essentiality of the end item dictates that a minimum quantity be available in the supply system.
M	Repair parts, Special Tools and Test Equipment which are not procured or stocked, as such, in the supply system but are to be manufactured at indicated maintenance levels.
A	Assemblies which are not procured or stocked as such, but are made up of two or more units. Such component units carry individual stock numbers and descriptions, are procured and stocked separately and can be assembled to form the required assembly at indicated maintenance categories.
x	Parts and assemblies that are not procured or stocked because the failure rate is normally below that of the applicable end item or component. The failure of such part or assembly should result in retirement of the end item from the supply system.
X1	Repair parts which are not procured or stocked. The requirement for such items will be filled by the next higher assembly or component.
X2	Repair parts, Special Tools and Test Equipment which are not stocked and have no foreseen mortality. The indicated maintenance category requiring such repair parts will attempt to obtain the parts through cannibalization or salvage, the item may be requisitioned with exception data, from the end item manager, for immediate use.
G	Major assemblies that are procured with PEMA funds for initial issue only as exchange assemblies at DSU and GSU level. These assemblies will not be stocked above DS and GS level or returned to depot supply level.

Note: Cannibalization or salvage may be used as a source of supply for any items source coded above except those coded X1 and aircraft support items as restricted by AR 700-42.

(2) Maintenance code, indicates the lowest category of maintenance authorized to install the listed item. The maintenance level codes are:

Code	*Explanation*
C	Operator Crew
O	Organizational maintenance

(3) Recoverability code, indicates whether unserviceable items should be returned for recovery or salvage. Items not coded are expendable, Recoverability codes are:

Code	*Explanation*
R	Applied to Repair parts, (assemblies and components) Special Tools and Test Equipment which are considered economically reparable at direct and general support maintenance levels. When the item is no longer economically reparable, it is normally disposed of at the GS

Code	Explanation
	level. When supply considerations dictate, some of these repair parts may be listed for automatic return to supply for depot level repair as set forth in AR 710-50. When so listed, they will be replaced by supply on an exchange basis.
S	Repair parts, Special Tools, Test Equipment and assemblies which are economically reparable at DSU and GSU activities and which normally are furnished by supply on an exchange basis. When items are determined by a GSU to be uneconomically reparable, they will be evacuated to a depot for evaluation and analysis before final disposition.
T	High dollar value recoverable Repair parts, Special Tools and Test Equipment which are subject to special handling and are issued on an exchange basis. Such items will be repaired or overhauled at depot maintenance activities only. No repair may be accomplished at lower levels.
U	Repair parts, Special Tools and Test Equipment specifically selected for salvage by reclamation units because of precious metal content, critical materials, high dollar value or reusable casings or castings.

b. Federal Stock Number, Column (1) of Section II and Column (2) of Section III. This column indicates the Federal stock number assigned to the item and will be used for requisitioning purposes.

c. *Description, Column (2) of Section II and Column (3) of Section III.* This column indicates the Federal item name and any additional description of the item required. A part number or other reference number is followed by the applicable five-digit Federal supply code for manufacturers in parentheses. Repair parts quantities included in the kits, sets, and assemblies are shown in front of the repair part name. Material required for manufacture or fabrication is identified.

d. Unit of Measure (U/M), Column (4) of Section III. A 2-character alphabetic abbreviation indicating the amount or quantity of the item upon which the allowances are based, e.g. ft, ea, pr, etc.

e. Quantity Incorporated in Unit, Column (5) of Section III. This column indicates the quantity of the item used in the assembly group. A "V" appearing in this column in lieu of a quantity indicates that a definite quantity cannot be indicated (e.g. shims, spacers, etc.).

f. 15-Day Organizational Maintenance Allowance, Column (3) of Section II and Column (6) of Section III.

(1) The allowance columns are divided into four subcolumns. Indicated in each subcolumn opposite the first appearance of each item is the total quantity of items authorized for the number of equipments supported. Subsequent appearances of the same item will have the letters "REF" in the allowance columns. Items authorized for use as required but not for initial stockage are identified with an asterisk in the allowance column.

(2) The quantitative allowances for organizational level of maintenance represents one initial prescribed load for a 15-day period for the number of equipments supported. Units and organizations authorized additional prescribed loads will multiply the number of prescribed loads authorized by the quantity of repair parts reflected in the density column applicable to the number of items supported to obtain the total quantity of repair parts authorized.

(3) Organizational units providing maintenance for more than 100 of these equipments shall determine the total quantity of parts required by converting the equipment quantity to a decimal factor by placing a decimal point before the next to last digit of the number to indicate hundredths, and multiplying the decimal factor by the parts quantity authorized in the 51-100 allowance column. Example, authorized allowance for 51-100 equipments is 40; for 150 equipments multiply 40 by 1.50 or 60 parts required.

(4) Subsequent changes to allowances will be limited as follows: No change in the range of items is authorized. If additional items are considered necessary, recommendation should be forwarded to U.S. Army Mobility Equipment command for exception or revision to the allowance list. Revisions to the range of items authorized will be made by this Command based upon engineering experience, demand data, or TAERS information.

g. *Illustration, Column (7) of Section III.* This column is divided as follows:

(1) *Figure number, column (7) (a).* Indicates the figure number of the illustration in which the item is shown.

(2) *Item number, column (7) (b).* Indicates the callout number used to reference the item in the illustration.

4. Special Information

a. Repair parts mortality has been based on 1,000 hours of operation per year.

b. Parts which require manufacture or assembly at a category higher than that authorized for installation will indicate in the source column the higher category.

c. The following publications pertain to the pumping assembly and its components:

TM 5-4320-259-12	Operator and Organizational Maintenance Manual
TM 5-4320-259-34	Direct Support and General Support Maintenance Manual

5. How to Locate Repair Parts

a. When Federal stock number or reference number is unknown:

(1) *First.* Using the table of contents, determine the assembly group, i.e., engine, engine assembly, transmission, transmission assembly, within which the repair part belongs. This is necessary since illustrations are prepared for assembly groups, and listings are divided into the same groups.

(2) Second. Find the illustration covering the assembly group to which the repair part belongs.

(3) *Third.* Identify the repair part on the illustration and note the illustration figure and item number of the repair part.

(4) *Fourth.* Using the Repair Parts Listing, find the assembly group to which the repair part belongs and locate the illustration figure and item number noted on the illustration.

b. When Federal stock number or reference number is known:

(1) *First.* Using the Index of Federal Stock Numbers and Reference Numbers, find the pertinent Federal stock number or reference number. This index is in ascending FSN sequence followed by a list of reference numbers in alpha-numeric sequence, cross-referenced to the illustration figure number and item number.

(2) *Second.* Using the Repair Part Listing, find the assembly group of the repair part and the illustration figure number and item number referenced in the Index of Federal Stock Numbers and Reference Numbers.

6. Abbreviations

Abbreviations	*Explanation*
assy	assembly
brs	brass
cad. pl.	cadmium plated
cres	corrosion-resistant steel
EPT	External Pipe Thread
fh	flat head
hd	head
int	internal
IPT	Internal Pipe Thread
lg	long
med	medium
MI	Malleable iron
NPT	National Taper Pipe Thread
NPTF	National Taper Pipe Thread for Tight Joints
stl	steel
thd	thread
thk	thick

7. Federal Supply Codes for Manufacturers

Code	*Manufacturer*
05748	Barnes Manufacturing Company
11583	Champion Spark Plug Company Toledo. Ohio
34199	Kohler Company
61864	United-Carr, Inc., Boston, Massachusetts
77122	Palnut Company
78940	United Air Cleaner Division, United Filtration Corporation
79470	The Weatherhead Company, Cleveland, Ohio
81718	Dover Corporation, OPW Division, Cincinnati, Ohio
94135	Naval Ordnance Standards
96906	Military Standards

8. Recommendations for Maintenance Publication Improvements

Report of errors, omissions, and recommendations for improving this publication by the individual user is encouraged. Reports should be submitted on DA Form 2028 (Recommended Changes to Publications) and forwarded direct to U. S. Army Mobility Equipment Command, 4300 Goodfellow Blvd., ATTN: AMSME-MPP, St. Louis, Mo. 63120.

Section II. PRESCRIBED LOAD ALLOWANCE

(1) FEDERAL STOCK NUMBER	(2) DESCRIPTION	USABLE ON CODE	(3) 15-DAY ORGANIZATIONAL MAINTENANCE ALW (a) 1-5	(b) 6-20	(c) 21-50	(d) 51-100
	GROUP 01 - SUCTION HOSE ASSEMBLY					
4730-360-0595	GASKET MS27030-5 (96906)		*	*	*	1
	GROUP 02 - DISCHARGE HOSE ASSEMBLY					
	HOSE ASSY, DISCHARGE 38075SA (05748)		*	*	1	1
	GROUP 03 - NOZZLE ASSEMBLY					
	NOZZLE ASSY 15689SA (05748)		*	*	*	1
	GROUP 04 - PUMPING UNIT AND FRAME					
	MUFFLER 38698 (05748)		*	*	1	1
	GROUP 06 - AIR BAFFLES AND EXHAUST ELBOW					
5330-544-0597	GASKET, MUFFLER ELBOW 220122 (34199)		*	*	*	1
	GROUP 08 - FUEL SYSTEM					
2910-729-9944	CARBURETOR G220517 (34199)		*	*	*	1
2910-752-2183	FILTER, FUEL A220805 (34199)		*	*	1	1
5330-562-1149	GASKET, CARBURETOR 210223 (34199)		*	*	*	1
	ELEMENT, STRAINER 220880 (34199)		*	*	1	1
	GASKET, BOWL 220881 (34199)		*	*	1	1
	GROUP 10 - BREATHER					
2805-573-9996	GASKET, BREATHER PLATE 220370 (34199)		*	*	*	1
2940-428-3506	FILTER, BREATHER 210256 (34199)		*	*	*	1
5340-724-4349	BUSHING, RUBBER 220369 (34199)		*	*	*	1
	GROUP 11 - FLYWHEEL AND MAGNETO					
2990-585-3920	ROPE, STARTER A220090 (34199)		*	1	2	5
	PULLEY, STARTER 220150 (34199)		*	*	*	1
	GROUP 13 - CYLINDER HEAD, VALVES, AND PISTON					
2805-738-7505	HEAD ASSY, CYLINDER A220796 (34199)		*	*	*	1
2920-288-3126	SPARK PLUG XMJ14 (11583)		1	3	6	11
2920-758-2173	CABLE, SPARK PLUG A220798 (34199)		*	*	*	1
	GASKET, CYLINDER HEAD 220124 (34199)		*	*	1	1
	GROUP 15 - KITS AND SETS					
4930-904-1383	PARTS KIT, NOZZLE REPAIR H4126 (81718)		1	2	4	8

Section III. REPAIR PARTS FOR ORGANIZATIONAL MAINTENANCE

(1) SMR CODE	(2) FEDERAL STOCK NUMBER	(3) DESCRIPTION REF NUMBER & MFR CODE	USABLE ON CODE	(4) UNIT OF MEAS	(5) QTY INC IN UNIT	(6) 15-DAY ORGANIZATIONAL MAINTENANCE ALW (a) 1-5	(b) 6-20	(c) 21-50	(d) 51-100	(7) ILLUSTRATION (a) FIG. NO.	(b) ITEM NO.
		GROUP 01 - SUCTION HOSE ASSEMBLY									
P2-O--		HOSE ASSY, SUCTION 38074SA (05748)		EA	1	*	*	*	*	1	1
X1----	4320-360-0947	CLAMP, HOSE 05858 (05748)		EA	4					1	2
X2-O--	5340-825-5317	COUPLING HALF, DUST CAP MS27028-9 (96906)		EA	1					1	3
P--O--	4730-360-0595	GASKET MS27030-5 (96906)		EA	1	*	*	*	1	1	4
X1----	4730-360-0592	COUPLING HALF, MALE MS27021-9 (96906)		EA	1					1	5
X1----	5340-823-5316	COUPLING HALF, DUST PLUG MS27029-9 (96906)		EA	1					1	6
X1----	4730-360-0591	COUPLING HALF, FEMALE MS27025-9 (96906)		EA	1					1	7
P--O--	4730-360-0595	GASKET MS27030-5 (96906)		EA	1	REF	REF	REF	REF	1	8
X1----		HOSE 38955 (05748)		EA	1	*	*	*	*	1	9
		GROUP 02 - DISCHARGE HOSE ASSEMBLY									
P--O--		HOSE ASSY, DISCHARGE 38075SA (05748)		EA	2	*	*	1	1	2	1
X1----	4320-360-0947	CLAMP, HOSE 05858 (05748)		EA	8					2	2
X2-O--	5340-825-5317	COUPLING HALF, DUST CAP MS27028-9 (96906)		EA	2					2	3
P--O--	4730-360-0595	GASKET MS27030-5 (96906)		EA	2	REF	REF	REF	REF	2	4
X1----	4730-360-0592	COUPLING HALF, MALE MS27021-9 (96906)		EA	2					2	5
X1----	5340-823-5316	COUPLING HALF, DUST PLUG MS27029-9 (96906)		EA	2					2	6
X1----	4730-360-0591	COUPLING HALF, FEMALE MS27025-9 (96906)		EA	2					2	7
P--O--	4730-360-0595	GASKET MS27030-5 (96906)		EA	2	REF	REF	REF	REF	2	8
X1----		HOSE 38953 (05748)		EA	2					2	9
		GROUP 03 - NOZZLE ASSEMBLY									
P--O--		NOZZLE ASSY 15689SA (05748)		EA	2	*	*	*	1	3	1
X1----	5340-823-5316	COUPLING HALF, DUST PLUG MS27029-9 (96906)		EA	2					3	2

(1) SMR CODE	(2) FEDERAL STOCK NUMBER	(3) DESCRIPTION REF NUMBER & MFR CODE	USABLE ON CODE	(4) UNIT OF MEAS	(5) QTY INC IN UNIT	(6) 15-DAY ORGANIZATIONAL MAINTENANCE ALW (a) 1-5	(b) 6-20	(c) 21-50	(d) 51-100	(7) ILLUSTRATION (a) FIG. NO.	(b) ITEM NO.
X1----		COUPLING HALF, FEMALE MS27026-9 (96906)		EA	2					3	3
P--O--	4730-360-0595	GASKET MS27030-5 (96906)		EA	2	REF	REF	REF	REF	3	4
X1----		NOZZLE 190GA1 1-2IN (81718)		EA	2					3	5
X1----		WIRE, GROUND 616W (81718)		EA	2					3	6
P--O--		PIN, COTTER H1471M (81718)		EA	2	*	*	*	*	3	7
X2-O--		PIN, LEVER H3353 (81718)		EA	2					3	8
X1----		LEVER H1668B (81718)		EA	2					3	9
X1----		CAP H3804A (81718)		EA	2					3	10
X1----		LINK H3673M (81718)		EA	4					3	11
X1----		LINK, CHAIN H284M (81718)		EA	24					3	12
X1----		SPRING, LEVER H3667M (81718)		EA	2					3	13
X1----		ADAPTER AND TUBE 296 (81718)		EA	2					3	14
X1----		STRAINER 153 1 1-2X1 5-8IN (81718)		EA	2					3	15
X1----		CAP H1669A (81718)		EA	2					3	16
X1----		SPRING, POPPET H2061M (81718)		EA	2					3	17
X1----		POPPET PART OF KIT FSN 4930-904-1383 C838M (81718)		EA	2					3	18
X1----		RETAINER, DISK H1670M (81718)		EA	2					3	19
X1----		DISK PART OF KIT FSN 4930-904-1383 H502M (81718)		EA	2					3	20
X1----		WASHER, DISK H428RA (81718)		EA	2					3	21
X1----		NUT H213RB (81718)		EA	2					3	22
X1----		STEM H538RE (81718)		EA	2					3	23
X1----		PACKING NUT PART OF KIT FSN 4930-904-1383 H113RA (81718)		EA	2					3	24
X1----		GLAND, PACKING H7012M (81718)		EA	2					3	25
X1----		STUFFING BOX H195RB (81718)		EA	2					3	26

(1) SMR CODE	(2) FEDERAL STOCK NUMBER	(3) DESCRIPTION REF NUMBER & MFR CODE	USABLE ON CODE	(4) UNIT OF MEAS	(5) QTY INC IN UNIT	(6) 15-DAY ORGANIZATIONAL MAINTENANCE ALW (a) 1-5	(b) 6-20	(c) 21-50	(d) 51-100	(7) ILLUSTRATION (a) FIG. NO.	(b) ITEM NO.
X1----		PACKING PART OF KIT FSN 4930-904-1383 H714M (81718)		EA	2					3	27
X1----		BODY D546A (81718)		EA	2					3	28
		GROUP 04 - PUMPING UNIT AND FRAME									
P--O--	5305-068-0502	SCREW, CAP HEX HD, STL, CAD. PL, 1/4-20 THD, 3/4 IN. LG MS90725-6 (96906)		EA	6	*	*	*	*	4	1
P--O--	5310-761-6882	NUT, PLAIN, HEXAGON STL, CAD. PL, 1/4-20 THD MS51967-2 (96906)		EA	10	*	*	*	*	4	2
P--O--	5310-582-5965	WASHER, LOCK STL, CAD. PL, 1/4 IN., MED MS35338-44 (96906)		EA	11	*	*	*	*	4	3
P--O--	5305-071-2240	SCREW, CAP HEX HD, STL, CAD. PL, 1/4-20 THD, 1-3/8 IN. LG MS90725-11 (96906)		EA	4	*	*	*	*	4	4
P--O--	5310-809-4058	WASHER, FLAT STL, CAD. PL, 0.281 IN. ID, 0.625 IN. OD, 0.065 IN. THK MS27183-10 (96906)		EA	4	*	*	*	*	4	5
X2-O--		SPACER, SLEEVE HOSE CONTAINER 38685 (05748)		EA	4					4	6
X2-O--		CONTAINER, HOSE 38607SA (05748)		EA	2					4	7
P--O--		BOLT ASSY 38732SA (05748)		EA	4	*	*	*	*	4	9
X1----		S-HOOK 09307 (05748)		EA	8					4	10
X1----		CHAIN 38737 (05748)		EA	4					4	11
X1----		BOLT SUBASSY 38733 (05748)		EA	4					4	12
X2-O--	5340-825-5317	COUPLING HALF, DUST CAP MS27028-9 (96906)		EA	4					4	13
P--O--	4730-360-0595	GASKET MS27030-5 (96906)		EA	4	REF	REF	REF	REF	4	14
X2-O--		CROSS, DISCHARGE 635C1 1-2IN (81718)		EA	1					4	15
X2-O--		COUPLING HALF, MALE SUCTION MS27022-9 (96906)		EA	1					4	16
P--O--		MUFFLER 38698 (05748)		EA	1	*	*	1	1	4	23
P--O--		COUPLING, PIPE STL, 3/4 IN. IPT 03229 (05748)		EA	1	*	*	*	*	4	24
P--O--		NIPPLE, PIPE STL, 3/4 IN. EPT, 1-3/8 IN. LG 05840 (05748)		EA	1	*	*	*	*	4	25

(1) SMR CODE	(2) FEDERAL STOCK NUMBER	(3) DESCRIPTION REF NUMBER & MFR CODE	USABLE ON CODE	(4) UNIT OF MEAS	(5) QTY INC IN UNIT	(6) 15-DAY ORGANIZATIONAL MAINTENANCE ALW (a) 1-5	(b) 6-20	(c) 21-50	(d) 51-100	(7) ILLUSTRATION (a) FIG. NO.	(b) ITEM NO.
P--O--		ELBOW, PIPE MI, 3/4 IN. EPT, 3/4 IN. IPT 05803 (05748)		EA	1	*	*	*	*	4	26
P--O--		NUT STL, 3/4-14 STRAIGHT PIPE THD 22564 (05748)		EA	1	*	*	*	*	4	27
X2-O--		BRACKET, MUFFLER 38705 (05748)		EA	1					4	32
P--O--	5305-175-3230	SCREW, DRIVE CRES, NO. 4 X 3/16 IN. LG, TYPE U MS21318-14 (96906)		EA	4	*	*	*	*	4	38
X2-O--		PLATE, IDENTIFICATION 38696 (05748)		EA	1					4	39
X2-O--		FRAME 38571SA (05748)		EA	1					4	40
		GROUP 05 - PUMP ASSEMBLY									
P--O--		PLUG, PIPE MI, ZINC PL, 1 IN. NPT 03220 (05748)		EA	1	*	*	*	*	5	14
P--O--		PLUG, PIPE MI, ZINC PL, 3/4 IN. NPT 03219 (05748)		EA	1	*	*	*	*	5	15
		GROUP 06 - AIR BAFFLES AND EXHAUST ELBOW									
P--O--	5305-958-5245	SCREW, CAP FH, STL, CAD. PL, 1/4-20 THD, 5/8 IN. LG MS35190-288 (96906)		EA	4	*	*	*	*	6	1
P--O--	5310-550-1130	WASHER, LOCK STL, CAD. PL, 1/4 IN., INT TEETH MS35333-40 (96906)		EA	1	*	*	*	*	6	2
X2-O--		BAFFLE, CYLINDER HEAD 220605 (34199)		EA	1					6	3
P--O--	5310-637-9541	WASHER, LOCK STL, CAD. PL, 1/4 IN., MED MS35338-46 (96906)		EA	3	*	*	*	*	6	4
X2-O--		BAFFLE, CYLINDER BLOCK 220054 (34199)		EA	1					6	5
X2-O--		FASTENER, INSTRUCTION PLATE 549361 (61864)		EA	4					6	6
X2-O--		PLATE, INSTRUCTION 220558 (34199)		EA	1					6	7
P--O--	5306-283-0407	SCREW, ASSEMBLED WASHER HEX HD, STL, ZINC PL, 1/4-20 THD, 1/2 IN. LG X132-6 (34199)		EA	1	*	*	*	*	6	9
P--O--	5310-761-6882	NUT, PLAIN, HEXAGON STL, CAD. PL, 1/4-20 THD MS51967-2 (96906)		EA	2	REF	REF	REF	REF	6	10

(1) SMR CODE	(2) FEDERAL STOCK NUMBER	(3) DESCRIPTION REF NUMBER & MFR CODE	USABLE ON CODE	(4) UNIT OF MEAS	(5) QTY INC IN UNIT	(6) 15-DAY ORGANIZATIONAL MAINTENANCE ALW (a) 1-5	(b) 6-20	(c) 21-50	(d) 51-100	(7) ILLUSTRATION (a) FIG. NO.	(b) ITEM NO.
P2-O--		ELBOW, MUFFLER 220289 (34199)		EA	1	*	*	*	*	6	11
P--O--	5330-544-0597	GASKET, MUFFLER ELBOW 220122 (34199)		EA	1	*	*	*	1	6	12
P--O--	5307-619-2441	STUD STL, 1/4-20 THD, 1.88 IN. LG 220133 (34199)		EA	2	*	*	*	*	6	13
		GROUP 07 - GOVERNOR LINKAGE									
P--O--		SCREW, CAP HEX HD, STL, ZINC PL, 1/4-20 THD, 1 IN. LG X5-7 (34199)		EA	1	*	*	*	*	7	1
P--O--	5310-761-6882	NUT, PLAIN, HEXAGON STL, CAD, PL, 1/4-20 THD MS51967-2 (96906)		EA	1	REF	REF	REF	REF	7	2
P--O--	5310-685-8308	WASHER, FLAT STL, 17/64 IN. ID, 1/2 IN. OD, 1/16 IN. THK X25-63 (34199)		EA	2	*	*	*	*	7	3
X2-O--		LEVER, GOVERNOR 220126 (34199)		EA	1					7	4
P2-O--	2910-789-0636	LINKAGE, GOVERNOR 220380 (34199)		EA	1	*	*	*	*	7	5
P--O--	5360-778-2067	SPRING, GOVERNOR 220119 (34199)		EA	1	*	*	*	1	7	6
P--O--	5365-594-9499	RING, RETAINING X269-13 (34199)		EA	1	*	*	*	*	7	7
P2-O--	2990-544-0609	BUSHING, GOVERNOR 220132 (34199)		EA	1	*	*	*	*	7	8
P2-O--		DISK ASSY, GOVERNOR REGULATING A221216 (34199)		EA	1	*	*	*	*	7	9
P--O--	5305-689-3965	SCREW, DRIVE STL, NO. 2 THD, 3/16 IN. LG X67-5 (34199)		EA	1	*	*	*	*	7	10
X1----		DISK, REGULATING 220127 (34199)		EA	1					7	11
P2-O--	2990-980-5123	BRACKET, SPEED CONTROL 220156 (34199)		EA	1	*	*	*	*	7	12
X2-O--		SHAFT, GOVERNOR 220131 (34199)		EA	1					7	13
		GROUP 08 - FUEL SYSTEM									
X2-O--		DECAL, CHOKE 231324 (34199)		EA	1					8	1
P--O--	5305-728-2916	SCREW, ASSEMBLED WASHER HEX HD, STL, ZINC PL, 1/4-20 THD, 3/4 IN. LG X140-1 (34199)		EA	2	*	*	*	*	8	2
P--O--	2910-729-9944	CARBURETOR G220517 (34199)		EA	1	*	*	*	1	8	3

(1) SMR CODE	(2) FEDERAL STOCK NUMBER	(3) DESCRIPTION REF NUMBER & MFR CODE	USABLE ON CODE	(4) UNIT OF MEAS	(5) QTY INC IN UNIT	(6) 15-DAY ORGANIZATIONAL MAINTENANCE ALW (a) 1-5	(b) 6-20	(c) 21-50	(d) 51-100	(7) ILLUSTRATION (a) FIG. NO.	(b) ITEM NO.
P--O--	5330-562-1149	GASKET, CARBURETOR 210223 (34199)		EA	1	*	*	*	1	8	4
P--O--		ELBOW, PIPE TO TUBE BRS, 7/16-20 THD, 1/8 EPT X447-10 (34199)		EA	2	*	*	*	*	8	5
P2-O--		LINE ASSY, FUEL A220807 (34199)		EA	1	*	*	*	*	8	6
P--O--	4730-011-6452	NUT, TUBE BRS, 7/16-20 THD 1110-4 (79470)		EA	2	*	*	*	*	8	7
P2-O--		STRAP ASSY, TANK A234167 (34199)		EA	1	*	*	*	*	8	8
P--O--		SCREW, CAP HEX HD, STL, ZINC PL, 1/4-20 THD, 1-1/4 IN. LG 50883 (05748)		EA	1	*	*	*	*	8	9
P--O--	5310-824-9399	NUT, SELF-LOCKING, HEXAGON STL, 1/4-20 THD 12Z2007-383 (94135)		EA	1	*	*	*	*	8	10
X1----		STRAP, TANK 230160 (34199)		EA	1					8	11
P--O--	2910-752-2183	FILTER, FUEL A220805 (34199)		EA	1	*	*	1	1	8	12
X1----		BAIL 221138 (34199)		EA	1					8	13
P--O--		GASKET, BOWL 220881 (34199)		EA	1	*	*	1	1	8	14
P--O--		ELEMENT, STRAINER 220880 (34199)		EA	1	*	*	1	1	8	15
X1----		BOWL 220879 (34199)		EA	1					8	16
P--O--	4730-684-4208	NIPPLE, PIPE BLACK IRON, 1/8 IN. EPT, 3/4 IN. LG X217-6 (34199)		EA	1	*	*	*	*	8	17
X1----		STRAINER 220526 (34199)		EA	1					8	18
P2-O--		FUEL TANK 220527 (34199)		EA	1	*	*	*	*	8	19
P2-O--		BRACKET ASSY, TANK A221254 (34199)		EA	1	*	*	*	*	8	20
X1----		WEBBING, TANK 220166 (34199)		EA	2					8	21
X1----		BRACKET, TANK 221252 (34199)		EA	1					8	22

(1) SMR CODE	(2) FEDERAL STOCK NUMBER	(3) DESCRIPTION REF NUMBER & MFR CODE	USABLE ON CODE	(4) UNIT OF MEAS	(5) QTY INC IN UNIT	(6) 15-DAY ORGANIZATIONAL MAINTENANCE ALW (a) 1-5	(b) 6-20	(c) 21-50	(d) 51-100	(7) ILLUSTRATION (a) FIG. NO.	(b) ITEM NO.
		GROUP 09 - AIR CLEANER AND MOUNTING									
P--O--		NUT, WING STL, 1/4-20 THD JZM001731T (77122)		EA	1	*	*	*	*	9	1
P2-O--	2940-371-4584	AIR CLEANER, INTAKE H40-9385 (78940)		EA	1	*	*	*	*	9	2
P--O--		GASKET, AIR CLEANER 210469 (34199)		EA	1	*	*	*	1	9	3
P--O--	5310-761-6882	NUT, PLAIN, HEXAGON STL, CAD, PL, 1/4-20 THD MS51967-2 (96906)		EA	1	REF	REF	REF	REF	9	4
P--O--	5310-637-9541	WASHER, LOCK STL, CAD, PL, 1/4 IN., MED MS35338-46 (34199)		EA	1	REF	REF	REF	REF	9	5
P--O--	5310-685-8308	WASHER, FLAT STL, 17/64 IN. ID, 1/2 IN. OD, 1/16 IN. THK X25-63 (34199)		EA	1	REF	REF	REF	REF	9	6
P--O--	5305-984-6200	SCREW, MACHINE PAN HD, STL, CAD PL, NO. 8-32 THD, 1-3/4 IN. LG MS35206-252 (96906)		EA	2	*	*	*	*	9	7
P--O--	5310-855-2417	WASHER, LOCK STL, NO. 8, MED X18-2 (34199)		EA	2	*	*	*	*	9	8
X2-O--		ELBOW ASSY, CLEANER A221174 (34199)		EA	1					9	9
P--O--	5307-818-1257	STUD STL, 1/4-20 THD, 7 IN. LG 220069 (34199)		EA	1	*	*	*	*	9	10
X2-O--		ELBOW, CLEANER 220173 (34199)		EA	1					9	11
P--O--	5330-585-1494	GASKET, CLEANER ELBOW 220537 (34199)		EA	1	*	*	*	*	9	12
P--O--	5306-283-0407	SCREW, ASSEMBLED WASHER HEX HD, STL, ZINC PL, 1/4-20 THD, 1/2 IN. LG X132-6 (34199)		EA	1	REF	REF	REF	REF	9	13
X2-O--		BRACE, CLEANER ELBOW 220371 (34199)		EA	1					9	14

(1) SMR CODE	(2) FEDERAL STOCK NUMBER	(3) DESCRIPTION REF NUMBER & MFR CODE	USABLE ON CODE	(4) UNIT OF MEAS	(5) QTY INC IN UNIT	(6) 15-DAY ORGANIZATIONAL MAINTENANCE ALW (a) 1-5	(b) 6-20	(c) 21-50	(d) 51-100	(7) ILLUSTRATION (a) FIG. NO.	(b) ITEM NO.
		GROUP 10 - BREATHER									
P--O--	5310-761-6882	NUT, PLAIN, HEXAGON STL, CAD. PL, 1/4-20 THD MS51967-2 (96906)		EA	1	REF	REF	REF	REF	10	1
P--O--	5310-637-9541	WASHER, LOCK STL, CAD. PL, 1/4 IN., MED MS35338-46 (96906)		EA	1	REF	REF	REF	REF	10	2
X2-O--		COVER, BREATHER 220358 (34199)		EA	1					10	3
P--O--	2940-428-3506	FILTER, BREATHER 210256 (34199)		EA	1	*	*	*	1	10	4
P--O--	5340-724-4349	BUSHING, RUBBER 220369 (34199)		EA	1	*	*	*	1	10	5
X2-O--		REED 220379 (34199)		EA	1					10	6
P--O--	2805-573-9996	GASKET, BREATHER PLATE 220370 (34199)		EA	2	*	*	*	1	10	7
X2-O--		PLATE, BREATHER 221250 (34199)		EA	1					10	8
P--O--	5307-778-2131	STUD STL, 1/4-20 THD, 2-9/16 IN. LG 220368 (34199)		EA	1	*	*	*	*	10	9
		GROUP 11 - FLYWHEEL AND MAGNETO									
P--O--	2990-585-3920	ROPE, STARTER A220090 (34199)		EA	1	*	1	2	5	11	1
X2-O--		RETAINER, SCREEN 220113 (34199)		EA	1					11	2
X2-O--		SCREEN 220098 (34199)		EA	1					11	3
P--O--	5310-584-5029	NUT, SELF-LOCKING, HEXAGON STL, ZINC PL, 7/16-20 THD X119-9 (34199)		EA	1	*	*	*	*	11	4
P--O--	5310-209-0965	WASHER, LOCK STL, CAD. PL, 7/16 IN., MED MS35338-47 (96906)		EA	1	*	*	*	*	11	5
P--O--		PULLEY, STARTER 220150 (34199)		EA	1	*	*	*	1	11	6
		GROUP 12 - IGNITION									
X2-O--		SPRING, STOP BUTTON 220045 (34199)		EA	1					12	3
X2-O--		BUTTON, STOP 220044 (34199)		EA	1					12	4

(1) SMR CODE	(2) FEDERAL STOCK NUMBER	(3) DESCRIPTION REF NUMBER & MFR CODE	USABLE ON CODE	(4) UNIT OF MEAS	(5) QTY INC IN UNIT	(6) 15-DAY ORGANIZATIONAL MAINTENANCE ALW (a) 1-5	(b) 6-20	(c) 21-50	(d) 51-100	(7) ILLUSTRATION (a) FIG. NO.	(b) ITEM NO.
		GROUP 13 - CYLINDER HEAD, VALVES, AND PISTON									
P--O--	2920-758-2173	CABLE, SPARK PLUG A220798 (34199)		EA	1	*	*	*	1	13	1
P--O--	2920-288-3126	SPARK PLUG XMJ14 (11583)		EA	1	1	3	6	11	13	2
P--O--	5306-226-4829	BOLT, MACHINE HEX HD. STL. CAD. PL. 5/16-18 THD. 1-1/4 IN. LG MS90728-36 (96906)		EA	6	*	*	*	*	13	3
P--O--	5310-778-0261	WASHER, FLAT STL. 21/64 IN. ID. 23/32 IN. OD. 1/8 IN. THK 220534 (34199)		EA	6	*	*	*	*	13	4
P--O--	2805-738-7505	HEAD ASSY, CYLINDER A220796 (34199)		EA	1	*	*	*	1	13	5
X1----		INSERT, SCREW THREAD 235014 (34199)		EA	1					13	6
X1----		HEAD, CYLINDER 220795 (34199)		EA	1					13	7
P--O--		GASKET, CYLINDER HEAD 220124 (34199)		EA	1	*	*	1	1	13	8
		GROUP 14 - CYLINDER BLOCK, CRANKSHAFT, AND OIL PAN									
P2-O--		DIPSTICK 220092 (34199)		EA	1					14	1
P--O--	4730-724-6067	PLUG, PIPE, MAGNETIC STL. 3/8 IN. NPTF X305-4 (34199)		EA	1	*	*	*	*	14	2
		GROUP 15 - KITS AND SETS									
P--O--	4930-904-1383	PARTS KIT, NOZZLE REPAIR H4126 (81718)		EA	1	1	2	4	8		
		1 POPPET								3	18
		1 DISK								3	20
		1 NUT								3	24
		1 PACKING								3	27

Section IV. SPECIAL TOOLS, TEST, AND SUPPORT EQUIPMENT - NOT APPLICABLE

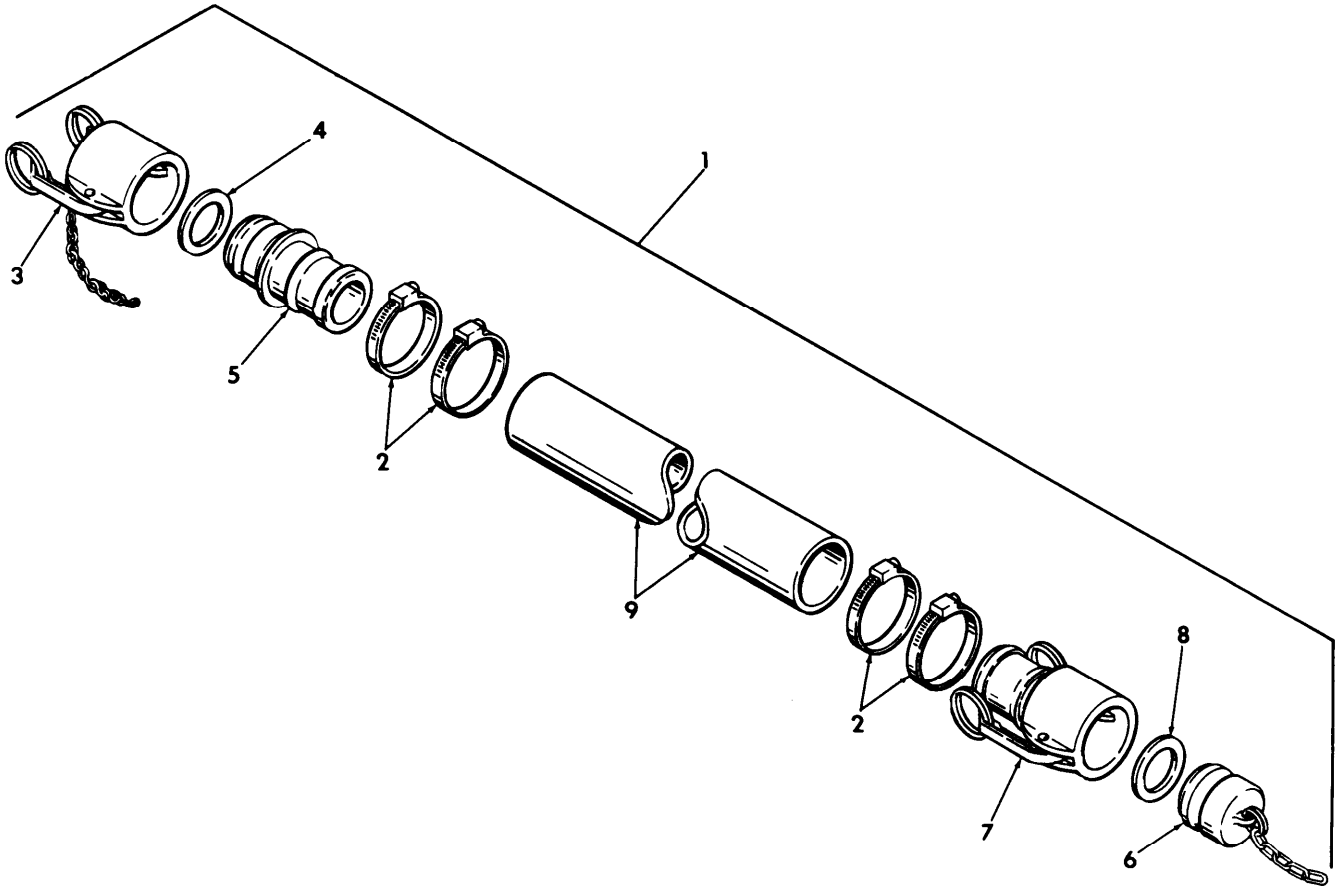

ME 4320-259-35P/1

Figure 1. Suction hose assembly

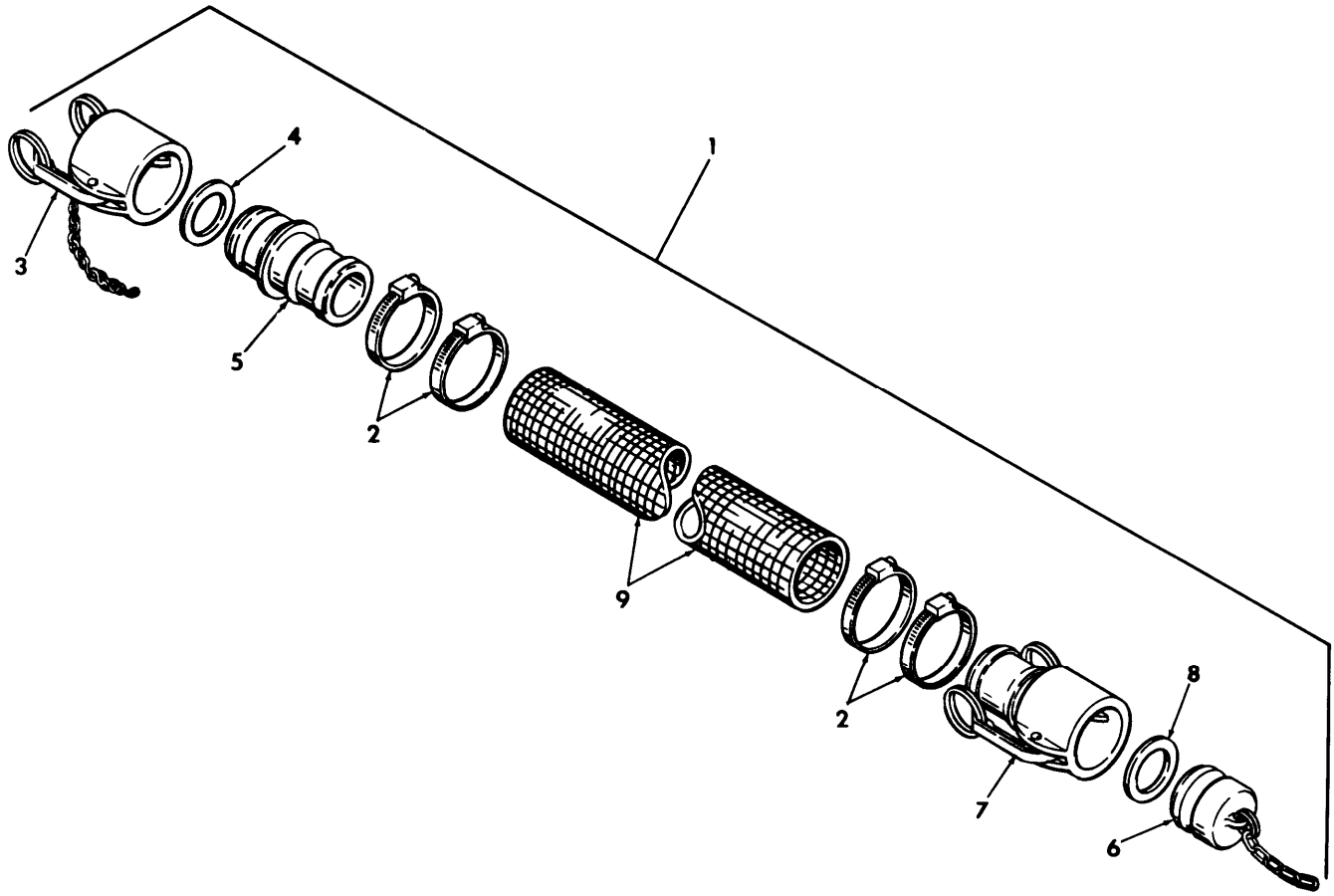

Figure 2. Discharge hose assembly

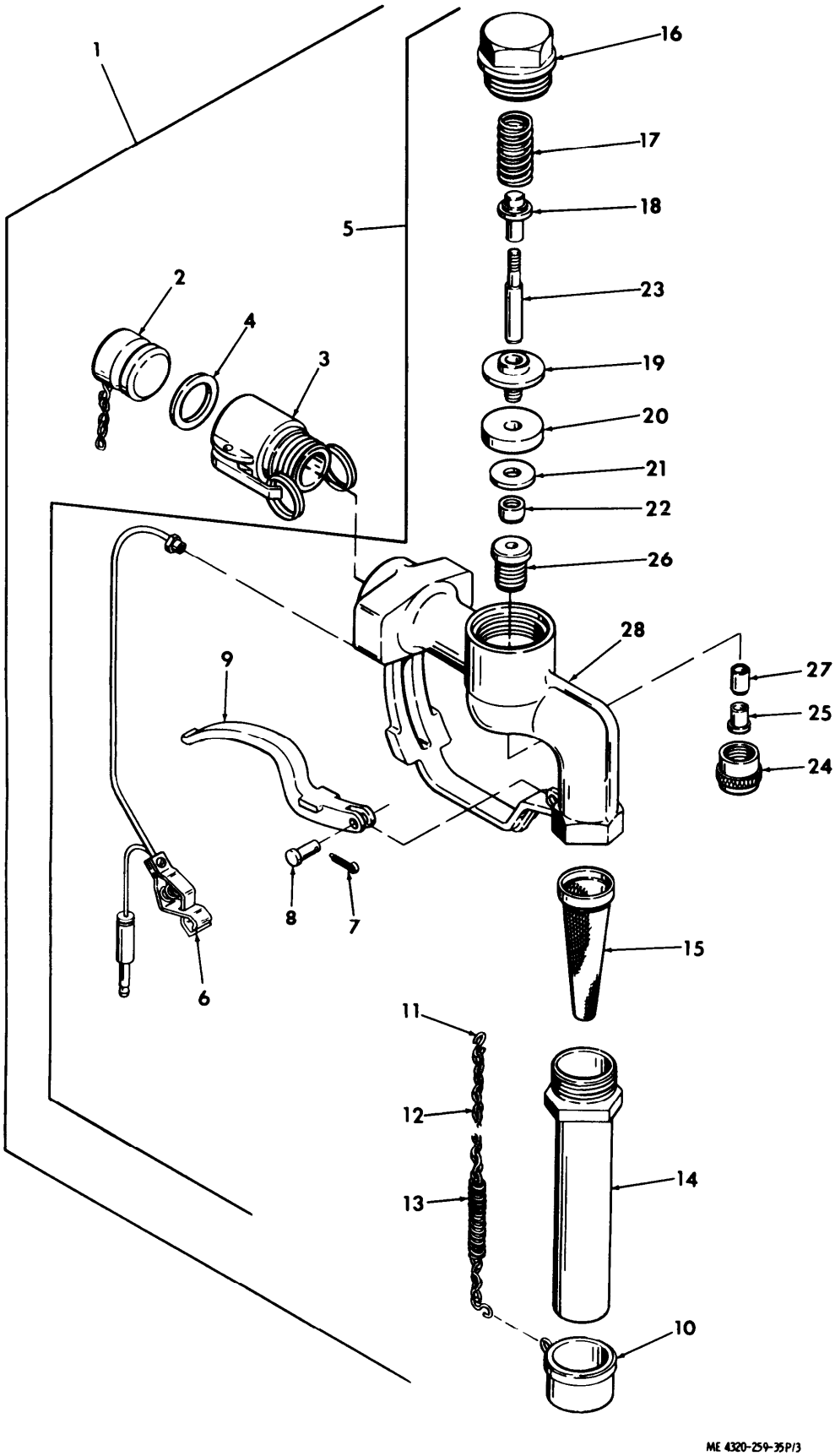

Figure 3. Nozzle assembly

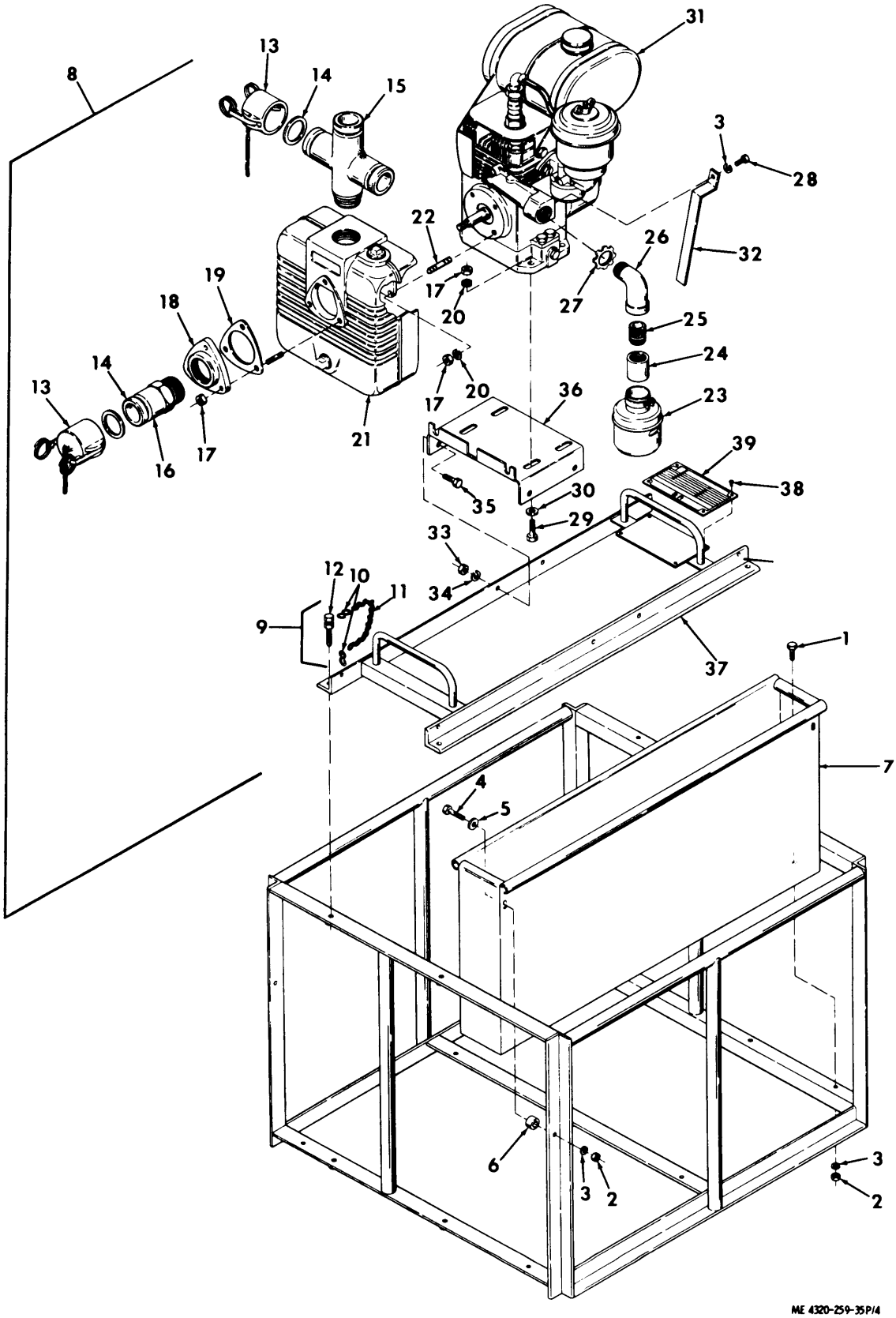

Figure 4. Pumping unit and frame

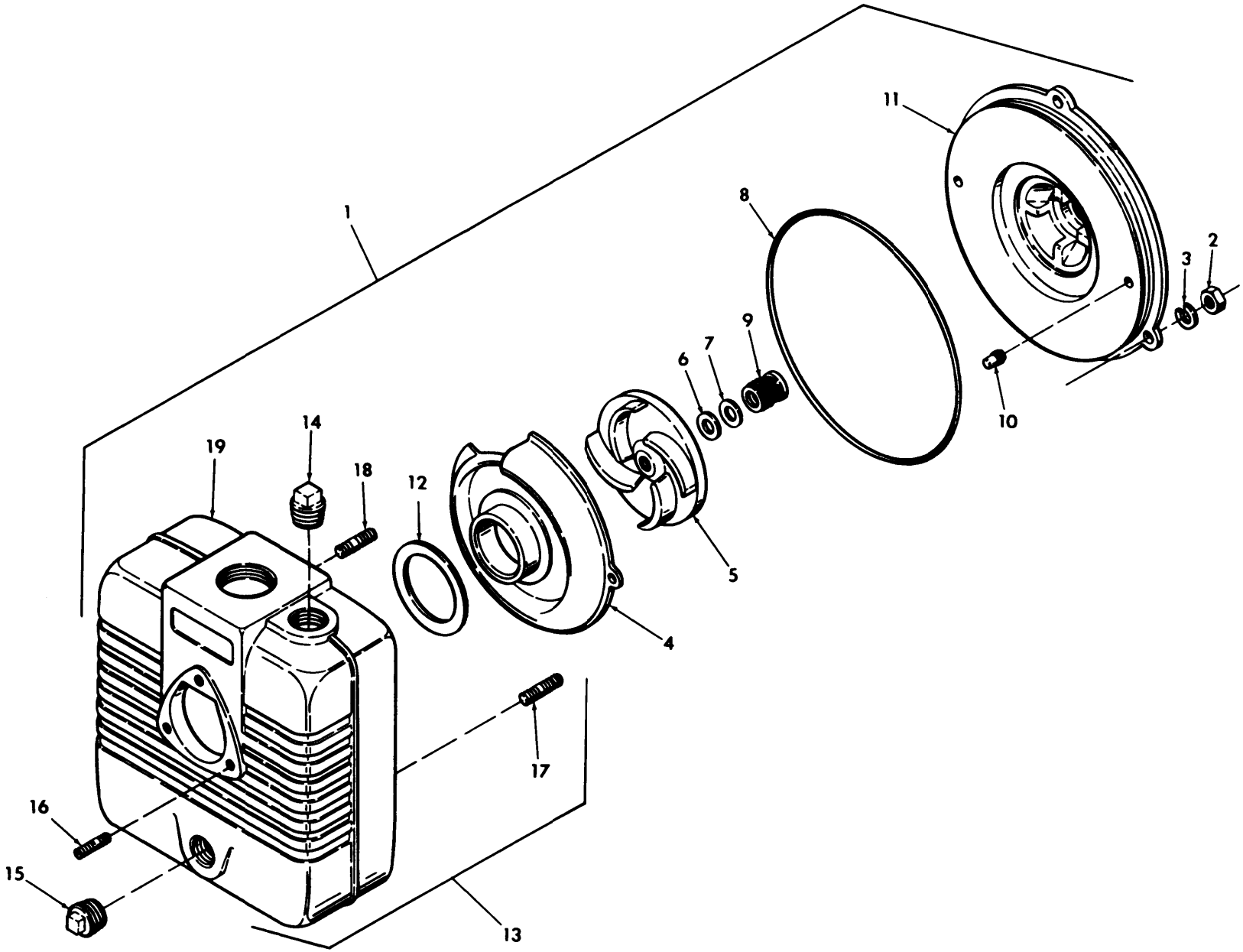

Figure 5. Pump assembly

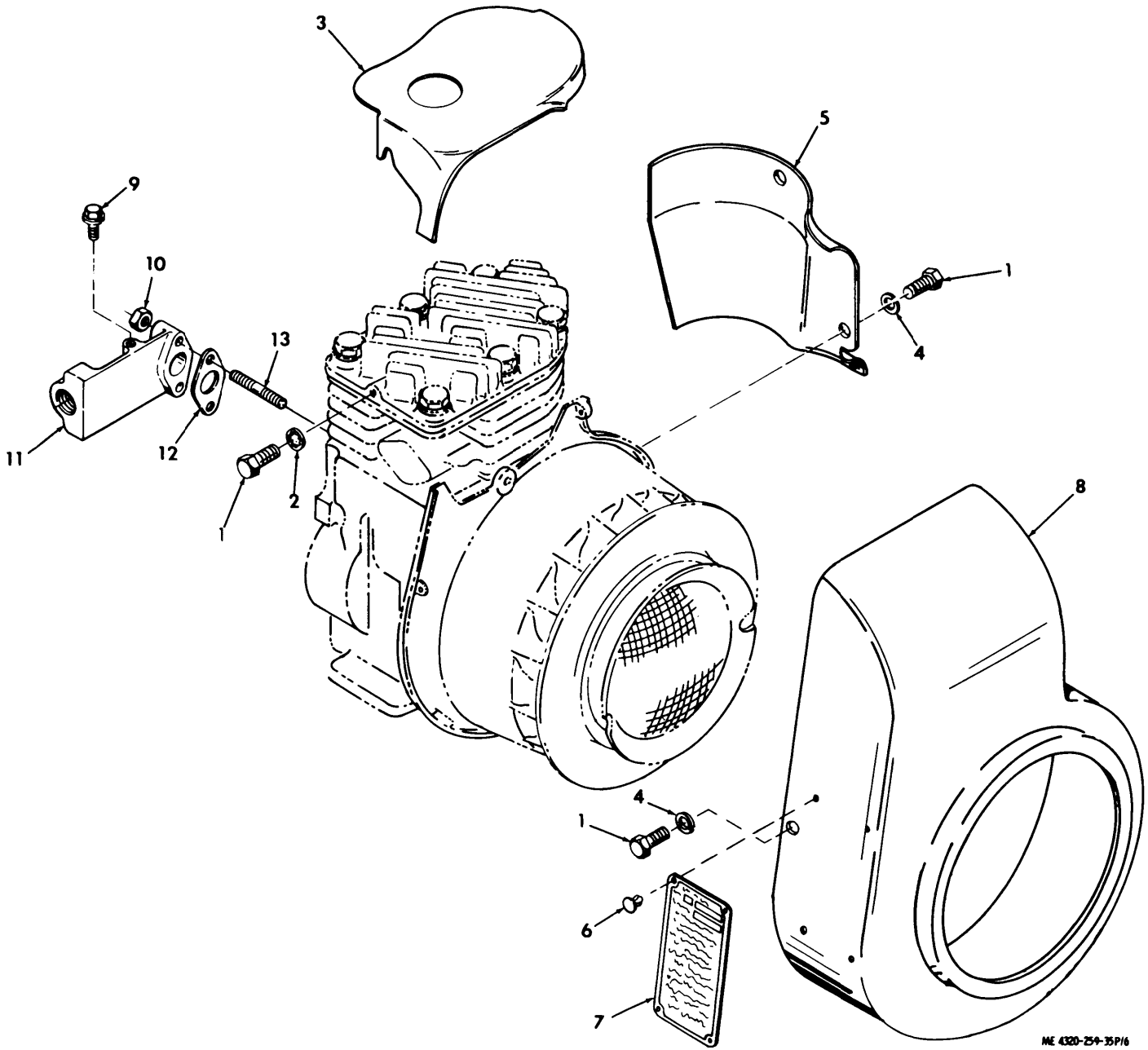

Figure 6. Air baffles and exhaust elbow

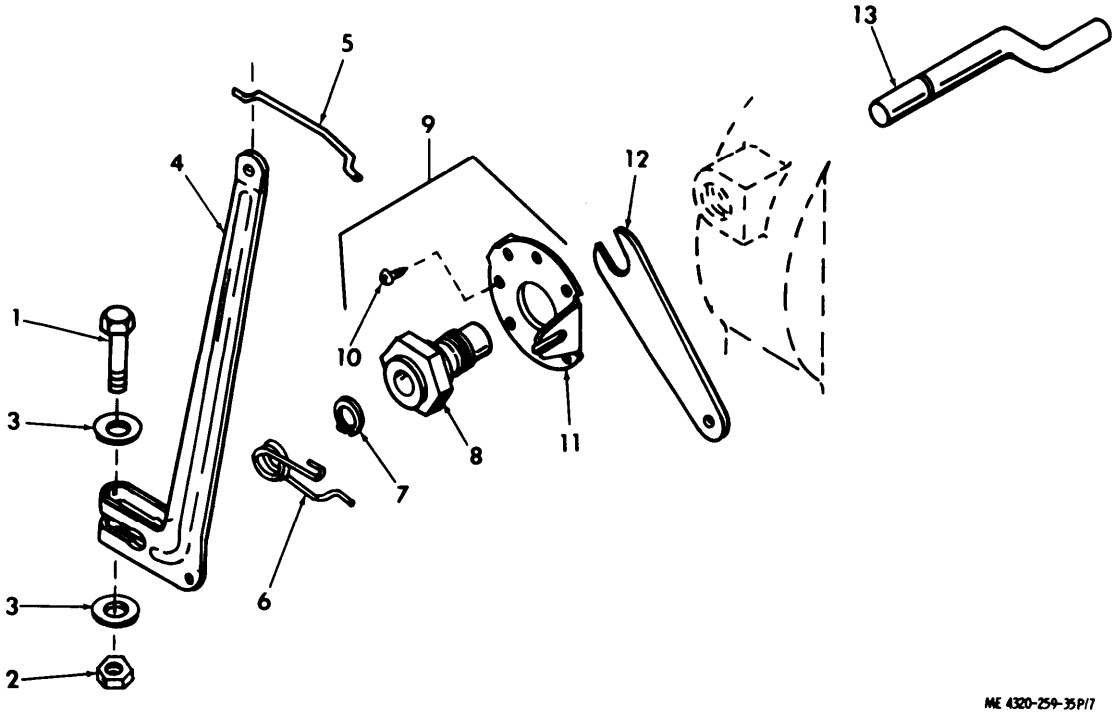

Figure 7. Governor linkage

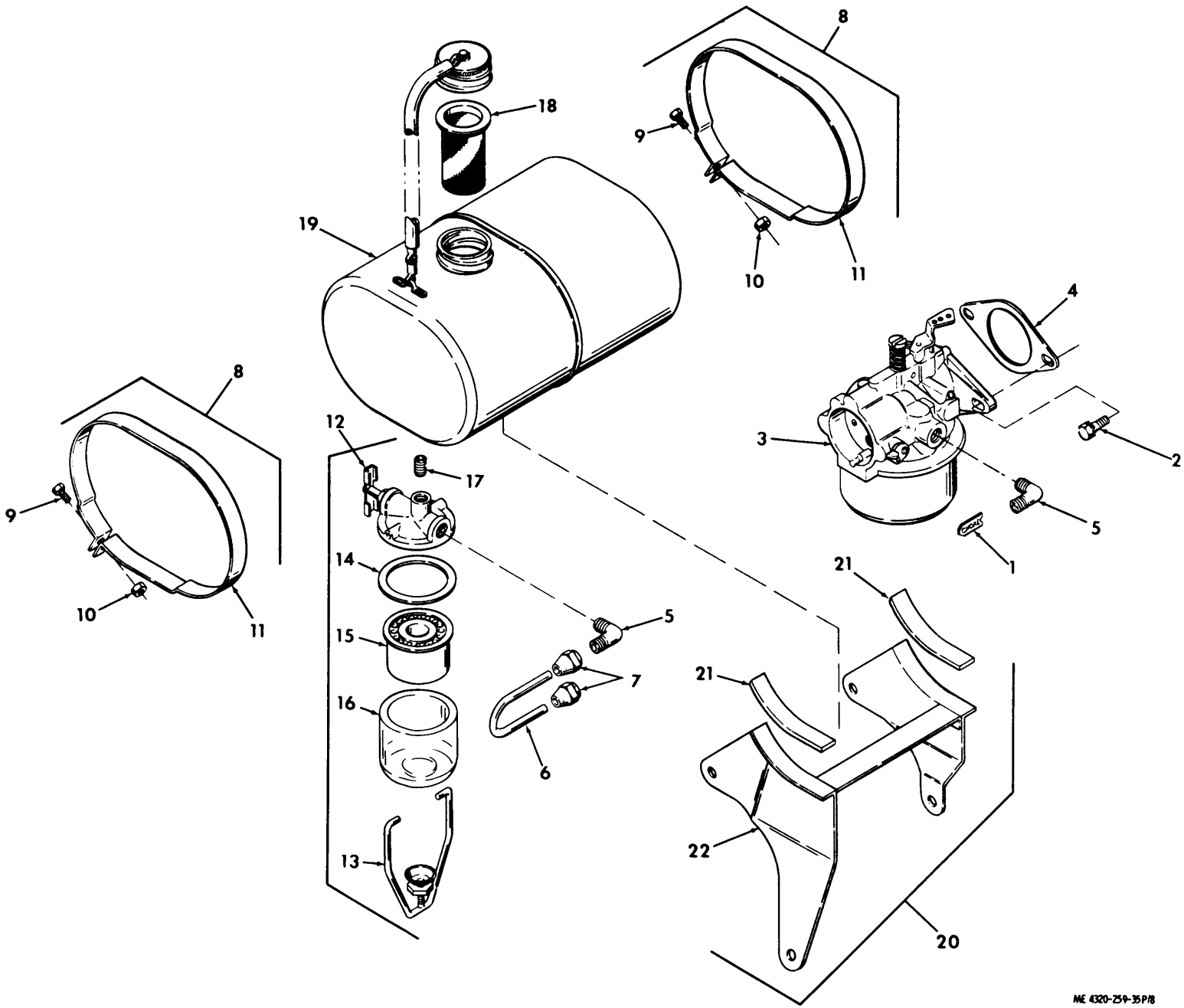

Figure 8. Fuel system

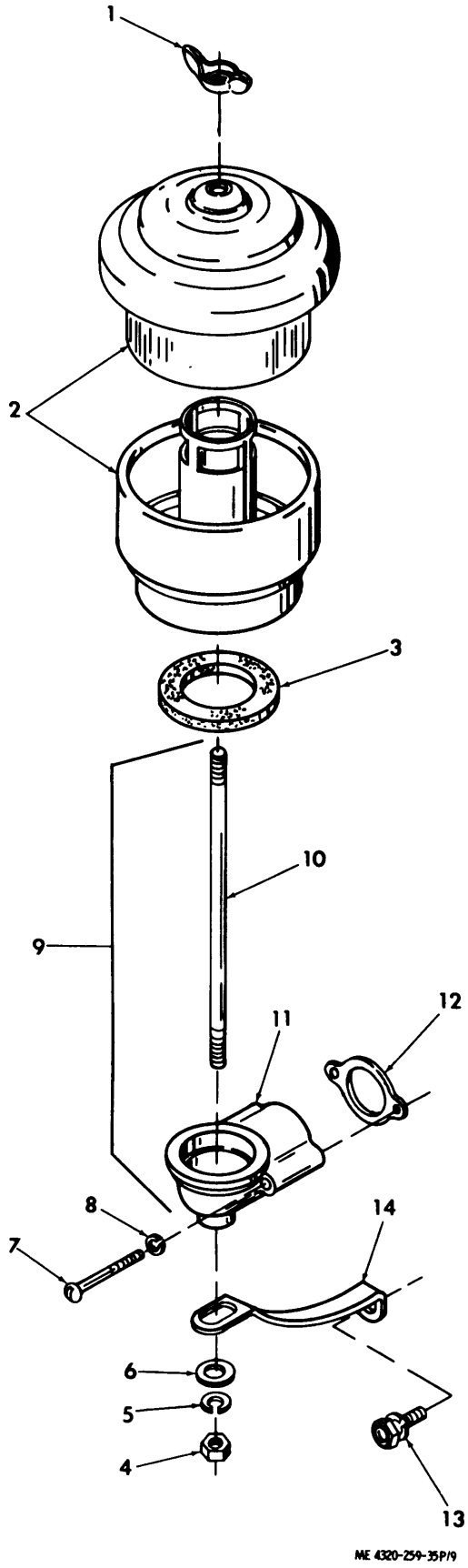

Figure 9. Air cleaner and mounting

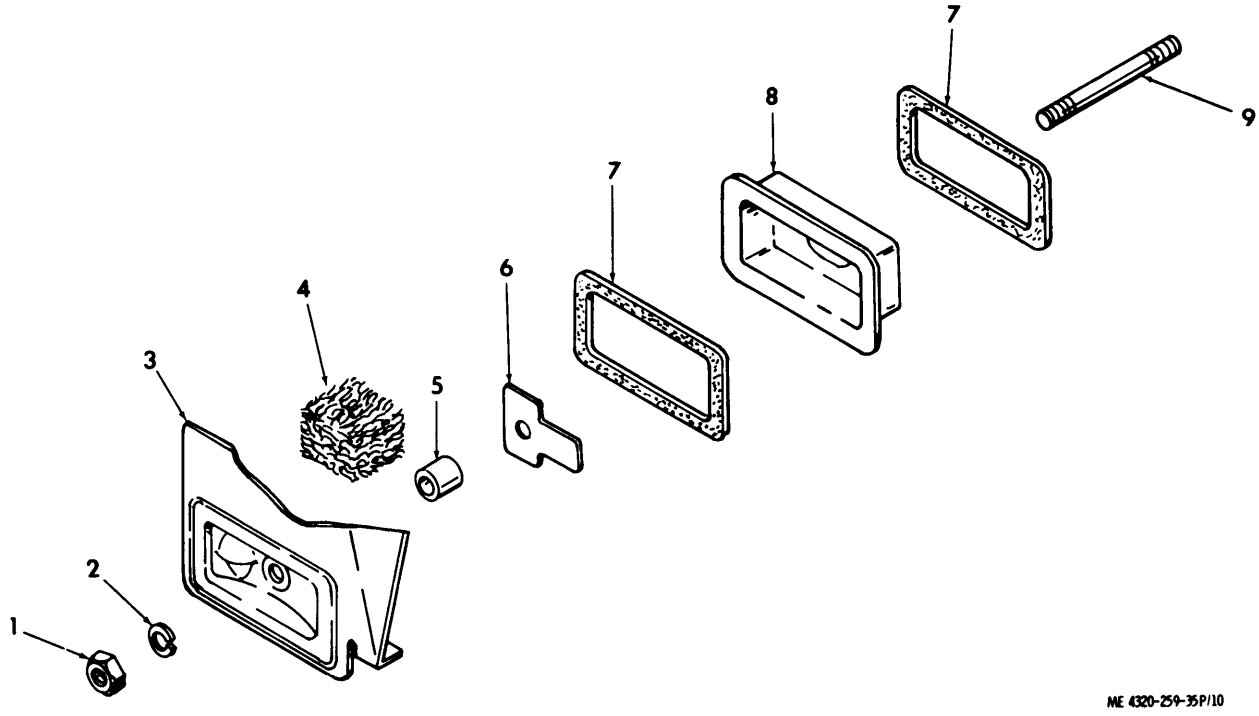

Figure 10. Breather

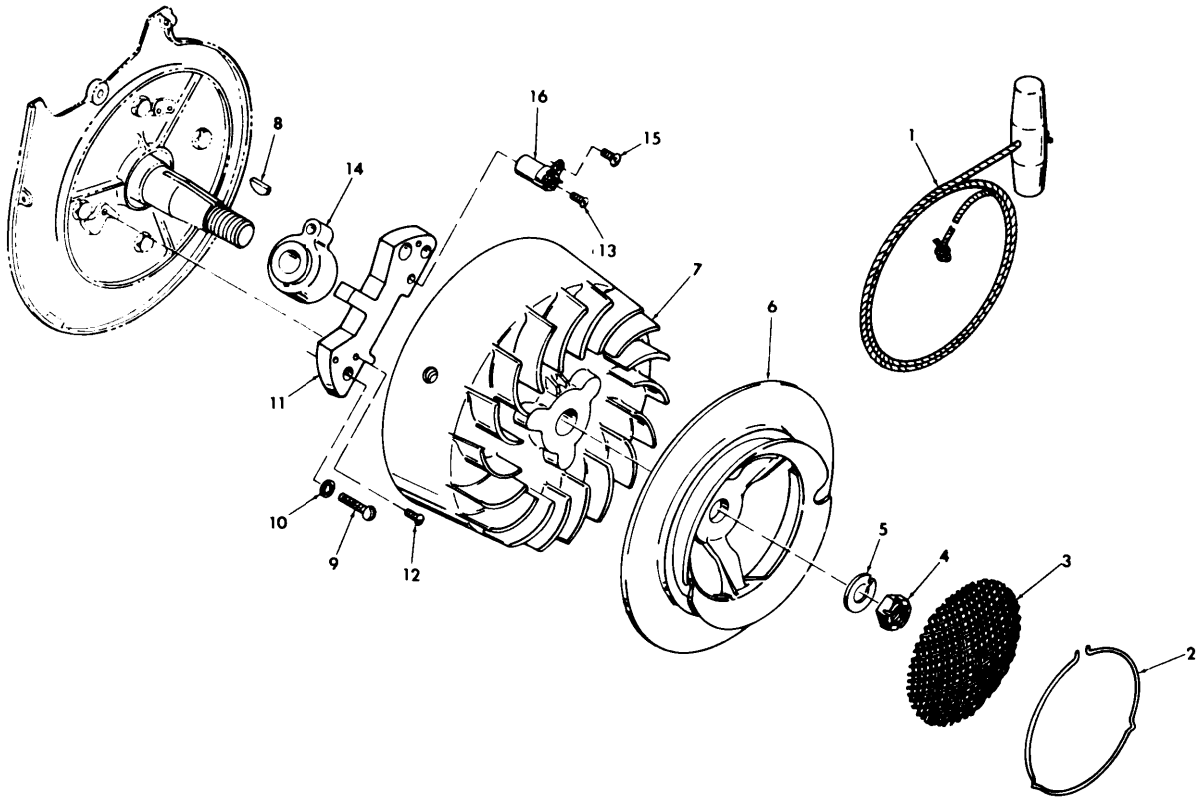

Figure 11. Flywheel and magneto

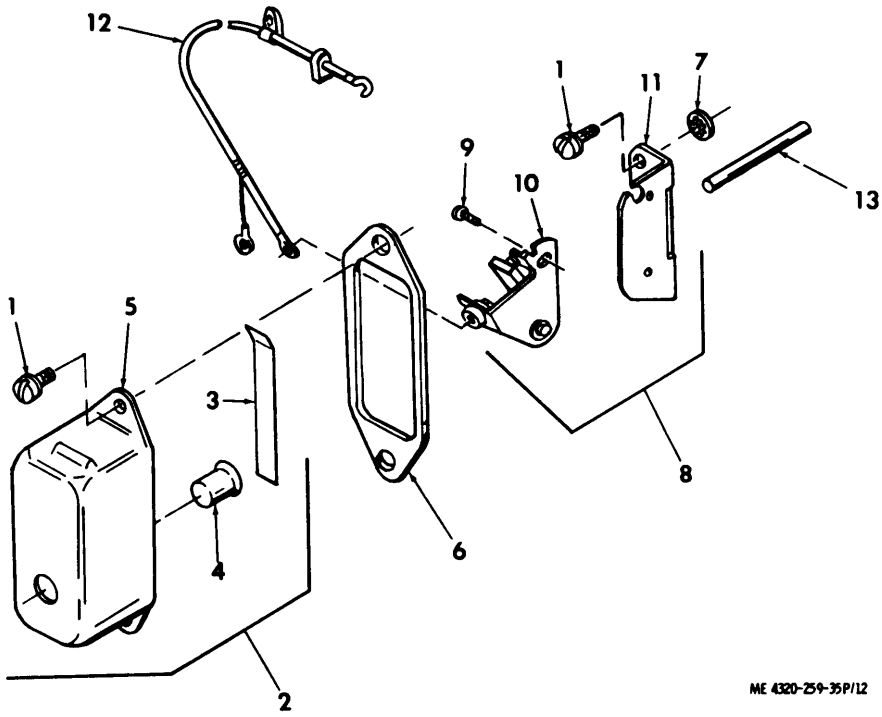

Figure 12. Ignition

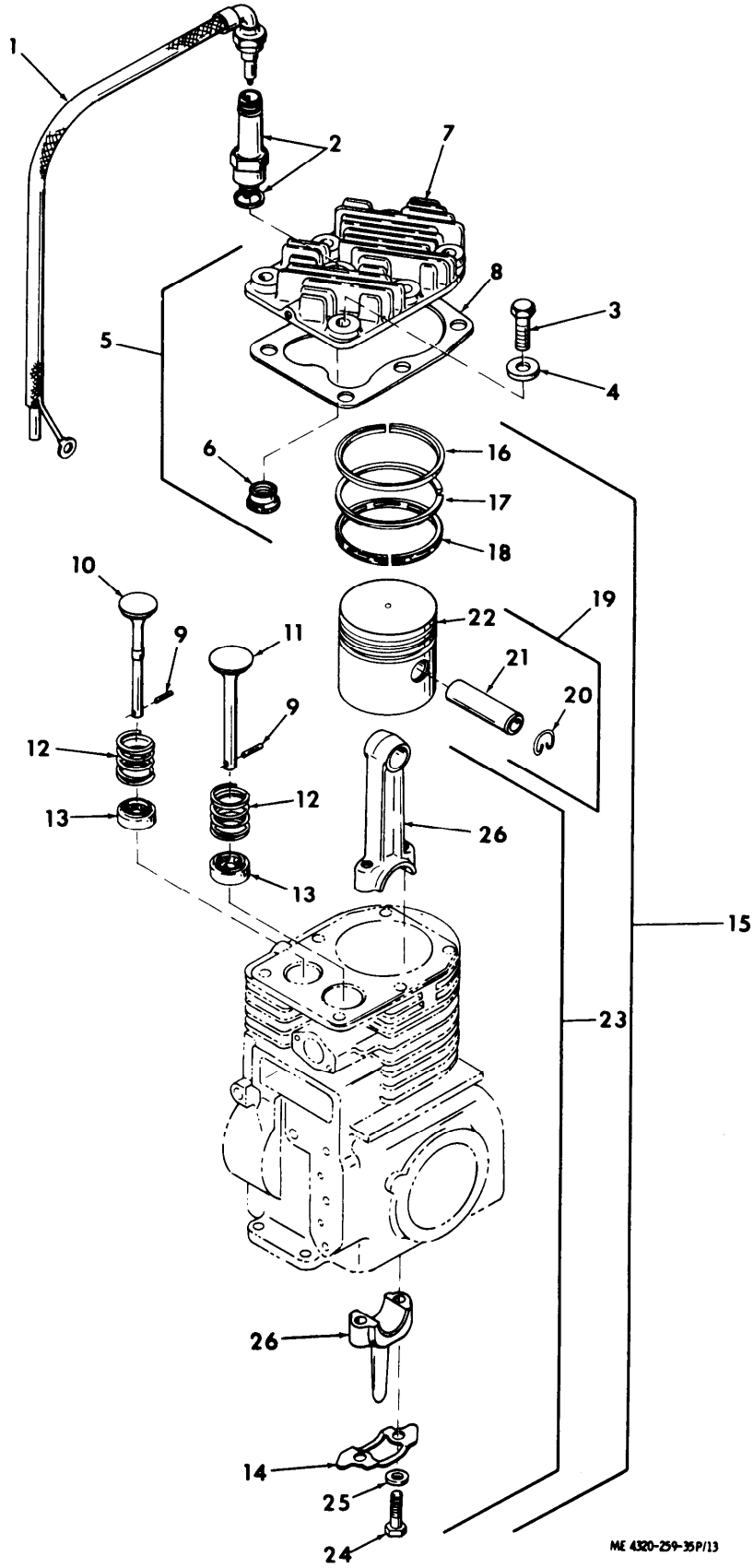

Figure 13. Cylinder head, valves, and piston

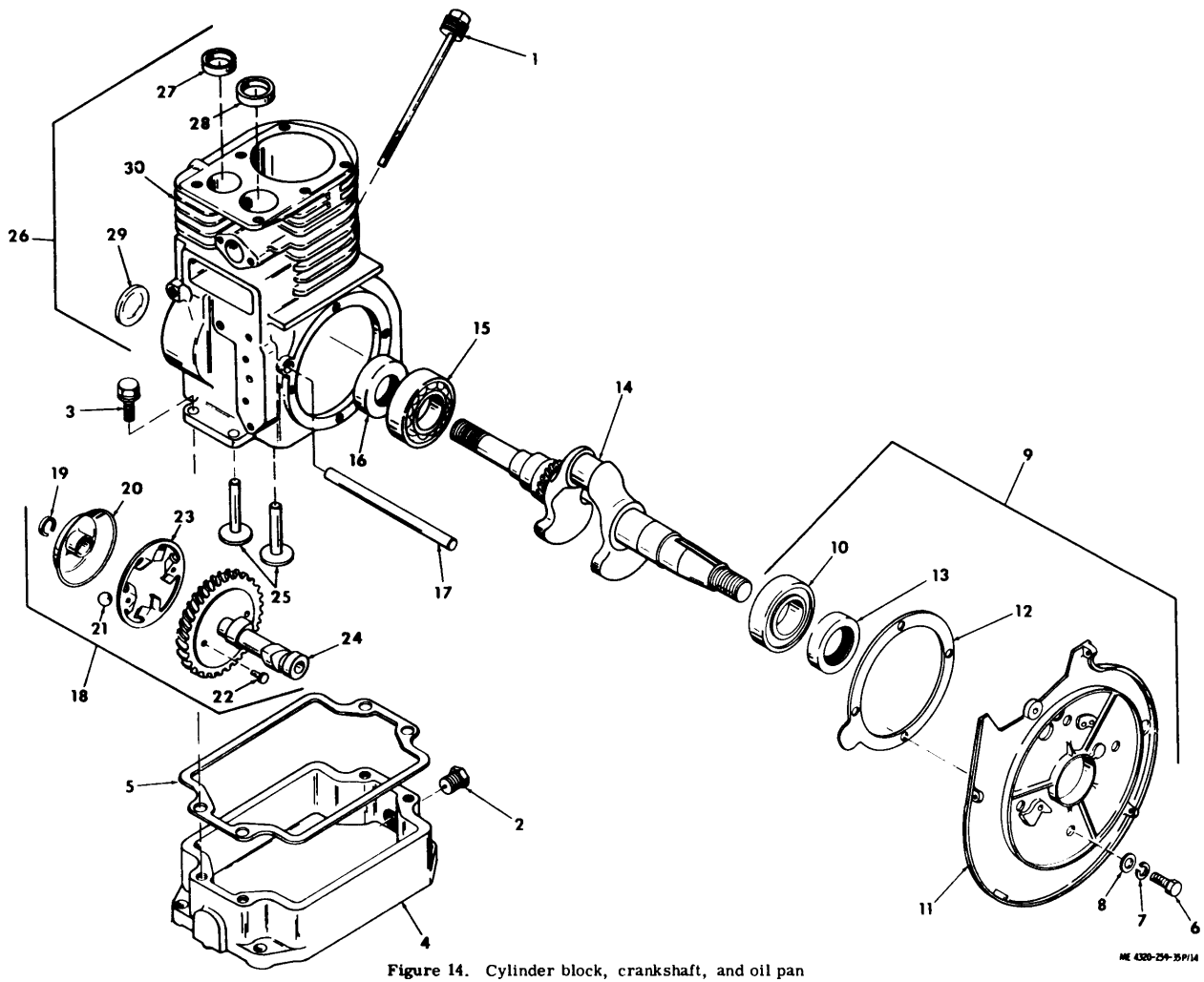

Figure 14. Cylinder block, crankshaft, and oil pan

Section V. INDEX - FEDERAL STOCK NUMBER AND REFERENCE NUMBER

CROSS-REFERENCE TO FIGURE AND ITEM NUMBER

Stock Number	Figure No.	Item No.
2805-573-9996	10	7
2805-738-7505	13	5
2910-729-9944	8	3
2910-752-2183	8	12
2910-789-0636	7	5
2920-288-3126	13	2
2920-758-2173	13	1
2940-371-4584	9	2
2940-428-3506	10	4
2990-544-0609	7	8
2990-585-3920	11	1
2990-980-5123	7	12
4320-360-0947	1	2
	2	2
4730-011-6452	8	7
4730-360-0591	1	7
	2	7
4730-360-0592	1	5
	2	5
4730-360-0595	1	4
	1	8
	2	4
	2	8
	3	4
	4	14
4730-684-4208	8	17
4730-724-6067	14	2
4930-904-1383	Group 15	
5305-068-0502	4	1
5305-071-2240	4	4
5305-175-3230	4	38
5305-689-3965	7	10
5305-728-2916	8	2
5305-958-5245	6	1
5305-984-6200	9	7
5306-226-4829	13	3
5306-283-0407	6	9
	9	13
5307-619-2441	6	13
5307-778-2131	10	9
5307-818-1257	9	10
5310-209-0965	11	5
5310-550-1130	6	2
5310-582-5965	4	3
5310-584-5029	11	4
5310-637-9541	6	4
	9	5
	10	2
5310-685-8308	7	3
	9	6
5310-761-6882	4	2
	6	10
	7	2
	9	4
	10	1
5310-778-0261	13	4
5310-809-4058	4	5
5310-824-9399	8	10
5310-855-2417	9	8
5330-544-0597	6	12
5330-562-1149	8	4
5330-585-1494	9	12
5340-724-4349	10	5
5340-823-5316	1	6
	2	6
	3	2
5340-825-5317	1	3
	2	3
	4	13
5360-778-2067	7	6
5365-594-9499	7	7

Reference No.	Mfg Code	Fig. No.	Item No.
A220090	34199	11	1
A220796	34199	13	5
A220798	34199	13	1
A220805	34199	8	12
A220807	34199	8	6
A221174	34199	9	9
A221216	34199	7	9
A221254	34199	8	20
A234167	34199	8	8
C838M	81718	3	18
D546A	81718	3	28
G220517	34199	8	3
H113RA	81718	3	24
H1471M	81718	3	7
H1668B	81718	3	9
H1669A	81718	3	16
H1670M	81718	3	19
H195RB	81718	3	26
H2061M	81718	3	17
H213RB	81718	3	22
H284M	81718	3	12
H3353	81718	3	8
H3667M	81718	3	13
H3673M	81718	3	11
H3804A	81718	3	10
H40-9385	78940	9	2
H4126	81718	Group 15	
H428RA	81718	3	21
H502M	81718	3	20
H538RE	81718	3	23
H7012M	81718	3	25
H714M	81718	3	27
JZM001731T	77122	9	1
MS21318-14	96906	4	38
MS27021-9	96906	1	5
		2	5
MS27022-9	96906	4	16
MS27025-9	96906	1	7
		2	7
MS27026-9	96906	3	3

Reference No.	Mfg Code	Fig. No.	Item No.
MS27028-9	96906	1	3
		2	3
		4	13
MS27029-9	96906	1	6
		2	6
		3	2
MS27030-5	96906	1	4
		1	8
		2	4
		2	8
		3	4
		4	14
MS27183-10	96906	4	5
MS35190-288	96906	6	1
MS35206-252	96906	9	7
MS35333-40	96906	6	2
MS35338-44	96906	4	3
MS35338-46	96906	6	4
		9	5
		10	2
MS35338-47	96906	11	5
MS51967-2	96906	4	2
		6	10
		7	2
		9	4
		10	1
MS90725-11	96906	4	4
MS90725-6	96906	4	1
MS90728-36	96906	13	3
XMJ14	11583	13	2
X119-9	34199	11	4
X132-6	34199	6	9
		9	13
X140-1	34199	8	2
X18-2	34199	9	8
X217-6	34199	8	17
X25-63	34199	7	3
		9	6
X269-13	34199	7	7
X305-4	34199	14	2
X447-10	34199	8	5
X5-7	34199	7	1
X67-5	34199	7	10
03219	05748	5	15
03220	05748	5	14
03229	05748	4	24
05803	05748	4	26
05840	05748	4	25
05858	05748	1	2
		2	2
09307	05748	4	10
1110X4	79470	8	7
12Z2007-383	94135	8	10
153 1 1-2X1 5-8IN	81718	3	15
15689SA	05748	3	1
190GA1 1-2IN	81718	3	5
210223	34199	8	4
210256	34199	10	4
210469	34199	9	3
220044	34199	12	4
220045	34199	12	3
220054	34199	6	5
220069	34199	9	10
220092	34199	14	1
220098	34199	11	3
220113	34199	11	2
220119	34199	7	6
220122	34199	6	12
220124	34199	13	8
220126	34199	7	4
220127	34199	7	11
220131	34199	7	13
220132	34199	7	8
220133	34199	6	13
220150	34199	11	6
220156	34199	7	12
220166	34199	8	21
220173	34199	9	11
220289	34199	6	11
220358	34199	10	3
220368	34199	10	9
220369	34199	10	5
220370	34199	10	7
220371	34199	9	14
220379	34199	10	6
220380	34199	7	5
220526	34199	8	18
220527	34199	8	19
220534	34199	13	4
220537	34199	9	12
220558	34199	6	7
220605	34199	6	3
220795	34199	13	7
220879	34199	8	16
220880	34199	8	15
220881	34199	8	14
221138	34199	8	13
221250	34199	10	8
221252	34199	8	22
22564	34199	4	27
230160	34199	8	11
231324	34199	8	1
235014	34199	13	6
296	81718	3	14
38074SA	05748	1	1
38075SA	05748	2	1
38571SA	05748	4	40
38607SA	05748	4	7
38685	05748	4	6
38696	05748	4	39
38698	05748	4	23
38705	05748	4	32
38732SA	05748	4	9
38733	05748	4	12
38737	05748	4	11
38953	05748	2	9
38955	05748	1	9
50883	05748	8	9
549361	61864	6	6
616W	81718	3	6
635C1 1-2IN	81718	4	15

By Order of the Secretary of the Army:

W. C. WESTMORELAND,
General, United States Army,
Chief of Staff.

Official:

VERNE L. BOWERS,
Major General, United States Army,
The Adjutant General.

Distribution:

To be distributed in accordance with DA Form 12-25A (qty rqr block No. 154) organizational maintenance requirements for Petroleum Distribution.

☆U.S. GOVERNMENT PRINTING OFFICE: 1996 - 406-421/52048

This fine document...

Was brought to you by me:

Liberated Manuals -- free army and government manuals

Why do I do it? I am tired of sleazy CD-ROM sellers, who take publicly available information, slap “watermarks” and other junk on it, and sell it. Those masters of search engine manipulation make sure that their sites that sell free information, come up first in search engines. They did not create it... They did not even scan it... Why should they get your money? Why are not letting you give those free manuals to your friends?

I am setting this document FREE. This document was made by the US Government and is NOT protected by Copyright. Feel free to share, republish, sell and so on.

I am not asking you for donations, fees or handouts. If you can, please provide a link to liberatedmanuals.com, so that free manuals come up first in search engines:

<A HREF=http://www.liberatedmanuals.com/>Free Military and Government Manuals</A>

- Sincerely
  Igor Chudov
  http://igor.chudov.com/
- Chicago Machinery Movers