D E P A R T M E N T O F T H E A R M Y T E C H N I C A L M A N U A L

TECHNICAL MANUAL

DIRECT SUPPORT AND GENERAL SUPPORT

MAINTENANCE MANUAL

FOR

PUMP, CENTRIFUGAL, POL, GED, 6 IN., 1120 GPM

SKID-MOUNTED (BARNES MODEL US67CCG)

FSN 4320-409-8678

H E A D Q U A R T E R S , D E P A R T M E N T O F T H E A R M Y

A U G U S T 1 9 7 1

WARNING

If conditions require emergency fuel tank repairs by welding or other methods involving heat or flame, take care to assure that all gasoline fumes are purged from the tank before commencing the repair. Applying heat or flame to a fuel tank containing gasoline residue may result in a violent explosion, causing injury or death to maintenance personnel.

Before performing maintenance, be sure the unit is not operating or subject to line pressures.

Do not operate the pump within an enclosed area without venting the exhaust gases to the outside. Exhaust fumes contain carbon monoxide, an odorless, colorless, deadly poison.

Do not allow smoking or open flames in the vicinity of this pump.

When lifting the pumping unit, be-sure the lifting device has a capacity of at least 4000 lbs. Do not allow the pumping unit to swing while suspended.

When using cleaning solvents, always provide adequate ventilation to prevent excessive inhalation of solvent vapors.

TECHNICAL MANUAL
NO. 5-4320-258-34

HEADQUARTERS,
DEPARTMENT OF THE ARMY
WASHINGTON, D. C., *30 August 1971*

DIRECT SUPPORT AND GENERAL SUPPORT

MAINTENANCE MANUAL

PUMP, CENTRIFUGAL, POL, GED, 6 IN., 1120 GPM,

SKID-MOUNTED

(BARNES MODEL US67CCG)

FSN 4320-409-8678

LIST OF ILLUSTRATIONS

CHAPTER 1

INTRODUCTION

SECTION I. GENERAL

1-1. Scope

These instructions are published for use by personnel to whom the Barnes Manufacturing Company Model US67CCG Centrifugal Pump is issued. They provide information on the Direct and General maintenance of the equipment as allocated by the Maintenance Allocation Chart.

1-2. Forms and Records

Maintenance forms, records, and reports which are used by maintenance personnel at all maintenance levels are listed in and prescribed.

1-3. Reporting of Errors

Report of errors, omissions, and recommendations for improving this publication by the individual user is encouraged. Reports should be submitted on DA Form 2028, Recommended Changes to Publications, and forwarded directly to Commanding General, U. S. Army Mobility Equipment Command, ATTN: AMSME-MP, 4300 Good-fellow Boulevard, St. Louis, Mo. 63120.

Section II. DESCRIPTION AND DATA

1-4.Description

a. Centrifugal Pump, Model US67CCG, consists primarily of a gasoline engine and a centrifugal pump mounted on a welded skid base. The torque from the engine is transferred to the pump through a flexible coupling.

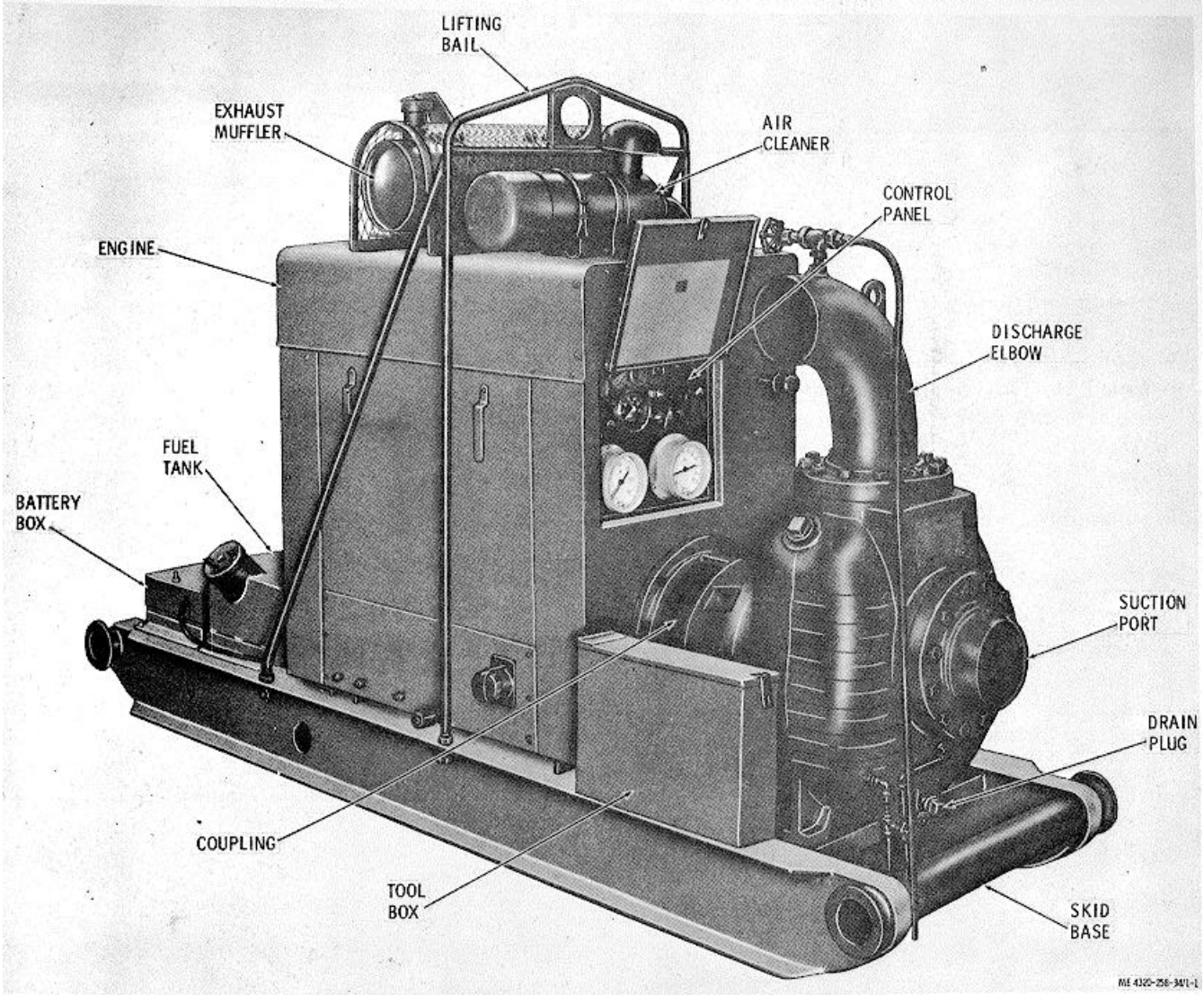

Figure 1-1. Centrifugal pump, left front view.

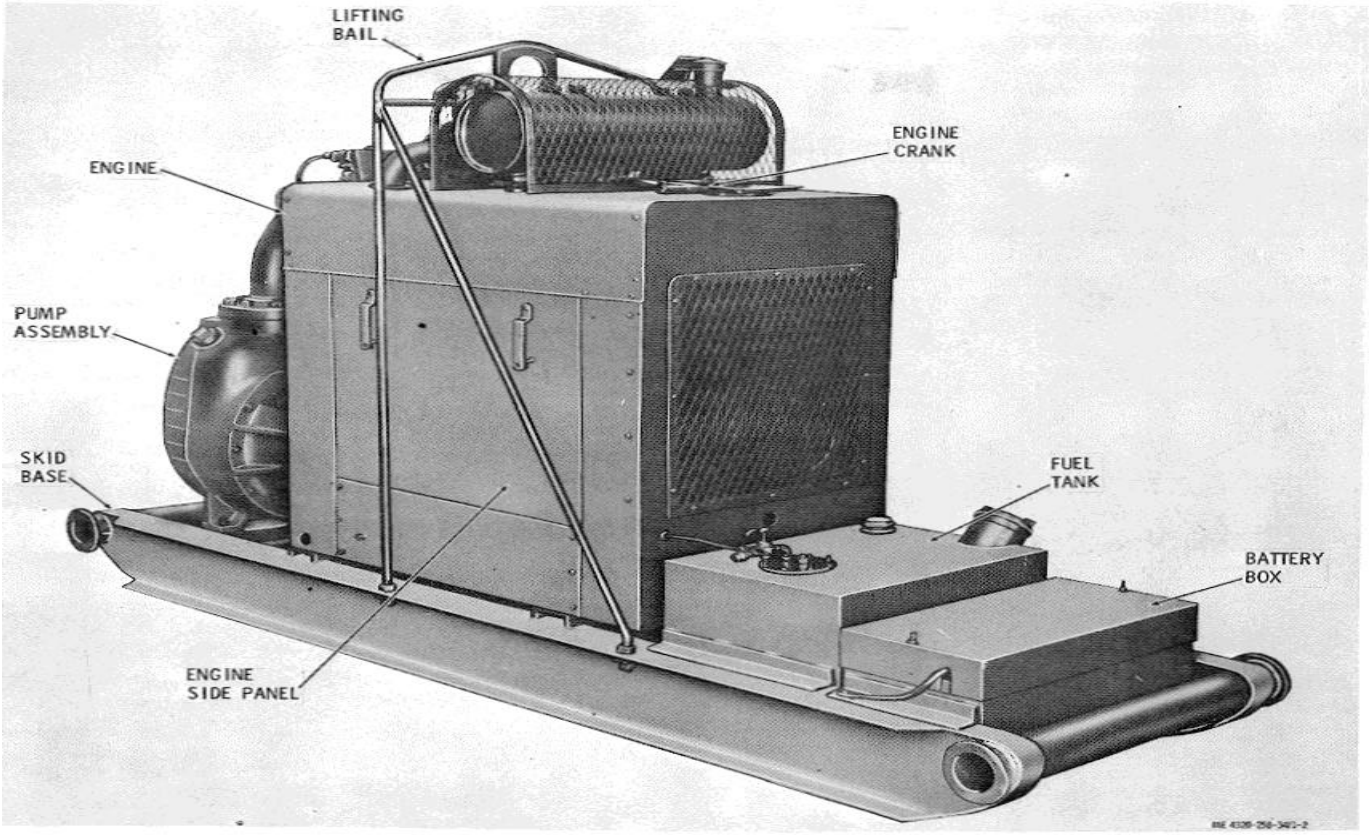

Figure 1-2. Centrifugal pump, right rear view.

b. The centrifugal pump has a 6-inch suction flange (7, fig. 5-1) secured to the front of the pump body and a 6-inch discharge elbow secured to the top of the pump body. The bearing housing (40, fig. 5-2) joins the flywheel housing of the engine with the pump body, providing correct spacing and proper alinement of the parts. The bearing housing also provides the bearing seats for the ball bearings that support the impeller shaft. The impeller is keyed to the end of the impeller shaft and is secured with nuts. The impeller is enclosed in a close-fitting volute to provide efficient pumping operation. A replaceable wear plate at the front of the impeller takes most of the internal pump wear.

c. The engine is a six-cylinder, water-cooled, pressure-lubricated, four-stroke-cycle, L-head type. Engine speed is governed by a flyball-type governor and is protected by an overspeed governor that shuts off the engine when the engine speed reaches the preset speed. The engine is enclosed in a housing that has coolant and oil drains ported to the outside of the housing for easy access. The engine uses an electrical starting motor, has magneto ignition, and uses an alternator to maintain the charge of the battery which is depleted by operation of the starting motor. The conventional radiator-type cooling system uses a pusher-type cooling fan which forces cooling air through the radiator from the inside out. It also maintains a flow of air around the engine to provide proper cooling.

1-5. Differences Between Models

This technical manual covers only the Barnes Model US67CCG. No known changes exist in the equipment procured under this model number.

1-6. Identification and Tabulated Data

a. Identification. The centrifugal pump has three identification plates.

(1) *US data plate*. The US data plate is located on front of the pump above the suction flange. It indicates the pump identification number, serial number, dimensions, weight, and shipping information.

(2) *Engine plate*. The engine data plate is located on alternator side of the engine block. It indicates engine identification numbers, serial number, valve tappet clearance information, and patent information.

(3) *Instruction plate*. The pump instruction plate is located in the cover of the control panel. It identifies the controls and provides basic operating instructions.

b. Tabulated Data.

(1) *Pump*.

Manufacturer.....Barnes Manufacturing Company
Part number.....US67CCG
Serial number range.....37628-001 thru 37628 047
Type.....Centrifugal
Pumping medium.....Petroleum products
Output (at maximum rated speed) .....245 gpm at 205 feet head 1120 gpm at 100 feet head
Maximum rated driven speed 2450 rpm
Suction port size .....6 in.
Discharge port size.....6 in.

(2) *Engine*.

Manufacturer.....Continental Motors Corporation
Model..... FS244-06097P
Type..... Four-stroke-cycle
Number of cylinders 6
Displacement 244
Compression ratio 6.9:1
Cooling .....Liquid
Cooling system capacity.....18 qts
Crankcase oil capacity .....5 qts
Valve clearance (warm)
Intake .....0.014 in.
Exhaust .....0.016 in.
Spark plug gap.....0.025 in.
Breaker point gap.....0.020 in.
Firing order 1-5-3-6-2-4
Governed speed.....2450 rpm
Overspeed cutout.....2700 rpm

(3) *Engine accessories*.

(*a*) *Alternator*.

Manufacturer.....Motorola
Part number MA24-900G
Voltage 24
Amperage output.....35

(*b*) *Voltage regulator*.

Manufacturer.....Motorola
Part number 70C44707B

(*c*) *Starter*.

Manufacturer.....Delco-Remy
Part number 1108271
Voltage 24

(*d*) *Magneto*.

Manufacturer.....Slick
Model No. 625

(*e*) *Fuel pump*.

Manufacturer.....AC Spark Plug
Part number 5594228

(*f*) *Air cleaner*.

Manufacturer.....Donaldson
Part number FWG06-5032

(*g*) *Oil filter*.

Manufacturer.....Fram
Part number C7407

(4) *Overall dimensions and weight*.

Overall length .....111 in.
Overall width.....31 in.
Overall height .....55 in.
Overall weight.....4000 lb
Shipping weight.....4270 lb
Shipping volume .....201 cu ft

(5) *Engine torque specifications*.

Item	*Torque (ft-lb)*
Cylinder head bolts	35-40
Main bearing cap bolts	85-95
Flywheel nuts	35-40
Manifold nuts	25-30
Gear cover bolts and nuts	
5/16 in	15-20
3/8 in	25-30
Oil pan bolts.....	12-16
Flywheel housing bolts	50-55
Filler block bolts	15-20
Front end plate bolts	25-30
Camshaft thrust plate bolts..	15-20
Water pump bolts	25-30
Magneto bolts	25-30
Governor bolts	25-30

(6) *Wiring diagram*. See figure 1-3.

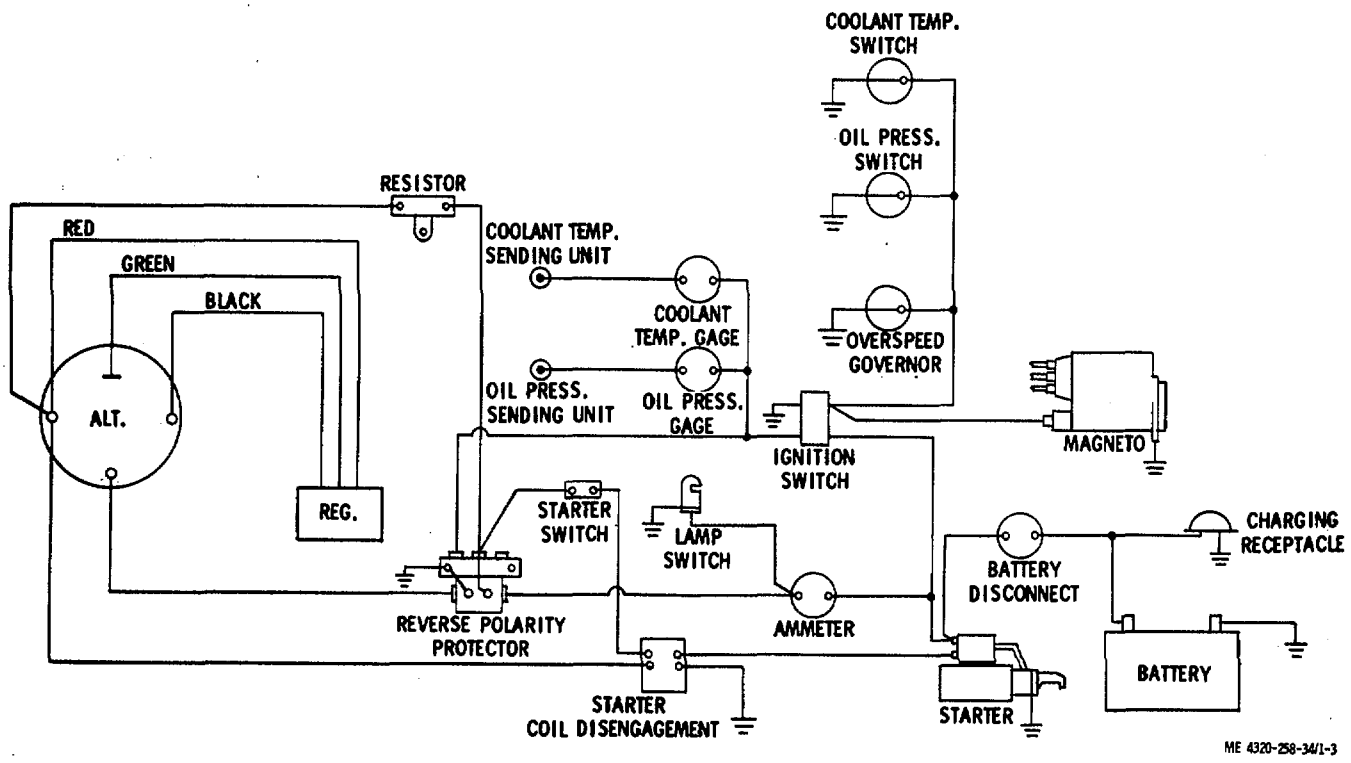

Figure 1-3. Wiring diagram.

CHAPTER 2

DIRECT SUPPORT AND GENERAL SUPPORT MAINTENANCE

SECTION I. REPAIR PARTS, SPECIAL TOOLS, AND EQUIPMENT

2-1. Special Tools and Equipment

No special tools and equipment are required for the direct support and general support maintenance of the centrifugal pump.

2-2. Maintenance Repair Parts

Repair parts and equipment are listed and illustrated in the repair parts and special tools list covering direct support and general support maintenance for this centrifugal pump. Refer to TM 5-4320-258-35P (when printed).

SECTION II. TROUBLESHOOTING

2-3. General

This section describes troubles which might occur during operation of the centrifugal pump, along with the probable causes and corrective actions relating to the troubles. Only those functions which are solely within the scope of direct and general support maintenance are listed. For trouble shooting procedures which are within the scope of operator/crew and organizational maintenance, refer to TM 5-4320-258-12.

2-4. Direct Support and General Support Maintenance Troubleshooting

Refer to table 2-1 for troubleshooting which is allocated to direct support and general support maintenance levels.

Table 2-1. Troubleshooting

Malfunction	Probable Cause	Corrective Action
1. Engine will not crank.	a. Impeller binding in volute.	a. Disassemble pump and free impeller (para 5-4).
	b. Impeller bearings binding in bearing housing.	b. Disassemble pump and replace Bearings (para 5-4).
	c. Engine seized.	c. Remove engine (para 2-10). Repair engine as necessary (para 4-3 through 4-13).
2. Engine cranks but will not start.	a. Carburetor defective.	a. Repair carburetor (para 3-3).
	b. Engine compression too low.	b. Test engine to determine fault (TM 5-4320-258-12). Repair engine as necessary (para 4-3 through 4-13).
3. Water temperature safety switch Stops engine operation.	a. Radiator clogged, causing engine Overheating.	a. Clean radiator (para 3-7).
	b. Cylinder head or block badly scaled.	b. Clean cylinder head (Para 4-3) or Block (para 4-13).
	c. Safety switch improperly adjusted.	c. Adjust safety switch (para 3-9).
	d. Water pump defective.	d. Repair water pump (para 3-8).
4. Oil pressure safety switch stops engine operation.	a. Oil pressure regulator valve im-Properly adjusted.	a. Adjust regulator valve (para 3-13).
	b. Oil pump defective.	b. Repair oil pump (para 4-7).
	c. Safety switch improperly adjusted.	c. Adjust safety switch (para 3-12).
5. Engine overspeed governor trips.	a. Overspeed governor not properly adjusted.	a. Adjusted overspeed governor (para 3-5).
	b. Overspeed governor defective.	b. Replace overspeed governor (para 3-5).
6. Engine lacks power, smokes, or operates erratically.	a. Carburetor float level incorrect.	a. Adjust carburetor float level (para 3-3).
	b. Carburetor defective.	b. Repair carburetor (para 3-3).

Table 2-1. Troubleshooting-Continued

Malfunction	Probable Cause	Corrective Action
6. Engine lacks power, smokes or operates erratically,-Continued	c. One or more valves stuck open.	c. Free stuck valves; Replace or regrind if burned (para 4-4).
	d. Valve springs weak.	d. Replace valve springs (para 4-4).
	e. Defective piston	e. Replace defective piston (para 4-10).
	f. Piston rings worn.	f. Replace piston rings (para 4-10).
	g. Engine timing incorrect.	g. Correct engine timing (parp 4-12).
7. Engine makes excessive noise	a. Main or connecting rod bearing. Defective.	a. Replace defective bearing (para 4-10 and 4-11).
	b. Flywheel rubbing on flywheel housing	b. Aline flywheel housing (para 4-9).
	c. Loose pistons pins	c. Replace pistons (para 4-10).
	d. Excessive crankshaft end play	d. correct crankshaft bearings (para 4-12).
	e. Loose camshaft bearings.	e. Replace cramshaft bearings (para 4-12).
	f. Piston slap.	f. Replace worn pistons (para 4-10).
8. Pump runs with no fluid discharge or with low discharge.	a. Impeller broken, worn, or damaged.	a. Replace impeller (para 5-4).
	b. Impeller-to-wear plate clearance incorrect.	b. Add or remove shims as required (par 5-4).
	c. Wear plate excessively worn.	c. Replace wear plate (para 5-4).
	d. Shaft seal defective.	d. Replace shaft seal (para 5-3).
9. Pump noisy.	a. Impeller or wear plate loose.	a. Tighten impeller or wear plate (para 5-4).
	b. Defective pump bearings.	b. Replace pump bearings (para 5-4).

SECTION III. GENERAL MAINTENANCE

2-5. General

This section contains general maintenance procedures which are the responsibility of direct support and general support maintenance personnel. The paragraphs contained herein describe general practices applicable to several assemblies or components of the centrifugal pump which would otherwise have to be repeated in each section of the manual assigned to those assemblies and components.

2-6. Cleanliness

a. Take care to assure that the workplace is clean before starting to disassemble the engine or pump parts.

b. Steam-clean the exterior of the engine or pump before starting disassembly to prevent the dirt from entering the bearings. Clean the exterior of engine components with a cloth dampened with cleaning solvent (FED. Spec. P-D-680).

c. If compressed air is used to clean the parts, make sure the compressed air is free from dirt and contaminants.

d. Protect disassembled parts from blowing sand and dust which could later cause rapid wear of the gears, bearings, and machined surfaces.

2-7. Care of Bearings

a. Clean ball and roller bearings by placing them in a wire basket and immersing them into a container of fresh cleaning solvent (FED. Spec. P-D680). Agitate the bearings in the solvent to remove all traces of old lubricant.

b. After the bearings are cleaned, dry them with clean, filtered compressed air. Take care to prevent spinning the bearings with the compressed air jet.

c. Dip the cleaned bearings in clean engine oil and immediately wrap them in lint-free paper to prevent the entry of dust and dirt.

2-8. Seals and Gaskets

Replace seals and gaskets of all components with each disassembly. The use of new gaskets and seals will greatly reduce the possibility of leaking and will help prevent the entry of dust and dirt after reassembly.

SECTION IV. REMOVAL AND INSTALLATION OF MAJOR COMPONENTS AND AUXILIARIES

2-9. Centrifugal Pump,

Removal and installation. of :the centrifugal pump are described in

2-10. Engine

a. *Removal*. Remove the engine from the centrifugal pump as follows:

(1) Remove the. centrifugal pump (TM 5-4320-258-12).

(2) Disconnect the fuel lines connecting the engine to the fuel tank.

Caution: **Though, thisengineis equipped with a reverse polarity protector to protect the alternator'aigainst damage due to reverse-polarity connectioi6ns, it is good practice to take special precaut-ions, when connecting and disconnecting electrical leads and cables. Do not ground the field terminal between the iS alternator and regulator. Do not operate the alternator in an open circuit with the rotor winding energized. Do not ground the alternator output circuit. Take care to prevent reversing polarity of the electrical system. When using a battery booster or fast charger, make sure the leads are connected with the correct polarity. Failure to follow these in- structions may damage the rectifiers, voltage regulator, and wiring.**

(3) Disconnect the battery cables at the battery, taking care to prevent shorting, grounding, or reverse-polarizing the electrical system. Disconnect the battery cable from the engine.

(4) Remove the nuts (1, fig. 2-1) and bevel washers (2) that secure the lifting bail (4) to the skid base (11); remove the lifting bail.

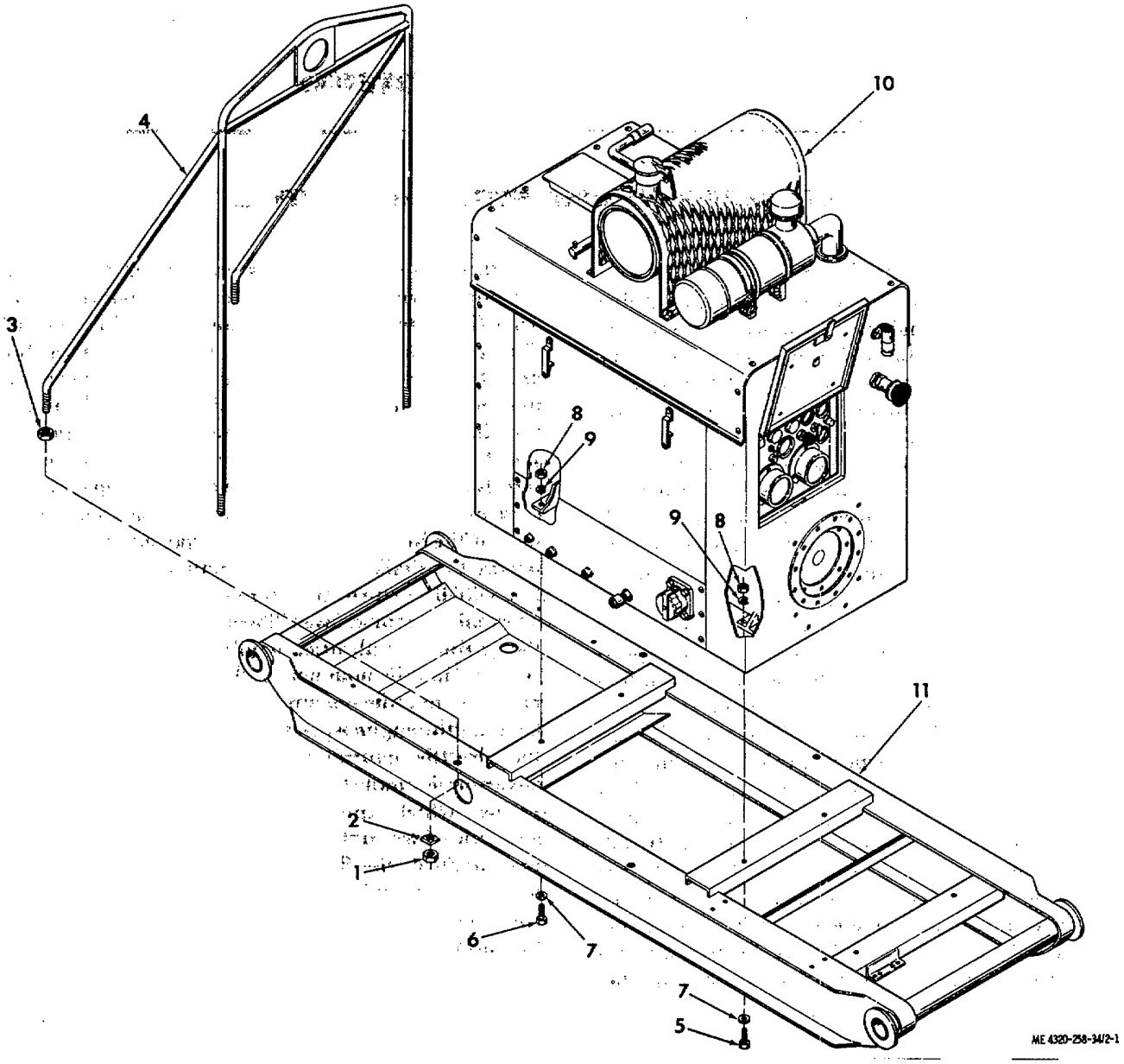

1. Nut
2. Bevel washer
3. Nut
4. Lifting bail
5. Bolt
6. Bolt
7. Flat washer
8. Nut
9. Lock washer
10. Engine
11. Skid base

Figure 2-1. Engine removal.

(5) Remove the bolts (5 and 6), flat washers (7), nuts (8), and lock washers (9) that secure the engine to the skid base. Use a suitable lift truck to lift the engine from the skid base, taking care to insert the forks under structural members only.

b. Installation.

(1) Use a lift truck to position the engine on the skid base (11). Take care to insert the forks under structural members only. Secure the engine to the skid base with bolts (5 and 6), nuts (8), lock washers (9), and flat washers (7).

(2) Connect the battery cables to the battery and to the engine. Review the caution in subparagraph a above to prevent damage to the components of the electrical system while connecting the battery cables.

(3) Install the fuel lines connecting the engine to the fuel tank.

(4) Position the lifting bail (4) on the skid base; secure with nuts (1) and bevel washers (2).

(5) Install the centrifugal pump TM 5-4320-258-12)

CHAPTER 3

REPAIR OF ENGINE COMPONENTS

SECTION I. REPAIR OF FUEL SYSTEM COMPONENTS

3-1. Description of Fuel System

a. The fuel tank is bolted to the skid at the radiator end of the engine. It is narrow enough to ride between the longitudinal frame members of the skid. It has an offset to permit part of the tank to slide under the radiator end of the engine. The tank capacity is 30 gallons.

b. Fuel from the fuel tank is pumped to the carburetor by a fuel pump mounted on and driven by the engine. The updraft-type carburetor controls the fuel-air mixture which is fed to the engine to meet the needs of the engine power requirements. A float system controls the level of the fuel in the carburetor float bowl. Adjustment screws are provided to permit regulation of the high-speed operation fuel mixture, the idle mixture, and the idle speed. Choking is controlled manually.

c. Engine speed control is done by the interoperation of the governor and the carburetor. The governor is a variable-speed type and is driven by the timing gear on the end of the camshaft. The driver on the drive shaft of the centrifugal flyball governor engages four hardened steel balls. As the engine runs, centrifugal force tends to throw the balls outward. As the engine speed increases, the centrifugal force increases. This causes the balls to exert pressure against a dished race, forcing the race to move , axially away from the rotating balls. The movement of the dished race is transferred to a drive fork through a thrust bearing. The fork is pinned to the governing shaft which pivots as the drive fork moves. An external governing .lever on the end of the control shaft is connected to the throttle control onthe carburetor and as the engine speed tends to increase, the throttle is closed slightly, resulting in a decrease in engine speed. The decrease in engine speed decreases the centrifugal force of the balls, and the dished race moves axially toward the balls. This movement is sensed by the fork which, in turn, transfers the movement to the external governing lever. The governing lever opens the carburetor throttle, tending to speed up the engine. In this manner, a balanced condition is reached and the engine speed remains constant, keeping the engine speed at the level determined by the throttle control setting. Adjustment of the governor'is made by changing the tension of the spring which applies tension to the external governing lever and which tends to keep the dished race against the flyballs. Tightening the spring tends to raise engine speed at any particular throttle control setting. Decreasing spring tension lowers the speed.

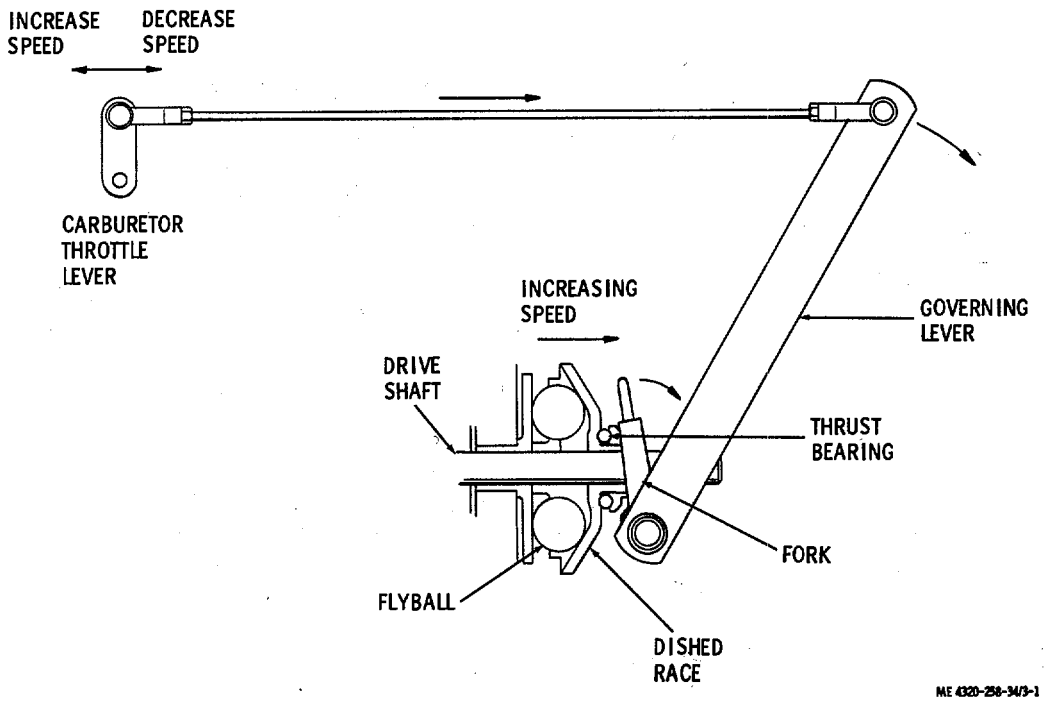

Figure 3-1. Operation of engine speed regulating system.

d. The engine is protected from overspeeds by the overspeed governor (fig. 3-6). The overspeed governor is mounted on an adapter on the top center of the cylinder head. It is driven by a shaft which engages the top of the oil pump drive shaft which is, in turn, driven by a geared portion of the camshaft. The overspeed governor is adjusted to stop the engine if crankshaft speed exceeds 2700 rpm. The stopping is accomplished by grounding the magneto primary through a switch which closes in the governor mechanism. A reset button at the top of the overspeed governor must be 'pressed to reset the switch if the unit it tripped by an overspeed condition.

3-2. Fuel Tank

a. Removal and Disassembly.

(1) Disconnect the fuel lines and fittings from the fuel tank (TM 5-4320-258-12)

(2) Remove the battery box from the skid base.

(3) Remove the drain plug (1, fig. 3-2) from the bottom of the fuel tank and catch the fuel in a suitable container.

KEY to fig. 3-2:

1. Drain plug
2. Cap screw
3. Lock washer
4. Fuel tank cap
5. Chain
6. Screen
7. Nut
8. Lock washer
9. Fill plate
10. Gasket
11. Suction pipe
12. Pipe plug
13. Nut 1
14. Autofill float valve
15. Fuel level gage
16. Fuel tank

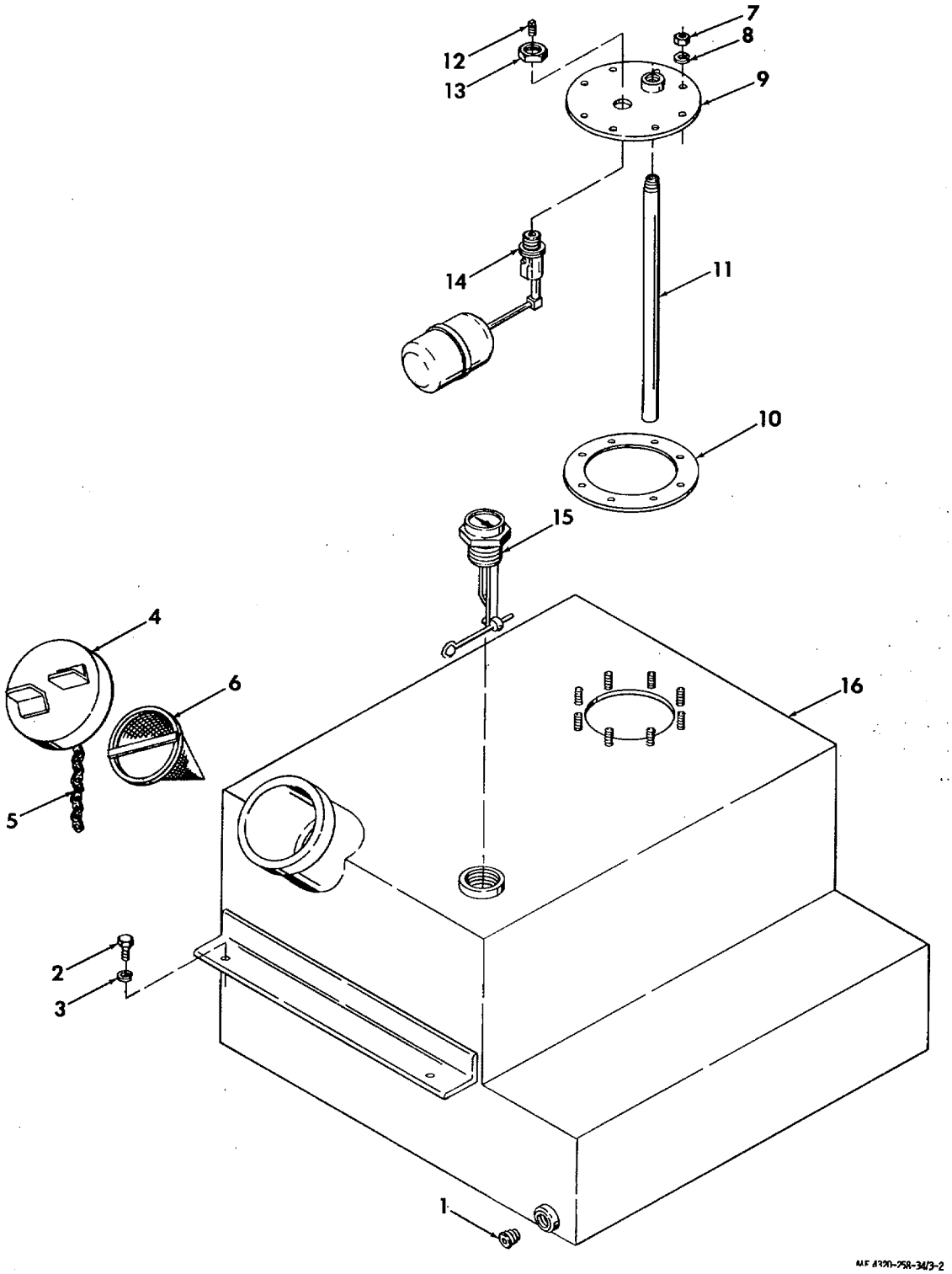

Figure 3-2. Fuel tank, exploded view.

(4) Remove the four bolts and lock washers that secure the fuel tank to the skid 'base. Remove the fuel tank.

(5) Disassemble the fuel tank as shown in figure 3-2.

b. Cleaning and Inspection.

(1) Steam-clean the inside and outside of the fuel tank. Thoroughly flush with cleaning solvent (FED. Spec. P-D-680).

***Warning*: If conditions require emergency fuel tank repairs by welding or other methods involving heat or flame, take care to assure that all gasoline fumes are purged from the tank before commencing the repair. Applying heat or flame to a fuel tank containing gasoline residue may result in a violent explosion, causing injury or death to maintenance personnel**.

(2) Inspect the fuel tank for loose mounting brackets, cracked seams, loose studs, and damaged threads. Replace a damaged fuel tank.

(3) Inspect the autofill float valve (14, fig. 32) for binding or catching operation of the float valve. Inspect the float valve seat for nicks and damage. Replace a damaged float valve.

(4) Inspect the fuel level gage for free operation of the float valve and proper registration of the level indicator. Replace if damaged.

c. Installation. Install the fuel tank by reversing the removal procedure. Refer to figure 3-2.

3-3. Carburetor

a. Removal. Remove the carburetor (TM 54320-258-12).

b. Disassembly. Disassemble the carburetor as shown in figure 3-3. The index numbers assigned to the parts indicate the order of disassembly. Note the following:

KEY to fig. 3-3:

1. Screw
2. Gasket
3. Float axle
4. Float and hinge assembly
5. Fuel valve
6. Fuel valve seat
7. Fiber washer
8. Filter head
9. Washer
10. Filter element
11. Idle adjusting screw
12. Spring
13. Venturi screw
14. Venturi
15. Cotter pin
16. Retainer
17. Clamp screw
18. Clamp lever
19. Spring
20. Bushing
21. Stop screw
22. Clamp screw
23. Nut
24. Lever stop
25. Swivel screw
26. Floating lever
27. Taper pin
28. Throttle plate screw
29. Throttle plate
30. Throttle shaft
31. Shaft hole plug
32. Seal retainer
33. Shaft seal
34. Pump piston
35. Idling jet
36. Throttle body
37. Shaft nut
38. Lock washer
39. Return spring
40. Swivel screw
41. Air shutter lever
42. Clamp screw
43. Nut
44. Wire clamp
45. Shaft bushing
46. Air shutter bracket
47. Screw 48. Shutter plate
49. Air shutter shaft
50. Shaft hole plug
51. Fiber washer
52. Main jet adjusting
53. Fiber washer
54. Main jet
55. Fiber washer
56. Lower plug
57. Fiber washer
58. Accelerator jet
59. Fiber washer
60. Main discharge jet
61. Fiber washer
62. Power jet valve
63. Well vent
64. Check valve
65. Pipe plug
66. Drip plug
67. Fuel bowl assembly

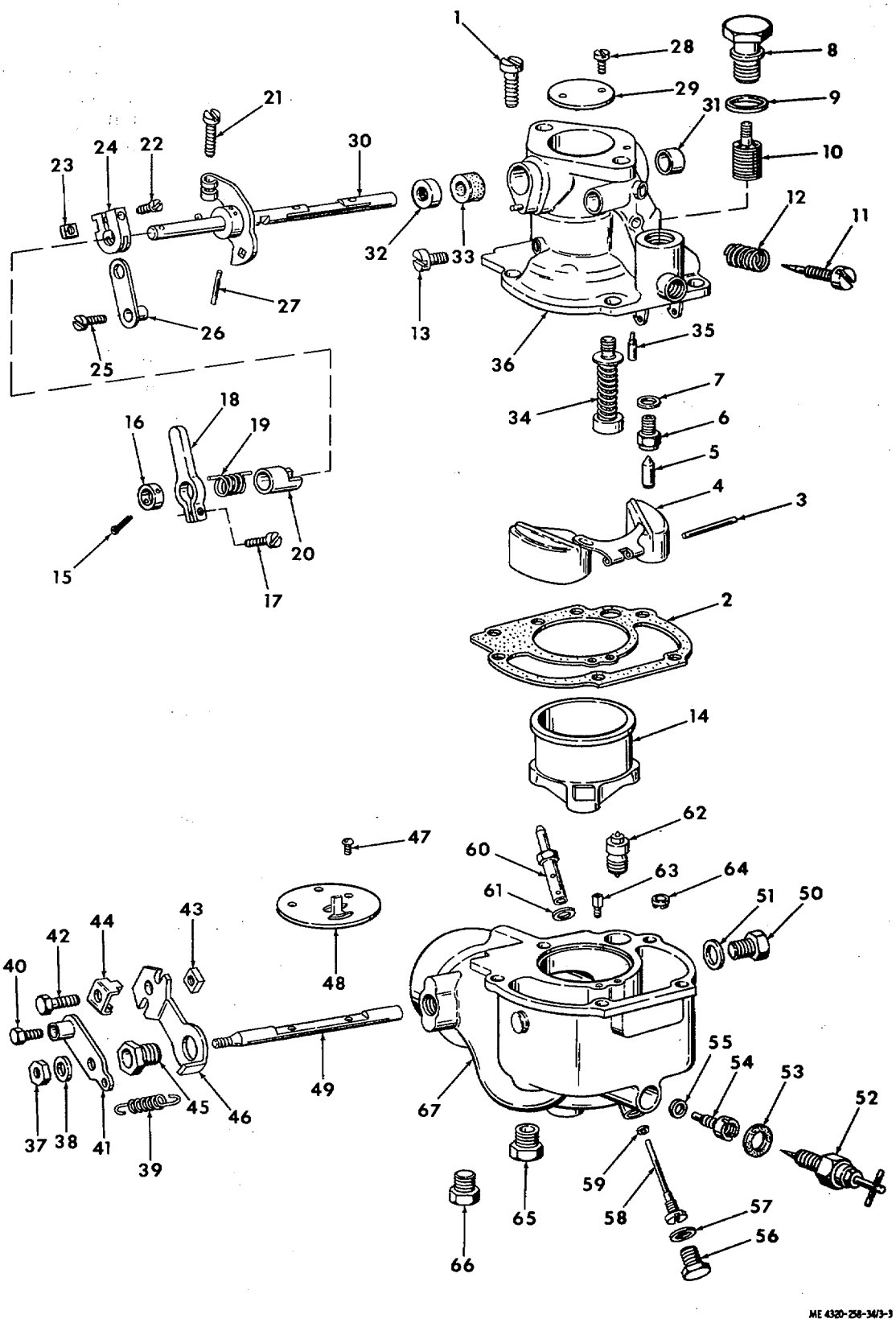

Figure 3-3. Carburetor, exploded view.

(1) To remove the float axle (3), press a screwdriver against the float axle at the slotted side of the float hinge bracket. Remove the axle from the opposite side and remove the float (4).

(2) After the float is removed, take care that the fuel valve (5) does not drop from the valve seat (6).

(3) Use a file to match-mark the throttle lever (on the throttle shaft (30)) and the throttle body (36). These marks will serve as a guide to assure that the parts will be reassembled in the proper manner.

(4) Use a file to match-mark the air shutter bracket (46), air shutter lever (41), and the boss on the fuel bowl (67). These marks will serve as a guide to assure proper reassembly.

(5) To remove the plug (31), insert a 1/4-inch rod, 6 inches long, through the opposite side of the throttle body (36) and drive out the shaft hole plug (31).

c. *Cleaning and Inspection*.

(1) Clean all parts in an approved carburetor cleaner. Wash with cleaning solvent (FED. Spec. P-D-680). Dry thoroughly with compressed air. Caution: Do not clean by inserting a wire or drill into any openings or passages as this will destroy their fine calibration.

(2) Blow out all passages in the air intake, fuel bowl, and throttle body with compressed air. (3) Inspect the float for cracks, worn float axle bearing, wear in the needle valve contact area, and other visible damage. Replace the float if it is damaged or if it is loaded with gasoline.

(4) Inspect the float axle for wear on the bearing surface. Replace if any wear can be detected.

(5) Inspect the needle valve and needle valve seat for wear or damage. Both parts must be replaced as an assembly if either is damaged.

(6) Inspect the idle adjusting screw for damaged threads and for a worn needle point. The point must be sharp and free from ridges of the tapered area.

(7) Inspect the throttle plate for burrs or damaged edges. Clean with crocus cloth to remove light burrs. Do not use a buffing wheel on the throttle plate. Replace if edges are damaged.

(8) Inspect the throttle shaft for wear of the bearing areas. Replace the shaft if visible wear is noted.

(9) Inspect the pump lever for distortion and for wear of the pump link hole. Replace if damaged.

(10) Inspect the air shutter plate for distortion, burrs, and damaged edges. Make sure the poppet valve on the choke plate is free. Replace a damaged choke plate.

(11) Inspect the air shutter shaft for cracks, distortion, and for worn bearing surfaces. Replace if damaged.

(12) Inspect the fuel bowl assembly and throttle body for cracks, distortion, damaged threads, and other damage. Inspect the bearing surfaces of the throttle shaft and air shutter shaft bores for wear or scoring. Replace damaged housings.

(13) Inspect all other parts for cracks, distortion, and other damage; replace damaged parts.

d. *Reassembly*. Refer to figure 3-3 to reassemble the carburetor. Reassembly is the reverse of disassembly. Note the following:

(1) During reassembly, aline the match marks made during disassembly on the fuel bowl (67), air shutter bracket (46), air shutter shaft (49), and lever (41).

(2) Aline the match marks made at disassembly on the throttle body (36) and lever of the throttle shaft (30).

(3) Note that the screw holes in the throttle plate (29) are off-centered. Start the side of the throttle plate with the shortest distance between the screw holes and beveled edge into place first. The plates are made with two opposite edges beveled to fit the throttle body bore when the plate is closed. The throttle plate will not close tightly if installed upside down. Pressure on the plate must be maintained with the finger until the screws are tightened. When properly installed, the side of the throttle plate farthest away from the mounting flange will be alined with the idle discharge holes when the plate is closed.

e. *Installation*. Install and adjust the carburetor (TM 5-4320-258-12).

3-4. Governor

a. *Removal*. Remove the governor from the engine (TM 5-4320-258-12).

b. *Disassembly*. Disassemble the governor, following the sequence of numbers assigned to figure 3-4. Note the following

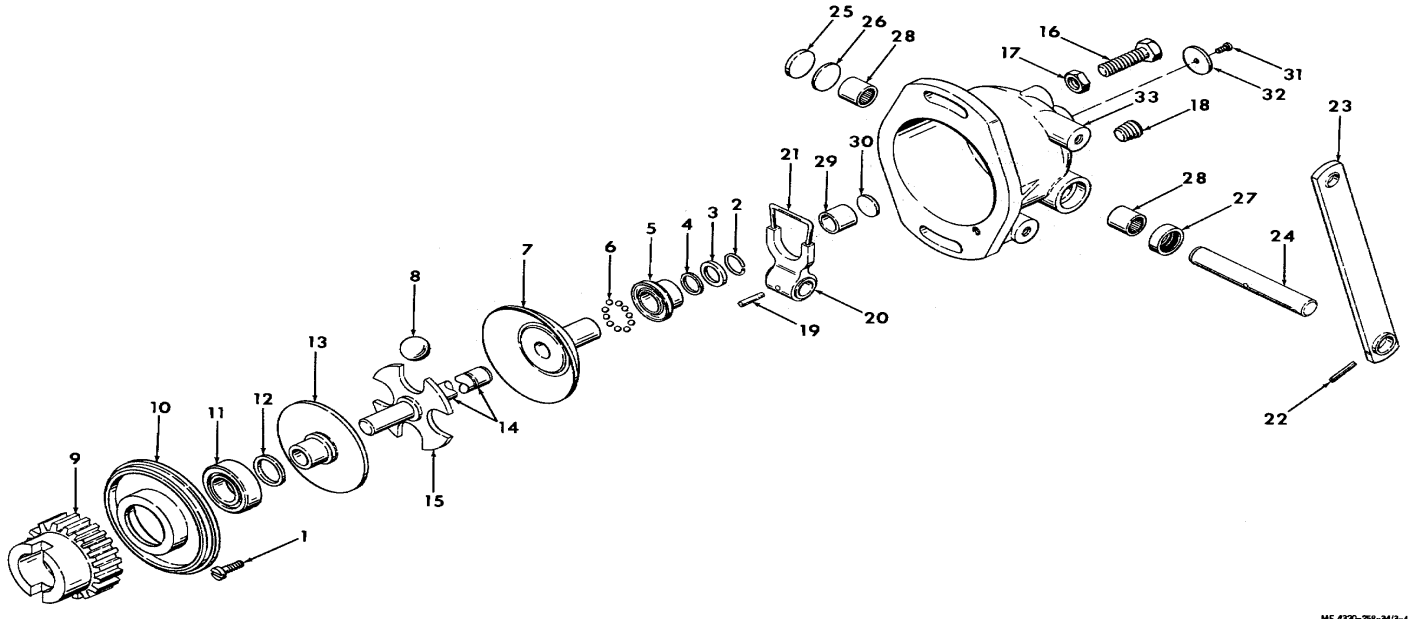

1. Screw
2. Retaining ring
3. Retaining ring washer
4. Ball stop washer
5. Fork base
6. Thrust bearing
7. Upper race
8. Ball
9. Drive gear
10. Governor base
11. Ball bearing
12. Lower race spacer
13. Lower race
14. Drive shaft
15. Driver
16. Adjusting screw
17. Lock nut
18. Plug
19. Groove pin
20. Fork
21. Bumper Spring
22. Spring pin
23. Governing lever
24. Governing shaft
25. Expansion plug
26. Gasket
27. Oil seal
28. Needle bearing
29. Bushing
30. Thrust washer
31. Drive screw
32. Name plate
33. Governor housing

Figure 3-4. Governor, exploded view.

(1) Remove the screw (1) to release the governor drive shaft assembly (items 2 through 15) from the governor housing (33).

(2) Slide the retaining ring washer (3) toward the upper race (7) on the drive shaft to expose the retaining ring (2). Remove the retaining ring and slide the washer (3), ball stop washer (4), fork base (5), thrust bearing (6), and upper race (7) from the drive shaft assembly. This will release the four balls (8).

(3) -Support the drive gear (9) in a press and press the drive shaft (14) from the gear. Remove the governor base (10) with the assembled bearing (11), lower race spacer (12), and the lower race (13) from the shaft.

(4) Press the ball bearing (11) from the governor base (10).

(5) Do not attempt to press the driver (15) from the drive shaft (14) unless either of the parts is damaged.

(6) Drive out the groove pin (19) that secures the fork (20) to the governing shaft (24). Pull the assembled governing lever (23) and shaft (24) from the governor housing (33) to release the fork. Remove the fork.

(7) Pierce the expansion plug (25) and pry it from the governor housing (33) along with the gasket (26).

(8) Insert a soft drift through the needle bearing (28) on the expansion plug side of the housing, and drive out the oil seal (27) and the needle bearing (28) from the housing. Insert the drift from the opposite side and drive out the remaining needle bearing.

(9) If the bushing (29) is damaged, thread it with a tap of suitable size and turn a bolt into the threaded bore. Pull the assembled bolt and bushing from the housing (33).

c. *Cleaning and Inspection*.

(1) Clean the bearings as directed in paragraph 2-7.

(2)'Clean all remaining parts by washing in cleaning solvent (FED. Spec. P-D-680); dry thoroughly.

(3) Inspect the bearings for rough, catching, or binding operation. Check the balls or rollers for scoring and check the races for damage. Replace damaged bearings.

(4). Inspect the upper race (7) and the lower race (13) for scoring, cracks, and distortion. Check the internal diameter of the bores for an out-of-round condition. Replace damaged races.

(5) Inspect the driver for scoring, cracks, wear in the ball pockets, and other damage; replace a damaged driver.

(6) Inspect the drive shaft for misalinement and for wear at the bushing end. Replace a damaged shaft.

(7) Inspect the balls (8)-for scoring, nicks, and other damage; replace damaged balls.

(8) Inspect the drive gear (9) for damaged gear teeth, worn or scored internal diameter, and damaged drive notches; replace a damaged drive gear.

(9) Inspect the fork and bumper spring (21) for wear and distortion. Replace damaged parts.

(10) Inspect the governing shaft (24) and lever (23) for wear and distortion; replace damaged parts. (11) Inspect the governor housing (33) for cracks, damaged bores, distorted mounting flange, and other damage; replace a damaged body.

d. *Reassembly*. Reassemble the governor as shown in figure 3-4. Note the following:

(1) Lubricate all operating parts with clean engine oil during reassembly.

(2) If the bushing (29) was removed from the bushing seat in the governor housing, place the thrust washer (30) in the seat and press the bushing squarely into the seat, taking care not to damage the bushing end. Press it in until it is firmly seated against the thrust washer.

(3) When pressing the drive gear (9) onto the end of the drive shaft (14), lubricate the end of the shaft with engine oil and press the gear squarely onto the shaft. Take care to support the opposite end of the shaft in a manner which will prevent peening or burring the shaft end.

(4) After installing the retaining ring (2), pull the retaining ring washer (3) over the retaining ring to lock it in place.

(5) After reassembly, rotate the governor shaft. It must turn freely without binding, scraping, or catching.

e. *Installation*. Install and adjust the governor on the engine (TM 5-4320-258-12).

3-5. Engine Overspeed Governor

a. *Testing and Adjustment*. The engine over-speed governor must shut off the engine when engine speed reaches or exceeds 2700 rpm. Test and adjust as follows:

(1) Start the. engine and allow it to warm to operating temperature, then shut it off.

(2) Disconnect the linkage from the engine speed governor (TM 5-4320-258-12) so that the engine speed can be controlled by manually manipulating the carburetor throttle lever. Caution: Do not operate the engine at speeds greater than 2750 rpm. Engine over-speed can result in severe engine damage.

(3) Restart the engine and have an assistant watch the tachometer. Slowly increase engine speed with no load until the engine stops as the result of the operation of the overspeed governor or until the tachometer indicates 2750 rpm.

(4) If the engine did not shut off as the result of the tripping of the overspeed governor, the overspeed governor requires adjustment. If the engine stopped before the tachometer indicated 2650 rpm, the engine overspeed governor must be adjusted.

(5) To adjust the engine overspeed governor, loosen the lock screw (3, fig. 3-5) that secures the cap (2) in position. To decrease the engine shutoff speed, rotate the cap clockwise. To raise the engine shutoff speed, turn the cap counterclockwise. Tighten the lock screw.

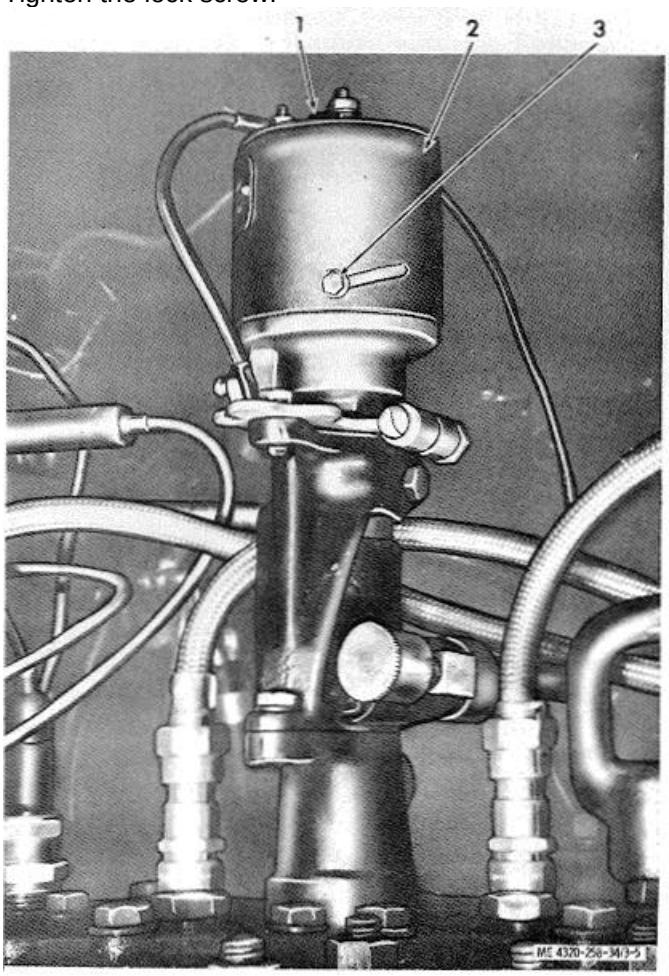

1. Reset button
2. Cap
3. Lock screw

Figure 3-5. Engine overspeed governor, showing adjusting points.

(6) Recheck the speed at which the overspeed governor stops the engine as directed in steps (1) through (3) above. Readjust until the engine shuts off at 2700 rpm. Replace the engine overspeed governor if it cannot be adjusted.

(7) Reconnect the engine speed governor.

b. Removal.

(1) Remove the tachometer drive from the governor arm (TM 5-4320-258-12)

(2) Disconnect the electrical leads from the terminals at the top of engine overspeed governor. Tag leads to facilitate reassembly.

(3) Remove and disassemble the overspeed governor and related parts as shown in figure 3-6.

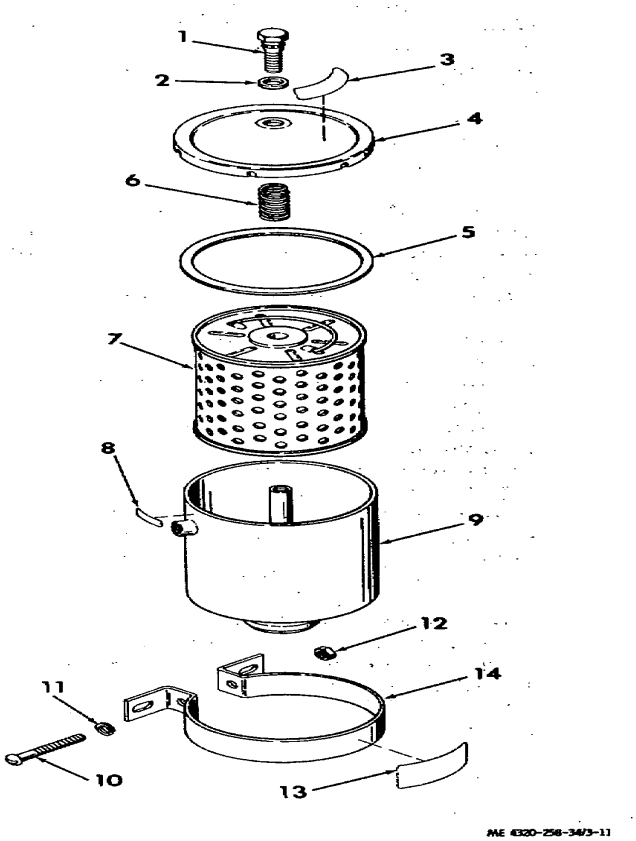

1. Cap screw
2. Lock washer
3. Overspeed governor
4. Cap screw
5. Lock washer
6. Governor arm
7. Nut
8. Lock washer
9. Cap screw
10. Adapter
11. Governor drive shaft

Figure 3-6. Engine overspeed governor and related parts, exploded view.

c. Cleaning and Inspection.

(1) Wipe the exterior of the engine overspeed governor with a cloth dampened with cleaning solvent (FED. Spec. P-D-680); dry thoroughly. Take care to prevent solvent from entering the interior of the unit.

(2) Wash all remaining parts with cleaning solvent (FED. Spec. P-D-680). Remove the grease

cup from the governor arm and carefully remove all grease from the cup and from the interior of the arm.

(3) Remove all grease from the toothed portion of the governor drive shaft. Use a soft- bristled brush, if necessary, to remove the grease.

(4) Inspect the engine overspeed governor for cracks, loose or damaged terminals, and damaged coupling at the end of the shaft. Rotate the shaft to check for rough, catching, or binding operation. Replace a damaged overspeed governor.

(5) Inspect the governor drive shaft for cracks, damaged teeth, distortion and other damage; replace a damaged drive shaft.

(6) Inspect all other parts for cracks, distortion, damaged threads, and other damage; replace damaged parts.

d. Reassembly and Installation.

(1) Reassemble and install the engine overspeed governor and related parts as shown 'in figure 3-6.

(2) Reconnect the electrical leads to the terminals at the top of the overspeed governor.

(3) Reconnect the tachometer drive and tachometer shaft to the governor arm, and lubricate the tachometer drive and overspeed governor (TM 5-4320-258-12).

(4) Check and, if necessary, adjust the engine overspeed governor (subparagraph a above).

SECTION II. REPAIR OF COOLING SYSTEM COMPONENTS

3-6. Description of Cooling System

a. Liquid coolant is pumped around the cylinder walls and valve guides in the cylinder block and around the tops of the cylinders in the cylinder head to remove the heat of combustion from the engine. This is necessary to prevent the excessive heat from damaging the engine.

b. As the hot coolant is pumped from the engine, it enters the radiator consisting of tubes and fins which dissipate the heat to the atmosphere. The fluid passes into the top of the radiator and out through the bottom. The cooling fan maintains a blast of air through the radiator to help dissipate the heat.

c. The coolant from the radiator enters the water pump which is V-belt driven by the engine to circulate the coolant through the block and cylinder head to complete the cycle. The centrifugal water pump is mounted on the cylinder block.

d. The engine is protected from overheating by coolant temperature safety switch (2, fig. 3-7) mounted on the control panel. This switch closes a set of contacts to stop the engine by grounding the magneto primary before engine coolant tem- perature reaches the point that engine damage can occur. The switch trip point is adjustable.

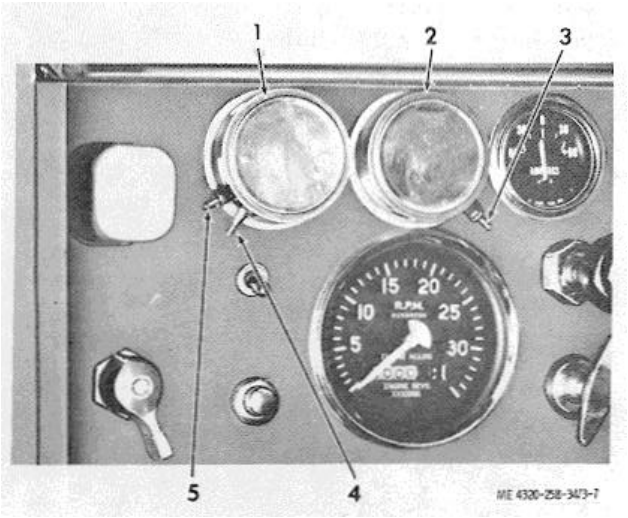

1. Oil pressure safety switch
2. Coolant temperature safety switch
3. Temperature switch adjusting screw
4. Oil pressure switch adjusting screw
5. Oil safety switch pushbutton

Figure 3-7. Coolant temperature and oil pressure safety switches.

3-7. Radiator

a. *Removal*. Remove the radiator (TM 5-4320- 258-12).

b. *Cleaning*.

(1) Clean the exterior of the radiator by flushing in a reverse-flow direction with stream of water to remove all bugs and debris. Remove any greasy or oily deposits with cleaning solvent (FED. Spec. P-D-680).

(2) Reverse-flush the interior of the radiator, using a flushing gun.

c. *Inspection and Testing*.

(1) Inspect all parts for cracks, signs of leaking tubes or gaskets, damaged thread's, or other obvious damage.

***Caution*: Do not exceed 10 psi air pressure for radiator testing. Excess pressure will damage the radiator. Be sure' the radiator core is completely drained before testing. When testing at low pressure, it is possible that water within the core could prevent air from passing out of small holes, and the leak could pass undetected**.

(2) Make sure the radiator is completely drained of coolant. Plug all openings, except one through which compressed air can be applied. Immerse the radiator in a tank of water and apply 10 psi air pressure to the interior of the radiator. Check for air bubbles that could indicate a leak. If a leak is found, mark the area for repair.

(3) Inspect all hardware for cracks and for worn or stripped threads.

(4) Replace all parts damaged beyond repair.

d. *Repair*.

(1) Repair leaks by soldering. Be sure that the repair does not block or retard circulation through any tubes. There shall be no blocked tubes.

(2) Straighten any bent or damaged fins. Replace any damaged parts.

e. *Installation*. Install the radiator (TM 5-4320-258-12).

3-8. Water Pump

a. *Removal*. Remove the water pump from the engine (TM 5-4320-258-12).

b. *Disassembly*.

(1) Disassemble the water pump only if the shaft binds, the seal leaks, the housing is cracked or damaged, or there are other signs of faulty operation.

(2) Use a puller to pull the drive pulley (2, fig. 3-8) from the water pump

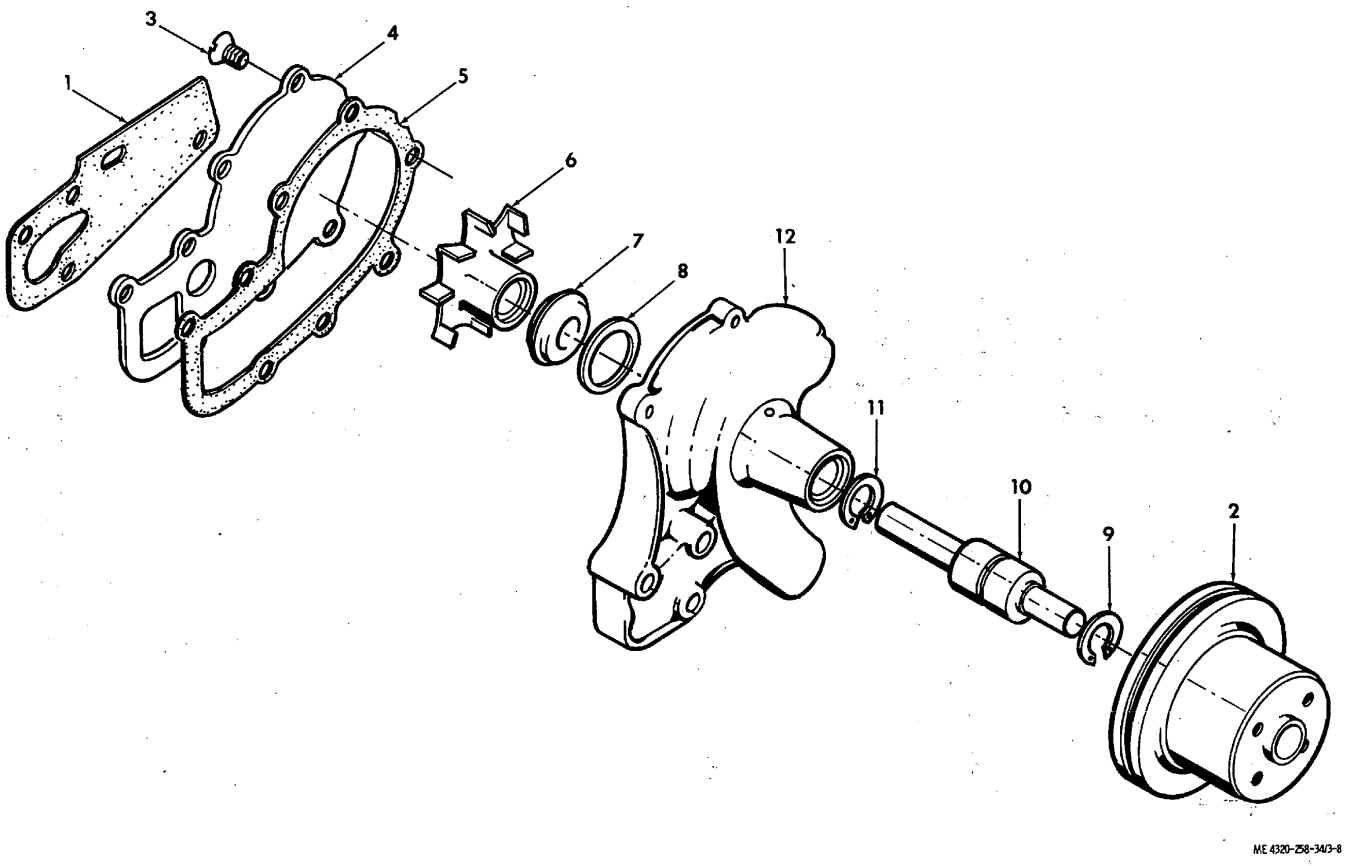

1. Gasket
2. Drive pulley
3. Screw
4. Water pump cover
5. Cover gasket
6. Impeller
7. Seal
8. Seal gasket
9. Retaining ring
10. Water pump shaft
11. Retaining ring
12. Water pump housing

Figure 3-8. Water pump, exploded view

(3) Use a puller to remove the impeller (6) from the shaft, taking care to prevent damage to the casting.

(4) To remove. the water pump shaft (10) from the housing (12), remove the retaining ring (9) and press on the impeller end of the shaft to press the shaft out of the fan end of the housing. Pressing the fan out in the opposite direction will severely damage the housing.

c. Cleaning and Inspection.

(1) Discard and replace seals, gaskets, and all parts contained in the water pump repair' kit. Clean all remaining parts with cleaning solvent (FED. Spec. P-D-680); dry thoroughly.

(2) Inspect the water pump housing for, cracks, distortion, and scoring of the seal contact surface. Replace the entire water pump if housing is dam- aged. (3) Inspect all other parts for cracks, worn or damaged threads, distortion, and other damage; replace damaged parts.

d. Reassembly.

(1) Reassemble the water pump as shown in figure 3-8.

(2) Apply a light film of grease to the face of the seal to facilitate sealing and seating.

(3) When assembling the seal and shaft, apply a thick coating of soap suds to the parts to prevent damage to the seal.

e. Installation. Install the water pump on the engine (TM 5-4320-258-12).

3-9. Coolant Temperature Safety Switch

a. Removal.

(1) Disconnect the electrical leads from the coolant temperature switch. Tag leads to facilitate reassembly.

(2) Disconnect the coolant temperature safety switch sender from the engine.

(3) Remove the coolant temperature safety switch from the control panel (see items 1 through 4, fig. 3-9).

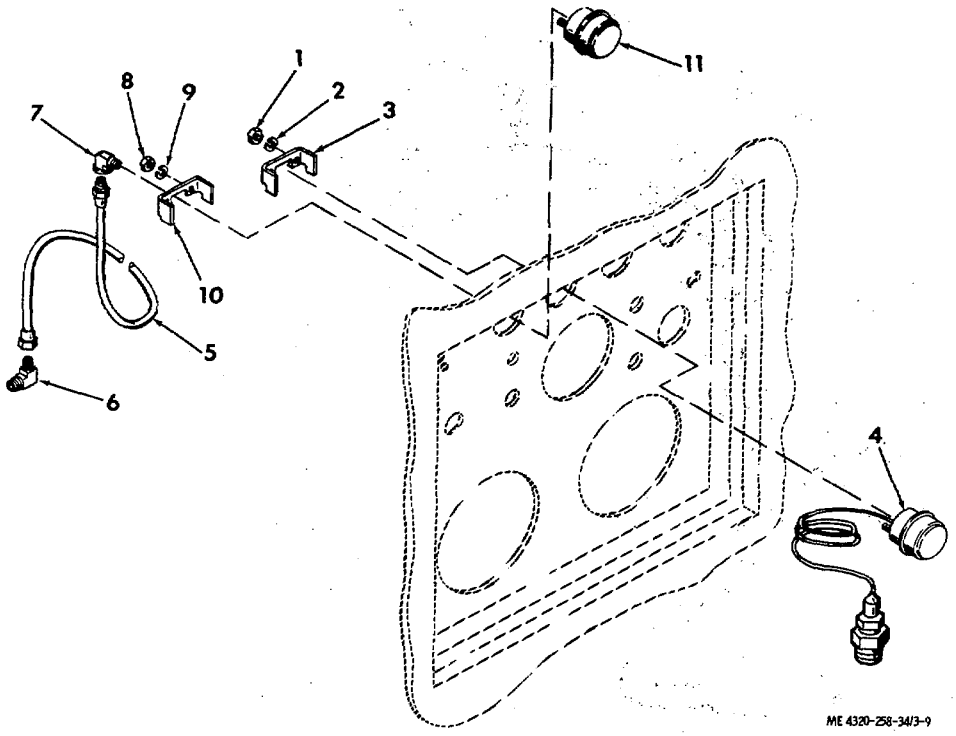

1. Nut
2. Lock washer
3. Clamp
4. Coolant temperature safety switch
5. Hose
6. Elbow
7. Elbow
8. Nut
9. Lock washer
10. Clamp
11. Oil pressure safety switch

Figure 3-9.Coolant temperature and oil pressure safety switches, exploded view.

b. *Cleaning and Inspection*.

(1) Wipe the coolant temperature safety switch with a cloth dampened with cleaning solvent (FED. Spec. P-D-680); dry thoroughly.

(2) Inspect the coolant temperature safety switch for broken, loose, or corroded terminals, severe dents, and other obvious damage. Check and adjust the switch as directed in subparagraph c below.

c. *Testing and Adjustment*.

(1) Suspend the sender of the coolant temperature safety switch and a thermometer in a container so that neither the sender nor the thermometer touches the sides or bottom of the container. Connect a multimeter, set to read continuity, across the terminals of the switch. No continuity should be indicated at normal temperatures.

(2) Heat the container while watching the thermometer and the multimeter. As the water temperature reaches approximately 2100F, the multimeter should indicate continuity through the switch.

(3) If the switch remains open, or closes at too low a temperature, loosen the lock nut on the adjusting screw (3, fig. 3-7) and adjust the switch so that it just closes at 2100F. Lock the lock nut to secure the adjustment.

d. *Installation*. Installation is the reverse of removal. Refer to items I through 4 in figure 3-9. If necessary, refer to the wiring diagram, figure 1-3, for wiring connection information.

SECTION III. REPAIR OF OIL SYSTEM COMPONENTS

3-10. Description of Engine Oil System

a. The engine oil system provides lubrication for the working surfaces within the engine. The oil is retained in the oil pan under the engine and is circulated through the engine by the oil pump mounted on one of the main bearing caps of the engine. Internal components of the engine lubrication system are covered in chapter 4, which describes basic engine overhaul. Oil pressure ad- justment is described in paragraph 3-13.

b. An oil filter with its related piping is mounted on the exterior of the engine to remove from the engine oil impurities and particles that could cause engine wear. This filter has a replaceable-type cartridge.

c. The engine is protected from a low oil pressure condition by an oil pressure safety switch (1, fig. 3- 7) mounted on the engine control panel. This switch is adjustable and provides a reset push- button to reset the device for starting.

3-11. Engine Oil Filter

a. *Removal.*

(1) Drain the oil from the engine (TM 5-4320-258-12).

(2) Disconnect the electrical lead from the oil pressure sender on the filter piping.

(3) Remove the oil filter and related parts from the engine as shown in figure 3-10

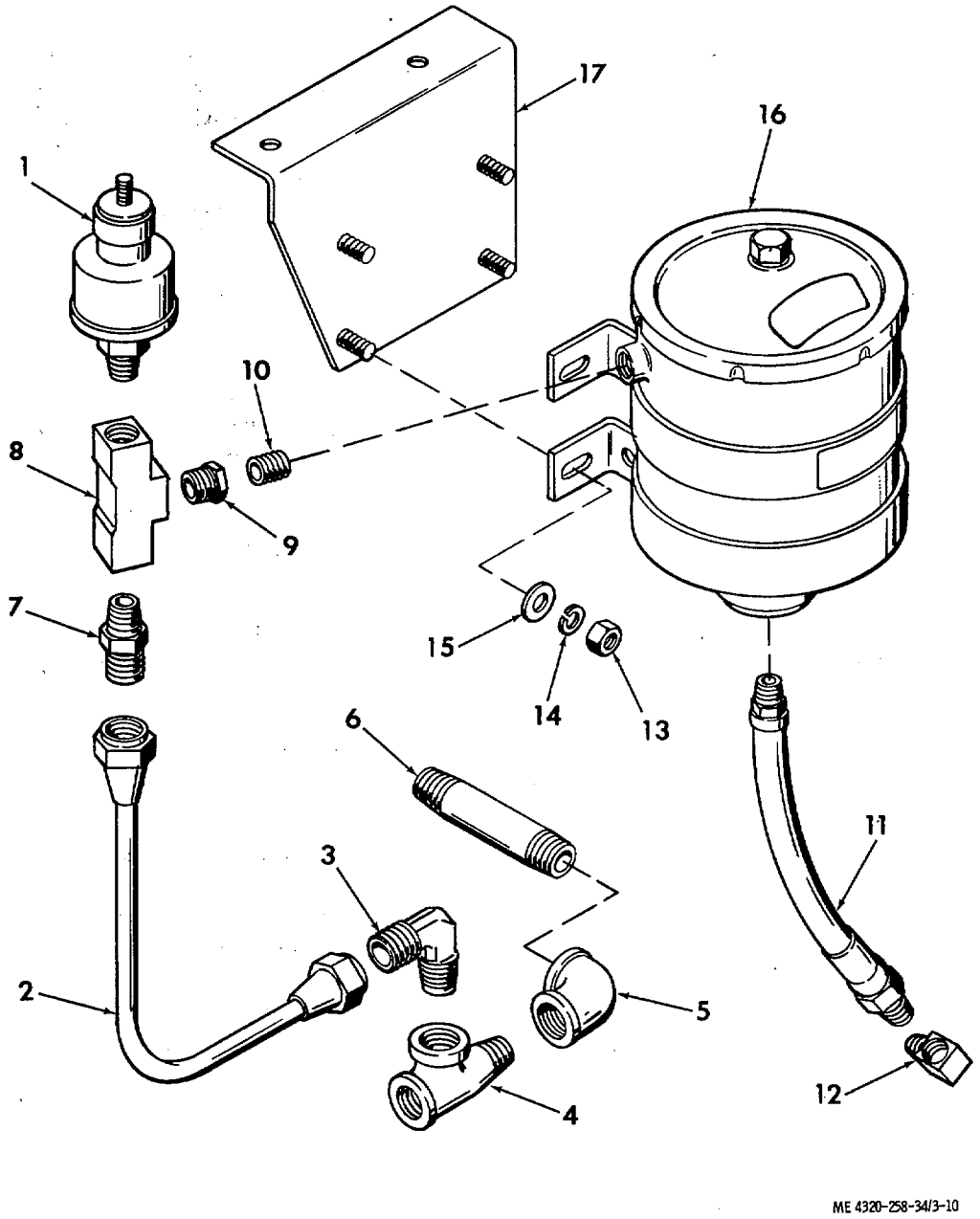

1. Oil pressure sender
2. Tube
3. Elbow
4. Tee
5. Elbow
6. Nipple
7. Connector
8. Tee
9. Bushing
10. Nipple
11. Hose
12. Elbow
13. Nut
14. Lock washer
15. Flat washer
16. Oil filter assembly
17. Oil filter bracket

Figure 3-10. Engine oil filter mounting, exploded view.

b. Disassembly. Disassemble the oil filter as shown in figure 3-11.

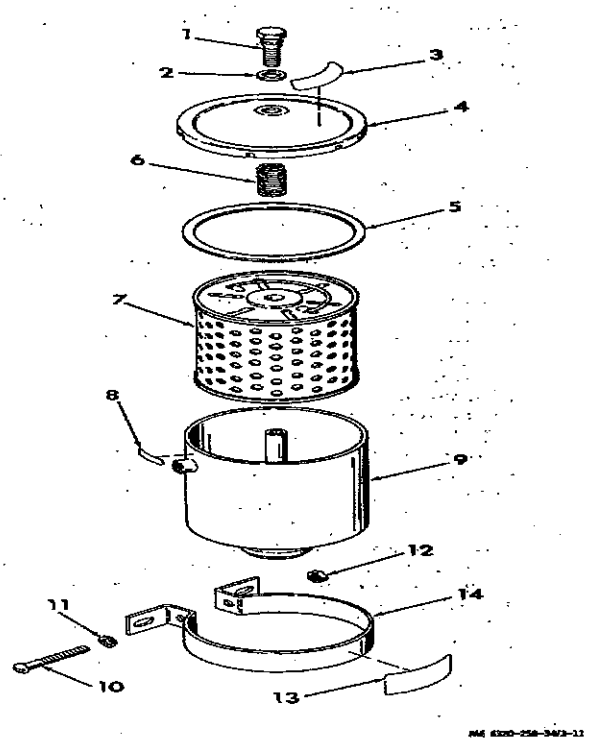

1. Cover screw
2. Screw gasket
3. Decal
4. Cover
5. Cover gasket
6. Spring
7. Filter element
8. Decal
9. Oil filter body
10. Screw
11. Lock washer
12. Nut
13. Decal
14. Oil filter clamp

Figure 3-11. Engine oil filter, exploded view.

c. Cleaning and Inspection.

(1) Discard and replace the oil filter element and gaskets.

(2) Clean all remaining parts with cleaning solvent (FED. Spec. P-D-680).-Blow out tubes and hoses with compressed air.

(3) Inspect the hose for abrasion, cracks, deterioration, damaged threaded ends, and collapsed walls; replace a damaged hose.

(4) Inspect the tube for dents, cracks, damaged tube nuts, and collapsed walls; replace a damaged tube.

(5) Inspect the filter body and cover for cracks, distortion, dents, damaged threads, and other damage; replace a damaged body or cover.

(6) Inspect the oil pressure sender for cracks, dents, and damaged threads. Connect the sender to a calibrated variable pressure air supply and connect an ohmmeter across the electrical terminal and ground of the sender. At zero air pressure resistance through the sender must be zero ohms. Increase air pressure in increments and check for the following resistance readings:

Psi	*Ohms 10%*
10	2.0
20	4.1
30	6.5
40	9.3
50	10.8
60	13.8

(7) Inspect all other parts for cracks, distortion, and damaged threads. Replace damaged parts.

d. Reassembly and Installation, Reassembly and installation are the reverse of removal and disassembly. Refer to figures 3-10 and 3-11. After installation, start the engine and check for oil leaks. Correct any leaks.

3-12. Engine Oil Pressure Safety Switch

a. Removal.

(1) Disconnect the electrical leads from the oil pressure safety switch. Tag leads to facilitate reassembly.

(2) Disconnect the hose (5, fig. 3-9) and the elbows (6 and 7i from the engine and from the oil pressure safety' switch.

(3) Remove the oil pressure safety switch. Refer to items 8 through 11 in figure 3-9.

b. Cleaning and Inspection.

(1) Clean the oil pressure safety switch with a cloth dampened with cleaning solvent (FED. Spec. P-D-680); dry thoroughly.

(2) Clean all remaining parts with solvent.

Blow through the hose with compressed air to make sure it is not clogged.

(3) Inspect the, :oil pressure safety switch for cracks, dents, damaged threads, and loose or corroded electrical terminals; replace if damaged.

(4) Inspect the hose for abrasions, deterioration, and damaged threads; replace a damaged hose.

(5) Inspect the remaining parts for cracks, damaged threads, distortion, and other damage; replace damaged parts.

c. Adjustment and Testing.

(1) Connect the pressure inlet of the oil pressure safety switch/ to an adjustable and calibrated air pressure source. Connect a multimeter, adjusted to read continuity, across the electrical terminals.

(2) Under a no-pressure condition, press and release the oil safety switch pushbutton (5, fig. 3-7) while watching the multimeter. It must indicate no continuity after the safety switch pushbutton is pressed.

(3) With the safety switch pushbutton re- leased, slowly apply pressure to the oil pressure safety switch while watching the multimeter. Continue to increase pressure to approximately 60 psi and then slowly decrease pressure while noting the indication of the multimeter. As pressure is decreased to between 5 and 6 psi, continuity must be made through the switch. Continuity must be broken as the oil pressure safety switch pushbutton is pressed.

(4) If the switch fails to close between 5 and 6 psi, turn the adjusting screw (4, fig. 3-7) on the switch to adjust the switch closing to the required level.

(5) Recheck the adjustment and, if necessary, repeat until the proper closing point is attained.

d. Installation. Installation of the oil pressure safety switch is the reverse of removal. Refer to items 6 through 11 of figure 3-9. If necessary, refer to the wiring diagram (fig. 1-3) for wire connection information.

3-13. Engine Oil Pressure Adjustment

a. Description. The engine oil pressure is regulated by a relief valve mounted in the engine cylinder block. It consists mainly of a spring- loaded, spool-type valve which seats in a bore in the block. The greater the spring pressure which loads the valve, the greater is the oil pressure in the system. The pressure is increased by adding pressure-adjusting washers between the spring and the valve to increase spring force against the valve.

b. Adjustment.

(1) Start the engine and allow it to warm to operating temperature. Check the engine oil pressure indicated on the oil pressure gage. At idle speed, the pressure must exceed 7 psi; at governed speed it must be between 20 and 30 psi.

(2) If the engine oil pressure is not within the required range, shut off the engine and remove the plug (23, fig. 4-22) from the carburetor side of the engine block. Remove the relieve valve spring (25) and pressure adjusting washers (26).

(3) To increase oil pressure, add a washer between the spring and valve. Not more than four washers are allowed. If four washers fail to bring it into the required range, the spring is faulty or other engine troubles exist.

(4) After adjustment, check that the oil pressure remains in the required ranges during operation.

SECTION IV. REPAIR OF ENGINE MOUNTING

3-14. Description

The engine is mounted on the radiator support assembly at the front, and on the feet of the flywheel housing at the rear. The resilient support at the front of the engine helps cushion the engine vibration, preventing it from being transmitted to the associated equipment. The radiator support is connected to the flywheel housing by adjustable tie rods.

3-15. Engine Support

a. Removal.

(1) Remove the engine from the centrifugal pump assembly (para 2-10).

(2) Remove the engine housing from the engine (TM 5-4320-258-12).

(3) Remove the radiator (TM 5-4320-258--12).

(4) Support the engine with a hoist engaged in the lifting eye at the top of the engine.

(5) Remove the tie rods and related parts (items 1 through 9, fig. 3-12) that connect the radiator support (23) with the flywheel housing

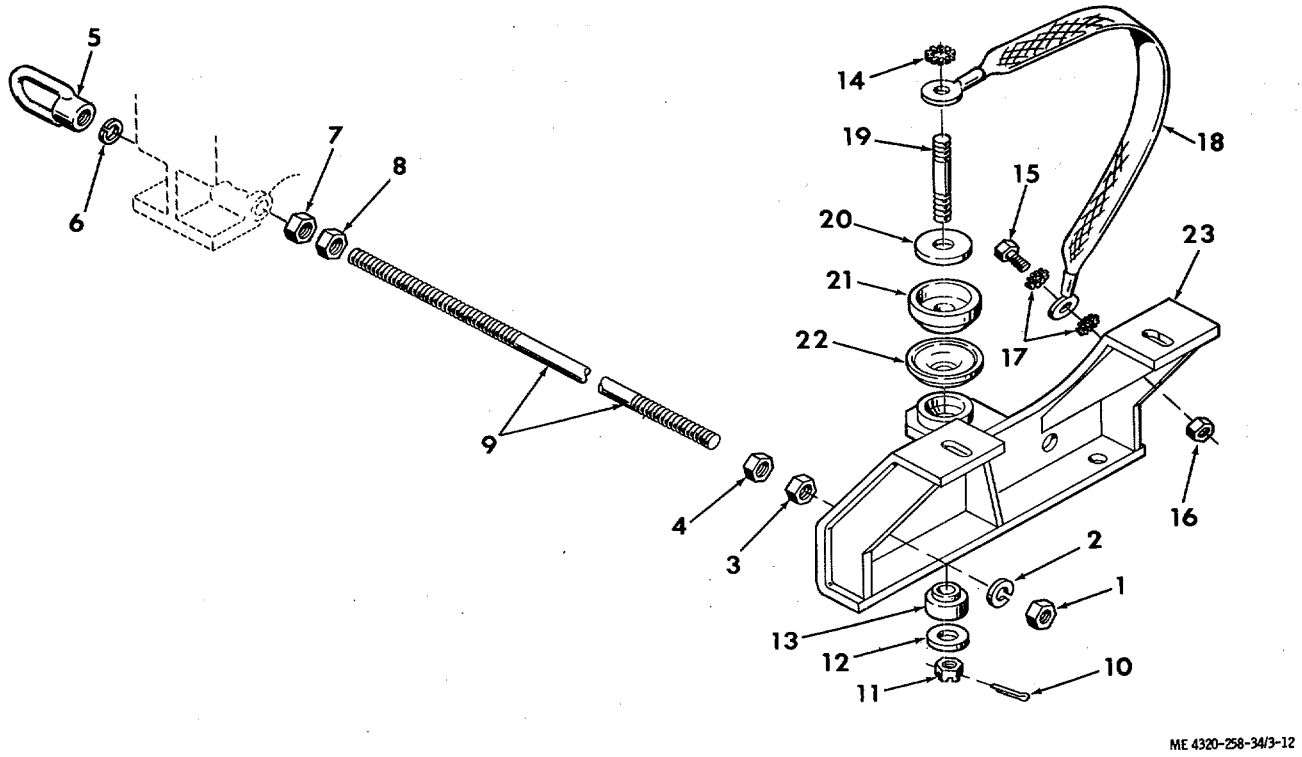

1. Nut
2. Lock washer
3. Nut
4. Nut
5. Rod end
6. Lock washer
7. Nut
8. Nut
9. Support tie rod
10. Cotter pin
11. Nut
12. Flat washer
13. Support mounting
14. Lock washer
15. Cap screw
16. Nut
17. Lock washer
18. Ground strap
19. Gear cover stud
20. Flat washer
21. Support mount
22. Mount retainer
23. Radiator support

Figure 3-12. Engine mounting parts, exploded view

***Caution*: Do not rest the engine on its oil pan. This may damage the oil pan.**

(6) Remove the cotter pin (10), nut (11), flat washer (12), and support mounting (13) from the end of the gear cover stud (19). Raise the engine out of engagement with the radiator support. Mount the engine on an overhaul stand or provide proper blocking to rest it on the floor.

(7) Remove the flat washer (20), support mount (21), and mount retainer (22) from the radiator support.

b. Cleaning and Inspection.

(1) Clean the rubber mounting parts with a cloth dampened with cleaning solvent (FED. Spec. P-D-680). Wash all remaining parts in solvent.

(2) Inspect the rubber mounting parts for 3-18 cracks, deterioration, loss of resiliency, cuts, and other damage; replace the mounting parts if damaged.

(3) Inspect the support tie rod and the stud for damaged threads and distortion; replace damaged parts.

(4) Inspect the radiator support for cracks, broken weldments, distortion, and other damage; reweld, straighten, or replace a damaged support.

(5) Inspect the ground strap for rust, corrosion, and other damage. If necessary, sand- paper the end terminals to assure a good electrical contact between the radiator support and engine at installation.

c. Installation.

(1) Install the engine on the radiator support

as shown in figure 3-12. Make sure the ground strap (18) is making good electrical contact between parts.

(2) When installing the tie rods (9) that connect the radiator support with the flywheel housing, position the inner nuts so that they prevent excessive strain on the radiator support when the outer nuts are tightened. The bottom of the radiator support must be horizontal when the tie rods are installed..

(3) Install the radiator (TM 5-4320-258-12).

(4) Install the engine housing (TM 5-4320-258-12).

(5) Install the engine on the centrifugal pump assembly (para 2-10).

CHAPTER 4

BASIC ENGINE OVERHAUL

SECTION I. INTRODUCTION AND FITS, TOLERANCES, AND WEAR LIMITS

4-1. Introduction

This chapter provides instructions relating to engine repair and overhaul. It includes information regarding disassembly, inspection of parts to determine if their continued serviceability is possible or if they should be replaced, instructions covering repair techniques such as valve grinding and cylinder honing, reassembly and tolerance checking to assure proper fits and clearances, and all other information relating to engine overhaul. Paragraph 4-2 provides the fits, tolerances, and allowable wear limits which are useful in determining if parts replacement is necessary.

4-2. Fits, Tolerances, and Wear Limits

Table 4-1 lists the fits and tolerances applicable to the engine. Refer to the table to determine if parts replacement is required or if containued serviceability of the parts is possible.

Table 4-1. Engine Fits, Tolerances, and Wear Limits

Component points of measurement	Manufacturer's dimensions and tolerances in inches		Design clearances in inches		Allowable wear or clearance
	Minimum	Maximum,	Minimum	Maximum	
Valve and valve guides					
Intake valves					
Cylinder block face-to-guide distance				115/32	
Outside diameter	0.6565	0.6575			
Inside diameter	0.3422	0.3432			0.3447
Valve stem diameter	0.3406	0.3414			0.3386
Stem-to-guide clearance			0.0008	0.0026	0.0046
Valve tappet clearance					0.0140
Exhaust valves					
Cylinder block face-to-guide distance				115/32	
Outside diameter	0.6565	0.6575			
Inside diameter	0.3422	0.3432			0.3447
Valve stem diameter	0.3377	0.3385			0.3357
Stem-to-guide clearance			0.0037	0.0055	0.0075
Valve tappet clearance					0.0160 (Hot) 0.0170 (Cold}
Valve tappets					
Outside diameter		0.9990			
Tappet bore diameter		1.0000			
Maximum bore-to-tappet clearance					0.0050
Camshaft and bushings					
Bearing journal diameter					
No. 1	1.8715	1.8725			1.8705
No. 2	1.8085	1.8095			1.8075
No. 3	1.7457	1.7465			1.7447
No. 4	1.2465	1.2475			1.2455
Camshaft bushing diameter					
No. 1	1.8745	1.8755			
No. 2	1.8115	1.8125			
No. 3	1.7495	1.7502			
No. 4	1.2495	1.2505			
Journal-to-bushing clearance					
No. 1			0.0020	0.0040	
No. 2			0.0020	0.0040	
No. 3			0.0020	0.0040	
No. 4			0.0020	0.0040	
Camshaft end play			0.0050	0.0090	
Connecting rod					
Bushing hole diameter	0.9130	0.9140			
Bearing hole diameter	2.1865	2.1870			
Side play			0/0060	0.0100	
Connecting rod bearing					
Bearing hole diameter	2.1865	2.1870			
Bearing thickness	0.0613	0.0616			0.0608
Crankpin diameter	2.0619	2.0627			2.0609
Bearing to crankshaft clearance					0.0032
Crankshaft					
End thrust			0.0030	0.0080	
Main bearing journal diameter	2.3744	2.3752			2.3734
Crankpin diameter	2.0619	2.0627			2.0609
Main bearings					
Case hole	2.5615	2.5622			
Bearing thickness	0.0925	0.0928			0.0920
Crankshaft journal diameter	2.3744	2.3752			2.3734
Journal-to-bearing clearance			0.0007	0.0028	
Piston					
Ring groove width					
1st	0.1270	0.1290			0.1305
2nd and 3rd	0.1275	0.1285			0.1305
4th	0.2520	0.2530			0.2550
Cylinder bore diameter	3.4375	3.4395			3.4475
Piston fit in bore. Check by pull on 1/ 3-inch wide-0.003-inch feeler gage					5-10 lb

Component points of measurement	Manufacturer's dimensions and tolerances in inches		Design clearances in inches		Allowable wear or clearance
	Minimum	Maximum,	Minimum	Maximum	
Piston rings					
Width					
No. 1	0.1230	0.1240			0.1210
No. 2 and 3	0.1235	0.1240			0.1215
No. 4	0.2485	0.2490			0.2465
Gap					
No. 1			0.0070	0.0170	
No. 2 and 3			0.0070	0.0170	
No. 4			0.0070	0.0170	
Side clearance					
No. 1			0.0035	0.0050	
No. 2 and 3			0.0035	0.0055	
No. 4			0.0030	0.0045	
Piston pin					
Length	2.8050	2.8150			
Pin diameter	0.8591	0.8593			0.8607
Piston pin bushing diameter	0.8595	0.8597			0.8067
Piston pin fit in piston			Light	Push	
Piston pin fit in rod			0.0002	0.0006	
Valve spring (intake and exhaust)					
Weight required to compress to 1 45/64 in.			47 lb	53 lb	42 lb
Weight required to compress to 1 27/64 in.			96 lb	104 lb	86 lb

SECTION II. ENGINE OVERHAUL

Note. Some engine repair can be done with the engine in the engine housing. More extensive repair will require removal of the engine from the housing. Major repair or overhaul requires that the engine be mounted on an engine overhaul stand. Remove the engine housing (TM 5-4320-258-12). Remove the engine from its mounting parts if necessary (para 3-15). Remove accessories from the engine as required. Refer to TM 5-4320-258-12.

4-3. Cylinder Head

a. Removal. Remove the cylinder head and gasket as shown in figure 4-1.

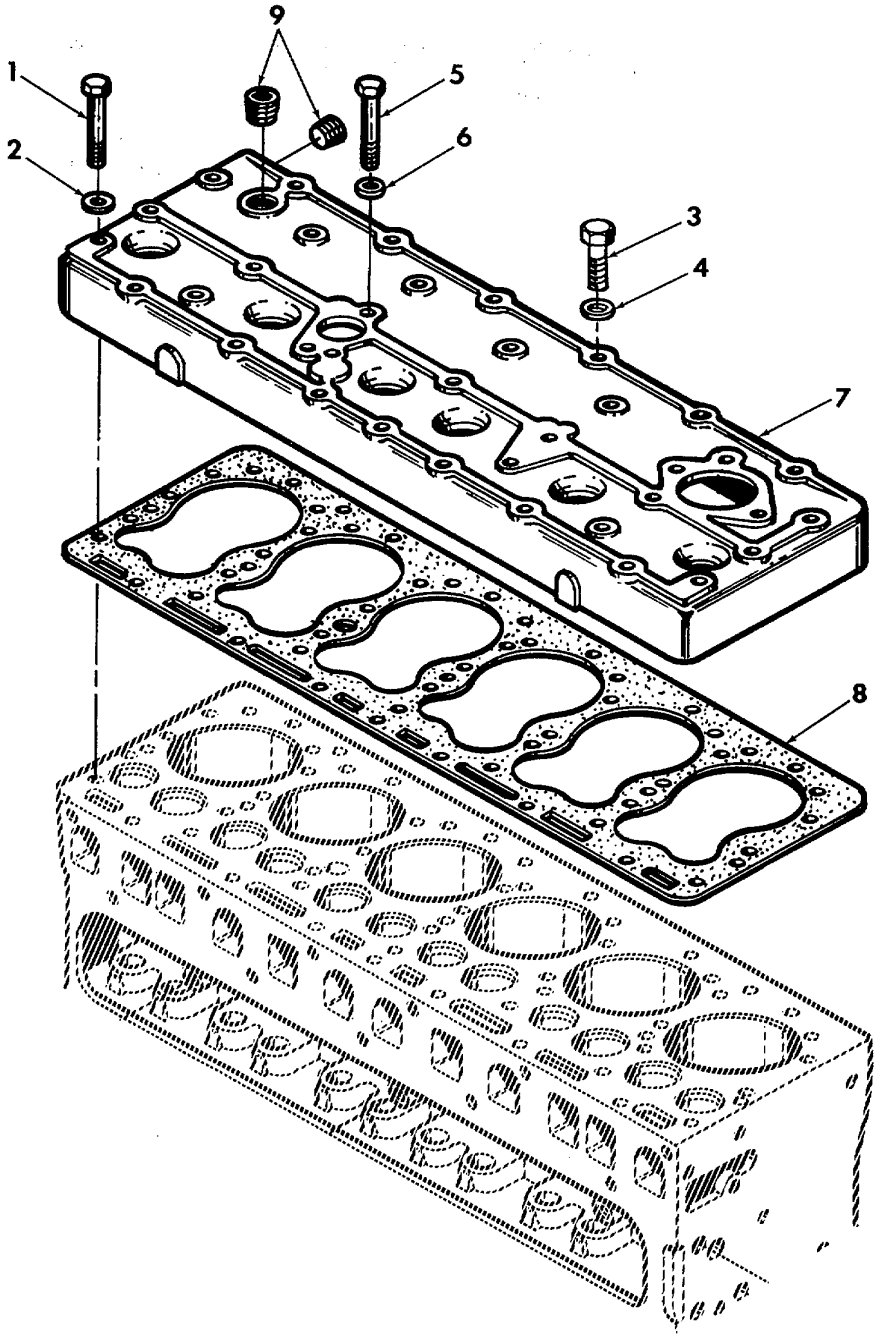

ME 4320-258-34/4-1

1. Screw
2. Flat washer
3. Screw
4. Flat washer
5. Screw
6. Flat washer
7. Cylinder head
8. Cylinder head gasket
9. Plug

Figure 4-1. Cylinder head, exploded view.

b. Cleaning and Inspection.

(1) Remove all carbon from combustion areas with a scraper and wire brush. Clean all remaining residue from the cylinder head with cleaning solvent (FED. Spec. P-D-680). Dry with clean, dry compressed air.

(2) Clean the top of the cylinder block with a scraper and a cloth dampened in cleaning solvent (FED. Spec. P-D-680). Be very careful not to get dirt in the cylinders or water jacket.

(3) Inspect the cylinder head for cracks, corrosion, damaged threads, plugged water ports, or other defects.

(4) Check flatness lengthwise with a straightedge and feeler gage. The maximum, permissible low spot is 0.012 inch in the center, gradually decreasing toward the ends. Check flatness lengthwise at each edge and in the middle of the head.

(5) Check flatness crosswise with a straightedge and a feeler gage. The maximum permissible low spot is 0.003 inch in localized areas. Check flatness crosswise at each end and between each combustion chamber.

(6) Inspect cylinder head studs for looseness or damaged threads.

(7) Replace the gasket, hoses, and defective parts.

c. Installation. Using a new head gasket, install head in reverse order of removal. Tighten the cylinder head screws in the sequence shown in figure 4-2. Torque to 35 to 40 foot-pounds.

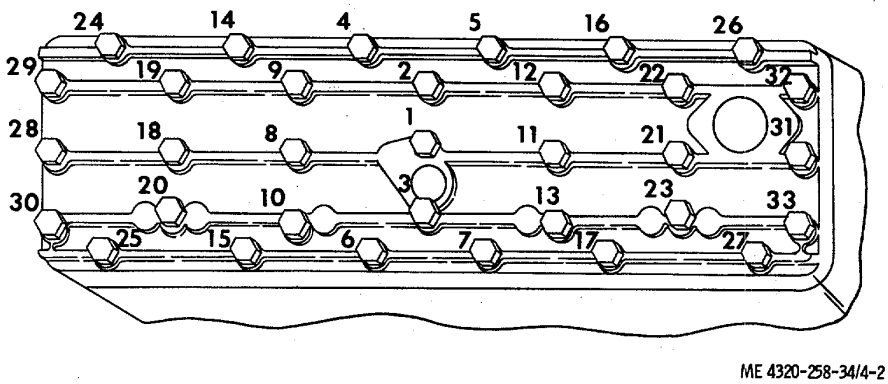

Figure 4-2. Cylinder head cap screw tightening sequence.

4-4. Intake and Exhaust Valves

a. General. The intake and exhaust valves of this L-head engine are mounted in the cylinder block. They are opened by operation of the camshaft through adjustable valve tappets. They are closed by the valve springs. The valve stems ride in valve guides which are pressed into the block. The intake valves seat directly in the block. The exhaust valve seat in shrink-fit valve seat inserts in the block.

b. Removal.

(1) Remove the cylinder head (para 4-3).

(2) Remove the valve chamber cover (7, fig. 4-22).

(3) Using a spring lifter, compress the valve spring (5 or 10, fig. 4-3) at each valve (2 or 7) and remove the valve locks (1 or 6) from each valve that is in the closed position. Rotate the engine crankshaft to close the remaining valves and remove the remaining locks.

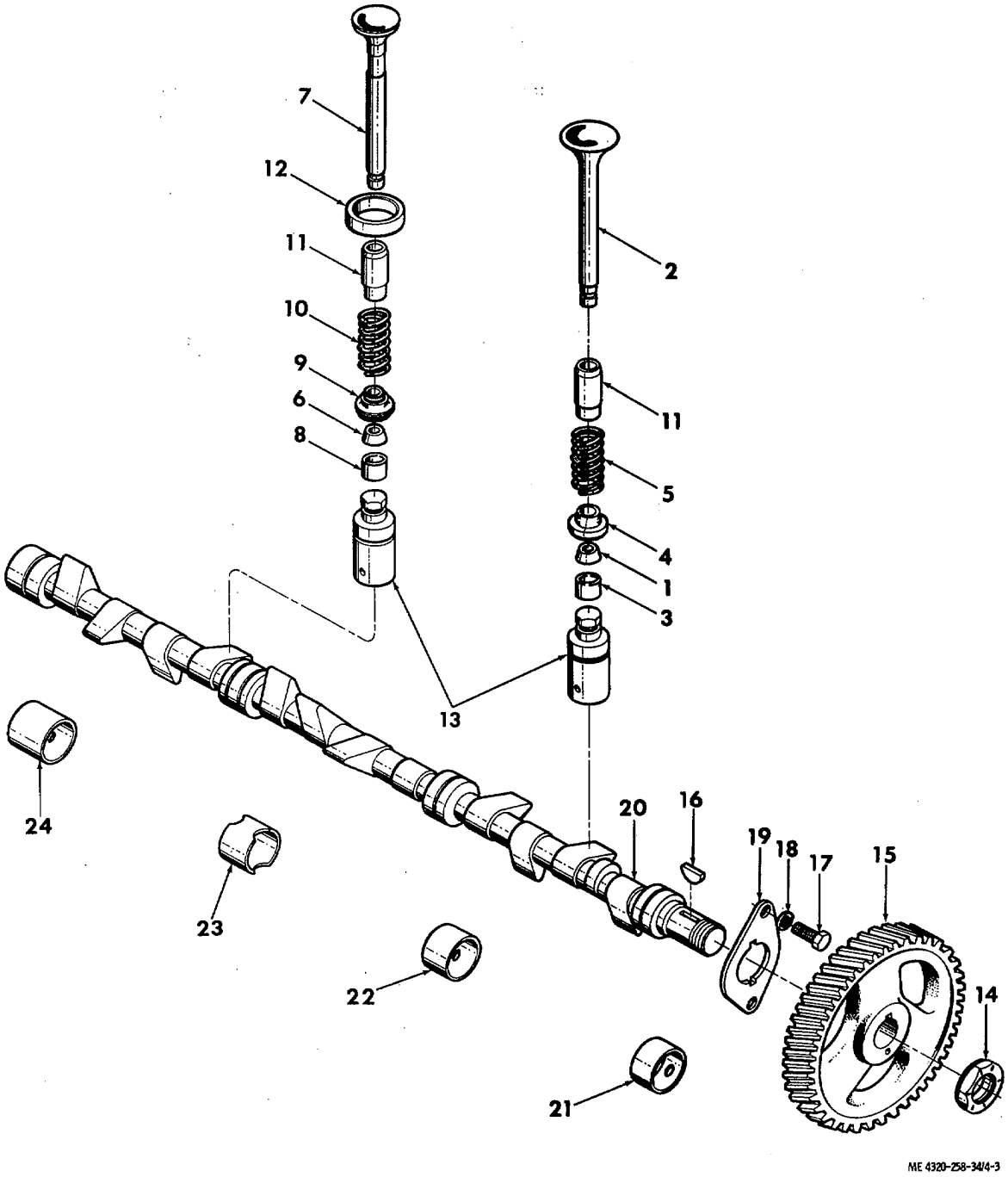

1. Valve lock
2. Intake valve
3. Intake valve rotator
4. Intake valve spring retainer
5. Valve spring
6. Valve lock
7. Exhaust valve
8. Exhaust valve rotator
9. Exhaust valve spring retainer
10. Valve spring
11. Valve guide
12. Valve seat insert
13. Valve tappet
14. Nut
15. Camshaft timing gear
16. Key
17. Cap screw
18. Lock washer
19. Thrust plate
20. Camshaft
21. Camshaft front bearing
22. Camshaft front intermediate bearing
23. Camshaft rear intermediate bearing
24. Camshaft rear bearing

Figure 4-3. Valves and camshaft, exploded view.

(4) Lift each valve from the top of the block. Place valves in order in a rack to assure that each will be reassembled in the same valve guide from which it was removed.

(5) Remove the valve rotators (3 or 8), spring retainers (4 or 9), and valve springs (5 or 10). Remove the valve tappet assemblies (13).

(6) Do not remove the valve guides (11) or valve seat inserts (12) unless inspection indicates that they are faulty.

c. Cleaning, Inspection, and Repair.

(1) Clean the valves, valve springs, and valve tappet assemblies with cleaning solvent (FED. Spec. P-D-680); dry thoroughly. Remove carbon deposits with a wire brush.

(2) Clean the valve guides installed in the block with a valve guide cleaner or wire brush. Remove all lacquer and other deposits.

(3) Clean the valve seats with a wire brush.

(4) Inspect the valves for cracks, bent stems, distortion, and wear (table 4-1). If the valves are not seriously damaged, regrind them. After grinding, the valve head thickness must be at least 50 percent the thickness of a new valve. Replace the valves if they are ground to less than this amount. Check the reground valves on V-blocks with an indicator. The contact face must be true with the stem to within 0.002 inch.

(5) Check for loose or worn valve guides. Check the internal diameter of the valve guide with a telescope gage and a micrometer. Replace guides that are worn to a bell-mouthed shape or guides that have a maximum diameter of more than 0.3447 inch.

Caution: **Do not attempt to ream the valve guides after seating them. Guides are pre reamed and coated. Further reaming will remove the coating.**

(6) If the valve guides are worn or damaged, press out the guides from the combustion side, using a driver that is slightly smaller than the external diameter of the guide. With the driver, press in new guides from the combustion side. When properly seated, valve guide tops will be 1 13 / 32 inches from the top of the block (fig. 4-4).

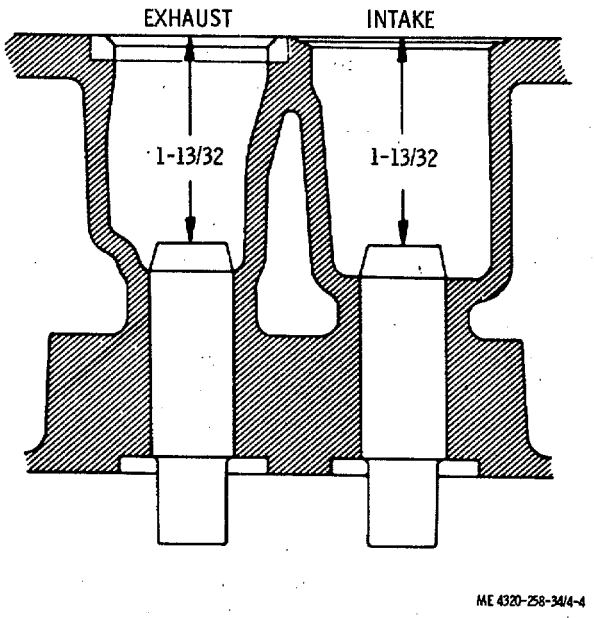

Figure 4-4. Valve guide installation dimensions.

(7) Check the exhaust valve seat inserts for cracks or loose mounting. Pull out faulty valve seat inserts. Replace original valve seats with new 0.010-inch oversized valve seats. Counterbore the original valve seats to a diameter of 1.3535 to 1.3545 inches. This will provide the required press fit. If valve seats have been counterbored previously, rebore to 0.01 inch oversize to provide an 0.003- to 0.005-inch press fit. Counterbore deeply enough so that the boring tool will clean up the bottom of the bore to assure proper heat conduction from the valve insert. Chill the valve seats in dry ice for 20 minutes. Install the valve seat in place with a piloted driver, using an arbor press or by applying light blows with a hammer until the valve seat is resting against the bottom of the bore. Roll or peen the valve seat in place.

(8) Check the valve springs for cracks and distortion. Intake and exhaust valve springs are identical. Test compression strength with a spring tester. Compression strength must be as follows:

Length	Load (minimum)
1-45 / 64 inches (closed)	42 pounds
1-27 / 64 inches (open)	86 pounds

(9) Grind the valve seats. The seat angle of the intake valves is 30°. The seat angle of the exhaust valve is 45°. Use a dial indicator to check the valve seat for runout. The total indicator reading must not exceed 0.002 inch. Clean the valve seat and surrounding area thoroughly after grinding.

(10) After the valves and seats have been refaced and reground, coat the seat lightly with Prussian blue 'and drop the valve into place, oscillating it slightly to transfer the blue pattern to the valve face. This should show a contact width of 1/ 16 to 3/ 32 inch, and should fall well within the width of the valve face, leaving at least 1 / 64 inch on either side of the contact area. If the contact area is greater than 3 / 32 inch, narrow the contact area by grinding the outside diameter of the seal with a 15° stone or by grinding the inside diameter of the seat with a 60° or 75° stone (fig. 4-5). After the seat area is corrected, touch the seat lightly with the original grinding stone to remove the burred or feathered edge.

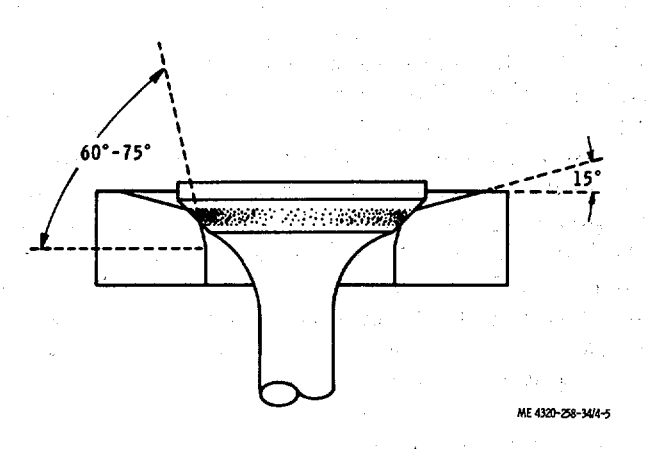

Figure 4-5. Narrowing valve seat.

(11) Inspect the spring retainer seats, spring retaining locks, valve stem caps, and valve tappet assemblies for cracks, scoring, overheating, and wear. Replace damaged parts.

d. Installation.

(1) Position the valve tappet assemblies (13, fig. 4-3) in the engine block.

(2) Assemble-the valves (2 and 7), valve springs (5 and 10), spring retainers (4 and 9), valve rotators (3 and 8), and valve locks (1 and 6). Compress the valve springs with a spring compressor to install the valve locks. Turn the engine over as necessary to allow each valve to move to the closed position before attempting to install the valve parts. Make sure each valve is installed in the guide from which it was removed.

(3) With the engine stopped, temporarily set the intake-valve-to-tappet clearance to 0.014 inch and the exhaust valve-to-tappet clearance to 0.017 inch (cold).

(4) Install the cylinder head (para 4-3).

(5) Operate the engine until it reaches operating temperature. Adjust valve tappet clearance as directed in subparagraph *e* below.

(6) Install the valve chamber cover (7, fig. 4-22).

e. Valve Adjustment.

(1) Operate engine until it reaches operating temperature.

(2) Disconnect the positive crankcase ventilation valve and fittings from the valve chamber cover.

(3) Remove the nuts and washers that secure the valve chamber cover to the cylinder block. Remove the valve chamber cover and gasket.

(4) With the engine at operating temperature: and running at idle speed, set the intake valves for; 0.014-inch clearance as follows:

(*a*) Alternately pass a 0.013-inch and a 0.015-inch flat feeler gage between the head of the adjusting screw of the tappet (13, fig. 4-3) and stem of valve (2).

(*b*) If a 0.013-inch feeler gage moves freely back and forth in gap when the valve is not being lifted and 0.015-inch feeler gage binds at all times, the clearance requires no adjustment.

(*c*) If a 0.013-inch feeler gage is gripped at all times, the clearance is insufficient.

(*d*) Hold valve lifter with an open end wrench while using a second wrench to turn adjusting screw one-quarter to one-half turn clockwise. Repeat clearance check and adjustment until proper clearance is obtained. The adjustable-type valve lifters have self-locking adjusting screws that require no lock nuts.

(*e*) If 0.015-inch feeler gage moves freely when valve is not being lifted, the clearance is too great. 'Hold valve lifter with an open end wrench while using a second wrench to turn valve lifter adjusting screw counterclockwise one-quarter to one-half turn. Repeat the clearance check, and adjustment until proper clearance is obtained.

(5) Adjust the exhaust valves to a 0.016 (hot) clearance in the manner described above, using 0.015and 0.017-inch feeler gage.

4-5. Intake and Exhaust Manifolds

a. Removal and Disassembly.

(1) Remove the carburetor from the intake manifold (TM 5-4320-258-12).

(2) Remove the exhaust piping from the exhaust manifold (TM 5-4320-258-12).

(3) Refer to figure 4-6 and remove and disassemble the intake and exhaust manifolds.

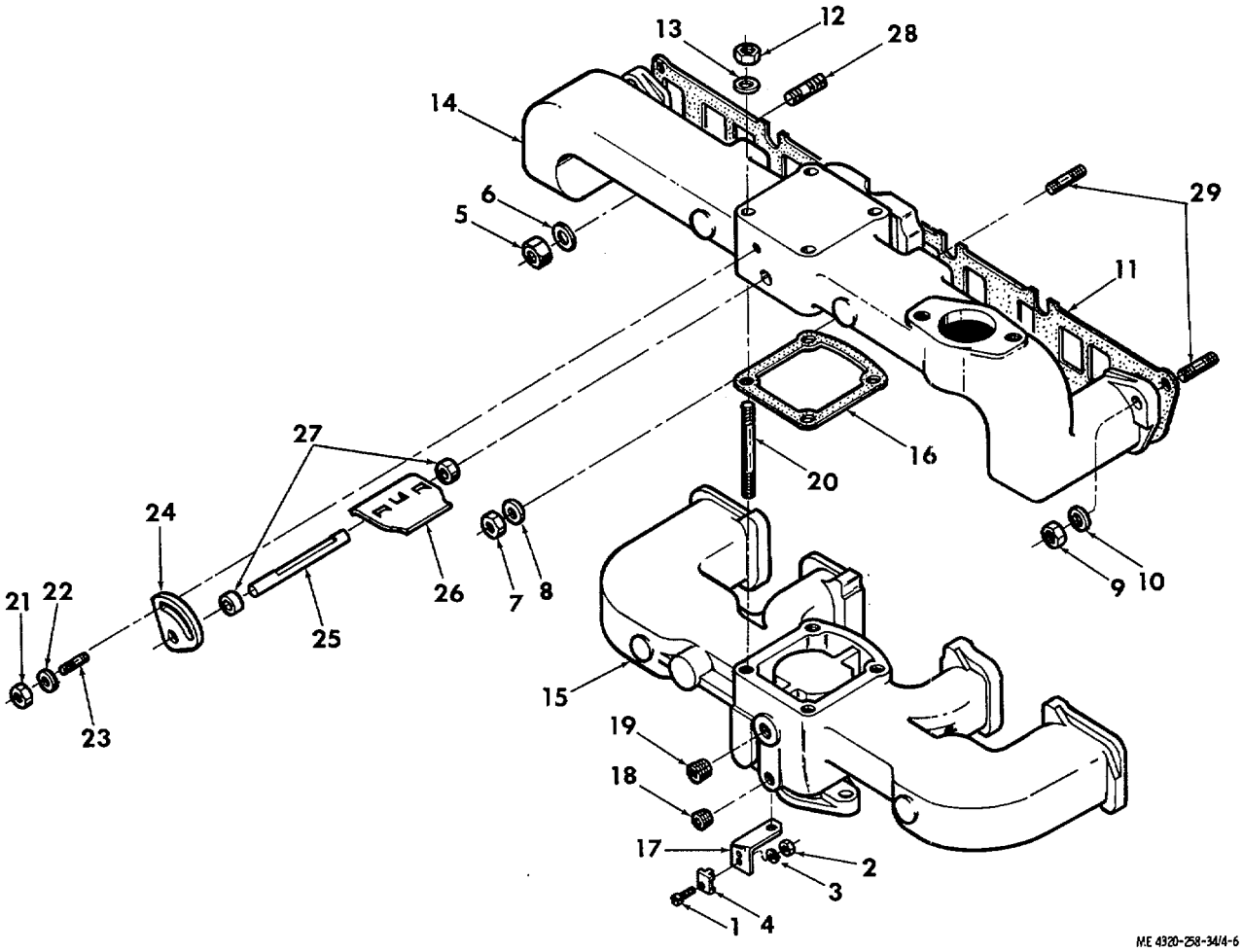

1. Screw
2. Nut
3. Lock washer
4. Throttle tube clip
5. Nut
6. Flat washer
7. Nut
8. Flat washer
9. Nut
10. Flat washer
11. Manifold-to-block gasket
12. Nut
13. Flat washer
14. Exhaust manifold
15. Intake manifold
16. Intake-to-exhaust manifold gasket
17. Throttle tube support
18. Plug
19. Plug
20. Stud
21. Nut
22. Flat washer
23. Stud
24. Quadrant
25. Heat control valve shaft
26. Heat control valve
27. Heat control valve bushing
28. Stud
29. Stud

Figure 4-6. Intake and exhaust manifolds, exploded view.

b. Cleaning and Inspection.

(1) Discard and replace all gaskets.

(2) Clean the intake manifold and heat control valve and related parts with cleaning solvent (FED. Spec. P-D-680). Dry thoroughly.

(3) Clean the exhaust manifold with a wire brush. Remove greasy or gummy deposits with cleaning solvent.

(4) Inspect the intake and exhaust manifolds for cracks, distortion, broken mounting flanges, damaged threads, and other damage; replace damaged manifolds.

(5) Inspect the heat control valve parts for corrosion and burning. Check the fit of the heat control valve shaft in the bushings. There shall be no binding, nor shall there be excessive bushing-to-shaft play. Replace bushings or shaft if necessary to correct defects.

(6) Remove and replace any damaged studs.

c. Reassembly and Installation.

(1) Reassembly is the reverse of disassembly. Use new gaskets. Refer to figure 4-6. When tightening the manifold mounting nuts, torque them to 25 to 30 foot-pounds.

(2) Install the exhaust piping and muffler (TM 5-4320-258-12).

(3) Install the carburetor (TM 5-4320-258-12).

(4) After the engine has been run at operating temperature and has cooled, recheck the torque of the mounting nuts. If necessary, retighten them to 25 to 30 foot-pounds torque.

4-6. Oil Pan and Filler Blocks

a. Removal.

(1) Remove the drain plug (1, fig. 4-7) and drain the engine oil into a suitable container. Remove the oil drain piping (items 2 through 5).

KEY to fig. 4-7:

1. Oil drain plug
2. Gasket
3. Coupling
4. Nipple
5. Elbow
6. Cap screw
7. Lock washer
8. Oil pan
9. Oil pan gasket
10. Cap screw
11. Lock washer
12. Front filler block seal
13. Front filler block
14. Cap screw
15. Lock washer
16. Rear filler block seal
17. Rear filler block
18. Oil guard seal
19. Rear oil guard

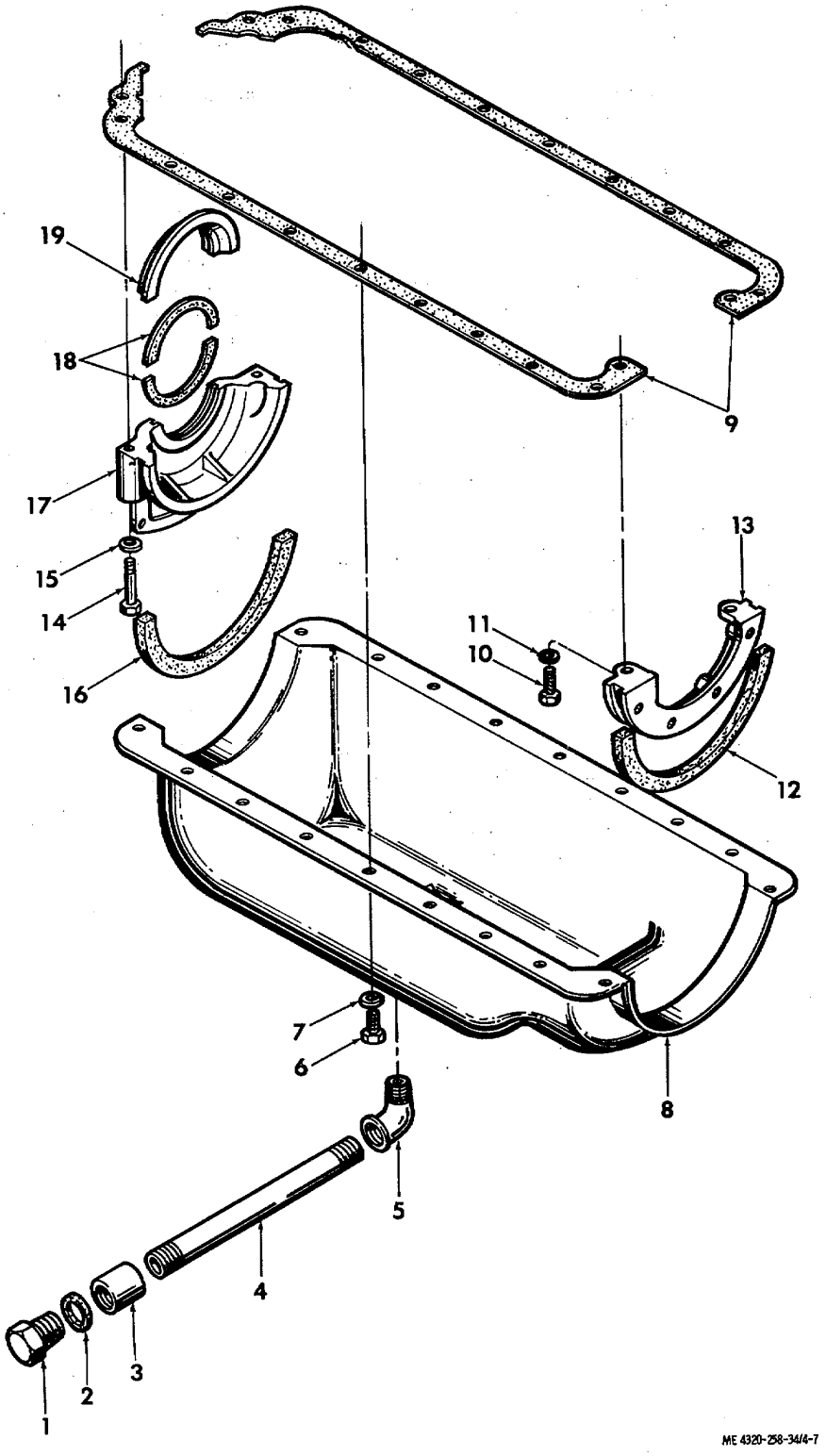

Figure 4-7. Oil pan and filler blocks, exploded view.

(2) Remove the 18 screws (6) and lock washers (7) that secure the oil pan (8) to the block; remove the oil pan and gaskets (9).

(3) Remove the two cap screws (10) and lock washers (11) that secure the front filler block (13) to the block; remove the filler block and seal (12).

(4) Remove the two cap screws (14) and lock washers (15) that secure the rear filler block (17) to the block; remove the filler block and seal (16), oil guard seal (18), and oil guard (19).

b. Cleaning and Inspection.

(1) Discard and replace gaskets and seals.

(2) Clean all remaining parts with cleaning solvent (FED. Spec. P-D-680); dry thoroughly.

(3) Inspect the oil pan for cracks, severe dents, holes, damaged threads, and other damage; replace a damaged oil pan.

(4) Inspect the filler blocks for cracks, distortion, and other damage; replace damaged filler blocks.

c. Installation.

(1) Install the seal (18, fig. 4-7) in the rear filler block (17) and oil guard (19) as follows:

(a) Flatten the jute seal in a vise or with a hammer until the seal fits into the groove in the filler block or oil guard.

(b) Roll the seal into the oil guard or filler block groove with a round object.

(c) Trim the seal 0.020 to 0.030 inch above the flat surface of the oil guard or filler block, using a sharp knife or razor blade. Make sure the cut is parallel to the flat surface of the casting.

(2) To replace the neoprene seals (12 and 16) on the filler blocks (13 and 17), make sure the contact surface is free of cement, dirt, and oil. To hold the seal in place for assembly, use a small spot of nonhardening cement in the center of the contacting surface before inserting the seal in the groove. No other cement is required.

(3) Lubricate all seals with engine oil. With the crankshaft in place, the assembled rear oil guard (19) and jute seal (18) can be rolled into place around the crankshaft. Position the assembled rear filler block (17) and seal (16) on the engine block; secure with the two cap screws (14) and lock washers (15). Tighten the cap screws to 15 to 20 foot-pounds torque.

(4) Position the front filler block (13) and seal (12) on the engine block; secure with the two cap screws (10) and lock washers (11). Tighten the bolts to 15 to 20 foot-pounds torque.

(5) Position the gaskets (9) on the oil pan (8). Install the oil pan and gaskets on the engine block; secure with the 18 cap screws (6) and lock washers (7). Tighten the screws to 15 to 20 foot-pounds torque.

4-7. Engine Oil Pump

a. Removal and Disassembly.

(1) Remove the engine oil pan (para 4-6).

(2) Remove the nut (1, fig. 4-8) and lock washer (2) that secure the engine oil pump to the bearing cap; remove the oil pump and flat washer (3).

(3) Disassemble the oil pump as shown in figure 4-8.

KEY to fig. 4-8:

1. Nut
2. Lock washer
3. Flat washer
4. Screen
5. Cap Screw
6. Lock Washer
7. Spacer
8. Strainer frame
9. Frame-to-cover gasket
10. Cap screw
11. Lock washer
12. Cover
13. Cover gasket
14. Pin
15. Drive gear
16. Retaining ring
17. Driver gear
18. Key
19. Drive shaft
20. Idler gear
21. Idler gear stud
22. Body bushing
23. Oil pump body
24. Stud
25. Crankshaft bushing

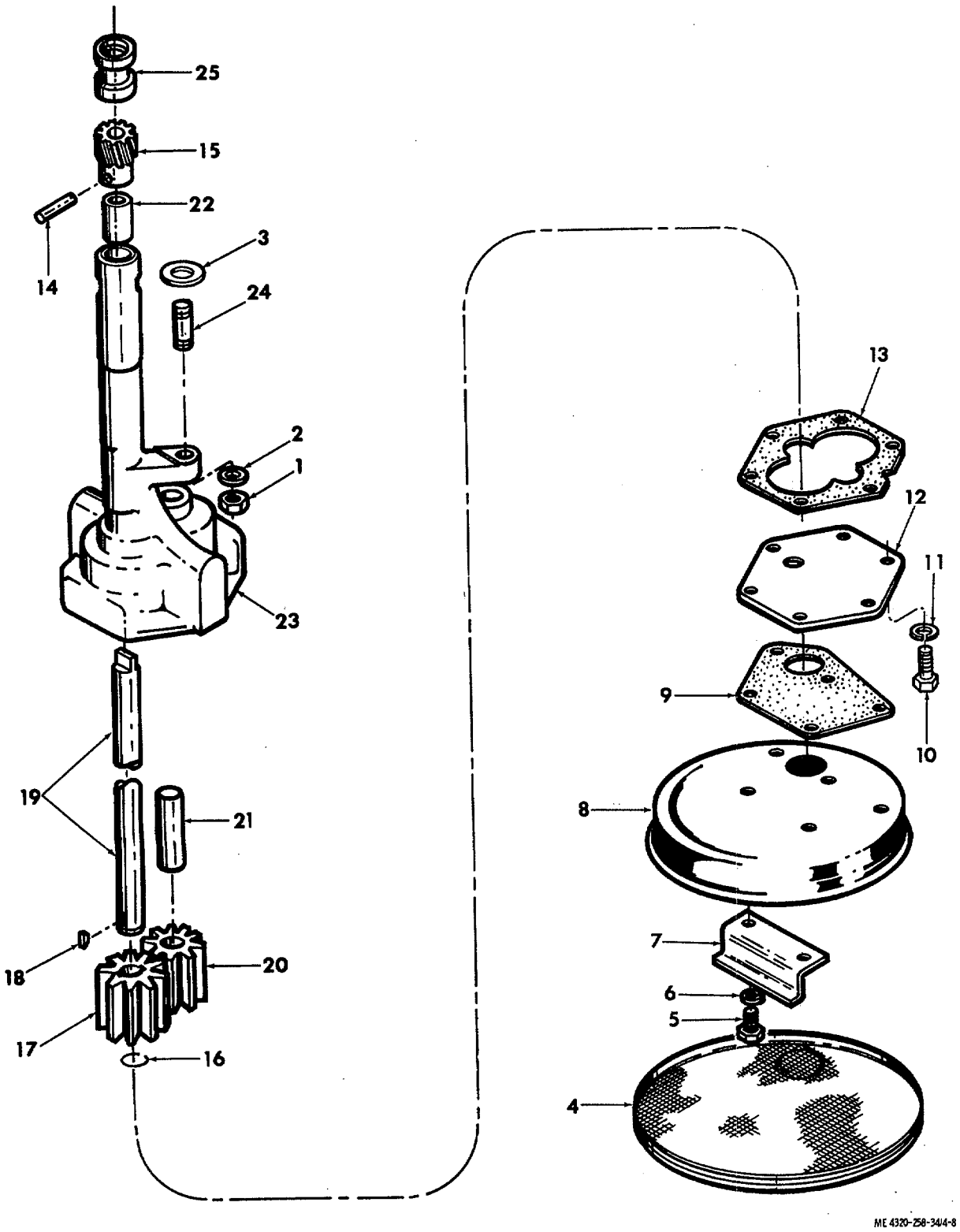

Figure 4-8. Engine oil pump, exploded view.

b. Cleaning and Inspection.

(1) Discard and replace all gaskets.

(2) Clean all parts with cleaning solvent (FED. Spec. P-D-680); dry thoroughly.

(3) Inspect the strainer screen for holes, clogging, and distortion; replace a damaged strainer screen.

(4) Inspect the gears for chipped or broken teeth, scoring, and wear. With the gears mounted on their respective shafts, there shall be no contact between the gears and the pump body. Clearance between gears shall be 0.001 inch minimum to 0.003 inch maximum. Replace parts if they fail to meet these requirements.

(5) With the gears positioned in the body and a new gasket positioned on the face of the pump body, place a straightedge across the open face of the body and, with a feeler gage, check the possible end play of the gears. It shall be 0.0015 to 0.006 inch. If clearance is not within this range, replace parts as required.

(6) Check the fit of the drive shaft in the pump body. There shall be no excessive play. Replace the body bushing if play is excessive.

(7) Inspect the gear pockets of the body. If they are scored, or excessively worn, replace the pump.

(8) Inspect all remaining parts for cracks, distortion, damaged threads, wear, and other damage; replace damaged parts.

c. Reassembly and Installation.

(1) Refer to figure 4-8 and reassemble the engine oil pump. Check that the drive shaft turns easily without binding when assembled.

(2) Position the washer (3, fig. 4-8) and oil pump on the main bearing so that the drive gear engages the toothed portion of the camshaft; secure the pump with a nut (1) and lock washer (2).

(3) Install the oil pan (para 4-6).

4-8. Gear Cover

a. Removal and Disassembly.

(1) Remove the governor from the engine (TM 5-4320-258-12).

(2) Remove the water pump from the engine TM 5-4320-258-12).

(3) Remove the starting jaw (1, fig. 4-14) and collar (2) that secure the pulley (3) to the front end of the crankshaft; remove the pulley and key (4) from the crankshaft.

(4) Remove the cap screws (1, 3, 6, 8, and 11, fig. 4-9), assembled washer screw (5), nuts (10, 13, and 14), lock washers (2, 9, 12, and 15), and copper washers (4 and 7) that secure the gear cover (17) to the engine block; remove the gear cover from the engine block.

(5) Press the seal (16) from the gear cover.

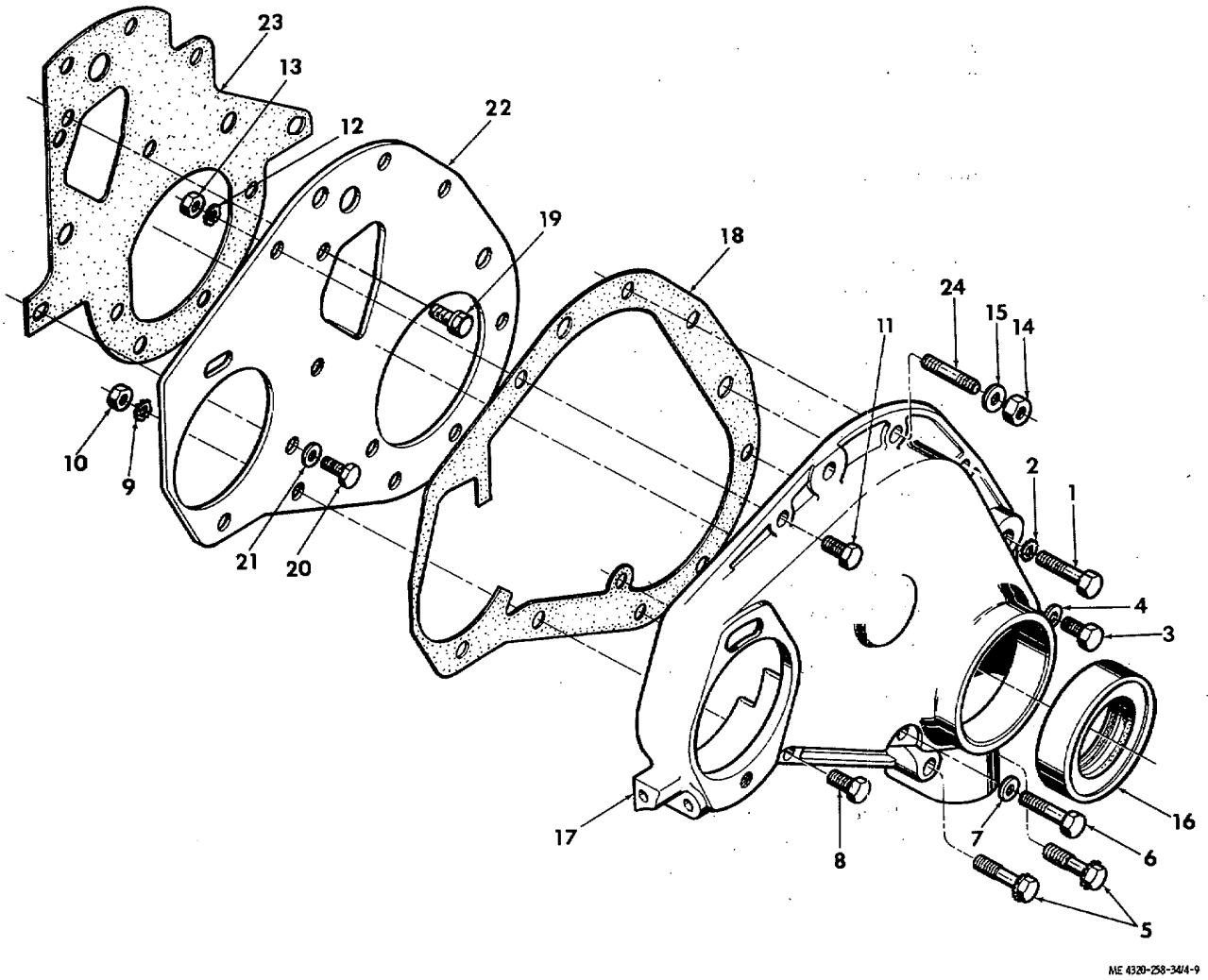

1. Cap screw
2. Lock washer
3. Cap screw
4. Flat washer
5. Assembled washer screw
6. Cap screw
7. Flat washer
8. Cap screw
9. Lock washer
10. Nut
11. Cap screw
12. Lock washer
13. Nut
14. Nut
15. Lock washer
16. Front oil seal
17. Gear cover
18. Gear cover housing gasket
19. Assembled washer screw
20. Cap screw
21. Flat washer
22. Front end plate
23. Front end cover gasket

Figure 4-9. Gear cover and front end plate, exploded view.

b. Cleaning and Inspection.

(1) Discard and replace all gaskets and seals.

(2) Clean all parts with cleaning solvent (FED. Spec. P-D-680); dry thoroughly.

(3) Inspect the gear cover for cracks, distortion, damaged sealing surfaces, and other damage; replace a damaged gear cover.

(4) Inspect all other parts for cracks, distortion, worn or damaged threads, and other damage: replace damaged parts.

c. Reassembly and Installation.

(1) Refer to figure 4-9, items 1 through 18, and install the gear cover.

(2) Secure the crankshaft pulley (3, fig. 4-14)

to the crankshaft, using the starting jaw (1) and collar (2).

(3) Install the governor on the engine (TM 5-4320-258-12). Time the magneto (TM 5-4320-258-12).

4-9. Flywheel and Flywheel Housing

a. Removal. Remove the flywheel and flywheel housing as follows:

(1) Remove the six nuts (5, fig. 4-14) and lock washers (6) that secure the flywheel (7) and ring gear (8) to the crankshaft (40); remove the flywheel.

(2) Remove the cap screws (11, fig. 4-22), shoulder screws (13), and lock washers (12 and 14) that secure the flywheel housing (15) to the block (35); remove the flywheel housing and gasket.

b. Cleaning, Inspection, and Repair.

(1) Clean the flywheel and flywheel housing with cleaning solvent (FED. Spec. P-D-680); dry thoroughly.

(2) Inspect the flywheel housing for cracks, distortion, and damaged threads; replace a damaged flywheel housing.

(3) Inspect the flywheel for chipped, cracked, or broken teeth on the ring gear, distortion, worn or out-of-round bolt holes, and other damage. If the ring gear is damaged, replace as follows:

***Caution:* When cutting the ring gear, be extremely careful not to damage the flywheel.**

(*a*) Cut the ring gear with a torch or hack saw and remove the ring gear from the flywheel.

(*b*) Heat the replacement ring gear in an oven and cool the flywheel in water or in a refrigerator.

(*c*) Position the replacement ring gear on the flywheel. As the ring gear and flywheel approach the same temperature, the ring gear will contract to a tight fit on the flywheel.

c. Installation.

(1) Position the flywheel housing (15, fig. 4-22) on the block (35); secure with shoulder screws (13), cap screws (11), and lock washers (12 and 14).

(2) Position the flywheel (7, fig. 4-14) on the crankshaft (40); secure with six bolts (9), lock washers (6), and nuts (5). Tighten the nuts to 35 to 40 foot-pounds torque.

(3) Check flywheel runout by mounting a dial indicator so that it indicates the flat vertical surface of the flywheel (figure 4-10); rotate the crankshaft through one full revolution. Hold pressure against the flywheel to eliminate crankshaft end play. If flywheel runout exceeds 0.008 inch, remove the flywheel and clean the crankshaft flange and flywheel seat. Install the flywheel and recheck runout. If runout still exceeds 0.008 inch, replace the flywheel.

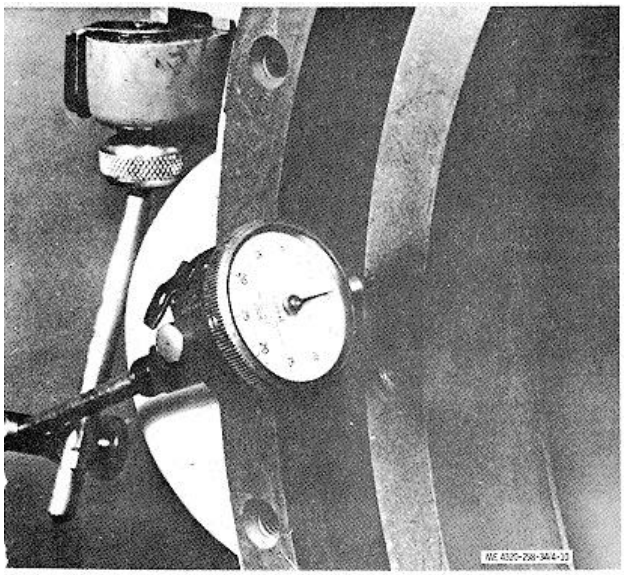

Figure 4-10. Checking flywheel runout.

(4) Check flywheel eccentricity by mounting a dial indicator so that it indicates the inside diameter of the flywheel counterbore (fig. 4-11); rotate the crankshaft through one revolution. If the flywheel is eccentric more than 0.008 inch, loosen and retighten the flywheel mounting bolts and recheck eccentricity. If eccentricity still exceeds 0.008 inch, replace the flywheel.

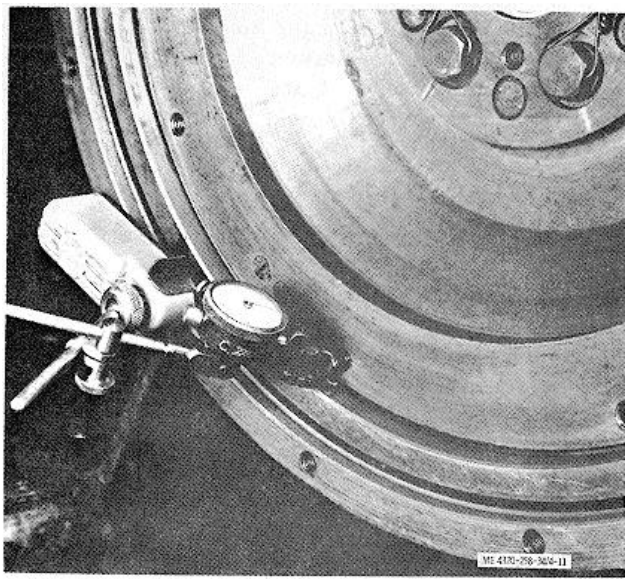

Figure 4-11. Checking flywheel eccentricity.

(5) Check runout of the flywheel housing face by mounting a dial indicator so that it indicates the housing face (fig. 4-12); rotate the crankshaft through one revolution. Hold pressure against the flywheel to eliminate end play. If runout exceeds

0.008 inch, clean the mounting surfaces of the flywheel housing and the block. Recheck flywheel housing runout. If the runout is still not within limits, replace the flywheel housing.

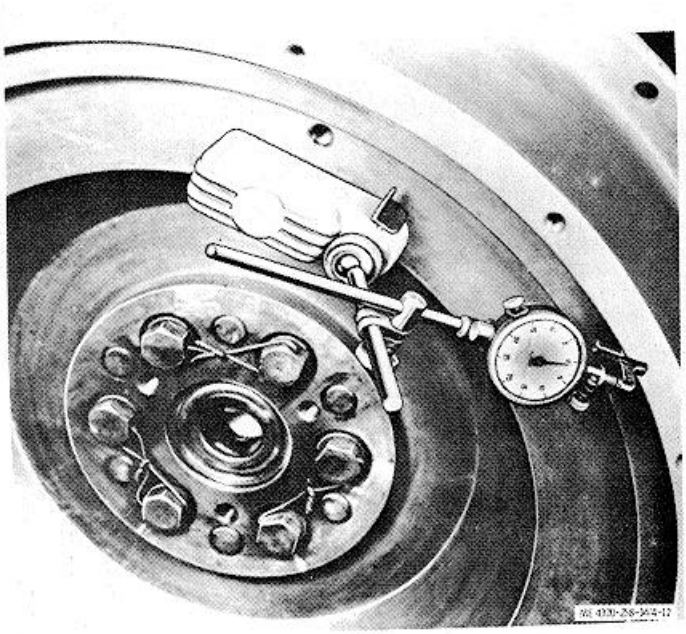

Figure 4-12. Checking flywheel housing runout.

(6) Check eccentricity of the flywheel housing bore by mounting a dial indicator so that it indicates the bore (fig. 4-13); rotate the engine through one revolution. If the housing bore is eccentric more than 0.008 inch, loosen the flywheel housing mounting bolts and tap the housing into its proper position with a soft hammer. Tighten the bolts and recheck eccentricity of the housing bore. If the housing cannot be brought into true position, replace the housing.

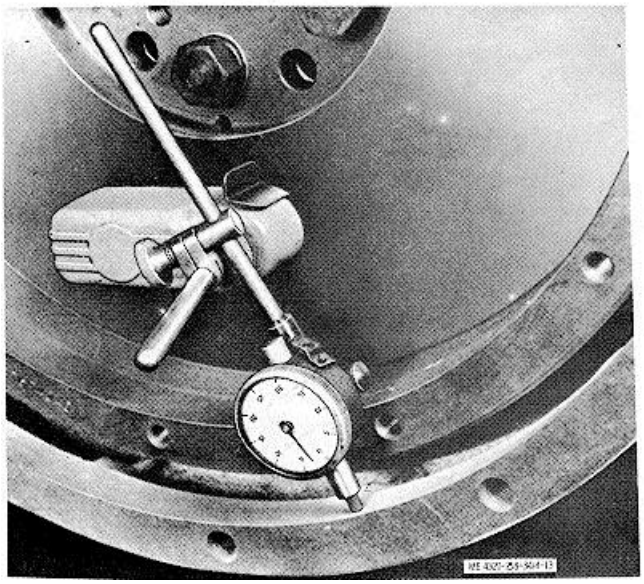

Figure 4-13. Checking flywheel housing eccentricity.

4-10. Pistons and Connecting Rods

a. Removal and Disassembly. With the engine mounted on an engine overhaul stand, proceed as follows:

(1) Remove the cylinder head (para 4-3).

(2) Remove the engine oil pan (para 4-6) and oil pump (para 4-7).

(3) Ream the ridge of the top of each cylinder bore with a standard ridge reamer. Blow metal fragments from the cylinder with compressed air.

(4) Remove the two cotter pins (10, fig. 4-14) and nuts (11) that secure a bearing cap (13) to a connecting rod (20); remove the cap and bearing shells (14).

Caution: **While pushing the piston and rod from the block, be very careful the connecting rod does not scratch the cylinder wall.**

(5) Push assembled piston (18), rings (17), and connecting rod (20) up through the top of the block.

(6) Refer to figure 4-14 (items 15 through 20) and disassemble the piston and connecting rod.

Note. Disassemble the pistons and piston rods in sets, and keep the sets together. Also, be sure each piston and piston rod set is installed in the cylinder from which it was removed.

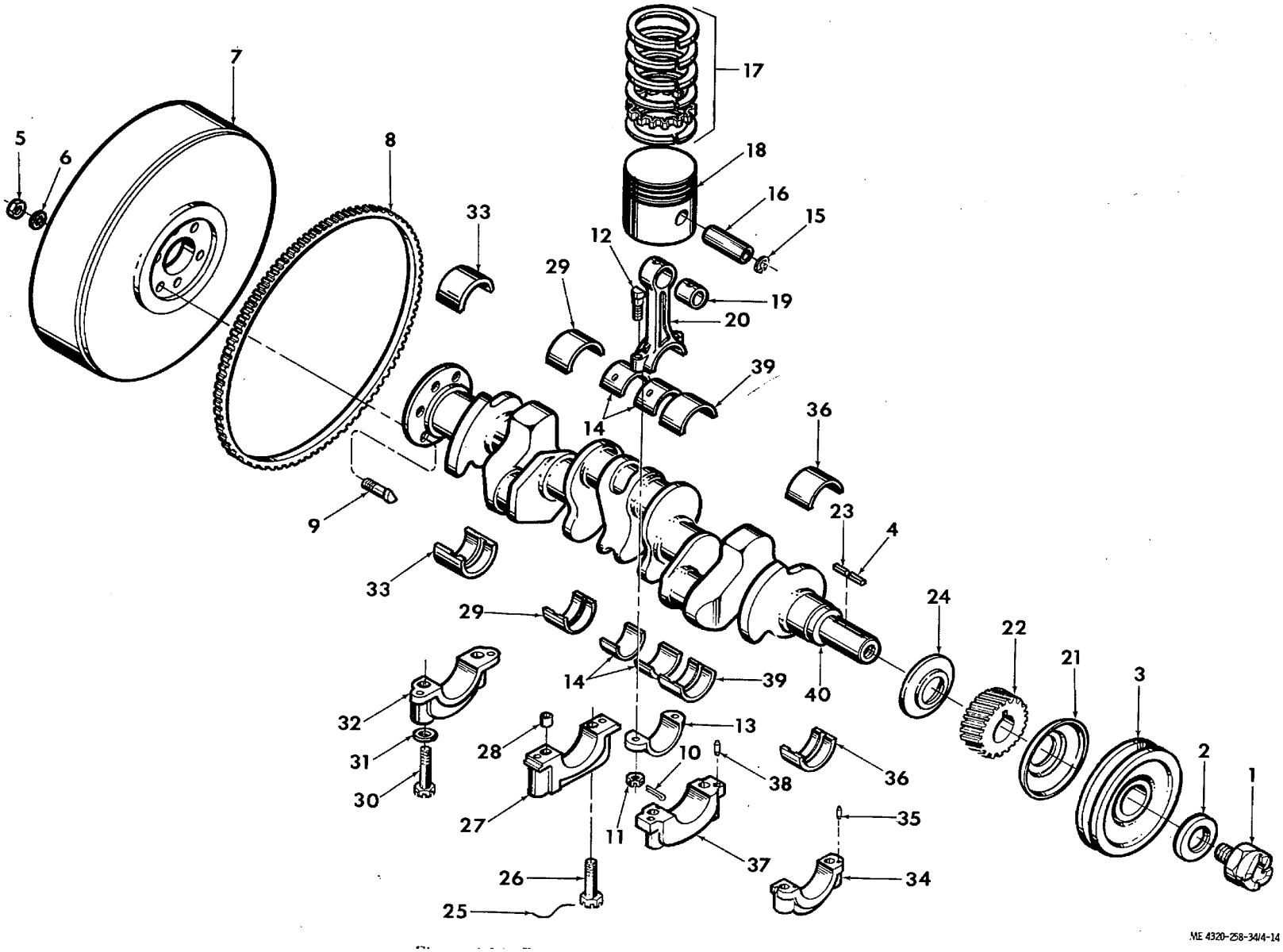

Figure 4-14. Piston, crankshaft, and flywheel, exploded view.

KEY to fig. 4-14:

1. Starting jaw
2. Collar
3. Pulley
4. Key
5. Nut
6. Lock washer
7. Flywheel
8. Ring gear
9. Flywheel bolt
10. Cotter pin
11. Nut
12. Connecting rod bolt
13. Bearing cap
14. Connecting rod bearing shell
15. Retaining ring
16. Piston pin
17. Piston ring set
18. Piston
19. Sleeve bearing
20. Connecting rod
21. Oil thrower
22. Crankshaft gear
23. Key
24. Thrust plate
25. Lock wire
26. Intermediate bearing capbolt
27. Intermediate bearing cap
28. Ring dowel
29. Intermediate main bearing
30. Bearing cap bolt
31. Flat washer
32. Rear bearing cap
33. Rear main bearing
34. Front bearing cap
35. Dowel
36. Front main bearing
37. Front intermediate main bearing cap
38. Dowel
39. Front intermediate main bearing
40. Crankshaft

b. Cleaning and Inspection.

(1) Discard and replace the piston rings.

(2) Clean all parts with cleaning solvent (FED. Spec. P-D-680); dry thoroughly.

(3) Inspect the pistons for cracks, distortion, broken ring bands and distorted grooves, loose piston pin-to-piston fit, and other damage; replace damaged pistons. Refer to table 4-1 for wear limits.

(4) Check the piston ring groove side clearance, using new piston rings. If side clearance exceeds the limits cited in table 4-1, replace the piston.

Note: Pistons and bearings are individually checked and fitted to the cylinders at reassembly. Before reassembly, the cylinder bores must be checked as directed in paragraph 413c.

(5) Inspect the connecting rods for cracks, distortion, and other damage: replace damaged connecting rods. Refer to table 4-1 for wear limits.

(6) Inspect the bearing shells for scoring, wear, cracks, and other damage. Check bearing thickness, using a ball micrometer. Thickness must not be less than 0.0608 in all areas.

Note: New bearing shells are smooth and highly polished. After a few hours of operation, the bearing surface becomes a leaden grey and develops minute craters so that the bearing surface has an almost cellular appearance. This is normal, and is not an indication of impending bearing failure.

(7) Inspect all other parts for cracks, scoring, damaged threads, and other damage; replace damaged parts.

c. Reassembly and Installation.

(1) Check piston fit in the cylinder bore (fig. 4-15), using a piece of 0.003-inch feeler stock cut 1/2 inch wide. Dress the edges of the feeler stock with a stone to remove burrs and feathered edges. The block and pistons must be at room temperature when piston fit is tested. Position the feeler stock midway between the piston pin bosses. With the piston inserted about 2 inches into the block, the feeler stock must pull from the block with 5 to 10 pounds pull. If the feeler stock does not offer enough resistance, perform the same test with a new standard size piston. If sufficient resistance is still not obtained, rebore the cylinders (para 4-13) and install oversize pistons.

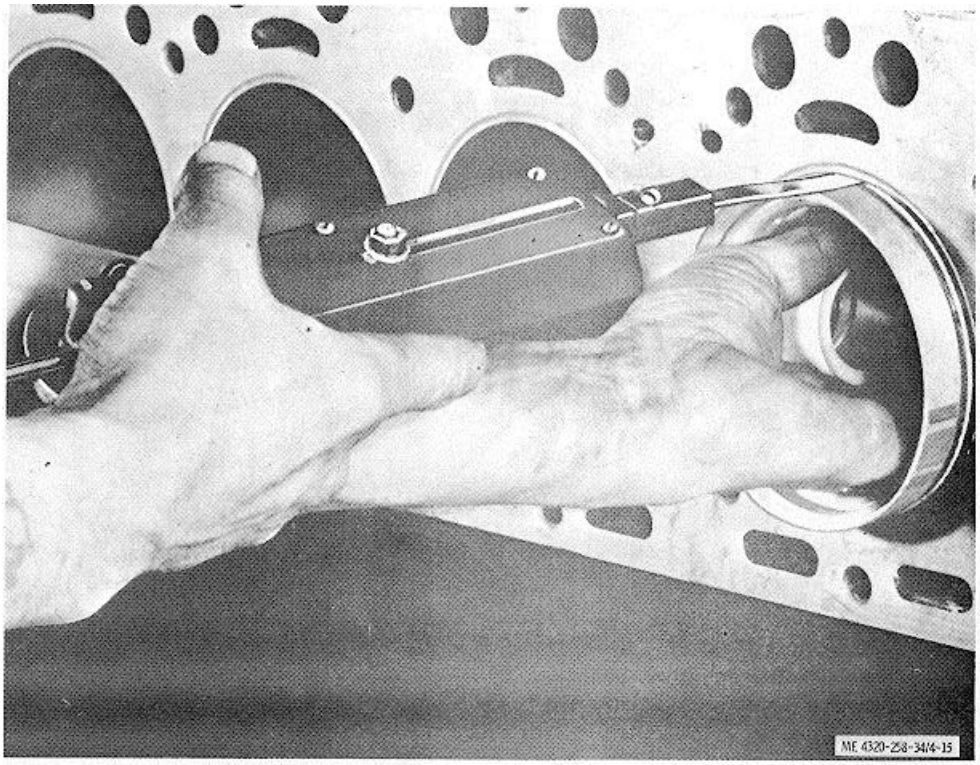

Figure 4-15. Checking piston fit in cylinder bore.

(2) If new pistons (18, fig. 4-14) and piston pins (16) are being used, press a new sleeve bearing (19) into each connecting rod (20). Ream and hone the sleeve bearings to 0.8595- to 0.8597-inch diameter. Make sure the final operation is done with a hone so that 75 percent of more of bearing surface contacts the piston pin.

(3) If the pistons and pins are not being replaced, check the clearance between the piston pins and the sleeve bearings. Clearance must be between 0.0002 and 0.0006 inch. If clearance is not within this tolerance, press new sleeve bearings into the connecting rods and ream and hone to provide the proper clearance. After honing, 75 percent of the sleeve bearing surface must contact the piston pin.

(4) When pins, bushings, and pistons of the proper size have been found, assemble the pistons to the connecting rods as follows:

(*a*) Heat the pistons and connecting rods in an oven or in water to a minimum of 160°F.

(*b*) Position a connecting rod in its piston. Install the piston pin; secure with the piston pin retaining ring (15, fig. 4-14).

(5) Slide the piston rings (17) squarely into the cylinders in which they will be used. Check the ring gap with feeler gage. If the ring gap is not at least 0.007 inch, file the rings to provide a larger gap. If the ring gap exceeds 0.017 inch, rebore the cylinders (para 4-13) and install oversize pistons and rings.

(6) Install the oil ring in the bottom ring groove of each piston as follows:

(*a*) Place stainless steel expander spacer in groove with ends butted.

(*b*) Install steel segment on top side of expander spacer with gap of segment approximately 90° beyond gap of stainless steel expander spacer, making certain that the expander spacer ends are still in a butted position.

(*c*) Install second segment on bottom side of the expander spacer with segment gap approximately 90° from the expander gap in opposite direction from which the top segment has been installed.

(*d*) Recheck assembly. Rings should be free to move in the groove; however, a slight drag will be evident because of the side sealing action of the ring assembly. Be sure expander spacer ends remain butted.

(7) Install the remaining piston rings on the piston with a standard ring expander tool.

(8) Assemble the remaining pistons, connecting rods, and piston rings.

(9) Install the assembled pistons and connecting rods in the same cylinders from which they were originally removed. Use a ring compressor to compress the piston rings. Lubricate the pistons and cylinder walls with engine oil before installing the pistons. Wrap the bottom end of the connecting rods with a cloth to prevent damage to the cylinder walls during installation.

(10) Check the crank pin bearing journal-to-connecting rod bearing clearance with plastigage. Lay a piece of plastigage material on the crankshaft journal and install the connecting rod bearing cap. Torque the nuts to 35 to 40 foot-pounds. Remove the bearing cap and compare the width of the flattened plastigage material with the scale markings on the plastigage package to determine the clearance. The bearing-to-journal clearance shall be 0.0006 to 0.0022 inch. If clearance is beyond these limits, replace the bearing and/or the crankshaft as required.

(11) As an alternate method of checking crank pin bearing journal-to-connecting rod bearing clearance, install a 1/2-inch piece of 0.0022-inch-thick feeler stock between the bearing and journal, and install the bearing cap. Tighten the connecting rod cap bolts to 35 to 40 foot-pounds torque. Rotate the crankshaft to detect drag. If clearance is within tolerance, a definite drag will be felt. Disassemble the rod cap and remove the shim stock. If clearance is not within tolerance, replace the connecting rod bearings and recheck the clearance. If clearance is still not within tolerance, replace the crankshaft.

(12) Lubricate the crank pin bearing journals and the sleeve bearings with engine oil. Install the cap (13, fig. 4-14) on its connecting rod (20) and crank pin bearing journal; secure with the two bolts (12) and nuts (11). Tighten the nuts to 35 to 40 foot-pounds torque. Install the cotter pins (10).

(13) Secure the remaining connecting rods to !the crank pin bearing journals.

(14) Install the engine oil pan (para 4-6c).

(15) Install the cylinder head (para 4-3 c).

4-11. Main Bearings and Crankshaft.

a. Removal and Disassembly. With the engine mounted on an engine overhaul stand, proceed as follows:

(1) Remove the cylinder head (para 4-3 a).

(2) Remove the oil pan (para 4-6 a) and oil pump (para 4-7 a).

(3) Remove the gear cover (para 4-8a).

(4) Remove the flywheel and flywheel housing (para 4-9 a).

(5) Remove the pistons and connecting rods (para 4-10 a).

(6) Remove the bolts (26 and 30, fig. 4-14) and flat washers (31) that secure the main bearing caps (27, 32, 34, and 37) to the cylinder block. Loosen the bearing caps by tapping them with a plastic hammer. Remove the bearing caps and lower bearings (29, 33, 36, and 39).

Note: Upper main bearing shells can be removed without removing the crankshaft. To remove the upper shell, remove the main bearing cap at the defective bearing and remove the lower bearing shell. Insert a pin with an angular head in the oil hole of the crankshaft as shown in figure 4-16. Rotate the crankshaft and roll the bearing shell from the cylinder block.

Figure 4-16. Removing upper bearing shell with angular pin.

(7) Pull the oil thrower (21, fig. 4-14) and gear (22) from the crankshaft (40). Remove the key (23) and remove the thrust plate (24).

b. Cleaning and Inspection.

(1) Clean all parts with cleaning solvent (FED. Spec. P-D-680). Clean oil passages in the crankshaft with a rifle cleaning brush. Make sure all passages are open.

(2) Inspect the crankshaft for cracks, worn or scored journals, damaged threads, and burred keyways. Refer to table 4-1 for wear limits. If magnetic particle inspection equipment is available, use it to check the crankshaft for hidden flaws. Replace a damaged crankshaft.

(3) Inspect the gear for cracked, chipped and broken teeth; replace a damaged gear.

(4) Inspect the bearing shells for cracks and scoring. New bearings are smooth and highly polished. After a few hours of operation, the bearing surfaces become leaden grey in color and develop minute craters which give the bearing surfaces an almost cellular appearance. This is a natural characteristic of the bearing and does not indicate bearing failure. Replace bearings if they are scored or damaged. Check the bearing thickness with a ball micrometer. Check several locations on the bearing. If thickness is less than 0.920 inch, replace the bearing.

(5) Inspect the bearing caps for cracks and distortion and for burrs and gouges of the seating surfaces. Clean up any burrs with a fine stone to assure proper seating of the bearing cap on the block.

c. Reassembly and Installation.

(1) Install the rear oil seal and oil guard as directed in paragraph 4-6 c.

(2) Position the thrust plate (24, fig. 4-14) on the crankshaft and install the key (23) in the keyway of the crankshaft, after making sure that the keyway is free of burrs. Press the gear (22) onto the crankshaft. Install the oil thrower (21).

(3) Position the upper half of the main bearings (29, 33, 36, and 39) in the seats in the crankcase. Position the crankshaft in the bearing shells.

Caution: **When installing the crankshaft, make sure the timing marks on the crankshaft gear are alined with the timing marks on the camshaft gear. See paragraph 4-12.**

(4) Install the lower half of the main bearings in the bearing caps (27, 32, 34, and 37).

(5) Check the clearance between the crankshaft bearing journals and bearings as follows:

(*a*) Place a piece of plastigage near the oil hole of the bearing cap.

(*b*) Position the cap on the block and secure with the two screws and lock washers. Tighten the screws to 85 to 95 foot-pounds torque.

(*c*) Remove the bearing and bearing cap. Check the bearing journal-to-bearing clearance indicated by the plastigage (fig. 4-17).

Figure 4-17. Checking bearing clearance with plastigage.

(6) Clearance must be between 0.0008 and 0.0028 inch. If the clearance is not within these limits, replace the bearings and recheck the clearance.

(7) Remove and replace the bearings as follows:

(*a*) Remove the bearing cap; remove the bearing from the cap.

(*b*) Install a pin with an angular head in the oil hole in the crankshaft bearing journal (fig. 4-16).

(*c*) Rotate the crankshaft by hand. The pin will force the top bearing half out of its seat.

(*d*) Position the replacement bearing on the crankshaft bearing journal. Rotate the crankshaft by hand. The pin will force the bearing half into position as shown in figure 4-18.

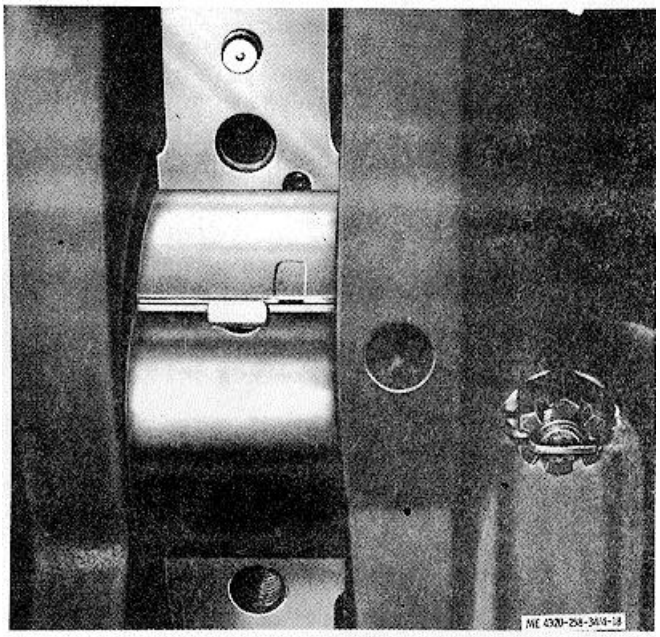

Figure 4-18. Installing upper bearing half, using angular pin.

(*e*) Install the replacement bearing half in the cap. Install the cap.

(8) Check the remaining bearing-to-bearing journal clearances and replace bearings as necessary.

(9) An alternate method of checking bearing clearance is as follows:

(a) Oil the bearing and bearing journal with engine oil.

(b) Position a strip of 0.003-inch feeler gage, 1/2 inch long, on the bearing cap (fig. 4-19).

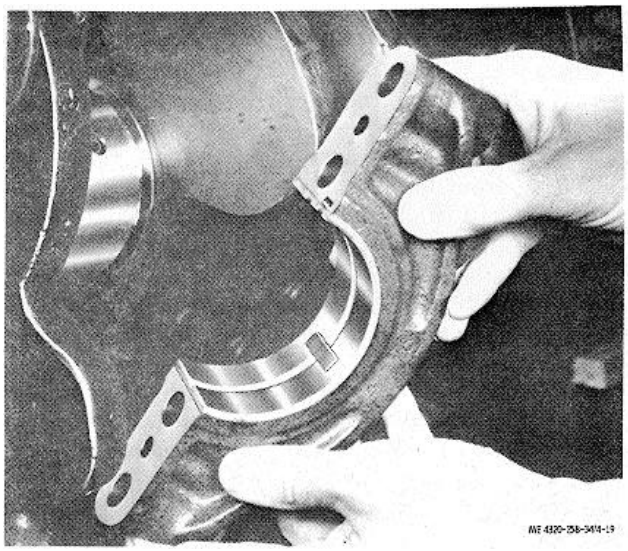

Figure 4-19. Checking bearing clearance with shim stock.

(*c*) Install the cap on the block; secure with the screws and lock washers. Tighten the screws to 85 to 95 foot-pounds torque.

(*d)* Try to turn the crankshaft by hand. If the crankshaft will not turn or a very definite drag is felt, bearing-to-bearing journal clearance is within tolerance. Remove the shim stock and reinstall the bearing caps.

(10) After all main bearings have been installed, use a dial indicator to check crankshaft end play. If end play is not between 0.003 and 0.008 inch, replace the thrust plate (24) which controls the shaft end play..

(11) Install the pistons and connecting rods (para 4-10*c*).

(12) Install the flywheel housing and flywheel (para 4-9*c*).

(13) Install the gear cover (para 4-8*c*).

(14) Install the oil pan (para 4-6c) and oil pump (para 4-7*c)*.

(15) Install the cylinder head (para 4-3*c*).

4-12. Camshaft

a. Removal. With the engine removed from the pump assembly and mounted on an engine stand, proceed as follows:

(1) Remove the cylinder head (para 4-3*a*).

(2) Remove the valves and valve tappets (para 4-4*b*).

(3) Remove the gear cover (para 4-8*a*).

(4) Remove the nut (14, fig. 4-3) from the camshaft (20) and pull the gear (15) from the cam shaft.

(5) Remove the two cap screws (17) and lock washers (18) that secure the thrust plate (19) to the block; remove the thrust plate.

(6) Pull the camshaft (20) from the block.

b. Cleaning and Inspection.

(1) Clean all parts with cleaning solvent (FED. Spec. P-D-680); dry thoroughly.

(2) Inspect the camshaft for cracks, worn or scored cams worn or scored bearing surfaces, chipped, cracked, or broken gear teeth, and clogged oil passages. Refer to table 4-1 for wear limits.
Replace a damaged camshaft.

(3) Inspect the thrust washer for scoring and wear. Replace the thrust washer if any signs of wear are evident.

(4) Inspect the cam gear for cracked, chipped, or broken gear teeth, damaged shaft bore, or worn thrust surface. The cam gear and the mating gear on the crankshaft must be replaced as a pair. Do not attempt to replace these gears singly.

(5) Inspect the plug (33, fig. 4-22) in the cylinder block. Replace if any leaking is evident from the circumference of the plug.

(6) Inspect the camshaft bearings in the cylinder block for scoring or visible damage; replace damaged bearings if necessary. Check the camshaft-to-bearing clearance and, if necessary, replace bearings as follows:

Caution: **Do not insert the camshaft too far into the block. If the camshaft bumps the expansion plug on the drive end of the engine, an oil leak could result.**

(*a*) Temporarily insert the camshaft (20, fig. 4-3) in the block. Check the clearance between the camshaft bearing journals and camshaft bearings (21, 22, 23, and 24) with feeler stock cut in strips 1/4 inch wide. Dress the feeler stock with a stone to eliminate burrs or feathered edges. Clearance between bearings and journals must be between 0.002 and 0.004 inch.

(*b*) If clearance exceeds tolerances, remove the camshaft and remove the camshaft bearings. New bearings are pre-reamed. Install new bearings, taking care to aline the oil holes with the passages in the block. Use caution to prevent damage to the bearings during installation.

c. Installation.

(1) Lubricate the camshaft bearings with engine oil and install the camshaft in the block. Position the thrust plate (19, fig. 4-3) on the camshaft; secure with two cap screws (17) and lock washers (18).

Caution: **When installing the camshaft gear, do not attempt to seat the gear by tightening the retaining nut. This may break threads on the camshaft, requiring camshaft replacement.**

(2) Hold the camshaft toward the front of the engine with a bar inserted into the fuel pump hole. Aline the timing marks on the camshaft and crankshaft gears (fig. 4-20) and drive the gear (15, fig. 4-3) onto the camshaft.

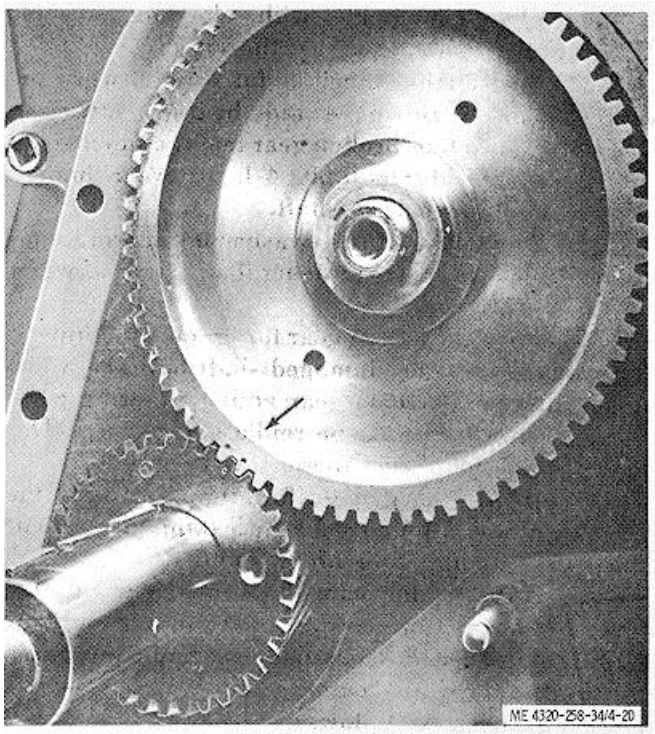

Figure 4-20. Timing gears showing alinement marks.

(3) Check camshaft, end play with a dial indicator. If end play is .not between 0.005 and 0.009 inch, remove the camshaft timing gear and, replace the thrust plate (19, fig. 4-3).

(4) Check the clearance between the camshaft and crankshaft gears as follows:

(*a*) Force the teeth of the gears apart with a screwdriver. Attempt to insert a 0.002-inch feeler gage into the gap between the gears. If the gage will enter, the clearance is excessive.

(*b*) If the gage will not enter, place a finger at the junction of the two gears as shown in figure 4-21 and tap the camshaft gear with a hammer. If vibrations can be felt in the large gear, the clearance is sufficient.

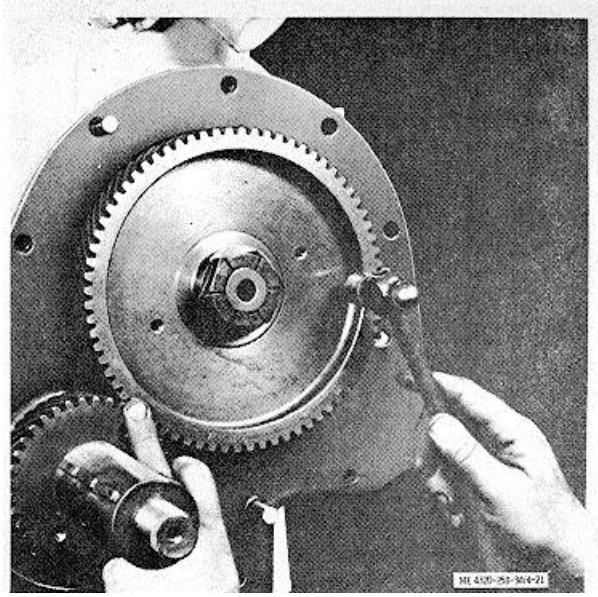

Figure 4-21. Checking for insufficient timing gear clearance.

(5) If gear clearance is too great or too small, the gears must be replaced. Replace the gears only in sets. Gear sets are available in standard size (marked S), 0.002 and 0.004 inch undersize (marked U), and 0.002 and 0.004 inch oversize (marked O). Install a gear set marked the same as the set removed. Check the clearance as directed in (4) above. If clearance is too great, install the next smaller size gear set. If clearance is insufficient, install the next larger size set.

(6) Install the gear cover (para 4-8*c)*.

(7) Install the valves and valve tappets (para 4-4*c)*.

(8) Install the cylinder head (para 4-3*c)*.

4-13. Cylinder Block

a. Removal and Disassembly. With the engine mounted on an engine overhaul stand, proceed as follows:

(1) Remove the cylinder head (para 4-3*a)*.

(2) Remove the intake and exhaust valves (para 4-4*b)* and intake and exhaust manifolds (para 4-5*a)*.

(3) Remove the oil pan (para 4-6*a)* and oil pump (para 4-7*a)*.

(4) Remove the gear cover (para 4-8*a)*.

(5) Remove the flywheel and flywheel housing (para 4-9*a)*.

(6) Remove the pistons and connecting rods (para 4-10*a)*.

(7) Remove the crankshaft and main bearings (para 4-11*a)*.

(8) Remove the camshaft (para 4-12*a)*.

(9) Remove the assembled washer screw (19, fig. 4-9), cap screws (20), and flat washers (21) that secure the front end plate (22) to the cylinder block; remove the backing plate and gasket (23).

(10) Remove the plug (33, fig. 4-22) and gasket (24); remove the spring (25), washers (26), and oil pressure relief valve (27).

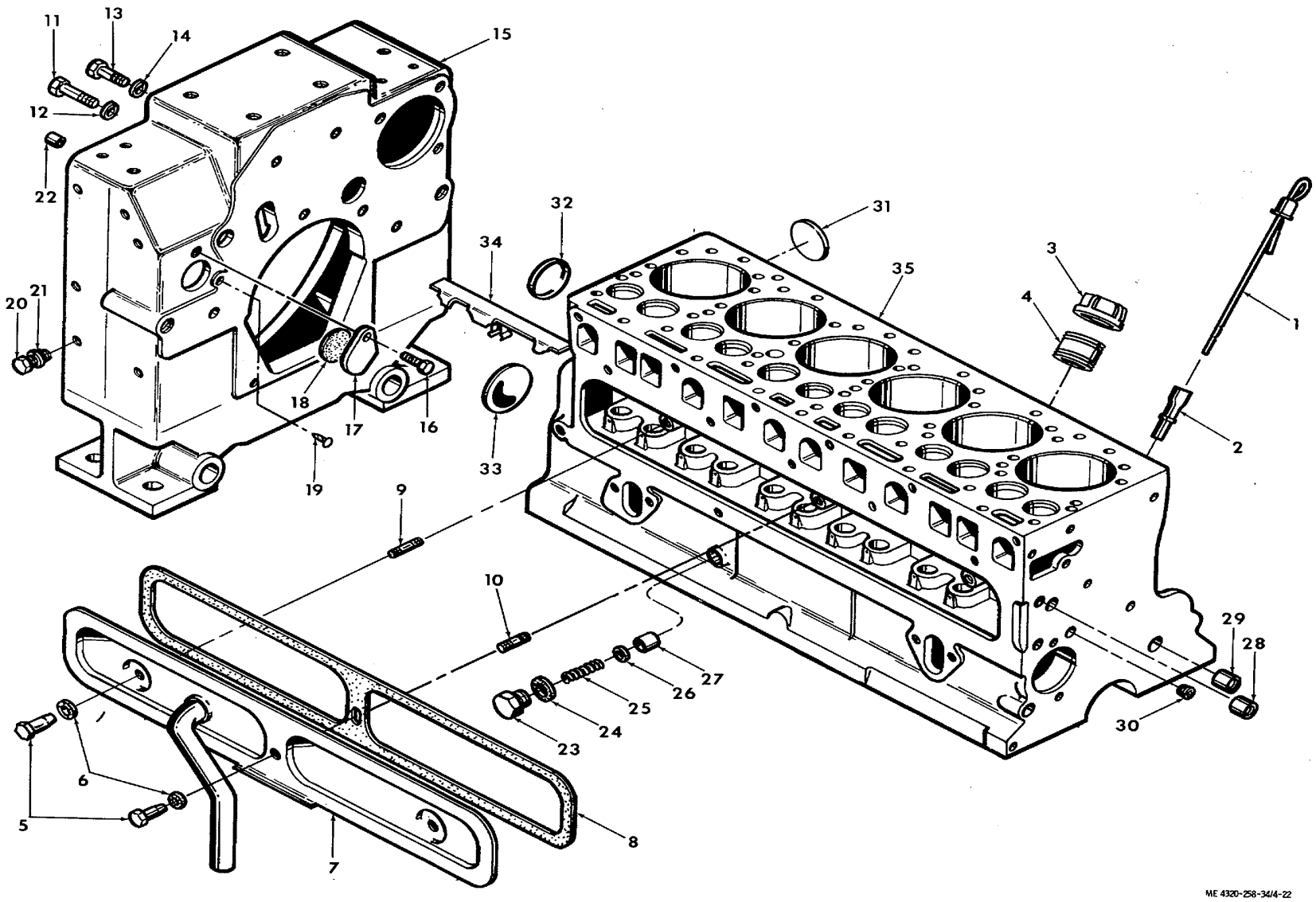

Figure 4-22. Cylinder block and flywheel housing, exploded view.

KEY to fig. 4-22:

1. Oil gage rod
2. Oil gage rod support
3. Oil filler cap
4. Oil filler nipple
5. Nut
6. Gasket
7. Valve chamber cover
8. Gasket
9. Stud
10. Stud
11. Cap screw
12. Lock washer
13. Shoulder screw
14. Lock washer
15. Flywheel housing
16. Screw
17. Timing hole cover
18. Felt
19. Drive screw pointer
20. Housing plug
21. Lock washer
22. Ring dowel
23. Plug
24. Gasket
25. Relief valve spring
26. Pressure adjusting washer
27. Oil pressure relief valve
28. Ring dowel
29. Ring dowel
30. Oil header plug
31. Core hole plug
32. Core hole plug
33. Core hole plug
34. Baffle
35. Cylinder block

b. Cleaning.

(1) Remove dirt and grease deposits from the block with a putty knife. Steam-clean the block. Remove greasy or gummy deposits with a cloth dampened in cleaning solvent (FED. Spec. P-D-680). Clean the oil and water passages in the block with compressed air. Remove varnish deposits with a wire brush.

(2) Clean the mounting plate and all other parts with cleaning solvent (FED. Spec. P-D-680); dry thoroughly.

c. Inspection.

(1) Inspect the block for cracks, damaged sealing surfaces, scored or damaged bearing seats, scored or scratched cylinder walls, damaged threads, loose or damaged studs, corrosion in the water jacket, or other defects.

(2) Check piston fit in the cylinder bores (para 4-10*c)*.

(3) Check cylinder bore wear with an inside micrometer. Measure the cylinder bore at 45° intervals below the travel of the lowest piston ring where the cylinder is not worn. Compare this measurement with a measurement taken about 1/4 inch below the top of the cylinder. The maximum allowable cylinder wear (the difference between these two measurements),is 0.008 inch.

(4) Replace the block if, it is cracked, or if defects cannot be repaired. Replace loose or damaged studs. Retap damaged threads. If a proper piston fit cannot be attained, (para 4-10 c), the cylinders are scratched or scored, or, cylinder wear exceeds 0.008 inch, rebore the cylinders as directed in *d* below.

(5) Inspect the backing plate for cracks and distortion. Remove any burrs with a fine stone.

(6) Inspect the oil pressure relief valve for scoring, wear, and other damage. Inspect the spring for cracks and misalined coils. Replace damaged oil pressure regulator parts.

d. Reboring. Rebore the cylinders to 3.4575- to 3.4595-inch diameter (0.020 inch oversize). If this is not sufficient to eliminate cylinder wear or damage, rebore the cylinders to 3.4775- to 3.4795-inch diameter (0.040 inch oversize). Maximum allowable overbore is 0.040 inch.

e. Reassembly and Installation.

(1) Reassembly and installation is the reverse of removal and disassembly. Refer to figure 4-22.

(2) When installing the front end plate (22, fig. 4-9), tighten the 5/16-inch bolts to 15 to 20 foot-pounds torque and tighten the 3 / 8-inch bolts to 25 to 30 foot-pounds torque.

(3) Install the camshaft (para 4-12c).

(4) Install the crankshaft and main bearings (para 4-11*c)*.

(5) Install the pistons and connecting rods (para 4-10c).

(6) Install the flywheel and flywheel housing (para 4-9*c)*.

(7) Install the gear cover (para 4-8*c)*.

(8) Install the oil pump (para 4-7*c)* and oil pan (para 4-6*c)*.

(9) Install the intake and exhaust valves (para 4-4 d), and intake and exhaust manifolds (para 45*c)*.

(10) Install the cylinder head (para 4-3*c)*.

(11) See paragraph 3-13 for oil pressure adjustment procedure.

CHAPTER 5

REPAIR OF CENTRIFUGAL PUMP

5-1. General

This chapter covers repair and overhaul of the centrifugal pump. Repair includes seal replacement and check valve replacement. Overhaul consists of complete teardown to allow inspection and, if necessary, replacement of all operating parts, including bearings, impeller, and wear plate. Repair can be done without removal of the entire pump assembly from the engine and skid. Overhaul requires removal of the unit to a workbench.

5-2. Check Valve Replacement

Replace the check valve as follows:

a. Remove the nuts (6, fig. 5-1) that secure the suction flange (7) to the pump body; remove the suction flange and gasket (8).

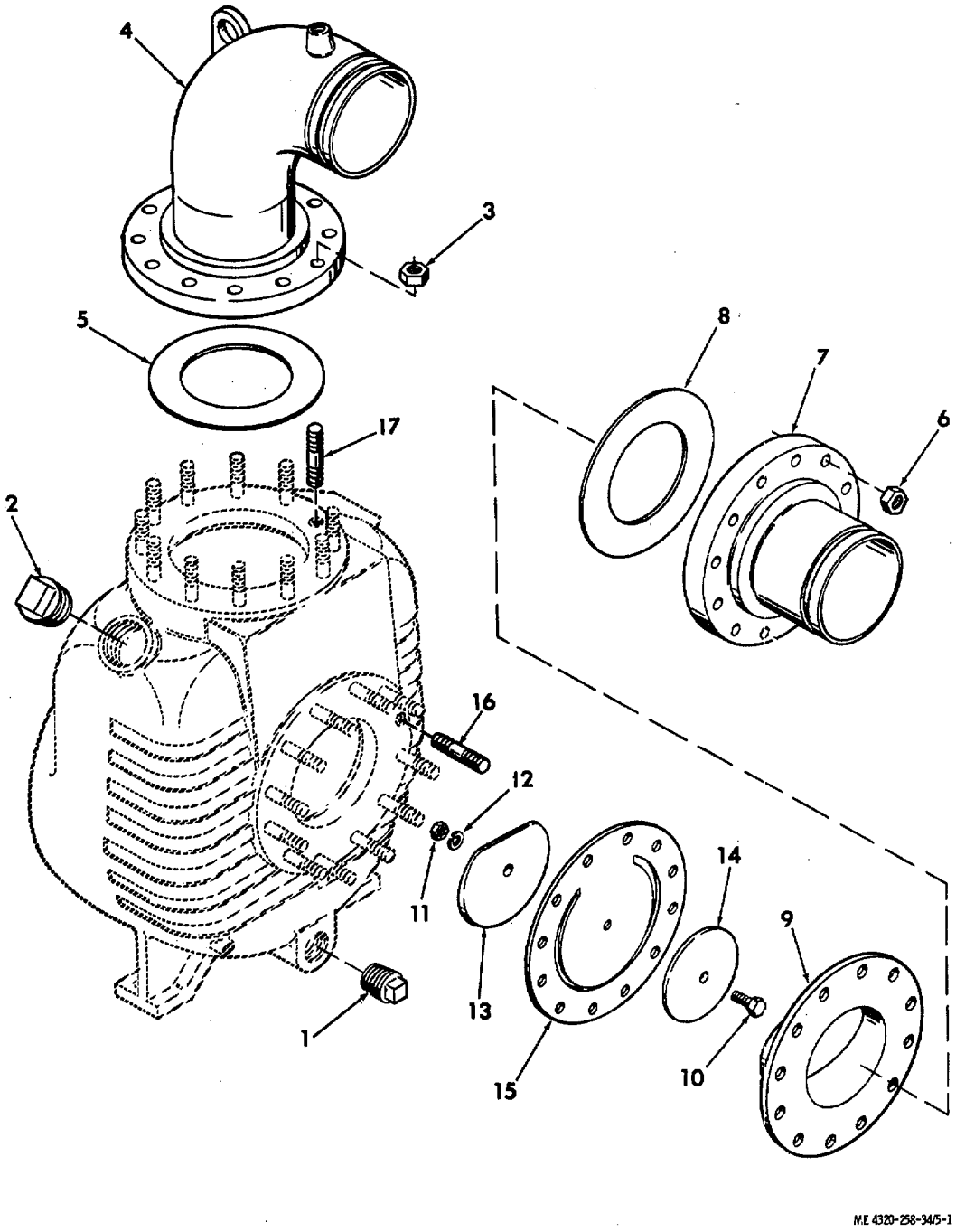

1. Drain plug
2. Filler plug
3. Nut
4. Discharge elbow
5. Gasket
6. Nut
7. Suction flange
8. Gasket
9. Check valve seat
10. Screw
11. Nut
12. Lock washer
13. Large weight
14. Small weight
15. Gasket
16. Stud
17. Stud

Figure 5-1. Suction and discharge assemblies, exploded view.

b. Remove the check valve seat (9) and the check valve assembly consisting of the large weight (13), small weight (14), and gasket (15). Remove the screw (10), nut (11), and lock washer (12) to separate the check valve parts.

c. Clean all parts with cleaning solvent (FED. Spec. P-D-680); dry thoroughly.

d. Inspect the gasket for wear, cracks, tears, and damaged seating surfaces. Replace a damaged gasket.

e. Inspect the check valve seat for cracks and for a damaged seating surface. Replace if damaged.

f. Reassemble the parts by reversing the removal procedure. Make sure the small weight is assembled to face outward. Tighten the nuts evenly and alternately in increments to prevent distortion of the check valve gasket.

g. After assembly, operate the check valve by hand to assure that it operates freely, and that it seats firmly against the valve seat.

5-3. Shaft Seal Replacement Replace

a. leaking shaft seal as follows: a. Remove the tool box from the centrifugal pump assembly (TM 5-4320-258-12).

b. Remove the drain plug (1, fig. 5-1) and drain all fluid from the pump body.

c. Use a hoist or other lifting device to support the weight of the pump body (3, fig. 5-2). Remove the bolts, nuts, and lock washers that secure the feet of the pump body to the skid base.

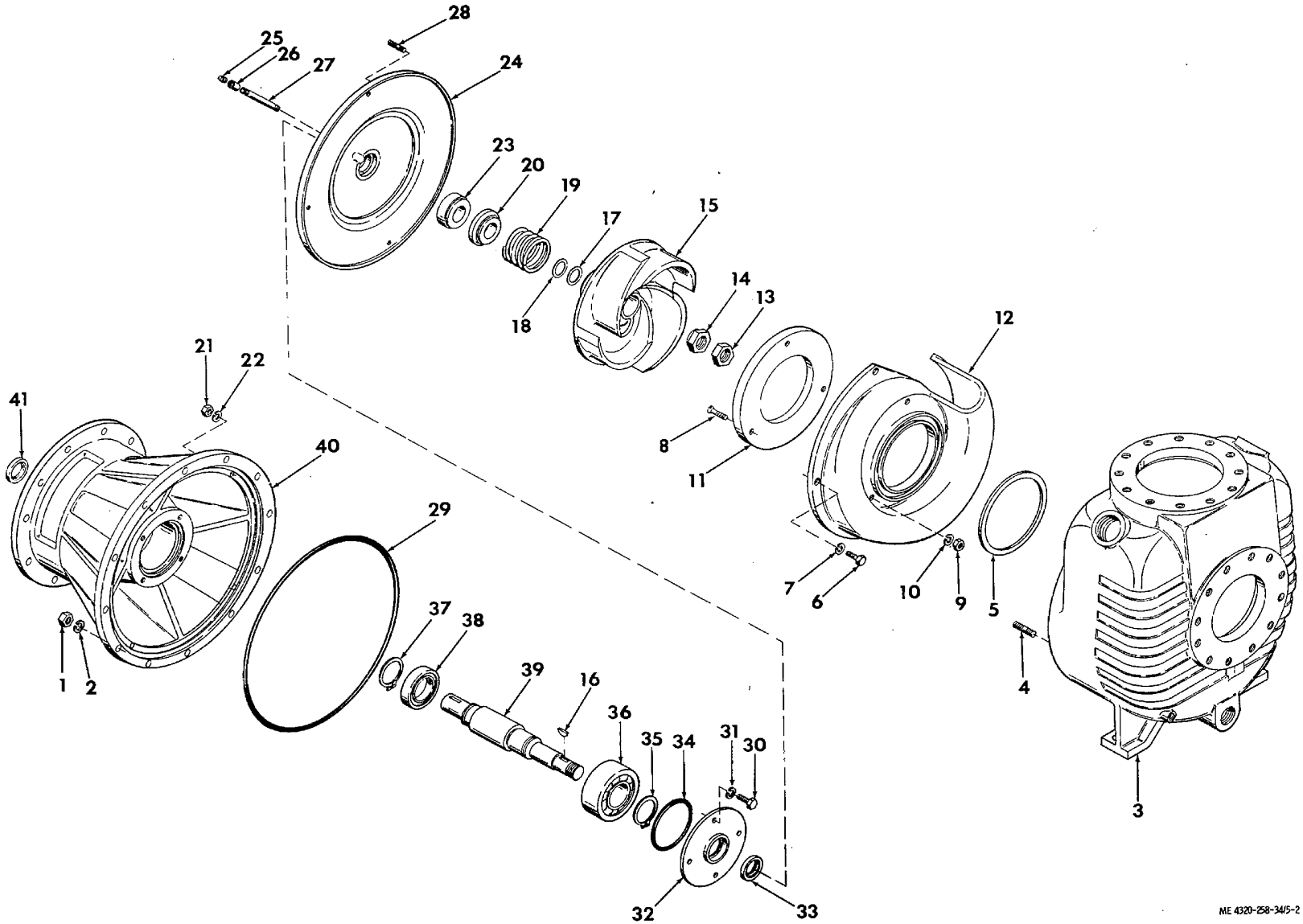

Figure 5-2. Centrifugal pump, exploded view.

KEY to fig. 5-2:

1. Nut
2. Lock washer
3. Pump body
4. Stud
5. Volute gasket
6. Cap screw
7. Lock washer
8. Flat head screw
9. Nut
10. Lock washer
11. Wear plate
12. Volute
13. Lock nut
14. Impeller nut
15. Impeller
16. Woodruff key
17. Shim
18. Shim
19. Seal spring
20. Seal rotating member
21. Nut
22. Lock washer
23. Seal stationary member
24. Seal plate
25. Pipe plug
26. Coupling
27. Pipe nipple
28. Stud
29. Preformed packing
30. Cap screw
31. Lock washer
32. Bearing cap
33. Grease seal
34. Preformed packing
35. Retaining ring
36. Ball bearing
37. Retaining ring
38. Ball bearing
39. Impeller shaft
40. Bearing housing
41. Grease seal

d. Remove the nuts (1) and lock washers (2) that secure the pump body (3) to the bearing housing (40); slide the pump body straight out to disengage it from the remainder of the pump which is secured to the engine.

e. Remove the cap screws (6) and lock washers (7) that secure the assembled volute (12) and wear plate (11) to the seal plate (24); remove the assembled parts.

f. Remove the nuts (13 and 14) that secure the impeller (15) to the impeller shaft (39). Pull the impeller from the shaft and remove the key (16). Remove the shims (17 and 18), seal spring (19), and seal rotating member (20) from the shaft.

g. Remove the nuts (21) and lock washers (22) that secure the seal plate (24) to the bearing housing (40); remove the seal plate with the assembled seal stationary member (23). Remove the seal stationary member from the seal plate.

Note: The seal members are not replaceable individually. When replacing the seal, be sure to replace all parts that are provided in the seal kit.

h. Install the seal stationary member (23) in the seal plate (24); install the seal plate on the bearing housing (40) with nuts (21) and lock washers (22).

i. Lubricate the inside diameter of the seal rotating member (20). Install the rotating member on the shaft, and install the seal spring (19). Take care to prevent damage to the interior of the seal member during assembly or premature failure will result. Also use extreme care to prevent damage to the contact faces, both the stationary and rotating seal members.

j. When installing the impeller (15), be sure to install the same thickness of shims (17 and 18) that was removed.

k. Reassemble the remainder of the pump by reversing the disassembly procedure.

5-4. Centrifugal Pump Overhaul

a. Disassembly. Remove the pump from the engine and skid (TM 5-4320-258-12). Disassemble in the sequence indicated in figures 5-1 and 5-2. Note the following:

(1) Press the impeller shaft (39, fig. 5-2) and bearings (36 and 38) from the bearing housing (40) as an assembly.

(2) Remove the retaining rings (35 and 37) and press the ball bearings (36 and 38) from-the shaft.

b. Cleaning and Inspection.

(1) Discard and replace all seals, gaskets, and packings.

(2) Clean the ball bearings as directed in paragraph 2-7.

(3) Clean all remaining parts with cleaning solvent (FED. Spec. P-D-680); wipe dry.

(4) Inspect the check valve seat for cracks, chipped edges, and other damage; replace a damaged check valve seat.

(5) Inspect the suction flange and discharge elbow for distortion, cracks, and damaged connector grooves. Remove nicks and burrs from the connector grooves with a fine stone. Replace if damaged beyond repair.

(6) Inspect the pump body for cracks, loose or damaged studs, and for damaged threads. Clean up damaged threads with a thread die. Replace any damaged studs. Replace the housing if worn beyond repair.

(7) Inspect the wear plate for damage or wear. If the wear is perceptible, replace the plate.

(8) Inspect the volute for cracks, distortion, and wear. Replace if damaged.

(9) Inspect the impeller for cracked, chipped, worn or broken vanes, damaged or distorted bore or keyway, and other damage; replace a damaged impeller.

(10) Inspect the ball bearings for scored balls or races, cracked races, signs of overheating, or

rough, catching, or binding operation; replace damaged bearings.

(11) Inspect the impeller shaft for distortion and damaged retaining ring grooves, keyways, and threads. Clean up damaged retaining ring grooves or keyways with a fine stone. Repair damaged threads with a thread chaser. Replace the shaft if it is damaged beyond repair.

(12) Inspect the bearing housing for cracks, distortion, or scored or burred bearing seats. Remove nicks or burrs from the bearing seats with a fine stone. Clean up damaged threads with a thread die. Replace a damaged bearing housing.

c. Reassembly. Reassemble the pump by reversing the disassembly sequence. Refer to figures 5-1 and 5-2. Note the following:

(1) Press bearings (36 and 38, fig. 5-2) onto the impeller shaft (39). If bearings slide onto the shaft by hand, they are too loose and the bearings and / or shaft must be replaced. Secure bearings to the shaft with retaining rings (35 and 37).

(2) Pack the bearings, bearing cap, and the area between the bearings in the bearing housing with MIL-G-10924 grease.

(3) Press grease seal (41) into the bearing housing (40) and grease seal (33) into the bearing cap (32) before installing the shaft and bearings in the bearing housing.

(4) Press the seal stationary member (23) into seal plate (24) before installing the plate. Lubricate the shaft lightly with oil and slide the seal rotating member (20) in place on the shaft.

(5) If the same impeller (15) and wear plate (11) are reassembled and no clearance change is indicated, make sure that the same thickness of shims ' (17 and 18) is used. If a new impeller and / or wear plate is to be installed, or if the impeller clearance is to be changed, determine the shim thickness required to obtain a clearance of 0.010 to 0.020 inch between the impeller and wear plate as follows:

(*a*) Install impeller (15) on shaft (39) without shims. Be sure that it is seated firmly against the shaft shoulder.

(*b*) Install volute (12), with wear plate (11) assembled, and secure with screws (6) and lock washers (7).

(*c*) Measure from the face of the impeller (15) to the face of the wear plate (11) using a feeler gage.

(*d*) Select shims (17 and 18) to equal the dimension obtained less 0.010 to 0.020 inch for clearance.

(6) After assembly, check the impeller shaft for free rotation. It must turn freely without catching or binding. If binding is evident, disassemble and correct the condition upon reassembly.

(7) Install the pump on the engine and skid (TM 5-4320-258-12).

APPENDIX A

REFERENCES

A-1.	**Fire Protection**	
	TB 5-4200-200-10	Hand Portable Fire Extinguishers Approved for Army Users
A-2.	**Lubrication**	
	C9100-IL	Identification List for Fuels, Lubricants, Oils and Waxes
	LO 5-4320-258-12	Lubrication Order for Pump, Centrifugal, Barnes Model US67CCG
A-3.	**Painting**	
	TM 9-213	Painting Instructions for Field Use
A-4.	**Radio Suppression**	
	TM 11-483	Radio Interference Suppression
A-5.	**Maintenance**	
	Fed. Spec. P-D-680	Dry Cleaning Metal Parts
	TB 750-651	Use of Antifreeze Solutions and Cleaning Compounds in Engine Cooling Systems
	TM 38-750	The Army Maintenance Management System
	TM 4320-258-34	DS, GS, and Depot Maintenance Manual for Pump, Centrifugal, Barnes Model US67CCG
	TM 5-4320-258-20P	Organizational Maintenance Repair Parts Manual for Pump, Centrifugal, Barnes Model US67CCG
	TM 5-4320-258-34P	DS, GS, and Depot Maintenance Repair Parts List for Pump, Centrifugal, Barnres Model US67CCG
	TM 9-6140-200-15	Operation and Organizational Field and Depot Maintenance Storage Batteries, Lead Acid Type
	TM 5-764	Electric Motor and Generator Repair
	TM 5-4320-258-12	Operator and Organizational Maintenance Manual for Pump, Centrifugal, Barnes Model US67CCG
A-6.	**Shipment and Storage**	
	TB 740-93-2	Preservation of USAMEC Mechanical Equipment for Shipment and Storage
	TM 740-90-1	Administrative Storage of Equipment
A-7.	**Destruction of Army Materiel to Prevent Enemy Use**	
	TM 750-244-3	Procedures for Destruction of Equipment to Prevent Enemy Use (Mobility Equipment Command)

By Order of the Secretary of the Army:

W. C. WESTMORELAND,
General, United States Army,
Chief of Staff.

Official:

VERNE L. BOWERS,
Major General, United States Army,
The Adjutant General.

Distribution:

To be distributed in accordance with DA Form 12-25 (qty rqr Block No. 155), Direct/ General Support requirements for Petroleum Distribution.

* U.S. GOVERNMENT PRINTING OFFICE: 1971-769-158/83

TEAR ALONG PERFORATED LINE

RECOMMENDED CHANGES TO EQUIPMENT TECHNICAL PUBLICATIONS

SOMETHING WRONG WITH THIS PUBLICATION?

FROM: (PRINT YOUR UNIT'S COMPLETE ADDRESS)

DATE SENT

PUBLICATION NUMBER	PUBLICATION DATE	PUBLICATION TITLE

BE EXACT. . .PIN-POINT WHERE IT IS

PAGE NO.	PARA-GRAPH	FIGURE NO	TABLE NO.

IN THIS SPACE TELL WHAT IS WRONG AND WHAT SHOULD BE DONE ABOUT IT:

PRINTED NAME, GRADE OR TITLE, AND TELEPHONE NUMBER

SIGN HERE:

DA FORM 1 JUL 79 2028-2

PREVIOUS EDITIONS ARE OBSOLETE.

P.S.—IF YOUR OUTFIT WANTS TO KNOW ABOUT YOUR RECOMMENDATION MAKE A CARBON COPY OF THIS AND GIVE IT TO YOUR HEADQUARTERS.

This fine document...

Was brought to you by me:

Liberated Manuals -- free army and government manuals

Why do I do it? I am tired of sleazy CD-ROM sellers, who take publicly available information, slap “watermarks” and other junk on it, and sell it. Those masters of search engine manipulation make sure that their sites that sell free information, come up first in search engines. They did not create it... They did not even scan it... Why should they get your money? Why are not letting you give those free manuals to your friends?

I am setting this document FREE. This document was made by the US Government and is NOT protected by Copyright. Feel free to share, republish, sell and so on.

I am not asking you for donations, fees or handouts. If you can, please provide a link to liberatedmanuals.com, so that free manuals come up first in search engines:

<A HREF=http://www.liberatedmanuals.com/>Free Military and Government Manuals</A>

- Sincerely
  Igor Chudov
  http://igor.chudov.com/
- Chicago Machinery Movers