TECHNICAL MANUAL

OPERATOR, ORGANIZATIONAL, DIRECT SUPPORT AND GENERAL SUPPORT MAINTENANCE MANUAL

COMPRESSOR, RECIPROCATING: AIR: HANDTRUCK MOUNTED, GASOLINE ENGINE DRIVEN 5CFM, 175PSI (KELLOGG AMERICAN MODEL G-311-PC) NSN 4310-00-843-8885

This copy is a reprint which includes current pages from Changes 1 through 6.

HEADQUARTERS, DEPARTMENT OF THE ARMY

FEBRUARY 1978

WARNING

Before starting engine or operating any of the components ensure that no loose bars, tools, or parts are lying in or on any part of the equipment, as they could cause serious damage to equipment or bodily injury to personnel.

WARNING

Never wear loose clothing, or hanging appendages from person or clothing. while inspecting running engine, moving shafts, or like machinery.

WARNING

Disconnect the spark plug cables prior to engine maintenance to prevent accidental starting and servere shock

WARNING

Do not touch the ignition system harness during starting or while in operation; Severe shocks or burns could result, and personnel may be seriously injured.

WARNING

When handling gasoline, always provide a metal-to-metal contact between the container and tank. This will prevent a spark from being generated as gasoline flows over the metallic surface,

WARNING

Before refueling, ensure that adequate fire tighting equipment is serviceable and is standing by for immediate use in event of fire or explosion.

WARNING

During operation, proper fire fighting equipment should be serviceable and kept near in the event that fire is developed by electrostatic spark or detonation of the gas fumes. Do not smoke or use an open flame in vicinity of these gasoline vapor hazards.

WARNING

Do not refuel while engine is in operation

WARNING

Never touch engine or engine accessories with bare hands during operation, or before they have cooled sufficiently. Severe burns can be caused through carelessness.

WARNING

Never attempt to service any of the air compressor components until the unit is relieved of all air pressure

WARNING

Do not operate the air compressor in an enclosed area unless the exhaust gases are piped to the outside. The exhaust gases contain carbon monoxide. which is a colorless, odorless, and poisonous gas.

WARNING

Do not weld repair air received tank.

WARNING

Do not operate the air compressor with the belt guard removed

WARNING

Do not operate in tilted position.

WARNING

This compressor is not suitable for the supply of air for charging cylinders with breathable air

WARNING

Operation of this equipment presents a noise hazard to personnel in the area. The noise level exceeds the allowable limits for unprotected personnel. Wear ear muffs or earplugs which were fitted by a trained professional.

WARNING

Make certain any lifting device used has a capacity equal to the weight being lifted. Failure to observe this precaution could result in injury or death to personnel and damage to equipment.

WARNING

Drycleaning solvent, P-D-680, used to clean parts is potentially dangerous to personnel and property. Avoid repeated and prolonged skin contact. Do not use near open flame or excessive heat. Flash point of solvent is 100°F (38°C).

CHANGE NO. 6

HEADQUARTERS
DEPARTMENT OF THE ARMY
WASHINGTON, D.C., 25 April 1989

Operator, Organizational, Direct Support and
General Support Maintenance Manual

COMPRESSOR, RECIPROCATING: AIR: HANDTRUCK MOUNTED,
GASOLINE ENGINE DRIVEN 5 CFM, 175 PSI
(KELLOGG AMERICAN MODEL G-311-PC)
NSN 4310-00-843-8885

TM 5-4310-276-14, 15 February 1978, is changed as follows:

1. Remove and insert pages as indicated below. New or changed text material is indicated by a vertical bar in the margin. An illustration change is indicated by a miniature pointing hand.

Remove pages	Insert pages
1-1 and 1-2	1-1 and 1-2
2-1 and 2-2	2-1 and 2-2
3-7 and 3-8	3-7 and 3-8
4-5 and 4-6	4-5 and 4-6
E-1 and E-2	E-1 and E-2

2. Retain this sheet in front of manual for reference purposes.

By Order of the Secretary of the Army:

CARL E. VUONO
General, United States Army
Chief of Staff

Official:

WILLIAM J. MEEHAN, II
Brigadier General, United States Army
The Adjutant General

DISTRIBUTION:
To be distributed in accordance with DA Form 12-25A, Operator, Unit, Direct Support and General Support Maintenance requirements for Compressor, Reciprocating, Air, Gas Engine, Hand Truck Mounted, 5 CFM, 175 PSI (G-311-PC).

CHANGE No. 5

HEADQUARTERS
DEPARTMENT OF THE ARMY
WASHINGTON, D.C., 29 May 1987

Operator, Organizational, Direct Support and
General Support Maintenance Manual

COMPRESSOR, RECIPROCATING: AIR: HANDTRUCK MOUNTED,
GASOLINE ENGINE DRIVEN 5 CFM, 175 PSI
(KELLOGG AMERICAN MODEL G-311-PC)
NSN 4310-00-843-8885

TM 5-4310-276-14, 15 February 1978, is changed as follows:

1. Remove and insert pages as indicated below. New or changed text material is indicated by a vertical bar in the margin. An illustration change is indicated by a miniature pointing hand.

Remove pages	Insert pages
i and ii	i and ii
1-1 and 1-2	1-1 and 1-2
3-1 and 3-2	3-1 and 3-2
3-3	3-3
E-1 and E-2	E-1 and E-2

2. Retain this sheet in front of manual for reference purposes.

By Order of the Secretary of the Army:

JOHN A. WICKHAM, JR.
General, United States Army
Chief of Staff

Official:

R. L. DILWORTH
Brigadier General, United States Army
The Adjutant General

DISTRIBUTION:
To be distributed in accordance with DA Form 12-25A, Operator, Unit, Direct Support and General Support Maintenance requirements for Compressor, Reciprocating, Air, Gas Engine, Hand Truck Mounted, 5 CFM, 175 PSI (G-311-PC).

CHANGE NO. 4

HEADQUARTERS
DEPARTMENT OF THE ARMY
WASHINGTON, D.C., 27 March 1987

Operator, Organizational, Direct Support and
General Support Maintenance Manual

COMPRESSOR, RECIPROCATING: AIR:
HANDTRUCK MOUNTED, GASOLINE ENGINE
DRIVEN 5 CFM, 175 PSI (KELLOGG
AMERICAN MODEL G-311-PC)
NSN 4310-00-843-8885

TM 5-4310-276-14, 15 February 1978, is changed as follows:

1. Remove and insert pages as indicated below. New or changed text material is indicated by a vertical bar in the margin. An illustration change is indicated by a miniature pointing hand.

Remove pages	Insert pages
4-5 and 4-6	4-5 and 4-6

2. Retain this sheet in front of manual for reference purposes.

By Order of the Secretary of the Army:

JOHN A. WICKHAM, JR.
General, United States Army
Chief of Staff

Official:

R. L. DILWORTH
Brigadier General, United States Army
The Adjutant General

DISTRIBUTION:
To be distributed in accordance with DA Form 12-25A, Operator, Organizational, Direct Support and General Support Maintenance Requirements for Compressor, Reciprocating, Air, Gas Engine Driven, 15 CFM, 175 PSI (50-6840).

CHANGE No. 3

HEADQUARTERS
DEPARTMENT OF THE ARMY
WASHINGTON, D.C., 14 April 1986

Operator, Organizational, Direct Support and
General Support Maintenance Manual

COMPRESSOR, RECIPROCATING: AIR:
HANDTRUCK MOUNTED, GASOLINE ENGINE
DRIVEN 5 CFM, 175 PSI (KELLOGG
AMERICAN MODEL G-311-PC)
NSN 4310-00-843-8885

TM 5-4310-276-14, 15 February 1978, is changed as follows:

1. Remove and insert pages as indicated below. New or changed text material is indicated by a vertical bar in the margin. An illustration change is indicated by a miniature pointing hand.

Remove pages	Insert pages
3-3 and 3-4	3-3
3-5 and 3-6	3-6
--	3-6.1/3-6.2
3-7 and 3-8	3-7 and 3-8
4-5 and 4-6	4-5 and 4-6
4-9 and 4-10	4-9 and 4-10

2. Retain this sheet in front of manual for reference purposes.

By Order of the Secretary of the Army:

JOHN A. WICKHAM, JR.
General, United States Army
Chief of Staff

Official:

R. L. DILWORTH
Briadier General, United States Army
The Adjutant Genend

DISTRIBUTION:
To be distributed in accordance with DA Form 12-25A, Operator Maintenance Requirements for Compressor, Reciprocating, Air, Gas Engine, Hand Truck Mounted, 5 CFM, 175 PSI (G-311-PC).

CHANGE No. 2

HEADQUARTERS
DEPARTMENT OF THE ARMY
WASHINGTON, D. C., 17 August 1981

Operator, Organizational, Direct Support and
General Support Maintenance Manual

COMPRESSOR, RECIPROCATING: AIR:
HANDTRUCK MOUNTED, GASOLINE ENGINE
DRIVEN 5 CFM, 175 PSI (KELLOGG
AMERICAN MODEL G-311-PC)
NSN 4310-00-843-8885

TM 5-4310-276-14, 15 February 1978, is changed as follows:

1. Remove and insert pages as indicated below.

	Remove pages	Insert pages
Table of Contents	i and ii	i and ii
Chapter 3	3-1 and 3-2	3-1 and 3-2
	3-7 and 3-8	3-7 and 3-8
	3-11 and 3-12	3-11 and 3-12
Chapter 4	4-5 and 4-6	4-5 thru 4-6.1/4-6.2
	4-33 and 4-34	4-33 and 4-34
	4-43 and 4-44	4-43 and 4-44
Chapter 6	6-15 and 6-16	6-15 and 6-16

2. New or changed text material is indicated by a vertical bar in the margin. An illustration change is indicated by a miniature pointing hand.

3. Retain this sheet in front of manual for reference purposes.

By Order of the Secretary of the Army:

E. C. MEYER
General, United States Army
Chief of Staff

Official:

ROBERT M. JOYCE
Brigadier General, United States Army
The Adjutant General

DISTRIBUTION:
To be distributed in accordance with DA Form 12-25A, Operator Maintenance Requirements for Air Compressors, 5 CPM.

CHANGE No. 1

HEADQUARTERS
DEPARTMENT OF TEE ARMY
Washington, DC, *4 December 1978*

OPERATOR, ORGANIZATIONAL, DIRECT SUPPORT AND
GENERAL SUPPORT MAINTENANCE MANUAL

COMPRESSOR, RECIPROCATING: AIR:
HANDTRUCK MOUNTED, GASOLINE ENGINE
DRIVEN 5 CFM, 175 PSI (KELLOGG
AMERICAN MODEL G-311-PC)
NSN 4310-00-843-8885

TM 5-4310-276-14, 15 February 1978, is changed as follows:

1. Remove old pages and insert new pages as indicated below.

2. New or changed material is indicated by a vertical bar in the margin of the page.

3. Added or revised illustrations are indicated by a vertical bar adjacent to the illustration identification number.

Remove Pages	*Insert Pages*
1-1 and 1-2	1-1 and 1-2
	E-1 and E-2
	F-1/(F-2 blank)

4. File this change sheet in front of publication for reference purposes.

By Order of the Secretary of the Army:

BERNARD W. ROGERS
General, United States Army
Chief of Staff

Official:

J.C. PENNINGTON
Brigadier General, United States Army
The Adjutant General

Distribution:
To be distributed in accordance with DA Form 12-25A, Operator maintenance requirements for Air Compressors, 5 CFM.

TECHNICAL MANUAL

NO. 5-4310-276-14

HEADQUARTERS
DEPARTMENT OF THE ARMY
Washington, DC, *15 February 1978*

OPERATOR, ORGANIZATIONAL, DIRECT SUPPORT AND GENERAL SUPPORT MAINTENANCE MANUAL

COMPRESSOR, RECIPROCATING: AIR: HANDTRUCK MOUNTED, GASOLINE ENGINE DRIVEN 5CFM, 175 PSI (KELLOGG AMERICAN MODEL G-311-PC) NSN 4310-00-843-8885

REPORTING ERRORS AND RECOMMENDING IMPROVEMENTS

You can help improve this manual. If you find any mistake or if you know of a way to improve the procedures, please let us know. Mail your letter, DA Form 2028 (Recommended Changes to Publications and Blank Forms), or DA Form 2028-2 located in the back of this manual direct to: Commander, U.S. Army Troop Support Command, ATI'N: AMSTR-MCTS, 4300 Goodfellow Boulevard, St. Louis, MO 63120-1798. A reply will be furnished directly to you.

Table of Contents

*This manual supersedes TM 5-4310-276-15, 6 September 1868, including all changes.

CHAPTER 1

INTRODUCTION

Section I. GENERAL

1-1. Scope

a. These instructions are published for use by personnel to whom the Model G-311-PC Reciprotating Compressor is issued. Chapters 1 through 4 provide information on operation, preventive maintenance services, and organizational maintenance of equipment, accessories, components and attachments. Chapters 5 through 7 provide information for direct and general support maintenance. Also included are descriptions of main units and their functions in relationship to other components.

b. Numbers in parentheses following nomenclature callouts on illustrations indicate quantity.

1-2. Maintenance Forms and Records

a. DA Form 2404 (Equipment Inspection and Maintenance Worksheet).

b. DA Form 2407 (Maintenance Request Used for Requesting Support Maintenance.

c. DA Form 2407-1 (Continuation Sheet Used for Requesting Support Maintenance.

d. For further information, refer to DA Pam 738-750, The Army Maintenance Management System (TAMMS).

1-2.1. HAND RECEIPT

Hand receipts for the End Item/Component of End Item (COEI), Basic Issue Items (BII), and Additional Authorized List (AAL) items are published in a Hand Receipt Manual. The Hand Receipt Manual numerical designation is the same as the related Technical Manual with the letters HR added to the number. These manuals are published to lid in property accountability and are available through: Commander, US Army Adjutant General Publication Center, 2800 Eastern Blvd., Baltimore, MD 21220-2896.

1-3. Administrative Storage

a. Storage Site.

(1) Select the best available site for administrative storage. Separate stored equipment from equipment in use. Conspicuously mark the area "Administrative Storage".

(2) Covered space is preferred. When sufficient covered space for all items to be stored is not available, priority should be given to items which are most susceptible to deterioration.

(3) Open sites should be improved hardstand, if available. Unimproved sites should be firm, well drained, and kept free of excessive vegetation.

b. Storage Plan.

(1) Store equipment so as to provide maximum protection from the elements and to provide access for inspection, maintenance, and exercising Anticipate removal or deployment problems and take suitable precaution.

(2) Take into account environmental conditions such as extreme heat or cold; high humidity; blowing sand, duet, or loose debris; soft ground; mud; heavy snows; earthquakes; or combinations thereof and take adequate precautions.

(3) Establish a fire plan and provide for adequate firefighting equipment and personnel.

(4) For further information, refer to TM 740-90-1 (Administrative Storage).

1-4. Destruction of Army Material to Prevent Enemy Use

a. Demolition of Air Compressors. Methods of destruction should achieve such damage to equipment and repair parts that it will not be possible to restore the equipment to a usable condition in the combat zone either by repair or cannibalisation.

(1) Mechanical destruction. Using an axe, pick, sledge hammer, or any heavy implement, damage the engine assembly, air receiver tank and all other vital parts.

(2) Explosives. Place 1/2-pound (0.225 kilogram) charges on the following items for demolition using explosives:

(a) One 1/2-pound (0.225 kg) charge between fuel tank and the air receiver tank.

(b) One 1/2-pound (0.225 kg) charge between engine and compressor assembly.

b. Additional lnformation. For additional information on procedures for destruction of equipment to prevent enemy use, refer to TM 750-244.9.

1-5. Reporting Error and Recommending Improvements

(Deleted)

Section II. DESCRIPTION AND DATA

1-6. Description

a. General. The Kellogg-American Model G 311-PC Air Compressor, Serial Number range 585130 through 588000 (figs. 1-1 and 1-2), is a two-stage, reciprocating type designed to deliver 5 cfm (cubic feet per minute) of compressed air at 175 psig (pounds per square inch gage) and powered by a Military Standard Model 1A08 Gasoline Engine. The compressor pump and engine are mounted on a two-wheel pneumatic tire handtruck. The maintenance paragraph of this manual contain detailed descriptions of its components.

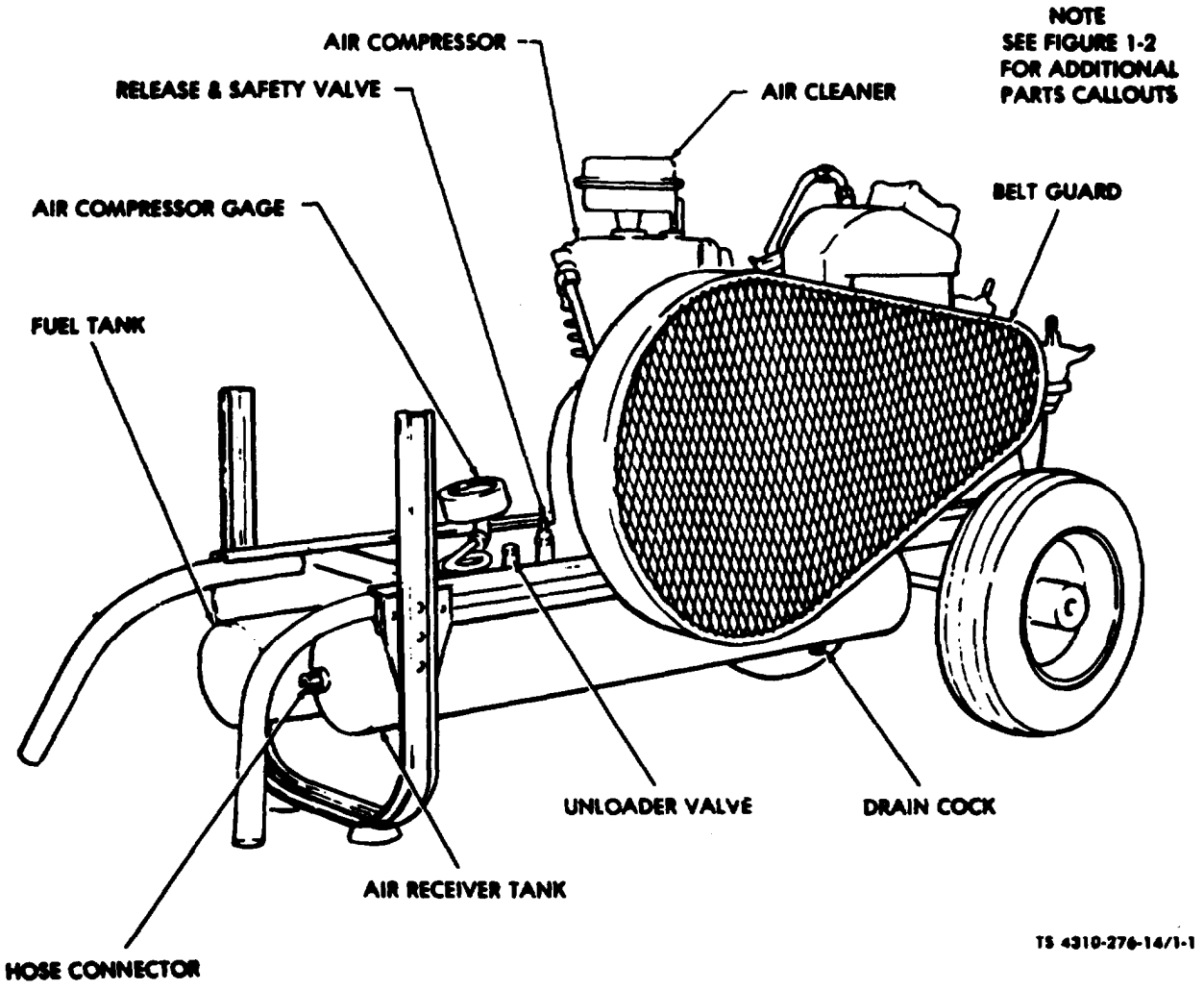

Figure 1-1. Air Compressor Assembly, Right Rear, Three-Quarter View.

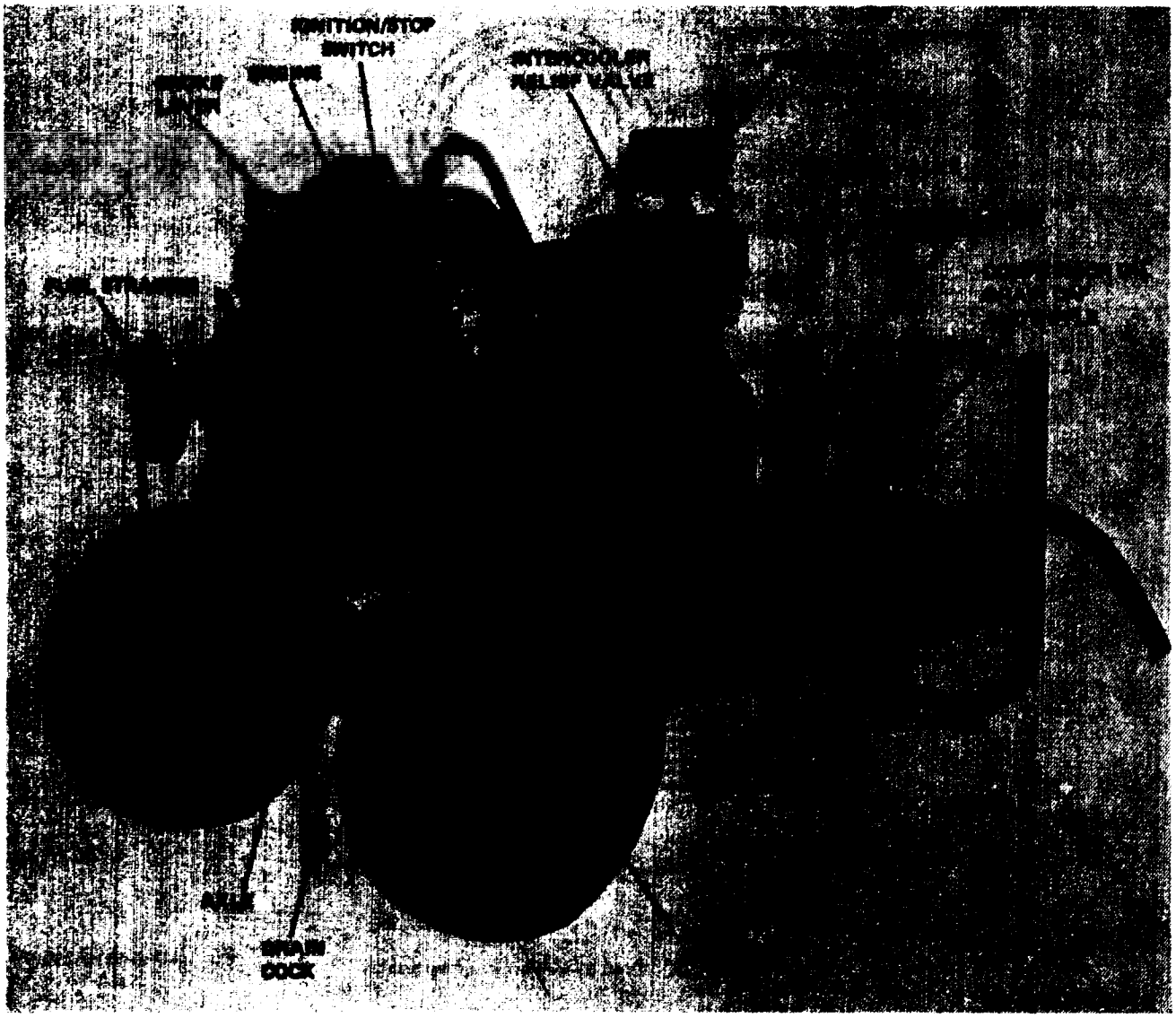

Figure 1-2. Air compressor assembly, left front, three-quarter view.

b. Compressor. The commpressor is a two-cylinder, two-stage, air cooled unit. It will deliver 5 cfm of air at 175 psig to the air receiver tank when belt-driven by the gasoline engine running at a speed of 3,600 rpm (revolutions per minute.) Filtered air as shown in figure 1-3 is drawn into the low pressure cylinder (the large one) at atmospheric pressure as the piston moves down. Air is compressed when the piston is moving upward, this action closes the inlet valves and opens the outlet valves, through which the air is forced into the intercooler. As the air flows through the intercooler much of the heat of compression is dissipated. The second stage is similar to the first, except the air enters the high pressure cylinder and is recompressed to higher pressure. The air next flows through the aftercooler where it is cooled before passing into the air receiver tank.

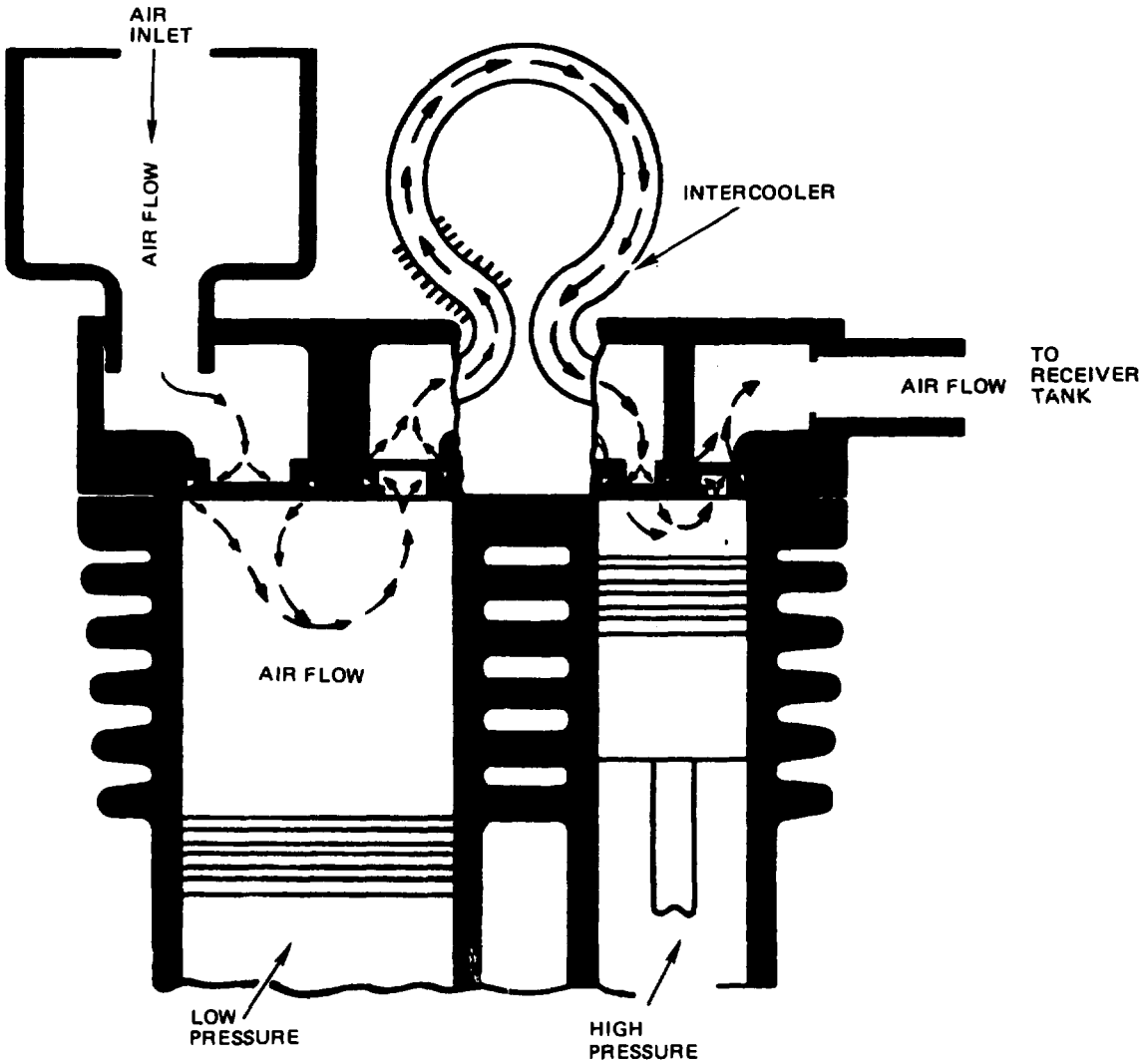

Figure 1-3. Typical two stage compressor. TS 4310-276-14/1-3

c. Engine. Air Compressor Model G-311-PC is driven by a Military Standard Model 1A08-III, 1.5 HP gasoline engine. Refer to Chapter 6 for a description of the engine.

d. Model Differences. This manual covers only the Kellogg-American Model G-311-PC Air Compressor. No known unit differences exist for the model covered by this manual.

1-7. Tabulated Data

a. Identification. The Model G-311-PC Air Compressor has two major identification plates. The information contained on these plates is listed below.

(1) End item identification plate. The Air Compressor plate specifies the name of the manufacturer, model number, date of manufacture, serial number and the National Stock Number. The plate is mounted on the left rear of the handtruck.

(2) Compressor identification plate. The compressor pump plate specifies the name of the manufacturer, the model number, and the serial number of the pump. The plate is mounted on the end cover of the pump.

(3) Engine identification plate. An identification plate is mounted on each flywheel housing of the engine. The plate indicates the make, model, serial number, stock number, and other pertinent maintenance data.

b. Operator Data.

(1) Model G-311-PC air compressor.

Manufacturer	Kellog-American, Inc.
Model	G-311-PC
Output	5 cfm at 175 psi
Type	Gas engine driven, handtruck mounted
Serial Number	585130 through 588000

(2) Engine.

Make	Military Standard Engine
Model	1A08-1, 1A08-2 and 1A08-3
Type	4-Cycle, gasoline, overhead valve, air cooled
Number of cylinders	1

Bore . . . . . 2.250 in. (5.715 cm)
Stroke . . . . . 2 in. (5.08 cm)
Piston displacement . . . . . 8 cu. in. (131.12 cu cm)
Compression ratio. 6:1
Horsepower at 3,600 rpm 1.5

(3) Air compressor.
Manufacturer . . . . . Kellogg-American Inc.
Model . . . . . 311 TV
Type. . . . . 2 Stage Vertical
Speed... . . . . 860 rpm
Bore and stroke
Low pressure . . . . . 3 in. x 2 in. (7.62 cm x 5.08 cm)
High pressure . . . . . 1 1/2 in. x 2 in. (3.81 cm x 5.08 cm)

(4) Compressor air cleaner.
Manufacturer . . . . . Dollinger Corporation
Type . . . . . Dry type-cleanable

(5) Capacities.
Compressor crankcase . . . . . 1 2/3 pints (0.8 liters)
Air receiver tank, ... 2 gallon (7.6 liters)
Fuel tank . . . . . 1.9 gallons (7.2 liters)

c. *Organizational Maintenance Data.*
(1) Compressor.
(a) Air hose.
Length . . . . . 25 feet (7.6 m)
Diameter . . . . . 5/16 inside diameter (7.9 mm)
Maximum pressure . . . . . 200 psi (14 kg/sq cm)

(b) Dimensions and weight.
Length . . . . . 52 inches (1.32 m)
Width . . . . . 22 inches (0.56 m)
Height . . . . . 27 inches (0.69 m)
Weight, net . . . . . 142 lbs (64.4 kg)
Shipping weight . . . . . 262 lbs (118.8 kg)
Volume. . . . . 28 cu ft (0.8 cu m)

(2) Engine.
(a) Carburetor.
Make . . . . . Military design

(b) Fuel pump.
Make . . . . . Military design
Type . . . . . Diaphragm
Fuel pump outlet
pressure . . . . . 3.0 to 4.5 psi (0.21 to 0.32 kg/sq cm)

(c) Air cleaner.
Make . . . . . Military design
Type:
Model 1A08-1 . . . . . Oil bath
Model 1A08-2 . . . . . Oil bath
Model 1A08-3 . . . . . Dry

(d) Spark plug.
Make . . . . . Military Standard
Type . . . . . Shielded

(e) Governor.
Make . . . . . Military design

(f) Fuel filter.
Make . . . . . Military design

(g) Adjustments.
Spark plug gap . . . . . 0.028-0.033 in. (0.071-0.838 cm)
Contact point gap . . . . . 0.016-0.020 in. (0.406-0.050 cm)
Valve Tappet clearance
(intake and exhaust) . . . . 0.007 in. to 0.009 in. (0.017 to 0.027 cm) cold

(h) Oil capacities.
Model 1A08-1 . . . . . 1/2 qt. (0.47 liter)
Model 1A08-2 . . . . . 1/2 qt. (0.47 liter)
Model 1A08-3 . . . . . 1/2 qt. (0.47 liter)

(i) Dimensions and Weights (Model 1A08-1).
Length . . . . . 12 1/2 in. (31.75 cm)
Width . . . . . 15 3/4 in. (40.0 cm)
Height . . . . . 14 1/2 in. (36.8 cm)
Weight . . . . . 28 lbs (12.69 kg)

(j) Dimensions and Weights (Model 1A08-2).
Length . . . . . 12 1/2 in. (31.75 cm)
Width . . . . . 15 3/4 in. (40.0 cm)
Height . . . . . 14 1/2 in. (36.8 cm)
Weight. . . . . 29 3/8 lbs. (13.32 kg)

(k) Dimensions and Weights (Model 1A08-3).
Length . . . . . 17 3/4 in. (45.08 cm)
Width . . . . . 17 3/4 in. (45.08 cm]
Height . . . . . 14 1/4 in. (36.19 cm)
Weight . . . . . 29 lbs. (13.15 kg)

d. Direct and General Support Maintenance Data.
(1) Compressor Torque Data.
Cylinder head bolts . . . . . 10 ft-lb
Cylinder to base bolts . . . . . 18 ft-lb
End cover bolts . . . . . 5 ft-lb
Connecting rod bolts . . . . . 8 ft-lb
Flywheel pulley bolt . . . . . 43 ft-lb

***(2)* Engine.**
(a) Nut and Bolt Torque Data.
Torque Weight Specifications (Dry)

Flywheel bolt nuts . . . . . 240-300 in-lb
Cylinder head nuts . . . . . 140-155 in-lb
Rocker arm adjusting
screw lock nuts . . . . . 44-55 in-lb
Intake manifold to cylin-
der head bolts.., ... 45-50 in-lb
Muffler to cylinder head
nuts. . . . . 60-85 in-lb
Spark plugs . . . . . 275-300 in-lb
Connecting rod bolts
(with molykote on
threads) . . . . . 90-100 in-lb
Oil pan cap screws . . . . . 25-30 in-lb
Bearing cap nuts . . . . . 100-125 in-lb
Fuel pump to crank case
bolts . . . . . 45-50 in-lb
Governor housing mount-
ing screws . . . . . 25-30 in-lb
Carburetor to intake
manifold . . . . . 60-85 in-lb

(b) Overhaul Data.
Bore . . . . . 2.25 in. (5.715 cm)
Stroke . . . . . 2.00 in. (5.08 cm)
Compression ratio 6:1

Horsepower:
Model 1A08-1 . . . . . 1.50 at 3,600 rpm (revolutions per minute)
Model 1A08-2 . . . . . 1.50 at 3,600 rpm
Model 1A08-3 . . . . . 1.50 at 3,600 rpm
Cylinder compression
minimum . . . . . 90 psi (6.3 kg/sq cm)
Spark plug gap . . . . . 0.028-0.033 (0.071-0.083 cm)
Magneto contact gap . . . . . 0.016-0.020 (0.040-0.050 cm)
Carburetor float level . . . . . 0.00-0.3 (0.00-0.762 cm from top of casting to top of float)
Fuel pump outlet
pressure . . . . . 3.0-4.5 psi (0.21 to 0.32 kg/sq cm)
Valve tappet clearance
(intake and exhaust) . . . . 0.007 to 0.009 (0.017 to 0.022 cm) (cold)

e. Engine Repair and Replacement Standards. Table 1-1 lists the manufacturer's sizes, tolerances, desired clearances, and maximum allowable wear for Military standard engines, 1 1/2 HP Models 1A08-1, 1A08-2 and 1A08-3.

NOTE

The manufacturer's dimensions and tolerances are given in inches and Metric measurements. All Metric units are enclosed in parenthese.

Table 1-1. Engine Repair and Replacement Standards

Components	Mfr's dimensions and tolerances in inches (cm)		Desired clearance in inches (cm)		Maximum allowable wear in inches (cm)	Maximum allowable clearance in inches (cm)
	Minimum	Maximum	Minimum	Maximum	Ž Denotes replacement necessary if Mfr's tolerances are exceeded	
CAMSHAFT						
Bearing surface i.d.	0.3747 (0.9517)	0.3767 (0.9568)	0.0014 (0.0035)	0.0037 (0.0093)	0.3780 (0.0601)	0.0060 (0.0152)
Camshaft axle dia.	0.3730 (0.9474)	0.3733 (0.9481)	0.0014 (0.0035)	0.0037 (0.0093)	0.3720 (0.9448)	0.0060 (0.0152)
Cam lift	0.1827 (0.4640)	0.1867 (0.4742)			0.1770 (0.4495)	
Cam lobe wear	1.3287 (3.3748)	1.3247 (3.3647)				
End play	0.0070 (0.0177)	0.0170 (0.0431)				
CRANKSHAFT						
Main baring journals:						
Front	0.0385 (2.3837)	0.9395 (2.3863)	0.0005T (0.0012)	0002T (0.0050)	•	
Rear	0.9385 (2.3837)	0.9395 (2.3863)	0.0005T (0.0012)	0.002T (0.0050)	•	
Connecting rod journal o.d.	0.8745 (2.2212)	0.8750 (2.2225)	0.9939 (0.0099)	0.0053 (0.0134)	•	
End play	0.0000 (0.0000)	0.0030 (0.0070)				
Crankshaft bearings Scaring i.d.	0.9375 (2.3812)	0.9380 (2.3825)	0.0005T (0.0012)	0.0020T (0.0050)	•	
Bearing o.d. (cup)	1.9687 (5.004)	1.9697 (5.0030)	0.0017T (0.0043)	0.0037T (0.0093)	•	
CONNECTING RODS						
Large end i.d.	0.8789 (2.2324)	0.8798 (2.2346)	0.0039 (0.0099)	0.0053 (0.0134)	•	
Small end i.d.	0.4200 (1.0668)	0.4205 (1.0680)	0.0005 (0.0012)	0.0015 (0.0038)	•	
Piston pin diameter	0.4190 (1.0642)	0.4195 (1.0655)	0.0005 (0.0012)	0.0015 (0.0038)	•	
Side clearance	0.0200 (0.0508)	0.0360 (0.0914)				0.040 (0.1016)
Piston pin clearance in bearing	(see above)					
PISTON						
Piston pin hole dia.	0.4195 (1.0655)	0.4200 (1.0668)	0.0000 (0.0000)	00010 (0.0025)	0.4203 (1.0675)	0.0013 (0.0033)
Skirt o.d.						
A-top	2.2475 (5.7086)	2.2480 (5.7099)	0.0015 (0.0038)	0.0025 (0.0063)	2.2470 (5.7073)	0.0050 (0.0127)
Bottom	2.2485 (5.7111)	2.2490 (5.7124)	0.0005 (0.0127)	0.0015 (00038)	2.2480 (5.7099)	0.0030 (0.0076)
B-top	2.2480 (5.7099)	2.2485 (5.7111)	0.0015 (0.0038)	0.0025 (0.0063)	2.2475 (5.7086)	0.0050 (0.0127)
Bottom	2.2490 (5.7124)	2.2495 (5.7137)	0.0005 (0.0127)	0.0015 (0.0038)	2.2485 (5.7111)	0.0030 (0.0076)
C-top	2.2485 (5.7111)	2.2490 (5.7124)	0.0015 (0.0038)	0.0025 (0.0063)	2.2480 (5.7099)	0.0050 (0.0127)
Bottom	2.2495 (5.7137)	2.2500 (5.7150)	0.0005 (0.0127)	0.0015 (0.0038)	2.2490 (5.7124)	0.0030 (0.0076)
D-top	2.2490 (5.7124)	2.2495 (5.7137)	0.0015 (0.0038)	0.0025 (0.0063)	2.2485 (5.7111)	0.0050 (0.0127)

Table 1-1. Engine Repair and Replacement Standards (Cont'd)

Components	Mfr's dimensions and tolerance in inches (cm)		Desired clearance in inches (cm)		Maximum allowable wear in inches (cm)	Maximum allowable clearance in inches (cm)
	Minimum	Maximum	Minimum	Maximum	ŽDenotes replacement necessary if Mfr's toleances are exceeded	
PISTON (Cont'd)						
Skirt o.d. (Cont'd)						
D-Bottom	2.2500 (5.7150)	2.2505 (5.7162)	0.0005 (0.0127)	0.0015 (0.0038)	2.2495 (5.7137)	0.0030 (0.0076)
Piston ring groove dia						
Top	1.9980 (5.0749)	2.0080 (5.1003)			*	
Second	1.9500 (4.9530)	1.9600 (4.9784)			*	
Third	1.9500 (4.9530)	19600 (4.9784)			*	
Piston ring groove width						
Top	0.1205 (0.3060)	0.1215 (0.3086)	0.0020 (0.0050)	0.0050 (0.0127)	*	
Second	0.0955 (0.2425)	0.0965 (0.2451)	0.0015 (0.0038)	0.0035 (0.0088)	*	
Third	0.1880 (0.4775)	0.1890 (0.4800)	00010 (0.0025)	0.0030 (0.0076)	*	
Piston rings						
Width: spacer	0.0235 (0.0596)	0.0245 (0.0622)			*	
Top	0.0930 (0.2362)	0.0940 (0.2387)			*	
Second	0.0930 (0.2362)	0.0940 (0.2387)			*	
Third	0.1860 (0.4724)	0.1870 (0.4749)			*	
Thickness: Spacer	0.1110 (0.2819)	0.1150 (0.2921)			*	
Top	0.0940 (0.2387)	0.1040 (0.2641)			* *	
Second	0.0940 (0.2387)	0.1040 (0.2641)			*	
Third	0.0940 (0.2387)	0.1040 (0.2641)			*	
Gap clearance spacer	0.0005 (0.0012)	0.0350 (0.0889)	Over 1.9820 (5.0342)	Dia. Plug	*	
Top	0.0070 (0.0177)	0.0170 (0.0451)	In bore		*	
Second	0.0070 (0.0177)	0.0170 (0.0431)	In bore		*	
Third	0.0070 (0.0177)	0.0170).0431)	In bore		*	
Side clearance						
First	00020 (0.0050)	0.0050 (0.0127)			*	
Second	0.0015 (0.0038)	0.0035 (0.0088)			*	
Third	0.0010 (0.0025)	0.0030 (0.0076)			*	
VALVES						
Exhaust and intake						
Length to gage point	2.7885 (7.0827)	2.7935 (7.0954)			2.7850 (7.0739)	
Stem diameter	0.3100 (0.7874)	0.3105 (0.7886)	0.0020 (0.0050)	0.0030 (0.0076)	0.3095 (0.7861)	0.0045 (0.0114)
Head diameter	0.8390 (2.1310)	0.8490 (2.1564)				

Table 1-1. Engine Repair and Replacement Standards (Cont'd)

Components	Mfr's dimensions and tolerance in inches (cm)		Desired clearance in inches (cm)		Maximum allowable wear in inches (cm)	Maximum allowable clearance in inches (cm)
	Minmum	Maximum	Minimum	Maximum	•Denotes replacement necessary if Mfr's tolerances are exceeded	
VALVES (Cont'd)						
Exhaust and intake (Cont'd)						
••Head diameter	0.9010 (2.2885)	0.9110 (2.3139)				
Seal angle	45°45'	46°0'				
Stem to guide clearance	0.0020 (0.0050)	0.0030 (0.0076)				0.0045 (0.0114)
Clearance valve to lift	0.0040 (0.0101)	0.0070 (0.0177)	Cold			
Minimum edge thickness of valve head relative to seat surface						0.0310 (0.0787)
VALVE SPRINGS						
Length (valve open)	0.8800 (2.2352)	0.8800 (2.2352)			40 (18144.)	
Pounds load (valve open)	42 (19051.2)	46 (20865.5)			40 (18144.)	
Length (valve closed)	1.0950 (2.7813)	1.0950 (2.7813)				
Pounds load (valve closed)	19 (8618.4)	21 (9525.6)			18 (8164.8)	
VALVE GUIDE						
Exhaust and intake						
Inside diameter	0.3125 (0.7937)	0.3125 (0.7937)	0.0020 (0.0050)	0.0030 (0.0076)	0.3145 (0.7988)	0.0045 (0.0114)
VALVE SEAT INSERTS						
Exhaust and intake						
Outside diameter	0.8670 (2.2021)	0.8770 (2.2275)	0.003T (0.0076)	0.005T (0.0127)	•	
Inside diameter	0.7450 (1.8923)	0.7500 (1.9050)			•	
Seat angle	44°45'	45°0'				
VALVE TAPPETS						
Outside diameter	0.4974 (1.2633)	0.4979 (1.2646)	0.0006 (0.0015)	0.0018 (0.0045)	0.4970 (1.2623)	0.0025 (0.0063)
Clearance in guide	0.0006 (0.0015)	0.0018 (0.0045)				0.0025 (0.0063)
Tappet guide i.d.	0.4987 (1.2666)	0.4992 (1.2679)	0.0006 (0.0015)	0.0018 (0.0045)	0.4995 (1.2687)	0.0025 (0.0063)
Rocker arms						
Rocker arm i.d.	0.6245 (1.5862)	0.6255 (1.5887)			•	
Rocker shaft o.d.	0.4375 (1.1112)	0.4380 (1.1125)	0.0000 (0.0000)	0.0008 (0.0020)	0.4370 (1.1099)	0.0013 (0.0033)
Rocker arm bearing i.d. in rocker arm	(See below)					
CYLINDERS						
Bore						
Out of round						
Taper						
OIL PUMP						
Gear to end cover tolerance	N/A					
Gear tooth tolerance o.d.	N/A					
Timing gear tooth tolerance backlash	0.0020 (0.0050)	0.0040 (0.0101)				0.0060

**Used on engine with latest Intake Valve configuration, on earlier models the intake valve in the same as the exhaust valve dimensions.

Table 1-1. Engine Repair and Replacement Standards (Cont'd)

Components	Mfr's dimension and tolerances in inches (cm)		Desired clearance in inches (cm)		Maximum allowable wear in inches (cm)	Maximum allowable clearance in inches (cm)
	Minimum	Maximum	Minimum	Maximum	ŽDenotes replacement necessary if Mfr's tolerances are exceeded	
CYLINDER						
A-Bore	2.2495 (5.7137)	2.2500 (5.7150)	0.0005 (0.0012)	0.0015 (0.0038)	2.2520 (5.7200)	0.0030 (0.0076)
B-Bore	2.2500 (5.7150)	2.2505 (5.7162)	0.0005 (0.0012)	0.0015 (0.0015)	2.2525 (5.7213)	0.0030 (0.0076)
C-Bore	2.2505 (5.7162)	2.2510 (5.7175)	0.0005 (0.0012)	0.0015 (0.0015)	2.2530 (5.7226)	0.0030 (0.0076)
D-Bore	2.2510 (5.7175)	2.2515 (5.7188)	0.0005 (.0012)	0.0015 (.0015)	2.2535 (5.7238)	0.0030 (0.0076)
Out of round	0.0000 T. I R. (0.0000)	0.0010 T. I R. (0.0025)			0.0020 T. I. R. (0.0050)	
Taper	0.0000 (0.0000)	0.0020 (0.0050)			0.0030 (0.0076)	

f. Compressor Repair and Replacement Standards. Table 1-2 lists the manufacturer's sizes, tolerances, desired clearances and maximum allowable wear for Kellogg-American, Inc., Air Compressor, Model 311TV.

NOTE

The manufacturer's dimensions and tolerances are given in inches and centimeters. Centimeter are enclosed in parentheses.

Table 1-2. Compressor Repair and Replacement Standards

Components	Mfr's dimensions and tolerances in inches (cm)		Desired clearance in inches (cm)		Maximum allowable wear and clearance in inches (cm)
	Minimum	Maximum	Minimum	Maximum	•Denotes replacement necessary if Mfr's tolerances are
Cylinders:					
Bore, low pressure	3.0000 (7.6200)	3.0010 (7.6230)	0.0045 (0.0114)	0.0060 (0.0150)	3.0030 (7.6280)
Bore, high pressure	1.5000 (3.8100)	1.5008 (3.8120)	0.0009 (0.0023)	0.0022 (0.0056)	1.5028 (3.8171)
Bores, out-of-round					0.0010 (0.0030)
Crankshaft:					
Journal (rod) size	0.8746 (2.2215)	0.8750 (2.2225)	0.0011 (0.0028)	0.0019 (0.0048)	0.8736 (2.2189)
Taper					0.0010 (0.0030)
Out of round					0.0010 (0.003)
End play			0.0000	0.0020 (0.0050)	0.0020 (0.0050)
Piston to Cylinder:					
Low, pressure, skirt	2.9950 (7.6073)	2.9955 (7.6086)	0.0045 (0.0114)	0.0060 (0.0150)	2.9930 (7.6020)
High pressure, skirt	1.4986 (3.8064)	1.4991 (3.8077)	0.0009 (0.0023)	0.0022 (0.0056)	1.4966 (3.8014)
Piston Ring Gap:					
Low pressure	0.0100 (0.0254)	0.0150 (0.0381)	0.0100 (0.0254)	0.0150 (0.0381)	0.0250 (0.0635)
High pressure	0.0070 (0.0180)	0.0120 (0.0305)	0.0070 (0.0180)	0.0120 (0.0305)	0.0220 (0.0559)
Piston Pin in Rod:					
Low pressure	0.5001 (1.2703)	0.5003 (1.2708)	0.0005 (0.0013)	0.0015 (0.0038)	0.4999 (1.2697)
High pressure	0.5001 (1.2703)	0.5003 (1.2708)	0.0005 (0.0013)	0.0015 (0.0038)	0.4999 (1.2697)
Piston Pin Boss:					
Low pressure	0.4995 (1.2687)	0.5000 (1.2700)	0.0000	0.0000	0.5002 (1.2705)
High pressure	0.4995 (1.2687)	0.5000 (1.2700)	0.0000	0.0000	0.5002 (1.2705)
Connecting Rod Bore:					
Piston pin end	0.5005 (1.2713)	0.5010 (1.2725)	0.0005 (0.0013)	0.0015 (0.0038)	0.5012 (1.2730)
Crankcase end	0.8761 (2.2253)	0.8765 (2.2263)	0.0011 (0.0028)	0.0019 (0.0048)	0.8767 (2.2268)

CHAPTER 2
OPERATING INSTRUCTIONS

Section I. OPERATING PROCEDURES

2-1. General

a. Instructions in this section are published for information and guidance of personnel responsible for operation of the air compressor.

b. The operator must know how to perform every operation of which the air compressor is capable. This section gives instructions on starting and stopping the air compressor, basic motions of the air compressor, and on coordinating basic motions to perform specific tasks for which the equipment is designed. Since nearly every job presents a different problem, the operator may have to vary given procedures to fit the individual job.

WARNING

Operation of this equipment presents a noise hazard to personnel in the area. The noise level exceeds the allowable limits for unprotected personnel. Wear ear muffs or earplugs which were fitted by a trained professional.

WARNING

This compressor is not suitable for the supply of air for charging cylinders with breathable air.

2-2. Starting

a. Preparation for Starting. Perform the necessary procedures before preventive services as indicated in table 3-1.

b. **Starting.** Refer to figure 2-1 and start the air compressor.

(1) Turn ignition switch on.

(2) Open draincock.

(3) Close choke lever.

(4) Before starting, raise release valve lever to unload compressor.

(5) Wind starter rope clockwise around starter pulley.

(6) With a quick, steady pull, start the engine.

(7) When engine starts, gradually open choke lever.

(8) Place release lever in down position.

(9) Close draincock.

(10) Perform the necessary procedures during operation preventive services as indicated on table 3-1.

(11) Observe for any unusual noise or vibration.

2-3. Stopping

a. Refer to figure 2-1 and stop the compressor.

(1) Turn ignition switch off.

(2) Open draincock to blow air and condensate from tank.

(3) close draincock.

b. Perform the necessary procedures after operation preventive services as indicated on table 3-1.

2-4. Operation

a. Start the air compressor.

b. Refer to figure 2-1 and operate the air compressor.

(1) Check pressure gage reading. It should read between 140 to 175 psi (9.8 to 12.3 kg/sq cm).

(2) Unloader valve is set to unload at 175 psi (12.3 kg/sq cm). To increase pressure, turn valve clockwise. To decrease pressure, turn valve counterclockwise.

NOTE

Air compressor will continue to cycle as long as fuel is fed to the engine.

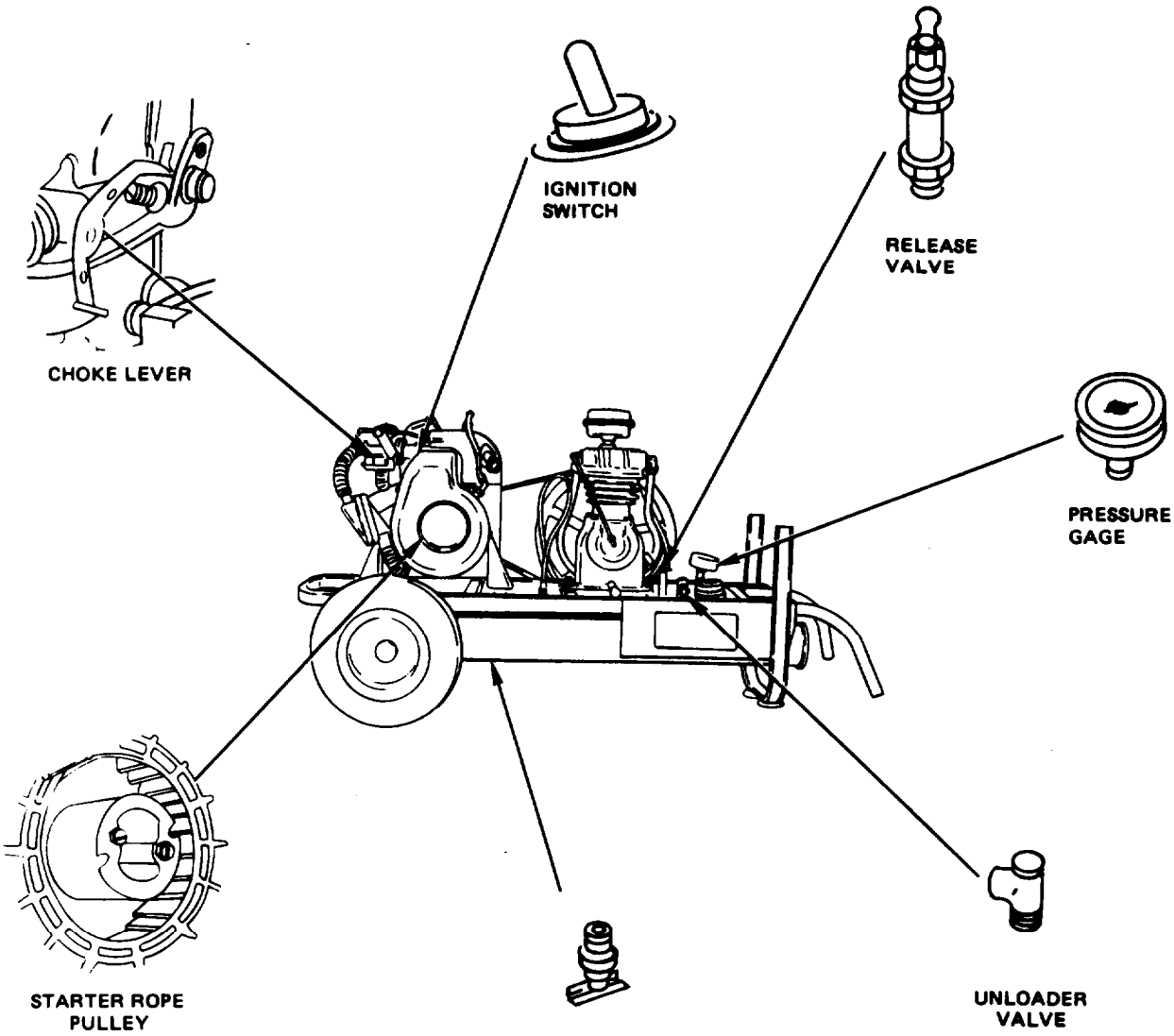

Figure 2.1. Operating the Air Compressor

TS 4310-276-14/2-1

Section II. OPERATION OF AUXILIARY EQUIPMENT

2-5. General

This section contains instructions for operation and maintenance for the portable fire extinguisher available for issue with the compressor assembly.

2-6. Fire Extinguisher (Monobromotrifluoromethane Type)

a. Description. The mono bromotrifluoromethane type fire extinguisher is generally suitable for all types of fires, except fires involved with LOX (liquid oxygen) generating equipment. The fire extinguisher is furnished with a disposable type cylinder.

b. Operation. To operate the fire extinguisher, perform the following:

(1) Remove fire extinguisher from its location.

(2) Break seal by pulling safety pin from handle.

(3) Point horn at base of flame.

(4) Press trigger for discharge and direct stream at base of flame.

(5) Replace cylinder immediately after using.

c. Replacement of Cylinder. To replace cylin-

der, perform the following:

(1) Press lever to release pressure from used cylinder.

(2) Loosen swivel valve coupling nut and remove valve assembly from used cylinder.

(3) Remove instruction band from used cylinder.

(4) Place new cylinder through instruction band.

(5) Replace safety pin in valve and seal pin with sealing wire.

(6) Attach valve assembly and tighten swivel coupling nut on the new cylinder and place fire extinguisher in mounting bracket.

(7) Adjust instruction band on cylinder to show maintenance and operating instructions.

d. Maintenance. Weigh fire extinguisher every 3 months and replace cylinder if gross weight has decreased 4 ounces (113.4 grams) or more. Lubricats cylinder neck threads with one drop of OE 30 oil before reassembly.

Section III. OPERATION UNDER UNUSUAL CONDITIONS

2-7. Operation in Extreme Cold (Below 0°F (-18°C))

a. Locate the air compressor in a shed or building whenever possible. If the unit is operated outdoors, protect it from prevailing winds and cover it with a tarpaulin when not in use.

b. Lubricate the air compressor in accordance with figure 3-1.

c. Avoid excessive handling, kinking, and sharp bending of the air hose, which will become brittle at low temperature.

d. Keep all fuel tanks and storage containers filled with fuel to prevent formation of ice crystals from the freezing of condensate. Such crystals will clog fuel lines and carburetor jets. Use filter paper, chamois, or other type strainer when filling the fuel tank *or* transferring fuel from one container to another.

WARNING

Always provide a metallic contact between the fuel container and the fuel tank. This will prevent a spark from being generated as the gasoline flows over metallic surfaces.

e. Allow engine to reach normal operating temperature before applying load.

2-8. Operation in Extreme Heat

a. Lubricate the air compressor in accordance with figure 3-1.

b. Check the drive-belt tension frequently. Improper drive-belt tension often results in over-heating.

c. Locate the air compressor in an 'operating area that is well ventilated or provide intake and exhaust fans to ventilate in closed areas.

d. Fill the fuel tank at the end of each day's operation, especially in areas where the temperature drops sharply at night. This will prevent condensation from forming in the fuel tank.

e. Keep the engine clean. Service the engine air cleaner as often as' necessary (figure 3-2).

2-9. Operation in Dusty or Sandy Areas

a. Lubricate the air compressor in accordance with figure 3-1, making sure that all lubrication points are free from dirt and sand before applying lubricant. Keep all lubricant containers clean and tightly closed. Do not lubricate excessively as dirt and sand will adhere to excess lubricant and may work into moving parts. Wipe off all lubrication points after lubricating.

b. Protect the air compressor from dust with screens, shelters, built from tarpaulin, or other dustproof material. Keep the unit covered when not in use.

c. Clean the compressor air cleaner more often than when operating under normal conditions.

d. Take adequate precautions to prevent sand and dirt from entering the fuel tank. Service the fuel strainer as often as necessary to keep the bowl free from dirt or sand. Clean the engine air cleaner more often than usual.

2-10. Operation Under Rainy or Humid Conditions

a. Protect the unit with a shelter, keeping the sides open for ventilation.

b. Make sure all surfaces requiring lubrication are clean and dry before applying lubricant. Lubricate the unit in accordance with figure 3-1.

c. Coat exposed polished or machined metal surfaces with a suitable rustproof material after first removing any accumulations of rust.

d. Open the drainclock frequently to blow condensate from the air receiver tank.

e. Service the engine air cleaner more frequently (figure 3-2).

2-11. Operation in Salt Water Areas

a. Wipe the unit dry at frequent intervals, with particular emphasis on the engine.

b. If the unit becomes encrusted with salt, wash it with fresh water, taking care not to damage the electrical system with water.

c. Make sure all surfaces requiring lubrication are clean and dry before applying lubricant. Lubricate the unit in accordance with figure 3-1.

d. Coat exposed polished or machined metal surfaces with a suitable rustproof material after first removing any accumulation of rust.

2-12. Operation at High Altitudes

The air compressor is designed to operate efficiently at elevations up to 5,000 feet. There will be a reduction in efficiency because of the rarified air at this level. This is a normal condition that cannot be prevented.

CHAPTER 3

OPERATOR'S MAINTENANCE INSTRUCTIONS

Section I. LUBRICATION INSTRUCTIONS

3-1. General Lubrication Information

This section contains reproductions of pertinent lubrication orders, LO 5-4310-276-12 (fig. 3-1) and LO 5-2805-256-12 (fig. 3-2), and lubrication instructions which are supplemental to, and not specifically covered in the lubrication orders.

LUBRICATION ORDER

LO5-4310-276-12

1 June 1987

(Supersedes LO5-4310-276-12, 22 Aug 1969)

COMPRESSOR, RECIPROCATING: AIR; 5 CFM; 175 PSI; HAND TRUCK MOUNTED; GASOLINE DRIVEN (KELLOGG-AMERICAN MODEL G-311-PC) LESS MIL STD ENGINE

Reference: C9100-IL

Intervals and related task-hour times are based on normal hours of operation. The task-hour time specified is the time you need to do all the services prescribed for a particular interval. Change the interval if your lubricants are contaminated or if you are operating the equipment under adverse operating conditions, including longer-than-usual operating hours. You may extend the interval during periods of low activity, but you must take adequate preservation precautions.

*The time specified is the time required to perform all services at the particular interval.

Clean fittings before lubricating. Relubricate all areas exposed to water after amphibious operation. Lubricate points indicated by dotted arrow shaft on both sides of equipment. Clean parts with SOLVENT, dry cleaning, or with OIL, fuel, diesel. Dry before lubricating. Drain crankcases when HOT. Fill and check level. The lowest level of maintenance authorized to lubricate a point is indicated by one of the following: (c) operator/crew, or (O) organizational maintenance.

You can improve this publication by calling attention to errors and by recommending improvements and by stating your reasons for the recommendations. Your letter or DA Form 2028 (Recommended Changes to Publications and Forms) should be mailed directly to Commander, U.S. Army Troop Support Command, ATTN: AMSTR-MCTS, 4300 Goodfellow Blvd., St. Louis, MO 63120-1798. A reply will be furnished directly to you.

LUBRICANT • INTERVAL

INTERVAL • LUBRICANT

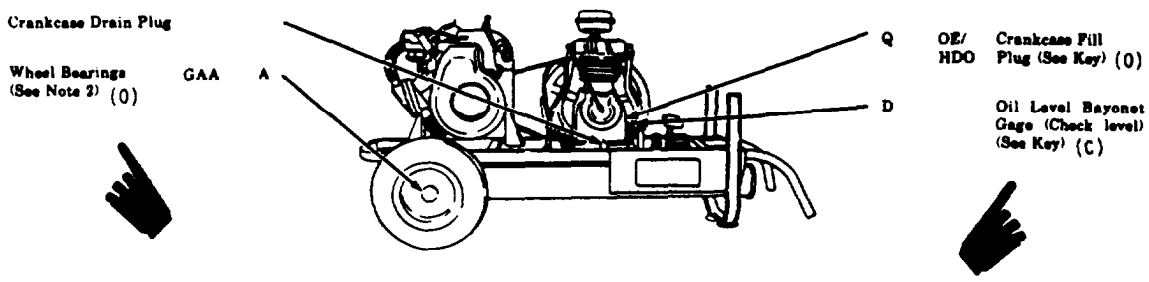

*TOTAL TASK HOURS		*TOTAL TASK HOURS	
INTERVAL	TASK HOURS	INTERVAL	TASK HOURS
D	0.5	Q	0.5
W	0.5	A	1.5

CARD 1 OF 2

Figure 3-1. Lubrication order, compressor (Card 1 of 2).

-KEY-

L05-4310-276-12

LUBRICANTS		CAPACITY	EXPECTED TEMPERATURES				INTERVALS
			Above +32°F Above 0°C	+40°F to -10°F + 5°C to -23°C	0°F to -65°F -18°C to -50°C		
OE/HDO OIL, Engine, Heavy Duty						FOR ARCTIC OPERATION Refer to TM 9-207	D 10 Hours or Daily
(MIL-L-2104C)	Crankcase						W 50 Hours
OEA/APG-PD-1 Oil, Engine		1 qt. .946 liters	OE/HDO 30	OE/APG-PD-1	OEA/APG-PG-1		Q 250 Hours or Quarterly
	Sub Zero						A 1000 Hours or Annually
SD2	Solvent						
CP-D-680	dry cleaning						

NOTES:

1. FOR OPERATION OF EQUIPMENT IN PROTRACTED COLD TEMPERATURES BELOW -10°F -23°C. Remove lubricants prescribed in the key for temperatures above -10°F -23°C. Clean parts with SOLVENT, dry-cleaning (P-D-680). Relubricate with lubricants specified in the key for temperatures below -10°F -23°C.

2. WHEEL BEARINGS. Every 1000 hours remove wheels, clean and inspect all parts, replace damaged or worn parts, repack bearings, and reassemble.

3. OIL CAN POINTS. Every 50 hours lubricate pins and clevises, and all exposed adjusting threads with OE/HDO 30.

OE-MIL-L-2104 OE/APG-PD-1

Copy of this Lubrication Order will remain with the equipment at all times; instructions contained herein are mandatory.

BY ORDER OF THE SECRETARY OF THE ARMY:

JOHN A. WICKHAM, JR.
General, United States Army
Chief of Staff

Official:

R. L. DILWORTH
Brigadier General, United States Army
The Adjutant General

CARD 2 of 2

Figure 3-1. Lubrication order, compressor (Card 2 of 2).

(ALL DATA ON PAGES 3-4 and 3-5, INCLUDING FIGURE 3-2 DELETED)

3-2. Detailed Lubrication Information

a. General. Keep all lubricants in closed containers and store in a clean, dry place away from external heat. Allow no dust, dirt, or other foreign material to mix with the lubricants. Keep all lubrication equipment clean and ready for use.

b. Cleaning. Keep all external parts not requiring lubrication clean of lubricants. Before lubricating the equipment, wipe all lubrication points free of dirt and grease. Clean all lubrication points after lubricating to prevent accumulation of foreign matter.

WARNING

Dry cleaning solvent, P-D-680, used to clean parts is potentially dangerous to personnel and property. Avoid repeated and prolonged skin contact. Do not use near open flame or excessive heat. Flash point of solvent is 100°F. (38°C.).

c. Points of Lubrication. Service the lubrication points at proper intervals.

d. OES Oil.

(1) Crankcase oil level must be checked frequently, as oil consumption may increase.

(2) Oil may require changing more frequently than usual because contamination by dilution and sludge formation will increase under cold weather operation conditions.

e. Operation Immediately After Lubrication. Visually check crankcase for cracks or loose oil drain connections which would allow oil to leak. During operation check all gasket points for indications of oil leaks. Check oil seal visually for leaks.

Section II. PREVENTIVE MAINTENANCE CHECKS AND SERVICES (PMCS)

3-3. General

To ensure that the compressor is ready for operation at all times, it must be inspected systematically so that the defects may be discovered and corrected before they result in serious damage or failure. Defects discovered during operation of the unit shall be noted for future corrections, to be made as soon as an operation has ceased. Stop operation which would damage the equipment if operation were to continue. All deficiencies and shortcomings shall be recorded together with the corrective action taken on DA Form 2404, Equipment Inspection and Maintenance Worksheet, at the earliest opportunity. When performing your Before Operation (B) and During Operation (D) PMCS, always keep in mind the CAUTIONS and WARNINGS. After operation, be sure to perform your (A) PMCS. If your equipment fails to operate, troubleshoot with proper equipment. Report any deficiencies using the proper forms, see TM 38-750.

3-4. Operator/Crew Preventive Maintenance Checks and Services

Refer to table 3-1 for Preventive Maintenance Checks and Services.

a. Item Number Column. Checks and services are numbered in chronological order regardless of interval. This column will be used as a source of item numbers for the "TM Item Number" column on DA Form 2404 in recording results of PMCS.

b. Interval Columns. The columns headed B, D, A, W and M, will contain a dot (•) opposite the appropriate check indicating it is to be performed Before, During, After, Weekly, or Monthly.

c. ***Item to be Inspected Column.*** The items listed in this column are divided into groups and identifies the items to be inspected.

d. Procedures Column. This column contains a brief description of the procedure by which the check is to be eprformed.

e. For Readiness Reporting, Equipment is Not Ready/Available If: Column. This column will contain the criteria which will cause the equipment to be classified as not Ready/Available because of inability to perform its primary mission.

NOTE

If the equipment must be kept in continuous operation, check and service only those items that can be checked and serviced without disturbing operation. Make the complete checks and services when the equipment can be shut down.

f. Leakage definitions for operator/crew PMCS shall be classified as follows:

Class I	Seepage of fluid (as indicated by wetness or discoloration) not great enough to form drops.
Class II	Leakage of fluid great enough to form drops but not enough to cause drops to drip from item being checked/inspected.
Class III	Leakage of fluid great enough to form drops that fall from the item being checked/inspected.

CAUTION

Equipment operation is allowable with minor leakages (Class I or II). Of course, you must consider the fluid capacity in the item/system being checkes/inspected. When in doubt, notify your supervisor.

When operating with Class I or Class II leaks, continue to check fluid levels as required in your PMCS.

Class III leaks should be reported to your supervisor or organizational maintenance.

Table 3-1. OPERATOR/CREW PREVENTIVE MAINTENANCE CHECKS AND SERVICES

	INTERVAL			B–BEFORE OPERATION D–DURING OPERATION	A–AFTER OPERATION	
ITEM NO.	B	D	A	ITEM TO BE INSPECTED	PROCEDURES CHECK FOR AND HAVE REPAIRED OR ADJUSTED AS NECESSARY	EQUIPMENT IS NOT READY/ AVAILABLE IF
					NOTE Perform lubrication prior to or in conjunction with before PMCS. For compressor lubrication refer to LO 5-4310-276-12. For engine lubrication refer to LO 5-2805-256-12.	
1	•			Complete unit	Walk around unit and visually inspect for fuel and oil leaks, loose connections, and damage (fig. 1-1 and 1-2).	A leak or damage is found which would impair operation.
	•			a. Fire Extinguisher	Check availability of and for proper pressure (para 2-6).	Fire extinguisher is missing or pressure is too low.
	•			b. Oil levels	Check engine and compressor oil levels. Add oil as required (fig. 3-1 and 3-2).	
2		•		Controls and Instruments	Check for proper operation and for specified limits.	
		•		a. Air pressure gage	Normal operating pressure 140 to 175 psi.	175 psi cannot be obtained.
		•		b. Engine air cleaner restriction indicator	Check restriction indicator. If indicator is red or indicating service or engine runs erratically or misses, notify Organizational Maintenance (fig. 4-11 and 4-12).	
		•		c. Compressor air cleaner	When compressor pumps slowly or does not provide sufficient air pressure, notify Organizational Maintenance (fig. 3-3).	
3			•	Fuel Thank	Fill tank at completion of operation.	
4			•	Air Receiver Tank	Drain water from the tank (fig. 3-6 and para 3-12).	
5		•	•	Drive Belts	Check for cracked or dry rotted belts.	Belts are cracked or broken.

Section III. TROUBLESHOOTING

3-5. General

a. This section contains troubleshooting information for locating and correcting meet of the opersting troubles which may develop in the air compressor. Each malfunction for an individual component, unit, or system is followed by a list of test or inspections which will help you to determine corrective actions to take. You should perform the tests/inspections and corrective actions in the order listed.

b. This manual cannot list all malfunctions that may occur, nor all tests or inspections and corrective actions. If a malfunction is not listed or is not corrected by listed corrective actions, notify your supervisor.

3-6. Operator/Crew Troubleshooting

Perform troubleshooting functions in accordance with table 3-2.

Table 3-2. Troubleshooting (Cont'd)

Malfunction
Test or Inspection
Corrective Action

ENGINE

1. ENGINE FAILS TO START.

Step 1. Inspect for lack of fuel in fuel tank.
Fill fuel tank.

Step 2. Check that engine ignition switch is positioned to on.
Position ignition switch to on.

Step 3. Inspect fuel tank strainer for signs of dirt or grime which could pass into fuel lines.
a. Unscrew fuel tank cap and remove cap and gasket.
b. Lift out tank strainer taking care that any particles in the strainer are not dislodged and allowed to **fall into the tank. Service fuel tank strainer.**

WARNING
Dry cleaning solvent, P-D-680, used to clean parts is potentially dangerous to personnel and property. Avoid repeated and prolonged skin contact. Do not use near open flame or excessive heat. Flash point of solvent is 100°F. (38°C.).

(1) Clean the tank strainer with dry cleaning solvent, item 5, App. D. Dry thoroughly.
(2) Position strainer in fuel tank filler aperture.
(3) Install fuel tank cap and gasket.

2. ENGINE MISSES OR OPERATES ERRATICALLY.

Step 1. Inspect fuel tank cap vent for blockage.
Clean cap vent, take out vent screw, and blow out with compressed air.

3. ENGINE OVERHEATS.

Step 1. Inspect belt guard screen for obstruction.
With the engine stopped, clear obstruction from screen.

Step 2. Restricted cylinder cooling fins.
Clean cylinder cooling fins.

4. ENGINE STOPS.

Step 1. Inspect for lack of fuel in fuel tank.
Fill fuel tank.

PNEUMATIC EQUIPMENT

1. COMPRESSOR PUMPS TOO SLOWLY OR PROVIDES INSUFFICIENT PRESSURE.

Step 1. Inspect compressor air cleaner for blockage.
a. Position ignition switch to OFF to stop engine.
b. Remove screws (1, figure 3-3) and lockwashers (2) attaching air cleaner cover (3) and remove cover.

Table 3-2. Troubleshooting (Cont'd)

Malfunction Test or Inspection Corrective Action

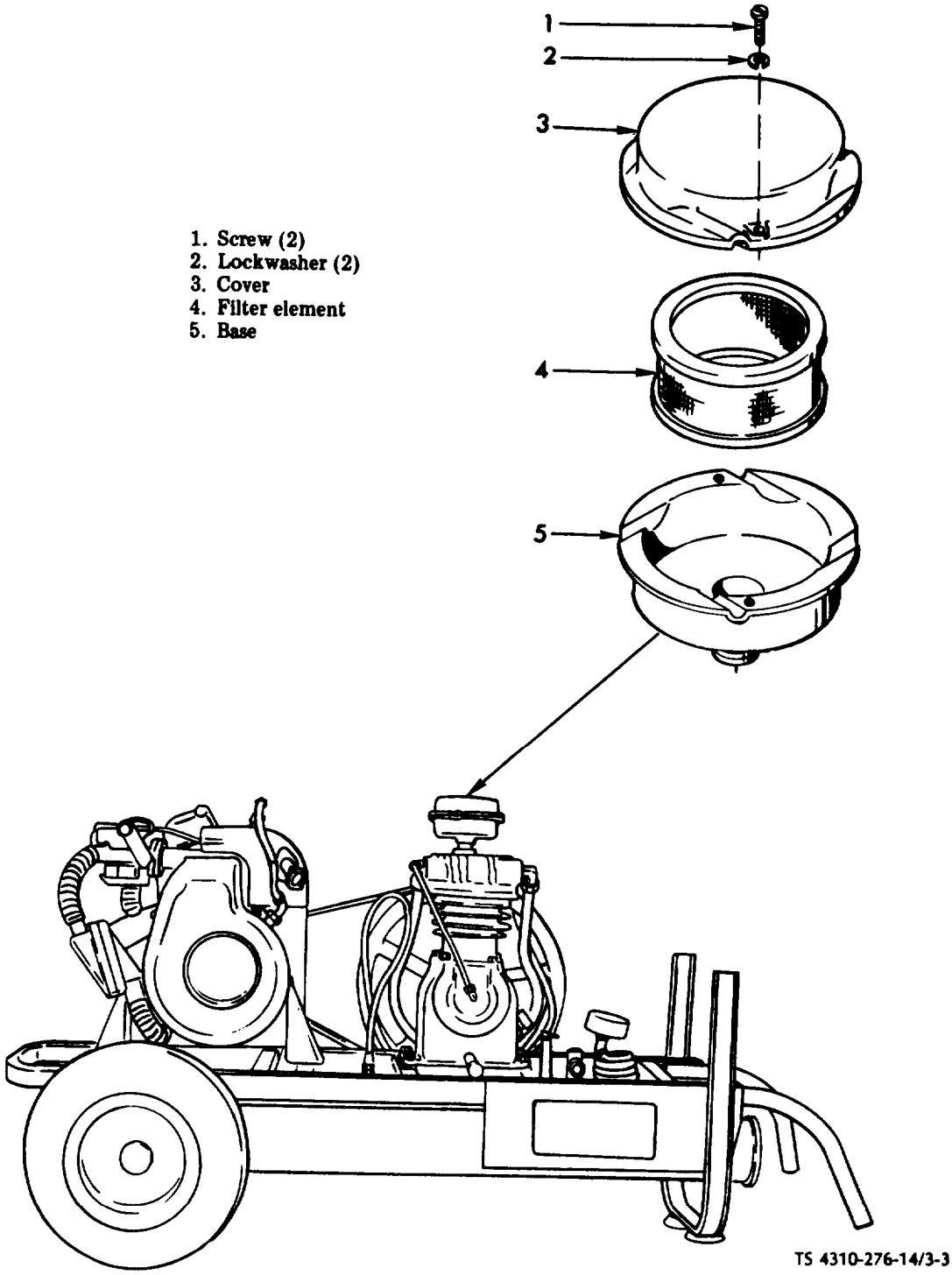

Figure 3-3. Compressor air cleaner service.

Table 3-2. Troubleshooting (Cont'd)

Malfunction
Test or Inspection
Corrective Action

c. Lift out air cleaner element (4) and check for dirt. Service the air cleaner.

WARNING
Dry cleaning solvent, P-D-680, used to clean parts is potentially dangerous to personnel and property. Avoid repeated and prolonged skin contact. Do not use near open flame or excessive heat. Flash point of solvent is 100°F. (38°C.).

(1) Clean the air cleaner with cleaning solvent, item 5, App. D, and dry thoroughly,
(2) Clean filter element by blowing out with air or washing with cleaning solvent, item 5, App. D.
(3) Inspect the air cleaner for cracks, dents, breaks, and other damage.
(4) Replace defective filter element or the complete cleaner assembly as required.
(5) Position air cleaner element (4) in base (5).
(6) Position cover (3) on base and install attaching screws (1) and lockwashers (2).

Step 2. Check for leaks from air receiver tank fittings with soapy water.
Secure fittings as necessary.

2. EXCESSIVE COMPRESSOR OIL CONSUMPTION.

Step 2. Check for incorrect or inferior grade of compressor oil.
Replace compressor crankcase oil.
a. Position suitable container beneath compressor crankcase drain plug and remove drain plug (figure 3-4).

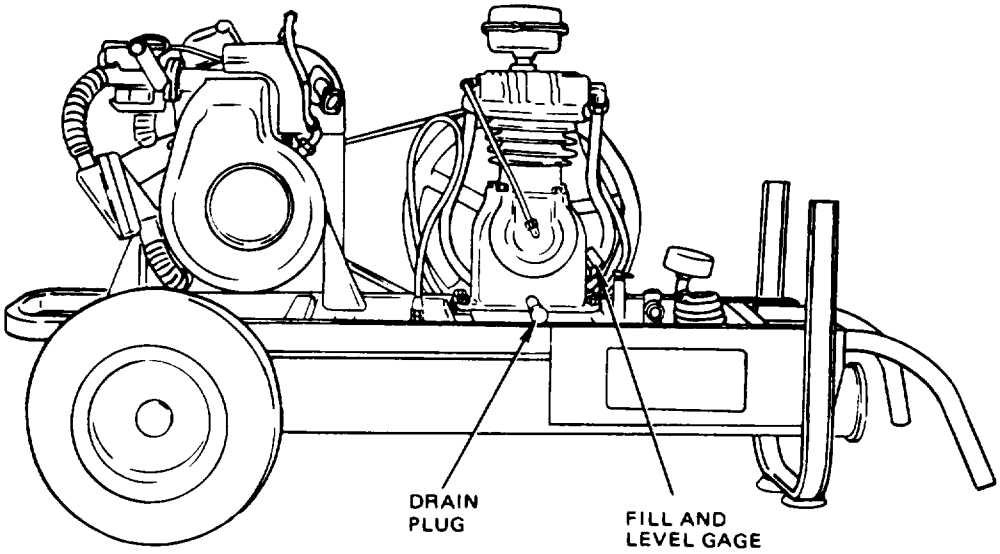

TS 4310-276-14/3-4

Figure 3-4. Compressor oil drain and filler plugs.

b. Install drain plug when oil is completely drained.
c. Remove combined oil filler plug and bayonet type level gage (fig. 3-4).
d. Fill crankcase with 1 quart (0.94 liters) of correct type of oil as follows:

Table 3-2. Troubleshooting (Cont'd)

Malfunction
Test or Inspection
Corrective Action

Expected Temperature	Oil Type
Above 32°F. (0°C.)	OE/HDO 30
+40°F. (4.5°C.) to -10°F. (-23°C.)	OE/APG-PD-1
0°F. (-18°C.) to -65°F. (-54°C.)	OEA/APG-PG-1

e. Install oil filler plug after checking oil level.

Step 2. Inspect for signs of leaks from oil line or fitting.
Secure oil line or fitting.

3. COMPRESSOR OVERHEATING.

Step 1 Inspect for dirt in cooling coils and cylinder fine.
Blow out any dirt with compressed air.

Step 2. Check for poor ventilation and high room temperature.
If possible, move compressor to a more adequately ventilated area or check the possibility of piping air intake from a cooler location.

4. NOISY COMPRESSOR OPERATION.

Step 1. Check compressor for inefficient oil.
Fill compressor crankcase with correct oil as follows:

Expected temperature	Oil Type
Above 32°F. (0°C.)	OE/HDO 30
+40°F. (4.5°C.) to -10°F. (-23°C.)	OE/APG-PD-1
0°F. (-18°C.) to -65°F. (-54°C.)	OEA/APG-PG-1

Section IV. MAINTENANCE PROCEDURES

3-7. General

Instructions in this section are published for the information and guidance of the operator to maintain the air compressor.

3-8. Air Intake Cleaner Assembly

a. Removal

(1) Stop the engine.

(2) Remove the compressor air cleaner from cylinder head by turning counterclockwise.

b. Disassembly.

(1) Remove screws (1, fig. 3-3) and lockwashers (2) attaching air cleaner cover (3) and remove cover.

(2) Lift out air cleaner element (4).

c. Cleaning and Inspection.

Dry cleaning solvent, P-D-680, used to clean parts is potentially dangerous to personnel and property. Avoid repeated and prolonged skin contact. Do not use near open flame or excessive heat. Flash point of solvent is 100°F. (38°C.).

(1) Clean the air cleaner with cleaning solvent, item 5, App. D, and dry thoroughly.

(2) Clean filter element by blowing out with air or washing with cleaning solvent, item 5, App. D.

(3) Inspect the air cleaner for cracks, dents, breaks, and other damage.

(4) Replace defective filter element or the complete cleaner assembly if required.

d. Reassembly and Installation.

(1) Refer to figure 3-3 and assemble the compressor air cleaner by installing the filter element (4) and cover (3) into base (5) and fastening with lockwashers (2) and screws (1).

(2) Install the compressor air cleaner assembly to cylinder head by turning clockwise.

3-9. Fuel Tank Strainer

a. Removal.

(1) Unscrew fuel tank filler cap (1, fig. 3-5) counterclockwise until it disengages from fuel tank filler opening.

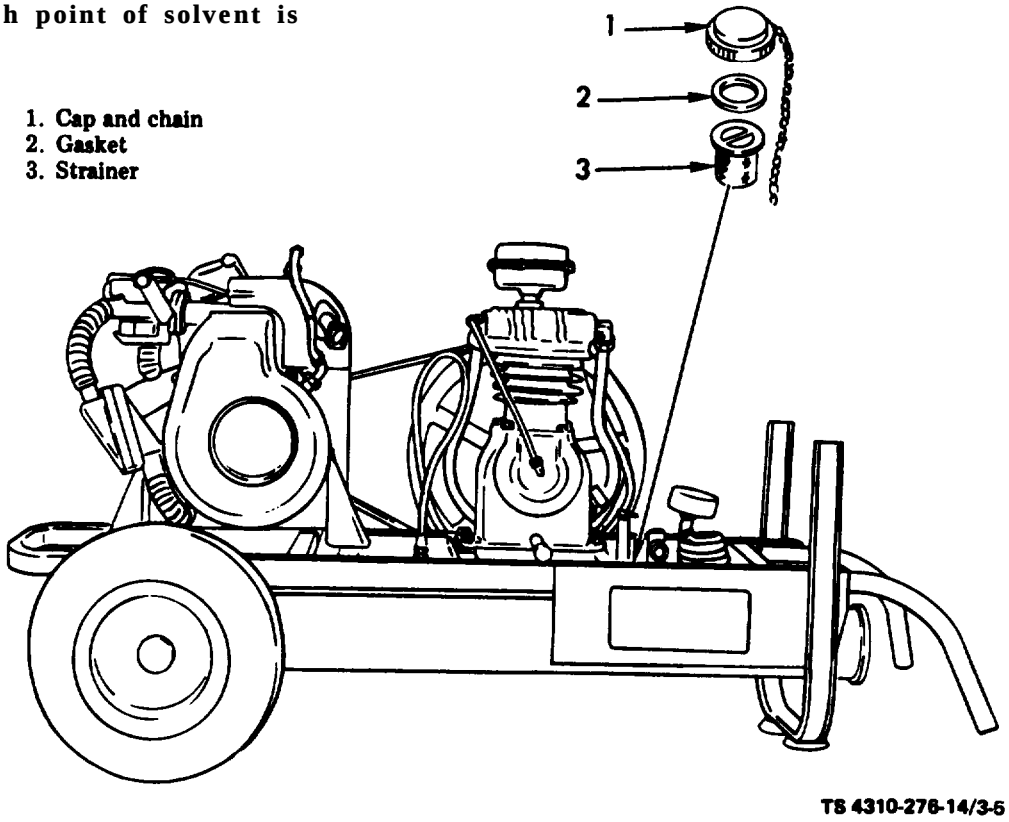

Figure 3-5. Fuel tank strainer.

(2) Remove cap and chain (1) and gasket (2).

(3) Remove strainer (3).

b. Cleaning and Inspection.

WARNING

Dry cleaning solvent, P-D-680, used to clean parts is potentially dangerous to personnel and property. Avoid repeated and prolonged skin contact. Do not use near open flame or excessive heat. Flash point of solvent is 100°F. (38°C.).

(1) Clean the strainer (3) by blowing out with air or washing in cleaning solvent, item 5, App. D.

(2) Inspect the cap and chain (1), gasket (2), and strainer (3) for cracks, breaks, and other damage.

(3) Replace any damaged parts.

c. Installation.

(1) Install strainer (3).

(2) Install gasket (2) and cap and chain (1) and fasten cap by turning clockwise until it engages with filler opening neck.

(3) Fasten finger tight.

3-10. Oil Level Gage

a. Removal.

(1) Stop the engine.

(2) Remove the oil level gage from the compresser crankcase.

b. Cleaning and Inspection.

WARNING

Dry cleaning solvent, P-D-680, used to clean parts is potentially dangerous to personnel and property. Avoid repeated and prolonged skin contact. Do not use near open flame or excessive heat. Flash point of solvent is 100°F. (38°C.).

(1) Clean the oil level gage with cleaning solvent, item 5, App. D.

(2) Inspect for cracks or breaks.

(3) Replace if defective.

c. *Installation.* Install the oil level gage in the compressor crankcase.

3-11. Fuel Tank

a. Check all fittings for leaks and tighten if necessary.

b. Check cover gasket for leaks and replace if necessary.

c. If leak is found in fuel tank, report to higher authority.

3-12. Air Receiver Tank

a. Refer to figure 3-6 and open drain cock daily to remove moisture from air receiver tank.

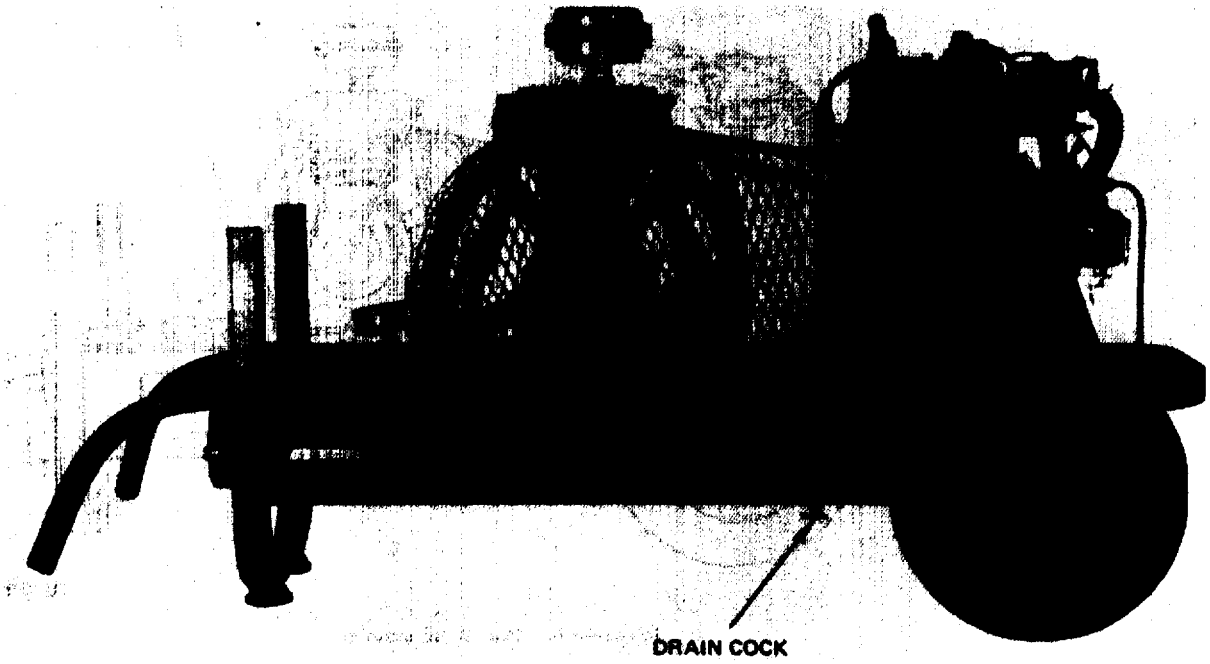

Figure 3-6. Air receiver tank draincock.

TS 4310-276-14/3-6

b. Keep all fittings connected to air receiver tank tight. Check for leaks with soapy water with pressure in air receiver. Check welds on air receiver tank with soapy water.

3-13. Air Compressor

a. Check oil level daily with bayonet type oil gage on oil fill plug.

b. Keep all the exterior bolts on air compressor tight.

c. Keep cooling fins clean by blowing out with air.

CHAPTER 4

ORGANIZATIONAL MAINTENANCE INSTRUCTIONS

Section I. SERVICE UPON RECEIPT OF MATERIAL

4-1. Inspecting and Servicing the Equipment.

a. Unloading.

(1) Remove all tiedowns or blocking that secure the crate to the carrier, as illustrated in figure 4-1.

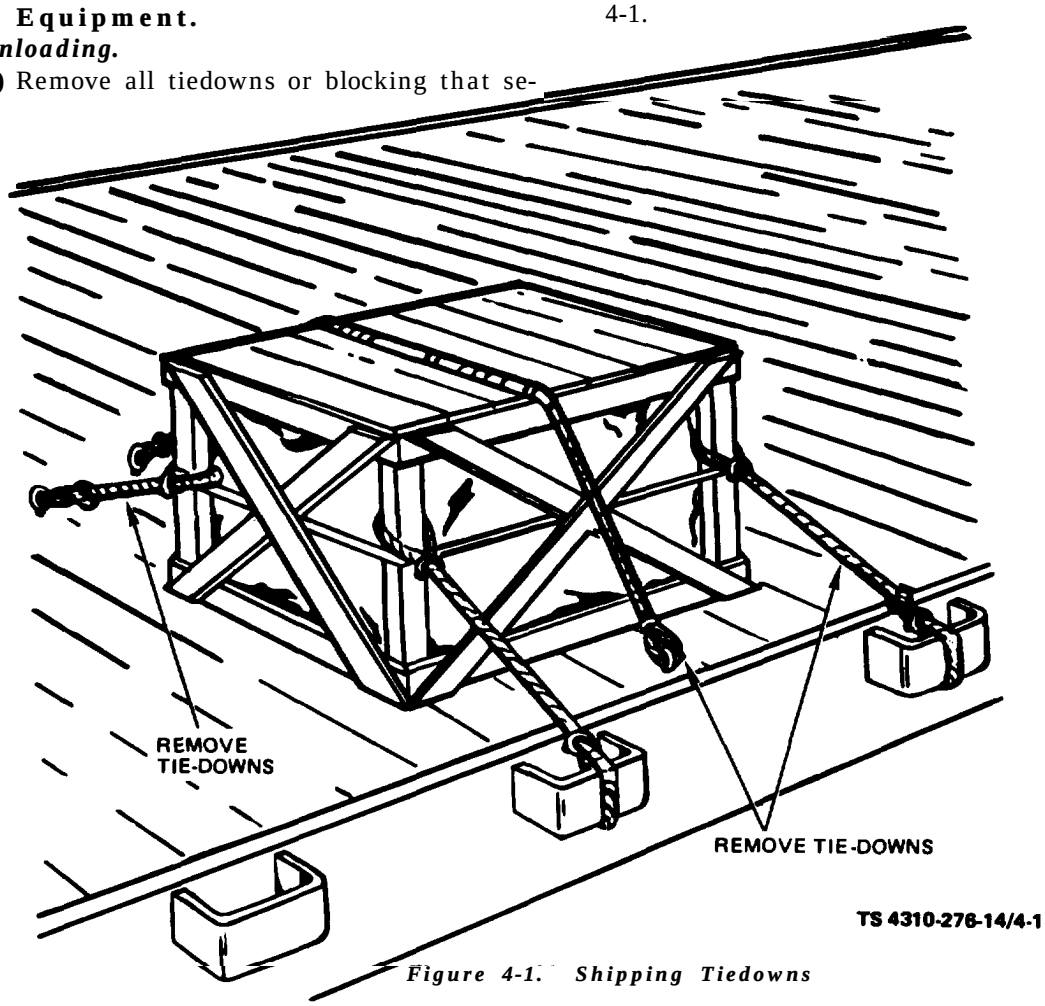

Figure 4-1. Shipping Tiedowns

(2) A forklift truck, pipe rollers, or a suitable hoist must be used when removing the air compressor from the carrier.

WARNING

Make certain any lifting device used has a capacity equal to the weight being lifted. Failure to observe this precaution could result in injury or death to personnel and damage to equipment.

b. Unpacking

(1) Place the air compressor as close to the point of use as possible. Remove the box containing the air hose assembly and inflation device from the inside of the crate.

(2) Prepare the air compressor for inspection and servicing as outlined on DA Form 2258, Depreservation Guide, attached on or near the operational controls.

(3) Remove the nuts and lockwasher that secure the air compressor to the bottom of the crate and remove the air compressor.

c. Inspection and Service

(1) Make a complete visual inspection of the air compressor for any loss or damage that may have occurred during shipment. See that flywheel

pulley turns freely by hand. If shipping crate has been damaged, pay particular attention to the compressor areas adjacent to damaged areas of the crate.

(2) Inspect the engine for loose connections, and insecure mounting. (fig. 4-2)

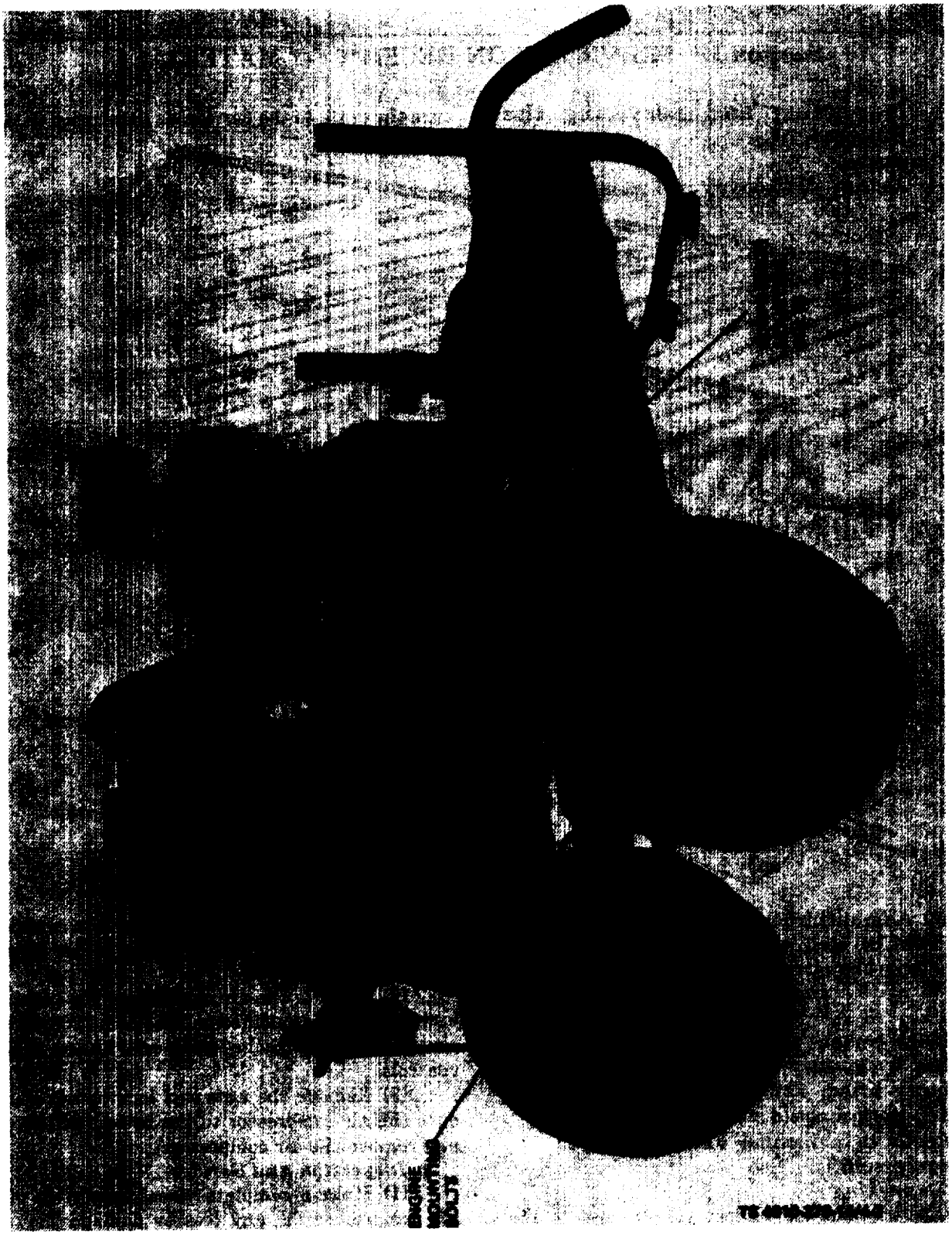

Figure 4-2. Engine and Compressor Mounting Bolts

(3) Inspect the air compressor for loose mounting bolts, cracks, breaks and other defects. (fig. 4-2)

(4) Inspect the release and safety valve for loose mounting.

(5) Inspect the handtruck assembly for cracks, breaks and other damage.

(6) Inspect the wheel assemblies for cracks, breaks, insecure mounting and alignment.

(7) Check the contents of the crate against the packing list to make sure no items are missing.

(8) Correct all deficiencies or report them to the proper authority.

4-2. Installation

a. ***General.*** The portable air compressor which requires no chase is delivered with an air hose assembly and gage inflator. The air hose assembly is installed directly in the end of the air receiver tank.

b. Outdoor Installation. Avoid muddy, sandy or dusty locations as a site for operation as dirt and moisture shortn the life of all moving parts.

c. Indoor Installation. If the compressor is to be operated within a building or vehicle, pipe the engine exhaust to the outside. Use as few bends as possible in the exhaust line and make sure all connections are tight.

d. Noise Hazard and Warning Signs. Signs conforming to provisions of AR 385-30 will be erected in the area to provide notification of noise hazard in accordance with TB MED-251. The signs should read:

WARNING

NOISE HAZARD EQUIPMENT
HEARING PROTECTION
REQUIRED

Section II. MOVEMENT TO A NEW WORKSITE

4-3. Dismantling For Movement

a. Operate the compressor and allow the pressure in the air received tank to build to approximately 100 psi (7.03 kg/sq cm).

b. Stop the engine. Open the drain cock and blow the condensate and all air from air tank. Close the drain cock (fig. 3-6).

c. Drain Fuel Strainer

(1) Loosen the nut at the base of the fuel strainer bowl retaining bail assembly (1, figure 4-3).

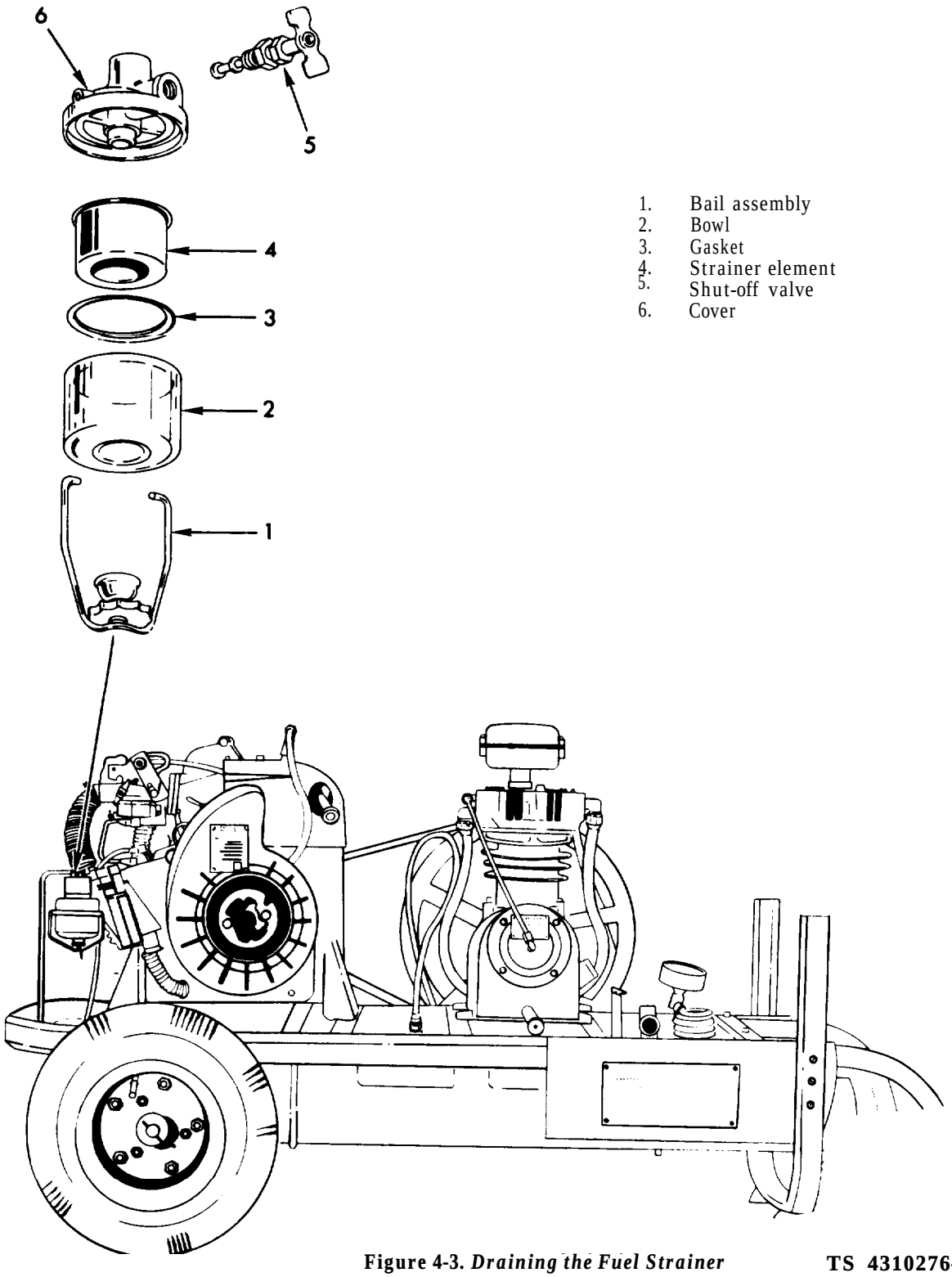

1. Bail assembly
2. Bowl
3. Gasket
4. Strainer element
5. Shut-off valve
6. Cover

Figure 4-3. ***Draining the Fuel Strainer*** **TS 4310276-14/4-3**

(2) Swing the bail to one side and carefully lower the bowl (2) together with gasket (3) and strainer (4). Empty the bowl and discard gasket.

(3) Position strainer (4) in recess of cover (6) bowl then place new gasket (3) and bowl (2) over strainer.

(4) Swing cup of bail assembly (1) beneath and secure with nut at base.

d. Drain fuel tank into a suitable container.

e. Remove the air hose assembly from the air receiver tank. Cover the hose connector in the air receiver tank.

f. Lift the air compressor and accessories on a suitable carrier and block and tie it down.

g. Move the air compressor to a new worksite.

4-4. Reinstallation After Movement.

a. General. The portable air compressor which requires no base is delivered with an air hose assembly and gage inflator. The air hose assembly is installed directly in the end of the air receiver tank.

b. Outdoor Installation. Avoid muddy, sandy or dusty locations as a site for operation as dirt and moisture shorten the life of all moving parts.

c. Indoor Installation. If the compressor is to be operated within a building or vehicle, pipe the engine exhaust to the outside. Use as few bends as possible in the exhaust line and make sure all connections are tight.

d. Noise Hazard and Warning Signs. Signs conforming to provisions of AR 385-30 will be erected in the area to provide notification of noise hazard in accordance with TB MED-251. The signs should read:

WARNING

NOISE HAZARD EQUIPMENT
HEARING PROTECTION
REQUIRED

Section III. REPAIR PARTS, SPECIAL TOOLS AND EQUIPMENT

4-5. Special Tools and Equipment

No special tools or equipment are required by organizational maintenance personnel for maintenance of the air compressor.

4-6. Repair Parts

Repair parts are listed and illustrated in the repair parts and special tools Iist covering organizational maintenance for this equipment, TM 5-4310-276-24P

Section IV. LUBRICATION INSTRUCTIONS

4-7. General

a. This section contains lubrication instructions which are supplemental to and not specifically covered in the lubrication orders illustrated in figure 3-1 and figure 3-2.

b. Carefully inspect the engine and air compressor to ensure that proper specifications have been met as requested in the lubrication orders.

NOTE

Proper preventive maintenance observation and adherence will prolong the life of the air compressor unit.

4-8. Detailed Lubrication Information

Refer to detailed lubrication information in paragraph 3-2.

Section V. PREVENTIVE MAINTENANCE CHECKS AND SERVICES (PMCS)

4-9. General

To ensure that the air compressor is ready for operation at all times, it must be inspected systematically so that defects may be discovered and corrected before they will result in serious damage or failure. Defects discovered during operation of the unit shall be noted for future correction, to be made as soon as operation has ceased. Stop operation immediately if a deficiency is noticed which would damage the equipment if operation were continued. All deficiencies and shortcomings will be recorded together with the corrective action taken on DA Form 2404 (Equipment Inspection and Mainte nance Worksheet) at the eariliest possible opportunity.

4-10. Preventive Maintenance Checks and Services.

a. This paragraph contains a tabulated listing of preventive maintenance services which must be performed by organizational maintenance personnel at quarterly intervals. A quarterly interval is equal to 3 calendar months, or 250 hours of operation, whichever occurs first.

b. The item numbers are listed consecutively and indicate the sequency of minimum requirements. Refer to table 4-1 for the quarterly pre-

ventive maintenance services. It should be noted that the item number column is used as a source of item numbers for the TM number column on DA Form 2404, Equipment Inspection and Maintenance Worksheet, in recording results of Preventive Maintenance Checks and Services.

Table 4-1. ORGANIZATIONAL PREVENTIVE MAINTENANCE CHECKS AND SERVICES

INTERVAL		Q–QUARTERLY (250 HOURS)		
ITEM NO.	Q	ITEM TO BE INSPECTED	PROCEDURES CHECK FOR AND HAVE REPAIRED OR ADJUSTED AS NECESSARY	EQUIPMENT IS NOT READY/ AVAILABLE IF:
			NOTE Perform operator/crew PMCS prior to or in conjunction with organizational PMCS if a. There is a delay between the daily operation of the equipment and the organizational PMCS. b. Regular operator is not assigned/participating.	
1	•	Complete Unit	Clean and inspect entire unit every 250 hours or three months. Remove dirt, grease, oil and debris. Look for wear, loose, bent, cracked, damaged, or missing parts. Service fuel strainers (fig. 3-5 and 4-4) and adjust V-belt tension (para 4-32).	

Section VI. TROUBLESHOOTING

4-11. General

This section provides useful information for diagnosing and correcting unsatisfactory operation or failure of the air compressor and its components. Each malfunction stated is followed by a list of tests and inspections. Any trouble beyond the scope of organizational maintenance shall be reported to direct support maintenance.

4-12. Organizational Maintenance Troubleshooting

Perform troubleshooting functions in accordance with table 4-2.

Table 4-2. Troubleshooting

Malfunction
Test or Inspection
Corrective Action

ENGINE

1. ENGINE FAILS TO START.

Step 1. Inspect for lack of fuel in fuel tank.
Fill fuel tank.

Step 2. Inspect fuel strainer bowl for signs of dirt.
Service fuel strainer.

a. Loosen the thumbscrew at the base of the bowl retaining bail assembly (1, fig. 4-24).

b. Swing the bail to one side and carefully lower the bowl together with gasket and strainer. Discard gasket.

WARNING

Drycleaning solvent, P-D-680, used to clean parts is potentially dangerous to personnel and property. Avoid repeated and prolonged skin contact. Do not use near open flame or excessive heat. Flash point of solvent is 100°F (38°C).

c. Clean the strainer and bowl with dry cleaning solvent, item 5, App. D. Dry components thoroughly.

d. Position strainer in recess of cover then place new gasket and bowl over strainer.

e. Swing sup of bail assembly beneath bowl and secure with thumbscrew at base.

Table 4-2. Troubleshooting (cont)

Malfunction	Test or Inspection	Corrective Action

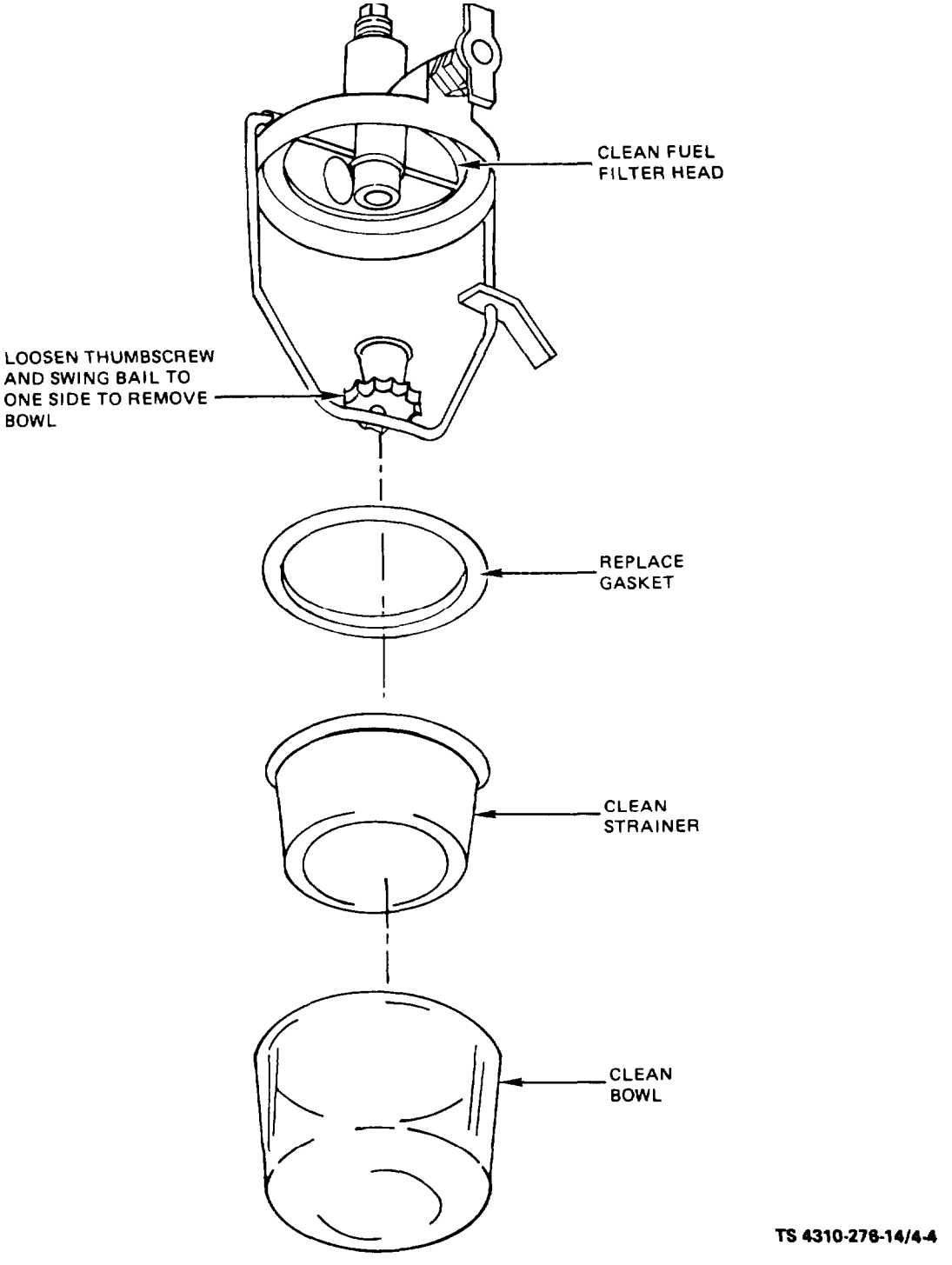

Figure 4-4. Servicing fuel strainer.

Table 4-2. Troubleshooting (cont)

Malfunction Test or Inspection Corrective Action

Step 3. Inspect for dirt in carburetor.
Clean carburetor.
a. Removal.
(1) Use figure 4-5 for Model 1A08-1 and figure 4-6 for Model 1A08-2 and Model 1A08-3 as a guide in removal of the carburetor and throttle controls.

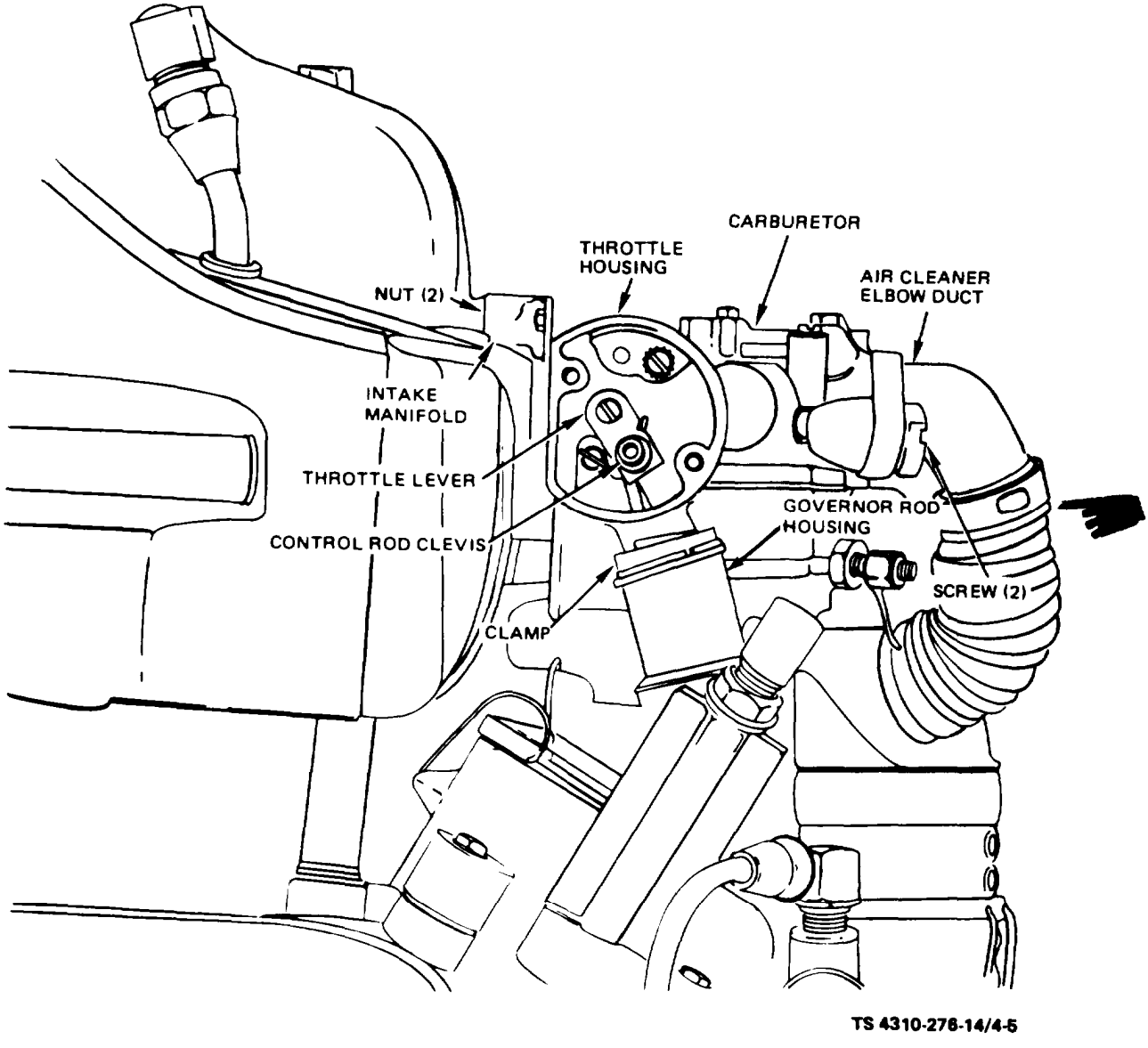

Figure 4-5. Carburetor throttle controls, removal and installation (Model 1A08-1).

Table 4-2. Troubleshooting (cont)

Malfunction Test or Inspection Corrective Action

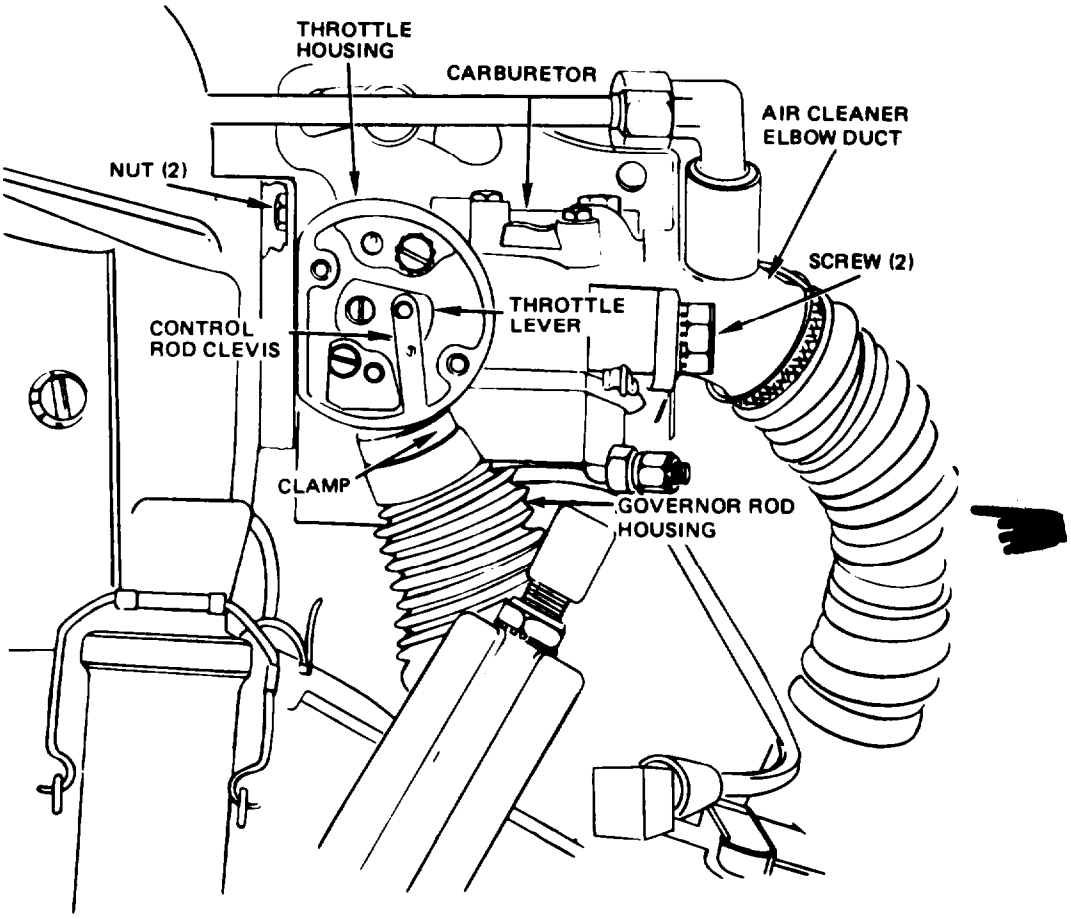

Figure 4-6. Carburetor and throttle controls, removal and installation (Models 1A08-2 and 1A08-3).

(2) Remove two screws and remove the front throttle housing cover and gasket.
(3) Spread control rod clevis from throttle level.
(4) Remove screw and disconnect throttle level from shaft.
(5) Remove clamp from governor rod housing hose.
(6) Remove the fuel line to the carburetor.
(7) Remove two screws and remove the air cleaner elbow duct from carburetor.
(8) Remove two carburetor mounting nuts and remove the carburetor and gasket from the in. take manifold. Discard the gasket.
(9) Remove two screws and remove the throttle housing from carburetor. Remove rear cover and gaskets from the throttle housing.

b. Cleaning and inspection.

WARNING

Drycleaning solvent, P-D-680, used to clean parts is potentially dangerous to personnel and property. Avoid repeated and prolonged skin contact. Do not use near open flame or excessive heat. Flash point of solvent is 100°F (38°C).

Table 4-2. Troobleshooting (cont)

Malfunction
Test or Inspection
Corrrective Action

(1) Clean carburetor with drycleaning solvent, item 5, App. D, and dry with low pressure filtered air.
(2) Inspect carburetor body for cracks, breaks, evidence of leakage, stripped or damaged threads or other damage.
(3) Inspect throttle rod and connectors, butterflies and housings for cracks, breaks, wear and ease of operation.
(4) Inspect adjustment screws for stripped or damaged threads, bent or broken ends.
(5) Inspect to see that all plugs are tightened and not leaking.
(6) Inspect throttle mounting plates for cracks, breaks, or other damage.
(7) Inspect throttle control for proper operation.
(8) Repair or replace any damaged or defective wear.

c. Installation.
(1) Use figure 4-5 for Model 1A08-1 and figure 4-6 for Model and throttle controls.

NOTE

When installing throttle lever on Models 1A08-2 and 1A08-3 be sure punch mark is pointed up and out.

(2) Spread control rod clevis and install throttle lever.
(3) Install new gaskets and rear cover to throttle housing. Install the throttle housing to carburetor.
(4) Using a new gasket, install the carburetor onto the intake manifold. Using an inch pound torque wrench, torgue the carburetor mounting nuts to intake manifold to 60-85 inch-pounds.
(5) Install the air cleaner elbow duct to carburetor.
(6) Install the fuel line to the carburetor.
(7) Reconnect throttle lever to the shaft.
(8) Install front throttle housing gasket and the housing.

d. Adjustment.
(1) Using figure 4-7 as a guide, adjust the carburetor.

Table 4-2. Troubleshooting (cont)

Malfunction
Test or Inspection
Corrective Action

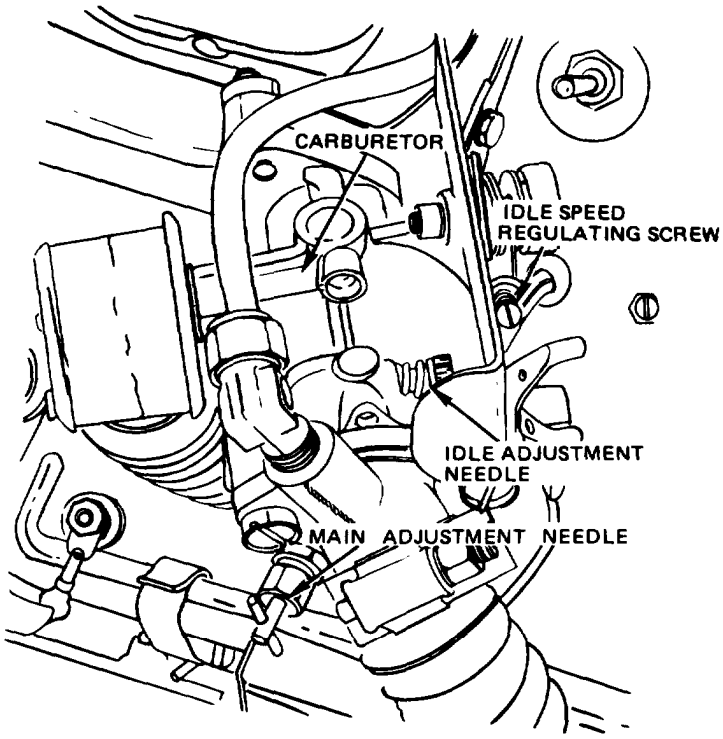

TS 4310-276-14/4-7

Figure 4-7. Carburetor adjustment.

(2) With engine stopped, turn main adjustment needle and idle adjustment needle fully clock. wise to close.

(3) Turn main adjustment needle three-quarters of a turn counterclockwise, and idle adjust. ment needle one-half turn counterclockwise. Start engine and run until warm.

(4) Apply load and observe engine exhaust. If exhaust is black, close main adjustment needle. If engine misfires or seems low in power, open main adjustment needle. Adjust main adjust. ment needle until engine delivers maximum power with minimum of exhaust smoke.

(5) If engine application has a throttle speed adjustment, regulate idle mixture in a similar manner.

(6) Regulate engine idle rpm by turning idle speed regulating screw clockwise or counter-clockwise enough to keep the engine running smoothly.

Step 4. Inspect for dirty or damaged spark plug.

Remove, clean, adjust or replace spark plug.

a. Removal.

(1) Using figure 4-8 as guide, loosen the connector nut on spark plug end of the cable.

(2) Remove the spark plug from the cylinder head.

Table 4-2. Troubleshooting (cont)

Malfunction	Test or Inspection	Corrective Action

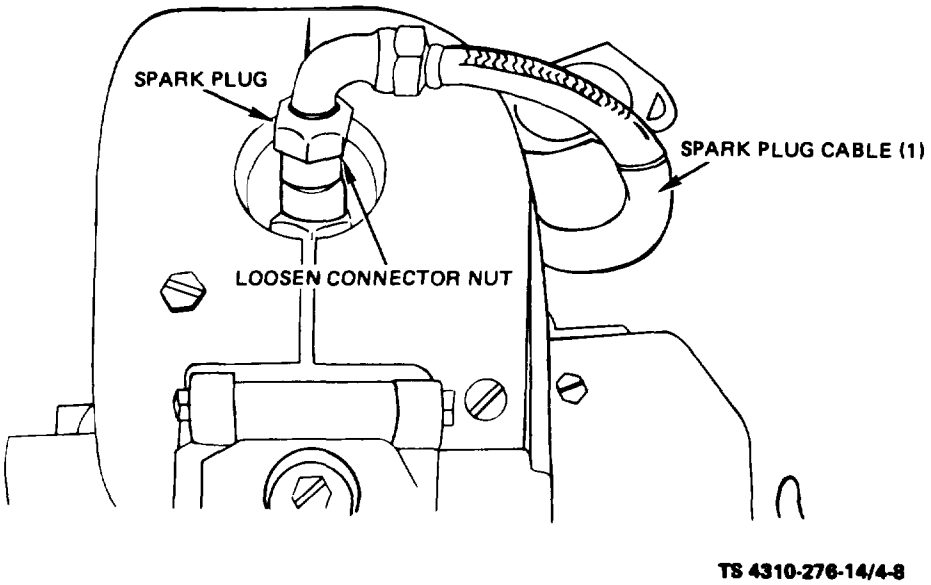

Figure 4-8. Spark plug and cable, removal and installation.

b. Cleaning and Inspection.
(1) Clean spark plug in a compressed air spark plug cleaner. Remove abrasive material with clean, dry compressed air.
(2) Inspect for excessive burning, pita, cracks or broken ceramic insallation. Inspect threads for burrs or evidence of having been stripped or cross-threaded.
(3) Teat the firing power of the spark plug on a suitable spark plug tester.
(4) Measure the electrode gap; 0.028 (0.071 cm) to 0.033 inch (0.083 cm), using a leaf or wire gage. Bend the outside electrode until the desired gap is attained.
(5) Replace plug if necessary.

d. Installation
(1) Install spark plug (fig. 4-7).
(2) When installing the spark lplug, make certain the gasket is serviceable and properly installed. Torque spark plugs to 275 to 300 inch-pounds.
(3) Tighten cable connector nut on spark plug.

Step 5. Inspect breaker points for pitting and adjustment.
Clean and adjust or replace breaker points.

a. Removal.
(1) Unsnap spring clips and remove the accessory case cover.
(2) Refer to figure 4-9 and remove the contact assembly.

Table 4-2. Troubleshooting (cont)

Malfunction Test or Inspection	Corrective Action

NOTE: TAG AND DISCONNECT ELECTRICAL LEADS AS NECESSARY.

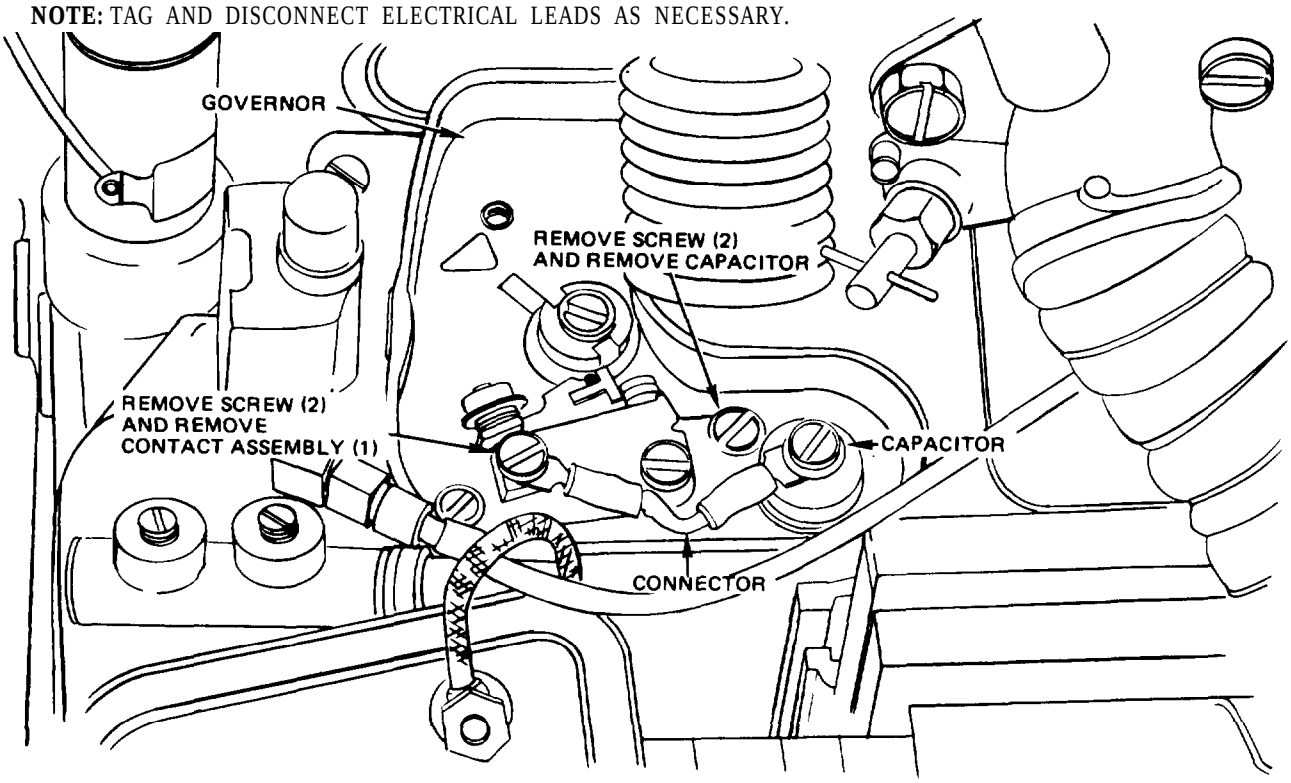

TS 4310-276-14/4-9

Figure 4-9. Contact assembly and capacitor, removal and installation.

b. Cleaning and Inspection.
   (1) Clean the contact assembly with filtered, compressed air.
   (2) Inspect contacts for pitted, burned, misaligned or worn surfaces,
   (3) Inspect cam follower for cracks, breaks, or wear.
   (4) Repair or replace any damaged or defective part.

c. Installation.
   (1) Refer to figure 4-9 and install the contact assembly.
   (2) Attach accessory case cover with spring clips.

d. Adjustment. Refer to figure 4-10 and adjust the contact assembly.

Table 4-2. Troubleshooting (cont)

Malfunction
Test or Inspection
Corrective Action

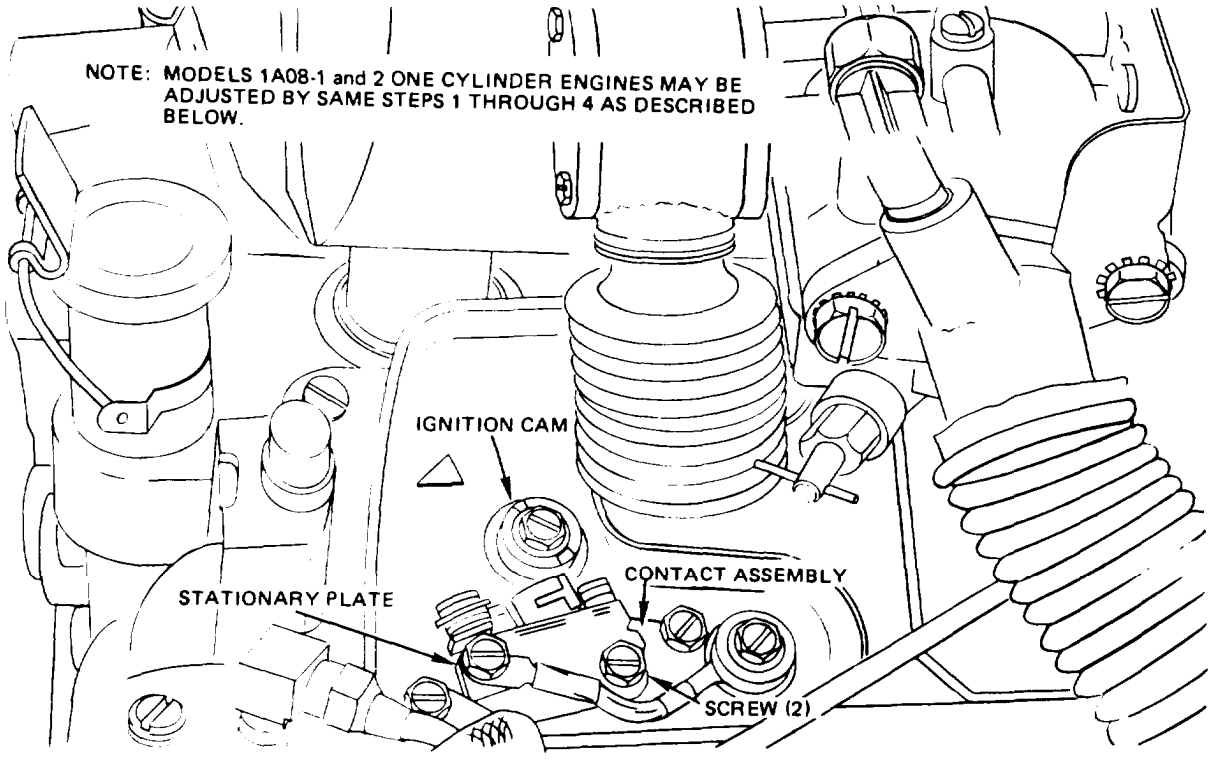

1. ROTATE ENGINE FLYWHEEL UNTIL THE CAM FOLLOWER IS POSITIONED ON THE HIGHEST POINT OF THE IGNITION CAM.
2. MEASURE THE POINT GAP WITH A FEELER GAGE. THE PROPER GAP IS 0.018 INCH (0.046 CM). IF GAP MEASURES MORE OR LESS THAN 0.018 INCHES (0.046 CM) ADJUSTMENT IS NECESSARY.
3. LOOSEN THE SCREW (2) THAT SECURE THE STATIONARY PLATE AND MOVE THE STATIONARY PLATE UNTIL THE DESIRED 0.018 INCH (0.046 CM) GAP IS REACHED.
4. TIGHTEN SCREWS, REMEASURE GAP AND READJUST IF NECESSARY.

TS 4310-276-14/4-10

Figure 4-10. Contact assembly adjustment.

Step 6. Inspect to see if capacitor is open or shorted.
Replace capacitor.
a. Removal.
(1) Unsnap spring clips and remove the accessory case cover.
(2) Refer to figure 4-9 and remove the capacitor.
b. Inspection.
(1) lmspect the capacitor for proper mounting. Using a multimeter or similar device, check for

Table 4-2. Troubleshooting (cont)

Malfunction
Test or Inspection
Corrective Action

continuity from the terminal and to the capacitor case or mounting lug. No continuity should be indicated. If so, discard capacitor. Check the lead for damage, fraying or damaged or broken terminal end.

(2) Repair or replace any damaged or defective part.

c. Installation.

(1) Refer to figure 4-9 and install the capacitor.

(2) Install the accessory case cover.

Step 7. Inspect for grounded ignition cable.

Replace cable, or locate grounded point and tape for temporary operation.

a. Removal.

(1) See figure 4-8 for removal of ignition cable.

(2) Loosen the connector nut on each end of the cable and remove the cable.

b. Inspection.

(1) Inspect the braided cables for broken, torn or cut strands.

(2) Inspect connector bodies for cracks, breaks and springs for broken or distorted coils.

(3) Inspect connectors for stripped or damaged threads or distorted nuts.

c. Repair or Replacement.

(1) Repair or replace the spring tips.

(2) Replace rubber insulators around the springs if torn or damaged.

(3) Replace ignition cable if damaged.

d. Installation.

(1) Use figure 4-8 as guide and install ignition cable.

(2) Tighten connector nuts on each end of cable.

2. ENGINE MISSES OR OPERATES ERRATICALLY.

Step 1. Inspect for clogged vent in fuel tank cap.

Clean cap vent, take out vent screw, and blow out with compressed air.

Step 2. Inspect for clogged carburetor air intake screen.

Service the air cleaner.

a. Service (Models 1A08-1 and 1A08-2).

(1) Loosen retaining clamps and mounting clamp. (fig. 4-11)

Table 4-2. Troubleshooting (cont)

Malfunction Teat or Inspection	Corrective Action

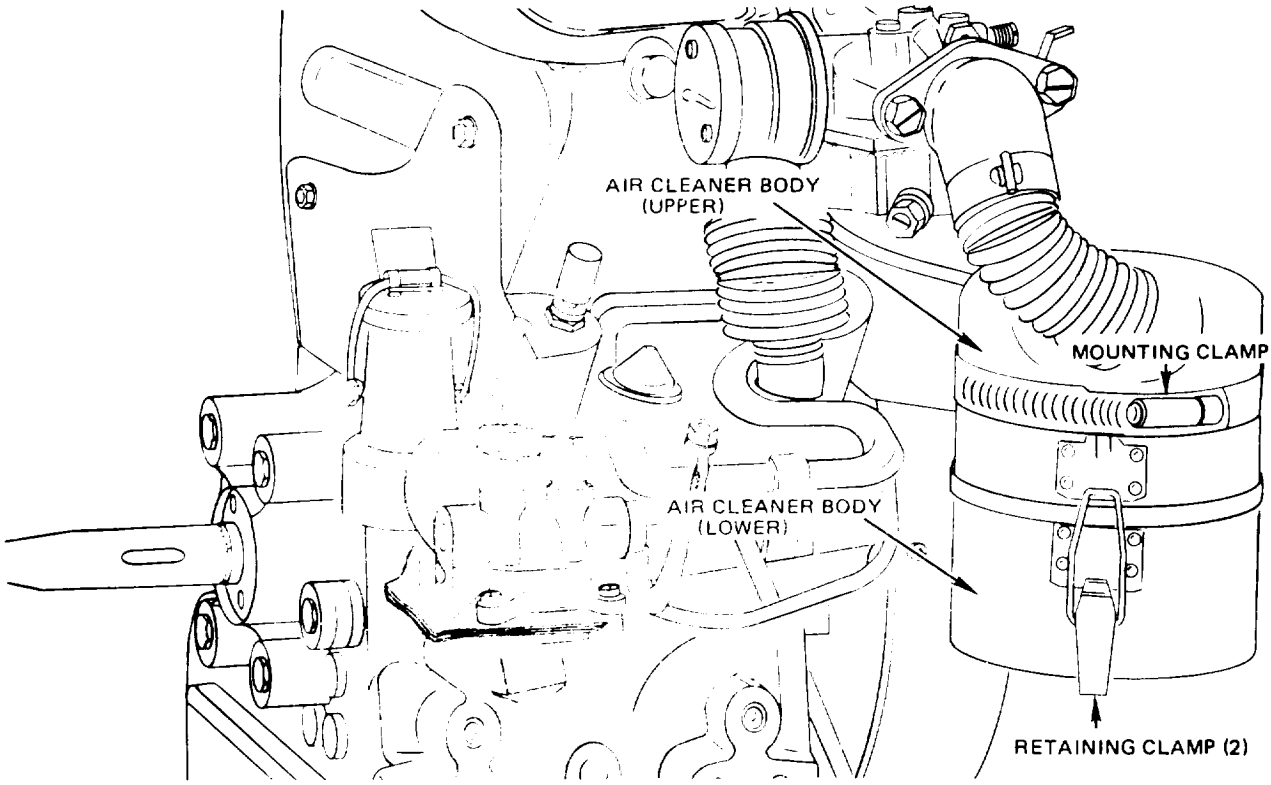

TS 4310-276-14/4-11

Figure 4-11. Air cleaner service (Models 1A08-1 and 1A08-2).

WARNING

Drycleaning solvent, P-D-680, used to clean parts is potentially dangerous to personnel and property. Avoid repeated and prolonged skin contact. Do not use near open flame or excessive heat. Flash point of solvent is 100°F (38°C).

(2) Remove lower section body and clean all parts with cleaning solvent, item 5, App. D. Dry with compressed air and clean towels.

(3) After cleaning element, lubricate and reinstall. See figure 3-1 for lubrication instructions.

b. Service (Model 1A08-3).

(1) Service the air cleaner element when red signal reaches service level (fig. 4-12).

Table 4-2. Troubleshooting (cont)

Malfunction
Test or Inspection
Corrective Action

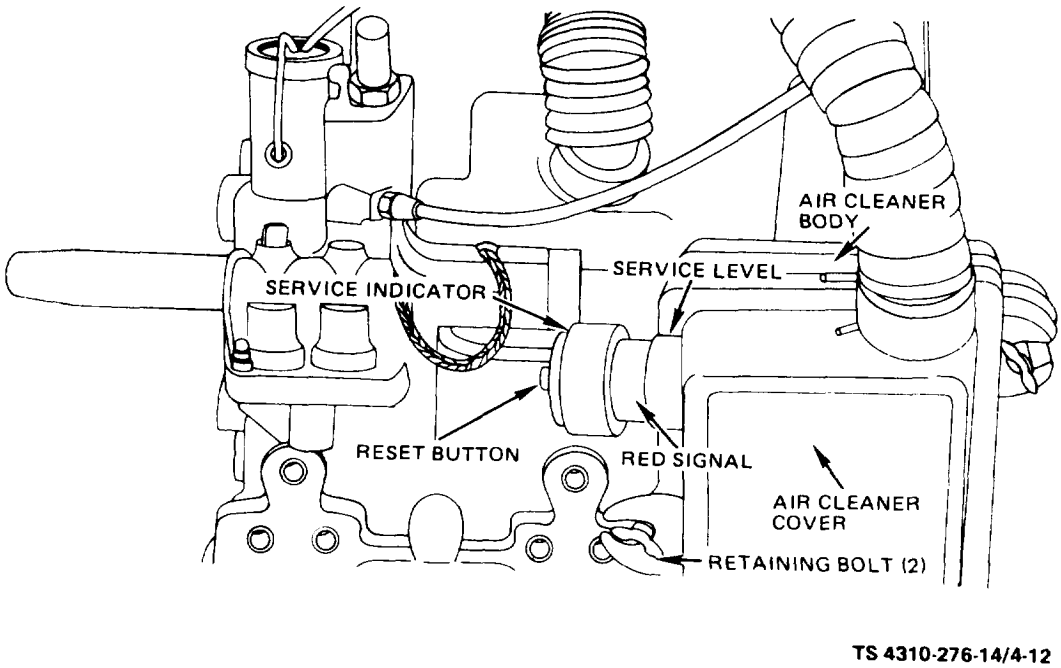

Figure 4-12. Air cleaner service (Model 1A08-3).

(2) Loosen retaining bolts.
(3) Wipe out inside of air cleaner cover and body.
(4) Remove element from air cleaner body and blow out with compressed air from clean side to dirty side of element.
(5) Reinstall element, cover, and bolts.

Step 3. Inspect for defective plug.
Clean, regap or replace plug.
a. Removal.
(1) Using figure 4-8 as guide, loosen the connector nut on spark plug end of the cable.
(2) Remove the spark plug from the cylinder head.
h. Cleaning and Inspection.
(1) Clean spark plug in a compressed air spark plug cleaner. Remove abrasive material with clean, dry compressed air.
(2) inspect for excessive burning, pits, cracks or broken ceramic insulation. Inspect threads for burrs or evidence of having been stripped or crow-threaded.
(3) Test the firing power of the spark plug on a suitable spark plug tester.
(4) Measure the electrode gap; 0.028 inch (0.071 cm) to 0.033 inch (0.083 cm), using a leaf or wire gage. Bend the outside electrode until the desired gap is attained.
(5) Replace plug if necessary
c. Installation.
(1) Install spark plug.
(2) When installing the spark plug, make certain the gasket is serviceable and properly installed. Torque spark plugs to 275 to 300 inch-pounds.
(3) Tighten cable connector nut on spark plug.

Table 4-2. Troubleshooting (cont)

Malfunction
Test or Inspection
Corrective Action

Step 4. Inspect for water or dirt in carburetor.
Drain water from carburetor bowl.
a. Remove carburetor bowl drain screw and gasket.
b. Drain carburetor.
c. Reinstall drain screw and gasket.

Step 5. Inspect for carburetor out of adjustment.
Adjust carburetor.
a. Using figure 4-7 as a guide, adjust the carburetor.
b. With engine stopped, turn main adjustment needle and idle adjustment needle fully clockwise to close.
c. Turn main adjustment needle three-quarters of a turn counterclockwise, and idle adjustment needle one-half turn counterclockwise. Start engine and run until warm.
d. Apply load and observe engine exhaust. If exhaust is black, close main adjustment needle. If engine misfires or seems low in power, open main adjustment needle. Adjust main adjustment needle until engine delivers maximum power with minimum of exhaust smoke.
e. If engine application has a throttle speed adjustment, regulate idel mixture in a similar manner.
f. Regulate engine idle rpm by turning idle speed regulating screw clockwise or counterclockwise enough to keep the engine running smoothly.

3. ENGINE OVERHEATS.

Step 1. Inspect for lean fuel mixture.
Adjust carburetor.
a. Using figure 4-7 as a guide, adjust the carburetor.
b. With engine stopped, turn main adjustment needle and idle adjustment needle fully clockwise to close.
c. Turn main adjustment needle three-quarters of a turn counterclockwise, and idle adjustment needle one-half turn counterclockwise. Start engine and run until warm.
d. Apply load and observe engine exhaust. If exhaust is black, close main adjustment. If engine misfires or seems low in power, open main adjustment needle. Adjust main adjustment needle until engine delivers maximum power with minimum of exhaust smoke.
e. If engine application has a throttle speed adjustment, regulate idle mixture in a similar manner.
f. Regulate engine idle rpm by turning idle speed regulating screw clockwise and counterclockwise enough to keep the engine running smoothly.

Step 2. Check if engine is running too slowly,
Unload engine and increase speed until normal operating temperature returns.
a. Unload engine by opening drain valve on underside of air tank.
b. Adjustment of speed control.
(1) Models 1A08-1 and 1A08-2 use figure 4-13 as a guide.

Table 4-2. Troubleshooting (cont)

Malfunction
Test or Inspection
Corrective Action

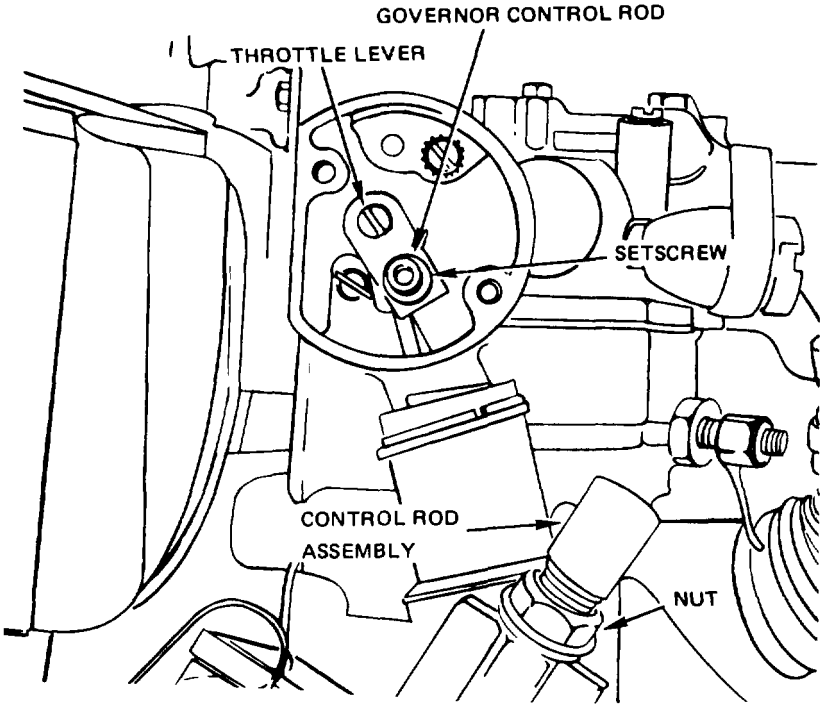

TS 4310-276-14/4-13

Figure 4-13. Governor adjustment (Models 1A08-1 and 1A08-2).

(a) Remove screws and remove front throttle housing cover and gasket.

(b) Loosen setscrew and release governor control rod. Push throttle level down as far as possible. Hold governor control rod in downward position, and move throttle level up about 1/16 inch.

(c) Tighten setscrew and inspect linkage for free play by manually operating carburetor throttle shaft.

(d) To regulate speed of engine, loosen nut and turn control rod assembly clockwise to increase, or counterclockwise to decrease engine speed.

(e) Install front throttle housing gasket and front throttle housing.

NOTE

Eliminate surging or poor speed regulation by adjusting the main adjustment needle on the carburetor.

(2) Model 1A08-3 (use figure 4-14 as a guide).

Table 4-2. Troubleshooting (cont)

Malfunction	Test or Inspection	Corrective Action

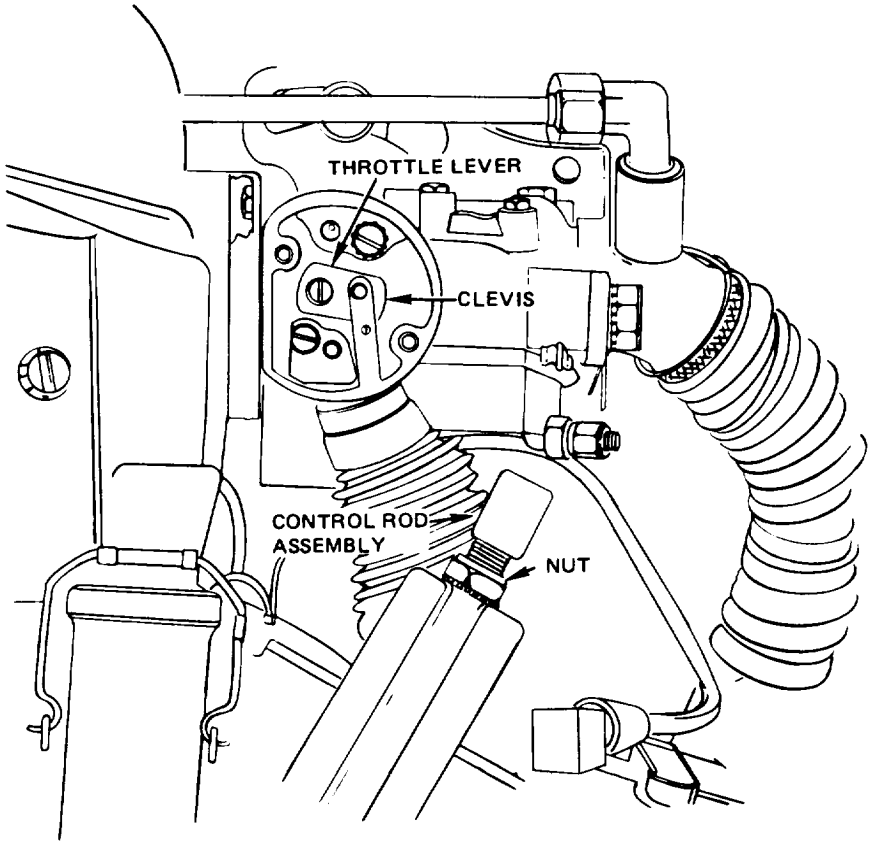

TS 4310-276-14/4-14

Figure 4-14. Governor adjustment (Model 1A08-3).

(a) Remove the front throttle housing cover and gasket.
(b) Open clevis and disconnect from the throttle lever.
(c) Hold the throttle 1/16 inch from the open position.
(d) Loosen the locknut below the clevis and scre the clevis up or down until the clevis pin aligns with the hole in the throttle lever.
(e) Connect the clevis to the throttle lever and tighten locknut.
(f) Imtall the gasket and front throttle housing cover.
(g) To regulate engine speed, turn nut on control rod assembly clockwise to increase or counterclockwise to decrease engine speed.

Table 4-2. Troubleshooting (cont)

Malfunction
Test or Inspection
Corrective Action

NOTE

Eliminate surging or poor speed regulation by adjusting the idle adjustment needle on carburetor.

(3) increase speed until normal operating temperature returns.
c. Close drain valve on air tank.

Step 3. Inspect for dirty or obstructed fan screen.
Clean the fan screen.

Step 4. Inspect for restricted cylinder cooling fins
Clean cylinder cooling fins.

4. ENGINE LACKS POWER.

Step 1. Check for improper fuel mixture.
Drain fuel tank and fill with correct fuel. Adjust carburetor.
a. Using figure 4-7 as a guide, adjust the carburetor.
b. With engine stopped, turn main adjustment needle and idle adjustment needle fully clockwise to close.
c. Turn main adjustment needle three-quarters of a turn counterclockwise, and idle adjustment needle one-half turn counterclockwise. Start engine and run until warm.
d. Apply load and observe engine exhaust. If exhaust is black, close main adjustment needle. If engine misfires or seems low in power, open main adjustment needle. Adjust main adjustment needle until engine delivers maximum power with minimum of exhaust smoke.
e. If engine application has a throttle speed adjustment, regulate idle mixture in a similar manner.
f. Regulate engine idle rpm by turning idle speed regulating screw clockwise or counterclockwise enough to keep the engine running smoothly.

Step 2. Check for clogged exhaust ports
Clean exhaust ports.

Step 3. Inspect for improper timing.
Retime engine.
a. Contact adjustment.
(1) Remove accessory case cover.
(2) See figure 4-10 for point adjustment.
(3) Rotate engine flywheel until the cam follower is positioned on the highest point of the ignition cam.
(4) Measure the point gap with a feeler gauge. Adjust to measure 0.018 in. (0.457 mm).
(5) Loosen the screws (2) that secure the stationary plate and move the plate until the cap is correct.
(6) Tighten screws, remeasure gap, and readjust if necessary.
b. Ignition timing.
(1) See figure 4-15 for ignition timing.

Table 4-2. Troubleshooting (cont)

Malfunction
Test or Inspection
Corrective Action

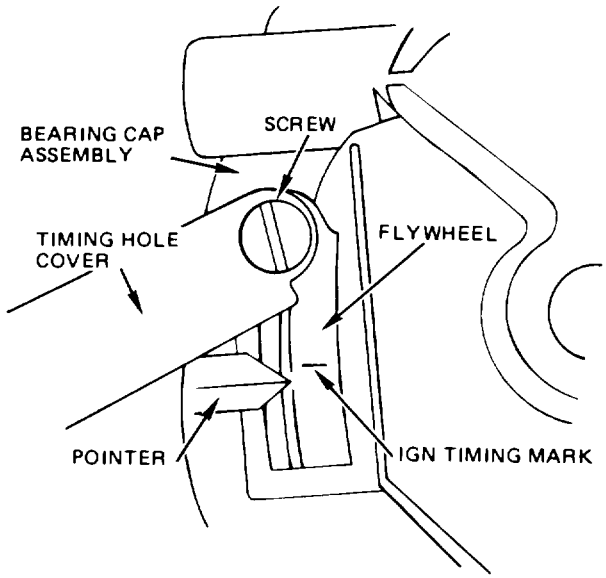

TS 4310-276-14/4-15

Figure 4-15. Ignition timing instructions.

(2) Loosen screw and slide timing hole cover open.
(3) Remove rocker arm cover.
(4) Rotate flywheel counterclockwise and observe intake valve and rocker arm. Continue to rotate flywheel until valve closes, and stop when the IGN mark on the flywheel is aligned with pointer.
(5) If points of contact assembly are not just beginning to open, the ignition cam must be reset.
(6) Loosen the screw and rotate the ignition cam counterclockwise until points being to open, then tighten screw. Ensure that flywheel timing mark and pointer are aligned, and the contact points should just begin to open.
(7) Install rocker arm cover.
(8) Install accessory case cover.
(9) Close timing hole cover and tighten Iockscrew.

5. ENGINE STOPS.

Step 1. Inspect for lack of fuel.
Fill fuel tank.

Step 2. Inspect for clogged carburetor air intake.
Service the air cleaner.
a. Service Models 1A08-1 and 1A08-2.
(1) Loosen retaining clamps and mounting clamp (fig. 4-11).
(2) Remove lower section body and clean all parts with approved solvent. Dry with compressed air and clean towels.
(3) After cleaning element, lubricate and reinstall. See figure 3-2 for lubrication instructions.

Table 4.2. Troubleshooting (cont)

Malfunction
Test or Inspection
Corrective Action

b. Service Model 1A08-3.
(1) Service the air cleaner element when red signal reached service level (fig. 4-11).
(2) Loosen retaining bolts.
(3) Wipe out inside of air cleaner cover and body.
(4) Remove element from air cleaner body and blow out with compressed air from clean aide to dirty side of element.
(5) Reinstall element, cover, and bolts.

Step 3. Check for clogged exhaust ports.
Clean exhaust points.

Step 4. Check for lack of spark at breaker points.
Adjust breaker points.
a. Removal.
(1) Unsnap spring clips and remove the accessory case cover.
(2) Refer to figure 4-9 and remove the contact assembly.
b. Cleaning and Inspection.
(1) Clean the contact assembly with filtered, compressed air.
(2) Inspect contacts for pitted, burned, misaligned or worn surfaces.
(3) lnspect cam follower for cracks, breaks or wear.
(4) Repair or replace any damaged or defective part.
c. Installation.
(1) Refer to figure 4-9 and install the contact assembly.
(2) Attach accessory case cover with spring clips.
d. Adjustment. Refer to figure 4-10 and adjust the contact assembly.

Step 5. Check for lack of spark at spark plug.
Adjust spark plugs.
a. Removal.
(1) Using figure 4-8 as guide, loosen the connector nut on spark plug end of the cable.
(2) Remove the spark plug from the cylinder bead.
b. Cleaning and Inspection.
(1) Clean spark plug in a compressed air spark plug cleaner. Remove abrasive material with clean dry compressed air.
(2) Inspect for excessive burning, pita, cracks or broken ceramic insulation. Inspect threads for burrs or evidence of having been stripped or cross-threaded.
(3) Test the firing power of the spark plug on a suitable spark plug tester.
(4) Measure the electrode gap; 0.028 (0.071 cm) to 0.033 inch (0.083 cm), using a leaf or wire gage. Bend the outside electrode until the desired gap is attained.
(5) Replace plug if necessary.
c. Installation
(1) Install spark plug.
(2) When installing the spark plug, make certain the gasket is serviceable and properly installed. Torque spark plugs to 275 to 300 inch-pounds.
(3) Tighten cable connector nut on spark plug.

Step 6. Inspect for grounded ignition cable.
Replace cable, or locate grounded point and tape for temporary operation.
a. Removal
(1) See figure 4-8 for removal of ignition cable.
(2) Loosen the connector nut on each end of the cable and remove the cable.
b. Inspection
(1) Inspect the braided cables for broken, torn or cut strands.
(2) Inspect connector bodies for cracks, breaks and springs for broken or distorted coils.
(3) Inspect connectors for stripped or damaged threads or distorted nuts.

Table 4-2. Troubleshooting (cont)

Malfunction Test or Inspection Corrective Action
c. Repair or Replacement (1) Repair or replace the spring tips. (2) Replace rubber insulators around the springs if torn or damaged. (3) Replace ignition cable if damaged. d. Installation (1) Use figure 4-8 as guide and install ignition cable. (2) Tighten connector nuts on each end of cable.

6. ENGINE KNOCKS.

Step 1. Check for lean fuel mixture.

Adjust carburetor.

a. Using figure 4-7 as a guide, adjust the carburetor.

b. With engine stopped, turn main adjustment needle and idle adjustment needle fully clockwise to close.

c. Turn main adjustment needle three-quarters of a turn counterclockwise, and idle adjustment needle one-half turn counterclockwise. Start engine and run until warm.

d. Apply load and observe engine exhaust. If exhaust is black, close main adjustment needle. If engine misfires or seems low in power, open main adjustment needle. Adjust main adjustment needle until engine delivers maximum power with minimum of exhaust smoke.

e. If engine application has a throttle speed adjustment, regulate idle mixture in a similar manner.

f. Regulate engine idle rpm by turning idle speed regulating screw clockwise or counterclockwise enough to keep the engine running smoothly.

Step 2. Check for loose flywheel or pulley.

Tighten the flywheel or pulley.

a. Removal.

(1) See figure 4-16 for removal of belt guard.

Table 4-2. Troubleshooting (cont)

Malfunction Test or Inspection	Corrective Action

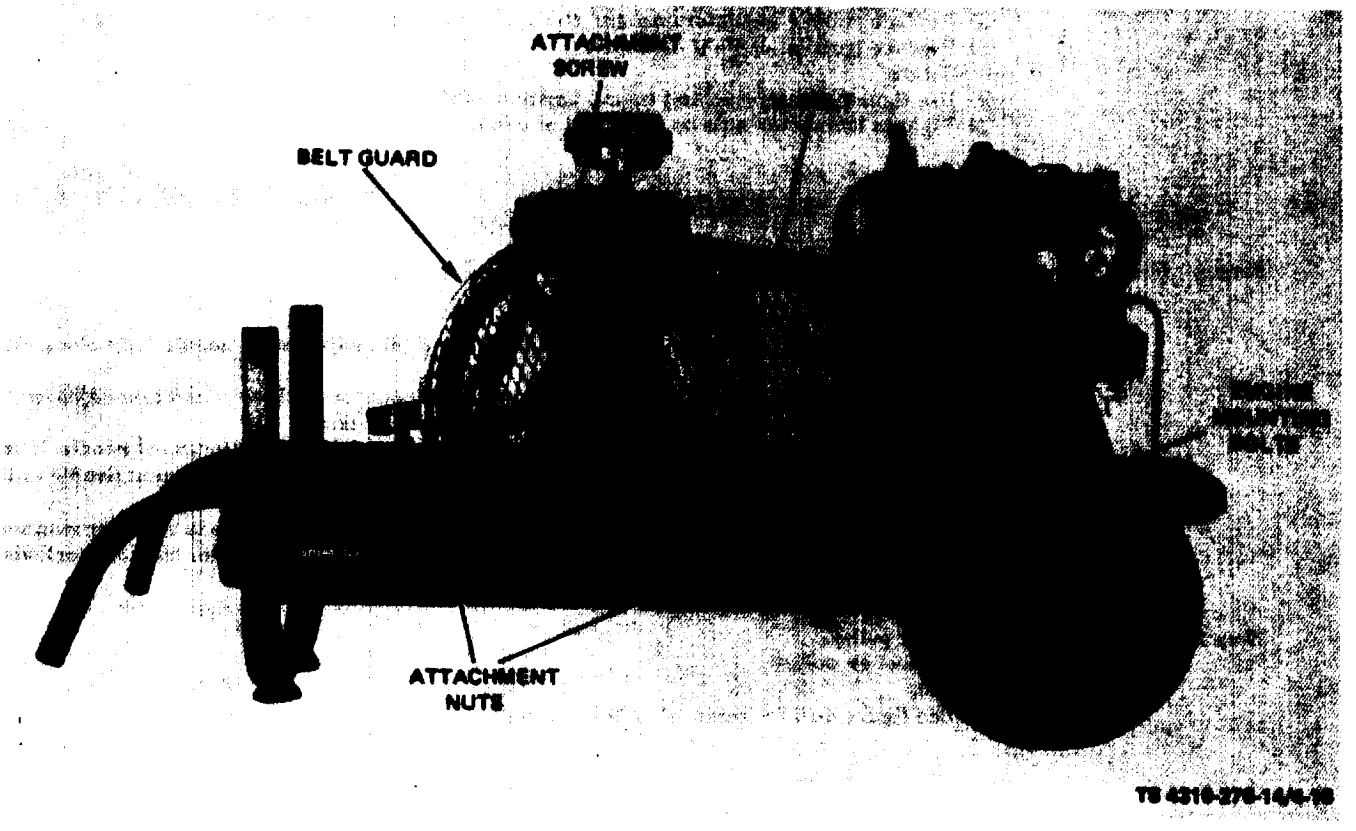

Figure 4-16. Compressor belt guard, removal and intallation.

(2) Remove the nuts holding the belt guard to the handtruck frame.
(3) Remove the screw holding the guard to the compressor. Remove the guard.
(4) Loosen the engine mounting bolts and slide the engine sufficiently to remove the belts.
(5) Loosen capscrews and remove drive pulley and key.
(6) Inspect the pulley for cracks and breaks and the key for chips and burrs. See that the key fits snugly in the keyway.

b. Installation.

(1) Install pulley and key and tighten capscrews.
(2) Loosen nut on flywheel hub and remove flywheel and key.
(3) Inspect the flywheel for chips and cracks.
(4) Inspect the key for chips, burrs, and a snug fit.
(5) Install the flywheel and key and tighten nut.
(6) Reinstall the belts and slide the engine until proper tension is obtained on the belts. Belt deflection should be 0.75 to 1.0 inch (19.05 to 25.4 mm) midway between pulleys. Tighten the engine mounting bolts.
(7) Install the guard by attaching to compressor with screw and to handtruck frame with nuts.

Table 4-2. Troubleshooting (cont)

Malfunction
Test or Inspection
Corrective Action

PNEUMATIC SYSTEM

1. SLOW PUMPING OR INSUFFICIENT PRESSURE.

Step 2. Inspect for clogged compressor air cleaner.
Clean element.
a. Removal and disassembly.
(1) Remove the compressor air cleaner from cylinder head by turning counterclockwise.
(2) See figure 3-3 for disassembly of compressor air cleaner.
(3) Remove screws (1) and lockwashers (2) and remove cover (3).
(4) Remove filter element (4) from base (5).

WARNING

Drycleaning solvent, P-D-680, used to clean parts is potentially dangerous to personnel and property. Avoid repeated and prolonged skin contact. Do not use near open flame or excessive heat. Flash point of solvent is 100°F (38°C).

(5) Clean the air cleaner with cleaning solvent, item 5, App. D, and dry thoroughly.
(6) Clean filter element by blowing out with air or washing with an approved cleaning solvent.
(7) Assemble element (4) into base (5) and install cover (3).
(8) Attach washers (2) and screws (1).
(9) Install cleaner on cylinder head by turning clockwise.

Step 2. Check for leaks in air lines, valves, fittings, etc.
Locate leaks and tighten or replace threaded parts.
a. Build up air pressure in compressor.
b. Using soapy water, check for leaks at all valves, fittings, etc.
c. Tighten threaded parts or, if necessary, replace damaged parts, after releasing pressure.

Step 3. Determine if compressor is too small for equipment being operated. Check the air pressure requirements of the equipment being serviced. If it is greater than the output of this compressor, push this one aside and obtain a compressor unit of a large enough capacity to perform the required job.

Step 4. Check to determine if engine is at correct speed

WARNING

Operation of this equipment presents a noise hazard to personnel in the area. The noise level exceeds the allowable limits for unprotected personnel, Wear ear muffs or earplugs which were fitted by a trained personnel.

Adjust the engine speed governor control to obtain correct speed.
a. See figure 4-13 for adjustment on Models 1A08-1 and 1A08-2.
(1) Remove screws and remove front throttle housing cover and gasket.
(2) Loosen setscrew and release governor control rod. Push throttle level down as far as possible. Hold governor control rod in downward position, and move throttle lever up about 1/16 inch.
(3) Tighten setscrew and inspect linkage for free play by manually operating carburetor throttle shaft.
(4) To regulate speed of engine, loosen nut and turn control" rod assembly clockwise to increase, or counterclockwise to decrease engine speed.

Table 4-2. Troubleshooting (cont)

Malfunction Test or Inspection Corrective Action

(5) Install front throttle housing gasket and front throttle housing.

NOTE

Eliminate surging or poor speed regulation by adjusting the main adjustment needle on the carburetor.

b. See figure 4-14 for adjustment on model 1A08-3.
(1) Remove the front throttle housing cover and gasket.
(2) Open clevis and disconnect from the throttle level.
(3) Hold the throttle 1/16 inch from the open position.
(4) Loosen the locknut below the clevis and screw the clevis up or down until the clevis pin aligns with the hole in the throttle lever.
(5) Connect the clevis to the throttle lever and tighten locknut.
(6) Install the gasket and front throttle housing cover.
(7) To regulate engine speed, turn nut on control rod assembly clockwise to increase or counterclockwise to decrease engine speed.

NOTE

Eliminate surging or poor speed regulation by adjusting the idle adjustment needle on carburetor.

2. EXCESSIVE OIL CONSUMPTION.

Step 1. Check for wrong type of inferior grade of oil.
In order to be certain of proper oil, drain crankcase and refill with proper type and amount.

Step 2. Check for loose oil line or fitting.
Tighten oil line or fitting.
Look for oil leakage around oil line or fittings. If leakage is present tighten oil line fittings.

3. NOISY OPERATION.

Step 1. Check for loose external parts.
Examine compressor carefully, tightening any loose bolts, screws, nuts, or other threaded parts that might be generating noise.

Step 2. Check for pulley striking coils.
a. Bend the coils toward base so they clean pulley.
b. If pulley still strikes coils proceed as follows.
(1) Refer to figure 4-15 for removal of belt guard.
(2) Loosen nuts attaching guard to handtruck frame.
(3) Loosen screw attaching guard to compressor. Remove guard.
(4) Loosen nut on hub of pulley and slide pulley outward on crankshaft until it clears coils. Tighten nut.
(5) Install guard by attaching screw to compressor and nuts to handtruck frame.

Step 3. Check for insufficient oil.
Check oil with oil level gage.

4. EXCESSIVE VIBRATION.

Step 1. Check for loose compressor or engine mounts.
Tighten all the bolts holding the engine and compressor to the truck frame.

Table 4-2. Troubleshooting (cont)

Malfunction
Test or Inspection
Corrective Action

Step 2. Check if belts are out of alignment.
Realign belts.
a. Refer to figure 4-16 for removal of belt guard.
b. Loosen nuts attaching guard to handtruck frame.
c. Loosen screw attaching guard to compressor. Remove guard.
d. Loosen nut on hub of flywheel pulley and adjust pulley on shaft until belts align between pulleys. Tighten nut.
e. Install guard by attaching screw to compressor and nuts to handtruck frame.

5, COMPRESSOR OVERHEATING.

Step 1. Check for dirt in cooling coil and cylinder fins.
Using air hose blow dirt from cooling coils and fins.

Step 2. Check for poor ventilation and high room temperature
If compressor cannot be moved, check possibility of piping intake to cooler location.

6. INTAKE AIR CLEANER NOT FILTERING PROPERLY.

Inspect the compressor air cleaner for the presence of moisture or dirt
Replace defective filter element or the complete cleaner assembly if required.
a. Removal. Remove the air cleaner from cylinder head by turning counterclockwise.
b. Disassembly.
(1) Remove screw (1, fig. 3-3) and wahers (2) and remove cover (3).
c. Cleaning and inspection.

WARNING
Drycleaning solvent, P-D-680, used to clean parts is potentially dangerous to personnel and property. Avoid repeated and prolonged skin contact. Do not use near open flame or excessive heat. Flash point of solvent is 100°F (39°C).

(1) Clean the air cleaner with cleaning solvent, item 5, App. D, and dry thoroughly.
(2) Clean filter element by blowing out with air or washing with cleaning solvent, item 5, App. D .
(3) Impact the air cleaner for cracks, dents, breaks, and other damage.
d. Reassembly end installation.
(1) Assemble filter element (4) into base (5) and cover (3).
(2) Install washers (2) and screws (1).
(3) Install the air cleaner assembly to cylinder head by turning clockwise.

7. AIR LEAKAGE.

Step 1. Check for defective intercooler relief valve.
Replace a defective valve.
a. Removal.
(1) Open the air tank drain valve and drain all air from the compressor.
(2) Remove the intercooler safety valve from the compressor cylinder head by turning the valve counterclockwise.

Table 4-2. Troubleshooting (cont)

Malfunction
Test or Inspection
Corrective Action

b. Cleaning and inspection.

WARNING

Drycleaning solvent, P-D-680, used to clean parts is potentially dangerous to personnel and property. Avoid repeated and prolonged skin contact. Do not use near open flame or excessive heat. Flash point of solvent is 100°F (38°C).

Wash the intercooler safety valve with cleaning solvent, item 5, App. D. Inspect for cracks in the body of the valve. Inspect the threads for wear or damage. Replace a defective intercooler safety valve.

NOTE

This valve is preset at 60 psi (4.2 kg/sq cm). A defective valve should be replaced rather than repaired.

c. Installation.
(1) Install the intercooler safety valve in the compressor cylinder head by turning the valve clockwise.
(2) Recharge air system.

Step 2. Check if air receiver tank drain valve is loose.
The air tank drain valve is underneath the tank and if found to be loose, tighten it. If it is found to be defective in any way, replace it.

Step 3. Check if air hoise or fittings are leaking.
Tighten any loose fittings and replace a leaking air hose.

Section VII. RADIO INTERFERENCE SUPPRESSION

4-13. General

Radio interference suppression is attained by providing a low-resistance path to ground for stray currents. The methods used on the military engine include shielding the high-frequency and ignition wires, grounding the frame with bonding straps, and using radio frequency filters composed of capacitors and resistors.

4-14. Interference Suppression Components.

a. ***Spark Plug.*** The spark plugs are integrally shielded and suppressed and are located in the cylinder head.

b. Spark Plug Cable. The high tension spark plug cable is encased in braided metal shields. It is connected to the spark plug and engine coil cover.

c. Bonding Strap. The bonding strap is connected to the governor and accessory case cover.

4-15. Replacement of Suppression Components.

a. Spark Plug. Loosen the nut on the spark plug cable and remove the cable. Remove the spark plug. Before installing the spark plug, check the gap between the electrodes with a wire or leaf thickness gage. A slight drag should be felt. The desired clearance is 0.028 (0.7112 cm) to 0.033 inch (.08382 cm). Adjust the gap by bending the outside electrode until the gap is properly set. Install the plug. Use a torque wrench and tighten the spark plug to 275-300 inch-pounds.

b. Spark Plug Cables. Loosen the connector nut on each end of the cable and remove the cable.

on each end of the spark plug cable is seated before tightening the connector nuts.

c. Bonding Strap. Remove the nut attaching the bonding strap to the contact assembly cover. Remove the screw attaching the bonding strap to the

governor housing. Remove the bonding strap. When installing the bonding strap, make sure the contact assembly cover nut and the governor housing screw are tight.

Section VIII. MAINTENANCE OF ENGINE ASSEMBLY

4-16. Description

The military standard engines described in this manual are 4-stroke cycle, overhead valve and air-cooled type. These engines have design features for radio frequency interference suppression; complete with fungus proofing. This Military Standard Engine develops 1-1/2 HP at 3,600 revolutions per minute (rpm). Other features designed into the engines are overhead valves with rotators which increase valve life. The valve seat inserts are made of high wear resistant materials, and the combustion chambers have a semi-hemispherical design. These engines are also designed with a splash lubrication system, wet and dry air cleaners, heavy duty tapered main bearings, standard size 18 millimeter spark plugs, centrifugal type mechanical governors, diaphragm fuel pumps, and capabilities of efficient starting and operation at temperatures to minus 25°F (-31.7°C).

WARNING

Operation of this **equipment presents a noise hazard to personnel in the area. The noise level exceeds the allowable limits for unprotected personnel. Wear ear muffs or earplugs which were fitted by a trained professional.**

4-17. Test

Start the engine and operate at full load, if possible, for one hour minimum. Any discrepancies discovered during this period will be noted and referred to Direct Support Maintenance.

4-18. Removal and Installation

a. Removal

(1) Remove the nuts attaching the belt guard to the truck frame (fig. 4-16).

(2) Remove the capscrews attaching the belt guard to the compressor. Remove the guard.

(3) Loosen the engine mounting bolts and slide engine sufficiently to remove belts.

(4) Remove the nut (1, fig. 4-17), fuel line (2), elbow (3) and fuel filter (4).

Figure 4-17. Engine fuel filter, removal and installation.

(5) Remove nuts (1, fig. 4-18), flatwashers (2), lockwashers (3), and capscrews (4). Lift engine from the handtruck.

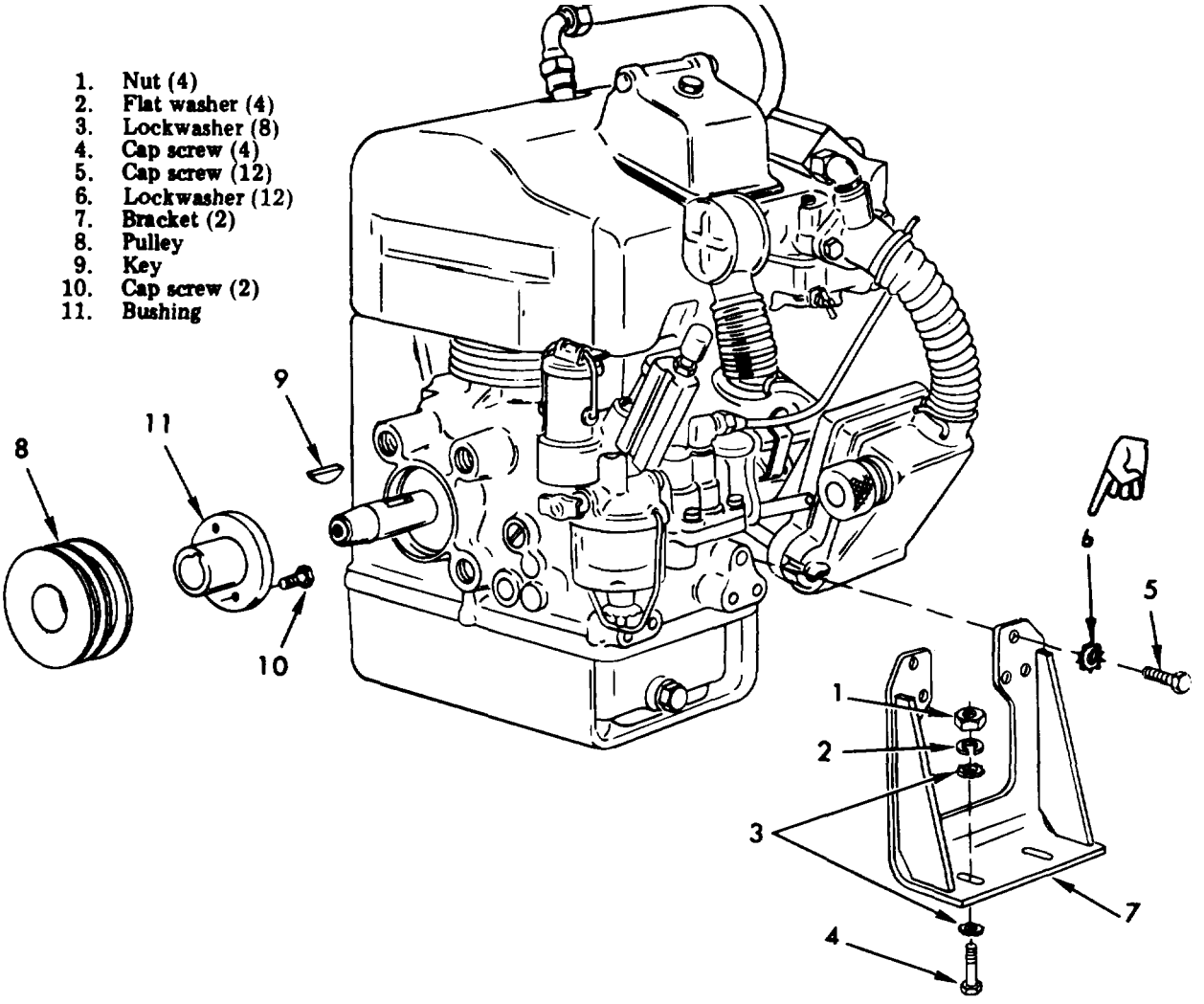

Figure 4-18. Engine, brackets, and drive pulley, removal and installation.

(6) Remove capescrews (5), lockwashers (6) and engine mounting

(7) Remove pully (8), key (9), capscrews (10) and bushing (11).

(8) Pack the starting rope and the fuel filter in a waterproof protective bag and attach to the engine.

b. Installation

(1) Detach the bag containing the starting rope and the fuel filter from the replacement engine.

(2) Attach the bushing (11, fig. 4-18) and the pulley (8) with capscrews (10). Attach pulley and key (9) to engine shaft.

(3) Attach mounting brackets (7) to engine with lockwashers (6) and capscrews (5),

(4) Place engine in position on handtruck and attach with capscrews (4), lockwashers (3), flatwashers (2) and nuts (1).

(5) Attach fuel filter (4, fig. 4-17) with elbow (3), fuel line (2) and nut (1). Care should be exercised when mounting to ensure that threads are not crossed and that the fittings are tight and do not leak. Use the recommended pipe seal or compound to seal the threads and fittings.

(6) Loosen the four engine mounting bolts and install the V-belts. Adjust belt tension to obtain belt deflection of 3/4 of 1 inch midway between pulleys. Tighten engine mounting bolts.

(7) Install belt guard.

(8) Service the engine crankcas.

Section IX. MAINTENANCE OF FUEL SYSTEM

4-19. Fuel Line Assembly.

a. Removal

(1) Remove drain plug (1, fig. 4-19) and drain the fuel tank into a suitable container.

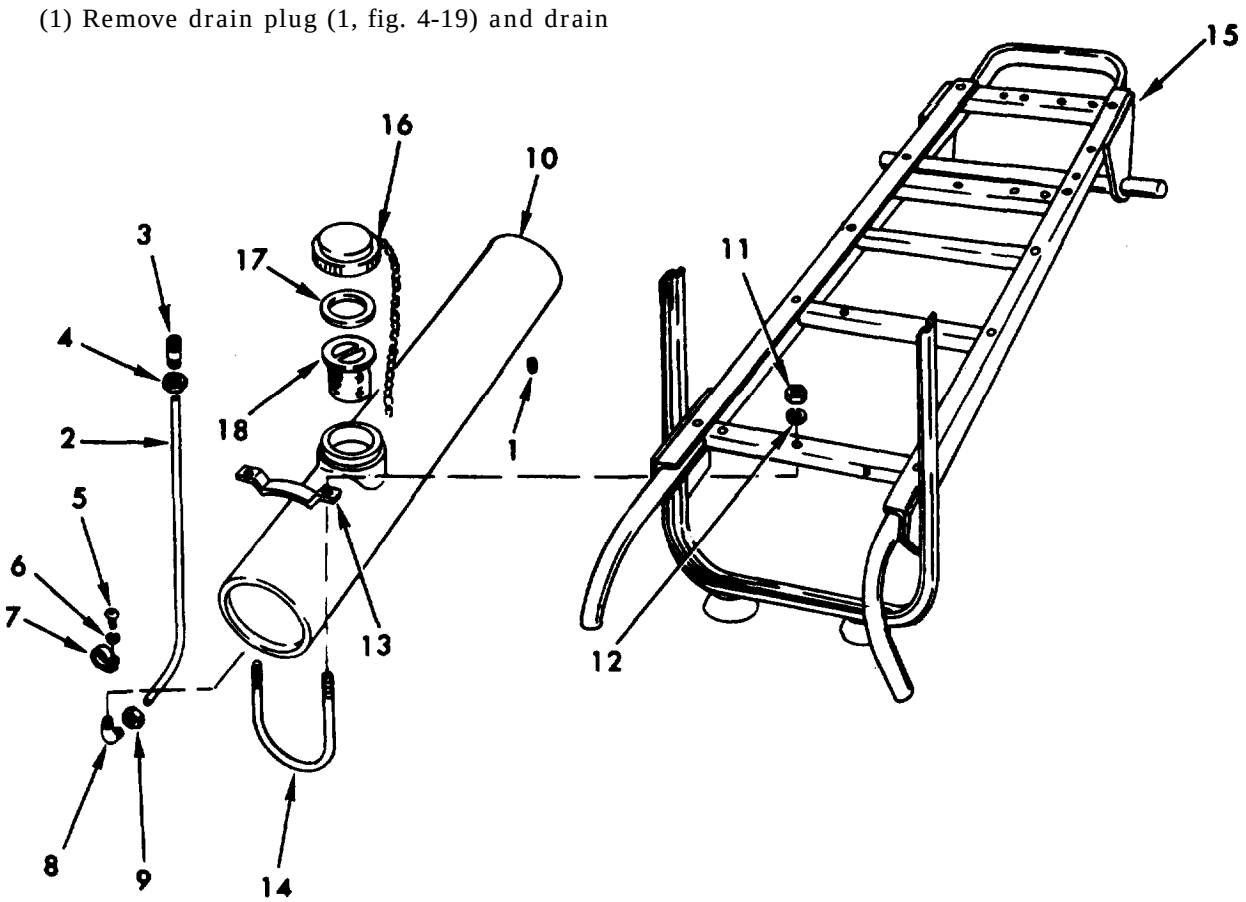

1. Plug	7. Clamp	13. Bracket (2)
2. Fuel line	8. Elbow	14. Hanger (2)
3. Elbow	9. Nut	15. Handtruck
4. Nut	10. Fuel tank	16. Cap and chain
5. Screw	11. Locknut (4)	17. Gasket
6. Lockwasher	12. Lockwasher (4)	18. Strainer

Figure. 4-19. Fuel tank, removal and installation.

(2) Disconnect the fuel line (2) at the fuel filtar and remove elbow (3), nut (4), screw (5), lockwasher (6), clamp (7), elbow (8) and nut (9).

b. Cleaning and Inspection.

WARNING

Drycleaning advent, P-D-680 used to clean parts is potentially dangerous to personnel and property. Avoid repeated and prolonged skin contact. Do not use near open flame or excessive heat. Flash point of solvent is 100°F (38°C).

(1) Clean the fuel line by blowing compressed air through the line. If the line contains a gummy deposit soak the line in cleaning solvent, item 5, App. D, and dry thoroughly.

(2) Inspect the fuel line for cracks, split, or frayed ends. Replace the fuel line if it is defective.

c. Installation

(1) Assemble nut (9, fig. 4-19), elbow (8), clamp (7), lockwasher (6), screw (5), nut (4), and elbow (3) to fuel line (2).

(2) Connect fuel line to fuel filter.

(3) Install drain plug (1).

(4) Service the fuel tank.

4-20. Fuel Tank Assembly.

a *Removal.*

(1) Remove drain plug (1, fig. 4-19) and drain the fuel tank into a suitable container.

(2) Disconnect the fuel line (2) from the fuel tank (10).

(3) Remove locknuts (11), Iockwashers (12), brackets (13) and hangers (14) from handtruck assembly (15). Remove fuel tank.

(4) Remove cap and chain (16), gasket (17) and strainer (18) from fuel tank.

b. Cleaning and Inspection.

WARNING

Drycleaning solvent, P-D-680, used to clean parts is potentially dangerous to personnel and property. Avoid repeated and prolonged skin contact. Do not use near open flame or excessive heat. Flash point of solvent is 100°F (38°C).

(1) Clean all parts with an approved cleaning solvent and dry thoroughly.

(2) Inspect all parts for dents or breaks.

(3) Inspect the nuts and bolts for stripped threads and worn heads.

(4) Replace any defective part.

c Repairing. If tank leaks at threaded connections, remove plug and/or fuel line elbow from bottom of tank and rum 1/8 inch NPT pipe tap into threads to correct crossthreading or damaged threads. Do not tap too deep as oversize hole will result. Reassemble plug and elbow and check for leaks. If leak still persists, replace fuel tank. Fuel tank ends and seam are soldered and leaks developing can be repaired by soldering at leak point.

d. Installation

(1) Install strainer (18, fig. 4-19), gasket (17), and cap and chain (16) in fuel tank (10).

(2) Attach fuel tank to handtruck (15) with hangers (14) brackets (13), lockwashers (12) and locknuts (11).

(3) Attach fuel line (2) to fuel tank.

(4) Install drain plug (1).

(5) Service the fuel tank.

Section X. MAINTENANCE OF FRONT AXLE

4-21. General

The axle is a cylindrical steel rod used to attach the wheel assemblies to the handtruck assembly.

4-22. Axle

a Removal

(1) Jack up the axle end of the handtruck and block securely under the bumper or rails.

(2) Release the air from the tires.

(3) Remove cotter pins (1, fig. 20), nuts (2), washers (3), nuts (4), hub bolts (5), and capscrews (6).

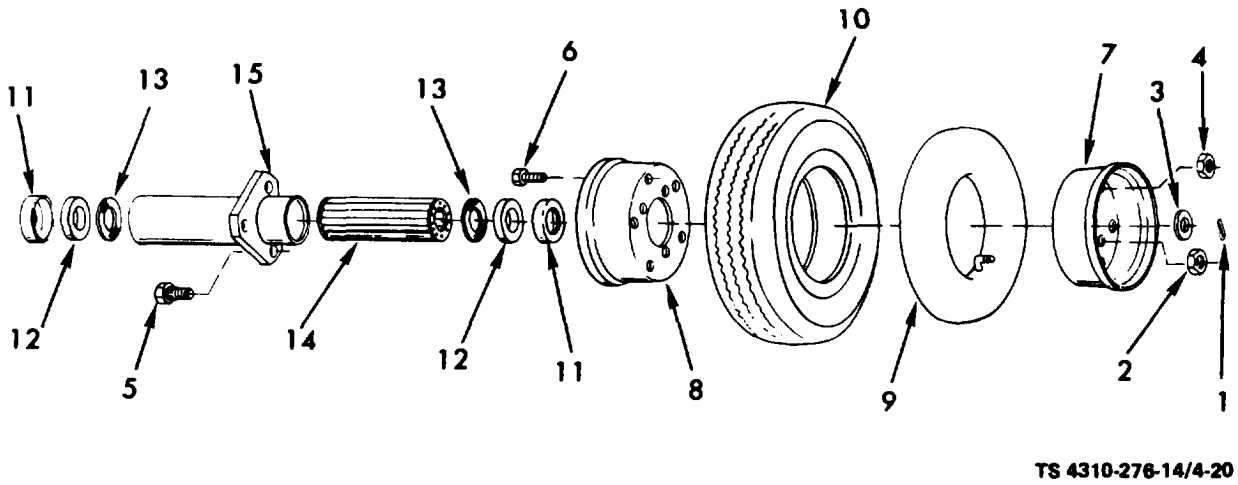

1. Cotter pin
2. Nut (3)
3. Washer
4. Nut (5)
5. Hub bolt
6. Cap screw
7. Wheel disc (outside)
8. Wheel disc (inside)
9. Tube
10. Tire
11. End cap (2)
12. Bearing seal (2)
13. Bearing retainer (2)
14. Roller bearing
15. Hub

Figure 4-20. Wheel assembly, disassembly and reassembly.

(4) Disassemble the wheel disc front half (7), wheel disc rear half (8), tube (9) and tire (10).

(5) Disassemble end caps (11), bearing seals (12), bearing retainers (13), roller bearings (14) and hubs (15).

(6) Remove axle.

(7) Inspect axle for cracks or bends. Replace axle is damaged beyond usage.

b. Installation

(1) Install axle on handtruck.

(2) Assemble hubs (15), bearings (14), bearing retainers (13), bearing seals (12), and end cape (11).

(3) Install the tube (9), tire (10), wheel disc rear bald (8), and wheel disc front half (7).

(4) Install capscrews (6), hub bolts (5), nuts (4), washers (3), nuts (2) and cotter pins (1).

(5) Service the tires to 25 psi (1.766 kg/sq cm).

(6) Remove the blocking and lower the jack.

Section XI. MAINTENANCE OF WHEELS AND TIRES

4-23. General.

The compressor assembly is mounted on a harndtruck, equipped with two rubber tired wheels with roller bearings mounted on the truck axle hub.

4-24. Wheels and Tires

a. ***Removal.***

(1) Jack up the axle end of the compressor assembly and block securely.

(2) Release air from tires.

(3) Remove cotter pins (1, fig. 4-20), nuts (2), washers (3), nuts (4), hub bolts (5) and capscrews (6).

(4) Disassemble the wheel disc front half (7), wheel disc rear half (8), tube (9) and tire (10).

(5) Disassemble end caps (11), bearing seals (12), bearing retainers (13), roller bearings (14) and hub (15).

b. Cleaning and Inspection.

WARNING

Drycleaning solvent, P-D-680, used to clean parts is potentially dangerous to personnel and property. Avoid repeated and prolonged skin contact. Do not use near open flame or excessive heat. Flash point of solvent is 100°F (38°C).

(1) Wash all parts with cleaning csolvent, item 5, App. D, and dry thoroughly.

(2) Inspect bearings, seals and retainers for breaks or excessive wear. Service bearings or re-

place if necessary.

(3) Inspect tires and tubes for cuts, breaks or holes.

c. ***Repair.***

(1) Replace defective tires.

(2) Replace defective tube if beyond repair.

(3) If tube is repairable proceed as follows:

(a) Rasp area around hole to rough up surface and remove any film.

(b) Apply layer of tube cement to area around puncture. Allow to dry.

(c) Peel protective film from patch and apply patch to cemented area.

(d) Roll or press edges of patch to assure proper adhesion.

d. Installation.

(1) Assemble hub (15, fig. 4-20), roller bearing (14), bearing retainers (13), bearing seals (12) and end caps (11) onto axle.

(2) Assemble tire (10) and tube (9) onto wheel disc rear half (8) and front half (7) with capscrews (6) and nuts (4).

(3) Attach to hub with hub bolts (5) and nuts (2). Attach washers (3) and cotter pins (1).

(4) Inflate tires to 25 psi (1.766 kg/sq cm).

(5) Remove blocking and jacks.

Section XII. MAINTENANCE OF HANDTRUCK ASSEMBLY

4-25. General.

The compressor handtruck assembly is constructed of rails, crossmembers, landing leg, handles and an axle all bolted together. The handtruck serves as a compressor frame and is equipped with wheels and tires for easy movement to a new worksite.

4-26. Handtruck Assembly.

a Removal.

(1) Relesase all air from the air tank by opening the drain valve.

(2) Remove the belt guard and V-belts.

(3) Disconnect fuel line at fuel filter.

(4) Remove the nuts, washers and capscrews holding engine assembly brackets to handtruck. Lift engine assembly from handtruck.

(5) Loosen tube nuts and remove aftercooler tube and intercooler tube.

(6) Remove nuts and screws holding compressor to handtruck and remove compressor.

(7) Disconnect fuel line at fuel tank.

(8) Remove nuts holding brackets and hangers and remove fuel tank.

(9) Remove nuts and bolts holding air receiver tank to handtruck and remove tank.

(10) Jack up the axle end of the handtruck and block securely.

(11) Release air from tires.

(12) Remove cotter pins (1, fig. 4-20), nuts (2), washers (3), nuts (4), hub bolts (5) and capscrews (6).

(13) Disassemble the wheel disc front half (7), wheel disc rear half (8), tube (9) and tire (10).

(14) Disassemble end caps (11), bearing seals (12), bearing retainers (13), roller bearings (14) and hub (15).

b. Disassembly of Handtruck.

(1) Removnuts (1, fig. 4-21), feet (2) and screws (3). Remove screws (4, 5, 6, 7), gusset (8), nuts (9), screws (10), gusset (11), leg (12) and handles (13).

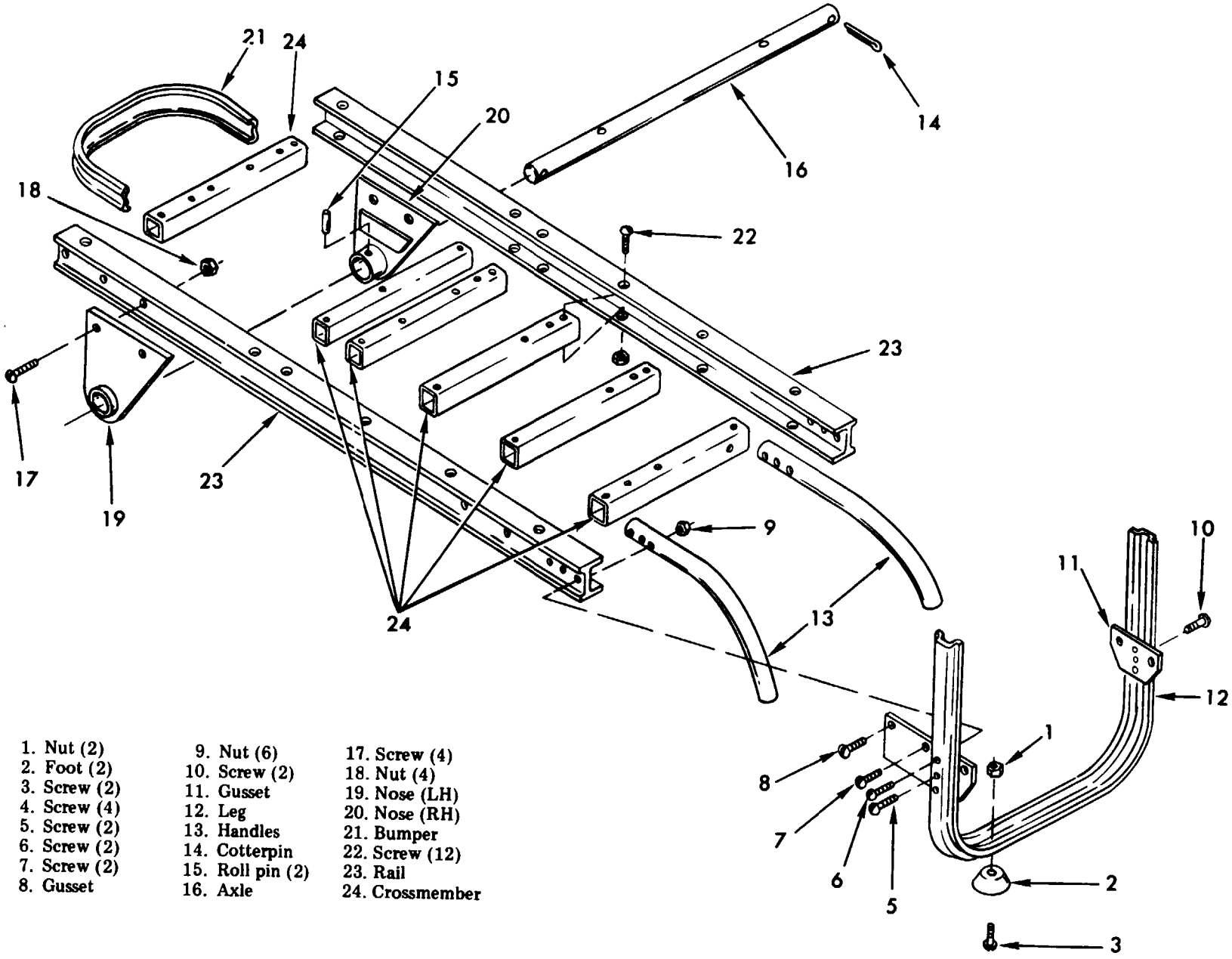

1. Nut (2)
2. Foot (2)
3. Screw (2)
4. Screw (4)
5. Screw (2)
6. Screw (2)
7. Screw (2)
8. Gusset
9. Nut (6)
10. Screw (2)
11. Gusset
12. Leg
13. Handles
14. Cotterpin
15. Roll pin (2)
16. Axle
17. Screw (4)
18. Nut (4)
19. Nose (LH)
20. Nose (RH)
21. Bumper
22. Screw (12)
23. Rail
24. Crossmember

TS 4310-276-14/4-21

Figure 4-21. Handtruck assembly, disassembly and reassembly.

(2) Remove cotter pins (14), roll pins (15), axle (16), screws (17), nuts (18), LH nose (19) and RH nose (20).

(3) Remove screws and bumper (21). Remove screws and nuts (22), rails (23) and crossmembers (24).

c. Cleaning and Inspection of Handtruck.

WARNING

Drycleaning solvent, P-D-680, used to clean parts is potentially dangerous to personnel and property. Avoid repeated and prolonged skin contact. Do not use near open flame or excessive heat. Flash point of solvent is 100°F (38°C).

(1) Wash all parts with cleaning solvent, item 5, App. D, and dry thoroughly.

(2) Inspect all parts for cracks, breaks or bends.

(3) Inspect all hardwar for damaged threads.

(4) Repair or replace all defective parts.

d. Reassembly of Handtruck.

(1) Attach rails (23, fig. 4-21) and crossmembers (24) with screws and nuts (22). Attach bumper and screws (21).

(2) Attach LH nose (19) and RH nose (20) with screws (17) and nuts (18). Install axle (16) with roll pins (15) and cotter pine (14).

(3) Attach handles (13), leg (12), gusset (11), screws (10), nuts (9), gusset (8) and screws (4, 5, 6, 7). Attach feet (2) with screws (3) and nuts (1).

(4) Assemble hubs (15, fig. 4-20), roller bearings (14), bearing retainers (13), bearing seals (12) and end caps (11).

(5) Assemble tires (10), tubes (9), wheel disc rear half (8), wheel dsic front half (7), capscrews (6), hub bolts (5), nuts (4), washers (3) and nuts (2). Attach to axle with cotter pins (1). Service tires to 25 psi (1.766 kg/sq cm).

e. Installiation.

(1) Attach air receiver tank to handtruck with nuts and bolts.

(2) Attach fuel tank with brackets, hangers and nuts. Attach fuel line to fuel tank.

(3) Attach compressor to handtruck.

(4) Attach aftercooler tube and intercooler tube to compressor and air tank.

(5) Place engine assembly on handtruck and fasten. Do not tighten bolts at this time.

(6) Connect fuel line to fuel filter.

(7) Install belts and adjust tension to obtain belt deflection of 0.75 to 1.0 inch (1.91 to 2.54 cm) midway between pulleys. Tighten engine mounting bolts.

(8) Install belt guard with screw attaching to compressor and nuts attaching to truck frame.

Section XIII. MAINTENANCE OF ACCESSORY ITEMS

4-27. Air Discharge Items.

The adapter hose, hose assembly and air chuck are replaced if found defective upon inspection.

4-28. Data Plates.

a. End Item Identification Plate. The air compressor plate specifies the name of the manufacturer, model number, date of manufacture, serial number and the National stock number. The plate is mounted on the left rear of the handtruck.

b. Compressor Identification Plate. The compress pump plate specifies the name of the manufacturer, the model number, and the serial number of the pump. The plate is mounted on the end cover of the pump.

c. Engine Identification Plate. The engine plate indicates the make, model, serial number, stock number, and other pertinent maintenance data. The plate is mounted on the flywheel housing.

d. The data plates are replaced if found defective.

Section XIV. MAINTENANCE OF GAGES

4-29.General.

Among the compressor assembly equipment are the air pressure gage and the gage mounting tube.

4-30. Pressure Gage and Mounting Tube.

a Removal.

(1) Detach mounting tube (3, fig. 4-22) from fitting (4).

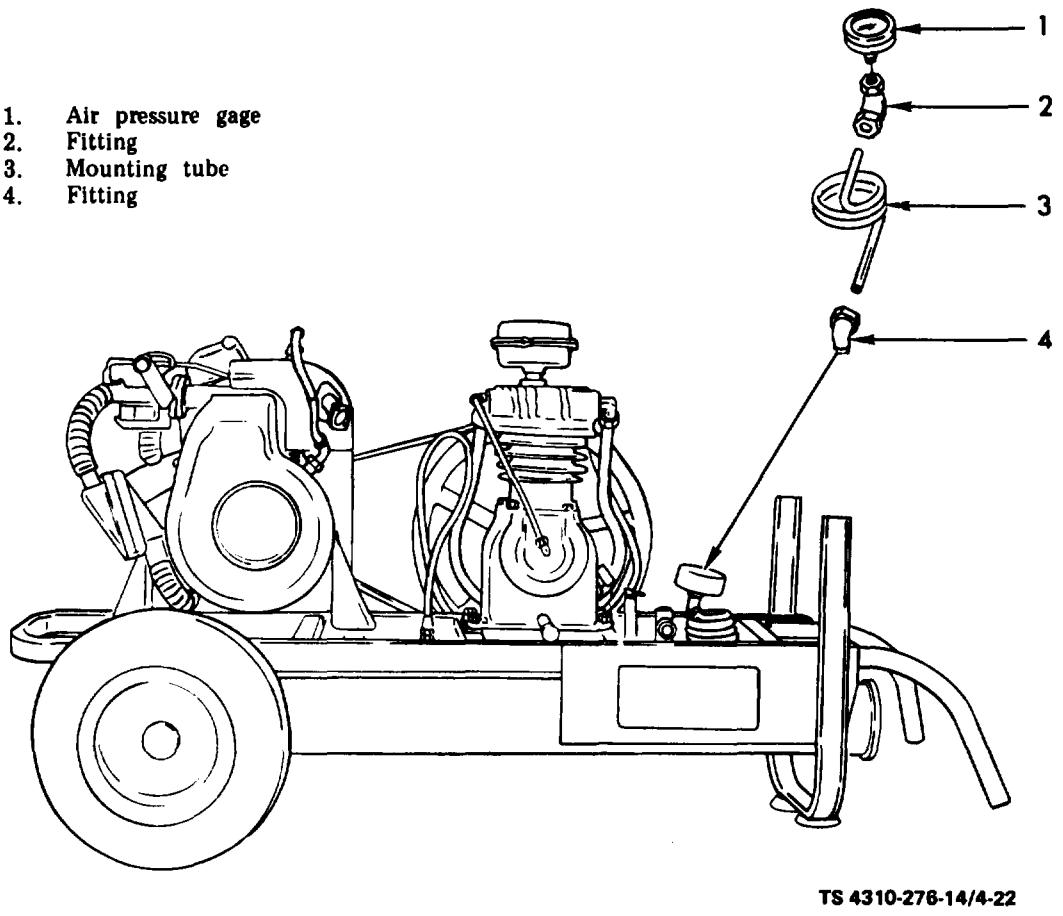

Figure 4-22. Air pressure gage and mounting tube, removal and installation.

(2) Disassemble tube (3), fitting (2) and gage (1).

b. Insallation.

(1) Replace gage and/or mounting tube.

(2) Assemble gage (1, fig. 4-22), fitting (2) and tube (3).

(3) Attach mounting tube to fitting (4).

Section XV. MAINTENANCE OF PNEUMATIC EQUIPMENT

4-31. Air Compressor Assembly.

a ***Removal.***

(1) Release all air from the compressor by opening the drain valve of air receiver tank.

WARNING

Do not operate the air compressor with the belt guard removed.

(2) Remove belt guard (fig. 4-16) by removing capscrew and nuts.

(3) Loosen engine mounting kits (1, fig. 4-23) to release tension on V-belts. Remove V-belts (2).

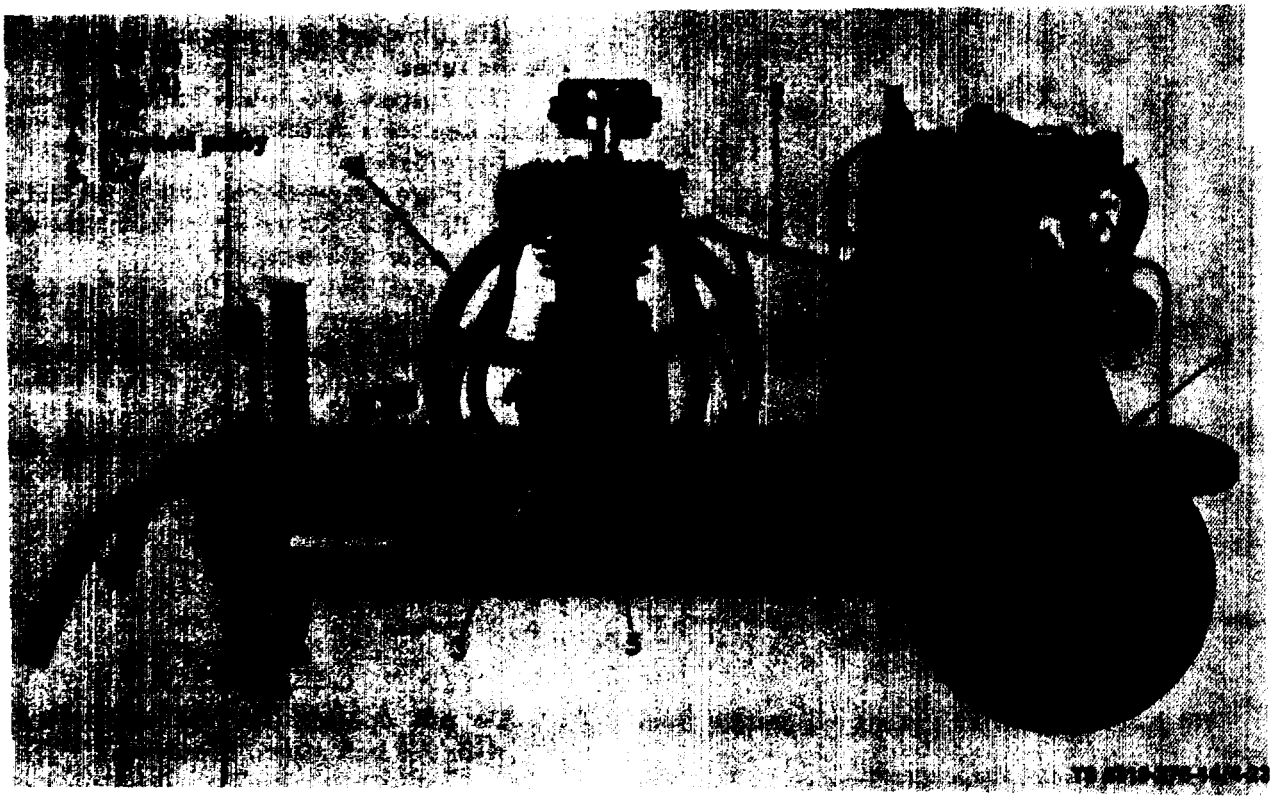

Figure 4-23. V-belts and flywheel pulley, removal and installation.

(4) Loosen nut (3) and remove flywheel pulley

(5) Loosen tube nuts (1, fig. 4-24) and remove intercooler tube. Loosen tube nuts (2) and remove aftercooler tube.

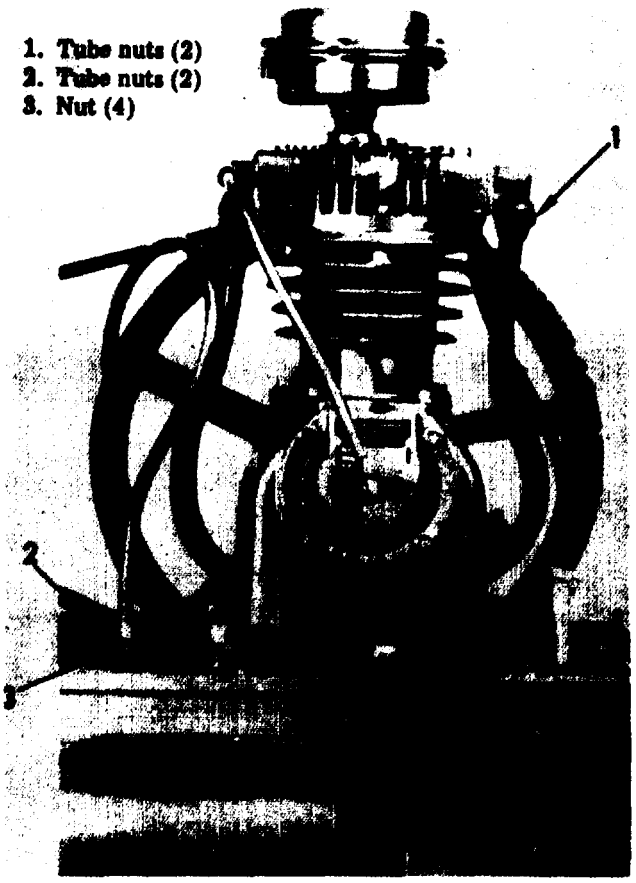

TS 4310-276-14/4-24

Figure 4-24. *Intercooler, aftercooler and compressor, removal and installation.*

(6) Remove nuts (3) and lift compressor from base.

b. Cleaning and Inspection.

(1) Clean the V-belts with a clean dry cloth, taking care to remove all dirt, grease and oil.

(2) Inspect the V-belts for cuts, fraying and wear.

(3) Replace worn or damaged V-belts.

WARNING

Drycleaning solvent, P-D-680, used to clean parts is potentially dangerous to personnel and property. Avoid repeated and prolonged skin contact. Do not use near open flame or excessive heat. Flash point of solvent is 100°F (38°C).

(4) Clean all other parts with cleaning solvent, item 5, App. D.

(5) Inspect the flywheel pulley for chips and cracks.

(6) Inspec the key for chips, burrs and snug fit.

(7) Replace any defective parts.

(8) Inspect the V-belt guard and mounting brackets for dents, cracks or other damage. Straighten minor dents and bends in the guard and brackets.

(9) Inspect all attaching hardware for damaged threads. Replace damaged attaching hardware and replace an unserviceable guard, bracket or other defective part.

(10) Blow out all grease and dirt collected inside the tubes.

(11) Inspect the tubes for dents, holes and cracks. Replace a defective tube.

c. Installation.

(1) Place compressor on handtruck and install nuts (3, fig. 4-24). Attach aftercooler tube nuts (2) and intercooler tube nuts (1).

(2) Install flywheel pulley, (4, fig. 4-23) and key (5). Tighten nut (3) to 43 footpounds.

(3) Install V-belts (2) and adjust tension to obtain belt deflection of 3/4 to 1 inch midway between pulleys. Tighten engine mounting bolts (1).

(4) Attach belt guard (fig. 4-16) with nuts and capscrew.

(5) Service compressor crankcase.

4-32. Belt Guard.

a. Removal.

WARNING

Do not operate the air compressor with the belt guard removed.

(1) Remove belt guard (fig. 4-16) by removing capscrew and nuts.

(2) Loosen engine mounting bolts (1, fig. 4-23) to relaease tension on V-belts. Remove V-belts (2).

b. Cleaning and Inspection.

(1) Clean the V-belts with a clean dry cloth, taking care to remove all dirt, grease and oil.

(2) Inspec the V-belts for cuts, fraying and wear.

(3) Replace worn or damaged V-belts.

NOTE

Always replace the V-belts in matched set of two.

c. Installation and Adjustment.

(1) Install V-belts and adjust tension to obtain belt deflection of 3/4 to 1 inch midway between pulleys. Tighten engine mounting bolts.

(2) Attach belt guard (fig. 4-16) with nuts and capscrews.

4-33. Flywheel Pulley.

a Removal.

WARNING

Do not operate the air compressor with the belt guard removed.

(1) Remove belt guard (fig. 4-16) by removing capscrew and nuts.

(2) Loosen engine mounting bolts (1, fig. 4-23) to release tension on belts. Remove belts (2).

(3) Loosen nut (3) and remove flywheel pulley (4) and key (5).

b. Cleaning and Inspection.

WARNING

Drycleaning solvent, P-D-680, used to clean parts is potentially dangerous to personnel and property. Avoid repeated and prolonged skin contact. Do not use near open flame or excessive heat. Flash point of solvent is 100°F (38°C).

(1) Clean all parts with cleaning solvent, item 5, App. D.

(2) Inspect the flywheel pulley for chips and cracks.

(3) Inspect the key for chips, burrs and snug fit.

(4) Replace any defective parts.

c. Installation.

(1) Install flywheel pulley (4, fig. 4-23) and key (5). Tighten nut (3) to 43 footpounds.

(2) Install V-belts (2) and adjust tension to obtain belt deflection of 3/4 of 1 inch midway between pulleys. Tighten engine mounting bolts (1).

(3) Attach belt guard (fig. 4-16) with nuts and capscrews.

4-34. Belt and Pulley Guard.

WARNING

Do not operate the air compressor with the belt guard removed.

removing capscrew and nuts.

b. Cleaning and Inspection.

WARNING

Drycleaning solvent, P-D-680, used to clean parts is potentially dangerous to personnel and property. Avoid repeated and prolonged skin contact. Do not use near open flame or excessive heat. Flash point of solvent is 100°F (38°C).

(1) CIean all parts with cleaning solvent, item 5, App. D.

(2) Inspect the V-belt aguard and mounting brackets for dents, cracks or other damage. Straighten minor dents and bends in the guard and brackets.

(3) Inspect all attaching hardware for damaged threads. Replace damaged attaching hardware and replace an unserviceable guard, bracket or other defective part.

c. Installation Attach belt guard (fig. 4-16) with nuts and capscrews.

4-35. Unloader Valve.

a. General. The unloader valve is a spring loaded pressure release valve set to open at 175psi (12.3 kg/sq cm). This valve is pre-set at the factory and should not be adjusted by the user.

b. Removal.

(1) Release the air from the air receiver tank (1, fig. 4-25) by opening drain valve (2) at bottom of tank.

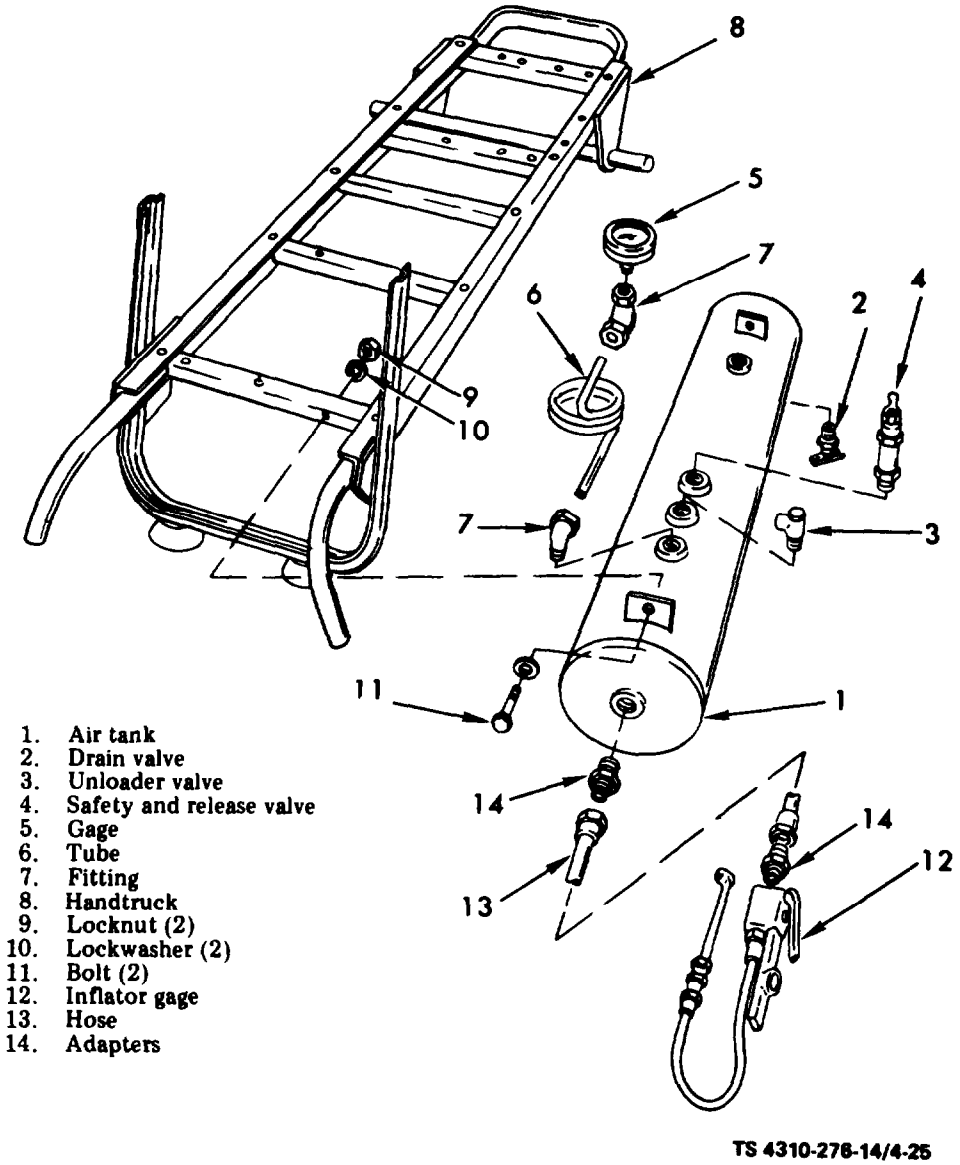

Figure 4-25. Air receiver tank, removal and installation.

(2) Remove the unloader valve (3) from the air receiver tank.

c. Cleaning and Inspection.

WARNING

Drycleaning solvent, P-D680, used to clean parts is potentially dangerous to personnel and property. Avoid repeated and prolonged skin contact. Do not use near open flame or excessive heat. Flash point of solvent is 100°F (38°C).

(1) Clean unloader asessembly with cleaning solvent, item 5, App. D, and dray thoroughly.

(2) Examine mounting threads for defective threads or cracks.

(3) Replace defective unloader.

d. Installation.

(1) Install the unloader valve (3) in the air receiver tank (1).

(2) Close drain valve (2).

4-36. Safety and Relief Valve.

a. ***Removal.***

(1) Release air from the air receiver tank (1,

fig. 4-25) by opening drain valve (2).

(2) Remove the safety and relief valve (4) from the air receiver tank.

b. Cleaning and Inspection.

WARNING

Drycleaning solvent, P-D-680, used to clean parts is potentially dangerous to personnel and property. Avoid repeated and prolonged skin contact. Do not use near open flame or excessive heat. Flash point of solvent is 100°F (38°C).

(1) Clean all parts in cleaning solvent, item 5, App. D, and dry thoroughly.

(2) Inspect all parts for breaks, cracks and other damage. Replace a defective part.

NOTE

This valve is preset at 200 psi (14.16 kg/sq cm). The internal parts of the release and safety valve cannot be repaired. Replace valve is defective.

c. Installation.

(1) Install the safety and relief valve (4) in the air receiver tank (1).

(2) Close drain valve (2).

4-37. Intercooler Safety Valve.

a. Removal.

(1) Drain air from the air receiver tank.

(2) Remove the intercooler safety valve from the compressor cylinder head by turning the valve counterclockwise.

b. Cleaning and Inspection.

WARNING

Drycleaning solvent, P-D-680, used to clean parts is potentially dangerous to personnel and property. Avoid repeated and prolonged skin contact. Do not use near open flame or excessive heat. Flash point of solvent is 100°F (38°C).

(1) Wash the intercooler safety valve with cleaning solvent, item 5, App. D.

(2) Inspect for cracks in the body of the valve.

(3) Inspect the threads for wear or damage.

(4) Replace a defective intercooler safety valve.

NOTE

This valve is preset at 60 psi (4.22 kg/sq cm). A defective valve should be replaced rather than repaired.

c. Installation. Install the intercooler safety valve in the compressor cylinder head by turning the valve clockwise.

4-38. Intercooler and Aftercooler Tubes.

a. Removal.

(1) Release all air from the compressor by opening the drain valve on air receiver tank.

(2) Remove belt guard (fig. 4-16) by removing capscrew and nuts.

WARNING

Do not operate the air compressor with the belt guard removed.

(3) Loosen engine mounting bolts (1, fig. 4-23) to release tension on V-belts. Remove V-belts (2).

(4) Loosen nut (3) and remove flywheel (4) and key (5).

(5) Loosen tube nuts (1, fig. 4-24) and remove intercooler tube. Loosen tube nuts (2) and remove aftercooler tube.

b. Cleaning and Inspection.

WARNING

Drycleaning solvent, P-D-680, used to clean parts is potentially dangerous to personnel and property. Avoid repeated and prolonged skin contact. Do not use near open flame or excessive heat. Flash point of solvent is 100°F(38°C).

(1) Clean all parts with cleaning solvent, item 5, App. D, and dry thoroughly. Blow out all grease and dirt collected inside the tubes.

c. Installation.

(1) Attach intercooler tube nuts (1, fig. 4-24) and aftercooler tube nuts (2).

(2) Install flywheel (4, fig. 4-23) and key (5). Tighten nut (3) to 43 foot-pounds.

(3) Install V-belts (2) and adjust tension to obtain belt deflection of 3/4 to 1 inch midway between pulleys. Tighten engine mounting bolts (1).

(4) Attach belt guard (fig. 4-16) with nuts and capscrew.

4-39. Air Receiver Tank Assembly.

a. Removal.

(1) Release air from the air receiver tank by opening drain valve (2, fig, 4-25).

(2) Remove the safety and relief valve (4) from the air receiver tank.

(3) Remove the air pressure gage (5), gage tube (6) and fittings (7).

(4) Remove the unloader valve (3).

(5) Remove th drain valve (2).

(6) Remove the air receiver tank (1) from the handtruck (8) by removing locknuts (9), lockwashers (10) and bolts (11).

b. Cleaning and Inspection.

WARNING

Drycleaning solvent, P-D-680, used to clean parts is potentially dangerous to personnel and property. Avoid repeated and prolonged skin contact. Do not use near open flame or excessive heat. Flash point of solvent is 100°F(38°C).

(1) Clean all metal parts with cleaning solvent, item 5, App. D, and dry thoroughly. Clean the glass on the gage with solvent and dry with a lint-free cloth.

(2) Clean the interior of the air tank with live steam, if available, or with an approved cleaning solvent. Dry thoroughly.

(3) Inspect metal parts for cracks, rust or damaged threads. Inspect the glass for cracks.

(4) Inspect the interior and exterior of the tank for cracks, broken welds, dents or corrosion. Check threaded surfaces for damaged threads.

(5) Replace defective parts.

c. Installation.

(1) Attach the air receiver tank (1, fig. 4-25) to the handtruck (8) with the bolts (11), lockwashers (10) and locknuts (9).

(2) Install the drain valve (2).

(3) Install the unloader valve (3).

(4) Install the air pressure gage (5), gage tube (6) and fittings (7).

(5) Install the safety and relief valve (4).

4-40. Air Discharge Assembly.

a. ***Removal.***

(1) Release all air from air receiver tank by opening drain valve (2, fig. 4-24).

(2) Remove inflator gage (12), air hose (13) and adapters (14).

b. Cleaning and Inspection.

WARNING

Drycleaning solvent, P-D-680, used to clean parts is potentially dangerous to personnel and property. Avoid repeated and prolonged skin contact. Do not use near open flame or excessive heat. Flash point of solvent is 100°F(38°C).

(1) Clean hose fittings with cleaning solvent, item 5, App. D, and dry thoroughly.

(2) Examine fittings for defective threads.

(3) Examine hose for cracks or leaks.

(4) Replace defective hose assembly.

c. Installation.

(1) Install adapters (14, fig. 4-25) air hose (13) and inflator gage (12).

(2) Close drain valve (2).

Section XVI. MAINTENANCE OF FIRE FIGHTING EQUIPMENT

4-41. General

The monogromotrifluoromethane type fire extinguisher is generally suitable for all types of fire, except fires involved with LOX (liquid oxygen) genersting equipment. The fire extinguisher is furnished with a disposable type cylinder.

4-42. Maintenance

Weight fire extinguisher every 3 months and replace cylinder if gross weight has decreased 4 ounces or more. Lubricate cylinder neck threads with one drop of OE HDO 30 oil before reassembly.

4-43. Replacement of Cylinder.

To replace cylinder, perform the following:

a. Press lever to release pressure from used cylinder.

b. Loosen swivel valve coupling nut and remove valve assembly from used cylinder.

c. Remove instruction band from used cylinder.

d. Place new cylinder through instruction band.

e. Replace safety pin in valve and seal pin with sealing wire.

f. Attach valve assembly and tighten swivel coupling nut on the new cylinder and place fire extinguisher in mounting bracket.

g. Adjust instruction band on cylinder to show maintenance and operating instruction.

CHAPTER 5

DIRECT AND GENERAL SUPPORT MAINTENANCE INSTRUCTIONS

Section I. REPAIR PARTS, SPECIAL TOOLS AND EQUIPMENT

5-1. Special Tools and Equipment

The special tools required to perform direct and general support maintenance on the compressor are listed in table 5-1.

5-2. Repair Parts

Repair parts are listed and illustrated in the repair parts and special tools list TM 5-4310-276-24P, and TM 5-2805-256-24P (Engine),

5-3. Fabricated Tools and Equipment

No specially fabricated tools and equipment are required by direct and general support maintenance personnel to perform maintenance on the compressor.

Table 5-1. Special Tools

Item	NSN	Use
Wrench, Inlet Valve Retainer	5120-00-357-7692	Inlet valve retainer removal and installation. Also removal and replacement of valves and springs.
Wrench, Outlet Valve Retainer	5120-00-357-7691	Outlet valve retainer removal and istallation. Also removal and replacement of valves and springs.
Wrench, Outlet Valve Seat	5120-00-357-7721	Outlet valve seat removal and installation. Also removal and replacement of valves and springs.
Wrench, Inlet Valve Seat	5120-00-357-7722	Inlet valve seat removal and installation. Also removal and replacement of valves and springs.

Section II. TROUBLESHOOTING

5-4. General

a. This section contains troubleshooting information for locating and correcting most of the operating troubles which may develop in the compressor. Each malfunction for an individual component, unit, or system is followed by a list of tests or inspections which will help you to determine corrective actions to take. You should perform the tests/inspections and corrective actions in the order listed.

b. This manual cannot list all malfunctions that may occur, nor all tests or inspections and corrective actions. If a malfunction is not listed or is not corrected by listed corrective actions, notify your supervisor.

5-5. Direct and General Support Maintenance Troubleshooting

Table 5-2 outlines the troubleshooting information.

NOTE

Before you use this table, be sure you have performed all applicable operating checks.

Table 5-2. Troubleshooting

Malfunction
Test or Inspection
Corrective Action

ENGINE

1. ENGINE MISSES OR RUNS ERRATICALLY

Step 1. Check for cracked cylinder head, leaking cylinder head gasket and burned *or* sticking valvse. cheek for l broken valve spring.
Replace cylinder head, gasket, valve or valve spring. Refer to paragraph 6-11 L

Step *2.* Check for a broken pistson piston rings excessively worn broken, or stuck.
Replace piston or piston rings. Refer to paragraph 6-14.

2. ENGINE 0IL CONSUMPTION EXCESSIVE

Step 1. Check piston rings for wear or sticking.
Replace piston ri.ngs. Refer to paragraph 6-14.

Step 2. Check front end rear oil seals for oil see page or leakage.
Replace oil seals. Refer to paragraph 6-17 and 6-21.

3. ENGINE EXCESSIVELY NOISY

Step 1. Check for broken valve spring or bent valve.
Replace valve spring or vaIve. Refer to paragraph 6-11.

Step 2. Camshaft gear worn.
Replace cameshaft gear. Refer to paragraph 6-19.

PNEUMATIC EQUIPMENT

4. COMPRESSOR FAILS TO PUMP TO PRESSURE

Step 1. *Check to see* if belts are improperly adjusted
Adjust *or* replace belts. Refer to paragraph 4-32.

Step 2. Check for broken valve or valve spring.
Remove cylinder head and replace defective parts. Refer to paragraph 7-3.

5. COMPRESSOR KNOCKS

Step 1. Check for loose flywheel pulley.
Tighten flywheel nut. Refer to paragraph 4-31.

Step 2. Check for broken valve or valve spring.
Remove cylinder head and replace defective parts. Refer to paragraph 7-3.

Step 3. Check for connecting rod bearings worn or rod bolts loose.
Tighten connecting rod bolts *or* replace connecting rod. Refer to paragraph 7-4.

6 COMPRESSED AIR CONTAINS OIL

Step 1. Check for worn piston or piston rings.
Replace piston or piston rings. Refer to paragraph 7-4.

Step 2. Check for worn or scored cylinder bore.
Replace cylinder. Refer to paragraph 7-14.

Section III. GENERAL MAINTENANCE

5-6. General

Refer to Chapters 3 and 4 for operator and organization preventive maintenance checks and services.

5-7. General Disassembly Procedures

a. Components to be repaired shall be disassembled to the extent required for complete serviceability.

b. Serviceable, precision, matched or mated parts shall be marked, handled and stored to preclude damage and to insure reassembly and installation in their matched and mated positions in the same assembly or component.

5-8. General Repair and/or Replacement Criteria

a. In-process inspection shall be performed on each assembly, subassembly and component parts being repaired to insure strict adherence to criteria established by this manual.

b. Welding shall assure complete fusion and penetration and be in compliance with specifications and standards referenced herein.

5-9. General Reassembly Procedures

a. General precautions shall be adhered to during reassembly to insure that all internal parts have been properly installed and necessary tolerance checks performed.

b. Upon completion of reassembly, unit shall be lubricated in accordance with Lubrication Order.

CHAPTER 6

REPAIR OF GASOLINE ENGINE

Section I. OIL PAN ASSEMBLY

6-1. General

The military standard engine lubrication system is a splashvapor type. The lubricating oil is splashed onto the moving parts from the oil pan. Lubrication of the valves and the rocker assembly is accomplished by a "closed" breather system which utilizes crankcase vacuum to draw oil vapors up through the pushrod housings into the rocker box cover and hence to the induction system.

6-2. Oil Pan

a. Removal

(1) Remove drain plug (fig. 6-1) and drain oil into a suitable container.

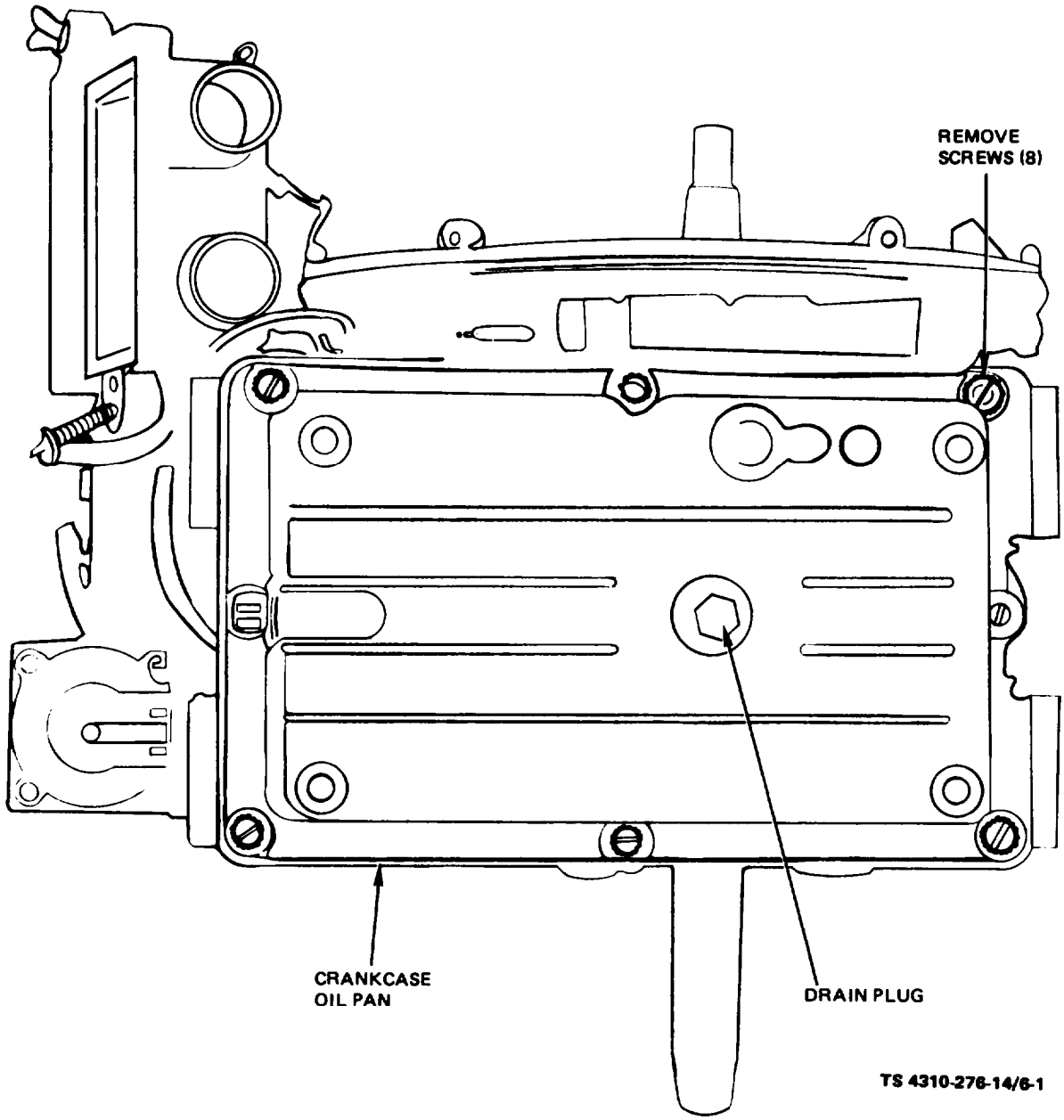

Figure 6-1. Crankcase Oil Pan Removal and Installation

(2) Remove four screws and remove the oil pan cover.

(3) Remove eight screws and remove oil pan.

(4) Remove and discard oil pan gasket.

b. Cleaning and Inspection.

WARNING

Drycleaning solvent, P-D-680, used to clean parts is potentially dangerous to personnel and property. Avoid repeated and prolonged skin contact. Do not use near open flame or excessive heat.

(1) Clean the oil pan with drycleaning solvent, item 5, App. D.

(2) Remove all sludge and carbon deposits; dry thoroughly.

(3) Inspect oil pan for cracks, breaks, warpage, bent or broken cooling fins, stripped or damaged threads or evidence of leakage.

(4) Inspect drain plugs and threads for burrs, damaged threads, and magnetic capabilities.

(5) Repair or replace oil pan if damaged or defective.

c. Installation.

(1) Install new oil pan gasket.

(2) Install oil pan and torque mounting screws to 25 to 30 inch-pounds.

(3) Install oil pan cover.

(4) Install oil drain plugs and refill oil pan.

Section II. ENGINE SPEED GOVERNOR AND CONTROL

6-3. General

A centrifugal flyweight-type governor controls the engine speed. This governor is directly gear driven by the engine camshaft. The ignition system breaker points, condensers, and radio suppression filters of the ignition system are housed in the outer section of the governor housing.

6-4. Governor and Control.

a. Removal.

(1) Refer to table 4-2 and remove the carburetor and throttle controls.

(2) Tag and disconnect low tension cable (fig. 6-2 or fig. 6-3).

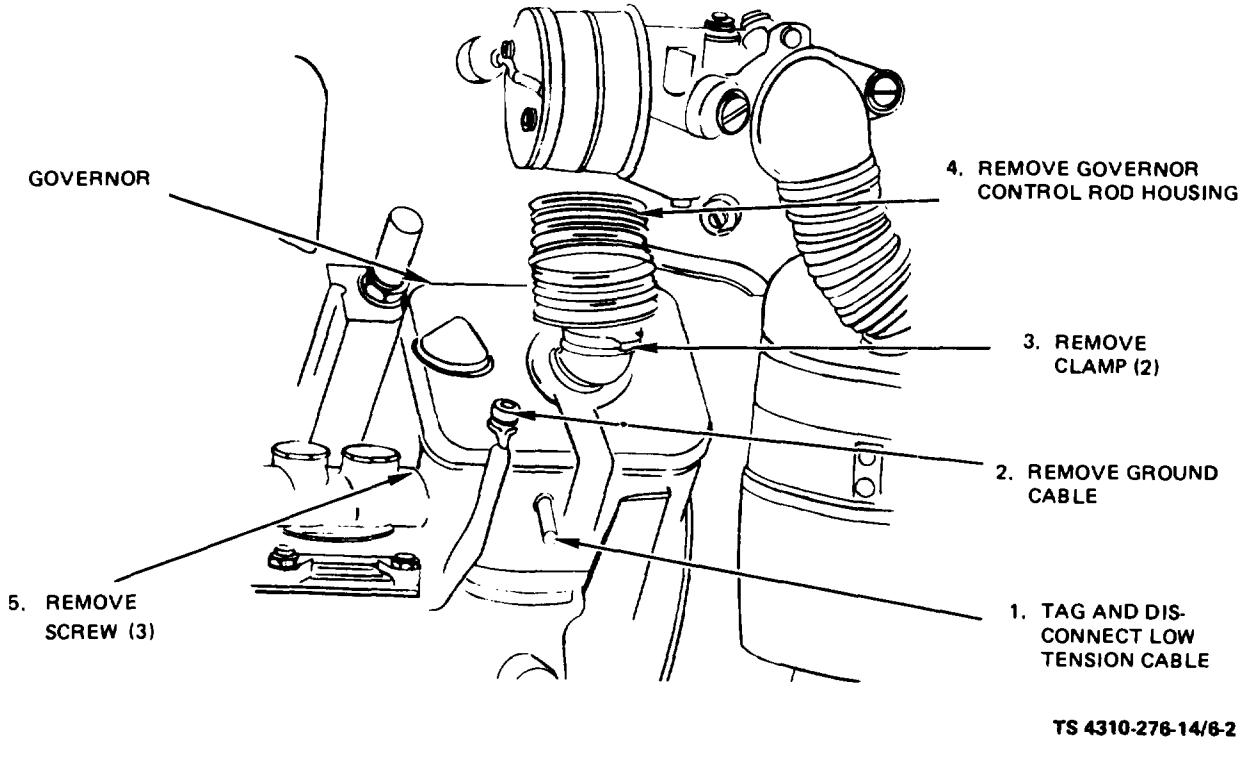

Figure 6-2. Governor, Removal and Installation (Model 1A08-1)

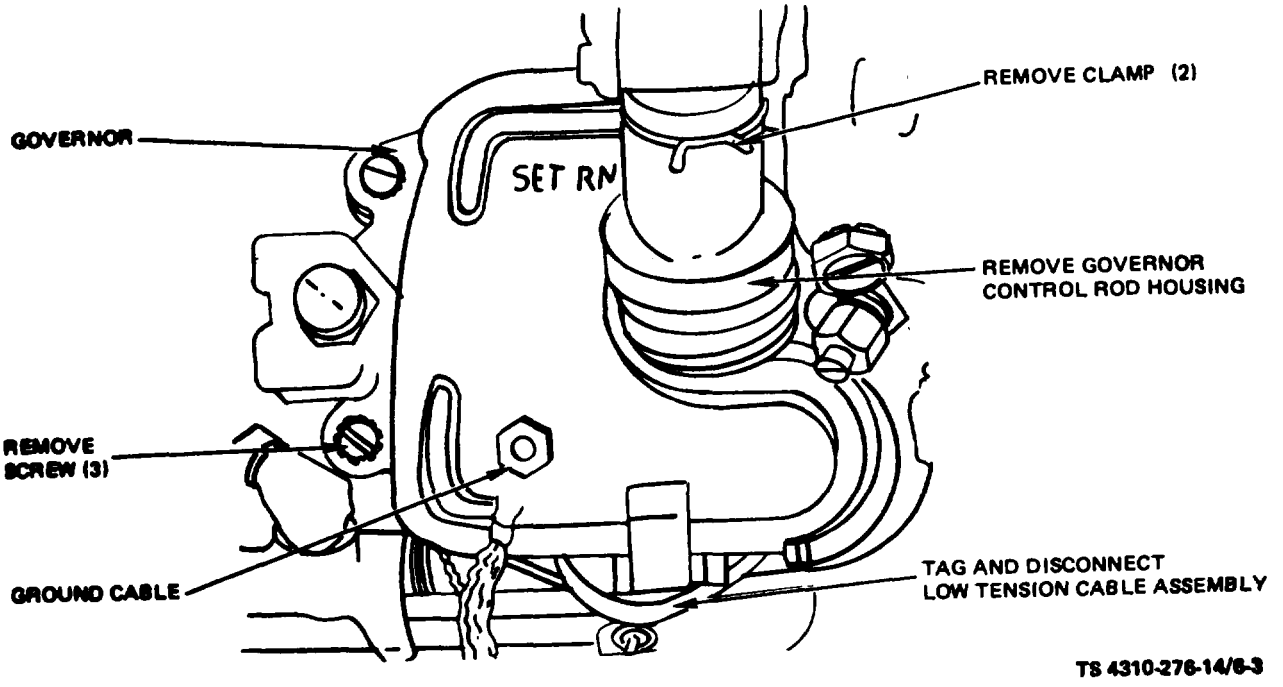

Figure 6-3. Governor, Removal and Installation (Models 1A08-2 and 1A08-3)

(3) Remove ground cable.

(4) Remove clamps securing governor control rod housing and remove housing.

(5) Remove bearing cap (17, fig. 6-4) and nut (18).

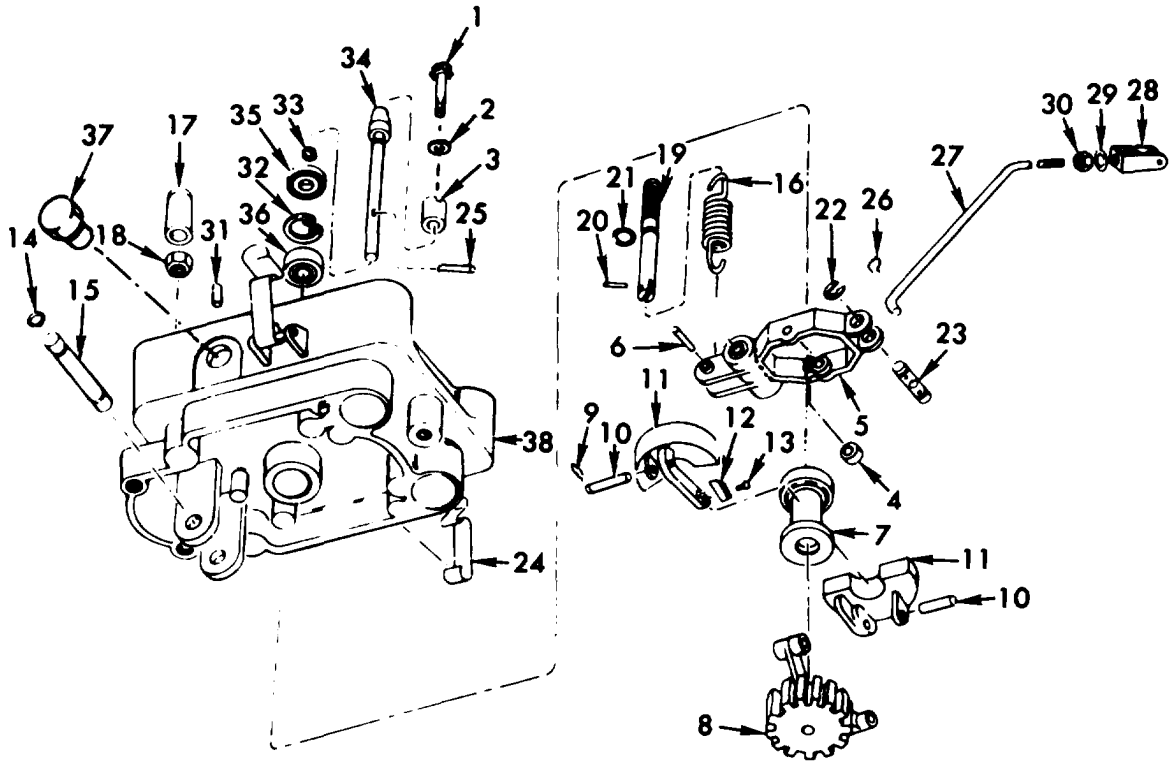

TS 4310-276-14/6-4

1. Screw
2. Washer
3. Cam
4. Bearing
5. Yoke
6. Pin
7. Bushing and bearing
8. Gear
9. Hair pin
10. Axle
11. Flyweight
12. Contact
13. Rivet
14. Ring
15. Axle
16. Spring
17. Cap, bearing
18. Nut, hex
19. Rod, threaded
20. Pin
21. Packing
22. Ring
23. Swivel
24. Clip
25. Pin
26. Spring
27. Rod
28. Clevis
29. Washer
30. Nut
31. Pin
32. Ring
33. Ring
34. Shaft
35. Seal
36. Bearing
37. Plug
38. Housing

Figure 6-4. Governor, Disassembly and Reassembly

(2) Pull pin (20) releasing spring (16).

(3) Remove spring (16), packing (21), rod (19), and pin (6).

(4) Remove spring (26), rod (27), clevis pin (28), washer (29), and nut (30).

(5) Extract pin (25) and remove gear (8), and bushing (7).

(6) Pull shaft (34) from housing (38) and remove bearing (36), ring (32), seal (35), and ring (33).

(7) Remove screw (l), washer (2) and cam (3).

(8) Remove hairpins (9) and axles (10) thus separating flyweights (11) from gear.

(9) Remove rivets (13) and contacts (12) from weights.

(10) Remove rings (14) and axle (15) and extract yoke (5) from housing.

(11) Remove bearings (4) from yoke.

(12) Remove rings (22) and swivel (23).

(13) Remove plug (37), pin (31), and clips (24) from housing.

(14) Discard seal and gaskets.

c. Cleaning, Inspection, and Repair.

WARNING

Drycleaning solvent, P-D-680, used to clean parts is potentially dangerous to personnel and property. Avoid repeated and prolonged skin contact. Do not use near open flame or excessive heat.

(1) Clean all metal parts with drycleaning solvent, item 5, App. D, and dry with filtered dry air.

(2) Dry all parts with clean, soft cloth or equivalent.

(3) Inspect governor assembly for cracks, breaks, bushings, bell cranks, or levers for excessive wear, ease of proper operation and drive gear for nicks, cracks, missing teeth and excessive wear.

(4) Inspect drive shaft and bearings for cracks, breaks, scored areas, freedom of operation and excessive wear.

(5) Inspect flyweights for cracks, breaks, and for ease of operation.

(6) Inspect governor rod for breaks, unusual bends, stripped or damaged threads.

(7) Inspect springs for cracks, breaks and distortion.

(8) Repair or replace any damaged parts.

d. Reassembly.

(1) Install new seal and gaskets during reassembly.

(2) Install clips (24, fig. 6-4), pin (31), and plug (37).

(3) Install swivel (23) with rings (22) into yoke (5).

(4) Install bearings (4) onto yoke.

(5) Attach yoke (5) to housing (38) with axle (15) and rings (14).

(6) Install contacts (12) to weights (11) with rivets (13).

(7) Attach flyweights (11) to gear (8) with axles (10) and hairpins (9).

(8) Attach cam (3), washer (2) and screw (1) to shaft (34).

(9) Assemble ring (33), seal (35), ring (32), and bearing (36) to shaft (34) and insert into housing (38).

(10) Install bushing (7) and gear-weight assembly onto end of shaft (34) and fasten with pin (25).

(11) Insert rod (27) through hole in swivel and attach with spring (26).

(12) Assemble nut (30), washer (29), and clevis (28) onto end of rod (27).

(13) Install pins (6 and 20). Place packing (21) over rod (19) and insert into housing. Attach spring (16) to pins (6 and 20) and install nut (18) and bearing cap (17) onto other end of rod (19).

e. Inatallation.

(1) Attach governor with three screws (fig. 6-2 or fig. 6-3).

(2) Install governor control rod housing and attach with clamps.

(3) Attach ground cable.

(4) Connect low tension cable.

(5) Refer to table 4-2 and install the carburetor and throttle controls.

Section III. FLYWHEEL-FAN ASSEMBLY

6-5. General

The flywheel stores up energy of rotation when the instantaneous torque is less than average. In this way, fluctuations in engine speed are reduced to within very small limits. It also provides cooling air and starting facilities for the engine.

6-6. Flywheel-Fan

a. Removal

(1) Remove two screws and remove startar flange (fig. 6-5).

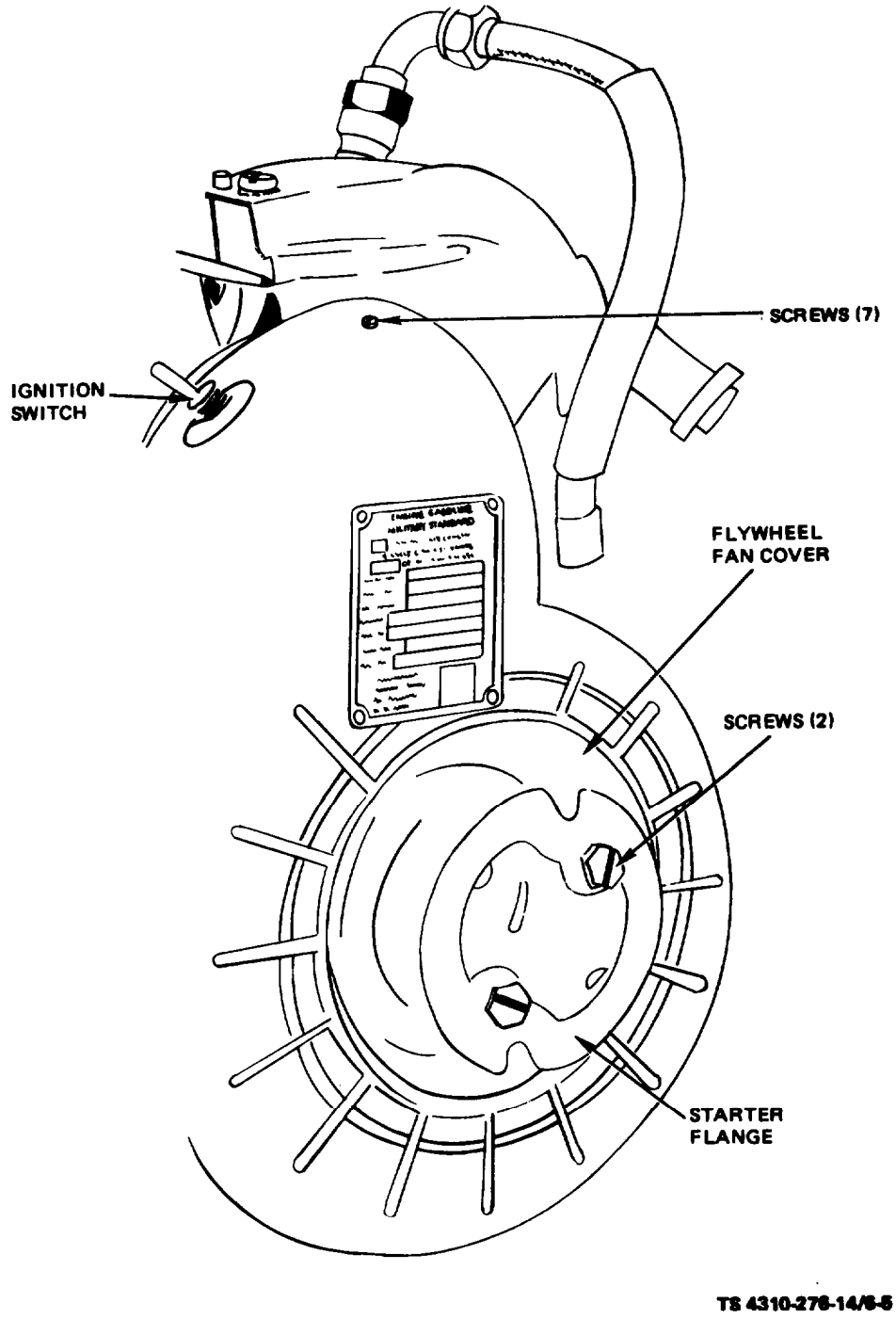

Figure 6-5. Starter Flange and Flywheel Fan Cover, Removal and Installation

(2) Remove seven screws and remove flywheel fan cover. Lay cover back with ignition leads attached.

(3) If necessary to remove switch, remove hex nut on switch and push switch through hole in cover.

(4) Remove nut and lockwasher (fig. 6-6).

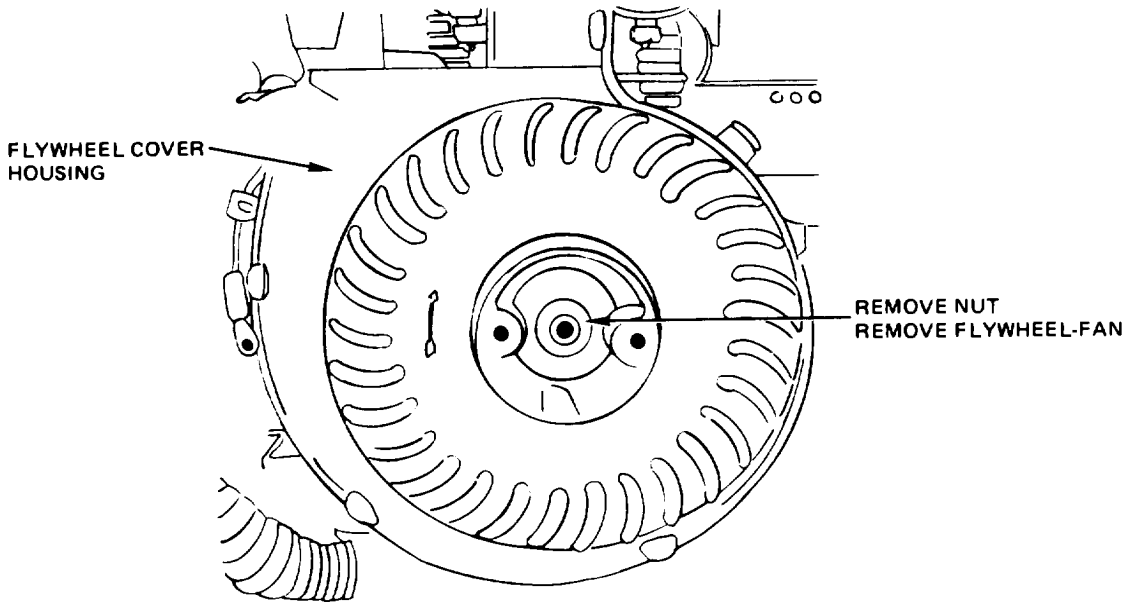

TS 4310-276-14/6-6

Figure 6-6. Flywheel-Fan, Removal and Installation

(5) Use a suitable puller and remove flywheel-fan. Remove key from shaft.

b. Cleaning and Inspection.

WARNING

Drycleaning solvent, P-D-680, used to clean parts is potentially dangerous to personnel and property. Avoid repeated and prolonged skin contact. Do not use near open flame or excessive heat.

(1) Clean flywheel-fan with drycleaning solvent, item 5, App. D.

(2) Inspect starter flange and mounting bolts for cracks, breaks and elongated mounting holes. Inspect mounting bolts for stripped or damaged threads, damaged heads and a serviceable lockwasher installed.

(3) Inspect flywheel-fan for cracks, breaks, evidence of rubbing, bent or broken guide vanes and distortion.

(4) Inspect hub and keyway for evidence of misalignment, damage or excessive wear. Inspect bolt holes for stripped or damaged threads.

(5) Repair or replace any damaged or defective part.

c. Installation.

(1) Place key in keyway of shaft.

(2) Use a plastic hammer or a wooden block and tap the flywheel fan onto the shaft.

(3) Install lockwasher and nut. Torque nut 240-300 inch-pounds.

(4) Install starter flange.

(5) If ignition switch was removed, push it through hole in fan cover and install hex nut.

(6) Install flywheel fan cover and fasten with seven screws.

Section IV. MANIFOLDS AND MANIFOLD MUFFLER

6-7. General

The intake manifold distributes the fuel to the cylinder, helps prevent fuel condensation and assists in further vaporization of the fuel mixture. The exhaust manifold-muffler carries waste products of combination from the cylinder. It also muffles the sound coming from the combustion chamber.

6-8. Intake Manifold

a. Removal.

(1) *Air cleaner (Models 1A08-1 and 1A08-2).*

(a) Disconnect breather line at the air cleaner (fig. 6-7).

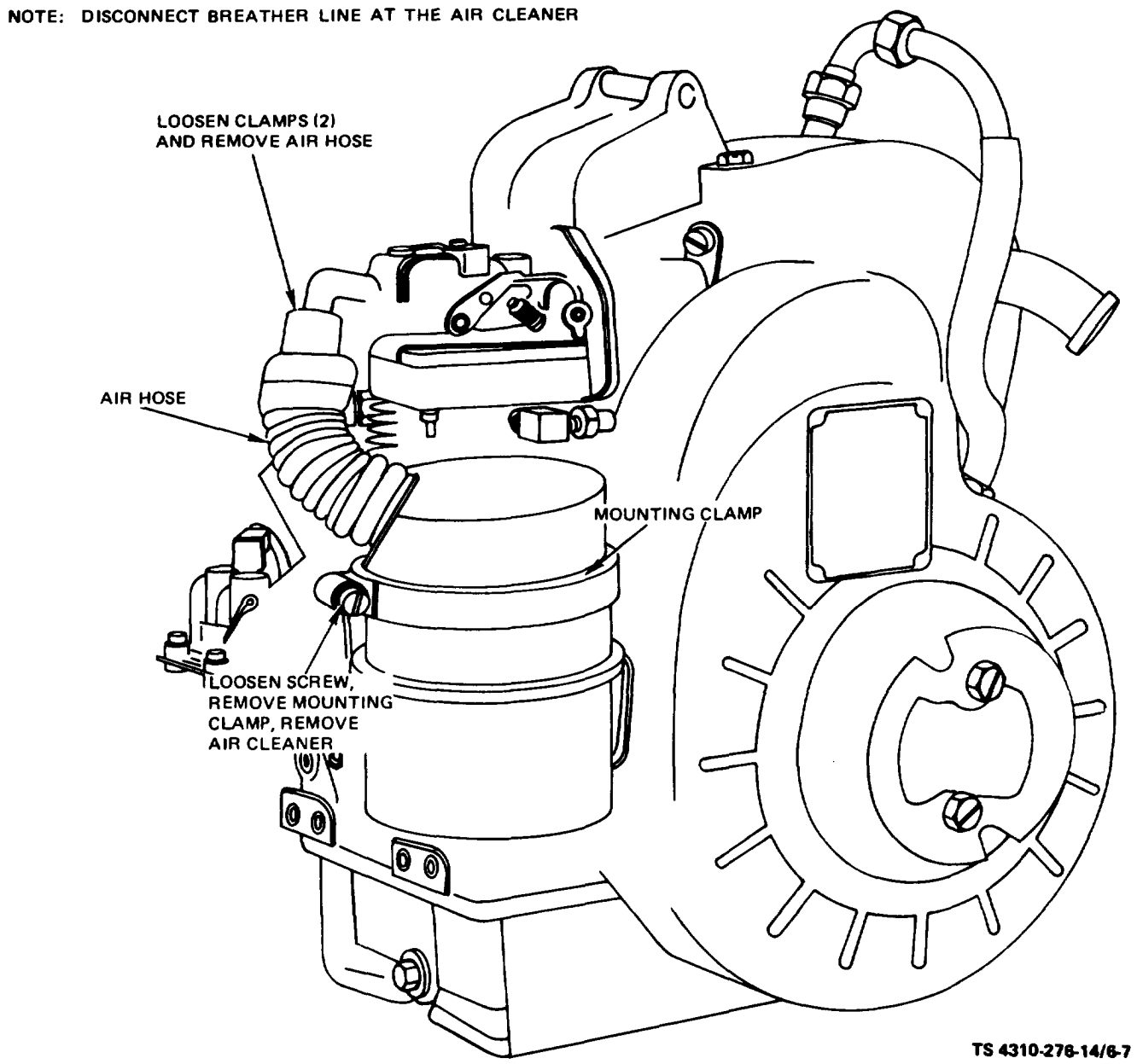

Figure 6-7. Air Cleaner, Removal and Installation (Models 1A08-1 and 1A08-2)

(b) Loosen two clamps and remove air hose.

(c) Loosen mounting clamp screw and remove mounting clamp.

(d) Remove air cleaner.

(2) Air cleaner (Model 1A08-3).

(a) Loosen four clamp screws and remove two hoses (filg. 6-8).

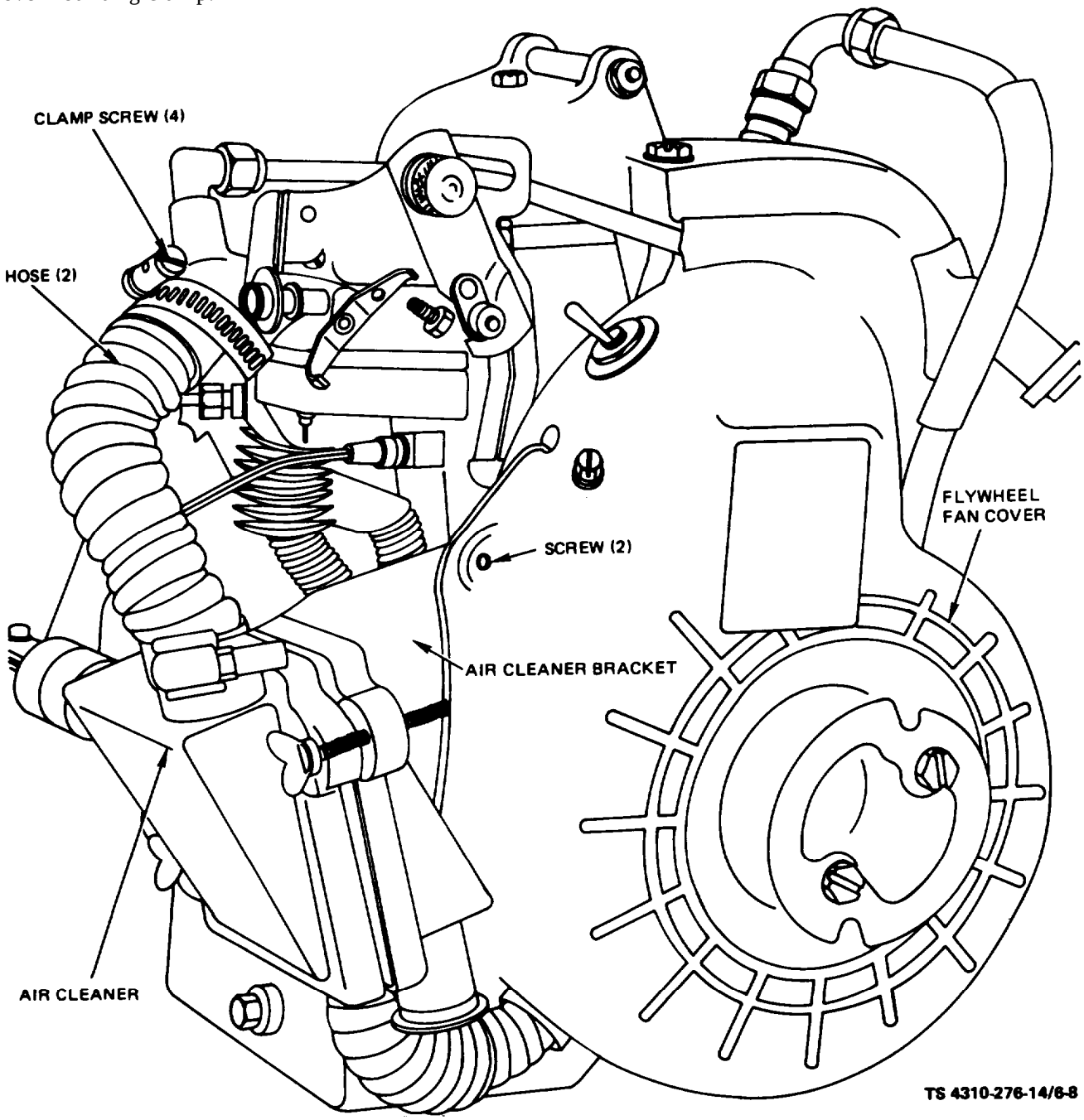

1. LOOSEN CLAMP SCREW (4) AND REMOVE HOSE (2).
2. REMOVE FLYWHEEL FAN COVER.
3. REMOVE SCREW (2) THAT SECURE THE AIR CLEANER BRACKET TO THE BEARING CAP.

Figure 6-8. Air Cleaner, Removal and Installation (Model 1A08-3)

(b) Remove flywheel fan cover (para. 6-6).

(c) Remove two screws that secure the air cleaner bracket to the bearing cap, and remove air cleaner.

(3) Remove carburetor.

(4) Remove screws and remove intake manifold and discard gasket,

b. Inspection and Repair.

(1) Inspect the intake manifold for crack% gasket mounting faces for scratches, gouges, and broken mounting flanges and elongated mounting holes.

(2) Repair or replace the intake manifold.

c. Installation.

(1) Use new gasket and install the intake manifold. Use an inch-pound torque wrench and torque the intake manifold mounting screws to 40-50 inch-pounds.

(2) Install carburetor.

(3) Install air cleaner (Model 1A08-3).

(a) Attach cleaner bracket to the bearing cap with two screws.

(b) Install flywheel fan cover (para. 6-6).

(c) Install two hoses and tighten four clamp screws.

(4) Install air cleaner (Models 1A08-1 and 1A08-2).

(a) Install mounting clamp around air cleaner and tighten mounting clamp screws (fig. 6-7).

(b) Install air hose and tighten two clamps.

(c) Connect breather line to cleaner.

6-9. Manifold-Muffler

a Removal.

(1) Remove screws and remove the side cylinder head covers.

(2) *Model 1A08-1 (fig. 6-9).*

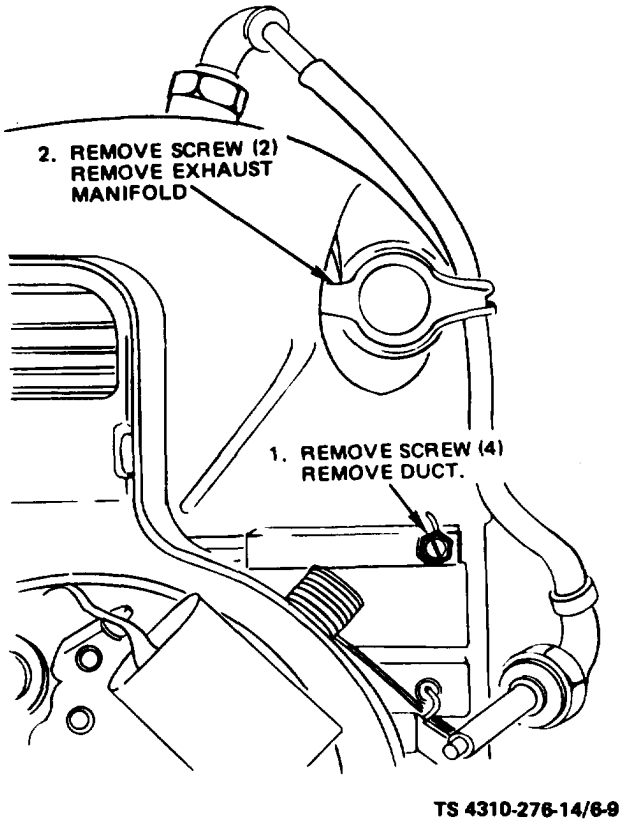

Figure 6-9. Exhaust Manifold-Muffler, Removal and Installation (Model 1AOS-1)

(a) Remove four screws and remove duct.

(b) Remove two screws and remove exhaust manifold.

(3) Models 1A08-2 and 1A08-3 (fig. 6-10).

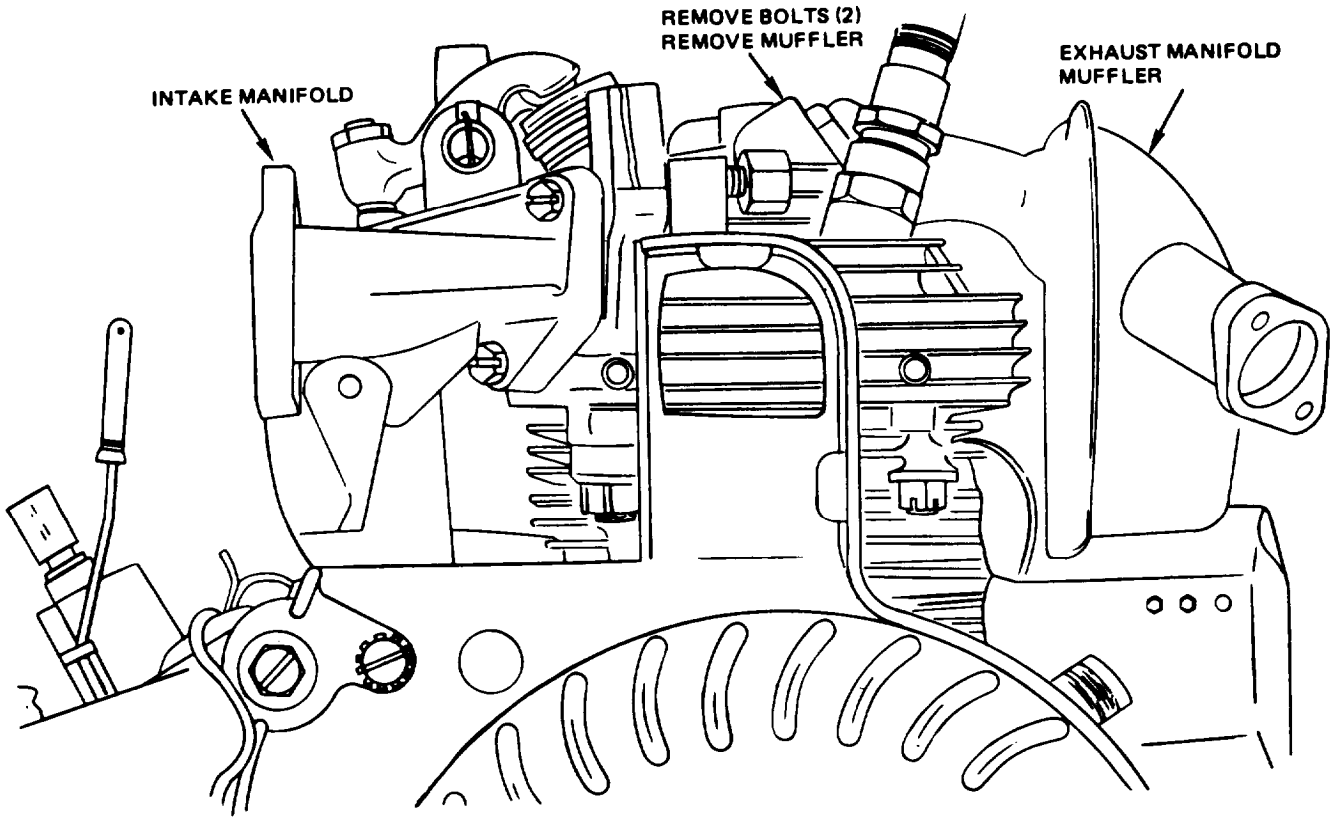

TS 4310-276-14/6-10

Figure 6-10. Exhaust Manifold-Muffer, Removal and Installation (Models 1A08-2 and 1A08-3)

(a) Remove two bolts.
(b) Remove exhaust manifold muffler.

b.* Cleaning, *Inspection and Repair.

WARNING

Drycleaning solvent, P-D-680, used to clean parts is potentially dangerous to personnel and property. Avoid repeated and prolonged skin contact. Do not use near open flame or excessive heat.

(1) Clean all parts with drycleaning solvent, item 5, App. D.

(2) Inspect the exhaust manifold for burned areas, broken mounting flanges, elongated mounting holes, dents, scratched or gouged mounting surfaces, cracks and defective weldments.

(3) Repair or replace any damaged or defective part.

c. Installation.

(1) Models 1A08-2 and 1A08-3.

(a) Install exhaust manifold-muffler and attach with two screws.

(b) Torque the mounting screws to 60-85 inch-pounds.

(2) Model 1A08-1.

(a) Install exhaust manifold with two screws.

(b) Install duct with four screws.

(c) Torque the mounting screws to 60-86 inch-pounds.

(3) Install side cylinder head covers and attach with screws.

Section V. CYLINDER HEAD ASSEMBLY

6-10. General

The cylinder head forms the upper section of the combustion chamber. It has tapped holes in the combustion chamber into which the spark plug is screwed. To retain compression in the cylinder, a metal or metal-abestos cylinder-head gasket is placed between the head and block. The cylinder head also contains and supports the valves, valve rocker arms and rocker shaft. The rocker arms are protected by individual covers, which house the air relief valves. The covers are removed for the purpose of adjusting for proper valve clearance. The valve clearance adjustment screws are located in the upper portion of the cylinder head. The cylinder heads of the three models are interchangeable and the valve clearance adjustment is also the same.

6-11. Rocker Arms, Cylinder Head, Pushrods and Pushrod Housing, Valves and Valve Springs

a. Removal.

(1) Remove five screws and remove the cylinder head covers (fig. 6-11).

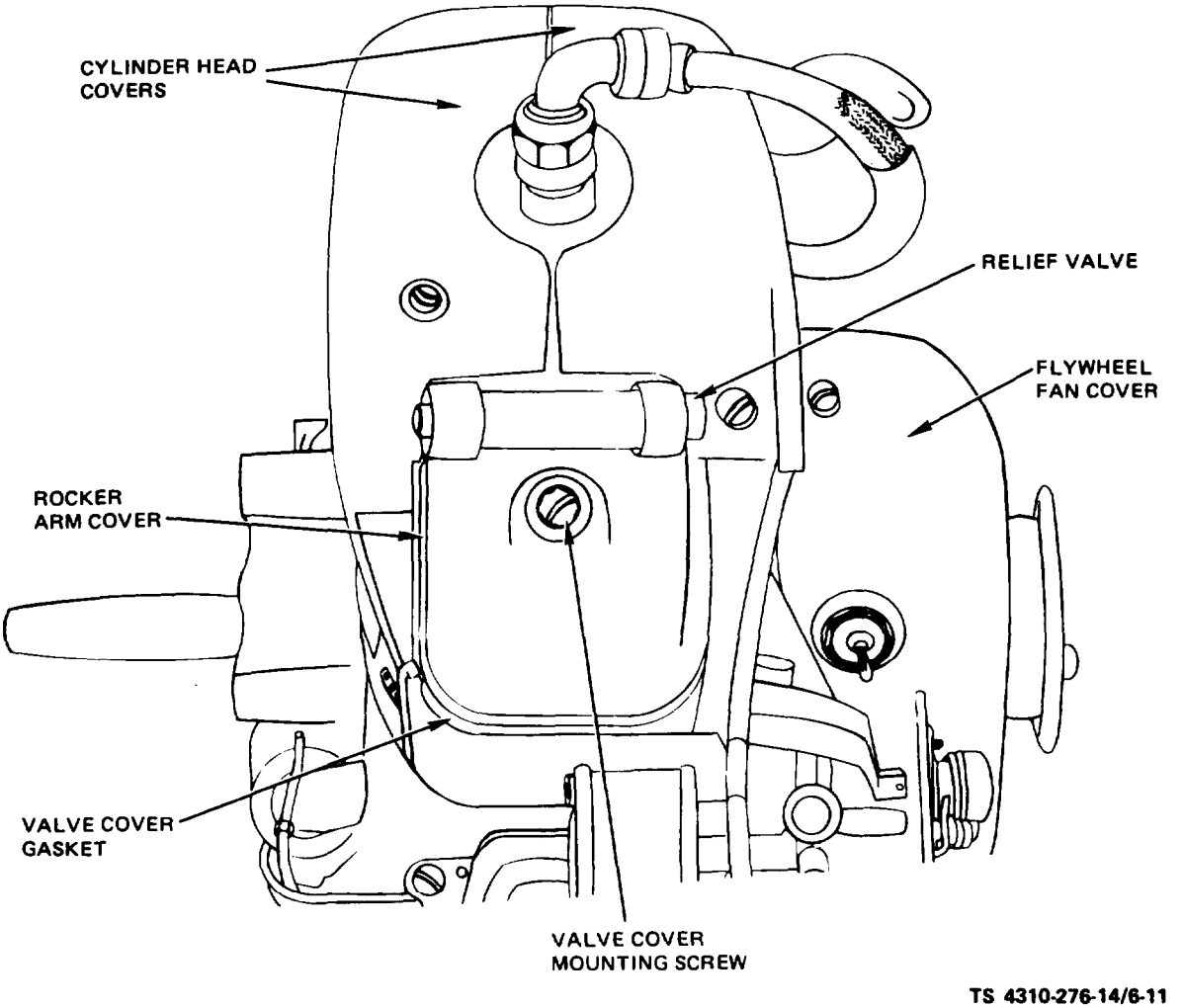

TS 4310-276-14/6-11

Figure 6-11. Rocker Arm Covers, Removal and Installation

(2) Remove seven screws, disconnect ignition switch leads, and remove flywheel fan cover.

(3) Remove rocker arm cover mounting screw and remove the cover.

(4) Remove and discard gasket.

(5) Remove the relief valve.

(6) Using figure 4-8 as guide, loosen the connector nut on each end of the cable and remove the cable.

(7) Remove the spark plug from the cylinder head.

(8) Remove intake manifold (para. 6-8).

(9) Remove exhaust manifold-muffler (para. 6-9).

(10) Loosen connector nut at either end of the breather line and' remove line.

(11) Remove four nuts and washers and remove cylinder head.

b. Disassembly.

(1) Remove screw (1, figure 6-12), packing (2), rod assembly (3), and housing (4).

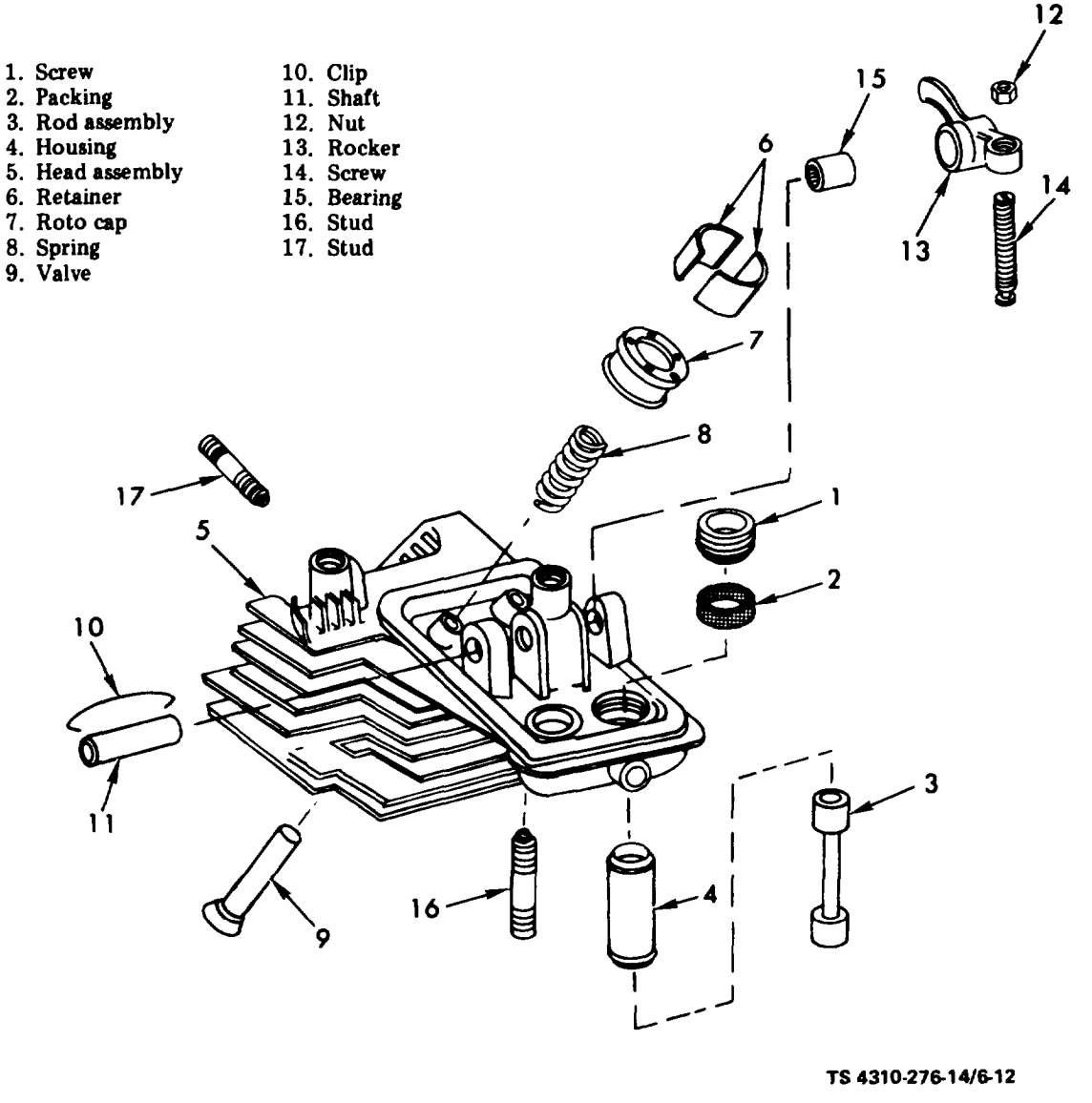

Figure 6-12. Cylinder Head, Disassembly and Reassembly

(2) Remove nuts (12) and screws (14).

(3) Remove clip (10), shaft (11), bearings (15), and rocker arms (13).

(4) Remove retainers (6), roto caps (7), and springs (8), and valves (9).

(5) Remove studs (16, 17) from head (5).

c. Cleaning and Inspection.

WARNING

Drycleaning solvent, P-D-680, used to clean parts is potentially dangerous to personnel and property. Avoid repeated and prolonged skin contact. Do not use near open flame or excessive heat.

(1) Clean all parts with drycleaning solvent, item 5, App. D.

(2) Inspect rocker arm needle bearings for missing needless or wear.

(3) Inspect rocker arm and rocker shaft for cracks, breaks, wear or evidence of overheating.

(4) Inspect valve adjustment assembly for wear, stripped or damaged threads.

(5) Inspect valve rotocaps for wear and proper operation.

(6) Inspect pushrods and housings for cracks, breaks, bends, dents or wear.

(7) Inspect intake and exhaust valves for cracks, breaks, bent stems, pitting burned areas or wear.

(8) Inspect valve guides and seats for cracks, breaks, wear and correct seat angle.

(9) Inspect valve springs and retainers for cracks, breaks, distortion or wear.

NOTE

The valve springs should test to the following dimensions: Free length 1.275 in. (3.24 cm) Load at compressed-length of 1.095 in. (2.78 cm) = 201bs. 1 lb. (9.07 0.45 kg). Load at compressed length of 0.880 in. (2.24 cm) = 441bs. 2 Ibs. (19.96 0.90 kg). Refer to table 1-1 for all other correct measurement.

(10) Grind valves and lap them to the seat inserts individually to insure a sealed fit between the valve and valve inserts.

(11) Inspect the cylinder holddown studs and nuts for cracks, breaks and stripped or damaged threads.

(12) Inspect cylinder head for cracks, broken fins, warpage, leakage, stripped or damaged threads and rocker assembly supports for wear.

(13) Repair or replace any damaged or defective part.

d. Reassembly.

(1) Install studs (16, 17, fig. 6-12) into head (5).

(2) Install valves (9), springs (8), roto caps (7), and retainers (6).

(3) Install rocker arms (13), bearings (15), shaft (11) and clip (10).

(4) Install screws (14) and nuts (12).

(5) Install housing (4), rod assembly (3), packing (2), and screw (1).

e. Installation.

(1) Use new gaskets and seals and install the cylinder head. Fasten with four nuts and washers. Torque to 140-155 inch-pounds.

(2) Install breather line and fasten connector nut at each end.

(3) Install exhaust manifold-muffler (para. 6-9), and torque nuts to 60-85 inch-pounds.

(4) Install intake manifold (para. 6-8), and torque bolts to 45-50 inch- pounds.

(5) Install spark plug and torque to 275-300 inch-pounds.

(6) Install spark plug cable and fasten connector nuts at each end.

(7) Install the relief valve (fig. 6-1 1).

(8) Use a new gasket and install it along with the rocker arm cover. Fasten the cover with the mounting screw.

(9) Connect ignition switch leads and install flywheel fan cover. Fasten with seven screws (fig. 6-11).

(10) Install cylinder head covers and fasten with five screws.

6-12. Valve Clearance Adjustment

a. General. The cylinder heads are interchangeable between the three models and the adjustment is the same for the three models.

b. Removal.

(1) Remove relief valve.

(2) Remove valve cover mounting screw and remove valve cover and gasket.

c. *Adjustment.*

(1) Refer to figure 6-13 for valve adjustment.

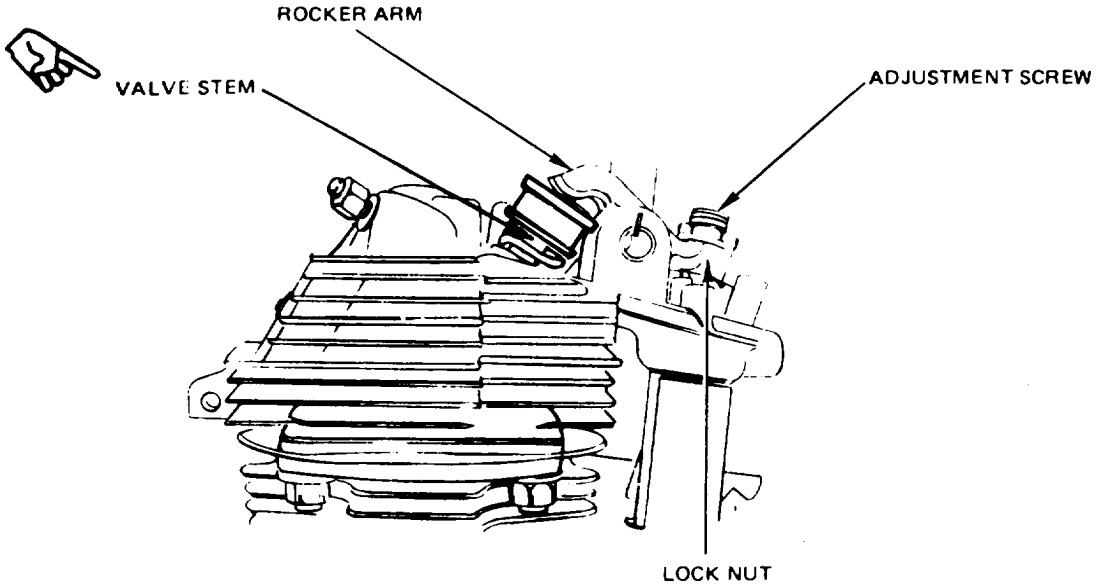

TS 4310-276-14/6-13

Figure 6-13. Valve Clearance Adjustment

(2) Insert a feeler gage between the end of the valve stem and the face of the rocker arm. Continue to rotate the crankshaft and measure the clearance, Correct clearance is 0.007 in. to 0.009 in. cold (0.017 cm to 0.022 cm),

(3) To adjust clearance, loosen the locknut and turn the adjustment screw until measured clearance is 0.007 in. to 0.009 in. cold (0,017 cm to 0.022 cm).

(4) Tighten locknut and remeasure clearance to be sure adjustment is correct.

NOTE
Adjust clearance on all models in the same manner.

(5) Torque locknuts to 44-55 inch-pounds.

(6) Install new gasket with valve cover and fasten with mounting screw.

(7) Install relief valve.

Section VI. PISTON AND CONNECTING ROD ASSEMBLY

6-13. General

Fitted into the bore of the cylinder is a movable piston that receives the energy or force of combustion and transmits the energy to the crankshaft through the connecting rod. Piston rings are used on pistons to maintain gastight seals between the pistons and cylinders, to assist in cooling the piston, and to control cylinder wall lubrication. The connetting rod connects the piston with the crankha ft.

6-14. Piston and Connecting Rod Assembly

a. Removal.

(1) Remove the V-belt guard and the V-belts.

(2) Remove plug and drain crankcase oil into suitable container.

(3) Extract mounting bolts and remove engine, placing it on suitable work area.

(4) Remove the cylinder head assembly (para. 6-11).

(5) Remove the crankcase oil pan (para. 6-2),

(6) Remove carbon deposit from top of cylinder.

(7) Bend lock washer tangs out (fig. 6-14).

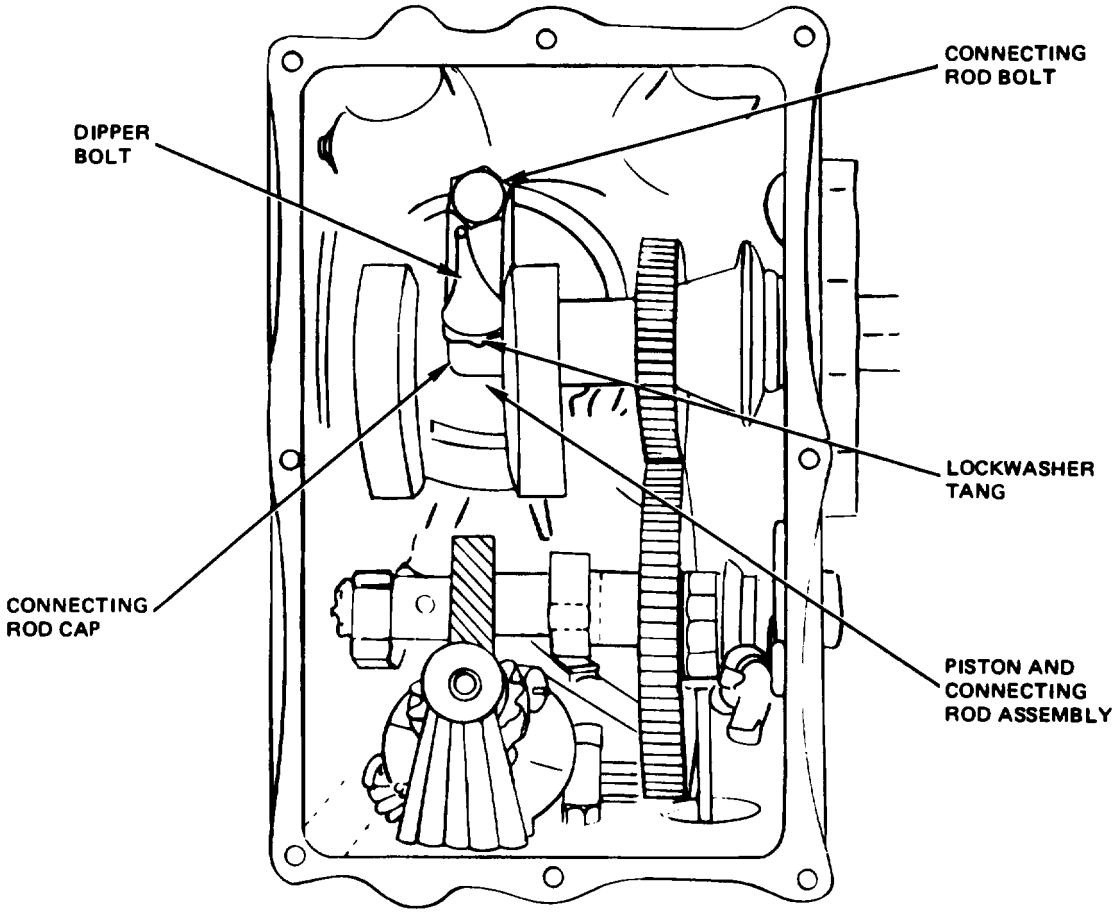

TS 4310-276-14/6-14

Figure 6-14. ***Piston and Connecting Rod Assembly, Removal and Installation***

(8) Remove connecting rod bolts and dipper bolt.

(9) Remove connecting rod cap and discard washer.

(10) Remove piston and connecting rod assembly through the top of engine.

b. Disassembly.

(1) Using retaining ring pliers, remove the piston pin retaining rings (1, fig. 6-15).

☆ U.S. GOVERNMENT PRINTING OFFICE: 1981--765035/359

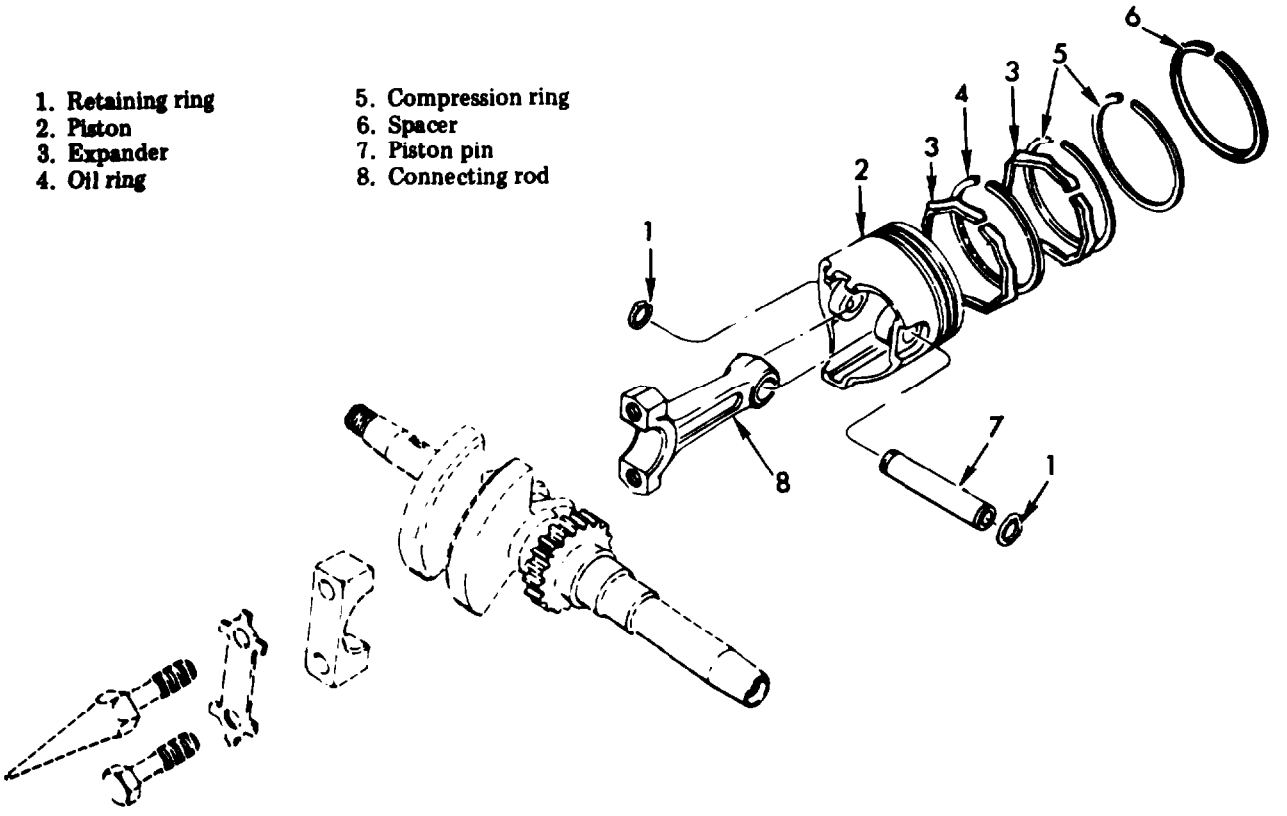

TS 4310-276-14/6-15

Figure 6-15. Piston and Connecting Rod Assembly, Disassembly and Reassembly

(2) Remove the piston pin (7) and the connecting rod (8).

(3) Using a ring expander tool, remove the expander rings (3), oil ring (4), compression rings (5), and spacer (6) from the piston (2).

c. Cleaning, *Inspection, and Repair.*

WARNING

Drycleaning solvent, P-D-680, used to clean parts is potentially dangerous to personnel and property. Avoid repeated and prolonged skin contact. Do not use near open flame or excessive heat.

(1) Clean all parts with drycleaning solvent, item 5, App. D.

(2) Clean the carbon deposit from the piston. Clean the piston ring grooves using a broken compression ring sharpened to a bevel edge or a ring groove cleaning tool. The oil holes in the bottom ring groove of the piston must be clean and free of any obstruction.

(3) Inspect the piston for cracks, breaks or scores. Check the piston ring grooves and lands for wear using a new piston ring, and feeler gage. Inspect the top of the piston for burned spots and flaking around the edge. Inspect the piston pin bearing surfaces for excessive wear or evidence of overheating.

(4) Inspect the piston pins and retainers for excessive wear, distortion and evidence of overheating.

(5) Inspect the connecting rod for breaks, cracks and straightness. Inspect the rod cap bolt and oil dipper bolt for stripped threads or other damage. Inspect the bearing surfaces on both ends for excessive wear, scoring and evidence of overheating. The oil passages in the connecting rod must be free of any obstruction. Install the rod cap on the connecting rod, torque bolts to 90-100 inch-pounds and measure the inside diameter (ID). Measure the ID of the piston pin hole. Proper clearances are contained in table 1-1.

(6) Repair or replace any defective part.

d. Reassembly and Installation.

(1) Using new piston rings and the ring expander tool, install the expander rings (3), oil ring (4), compression rings (5) and spacer (6) in the proper grooves. Stagger the ring gaps around the circumference of the piston,

(2) Install piston pin (7) through the piston (2) and the connecting rod (8). Install retaining rings (l).

(3) Using a ring compressor, compress the rings flush with the piston. Insert the piston and connecting rod into the top of the engine. Tap the top of the piston with a hammer handle and install the piston into the cylinder until the connecting rod is seated onto the crankshaft.

(4) Install the connecting rod cap. Install new lockwasher, connecting rod bolt and dipper bolt.

(5) Tighten connecting rod bolt and dipper bolt to 90-100 inch-pounds.

(6) Bend lockwasher tangs around bolt head.

(7) Install the crankcase oil pan and torque screws to 25-30 inch-pounds.

(8) Install cylinder head assembly (para. 6-11).

(9) Place engine in proper position on compressor unit and install mounting bolts.

(10) Install V-belts and guard.

(11) Service crankcase.

Section VII. BEARING CAP ASSEMBLY

6-15. General

The bearing cap assembly houses the ignition generating component consisting of the coil, rotating magnet, pole shoes and noise filter. Also ineluded is the crankshaft main bearing and oil seal.

6-16. Coil and Rotor

a. Removal.

(1) Remove flywheel-fan assembly (para. 6-16).

(2) Tag and disconnect coil leads (fig. 6-16 or fig. 6-17).

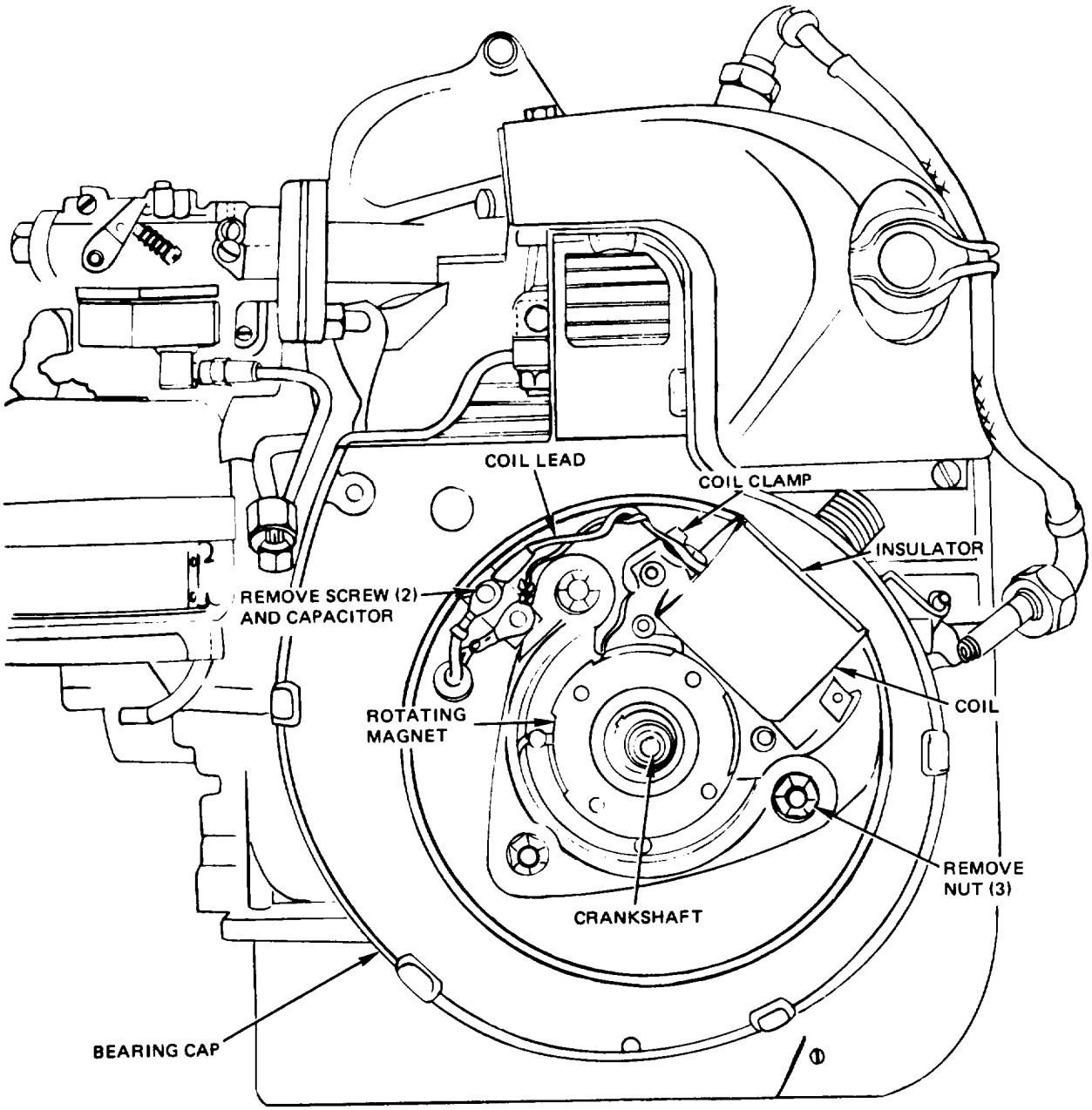

TS 4310-276-14/6-16

Figure 6-16. Coil and Rotating Magnet, Removal and Installation (Models 1A08-1 and 1A08-2)

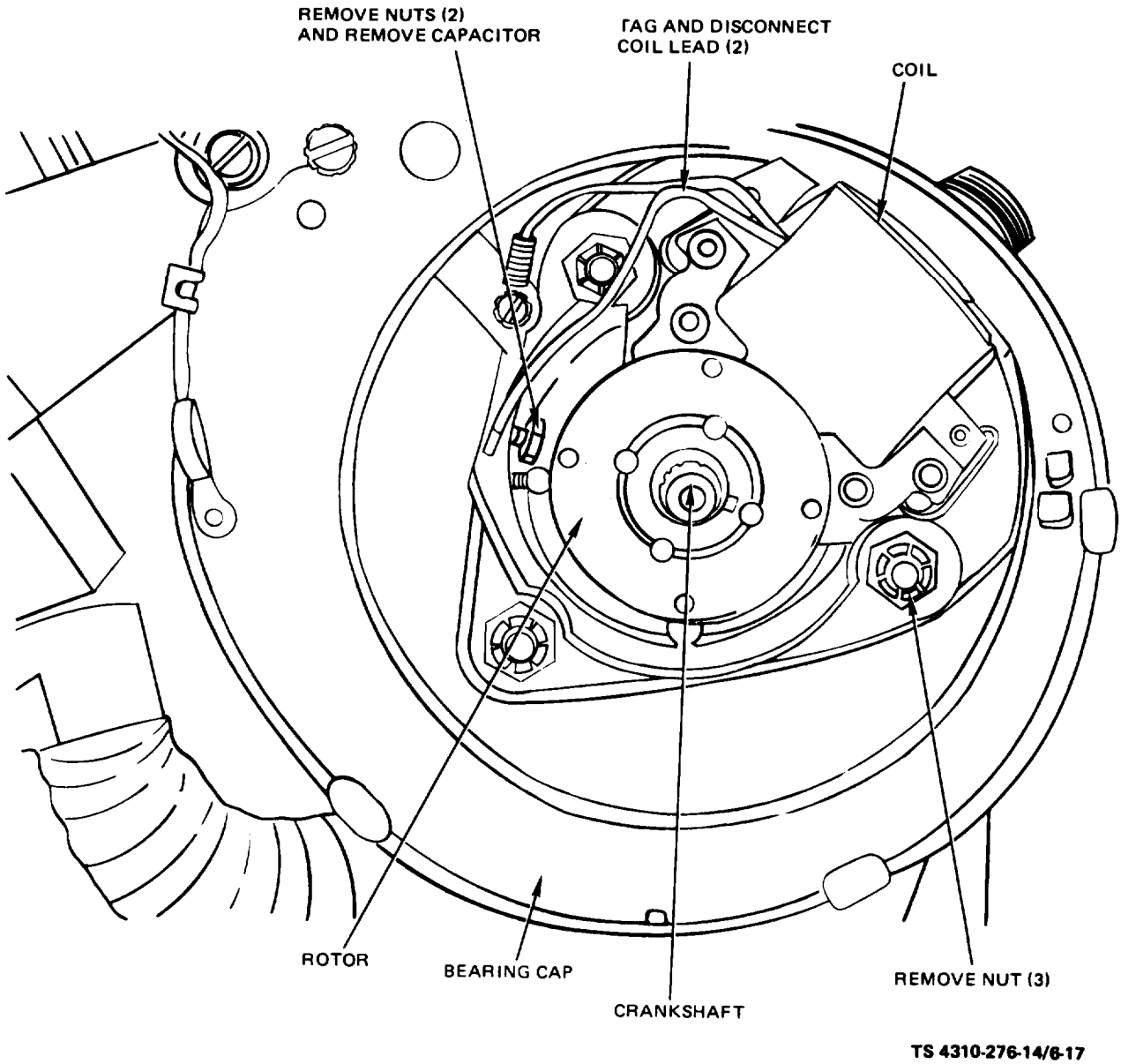

Figure 6-17. Coil and Rotating Magnet, Removal and Installation (Model 1A08-3)

(3) Remove coil clamps and remove coil.

(4) Remove screws and capacitor.

(5) Disconnect low-tension cable lead and remove cable and grommet from behind bearing cap.

(6) Use a suitable puller and remove the rotating magnet from the crankshaft and remove the key from crankshaft.

b. Inspection and Repair.

(1) Inspect the coil for proper mounting, evidence of overheating, defective insulation, or frayed wiring, Using a multimeter or similar device, check for continuity between leads. Continuity between leads indicates the primary and secondary windings are shorted, therefore, discard the coil.

(2) Inspect the rotating magnet for evidence of chaffing, corrosion, proper alignment or damaged keyway.

(3) Inspect the pole shoes for proper alignment, corrosion or evidence of chaffing.

(4) Inspect the dielectric block for cracks, breaks, and proper mounting (Models 1A08-1 and 1A08-2).

(5) Inspect the noise filter for serviceability and proper mounting (Model 1A08-3). Check continuity between terminal end to terminal end.

NOTE

Continuity should not be read from terminal end case.

(6) Inspect for damaged terminal ends and frayed wiring (Model 1A08-3).

(7) Repair any broken or frayed wiring and terminals. Repair or replace the coil or rotating magnet if damaged or defective.

(8) Proceed to next paragraph and remove bearing cap assembly.

6-17. Bearing Cap Assembly

a. Removal and Disassembly.

(1) Refer to figure 6-16 or 6-17 and remove three nuts securing the bearing cap to the engine. Remove the bearing cap.

(2) Remove shims (1, fig. 6-18), bearing cap (2), and oil seal (3). Discard oil seal.

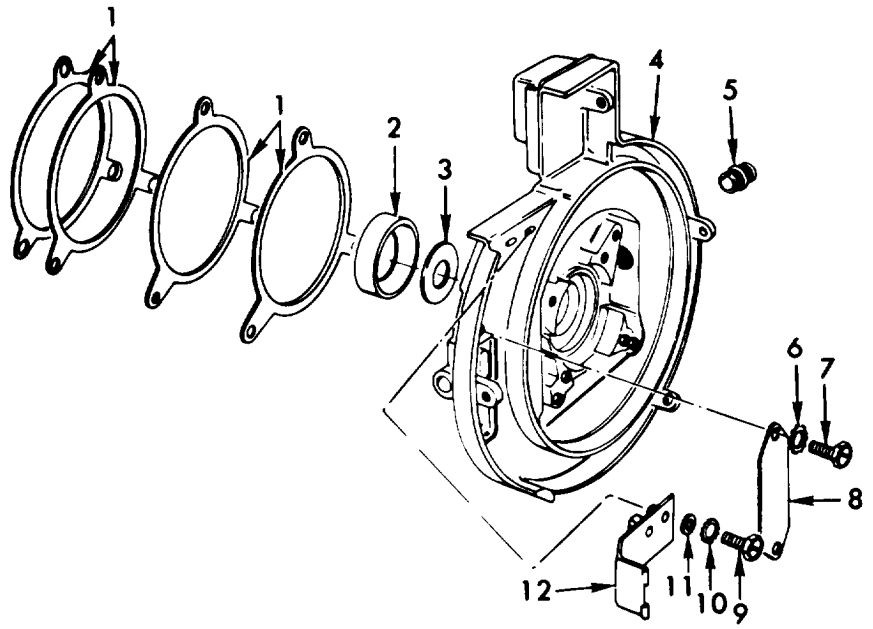

1. Shim
2. Bearing cup
3. Oil seal
4. Bearing cap
5. Adapter
6. Lockwasher
7. Screw
8. Cover
9. Screw
10. Lockwasher
11. Flat washer
12. Air cleaner bracket

Figure 6-18. Bearing Cap Assembly, Disassembly and Reassembly

(3) Remove adapter (5) from bearing cap (4).

(4) Remove screw (7), lockwasher (6) and cover (8).

(5) Remove screw (9), lockwasher (10), flat-washer (11), and air cleaner bracket (12).

b. Cleaning and Inspection.

WARNING

Drycleaning solvent, P-D-680, used to clean parts is potential] y dangerous to personnel and property. Avoid repeated and prolonged skin contact. Do not use near open flame or excessive heat.

(1) Clean all parts with drycleaning solvent, item 5, App. D.

(2) Inspect the bearing cap for cracks, breaks, stripped or damaged threads, elongated mounting holes or other damage.

(3) Inspect bearing cup for wear, pitting, scoring and evidence of overheating.

(4) Inspect shims for damage.

(5) Replace or repair any damage or defective part.

c. Reassembly and Installation.

(1) Install new oil seal (3) in bearing cap (4),

(2) Install cover (8) with washer (6) and screw (7).

(3) Install bracket (12) with washers (10,11), and screw (9).

(4) Install adapter (5).

(5) Install bearing cup (2) and shims (l).

(6) Install the bearing cap assembly. Torque mounting nuts to 100-125 inch-pounds.

NOTE

When installing the bearing cap assembly, attain the proper crankshaft end-play by utilizing shims (0.000 -0.003 in,) (0.000 -0.007 cm).

(7) Install key on crankshaft and then place magnet on crankshaft.

(8) Install cable and grommet and connect low tension cable lead.

(9) Install capacitor.

(10) Install coil and clamps.

(11) Connect coil leads.

(12) Install flywheel-fan assembly.

Section VIII. CAMSHAFT AND VALVE TAPPETS

6-18. General

The camshaft operates the pushrod lifters and drives the governor assembly and fuel pump.

6-19. Camshaft and Valve Tappets

a. Removal and Disassembly.

(1) Refer to paragraph 6-11 and remove the cylinder head assembly.

(2) Drain the crankcase oil into a suitable container and remove the oil pan in accordance with paragraph 6-2.

(3) Remove plug (5, fig. 6-19) and rubber seal ring **(6).**

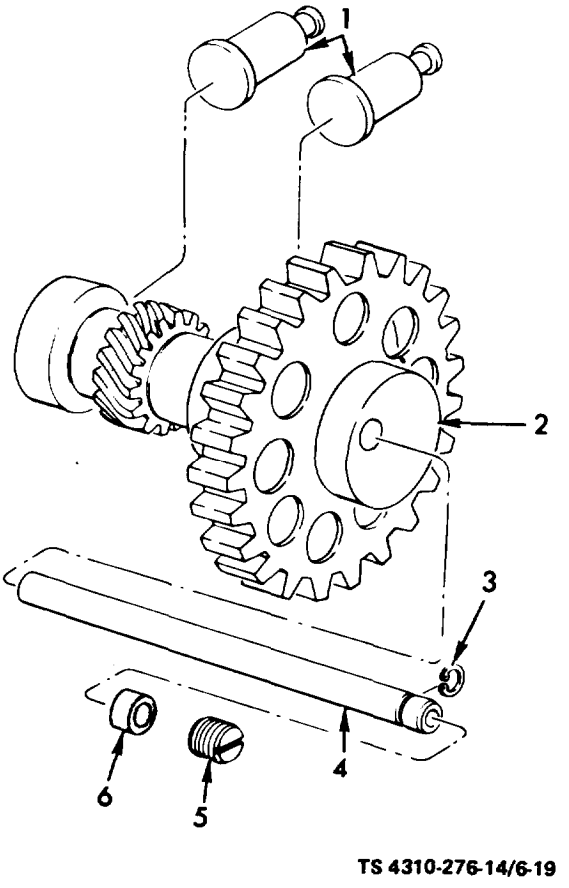

Figure 6-19. ***Camshaft and*** **Value** ***Tappets, Disassembly and Reassembly***

(4) Insert one of the oil pan mounting screws into the threaded end of the camshaft axle (4) and pull the axle out with a pair of pliers.

(5) Remove retaining ring (3) from axle.

(6) Remove camshaft (2) and valve tappets (1).

b. Cleaning, Inspection, and Repair.

WARNING

Drycleaning solvent, P-D-680, used to clean parts is potentially dangerous to *personnel* and property. Avoid repeated and prolonged skin contact. Do not use near open flame or excessive heat.

(1) Clean all parts with drycleaning solvent, item 5, App. D.

(2) Inspect the camshaft for excessively worn lobes, chipped or broken gear teeth, cracks, worn or scored bearing surfaces or evidence of overheating.

(3) Inspect axle for cracks, breaks, scoring, excessive wear or evidence of overheating.

(4) Inspect valve tappets for excessive wear, freedom of operation in crankcase, or evidence of overheating.

(5) Clearances are shown in table 1-1.

(6) Replace any damaged or defective part.

c. Reassembly and Installation.

(1) Install the valve tappets (1, fig. 6-19). Install the camshaft (2). Install the retaining ring (3) on the camshaft axle (4) and install the axle. Remove the oil pan retaining screw from the axle. Install a new oil seal (6) and install the machine plug (5).

(2) Install the oil pan and service the crankcase (para. 6-2).

(3) Install the cylinder head assembly (para. 6-11.

Section IX. CRANKSHAFT ASSEMBLY

6-20. General

The crankshaft is operated by the action of the piston and connecting rod. It drives the compressor by means of a pulley on the exterior extension of the crankshaft.

6-21. Crankshaft Assembly

a. Removal and Dimuraernbly.

(1) Remove the V-belt guard and V-belts.

(2) Drain crankcase oil into suitable container.

(3) Extract mounting bolts and remove engine, placing it in a suitable work area.

(4) Remove the cylinder head assembly (para. 6-11).

(5) Remove the crankcase oil pan (para. 6-2).

(6) Remove the piston and connecting rod assembly (para. 6-14).

(7) Remove the bearing cap assembly (para. 6-17)

(8) Remove bearing cup (1, fig. 6-20) and bearing cone (2).

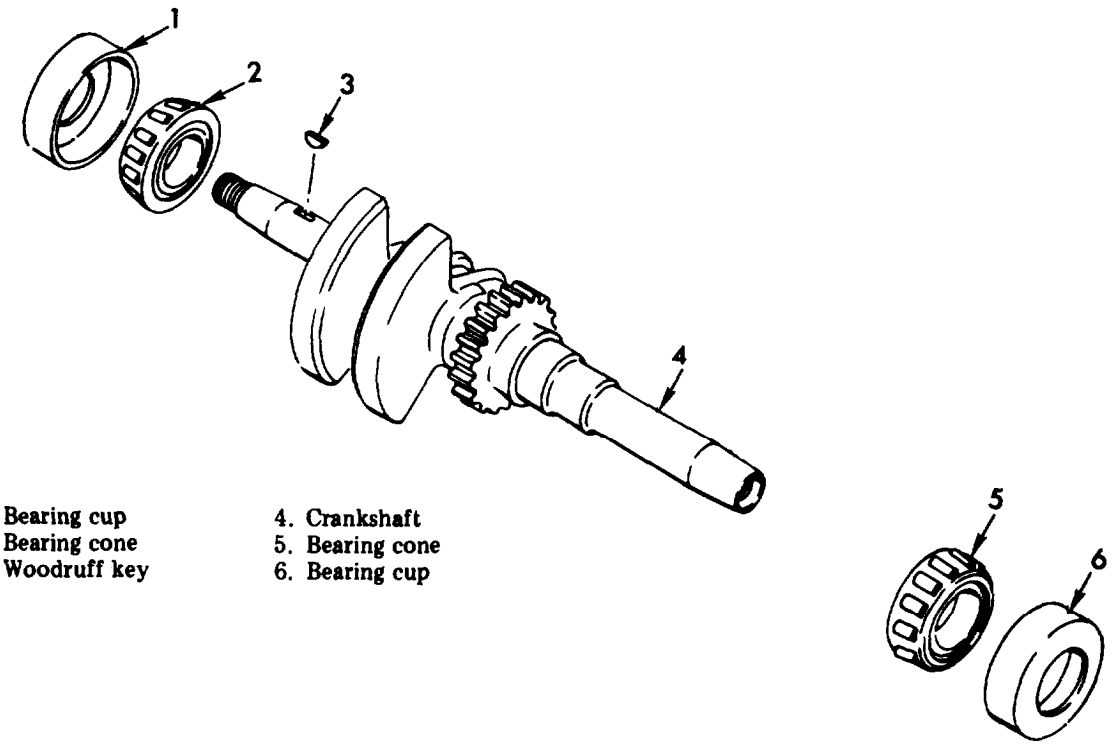

Figure 6-20. Crankshaft, Disassembly and Reassembly

(9) Remove key (3) and extract crankshaft (4) from engine.

(10) Remove bearing cone (5) and bearing **cup** (6).

(11) Remove crankshaft rear oil **seal.**

b. Cleaning, Inspection, and Repair.

WARNING

Drycleaning solvent, P-D-680, used to clean parts is potentially dangerous to personnel and property. Avoid repeated and prolonged skin contact. Do not use near open flame or excessive heat.

(1) Clean crankshaft and bearings with drycleaning solvent, item 5, App. D.

(2) Inspect the crankshaft for cracks, breaks, run-out, damaged keyway, gear for chipped or missing teeth, excessive wear to bearing surfaces or evidence of overheating. Inspect threaded end for damaged or stripped threads.

(3) Inspect crank journal for scoring, pitting, excessive wear or evidence of overheating. Measurements for crankshaft journals are shown in table 1-1.

(4) Inspect the roller bearings for freedom of operation, corrosion, chipped or missing rollers.

(5) Replace any damaged or defective part.

c. Reassembly and Installation.

(1) Install new crankshaft near oil seal.

(2) Install bearing cup (6, fig. 6-20) and bearing cone (5).

(3) Install crankshaft (4) into engine.

(4) Install key (3), bearing cone (2) and bearing cup (1).

(5) Install the bearing cap assembly (para. 6-17). Insure the crankshaft endplay is proper.

(6) Install the piston and connecting rod assembly (para. 6-14).

(7) Install the crankcase oil pan (para. 6-2).

(8) Install the cylinder head assembly (para. 6-11).

(9) Install engine on compressor unit and fasten with mounting bolts.

(10) Install belts and belt guard.

(11) Service crankcase with oil.

Section X. CRANKCASE ASSEMBLY

6-22. General

The crankcase is that part of the engine which supports and encloses the crankshaft, provides a reservoir for the lubricating oil and acts as a sup port for other accessories.

6-23. Crankcase Assembly

a. Removal and Disassembly.

(1) Remove V-belt guard and V-belts.

(2) Drain crankcase oil into suitable container.

(3) Remove engine mounting bolts and move engine to a suitable work area.

(4) Remove fuel lines from fuel filter and unscrew filter from fuel pump.

(5) Disconnect fuel line into fuel pump, remove two screws and remove pump and discard gasket.

(6) Refer to table 4-2 and remove the carburetor and throttle controls.

(7) Remove intake manifold and air cleaner assembly (para. 6-8).

(8) Remove the engine speed governor control (para. 6-4).

(9) Remove the exhaust manifold-muffler, and ducts and covers (para. 6-9).

(10) Remove contact assembly and capacitor.

(a) Unsnap spring clips and remove the accessory case cover.

(b) Tag and disconnect electrical leads as necessary.

(c) Remove screws and remove contact assembly and capacitor.

(11) Remove oil pan (para. 6-2).

(12) Remove rocker arms, cylinder head, pushrods and housing, valves and valve springs (para. 6-11).

(13) Remove flywheel-fan (para. 6-6).

(14) Remove piston and connecting rod assembly (para. 6-14).

(15) Remove bearing cap assembly (para. 6-17).

(16) Remove the camshaft and valve tappets (para. 6-19).

(17) Remove the crankshaft assembly (para. 6-21).

(18) Remove needle bearing (1, fig. 6-21).

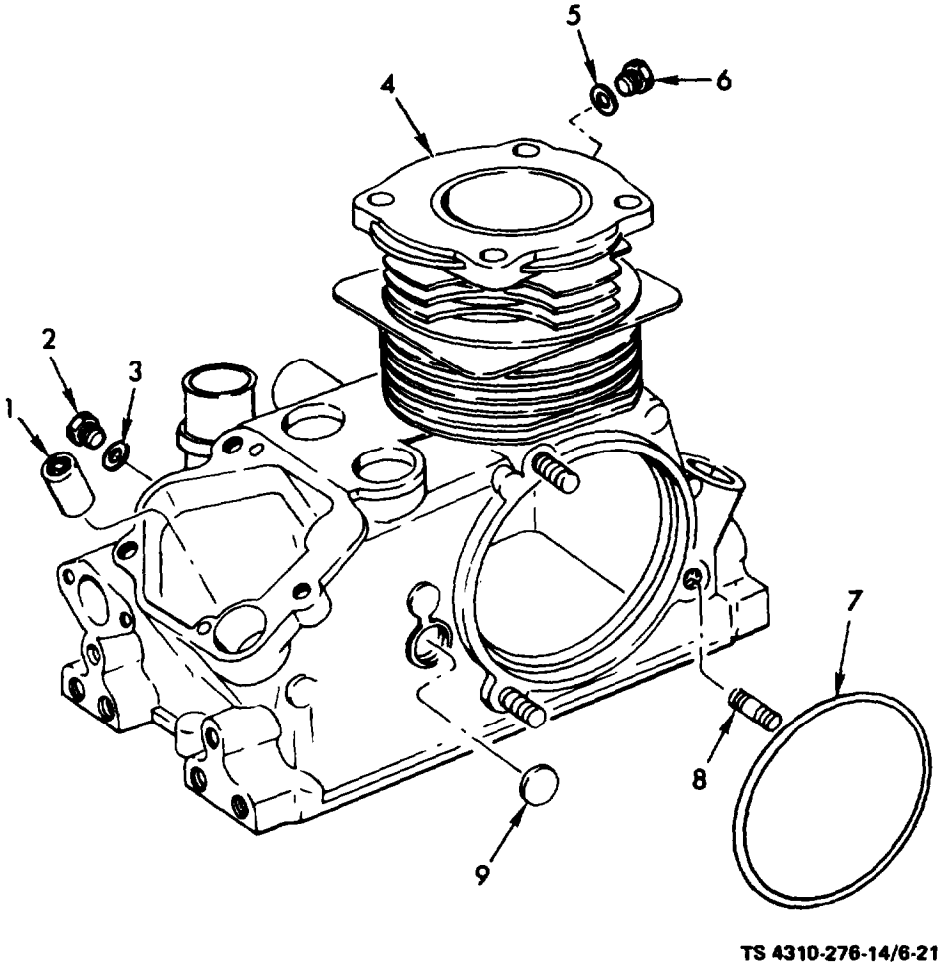

1. Bearing, needle
2. Plug, machine (Models 1A08-1 and 1A08-2)
3. Packing (Models 1A08-1 and 1A08-2)
4. Crankcase
5. Packing (Models 1A08-1 and 1A08-2)
6. Pipe plug (Models 1A08-1 and 1A08-2)
7. O-ring (Models 1A08-3)
8. Stud
9. Plug, expansion

Figure 6-21. Crankcase, Disassembly and Reassembly

(19) Remove plug (2), packing (3), plug (6), and packing (5) from Models 1A08-1 and 1A08-2.

(20) Remove O-ring (7) from Model 1A08-3.

(21) Remove studs (8) and expansion plug (9).

b. Cleaning, Inspection, and Repair.

WARNING

Drycleaning solvent, P-D-680, used to clean parts is potentially dangerous to personnel and property. Avoid repeated and prolonged skin contact. Do not use near open flame or excessive heat.

(1) Thoroughly clean the crankcase with drycleaning solvent, item 5, App. D.

(2) Inspect crankcase for cracks, breaks, stripped or damaged threads. Inspect oil seal for serviceability and any visible damage. Inspect oil *pan* and bearing cap mating surfaces for warpage, scratches, nicks, or other damage. Inspect cooling fins for breaks or bent fins. Inspect engine mounting pads for serviceability, threaded inserts properly installed and no damage to the threads. Inspect cylinder wall for excessive wear, scoring, corrosion or pitting. Inspect camshaft and valve tappet bearing surfaces for wear, pit ting or scoring. Refer to table 1-1 for proper measurements and tolerances.

(3) Repair or replace any damaged or defective part.

c. Reassembly and Installation.

(1) Install expansion plug (9, fig. 6-21) and studs (8) ,

(2) Install O-ring (7) in Model 1A08-3.

(3) Install packing (5), plug (6), packing (3), and plug (2) in Models 1A08-1 and 1A08-2.

(4) Install needle bearing (1).

(5) Install the crankshaft assembly (para. 6-21).

(6) Install the camshaft and valve tappets (para. 6-19).

(7) Install bearing cap assembly (para. 6-17).

(8) Install piston and connecting rod assembly (para. 6-14).

(9) Install flywheel-fan (para. 6-6).

(10) Install rocker arms, cylinder head, push-rods and housing, valves and valve springs (para. 6-11).

(11) Install oil pan (para. 6-2).

(12) Install contact assembly and capacitor and tighten screws.

(a) Connect electrical leads.

(b) Install accessory case cover and snap spring clips closed.

(13) Install the exhaust manifold-muffler, ducts, and covers (para. 6-9).

(14) Install the engine speed governor control (para. 6-4).

(15) Install intake manifold and air cleaner assembly (para. 6-8).

(16) Refer to table 4-2 and install the carburetor and throttle controls.

(17) Using a new gasket, install the fuel pump and connect fuel lines.

(18) Screw fuel filter onto fuel pump and connect fuel lines.

(19) Install engine on compressor unit and attach with mounting bolts.

(20) Service crankcase.

(21) Install V-belts and V-belt guard.

(22) Adjust the contact assembly (fig. 6-22).

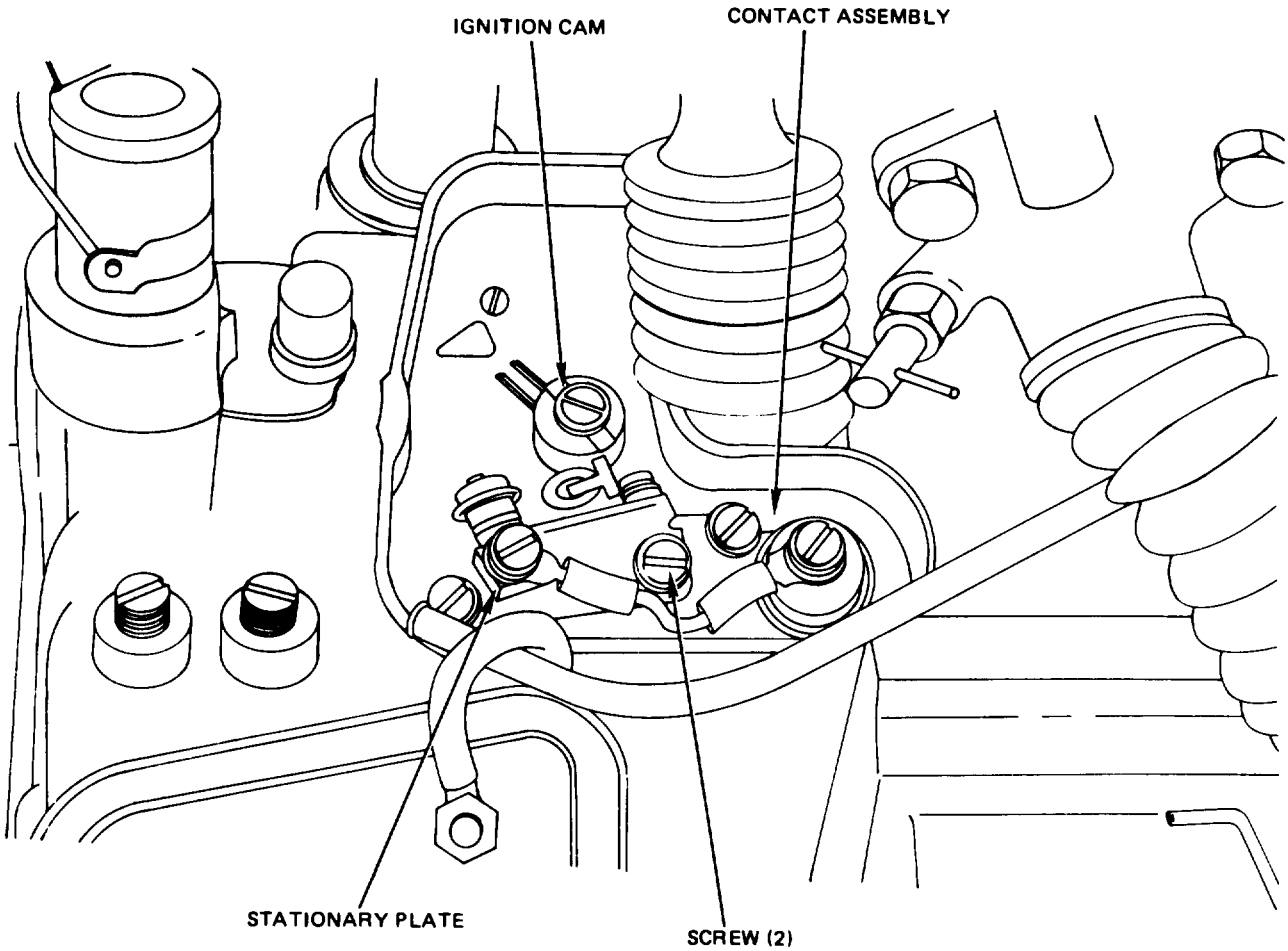

1. ROTATE ENGINE FLYWHEEL UNTIL THE CAM FOLLOWER IS POSITIONED ON THE HIGHEST POINT OF THE IGNITION CAM.

2. MEASURE THE POINT GAP WITH A FEELER GAGE. THE PROPER GAP IS 0.018 INCH (0.046 CM). IF GAP MEASURES MORE OR LESS THAN 0.018 INCH (0.046 CM) ADJUSTMENT IS NECESSARY.

3. LOOSEN THE SCREW (2) THAT SECURE THE STATIONARY PLATE AND MOVE THE STATIONARY PLATE UNTIL THE DESIRED 0.018 INCH (0.046 CM) GAP IS REACHED.

TS 4310-276-14/6-22

Figure 6.22. Contact Assembly Adjustment

(23) Time the ignition (fig. 6-23).

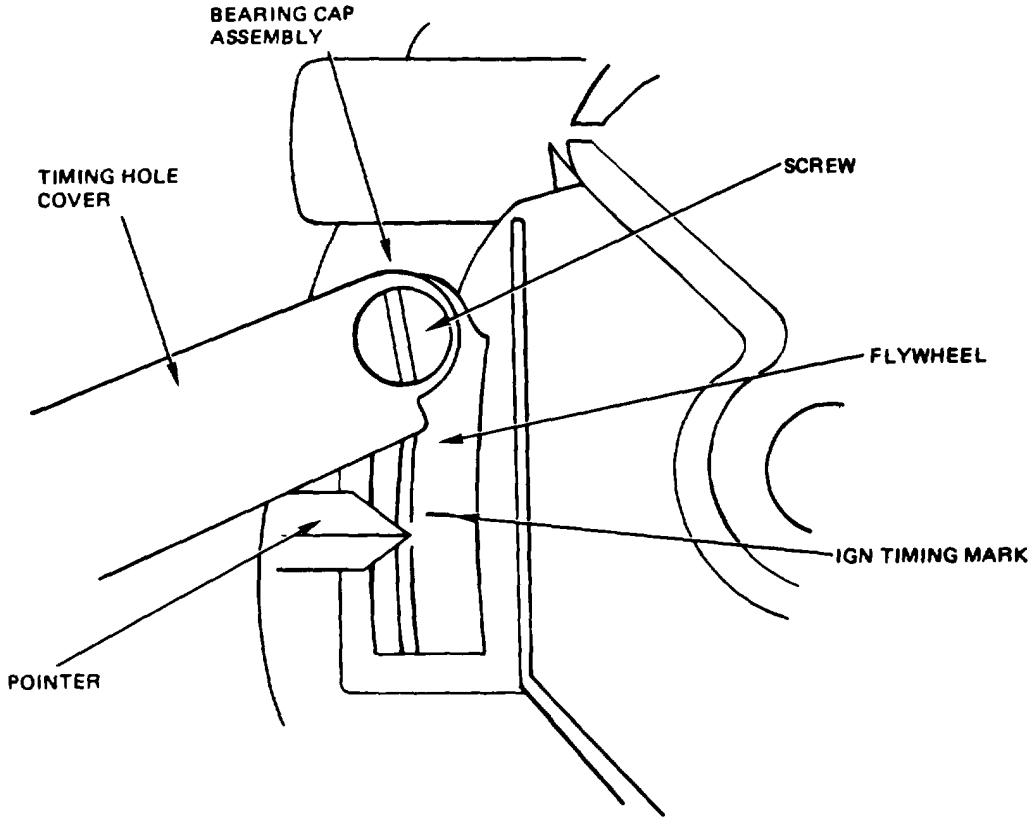

1. REMOVE ACCESSORY CASE COVER, INSPECT POINT GAP, AND ADJUST IF NECESSARY.

2. LOOSEN SCREW AND SLIDE TIMING HOLE COVER OPEN.

3. REMOVE ROCKER ARM COVER.

4. ROTATE FLYWHEEL COUNTERCLOCKWISE AND OBSERVE INTAKE VALVE AND ROCKER ARM. CONTINUE TO ROTATE FLYWHEEL UNTIL VALVE CLOSES, AND STOP WHEN THE IGN MARK ON THE FLYWHEEL IS ALINED WITH POINTER.

5. IF POINTS OF CONTACT ASSEMBLY ARE NOT JUST BEGINNING TO OPEN, THE IGNITION CAM MUST BE RESET.

6. LOOSEN THE SCREW AND ROTATE THE IGNITION CAM COUNTERCLOCKWISE UNTIL POINTS BEGIN TO OPEN, THEN TIGHTEN SCREW, INSURE THAT FLYWHEEL TIMING MARK AND POINTER ARE ALINED, AND THE CONTACT POINTS SHOULD JUST BEGIN TO OPEN: IF NOT, ADJUST POINT GAP SO THEY ARE JUST BEGINNING TO OPEN.

7. INSTALL ROCKER ARM COVER. INSTALL ACCESSORY CASE COVER AND CLOSE TIMING HOLE COVER, TIGHTEN LOCK SCREW.

TS 4310-276-14/6-23

Figure 6-23. Ignition Timing Instructions

CHAPTER 7

REPAIR OF PNEUMATIC EQUIPMENT

Section I. REPAIR OF PNEUMATIC EQUIPMENT

7-1. General

The compressor is a two-stage, two-cylinder, air cooled unit. There is one low-pressure piston and one high-pressure piston operating off the crankshaft. The major repair instructions are those covering replacement of the cylinder head, and valves, pistons and rings, connecting rods, crankshaft, cylinder and crankcase.

7-2. Cylinder Head

a. ***Removal.***

(1) Remove air cleaner by turning cleaner counterclockwise.

(2) Remove cylinder head (6, fig. 7-1) by loosening tube nuts on intercooler (3) and tube elbow (1) on breather tube (2). Remove cylinder head screws (4 and 5) and lift off cylinder head (6) and gasket (7).

b. Cleaning and Inspection.

WARNING

Drycleaning solvent, P-D-680, used to clean parts is potentially dangerous to personnel and property. Avoid repeated and prolonged skin contact. Do not use near open flame or excessive heat. Flash point of solvent is 100°F (38°C).

(1) Clean all parts with cleaning solvent, item 5, App. D, and dry thoroughly.

(2) Inspect all parts for cracks, breaks, and other damage. Replace a defective part.

(3) Discard and replace cylinder head gasket (7).

c. Installation.

(1) Assemble cylinder head gasket (7) to top of cylinder (8).

(2) Install cylinder head (6) to top of cylinder (8) and secure with screws (4 and 5), tighten screws to 10 foot-pounds torque.

(3) Attach breather tube (2) and intercooler (3) with tube nuts and elbow (l).

(4) Install air cleaner by turning clockwise.

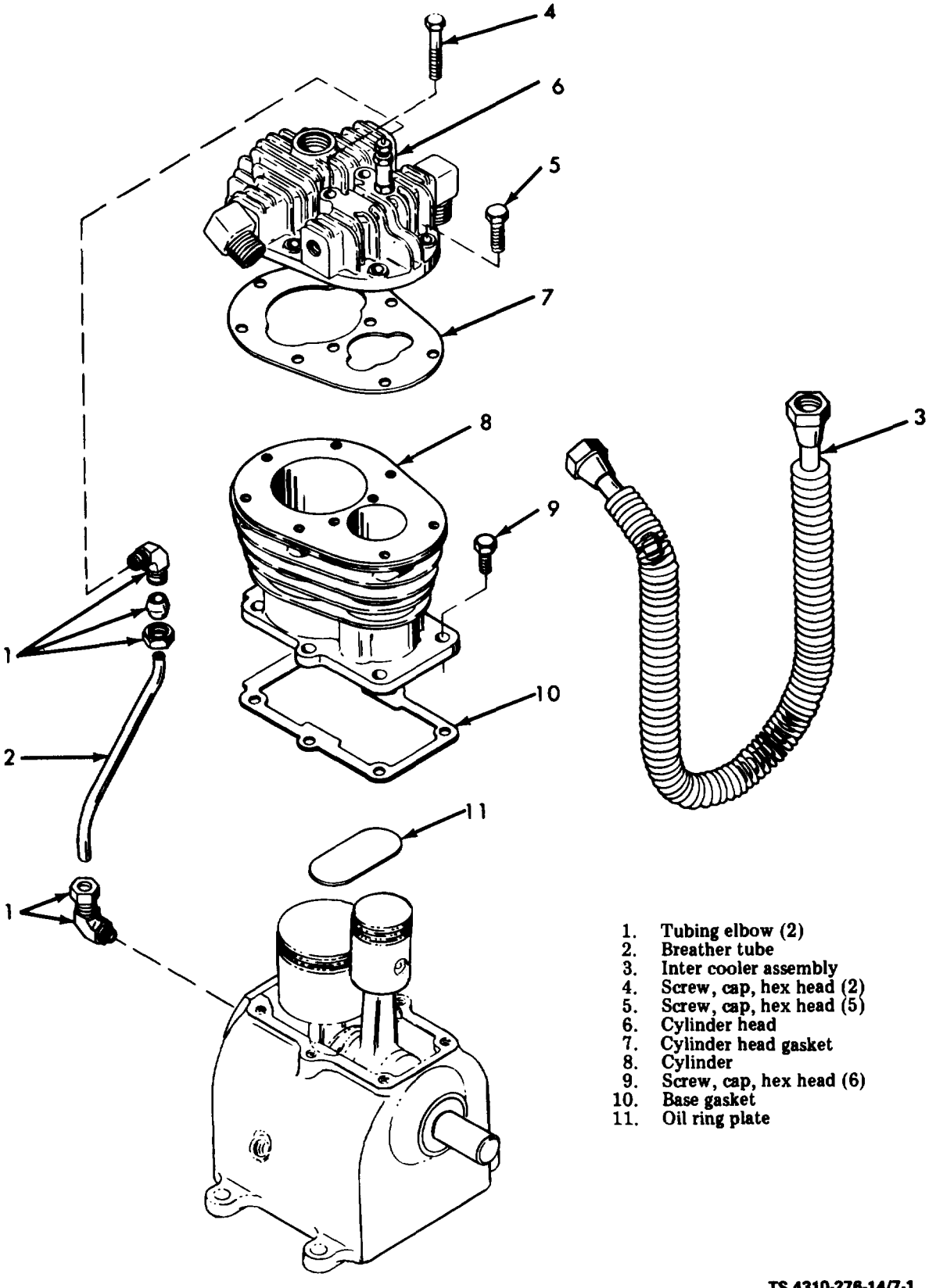

1. Tubing elbow (2)
2. Breather tube
3. Inter cooler assembly
4. Screw, cap, hex head (2)
5. Screw, cap, hex head (5)
6. Cylinder head
7. Cylinder head gasket
8. Cylinder
9. Screw, cap, hex head (6)
10. Base gasket
11. Oil ring plate

TS 4310-276-14/7-1

Figure 7-1. Cylinder, Cylinder Head, Tubing and Connections

7-3. Compressor Valves

a. Removal.

(1) Remove air cleaner by turning counterclockwise.

(2) Remove cylinder head (6, fig. 7-1) by loos - ening tube nuts on intercooler (3) and tube elbow (1) on breather tube (2).

(3) Remove cylinder head screws (4 and 5) and lift off cylinder head (6) and gasket (7).

(4) Valve openings (A, fig. 7-2) are L. P. intake openings and valves are removed as follows:

(a) Using valve retainer wrench (10, fig. 7-2) and by turning counterclockwise, remove retainers (9), springs (8) and valves (7).

(b) Using wrench (4), and turning counterclockwise, remove seats (6). Remove shims (5).

(5) Valve opening (B) is the L. P. discharge opening and valve is removed as follows:

(a) Using wrench (4), and turning counterclockwise, remove seat (6), valve (7) and spring (8).

(b) Using wrench (19), and turning counterclockwise, remove retainer (9). Remove shim (5).

(6) Valve opening (C) is the H. P. intake opening and valve is removed as follows:

(a) Using wrench (17), and turning counterclockwise, remove retainer (16), spring (15) and valve (14).

(b) Using wrench (11), and turning counterclockwise, remove seat (13). Remove shim (12).

(7) Valve opening (D) is the H. P. discharge opening and valve is removed as follows:

(a) Using wrench (11), and turning counterclockwise, remove seat (13), valve (14) and spring (15).

(b) Using wrench (17), and turning counterclockwise, remove retainer (16). Remove shim (12).

b. Cleaning and Inspection.

WARNING

Drycleaning solvent, P-D-680, used to clean parts is potentially dangerous to personnel and property. Avoid repeated and prolonged skin contact. Do not use near open flame or excessive heat. Flash point of solvent is 100°F (38°C).

(1) Clean all parts with cleaning solvent, item 5, App. D, and dry thoroughly.

(2) Inspect all valve seats and valve discs for cracks, breaks, rough or scored surfaces.

(3) Inspect the springs for distortion, weak tension or broken helical coils.

(4) Inspect the cylinder head for defective valve seats.

(5) Inspect the valve shims for distortion or imprints that will render the gaskets unserviceable.

(6) Repair after inspection.

(7) Valves and valve seats must be flat and can sometimes be resurfaced by rubbing on fine (No. 400) emery cloth held on a smooth flat surface.

(8) Replace all defective parts that cannot be repaired.

c. Installation.

(1) When installing valves (see fig. 7-2) be careful not to catch valves between edges of seats and retainers (valves must move freely in retainers when assembled).

(2) Valve openings A are L. P. intake openings and valves are installed as follows:

(a) Place valve shims (5) in holes (A).

(b) Assemble valveseat (6) by turning clockwise with wrench (4) provided. Torque to 50 foot-pounds.

(c) Place valve (7) on seat (6).

(d) Assemble large end of spring (8) to inside of retainer (9) and assemble by turning clockwise with valve retainer wrench (10).

(3) Valve opening (B) is the L. P. discharge opening and valve is installed in the following sequence:

(a) Place valve shim (5) in hole (B).

(b) Assemble valve retainer (9) by turning clockwise with valve retainer wrench (10). Torque to 50 foot-pounds.

(c) Assemble large end of spring (8) to inside of retainer (9).

(d) Place valve (7) on top of spring (8) and assemble valve seat (6) by turning clockwise with valve seat wrench (4).

(4) Valve opening (C) is the H. P. intake opening and valve is installed as follows:

(a) Place shim (12) in hole (C).

(b) Assemble valve seat (13) by turning clockwise with wrench (11). Torque to 50 foot-pounds.

(c) Place valve (14) on seat (13).

(d) Assemble large end of spring (15) to inside of retainer (16) and assemble by turning clockwise with wrench (17).

(5) Valve opening (D) is the H. P. discharge opening and valve is installed as follows:

(a) Place shim (12) in hole (D).

(b) Assemble valve retainer (16) by turning clockwise with wrench (17). Torque to 50 foot-pounds.

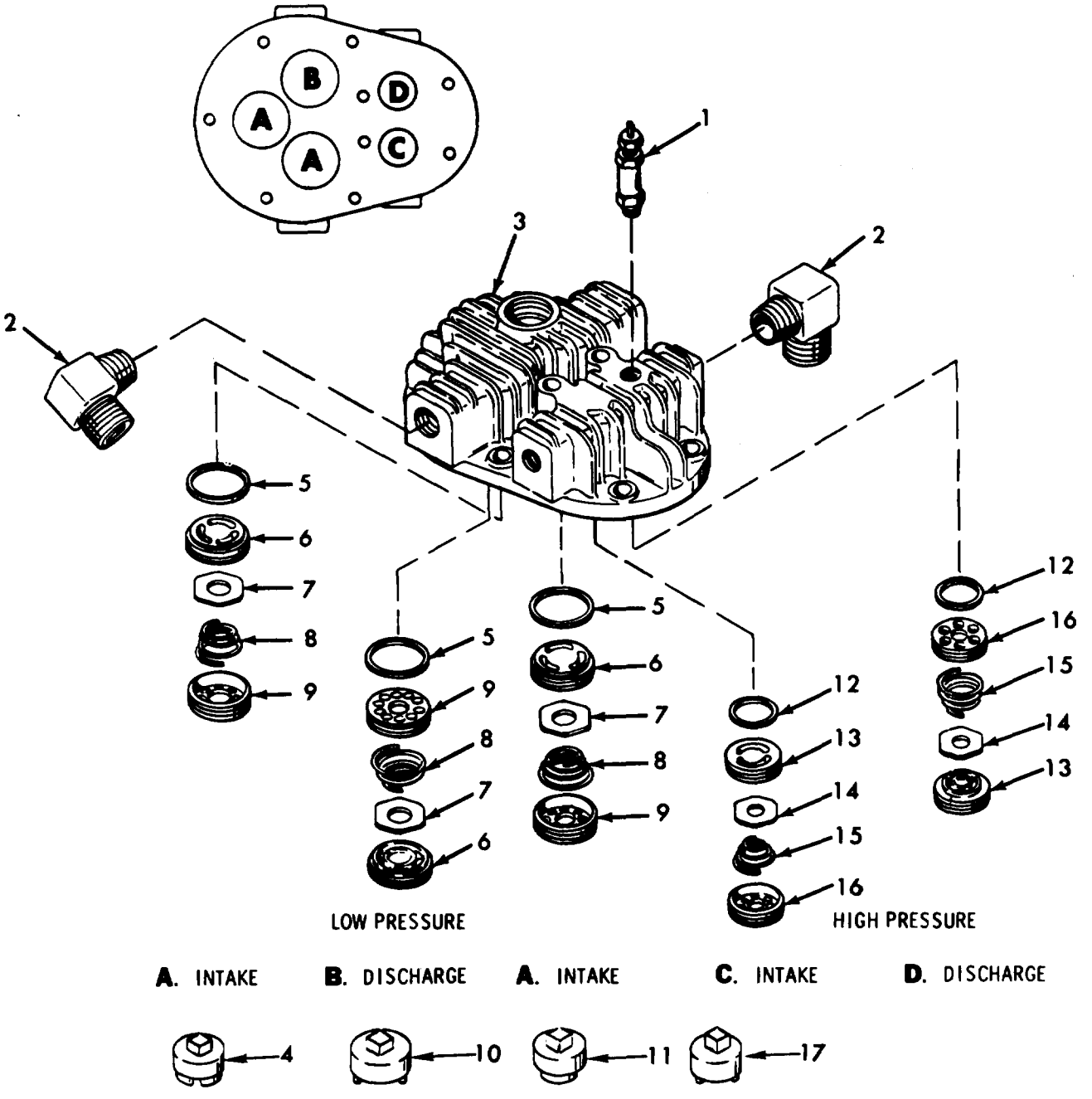

1. Intercooler relief valve
2. Tubing elbow (2)
3. Cylinder head
4. Valve seat wrench, l.p.
5. Shim, l.p. (3)
6. Valve seat, l.p. (3)
7. Valve, l.p. (3)
8. Valve spring l.p. (3)
9. Valve retainer, l.p. (3)
10. Valve retainer wrench h.p.
11. Valve seat wrench, h.p.
12. Shim, h.p. (2)
13. Valve seat h.p. (2)
14. Valve h.p. (2)
15. Valve spring, h.p. (2)
16. Valve retainer, h.p. (2)
17. Valve retainer wrench, h.p.

TS 4310-276-14/7-2

Figure 7-2. Cylinder Head, Intake and Discharge Valvea, Removal and Imtallation

(c) Assemble large end of spring (15) to inside of retainer (16).

(d) Place valve (14) on top of spring (15) and assemble valve seat (13) by turning clockwise with wrench (11).

(6) When tightened, each seat or retainer must be flush with surface of head. Torque to 50 foot-pounds.

(7) Install gasket (7, fig. 7-1) and cylinder head (6) onto cylinder (8) with screws (4 and 5). Torque to 10 feet-pounds.

(8) Attach intercooler (3) with tube nuts and attach breather tube (2) with tube elbows (l).

(9) Install air cleaner by turning it clockwise.

7-4. Pistons, Rings, Connecting Rods, Cylinder Block, Crankshaft and Crankcase

a. Removal and Distassembly

(1) Loosen hub nut and remove flywheel.

(2) Remove capscrews (9, fig. 7-1) holding cylinder (8) to crankcase (19, fig. 7-3) and lift off cylinder. Mark top of each piston on side nearest pulley so that they can be reinstalled in the same position.

(3) Remove key (8) from crankshaft (16) and file the edges of the keyway to remove burrs, thus avoiding damage to the oil seal when removing crankshaft.

(4) Remove end cover (10) and slide crankshaft with connecting rods and pistons, out of crankcase being careful not to damage the oil feeder ring (15). Place pulley end of crankshaft in a vise using soft jaws to prevent damage.

(5) To remove pistons (8, 19, fig. 7-4) remove washers (3 and 14) from end of wrist pins (4 and 15) and drive wrist pins out of pistons at ambient temperature. It is not necessary to heat piston. Remove piston rings (5, 6, 7, 16, 17 and 18) from pistons.

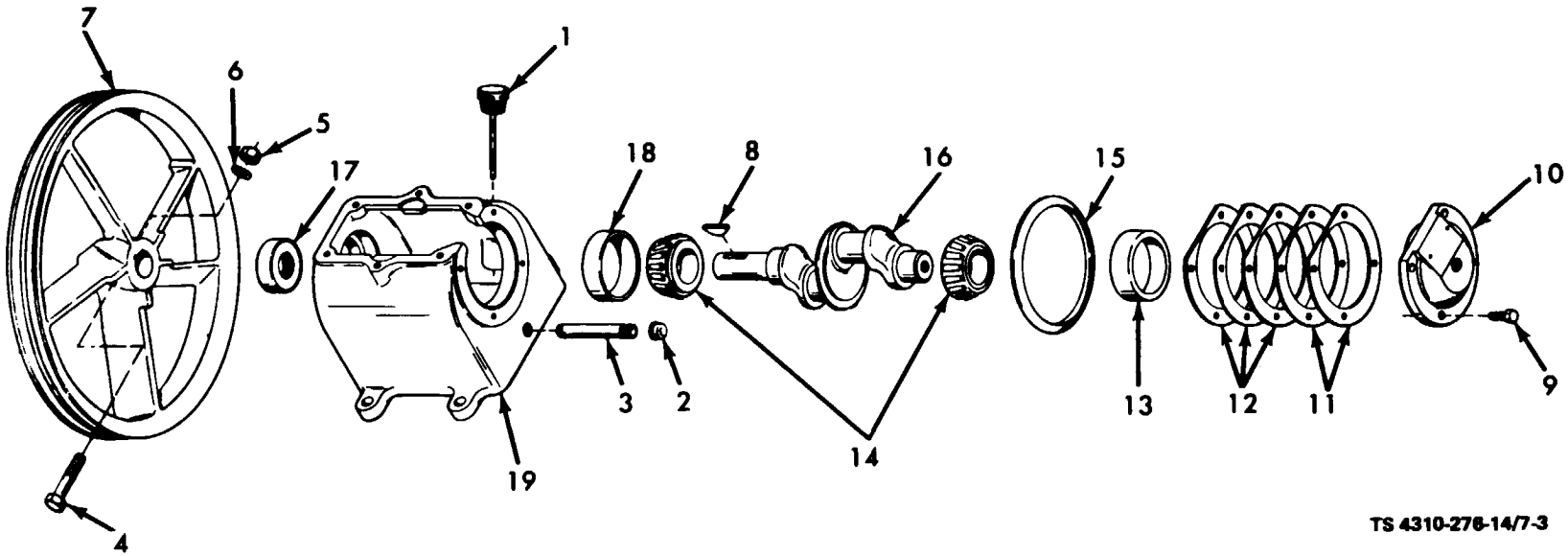

1. Oil gage assembly
2. Oil drain cap
3. Oil drain nipple
4. Screw, cap, hex head
5. Nut
5. Lockwasher
7. Flywheel pulley
8. Key
9. Screw, cap, hex head (4)
10. End cover
11. End cover gasket (2)
12. End cover gasket (3)
13. Bearing cup
14. Bearing cone (2)
15. Oil feeder ring
16. Crankshaft
17. Oil seal
18. Bearing cup
19. Crankcase

Figure 7-3. Crankcase Base Assembly

1. Screw, cap, hex head (2)
2. Lockwasher (2)
3. Wrist pin washers (2)
4. Wrist pin
5. Compression ring l.p.
6. Compression ring l.p.
7. Oil ring, l.p.
8. Piston, l.p.
9. Wrist pin bushing, l.p.
10. Connecting rod
11. Cap
12. Screw, cap, hex head (2)
13. Lockwasher (2)
14. Wrist pin washers (2)
15. Wrist pin
16. Compression ring, h.p.
17. Compression ring, h.p.
18. Oil ring. h.p.
19. Piston, h.p.
20. Wrist pin bushing, h.p.
21. Connecting rod, h.p.
22. Cap
23. Crankshaft assembly

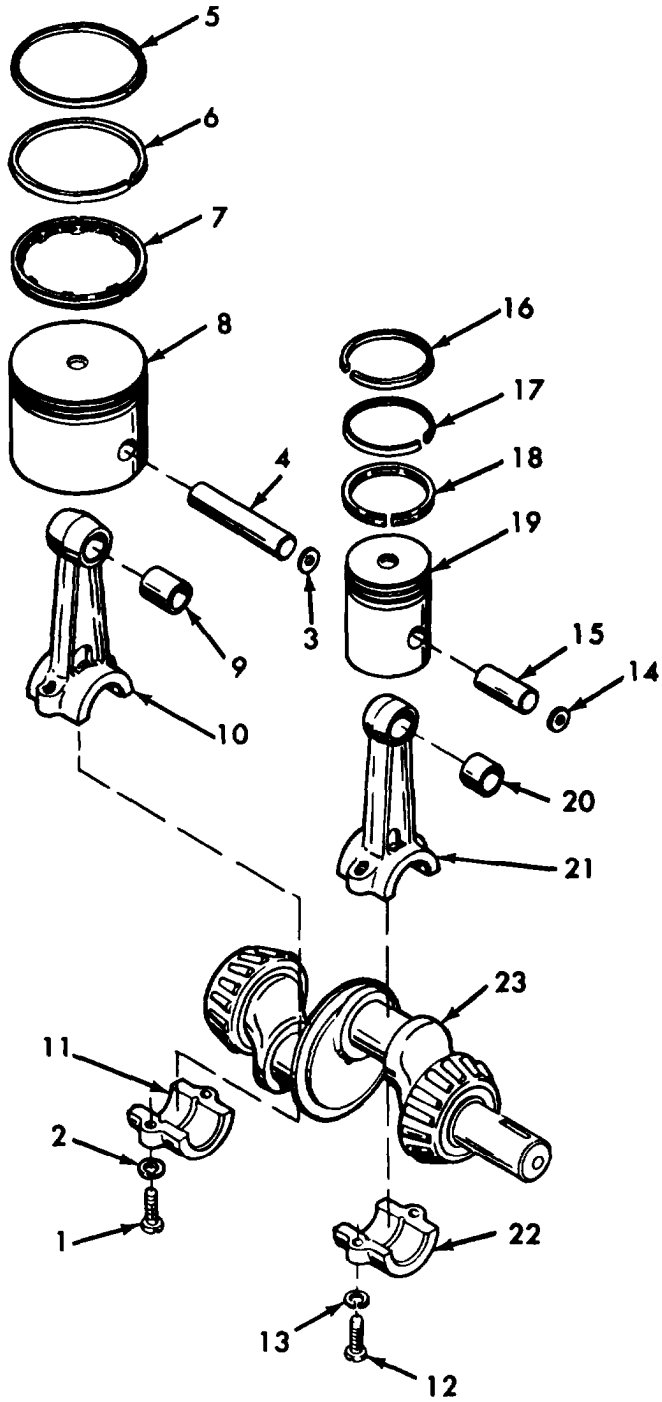

TS 4310-276-14/7-4

Figure 7-4. Piston Assembly, Exploded View

(6) When removing connecting rods (10 and 21) from crankshaft by removing rod capscrews (1 and 12) and lockwashers (2 and 13) from connecting rods to be sure that rods and caps (11 and 22) are kept in matched sets, noting the position with reference to the crankshaft of the identification marks on one side of each so that the connecting rod can be replaced in the same position it originally occupied. Remove bushings (9 and 20) only if worn or scored.

(7) Drive oil seal (17, fig. 7-3) out of crankcase if replacement is necessary, by evenly spaced blows from inside.

b. Cleaning, Inspection and Repair.

WARNING

Drycleaning solvent, P-D 680, used to clean parts is potentially dangerous to personnel and property. Avoid repeated and prolonged skin contact, Do not use near open flame or excessive heat. Flash point of solvent is 100°F (38°C).

(1) Clean all parts with cleaning solvent, item 5, App, D, and dry thoroughly.

(2) Examine cylinder bores for wear, scoring, pitting, cracks or other damage. Replace cylinder with damaged bores.

(3) Measure the clearance between small end of connecting rod and wrist pin. Also measure the clearance between large end of connecting rod and crankshaft. Refer to table 1-2 for allowable clearances.

(4) Examine crankshaft and pistons for wear, scuffing, scoring, etc., and replace parts damaged. If parts exceed clearance listed in table 1-2, replace them.

(5) Inspect tapered roller bearing for rough, pitted, or scored surfaces. Replace a defective bearing.

c. Reassembly and Installation.

(1) Crankshaft-crankcase. Before assembling, the crankshaft (16, fig. 7-3) must be fitted to the crankcase (19). Install cover (10), gaskets (11 and 12) and secure with end cover screws (9) evenly. End cover gaskets (11 and 12) serve as shims and are furnished in two thicknesses and proper combination must be selected so crankshaft (16) can be spun in the bearings without end play. Refer to table 1-2 for end play allowance. Also see that oil feed ring (15) rotates freely on the crankcase. Remove crankshaft from the crankcase and hold long end in a vise using soft jaws to prevent damage.

(2) Piston-cylinder. Check fit before assembling pistons to connecting rods. Piston without rings must slide through the cylinder of their own weight and holding the skirt of the piston with the two thumbs there should be no appreciable side motion at any point of piston travel. Refer to table 1-2 for allowable clearance.

(3) Wrist pin-piston. Wrist pins (4 and 15, fig. 7-4) must be a tap fit with a soft hammer in piston bores at ambient temperature. Be sure fibre washers (3 and 14) at each end of the wrist pins (4 and 15) are in place before assembling to cylinder. Assemble piston rings (5, 6, 7, 16 and 17) to pistons (8 and 19). Top two rings are compression rings and dot stamped on side of rings indicates top of ring. Oil rings (7 and 18) cannot be installed upside down as either position is correct.

(4) Connecting rod-crankshaft. Install bearing caps (11 and 22, fig. 7-4) and secure with washers (2 and 13) and screws (1 and 12). Tap cap lightly to make sure bearing is making contact and tighten rod bolts, Torque bolts to 8 foot-pounds. The combined piston and connecting rod should turn on the crankshaft of their own weight if bearing adjustment is correct. If tight, cut paper shims and install between cap and rod. If loose, file cap until fit is sufficiently tight. Correct clearance between connetting rod and crankshaft journal is 0.0011 inch to 0.0019 inch (0.0028 cm to 0.0048 cm). Refer to table 1-2 for allowable wear clearance,

a. Reinstall crankshaft with pistons and crankshaft attached being careful not to damage oil feeder ring (15, fig. 7-3) when fitting within lugs at bottom of crankcase (19) and being sure there are no burrs or dirt on the pulley end of the crankshaft that might cut the oil seal (17). Replace oil feeder ring plate (11, fig. 7-l).

b. If oil seal (17, fig. 7-3) is to be replaced slide on over crankshaft and press into place in the crankcase, the lip or seal side toward the crankcase. Do not hammer directly on the seal.

(5) Cylinder-crankcase. Coat bottom end of cylinder bores (8, fig. 7-1) and piston rings with oil and assemble cylinder over pistons. The bottom of the cylinder bores are chamfered and rings will compress into piston grooves by pressing cylinder downward and twisting slightly from side to side. After cylinder is in place and before cap screws (9, fig. 7-1) are tightened rotate crankshaft two or three times for self-alignment. Tighten cap screws (9) and torque to 18 foot-pounds. Install key (8, fig, 7-3) and flywheel pulley (7) after cylinder head and intercooler is assembled. Torque flywheel bolt to 43 foot-pounds.

(6) Be sure crankcaae is filled to proper level with oil before operating or running in.

7-5. Efficiency Test

After compressor assembly is completely reassembled and all connections are checked for leaks, the compressor should pump up the air received from 0 to 100 psi (0 to 7.03 kg/sq cm) in 22 seconds.

Section II. AIR RECEIVER TANK

7-6. General

The air receiver tank is of a welded construction and is mounted under the two wheel, pneumatic tired handtruck.

7-7. Air Receiver Tank Test

a. Removal.

(1) Release all air from the air receiver tank (1, fig. 7-5) by opening drain valve (2) and then removing valve.

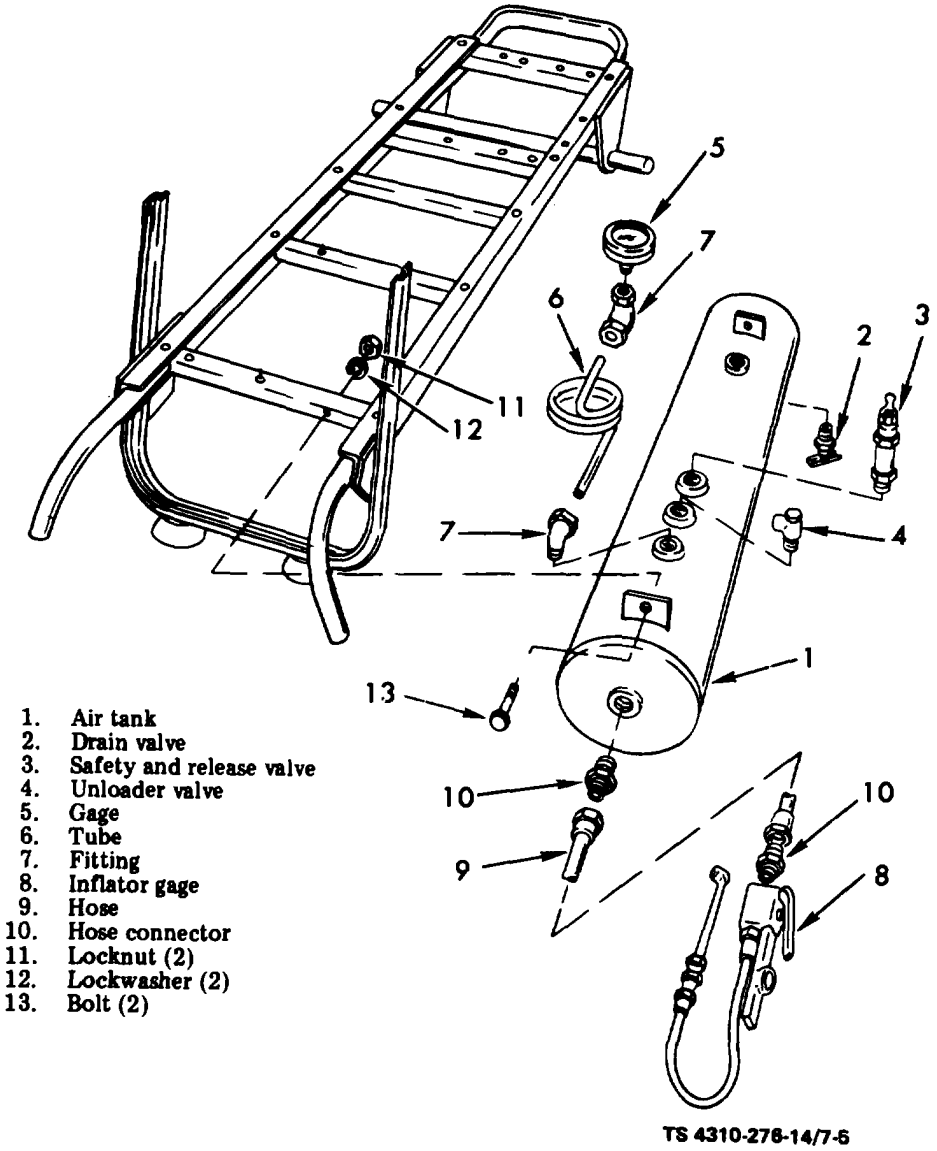

Figure 7-5. Air Receiver Tank, Removal and Installation

(2) Remove the safety and relief valve (3) and unloader valve (4).

(3) Remove the air pressure gage (5), gage tube (6) and fittings (7).

(4) Remove the inflator gage (8), hose (9) and hose connectors (10).

(5) Remove the tank by removing locknuts (11) lockwashers (12) and bolts (13).

b. Cleaning and Inspection

WARNING

Drycleaning solvent, P-D-680, used to clean parts is potentially dangerous to personnel and property. Avoid repeated and prolonged skin contact. Do not used near open flame or excessive heat. Flash point of advent is l00°F (38°C).

(1) Clean the interier of the air tank with live steam, if available, or with leaning solvent, item 5, App. D. Dry thoroughly.

(2) Inspect the interior and exterior of the tank for cracks, broken welds, dents or corrosion. Check threaded surfaces for damaged threads.

c. ***Testing.*** To test air receiver for leaks pressurize to 100 psi (7.03 kg/sq cm) with compressed air and check all joints and welds with soapy water or submerge complete tank in water. To test damaged tank it is necessary to test with hydrostatic pressure making sure all air has been removed from air receiver. Test to a pressure of 300 psi (21.1 kg/sq cm). If any leaks appear, replace tank.

WARNING

Do not weld repair air receiver tank.

d. Installation.

(1) Attache tank (1, fig. 7-5) to handtruck by installing bolts (13), lockwashers (12) and locknuts (11).

(2) Install hose connectors (19), hose (9) and inflator page (8).

(3) Attach fittings (7), gage tube (6) and air pressure gage (5).

(4) Attach unloader valve (4) and safety and relief valve (3).

(5) Install drain valve (2).

APPENDIX A

REFERENCES

A-1. Fire Protection

TM 5-4200-200-10	Hand Portable Fire Extinguishers for Army Users

A-2. Lubrication

C9100IL	Petroleum Petroleum-Base Products and Related Material
LO 5-2805-256-12	Engine, Gasoline, 1-1/2 H. P. Military Standard Models (Model 1A08-1) (Model 1A08-2) (Model 1A08-3)
LO 5-4310-276-15	Compressor, Reciprocating; Air, Handtruck Mounted Gasoline Engine: 5 CFM, 175 PSI (Kellogg-American Model G-311-PC)

A-3. Preventive Maintenance

TM 38-750	The Army Maintenance Management System
TM 9-1870-1	Care and Maintenance of Pneumatic Tires
TM 5-2805-256-14	Operator, Organizational, Intermediate (Field) (Direct Support and General Support) and Depot Maintenance Manual. Engine, Gasoline, 1-1/2 H. P., Military Standard Models (Model 1A08-1, NSN 2805-00-601-5181) (Model 1A08-2, NSN 2805-00-714-8552) (Model 1A08-3, NSN 2805-00-068-7510)
TM 5-4310-276-24P	Organizational, Direct Support, General Support, and Depot Maintenance Repair Parts and Special Tools List. Compressor, Reciprocating; Air, Handtruck Mounted Gasoline Engine, 5 CFM, 175 PSI (Kellogg-American Model G-311 - PC) NSN 4310-00-843-8885

A-4. Painting

TM 9-213	Painting Instructions for Field Use

A-6. Radio Interference Suppression

TM 11-483	Radio Interference Suppression

A-6. Shipment and Limited Storage

TB 740-93-2	Preservation of USAMEC Mechanical Equipment for Shipment and Storage
TB 740-93-3	Administrative Storage of USAMEC Mechanical Equipment
TM 740-90-1	Administrative Storage of Equipment

A-7. Destruction of Equipment

TM 750-244-3	Procedures for Destruction of Equipment to Prevent Enemy Use

APPENDIX B
ADDITIONAL AUTHORIZATION LIST

Section I. INTRODUCTION

B-1. Scope

This appendix lists additional items that are authorized for the support of the air compressor.

B-2. Explanation of Listing

National stock numbers, descriptions and quantities are provided to help you identify and request the additional items you require to support this equipment.

Section II. ADDITIONAL AUTHORIZATION LIST

(1) NATIONAL STOCK NUMBER	PART NUMBER & FSCM	(2) DESCIPTION	USABLE ON CODE	(3) U/M	(4) QTY AUTH
4210-00-555-8837		EXTINGUISHER, FIRE		EA	1

APPENDIX C

MAINTENANCE ALLOCATION CHART

Section I. INTRODUCTION

C-1. General

a. This section provides a general explanation of all maintenance and repair functions authorized at various maintenance levels.

b. The Maintenance Allocation Chart (MAC) in section II designates overall responsibility for the performance of maintenance functions on the identified end item or component. The implementation of the maintenance functions upon the end item or component will be consistent with the assigned maintenance functions.

c. Section III lists the special tools and test equipment required for each maintenance function as referenced from Section II.

d. Section IV contains supplemental instructions on explanatory notes for a particular maintenance function.

C-2. Maintenance Functions

a. Inspect. To determine the serviceability of an item by comparing its physical, mechanical and/or electrical characteristics with established standards through examination.

b. Test. To verify serviceability and detect incipient failure by measuring the mechanical or electrical characteristics of an item and comparing those characteristics with prescribed standards.

c. Service. Operations required periodically to keep an item in proper operating condition, i.e., to clean (decontaminate), to preserve, to drain, to paint, or to replenish fuel, lubricants, hydraulic fluids, or compressed air supplies.

d. Adjust. To maintain, within prescribed limits, by bringing into proper or exact position, or by setting the operating characteristics to specified parameters.

e. Align To adjust specified variable elements of an item to bring about optimum or desired performance.

f. Calibrate. To determine and cause corrections to be made or to be adjusted on instruments or test measuring and diagnostic equipments used in precision measurement. Consists of comparisons of two instruments, one of which is a certified standard of known accuracy, to detect and adjust any discrepancy in the accuracy of the instrument being compared.

g. Install. The act of emplacing, seating, or fixing into position an item, part, or module (component or assembly) in a manner to allow the proper functioning of an equipment or system.

h. Replace. The act of substituting a serviceable like type part, subassembly, or module (component or assembly) for an unserviceable counterpart.

i. Repair. The application of maintenance services (inspect, test, service, adjust, align, calibrate or replace) or other maintenance actions (welding, grinding, riveting, straightening, facing, remachining or resurfacing) to restore serviceability to an item by correcting specific damage, fault, malfunction, or failure in a part, subassembly, module (component or assembly), end item, or system,

j. Overhaul. That maintenance effort (services/actions) necessary to restore an item to a completely serviceable/operational condition as prescribed by maintenance standards (i.e., DMWR) in appropriate technical publications. Overhaul is normally the highest degree of maintenance performed by the Army, Overhaul does not normally return an item to like new condition.

k. Rebuild. Consists of those services/actions necessary for the restoration of unserviceable equipment to a like new condition in accordance with original manufacturing standards. Rebuild is the highest degree of materiel maintenance applied to Army equipment, The rebuild operation includes the act of returning to zero those age measurements (hours/miles, etc.) considered in classifying Army equipments/components.

C-3. Column Entries Used in the MAC

a. ***Column 1, Group Number.*** Column 1 lists group numbers, the purpose of which is to identify components, assemblies, subassemblies, and modules with the next higher assembly.

b. Column 2, Component/Assembly. Column 2 contains the names of components, assemblies, subassemblies, and modules for which maintenance is authorized.

c. Column 3, Maintenance Functions. Column 3 lists the functions to be performed on the item listed in Column 2. (For detailed expla-

nation of these functions, see para. D-2.)

d. Column 4, Maintenance Level. Column 4 specifies, by the listing of a "work time" figure in the appropriate subcolumn(s), the lowest level of maintenance authorized to perform the function listed in Column 3. This figure represents the active time required to perform the maintenance function at the indicated level of maintenance. If the number or complexity of the tasks within the listed maintenance function vary at different maintenance levels, appropriate work time figures will be shown for each level. The number of man-hours specified by the work time figure represents the average time required to restore an item (assembly, subassembly, component, module, end item, or system) to a serviceable condition under typical field operating conditions. This time includes preparation time, troubleshooting time, and quality assurance/quality control time in addition to the time required to perform the specific tasks identified for the maintenance fuctions authorized in the maintenance allocation chart. The symbol designations for the various maintenance levels are as follows:

C	Operator or crew
O	Organizational maintenance
F	Direct support maintenance
H	General support maintenance
D	Depot maintenance

e. Column 5, Tools and Equipment. Column 5 specifies, by code, those common tool sets (not individual tools) and special tools, test, and support equipment required to perform the designated function.

f. Column 6, Remarks. This column contains a letter code in alphabetic order which is keyed to the remarks contained in Section IV.

C-4. Column Entries Used in Tool and Test Equipment Requirements

a. Column 1, Tool or Test Equipment Reference Code. The tool and test equipment reference code correlates with a maintenance function on the identified end item or component.

b. Column 2, Maintenance Level. The lowest level of maintenance authorized to use the tool or test equipment.

c. Column 3, Nomenclature. Name or identification of the tool or test equipment.

d. Column 4, National/NATO) Stock Number. The National or NATO stock number of the tool or test equipment.

e. Column 6, Tool Number. The manufacturer's part number.

C-5. Explanation of Columns in Section IV.

a. Reference Code. The code scheme recorded in Column 6, Section II.

b. Remarks. This column lists information pertinent to the maintenance function being performed as indicated on the MAC, Section II.

Section II. MAINTENANCE ALLOCATION CHART

(1) Group Number	(2) Component/ Assembly	(3) Maintenance Function	(4) Maintenance Level C	O	F	H	D	(5) Tools and Equipment	(6) Remarks
01	ENGINE								
	Engine Assy., Gasoline	Inspect	0.5						
		Service	0.5						
		Teat		0.5					A
		Replace		1.5					
		Repair			2.5				
		Overhaul				8.0			
	Crankshaft Pulley	Replace		1.0					
02	FUEL SYSTEM								
	Tank Lines, Fittings								
	Tank Assy., Fuel	Inspect	0.5						
		Service	0.2						
		Replace		0.8					
		Repair		2.0					
	Line Assy., Tank	Service	0.2						
		Replace	0.5						
03	ELECTRICAL ASSEMBLY								
	Radio Interference Sup-								
	pression Strap, Ground	Replace		0.5					
04	FRONT AXLE								
	Front Axle Assy.								
	Axle, handtruck	Replace		1.0					
05	WHEELS AND TRACKS								
	Wheel Assy.								
	Bearing, wheel	Service		0.8					
		Replace		1.0					
	Tires Tubes								
	Tires, pneumatic	Impact	0.5						
		Service	0.5						
		Replace		1.0					
	Inner tube	Replace		0.5					
		Repair		0.5					
06	FRAME								
	Frame Assy.								
	Handtruck assy.	Inspect	0.2						
		Replace		2.0					
		Repair		1.0					
07	BODY, CHASSIS OR HULL								
	AND ACCESSORY ITEMS								
	Accessory Items								
	Adapter hose	Replace		0.2					
	Hose assy.	Replace		0.2					
	Chuck, air	Replace		0.2					
	Data Plates								
	Plate, identification	Replace		0.2					
	Plate, instruction	Replace		0.2					
08	GAGES								
	Gages, Mountings, Linen								
	and Fittings								
	Tube, gage mounting	Replace		0.5					
	Gage, pressure	Replace		0.5					
09	PNEUMATIC EQUIPMENT								
	Air Compressor Assy.								
	Compressor, air	Inspect	0.2						
		Service	0.5						
		Replace		1.5					
		Repair			3.0				

Section II. MAINTENANCE ALLOCATION CHART (Cont'd)

(1) Group Number	(2) Components/ Assembly	(3) Maintenance Function	(4) Maintenance Level C	O	F	H	D	(5) Tools and Equipment	(6) Remarks
09	PNEUMATIC EQUIPMENT (Cont'd)								
	Crankcase, Block, Cylinder Head								
	Block, cylinder	Replace			4.0				
	Crankcase, Block, Cylinder Head (Cont'd)								
	Crankcase, compressor	Replace			5.0				
	Gage, oil	Replace	0.1						
	Crankshaft								
	Bearing, crankshaft	Replace			3.0				
	Crankshaft, compressor	Replace			3.0				
	Seal, oil	Replace			1.5				
	Piston, Connecting Rods								
	Piston Assy., High and Low Pressure	Replace			3.0				
	Ring Set, Piston	Replace			3.0				
	Rod Assy., High and Low Pressure	Replace			3.0				
	Valves Camshaft and Timing Mechanism								
	Valve assy., intake and discharge	Replace			1.0				
		Repair			1.5				
	Lubrication System								
	Cap, oil filler	Replace		0.1					
	Tube, breather	Replace		0.2					
	Compressor Drive Belts, V	Inspect	0.2						
		Adjust		0.5					
		Replace		0.9					
	Flywheel, drive	Replace		1.0					
	Guard, belt and flywheel	Replace		1.0					
	Air Intake								
	Filter assy.	Service	0.3						
		Replace	0.2						
	Unloader System								
	Component								
	Unloader assy.	Replace		1.0					
	Valve assy. relief and safety	Replace		1.0					
	Valve, safety intercooler	Replace		1.0					
	Compressor Cooling								
	Tube, intercooler and aftercooler	Replace		1.5					
	Air Receiver								
	Tank assy.	Test			2.0				
		Service	0.2						
		Replace		5.0					
	Air Discharge Assembly								
	Adapter, air discharge	Replace		0.5					
10	FIRE FIGHTING EQUIPMENT								
	Fire Extinguishers								
	Extinguisher, fire	Replace		0.5					

Section III. TOOL AND TEST EQUIPMENT REQUIREMENTS

(1) REFERENCE CODE	(2) MAINTENANCE LEVEL	(3) NOMENCLATURE	(4) NATIONAL STOCK NO.	(5) TOOL NUMBER
1	F	Wrench, inlet valve retainer	5120-00-357-7592	
1	F	Wrench outlet valve retainer	5120-00-357-7691	
1	F	Wrench inlet valve seat	5120-00-357-7722	
1	F	Wrench, outlet valve seat	5120-00-357-7721	

Section IV. REMARKS

Reference Code	Remarks
A	Test includes engine operation and compression

APPENDIX D

EXPENDABLE SUPPLIES AND MATERIALS LIST

Section I. INTRODUCTION

D-1. Scope

This appendix lists expendable supplies and materials needed to operate and maintain the air compressor. These items are authorized by CTA 50-970. Expendable items (Except Medical, Class V, Repair Parts, and Heraldic Items).

D-2. Explanation of Columns

a. Column 1 - Item Number. This number is assigned to the entry in the listing and is referenced in the narrative instructions to identify the material (e.g., "Use cleaning compound, item 5, App. D.").

b. Column 2- Level. This column identifies the lowest level of maintenance that requires the listed item.

C ..... Operator/Crew
O ..... Organizational Maintenance
F ..... Direct Support Maintenance
H ..... General Support Maintenance

c. ***Column 3- National Stock Number.*** This is the National stock number assigned to the item; use it to requisition the item.

d. Column 4- Description. Indicates the Federal item name and, if required, a description to identify the item. The last line for each item indicates the part number followed by the Federal Sup ply Code for Manufacturer (FSCM) in parentheses, if applicable.

e. ***Column 5 - Unit of Measure (U/M).*** Indicates the measure used in performing the actual maintenance function. This measure is expressed by a two-character alphabetical abbreviation (e.g., ea, in, pr). If the unit of meaaure differs from the unit of issue, requisition the lowest unit of issue that will satisfy your requirements.

Section II. EXPENDABLE SUPPLIES AND MATERIALS LIST

(1) ITEM NUMBER	(2) IEVEL	(3) NATIONAL STOCK NUMBER	(4) DEsCRIPTION	(5) U/M
1	C	9130-00-160-1817	Gasoline, Automotive, Combat, 91A, 5 gal can	ga
2	C	9150-00-265-9425	Oil, Lubricating, OE 10	qt
3	C	9150-00-265-9433	Oil, Lubricating, OE 30	qt
4	C	9150-00-242-7602	Oil, Lubricating, OES	qt
5	C		Solvent, Dry cleaning, P-D-680	ga

APPENDIX E
COMPONENTS OF END ITEMS LIST
Section I. INTRODUCTION

1. Scope. This appendix lists Integral Components of and Basic Issue Items (BII) for the Air Compressor to help you inventory items required for safe and efficient operation.

2. General. The components of end list are divided into the following sections.

a. ***Section II. Integral Components of the End Item.*** These items, when assembled, comprise the Air Compressor and must accompany it whenever it is transferred or turned in. These illustrations will help you identify these items.

b. Section III. Basic Issue Items. These are minimum essential items required to place the Air Compressor in operation, to operate it and to perform emergency repairs. Although shipped separately packed, they must accompany the Air Compressor during operation and whenever it is transferred between accountable officers. The illustrations will assist you with hard-to-identify items. This manual is your authority to requisition replacement BII based on Table(s) of Orgnaization and Equipment (TOE)/Modification Table of Organization and Equipment (MTOE) authorization of the end item.

3. Explanation of Columns.

a. ***Illustration.*** This column is divided as follows:

(1) Figure Number. Indicates the figure number of the illustration on which the item is shown (if applicable).

(2) ***Item Number.*** The number used to identify item called out in the illustration.

b. National Stock Number (NSN). Indicates the national stock number assigned to the end item which will be used for requisitioning.

c. ***Part Number (P/N).*** Indicates the primary number used by the manufacturer which controls the design and characteristics of the item by means of its engineering drawings, specifications, standards and inspection requirements to identify an item or range of items.

d. Description. Indicates the federal item name and, if required, a minimum description to identify the item.

e. Location. The physical location of each item listed is given in this column. The lists are designed to inventory all items in one area of the major item before moving on to an adjacent area.

f. Usable on Code. (Not Used)

g. Quantity Required (Qty Reqd). This column lists the quantity of each item required for a complete major item.

h. Quantity. This column is left blank for use during inventory. Under the received column, list the quantity you actually receive on your major item. The date columns are for use when you inventory the major item at a later date, such as for shipment to another site.

Section II. INTEGRAL COMPONENTS OF END ITEM

(1) ILLUSTRATION (a) FIGURE NO.	(b) ITEM NO.	(2) NATIONAL STOCK NO.	(3) PART NO. & FSCM	(4) DESCRIPTION	(5) LOCATION	(6) USABLE ON CODE	(7) QTY REQD.	RCVD DATE	(8) QUANTITY DATE	DATE
7-5	9	4720-00-289-4612		Hose Assembly	Air Tank		1			
7-5	8	4910-00-204-2644		Gage Inflator	End of Hose Assembly		1			

Section III. BASIC ISSUE ITEMS (BII)

(1) ILLUSTRATION (a) FIGURE NO.	(b) ITEM NO.	(2) NATIONAL STOCK No.	(3) PART NO. & FSCM	(4) DESCRIPTION	(5) LOCATION	(6) USABLE ON CODE	(7) QTY REQD.	RCVD DATE	(8) QUANTITY DATE	DATE
				TM 5-4310-276-14			1			

APPENDIX F
ADDITIONAL AUTHORIZATION LIST

Section I. INTRODUCTION

1. Scope. This appendix lists additional items you are authorized for the support of the compressor.

2. General. This list identifies items that do not have to accompany the compressor and that do not have to be turned in with it. These items are authorized to you by CTA, MTOE, or JTA.

3. Explanation of Listing. National stock number, descriptions and quantities are provided to help you identify and request the additional items you require to support this equipment. "USABLE ON" codes are identified as follows: (Not used)

Section II. ADDITIONAL AUTHORIZATION LIST (AAL)

(1) NATIONAL STOCK NUMBER	(2) DESCRIPTION PART NUMBER & FSCM	USABLE ON CODE	(3) U/M	(4) QTY AUTH
4210-00-555-8837	EXTINGUISHER, FIRE		EA	1

ALPHABETICAL INDEX

By Order of the Secretary of the Army:

BERNARD W. ROGERS
General *United States Amy*
Chief of Staff

Official:

J. C. PENNINGTON
Brigadier General, United States Army
The Adjutant General

Distribution:
TO be distributed in accordance with DA Form 12-25A, Operator maintenance requirements for Air Compressors, 5 CFM.

*U.S. GOVERNMENT PRINTING OFFICE : 1989 0- 242-466/8399

RECOMMENDED CHANGES TO EQUIPMENT TECHNICAL MANUALS

SOMETHING WRONG WITH THIS MANUAL?

THEN. . .JOT DOWN THE DOPE ABOUT IT ON THIS FORM, TEAR IT OUT, FOLD IT AND DROP IT IN THE MAIL!

FROM: (YOUR UNIT'S COMPLETE ADDRESS)
PFC JOHN DOE
CoA, 3d ENGINEER BN
FT. LEONARD WOOD MO 63108

DATE 16 DEC 74

PUBLICATION NUMBER	DATE	TITLE
TM5-6115-200-20 AND P	1 APR 72	GENERATOR SET 10 KW NSN 6115-00-231-7286

BE EXACT. . .PIN-POINT WHERE IT IS

PAGE NO.	PARAGRAPH	FIGURE NO.	TABLE NO.	IN THIS SPACE TELL WHAT IS WRONG AND WHAT SHOULD BE DONE ABOUT IT:
6	2-1 a			In line 6 of paragraph 2-1a the manual states the engine has 6 cylinders. The engine on my set only has 4 cylinders. Change the manual to show 4 cylinders
81		4-3		Callout 16 on figure 4-3 is pointing at a bolt. In the key to fig. 4-3, item 16 is called a shim. Please correct one or the other.
125	line 20			I ordered a gasket, item 19 on figure B-16 by NSN 2910-00-762-3001. I got a gasket but it doesn't fit. Supply says I got what I ordered so the NSN is wrong. Please give me a good NSN

SAMPLE

TYPED NAME, GRADE OR TITLE, AND TELEPHONE NUMBER: JOHN DOE, PFC (268) 317-7111

SIGN HERE: John Doe

DA FORM 1 AUG 74 2028-2 (TEST)

P.S.—IF YOUR OUTFIT WANTS TO KNOW ABOUT YOUR MANUAL "FIND," MAKE A CARBON COPY OF THIS AND GIVE IT TO YOUR HEADQUARTERS.

TEAR ALONG DOTTED LINE

FILL IN YOUR UNIT'S ADDRESS

FOLD BACK

DEPARTMENT OF THE ARMY

OFFICIAL BUSINESS

PENALTY FOR PRIVATE USE, $300

Commander
US Army Troop Support &
Aviation Materiel Readiness Command
ATTN: DRSTS -MCTPC
4300 Goodfellow Blvd.
St. Louis, MO 63120

TEAR ALONG DOTTED LINE

FOLD BACK

REVERSE OF DA FORM 2028-2 (TEST)

RECOMMENDED CHANGES TO EQUIPMENT TECHNICAL MANUALS

SOMETHING WRONG WITH THIS MANUAL?

THEN. . .JOT DOWN THE DOPE ABOUT IT ON THIS FORM, TEAR IT OUT, FOLD IT AND DROP IT IN THE MAIL!

FROM: (YOUR UNIT'S COMPLETE ADDRESS)

DATE

PUBLICATION NUMBER	DATE	TITLE
TM 5-4310-276-14	15 FEB 1978	COMPRESSOR, RECIPROCATING: AIR

BE EXACT. . .PIN-POINT WHERE IT IS

PAGE NO.	PARA-GRAPH	FIGURE NO.	TABLE NO.

IN THIS SPACE TELL WHAT IS WRONG AND WHAT SHOULD BE DONE ABOUT IT:

TYPED NAME, GRADE OR TITLE, AND TELEPHONE NUMBER

SIGN HERE:

TEAR ALONG DOTTED LINE

DA FORM 1 AUG 74 2028-2 (TEST)

P.S.--IF YOUR OUTFIT WANTS TO KNOW ABOUT YOUR MANUAL "FIND," MAKE A CARBON COPY OF THIS AND GIVE IT TO YOUR HEADQUARTERS.

FILL IN YOUR UNIT'S ADDRESS

FOLD BACK

DEPARTMENT OF THE ARMY

OFFICIAL BUSINESS

PENALTY FOR PRIVATE USE, $300

Commander
US Army Troop Support & Aviation
Materiel Readiness Command
ATTN: DRSTS-MCPTC
4300 Goodfellow Blvd
St. Louis, MO 63120

TEAR ALONG DOTTED LINE

FOLD BACK

REVERSE OF DA FORM 2028-2 (TEST)

RECOMMENDED CHANGES TO EQUIPMENT TECHNICAL MANUALS

SOMETHING WRONG WITH THIS MANUAL?

THEN. . .JOT DOWN THE DOPE ABOUT IT ON THIS FORM, TEAR IT OUT, FOLD IT AND DROP IT IN THE MAIL!

FROM: (YOUR UNIT'S COMPLETE ADDRESS)

DATE

PUBLICATION NUMBER	DATE	TITLE
TM 5-4310-276-14	15 FEB 1978	COMPRESSOR, RECIPROCATING, AIR

BE EXACT. . .PIN-POINT WHERE IT IS

PAGE NO.	PARA-GRAPH	FIGURE NO.	TABLE NO.

IN THIS SPACE TELL WHAT IS WRONG AND WHAT SHOULD BE DONE ABOUT IT:

TYPED NAME, GRADE OR TITLE, AND TELEPHONE NUMBER

SIGN HERE:

TEAR ALONG DOTTED LINE

DA FORM 1 AUG 74 2028-2 (TEST)

P.S.--IF YOUR OUTFIT WANTS TO KNOW ABOUT YOUR MANUAL "FIND," MAKE A CARBON COPY OF THIS AND GIVE IT TO YOUR HEADQUARTERS.

FILL IN YOUR UNIT'S ADDRESS

FOLD BACK

DEPARTMENT OF THE ARMY

OFFICIAL BUSINESS

PENALTY FOR PRIVATE USE, $300

Commander
US Army Troop Support & Aviation
Materiel Readiness Command
ATTN: DRSTS-MCTPC
4300 Goodfellow Blvd.
St. Louis, MO 63120

TEAR ALONG DOTTED LINE

FOLD BACK

RECOMMENDED CHANGES TO EQUIPMENT TECHNICAL MANUALS

SOMETHING WRONG WITH THIS MANUAL?

THEN. . .JOT DOWN THE DOPE ABOUT IT ON THIS FORM, TEAR IT OUT, FOLD IT AND DROP IT IN THE MAIL!

FROM: (YOUR UNIT'S COMPLETE ADDRESS)

DATE

PUBLICATION NUMBER	DATE	TITLE
TM 5-4310-276-14	15 FEB 1978	COMPRESSOR,RECIPROCATING, AIR

BE EXACT. . .PIN-POINT WHERE IT IS

PAGE NO.	PARA-GRAPH	FIGURE NO.	TABLE NO.

IN THIS SPACE TELL WHAT IS WRONG AND WHAT SHOULD BE DONE ABOUT IT:

TYPED NAME, GRADE OR TITLE, AND TELEPHONE NUMBER

SIGN HERE:

TEAR ALONG DOTTED LINE

DA FORM 1 AUG 74 2028-2 (TEST)

P.S.--IF YOUR OUTFIT WANTS TO KNOW ABOUT YOUR MANUAL "FIND," MAKE A CARBON COPY OF THIS AND GIVE IT TO YOUR HEADQUARTERS.

FILL IN YOUR UNIT'S ADDRESS

FOLD BACK

DEPARTMENT OF THE ARMY

OFFICIAL BUSINESS

PENALTY FOR PRIVATE USE, $300

Commander
US Army Troop Support & Aviation
Materiel Readiness Command
ATTN: DRSTS-MCTPC
4300 Goodfellow Blvd.
St. Louis, MO 63120

TEAR ALONG DOTTED LINE

FOLD BACK

REVERSE OF DA FORM 2028-2 (TEST)

The Metric System and Equivalents

Linear Measure

1 centimeter = 10 millimeters = . 39 inch
1 decimenter = 10 centimeters = 3.94 inches
1 meter = 10 decimeters = 39.37 inches
1 dekameter = 10 meters = 32.8 feet
1 hectometer = 10 dekameters = 328.08 feet
1 kilometer = 10 hectometers = 3,280.8 feet

Weights

1 centigram = 10 milligrams = . 15 grain
1 decigram = 10 centigrams = 1.54 grains
1 gram = 10 decigrams = . 035 ounce
1 dekagram = 10 grams = . 35 ounce
1 hectogram = 10 dekagrams = 3.52 ounces
1 kilogram = 10 hectograms = 2.2 pounds
1 quintal = 100 kilograms = 220.46 pounds
1 metric ton = 10 quintals = 1.1 short tons

Liquid Measure

1 centiliter = 10 milliters = . 34 fl. ounce
1 deciliter = 10 centiliters = 3.38 fl. ounces
1 liter = 10 deciliters = 38.82 fl. ounces
1 dekaliter = 10 liters = 2.64 gallons
1 hectoliter = 10 dekaliters = 26.42 gallons
1 kiloliter = 10 hectoliters = 264.18 gallons

Square Measure

1 sq. centimeter = 100 sq. millimeters = . 155 sq. inch
1 sq. decimenter = 100 sq. centimeters = 15.5 sq. inches
1 sq. meter (centare) = 100 sq. decimeters = 10.76 sq. feet
1 sq. dekameter (are) = 100 sq. meters = 1,076.4 sq. feet
1 sq. hectometer (hectare) = 100 sq. dekameters = 2.47 acres
1 sq. kilometer = 100 sq. hectometers = . 386 sq. mile

Cubic Measure

1 cu. centimeter = 1000 cu. millimeters = . 06 cu. inch
1 cu. decimeter = 1000 cu. centimeters = 61.02 cu. inches
1 cu meter = 1000 cu. decimeters = 35.31 cu. feet

Approximate Conversion Factors

To change	*To*	*Multiply by*	*To change*	*To*	*Multiply by*
inches	centimeters	2.540	ounce-inches	newton-meters	.007062
feet	meters	.305	centimeters	inches	3.94
yards	meters	.914	meters	feet	3.280
miles	kilometers	1.609	meters	yards	1.094
square inches	square centimeters	6.451	kilometers	miles	.621
square feet	square meters	.093	square centimeters	square inches	.155
square yards	square meters	.836	square meters	square feet	10.764
square miles	square kilometers	2.590	square meters	square yards	1.196
acres	square hectometers	.405	square kilometers	square miles	.386
cubic feet	cubic meters	.028	square hectometers	acres	2.471
cubic yards	cubic meters	.765	cubic meters	cubic feet	35.315
fluid ounces	milliliters	29,573	cubic meters	cubic yards	1.308
pints	liters	.473	milliliters	fluid ounces	.034
quarts	liters	.946	liters	pints	2.113
gallons	liters	3.785	liters	quarts	1.057
ounces	grams	28.349	liters	gallons	.264
pounds	kilograms	.454	grams	ounces	.035
short tons	metric tons	.907	kilograms	pounds	2.205
pound-feet	newton-meters	1.365	metric tons	short tons	1.102
pound-inches	newton-meters	.11375			

Temperature (Exact)

°F	Fahrenheit temperature	5/9 (after subtracting 32)	Celsius temperature	°C

This fine document...

Was brought to you by me:

Liberated Manuals -- free army and government manuals

Why do I do it? I am tired of sleazy CD-ROM sellers, who take publicly available information, slap “watermarks” and other junk on it, and sell it. Those masters of search engine manipulation make sure that their sites that sell free information, come up first in search engines. They did not create it... They did not even scan it... Why should they get your money? Why are not letting you give those free manuals to your friends?

I am setting this document FREE. This document was made by the US Government and is NOT protected by Copyright. Feel free to share, republish, sell and so on.

I am not asking you for donations, fees or handouts. If you can, please provide a link to liberatedmanuals.com, so that free manuals come up first in search engines:

<A HREF=http://www.liberatedmanuals.com/>Free Military and Government Manuals</A>

- Sincerely
  Igor Chudov
  http://igor.chudov.com/
- Chicago Machinery Movers