DEPARTMENT OF THE ARMY TECHNICAL MANUAL

TECHNICAL MANUAL

DIRECT AND GENERAL SUPPORT

MAINTENANCE MANUAL

MIXER, CONCRETE, 4 WHEEL TRAILER MOUNTED,

GASOLINE ENGINE DRIVEN, NON TILT, 16 CU. FT.

(T. L. SMITH COMPANY MODEL 499A)

FSN 3895-444-1531

This copy is a reprint which includes current pages from Change 1.

HEADQUARTERS, DEPARTMENT OF THE ARMY

7 JANUARY 1972

Changes In Force: C1 and C2

CHANGE

No. 2

HEADQUARTERS
DEPARTMENT OF THE ARMY
Washington D. C., *20 April 1992*

Direct and General Support Maintenance Manual
MIXER, CONCRETE; _WHEEL TRAILER MOUNTED; GED;
NONTILT; 16 CU. FT. (T. L. SMITH MODEL 499A)
NSN 3895-44-1531

TM 5-3895-342-347 January 1972,is changed s follows:

Cover: manual title is changed to ad as shown above.

In*side front cover:* The following **WARNING** should be added; be added:

WARNING: If NBC exposure is suspected, all air filter media should be handled by personnel wearing protective equipment. Consult your unit NBC Officer or NBC NCO for appropriate handing or disposal instructions.

Page 1. The manual title is changed to read as shown above.

Page 2-2. Under the Malfunction "6. Engine lacks power", before item e, "Clogged or dirty air cleaner", the following **WARNING** should be added

WARNING: If NBC exposure is suspected, all air filter media should be handled by personnel wearing protective equipment. Consult your unit NBC Officer or NBC MCO for appropriate handing or disposal instructions.

By Order of the Secretary of the Army:

GORDON R. SULLIVAN
General, United States Army
Chief of Staff

Official:

MILTON H. HAMILTON
Administrative Assistant to the
Secretary of the Army
01130

Distribution:
To be distributed in accordance with DA Form 1 -E (Block 1203) Direct Support and General Support maintenance requirements for TM5-3895-342-34.

Approved for public release; distribution is unlimited

*U. S. GOVERNMENT PRINTING OFFICE: 1992 643-016/60101

Change No. 1

HEADQUARTERS,
DEPARTMENT OF THE ARMY
WASHINGTON, D. C., 23 *February 1*973

Direct and General Support Maintenance Manual
MIXER, CONCRETE; 4-WHEEL TRAILER MOUNTED; GED;
NON-TILT; 16 CU. FT. (T. L. SMITH MODEL 499A)
FSN 3895-444-1531

TM 5-3895-342-34, 7 January 1972, is changed as follows:

Page 3-13. Figure 3-8.1 is added as follows:

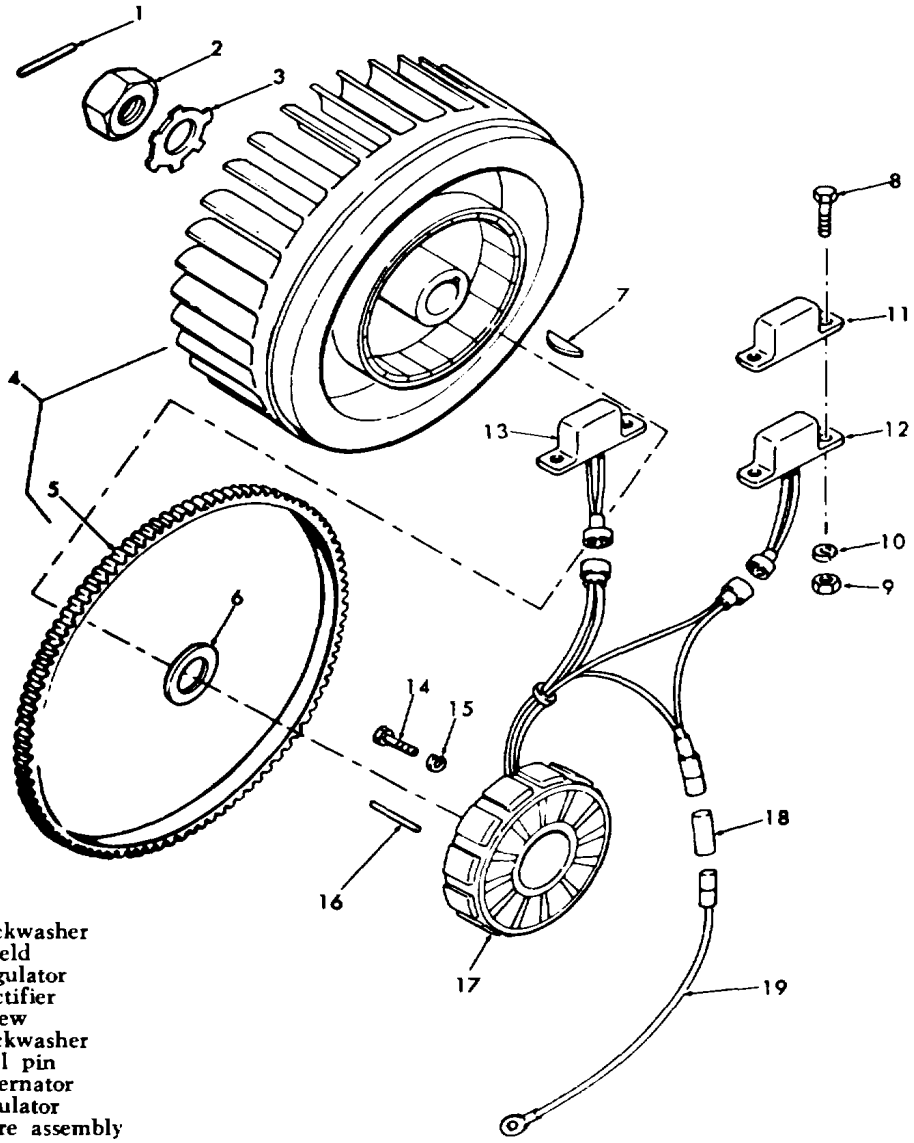

1 Pin, crank
2 Nut
3 Lockwasher
4 Flywheel
5 Ring gear
6 Oil slinger
7 Woodruff key
8 Screw
9 Nut
10 Lockwasher
11 Shield
12 Regulator
13 Rectifier
14 Screw
15 Lockwasher
16 Roll pin
17 Alternator
18 Insulator
19 Wire assembly

ME 3895-342-34/3-8.1 C1

Figure 3-8.1 Flywheel and alternator assembly.

Paragraph 3-9a. After the paragraph title add (fig. 3-8.1).

Page 4-2. Paragraph 4-2d is superseded as follows:

d. Assembly. Assemble water gage in reverse procedure of removal. Insure that gib key is properly aligned when reassembling handle and shaft to tank lever.

Page 9-3. Paragraph 9-3a is changed as follows:

a. Remove and disassemble towing stub * * * figure 9-2.

Paragraph 9-5 is added as follows:

9-5. Axle Assemblies (fig. 9-4).

a. Removal

(1) Jack up mixer. Support mixer with suitable timbers.

(2) Remove locknuts (1) and capscrews that secure axle to springs (8). Move axle away from springs.

(3) Remove wheel assemblies from axle (para 9-2).

(4) Disassemble towing stub and fifth wheel assembly from front axle is required (para 9-4).

b. Assembly. Assemble axle in reverse of removal procedure *a* above.

TECHNICAL MANUAL
No. 5-3895-342-34

HEADQUARTERS,
DEPARTMENT OF THE ARMY
WASHINGTON, D. C., 7 *January 1*972

DIRECT AND GENERAL SUPPORT MAINTENANCE MANUAL

MIXER, CONCRETE, 4 WHEEL TRAILER MOUNTED,

GASOLINE ENGINE DRIVEN, NON TILT,16 CU. FT.

(T. L. SMITH COMPANY MODEL 499A)

FSN 3895-444-1531

			Paragraph	Page
CHAPTER	**I.**	**INTRODUCTION**		
Section	I.	General	1-1,1-2,1-3	1-1
	II.	Description and tabulated data	1-4,1-5,1-6	1-1
CHAPTER	**2.**	**DIRECT SUPPORT AND GENERAL SUPPORT MAINTENANCE INSTRUCTIONS**		
Section	I.	Repair parts, special tools, and equipment	2-1,2-2,2-3	2-1
	II.	Troubleshooting	2-4,2-5	2-1
	III.	General maintenance	2-6,2-7	2-2
	IV.	Removal and installation of major components and auxiliaries	2-8,2-9,2-10, 2-11,2-12,2-13, 2-14,2-15,2-16	2-3
CHAPTER	**3.**	**REPAIR OF ENGINE**		
Section	I.	Engine accessories	3-1,3-2,3-3, 3-4,3-5,3-6,3-7	3-1
	II.	Engine components	3-8,3-9,3-10, 3-11,3-12,3-13, 3-14,3-15,3-16, 3-17,3-18,3-19	3-13
CHAPTER	**4.**	**REPAIR OF WATER SYSTEM**		
		General	4-1	4-1
		Water gage	4-2	4-1
		Water tank	4-3	4-2
CHAPTER	**5.**	**REPAIR OF DISCHARGE SPOUT ASSEMBLY**		
		General	5-1	5-1
		Discharge spout assembly	5-2	5-1
CHAPTER	**6.**	**REPAIR OF SKIP, SKIP VIBRATOR ASSEMBLY AND SKIP HOIST ASSEMBLY**		
Section	I.	Skip, and skip vibrator assembly	6-2,6-3,6-4	6-1
	II.	Skip hoist assembly	6-5,6-6	6-3
CHAPTER	**7.**	**REPAIR OF DRIVE AND HOIST ASSEMBLY**		
		General	7-1	7-1
		Drive sheave	7-2	7-1
		Brake band	7-3	7-1
		Clutch band	7-4	7-1
		Hoisting drum	7-5	7-1
		Gear reduction case assembly	7-6	7-1
CHAPTER	**8.**	**REPAIR OF DRUM, AND ROLLER ASSEMBLY**		
		General	8-1	8-1

		Paragraph	Page
	Drum plate	8-2	8-1
	Drum rollers and shaft	8-3	8-1
	Drum ring gear	8-4	8-1
CHAPTER 9.	**REPAIR OF UNDER CARRIAGE ASSEMBLY**		
	General	9-1	9-1
	Wheel assembly	9-2	9-1
	Towing stub	9-3	9-3
	Fifth wheel, radius rods, and steering knuckles	9-4	9-3
APPENDIX A	**REFERENCES**		A-1
INDEX			I-1

LIST OF ILLUSTRATIONS

Number	Title	Page
1-1	Wiring diagram	1-2
2-1	Discharge spout assembly removal	2-3
3-1	Governor removal	3-1
3-2	Governor, exploded view	3-2
3-3	Carburetor, exploded view	3-4
3-4	Magneto, exploded view	3-6
3-5	Stag motor, exploded view	3-8
3-6	Clutch housing, exploded view	3-10
3-7	Clutch assembly removal	3-11
3-8	Clutch, assembly	3-12
3-9	Valve assembly, valve insert and vale guide, exploded view	3-15
3-10	Gear cover removal	3-16
3-11	Gear cover, exploded view	3-17
3-12	Idler gear and shaft assembly	3-17
3-13	Idler, camshaft, and oil pump gears removal	3-18
3-14	Gear cover spacer removal	3-19
3-15	Crankcase cover plate, cover, gasket and engine supports removal	3-20
3-16	Oil pump removal	3-20
3-17	Oil pump, exploded view	3-21
3-18	Connecting rod caps and baffle plates removal	3-22
3-19	Piston assembly, exploded view	3-23
3-20	Crankshaft assembly, exploded view	3-24
3-21	Camshaft and valve lifter assembly, exploded view	3-25
3-22	Cylinder block and crankcase assemblies, exploded view	3-26
4-1	Water gage removal	4-1
4-2	Water gage, exploded view	4-2
4-3	Water tank, exploded view	4-3
5-1	Discharge spout assembly, exploded view	5-2
6-1	Skip vibrator assembly, exploded view	6-2
7-1	Gear reduction case assembly, exploded view	7-2
8-1	Drum plates, exploded view	8-1
8-2	Drum rollers and shaft, exploded view	8-2
9-1	Wheel assembly, exploded view	9-2
9-2	Towing stub, exploded view	9-3
9-3	Fifth wheel, radius rods and steering knuckles, exploded view	9-4

CHAPTER 1

INTRODUCTION

Section I. GENERAL

1-1. Scope.

a. This manual contains instructions for the use of direct and general support maintenance personnel maintaining the T.L. Smith Concrete Mixer as allocated by the Maintenance Allocation Chart. It provides information on the maintenance of the equipment which is beyond the scope of the tools, equipment, personnel, or supplies normally available to using organizations.

b. Appendix A contains a list of publications applicable to this manual.

1-2. Maintenance Forms and Records

DA forms and procedures used for equipment maintenance will be only those prescribed by TM 38-750, The Army Maintenance Management System.

1-3. Reporting of Errors

Report of errors, omissions, and recommendations for improving this publication by the individual user is encouraged. Reports should be submitted on DA Form 2028, Recommended Changes to Publications, and forwarded direct to Commanding General, U. S. Army Mobility Equipment Command, ATTN: AMSME-MP, 4300 Goodfellow Blvd., St. Louis, Mo. 63120.

Section II. DESCRIPTION AND TABULATED DATA

1-4. Description

A general description of the T. L.. Smith Concrete Mixer is contained in TM 5-3895-342-12.

1-5. Differences Between Models

This manual covers only the T. L.. Smith Concrete Mixer, Model 499A. No differences exist within the serial number range covered in this manual. The serial number range covered in this manual is: 76900 to 77058

1-6. Tabulated Data

a. General. Data as to manufacturer and model identification of component is contained in TM 5-3895-342-12. This paragraph contains all maintenance data pertinent to direct and general maintenance personnel. A wiring diagram (fig. 1-1) is also included.

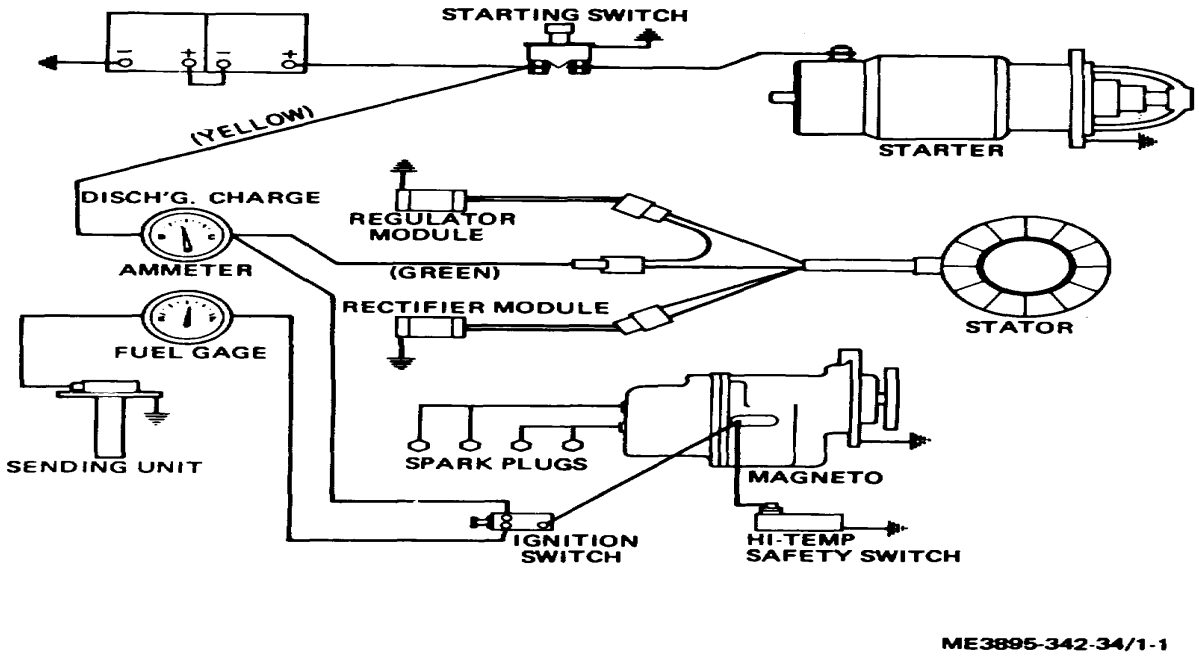

Figure 1-1. Wiring diagram.

b. Engine Repair and Rebuild Standard. Table 1-1 lists manufacturer's sizes, tolerances and maximum allowable wear and clearance.

c. Nut and Bolt Torque Data. Table 1-2 provides nut and bolt torque data.

Table 1-1. Engine Repair and Rebuild Data

Component	Manufacturer's dimensions and tolerances in inches		Desired clearance		Maximum allowable wear and clearance
	Minimum	Maximum	Minimum	Maximum	
Camshaft	1.8725	1.8730			0.002
No. I Journal	1.8725	1.8730			0.002
No. 2 Journal	1.2475	1.2480			0.002
Camshaft bores					
No. I Journal	1.875	1.876			0.002
No. 2 Journal	1.250	1.251			0.002
Clearance between camshaft and bore			0.002	0.0035	
Connecting Rod					
Id of installed bushing (crankcase end)	1.8115	1.8125			
Clearance between connecting rod bushing and crankshaft.			0.0019	0.0025	0.003
Side clearance between connecting rod bushing and crankshaft.			0.004	0.011	0.005
Maximum out-of-round of bearing crankshaft end).	0.0005				
Id of piston end	0.9125	0.9130			
Id of installed bushing (piston end)	0.8594	0.8597			0.001
Interference of bushing to id of rod			0.0025	0.0055	

Table 1-1. Engine Repair and Rebuild Data— Continued

Component	Manufacturer's dimensions and tolerances in inches		Desired clearance		Maximum allowable wear and clearance
	Minimum	Maximum	Minimum	Maximum	
Connecting Rod					
Clearance between piston pin and bushing			0.0005	0.0010	0.0005
Allowable twist of connecting rod measured 3 inches from end	0.0002				
Crankshaft					
Connecting rod journal diameter	1.8100	1.8105			
Main journal fillet radius		0.125			
Conrad journal fillet radius		0.937			
End play of crankshaft in bearing			0.002	0.004	adjustable
Cylinders					
Nominal dimension of bore diameter	3.254	3.25			0.005
Governor					
Diameter of drive gear shaft	0.4270	0.4275			0.002
Id of drive gear shaft bushing	0.4290	0.4295			0.002
Clearance between shaft end bushing	0.0015	0.0025			
Id of fulcrum bore in housing	0.312	0.313			0.002
Fulcrum of shaft diameter	0.309	0.310			0.002
Clearance of shaft in housing bore	0.002	0.004			
Od of flyweight spool bushing	0.560	0.0561			0.002
Id of flyweight spool	0.563	0.565			0.003
Clearance between spool bushing	0.002	0.005			
Idler Gear					
Diameter of idler gear shaft	0.7490	0.7495			0.002
Diameter of shaft bore in gear	0.7510	0.7515			0.002
Clearance of gear bore to shaft			0.001	0.0025	
Backlash of idler gear			0.002	0.004	
Oil pump					
Drive shaft diameter	0.4995	0.5000			0.002
Diameter of shaft bore in pump body	0.5005	0.5015			0.002
Clearance bore to shaft			0.0005	0.0030	
Driven gear stub shaft diameter	0.4995	0.5000			0.002
Diameter of bore in driven gear	0.5005	0.5015			0.002
Piston					
Allowable wear from diameter of skit					0.005
Clearance skirt to cylinder bore			0.0045	0.0050	
Diameter of piston pin bore	0.8593	0.8596			0.0005
Clearance piston pin to piston			0.0000	0.0005	
Diameter of piston pin	0.8591	0.8593			0.001
Piston ring					
Gap clearance (fitted in cylinder)			0.010	0.020	0.015
Clearance of ring in piston groove:					
Groove No. 1			0.002	0.0035	0.002
Groove No. 2			0.0015	0.0025	0.002
Groove No. 3			0.001	0.003	0.002
Valve lifters					
Diameter of guide holes in block	0.6245	0.6255			0.002
Clearance valve liter to hole			0.005	0.0025	
Diameter of valve lifter	0.623	0.624			
Valves (intake and exhaust)					
Angle of seat	45°				
Stem diameter	3.405	0.3415			0.002
Stem to guide hole clearance			0.0025	0.0045	0.007
Nominal dimension of valve guide hole	0.344	0.345			0.002
Valve seats (inserts)					
Nominal dimension of *seat* diameter	1.3765	1.3770			
Angle of seat	45°				
Angle of relief	45°				
Interference od of insert to id of bore			0.001	0.003	
Valve springs (intake and exhaust)					
Scale reading compressed to 1.27 inch	51 lb	53 lb			
Scale reading compressed to 1.546 inch	38 lb	39 lb			

Table 1-2. Nat and Bolt Torque Date

Spark plug	25-30 ft-lb (foot-pound) (s)	Connecting rod nuts	22-24 ft-lb
Cylinder head capcrews	22-24 ft-lb	Cylinder block nuts	40-50 ft-lb
Gear vocer capscrews	14-18 ft-lb	Main bearing plate capscrews	25-30 ft-lb
Oil pan capscrews	6-9 ft-lb	Pal locknut	¼ turn past finger tight

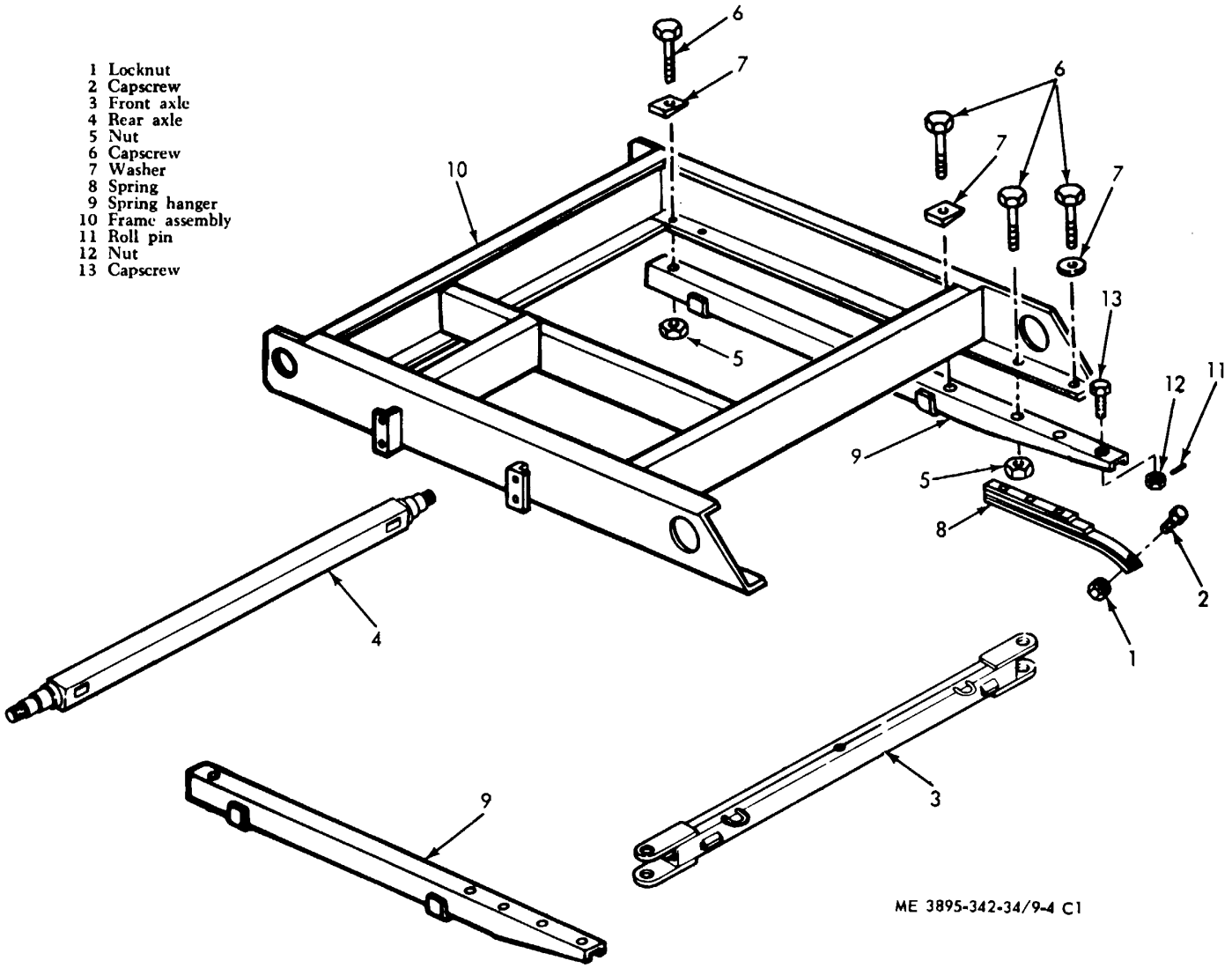

Figure 9-4. Axle and frame assemblies

9-6. Trailer Frame Assembly

a. Removal

(1) Jack up mixer at mixer frame. Support mixer with suitable timbers.

(2) Remove nuts (5) (fig. 9-4), capscrews (6) and washers (7) that secure frame (10) to spring hangers (9).

(3) Remove rear axle (para 9-4).

(4) Pull front axle with spring hangers from beneath mixer.

(5) Remove nuts and capscrews that secure spring hangers to springs and axles and disassemble trailer spring from hangers.

(6) Remove roll pins (11) from nuts (12) and unscrew leveling screws (13) from spring hanger (9).

(7) To remove frame assembly (10) it is necessary that mixer be supported from overhead sling in order for frame to be lowered away from mixer when attaching hardware is removed.

By Order of the Secretary of the Army:

CREIGHTON W. ABRAMS
Genera, United States Army
Chief of Staff

Official:
VERNE L. BOWERS
Major General, United States Army
The Adjutant General

Distribution:
To be distributed accordance with DA Form 12-25B, (qty rqr block no. 431) Direct ad General Support maintenance requirements for Mixer, Concrete.

CHAPTER 2

DIRECT SUPPORT AND GENERAL SUPORT

MAINTENANCE INSTRUCTIONS

Section I. REPAIR PARTS SPECIAL TOOLS AND EQUIPMENT

2-1. Tools and Equipment
Tools and equipment issued with or authorized for the concrete mixer are listed i the Basic Issue Items list, TM 5-3895-342-12.

2-2. Special Tools and Equipment
There are no special tools or equipment required to perform direct and general support maintenance on the mixer.

2-3. Maintenance Repair Parts
Maintenance repair parts are listed and illustrated in TM 5-3895-342-34P (when printed).

Section II. TROUBLESHOOTING

2-4. General.
This section provides information useful in diagnosing and correcting unsatisfactory operation or failure of the concrete mixer and its components. Malfunctions which may occur are listed in table 2-1. A list of probable causes is described opposite each malfunction. The corrective action recommended is described opposite the probable cause.

2-5. Troubleshooting
Refer to table 2-1 for troubleshooting information.

Table 2-1. Troubleshooting

Malfunction	Probable cause	Corrective action
1. Starting motor will not crank engine.	*a.* Defective starting motor.	*a.* Repair starting motor (para 3-5).
	b. Low or dead battery.	*b.* Replace or recharge battery.
2. Engine fail to start or is hard to start.	*a.* Defective magneto.	a. Repair magneto (para 3-4).
	b. Engine valves burned.	*b.* Repair or replace valves (para 3-11).
	c. Dirty or faulty carburetor.	*c.* Clean and replace carburetor, (para 3-3).
	d. Dirty fuel tank and fuel	*d.* Drain fuel tank and service with clean fuel.
3. Engine stops.	a. Magneto defective.	*a.* Repair magneto (para 3-4).
	b. Engine damaged by overheating or lack of lubrication.	*b.* Repair the engine (chapter 3).
	c. Broken crankshaft.	*c.* Replace crankshaft (para 3-17.
	d. Broken camshaft	*d* Replace camshaft (para 3-18).
4. Engine noisy.	*a.* Worn piston pins or pistons	*a.* Replace pistons or piston pins (para 3-16).
	b. Connec*ti*ng rods and main bearings loose.	*b.* Replace connecting rod, upper and lower bearing halves (para 3-16), and crankshaft (para 3-17}).
	c. Valve tappets loose.	*c.* Replace a defective valve tappet (para 3-11).
	d. Valve spring broken or weak.	*d.* Replace a defective valve spring (para 3-11).
	e. Flywheel loose or defective.	*e.* Tighten or rep*la*ce flywheel.
5. Engine mimes or runs erratically.	*a.* Magneto defective.	*a.* Repair magneto (para 3-4).
	b. Valve burned, warped or broken.	*b.* Grind or replace valves (para 3-11).
	c. Valve seat cracked.	*c.* Reface or replace valve seat (para 3-11).
	d. Governor defective.	*d.* Repair governor (para 3-2).
	e. Dirty carburetor.	e. Disassemble, clean, and repair carburetor para 3-3).
	f. Dirt or water in fuel.	*f.* Drain contaminated fuel and service with clean fuel
6. Engine lacks power.	a. Valves burned or sticking.	*a.* Repair or rep*la*ce valves (para 3-11).

Table 2-1. Troubleshooting-Continued

Malfunction	Probable cause	Corrective action
	b. Governor defective.	*b.* Repair governor (para 3-2).
	c. Piston rings defective.	*c.* Replace pistons and rings (pars 3-16).
	d. Defective magneto.	*d.* Repair magneto (para 3-4).
	e. Clogged or dirty air cleaner	*e.* Disassemble and clean air cleaner.
7. Engine has low or no oil pressure	*a.* Defective oil pump.	*a.* Repair oil pump (para 3-15).
	b. Main and connecting rod bearing worn.	*b.* Replace main and connecting rod bearings (para 3-16 and 3-17).
8. Engine oil consumption high.	*a.* Piston rings worn.	*a.* Replace piston rings (para 3-16).
	b. Cylinder bore scored.	*b.* Rebore or replace the cylinder block (para 3-19).
9. Master clutch slips or chatter	Defective clutch.	Repair clutch (para 3-7).
10. Ammeter will not indicate in green range.	Defective flywheel alternator.	Check flywheel alternator (table 3-1). Repair or replace defective flywheel alternator (para 3-9).

Section III. GENERAL MAINTENANCE

2-6. General

This section contains general maintenance information that would otherwise have to be repeated throughout this manual.

2-7. Maintenance

a. Hardware and Threaded Parts. Inspect hardware for damaged threads, rounded corners and damaged slots. Threaded holes and parts should accept their mating parts without requiring excessive torque. Threads may be chased with a tap or die. Replace any threaded parts which cannot be repaired.

b. Gasket. Replace all gaskets which are disturbed during repair operations or which show signs of leakage. Use grease or gasket cement to hold the gasket in position during installation.

c. Oil Seals and Packings. Thoroughly lubricate the sealing lip of spring-loaded seals when installing. Apply a non-hardening sealant to the outer circumference of encased seals or to the mating bores to prevent leakage. Immerse preformed packings in the fluid which they will contact.

d. Ball and Roller Bearings. After removing anti-friction bearings, cover them immediately to keep out dirt and abrasives. Flush thoroughly with solvent, tap them against a wooden block to remove packed lubricant and air-dry. Do not spin the bearings. Coat the clean bearings with oil and wrap in clean paper until installation. Replace any bearings that are scored, pitted, discolored from overheating, or otherwise damaged. When installing bearings against shoulders, be sure the chamfered side is toward the shoulder. Lubricate the bearing and its mating surface when pressing. Press the bearing only on the race adjacent to the mating part. Use drivers which contact as much of the race as possible.

e. Repair of Damaged Machined and Polished Surfaces. Remove rough spots, scores, burrs, galling, gouges and other surface damage from machined and polished surfaces. Use a honing stone, crocus or emery cloth, file or other abrasive. The finish of the part must approximate that of a new part. Critical dimensions must not be altered beyond acceptable limits. Build up shafts, rods and other worn parts by neutralizing, chrome plating, or welding. Grind to the original size.

f. Welding. Welding must be performed by a qualified welder. Insure that welds provide complete fusion and penetration and comply with governing specifications. Inspect all welds using a radiographic or magnetic particle technique. Grind all new welds flat and smooth whenever possible.

g. Part Replacement Replace parts which are worn or defective with new parts. Consider such factors as age, mileage, operating hours, usage and parts availability when determining the necessity of part replacement.

Section IV. REMOVAL AND INSTALLATION OF MAJOR COMPONENTS AND AUXILIARIES

2-8. Clutch Housing Assembly

a. Removal

(1) Remove pump belt and drive hoist belt as instructed in TM 5-3895-342-12.

(2) Remove motor sheave.

(3) Remove oil level plug and drain oil from housing.

(4) Remove four nuts and the lockwashers securing clutch housing to engine and remove housing and gasket.

b. Installation. Install clutch housing assembly in reverse of instructions in subparagraph a above.

2-9. Engine Assembly

a. Removal

(1) Remove pump belt and hoist drive belts as instructed in TM 5-3895-342-12

(2) Remove fuel tank as instructed in TM 5-3895-342-12.

(3) Disconnect battery cable from start switch on engine.

(4) Disconnect engine ground wire from decking.

(5) Remove four bolts, nuts and lockwashers securing engine spacer plates to deck.

(6) Lift engine assembly off mixer with suitable lifting device.

b. Installation. Install engine assembly in reverse of instructions in subparagraph *a* above.

2-10. Water Tank

a. Removal

(1) Drain all water from tank.

(2) Disconnect hose at tank.

(3} Remove four bolts, nuts and lockwashers securing tank to support angles. Lift tank off mixer.

b. Installation. Install water tank in reverse of instructions in subparagraph *a* above.

2-11. Discharge Spout Assembly

a. *Removal.* Remove discharge spout as instructed in figure 2-1.

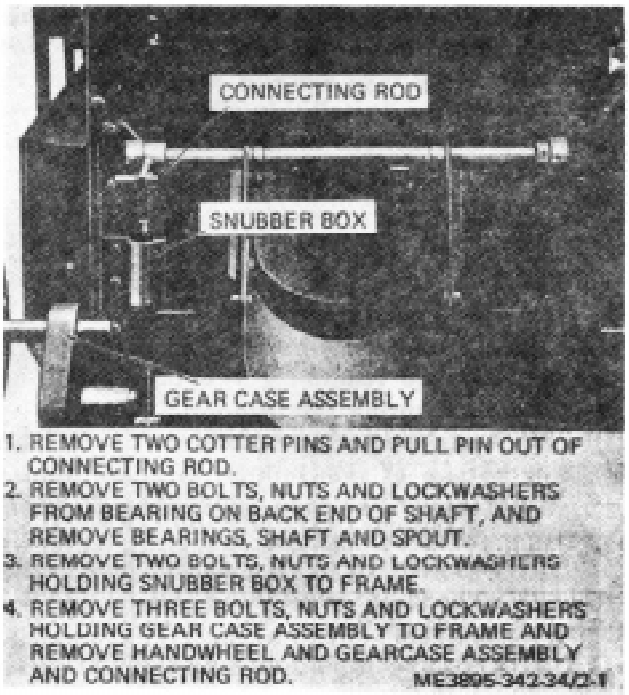

Figure 2-1. Discharge spout assembly removal.

b. Installation. Install discharge spout assembly in reverse of instructions in figure 2-1.

2-12. Skip

a. Removal

(1) Lower skip to ground.

(2} Disconnect cable from left hand winding drum and pull cable free of skip.

(3) Disconnect vibrator cable from underside of skip.

(4) Remove two bolts, nuts and lockwashers holding skip pillowblocks to mixer and remove skip and pillowblocks.

b. Installation. Install skip in reverse of instructions in subparagraph a above.

2-13. Skip Vibrator Assembly

a. Removal

(1) Lower skip to ground.

(2) Disconnect vibrator cable from underside of skip.

(3) Disengage vibrator cable from bracket below skip. Remove two bolts, nuts and lock-washers holding skip vibrator assembly to mixer.

b. Installation. Install skip vibrator assembly in reverse of instructions in subparagraph *a* above.

2-14. Drive and Hoist Assembly

a. Removal

(1) Remove skip vibrator assembly (para 2-2).

(2) Remove hoist cable (TM 5-3895-342-12).

(3) Remove engine (para 2-9).

(4) Remove battery box (TM 5-3895-342-12).

(5) Remove remaining two bolts, nuts and lockwashers securing side support to deck.

(6) Remove two bolts, nuts and lockwashers holding bottom of side support to lower frame.

(7) Remove two nuts and washers securing side support to left upright.

(8) Remove two bolts, nuts and lockwashers securing pillowblock on each end of drive and hoist assembly to frame.

(9) Remove bottom nut from tension rod and lift rod out of frame.

(10) Remove cotter pi from back side of skip clutch shifter yoke, remove cotter pin from yoke rod at frame end, slide rod out and remove yoke.

(11) Remove nut and washer securing brake hold-own rod to frame.

(12) Remove cotter pin from rod holding brake band to brake linkage and disengage rod from linkage.

(13) Lift drive and hoist assembly out of mixer with suitable lifting device.

b. Installation. Install drive and hoist assembly in reverse of instructions in subparagraph a above.

2-15. Reduction Gear Case. Assembly

a. Removal.

(1) Remove drive and hoist assembly (para 2-4).

(2) Remove three capscrews holding sheave to assembly.

(3) Remove cotter pin from tension rod and disengage tension rod from gear case.

(4) Remove pillowblock.

(5) Remove oil level plug from gear case and drain.

(6) Remove eight bolts, nuts and lockwashers holding cover to case and remove case and gasket.

b. Installation. Install reduction gear case assembly in reverse of instructions in subparagraph a above.

2-16. Drum

a. Removal

(1) Lower skip to the ground.

(2) Remove discharge spout assembly (para 2-11).

(3) Remove eight bolt, nuts and lockwashers holding ladder to frame and remove ladder.

(4) Remove eight bolt, nuts and lockwasher holding right guard to frame and remove guard.

(5) Remove four bolts, nuts and lockwashers holding left guard to frame and remove guard.

(6) Remove four bolt, nuts and lockwashers holding each rear upright to the upper frame.

(7) Remove two bolts, nuts and lockwashers holding each front upright to upper frame.

(8) Disconnect hose from pump to upped frame at upper frame end.

(9) Disconnect hose from three-way valve to drum at three-way valve end.

(10) Provide sufficient slack in skip cable to permit lifting water tank and upper frame off and setting it to one side of mixer.

(11) Remove section of water pipe that protrudes into drum.

(12) Use suitable lifting device to hoist drum out of mixer.

b. Installation. Install drum in reverse of instructions in subparagraph *a* above.

CHAPTER 3

REPAIR OF ENGINE

Section I. ENGINE ACCESSORIES

3-1. General

This section provides information on the maintenance of those items which are considered accessories to the engine. They consist of the governor, carburetor, magneto and starting motor.

3-2. Governor

a. Removal. Remove the governor (fig. 3-1).

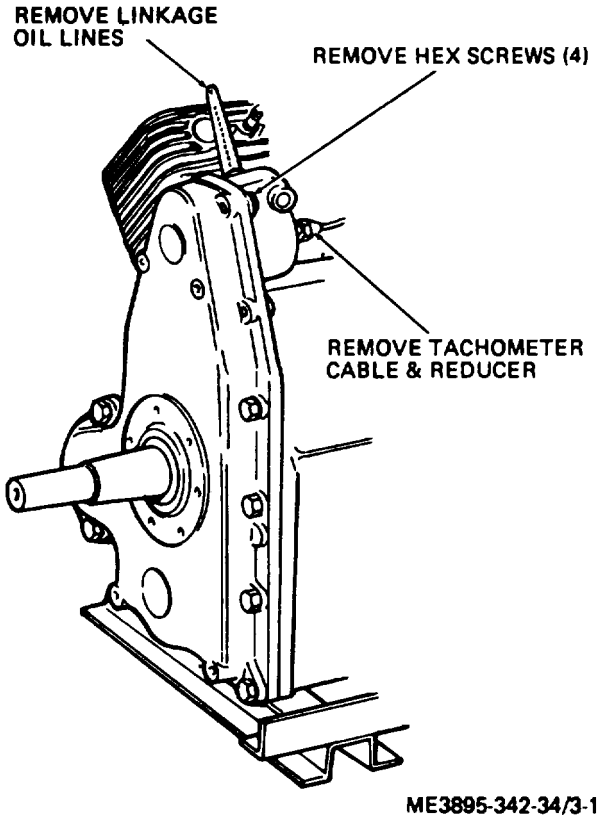

Figure 3-1. Governor removal.

b. Disassembly. Disassemble the governor in numerical sequence shown in figure 3-2.

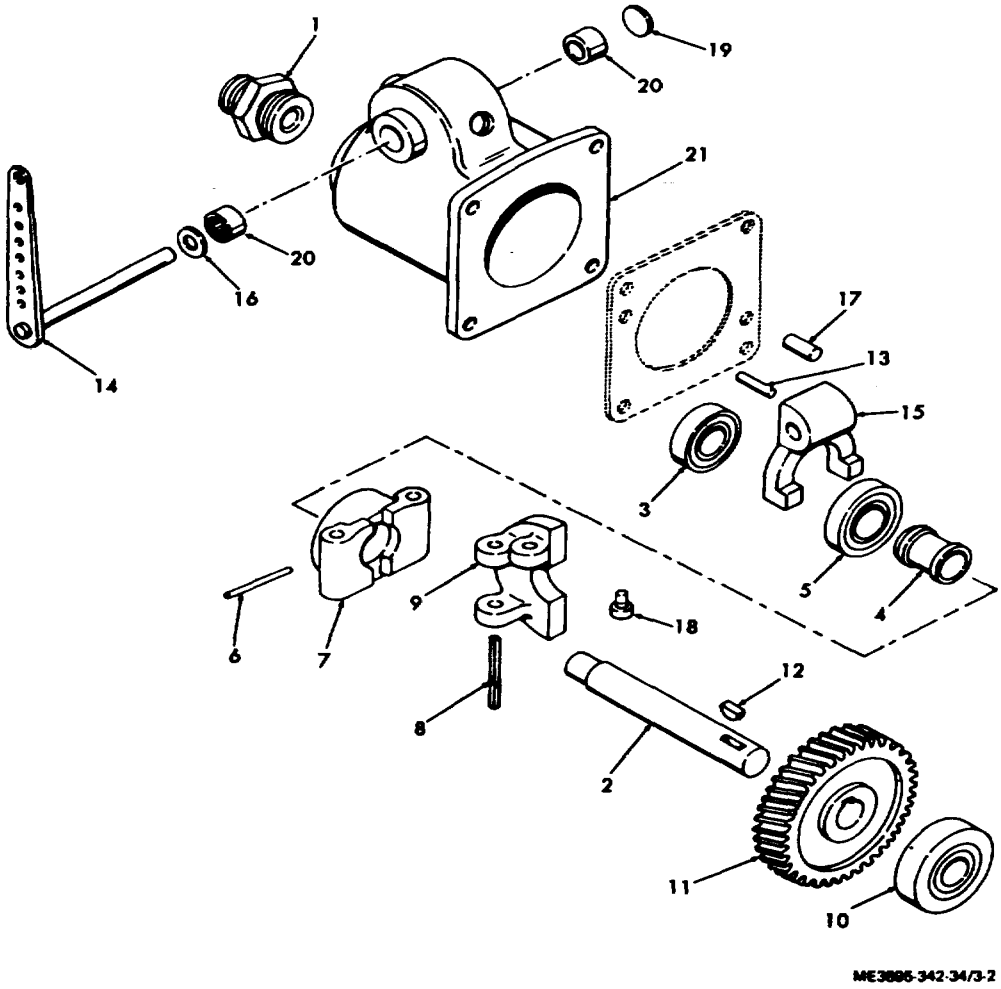

1. Adapter, tachometer
2. Drive haft
3. Bering
4. Thrust sleeve
5. Bearing
6. Pin, tapered
7. Flyweight hub
8. Pin, spring
9. Governor flyweight
10. Bearing
11. Governor gear
12. Key, woodruff, No. 404
13. Pin, tapered, No. 0 x ¾ in.
14. Cross-shaft and lever
15. Governor yoke
16. Packing, preformed
17. Pin
18. Pin, straight headed
19. Plug, expansion
20. Needle bearing
21. Governor body

Figure 3-2. Governor, exploded view.

c. Cleaning, Inspection and Repair.

(1) Clean all parts with cleaning solvent.

(2) Inspect all parts for wear or damage. Repair or *repl*ace worn or damaged parts.

d. Reassembly. Reassemble the governor in reverse of numerical sequence as illustrated in figure 3-2.

e. Installation. Install the governor in reverse of instructions in figure 3-1.

f. Adjustment.

(1) Disconnect the control rod ball joint from the governor lever, and then pus h the rod assembly toward the carburetor as far as it will go. The governor lever would then be moved as far as

possible in the same direction. While holding both parts in this position, screw the ball joint onto the control rod until the right angle stud on the ball it fitting registers with the hole in the lever, then screw fitting in two more turns.

(2) Insert ball joint stud into the hole in governor lever, assemble and tighten locknuts. With the governor lever pushed toward the carburetor as far as it will go, there should be a 1/ 16 inch clearance between the throttle lever and the stop pin on the carburetor.

(3) Hook the governor lever tension spring into the fifth hole (from the bottom) in the governor lever and adjust the spring tension by means of the adjusting screw connected to the spring to run 1725 revolutions per minute without load. The speed at full load will then be approximately 1600 revolutions per minute.

3-3. Carburetor

a. Removal Remove the carburetor (TM 5-3895-342-12).

b. Disassembly. Disassemble the carburetor in numerical sequence as illustrated in figure 3-3.

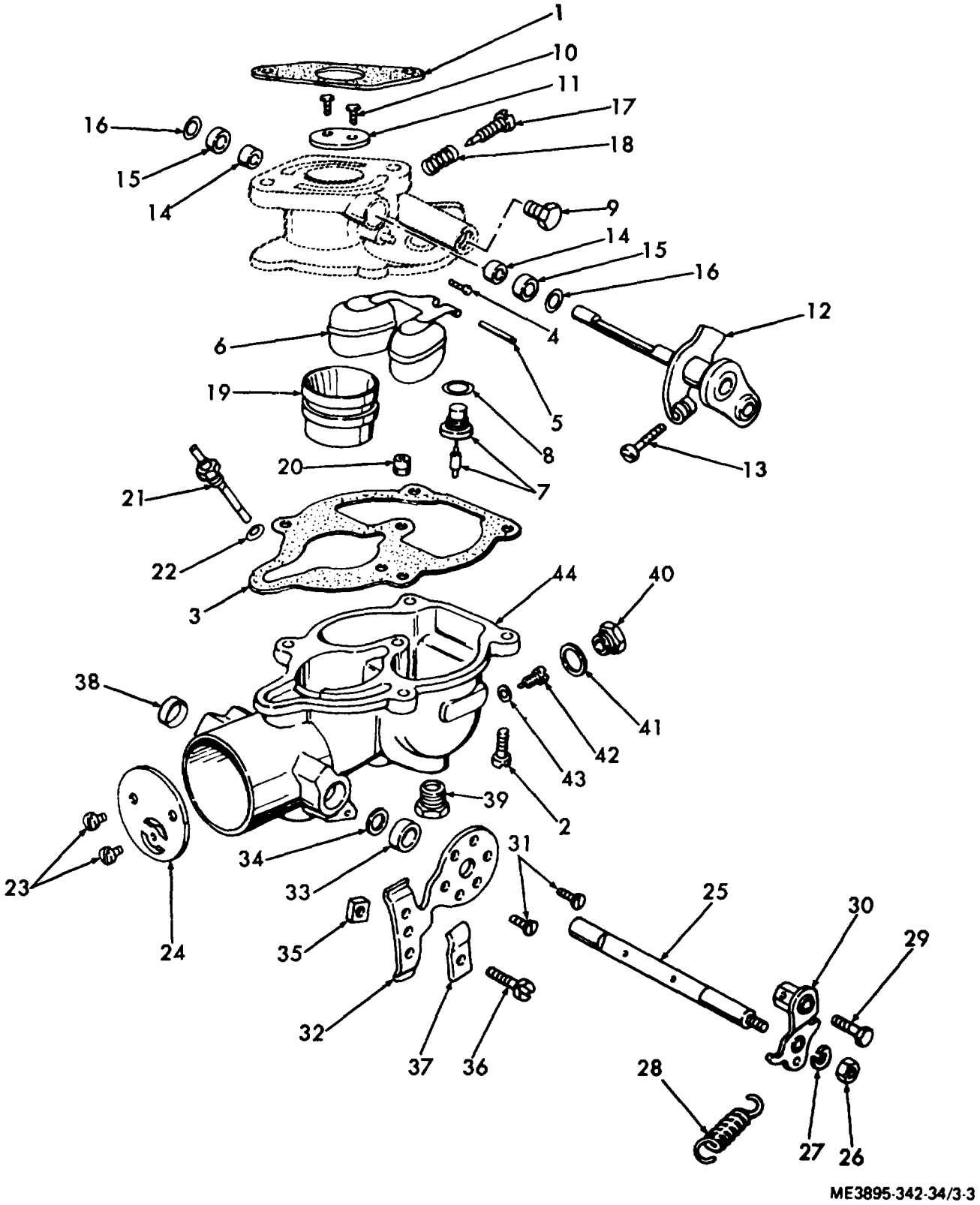

Figure 3-3. Carburetor, exploded view

KEY to fig. 3-3:

1. Gasket
2. Screw
3. Gasket
4. Jet, idle
5. Axle, float
6. Float and hinge ay
7. Valve and seat: fuel
8. Washer
9. Plug, 1/8 in.
10. Screw and washer
11. Plate, throttle
12. Shift and stop lever
13. Screw
14. Bushing
15. Seal
16. Retain
17. Needle: idle adj
i8. Sprig
19. Venturi
20. Jet, well vent
21. Jet, discharge
22. Washer, fiber
23. Screw and washer
24. Plate, choke
25. Shaft, choke
26. Nut
27. Lockwasher
28. Sprig
29. Screw
30. Lever choke
31. Screw
32. Bracket, choke
33. Retainer
34. Seal
35. Nut
36. Screw
37. Clip
38. Plug
39. Plug
40. Plug
41. Washer, fiber
42. Jet, main
43. Washer, fiber
44. Bowl, fuel

c. Cleaning, Inspection and Repair.

(1) Clean all parts with cleaning solvent.

(2) Inspect all parts for wear or damage. Repair or replace worn or damaged parts.

d. Reassembly. Reassemble the carburetor in reverse of numerical sequence as illustrated in figure 3-3.

e. *Installation.* Install the carburetor (TM 5-3895-342-12).

f. Adjustment. Adjust the carburetor (TM 5-3895-342-12)

3-4. Magneto

a. Removal. Remove the magneto (TM 5-3895-342-12).

b. Disassembly. Disassemble the magneto in numerical sequence as illustrated in figure 3-4.

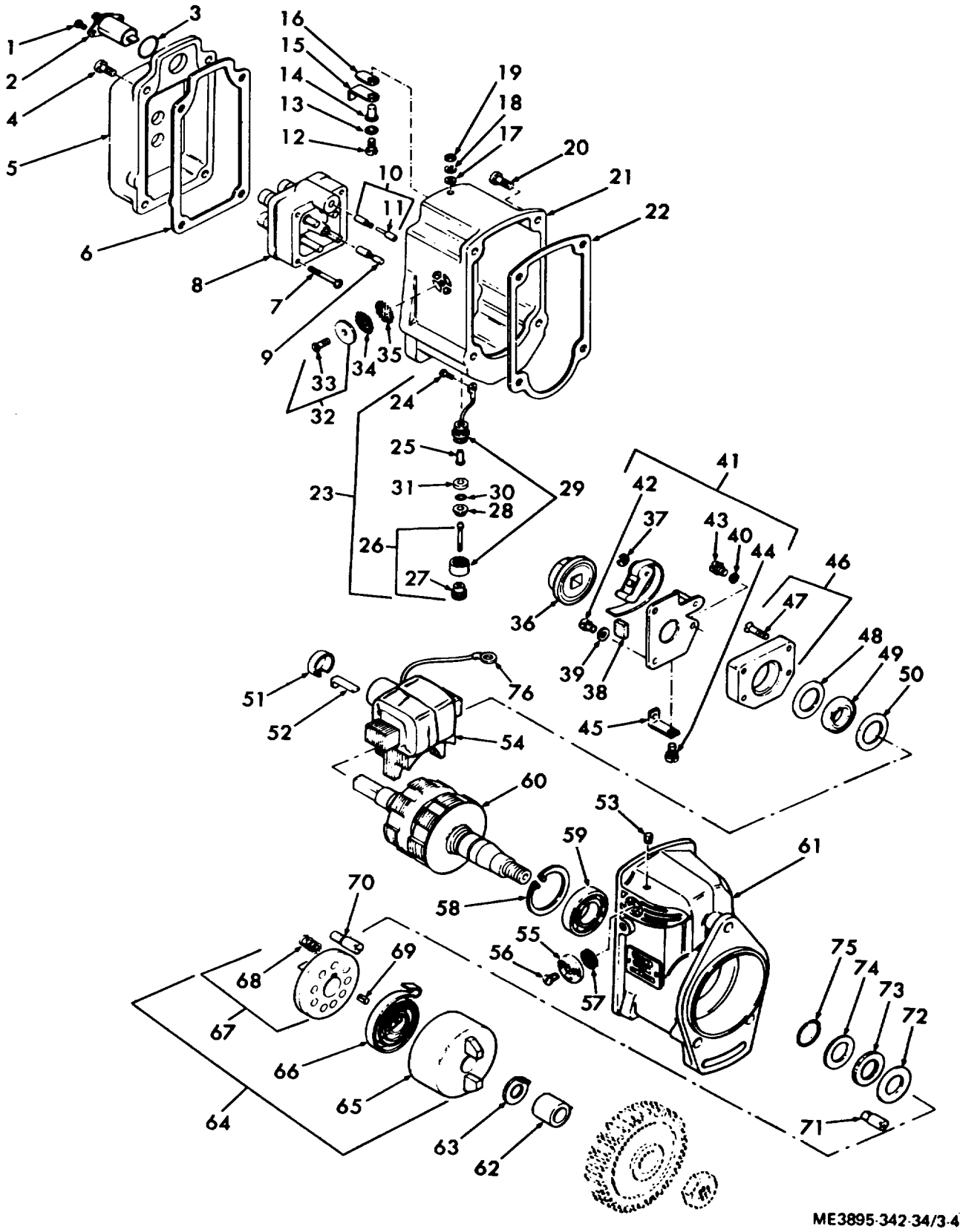

Figure 3-4. Magneto, exploded view

KEY to fig. 34:

1. Screw, 6-32 x 3/8 in.
2. Condenser
3. Preformed Seal
4. Screw, 8-32 x 5/8 in.
5. Cover, End Cap
6. Gasket, End Cap Cover
7. Screw, 8-32 x 1/2 in.
8. Block, Distributor
9. Brush & Spring Assembly
10. Rod, High Tension Lead
11. Tube, Suppresser
12. Screw, 6-32 X 1/2 in.
13. Washer, Flat No. 6
14. Bushing
15. Contact, Condenser
16. Guide
17. Washer, Flat No. 6
18. Washer, Lock, No. 6
19. Nut, 6-32
20. Screw, Cap, 10-24 x 5/8 in.
21. End Cap Assembly
22. Gasket, End Cap
23. Switch, Ground
24. Screw, Hex, 6-32 x ¼ in.
25. Insulator, Terminal
26. Plunger & Nut Assembly
27. Button Ground Switch
28. Ferrule
29. Nut, Ground Switch
30. Spring
31. Spacer
32. Vent, Hood
33. Screw, 6-32 x 3/8 in.
34. Mesh, Copper
35. Screen, Vent
36. Rotor, Distributor
37. Pin, Lock
38. Wick and Holder
39. Washer, Lock, No. 6
40. Washer, Lock, No. 6
41. Breaker Arm
42. Screw w/Washer 32 x 3/8 in.
43. Screw w/ Washer
44. Screw, 6-32 x 3/8 in.
45. Clip
46. Support Bearing
47. Screw, Hex, 8-32 x 3/8 in.
48. Washer, Flat
49. Bearing
50. Washer, flat
51. Button
52. Clip, coil
53. Sew, set-5/ 1624 x 3/8 in.
54. Coil Assembly
55. Vent, hood
56. Screw, 632x ¼ in.
57. Screen, vent
58. Ring, retaining
59. Bearing
60. Rotor, magnetic
61. Frame and Vent Assembly
62. Bushing
63. Washer
64. Impulse coupling
65. Shell
66. Spring
67. Hub
68. Spring
69. Key
70. Pin
71. Pin
72. Washer
73. Seal
74. Washer
75. Ring, snap
76. Wire, Ground Assembly

Note. The housing around the bearing race must be heated to 240 to 250 degrees fahrenheit before removing or installing the bearing.

c. Cleaning, Inspection and Repair.

(1) Clean the condensor and lead wire and coil lead wire with a dry cloth. Clean all other parts with a cleaning solvent.

(2) Inspect all parts for wear or damage. Repair or replace worn or damaged parts.

(3) Test the condensor for open circuit on a reliable condensor tester. The capacity of the condensor is 0.17 to 0.21 mfd (microfarad).

(4) Test the coil on a reliable tester. The primary draw current of the coil must be 1.6 amperes.

d. Reassembly. Reassemble the magneto in reverse of the numerical sequence as illustrated in figure 3-4.

Note. The proper clearance between the contact support point and the point on e baker arm 0.015 inch.

e. Installation. Install the magneto (TM 5-3895-42-12).

3-5. Starting Motor

a. Removal. Remove starting motor (TM 5-3895-342-12).

b. Disassembly. Disassemble the starting motor numerical sequence as illustrated in figure 3-5.

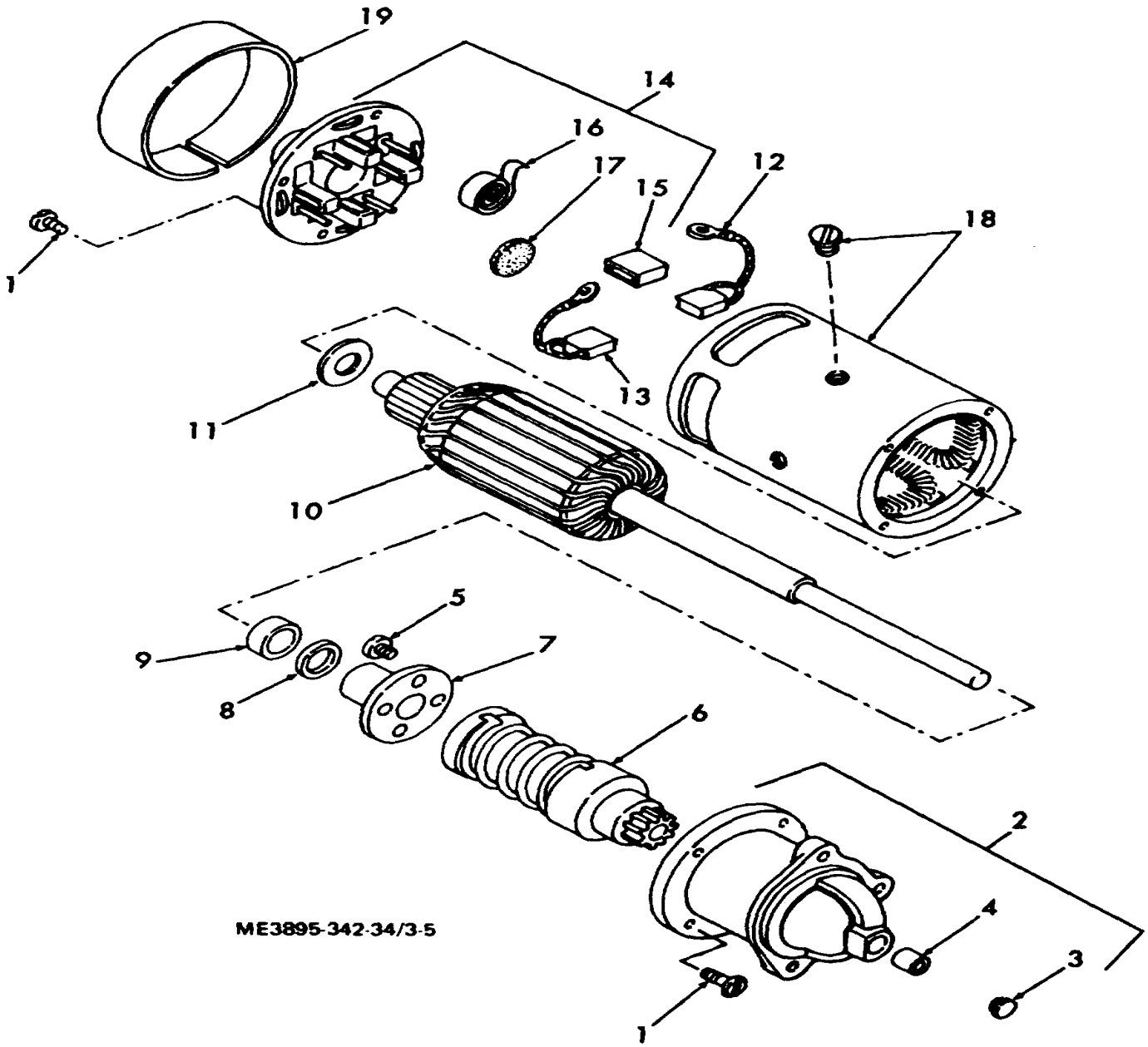

1. Screw, Hex 10-32 x 31/32 in.
2. Housing, Pinion
3. Cap. Bearing
4. Bearing
5. Screw, 8-32 x A in.
6. Bendix Drive
7. Bearing
8. Gasket
9. Seal
10. Armature Assembly
11. Thrust Washer Package
12. Brush
13. Brush
14. Commutator Head Assembly
15. Guard, Brush
16. Spring
17. Felt
18. Frame and Field Assembly
19. Cover and Band

Figure 3-5. Starting motor, exploded view.

Note. Scribe mark the position of both the end bell and the starter gear housing on the frame and field assembly so they can be assembled in the same position.

Note. Due to the method of installing field coils in this unit, it is necessary that the complete frame and field assembly be replaced if field coils are required.

c. Cleaning, Inspection and Repair.

(1) Clean all parts with a cleaning solvent.

(2) Inspect all parts for wear and damage.

(3) Test the armature on a growler for shorts, open circuits, and grounds. Replace a defective armature.

(4) Test the field coils with a multimeter for continuity and ground. Replace a defective field coil. Use a multimeter and test for continuity between the insulated brush holder and the commutator end frame. If continuity is indicated, the commutator end frame **is** defective and must be replaced.

(5) Replace worn or damaged parts.

d. Reassembly. Reassemble the starting motor in reverse of numerical sequence as illustrated in figure 3-5.

e. Installation. Install the starting motor (TM 5-3895-342-12).

3-6. Clutch Housing Assembly

a. Removal Remove the clutch housing assembly (para 2-8).

*b. Disassembly. Dis*assemble the clutch housing assembly in numerical sequence as illustrated in figure 3-6.

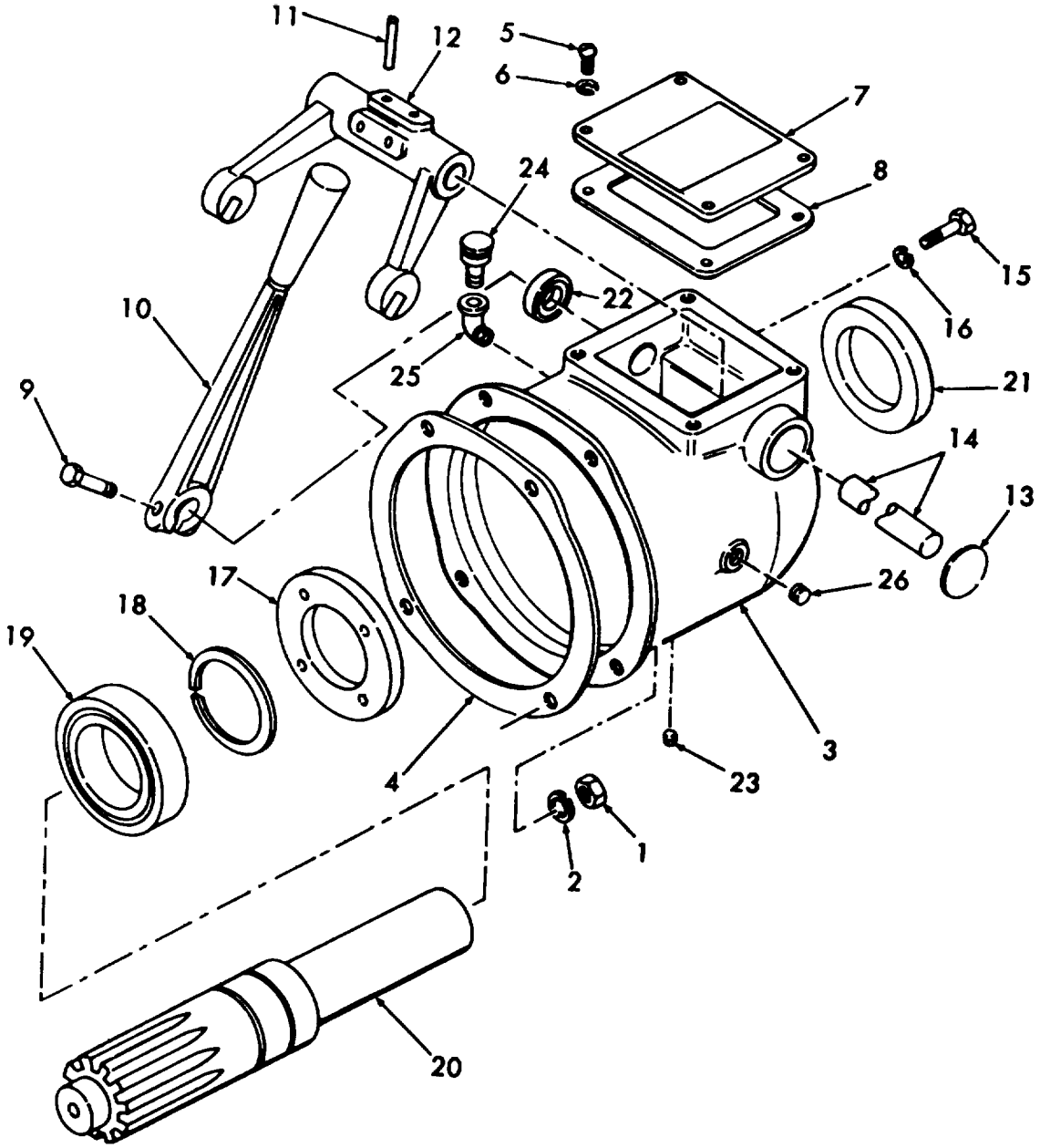

ME3895-342-34/3-6

1. Nut, Plain, Hex, 7/16-20
2. Washer, Lock, 7/16 in.
3. Clutch Housing
4. Clutch Housing Gasket
5. Screw, Machine, 10-24 x 3/8 in.
6. Washer, Lock, #10
7. Clutch Housing Cover
8. Clutch Housing Cover Gasket
9. Screw, Cap, 3/8-16 x 1 1/4 in.
10. Shifter Lever
11. Pin, Roll, ¼ x 1 1/8
12. Yoke, Clutch
13. Expansion Plug
14. Clutch Yoke Shaft
15. Bolt, Machine, ¼-20 x 1¼
16. Washer, Lock, ¼ in.
17. Bearing Retaining Plate
18. Retaining Ring
19. Bearing
20. Clutch Drive Shaft
21. Plain Incased Oil Seal
22. Oil Seal
23. Plug, Pipe, ¼-18
24. Breather
25. Elbow, 1/8 x 45°
26. Plug, Pipe, ¼-18

Figure 3-6. Clutch housing, exploded view.

c. Cleaning, Inspection and Repair.

(1) Clean all parts with a cleaning solvent.

(2) Inspect all parts for wear or damage. Repair or replace worn or damaged parts.

d. Reassembly. Reassemble the clutch housing assembly in reverse of numerical sequence as illustrated in figure 3-6.

e. Installation. Install clutch housing assembly (para 2-8).

3-7. Clutch Assembly

a. Removal

(1) Remove the clutch housing assembly (para 3-6).

(2) Remove the clutch assembly as illustrated in figure 3-7.

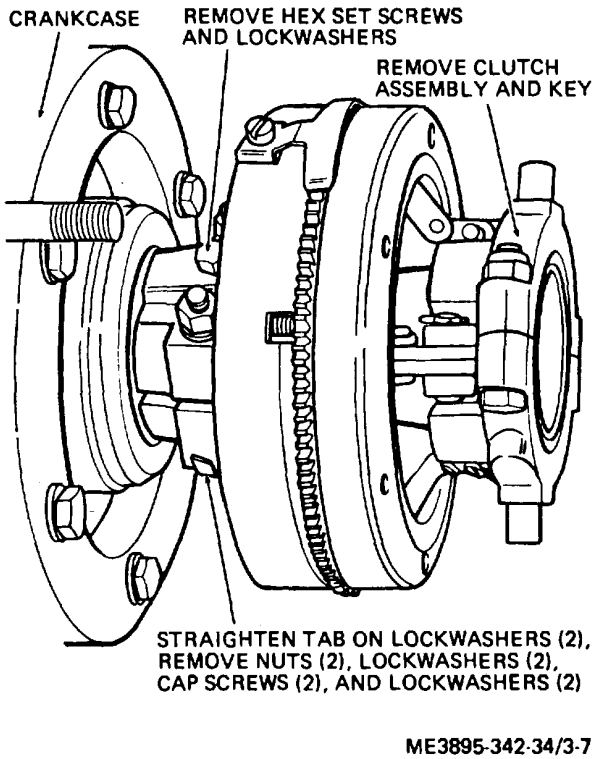

Figure 3-7. Clutch assembly removal

b. Disassembly. Disassemble the clutch assembly in numerical sequence as illustrated in figure 3-8.

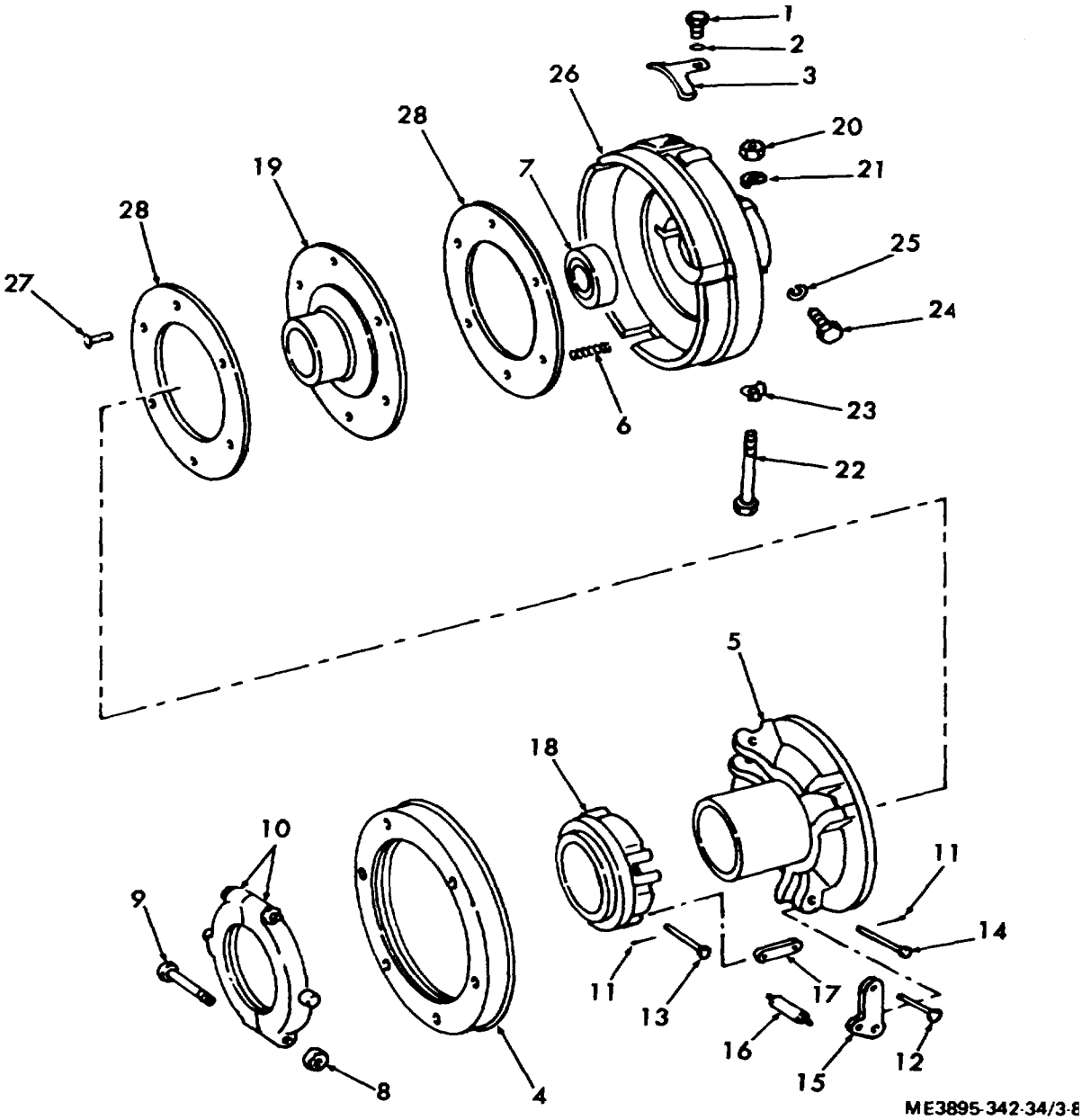

1. Screw, Machine ¼-20 x 3/8 in.
2. Washer, Lock, ¼ in.
3. Adjusting Ring Lockplate
4. Adjusting Ring
5. Pressure Plate
6. Spring
7. Bearing
8. Nut. Self-Locking, Hex 5-16-24
9. Bolt, Machine, 5/ 16-24 x 1 3/4
10. Release Bering Assembly
11. Pin, Cotter, 1/16 x 3/8 in.
12. Pin
13. Pin
14. Pin
15. Link Arm
16. Link Roller
17. Connecting Link
18. Sliding Sleeve
19. Spliner Center Assembly
20. Nut, Hex, 3/8-24
21. Washer, Lock, 3/8 in.
22. Sew, Cap 3/8-24 x 2 1/2 in.
23. Washer Lock, Shifter Lever, 3/8
24. Setscrew, Hex, 5/16-18 x 5/8 in.
25. Washer, Lock, 5/16 in.
26. Clutch Housing
27. Rivet, Tubular Brass
28. Friction Lining

Figure 3-8. Clutch assembly

c. Cleaning, Inspection and Repair.

(1) Clean all parts with a cleaning solvent.

(2) Inspect all parts for wear and damage. Repair or replace worn or damaged parts.

d. Reassembly. Reassemble the clutch assembly in reverse of numerical sequence as illustrated in figure 3-8.

e. Installation. Install the clutch assembly in reverse of the instructions in subparagraph above.

f. Adjustment. Adjust the clutch assembly (TM 5-3895-342-121.

Section II. ENGINE COMPONENTS

3-8. General

This section provides information on the maintenance of those items which are considered engine components. They consist of the flywheel alternator, cylinder heads, timing gears, oil pump, connection rod and piston assemblies, crankshaft assembly, camshaft and valve lifters, and cylinder blocks and crankcase.

3-9. Flywheel Alternator

a. Removal

(1) Remove the flywheel (TM 5-3895-342-12).

(2) Disconnect the 14 gage green wire from the charge side of the ammeter.

(3) Disconnect the rectifier module leads at the terminal block plug and receptacle. Remove the two screws, nuts and lockwashers securing the rectifier module to the engine.

(4) Disconnect the regulator module leads at the terminal block plug and receptacle. Remove the two screws, nuts and lockwashers securing the regulator module shield and regulator module to the engine.

(5) Remove the two roll pins and four screws and lockwashers securing the stator to the engine.

b. Cleaning, Inspection and Repair.

(1) Wipe all parts with a clean dry rag.

(2) To check stator, rectifier module and regulator module, refer to table 3-1. Replace defective components.

c. Installation. Install the flywheel alternator in reverse of the instructions in subparagraph a above.

***CAUTION:* The following are precautions to be exercised in the use of this flywheel alternator.**

(1) Do not reverse battery connections. This is for a negative ground system only.

(2) Connect booster batteries properly-positive to positive and negative to negative.

(3) Do not polorize the alternator.

(4) Do not ground any wire from stator or modules which terminate at connectors.

(5) Do not operate engine with battery disconnected from system.

(6) Disconnect at least one battery lead if a fast battery charger is used.

(7) Never use a fast battery charger to boost the battery output.

3-10. Cylinder Heads

a. Removal.

(1) Remove cylinder air shrouds (TM 5-3895-342-12).

(2) Remove spark plugs (TM 5-3895-342-12).

Table 3-1. Flywheel Alternator Check

TO CHECK STATOR: Use an ohmmeter with R x 1 Scale (minimum sensitivity of 20,000 ohms / volts), and check continuity as follows:

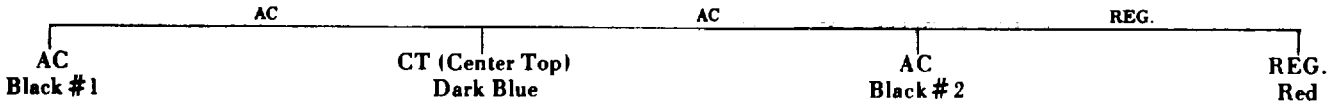

Note. Wire numbers for probe connections are for convenience only and are not indicated on the connections.

Table 3-1. Flywheel Alternator Check—Continued

METER PROBE CONNECTIONS	CORRECT METER VALUE	REPLACE STATOR
+ –	**RX 1 SCALE**	
Black # 1 to Black # 2	1.00 ohms	0 indicates Short Circuit
Black # 1 to CT	.50 ohm	
Black # 2 to CT	.50 ohm	
Black # I to Re	2.75 ohms	00 indicates
Black # 2 to Red	1.75 ohm	Open Circuit
Any Pin to Engine Ground	00	Any reading indicates a short circuit

TO CHECK RECTIFER MODULE

The rectifier module can be distinguished from the regulator by the two black lead wires and identification decal. Use an ohmmeter and static check continuity as follows:

METER PROBE CONNECTIONS	CORRECT METER VALUE	REPACE RECTIFIER MODULE
+ –	**RX 1 SCALE**	
Eng. Gnd. to Black #1	5 to 15 ohms	
Black # 1 to Eng. Gnd.	00	Any reading
Eng. Gnd. to Black #2	5 w 15 ohms	indicates a
Black # 2 to Eng. Gnd	00	short circuit

TO CHECK REGULATOR MODULE

The regulator module can be distinguished from the rectifier module by the lead wire colors, black and red, and the identification decal. Use a good ohmmeter and static check continuity as follows:

METER PROBE CONNECTIONS	CORRECT METER VALUE	REPACE REGULATOR MODULE
+ –	**RX1SCALE**	
Red to Eng. Gnd.	00	Any
Eng. Gnd. to Red	00	reading
Red to Black	00	indicates
Black to Red	00	a short
Black to Eng. Gnd.	00	circuit

(3) Remove high temperature safety switch (TM 5-3895-342-12).

(4) Remove screws and washers holding cylinder head to cylinder block. Screws of different lengths are used, but these can be properly reassembled according to the various lengths of cylinder head bosses.

b. Cleaning and Inspection.

(1) Clean the cylinder heads with cleaning solvent and dry thoroughly.

(2) Carefully scrape and wire-brush all carbon deposits from the cylinder heads. Remove all gasket residue.

(3) Inspect the cylinder heads for cracks, breaks, and warpage. Replace a cracked, broken or warped cylinder head.

c. Installation. Install the cylinder heads in reverse of instructions in subparagraph *a* above.

Note. Install main cylinder head gaskets when reinstalling cylinder heads. Us a mixture of graphite and oil on the cylinder head screws prevent them from rusting tight against the cylinder block. Tighten cylinder head screws 22 to 24 foot-pounds torque. After completing assembly and engine is running, re-torque head screws.

3-11. Valve Assemblies, Valve Inserts, and Guides.

a. Removal

(1) Remove the valve covers and gasket (TM 5-3895-342-12}.

(2) Remove the cylinder heads (para 3-10}.

(3) Remove and d*is*assemble the valve assemblies, valve seat inserts, and the valve guides in numerical sequence as illustrated in figure 3-9.

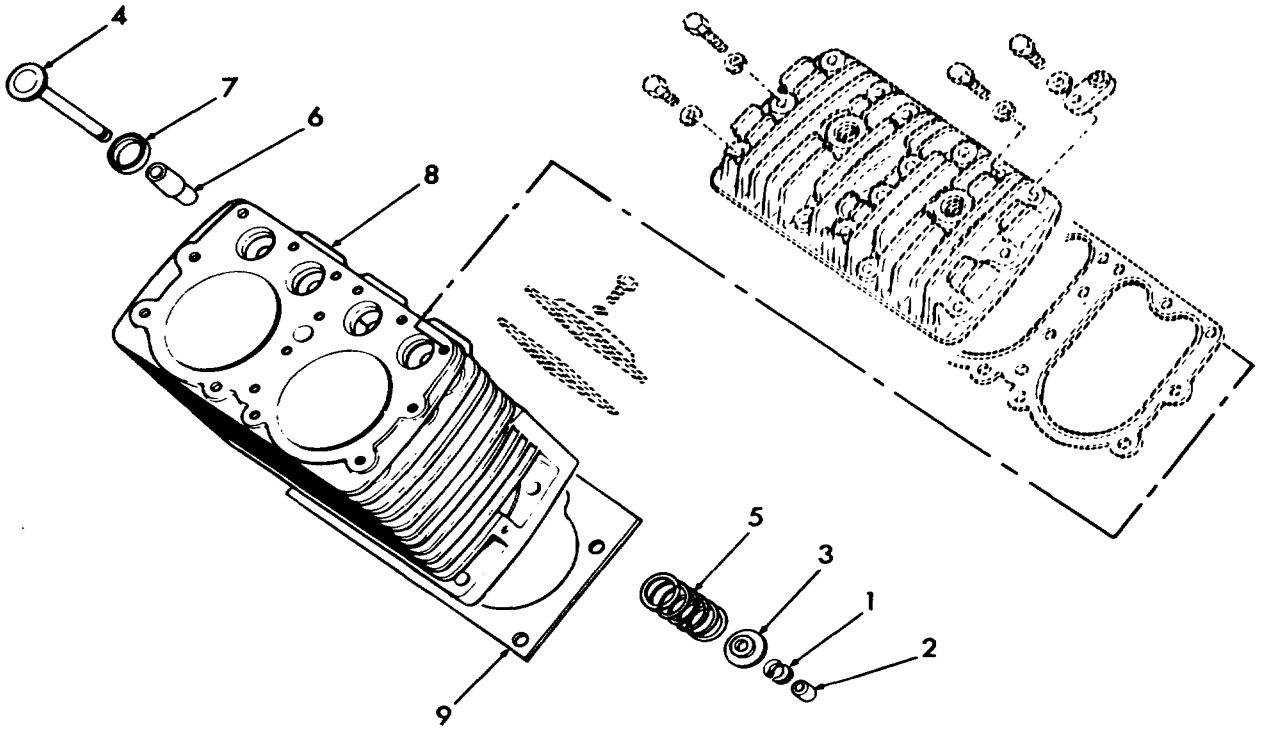

ME3895-342-34/3-9

1. Valve Spring Seat Retainer
2. Valve Rotor Cap
3. Valve Spring Seat
4. Valve
5. Spring
6. Valve Guide
7. Valve Seat Insert
8. Cylinder Block

Figure 3-9. Valve assembly, valve inset and valve guide, exploded view.

Note. Tag each part and keep assemblies separated for accurate reinstallation.

b. Cleaning, Inspection and Repair.

(1) Clean all parts with cleaning solvent.

(2) Inspect all parts for wear and damage.

Note. Measure each valve stem diameter and the clearance between the valve stem and the valve stem guide. Reface the valve face to the proper angle and grind the mating on the valve at insert. See table 1-1 for the proper tolerances and fit for all parts.

Note. Remove valve seat insert with a suitable tool. Install a new valve seat insert by shrinking the insert with dry ice. Repair or replace excessively worn or damaged parts.

c. Installation. Install the valve assemblies, valve inserts, and guides in reverse of the instructions in subparagraph a above.

3-12. Gear Cover

a. Removal

(1) Remove governor, magneto, and flywheel and flywheel shroud (TM 5-3895-342-12).

(2) Drain oil from engine (refer to current lubrication order).

(3) Remove gear cover as instructed in figure 3-10.

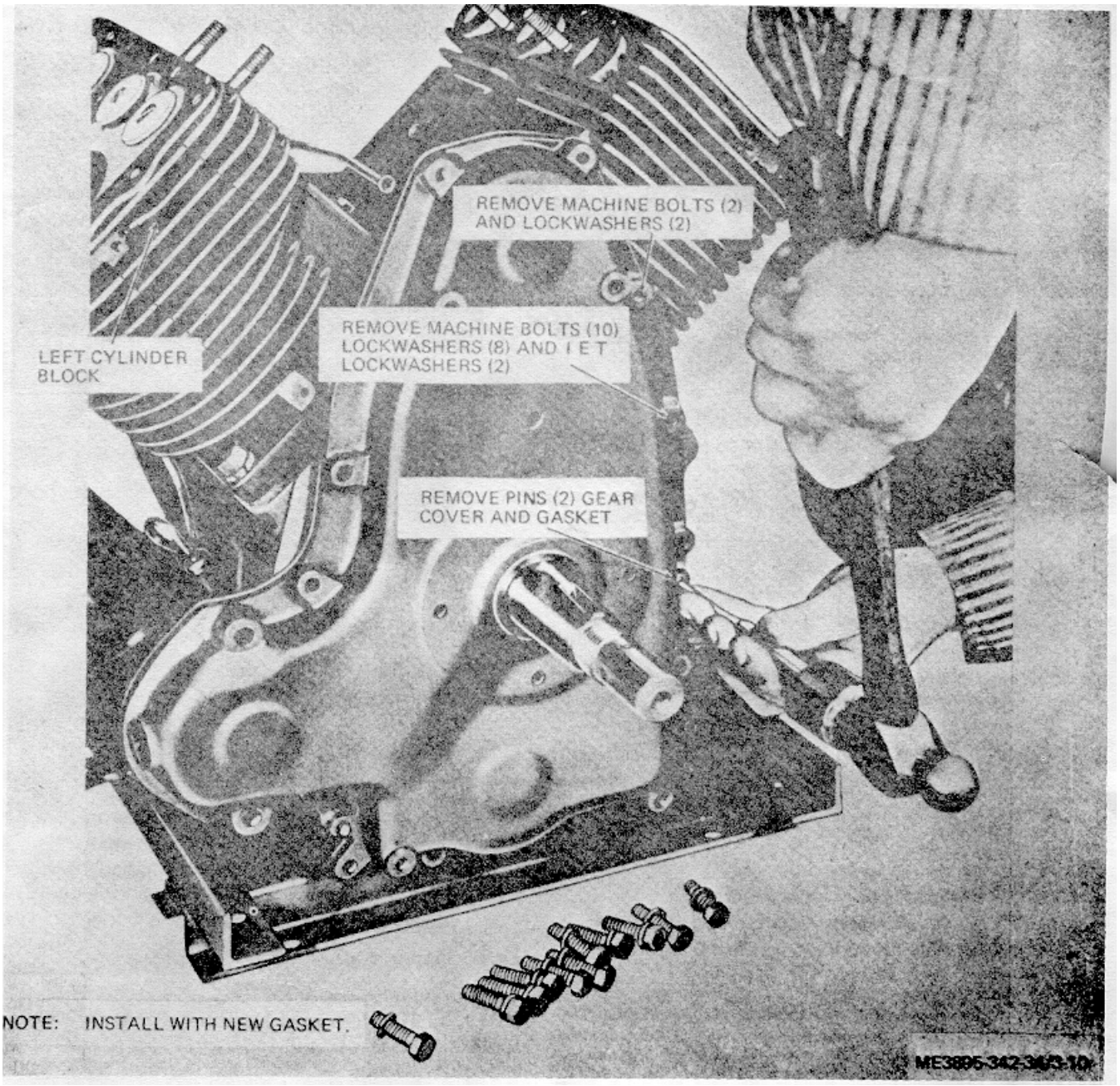

Figure 3-10. Gear cover removal.

b. Disassembly. Disassemble the gear cover in numerical sequence as illustrated in figure 3-11.

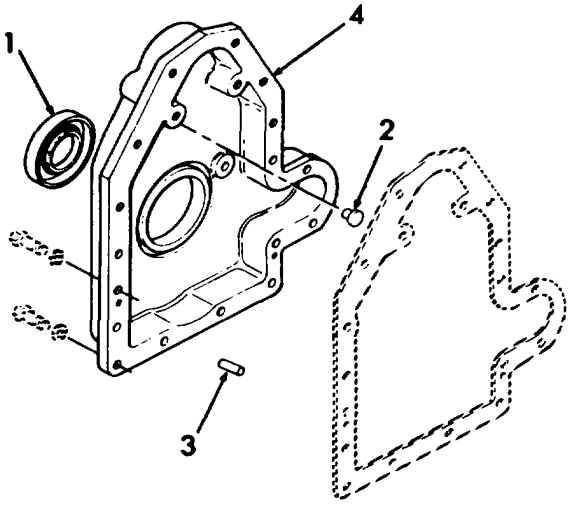

ME3895-342-34/3-11

1. Plain incased seal
2. Pin, straight headed
3. Pin, straight headless
4. Gear housing cover

Figure 3-11. Gear cover, exploded view.

c. Cleaning and Inspection.

(1) Clean all parts with cleaning solvent.

(2) Inspect all parts for wear or damage. Replace worn or damaged parts.

d. Reassembly. Reassemble the gear cover in reverse of numerical sequence as illustrated in figure 3-11.

e. Installation. Install the gear cover in reverse of the instructions in subparagraph a above.

Note. When reassembling, tighten capscrews 14 to 18 foot-pounds torque.

3-13. Timing Gears and Gear Cover Spacer.

a. Removal.

(1) Remove the gear cover (para 3-12).

(2) Remove the setscrew from the crankcase and idler gear shaft, and remove the idler gear and shaft from the crankcase (fig. 3-12).

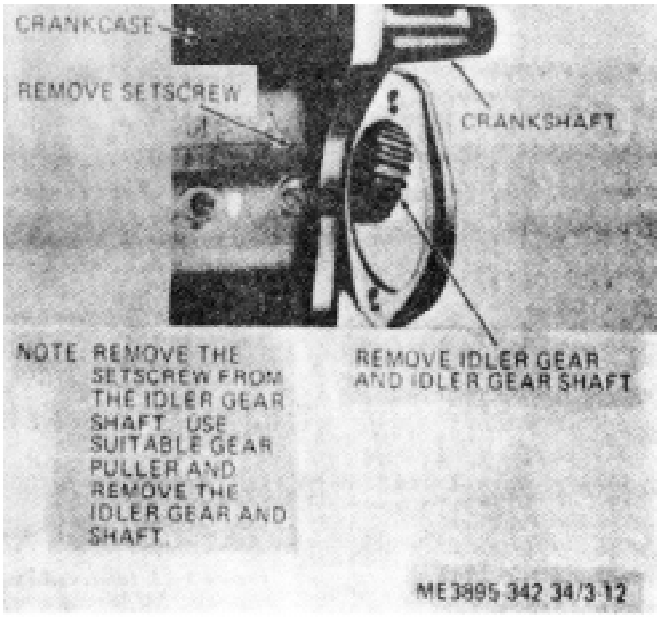

Figure 3-12. Idler gear and shaft removal

(3) Remove the oil pump gear and woodruff key from oil pump shaft (fig. 3-13).

(4) Remove the camshaft thrust plunger and plunger spring from the camshaft (fig. 3-13).

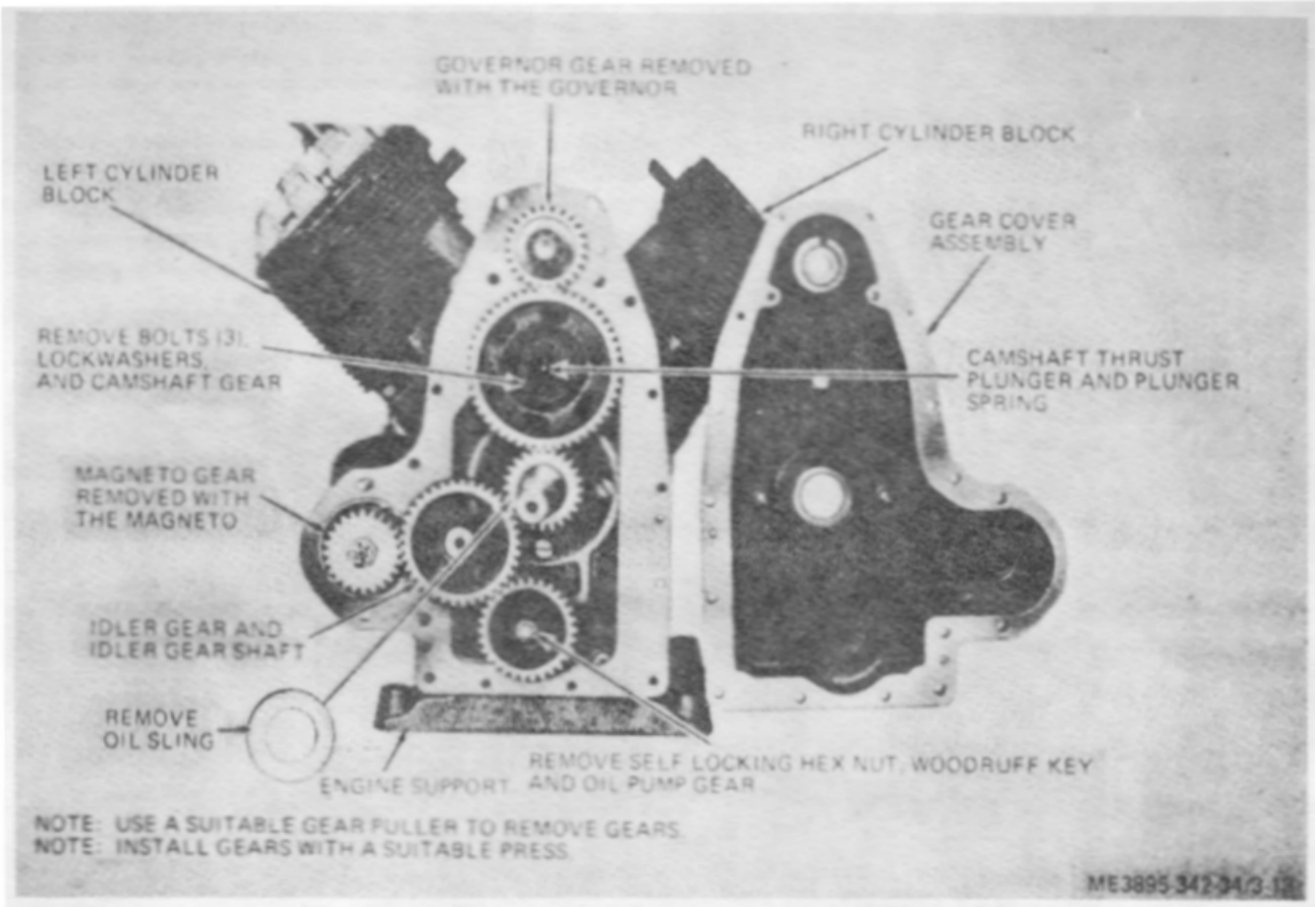

Figure 3-13. Idler, camshaft, and oil pump gears removal.

(5) Remove the gear cover spacer and gear cover gasket (fig. 3-14).

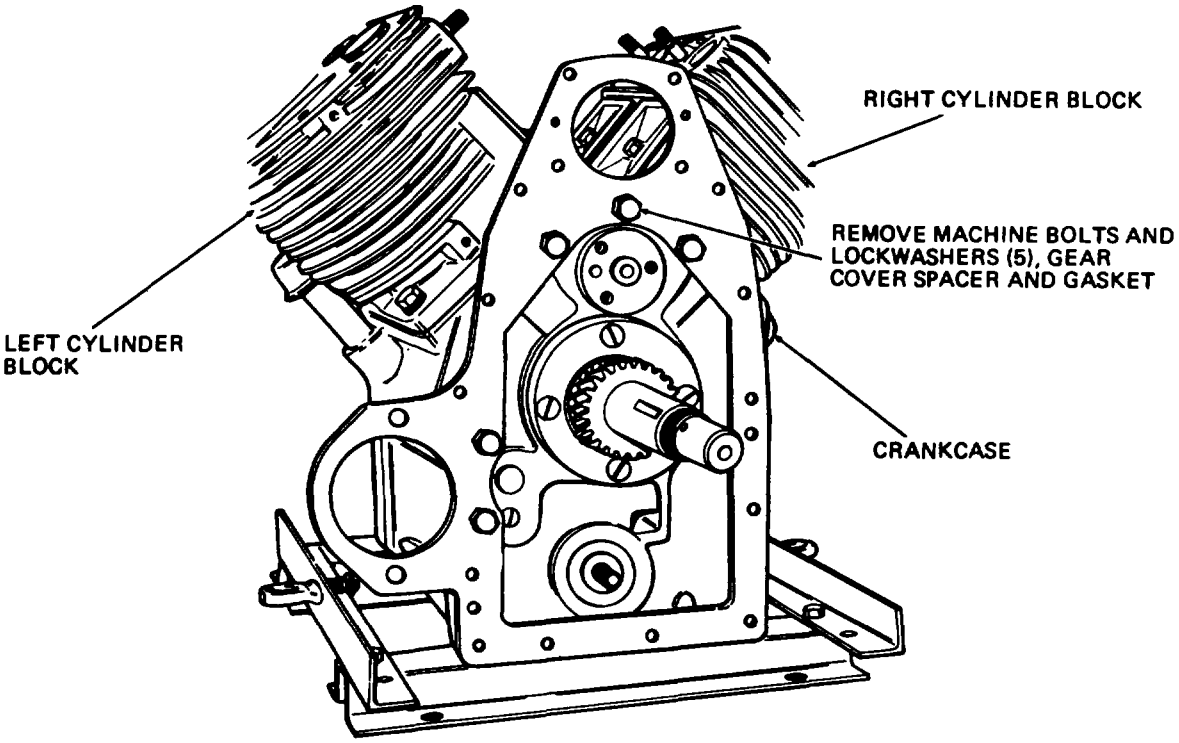

NOTE: INSTALL WITH NEW GASKET.

ME3895-342-34/3-14

Figure 3-14. Gear cover spacer removal.

b. Cleaning, Inspection and Repair.

(1) Clean all parts with cleaning solvent.

(2) Inspect all parts for wear and damage. Replace worn or damaged parts.

c. Installation. Install the timing gears and gear cover spacer in reverse of instructions in subparagraph *a* above.

*Note. In reasse*mbly, allow 003 inch to .004 inch clearance between idler and shaft collar.

3-14. Crankcase Cover Plat, Crankcase Cover Gasket and Engine Supports

a. Removal

(1) Remove engine assembly (para. 2-9).

(2) Drain engine oil (refer to current lubrication order).

(3) Position the engine assembly in a suitable location to remove the crankcase cover.

(4) Remove the crankcase cover plate, cover, and gasket as instructed in figure 3-15.

(5) Remove the engine supports from the engine as instructed in figure 3-15.

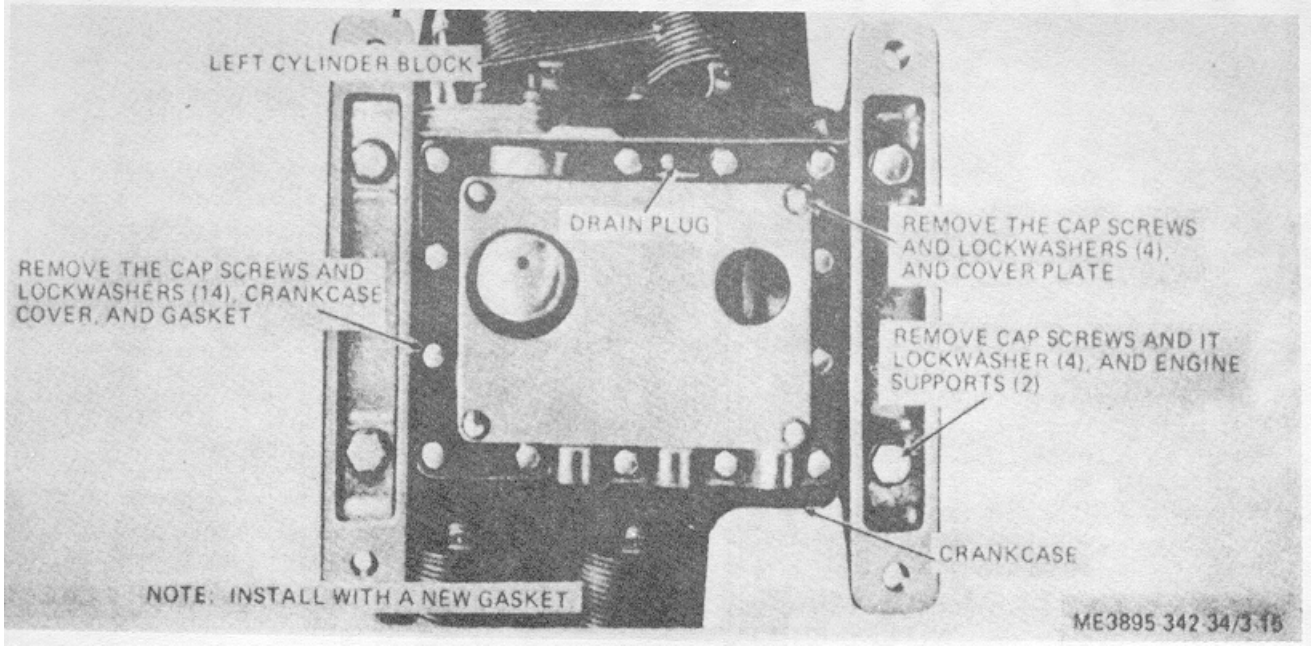

Figure 3-15. Crankcase cover plate, cover, gasket, and engine supports removal.

b. Cleaning, Inspection and Repair.

(1) Clean all parts with a cleaning solvent.

(2) Inspect all parts for wear and damage. Repair or replace worn or damaged parts.

c. Installation. Install the crankcase cover plate, crankcase cover, gasket, and engine supports in reverse of the instructions in subparagraph *a* above.

3-15. Oil Pump

a. Removal.

(1) Remove engine (para 2-9).

(2) Remove gear cover (para 3-12).

(3) Remove the nut, gear and woodruff key from the oil pump shaft (fig. 3-13).

(4) Remove the crankcase cover plate, crankcase cover, gasket, and engine supports (para 3-14).

(5) Remove the oil pump from the crankcase as illustrated in figure 3-16.

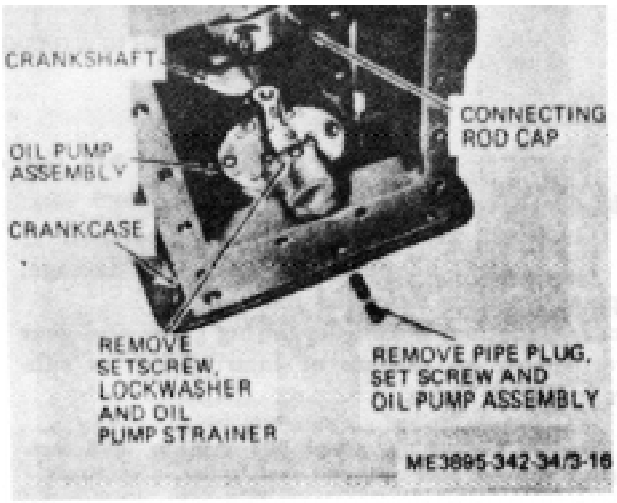

Figure 3-16. Oil pump removal.

b. Disassembly. Disassemble the oil pump in numeral sequence as illustrated in figure 3-17.

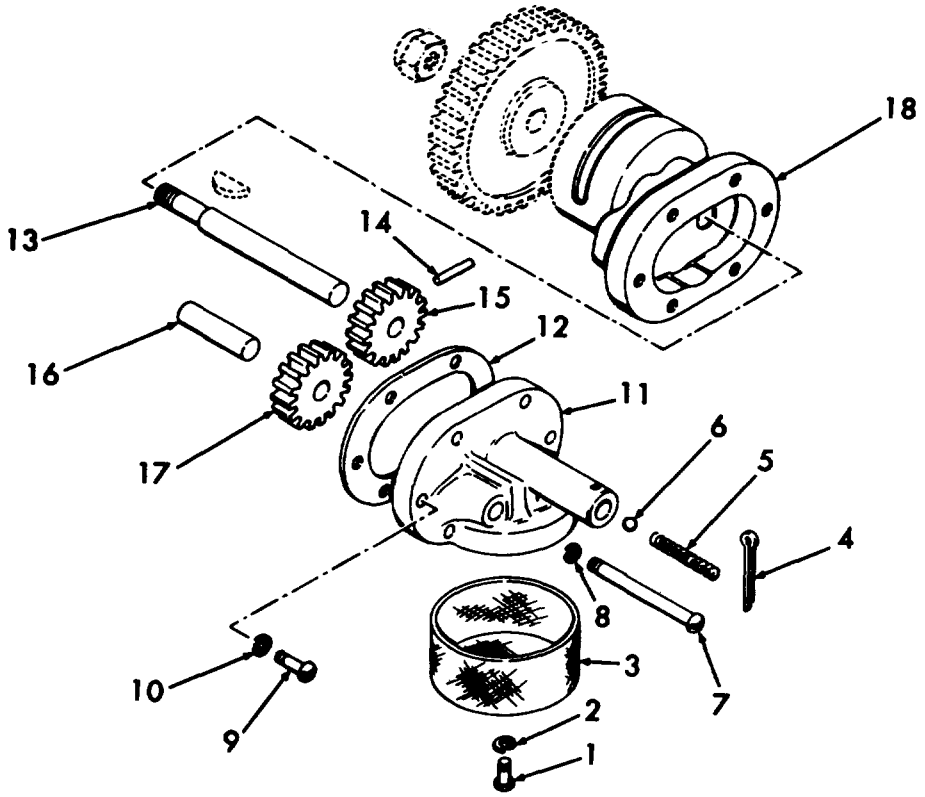

ME3895-342-34/3-17

1. Screw, Machine, No. 10-32 x 3/8 in.
2. Washer, Lock, No. 10
3. Oil Pump Strainer
4. Pin, Cotter, 1/8 x 1 in.
5. Spring, Helical Compression
6. Ball Bearing, 1/4 dia.
7. Screw, Machine, No. 10-32 x 1/4 in.
8. Washer, Lock, No. 10
9. Screw, Machine, No. 10-32 x I/2 in.
10. Washer, Lock, No. 10
11. Oil Pump Cover
12. Gasket
13. Oil Pump Shaft
14. Pin, straight headless, 1/8 x 3/4 in.
15. Drive gear
16. Idler gear pi
17. Idler gear
18. Oil pump body

Figure 3-17. Oil pump, exploded view.

c. Cleaning, Inspection and Repair.

(1) Clean all parts with a cleaning solvent.

(2) Inspect all parts for wear and damage. Repair or replace worn or damaged parts.

d. Reassembly. Reassemble the oil pump in reverse of the numerical sequence as illustrated in figure 3-17.

e. Installation. Install the oil pump in reverse of the instructions in subparagraph *a* above.

3-16. Baffle Plates, Connecting Rod, and Piston Assemblies

a. Removal.

(1) Remove cylinder heads (para 3-10).

(2) Remove oil pump (para 3-15).

(3) Remove the bearing caps, bearings, and piston assemblies as instructed in figure 3-18.

(4) Remove both baffle plates instructed in figure 3-18.

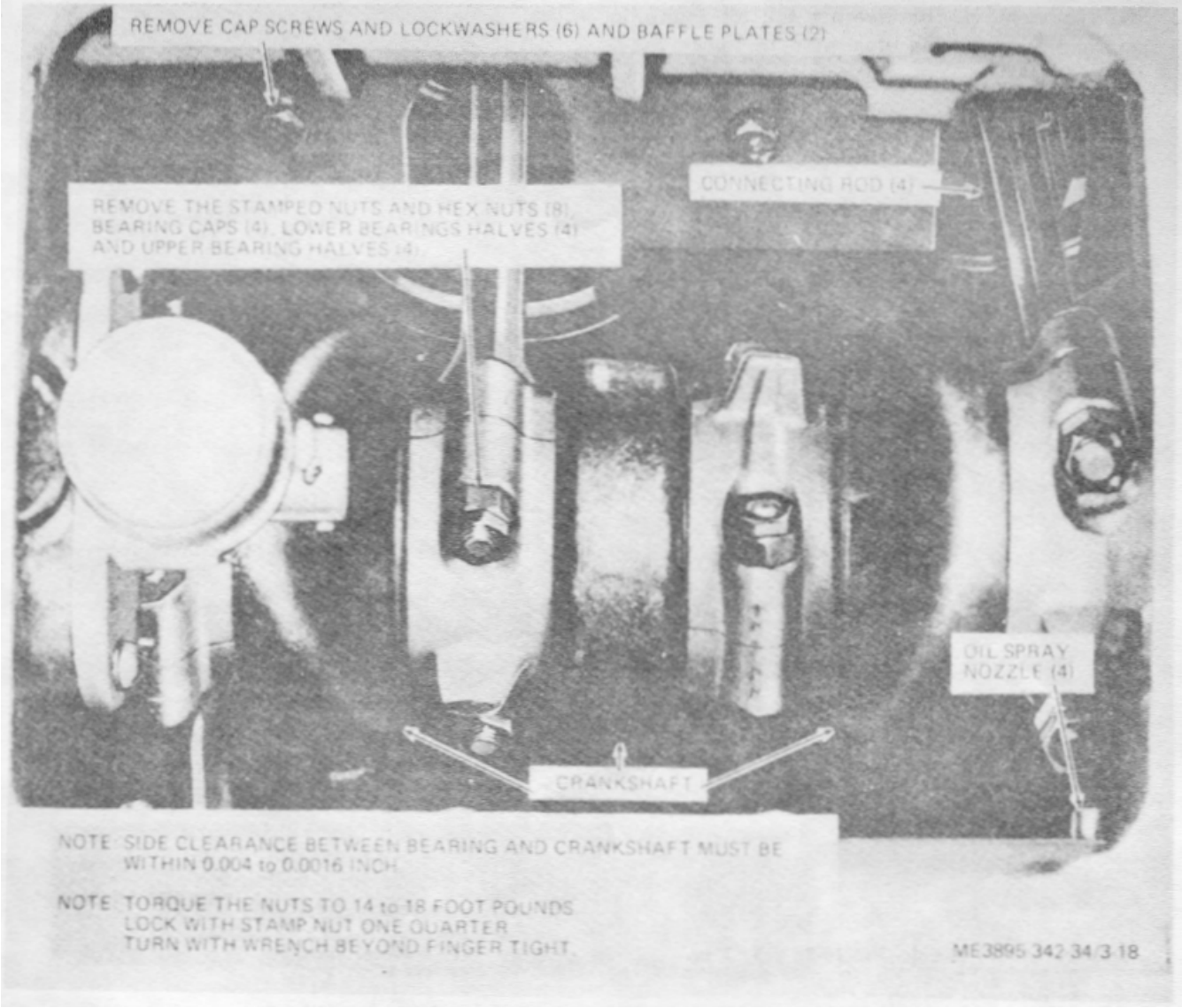

Figure 3-18. Connecting rod caps and baffle plates removal.

Note. Remove the assembled pistons from the top the cylinder block.

Note. The connecting rods, bearings, and caps are matched and must be kept in the assembly to insure correct installation. Tag parts as removed. Each bearing cap and rod is marked with its respective cylinder number.

b. Disassembly. Disassemble the piston and rod assembly in numerical sequence as illustrated in figure 3-19.

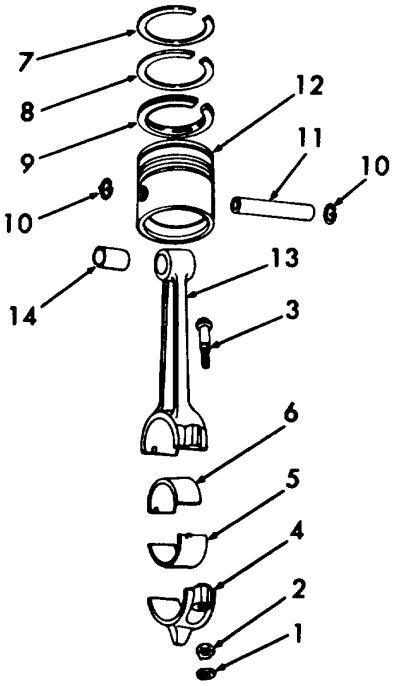

ME3895-342-34/3-19

1. Nut, Stamped, 5/16-24
2. Nut, Hex 5/1624
3. Bolt, Shoulder, 5/16-24
4. Cap
5. Lower Half Bearing
6. Upper Half Bearing
7. Compression Ring
8. Scraper Ring
9. Oil Ring
10. Retainer Ring
11. Piston
12. Piston
13. Connecting Rod
14. Sleeve Bearing

Figure 3-19. Piston assembly, exploded view.

c. Cleaning, Inspection and Repair.

(1) Clean a parts with a leaning solvent.

(2) Inspect all parts for wear or damage. refer to table 1-1 for wear limits and connections. Replace worn or damaged parts.

d. Reassembly. Rea*sse*mble the connecting rod and piston assemblies reverse of numerical sequence as illustrated in figure 3-19. The connecting rods have removable shell bearings and care should be take in reassembly that they are in place in the rod and cap. When replacing the shell bearings, be sure and replace a complete bearing (both halves). Be sure piston and connecting rod assemblies are put back into the same bore from which they were removed. The piston skirt is camground to an elliptical contour. Clearance between the piston and cylinder must be measured at the center of the thrust face of the piton skirt. Refer to table 1-1. The thrust faces on the piston skin are 90 degrees from the axis of the piston pin hole. When reassembling the piston and connecting rod to the engine, be sure the arrow on the top of the piston is pointing in the direction of crankshaft rotation. (Clockwise when viewing the flywheel end of the engine. Tighten connecting rod nuts 22 to 24 foot pounds torque.

e. Installation. Install the baffle plates and connecting rods and piston assemblies in reverse of instructions in subparagraph *a* above.

Note. Install piston in number one and three cylinder so that the slit in the piston skirts face the enter of the engine. The slits in pistons two and four must face away from the center of the engine.

3-17. Crankshaft Assembly

a. Removal.

(1) Remove engine (para 2-9).

(2) Remove clutch assembly (para 3-7).

(3) Remove timing gears and gear cover spacer. (para 3-13).

(4) Remove baffle plates, and connecting rod and piston assemblies (para 3-16).

(5) Remove the crankshaft assembly from the crankcase in numerical sequence as illustrated in figure 3-20. Be sure to keep shims and gaskets in place as these are required to give the proper end play to the tapered roller main bearings on the crankshaft. The end play should be .002 to .004 inch when engine is cold. There is practically no wear on the bearings so that no readjustment is necessary after proper assembly.

b. Cleaning, Inspection and Repair.

(1) Clean all parts with cleaning solvent.

(2) Inspect all parts for wear and damage. Refer to table 1-1 for wear limit and dimensions. Replace worn or damaged parts.

c. *Reassembly.* Reassemble the crankshaft assembly in reverse of numerical sequence as illustrated in figure 3-20. When reassembling crankshaft, the timing marks on the crankshaft gear and the camshaft gear must be matched. Tighten main bearing plate capscrews 25 to 30 foot pounds torque.

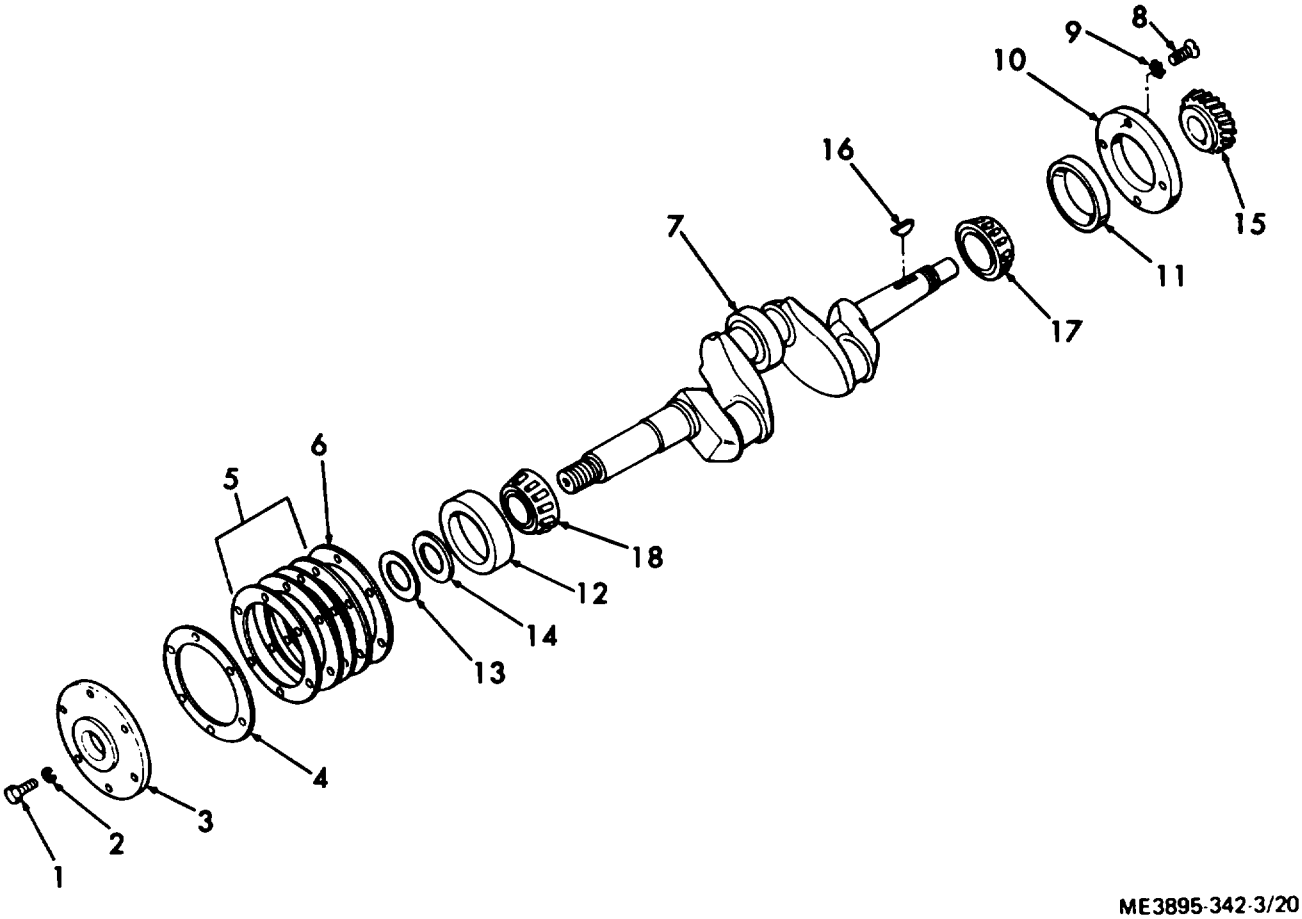

1. Screw, Cap, 3/ 8-16 1-1/4 in.
2. Washer, Lock, 3/8 in.
3. Bearing Plate Retainer
4. Gasket
5. Shims
6. Gasket
7. Crankshaft
8. Screw, Machine, 5/16-18 3/4 in.
9. Washer, Lock, 5/16 in.
10. Bearing Retainer Plate
11. Bearing Cup
12. Bearing Cup
13. Retainer, Takeoff End
14. Encased Seal
15. Gear
16. Key, Woodruff, No. 8
17. Bearing Cone
18. Bearing Cone

Figure 3-20. Crankshaft assembly, exploded view.

d. Installation. Install the crankshaft assembly in reverse of instructions in subparagraph *a* above.

3-18. Camshaft and Valve Lifters.

a. Removal.

(1) Remove the crankshaft assembly (para 3-17).

(2} Remove the valve assemblies, valve inserts and guides (para 3-11).

(3) Remove the camshaft assembly and valve lifter assemblies in numerical sequence as illustrated in figure 3-21.

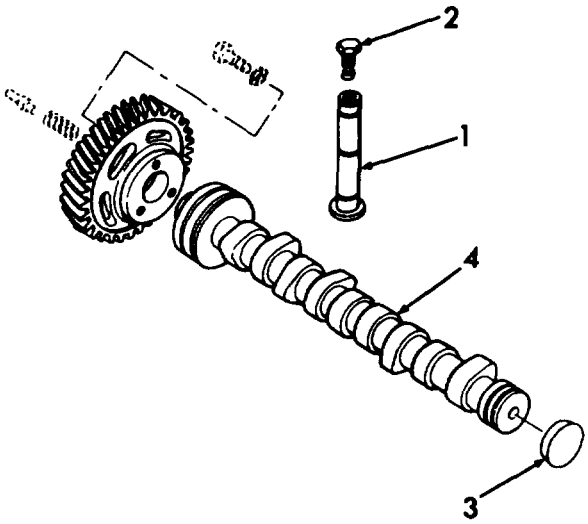

ME3895-342-34/3-21

Figure 3-21. Camshaft and valve lifter assembly, exploded view.

KEY to fig. 3-21:

1. Valve Lifter
2. Screw, Valve Lifter Adjusting
3. Expansion Plugs
4. Camshaft

Note. Screw a into one o the camshaft gear mounting holes in the front camshaft journal. Turn on engine its side then move each valve lifter assembly into the valve chamber free of the camshaft. Remove the camshaft from the crankcase.

b. Cleaning, Inspection and Repair.

(1) Clean all parts with cleaning solvent.

(2) Inspect all parts for wear and damage. Refer to table 1-1 for wear limits and dimensions. Repair or replace worn or damaged parts.

c. Installation. Install the camshaft and valve lifters in reverse of instructions in subparagraph *a* above. When reinstalling, be sure the spring and plunger are in place in the end of the camshaft, a s they hold the camshaft in position end-wise.

3-19. Cylinder Blocks and Crankcase

a. *Removal*

(1) Remove the camshaft and valve lifters (para 3-18).

(2) Remove the cylinder block and gaskets from the crankcase in numeral sequence as illustrated in figure 3-22.

Note. Tag each cylinder block so that it will be installed on the same side of the crankcase.

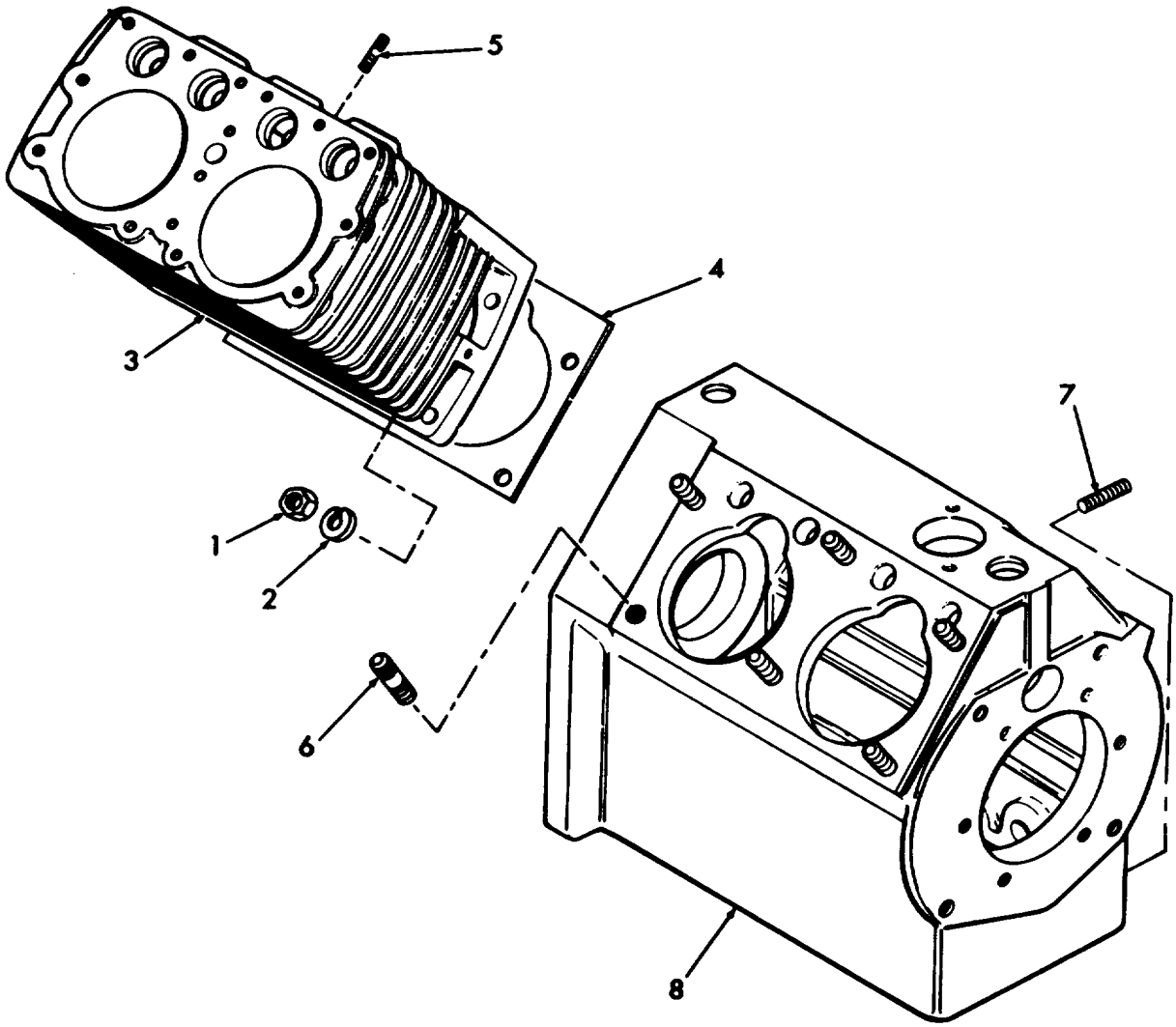

ME3895-342-34/3-22

1. Nut, hex, 7/16-20
2. Washer, Lock, 7/16 in.
3. Cylinder Block
4. Gasket
5. Stud, 3/8-16-24 2 in.
6. Stud, 7/6-14-20 x 2 in.
7. Stud, 5/16-18-24 x1 ¼ in.
8. Crankcase

Figure 3-22. Cylinder block and crankcase assemblies, exploded view.

b. Disassembly. Remove the cylinder block studs, oil filer mounting pad studs, spray nozzles, and pipe plugs from the crankcase assembly as illustrated in figure 3-22.

c. Cleaning, Inspection and Repair.

(1) Clean all parts with cleaning solvent.

(2) Inspect all parts for wear and damage. Repair or replace worn or damaged parts.

d. Installation. Install the cylinder blocks and crankcase in reverse of instructions in subparagraph *a* above.

Note. Use a new gasket on each cylinder block when installing.

CHAPTER 4

REPAIR OF WATER SYSTEM

4-1. General

The water system consists of an automatic syphon-cut-off type tank and a three-way valve. 'The amount of water discharged into the drum is predetermined by setting the indicator lever on the water gage. This lever moves the syphon head up or down to regulate the exact amount of mixing water desired.

4-2. Water Gage

a. Removal Remove water gage as instructed in figure 4-1.

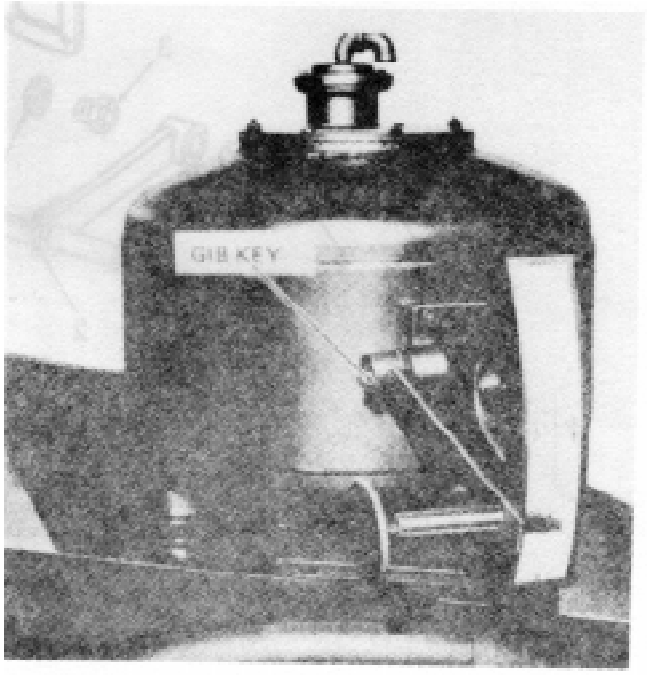

1. REMOVE GIB KEY AND DRIVE OUT SHAFT, AND REMOVE HAND LEVER.
2. REMOVE FOUR NUTS AND LOCKWASHERS AND REMOVE WATER GAGE.

ME3895-342-34/4-1

Figure 4-1. Water gage removal.

b. Disassembly. Disassemble water gage in numerical sequence as illustrated in figure 4-2.

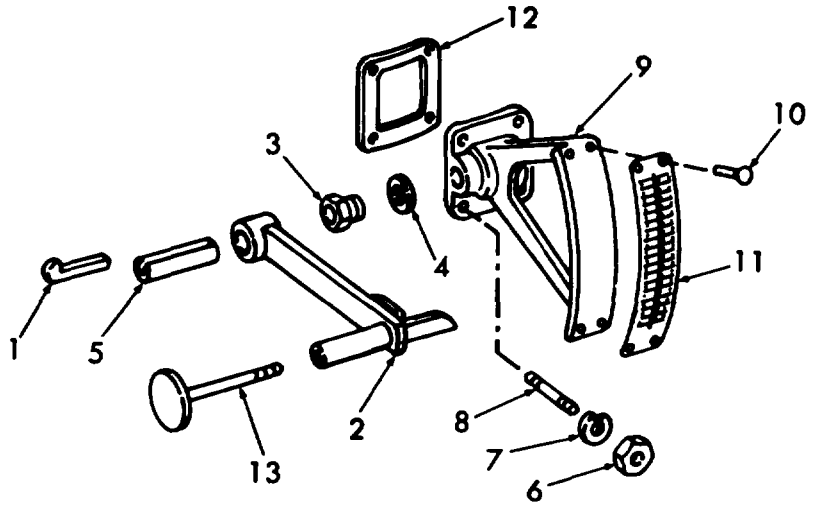

ME3895-342-34/4-2

1. Gib, key
2. Lever, hand
3. Gland
4. Packing
9. Support
5. Shaft
6. Nut, hex
7. Lockwasher
8. Stud
10. Screw, drive
11. Gage, water
12. Gasket
13. Handle, adjusting

Figure 4-2. Water gage, exploded view.

c. Cleaning, Inspection and Repair.

(1) Clean all parts with a cleaning solvent.

(2) Inspect all parts for wear and damage. Replace worn or damaged parts.

d. Reassembly. Reassemble water gage in reverse of numerical sequence as illustrated in figure 4-2.

e. Installation. Install water gage in reverse of instructions in figure 4-1.

4-3. Water Tank

a. Removal Remove water tank (para 2-10).

b. Disassembly. Disassemble water tank in numerical sequence as illustrated in figure 4-3.

KEY to fig. 4-3:

1. Screw, cap hex head
2. Lockwasher ½ in.
3. Nut, hex
4. Pipe, plug
5. Syphon, tank
6. Gib, key
7. Lever, hand
8. Gland
9. Packing
10. Shaft
11. Nut, hex
12. Lockwasher
13. Stud
14. Support
15. Screw, drive
16. Gage, water
17. Gasket
18. Key, ¼ sq x 1¾
19. Handle, adj
20. Street elbow
21. Screw, cap hex head
22. Valve ay
23. Gasket
24. Nut, hex
25. Lockwasher
26. Stud
27. Nut, hex
28. Nut, hex
29. Screw, hex head cap
30. Nut, hex
31. Bar, support
32. Cover
33. Gasket
34. Screw, cap hex head
35. Spacer
36. Lever, fork
37. Clamp, hose
38. Rod, support
39. Hose
40. Screw, cap hex head
41. Link
42. Syphon head ay
43. Insert

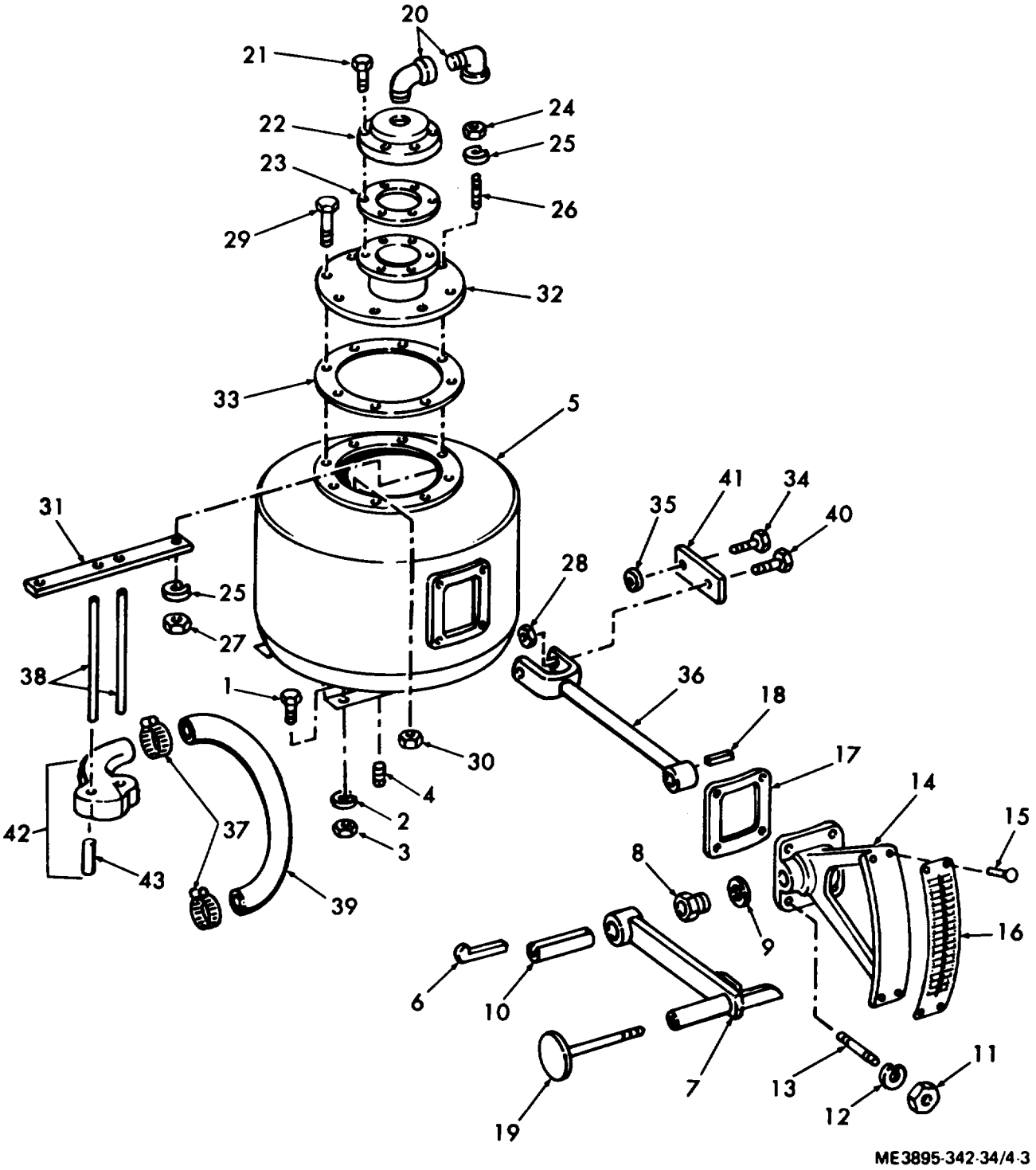

Figure 4-3. Water tank, exploded view.

c. Cleaning, Inspection and Repair.

(1) Clean all parts with cleaning solvent.

(2) Inspect all parts for wear and damage. Replace worn or damaged parts.

d. Reassembly. Reassemble water tank in reverse of numerical sequence as illustrated in figure 4-2.

e. Installation. Install water tank (para 2-10)

CHAPTER 5

REPAIR OF DISCHARGE SPOUT ASSEMBLY

5-1. General

The discharge spout assembly consists of the discharge spout, hand wheel and gear case, and connecting linkage. The operating shaft lever moves past center to lock spout in both the mixing and discharge positions.

5-2. Discharge Spout Assembly.

a. Removal. Removal discharge spout assembly (para 2-11).

b. Disassembly. Disassemble discharge spout assembly in numerical sequence as illustrated in figure 5-1.

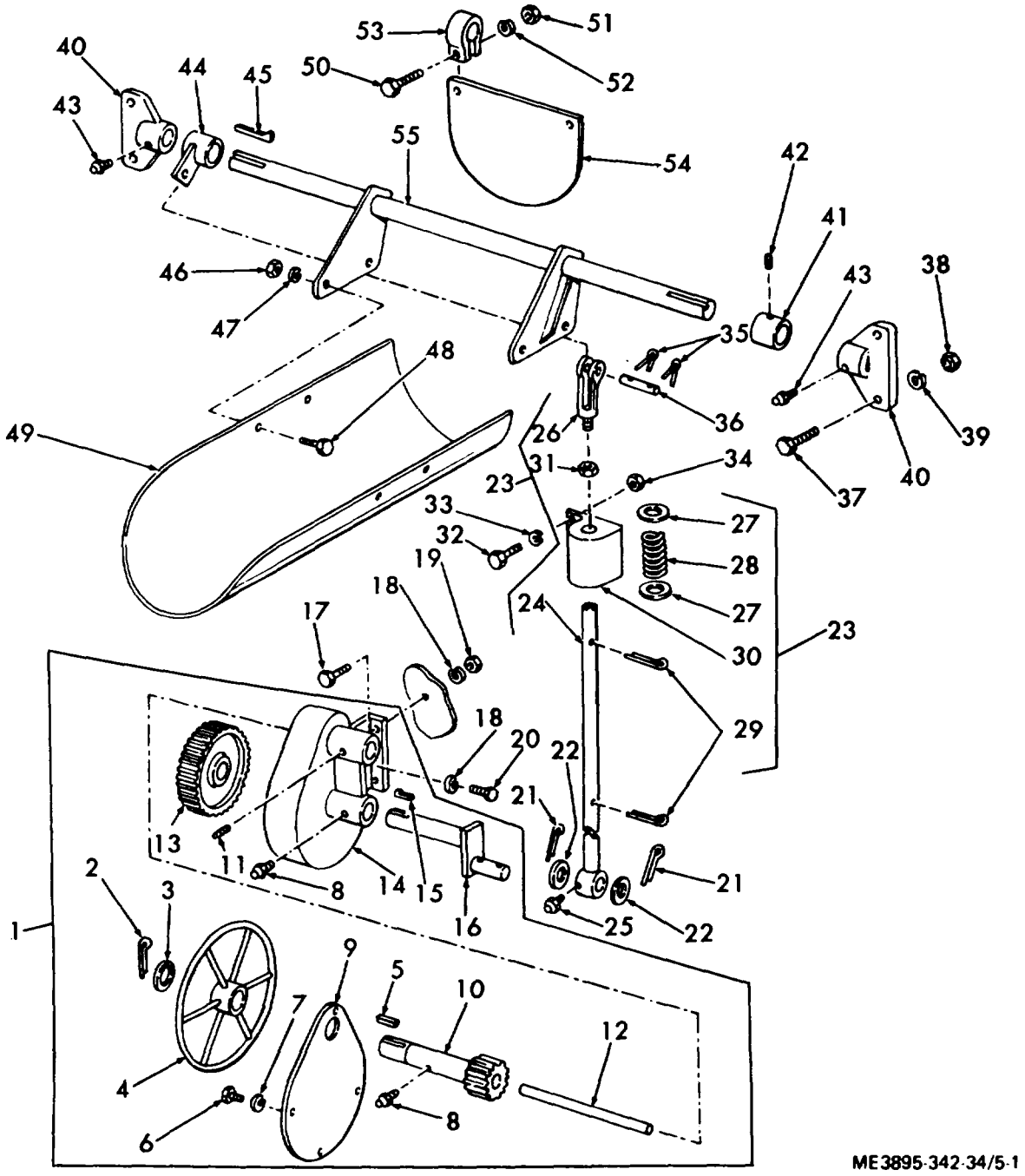

Figure 5-1. Discharge spout assembly, exploded view.

KEY to fig. 5-1:

1. Crank ay, discharge
2. Pin, cotter
3. Washer, cut
4. Wheel, hand
5. Key
6. Screw, cap hex head
7. Lockwasher
8. Fitting, grease
9. Cover
10. Shaft, pinion discharge
11. Screw, set soc hd
12. Shaft, pinion discharge
13. Gear, Boston
14. Gear Case
15. Key, Gib
16. Crank
17. Bolt, mach hex hd
18. Lockwasher
19. Nut, hex
20. Screw, hex head
21. Pin, Cotter
22. Washer
23. Snubber Subassembly
24. Rod, Connecting
25. Fitting, grease
26. Yoke end
27. Washer, cut
28. Spring
29. Pin, cotter
30. Box, snubber
31. Nut, hex
32. Bolt, mach hex head
33. Lockwasher
34. Nut, hex
35. Pin, Cotter
36. Pin
37. Bolt, mach hex head
38. Nut, hex
39. Lockwasher
40. Bearing
41. Collar, Set
42. Screw, Set Soc Hd
43. Fitting, grease
44. Lever
45. Key, Gib
46. Nut, hex
47. Lockwasher
48. Bolt, mach hex hd
49. Chute, discharge
50. Bolt, mach hex hd
51. Nut, hex
52. Lockwasher
53. Clamps
54. Guard, splash
55. Shaft

c. Cleaning, Inspection and Repair.

(1) Clean all parts with cleaning solvent.

(2) Inspect all parts for wear and damage. Repair or replace worn and damaged parts.

d. Reassembly. Reassemble discharge spout assembly in reverse of numerical sequence as illustrated in figure 5-1.

e. Installation. Install discharge spout assembly (para 2-11).

CHAPTER 6

REPAIR OF SKIP, SKIP VIBRATOR ASSEMBLY, AND SKIP HOIST ASSEMBLY

Section I. SKIP, AND SKIP VIBRATOR ASSEMBLY

6-1. General

The closed end skip with arched cover plate elevates to 49 degrees in 49 degrees in 7 seconds. The cam and lever type skip vibrator is enclosed in an oil tight case. The skip vibrator operates with a frequency of 1100 pulsations per minute.

6-2. Skip

a. Removal. Remove skip (para 2-2).

b. Cleaning, Inspection and Repair.

(1) Clean the skip thoroughly with water and a stiff bristled brush.

(2) Inspect the skip for wear and damage. Repair or replace excessively worn or damaged skip.

c. Installation. Install the skip (para 2-2).

6-3. Vibrator Assembly

a. Removal. Remove skip vibrator assembly (para 2-3).

b. Disassembly. Disassemble skip vibrator assembly in numerical sequence as illustrated in figure 6-1.

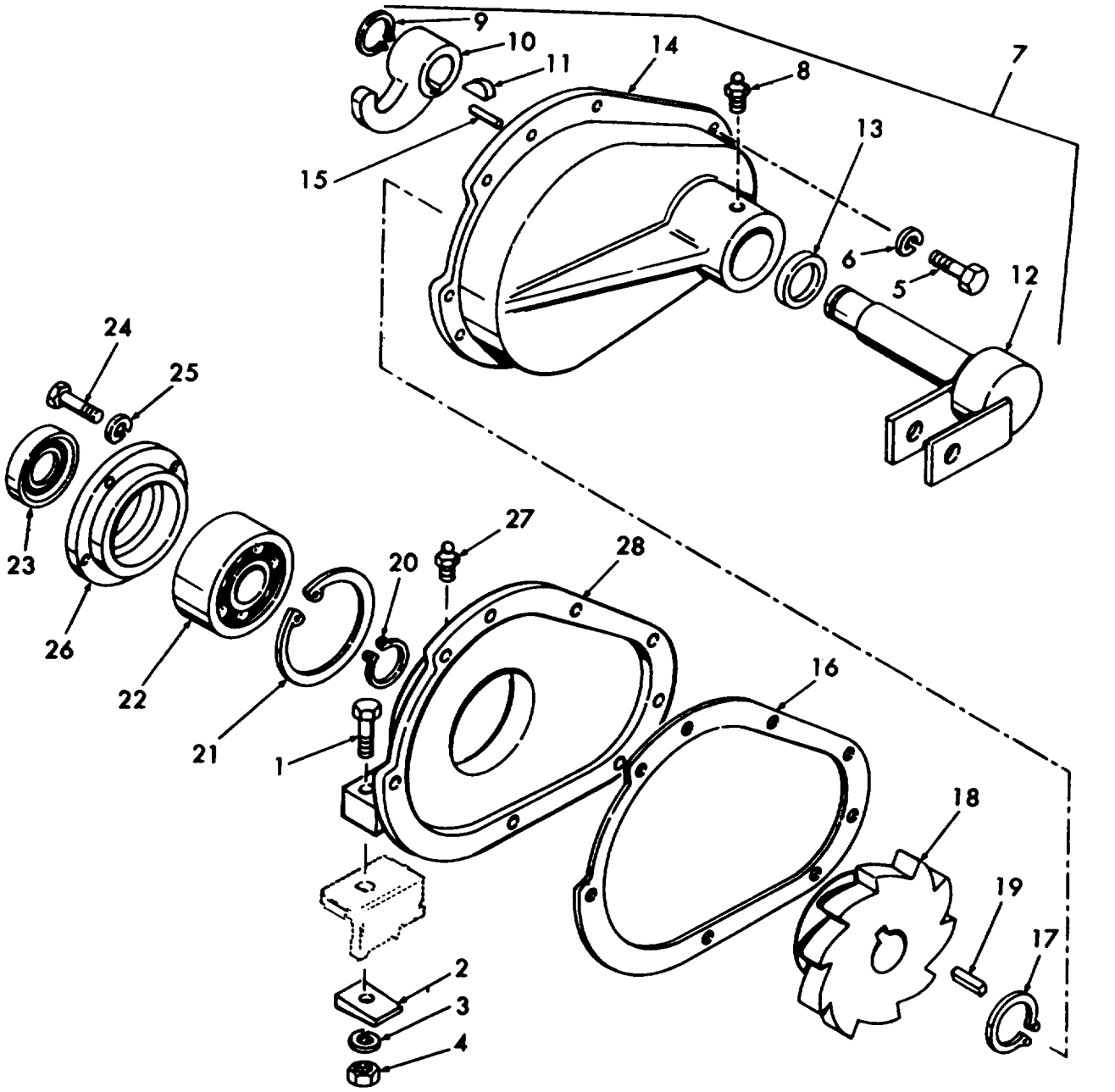

1. Screw, cap hex head
2. Washer, bevel
3. Lockwasher
4. Nut, hex
5. Screw, cap hex head
6. Lockwasher
7. Housing, vibrator ay
8. Fitting, hydraulic
9. Ring, retaining
10. Lever
11. Key, Woodruff
12. Shaft, vibrator
13. Seal, oil
14. Housing, vibrator
15. Pin, dowel
16. Gasket
17. Ring, retaining
18. Jaw
19. Key
20. Ring, retaining
21. Ring, retaining
22. Bearing, ball
23. Seal, oil
24. Screw, cap hex head
25. Lockwasher
26. Ring, retaining
27. Fitting, hydraulic
28. Housing, vibrator

Figure 6-1. Skip vibrator assembly, exploded view.

c. Cleaning, Inspection and Repair.

(1) Clean all parts with cleaning solvent.

(2) Inspect all parts for wear and damage. Repair or replace worn and damaged parts.

d. Reassembly. Reassemble the skip vibrator assembly in reverse of numerical sequence as illustrated in figure 6-1.

e. Installation. Install skip vibrator assembly (para 2-13).

6-4. Skip Cable

a. Removal.

(1) Lower skip to the ground.

(2) Remove gib key from outer end of left-hand winding drum, pull cable off winding drum as far as possible, then remove capscrew, lock-washer and cut washer securing cable to winding drum.

(3) Remove gib key from reduction pulley, and unwind cable from reduction pulley far enough to permit sliding pulley off of shaft and placing pulley out of the way on top of mixer.

(4) Remove gib key from right-hand winding drum, pull skip cable off drum as far as possible and then remove capscrew, lockwasher and cut washer securing cable to drum.

b. Cleaning, Inspection and Repair.

(1) Clean cable with cleaning solvent.

(2) Inspect cable for wear and damage. Replace excessively worn or damaged cable.

c. Installation. Install skip cable in reverse of instructions in subparagraph *a* above.

Section II. SKIP HOIST ASSEMBLY

6-5. General

The skip hoist a*ss*embly consists of a reduction pulley, left-hand and right-hand winding drums, shaft, and cable.

6-6. Reduction Pulley, Winding Drums, Bearings and Shaft

a. Removal

(1) Remove skip cable (para 6-4).

(2) Slide left and right-hand winding drums off of shaft.

(3) Unwind cable from reduction pulley as far as possible, then remove two capscrews and lock-washers securing cable to reduction pulley.

(4) Drive out shaft, remove two bolts and lockwashers from each bearing plate and remove bearings.

b. Cleaning, Inspection and Repair.

(1) Clean all parts with a cleaning solvent.

(2) Inspect all parts for wear and damage. Repair or replace worn and damaged parts.

c. Installation. Install reduction pulley, winding drums, bearings and shaft in reverse of instructions in subparagraph *a* above.

CHAPTER 7

REPAIR OF DRIVE AND HOIST ASSEMBLY

7-1. General

The drive and hoist assembly consists of the drive sheave, gear reduction case assembly, clutch band, brake band, and hoisting drum.

7-2. Drive Sheave

a. Removal.

(1) Remove pump belt (1) and hoist drive belts (4) (TM 5-3895-342-12).

(2) Remove the three capscrews securing the drive sheave to the gear reduction case, and slide the drive sheave off of the shaft.

b. Cleaning, Inspection and Repair.

(1) Clean drive sheave with cleaning solvent.

(2) Inspect sheave for wear and damage. Repair or replace worn or damaged sheave.

c. Installation. Install drive sheave in reverse of instructions in subparagraph *a* above.

7-3. Brake Band

a. Removal.

(1) Disconnect brake linkage from brake band by removing cotter pin from brake rod and disengaging rod from linkage.

(2) Remove nut from brake rod holding brake band to lower frame and remove brake band.

b. Cleaning, Inspection and Repair.

(1) Clean brake band.

(2) Inspect brake band for wear and damage. Replace worn or damaged brake band.

c. Installation. Install brake band in reverse of instructions in subparagraph *a* above.

7-4. Clutch Band

a. Removal.

(1) Loosen tension screw on clutch band until clutch band is loose on drum.

(2) Remove cotter pin holding tension screw to clutch band, remove screw and remove clutch band.

b. Cleaning, Inspection and Repair.

(1) Clean clutch band.

(2) Inspect clutch band for wear and damage. Replace worn or damaged clutch band.

c. Install clutch band in reverse of instructions in subparagraph *a* above.

7-5. Hoisting Drum

a. Removal.

(1) Remove drive and hoist assembly (para 2-14).

(2) Remove setscrew securing hoisting drum to shaft and remove hoisting drum.

b. Cleaning, Inspection and Repair.

(1) Clean hoisting drum with cleaning solvent.

(2) Inspect hoisting drum for wear and damage. Replace worn or damaged hoisting drum.

c. Installation. Install hoisting drum in reverse of instructions in subparagraph *a* above.

7-6. Gear Reduction Case Assembly

a. Removal.

(1) Remove drive and hoist assembly (para 2-14). 14).

(2) Remove drive sheave (para 7-2).

(3) Remove cotter pin securing tension rod to gear case and remove tension rod.

(4) Remove plug on side of gear caw and drain lubricant from gear case assembly.

b. Disassembly. Disassemble gear reduction case assembly in numerical sequence as illustrated in figure 7-1.

KEY to fig. 7-1.

1. Sheave
2. Spacer
3. Screw, cap hex hd
4. Lockwasher
5. Cover
6. Gasket
7. Ring, retaining
8. Ring, retaining int
9. Nut, hex
10. Lockwasher
11. Washer, flat
12. Screw, cap hex hd
13. Bearing
14. Pin, cotter
15. Rod, hold down
16. Nut, hex
17. Washer, cut
18. Lockwasher
19. Case, gear reduction with pinion
20. Oil
21. Plug, pipe sq hd
22. Bearing, ball
23. Screw, cap hex hd
24. Nut, hex
25. Lockwasher
26. Case, reduction
27. Plug, vent
28 Bearing, ball
29. Spacer
30. Ell, street 90°
31. Spacer
32. Plug, pipe sq hd
33. Key
34. Pinion & shaft, reduction
35. Gear
36. Gasket
37. Cover

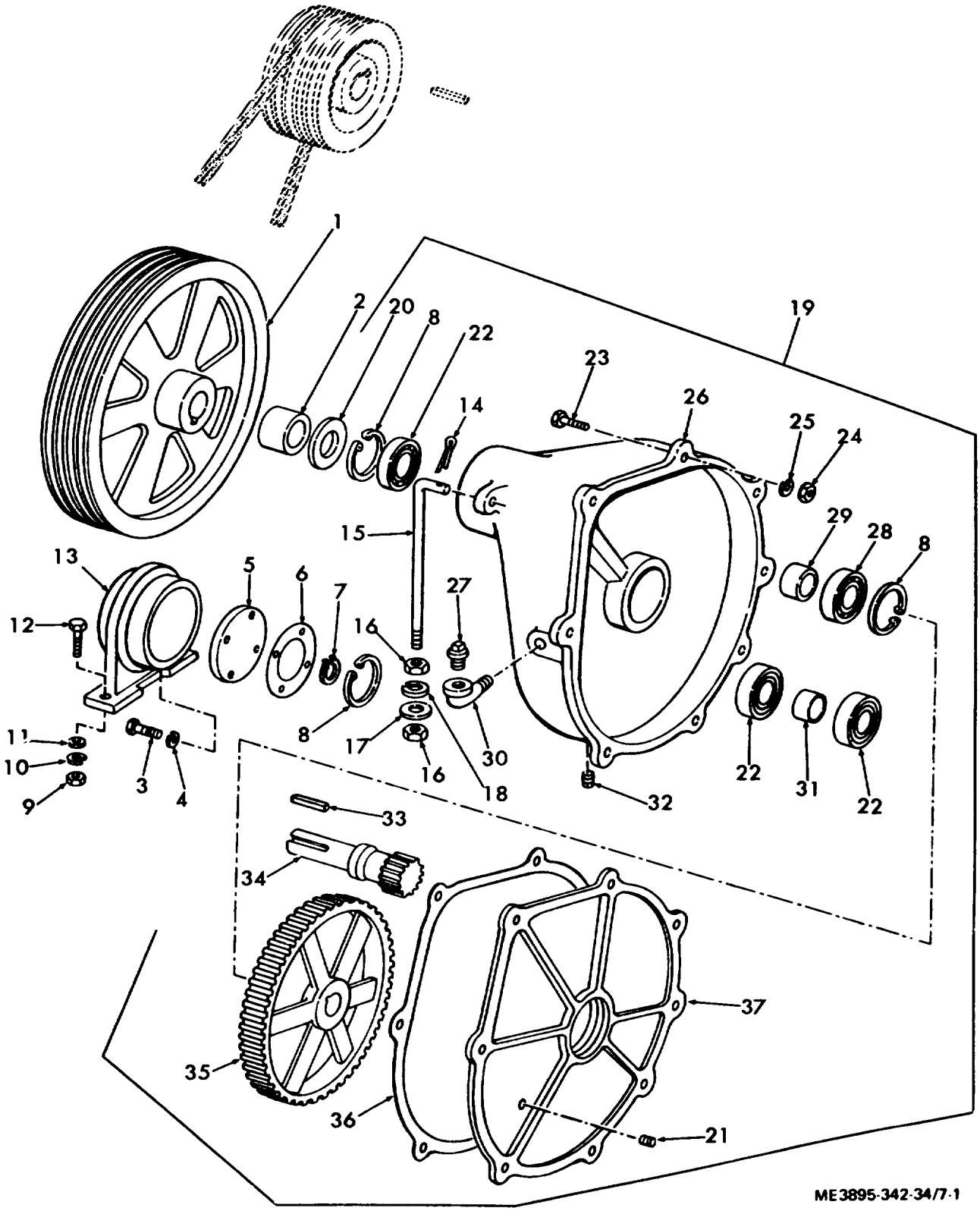

Figure 7-1. Gear reduction case assembly, exploded view.

c. Cleaning, Inspection and Repair.

(1) Clean all parts with cleaning solvent.

(2) Inspect all parts for wear and damage. Replace worn or damaged parts.

d. Reassembly. Reassemble gear reduction case assembly in reverse of numerical sequence as illustrated in figure 7-1.

e. Installation, Install gear reduction case assembly in reverse of instructions in subparagraph *a* above.

CHAPTER 8

REPAIR OF DRUM, AND ROLLER ASSEMBLY

8-1. General

The drum and roller assembly consists of the drum, drum ring, drum plates, drum rollers and shaft.

8-2. Drum Plates

a. Removal. Remove drum plates in numerical sequence as illustrated in figure 8-1.

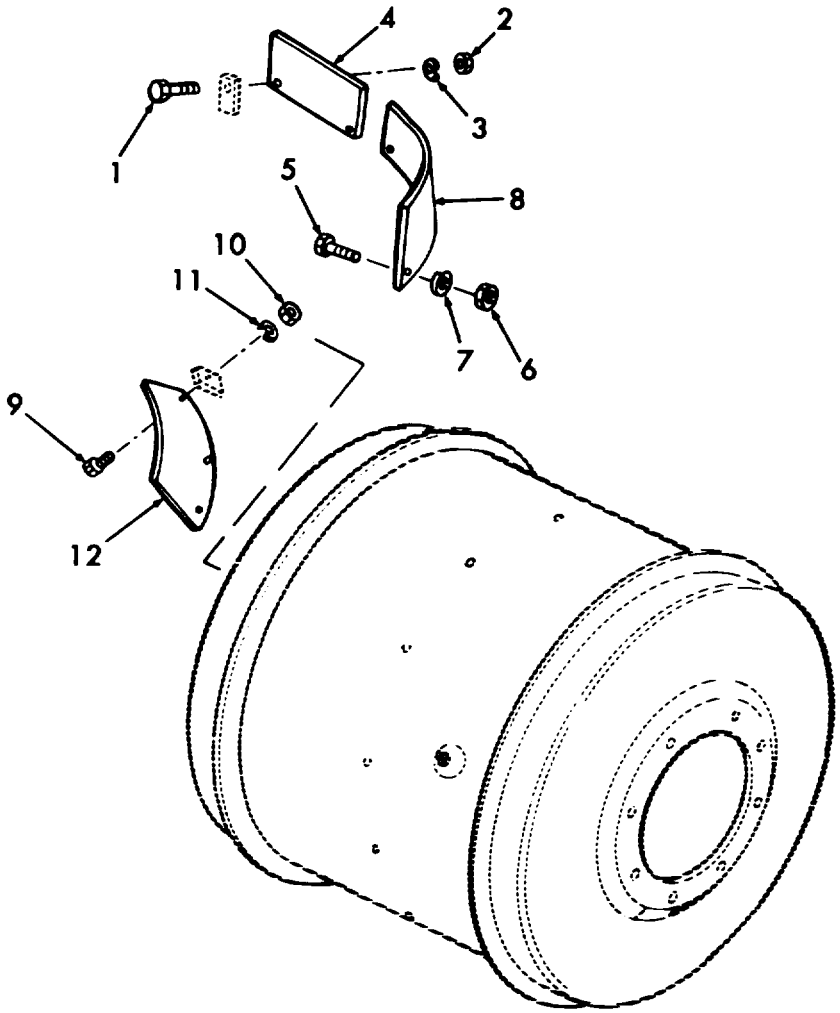

ME3895-342-34/8-1

1. Bolt, mach hex hd spec
2. Nut, hex
3. Lockwasher
4. Blade
5. Bolt, mach hex hd spec
6. Nut, hex
7. Lockwasher
8. Bucket
9. Bolt mach hex hd spec
10. Nut, hex
11. Lockwasher
12. Bucket

Figure 8-1. Drum plates, exploded view.

b. Cleaning, Inspection and Repair.

(1) Clean drum plates with water and a stiff bristled brush.

(2) Inspect drum plates for wear and damage. Repair or replace worn or damaged drum plates.

c. Installation. Install the drum plates in reverse of numerical sequence as illustrated in figure 8-1.

8-3. Drum Rollers and Shaft

a. Removal.

(1) Place suitable jacking device under drum and raise drum just enough to free drum rollers of drum weight.

(2) Remove drum rollers and shaft in numerical sequence as illustrated in figure 8-2.

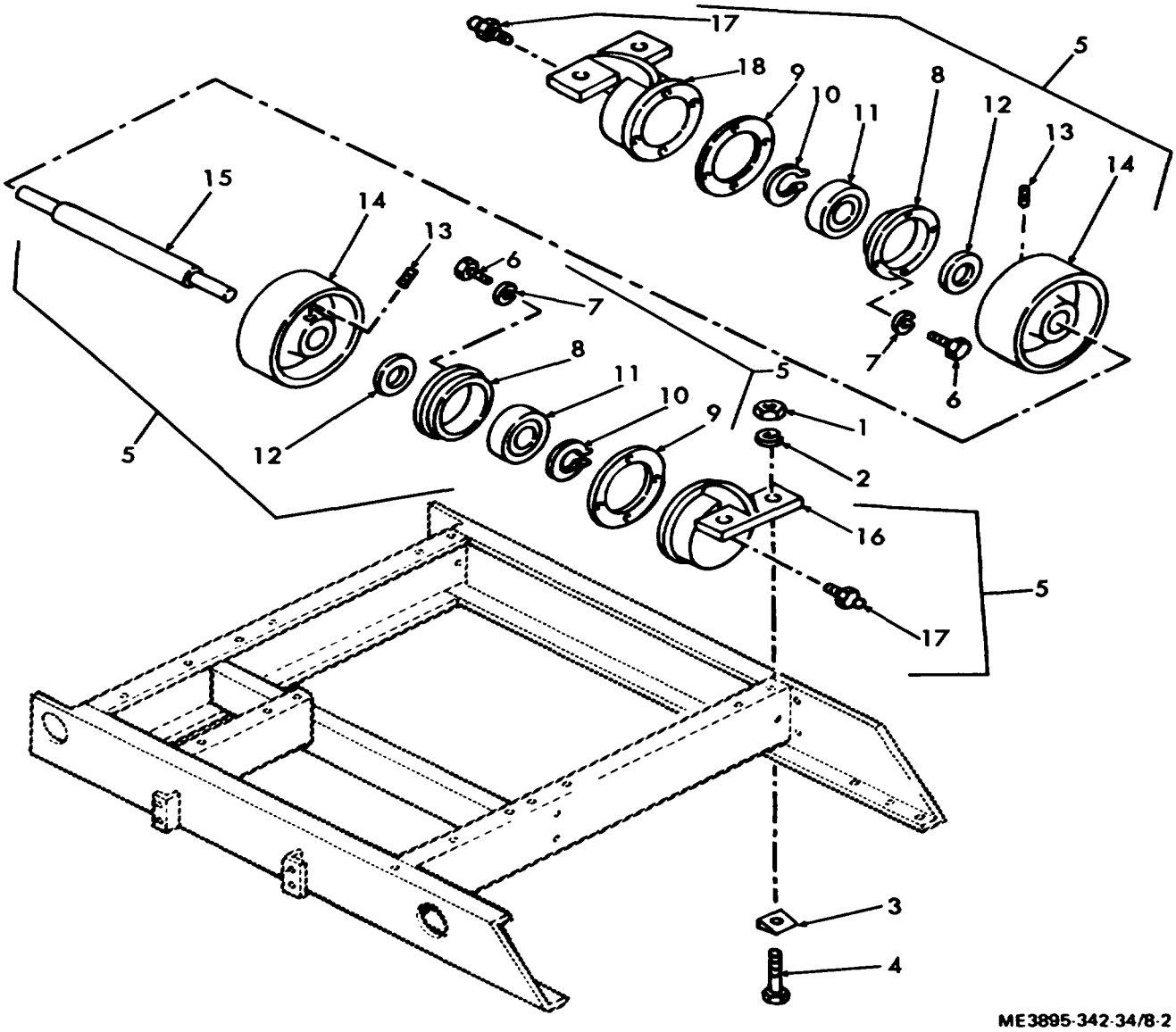

1. Nut, hex
2. Lockwasher
3. Washer, bevel
4. Bolt, mach hex hd
5. Roller, drum ay
6. Capscrew, hex hd
7. Lockwasher
8. Flange, sealing
9. Gasket
10. Ring, retaining
11. Bearing, ball
12. Seal, oil
13. Screw, socket hd set
14. Roll, drum
15. Roller, shaft, drum
16. Bearing, main roller
17. Fitting, hyd
18. Bearing, main roller

Figure 8-2. Drum rollers and shaft, exploded view.

b. Cleaning Inspection and Repair.

(1) Clean all parts with cleaning solvent.

(2} Inspect all parts for wear and damage, Replace worn or damaged parts.

c. Installation. Install drum rollers and shaft in reverse of numerical sequence as illustrated in figure 8-2 2.

8-4. Drum Ring Gear

a. Removal.

(1) Remove drum (para 2-16).

(2) Remove 24 bolts, bevel washers and lock-washers holding ring gear in place on drum.

(3) Use cutting torch to remove ring gear.

b. Installation. Replacement ring gear is supplied in half sections. Install new ring gear onto drum using bolts and washers removed from old ring gear.

CHAPTER 9

REPAIR OF UNDER CARRIAGE ASSEMBLY

9-1. General

The under carriage assembly consists of the wheel assemblies, towing stub, fifth wheel and radius rods, steering knuckles and axles.

9-2. Wheel Assembly

a. Removal Remove wheel assembly in numerical sequence as illustrated in figure 9-1.

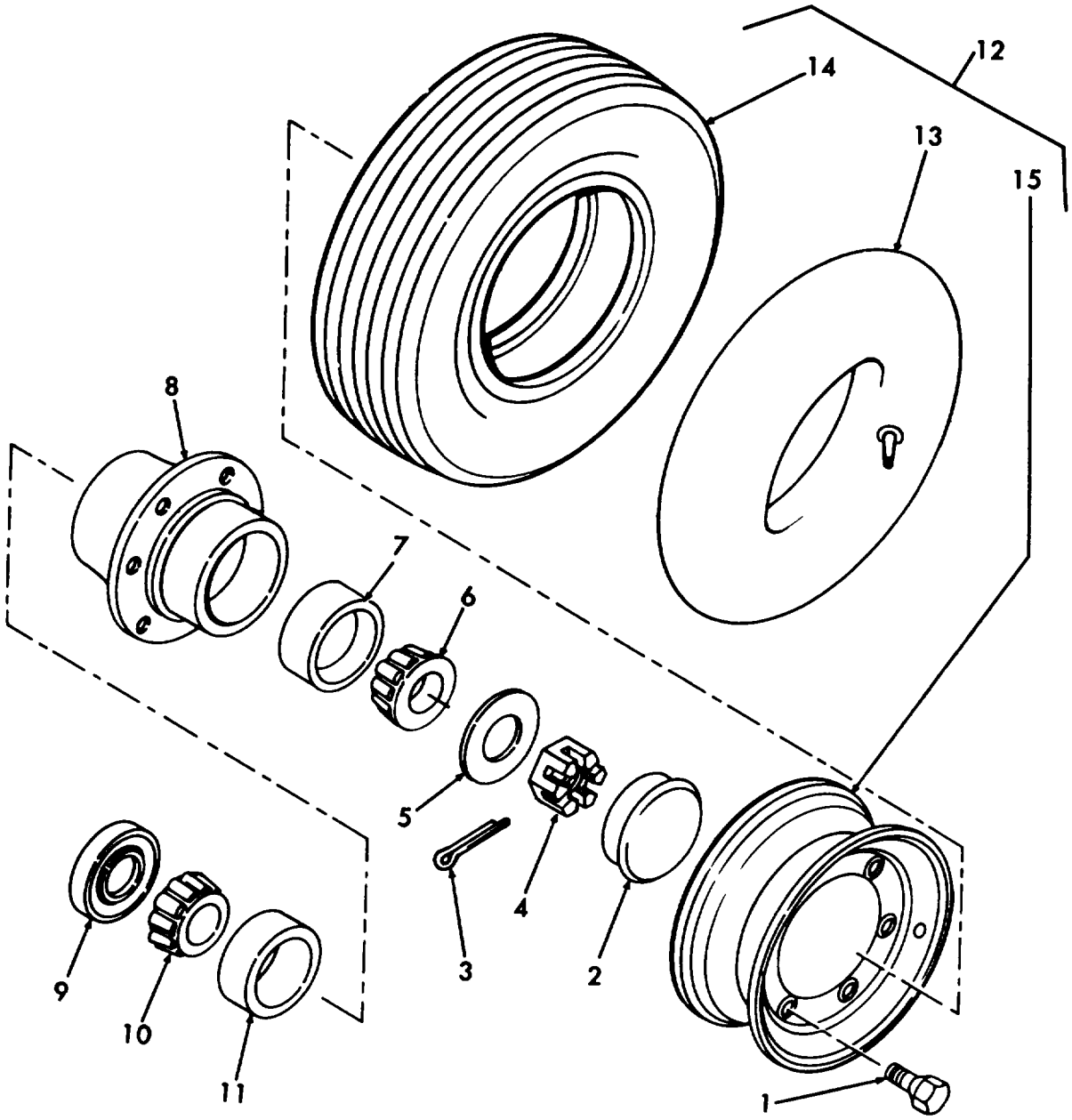

ME3895-342-34/9-1

1. Bolt
2. Cap
3. Pin, cotter
4. Nut, castelated hex
5. Washer
6. Bearing, cone
7. Cup, bearing
8. Hub
9. Seal
10. Cone, bearing
11. Cup, bearing
12. Tire and wheel ay
13. Tube, inner
14. Tire
15. Rim, wheel

Figure 9-1. Wheel assembly, explode view.

b. Cleaning, Inspection and Repair.

(1) Clean all parts with a cleaning solvent.

(2) Inspect all parts for wear and damage.

(3) Repair or replace worn or damaged parts.

c. Installation. Install wheel assembly in reverse of instructions in figure 9-1.

9-3. Towing Stub

a. Removal. Remove towing stub in numerical sequence as illustrated in figure 9-2.

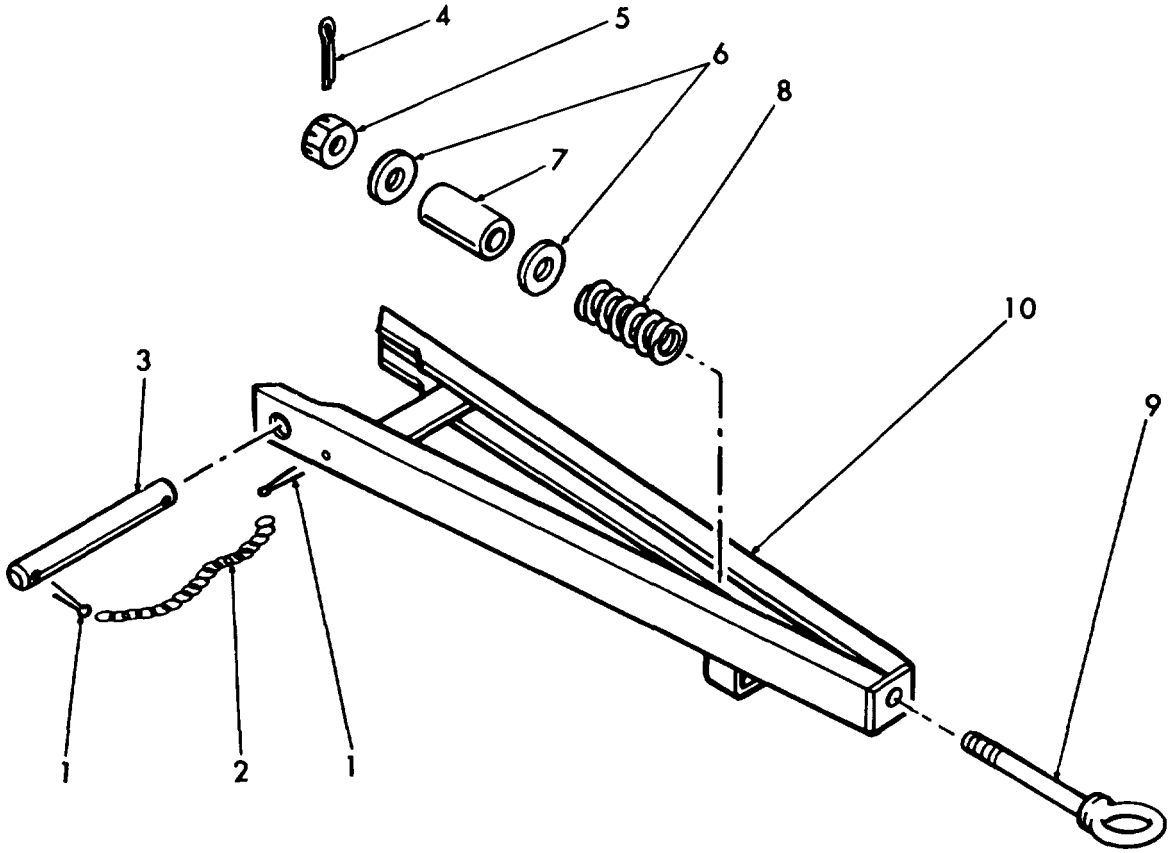

ME3895-342-34/9-2

1. Pin, cotter
2. Chain, jack
3. Pin, hauling stub
4. Pin, cotter
5. Nut, slotted hex
6. Washer
7. Spacer
8. Spring
9. End, hauling stub
10. Stub, hauling sub-ay

Figure 9-2. Towing stub, exploded view.

b. Cleaning, Inspection and Repair.

(1) Clean all parts with cleaning solvent.

(2) Inspect all parts for wear and damage. Repair or replace worn or damaged parts.

c. Installation. Install towing stub in reverse of instructions in figure 9-2.

9-4. Fifth Wheel, Radius Rods, and Steering Knuckles

a. Removal.

(1) Remove towing stub (para 9-3).

(2) Remove fifth wheel, radius rods, and steering knuckles in numerical sequence as illustrated in figure 9-3.

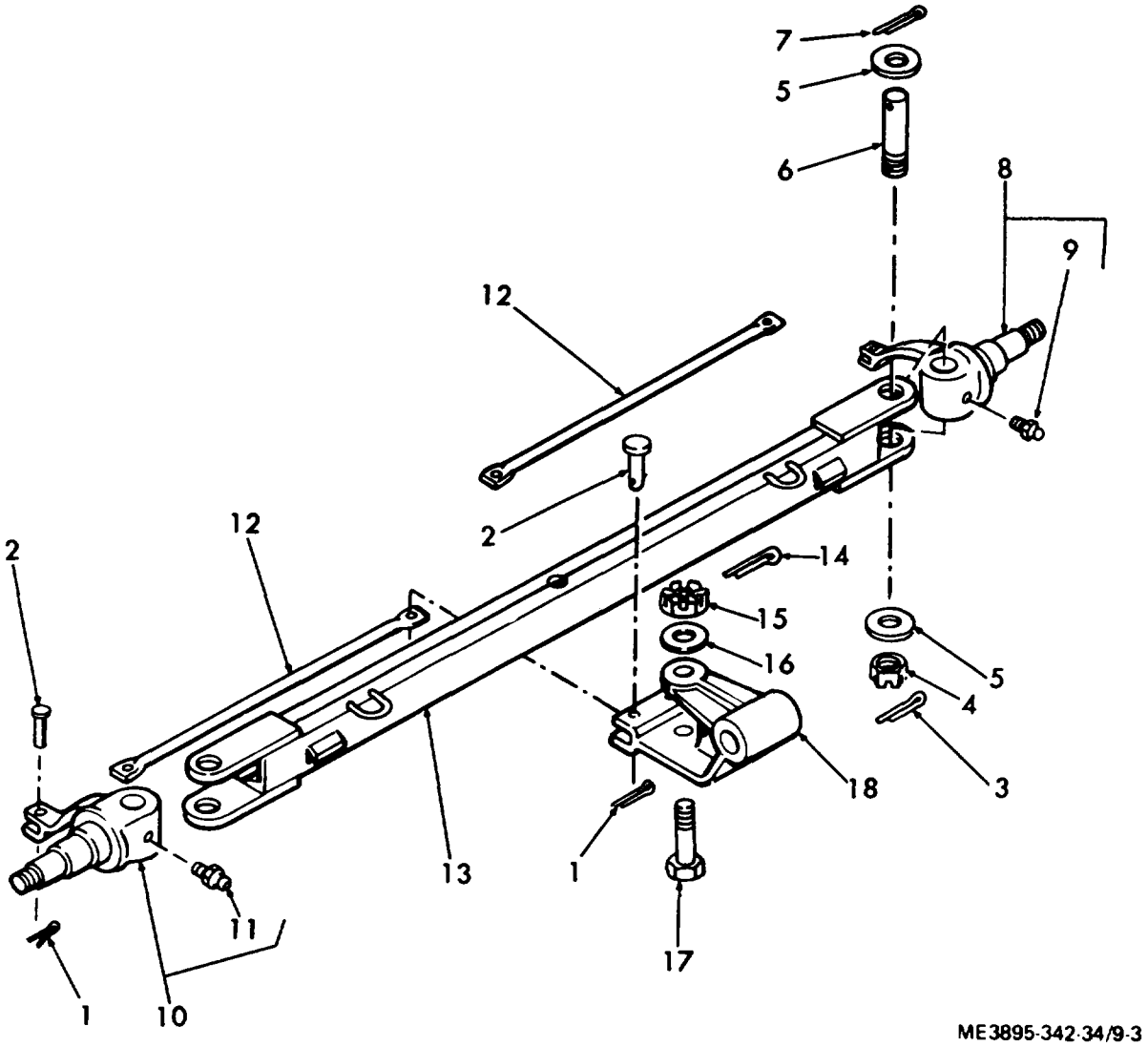

1. Pin, cotter
2. Pin, corn picker
3. Pin, cotter
4. Nut, slotted hex
5. Washer, cut
6. Pin
7. Pin, cotter
8. Knuckle: RH
9. Fitting, grease
10. Knuckle: LH
11. Fitting, grease
12. Rod, radius
13. Axle, front
14. Pin, cotter
15. Nut, cotter
16. Washer, flat
17. Bolt, king
18. Wheel, fifth

Figure 9-3. Fifth wheel radius rods and steering knuckle, exploded view.

b. Cleaning, Inspection and Repair.

(1) Clean all parts with cleaning solvent.

(2) Inspect all parts for wear and damage. Repair or replace worn or damaged parts.

c. *Installation. Install* fifth wheel and radius rods in reverse of numerical sequence as illustrated in figure 9-3.

APPENDIX A

REFERENCES

A-1. Fire Protection

TB 5-4200-200-10	Hand Portable Fire Extinguishers Approved For Army Users

A-2. Lubrication

C91004L	Identification List For Fuels, Lubricants, Oils and Waxes
LO 5-3895-342-12	Lubrication Order

A-3. Painting

TM 9-213	Painting Instructions For Field Use

A-4. Radio Suppression

TM 11-483	Radio Interference Suppression

A-5. Maintenance

TM 9-1870-1	Care and Maintenance of Pneumatic Tires
TM 38-750	The Army Maintenance Management System
TM 5-3895-342-12	Operator and Organizational Maintenance Manual
TM 5895-342-20P	Organizational Maintenance Repair Parts and Special Tools List
TM 5-3895-342-34	Direct Support and General Support Maintenance Manual
TM 5-89542-34P	Direct Support, General Support, and Depot Maintenance Repair Parts and Special Tools List
TM 9-6140-200-15	Operation and Organizational, Field and Depot Maintenance: Storage Batteries, Lead Acid Type

A6. Shipment and Storage

TB 740-97-2	Preservation of USAMEC Mechanical Equipment for Shipment and Storage
TM 740-90-1	Administrative Storage of Equipment

A-7. Destruction to Prevent Enemy Use

TM 750-244-3	Procedures for Destruction of Equipment to Prevent Enemy Use

INDEX

	Paragraph	Page
A		
Alternator, flywheel	3-9	3-13
B		
Baffle plates	3-16	3-21
Brake band	7-3	7-1
C		
Cable, skip	6-4	6-3
Camshaft	3-18	3-25
Carburetor	3-3	3-3
Clutch assembly	3-7	3-11
Clutch band	7-4	7-1
Clutch housing assembly	2-8, 3-6	2-3, 3-9
Connecting rods	3-6	3-9
Crankcase	3-14, 3-19	3-19, 3-26
Cylinder blocks	3-19	3-26
Cylinder heads	3-10	3-13
D		
Data, tabulated	1-6	1-1
Differences between models	1-5	1-1
Discharge spout assembly	2-11, 5-2	2-3, 5-1
Drive and hoist assembly	2-14	2-4
Drive sheave	7-2	7-1
Drum	2-16	2-4
Drum, hoisting	7-5	7-1
Drum plates	8-2	8-1
Drum ring gear	8-4	8-3
Drum rollers and shaft	8-3	8-2
Drum, winding	6-6	6-3
E		
Engine assembly	2-9	2-3
Errors, reporting of	1-3	1-1
F		
Fifth wheel	9-4	9-3
Flywheel alternator	3-9	3-13
G		
Gage, water	4-2	4-1
Gear cover	3-12	3-15
Gear, drum ring	8-4	8-3
Gear reduction case assembly	7-6	7-1
General maintenance	2-6	2-2
Governor	3-2	3-1
H		
Hoisting drum	7-5	7-1
M		
Magneto	3-4	3-5
Motor, starting	3-5	3-7
Maintenance forms and records	1-2	1-1
Maintenance repair parts	2-3	2-1
O		
Oil pump	3-15	3-20
P		
Piston assembly	3-16	3-21
R		
Radius rods	9-4	9-3
Reduction pulley	6-6	6-3
Reporting of errors	1-3	1-1
Rollers and shaft, drum	8-3	8-2
S		
Sheave, drive	7-2	7-1
Skip	2-12, 6-2	2-3, 6-1
Skip cable	6-4	6-3
Skip vibrator assembly	2-13, 6-3	2-3, 6-1
Special tools and equipment	2-5	2-1
Starting motor	3-5	3-7
Steering knuckle	9-4	9-1
T		
Tabulated data	1-6	1-1
Tank, water	2-10	2-3
Timing gears	3-13	3-17
Tools and equipment	2-1, 2-2	2-1
Towing stub	9-3	9-3
Troubleshooting	2-5	2-1
V		
Valve assemblies	3-11	3-14
Valve inserts	3-11	3-14
Valve lifters	3-18	3-25
W		
Water gage	4-3	4-2
Water tank	4-2	4-1
Wheel assembly	9-2	9-1
Winding drum	6-6	6-3

By Order of the Secretary of the Army:

W. C. WESTMORELAND,
General, United State Army,
Chief of Staff .

Official:

VERNE L.. BOWERS,
Major General, United States Arm
The Adjutant General .

Distribution:

To be distributed in accordance with DA Form 12-25B (qty rqr block no. 431) Direct and General Support Maintenance requirements for Mixer, Concrete .

*U .S. GOVERNMENT PRINTING OFFICE: 1993 - 342-421/80735

RECOMMENDED CHANGES TO EQUIPMENT TECHNICAL PUBLICATIONS

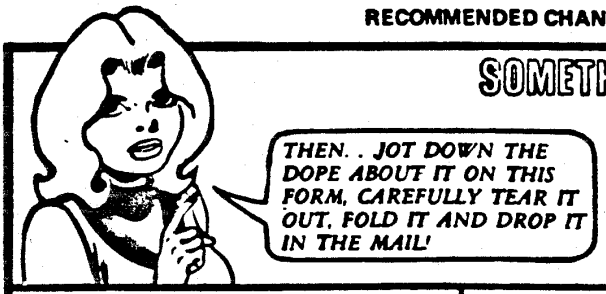

SOMETHING WRONG WITH THIS PUBLICATION?

FROM: (PRINT YOUR UNIT'S COMPLETE ADDRESS)

DATE SENT

PUBLICATION NUMBER	PUBLICATION DATE	PUBLICATION TITLE
TM 11-5825-270-10	23 Jul 81	Radio Frequency R-2176/FRN

BE EXACT. . .PIN-POINT WHERE IT IS

PAGE NO.	PARA-GRAPH	FIGURE NO	TABLE NO.	IN THIS SPACE TELL WHAT IS WRONG AND WHAT SHOULD BE DONE ABOUT IT:

PRINTED NAME, GRADE OR TITLE, AND TELEPHONE NUMBER

SIGN HERE:

DA FORM 1 JUL 79 2028-2

PREVIOUS EDITIONS ARE OBSOLETE.

P.S.—IF YOUR OUTFIT WANTS TO KNOW ABOUT YOUR RECOMMENDATION MAKE A CARBON COPY OF THIS AND GIVE IT TO YOUR HEADQUARTERS.

TEAR ALONG PERFORATED LINE

THE METRIC SYSTEM AND EQUIVALENTS

'NEAR MEASURE

. Centimeter = 10 Millimeters = 0.01 Meters = 0.3937 Inches
1 Meter = 100 Centimeters = 1000 Millimeters = 39.37 Inches
1 Kilometer = 1000 Meters = 0.621 Miles

'VEIGHTS

Gram = 0.001 Kilograms = 1000 Milligrams = 0.035 Ounces
1 Kilogram = 1000 Grams = 2.2 lb.
1 Metric Ton = 1000 Kilograms = 1 Megagram = 1.1 Short Tons

LIQUID MEASURE

1 Milliliter = 0.001 Liters = 0.0338 Fluid Ounces
1 Liter = 1000 Milliliters = 33.82 Fluid Ounces

SQUARE MEASURE

1 Sq. Centimeter = 100 Sq. Millimeters = 0.155 Sq. Inches
1 Sq. Meter = 10,000 Sq. Centimeters = 10.76 Sq. Feet
1 Sq. Kilometer = 1,000,000 Sq. Meters = 0.386 Sq. Miles

CUBIC MEASURE

1 Cu. Centimeter = 1000 Cu. Millimeters = 0.06 Cu. Inches
1 Cu. Meter = 1,000,000 Cu. Centimeters = 35.31 Cu. Feet

TEMPERATURE

5/9(°F - 32) = °C
212° Fahrenheit is evuivalent to 100° Celsius
90° Fahrenheit is equivalent to 32.2° Celsius
32° Fahrenheit is equivalent to 0° Celsius
9/5C° + 32 =°F

APPROXIMATE CONVERSION FACTORS

TO CHANGE	TO	MULTIPLY BY
Inches	Centimeters	2.540
Feet	Meters	0.305
Yards	Meters	0.914
Miles	Kilometers	1.609
Square Inches	Square Centimeters	6.451
Square Feet	Square Meters	0.093
Square Yards	Square Meters	0.836
Square Miles	Square Kilometers	2.590
Acres	Square Hectometers	0.405
Cubic Feet	Cubic Meters	0.028
Cubic Yards	Cubic Meters	0.765
Fluid Ounces	Milliliters	29.573
ıts	Liters	0.473
arts	Liters	0.946
allons	Liters	3.785
Ounces	Grams	28.349
Pounds	Kilograms	0.454
Short Tons	Metric Tons	0.907
Pound-Feet	Newton-Meters	1.356
Pounds per Square Inch	Kilopascals	6.895
Miles per Gallon	Kilometers per Liter	0.425
Miles per Hour	Kilometers per Hour	1.609

TO CHANGE	TO	MULTIPLY BY
Centimeters	Inches	0.394
Meters	Feet	3.280
Meters	Yards	1.094
Kilometers	Miles	0.621
Square Centimeters	Square Inches	0.155
Square Meters	Square Feet	10.764
Square Meters	Square Yards	1.196
Square Kilometers	Square Miles	0.386
Square Hectometers	Acres	2.471
Cubic Meters	Cubic Feet	35.315
Cubic Meters	Cubic Yards	1.308
Milliliters	Fluid Ounces	0.034
Liters	Pints	2.113
Liters	Quarts	1.057
'ers	Gallons	0.264
.ms	Ounces	0.035
.ograms	Pounds	2.205
Metric Tons	Short Tons	1.102
Newton-Meters	Pounds-Feet	0.738
Kilopascals	Pounds per Square Inch	0.145
'lometers per Liter	Miles per Gallon	2.354
›meters per Hour	Miles per Hour	0.621

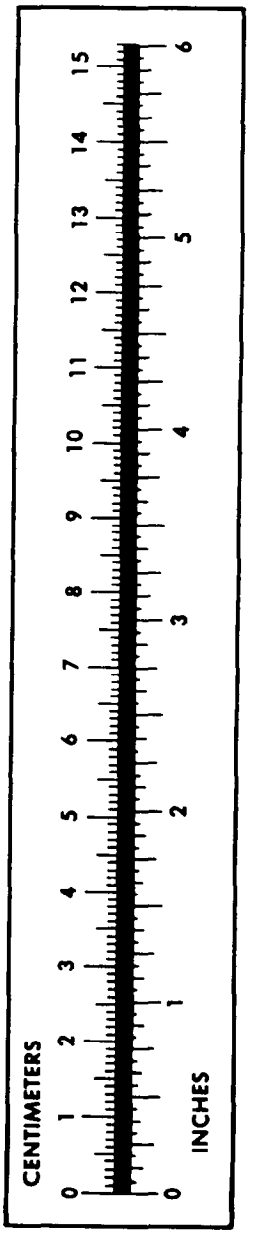

PIN: 025357-002

This fine document...

Was brought to you by me:

Liberated Manuals -- free army and government manuals

Why do I do it? I am tired of sleazy CD-ROM sellers, who take publicly available information, slap “watermarks” and other junk on it, and sell it. Those masters of search engine manipulation make sure that their sites that sell free information, come up first in search engines. They did not create it... They did not even scan it... Why should they get your money? Why are not letting you give those free manuals to your friends?

I am setting this document FREE. This document was made by the US Government and is NOT protected by Copyright. Feel free to share, republish, sell and so on.

I am not asking you for donations, fees or handouts. If you can, please provide a link to liberatedmanuals.com, so that free manuals come up first in search engines:

<A HREF=http://www.liberatedmanuals.com/>Free Military and Government Manuals</A>

- Sincerely
  Igor Chudov
  http://igor.chudov.com/
- Chicago Machinery Movers