**TECHNICAL MANUAL**

# UNIT, DIRECT SUPPORT AND GENERAL SUPPORT MAINTENANCE REPAIR PARTS AND SPECIAL TOOLS LIST FOR

# DRILLING SYSTEM, WELL, ROTARY, TRUCK MOUNTED, AIR TRANSPORTABLE, 600-FOOT CAPACITY MODEL LP-12 NSN 3820-01-246-4276

DISTRIBUTION STATEMENT A: Approved for public release; distribution is unlimited.

* This manual supersedes TM 5-3820-256-24P-2, dated 24 January 1991.

**HEADQUARTERS, DEPARTMENT OF THE ARMY**
**26 FEBRUARY 1993**

TM 5-3820-256-24P-2
C I

CHANGE

NO. 1

HEADQUARTERS
DEPARTMENT OF THE ARMY
WASHINGTON, D.C., 28 May 1997

**Unit, Direct Support and General Support Maintenance**
**Repair Parts and Special Tools List**

**For**

DRILLING SYSTEM, **WELL, ROTARY, TRUCK MOUNTED,**
AIR TRANSPORTABLE, **600-FOOT CAPACITY**
**MODEL LP-12, NSN 3820-01-246-4276**

**DISTRIBUTION STATEMENT A: Approved** for public release; **distribution** is unlimited.

**TM 5-3820-256-24P-2, 26 February 1993, is changed** as follows:

**1. Remove and insert pages as indicated below. The asterick (*) to the left or right** of the **ITEM NO. col-**umn adjacent to the Line **Item** indicates the current change. An illustration change **is indicated** by a **min-iature** pointing hand.

| Remove pages | Insert pages |
|---|---|
| iandii | i and ii |
| **178-t and Figure 179** | 178-1 **and** Figure **179** |
| **179-I** and Figure **180** | **179-1** and Figure **180** |
| **I-7** and 1-8 | **I-7 and I-8** |
| **I-15 and I-16** | **I-15 and I-16** |
| **I-106 and I-106** | **I-105 and I-106** |

**2.** Retain this sheet in **front of** manual **for** reference

TM 5-3820-256-24P-2
C 1

By Order of the Secretary of the Army:

DENNIS J. REIMER
*General, United States Army*
*Chief of Staff*

Official:

JOEL B. HUDSON
*Administrative Assistant to the Secretary of the Army*
03501

DISTRIBUTION:

To be distributed in accordance with DA Form 12-25-E, block no. 4844, requirements for TM 5-3820-256-24P-2.

TECHNICAL MANUAL
NO **5-3820-256-24P-2**

HEADQUARTERS
DEPARTMENT OF THE ARMY
WASHINGTON, D.C., 26 FEBRUARY 1993

Unit, Direct Support and General Support Maintenance
Repair Parts and Special Tools List
for

# DRILLING SYSTEM, WELL, ROTARY, TRUCK MOUNTED, AIR TRANSPORTABLE, COO-FOOT CAPACITY MODEL LP'12, NSN 3820-01-246-4276

**Current • s of 8 January 1M7**

This manual is printed in four volumes as follows: Volume 1, TM 5-3820-256-24P-1, consisting of Table of Contents, Section I, Section II (Functional Group 01), and Section IV.
Volume 2, TM 5-3820-256-24P-2, consisting of Table of Contents, Section I, Section II (Functional Group 02), and Section IV.
Volume 3, TM 5-3820-256-24P-3, consisting of Table of Contents, Section I, Section II (Functional Group 03), and Section IV.
Volume 4, TM 5-3820'256-24P-4. consisting of Table of Contents, Section I, Section II (Functional Group 04 and 99), Section III and Section IV.
The Table of Contents and Section I are identical in all volumes. Each volume contains indexes specific to that volume.

REPORTING ERRORS AND RECOMMENDING IMPROVEMENTS

You can help improve this manual. If you find any mistakes, or if you know of a way to improve these procedures, please let us know. Mail your letter or DA Form 2028 (Recommended Changes to Publications and Blank Forms), or DA Form 2028-2 located m the back of this manual directly to: Commander. US Army Aviation and Troop Command. ATTN: AMSAT-I-MP, 4300 Goodfellow Blvd., St. Louis, MO 63120-1798. You may also submit your recommended changes by E-mail directly to <mpmt%avma28@st-louis-emh7.army.mil>. A reply will be furnished directly to you. Instructions for sending an electronic 2028 may be found at the back of this manual immediately preceding the hard copy 2028.

DISTRIBUTION STATEMENT A: Approved for public release: distribution is unlimited

## TABLE OF CONTENTS


| | Page | Illus/ Figure |
|---|---|---|
| **Section I INTRODUCTION** | 1 | |
| **Section II REPAIR PARTS LIST** | 1-1 | |
| **Group 01 Drilling Machine** | | |
| **0101 Mast** Lighting **Assembly** | 1-1 | 1 |
| **0102 Discharge Piping Assembly** | 2-1 | 2 |
| **010201 Shear Relief Valve** | 3-1 | 3 |
| **010202 Ball Valve (1500 through 3000 PSI WP)** | 4-1 | 4 |
| **Ball Valve (750 through 2000 PSI WP)** | 5-1 | 5 |
| **0103 Mast Assembly** | 6-1 | 6 |


* **This manual supersedes TM 5-3820-256-24P-2 dated 24 January 1991.**

| | | Page | Illus/ Figure |
|---|---|---|---|
| 010301 | Crown Block Assembly | 7-1 | 7 |
| 010302 | Chain Feed Sprocket Assembly | 8-1 | 8 |
| 010303 | Chain Pulldown Assembly | 9-1 | 9 |
| 0104 | Mast Raising Cylinder Assembly | 10-1 | 10 |
| | Mast Cylinder | 11-1 | 11 |
| 0105 | Mud Pump Drive Assembly | 12-1 | 12 |
| 010501 | Mud Pump Drive Clutch | 13-1 | 13 |
| 0106 | Mud Pump Assembly | 14-1 | 14 |
| 0107 | Air Compressor Drive Assembly | 15-1 | 15 |
| 010701 | Air Compressor Assembly | 16-1 | 16 |
| 010701 | Shaft Seal Assembly | 17-1 | 17 |
| 010702 | Compressor Drive Clutch | 18-1 | 18 |
| 010703 | Air Compressor | 19-1 | 19 |
| | Air Filter Assembly | 20-1 | 20 |
| | Air Filter | 21-1 | 21 |
| | Inlet Throttle Assembly | 22-1 | 22 |
| | Air/Oil Separator Assembly | 23-1 | 23 |
| 010702 | Oil Cooler Assembly | 26-1 | 24 |
| 01070201 | Compressor Oil Filter | 25-1 | 25 |
| 01070203 | Thermostatic Bypass Valve | 26-1 | 26 |
| | Cooling Fan Motor | 27-1 | 27 |
| 0108 | Subdrive Assembly | 28-1 | 26 |
| 010801 | Driveshaft Assembly | 29-1 | 29 |
| 010802 | Driveshaft Assembly | 30-1 | 30 |
| 010903 | Power Take-Off Assembly | 31-1 | 31 |
| 010804 | Hydraulic Gear Pump Assembly | 32-1 | 32 |
| 010806 | Displacement Pump Assembly | 33-1 | 33 |
| 070806 | Hydraulic Pump Assembly | 34-1 | 34 |
| 0109 | Drawworks Assembly | 35-1 | 35 |
| 010901 | Bevel Gearbox Assembly | 36-1 | 36 |
| 010902 | Driveshaft | 37-1 | 37 |
| 010903 | Hoist/Auxiliary Drum Brake Assembly | 38-1 | 38 |
| 010904 | Third Drum Brake Assembly | 39-1 | 39 |
| 010905 | Third Drum Clutch Control | 40-1 | 40 |
| 010906 | Hoist/Auxiliary Drum Assembly | 41-1 | 41 |
| 01090601 | Rotorseal Assembly | 42-1 | 42 |
| 01090602 | Hoist/Auxiliary Drum Clutch Assembly | 43-1 | 43 |
| 010907 | Third Drum Assembly | 44-1 | 44 |
| 01090701 | Third Drum Clutch | 45-1 | 45 |
| 0110 | Hydraulic Piping | 46-1 | 46 |

| | | Page | Illus/ Figure |
|---|---|---|---|
| 011001. | Hydraulic Oil Filter | 47-1 | 47 |
| 0111. | Water and Foam Injection Assembly | 48-1 | 48 |
| 011101. | Water Injection Drive Motor | 49-1 | 49 |
| 011102. | Water Injection Pump | 50-1 | 50 |
| 011103. | Foam Pulse Pump | 51-1 | 51 |
| | Water Injection Relief Valve | 52-1 | 52 |
| 0112. | Lubricator Assembly | 53-1 | 53 |
| 011201. | Force Feed Lubricator | 54-1 | 54 |
| 0113. | Breakout Tong Assembly | 55-1 | 55 |
| 0114. | Hydraulic Breakout Assembly | 56-1 | 56 |
| 011401. | Breakout Cylinder | 57-1 | 57 |
| 0115. | Rotary Table Drive Assembly | 58-1 | 58 |
| 011501. | Rotary Table Driveshaft | 59-1 | 59 |
| 011502. | Hydrostatic Motor | 60-1 | 60 |
| 011503. | Manifold Valve Assembly | 61-1 | 61 |
| 011504. | Rotary Table Transmission | 62-1 | 62 |
| | Transmission Shifter | 63-1 | 63 |
| 0116. | Dust Deflector Assembly | 64-1 | 64 |
| 0117. | Transfer Cylinder Assembly | 65-1 | 65 |
| 0118. | Rotary Table Assembly | 66-1 | 66 |
| 0119. | Rotary Table Sliding Base | 67-1 | 67 |
| 0120. | Pulldown Transmission Control | 68-1 | 68 |
| 0121. | Chain Feed Drive Assembly | 69-1 | 69 |
| 012101. | Chain Feed Drive Motor | 70-1 | 70 |
| 012102. | Pulldown Transmission | 71-1 | 71 |
| 0122. | Instrument Panel | 72-1 | 72 |
| 012201. | Compressor Panel | 73-1 | 73 |
| 0123. | Air Piping Assembly | 74-1 | 74 |
| 012301. | Pilotair Control Valve | 75-1 | 75 |
| 012302. | Controlair Control Valve | 76-1 | 76 |
| 012303. | Air Line Conditioner Unit | 77-1 | 77 |
| 01230301. | Air Line Filter | 78-1 | 78 |
| 01230302. | Air Line Lubricator | 79-1 | 79 |
| 01230303. | Air Regulator | 80-1 | 80 |
| 0124. | Throttle Control Assembly | 81-1 | 81 |
| 0125. | Frame Lighting Assembly | 82-1 | 82 |
| 0126. | Splash Guard Assembly | 83-1 | 83 |
| 0127. | Drill Platform Assembly | 84-1 | 84 |
| 0128. | Jacks and Mounting Assembly | 85-1 | 85 |
| 012801. | Leveling Jack Assembly, Rear | 86-1 | 86 |

| | | Page | Illus/ Figure |
|---|---|---|---|
| | 012802. Leveling Jack Assembly, Front | 87-1 | 87 |
| | 0129. Drill Frame Assembly | 88-1 | 88 |
| | 0130. Winch Assembly | 89-1 | 89 |
| | 0131. Winch Motor | 90-1 | 90 |
| | 0132. Control Valve | 90-1 | 90 |
| | 0133. Power Take-Off | 91-1 | 91 |
| | 0134. Hydraulic Pump | 92-1 | 92 |
| | 0135. Hand Jack | 93-1 | 93 |
| | Hand Tools | 94-1 | 94 |
| | Operating Equipment | 95-1 | 95 |
| | Swivel Assembly | 96-1 | 96 |
| | Mud Mixing Hopper | 97-1 | 97 |
| | Desander Unit | 98-1 | 98 |
| | Mud Testing Laboratory | 99-1 | 99 |
| | Hoisting Plug | 100-1 | 100 |
| Group 02. | Drilling Machine Truck | | |
| | 0201. Cab Group | 101-1 | 101 |
| | 020101. Cab Trim, Exterior | 101-1 | 101 |
| | 020102. Cab Trim, Interior | 102-1 | 102 |
| | 020103. Windshield Wiper Installation | 103-1 | 103 |
| | 020104. Heater/Defroster Connections | 104-1 | 104 |
| | 0202. Driver Seat Assembly | 105-1 | 105 |
| | 0203. Brake Pedal Assembly | 106-1 | 106 |
| | 0204. Clutch Pedal Installation | 107-1 | 107 |
| | 0205. Accelerator Pedal Installation | 108-1 | 108 |
| | 0206. Shift Lever Installation | 109-1 | 109 |
| | 0207. Steering Installation | 110-1 | 110 |
| | 0208. Cab Electrical Installation | 111-1 | 111 |
| | Instrument Cluster | 112-1 | 112 |
| | 0209. Steering Gear | 113-1 | 113 |
| | 0210. Engine Cover Installation | 114-1 | 114 |
| | 0211. Exhaust System Installation | 115-1 | 115 |
| | 0212. Radiator | 116-1 | 116 |
| | 021201. Radiator Hose Installation | 116-1 | 116 |
| | Deaeration Tank Installation | 117-1 | 117 |
| | Radiator Installation | 118-1 | 118 |
| | 0213. Steering Pump | 119-1 | 119 |
| | Steering Pump Installation | 119-1 | 119 |
| | Steering Pump Installation | 120-1 | 120 |
| | Steering Pump Assembly | 121-1 | 121 |

| | | Page | Illus/ Figure |
|---|---|---|---|
| | Power Steering Pump | 122-1 | 122 |
| 0214. | Alternator | 123-1 | 123 |
| | Alternator Mounting | 123-1 | 123 |
| | Alternator Assembly | 124-1 | 124 |
| 0215. | Engine Wiring Installation | 125-1 | 125 |
| 021501. | Starting Motor | 126-1 | 126 |
| 0216. | Diesel Engine Assembly | 127-1 | 127 |
| 021601. | Air Cleaner and Mounting | 127-1 | 127 |
| | Ether Start Installation | 128-1 | 128 |
| 021602. | Turbocharger Piping | 129-1 | 129 |
| | Turbocharger Assembly | 130-1 | 130 |
| 021603. | Fuel Pump Access Cover | 131-1 | 131 |
| | Fuel Pump Access Cover | 132-1 | 132 |
| | Fuel Pump Linkage | 133-1 | 133 |
| | Fuel Pump Solenoid | 134-1 | 134 |
| | Fuel Injection Piping | 135-1 | 135 |
| | Fuel Supply Pump | 136-1 | 136 |
| 021604. | Fuel Injection Pump Aneroid | 137-1 | 137 |
| 021605. | Fuel Injection Pump Governor | 138-1 | 138 |
| | Fuel Injection Pump | 139-1 | 139 |
| 021606. | Air Compressor Mounting | 140-1 | 140 |
| | Air Compressor Governor | 141-1 | 141 |
| | Air Compressor | 142-1 | 142 |
| | Air Compressor Strainer | 143-1 | 143 |
| | Engine Mounting | 144-1 | 144 |
| 021607. | Water Pump and Fan Drive | 145-1 | 145 |
| | Idler Pulley and Mounting | 146-1 | 146 |
| | Oil Filter and Connection | 147-1 | 147 |
| 021508. | Oil Cooler and Coolant Filter | 148-1 | 148 |
| 021609. | Intercooler Mounting and Piping | 149-1 | 149 |
| 021610. | Exhaust Manifold | 150-1 | 150 |
| 021611. | Oil Pan | 151-1 | 151 |
| 021612. | Oil Pump | 152-1 | 152 |
| 021613. | Crankcase Front Cover | 153-1 | 153 |
| | Fuel Injection Nozzle | 154-1 | 154 |
| | Hydraulic Head | 155-1 | 155 |
| 021614. | Cylinder Head Group | 156-1 | 156 |
| 021615. | Camshaft and Related Parts | 157-1 | 157 |
| 021616. | Piston and Connecting Rod | 158-1 | 158 |
| 021617. | Crankshaft and Related Parts | 159-1 | 159 |

| | | Page | Illus/ Figure |
|---|---|---|---|
| 021618. | Crankcase Vent | 160-1 | 160 |
| | Crankcase and Related Parts | 161-1 | 161 |
| 0217. | Transmission Assembly | 162-1 | 162 |
| 0218. | Driveshaft-Transmission/Transfer Case | 163-1 | 163 |
| 0219. | Driveshaft-Transfer Case/Front Axle | 164-1 | 164 |
| 0220. | Transfer Case | 165-1 | 165 |
| | Transfer Case Valve | 165-1 | 165 |
| | Transfer Case Installation | 166-1 | 166 |
| | Transfer Case Assembly | 167-1 | 167 |
| 0221. | Clutch Assembly | 168-1 | 168 |
| 0222. | Air Brake Piping | 169-1 | 169 |
| | Parking Brake Control Valve | 170-1 | 170 |
| | Double Check Valve | 171-1 | 171 |
| | Quick Release Valve | 172-1 | 172 |
| | Air Brake Chamber-Forward Rear | 173-1 | 173 |
| | Air Brake Chamber-Rear Rear | 174-1 | 174 |
| | Air Tanks and Mounting | 175-1 | 175 |
| 0223. | Front Wheel, Hub and Drum | 176-1 | 176 |
| 0224. | Rear Wheel, Hub and Drum | 177-1 | 177 |
| 0225. | Front Brakes | 178-1 | 178 |
| | Left Front Brake Assembly | 178-1 | 178 |
| | Right Front Brake Assembly | 179-1 | 179 |
| 0226. | Rear Brakes | 180-1 | 180 |
| | Left Forward Rear Brake Assembly | 180-1 | 180 |
| | Right Forward Rear Brake Assembly | 181-1 | 181 |
| | Left Rear Rear Brake Assembly | 182-1 | 182 |
| | Right Rear Rear Brake Assembly | 183-1 | 183 |
| 0227. | Driveshaft-Transfer Case/Rear Axle | 184-1 | 184 |
| 0228. | Driveshaft-Rear Interaxle | 185-1 | 185 |
| 0229. | Rear Axle | 186-1 | 186 |
| 022901. | Forward Rear Axle Assembly | 186-1 | 186 |
| 022902. | Rear Rear Axle Assembly | 187-1 | 187 |
| | Rear Suspension | 188-1 | 188 |
| 0230. | Front Axle Assembly | 189-1 | 189 |
| | Front Springs and Shocks | 190-1 | 190 |
| | Frame | 191-1 | 191 |
| | Fuel Tank Installation | 191-1 | 191 |
| | Fuel Tank Assembly | 192-1 | 192 |
| | Battery Box Installation | 193-1 | 193 |
| | Frame | 194-1 | 194 |

| | | | Page | Illus/ Figure |
|---|---|---|---|---|
| Group 03. | Rig Tender | | | |
| | 0301. | Crane | 195-1 | 195 |
| | 030101. | Crane Extension Boom Assembly | 195-1 | 195 |
| | 030102. | Crane Main Boom Assembly | 196-1 | 196 |
| | 03010201. | Extension Cylinder Assembly | 197-1 | 197 |
| | 030103. | Crane Turret Assembly | 198-1 | 198 |
| | 03010301. | Main Cylinder Assembly | 199-1 | 199 |
| | 03010202. | Winch Motor Assembly | 200-1 | 200 |
| | 03010303. | Crane Winch Assembly | 201-1 | 201 |
| | | Crane Swivel Manifold | 202-1 | 202 |
| | 030104. | Crane Base Assembly | 203-1 | 203 |
| | 03010401. | Control Valve | 204-1 | 204 |
| | 03010402. | Crane Swing Hydraulic Motor | 205-1 | 205 |
| | | Rotation Gearbox | 206-1 | 206 |
| | 030105. | Remote Control Assembly | 207-1 | 207 |
| | 0302. | Welder-Generator Assembly | 208-1 | 208 |
| | 030201. | Front Panel Assembly | 209-1 | 209 |
| | | Selector Switch | 210-1 | 210 |
| | | Electronic Bracket Assembly | 211-1 | 211 |
| | | Regulator Circuit Card | 212-1 | 212 |
| | | Weld/Idle Circuit Card | 213-1 | 213 |
| | 030202. | Generator Assembly | 214-1 | 214 |
| | 030203. | Engine Assembly | 215-1 | 215 |
| | | Alternator | 215-1 | 215 |
| | | Air Cleaner and Cooling Housing | 216-1 | 216 |
| | | Exhaust Group | 217-1 | 217 |
| | | Starting Motor | 218-1 | 218 |
| | | Regulator Cover | 219-1 | 219 |
| | | Shutdown Device | 220-1 | 220 |
| | | Fuel Injection Pump | 221-1 | 221 |
| | | Fuel Injection | 222-1 | 222 |
| | | Governor | 223-1 | 223 |
| | | Cylinder Cover | 224-1 | 224 |
| | | Valve Drive Group | 225-1 | 225 |
| | | Cylinder Head Group226-1 | 226-1 | 226 |
| | | Oil Filter and Dipstick | 227-1 | 227 |
| | | Oil Pan | 228-1 | 228 |
| | | Oil Pump | 229-1 | 229 |
| | | Pulley and Front Cover | 230-1 | 230 |
| | | Flanged Bearing | 231-1 | 231 |

| | | | Page | Illus/ Figure |
|---|---|---|---|---|
| | | Camshaft and Gear | 232-1 | 232 |
| | | Piston and Connecting Rod | 233-1 | 233 |
| | | Crankshaft and Flywheel | 234-1 | 234 |
| | | Balancer Shaft | 235-1 | 235 |
| | | Crankcase Group | 236-1 | 236 |
| | 0303. | Flood Light Assembly | 237-1 | 237 |
| | 0304. | Cabinet Assembly | 238-1 | 238 |
| | 030401. | Fuel Transfer Pump | 239-1 | 239 |
| | 030402. | Fuel Nozzle | 240-1 | 240 |
| | 030403. | Torch Assembly | 241-1 | 241 |
| | 0305. | Water Pump Assembly | 242-1 | 242 |
| | 030501. | Water Pump | 243-1 | 243 |
| | 030502. | Water Pump Drive Motor | 244-1 | 244 |
| | 0306. | Hydraulic Reservoir Assembly | 245-1 | 245 |
| | 030601. | Control Valve Assembly | 246-1 | 246 |
| | 030602. | Hydraulic Filter Assembly | 247-1 | 247 |
| | 0307. | Front Mounted Winch Assembly | 248-1 | 248 |
| | 030701. | Winch Assembly | 249-1 | 249 |
| | 030702. | Winch Drive Motor | 250-1 | 250 |
| | 0308. | Pump and Power Take-Off Assembly | 251-1 | 251 |
| | 030801. | Hydraulic Pump | 252-1 | 252 |
| | 030802 | Power Take-Off | 253-1 | 253 |
| Group 04. | Rig Tender Truck | | | |
| | 0401. | Front Sheet Metal Group | 254-1 | 254 |
| | | Hood and Grille Installation | 254-1 | 254 |
| | | Stone Deflector Installation | 255-1 | 255 |
| | | Splash Guard Installation | 256-1 | 256 |
| | 0402. | Cab Group | 257-1 | 257 |
| | 040201. | Left Cab Door Assembly | 257-1 | 257 |
| | | Right Cab Door Assembly | 258-1 | 258 |
| | | Cab Interior | 259-1 | 259 |
| | 040202. | Heater Controls | 260-1 | 260 |
| | 040203. | Windshield Wiper and Washer | 261-1 | 261 |
| | 040204. | Heater Assembly | 262-1 | 262 |
| | 040205. | Driver Seat Installation | 263-1 | 263 |
| | | Passenger Seat Installation | 264-1 | 264 |
| | | Heater Duct | 265-1 | 265 |
| | | Engine and Transmission Cover | 266-1 | 266 |
| | | Rear View Mirror and Grab Handle | 267-1 | 267 |
| | | Cab Roof Assembly | 268-1 | 268 |

| | | Page | Illus/ Figure |
|---|---|---|---|
| | Control Console Assembly | 269-1 | 269 |
| | Cab Mounting | 270-1 | 270 |
| | Steer Column and Clutch Shaft Seal | 271-1 | 271 |
| 0403. | Treadle and Brake Valve | 272-1 | 272 |
| 0404. | Clutch Control | 273-1 | 273 |
| 0405. | Accelerator Control | 274-1 | 274 |
| 0406. | Transmission Shift Control | 275-1 | 275 |
| 0407. | Steering Column Installation | 276-1 | 276 |
| 0408. | Cab Electrical Components | 277-1 | 277 |
| | Cab Dome Light | 277-1 | 277 |
| | Instrument Cluster | 278-1 | 278 |
| 0409. | Steering Gear | 279-1 | 279 |
| 0410. | Exhaust System | 280-1 | 280 |
| 0411. | Radiator | 281-1 | 281 |
| 041101. | Radiator Hose Installation | 281-1 | 281 |
| | Deaeration Tank Installation | 282-1 | 282 |
| | Radiator Installation | 283-1 | 283 |
| 0412. | Steering Pump | 284-1 | 284 |
| | Steering Pump Installation | 284-1 | 284 |
| | Steering Pump Installation | 285-1 | 285 |
| | Steering Pump Assembly | 286-1 | 286 |
| | Power Steering Pump | 287-1 | 287 |
| 0413. | Alternator | 288-1 | 288 |
| 041301. | Alternator Mounting | 288-1 | 288 |
| | Alternator Assembly | 289-1 | 289 |
| 0414. | Engine Wiring Installation | 290-1 | 290 |
| 041401. | Starting Motor | 291-1 | 291 |
| 0415. | Diesel Engine Assembly | 292-1 | 292 |
| 041501. | Air Cleaner and Mounting | 292-1 | 292 |
| | Ether Start Installation | 293-1 | 293 |
| 041502. | Turbocharger Piping | 294-1 | 294 |
| | Turbocharger Assembly | 295-1 | 295 |
| 041503. | Fuel Pump Access Cover | 296-1 | 296 |
| | Fuel Pump Access Cover | 297-1 | 297 |
| | Fuel Pump Linkage | 298-1 | 298 |
| | Fuel Injection Solenoid | 299-1 | 299 |
| | Fuel Injection Piping | 300-1 | 300 |
| | Fuel Supply Pump | 301-1 | 301 |
| 041504. | Fuel Injection Pump Aneroid | 302-1 | 302 |
| 041505. | Fuel Injection Pump Governor | 303-1 | 303 |

| | | Page | Illus/ Figure |
|---|---|---|---|
| | Fuel Injection Pump | 304-1 | 304 |
| 041506. | Air Compressor Mounting | 305-1 | 305 |
| | Air Compressor Governor | 306-1 | 306 |
| | Air Compressor | 307-1 | 307 |
| | Air Compressor Strainer | 308-1 | 308 |
| | Engine Mounting | 309-1 | 309 |
| 041507. | Water Pump and Fan Drive | 310-1 | 310 |
| | Idler Pulley and Mounting | 311-1 | 311 |
| | Oil Filter and Connection | 312-1 | 312 |
| 041508. | Oil Cooler and Coolant Filter | 313-1 | 313 |
| 041509. | Intercooler Mounting and Piping | 314-1 | 314 |
| 041510. | Exhaust Manifold | 315-1 | 315 |
| 041511. | Oil Pan | 316-1 | 316 |
| 041512. | Oil Pump | 317-1 | 317 |
| | Crankcase Front Cover | 318-1 | 318 |
| 041513. | Fuel Injection Nozzle | 319-1 | 319 |
| | Hydraulic Head | 320-1 | 320 |
| 041514. | Cylinder Head Group | 321-1 | 321 |
| 041515. | Camshaft and Related Parts | 322-1 | 322 |
| 041516. | Piston and Connecting Rod | 323-1 | 323 |
| 041517. | Crankshaft and Related Parts | 324-1 | 324 |
| 041518. | Crankcase Vent | 325-1 | 325 |
| | Crankcase and Related Parts | 326-1 | 326 |
| 0416. | Transmission Assembly | 327-1 | 327 |
| 0417. | Driveshaft Transmission/Transfer Case | 328-1 | 328 |
| 0418. | Driveshaft-Transfer Case/Front Axle | 329-1 | 329 |
| 0419. | Transfer Case | 330-1 | 330 |
| | Transfer Case Valve | 330-1 | 330 |
| | Transfer Case Installation | 331-1 | 331 |
| | Transfer Case Assembly | 332-1 | 332 |
| 0420. | Clutch Assembly | 333-1 | 333 |
| 0421. | Air Brake Piping | 334-1 | 334 |
| | Parking Brake Control Valve | 335-1 | 335 |
| | Double Check Valve | 336-1 | 336 |
| | Quick Release Valve | 337-1 | 337 |
| | Air Brake Chamber Forward Rear | 338-1 | 338 |
| | Air Brake Chamber-Rear Rear | 339-1 | 339 |
| | Air Tanks and Mounting | 340-1 | 340 |
| 0422. | Front Wheel, Hub and Drum | 341-1 | 341 |
| 0423. | Rear Wheel, Hub and Drum | 342-1 | 342 |

| | | | Page | Illus/ Figure |
|---|---|---|---|---|
| 0424. | Front Brakes | | 343-1 | 343 |
| | | Left Front Brake Assembly | 343-1 | 343 |
| | | Right Front Brake Assembly | 344-1 | 344 |
| 0425. | Rear Brakes | | 345-1 | 345 |
| | | Left Forward Rear Brake Assembly | 345-1 | 345 |
| | | Right Forward Rear Brake Assembly | 346-1 | 346 |
| | | Left Rear Rear Brake Assembly | 347-1 | 347 |
| | | Right Rear Rear Brake Assembly | 348-1 | 348 |
| 0426. | Driveshaft-Transfer Case/Rear Axle | | 349-1 | 349 |
| 0427. | Driveshaft-Rear Interaxle | | 350-1 | 350 |
| 0428. | Rear Axle | | 351-1 | 351 |
| 042801. | | Forward Rear Axle Assembly | 351-1 | 351 |
| 042802. | | Rear Rear Axle Assembly | 352-1 | 352 |
| | | Rear Suspension | 353-1 | 353 |
| 0429. | Front Axle | | 354-1 | 354 |
| | | Front Axle Assembly | 354-1 | 354 |
| | | Front Springs and Shocks | 355-1 | 355 |
| | | Frame | 356-1 | 356 |
| | | Fuel Tank Installation | 356-1 | 356 |
| | | Fuel Tank Assembly | 357-1 | 357 |
| | | Battery Box Installation | 358-1 | 358 |
| Group 99. | Bulk Materials List | | Bulk-1 | |
| Section III. | SPECIAL TOOLS LIST (Not Applicable) | | | |
| Section IV. | CROSS REFERENCE INDEXES (Each volume contains indexes specific to that volume.) | | I-1 | |
| | NATIONAL STOCK NUMBER INDEX | | I-1 | |
| | PART NUMBER INDEX | | I-14 | |
| | FIGURE AND ITEM NUMBER INDEX | | I-72 | |

# UNIT, DIRECT SUPPORT AND GENERAL SUPPORT MAINTENANCE REPAIR PARTS AND SPECIAL TOOLS LIST

## SECTION I INTRODUCTION

1. SCOPE. This RPSTL lists and authorizes spares and repair parts; special tools; special test, measurement, and diagnostic equipment (TMDE); and other special support equipment required for performance of unit, direct support, and general support maintenance of the 600-Foot Well Drilling System. It authorizes the requisitioning, issue, and disposition of spares, repair parts and special tools as indicated by the source, maintenance and recoverability (SMR) codes.

2. GENERAL. In addition to this section, Introduction, this Repair Parts and Special Tools List is divided into the following sections:

a. Section II. Repair Parts List. A list of spares and repair parts authorized by this RPSTL for use in the performance of maintenance. This list also includes parts which must be removed for replacement of the authorized parts. Parts lists are composed of functional groups in ascending alphanumeric sequence, with the parts in each group listed in ascending figure and item number sequence. Bulk materials are listed in item name sequence. Repair parts kits are listed separately in their own functional group within Section II. Repair parts for repairable special tools are also listed in this section. Items are shown in the associated illustration(s)/figure(s).

b. Section III. Special Tools List. A list of special tools, special TMDE, and other special support equipment authorized by this RPSTL (as indicated by Basis of Issue (BOI) information in DESCRIPTION AND USABLE ON CODE column) for the performance of maintenance.

c. Section IV. Cross-references Indexes. A list, in National Item Identification Number (NIIN) sequence, of all National stock numbered items appearing in the listing, followed by a list in alphanumeric sequence of all part numbers appearing in the listings. National stock numbers and part numbers are cross referenced to each illustration figure and item number appearance. The figure and item number index lists figure and item number in alphanumeric sequence and cross references NSN, CAGEC and part number.

3. EXPLANATION OF COLUMNS (Sections II AND III).

a. ITEM NO. (Column (1)). Indicates the number used to identify items called out in the illustration.

b. SMR Code (Column (2)). The Source, Maintenance, and Recoverability (SMR) code is a 5-position code containing supply/requisitioning information, maintenance category authorization criteria, and disposition instruction, as shown in the following breakout:

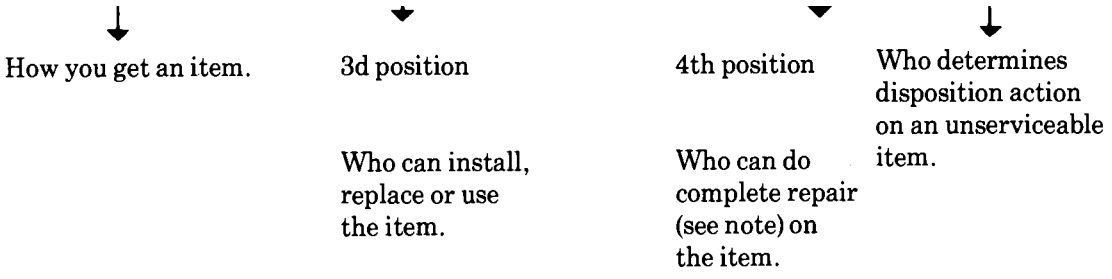

*Complete Repair: Maintenance capacity, capability, and authority to perform all corrective maintenance tasks of the "Repair" function in a use/user environment in order to restore serviceability to a failed item.

(1) **Source Code**. The source code tells you how to get an item needed for maintenance, repair, or overhaul of an end item/equipment. Explanations of source codes follows:

| Code | Explanation |
|---|---|
| PA<br>PB<br>PC**<br>PD<br>PE<br>PF<br>PG | Stocked items; use the applicable NSN to requested/requisition items with these source codes. They are authorized to the category indicated by the code entered in the 3rd position of the SMR code.<br><br>NOTE: Items coded PC are subject to deterioration. |
| KD<br>KF<br>KB | Items with these codes are not to be requested/requisitioned individually. They are part of a kit which is authorized to the maintenance category indicated in the 3rd position of the SMR code. The complete kit must be requisitioned and applied. |
| MO- (Made at org/AVUM Level)<br>MP- (Made at DS/AVUM Level)<br>MH- (Made at GS Level)<br>ML- (Made at Specialized Repair Activity (SRA))<br>MD- (Made at Depot) | Items with these codes are not to be requested/requisitioned individually. They must be made from bulk material which is identified by the part number in the DESCRIPTION and USABLE ON CODE (UOC) column and listed in the Bulk Material group of the repair parts list in this RPSTL. If the item is authorized to you by the 3rd position code of the SMR code, but the source code indicates it is made at a higher level, order the item from the higher level of maintenance. |
| AO- (Assembled by org/AVUM Level)<br>AF- (Assembled by DS/AVIM Level<br>AH- (Assembled by GS Category)<br>AL- (Assembled by SRA)<br>AD- (Assembled by Depot) | Items with these codes are not to be requested/ requisitioned individually. The parts that make up the assembled item must be requisitioned or fabricated and assembled at the level of maintenance indicated by the source code. If the 3rd position code of the SMR code authorizes you to replace the item, but the source code indicates the items are assembled at a higher level, order the item from the higher level of maintenance. |

XA- Do not requisition "XA"-coded item. Order its next higher assembly. (Also, refer to the NOTE below.)

XB- If an "XB" item is not available from salvage, order it using the CAGEC and part number given.

XC- Installation drawing, diagram, instruction sheet, field service drawing, that is identified by Reciprocating Compressor manufacturer's part number.

XD- Item is not stocked. Order an "XD"-coded item through normal supply channels using the CAGEC and part number given if no NSN is available.

**NOTE**

Cannibalization or controlled exchange, when authorized, may be used as a source of supply for items with the above source codes, except for those source coded "XA" or those aircraft support items restricted by requirements of AR 750-1.

(2) **Maintenance Code**. Maintenance codes tells you the level(s) of maintenance authorized to USE and REPAIR support items. The maintenance codes are entered in the third and fourth positions of the SMR code as follows:

(a)The maintenance code entered in the third position tells you the lowest maintenance level authorized to remove, replace, and use an item. The maintenance code entered in the third position will indicate authorization to one of the following levels of maintenance.

| Code | Application/Explanation |
|---|---|
| C- | Crew or operator maintenance done with unit or aviation unit maintenance. |
| O- | Unit or aviation unit category can remove, replace, and use the item. |
| F- | Direct support or aviation intermediate level can remove, replace, and use the item. |
| H- | General support level can remove, replace, and use the item. |
| L- | Specialized repair activity can remove, replace, and use the item. |
| D- | Depot level can remove, replace, and use the item. |

(b) The maintenance code entered in the fourth position tells whether or not the item is to be repaired and identifies the lowest maintenance level with the capability to do complete repair (i.e., perform all authorized repair functions.) NOTE: Some limited repair may be done on the item at a lower level of maintenance, if authorized by the Maintenance Allocation Chart (MAC) and SMR codes. This position will contain one of the following maintenance codes.

| Code | Application/Explanation |
|---|---|
| O- | Unit or (aviation unit) is the lowest level that can do complete repair of the item. |
| F- | Direct support or aviation intermediate is the lowest level that can do complete repair of the item. |
| H- | General Support is the lowest level that can do complete repair of the item. |
| L- | Specialized repair activity is the lowest level that can do complete repair of the item. |
| D- | Depot is the lowest level that can do complete repair of the item. |
| Z- | Nonreparable. No repair is authorized. |
| B- | No repair is authorized. (No parts or special tools are authorized for the maintenance of a "B" coded Item). However, the item may be reconditioned by adjusting, lubricating, etc., at the user level. |

(3) **Recoverability Code**. Recoverability codes are assigned to items to indicate the disposition action on unserviceable items. The recoverability code is entered in the fifth position of the SMR Code as follows:

| Recoverability Codes | Application/Explanation |
|---|---|
| Z- | Nonreparable item. When unserviceable, condemn and dispose of the item at the level of maintenance shown in 3d position of SMR Code. |
| O- | Reparable item. When not economically reparable, condemn and dispose of the Item unit or aviation unit level |
| F- | Reparable item. When uneconomically reparable, condemn and dispose of the item at the direct support or aviation intermediate level |
| H- | Reparable item. When uneconomically reparable, condemn and dispose of the item at the general support level. |
| D- | Reparable item. When beyond lower level repair capability, return to depot. Condemnation and disposal of item not authorized below depot level. |
| L- | Reparable item. Condemnation and disposal not authorized below specialized repair activity (SRA). |
| A- | Item requires special handling or condemnation procedures because of specific reasons (e.g., precious metal content, high dollar value, critical material, or hazardous material). Refer to appropriate manuals/directives for specific instructions. |

c. CAGEC (Column (3)). The Commercial and Government Entity Code (CAGEC) is a 5-digit numeric code which is used to identify the manufacturer, distributor, or Government agency, etc., that supplies the item.

d. PART NUMBER (Column (4)). Indicates the primary number used by the manufacturer, (individual, company, firm, corporation, or Government activity), which controls the design and characteristics of the item by means of its engineering drawings, specifications standards, and inspection requirements to identify an item or range of items.

**NOTE**

When you use an NSN to requisition an item, the item you receive may have a different part number from the part ordered.

e. DESCRIPTION AND USABLE ON CODE (UOC) (Column (5). This column includes the following information:

(1) The Federal item name and, when required, a minimum description to identify the item.
(2) The physical security classification of the item is indicated by the parenthetical entry, e.g., PhySec C1 - Confidential, PhySec C1 (S) - Secret, PhySec C1 (T) - Top Secret.
(3) Items that are included in kits and sets are listed below the name of the kit or set.
(4) Spare/repair parts that make up an assembled item are listed immediately following the assembled item line entry.
(5) Part numbers for bulk materials are referenced in this column in the line item entry for the item to be manufactured/fabricated.
(6) When the item is not used with all serial numbers of the same model, the effective serial numbers are shown on the last line(s) of the description (before UOC).
(7) The usable on code, when applicable (see paragraph 5, Special Information).

(8) In the Special Tools List section, the basis of issue (BOI) appears as the last line(s) in the entry for each special tool, special TMDE, and other special support equipment. When density of equipments supported exceeds density spread indicated in the basis of issue, the total authorization is increased proportionately.

(9) The statement "END OF FIGURE" appears just below the last item description in Column 5 for a given figure in both Section II and Section III.

(10) The indenture, shown as dots appearing before the repair part, indicates that the item Is a repair part of the next higher assembly.

f. QTY (Column (6)). The QTY (quantity per figure column) indicates the quantity of the item used in the breakout shown on the illustration figure, which is prepared for a functional group, subfunctional group, or an assembly. A"V" appearing in this column in lieu of a quantity indicates that the quantity is variable and may vary from application to application.

4. EXPLANATION OF COLUMNS (SECTION IV).

a. NATIONAL STOCK NUMBER (NSN) INDEX.

(1) STOCK NUMBER column. This column lists the NSN by National item identification number (NIIN) sequence. The NIIN consists of the last nine digits of the NSN, i.e.

| NSN |
|---|
| 5305-01-574-1467 |
| NIIN |

When using this column to locate an item, ignore the first 4 digits of the NSN. However, the complete NSN should be used when ordering items by stock number.

(2) FIG. column. This column lists the number of the figure where the item is identified/located. The figures are in numerical order in Section II and Section III.

(3) ITEM column. The item number identifies the item associated with the figure listed in the adjacent FIG. column. This item is also identified by the NSN listed on the same line.

b. PART NUMBER INDEX. Part numbers in this index are listed by part number in ascending alphanumeric sequence (i e., vertical arrangement of letter and number combination which places the first letter or digit of each group in order A through Z, followed by the numbers 0 through 9 and each following letter or digit in like order).

(1) CAGEC column. The Commercial and Government Entity Code (CAGEC) is a 5-digit numeric code used to identify the manufacturer, distributor, or Government agency, etc., that supplies the item.

(2) PART NUMBER column. Indicates the primary number used by the manufacturer (individual, firm, corporation, or Government activity), which controls the design and characteristics of the item by means of its engineering drawings, specifications standards, and inspection requirements to identify an item or range of items.

(3) STOCK NUMBER column. This column lists the NSN for the associated part number and manufacturer identified in the PART NUMBER and CAGEC columns to the left.

(4) FIG. column. This column lists the number of the figure where the item is identified/located in Sections II and III.

(5) ITEM column. The item number is that number assigned to the item as it appears in the figure referenced in adjacent figure number column.

c. FIGURE AND ITEM NUMBER INDEX.

(1) FIG. column. This column lists the number of the figure where the item is identified/located in Section II and III.

(2) ITEM column. The item number is that number assigned to the item as it appears in the figure referenced in the adjacent figure number column.

(3) STOCK NUMBER column. This column lists the NSN for the item.

(4) CAGEC column. The Commercial and Government Entity Code (CAGEC) is a 5-digit numeric code used to identify the manufacturer, distributor, or Government agency, etc., that supplies the item.

(5) PART NUMBER column. Indicates the primary number used by the manufacturer (individual, firm, corporation, or Government activity), which controls the design and characteristics of the item by means of its engineering drawings, specifications standards, and inspection requirements to identify an item or range of items.

5. SPECIAL INFORMATION.

a. USABLE ON CODE. The usable on code appears in the lower corner of the Description column heading. Usable on codes are shown as "UOC:.." in the Description Column justified left) on the last line applicable item description/nomenclature. Uncoded items are applicable to all models.

b. ASSOCIATED PUBLICATIONS. The publications listed below pertains to the 600-Foot Well Drilling System and its components.

| Publication | Short Title |
|---|---|
| TM 5-3820-256-24P-1 | Drilling Machine |
| TM 5-3820-256-24P-2 | Drilling Machine Truck |
| TM 5-3820-256-24P-3 | Drilling Rig Tender |
| TM 5-3820-256-24P-4 | Drilling Rig Tender Truck |
| TM 5-3820-256-10 | Operation, Preventive Maintenance and Lubrication of the Well Drilling System |
| TM 5-3820-256-24-1 | Drilling Machine |
| TM 5-3820-256-24-2 | Support Vehicle |
| TM 5-3820-256-24-3 | Drilling System Trucks |
| TM 5-3820-256-24-4 | Drilling System Trucks |
| TM 5-3820-256-24-5 | Drilling System Trucks |
| TM 5-3820-256-24-6 | Well Completion Kit |

**NOTE**

**Associated publications shall not be listed here in combined narrative and RPSTL listings**

c. ILLUSTRATIONS - LISTING. The illustrations in this RPSTL are identical to those published in TM_____. (higher level P manuals) Only those parts codes "C" or "O" in the third position of the SMR Code are listed in the tabular listing; therefore, there may be a break in the item number sequence. Only illustrations containing Unit or Aviation unit authorized items appear in this RPSTL.

**NOTE**

**The above statements shall appear in UNIT or aviation unit level RPSTL's only.**

6. HOW TO LOCATE REPAIR PARTS.
    a. When National Stock Number or Part Number is NOT Known.
        (1) First. Using the table of contents, determine the assembly group or subassembly group to which the item belongs. This is necessary since figures are prepared for assembly groups and subassembly groups, and listings are divided into the same groups.
        (2) Second. Find the figure covering the assembly group or subassembly group to which the item belongs.
        (3) Third. Identify the item on the figure and note the item number.
        (4) Fourth. Refer to the Repair Parts List for the figure to find the part number for the item number noted on the figure.
        (5) Fifth. Refer to the Part Number Index to find the NSN, if assigned.
    b. When National Stock Number or Part Number is Known.
        (1) First. Using the Index of National Stock Numbers and Part Numbers, find the pertinent National Stock Number or Part Number. The NSN index is in National Item Identification Number (NIIN) sequence (see paragraph c-4a.(1)). The part numbers in the Part Number index are listed in ascending alphanumeric sequence (see paragraph c-4.b). Both indexes cross-reference you to the illustration figure and item number of the item you are looking for.
        (2) Second. After finding the figure and item number, verify that the item is the one you are looking for, then locate the item number in the repair parts list for the figure.
7. ABBREVIATIONS. Abbreviations used in this manual are listed in MIL-STD-1 2.

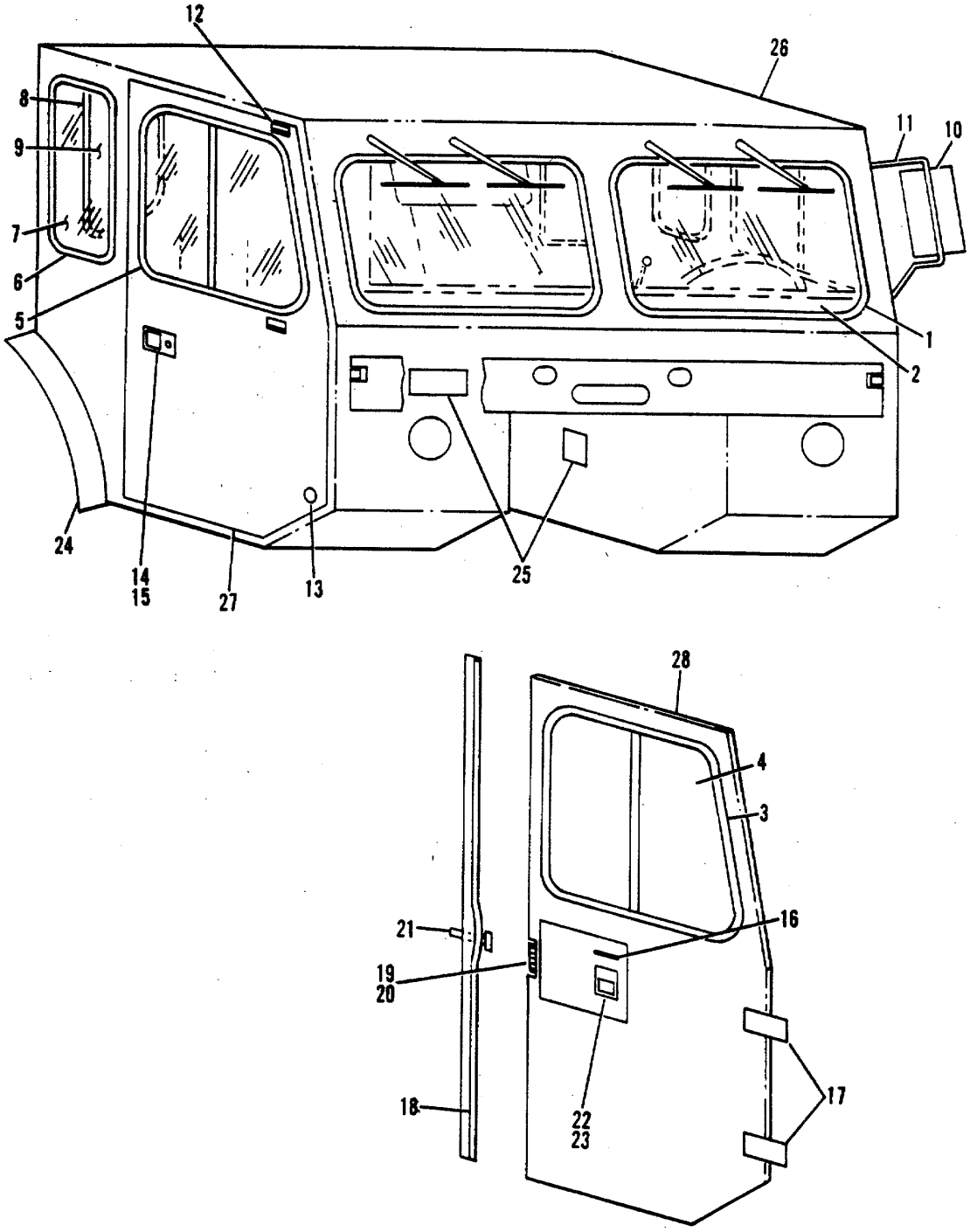


*Figure 101. Cab Trim - Exterior*

| (1) ITEM NO | (2) SMR CODE | (3) CAGEC | (4) PART NUMBER | (5) DESCRIPTION AND USABLE ON CODES (UOC) | (6) QTY |
|---|---|---|---|---|---|
| | | | | GROUP 0201 CAB/BODY GROUP | |
| | | | | FIG. 101 CAB TRIM - EXTERIOR | |
| | XCFFF | 7T253 | SD-16 | .CAB TRIM, EXTERIOR | 1 |
| 1 | MFFZZ | 7T253 | 663 | ..SEAL, WINDSHIELD MAKE FROM SEAL (82654) 75000533 | 2 |
| 2 | XBFZZ | 7T253 | 909 | ..GLASS, WINDSHIELD | 2 |
| 3 | MFFZZ | 7T253 | 796 | ..SEAL, WINDOW MAKE FROM SEAL (82654) 75000533 | 2 |
| 4 | XBFZZ | 63108 | 602-1121A | ..WINDOW, SLIDE, LH | 1 |
| 5 | XBFZZ | 63108 | 603-1121A | ..WINDOW, SLIDE, RH | 1 |
| 6 | MFFZZ | 7T253 | 664 | ..SEAL, SIDE WINDOW MAKE FROM SEAL (82654) 75000533 | 2 |
| 7 | XBFZZ | 7T253 | 593 | ..GLASS, SIDE WINDOW | 2 |
| 8 | MFFZZ | 7T253 | 797 | ..SEAL, WINDOW MAKE FROM SEAL (82654) 75000533 | 2 |
| 9 | XBFZZ | 7T253 | 594 | ..GLASS, REAR | 2 |
| 10 | PBFZZ | 55262 | MC716-S | ..MIRROR HEAD, VEHICUL | 2 |
| 11 | XBFZZ | 1CU61 | 242-1580 | ..ARM, MIRROR | 2 |
| 12 | XBFZZ | 7T253 | 795 | ..BRACKET, MIRROR | 4 |
| 13 | PAFZZ | 75175 | 330-0100-B | ..REFLECTOR, INDICATIN | 2 |
| 14 | XBFZZ | 19220 | SS-13-4972-51UL | ..DOOR PADDLE, LH | 1 |
| 15 | XBFZZ | 19220 | SS-13-4972-51UR | ..DOOR PADDLE, RH | 1 |
| 16 | XBFZZ | 6B565 | 9611 | ..HANDLE, GRAB | 2 |
| 17 | XBFZZ | 1FM60 | 7INX1.75IN | ..STRAP, DOOR | 4 |
| 18 | MFFZZ | 7T253 | 668 | ..SEAL, DOOR MAKE FROM SEAL (82654) 75000358 | 2 |
| 19 | XBFZZ | 19220 | 1-400-L25 | ..LOCK, ROTARY, LH | 1 |
| 20 | XBFZZ | 19220 | 1-400-R25 | ..LOCK, ROTARY, RH | 1 |
| 21 | XBFZZ | 19220 | 400-52 | ..BOLT, STRIKER | 2 |
| 22 | XBFZZ | 19220 | 13-4972-SS-50L | ..DOOR PADDLE, LH | 1 |
| 23 | XBFZZ | 19220 | 13-4972-SS-50R | ..DOOR PADDLE, RH | 1 |
| 24 | XBFZZ | 98933 | 32214 | ..EXTENSION, RUBBER | 2 |
| 25 | XBFZZ | 3J335 | 622-503 | ..VENT, FRESH AIR | 2 |
| 26 | XBFZZ | 7T253 | 700 | ..CAB | 1 |
| 27 | XBFZZ | 7T253 | 302 | ...DOOR, RH | 1 |
| 28 | XBFZZ | 7T253 | 303 | ...DOOR, LH | 1 |
| | | | | END OF FIGURE | |

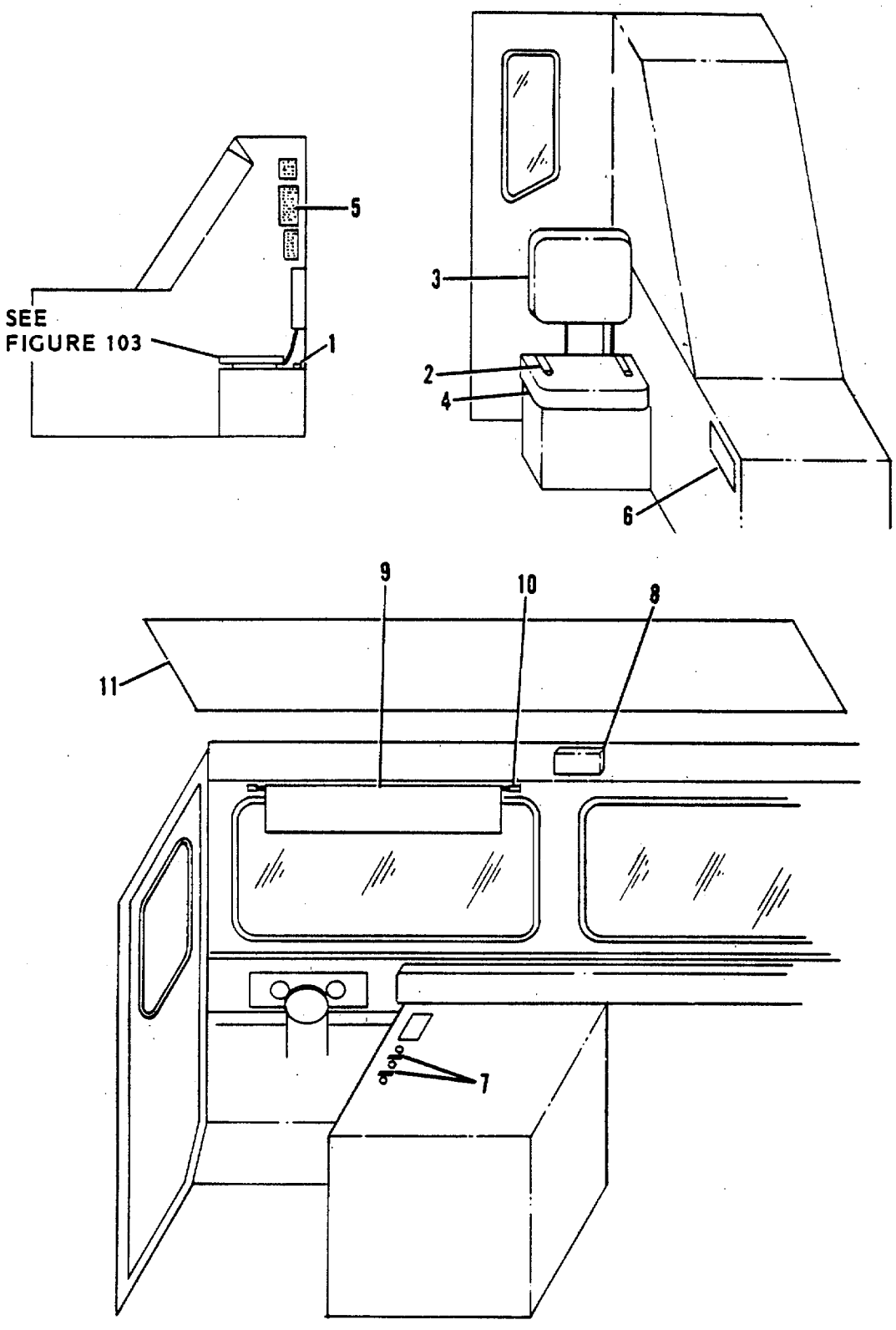


*Figure 102. Cab Trim - Interior*

| (1) ITEM NO | (2) SMR CODE | (3) CAGEC | (4) PART NUMBER | (5) DESCRIPTION AND USABLE ON CODES (UOC) | (6) QTY |
|---|---|---|---|---|---|
| | | | | GROUP 0201 CAB/BODY GROUP | |
| | | | | FIG. 102 CAB TRIM - INTERIOR | |
| | XCOOO | 7T253 | SD-17 | .CAB TRIM, INTERIOR | 1 |
| 1 | PAOZZ | 89346 | RE268330 | ..SHIELD, EXPANSION | 4 |
| 2 | PAOZZ | 26786 | J1800AF60 | ..BELT, VEHICULAR SAFE | 2 |
| 3 | XBOZZ | 7T253 | 671 | ..CUSHION, BACK | 1 |
| 4 | XBOZZ | 7T253 | 670 | ..CUSHION, SEAT | 1 |
| 5 | XBOZZ | 7T253 | 554 | ..DECAL, INFORMATION | 1 |
| 6 | XBOZZ | 89346 | 451497C1 | ..PLATE, COVER | 1 |
| 7 | XBOZZ | 7T253 | 553 | ..DECAL, INFORMATION | 1 |
| 8 | PBOZZ | 7T253 | 798 | ..COVER, ACCESS | 2 |
| 9 | PAOZZ | 89346 | 490687C1 | ..VISOR, SUN, VEHICLE | 2 |
| 10 | XBOZZ | 7T253 | 465 | ..CLIP, VISOR | 2 |
| 11 | XBOZZ | 7T253 | 661 | ..HEADLINER, CAB | 1 |
| | | | | END OF FIGURE | |

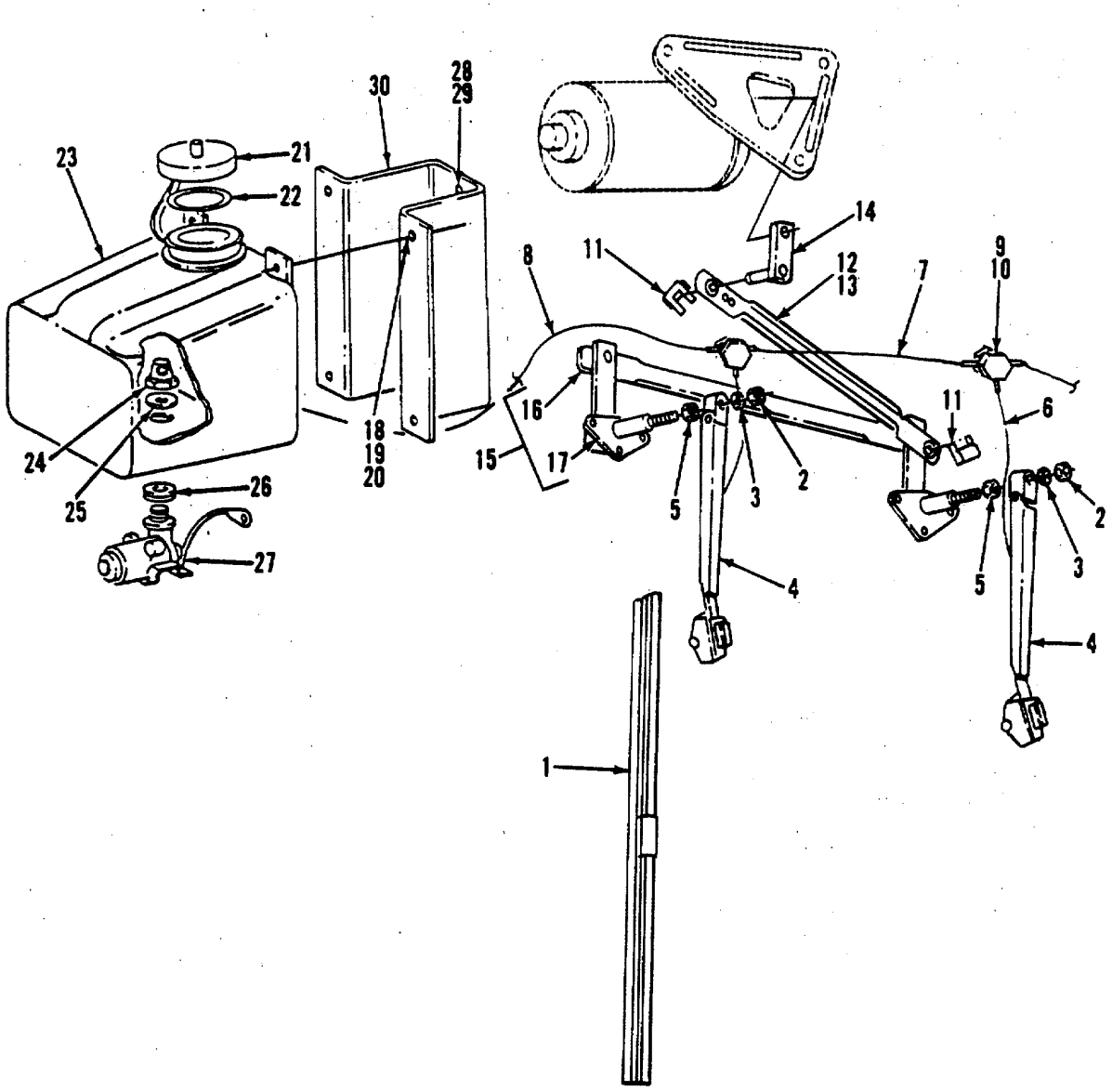


*Figure 103. Windshield Wiper Installation*

| (1) ITEM NO | (2) SMR CODE | (3) CAGEC | (4) PART NUMBER | (5) DESCRIPTION AND USABLE ON CODES (UOC) | (6) QTY |
|---|---|---|---|---|---|
| | | | | GROUP 0201 CAB/BODY GROUP | |
| | | | | FIG. 103 WINDSHIELD.WIPER INSTALLATION | |
| | XCOOO | 7T253 | SD-39 | .WIPER INSTL | 1 |
| 1 | PAOZZ | 89346 | 475925C1 | ..BLADE, WINDSHIELD WI | 4 |
| 2 | PAOZZ | 89346 | 966782R1 | ..NUT | 4 |
| 3 | PAOZZ | 96906 | MS35333-42 | ..WASHER, LOCK | 4 |
| 4 | PAOZZ | 05409 | 819 | ..ARM, WINDSHIELD WIPE | 4 |
| 5 | PAOZZ | 29930 | 339544C1 | ..NUT, PLAIN, CAP | 4 |
| 6 | MFFZZ | 7T253 | 881 | ..HOSE, NONMETALLIC MAKE FROM HOSE (79470) PT20004NA. | 4 |
| 7 | MFFZZ | 7T253 | 880 | HOSE, NONMETALLIC MAKE FROM HOSE (79470) PT20004NA | 3 |
| 8 | MFFZZ | 7T253 | 879 | HOSE, NON, METALLIC MAKE FROM HOSE (79470) PT20004NA | 1 |
| 9 | XBOZZ | 89346 | 437692C1 | ..BLOCK, WATER OUTLET | 4 |
| 10 | XBOZZ | 89346 | 875520C1 | ..PACKING, PREFORMED | 4 |
| 11 | XBOZZ | 89346 | 162304R1 | ..CLIP | 4 |
| 12 | XBOZZ | 7T253 | 823 | ..LINKAGE, WIPER | 1 |
| 13 | XBOZZ | 7T253 | 1146 | ..LINKAGE, WIPER | 1 |
| 14 | XBOZZ | 89346 | 491673C1 | ..LEVER, DRIVE | 2 |
| 15 | XBOZZ | 7T253 | 821 | ..PIVOT ASSY | 2 |
| 16 | XBOZZ | 7T253 | 1147 | ..LINKAGE | 1 |
| 17 | XBOZZ | 7T253 | 1148 | ..PIVOT | 2 |
| 18 | PAOZZ | 89346 | 167263 | ..SCREW, CAP, HEXAGON H | 4 |
| 19 | PAOZZ | 89346 | 25707R1 | ..WASHER, FLAT | 4 |
| 20 | PAOZZ | 96906 | MS35338-44 | ..WASHER, LOCK | 4 |
| 21 | PAOZZ | 89346 | 312690C91 | ..CAP, FILLER OPENING | 1 |
| 22 | PAOZZ | 89346 | 404619C1 | ..GASKET | 1 |
| 23 | PAOZZ | 89346 | 394120C91 | ..WINDSHIELD WASHER A | 1 |
| 24 | PAOZZ | 89346 | 404621C1 | ..STRAINER ELEMENT, SE | 1 |
| 25 | PAOZZ | 89346 | 404620C1 | ..WASHER | 1 |
| 26 | PAOZZ | 89346 | 404617C1 | ..GROMMET, METALLIC | 1 |
| 27 | PAOZZ | 89346 | 404618C1 | ..PUMP UNIT, CENTRIFUG | 1 |
| 28 | PAOZZ | 89346 | 25228R1 | ..SCREW, CAP, HEXAGON H | 2 |
| 29 | PAOZZ | 96906 | MS35338-45 | ..WASHER, LOCK | 2 |
| 30 | XBOZZ | 89346 | 488737C2 | ..BRACKET MOUNTING | 1 |
| | | | | END OF FIGURE | |

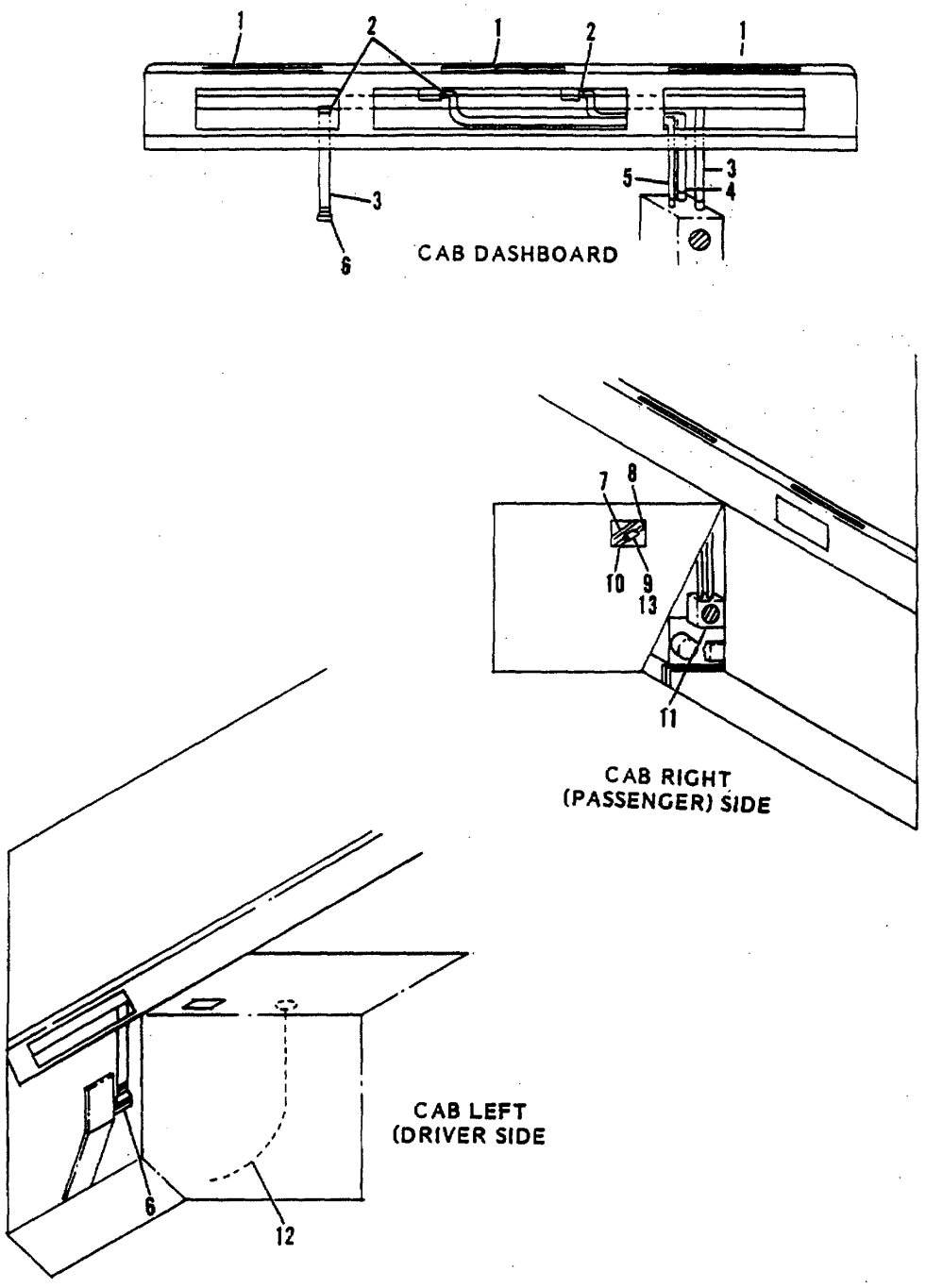


*Figure 104. Heater/Defroster Connections*

| (1) ITEM NO | (2) SMR CODE | (3) CAGEC | (4) PART NUMBER | (5) DESCRIPTION AND USABLE ON CODES (UOC) | (6) QTY |
|---|---|---|---|---|---|
| | | | | GROUP 0201 CAB/BODY GROUP | |
| | | | | FIG. 104 HEATER/DEFROSTER CONNECTIONS | |
| | XCFFF | 7T253 | SD-18 | .HEATER CONNECTIONS | 1 |
| 1 | XBFZZ | 7T253 | 518 | ..DIFFUSER, AIR | 3 |
| 2 | XBFZZ | 7T253 | 706 | ..CLAMP, HOSE | 8 |
| 3 | XBFZZ | 7T253 | 814 | ..HOSE, DUCT | 2 |
| 4 | XBFZZ | 7T253 | 815 | ..HOSE, DUCT | 1 |
| 5 | XBFZZ | 7T253 | 816 | ..HOSE, DUCT | 1 |
| 6 | XBFZZ | 7T253 | 813 | ..HOUSING, DIFFUSER | 1 |
| 7 | XBFZZ | 7T253 | 812 | ..HOSE, NONMETALLIC | 1 |
| 8 | XBFZZ | 7T253 | 810 | ..HOSE, NONMETALLIC | 1 |
| 9 | XBFZZ | 1JT45 | TC01010 | ..VALVE, SHUTOFF | 1 |
| 10 | XBFZZ | 7T253 | 811 | ..HOSE, NONMETALLIC | 1 |
| 11 | XBFZZ | 1JT45 | PD250 | ..LOUVER, ROUND | 1 |
| 12 | XBFZZ | 7T253 | 515 | ..CABLE, CONTROL | 1 |
| 13 | XBFZZ | 7T253 | 701 | ..CLAMP, HOSE | 4 |
| | | | | END OF FIGURE | |

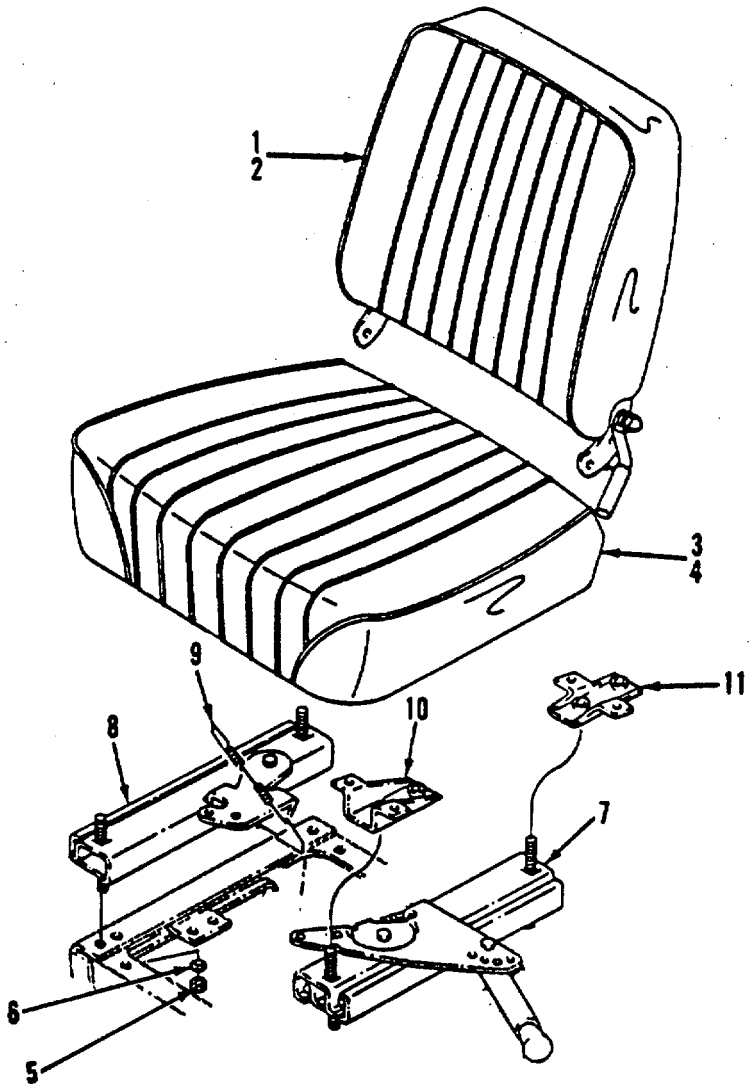


*Figure 105. Driver Seat Assembly*

| (1) ITEM NO | (2) SMR CODE | (3) CAGEC | (4) PART NUMBER | (5) DESCRIPTION AND USABLE ON CODES (UOC) | (6) QTY |
|---|---|---|---|---|---|
| | | | | GROUP 0202 DRIVER SEAT ASSEMBLY | |
| | | | | FIG. 105 DRIVER SEAT ASSEMBLY | |
| | AOOOO | 89346 | 489904C92 | ..SEAT ASSY, DRIVER | 1 |
| 1 | XBOZZ | 89346 | 489908C91 | ...CUSHION, BACK | 1 |
| 2 | XBOZZ | 89346 | 490661C1 | ...COVER, CUSHION | 1 |
| 3 | XBOZZ | 89346 | 489906C92 | ...CUSHION, SEAT | 1 |
| 4 | XBOZZ | 89346 | 490662C1 | ...COVER, CUSHION | 1 |
| 5 | PAOZZ | 96906 | MS51968-5 | ..NUT, PLAIN, HEXAGON | 4 |
| 6 | PAOZZ | 96906 | MS35338-45 | ..WASHER, LOCK | 4 |
| 7 | XBOZZ | 89346 | 467842C91 | ..ADJUSTER, SEAT, LH | 1 |
| 8 | XBOZZ | 89346 | 434955C91 | ..ADJUSTER, SEAT, RH | 1 |
| 9 | XBOZZ | 89346 | 584702C1 | ..WIRE, RELEASE | 1 |
| 10 | XBOZZ | 89346 | 467880C1 | ..BRACKET, REAR | 2 |
| 11 | XBOZZ | 89346 | 467879C1 | ..BRACKET | 2 |
| .. | | | | | |
| | | | | END OF FIGURE | |

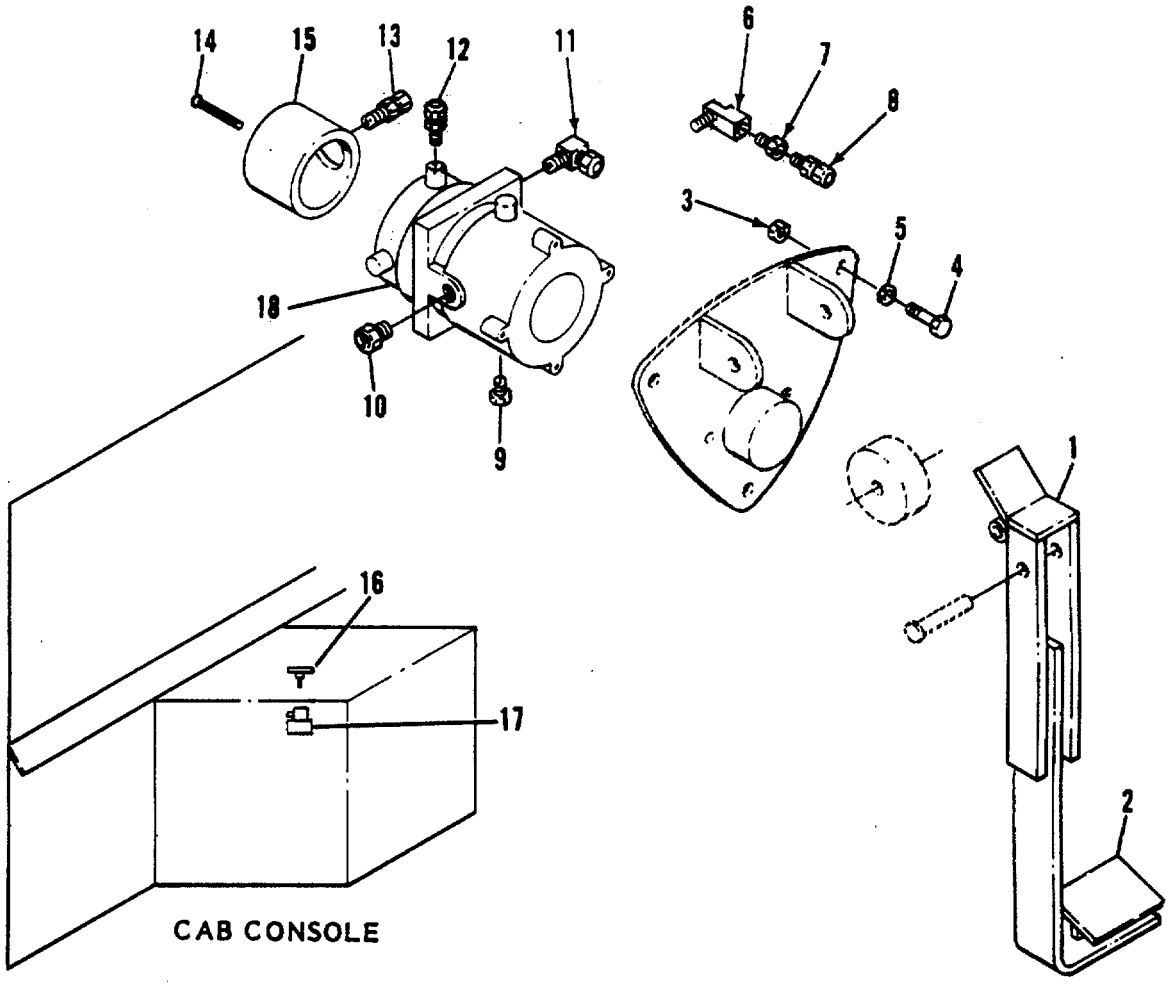


*Figure 106. Brake Pedal Installation*

| (1) ITEM NO | (2) SMR CODE | (3) CAGEC | (4) PART NUMBER | (5) DESCRIPTION AND USABLE ON CODES (UOC) | (6) QTY |
|---|---|---|---|---|---|
| | | | | GROUP 0203 BRAKE PEDAL ASSEMBLY | |
| | | | | FIG. 106 BRAKE PEDAL INSTALLATION | |
| | XCFFF | 7T253 | SD-13 | .PEDAL INSTL, BRAKE | 1 |
| 1 | PBFZZ | 7T253 | 842 | ..PEDAL ASSY, BRAKE | 1 |
| 2 | PBFZZ | 31007 | 166880R1 | ..PAD, PEDAL | 1 |
| 3 | PAFZZ | 96906 | MS51922-13 | ..NUT, SELF-LOCKING, HE | 3 |
| 4 | PAFZZ | 80204 | B1821BH031C150N | ..BOLT, MACHINE | 3 |
| 5 | PAFZZ | 96906 | MS27183-11 | ..WASHER, FLAT | 3 |
| 6 | PBFZZ | 79470 | 3400X6 | ..ELBOW, PIPE | 1 |
| 7 | XBFZZ | 79470 | 3200X8X6 | ..BUSHING, PIPE | 1 |
| 8 | XBFZZ | 79470 | 1468X12 | ..ADAPTER, PIPE TO TUB | 1 |
| 9 | PBFZZ | 79470 | 3152X6 | ..PLUG, PIPE | 2 |
| 10 | PBFZZ | 79470 | 3220X6X4 | ..BUSHING, PIPE | 2 |
| 11 | XBFZZ | 79470 | 1469X10X6 | ..ELBOW, PIPE TO TUBE | 1 |
| 12 | XBFZZ | 79470 | 1462X10 | ..UNION, TUBE | 2 |
| 13 | XBFZZ | 79470 | 1468X8X4 | ..ADAPTER, PIPE | 1 |
| 14 | PAFZZ | 96906 | MS35649-362 | ..SCREW, MACHINE | 1 |
| 15 | XBFZZ | 7T253 | 846 | ..CAP ASSY | 1 |
| 16 | PBFZZ | 89346 | 482528C1 | ..KNOB | 1 |
| 17 | PBFZZ | 89346 | 592699C1 | ..VALVE, SAFETY RELIEF | 1 |
| | PBFZZ | 40342 | N20954D | ..VALVE, CHECK | 1 |
| 18 | PBFZZ | 40342 | N30072ED | ..TREADLE ASSY, BRAKE | 1 |
| | | | | END OF FIGURE | |

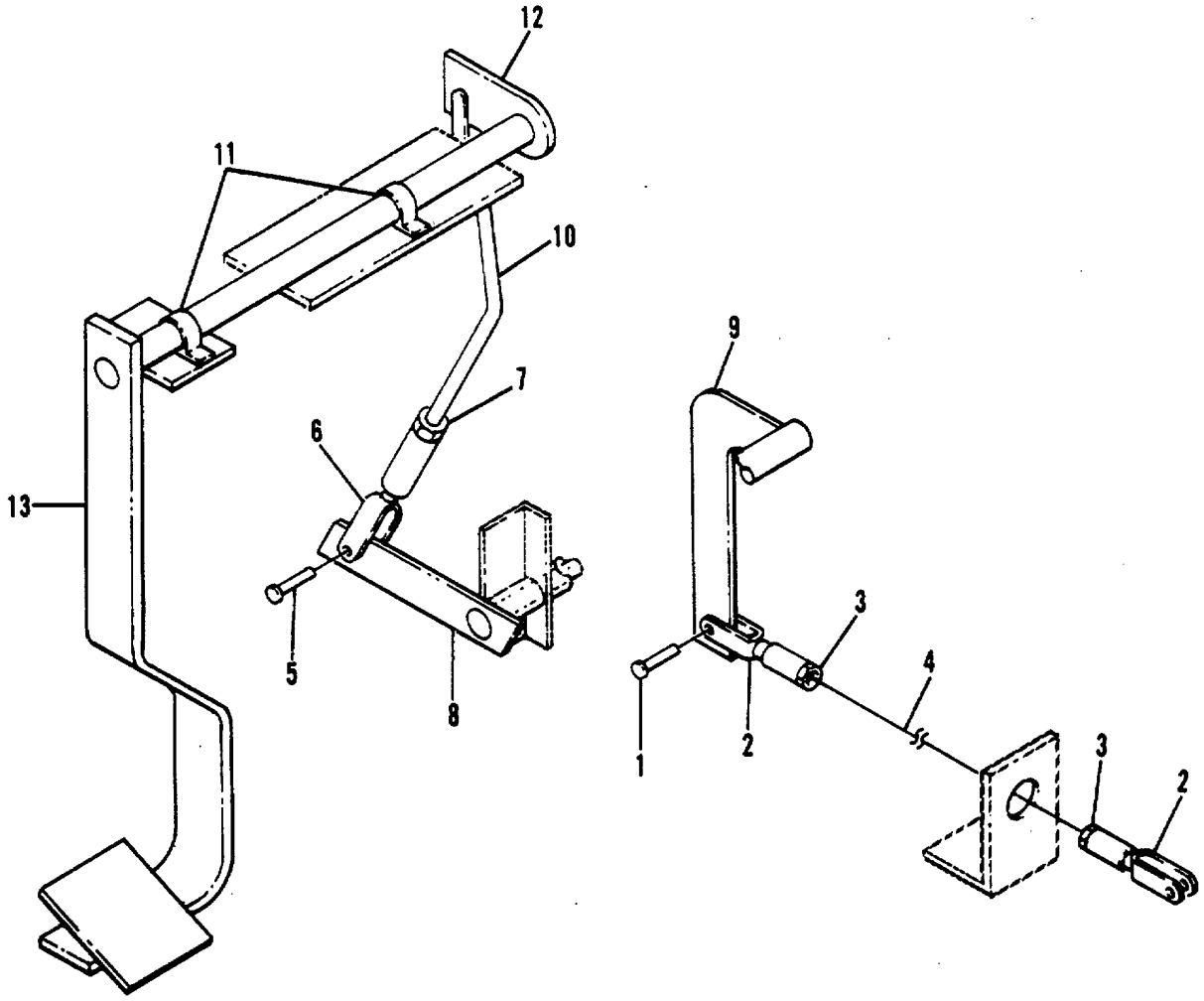


*Figure 107. Clutch Pedal Installation*

| (1) ITEM NO | (2) SMR CODE | (3) CAGEC | (4) PART NUMBER | (5) DESCRIPTION AND USABLE ON CODES (UOC) | (6) QTY |
|---|---|---|---|---|---|
| | | | | GROUP 0204 CLUTCH PEDAL ASSEMBLY | |
| | | | | FIG 107 CLUTCH PEDAL INSTALLATION | |
| | XCOOO | 7T253 | SD-33 | .PEDAL INSTL, CLUTCH | 1 |
| 1 | XBOZZ | 79146 | 019065 | ..PIN, STRAIGHT, HEADED | 2 |
| 2 | XBOZZ | 79146 | 019006 | ..CLEVIS | 2 |
| 3 | XBOZZ | 96906 | MS51967-14 | ..NUT, HEX | 2 |
| 4 | PBOZZ | 41625 | D300669-004-120 | ..CABLE AND CONDUIT | 1 |
| 5 | XBOZZ | 79146 | 019061 | ..PIN, STRAIGHT, HEADED | 2 |
| 6 | XBOZZ | 79146 | 019004 | ..CLEVIS | 2 |
| 7 | XBOZZ | 96906 | MS51967-8 | ..NUT, HEX | 1 |
| 8 | XBOZZ | 7T253 | 688 | ..LEVER ASSY | 1 |
| 9 | XBOZZ | 7T253 | 690 | ..BELLCRANK, CLUTCH | 1 |
| 10 | XBOZZ | 7T253 | 687 | ..LINKAGE, CONTROL | 1 |
| 11 | PBOZZ | 21335 | VAK1 | ..BEARING UNIT, BALL | 2 |
| 12 | XBOZZ | 7T253 | 686 | ..LEVER | 1 |
| 13 | XBOZZ | 7T253 | 682 | ..PEDAL ASSY | 1 |
| | | | | END OF FIGURE | |

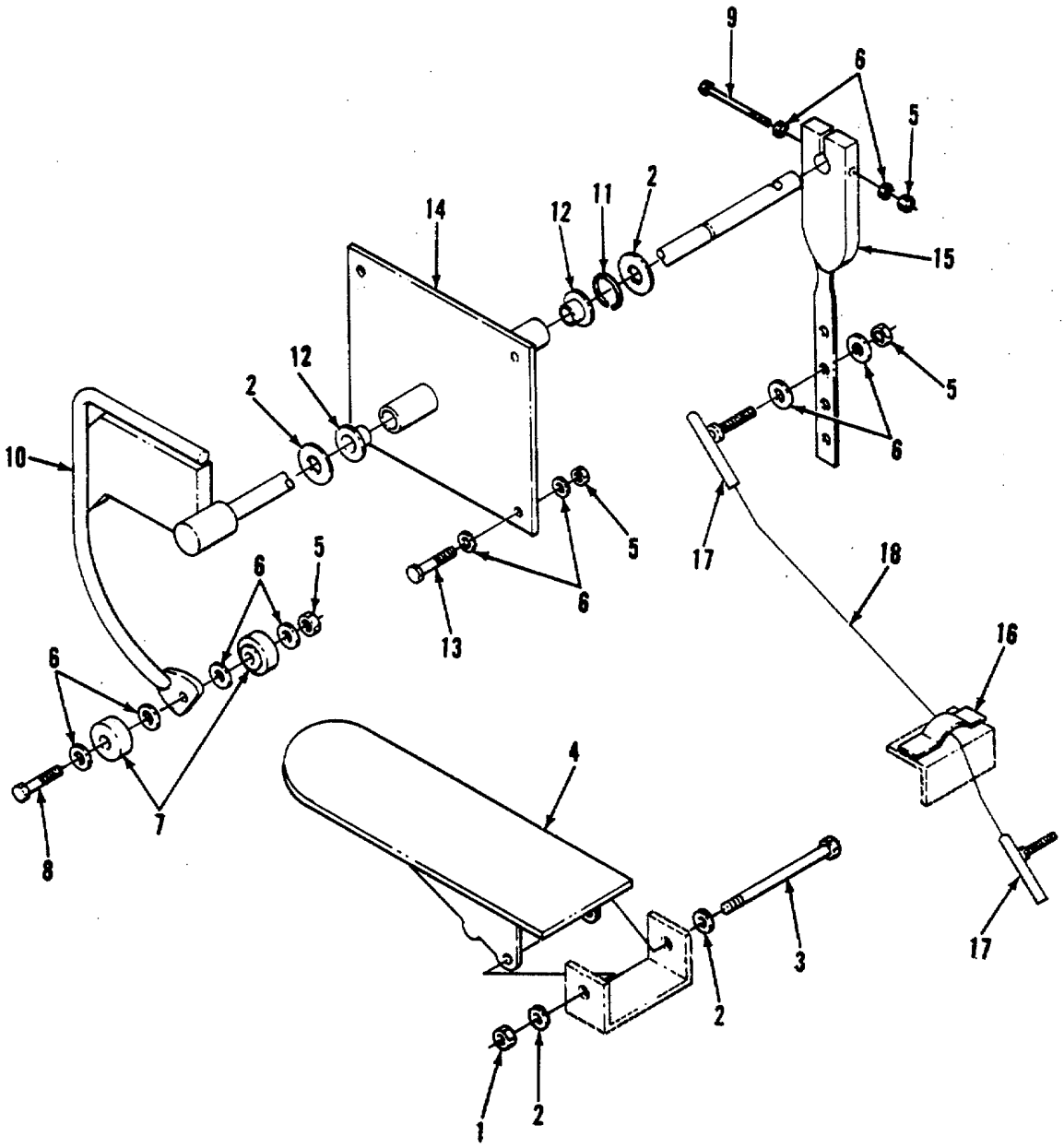


*Figure 108. Accelerator Pedal Installation*

| (1) ITEM NO | (2) SMR CODE | (3) CAGEC | (4) PART NUMBER | (5) DESCRIPTION AND USABLE ON CODES (UOC) | (6) QTY |
|---|---|---|---|---|---|
| | | | | GROUP 0205 ACCELERATOR PEDAL ASSEMBLY | |
| | | | | FIG 108 ACCELERATOR PEDAL INSTALLATION | |
| | XCOOO | 7T253 | SD-14 | .PEDAL INSTL, ACCELER | 1 |
| 1 | PAOZZ | 96906 | MS51922-17 | ..NUT, SELF-LOCKING, HE | 1 |
| 2 | PAOZZ | 96906 | MS27183-13 | ..WASHER, FLAT | 4 |
| 3 | PAOZZ | 80204 | B1821BH038C300N | ..SCREW, CAP, HEXAGON H | 1 |
| 4 | XBOZZ | 7T253 | 860 | ..PEDAL, ACCELERATOR | 1 |
| 5 | PAOZZ | 96906 | MS51922-2 | ..NUT, SELF-LOCKING, HE | 8 |
| 6 | PAOZZ | 96906 | MS27183-9 | ..WASHER, FLAT | 18 |
| 7 | XBOZZ | 7T253 | 864 | ..ROLLER | 2 |
| 8 | PAOZZ | 80204 | B1821BH025C125N | ..SCREW, CAP, HEXAGON H | 1 |
| 9 | PAOZZ | 96906 | MS90725-13 | ..BOLT, MACHINE | 1 |
| 10 | XBOZZ | 7T253 | 856 | ..SHAFT ASSY | 1 |
| 11 | XBOZZ | 89346 | 110668R1 | ..RING, RETAINING | 1 |
| 12 | XBOZZ | 89346 | 479220C1 | ..BUSHING | 2 |
| 13 | PAOZZ | 80204 | B1821BH025C100N | ..SCREW, CAP, HEXAGON H | 4 |
| 14 | XBOZZ | 7T253 | 862 | ..BRACKET, PIVOT | 1 |
| 15 | XBOZZ | 7T253 | 859 | ..LEVER, -ACCELERATOR | 1 |
| 16 | XBOZZ | 41625 | A036733 | ..CLAMP, CABLE | 1 |
| 17 | XBOZZ | 06120 | SPG1002 | ..BALL JOINT, CABLE | 2 |
| 18 | PBOZZ | 41625 | D300669-004-120 | ..CABLE AND CONDUIT A | 1 |
| | | | | END OF FIGURE | |

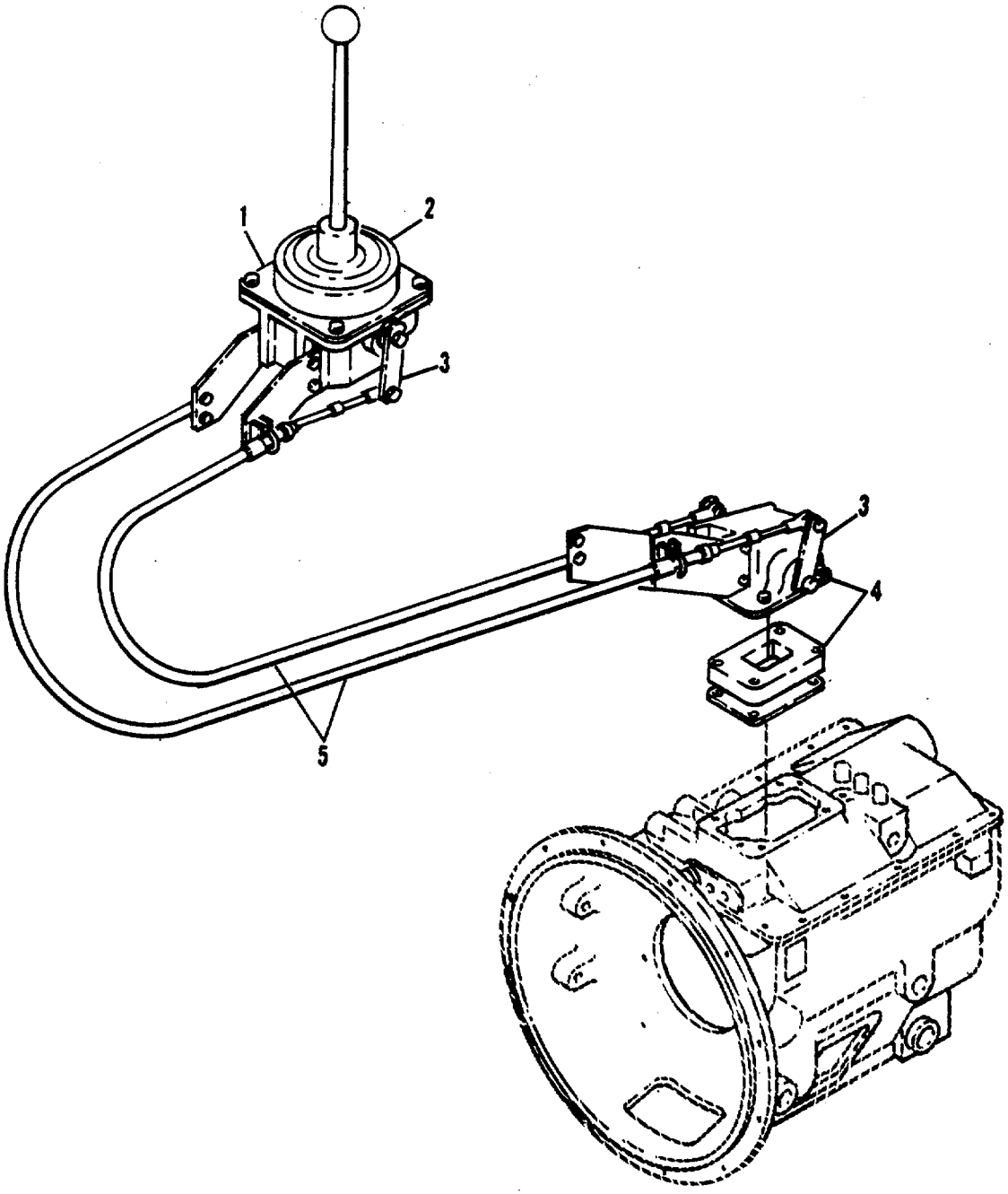


*Figure 109. Shift Lever Installation*

| (1) ITEM NO | (2) SMR CODE | (3) CAGEC | (4) PART NUMBER | (5) DESCRIPTION AND USABLE ON CODES (UOC) | (6) QTY |
|---|---|---|---|---|---|
| | | | | GROUP 0206 SHIFT LEVER ASSEMBLY | |
| | | | | FIG 109 SHIFT LEVER INSTALLATION | |
| | XCFFF | 7T253 | SD-32 | .SHIFT LEVER INSTL ..... | 1 |
| 1 | XBFZZ | 41625 | A303800 | ..CONTROL, SHIFTER..... | 1 |
| 2 | XBFZZ | 7T253 | 794 | ..SHIFTER..... | 1 |
| 3 | XBFZZ | 7T253 | 793 | ..LINK..... | 4 |
| 4 | XBFZZ | 41625 | A303804 | ..RAIL SELECTOR ..... | 1 |
| 5 | PAFZZ | 41625 | D301872-002-180 | ..CABLE AND CONDUIT ..... | 2 |
| | | | | END OF FIGURE | |

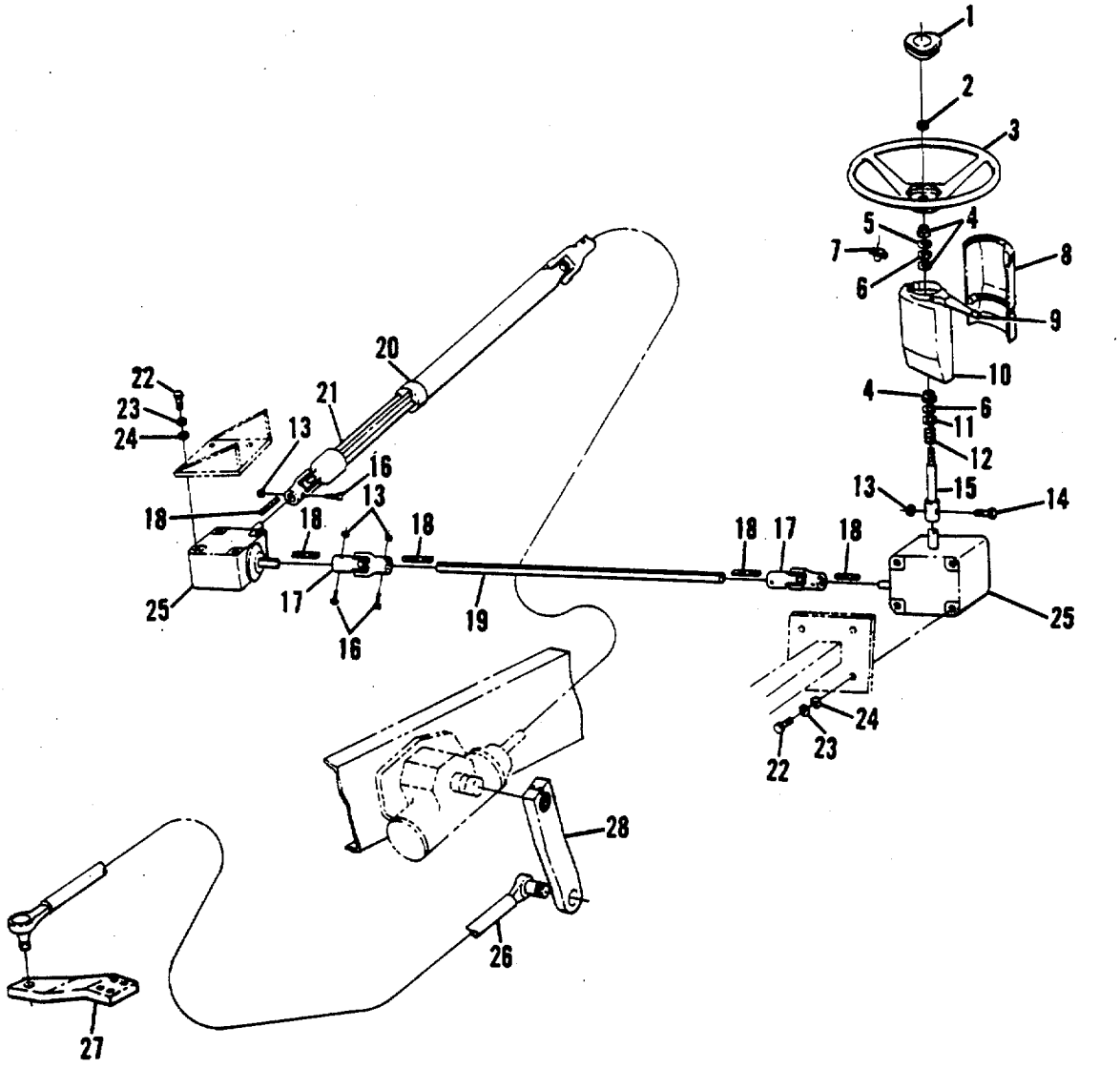


*Figure 110. Steering Installation*

| (1) ITEM NO | (2) SMR CODE | (3) CAGEC | (4) PART NUMBER | (5) DESCRIPTION AND USABLE ON CODES (UOC) | (6) QTY |
|---|---|---|---|---|---|
| | | | | GROUP 0207 STEERING GROUP | |
| | | | | FIG 110 STEERING INSTALLATION | |
| | XCFFF | 7T253 | SD-12 | .STEERING INSTL | 1 |
| 1 | PBFZZ | 89346 | 1652453C91 | ..HORN BUTTON, VEHICLE | 1 |
| 2 | XBFZZ | 89346 | 384725C1 | ..NUT, STEERING WHEEL | 1 |
| 3 | XBFZZ | 89346 | 469902C3 | ..WHEEL, STEERING | 1 |
| 4 | PAFZZ | 89346 | 469878C1 | ..BUSHING, SLEEVE | 3 |
| 5 | PAFZZ | 89346 | 373522R1 | ..RING, RETAINING | 1 |
| 6 | PAFZZ | 89346 | 468796C1 | ..WASHER, FLAT | 2 |
| 7 | PAFZZ | 89346 | 470213C91 | ..CONTACT, HORN BRUSH | 1 |
| 8 | XBFZZ | 7T253 | 828 | ..COVER, COLUMN, STEER | 1 |
| 9 | PBFZZ | 89346 | 471302C94 | ..SWITCH, TOGGLE | 1 |
| 10 | XBFZZ | 7T253 | 829 | ..COVER, COLUMN, STEER | 1 |
| 11 | XBFZZ | 89346 | 26070R1 | ..WASHER, FLAT | 1 |
| 12 | PAFZZ | 89346 | 583497C1 | ..SPRING, HELICAL, COMP | 1 |
| 13 | PAFZZ | 96906 | MS51922-17 | ..NUT, SELF-LOCKING, HE | 1 |
| 14 | PAFZZ | 80204 | B1821BH038C175N | ..SCREW, CAP, HEXAGON H | 1 |
| 15 | XBFZZ | 7T253 | 830 | ..SHAFT, STEERING | 1 |
| 16 | PAFZZ | 80204 | B1821BH038C225N | ..SCREW, CAP, HEXAGON H | 5 |
| 17 | PBFZZ | 1DR34 | N10242-149 | ..UNIVERSAL JOINT | 2 |
| 18 | XBFZZ | 96906 | MS20068-145 | ..KEY, MACHINE | 6 |
| 19 | XBFZZ | 7T253 | 831 | ..SHAFT, STEERING | 1 |
| 20 | XBFZZ | 7T253 | 834 | ..SLIP | 1 |
| 21 | XBFZZ | 7T253 | 833 | ..SLIP SHAFT | 1 |
| 22 | PAFZZ | 80204 | B1821BH038C100N | ..SCREW, CAP, HEXAGON H | 11 |
| 23 | PAFZZ | 96906 | MS27183-13 | ..WASHER, FLAT | 11 |
| 24 | PAFZZ | 96906 | MS35338-46 | ..WASHER, LOCK | 11 |
| 25 | PBFZZ | 02843 | 917237MODEL215 | ..DRIVE UNIT, ANGLE | 2 |
| 26 | XBFZZ | 89346 | 486979C91 | ..DRAG LINK | 2 |
| 27 | XBFZZ | 7T253 | 849 | ..ARM, STEERING | 1 |
| 28 | XBFZZ | 89346 | 542098C1 | ..ARM, PITTMAN | 1 |
| | | | | END OF FIGURE | |

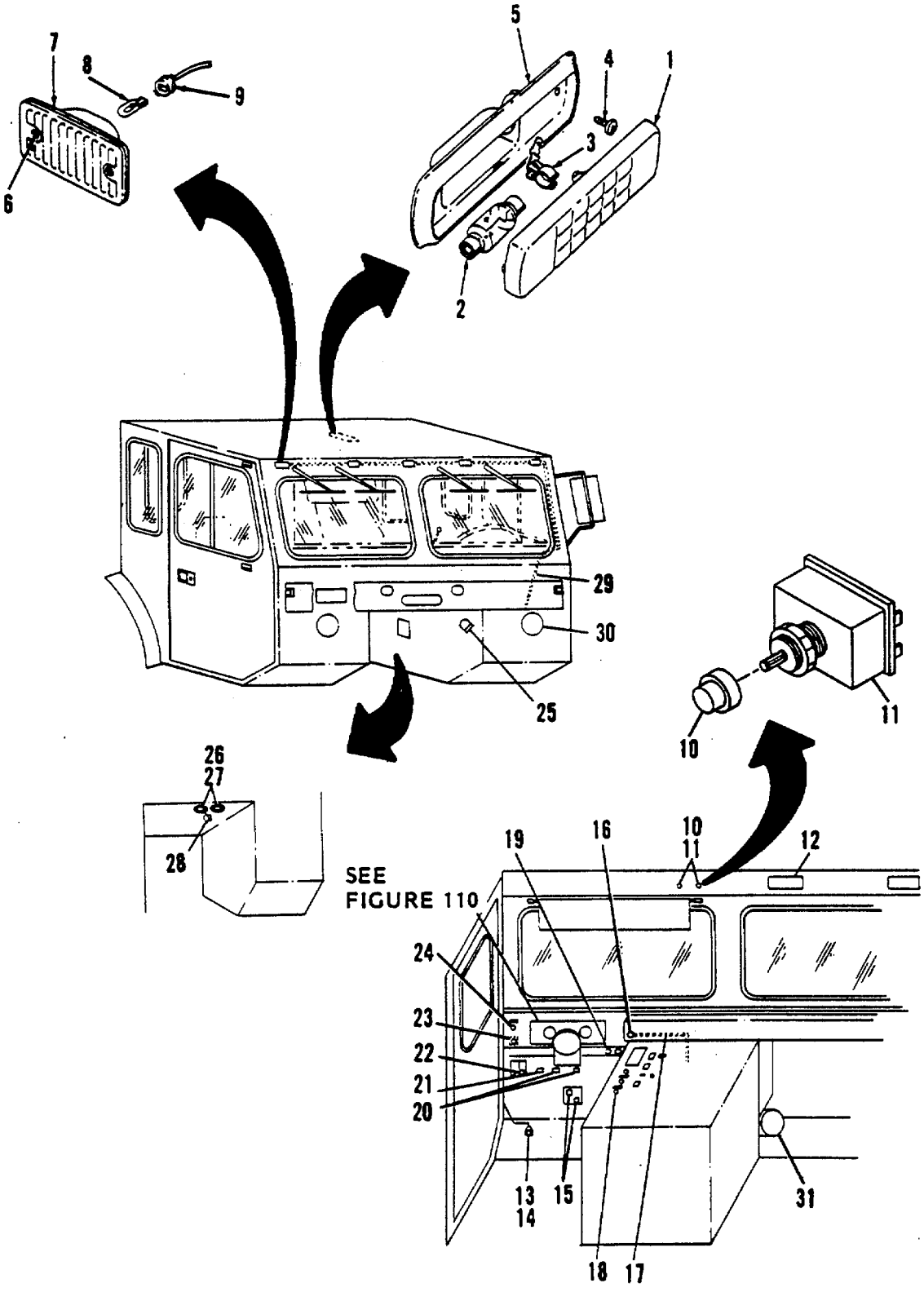


*Figure 111. Cab Electrical Installation*

| (1) ITEM NO | (2) SMR CODE | (3) CAGEC | (4) PART NUMBER | (5) DESCRIPTION AND USABLE ON CODES (UOC) | (6) QTY |
|---|---|---|---|---|---|
| | | | | GROUP 0208 ELECTRICAL COMPONENTS, CAB | |
| | | | | FIG. 111 CAB ELECTRICAL INSTALLATION | |
| | XCFFF | 7T253 | SD-15 | .ELECTRICAL INSTL | 1 |
| 1 | PAFZZ | 89346 | 296446C1 | ..LENS, LIGHT | 1 |
| 2 | PAOZZ | 08806 | 211-2 | ..LAMP, INCANDESCENT | 1 |
| 3 | XBFZZ | 89346 | 300853C1 | ..TERMINAL, CLIP | 2 |
| 4 | XBFZZ | 89346 | 26282R1 | ..SCREW, TAPPING | 2 |
| 5 | XBFZZ | 89346 | 463179C1 | ..BASE, DOME LIGHT | 1 |
| 6 | XBFZZ | 89346 | 27196R1 | ..SCREW, TAPPING | 10 |
| 7 | PAFZZ | 89346 | 451677C92 | ..LIGHT, MARKER, CLEARA | 5 |
| 8 | PAFZZ | 08806 | 168 | ..LAMP, INCANDESCENT | 5 |
| 9 | XBFZZ | 89346 | 470184C92 | ..HARNESS, WIRE | 1 |
| 10 | PAOZZ | 89346 | 469858C1 | ..KNOB | 1 |
| 11 | PAFZZ | 89346 | 470249C91 | ..SWITCH, ELECTRICAL | 1 |
| 12 | PBFZZ | 89346 | 471496C92 | ..MOTOR, WINDSHIELD WI | 2 |
| 13 | PBFZZ | 89346 | 452187C1 | ..SWITCH, ELECTRICAL | 1 |
| 14 | XBFZZ | 89346 | 402015C1 | ..BRACKET, SWITCH | 1 |
| 15 | PBFZZ | 89346 | 505026C1 | ..SWITCH, STOP LIGHT | 2 |
| 16 | PBFZZ | 89346 | 1652306C91 | ..SWITCH, ENGINE START | 1 |
| 17 | XBFZZ | 89346 | 571809C91 | ..HARNESS, WIRE | 1 |
| 18 | PBFZZ | 1JT45 | K753 | ..SWITCH, THERMOSTATIC | 1 |
| 19 | PBFZZ | 89346 | 470841C91 | ..METER, TIME TOTALIZI | 1 |
| 20 | PBFZZ | 89346 | 268690C91 | ..BUZZER | 1 |
| | PBFZZ | 40342 | 13241A | ..SWITCH, THERMOSTATIC | 1 |
| 21 | PBFZZ | 89346 | 1116920 | ..RELAY, HORN | 1 |
| 22 | PAFZZ | 89346 | 501707C1 | ..FLASHER, THERMAL | 1 |
| 23 | PBFZZ | 96906 | MS51113-1 | ..SWITCH ASSEMBLY | 1 |
| 24 | PBFZZ | 89346 | 463822C93 | ..SWITCH, THERMOSTATIC | 1 |
| 25 | PAFZZ | 89346 | 411948C91 | ..HORN, ELECTRICAL | 1 |
| 26 | XBFZZ | 89346 | 481366C1 | ..RETAINER, GROMMET | 2 |
| 27 | XBFZZ | 89346 | 487223C1 | ..GROMMET | 2 |
| 28 | PAFZZ | 89346 | 450499C1 | ..SWITCH, REED | 1 |
| 29 | XBFZZ | 89346 | 481724C91 | ..HARNESS, WIRE | 1 |
| 30 | PBFZO | 75175 | 920-3301 | ..HEADLIGHT | 2 |
| | PBFZZ | 89346 | 480147C92 | ..SHAFT ASSEMBLY, FLEX | 1 |
| 31 | XBOZZ | 1JT45 | LB3-ST | ..HEATER ASSY | 1 |
| | | | | END OF FIGURE | |

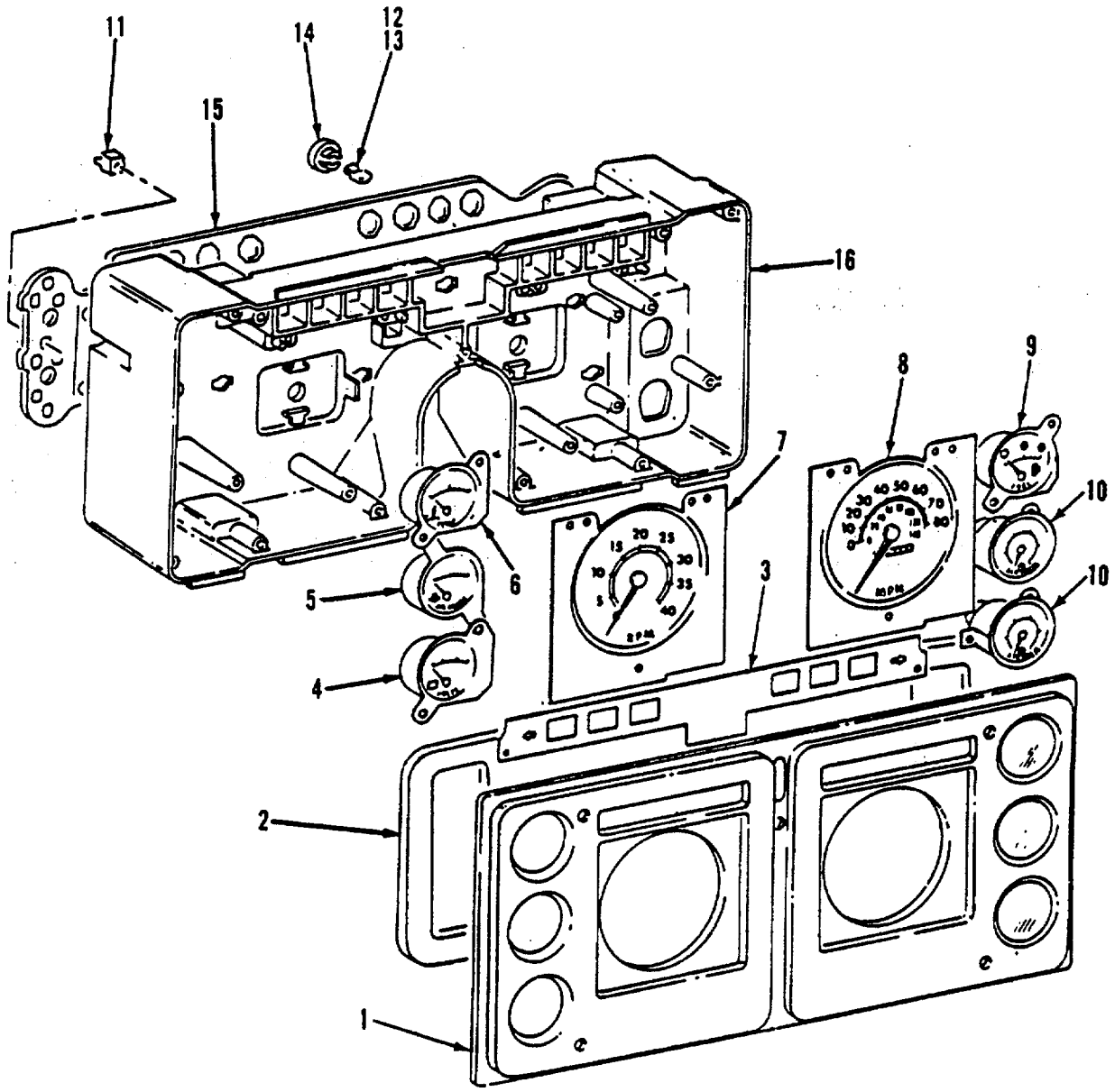


*Figure 112. Instrument Cluster*

| (1) ITEM NO | (2) SMR CODE | (3) CAGEC | (4) PART NUMBER | (5) DESCRIPTION AND USABLE ON CODES (UOC) | (6) QTY |
|---|---|---|---|---|---|
| | | | | GROUP 0208 ELECTRICAL COMPONENTS, CAB | |
| | | | | FIG 112 INSTRUMENT CLUSTER | |
| | XCFFF | 89346 | 1648567C91 | ..CLUSTER, INSTRUMENT | 1 |
| 1 | XBFZZ | 89346 | 584747C1 | ...BEZEL, CLUSTER | 1 |
| 2 | XBFZZ | 89346 | 1653174C1 | ...LENS, CLUSTER.. | 1 |
| 3 | XBFZZ | 89346 | 573070C1 | ...MASK | 1 |
| 4 | PBFZZ | 89346 | 478677C1 | ...VOLTMETER | 1 |
| 5 | PBFZZ | 89346 | 478675C1 | ...GAGE PRESSURE, OIL | 1 |
| 6 | PBFZZ | 29930 | 478676C1 | ...INDICATORT TEMPERATU | 1 |
| 7 | PBFZZ | 89346 | 583274C2 | ...TACHOMETER, ELECTRIC | 1 |
| 8 | PBFZZ | 89346 | 584745C1 | ...SPEEDOMETER | 1 |
| 9 | PBFZZ | 89346 | 478678C1 | ...INDICATOR, LIQUID QU | 1 |
| 10 | PBFZZ | 89346 | 478679C1 | ...GAGE.PRESSURE, DIAL | 1 |
| 11 | XBFZZ | 89346 | 501811C1 | ...CLIP, GAUGE TERMINAL | 8 |
| 12 | PDFZZ | 08865 | 194-2 | ...LAMP, INCANDESCENT | 9 |
| 13 | PAFZZ | 08806 | 168 | ...LAMP, INCANDESCENT | 6 |
| 14 | XBFZZ | 89346 | 500724C1 | ...SOCKET, LAMP | 15 |
| 15 | XBFZZ | 89346 | 586680C1 | ...HOUSING | 1 |
| 16 | PBFZZ | 89346 | 586679C1 | ....PRINTED CIRCUIT BOA | 1 |
| | | | | END OF FIGURE | |

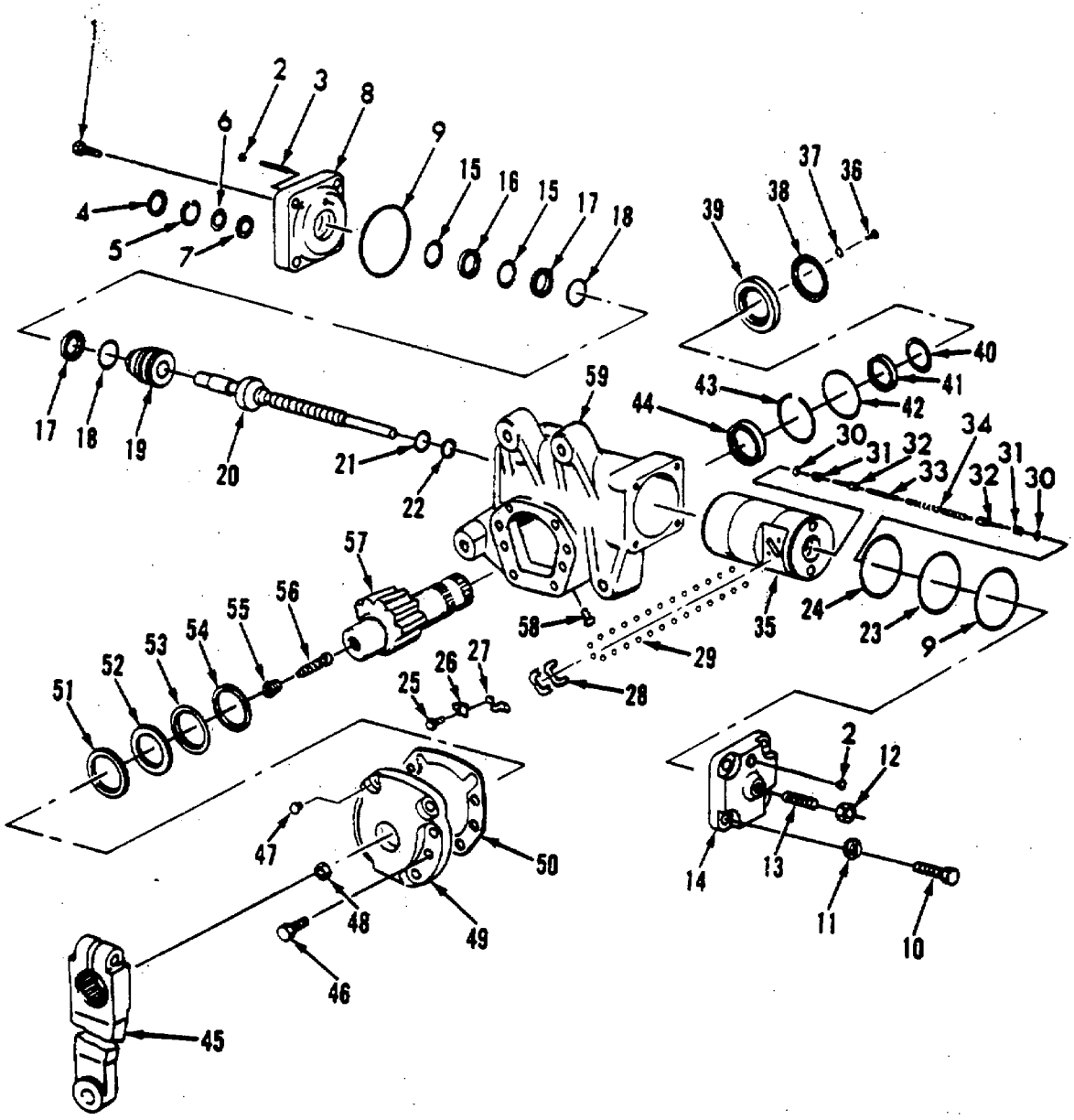


*Figure 113. Steering Gear*

| (1) ITEM NO | (2) SMR CODE | (3) CAGEC | (4) PART NUMBER | (5) DESCRIPTION AND USABLE ON CODES (UOC) | (6) QTY |
|---|---|---|---|---|---|
| | | | | GROUP 0209 STEERING GEAR | |
| | | | | FIG. 113 STEERING GEAR | |
| | PBFHH | 89346 | 542489C91 | .VALVE, STEERING | 1 |
| 1 | PAHZZ | 77640 | G 9430271 | ..SCREW, CAP, HEXAGON H | 4 |
| 2 | PAFZZ | 89346 | 458446C1 | ..RING, EXTERNALLY THR | 2 |
| 3 | XBHZZ | 89346 | 582489C1 | ..SCREW, ADJUSTING | 1 |
| 4 | PAHZZ | 89346 | 582497C91 | ..SEAL, PLAIN ENCASED | 1 |
| 5 | PAHZZ | 89346 | 253629 | ..RING, RETAINING | 1 |
| 6 | XBHZZ | 89346 | 582501C1 | ..WASHER, BACK-UP | 1 |
| 7 | PAHZZ | 89346 | 582496C91 | ..SEAL, PLAIN ENCASED | 1 |
| 8 | XBHZZ | 89346 | 582506C91 | ..HOUSING, VALVE | 1 |
| 9 | PAHZZ | 89346 | 582516C1 | ..PACKING, PREFORMED | 2 |
| 10 | PAHZZ | 77640 | G 455076 | ..SCREW, MACHINE | 4 |
| 11 | PAHZZ | 96906 | MS27183-19 | ..WASHER, FLAT | 4 |
| 12 | XBHZZ | 89346 | 487343C1 | ..NUT | 1 |
| 13 | XBHZZ | 89346 | 487342C1 | ..SCREW, ADJUSTING | 1 |
| 14 | XBHZZ | 89346 | 582502C1 | ..COVER, END | 1 |
| 15 | XBHZZ | 89346 | 157725C1 | ..WASHER, THRUST | 2 |
| 16 | PAOZZ | 89346 | 607146R91 | ..BEARING, WASHER, THRU | 1 |
| 17 | PAOZZ | 89346 | 582494C1 | ..PACKING, PREFORMED | 2 |
| 18 | PAHZZ | 89346 | 604844C1 | ..PACKING, PREFORMED | 2 |
| 19 | XBHZZ | 77640 | 032647 | ..SLEEVE, VALVE | 1 |
| 20 | XBHZZ | 89346 | 586686C91 | ..SHAFT, ACTUATING | 1 |
| 21 | PAHZZ | 89346 | 25897R1 | ..SEAL, PLAIN ENCASED | 1 |
| 22 | PAHZZ | 89346 | 582491C1 | ..PACKING, PREFORMED | 1 |
| 23 | PAHZZ | 89346 | 582492C1 | ..PACKING, PREFORMED | 1 |
| 24 | PAHZZ | 89346 | 582509C1 | ..PACKING, PREFORMED | 1 |
| 25 | PAHZZ | 96906 | MS90725-27 | ..BOLT, MACHINE | 2 |
| 26 | PAHZZ | 77640 | 028426 | ..WASHER, LOCK | 1 |
| 27 | PAHZZ | 77640 | 402380 | ..CLIP, RETAINING | 1 |
| 28 | PAHZZ | 89346 | 586687C91 | ..BEARING, BALL, GUIDE | 2 |
| 29 | PAHZZ | 77640 | 216191 | ..BALL, BEARING | 34 |
| 30 | PAHZZ | 89346 | 310086R1 | ..RING, RETAINING | 2 |
| 31 | XBHZZ | 89346 | 487332C1 | ..SEAT, POPPET | 2 |
| 32 | PAHZZ | 89346 | 487331C1 | ..PLUNGER, DETENT | 2 |
| 33 | XBHZZ | 89346 | 582504C1 | ..ROD | 1 |
| 34 | PAHZZ | 89346 | 582503C1 | ..SPRING, HELICAL, COMP | 1 |
| 35 | XBHZZ | 89346 | 582507C91 | ..PISTON, RACK | 1 |
| 36 | PAHZZ | 89346 | 25492R1 | ..SCREW, CAP, HEXAGON H | 4 |
| 37 | PAHZZ | 96906 | MS27183-11 | ..WASHER, FLAT | 4 |
| 38 | PAHZZ | 89346 | 582493C91 | ..SEAL, PLAIN ENCASED | 1 |
| 39 | XBHZZ | 89346 | 582505C91 | ..COVER, TRUNNION | 1 |
| 40 | PAHZZ | 89346 | 582514C1 | ..WASHER, FLAT | 1 |
| 41 | PAHZZ | 89346 | 582515C91 | ..SEAL, PLAIN ENCASED | 1 |
| 42 | PAHZZ | 77640 | 032784 | ..SEAL RING, METAL | 1 |
| 43 | PAHZZ | 89346 | 582513C1 | ..RING, RETAINING | 1 |
| 44 | PAHZZ | 89346 | 582488C91 | ..BEARING, SLEEVE | 1 |
| 45 | XBHZZ | 89346 | 542098C1 | ..ARM, STEERING GEAR | 1 |
| 46 | PAHZZ | 89346 | 435860C1 | ..BOLT, CLOSE TOLERANC | 8 |
| 47 | XBHZZ | 89346 | 435693C1 | ..PLUG, PIPE | 1 |

| (1) ITEM NO | (2) SMR CODE | (3) CAGEC | (4) PART NUMBER | (5) DESCRIPTION AND USABLE ON CODES (UOC) | (6) QTY |
|---|---|---|---|---|---|
| 48 | PAHZZ | 89346 | 25527R1 | ..NUT, SPECIAL | 1 |
| 49 | XBHZZ | 89346 | 582517C91 | ..COVER, SIDE | 1 |
| 50 | PAHZZ | 89346 | 582487C1 | ..GASKET | 1 |
| 51 | PBHZZ | 89346 | 582500C1 | ..WASHER, FLAT | 1 |
| 52 | PAHZZ | 89346 | 582499C1 | ..WASHER, FLAT | 1 |
| 53 | PAHZZ | 89346 | 582495C91 | ..SEAL, PLAIN ENCASED | 1 |
| 54 | PAHZZ | 89346 | 503512C2 | ..RING, RETAINING | 1 |
| 55 | XBHZZ | 89346 | 346902R1 | ..RETAINER, SCREW | 1 |
| 56 | XBHZZ | 89346 | 866224R1 | ..SCREW, ADJUSTING | 1 |
| 57 | XBHZZ | 89346 | 582508C91 | ..SHAFT, SECTOR | 1 |
| 58 | PAHZZ | 77640 | 213705 | ..BOLT, FLUID PASSAGE | 1 |
| 59 | XAHZZ | 89346 | 582511C1 | ..HOUSING, GEAR | 1 |

END OF FIGURE

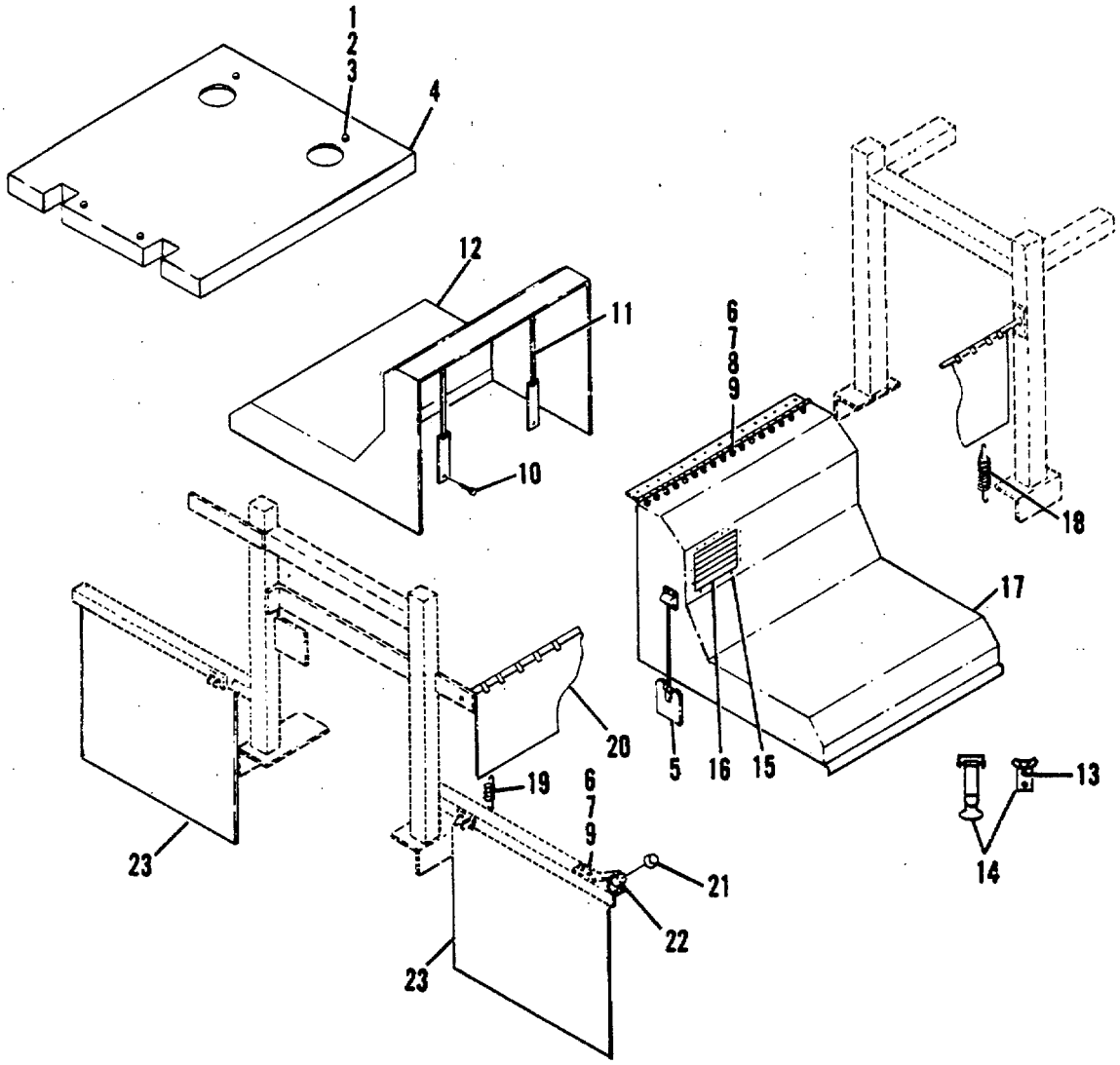


*Figure 114. Engine Cover Installation*

| (1) ITEM NO | (2) SMR CODE | (3) CAGEC | (4) PART NUMBER | (5) DESCRIPTION AND USABLE ON CODES (UOC) | (6) QTY |
|---|---|---|---|---|---|
| | | | | GROUP 0210 ENGINE COVER ASSEMBLY | |
| | | | | FIG 114 ENGINE COVER INSTALLATION | |
| | XCOOO | 7T253 | SD-31 | .COVER INSTL, ENGINE | 1 |
| 1 | PAOZZ | 80204 | B1821BH038C400N | ..SCREW, CAP, HEXAGON H | 4 |
| 2 | PAOZZ | 96906 | MS27183-13 | ..WASHER, FLAT | 8 |
| 3 | PAOZZ | 96906 | MS51922-17 | ..NUT, SELF-LOCKING, HE | 4 |
| 4 | XBOZZ | 7T253 | 704 | ..PANEL, CENTER | 1 |
| 5 | PAOZZ | 89346 | 475802C1 | ..LATCH, HOOD, VEHICULA | 2 |
| 6 | PAOZZ | 80204 | B1821BHO25Cl00N | ..SCREW, CAP, HEXAGON H | 34 |
| 7 | PAOZZ | 96906 | MS51922-2 | ..NUT, SELF-LOCKING, HE | 34 |
| 8 | PAOZZ | 1HN49 | 25N150WFEZ | ..WASHER, FLAT | 30 |
| 9 | PAOZZ | 96906 | MS27183-9 | ..WASHER, FLAT | 38 |
| 10 | PAOZZ | 89346 | 338633C1 | ..BOLT, RIBBED SHOULDE | 8 |
| 11 | PAOZZ | 64289 | 100-2425 | ..ROD, HOOD, VEHICULAR | 4 |
| 12 | XBOZZ | 7T253 | 678 | ..COVER, ENGINE | 2 |
| 13 | PAOZZ | 96906 | MS35206-247 | ..SCREW, MACHINE | 4 |
| 14 | PAOZZ | 1H540 | 190HOLD-DOWN | ..LATCH, HOOD, VEHICULA | 2 |
| 15 | XBOZZ | 1HN49 | ABL6-6A | ..RIVET | 26 |
| 16 | PBOZZ | 7T253 | 885 | ..LOUVER, LIGHT | 2 |
| 17 | XBOZZ | 98933 | 32214 | ..EXTENSION, RUBBER | 2 |
| 18 | PAOZZ | 89346 | 489862C1 | ..SPRING, HELICAL, COMP | 2 |
| 19 | PAOZZ | 89346 | 482244C3 | ..SPRING, HELICAL, COMP | 2 |
| 20 | XBOZZ | 89346 | 486855C4 | ..SHIELD, SPLASH | 2 |
| 21 | PBOZZ | 89346 | 472698C1 | ..BELL, LOCATING | 2 |
| 22 | XBOZZ | 89346 | 472697C1 | ..MOUNT, BELL | 2 |
| 23 | XBOZZ | 05333 | 062430 | ..MUD FLAP | 2 |
| | | | | END OF FIGURE | |

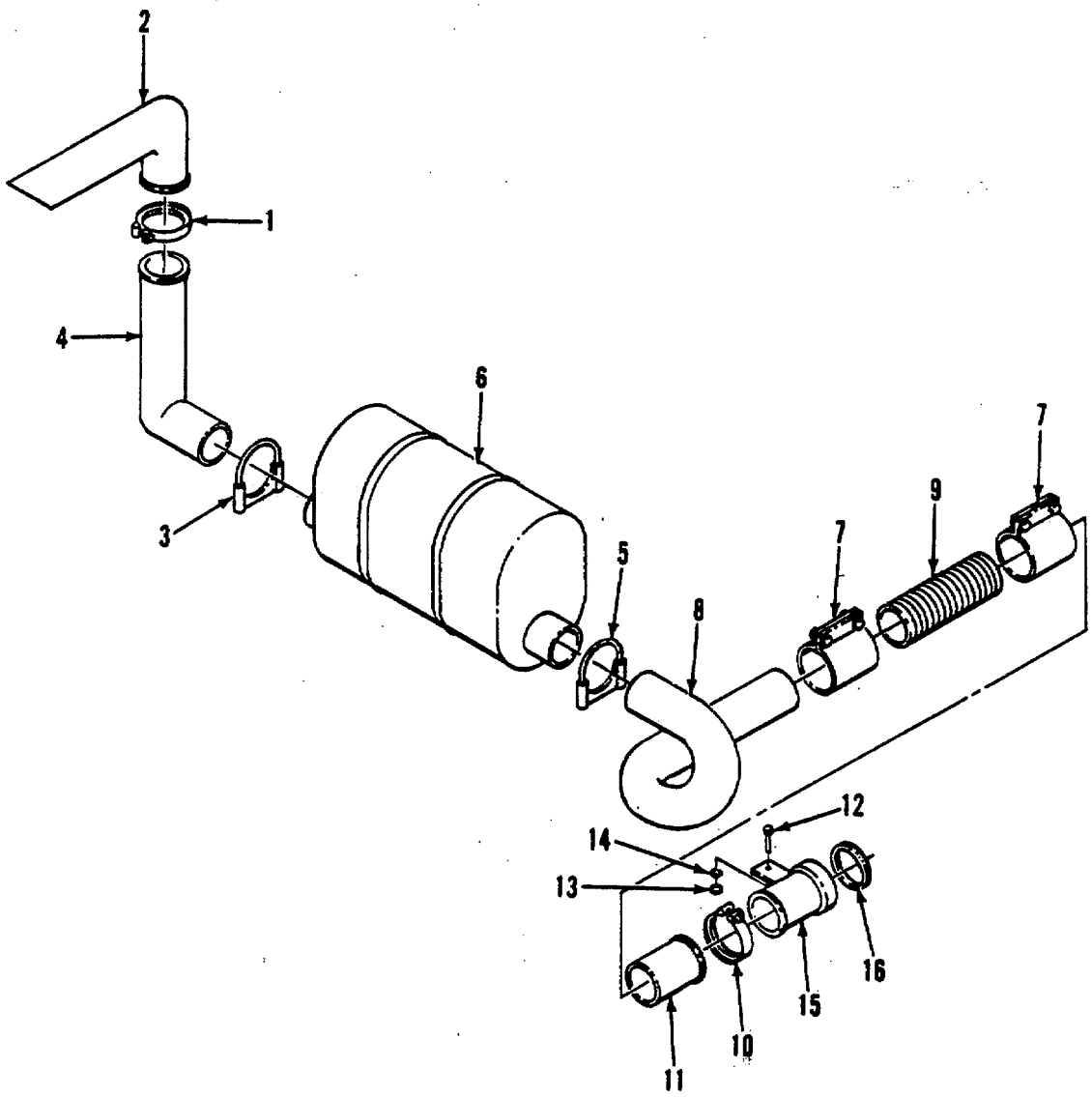


*Figure 115. Exhaust System Installation*

| (1) ITEM NO | (2) SMR CODE | (3) CAGEC | (4) PART NUMBER | (5) DESCRIPTION AND USABLE ON CODES (UOC) | (6) QTY |
|---|---|---|---|---|---|
| | | | | GROUP 0211 EXHAUST SYSTEM | |
| | | | | FIG. 115 EXHAUST.SYSTEM INSTALLATION | |
| | XCOOO | 7T253 | SD-19 | .EXHAUST SYSTEM | 1 |
| 1 | PAOZZ | 01652 | SPA1740 | ..BRACKET, ANGLE | 1 |
| 2 | PAOZZ | 7T253 | 3251 | ..PIPE, EXHAUST | 1 |
| 3 | PAOZZ | 01652 | U400 | ..CLAMP, LOOP | 1 |
| 4 | PAOZZ | 7T253 | 3252 | ..EXHAUST ELBOW ASSEM | 1 |
| 5 | PAOZZ | 01652 | U350 | ..CLAMP, LOOP | 1 |
| 6 | PAOZZ | 89346 | 482167C1 | ..MUFFLER, EXHAUST | 1 |
| 7 | PAOZZ | 89346 | 583977C91 | ..CLAMP, LOOP | 2 |
| 8 | PAOZZ | 7T253 | 3252 | ..EXHAUST ELBOW ASSEM | 1 |
| 9 | PAOZA | 89346 | 320230C1 | ..HOSE, METALLIC | 1 |
| 10 | PAOZZ | 89346 | 338614C1 | ..CLAMP, LOOP | 1 |
| 11 | PAOZZ | 7T253 | 866 | ..PIPE, EXHAUST | 1 |
| 12 | PAOZZ | 29930 | 140483H | ..BOLT, HEX HEAD | 2 |
| 13 | PAOZZ | 89346 | 21333R1 | ..NUT, PLAIN, HEXAGON | 2 |
| 14 | PAOZZ | 89346 | 25896R1 | ..WASHER | 2 |
| 15 | PBOZZ | 89346 | 683076C1 | ..ELBOW, PIPE | 1 |
| 16 | PAOZZ | 29510 | 702299C1 | ..SEAL, TURBO | 1 |
| | | | | END OF FIGURE | |

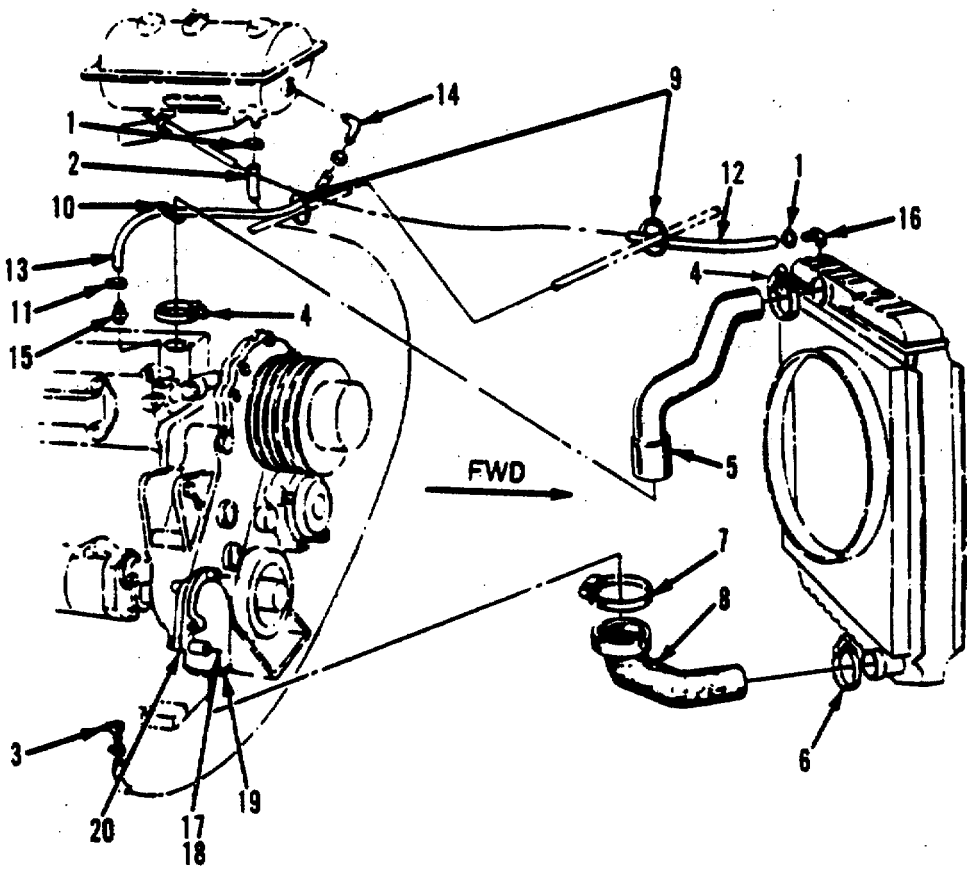


*Figure 116. Radiator Hose Installation*

| (1) ITEM NO | (2) SMR CODE | (3) CAGEC | (4) PART NUMBER | (5) DESCRIPTION AND USABLE ON CODES (UOC) | (6) QTY |
|---|---|---|---|---|---|
| | | | | GROUP 0212 RADIATOR | |
| | | | | FIG 116 RADIATOR HOSE INSTALLATION | |
| 1 | PAOZZ | 89346 | 681896C1 | .CLAMP, HOSE | 2 |
| 2 | PAOZZ | 89346 | 364361C1 | .HOSE, NONMETALLIC | 3 |
| 3 | XBOZZ | 89346 | 864454R1 | .ELBOW, PIPE TO HOSE | 1 |
| 4 | PAOZZ | 89346 | 995223R1 | .CLAMP, HOSE | 2 |
| 5 | PAOZZ | 89346 | 571967C1 | .HOSE, PREFORMED | 1 |
| 6 | PAOZZ | 89346 | 27392R1 | .CLAMP, HOSE | 1 |
| 7 | PAOZZ | 89346 | 995224R1 | .CLAMP, HOSE | 1 |
| 8 | PAOZZ | 89346 | 486129C92 | .HOSE, | 1 |
| 9 | PAOZZ | 89346 | 935522C1 | .STRAPPING | 4 |
| 10 | PAOZZ | 89346 | 306132C1 | .STRAP | 2 |
| 11 | PAOZZ | 89346 | 553791C1 | .CLAMP, HOSE | 4 |
| 12 | PAOZZ | 89346 | 364357C1 | .HOSE, NONMETALLIC | 4 |
| 13 | PAOZZ | 89346 | 382997C1 | .HOSE, NONMETALLIC | 5 |
| 14 | XBOZZ | 89346 | 482731C1 | .ELBOW, PIPE TO HOSE | 1 |
| 15 | XBOZZ | 89346' | 61181H | .NIPPLE, PIPE TO HOSE | 1 |
| 16 | XBOZZ | 89346 | 465108C1 | .ELBOW, PIPE TO HOSE | 1 |
| 17 | PAFZZ | 92679 | 277232R1 | .BOLT | 3 |
| 18 | PAFZZ | 89346 | 25709R1 | .WASHER, FLAT | 3 |
| 19 | XBFZZ | 89346 | 921454C2 | .ELBOW, INLET | 1 |
| 20 | PAFZZ | 92679 | 673396C1 | .GASKET | 1 |
| | | | | END OF FIGURE | |

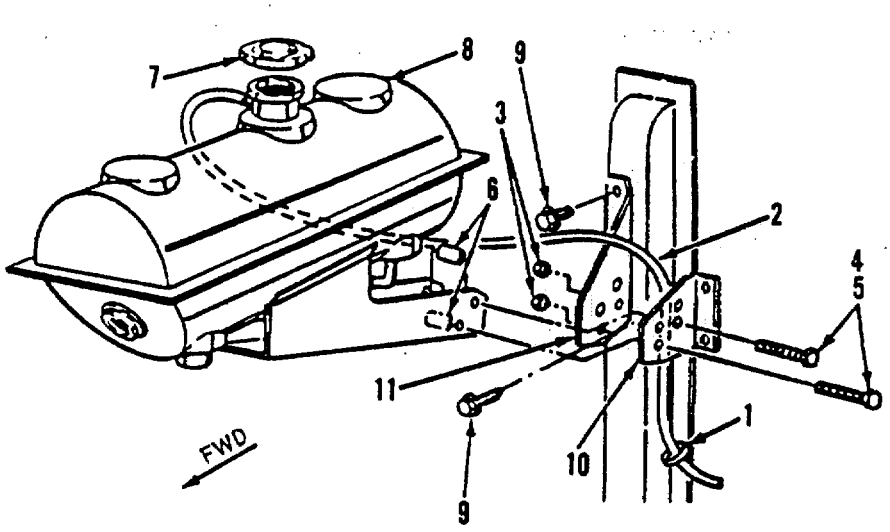


*Figure 117. Deaeration Tank Installation*

| (1) ITEM NO | (2) SMR CODE | (3) CAGEC | (4) PART NUMBER | (5) DESCRIPTION AND USABLE ON CODES (UOC) | (6) QTY |
|---|---|---|---|---|---|
| | | | | GROUP 0212 RADIATOR | |
| | | | | FIG. 117 DEAERATION TANK INSTALLATION | |
| 1 | XBOZZ | 89346 | 289862C1 | .STRAP | 1 |
| 2 | PAOZZ | 89346 | 427698C1 | .HOSE | 1 |
| 3 | XBOZZ | 89346 | 9413979 | .NUT | .6 |
| 4 | XBOZZ | 89346 | 24839R1 | .SCREW, CAP, HEXAGON H | 2 |
| 5 | PBOZA | 89346 | 25501R1 | .BOLT | 1 |
| 6 | PBOZZ | 89346 | 371623C2 | .SPACER, SLEEVE | 2 |
| 7 | PAOZZ | 89346 | 530874R1 | .CAP, FILLER OPENING | 1 |
| 8 | XBOZZ | 89346 | 586531C2 | .TANK, DEAERATION | 1. |
| 9 | XBOZZ | 89346 | 403859C92 | .SCREW | 2 |
| 10 | XBOZZ | 89346 | 483128C2 | .BRACKET | 1 |
| 11 | XBOZZ | 89346 | 483127C2 | .BRACKET | 1 |
| | | | | END OF FIGURE | |

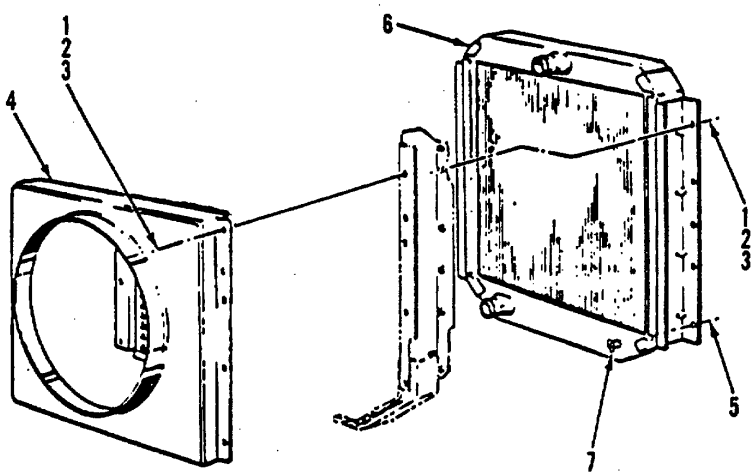


*Figure 118. Radiator Installation (Sheet 1 of 2)*

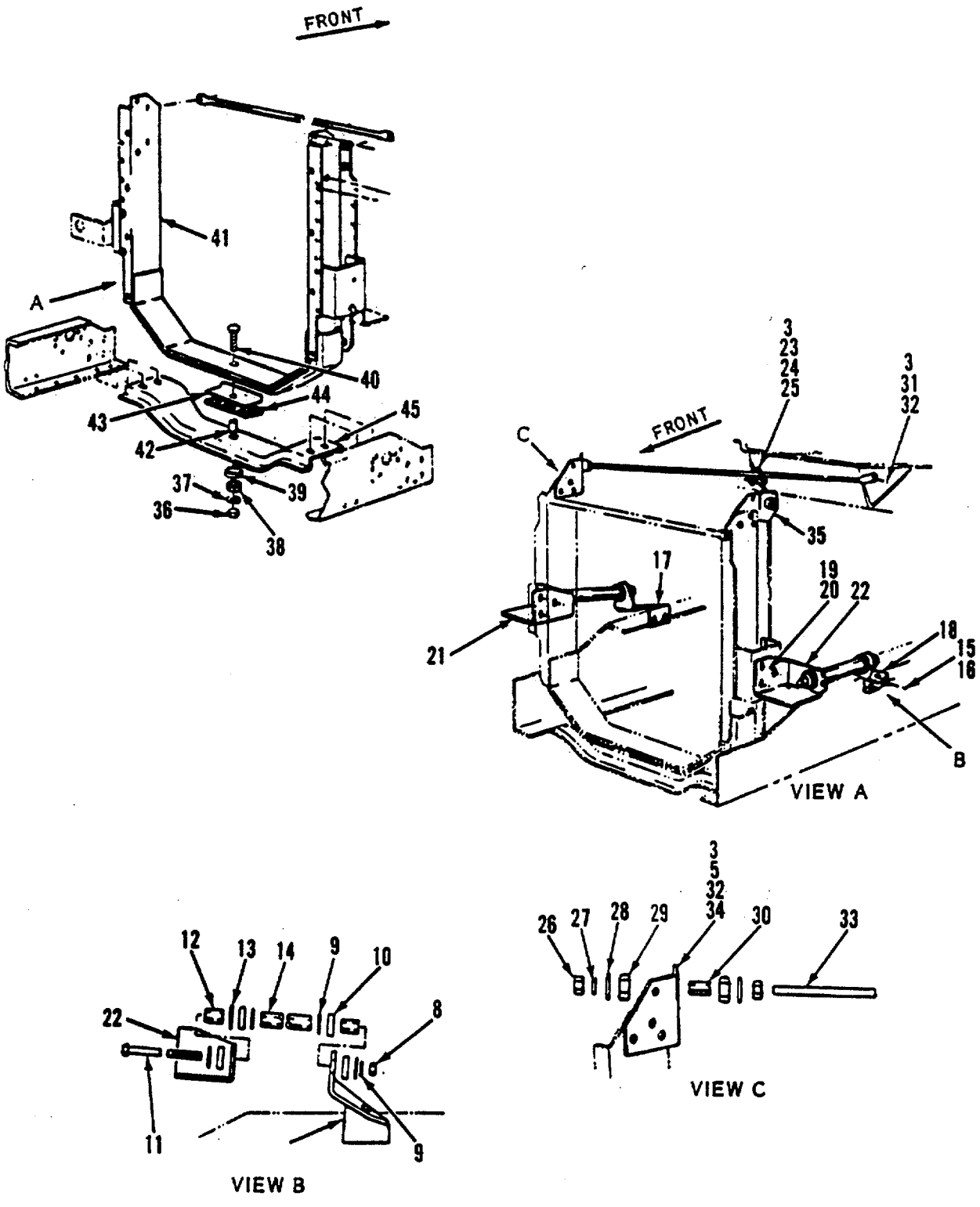


*Figure 118. Radiator Installation (Sheet 2 of 2)*

| (1) ITEM NO | (2) SMR CODE | (3) CAGEC | (4) PART NUMBER | (5) DESCRIPTION AND USABLE ON CODES (UOC) | (6) QTY |
|---|---|---|---|---|---|
| | | | | **GROUP 0212 RADIATOR** | |
| | | | | **FIG 118 RADIATOR INSTALLATION** | |
| 1 | PAOZZ | 35311 | VM1471 | .SCREW | 17 |
| 2 | PAOZZ | 89346 | 25708R1 | .WASHER, FLAT | 17 |
| 3 | PAOZZ | 96906 | MS35338-45 | .WASHER, LOCK | 23 |
| 4 | XBOZZ | 89346 | 485200C3 | .SHROUD | 1 |
| 5 | PAOZZ | 89346 | 25228R1 | .SCREW, CAP, HEXAGON H | 2 |
| 6 | XDOFF | 89346 | 493362C3 | .RADIATOR, ENGINE COO | 1 |
| 7 | PAOZZ | 89346 | 125407H1 | .VALVE, ANGLE | 1 |
| 8 | PAOZZ | 89346 | 9413979 | .NUT | 2 |
| 9 | PAOZZ | 96906 | MS27183-21 | .WASHER, FLAT | 10 |
| 10 | XBOZZ | 89346 | 459591C1 | .INSULATOR | 8 |
| 11 | PAOZZ | 89346 | 27955R1 | .BOLT, MACHINE | 2 |
| 12 | XBOZZ | 89346 | 474923C1 | .SPACER | 4 |
| 13 | PAOZZ | 89346 | 25847R1 | .WASHER, FLAT | 2 |
| 14 | XBOZZ | 89346 | 482708C1 | .SPACER | 2 |
| 15 | PAOZZ | 89346 | 414053C1 | .BOLT, MACHINE | 4 |
| 16 | PAOZZ | 89346 | 414087C1 | .NUT, DIFFERENTIAL | 4 |
| 17 | XBOZZ | 89346 | 483918C2 | .BRACKET, RIGHT | 1 |
| 18 | XBOZZ | 89346 | 483916C2 | .BRACKET, LEFT | 6 |
| 19 | PAOZZ | 29930 | 140483H | .BOLT, HEX HEAD | 6 |
| 20 | PAOZZ | 96906 | MS35338-46 | .WASHER, LOCK | 6 |
| 21 | XBOZZ | 89346 | 483792C2 | .BRACKET, RIGHT | 1 |
| 22 | XBOZZ | 89346 | 483791C2 | .BRACKET, LEFT | 1 |
| 23 | PAOZZ | 89346 | 264230C1 | .BOLT, U | 1 |
| 24 | PAOZZ | 89346 | 118624 | .NUT, PLAIN, HEXAGON | 2 |
| 25 | PAOZZ | 89346 | 264231C1 | .PLATE, MOUNTING | 1 |
| 26 | PAOZZ | 89346 | 25524R1 | .NUT, PLAIN;HEXAGON | 4 |
| 27 | PAOZZ | 96906 | MS35338-47 | .WASHER, LOCK | 2 |
| 28 | PAOZZ | 89346 | 23043R1 | .WASHER, FLAT | 4 |
| 29 | XBOZZ | 89346 | 299341C1 | .INSULATOR | 4 |
| 30 | XBOZZ | 89346 | 299340C1 | .SPACER | 2 |
| 31 | PAOZZ | 89346 | 25493R1 | .SCREW, CAP, HEXAGON H | 2 |
| 32 | PAOZZ | 92679 | 25520R1 | .NUT, PLAIN, HEXAGON | 4 |
| 33 | XBOZZ | 89346 | 483513C2 | .ROD, STAY | 2 |
| 34 | XBOZZ | 89346 | 491499C4 | .BRACKET, RIGHT | 1 |
| 35 | XBOZZ | 89346 | 491497C4 | .BRACKET, LEFT | 1 |
| 36 | PAOZZ | 89346 | 9412230 | .NUT | 1 |
| 37 | PAOZZ | 89346 | 22191R1 | .WASHER, FLAT | 1 |
| 38 | XBOZZ | 89346 | 471477C1 | .INSULATOR | 1 |
| 39 | XBOZZ | 89346 | 471475C1 | .RETAINER | 1 |
| 40 | PAOZZ | 89346 | 27463R1 | .BOLT, MACHINE | 1 |
| 41 | XBOZZ | 89346 | 483533C6 | .SUPPORT, RADIATOR | 1 |
| 42 | XBOZZ | 89346 | 487704R1 | .SPACER | 1 |
| 43 | XBOZZ | 89346 | 468348C1 | .PLATE, SPACER | 1 |
| 44 | XBOZZ | 89346 | 471478C1 | .INSULATOR | 1 |
| 45 | XBOZZ | 89346 | 468349C4 | .CROSSMEMBER | 1 |

END OF FIGURE

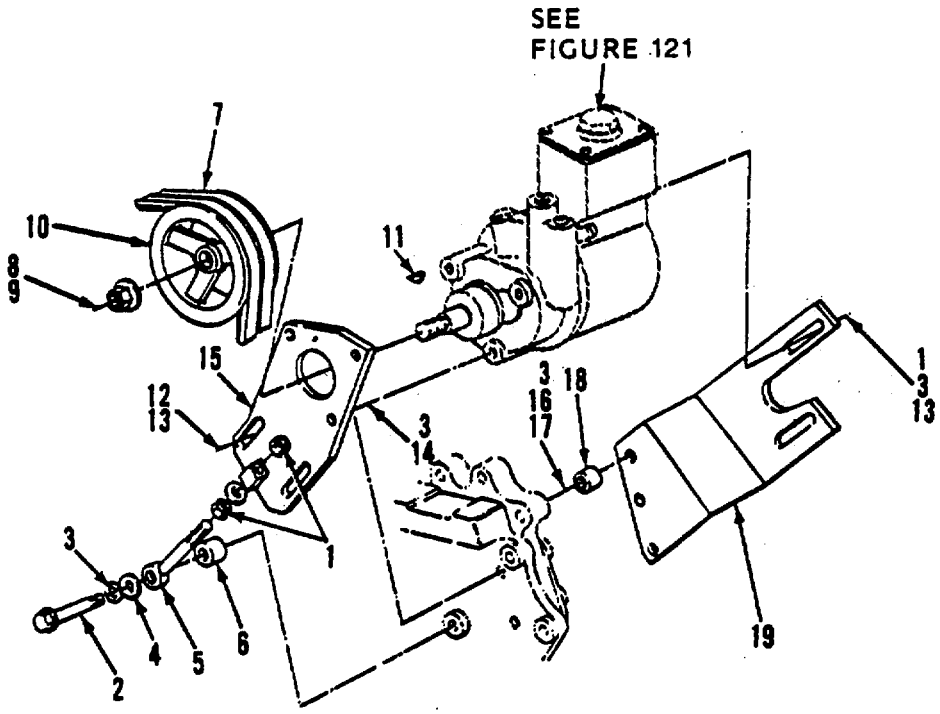


*Figure 119. Steering Pump Installation*

| (1) ITEM NO | (2) SMR CODE | (3) CAGEC | (4) PART NUMBER | (5) DESCRIPTION AND USABLE ON CODES (UOC) | (6) QTY |
|---|---|---|---|---|---|
| | | | | **GROUP 0213 STEERING PUMP** | |
| | | | | **FIG 119 STEERING PUMP INSTALLATION** | |
| 1 | XBOZZ | 89346 | 25522R1 | .NUT, HEX | 4 |
| 2 | PBOZZ | 89346 | 24842R1 | .SCREW, CAP, HEXAGON H | 1 |
| 3 | XBOZZ | 96906 | MS35338-46 | .WASHER, LOCK | 3 |
| 4 | PBOZZ | 89346 | 25709R1 | .WASHER, FLAT | 1 |
| 5 | XBOZZ | 89346 | 689362C1 | .BOLT, EYE | 1 |
| 6 | XBOZZ | 89346 | 689366C1 | .SPACER | 1 |
| 7 | PAOZZ | 89346 | 480082C91 | .BELTS, V, MATCHED SET | 1 |
| 8 | PAOZZ | 89346 | 303986C1 | .RING, RETAINING | 1 |
| 9 | PAOZZ | 89346 | 414087C1 | .NUT, DIFFERENTIAL | 1 |
| 10 | XBOZZ | 89346 | 508789C1 | .PULLEY, STEER PUMP | 1 |
| 11 | XBOZZ | 89346 | 124543 | .KEY, WOODRUFF | 1 |
| 12 | PAOZZ | 89346 | 24850R1 | .SCREW, CAP, HEXAGON H | 2 |
| 13 | PAOZZ | 96906 | MS35338-47 | .WASHER, LOCK | 2 |
| 14 | PAOZZ | 89346 | 24840R1 | .BOLT | 3 |
| 15 | XBOZZ | 89346 | 508792C1 | .BRACKET | 1 |
| 16 | PAOZA | 89346 | 25501R1 | .BOLT | 2 |
| 17 | PBOZZ | 89346 | 9413979 | .NUT | 1 |
| 18 | XBOZZ | 89346 | 1801433C1 | .SPACER | 1 |
| 19 | XBOZZ | 89346 | 1801427C1 | .BRACKET | 1 |
| | PAOZZ | 89346 | 384139C1 | .HOSE ASSEMBLY, NONME PUMP TO GEAR | 1 |
| | XBOZZ | 89346 | 864455R1 | .ELBOW, HOSE | 1 |
| | PAOZZ | 89346 | 532389C2 | .HOSE, NONMETALLIC | 1 |
| | PAOZZ | 31007 | 274085R91 | .CLAMP, HOSE | 2 |
| | XBOZZ | 89346 | 9410977 | .ELBOW | 1 |
| | XBOZZ | 89346 | 9411105 | .ELBOW | 1 |
| | PAFZZ | 89346 | 9409287 | .ADAPTER, STRAIGHT, PI | 1 |

END OF FIGURE

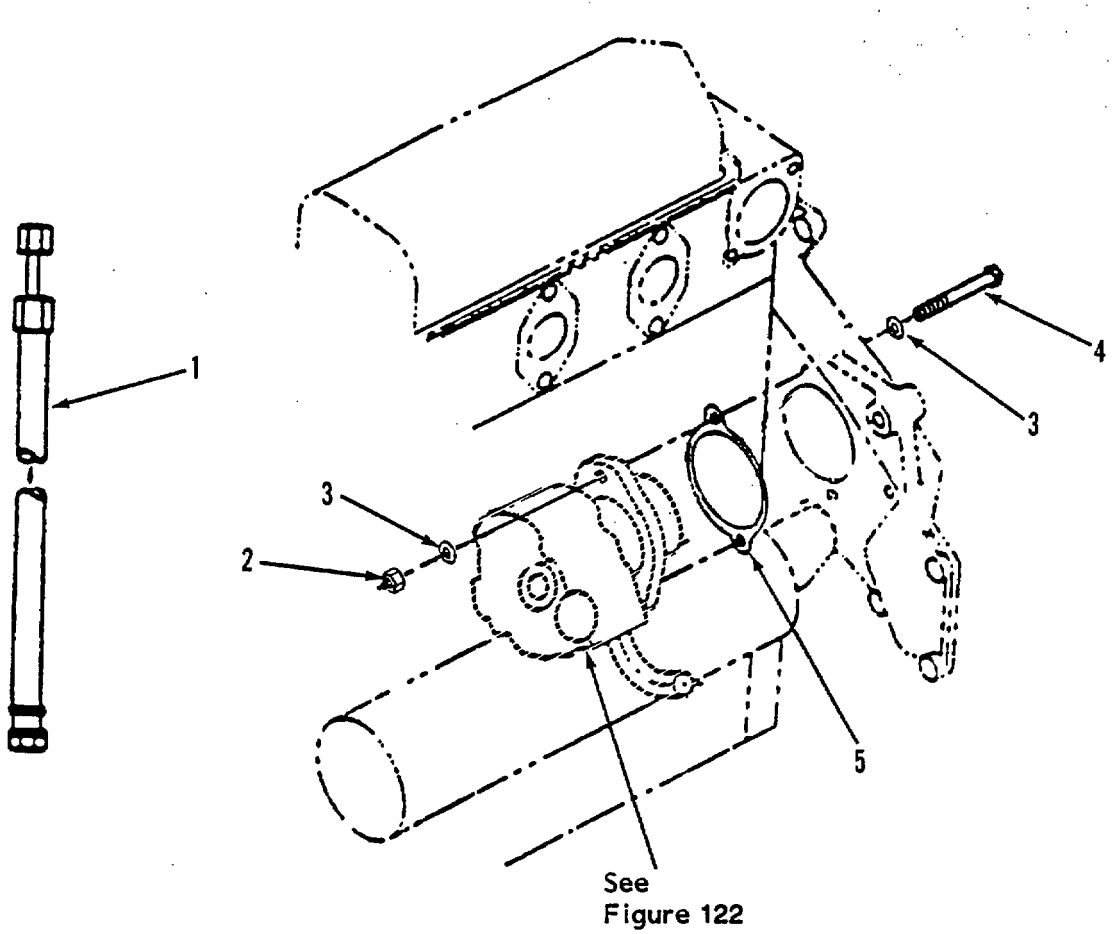


*Figure 120. Steering Pump Installation*

| (1) ITEM NO | (2) SMR CODE | (3) CAGEC | (4) PART NUMBER | (5) DESCRIPTION AND USABLE ON CODES (UOC) | (6) QTY |
|---|---|---|---|---|---|
| | | | | **GROUP 0213 STEERING PUMP** | |
| | | | | **FIG 120 STEERING PUMP INSTALLATION** | |
| 1 | PAOZZ | 89346 | 1614814C92 | .HOSE ASSEMBLY, NONME PUMP TO GEAR ..... | 1 |
| 1 | PAOZZ | 89346 | 532389C2 | .HOSE, NONMETALLIC GEAR TO RESERVOIR ..... | 6 |
| 1 | PAOZZ | 89346 | 1513791C1 | .HOSE, NONMETALLIC RESERVOIR TO PUMP ..... | 6 |
| 2 | XBOZZ | 89346 | 25522R1 | .NUT, HEX ..... | 2 |
| 3 | PBOZZ | 89346 | 25896R1 | .WASHER ..... | 4 |
| 4 | PBOZA | 89346 | 25501R1 | .BOLT ..... | 2 |
| 5 | PAOZZ | 89346 | 591597C2 | .GASKET ..... | 1 |

END OF FIGURE

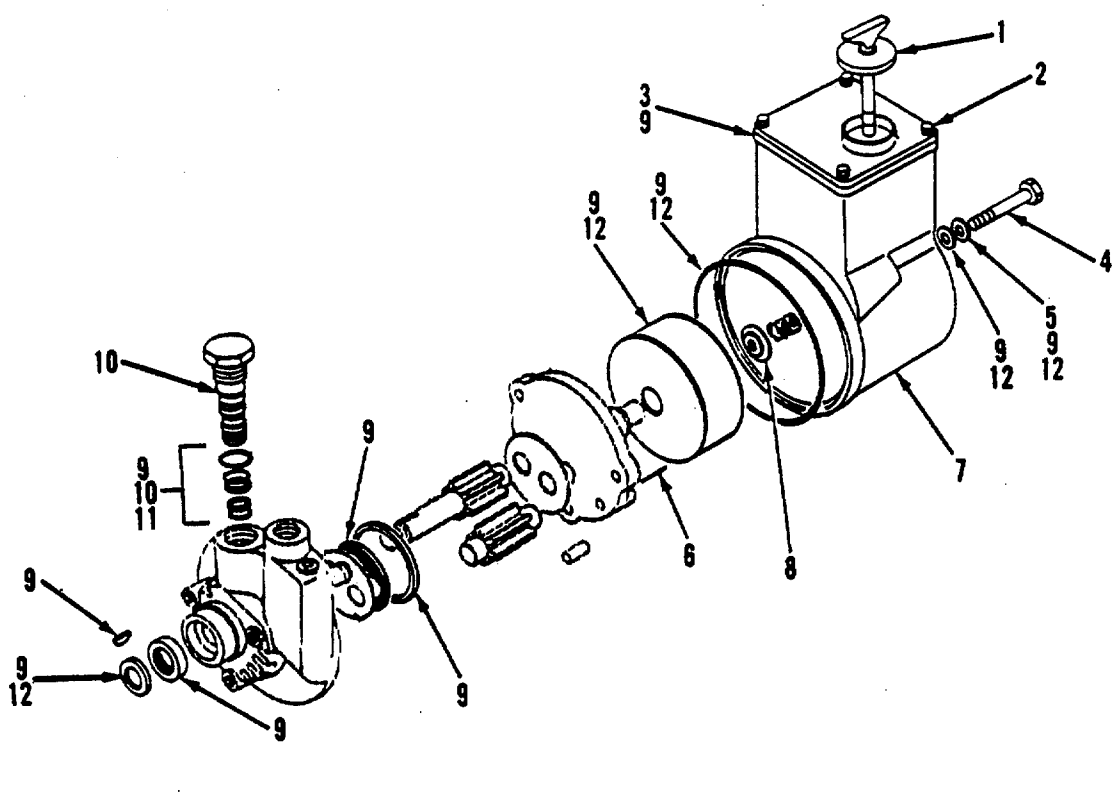


*Figure 121. Steering Pump Assembly*

| (1) ITEM NO | (2) SMR CODE | (3) CAGEC | (4) PART NUMBER | (5) DESCRIPTION AND USABLE ON CODES (UOC) | (6) QTY |
|---|---|---|---|---|---|
| | | | | **GROUP 0213 STEERING PUMP** | |
| | | | | **FIG. 121 STEERING PUMP ASSEMBLY** | |
| | PBOFZ | 89346 | 491000C92 | .PUMP ASSEMBLY, POWER | 1 |
| 1 | PAOZZ | 89346 | 585744C1 | ..CAP, FILLER OPENING | 1 |
| 2 | XBFZZ | 89346 | 10-24X5/8 | ..SCREW, TAPPING | 4 |
| 3 | PAFZZ | 89346 | 591238C1 | ..GASKET | 1 |
| 4 | PAFZZ | 89346 | 24842R1 | ..SCREW, CAP, HEXAGON H | 1 |
| 5 | PAFZZ | 89346 | 25709R1 | ..WASHER, FLAT | 5 |
| 6 | PAFZZ | 29930 | 140483H | ..BOLT, HEX HEAD | 4 |
| 7 | XBFZZ | 89346 | 585765C1 | ..RESERVOIR, PUMP | 1 |
| 8 | PAFZZ | 89346 | 590745C1 | ..WASHER, FLAT | 1 |
| 9 | PAFZZ | 89346 | 584960C91 | ..GASKET AND SEAL SET | 1 |
| 10 | PAFZZ | 89346 | 585768C91 | ..PARTS KIT, VALVE | 1 |
| 11 | PAFZZ | 89346 | 585767C91 | ..GASKET AND SEAL SET | 1 |
| 12 | PBFZZ | 89346 | 585766C91 | ..PARTS KIT, FLUID PRE | 1 |

END OF FIGURE

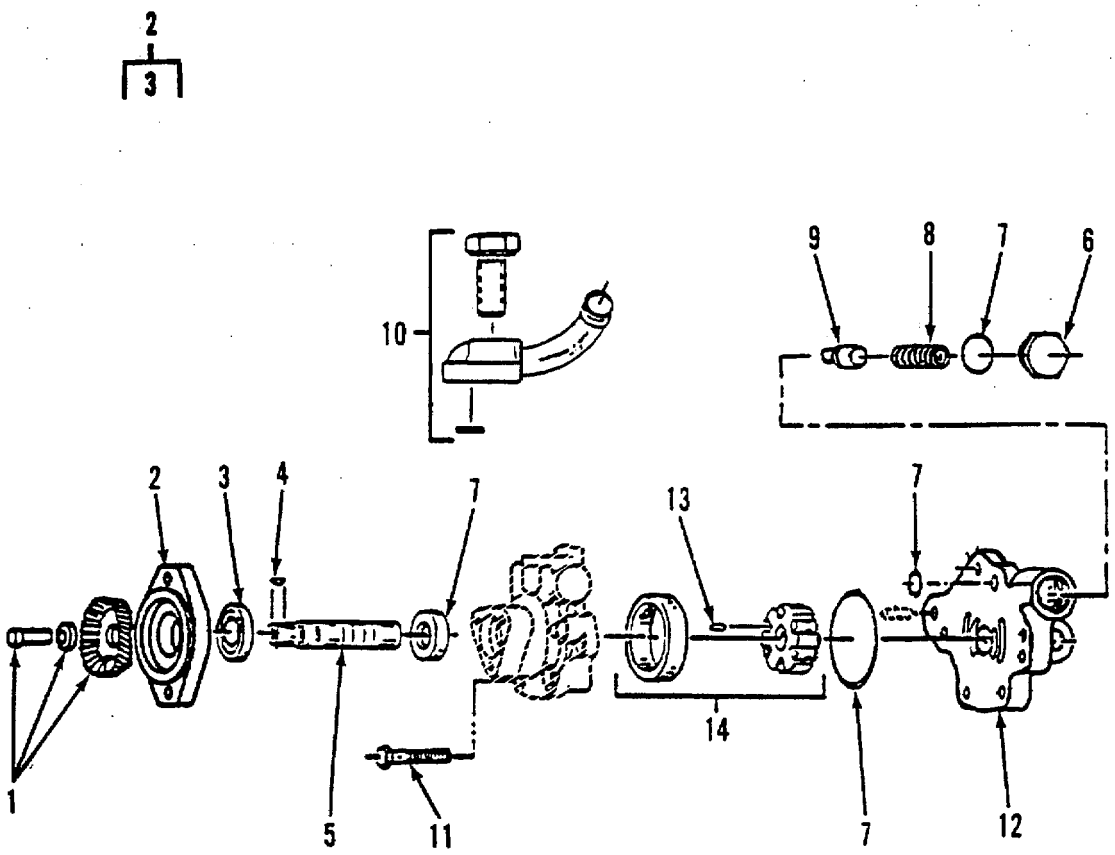


*Figure 122. Power Steering Pump*

| (1) ITEM NO | (2) SMR CODE | (3) CAGEC | (4) PART NUMBER | (5) DESCRIPTION AND USABLE ON CODES (UOC) | (6) QTY |
|---|---|---|---|---|---|
| | | | | **GROUP 0213 STEERING PUMP** | |
| | | | | **FIG 122 POWER STEERING PUMP** | |
| | PBOFZ | 89346 | 1655606C91 | .PUMP ASSEMBLY, POWER | 1 |
| 1 | PAOZZ | 89346 | 1655609C91 | ..STEERING GEAR | 1 |
| 2 | XBOZZ | 89346 | 16613745C91 | ..FLANGE, MOUNTING | 1 |
| 3 | PAOZZ | 89346 | 133214R91 | ..BEARING, BALL, ANNULA | 1 |
| 4 | XBOZZ | 89346 | 124543 | ..KEY, WOODRUFF | 1 |
| 5 | XBOZZ | 89346 | 1655602C91 | ..SHAFT, PUMP | 1 |
| 6 | XBOZZ | 89346 | 212747R1 | ..CAP, VALVE | 1 |
| 7 | PAOZZ | 89346 | 596241C91 | ..PARTS KIT, SEAL REPL | 1 |
| 8 | XBOZZ | 89346 | 212746R1 | ..SPRING, COMPRESSION | 1 |
| 9 | PBOZZ | 89346 | 1655603C1 | ..VALVE, CONTROL, MAGNE | 1 |
| 10 | XBOZZ | 89346 | 1655608C91 | ..ADAPTER, PUMP | 1 |
| 11 | XBOZZ | 89346 | 21318R1 | ..BOLT | 5 |
| 12 | XBOZZ | 89346 | 1655605C1 | ..COVER, PUMP | 1 |
| 13 | XBOZZ | 89346 | 434345C1 | ..PIN, DRIVE | 1 |
| 14 | PAOZZ | 89346 | 1649641C91 | ..PARTS KIT, POWER STE | 1 |

END OF FIGURE

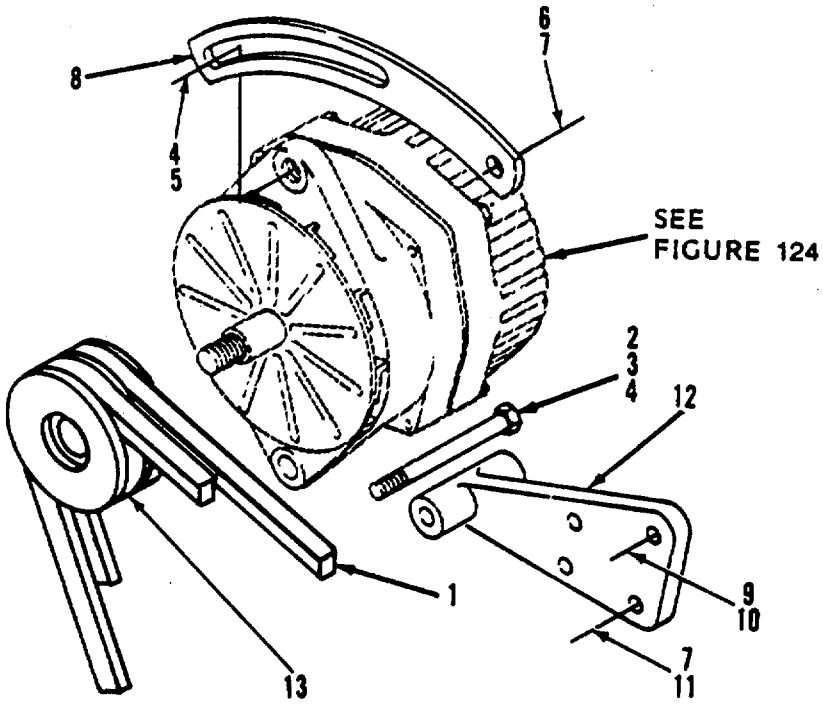


*Figure 123. Alternator Mounting*

| (1) ITEM NO | (2) SMR CODE | (3) CAGEC | (4) PART NUMBER | (5) DESCRIPTION AND USABLE ON CODES (UOC) | (6) QTY |
|---|---|---|---|---|---|
| | | | | **GROUP 0214 ALTERNATOR ASSEMBLY** | |
| | | | | **FIG. 123 ALTERNATOR, MOUNTING** | |
| 1 | PAOZZ | 89346 | 686617C91 | .BELTS, V, MATCHED SET | 1 |
| 2 | PAOZZ | 89346 | 26704R1 | .SCREW, CAP, HEXAGON H | 1 |
| 3 | PAOZZ | 89346 | 9412230 | .NUT | 1 |
| 4 | PAOZZ | 89346 | 25710R1 | .WASHER, FLAT | 2 |
| 5 | PAFZZ | 89346 | 24881R1 | .SCREW, CAP, HEXAGON H | 1 |
| 6 | PAOZZ | 29930 | 140483H | .BOLT, HEX HEAD | 1 |
| 7 | PAOZZ | 96906 | MS35338-46 | .WASHER, LOCK | 1 |
| 8 | XBOZZ | 89346 | 471530C1 | .STRAP, ADJUSTING | 1 |
| 9 | PAOZZ | 89346 | 25236R1 | .SCREW, CAP, HEXAGON H | 3 |
| 10 | PAOZZ | 96906 | MS35338-45 | .WASHER, LOCK | 3 |
| 11 | PAOZZ | 29510 | 275804R1 | .SCREW, CAP, HEXAGON H | 1 |
| 12 | XBOZZ | 89346 | 689427C1 | .BRACKET | 1 |
| 13 | XBOZZ | 89346 | 689342C1 | .PULLEY, ALTERNATOR | 1 |

END OF FIGURE

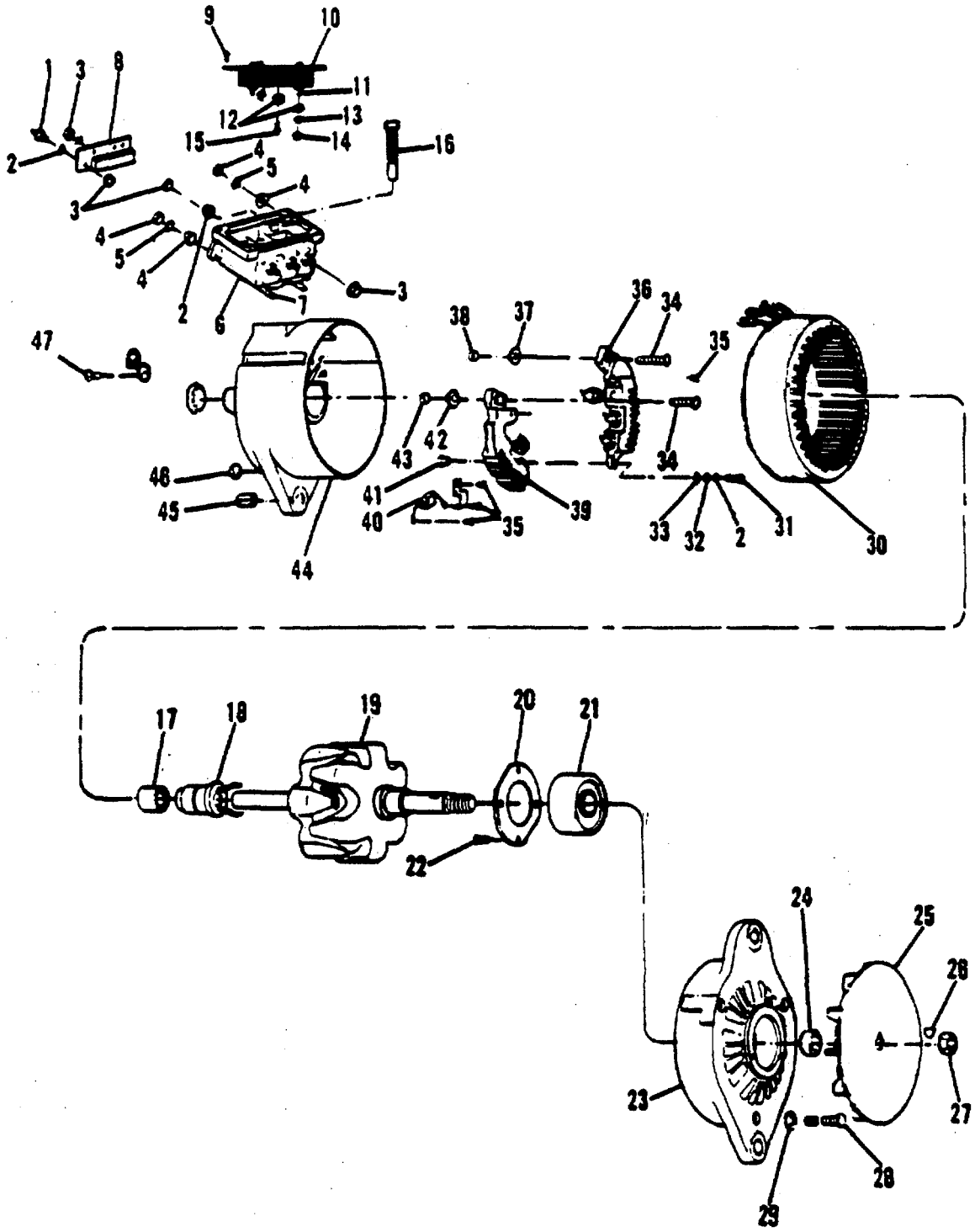


*Figure 124. Alternator Assembly*

| (1) ITEM NO | (2) SMR CODE | (3) CAGEC | (4) PART NUMBER | (5) DESCRIPTION AND USABLE ON CODES (UOC) | (6) QTY |
|---|---|---|---|---|---|
| | | | | **GROUP 0214 ALTERNATOR ASSEMBLY** | |
| | | | | **FIG. 124 ALTERNATOR ASSEMBLY** | |
| | PAOFF | 89346 | 585946C91 | .GENERATOR, ENGINE AC | 1 |
| 1 | XBFZZ | 89346 | 461064C1 | ..SCREW, TERMINAL | 1 |
| 2 | PBFZZ | 96906 | MS35338-43 | ..WASHER, LOCK | 5 |
| 3 | PBFZZ | 96906 | MS35650-302 | ..NUT, PLAIN, HEXAGON | 7 |
| 4 | XBFZZ | 96906 | MS35649-3252 | ..NUT, HEX | 4 |
| 5 | PBFZZ | 35510 | 3231 | ..WASHER, LOCK | 1 |
| 6 | PAFZZ | 35510 | 461044-C1 | ..HOLDER, ELECTRICAL C | 1 |
| 7 | PAFZZ | 89346 | 461052C1 | ..GASKET | 1 |
| 8 | PAFZZ | 89346 | 461054C1 | ..SEMICONDUCTOR DEVIC | 1 |
| 9 | PBFZZ | 96906 | MS35206-243 | ..SCREW, MACHINE | 4 |
| 10 | XDFZZ | 89346 | 461051C1 | ..GASKET | 1 |
| 11 | PAFZZ | 89346 | 585949C1 | ..REGULATOR, ENGINE GE | 1 |
| 12 | PBFZZ | 96906 | MS27183-5 | ..WASHER, FLAT | 4 |
| 13 | XBFZZ | 96906 | MS35338-30 | ..WASHER, LOCK | 2 |
| 14 | XBFZZ | 96906 | MS35649-362 | ..NUT, HEX | 2 |
| 15 | XBFZZ | 35510 | 100111 | ..SCREW, MACHINE | 2 |
| 16 | PAFZZ | 89346 | 461045C1 | ..BRUSH, ELECTRICAL CO | 2 |
| 17 | XBFZZ | 89346 | 460684C91 | ..BEARING, ROLLER | 1 |
| 18 | XBFZZ | 89346 | 461059C1 | ..RING, SLIP | 1 |
| 19 | XAFZZ | 89346 | 463118C91 | ..ROTOR | 1 |
| 20 | XBFZZ | 89346 | 461058C1 | ..RETAINER, BEARING | 1 |
| 21 | XBFZZ | 89346 | 460685C91 | ..BEARING, BALL | 1 |
| 22 | PBFZZ | 35510 | 58754 | ..SCREW, MACHINE | 4 |
| 23 | XBFZZ | 89346 | 461042C1 | ..HOUSING, FRONT | 1 |
| 24 | PBFZZ | 89346 | 461049C1 | ..SPACER, SLEEVE | 1 |
| 25 | PBFZZ | 89346 | 461050C2 | ..IMPELLER, FAN, AXIAL | 1 |
| 26 | PBOZZ | 35510 | 6399 | ..KEY, WOODRUFF | 1 |
| 27 | PBFZZ | 96906 | MS51968-20 | ..NUT, PLAIN, HEXAGON | 1 |
| 28 | PAFZZ | 35510 | 78991 | ..SCREW, CAP, HEXAGON H | 3 |
| 29 | XBFZZ | 89346 | 120391 | ..WASHER, FLAT | 1 |
| 30 | XBFZZ | 89346 | 461449C1 | ..STATOR, ALTERNATOR | 1 |
| 31 | PBFZZ | 96906 | MS35207-265 | ..SCREW, MACHINE | 2 |
| 32 | XBFZZ | 35510 | 5291 | ..WASHER, GUARD | 2 |
| 33 | PAFZZ | 35510 | 13657 | ..WASHER, FLAT | 2 |
| 34 | XBFZZ | 35510 | 78997 | ..BOLT, SQUARE NECK | 2 |
| 35 | PBFZZ | 35510 | 73543 | ..SCREW, TAPPING | 5 |
| 36 | PAFZZ | 89346 | 461057C91 | ..RECTIFIER ASSEMBLY | 1 |
| 37 | PAFZZ | 89346 | 461061C1 | ..BUSHING, INSULATION | 1 |
| 38 | PAFZZ | 89346 | 461065C1 | ..BUSHING, INSULATION | 1 |
| 39 | PAFZZ | 89346 | 461056C91 | ..RECTIFIER ASSEMBLY | 1 |
| | PAFZZ | 89346 | 98959R1 | ..CLAMP, LOOP | 1 |
| 40 | PAFZZ | 92679 | 461048C1 | ..CAPACITOR, FIXED, PLA | 1 |
| 41 | PAFZZ | 89346 | 461063C1 | ..BUSHING, INSULATION | 1 |
| 42 | PAFZZ | 89346 | 461062C1 | ..BUSHING, INSULATION | 1 |
| 43 | PAFZZ | 89346 | 461066C1 | ..BUSHING, INSULATION | 1 |
| 44 | XBFZZ | 89346 | 461043C1 | ..HOUSING, REAR | 1 |
| 45 | PAFZZ | 89346 | 461060C1 | ..BUSHING, SLEEVE | 1 |
| 46 | PAFZZ | 35510 | 26175 | ..NUT, HEXAGON | 3 |

| (1) ITEM NO | (2) SMR CODE | (3) CAGEC | (4) PART NUMBER | (5) DESCRIPTION AND USABLE ON CODES (UOC) | (6) QTY |
|---|---|---|---|---|---|
| 47 | PBFZZ | 35510 | 75348 | ..SCREW, CAP, HEXAGON H..... | 1 |

END OF FIGURE

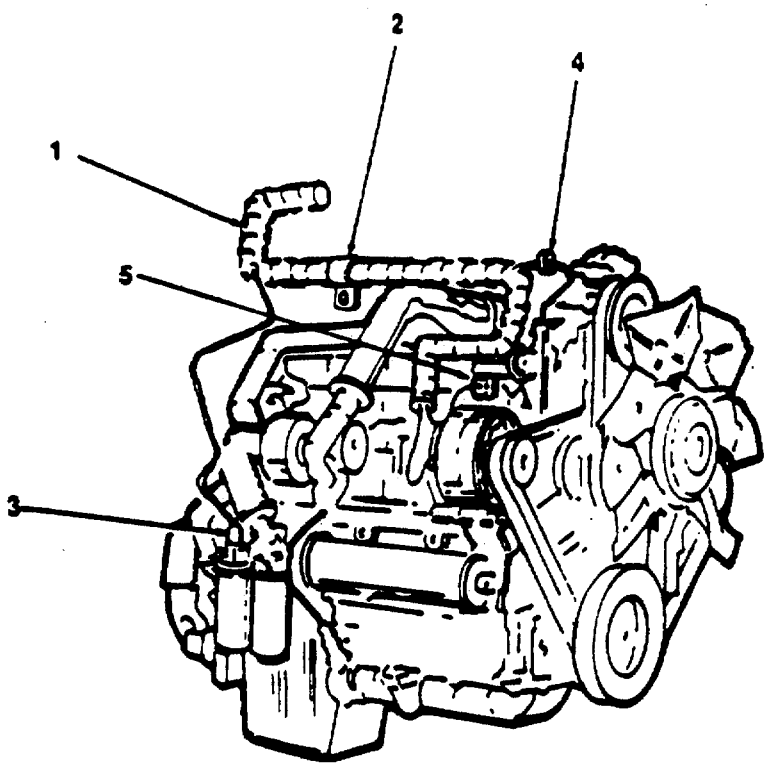


*Figure 125. Engine Wiring Installation.*

| (1) ITEM NO | (2) SMR CODE | (3) CAGEC | (4) PART NUMBER | (5) DESCRIPTION AND USABLE ON CODES (UOC) | (6) QTY |
|---|---|---|---|---|---|
| | | | | **GROUP 0215 STARTING MOTOR ASSEMBLY** | |
| | | | | **FIG. 125 ENGINE WIRING INSTALLATION** | |
| 1 | PBFZZ | 89346 | 571792C92 | .WIRING HARNESS, ENGI | 1 |
| 2 | XBFZZ | 89346 | 299608C1 | .CLAMP | 4 |
| 3 | PBFZZ | 89346 | 584051C2 | .TRANSMITTER, PRESSUR | 1 |
| 4 | PBFZZ | 89346 | 479758C1 | .TRANSMITTER, TEMPERA | 1 |
| | PBFZZ | 89346 | 556915C91 | .INDICATOR, ELECTRICA | 1 |
| 5 | PBFZZ | 89346 | 509048C1 | .SWITCH, THERMOSTATIC | 1 |
| | PBFZZ | 89346 | 1655816C1 | .SWITCH, THERMOSTATIC | 1 |
| | PBFZZ | 89346 | 268690C91 | .BUZZER | 1 |
| | XBFZZ | 89346 | 393435C2 | .BRACKET, RELAY | 1 |

END OF FIGURE

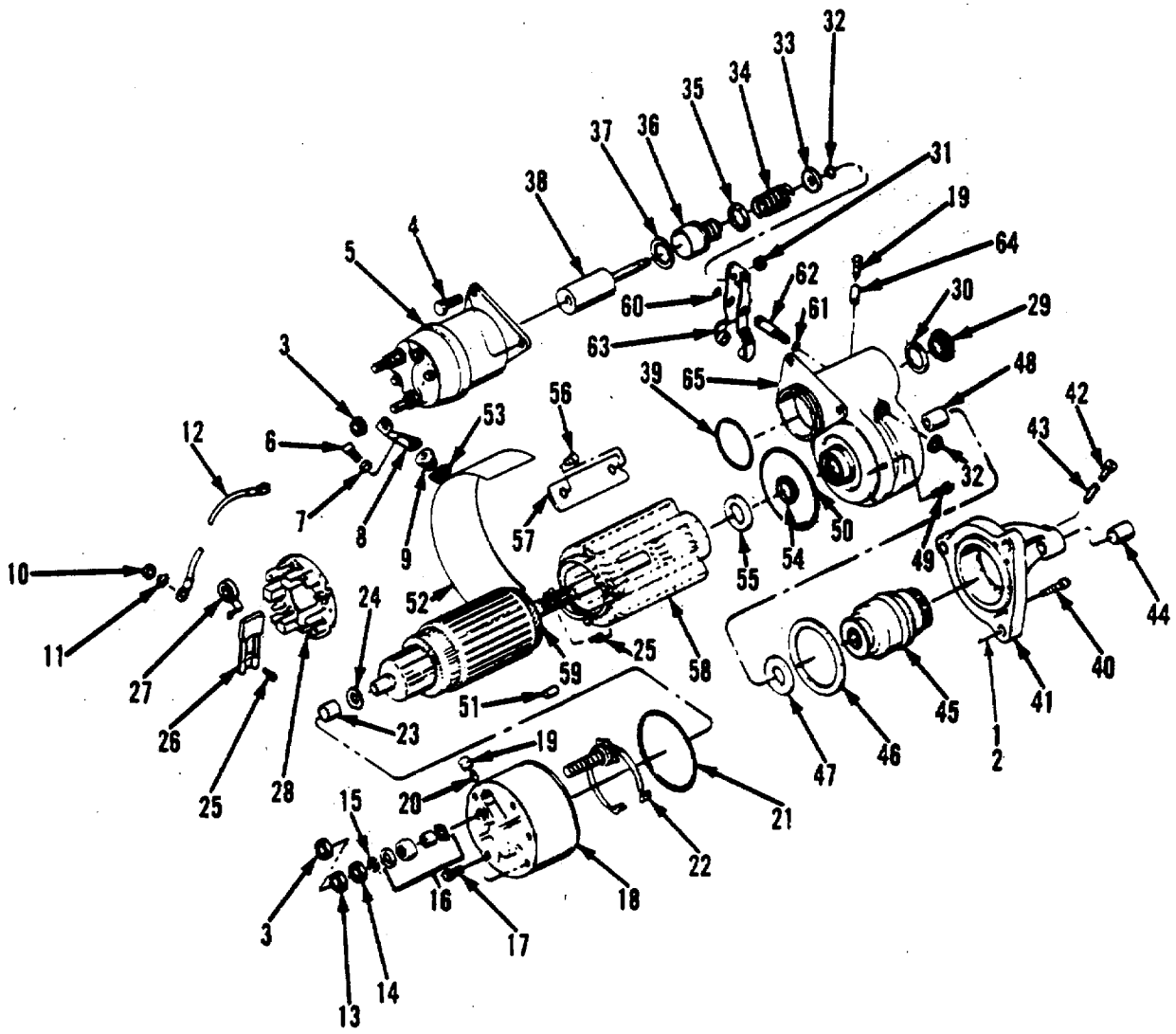


*Figure 126. Starting Motor*

| (1) ITEM NO | (2) SMR CODE | (3) CAGEC | (4) PART NUMBER | (5) DESCRIPTION AND USABLE ON CODES (UOC) | (6) QTY |
|---|---|---|---|---|---|
| | | | | **GROUP 0215 STARTING MOTOR ASSEMBLY** | |
| | | | | **FIG. 126 STARTING MOTOR** | |
| | PAOFF | 89346 | 1990466 | .MOTOR, ENGINE STARTE | 1 |
| 1 | PAOZZ | 29510 | 27578R1 | .BOLT, MACHINE | 3 |
| 2 | PAOZZ | 89346 | 25711R1 | .WASHER, FLAT | 3 |
| 3 | PBFZZ | 89346 | 9412230 | ..NUT | 2 |
| 4 | XBFZZ | 89346 | 1985332 | ..SCREW | 3 |
| 5 | PAFZZ | 89346 | 1115598 | ..RELAY-SOLENOID, ENGI | 1 |
| 6 | XBFZZ | 89346 | 9440917 | ..SCREW | 1 |
| 7 | XBFZZ | 89346 | 1905125 | ..WASHER | 1 |
| 8 | XBFZZ | 89346 | 10498663 | ..CONNECTOR | 1 |
| 9 | PAFZZ | 16764 | 1988340 | ..INSULATOR, BUSHING | 1 |
| 10 | XBFZZ | 89346 | 432230 | ..NUT | 1 |
| 11 | XBFZZ | 89346 | 453435 | ..WASHER, LOCK | 1 |
| 12 | XBFZZ | 89346 | 1979600 | ..LEAD, ELECTRICAL | 1 |
| 13 | XBFZZ | 89346 | 25933R1 | ..NUT | 1 |
| 14 | XBFZZ | 96906 | MS35338-48 | ..WASHER, LOCK | 1 |
| 15 | XBFZZ | 89346 | 30205 | ..WASHER | 1 |
| 16 | PAFZZ | 16764 | 10495183 | ..INSULATOR KIT | 1 |
| 17 | KFFZZ | 89346 | 1988135 | ..SCREW PART OF' KIT P/N 1989495 | 6 |
| 18 | XBFZZ | 89346 | 1988126 | ..FRAME, END | 1 |
| 19 | KFFZZ | 89346 | 1985246 | ..CUP, OIL PART OF KIT P/N 19'89497 | 1 |
| 20 | KFFZZ | 89346 | 1988138 | ..WICK, OIL PART OF KIT P/N 1989497 | 1 |
| 21 | KFFZZ | 89346 | 1985320 | ..PACKING, PREFORMED PART OF KIT P/N 1989495 | 1 |
| 22 | XBFZZ | 89346 | 1988128 | ..LEAD & TERMINAL | 1 |
| 23 | KFFZZ | 89346 | 1955994 | ..BUSHING PART OF KIT P/N 1989497 | 1 |
| 24 | KFFZZ | 89346 | 1985617 | ..WASHER, THRUST PART OF KIT P/N 1989497 | 1 |
| 25 | KFFZZ | 89346 | 1968998 | ..SCREW PART OF KIT P/N -1989495 | 8 |
| 26 | KFFZZ | 89346 | 1852892 | ..BRUSH, ELECTRICAL PART OF KIT P/N 1989495.. | 4 |
| 27 | KFFZZ | 89346 | 1985314 | ..SPRING, BRUSH PART OF KIT P/N 1989495 | 4 |
| 28 | XBFZZ | 89346 | 1988121 | ..PLATE, BRUSH | 1 |
| 29 | XBFZZ | 89346 | 1945356 | ..PLUG | 1 |
| 30 | KFFZZ | 89346 | 1964857 | ..GASKET PART OF KIT P/N 1989497 | 1 |
| 31 | KFFZZ | 89346 | 9412305 | ..NUT, ADJUSTING PART OF KIT P/N 1989497 | 1 |
| 32 | XBFZZ | 89346 | 213262R1 | ..RING, SNAP | 2 |
| 33 | XBFZZ | 89346 | 1948526 | ..RETAINER, SPRING | 1 |
| 34 | XBFZZ | 89346 | 1948521 | ..SPRING, COMPRESSION | 1 |
| 35 | XBFZZ | 89346 | 1948520 | ..RETAINER, SPRING | 1 |
| 36 | XBFZZ | 89346 | 1985243 | ..BOOT, PLUNGER | 1 |
| 37 | XBFZZ | 89346 | 1948519 | ..WASHER, FLAT | 1 |
| 38 | XBFZZ | 89346 | 1988140 | ..PLUNGER, SOLENOID | 1 |
| 39 | KFFZZ | 89346 | 1985304 | ..PACKING, PREFORMED PART OF KIT P/N 1989497 | 1 |
| 40 | XBFZZ | 89346 | 1948537 | ..SCREW | 6 |
| 41 | XBFZZ | 89346 | 1988137 | ..HOUSING, DRIVE | 1 |

| (1) ITEM NO | (2) SMR CODE | (3) CAGEC | (4) PART NUMBER | (5) DESCRIPTION AND USABLE ON CODES (UOC) | (6) QTY |
|---|---|---|---|---|---|
| 42 | XBFZZ | 89346 | 1978756 | ..CUP, OIL | 1 |
| 43 | KFFZZ | 89346 | 1972977 | ..WICK, OIL PART OF KIT P/N 1989497 | 1 |
| 44 | KFFZZ | 89346 | 1894635 | ..BUSHING PART OF KIT P/N 1989497 | 1 |
| 45 | XAFZZ | 89346 | 1977005 | ..DRIVE, MOTOR | 1 |
| 46 | KFFZZ | 89346 | 1851960 | ..PACKING, PREFORMED PART OF KIT P/N 1989497 | 1 |
| 47 | KFFZZ | 89346 | 1911644 | ..WASHER, FLAT PART OF KIT P/N 1989497 | 1 |
| 48 | KFFZZ | 89346 | 1988096 | ..BUSHING PART OF KIT P/N 1989497 | 1 |
| 49 | PAFZZ | 80204 | B1821BH025C100N | ..SCREW, CAP, HEXAGON H | 5 |
| 50 | KFFZZ | 89346 | 1916272 | ..PACKING, PREFORMED PART OF KIT P/N 1989497 | 1 |
| 51 | XBFZZ | 89346 | 456652 | ..PIN, STRAIGHT | 2 |
| 52 | PAFZZ | 89346 | 1988100 | ..INSULATOR, PLATE | 1 |
| 53 | PAFZZ | 16764 | 1988339 | ..INSULATOR, B US HING | 1 |
| 54 | KFFZZ | 89346 | 1918047 | ..SEAL, OIL PART OF KIT P/N 1989497 | 1 |
| 55 | KFFZZ | 89346 | 1936466 | ..WASHER, FLAT PART OF KIT P/N 1989497 | 1 |
| 56 | XBFZZ | 89346 | 1968396 | ..SCREW | 8 |
| 57 | XBFZZ | 89346 | 1934478 | ..SHOE, POLE | 4 |
| 58 | XBFZZ | 89346 | 1988111 | ..COIL, FIELD | 1 |
| 59 | XAFZZ | 89346 | 1987989 | ..ARMATURE | 1 |
| 60 | KFFZZ | 89346 | 1894643 | ..PACKING, PREFORMED PART OF KIT P/N 1989498 | 1 |
| 61 | KFFZZ | 89346 | 1894642 | ..PACKING, PREFORMED PART OF KIT P/N 1989498 | 1 |
| 62 | KFFZZ | 89346 | 1948529 | ..SHAFT, LEVER PART OF KIT P/N 1989498 | 1 |
| 63 | KFFZZ | 89346 | 1988097 | ..LEVER, SHIFT PART OF KIT P/N 1989498 | 1 |
| 64 | KFFZZ | 89346 | 1985247 | ..WICK, OIL PART OF KIT P/N 1989497 | 1 |
| 65 | XBFZZ | 89346 | 1988093 | ..HOUSING, LEVER | 1 |
| | PAFZZ | 89346 | 1989495 | .BRUSH, ELECTRICAL CO | 1 |
| | | | | BRUSH, ELECTRICAL ( 4) 126-26 | |
| | | | | PACKING, PREFORMED ( 1) 126-21 | |
| | | | | SCREW ( 6) 126-17 | |
| | | | | SCREW ( 8) 126-25 | |
| | | | | SPRING, BRUSH ( 4) 126727 | |
| | PAFZZ | 89346 | 1989497 | .BUSHING, ELECTRICAL | 1 |
| | | | | BUSHING ( 1) 126-23 | |
| | | | | BUSHING ( 1) 126-44 | |
| | | | | BUSHING ( 1) 126-48 | |
| | | | | CUP, OIL ( 1) 126-19 | |
| | | | | GASKET ( 1) 126-30 | |
| | | | | NUT, ADJUSTING ( 1) 126-31 | |
| | | | | PACKING, PREFORMED ( 1) 126-39 | |
| | | | | PACKING, PREFORMED ( 1) 126-46 | |
| | | | | PACKING, PREFORMED ( 1) 126-50 | |
| | | | | SEAL, OIL ( 1) 126-54 | |
| | | | | WASHER, FLAT ( 1) 126-47 | |
| | | | | WASHER, FLAT ( 1) 126-55 | |
| | | | | WASHER, THRUST ( 1) 126-24 | |

| (1) ITEM NO | (2) SMR CODE | (3) CAGEC | (4) PART NUMBER | (5) DESCRIPTION AND USABLE ON CODES (UOC) | (6) QTY |
|---|---|---|---|---|---|
| | | | | WICK, OIL ( 1) 126-20 | |
| | | | | WICK, OIL ( 1) 126-43 | |
| | | | | WICK, OIL ( 1) 126-64 | |
| | PAFZZ | 16764 | 1989498 | .PARTS KIT, ELECTRICA ..... | 1 |
| | | | | LEVER, SHIFT ( 1) 126-63 | |
| | | | | PACKING, PREFORMED ( 1) 126-60 | |
| | | | | PACKING, PREFORMED ( 1) 126-61 | |
| | | | | SHAFT, LEVER ( 1) 126-62 | |

END OF FIGURE

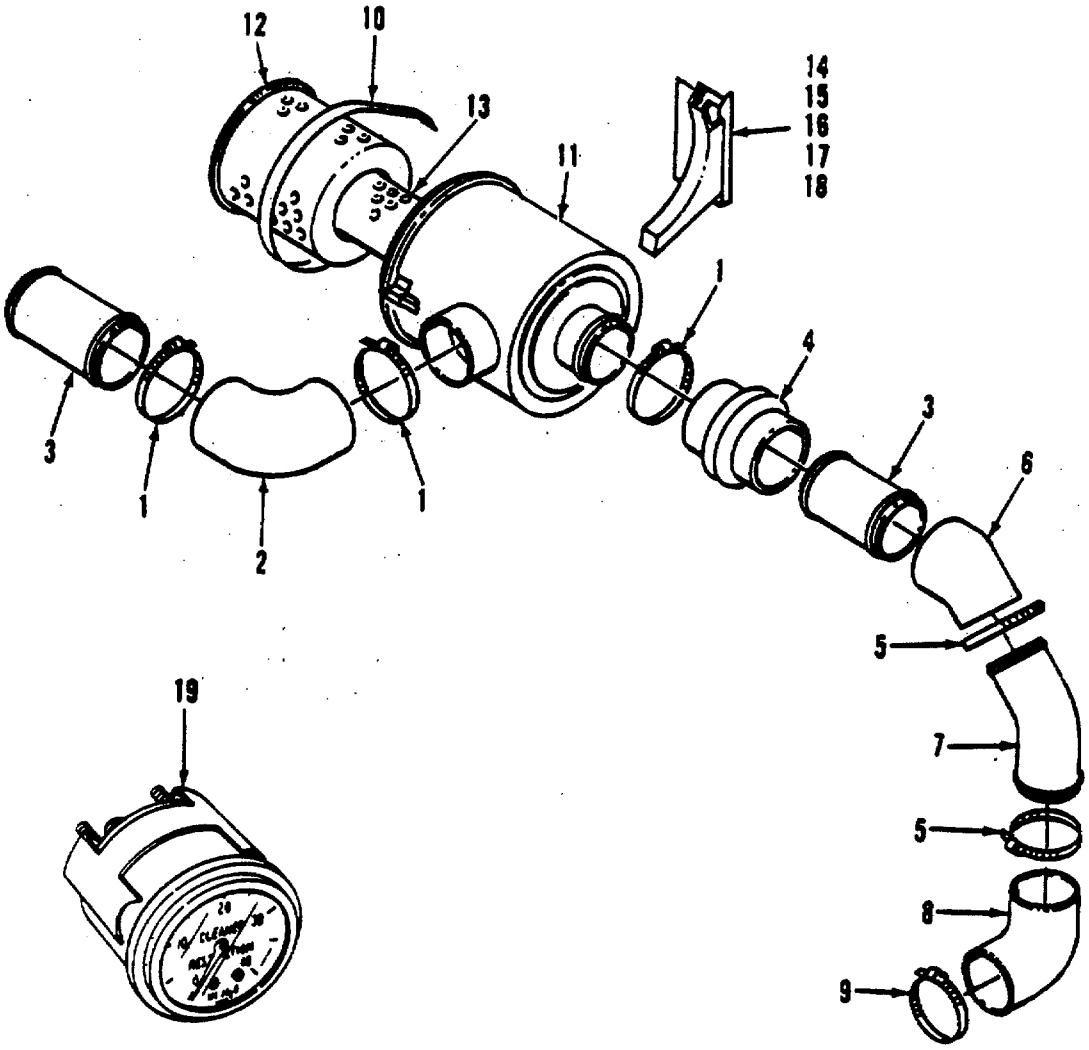


*Figure 127. Air Cleaner and Mounting*

| (1) ITEM NO | (2) SMR CODE | (3) CAGEC | (4) PART NUMBER | (5) DESCRIPTION AND USABLE ON CODES (UOC) | (6) QTY |
|---|---|---|---|---|---|
| | | | | **GROUP 0216 DIESEL ENGINE ASSEMBLY** | |
| | | | | **FIG. 127 AIR CLEANER AND MOUNTING** | |
| 1 | PAOZZ | 08484 | 21080 | .CLAMP, HOSE | 4 |
| 2 | PAOZZ | 18265 | P10-5534 | .HOSE, PREFORMED | 1 |
| 3 | XBOZZ | 89346 | 482757C1 | .PIPE, AIR INLET | 2 |
| 4 | PAOZZ | 18265 | P10-5610 | .HOSE, PREFORMED | 1 |
| 5 | PAOZZ | 89346 | 397270R1 | .ELBOW, PIPE | 3 |
| 6 | PAOZZ | 89346 | 515718C1 | .TUBING, NONMETALLIC | 1 |
| 7 | XBOZZ | 89346 | 482758C1 | .PIPE, AIR INTAKE | 1 |
| 8 | PAOZZ | 89346 | 548222R1 | .ELBOW, HOSE | 1 |
| 9 | PAOZZ | 89346 | 995224R1 | .CLAMP, HOSE | 1 |
| 10 | XBOZZ | 89346 | 595968C1 | .STRAP, MOUNTING | 2 |
| | XBOZZ | 89346 | 277232R1 | .SCREW, CAP | 2 |
| | PBOZZ | 89346 | 9413979 | .NUT | 2 |
| | PBOZZ | 89346 | 25709R1 | .WASHER, FLAT | 2 |
| 11 | PBOOO | 89346 | 492920C91 | .AIR CLEANER, INTAKE | 1 |
| 12 | PAOZZ | 89346 | 476741CI | ..FILTER ELEMENT, INTA | 1 |
| 13 | PAOZZ | 89346 | 482644C1 | ..STRAINER ELEMENT, SE | 1 |
| 14 | XBOZZ | 89346 | 482736C1 | .BRACKET, MTG, LEFT | 1 |
| 15 | XBOZZ | 89346 | .482737C1 | .BRACKET, MTG, RIGHT | 1 |
| 16 | PBOZZ | 89346 | 25228R1 | .SCREW, CAP, HEXAGON H | 2 |
| 17 | PBOZZ | 89346 | 9413977 | .NUT, PLAIN, HEXAGON | 2 |
| 18 | XBOZZ | 89346 | 593394C1 | .INSULATOR | 2 |
| 19 | PAOZZ | 89346 | 484534C91 | .GAGE, DIFFERENTIAL, D | 1 |

END OF FIGURE

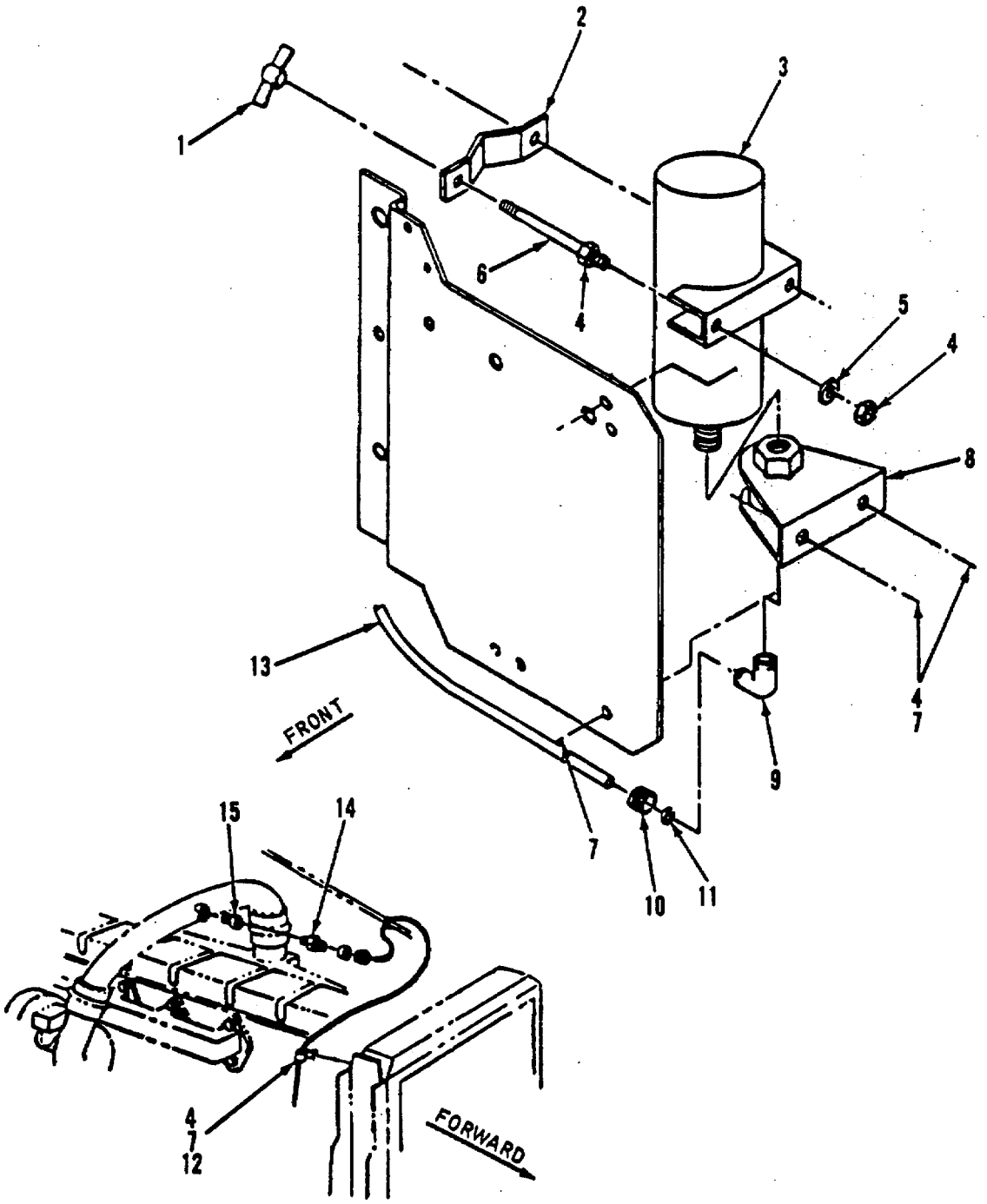


*Figure 128. Ether Start Installation*

| (1) ITEM NO | (2) SMR CODE | (3) CAGEC | (4) PART NUMBER | (5) DESCRIPTION AND USABLE ON CODES (UOC) | (6) QTY |
|---|---|---|---|---|---|
| | | | | **GROUP 0216 DIESEL ENGINE ASSEMBLY** | |
| | | | | **FIG. 128 ETHER START INSTALLATION** | |
| 1 | PAOZZ | 89346 | 126177 | .NUT, PLAIN, WING | 2 |
| 2 | XBOZZ | 89346 | 453699C1 | .BRACKET | 1 |
| 3 | PAOZZ | 53203 | 20000 | .CARTRIDGE, ENGINE ST | 1 |
| 4 | XBOZZ | 89346 | 26110R1 | .NUT, HEX LOCK | 6 |
| 5 | PBOZZ | 89346 | 25707R1 | .WASHER, FLAT | 2 |
| 6 | XBOZZ | 89346 | 453698C1 | .STUD | 2 |
| 7 | XBOZZ | 89346 | 25222R1 | .SCREW, CAP | 3 |
| 8 | PBOZZ | 89346 | 463683C91 | .VALVE, SAFETY RELIEF | 1 |
| 9 | XBOZZ | 89346 | 140304 | .ELBOW | 1 |
| 10 | XBOZZ | 89346 | 121220 | .NUT | 4 |
| 11 | XBOZZ | 89346 | 121322 | .SLEEVE | 2 |
| 12 | PAOZZ | 89346 | 299398C1 | .CLAMP, SPECIAL | 1 |
| 13 | PAOZZ | 89346 | 417195C2 | .TUBING, NONMETALLIC | 1 |
| 14 | PBOZZ | 29510 | 269635R91 | .NOZZLE ASSEMBLY, ETH | 1 |
| 15 | XBOZZ | 89346 | 298608C11 | .CONNECTOR, POPPET | 1 |

END OF FIGURE

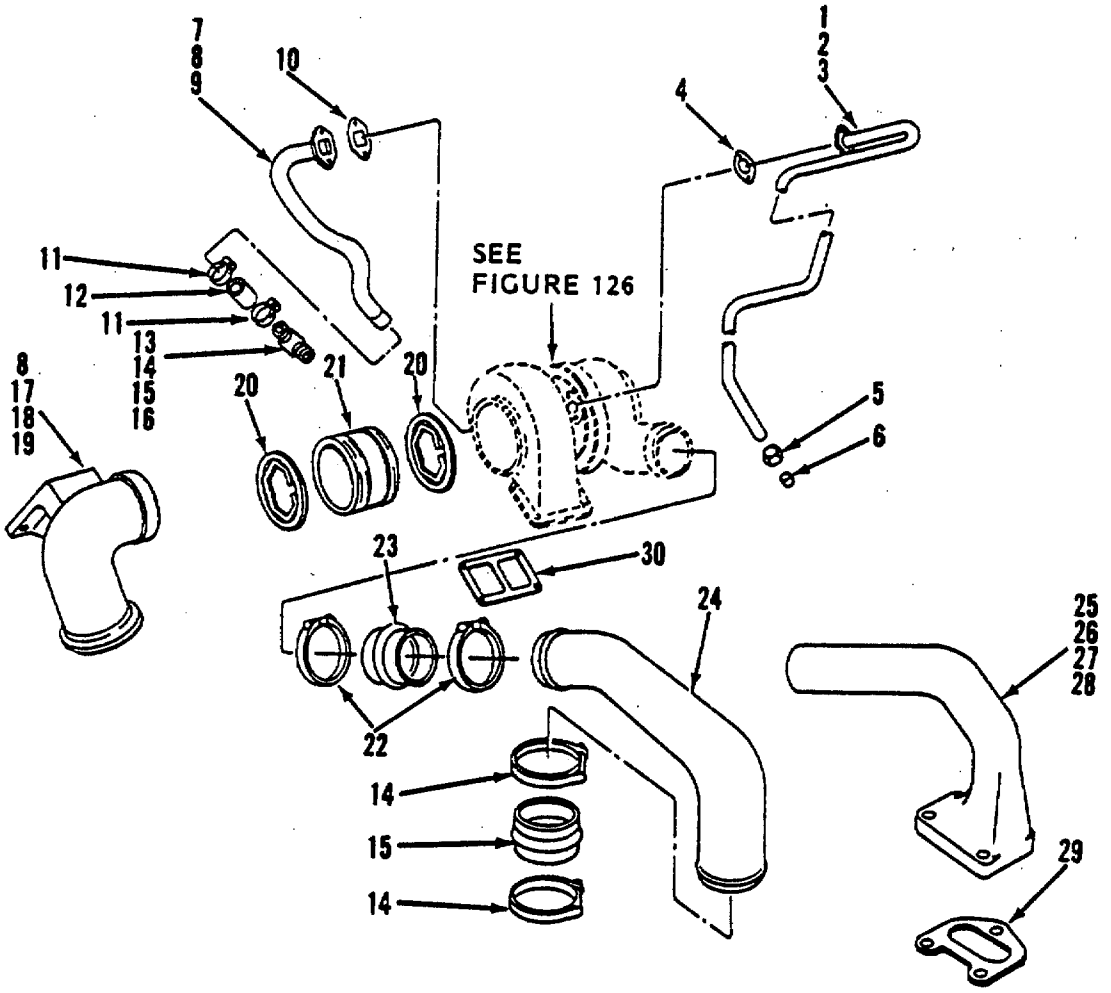


*Figure 129. Turbocharger Piping*

| (1) ITEM NO | (2) SMR CODE | (3) CAGEC | (4) PART NUMBER | (5) DESCRIPTION AND USABLE ON CODES (UOC) | (6) QTY |
|---|---|---|---|---|---|
| | | | | **GROUP 0216 DIESEL ENGINE ASSEMBLY** | |
| | | | | **FIG. 129 TURBOCHARGER PIPING** | |
| 1 | PAFZZ | 89346 | 25493R1 | .SCREW, CAP, HEXAGON H | 2 |
| 2 | PAFZZ | 89346 | 27326R1 | .WASHER, FLAT | 2 |
| 3 | PAFZZ | 89346 | 677755C91 | .TUBE ASSEMBLY, METAL | 1 |
| 4 | PAFZZ | 29510 | 253660R1 | .GASKET | 1 |
| 5 | PAFZZ | 29510 | 265205R1 | .NUT | 1 |
| 6 | PAFZZ | 89346 | 265204R1 | .BUSHING, NONMETALLIC | 1 |
| 7 | PAFZZ | 96906 | MS90725-60 | .SCREW, CAP, HEXAGON H | 2 |
| 8 | PAFZZ | 89346 | 25896R1 | .WASHER | 2 |
| 9 | PAFZZ | 89346 | 1801244C1 | .HOSE , NONMETALLIC | 1 |
| 10 | PAFZZ | 29510 | 670079C1 | .GASKET | 1 |
| 11 | PAFZO | 92679 | 122316R91 | .CLAMP, HOSE | 2 |
| 12 | PAFZZ | 89346 | 675859C2 | .HOSE, METALLIC | 1 |
| 13 | XBFZZ | 89346 | 673622C1 | .ELBOW | 1 |
| 14 | XBFZZ | 89346 | 1800667C1 | .NUT, FITTING | 1 |
| 15 | PAFZZ | 89346 | 875528C1 | .PACKING, PREFORMED | 1 |
| 16 | PAFZZ | 89346 | 619174C1 | .WASHER, FLAT | 1 |
| 17 | PAFZZ | 29930 | 140483H | .BOLT, HEX HEAD | 4 |
| 18 | PAFZZ | 31007 | 25522R1 | .NUT | 2 |
| 19 | XBFZZ | 89346 | 683520C1 | .ELBOW, EXHAUST | 1 |
| 20 | PAFZZ | 29510 | 702299C1 | .SEAL, TURBO | 2 |
| 21 | XBFZZ | 89346 | 675317C1 | .SLEEVE, TUBE, EXHAUST | 1 |
| 22 | PAFZZ | 89346 | 687456C1 | .CLAMP, HOSE | 2 |
| 23 | PAFZZ | 92679 | 675723C2 | .HOSE, PREFORMED | 1 |
| 24 | XBFZZ | 89346 | 691179C92 | .PIPE, OUTLET | 1 |
| 25 | XDFZZ | 92679 | 25654R1 | .BOLT | 2 |
| 26 | PAFZZ | 89346 | 25678R1 | .SCREW, CAP, HEXAGON H | 1 |
| 27 | PAFZZ | 89346 | 27326R1 | .WASHER, FLAT | 3 |
| 28 | XBFZZ | 89346 | 688329C1 | .ELBOW, INTERCO OLER | 1 |
| 29 | PAFZZ | 89346 | 686181C1 | .GASKET | 1 |
| 30 | PAFZZ | 29510 | 670073C1 | .GASKET | 1 |

END OF FIGURE

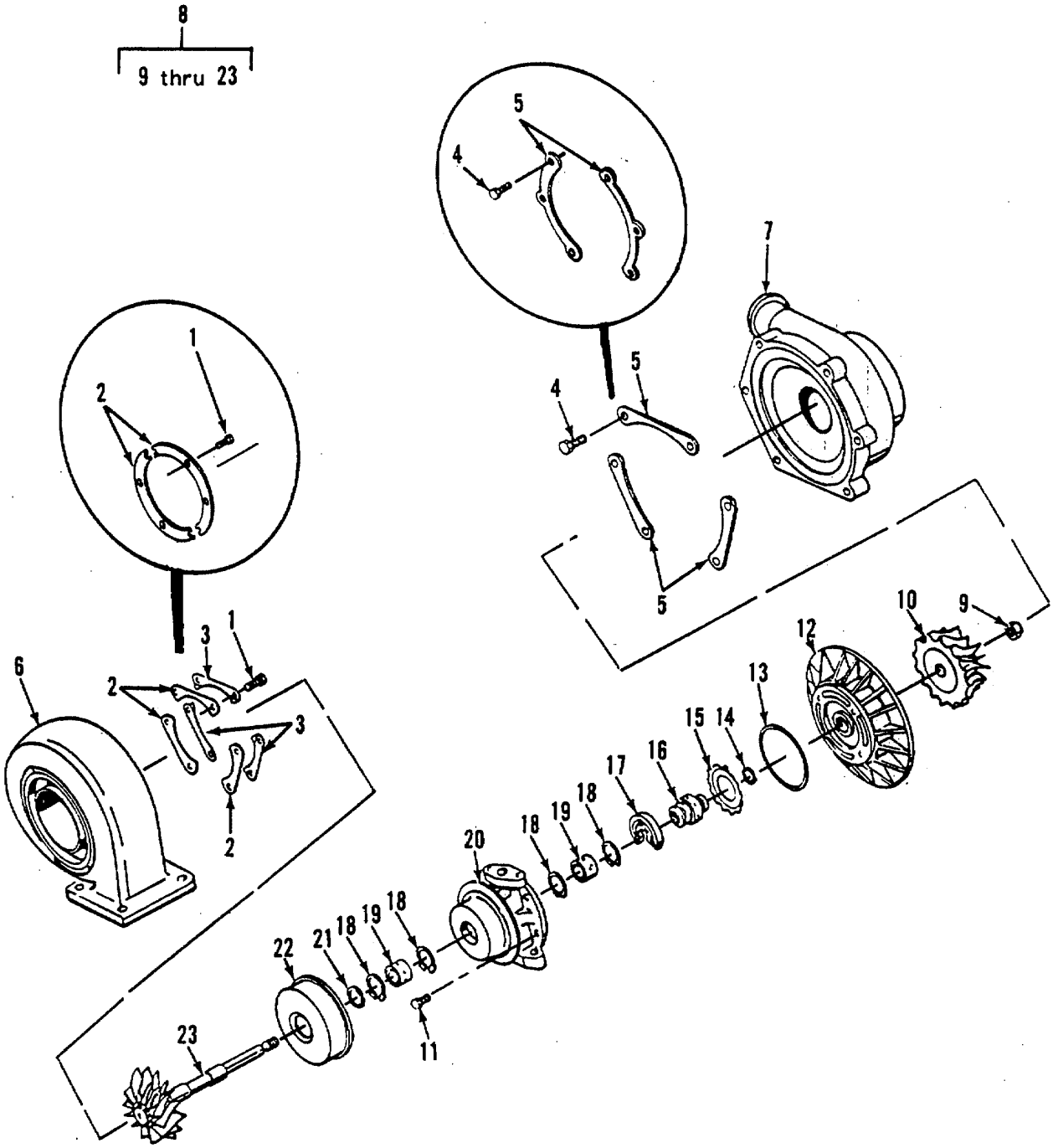


*Figure 130. Turbocharger Assembly*

| (1) ITEM NO | (2) SMR CODE | (3) CAGEC | (4) PART NUMBER | (5) DESCRIPTION AND USABLE ON CODES (UOC) | (6) QTY |
|---|---|---|---|---|---|
| | | | | **GROUP 0216 DIESEL ENGINE ASSEMBLY** | |
| | | | | **FIG. 130 TURBOCHARGER ASSEMBLY** | |
| | PAFFZ | 89346 | 1810304C91 | .TURBOSUPERCHARGER, E USED ON | 1 |
| | | | | ..SERIAL NOS 672040 THRU 672044 | 1 |
| 1 | PAFZZ | 70210 | 400450-1 | ..BOLT, MACHINE | 6 |
| 2 | PAFZZ | 29510 | 684245C1 | ..PLATE, HOUSING CLAMP | 3 |
| 2 | PAFZZ | 89346 | 1809692C1 | ..CLAMP, HOUSING USED ON SERIAL NOS ..672040 THRU 672044 | 3 |
| 3 | XBFZZ | 89346 | 615739C1 | ..PLATE, LOCKING | 3 |
| 4 | PAFZZ | 89346 | 1809618C1 | ..BOLT, MACHINE | 6 |
| 5 | PAFZZ | 29510 | 630610C1 | ..CLAMP, HOSE, SPECIAL | 3 |
| 5 | PAFZZ | 89346 | 1809690C1 | ..CLAMP, HOUSING USED ON SERIAL NOS ..672040 THRU 672044 | 3 |
| 6 | XBFZZ | 89346 | 630611C1 | ..HOUSING, TURBINE | 1 |
| 6 | XBFZZ | 89346 | 630675C1 | ..HOUSING, TURBINE USED ON SERIAL ..NOS 672040 THRU 672044 | 1 |
| 7 | XBFZZ | 89346 | 1809695C1 | ..HOUSING, COMPRESSION | 1 |
| 8 | XBFFF | 89346 | 1809696C91 | ..CORE, TURBOCHARGER | 1 |
| 9 | XBFZZ | 89346 | 615741C2 | ..NUT, LOCK | 1 |
| 10 | XBFZZ | 89346 | 684364C1 | ...WHEEL, IMPELLER | 1 |
| 10 | XBFZZ | 89346 | 1809694C1 | ...WHEEL, IMPELLER USED ON SERIAL ...NOS 672040 THRU 672044 | 1 |
| 11 | XBFZZ | 89346 | 1809617C1 | ...BOLT, SELF-LOCKING | 1 |
| 12 | XBFZZ | 89346 | 630614C91 | ...PLATE | 1 |
| 12 | XBFZZ | 89346 | 1809693C91 | ...PLATE USED ON SERIAL NOS 672040 ...THRU 672044 | 1 |
| 13 | PAFZZ | 29510 | 343847R1 | ...RING, BACKPLATE SEAL | 1 |
| 14 | PAFZZ | 89346 | 615746C1 | ...SEAL RING, METAL | 1 |
| 15 | PAFZZ | 89346 | 615747C1 | ...SPRING, HELICAL, COMP | 2 |
| 16 | XBFZZ | 89346 | 615745C2 | ...COLLAR, THRUST | 1 |
| 17 | PAFZZ | 29510 | 627773C1 | ...BEARING, THRUST | 1 |
| 18 | PAFZZ | 89346 | 627774C1 | ...RING, RETAINING | 4 |
| 19 | PAFZZ | 89346 | 687965C1 | ...BEARING, PLAIN, SPHER | 2 |
| 20 | XBFZZ | 89346 | 684360C92 | ...HOUSING, CENTER | 1 |
| 21 | PAFZZ | 89346 | 684359C2 | ...RING, RETAINING | 1 |
| 22 | XBFZZ | 89346 | 627771C1 | ...SHROUD | 1 |
| 23 | XAFZZ | 89346 | 1806082C1 | ...WHEEL, TURBINE | 1 |
| 23 | XAFZZ | 89346 | 1809691C1 | ...WHEEL, TURBINE USED ON SERIAL NOS 672040 THRU 672044 | 1 |

END OF FIGURE

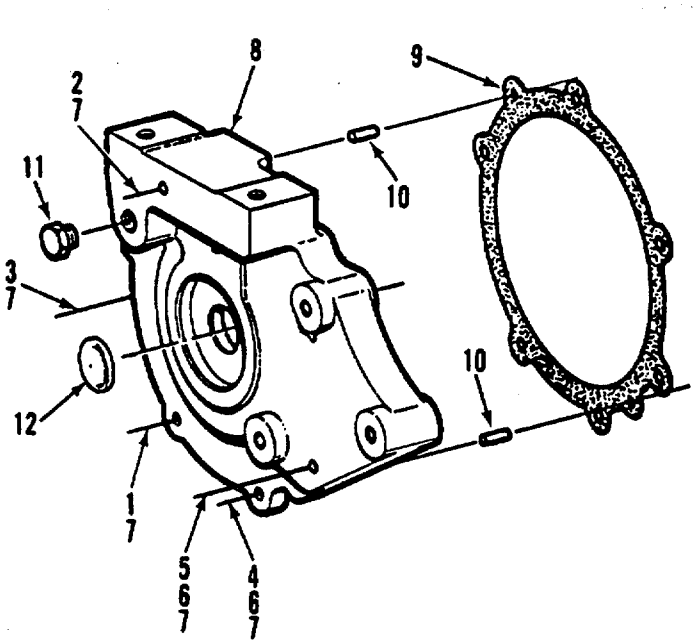


*Figure 131. Fuel Pump Access Cover*

| (1) ITEM NO | (2) SMR CODE | (3) CAGEC | (4) PART NUMBER | (5) DESCRIPTION AND USABLE ON CODES (UOC) | (6) QTY |
|---|---|---|---|---|---|
| | | | | **GROUP 0216 DIESEL ENGINE ASSEMBLY** | |
| | | | | **FIG. 131 FUEL PUMP ACCESS COVER** | |
| 1 | PBFZZ | 89346 | 25493R1 | .SCREW, CAP, HEXAGON H | 1 |
| 2 | PBFZZ | 89346 | 25235R1 | .SCREW, CAP, HEXAGON H | 1 |
| 3 | XBFZZ | 89346 | 26057R1 | .SCREW, CAP | 1 |
| 4 | XBFZZ | 89346 | 26586R1 | .SCREW, CAP | 1 |
| 5 | XBFZZ | 89346 | 26703R1 | .SCREW, CAP | 2 |
| 6 | XBFZZ | 89346 | 25520R1 | .NUT, HEX | 3 |
| 7 | PBFZZ | 89346 | 27326R1 | .WASHER, FLAT | 9 |
| 8 | XBFZZ | 89346 | 1809829C91 | .COVER, ACCESS | 1 |
| 9 | PAFZZ | 92679 | 675816C1 | .GASKET | 1 |
| 10 | XBFZZ | 89346 | 680481C1 | .PIN, DOWEL | 2 |
| 11 | XBFZZ | 89346 | 444625 | .PLUG, PIPE | 1 |
| 12 | XBFZZ | 89346 | 318300R1 | .PLUG, CAP | 1 |
| | | | | END OF FIGURE | |

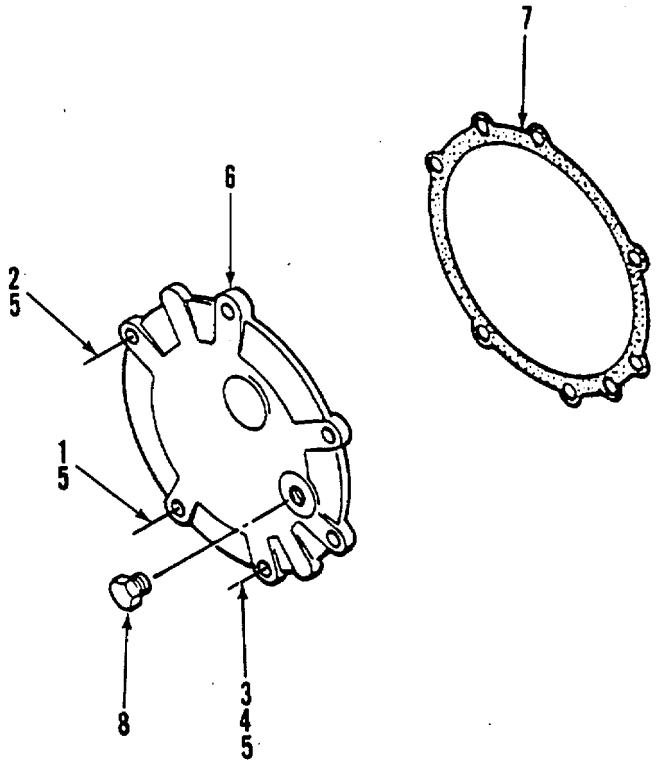


*Figure 132. Fuel Pump Access Cover*

| (1) ITEM NO | (2) SMR CODE | (3) CAGEC | (4) PART NUMBER | (5) DESCRIPTION AND USABLE ON CODES (UOC) | (6) QTY |
|---|---|---|---|---|---|
| | | | | **GROUP 0216 FUEL PUMP** | |
| | | | | **FIG. 132 FUEL PUMP ACCESS COVER** | |
| 1 | PBFZZ | 89346 | 25493R1 | .SCREW, CAP, HEXAGON H USED ON SERIAL NOS 672040 THRU 672044 | 2 |
| 2 | XBFZZ | 89346 | 26057R1 | .SCREW, CAP USED ON SERIAL NOS 672040 THRU 672044 | 1 |
| 3 | XBFZZ | 89346 | 26586R1 | .SCREW, CAP USED ON SERIAL NOS 672040 THRU 672044 | 3 |
| 4 | XBFZZ | 89346 | 25520R1 | .NUT, HEX USED ON SERIAL NOS 672040 THRU 672044 | 3 |
| 5 | PBFZZ | 89346 | 27326R1 | .WASHER, FLAT USED ON SERIAL NOS 672040 THRU 672044 | 9 |
| 6 | XBFZZ | 89346 | 1810351C1 | .COVER, ACCESS USED ON SERIAL NOS 672040 THRU 672044 | 1 |
| 7 | XBFZZ | 89346 | 675816C1 | .GASKET USED ON SERIAL NOS 672040 THRU 672044 | 1 |
| 8 | XBFZZ | 89346 | 444624 | .PLUG, PIPE USED ON SERIAL NOS 672040 THRU- 672044 | 1 |

END OF FIGURE

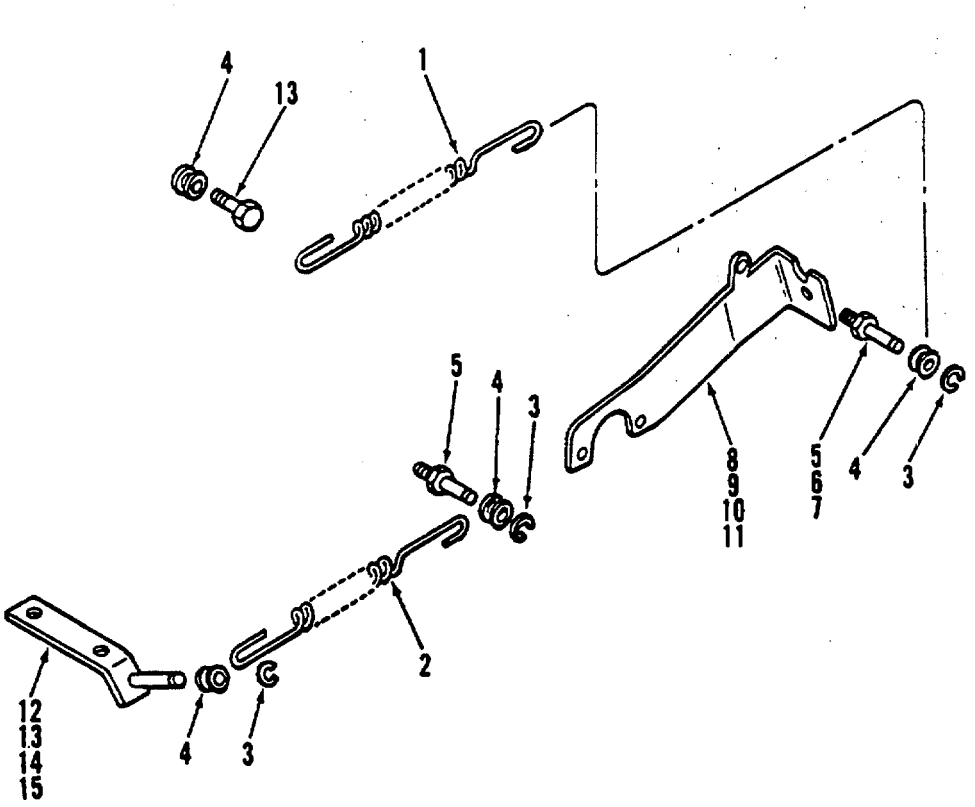


*Figure 133. Fuel Pump Linkage*

| (1) ITEM NO | (2) SMR CODE | (3) CAGEC | (4) PART NUMBER | (5) DESCRIPTION AND USABLE ON CODES (UOC) | (6) QTY |
|---|---|---|---|---|---|
| | | | | **GROUP 0216 DIESEL ENGINE ASSEMBLY** | |
| | | | | **FIG. 133 FUEL PUMP LINKAGE** | |
| 1 | PAOZZ | 89346 | 1806792C1 | .SPRING, HELICAL, EXTE | 1 |
| 2 | PAOZZ | 89346 | 1806793C1 | .SPRING, HELICAL, EXTE | 1 |
| 3 | PAOZZ | 89346 | 1806388C1 | .RING, RETAINING | 3 |
| 4 | PAOZZ | 89346 | 1806281C1 | .SPRING, HELICAL, EXTE | 4 |
| 5 | PBOZZ | 89346 | 1806279C1 | .POST, ELECTRICAL-MEC | 2 |
| 6 | PAOZZ | 89346 | 26030R1 | .NUT, PLAIN, HEXAGON | 2 |
| 7 | PAOZZ | 96906 | MS35338-44 | .WASHER, LOCK | 2 |
| 8 | PAOZZ | 89346 | 25784R1 | .SCREW, CAP, HEXAGON H | 1 |
| 9 | PAOZZ | 29510 | 25684R1 | .SCREW, CAP, HEXAGON H | 2 |
| 10 | PAOZZ | 89346 | 25896R1 | .WASHER | 3 |
| 11 | XBOZZ | 89346 | 1806610C1 | .BRACKET | 1 |
| 12 | PAOZZ | 89346 | 25228R1 | .SCREW, CAP, HEXAGON H | 2 |
| 13 | PAOZZ | 96906 | MS35338-45 | .WASHER, LOCK | 2 |
| 14 | PAOZZ | 89346 | 27326R1 | .WASHER, FLAT | 2 |
| 15 | XBOZZ | 89346 | 1806282C2 | .BRACKET | 1 |

END OF FIGURE

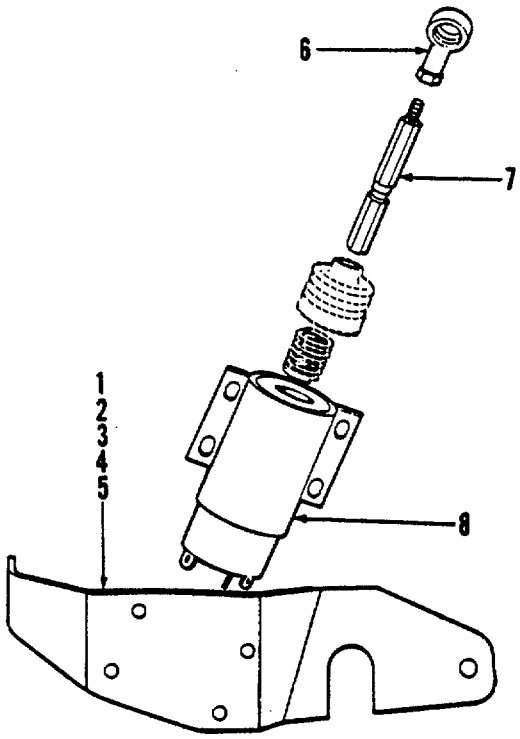


*Figure 134. Fuel Pump Solenoid*

| (1) ITEM NO | (2) SMR CODE | (3) CAGEC | (4) PART NUMBER | (5) DESCRIPTION AND USABLE ON CODES (UOC) | (6) QTY |
|---|---|---|---|---|---|
| | | | | **GRCUP 0216 DIESEL ENGINE ASSEMBLY** | |
| | | | | **FIG. 134 FUEL PUMP SOLENOID** | |
| 1 | PAFZZ | 89346 | 25483R1 | .SCREW, CAP, HEXAGON H..... | 4 |
| 2 | PAFZZ | 89346 | 27616R1 | .WASHER, FLAT..... | 8 |
| 3 | PAFZZ | 96906 | MS35338-44 | .WASHER, LOCK..... | 4 |
| 4 | PAFZZ | 92679 | 25519R1 | .NUT..... | 4 |
| 5 | XBFZZ | 89346 | 1801452C1 | .BRACKET ..... | 1 |
| 6 | XBFZZ | 89346 | 1803254C1 | .END, ROD ..... | 1 |
| 7 | XBFZZ | 89346 | 1801344C2 | .ROD, ADJUSTING ..... | 1 |
| 8 | PAFZZ | 89346 | 1802650C91 | .VALVE, SOLENOID..... | 1 |
| | | | | END OF FIGURE | |

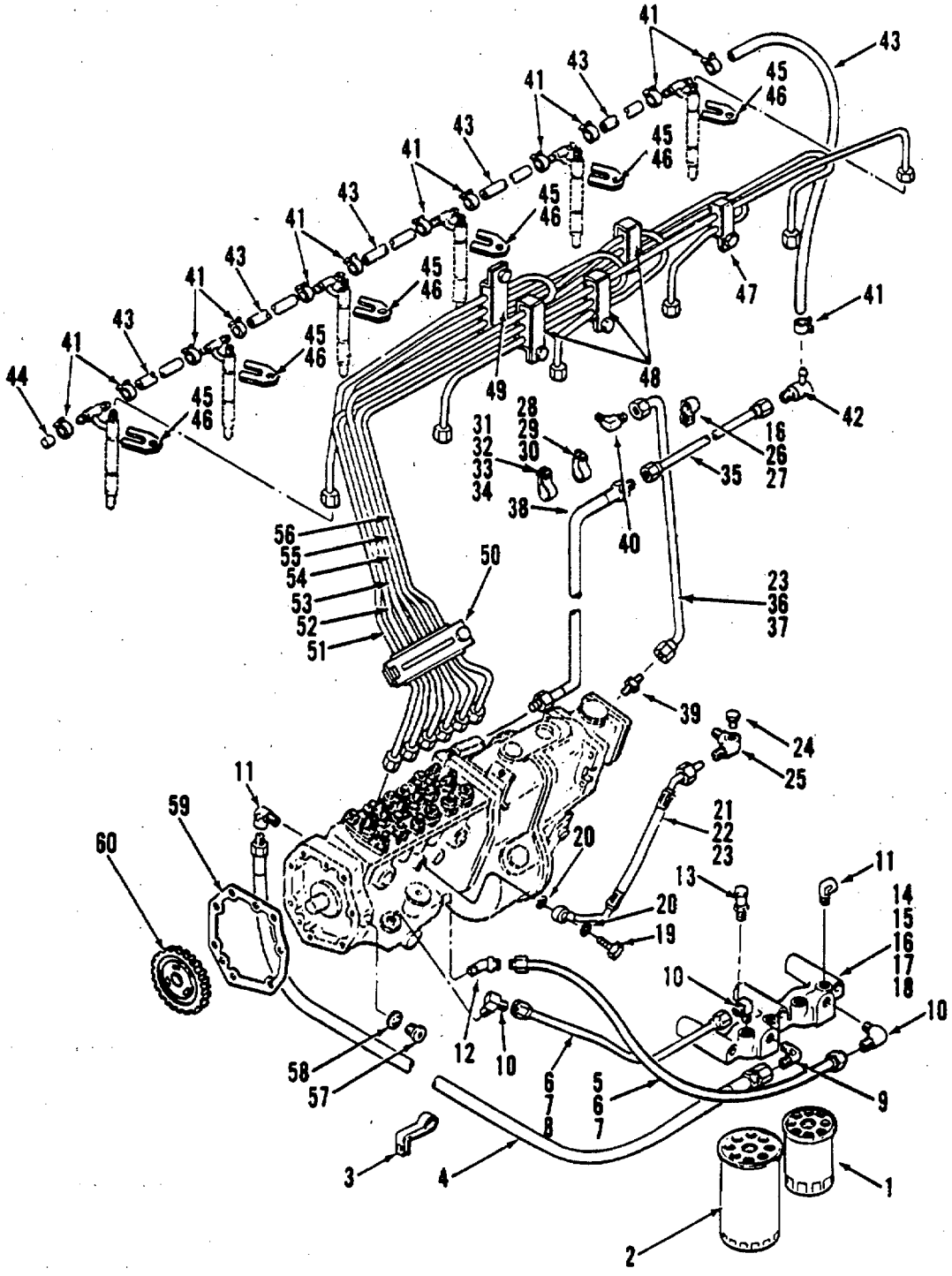


*Figure 135. Fuel Injection Piping*

| (1) ITEM NO | (2) SMR CODE | (3) CAGEC | (4) PART NUMBER | (5) DESCRIPTION AND USABLE ON CODES (UOC) | (6) QTY |
|---|---|---|---|---|---|
| | | | | **GROUP 0216 DIESEL ENGINE ASSEMBLY** | |
| | | | | **FIG. 135 FUEL INJECTION PIPING** | |
| 1 | PAOZZ | 12658 | BF979 | .FILTER ELEMENT, FLUI | 1 |
| 2 | PAOZZ | 89346 | 672603C2 | .FILTER ELEMENT, FLUI | 1 |
| 3 | PAOZZ | 89346 | 1802756C1 | .CLAMP, HOSE | 1 |
| 4 | PAOZZ | 89346 | 688188C1 | .HOSE ASSEMBLY, NONME | 1 |
| 5 | PAOZZ | 89346 | 1806602C91 | .TUBE ASSEMBLY, METAL | 1 |
| 6 | PAOZZ | 89346 | 265204R1 | .BUSHING, NONMETALLIC | 6 |
| 7 | PAOZZ | 29510 | 265205R1 | .NUT | 6 |
| 8 | PAOZZ | 89346 | 691072C91 | .TUBE ASSEMBLY, METAL | 1 |
| 9 | XBOZZ | 89346 | 118755 | .ELBOW | 1 |
| 10 | XBOZZ | 89346 | 606845C1 | .ELBOW | 1 |
| 11 | XBOZZ | 89346 | 444040 | .ELBOW, PIPE STREET | 1 |
| 12 | XBOZZ | 89346 | 606889C1 | .ELBOW | 1 |
| 13 | PAOZZ | 29510 | 39677DA | .COCK, SHUTOFF, SCREW | 1 |
| 14 | PAOZZ | 89346 | 24846R1 | .BOLT, MACHINE | 3 |
| 15 | PAOZZ | 19207 | 7617319 | .WASHER, FLAT | 3 |
| 16 | PAOZZ | 89346 | 25896R1 | .WASHR | 3 |
| 17 | XBOZZ | 89346 | 444000 | .ADAPTER | 1 |
| 18 | XBOZZ | 89346 | 1809590C91 | .HEADER, FILTER | 1 |
| 19 | PBOZZ | 89346 | 1810819C1 | .SCREW, CAP, HEXAGON H | 1 |
| 20 | PAOZZ | 29510 | 33697R1 | .GASKET | 2 |
| 21 | PAOZZ | 89346 | 1809642C92 | .TUBE ASSEMBLY, METAL | 1 |
| 22 | PAOZZ | 89346 | 685158C1 | .INSULATION PIPE FIT | 3 |
| 23 | PAOZZ | 29510 | 915499R1 | .NUT, TUBE COUPLING | 5 |
| 24 | XBOZZ | 89346 | 444613 | .PLUG, PIPE | 1 |
| 25 | XBOZZ | 89346 | 686839C1 | .ELBOW | 1 |
| 26 | PBFZZ | 89346 | 24839R1 | .SCREW, CAP, HEXAGON H | 1 |
| 27 | PAOZZ | 89346 | 680116C1 | .CLAMP, LOOP | 1 |
| 28 | PAOZZ | 89346 | 25521R1 | .NUT, PLAIN, HEXAGON H | |
| 29 | PBOZZ | 96906 | MS35338-45 | .WASHER, LOCK | 1 |
| 30 | PAOZZ | 89346 | 27326R1 | .WASHER, FLAT | 1 |
| 31 | XBOZZ | 89346 | 689324C1 | .STUD | 1 |
| 32 | PAOZZ | 89346 | 299566C1 | .CLAMP, HOSE | 2 |
| 33 | XBOZZ | 89346 | 86224H | .SPACER | 2 |
| 34 | PAOZZ | 89346 | 27439R1 | .BOLT, MACHINE | 1 |
| 35 | PAOZZ | 89346 | 691074C92 | .TUBE ASSEMBLY, METAL | 1 |
| 36 | PAOZZ | 89346 | 1802755C91 | .TUBE ASSEMBLY, METAL | 1 |
| 37 | PAOZZ | 29510 | 915500R1 | .SLEEVE | 2 |
| 38 | PAOZZ | 89346 | 1806503C1 | .HOSE ASSEMBLY, NONME | 1 |
| 39 | XBOZZ | 89346 | 606885C1 | .CONNECTOR | 1 |
| 40 | XBOZZ | 89346 | 606296C1 | .ELBOW | 1 |
| 41 | PAOZZ | 92679 | 1802453C1 | .CLAMP, HOSE | 13 |
| 42 | XBOZZ | 89346 | 673196C1 | .TEE | 1 |
| 43 | PAOZZ | 89346 | 680246C1 | .HOSE, NONMETALLIC | 4 |
| 44 | XBOZZ | 89346 | 802452C1 | .CAP | 1 |
| 45 | PAFZZ | 92679 | 691105C1 | .BOLT, MACHINE | 6 |
| 46 | PAFZZ | 92679 | 675479C2 | .SEAT, BALL SOCKET | 6 |
| 47 | KFOZZ | 89346 | 1802796C91 | .CLAMP, PIPE PART OF KIT P/N 1802826C91 | 1 |

| (1) ITEM NO | (2) SMR CODE | (3) CAGEC | (4) PART NUMBER | (5) DESCRIPTION AND USABLE ON CODES (UOC) | (6) QTY |
|---|---|---|---|---|---|
| 48 | KFOZZ | 89346 | 1802959C91 | .CLAMP, PIPE PART OF KIT P/N 1802826C91 | 3 |
| 49 | KFOZZ | 89346 | 1802800C91 | .CLAMP, PIPE PART OF KIT P/N 1802826C91 | 1 |
| 50 | KFOZZ | 89346 | 1802947C91 | .CLAMP, PIPE PART OF KIT P/N 1802826C91 | 1 |
| 51 | KFOZZ | 89346 | 1802951C91 | .PIPE, INJECTION PART OF KIT P/N 1802826C91 | 1 |
| 52 | KFOZZ | 89346 | 1802952C91 | .PIPE, INJECTION PART OF KIT P/N 1802826C91 | 1 |
| 53 | KFOZZ | 89346 | 1802953C91 | .PIPE, INJECTION PART OF KIT P/N 1802826C91 | 1 |
| 54 | KFOZZ | 89346 | 1802954C91 | .PIPE, INJECTION PART OF KIT P/N 1802826C91 | 1 |
| 55 | KFOZZ | 89346 | 1802955C91 | .PIPE, INJECTION PART OF KIT P/N 1802826C91 | 1<br>4 |
| 56 | KFOZZ | 89346 | 1802956C91 | .PIPE, INJECTION PART OF KIT P/N 1802826C91 | 1 |
| 57 | XBOZZ | 89346 | 444944 | .PLUG, PIPE | 1 |
| 58 | PAFZZ | 89346 | 689568C1 | .GASKET | 1 |
| 59 | PAFZZ | 29510 | 675609C1 | .GASKET | 1 |
| 60 | PBFZZ | 89346 | 1802737C1 | .GEAR, SPUR | 1 |
| | PAOZZ | 89346 | 1802826C91 | .PARTS KIT, ENGINE FU | 1 |
| | | | | CLAMP, PIPE ( 1) 135-47 | |
| | | | | CLAMP, PIPE ( 3) 135-48 | |
| | | | | CLAMP, PIPE ( 1) 135-49 | |
| | | | | CLAMP, PIPE ( 1) 135-50 | |
| | | | | PIPE, INJECTION ( 1) 135-51 | |
| | | | | PIPE, INJECTION ( 1) 135-52 | |
| | | | | PIPE, INJECTION ( 1) 135-53 | |
| | | | | PIPE, INJECTION ( 1) 135-54 | |
| | | | | PIPE, INJECTION ( 1) 135-55 | |
| | | | | PIPE, INJECTION ( 1) 135-56 | |

END OF FIGURE

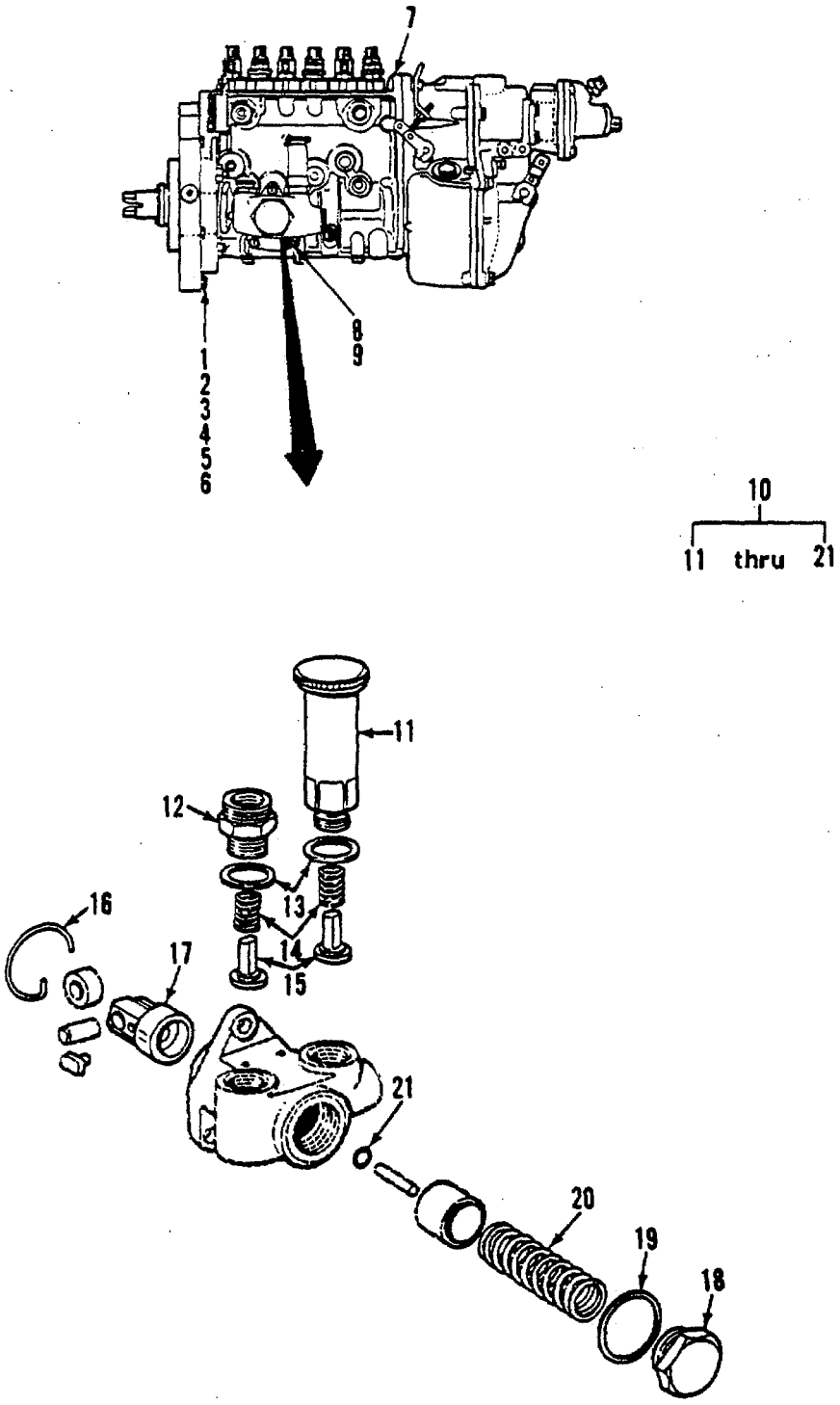


*Figure 136. Fuel Injection Pump - Fuel Supply Pump*

| (1) ITEM NO | (2) SMR CODE | (3) CAGEC | (4) PART NUMBER | (5) DESCRIPTION AND USABLE ON CODES (UOC) | (6) QTY |
|---|---|---|---|---|---|
| | | | | **GROUP 0216 DIESEL ENGINE ASSEMBLY** | |
| | | | | **FIG. 136 FUEL INJECTION PUMP - FUEL SUPPLY PUMP** | |
| 1 | PAFZZ | 89346 | 25235R1 | .SCREW, CAP, HEXAGON H | 2 |
| 2 | PAFZZ | 89346 | 25232R1 | .SCREW, CAP, HEXAGON H | 2 |
| 3 | PAFZZ | 89346 | 27326R1 | .WASHER, FLAT | 2 |
| 4 | PAFZZ | 89346 | 25552R1 | .WASHER, FLAT | 1 |
| 5 | XBFZZ | 89346 | 678026C1 | .SEAL, WIRE | 2 |
| 6 | XBFZZ | 89346 | 687459C1 | .LOCKWIRE | 2 |
| 7 | PBFHZ | 89346 | 1810057C91 | .PUMP, FUEL, METERING | 1 |
| 7 | PBFHZ | 89346 | 1811680C91 | .PUMP, FUEL, METERING USED ON SERIAL NOS 672040 THRU 672044 | 1 |
| 8 | PAHZZ | 89346 | 30208R1 | ..NUT, PLAIN, HEXAGON | 3 |
| 9 | PAHZZ | 96906 | MS35338-44 | ..WASHER, LOCK | 3 |
| 10 | PBHHZ | 89346 | 691054C91 | ..PUMP, FUEL, CAM ACTUA | 1 |
| 11 | PAOZZ | 29510 | 684492C93 | ...PUMP, FUEL, CAM ACTUA | 1 |
| 12 | XBHZZ | 89346 | 691306C1 | ...FITTING | 1 |
| 13 | PAHZZ | 89346 | 625550C1 | ...GASKET | 2 |
| 14 | PAHZZ | 89346 | 760583R1 | ...SPRING, HELICAL, COMP | 2 |
| 15 | PAOZZ | 89346 | 684726C1 | ...REED, STRIP, VALVE | 2 |
| 16 | PAHZZ | 89346 | 684725C1 | ...RING, RETAINING | 1 |
| 17 | XBHZZ | 89346 | 1802159C1 | ...TAPPET ASSY | 1 |
| 18 | XBHZZ | 89346 | 691308C1 | ...PLUG, SCREW | 1 |
| 19 | PAHZZ | 89346 | 670882C1 | ...GASKET | 1 |
| 20 | PAHZZ | 89346 | 691307C1 | ...SPRING, HELICAL, COMP | 1 |
| 21 | PAHZZ | 89346 | 691272C1 | ...PACKING, PREFORMED | 1 |

END OF FIGURE

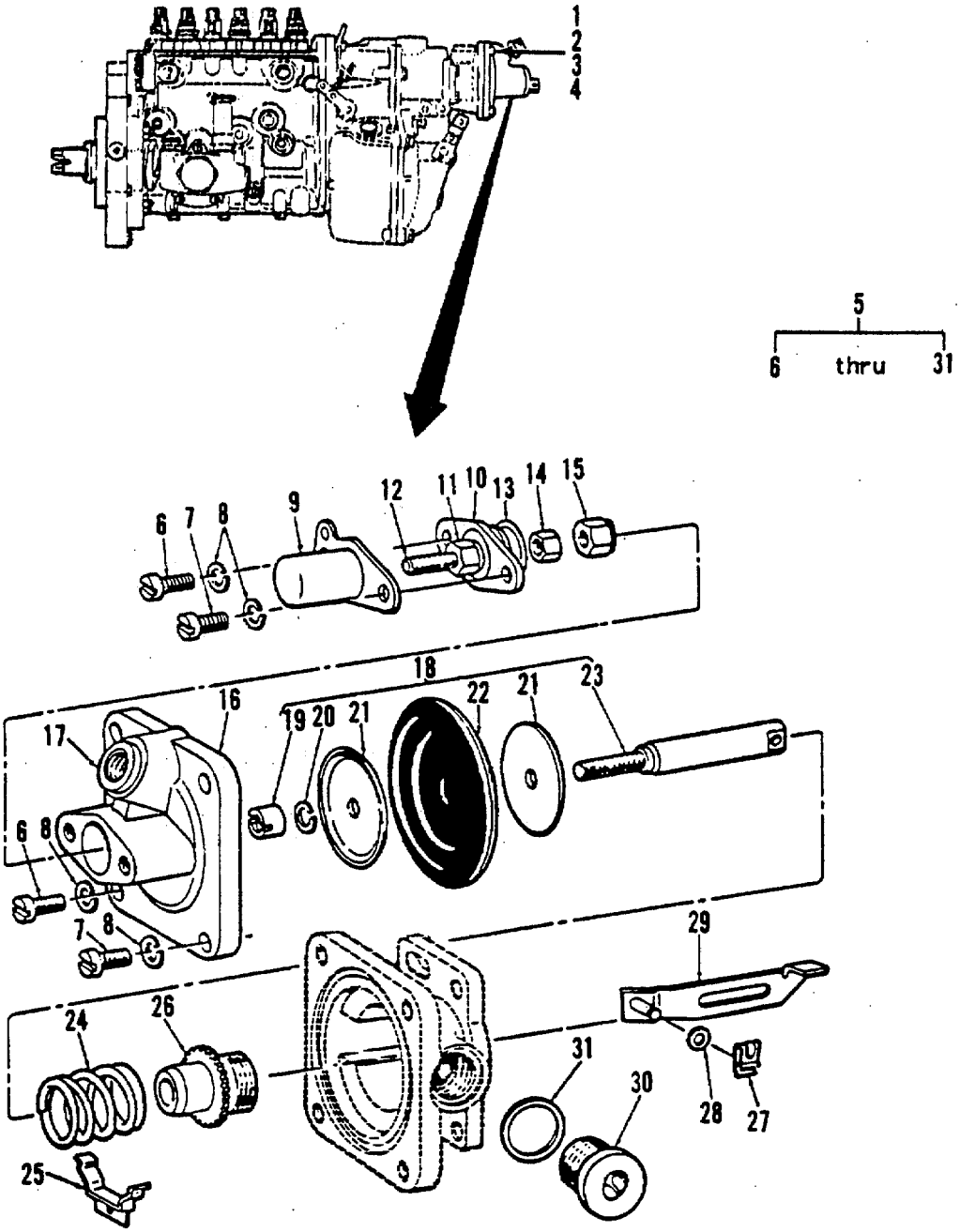


*Figure 137. Fuel Injection Pump- Aneroid*

| (1) ITEM NO | (2) SMR CODE | (3) CAGEC | (4) PART NUMBER | (5) DESCRIPTION AND USABLE ON CODES (UOC) | (6) QTY |
|---|---|---|---|---|---|
| | | | | **GROUP 0216 DIESEL ENGINE ASSEMBLY** | |
| | | | | **FIG. 137 FUEL INJECTION PUMP - ANEROID** | |
| 1 | PAHZZ | 89346 | 397778C1 | ..SCRE W , CAP, HEX, HD | 2 |
| 2 | PAHZZ | 89346 | 1806357C1 | ..SCREW, CAP, HEX, HD | 2 |
| 3 | PAHZZ | 96906 | MS35338-44 | ..WASHER, LOCK | 4 |
| 4 | PBHZZ | 89346 | 397746C1 | ..WASHER, FLAT | 4 |
| 5 | PAHHZ | 89346 | 1811928C91 | ..GOVERNOR, GASOLINE E | 1 |
| 6 | PAHZZ | 89346 | 1802132C1 | ...BOLT, MACHINE B | 4 |
| 7 | PAHZZ | 89346 | 1806353C1 | ...SCREW, MACHINE | 2 |
| 8 | PAHZZ | 96906 | MS27183-9 | ...WASHER, FLAT | 6 |
| 9 | XBHZZ | 89346 | 1806841C1 | ...CAP | 1 |
| 10 | XBHZZ | 89346 | 1806348C91 | ...STOP | 1 |
| 11 | PAHZZ | 89346 | 1806350C1 | ...NUT, PLAIN, HEXAGON | 1 |
| 12 | XBHZZ | 89346 | 1806349C91 | ...PIN, THREADED | 1 |
| 13 | PAHZZ | 89346 | 625492C1 | ...PACKING, PREFORMED | 1 |
| 14 | PAHZZ | 89346 | 30208R1 | ...NUT, PLAIN, HEXAGON | 1 |
| 15 | PAHZZ | 89346 | 1806346C1 | ...NUT, PLAIN, HEXAGON | 1 |
| 16 | XBHZZ | 89346 | 1806352C91 | ...COVER ASSY | 1 |
| 17 | XBHZZ | 89346 | 1806389C1 | ....BUSHING | 1 |
| 18 | XBHHH | 89346 | 1806347C91 | ...DIAPHRAGM ASSY | 1 |
| 19 | XBHZZ | 89346 | 1806345C1 | ....NUT | 1 |
| 20 | XBHZZ | 89346 | 1806838C1 | ....WASHER, LOCK | 1 |
| 21 | XBHZZ | 89346 | 1806343C1 | ....SEAT | 2 |
| 22 | PAHZZ | 89346 | 1806344C1 | ....DIAPHRAGM, VALVE, FLA | 1 |
| 23 | XBHZZ | 89346 | 1813764C1 | ....SHAFT | 1 |
| 24 | PAHZZ | 89346 | 1808734C1 | ..SPRING, HELICAL, COMP | 1 |
| 25 | XBHZZ | 89346 | 684850C1 | ...CLIP, ANEROID | 1 |
| 26 | XBHZZ | 89346 | 1806342C1 | ...BUSHING, GUIDE | 1 |
| 27 | XBHZZ | 89346 | 1700926C1 | ...CLIP | 1 |
| 28 | XBHZZ | 89346 | 933982R1 | ...WASHER | 1 |
| 29 | XBHZZ | 89346 | 1700924C91 | ...LINK, ANEROID | 1 |
| 30 | XBHZZ | 89346 | 691271C1 | ...PLUG | 1 |
| 31 | PAHZZ | 89346 | 3051337R1 | ...GASKET | 1 |

END OF FIGURE

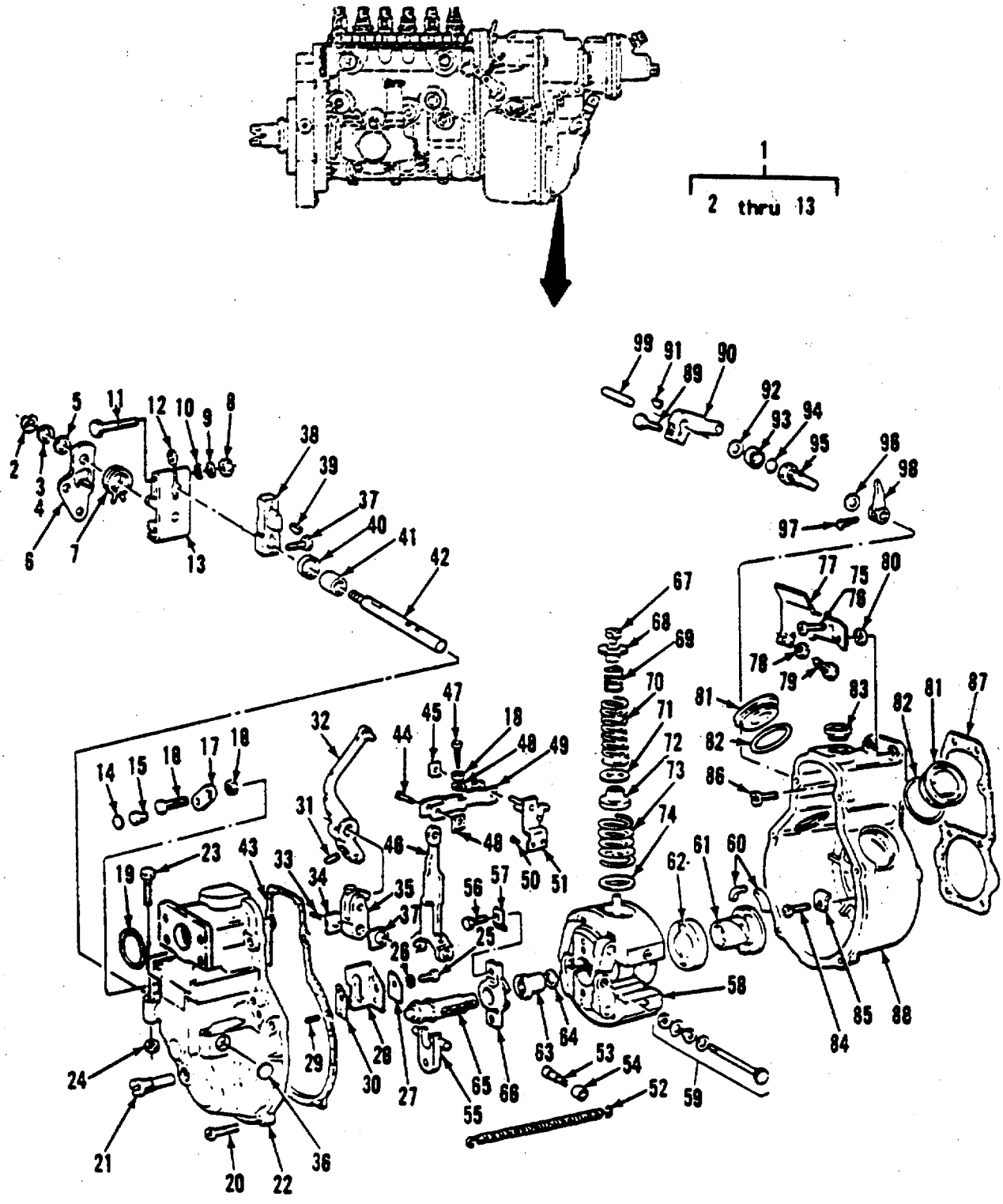


*Figure 138. Fuel Injection Pump - Governor*

| (1) ITEM NO | (2) SMR CODE | (3) CAGEC | (4) PART NUMBER | (5) DESCRIPTION AND USABLE ON CODES (UOC) | (6) QTY |
|---|---|---|---|---|---|
| | | | | **GROUP 0216 DIESEL ENGINE ASSEMBLY** | |
| | | | | **FIG. 138 FUEL INJECTION PUMP - GOVERNOR** | |
| 1 | XBHHH | 89346 | 1806330C91 | ..LEVER ASSY | 1 |
| 1 | XBHHH | 89346 | 1806330C92 | ..LEVER ASSY USED ON SERIAL NOS 672040 THRU 672044 | 1 |
| 2 | PAHZZ | 89346 | 934030R1 | ...CLIP, SPRING TENSION | 2 |
| 3 | PAHZZ | 89346 | 397664C1 | ...SHIM | 1 |
| 6 | PAHZZ | 89346 | 1802942C1 | ...SHIM | 1 |
| 5 | PAHZZ | 89346 | 397692C1 | ...WASHER, FLAT | 1 |
| 6 | XBHZZ | 89346 | 1813776C1 | ...LEVER | 1 |
| 7 | PAHZZ | 89346 | 1806332C1 | ...SPRING, SPIRAL, TORSI | 1 |
| 8 | XBHZZ | 89346 | 397748C1 | ...NUT | 1 |
| 9 | XBHZZ | 89346 | 680201C1 | ...WASHER, LOCK | 1 |
| 10 | PBHZZ | 89346 | 397746C1 | ...WASHER, FLAT | 1 |
| 11 | XBHZZ | 89346 | 397745C1 | ...SCREW | 1 |
| 12 | XBHZZ | 89346 | 425987C1 | ...SPACER | 1 |
| 13 | XBHZZ | 89346 | 1701015C1 | ...LEVER | 1 |
| 14 | XBHZZ | 89346 | 397755C1 | ..PLUG, SEAL | 1 |
| 15 | PAHZZ | 89346 | 684858C1 | ..SCREW, MACHINE | 1 |
| 16 | PAHZZ | 89346 | 1802561C1 | ..SCREW, MACHINE | 1 |
| 16 | PAHZZ | 89346 | 1814119C1 | ..SCREW, MACHINE USED ON SERIAL NOS 672040 THRU 672044 | 1<br>1 |
| 17 | XBHZZ | 89346 | 1802064C1 | ..HOLDER, SEAL | 1 |
| 18 | PAHZZ | 89346 | 30208R1 | ..NUT, PLAIN, HEXAGON | 1 |
| 19 | PAHZZ | 89346 | 691402C1 | ..PACKING, PREFORMED | 1 |
| 20 | PAHZZ | 89346 | 931113R1 | ..SCREW, MACHINE | 6 |
| 21 | PAHZZ | 89346 | 397749C1 | ..BOLT BLANK | 1 |
| 22 | PBHHZ | 89346 | 1806484C91 | ..COVER, ACCESS | 1 |
| 23 | PAHZZ | 89346 | 1808129C1 | ...SCREW, CAP, HEXAGON H | 1 |
| 24 | PBHZZ | 89346 | 30208R1 | ...NUT, PLAIN, HEXAGON | 1 |
| 25 | PAHZZ | 89346 | 1802054C1 | ...SCREW, CAP, HEXAGON H | 1 |
| 26 | PAHZZ | 96906 | MS35338-44 | ...WASHER, LOCK | 1 |
| 27 | XBHZZ | 89346 | 1700920C1 | ...PLATE, LOCK | 1 |
| 28 | XBHZZ | 89346 | 684112C1 | ...S-PLATE | 1 |
| 29 | XBHZZ | 89346 | 397777C1 | ...PIN, STRAIGHT | 2 |
| 30 | PAHZZ | 98345 | 397773C1 | ...SHIM .20 MM | 1 |
| 30 | PAHZZ | 89346 | 397774C1 | ...SHIM .30 MM | 1 |
| 30 | PAHZZ | 89346 | 397776C1 | ...SHIM .50 MM | 1 |
| 30 | PAHZZ | 89346 | 397775C1 | ...SHIM .80 MM | 1 |
| 31 | PAHZZ | 89346 | 397783C1 | ...SPRING | 1 |
| 32 | XBHZZ | 89346 | 397782C1 | ...ARM, ROCKER | 1 |
| 33 | XBHZZ | 89346 | 397731C1 | ...PIN | 1 |
| 34 | XBHZZ | 89346 | 397730C1 | ...PLATE | 1 |
| 35 | XBHZZ | 89346 | 1806314C1 | ...BLOCK, GUIDE | 1 |
| 36 | XBHZZ | 89346 | 397738C1 | ...PLUG | 1 |
| 37 | PAHZZ | 89346 | 684871C1 | ...SCREW, MACHINE | 1 |
| 38 | XBHZZ | 89346 | 1808025C1 | ...LEVER, THROTTLE | 1 |
| 39 | XBHZZ | 89346 | 932618R1 | ...KEY, WOODRUFF | 1 |
| 40 | PAHZZ | 89346 | 1808310C92 | ...SEAL, NONMETALLIC SP | 1 |

| (1) ITEM NO | (2) SMR CODE | (3) CAGEC | (4) PART NUMBER | (5) DESCRIPTION AND USABLE ON CODES (UOC) | (6) QTY |
|---|---|---|---|---|---|
| 41 | PAHZZ | 89346 | 397725C1 | ...BUSHING, SLEEVE | 1 |
| 42 | XBHZZ | 89346 | 1700632C1 | ...SHAFT | 1 |
| 43 | PAHZZ | 89346 | 1700925C1 | ..GASKET | 1 |
| 43 | PAHZZ | 89346 | 1700923C1 | ..GASKET | 1 |
| 44 | XBHZZ | 89346 | 1808579C1 | ..PIN, LINK | 1 |
| 45 | XBHZZ | 89346 | 691092C1 | ..CLIP | 1 |
| 46 | XBHZZ | 89346 | 1806335C1 | ..LEVER, FULCRUM | 1 |
| 47 | XBHZZ | 89346 | 1700917C1 | ..SCREW | 1 |
| 48 | PAHZZ | 89346 | 684864C1 | ..WASHER, LOCK | 1 |
| 48 | XBHZZ | 89346 | 397817C1 | ..WASHER, LOCK USED ON SERIAL NOS; 672040 THRU 672044 | 1 |
| 49 | XBHZZ | 89346 | 468962C1 | ..LINK | 1 |
| 50 | XBHZZ | 89346 | 1806310C1 | ..RIVET | 2 |
| 51 | XBHZZ | 89346 | 1806309C1 | ..PLATE | 1 |
| 52 | PAHZZ | 89346 | 1811733C1 | ..SPRING, HELICAL, COMP | 1 |
| 53 | XBHZZ | 89346 | 1806355C1 | ..PIN | 1 |
| 54 | PAHZZ | 89346 | 1806356C1 | ..BUSHING, SLEEVE | 1 |
| 55 | XBHZZ | 89346 | 397702C1 | ..BLOCK, GUIDE | 1 |
| 56 | PAHZZ | 89346 | 30192R1 | ..SCREW, MACHINE | 1 |
| 57 | XBHZZ | 89346 | 397705C1 | ..PLATE, LINK | 1 |
| 53 | XBHZZ | 89346 | 1806358C91 | ..FLYWEIGHTASSY | 1 |
| 59 | XBHZZ | 89346 | 397643C91 | ...BOLT ASSY | 1 |
| 60 | XBHZZ | 89346 | 397682C1 | ...DAMPER, RUBBER | 4 |
| 61 | XBHZZ | 89346 | 397680C1 | ...HUB, FLYWEIGHT | 1 |
| 62 | XBHZZ | 89346 | 684108C1 | ...RETAINER | 1 |
| 63 | XBHZZ | 89346 | 397679C1 | ...NUT | 1 |
| 64 | PAHZZ | 89346 | 1806359C1 | ...SHIM 1.60 MM | 1 |
| 64 | PAHZZ | 89346 | 1806360C1 | ...SHIM 1.63 MM | 1 |
| 64 | PAHZZ | 89346 | 1806361C1 | ...SHIM 1.66 MM | 1 |
| 64 | PAHZZ | 89346 | 1806362C1 | ...SHIM 1.69 MM | 1 |
| 64 | PAHZZ | 89346 | 1806363C1 | ...SHIM 1.72 MM | 1 |
| 64 | PAHZZ | 89346 | 1806364C1 | ...SHIM 1.75 MM | 1 |
| 64 | PAHZZ | 89346 | 397671C1 | ...WASHER 1.75 MM, USED ON SERIAL NOS 672040 THRU 672044 | 1 |
| 64 | PAHZZ | 89346 | 1806365C1 | ...SHIM 1.78 MM | 1 |
| 64 | PAHZZ | 89346 | 1806366C1 | ...SHIM 1.81 MM | 1 |
| 64 | PAHZZ | 89346 | 1806367C1 | ...SHIM 1.84 MM | |
| 64 | PAHZZ | 89346 | 397673C1 | ...WASHER 1.84 MM, USED ON SERIAL NOS 672040 THRU 672044 | 1 |
| 64 | PAHZZ | 89346 | 1806368C1 | ...SHIM 1.87 MM | 1 |
| 64 | PAHZZ | 89346 | 1806369C1 | ...SHIM 1.90 MM | 1 |
| 64 | PAHZZ | 89346 | 1806370C1 | ...SHIM 1.93 MM | 1 |
| 64 | PAHZZ | 89346 | 1806371C1 | ...SHIM 1.96 MM | 1 |
| 64 | PAHZZ | 89346 | 1806372C1 | ...SHIM 1.99 MM | 1 |
| 64 | PAHZZ | 89346 | 397676C1 | ...WASHER 1.99 MM, USED ON SERIAL NOS 672040 THRU 672044 | 1 |
| 64 | PAHZZ | 89346 | 1806373C1 | ...SHIM 2.02 MM | 1 |
| 64 | PAHZZ | 89346 | 1806374C1 | ...WASHER 2.05 MM | 1 |
| 64 | PAHZZ | 89346 | 1806375C1 | ...SHIM 2.08 MM | 1 |
| 64 | PAHZZ | 89346 | 1806376C1 | ...SHIM 2.11 MM | 1 |
| 64 | PAHZZ | 89346 | 1806377C1 | ...SHIM 2.14 MM | 1 |
| 65 | XBHZZ | 89346 | 397701C1 | ..SLEEVEGUIDE | 1 |

| (1) ITEM NO | (2) SMR CODE | (3) CAGEC | (4) PART NUMBER | (5) DESCRIPTION AND USABLE ON CODES (UOC) | (6) QTY |
|---|---|---|---|---|---|
| 66 | XBHZZ | 89346 | 397703C1 | ..BUSHING, GUIDE | 1 |
| 67 | PAHZZ | 89346 | 1802309C1 | ..NUT, PLAIN, ROUND | 1 |
| 68 | XBHZZ | 89346 | 1802310C1 | ..SEAT, SPRING | 1 |
| 69 | PAHZZ | 89346 | 1810694C1 | ..SPRING, HELICAL, COMP | 1 |
| 69 | PAHZZ | 89346 | 1812675C1 | ..SPRING, HELICAL, COMP USED ON SERIAL NOS 672040 THRU 672044 | 2 |
| 70 | PAHZZ | 89346 | 1810695C1 | ..SPRING, HELICAL, COMP | 1 |
| 70 | PAHZZ | 89346 | 1814109C1 | ..SPRING, HELICAL, COMP USED ON SERIAL NOS 672040 THRU 672044 | 2 |
| 71 | PAHZZ | 89346 | 397769C1 | ..SHIM | 1 |
| 71 | PAHZZ | 89346 | 1812677C1 | ..SHIM USED ON SERIAL NOS 672040 THRU 672044 | 1 |
| 72 | XBHZZ | 89346 | 691086C1 | ..SEAT, SPRING 17.25 MM | 1 |
| 72 | XBHZZ | 89346 | 1812678C1 | ..SEAT, SPRING 17.25 MM, USED ON SERIAL NOS 672040 THRU 672044 | 1 |
| 72 | XBHZZ | 89346 | 691084C1 | ..SEAT, SPRING 16.95 MM | 1 |
| 72 | XBHZZ | 89346 | 691085C1 | ..SEAT, SPRING 17.10 MM | 1 |
| 73 | PAHZZ | 89346 | 1810697C1 | ..SPRING, HELICAL, COMP | 1 |
| 73 | PAHZZ | 89346 | 1814111C1 | ..SPRING, SPIRAL, TORSI USED ON SERIAL NOS 672040 THRU 672044 | 2 |
| 74 | PAHZZ | 89346 | 691087C1 | ..SHIM | 1 |
| 75 | PAHZZ | 89346 | 1806306C1 | ..SCREW, MACHINE | 1 |
| 76 | PAHZZ | 89346 | 1806307C1 | ..SCREW, SPECIAL | 1 |
| 76 | PAHZZ | 89346 | 1814867C1 | ..SCREW, MACHINE USED ON SERIAL NOS 672040 THRU 672044 | 1 |
| 77 | XBHZZ | 89346 | 1806336C91 | ..BRACKET | 1 |
| 78 | XBHZZ | 89346 | 1806338C1 | ...NUT | 1 |
| 79 | PAHZZ | 89346 | 1806337C1 | ...SCREW, MACHINE | 1 |
| 79 | XBHZZ | 89346 | 3078343R1 | ...SCREW | 1 |
| 80 | XBHZZ | 89346 | 1806339C1 | ..SPACER | 1 |
| 81 | XBHZZ | 89346 | 397720C1 | ..PLUG | 1 |
| 82 | PAHZZ | 89346 | 397721C1 | ..GASKET | 1 |
| 83 | XBHZZ | 89346 | 439184C1 | ..PLUG | 1 |
| 84 | XBHZZ | 89346 | 1806304C1 | ..SCREW | 1 |
| 85 | XBHZZ | 89346 | 691283C1 | ..WASHER, SPECIAL | 1 |
| 86 | XBHZZ | 89346 | 1806305C1 | ..SCREW | 1 |
| 87 | PAHZZ | 89346 | 691277C1 | ..GASKET | 1 |
| 88 | XBHHH | 89346 | 1806557C91 | ..HOUSING ASSY | 1 |
| 89 | XBHZZ | 89346 | 397697C1 | ...BOLT, SPECIAL | 1 |
| 90 | XBHZZ | 89346 | 1806301C1 | ...CONTROL, LEVER | 1 |
| 91 | XBHZZ | 89346 | 397695C1 | ...KEY, WOODRUFF | 1 |
| 92 | XBHZZ | 89346 | 1806303C1 | ...SHIM | 1 |
| 93 | XBHZZ | 89346 | 1806300C1 | ...CAP | 1 |
| 94 | PAHZZ | 89346 | 1806299C1 | ...PACKING, PREFORMED | 1 |
| 95 | PAHZZ | 89346 | 1806296C1 | ...BUSHING, SLEEVE | 1 |
| 96 | XBHZZ | 89346 | 1806302C1 | ...SPACER | 1 |
| 97 | XBHZZ | 89346 | 397689C1 | ...SCREW, SET | 1 |
| 98 | XBHZZ | 89346 | 1806298C1 | ...LEVER, STOP | 1 |
| 99 | XBHZZ | 89346 | 1806297C1 | ...SHAFT, STOP LEVER | 1 |

END OF FIGURE

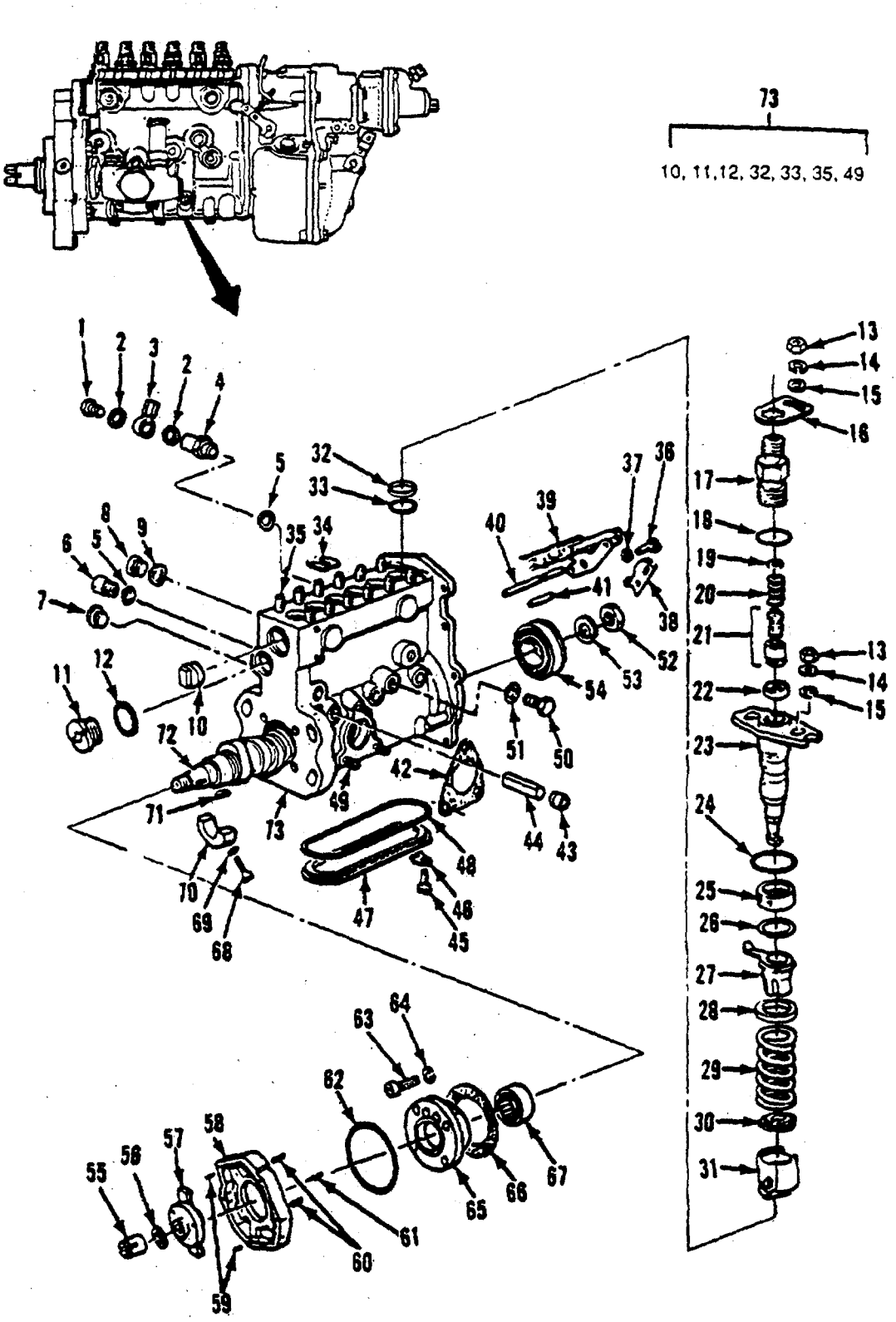


*Figure, 139. Fuel Injection Pump*

| (1) ITEM NO | (2) SMR CODE | (3) CAGEC | (4) PART NUMBER | (5) DESCRIPTION AND USABLE ON CODES (UOC) | (6) QTY |
|---|---|---|---|---|---|
| | | | | **GROUP 0216 DIESEL ENGINE ASSEMBLY** | |
| | | | | **FIG. 139 FUEL INJECTION PUMP** | |
| 1 | PAHZZ | 89346 | 1810491C1 | ..SCREW, MACHINE | 1 |
| 2 | PAHZZ | 89346 | 691273C1 | ..GASKET | 2 |
| 3 | PAHZZ | 89346 | 1809797C1 | ..CONNECTOR, MULTIPLE | 1 |
| 4 | PAHZZ | 89346 | 1809796C1 | ..VALVE, SOLENOID | 1 |
| 5 | PAHZZ | 89346 | 397630C1 | ..GASKET | 2 |
| 6 | XBHZZ | 89346 | 625924C1 | ..FITTING | 1 |
| 7 | XBHZZ | 89346 | 1806293C1 | ..PLUG, SCREW | 1 |
| 8 | XBHZZ | 89346 | 691271C1 | ..PLUG | 1 |
| 9 | PAHZZ | 89346 | 3051337R1 | ..GASKET | 1 |
| 10 | XBHZZ | 89346 | 691263C1 | ..PLUG | 1 |
| 11 | XBHZZ | 89346 | 691260C1 | ..PLUG, SCREW | 1 |
| 12 | PAHZZ | 92679 | 933608R1 | ..RING, RETAINING | 1 |
| 13 | PAHZZ | 89346 | 691265C1 | ..NUT, PLAIN, HEXAGON | 18 |
| 14 | PAHZZ | 89346 | 933983C1 | ..WASHER, SPLIT | 18 |
| 15 | PAHZZ | 89346 | 1806270C1 | ..SPACER, RING | 18 |
| 16 | XBHZZ | 89346 | 1806294C1 | ..PLATE, PLUNGER | 6 |
| 17 | XBHZZ | 89346 | 1806288C1 | ..HOLDER, VALVE | 6 |
| 18 | PAHZZ | 89346 | 1806292C1 | ..SEAL, NONMETALLIC RO | 6 |
| 19 | PAHZZ | 89346 | 307924R1 | ..WASHER, FLAT | 6 |
| 20 | PAHZZ | 89346 | 3132382R1 | ..SPRING, HELICAL, COMP | 6 |
| 21 | PAHZZ | 89346 | 1806833C91 | ..VALVE, POPPET, ENGINE | 6 |
| 22 | PAHZZ | 89346 | 1806328C1 | ..GASKET | 6 |
| 23 | XBHZZ | 89346 | 1811925C1 | ..PLUNGER & BARREL | 6 |
| 23 | XBHZZ | 89346 | 1806565C1 | ..PLUNGER & BARREL USED ON SERIAL NOS 672040 THRU 672044 | 6 |
| 24 | PAHZZ | 89346 | 1806290C1 | ..PACKING, PREFORMED | 6 |
| 25 | XBHZZ | 89346 | 1806291C1 | ..CAP, IMPACT | 6 |
| 26 | PAHZZ | 89346 | 691232C1 | ..RING, RETAINING | 6 |
| 27 | XBHZZ | 89346 | 691233C1 | ..SLEEVE | 6 |
| 27 | XBHZZ | 89346 | 1814130C1 | ..SLEEVE USED ON SERIAL NOS 672040 THRU 672044 | 6 |
| 28 | XBHZZ | 89346 | 691234C1 | ..SEAT, SPRING | 6 |
| 29 | PAHZZ | 89346 | 1809798C1 | ..SPRING, HELICAL, COMP | 6 |
| 30 | XBHZZ | 89346 | 691235C1 | ..SEAT, SPRING | 6 |
| 31 | PBHZZ | 89346 | 691236C91 | ..TAPPET, ENGINE POPPE | 6 |
| 32 | XBHZZ | 89346 | 691261C1 | ..SPACER | 6 |
| 33 | PAHZZ | 89346 | 691262C1 | ..PACKING, PREFORMED | 6 |
| 34 | PBHZZ | 89346 | 1802256C1 | ..SHIM 1.0 MM | 6 |
| 34 | PBHZZ | 89346 | 1802257C1 | ..SHIM 1.05 MM | 6 |
| 34 | PBHZZ | 89346 | 1802258C1 | ..SHIM 1.1 MM | 6 |
| 34 | PBHZZ | 89346 | 1802259C1 | ..SHIM 1.15 MM | 6 |
| 34 | PBHZZ | 89346 | 1802260C1 | ..SHIM 1.2 MM | 6 |
| 34 | PBHZZ | 89346 | 1802261C1 | ..SHIM 1.25 MM | 6 |
| 34 | PBHZZ | 89346 | 1802262C1 | ..SHIM 1.3 MM | 6 |
| 34 | PBHZZ | 89346 | 1802263C1 | ..SHIM 1.35 MM | 6 |
| 34 | PBHZZ | 89346 | 1802264C1 | ..SHIM 1.4 MM | 6 |
| 34 | PBHZZ | 89346 | 1802265C1 | ..SHIM 1.45 MM | 6 |
| 34 | PBHZZ | 89346 | 1802266C1 | ..SHIM 1.5 MM | 6 |

| (1) ITEM NO | (2) SMR CODE | (3) CAGEC | (4) PART NUMBER | (5) DESCRIPTION AND USABLE ON CODES (UOC) | (6) QTY |
|---|---|---|---|---|---|
| 34 | PBHZZ | 89346 | 1802267C1 | ..SHIM 1.55 MM | 6 |
| 34 | PBHZZ | 89346 | 691315C1 | ..SHIM 1.6 MM | 6 |
| 34 | PBHZZ | 89346 | 691316C1 | ..SHIM 1.65 MM | 6 |
| 34 | PBHZZ | 89346 | 691317C1 | ..SHIM 1.7 MM | 6 |
| 34 | PBHZZ | 89346 | 691318C1 | ..SHIM 1.75 MM | 6 |
| 34 | PBHZZ | 89346 | 691319C1 | ..SHIM 1.8 MM | 6 |
| 34 | PBHZZ | 89346 | 691320C1 | ..SHIM 1.85 MM | 6 |
| 34 | PBHZZ | 89346 | 691321C1 | ..SHIM 1.9 MM | 6 |
| 34 | PBHZZ | 89346 | 691322C1 | ..SHIM 1.95 MM | 6 |
| 34 | PBHZZ | 89346 | 691323C1 | ..SHIM 2.0 MM | 6 |
| 34 | PBHZZ | 89346 | 691324C1 | ..SHIM 2.05 MM | 6 |
| 34 | PBHZZ | 89346 | 691325C1 | ..SHIM 2.1 MM | 6 |
| 34 | PBHZZ | 89346 | 691326C1 | ..SHIM 2.15 MM | 6 |
| 34 | PBHZZ | 89346 | 691327C1 | ..SHIM 2.2 MM | 6 |
| 34 | PBHZZ | 89346 | 691328C1 | ..SHIM 2.25 MM | 6 |
| 34 | PBHZZ | 89346 | 691329C1 | ..SHIM 2.3 MM | 6 |
| 34 | PBHZZ | 89346 | 691330C1 | ..SHIM 2.35 MM | 6 |
| 34 | PBHZZ | 89346 | 691331C1 | ..SHIM 2.4 MM | 6 |
| 34 | PBHZZ | 89346 | 691332C1 | ..SHIM 2.45 MM | 6 |
| 34 | PBHZZ | 89346 | 691333C1 | ..SHIM 2.5 MM | 6 |
| 35 | XBHZZ | 89346 | 1806269C1 | ..STUD | 12 |
| 35 | XBHZZ | 89346 | 1815544C1 | ..STUD USED ON SERIAL NOS 672040 THRU 672044 | 12 |
| 36 | XBHZZ | 89346 | 1810687C1 | ..SCREW | 2 |
| 37 | PBHZZ | 96906 | MS35338-44 | ..WASHER, LOCK | 2 |
| 38 | XBHZZ | 89346 | 1806272C1 | ..PLATE, STOP | 1 |
| 39 | XBHZZ | 89346 | 691255C1 | ..RACK | 1 |
| 40 | XBHZZ | 89346 | 1811730C1 | ..PIN, STRAIGHT | 1 |
| 41 | XBHZZ | 89346 | 691256C1 | ..PIN, STRAIGHT | 1 |
| 42 | PAHZZ | 89346 | 1809553C1 | ..GASKET | 1 |
| 43 | XBHZZ | 89346 | 691270C1 | ..PLUG | 3 |
| 44 | XBHZZ | 89346 | 1806278C1 | ..SPACER | 3 |
| 45 | XBHZZ | 89346 | 1806919C1 | ..SCREW | 6 |
| 46 | XBHZZ | 89346 | 691268C1 | ..WASHER, LOCK | 6 |
| 47 | XBHZZ | 89346 | 1806416C1 | ..COVER, BOTTOM | 1 |
| 48 | PAHZZ | 89346 | 1806504C1 | ..GASKET | 1 |
| 49 | XBHZZ | 89346 | 397624C1 | ..STUD | 3 |
| 50 | PAHZZ | 89346 | 1810819C1 | ..SCREW, CAP, HEXAGON H | 1 |
| 51 | PAHZZ | 29510 | 933697R1 | ..GASKET | 2 |
| 52 | XBHZZ | 89346 | 691251C1 | ..NUTPHEX | 1 |
| 53 | XBHZZ | 89346 | 691250C1 | ..WASHER, LOCK | 1 |
| 54 | PAHZZ | 89346 | 691249C91 | ..BEARING, BALL, ANNULA | 1 |
| 55 | PBHZZ | 89346 | 1802705C1 | ..NUT, PLAIN, SLOTTED, H | 1 |
| 56 | XBHZZ | 89346 | 691243C1 | ..WASHER, LOCK | 1 |
| 57 | XBHZZ | 89346 | 1802649C1 | ..HUB, PUMP | 1 |
| 58 | XBHZZ | 89346 | 1811726C91 | ..ADAPTER ASSY | 1 |
| 58 | XBHZZ | 89346 | 1811726C92 | ..ADAPTER ASSY USED ON SERIAL NOS 672040 THRU 672044 | 1 |
| 59 | XBHZZ | 89346 | 680481C1 | ..PIN, DOWEL | 2 |
| 60 | XBHZZ | 89346 | 1811728C1 | ..SCREW | 4 |
| 61 | XBHZZ | 89346 | 691349C1 | ..POINTER, TIMING | 1 |
| 62 | PAHZZ | 89346 | 670875C1 | ..PACKING, PREFORMED | 1 |

| (1) ITEM NO | (2) SMR CODE | (3) CAGEC | (4) PART NUMBER | (5) DESCRIPTION AND USABLE ON CODES (UOC) | (6) QTY |
|---|---|---|---|---|---|
| 63 | XBHZZ | 89346 | 1810690C1 | ..SCREW | 4 |
| 64 | XBHZZ | 89346 | 933833R1 | ..WASHER | 4 |
| 65 | XBHZZ | 89346 | 1806275C1 | ..HOUSING, BEARING | 1 |
| 66 | PAHZZ | 89346 | 1806274C1 | ..GASKET | 1 |
| 67 | PAHZZ | 89346 | 1806273C91 | ..BEARING, ROLLER, CYLI | 1 |
| 68 | XBHZZ | 89346 | 1811729C1 | ..SCREW | 2 |
| 69 | XBHZZ | 89346 | 1806284C1 | ..WASHER | 2 |
| 70 | XBHZZ | 89346 | 691252C1 | ..SUPPORT, CAMSHAFT | 1 |
| 71 | XBHZZ | 89346 | 3056409R1 | ..KEY, WOODRUFF | 1 |
| 72 | XBHZZ | 89346 | 1808652C1 | ..CAMSHAFT, PUMP | 1 |
| 73 | XAHZZ | 89346 | 1811926C91 | ..HOUSING, INJ. PUMP | 1 |

END OF FIGURE

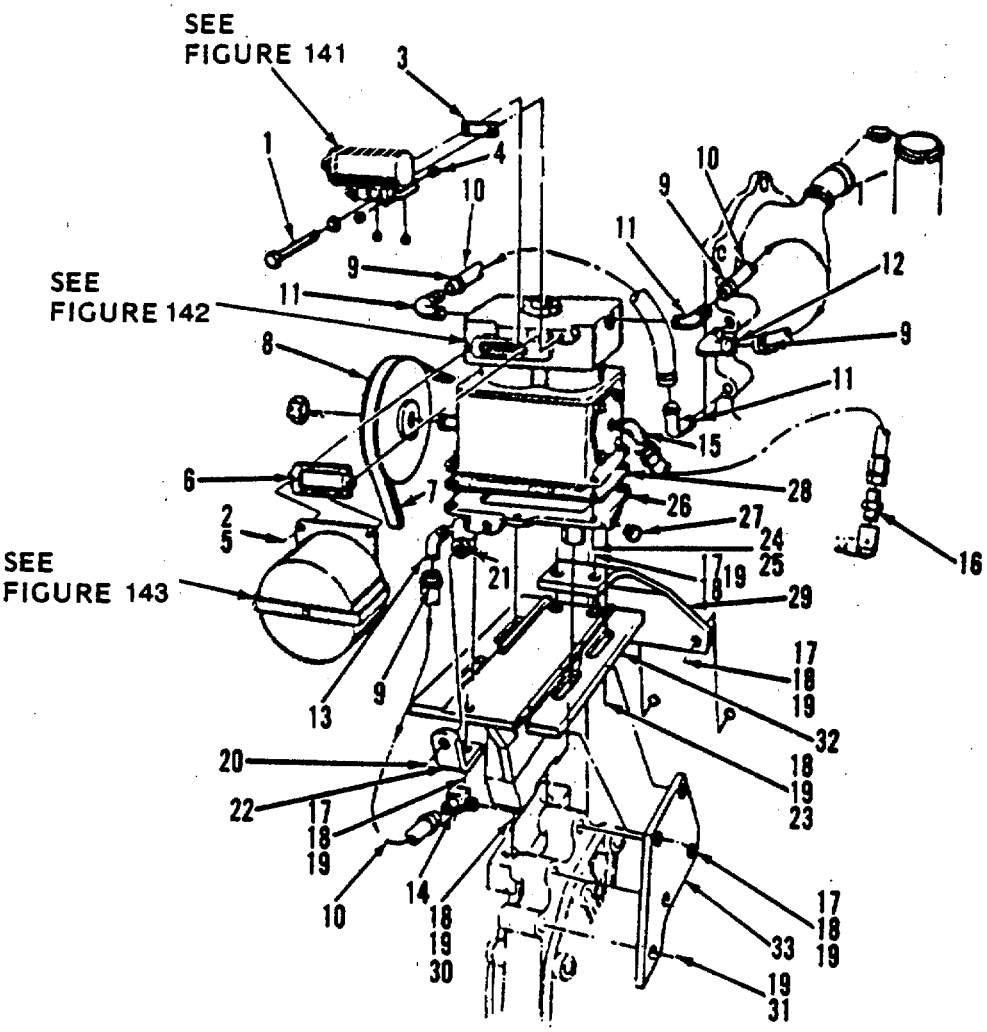


*Figure 140. Air Compressor Mounting*

| (1) ITEM NO | (2) SMR CODE | (3) CAGEC | (4) PART NUMBER | (5) DESCRIPTION AND USABLE ON CODES (UOC) | (6) QTY |
|---|---|---|---|---|---|
| | | | | **GROUP 0216 DIESEL ENGINE ASSEMBLY** | |
| | | | | **FIG. 140 AIR COMPRESSOR MOUNTING** | |
| 1 | PAFZZ | 89346 | 26269R1 | .SCREW, CAP, HEXAGON H | 2 |
| 2 | PAFZZ | 96906 | MS35338-45 | .WASHER, LOCK | 4 |
| 3 | PAFZZ | 89346 | 166562R1 | .GASKET | 1 |
| 4 | XBFZZ | 89346 | 444688 | .PLUG, PIPE | 5 |
| 5 | PAFZZ | 89346 | 25653R1 | .SCREW, CAP, HEXAGON H | 2 |
| 6 | PAFZZ | 89346 | 315209C1 | .GASKET | 1 |
| 7 | PAOZZ | 81300 | 17495GL | .BELT, V | 1 |
| 8 | PBFZZ | 89346 | 446738C1 | .PULLEY, GROOVE | 1 |
| 9 | PAFZZ | 31007 | 274085R91 | .CLAMP, HOSE | 6 |
| 10 | PAFZZ | 89346 | 364358C1 | .HOSE, NONMETALLIC | 3 |
| 11 | XBFZZ | 89346 | 864457RI | .ELBOW, PIPE TO HOSE | 3 |
| 12 | XBFZZ | 89346 | 492536C1 | .ELBOW, PIPE TO HOSE | 1 |
| 13 | XBFZZ | 89346 | 408011C1 | .ELBOW, PIPE TO HOSE | 1 |
| 14 | XBFZZ | 89346 | 444014 | .ELBOW, PIPE TO HOSE | 1 |
| 15 | XBFZZ | 89346 | 431606R1 | .ELBOW | 1 |
| 16 | XBFZZ | 89346 | 118748 | .CONNECTOR, PIPE-HOSE | 1 |
| 17 | PBFZZ | 89346 | 24840R1 | .BOLT. | 7 |
| 18 | XBFZZ | 96906 | MS35338-48 | .WASHER, LOCK | 13 |
| 19 | PBFZZ | 89346 | 25709R1 | .WASHER, FLAT | 16 |
| 20 | XBFZZ | 89346 | 674190C1 | .SCREW, CAP | 1 |
| 21 | PBFZZ | 89346 | 25524R1 | .NUT, PLAIN, HEXAGON | 1 |
| 22 | XBFZZ | 89346 | 689351C1 | .BRACKET | 1 |
| 23 | XBFZZ | 89346 | 140483H | .SCREW, CAP | 4 |
| 24 | PBFZZ | 89346 | 24850R1 | .SCREW, CAP, HEXAGON H | 4 |
| 25 | PAFZZ | 89346 | 9413981 | .NUT, SELF-LOCKING, HE | 4 |
| 26 | XBFZZ | 89346 | 689432C92 | .BASE, COMPRESSOR | 1 |
| 27 | XBFZZ | 89346 | 444698 | .PLUG, PIPE | 1 |
| 28 | PAFZZ | 89346 | 83817HB | .GASKET | 1 |
| 29 | XBFZZ | 89346 | 689350C1 | .BRACKET | 1 |
| 30 | PBFZZ | 89346 | 24843R1 | .BOLT | 2 |
| 31 | XBFZZ | 89346 | 275804R1 | .SCREW, CAP | 3 |
| 32 | XBFZZ | 89346 | 689348C2 | .BASE, MOUNTING | 1 |
| 33 | XBFZZ | 89346 | 689349C2 | .SUPPORT | 1 |

END OF FIGURE

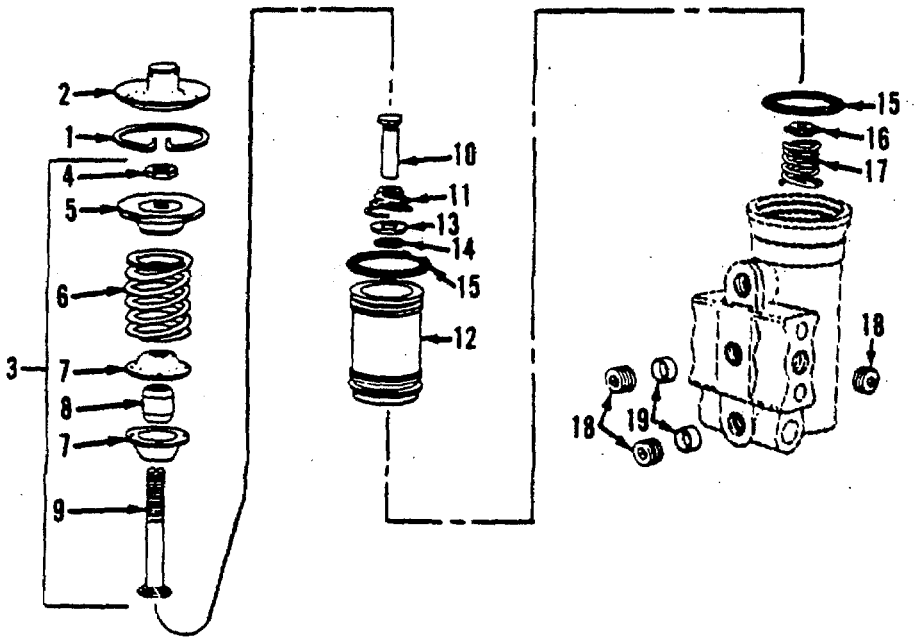


*Figure 141. Air Compressor Governor*

| (1) ITEM NO | (2) SMR CODE | (3) CAGEC | (4) PART NUMBER | (5) DESCRIPTION AND USABLE ON CODES (UOC) | (6) QTY |
|---|---|---|---|---|---|
| | | | | **GROUP 0216 DIESEL ENGINE ASSEMBLY** | |
| | | | | **FIG. 141 AIR COMPRESSOR GOVERNOR** | |
| | PAFFF | 89346 | 410986C92 | .GOVERNOR ASSEMBLY, A | 1 |
| 1 | XBFZZ | 89346 | 160094R1 | ..RING, SNAP | 1 |
| 2 | XBFZZ | 89346 | 321739R1 | ..COVER | 1 |
| 3 | XBFZZ | 89346 | 321740R91 | ..SPRING ASSY | 1 |
| 4 | XBFZZ | 89346 | 124818 | ...NUT, HEX JAM | 1 |
| 5 | XBFZZ | 89346 | 684831R1 | ...SEAT, SPRING | 1 |
| 6 | XBFZZ | 89346 | 321747R1 | ...SPRING, COMPRESSION | 1 |
| 7 | XBFZZ | 89346 | 321748R1 | ...SEAT, SPRING | 2 |
| 8 | XBFZZ | 89346 | 321749R1 | ...GUIDE, SPRING | 1 |
| 9 | XBFZZ | 89346 | 321746R1 | ..STEM VALVE | 1 |
| 10 | XBFZZ | 89346 | 321741R1 | ..SPRING, COMPRESSION | 1 |
| 12 | PBFZZ | 29510 | 321743R91 | ..PARTS KIT, PISTON AS | 1 |
| 13 | XBFZZ | 89346 | 684830R1 | ...WASHER, FLAT | 1 |
| 14 | XBFZZ | 89346 | 3046105R1 | ...GROMMET | 1 |
| 15 | XBFZZ | 89346 | 382137R1 | ...PACKING, PREFORMED | 2 |
| 16 | XBFZZ | 89346 | 321744R1 | ..VALVE | 1 |
| 17 | XBFZZ | 89346 | 321745R1 | ..SPRING, COMPRESSION | 1 |
| 18 | XBFZZ | 89346 | 444688 | ..PLUG, PIPE | 4 |
| 19 | PAFZZ | 29510 | 321738R1 | ..STRAINER ELEMENT, SE | 2 |

END OF FIGURE

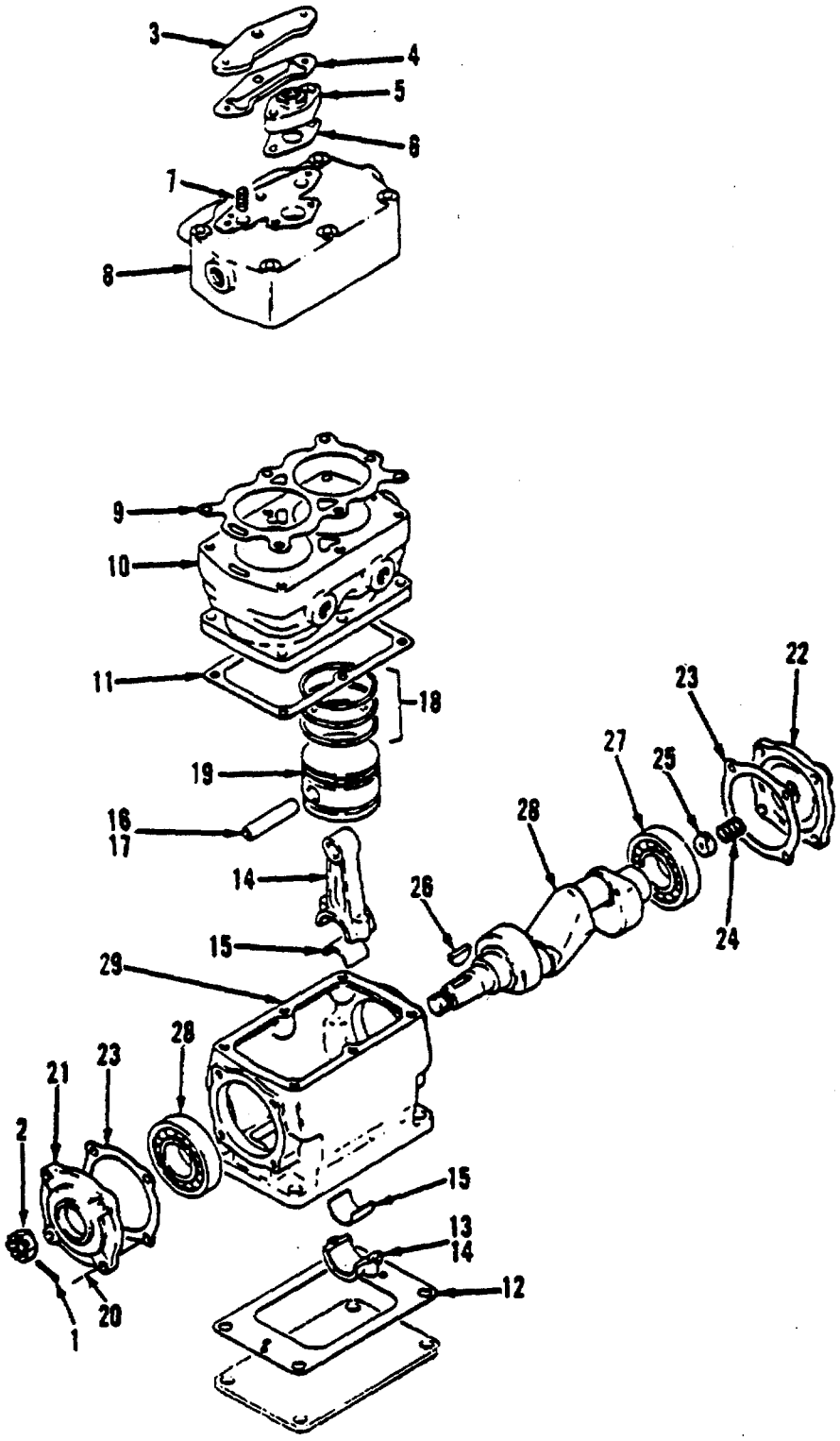


*Figure 142. Air Compressor*

| (1) ITEM NO | (2) SMR CODE | (3) CAGEC | (4) PART NUMBER | (5) DESCRIPTION AND USABLE ON CODES (UOC) | (6) QTY |
|---|---|---|---|---|---|
| | | | | **GROUP 0216 DIESEL ENGINE ASSEMBLY** | |
| | | | | **FIG. 142 AIR COMPRESSOR** | |
| | PAFFZ | 89346 | 217877R92 | .COMPRESSOR, RECIPROC | 1 |
| 1 | PAFZZ | 96906 | MS24665-355 | ..PIN, COTTER | 1 |
| 2 | PAFZZ | 89346 | 427640 | ..NUT, PLAIN, HEXAGON | 1 |
| 3 | XBFZZ | 89346 | 473653C1 | ..COVER | 1 |
| 4 | KFFZZ | 89346 | 473055C2 | ..GASKET PART OF KIT P/N 473035C92 PART OF KIT P/N 473046C92 | 1 |
| 5 | XBFZZ | 89346 | 483391C1 | ..MANIFOLD, EXHAUST | 1 |
| 6 | PAFZZ | 89346 | 861432R1 | ..GASKET | 1 |
| 7 | KFFZZ | 89346 | 474469C1 | ..SPRING, VALVE PART OF KIT P/N 473035C92 PART OF KIT P/N 473046C92. | 2 |
| 8 | XBFZZ | 89346 | 473033C92 | ..HEAD, CYLINDER | 1 |
| 9 | KFFZZ | 89346 | 473052C1 | ..GASKET PART OF KIT P/N 473035C92 PART OF KIT P/N 473046C92 | 1 |
| 10 | XBFZZ | 89346 | 473064C1 | ..BLOCK | 1 |
| 11 | KFFZZ | 89346 | 473053C1 | ..GASKET PART OF KIT P/N 473035C92 | 1 |
| 12 | PAFZZ | 89346 | 474466C1 | ..GASKET | 1 |
| 13 | PBFZZ | 89346 | 571330C1 | ..SETSCREW | 4 |
| 14 | PBFZZ | 89346 | 473060C91 | ..CONNECTOR, ROD END | 2 |
| 15 | PAFZZ | 89346 | 473042C91 | ..BEARING, SLEEVE | 1 |
| 15 | PAFZZ | 89346 | 473043C91 | ..BEARING, SLEEVE .010 UNDERSIZE | 4 |
| 15 | PAFZZ | 89346 | 473044C91 | ..BEARING, SLEEVE .020 UNDERSIZE | 1 |
| 16 | PAFZZ | 89346 | 310086R1 | ..RING, RETAINING | 4 |
| 17 | PBFZZ | 89346 | ZZ102377 | ..PIN, STRAIGHT, HEADLE | 2 |
| 18 | PBFZZ | 89346 | 473038C91. | ..RING, PISTON | 1 |
| 18 | KFFZZ | 89346 | 473039C91 | ..RING SET, PISTON .020 OVERSIZE PART OF KIT P/N 473040C91 | 1 |
| 19 | KFFZZ | 89346 | 473059C91 | ..PISTON PART OF KIT P/N 473040C91 | 1 |
| 20 | XBFZZ | 89346 | 15/16X1 L | ..BOLT | 8 |
| 21 | KFFZZ | 89346 | 474470C91 | ..CAP, BEARING PART OF KIT P/N 473047C91 | 1 |
| 22 | XBFZZ | 89346 | 473065C91 | ..COVER, BEARING | 1 |
| 23 | XBFZZ | 89346 | 473065C91 | ..COVER, BEARING | 1 |
| 24 | KFFZZ | 89346 | 474468C1 | ..SPRING, COMPRESSION PART OF KIT P/N 473035C92 | 1 |
| 25 | KFFZZ | 89346 | 474467C1 | ..RING, SEAL PART OF KIT P/N 473035C92 | 1 |
| 26 | XBFZZ | 89346 | 117996 | ..KEY, WOODRUFF | 1 |
| 27 | PAFZZ | 89346 | ST205A | ..BEARING, BALL, ANNULA | 2 |
| 28 | XBFZZ | 89346 | 473063C1 | ..CRANKSHAFT | 1 |
| 29 | XBFZZ | 89346 | 473070C1 | ..CRANKCASE, COMPRESSR | 1 |
| | PAFZZ | 89346 | 473057C1 | ..GASKET | 1 |
| | PAFZZ | 89346 | 73035C92 | ..PARTS KIT, COMPRESSO<br>GASKET ( 1) 142-4<br>GASKET ( 1) 142-9<br>GASKET ( 1) 142-11<br>RING, SEAL ( 1) 142-25<br>SPRING, COMPRESSION ( 1) 142-24<br>SPRING, VALVE ( 2) 142-7 | 1 |

| (1) ITEM NO | (2) SMR CODE | (3) CAGEC | (4) PART NUMBER | (5) DESCRIPTION AND USABLE ON CODES (UOC) | (6) QTY |
|---|---|---|---|---|---|
| | PAFZZ | 89346 | 473046C92 | ..PARTS KIT, COMPRESSO ..... | 1 |
| | | | | GASKET (1) 142-4 | |
| | | | | GASKET (1) 142-9 | |
| | | | | SPRING, VALVE ( 2) 142-7 | |
| | PAFZZ | 89346 | 473047C91 | ..PARTS KIT, BEARING R ..... | 1 |
| | | | | CAP, BEARING ( 1) 142-21 | |
| | PAFZZ | 89346 | 473040C91 | ..PARTS KIT, PISTON AS ..... | 1 |
| | | | | PISTON (1) 142-19 | |
| | | | | RING SET, PISTON ( 1) 142-18 | |
| | PAFZZ | 89346 | 473045C92 | ..REPAIR KIT, COMPRESS..... | 1 |

END OF FIGURE

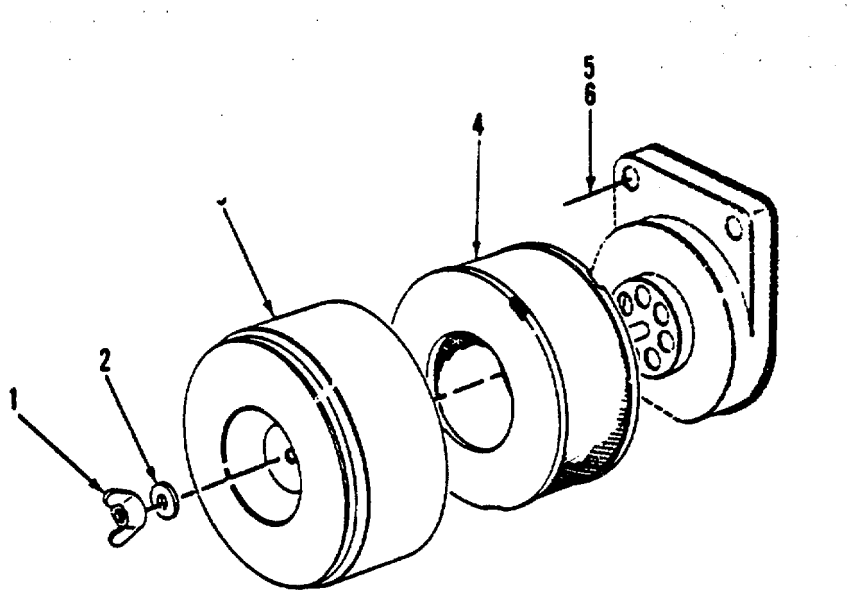


*Figure 143. Air Compressor Strainer*

| (1) ITEM NO | (2) SMR CODE | (3) CAGEC | (4) PART NUMBER | (5) DESCRIPTION AND USABLE ON CODES (UOC) | (6) QTY |
|---|---|---|---|---|---|
| | | | | GROUP 0216 DIESEL ENGINE ASSEMBLY | |
| | | | | FIG. 143 AIR COMPRESSOR STRAINER | |
| | XBOOO | 89346 | 281911C92 | .STRAINER, AIR COMPR..... | 1 |
| 1 | PAOZZ | 89346 | 110 330 | ..NUT WING THREAD SIZE 10-32 ..... | 1 |
| 2 | PAOZZ | 89346 | 290308C1 | ..WASHER, FLAT..... | 1 |
| 3 | XBOZZ | 89346 | 359379C1 | ..COVER ..... | 1 |
| 4 | PAOZZ | 06853 | 243009 | ..FILTER ELEMENT, INTA..... | 1 |
| 5 | PBOZZ | 89346 | 25653R1 | ..SCREW, CAP, HEXAGON H..... | 2 |
| 6 | PBOZZ | 96906 | MS35338-45 | ..WASHER, LOCK..... | 2 |
| | | | | END OF FIGURE | |

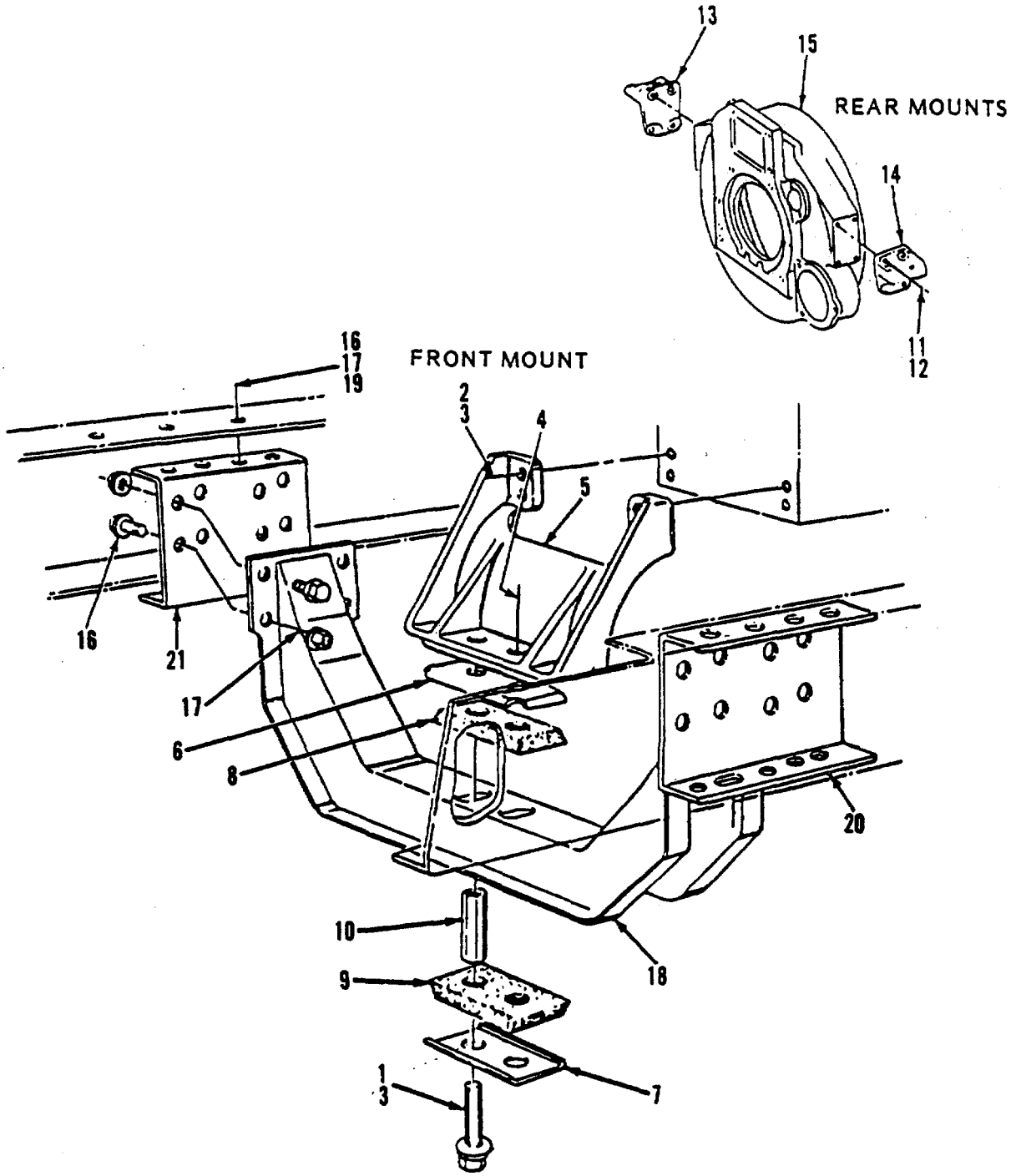


*Figure 144. Engine Mounting*

| (1) ITEM NO | (2) SMR CODE | (3) CAGEC | (4) PART NUMBER | (5) DESCRIPTION AND USABLE ON CODES (UOC) | (6) QTY |
|---|---|---|---|---|---|
| | | | | GROUP 0216 DIESEL ENGINE ASSEMBLY | |
| | | | | FIG. 144 ENGINE MOUNTING | |
| 1 | PAFZZ | 89346 | 24879R1 | .SCREW, CAP, HEXAGON H | 2 |
| 2 | PAFZZ | 89346 | 24875R1 | .SCREW, CAP, HEXAGON H | 2 |
| 3 | PAFZZ | 89346 | 25976R1 | .WASHER, FLAT | 4 |
| 4 | PAFZZ | 89346 | 414089C1 | .NUT, PLAIN, EXTENDED | 2 |
| 5 | XBFZZ | 89346 | 463526C1 | .BRACKET, ENGINE MTG | 1 |
| 6 | XBFZZ | 89346 | 422650C1 | .RETAINER | 1 |
| 7 | XBFZZ | 89346 | 286234C2 | .RETAINER | 1 |
| 8 | PAFZZ | 89346 | 286236C2 | .MOUNT, RESILIENT | 1' |
| 9 | PAFZZ | 89346 | 286235C2 | .MOUNT, RESILIENT | 1I |
| 10 | PAFZZ | 89346 | 371623C2 | .SPACER, SLEEVE | 2 |
| 11 | PAFZZ | 89346 | 624862R1 | .BOLT | 8 |
| 12 | PAFZZ | 89346 | 25710R1 | .WASHER, FLAT | 8 |
| 13 | XBFZZ | 89346 | 479376C1 | .BRACKET, REAR, RH | 1 |
| 14 | XBFZZ | 89346 | 479375C1 | .BRACKET, REAR, LH | 1 |
| 15 | XBFZZ | 89346 | 686704C4 | .HOUSING, FLYWHEEL | 1 |
| 16 | PAFZZ | 89346 | 414052C1 | .BOLT | 16 |
| 17 | PAFZZ | 89346 | 414087C1 | .NUT, DIFFERENTIAL | 16 |
| 18 | XBFZZ | 89346 | 1664732C2 | .CROSSMEMBER | 1 |
| 19 | PAFZZ | 89346 | 414053C1 | .BOLT, MACHINE | 8 |
| 20 | XBFZZ | 89346 | 471640C2 | .BRACKET, LEFT | 1 |
| 21 | XBFZZ | 89346 | 471641C2 | .BRACKET, RIGHT | 1 |
| | | | | END OF FIGURE | |

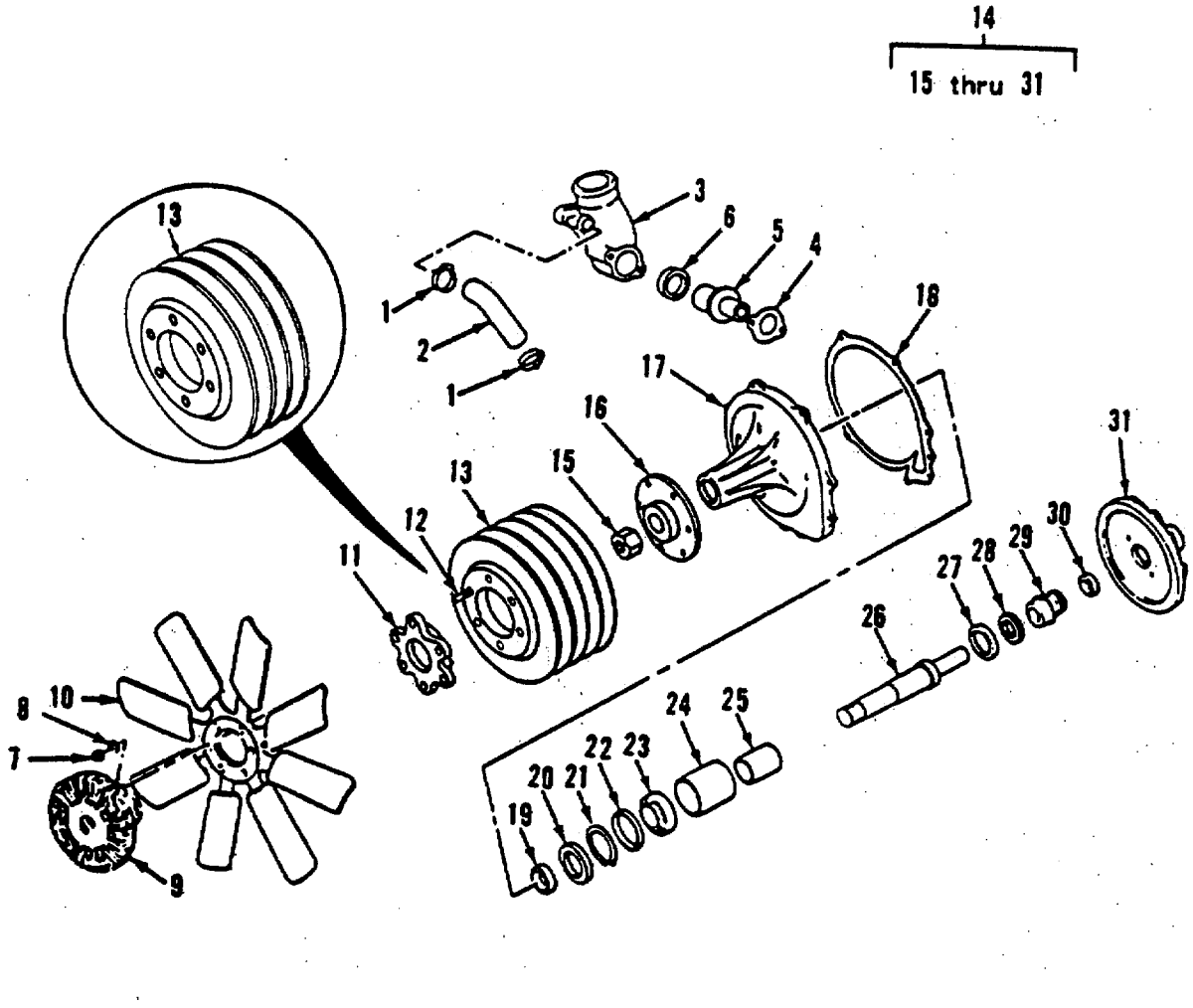


*Figure 145. Water Pump and Fan Drive*

| (1) ITEM NO | (2) SMR CODE | (3) CAGEC | (4) PART NUMBER | (5) DESCRIPTION AND USABLE ON CODES (UOC) | (6) QTY |
|---|---|---|---|---|---|
| | | | | **GROUP 0216 DIESEL ENGINE ASSEMBLY** | |
| | | | | **FIG. 145 WATER PUMP AND FAN DRIVE** | |
| 1 | PAOZZ | 89346 | 681896C1 | .CLAMP, HOSE | 2 |
| 2 | PAOZZ | 92679 | 672242C1 | .HOSE, PREFORMED | 1 |
| | PAOZZ | 92679 | 277232R1 | .BOLT | 1 |
| | PAOZZ | 29510 | 275804R1 | .SCREW, CAP, HEXAGON H | 1 |
| | PAOZZ | 89346 | 25896R1 | .WASHER | 2 |
| | XBOZZ | 89346 | 444631 | .PLUG, PIPE | 1 |
| 3 | XBOZZ | 89346 | 686757C2 | .HOUSING, THERMOSTAT | 1 |
| 4 | PAOZZ | 29510 | 675384C1 | .GASKET | 1 |
| 5 | PAOZZ | 29510 | 687018C2 | .SWITCH, THERMOSTATIC | 1 |
| 6 | PAOZZ | 29510 | 615175C91 | .SEAL, THERMOSTAT | 1 |
| 7 | XBFZZ | 89346 | 25523R1 | .NUT, HEX | 6 |
| 8 | XBFZZ | 96906 | MS35338-46 | .WASHER, LOCK | 6 |
| 9 | PBFZZ | 89346 | 1609989C91 | .DRIVE, FAN | 1 |
| 10 | PBFZZ | 89346 | 492146C1 | .IMPELLER, FAN, AXIAL | 1 |
| 11 | XBFZZ | 89346 | 481775C1 | .SPACER, FAN | 1 |
| 12 | XBFZZ | 89346 | 481979C3 | .STUD | 6 |
| 13 | XBFZZ | 89346 | 1808474C1 | .PULLEY, WATER PUMP | 1 |
| 13 | XBFZZ | 89346 | 1810717C1 | .PULLEY, WATER PUMP USED ON SERIAL .NOS 672040 THRU 672044 | 1 |
| | XBFZZ | 89346 | 140483H | .SCREW, CAP | 4 |
| | XBFZZ | 89346 | 24344R1 | .SCREW, CAP | 2 |
| | PBFZZ | 89346 | 24842R1 | .SCREW, CAP, HEXAGON H | 2 |
| | XBFZZ | 89346 | 25522R1 | .NUT, HEX | 2 |
| | PBFZZ | 89346 | 25896R1 | .WASHER | 8 |
| | XBFZZ | 89346 | 680481C1 | .PIN, DOWEL A | 2 |
| 14 | PAFFF | 89346 | 685155C95 | .HOUSING, COOLANT PUM | 1 |
| 15 | XBFZZ | 89346 | 691342C1 | ..NUT, HEX | 1 |
| 16 | XBFZZ | 89346 | 685157C1 | ..HUB, WATER PUMP | 1 |
| 17 | XBFZZ | 89346 | 677856C2 | ..HOUSING, BEARING | 1 |
| 18 | PAFZZ | 29510 | 675808C2 | ..GASKET | 1 |
| 19 | PAFZZ | 92679 | 671308C2 | ..SPACER, SLEEVE | 1 |
| 20 | PAFZZ | 89346 | 1806268C91 | ..SEAL | 1 |
| 21 | PAFZZ | 89346 | 272842R1 | ..RING, RETAINING | 1 |
| 22 | PAFZZ | 92679 | 677715C1 | ..SPACER, RING | 1 |
| 23 | PAFZZ | 92679 | 677148C91 | ..BEARING, ROLLER, TAPE | 1 |
| 24 | PAFZZ | 92679 | 677141C1 | ..SPACER, SLEEVE | 1 |
| 25 | PAFZZ | 92679 | 685152C1 | ..SPACER, SL EEVE | 1 |
| 26 | XBFZZ | 89346 | 685153C2 | ..SHAFT, WATER PUMP | 1 |
| 27 | PAFZZ | 89346 | 1806267C91 | ..SEAL, BEARING | 1 |
| 28 | KFFZZ | 89346 | 1802812C1 | ..PACKING, PREFORMED PART OF KIT P/N 1810505C91 PART OF KIT P/N 1810366C91 | 1 |
| 29 | KFFZZ | 89346 | NSS-SEAL | ..SEAL, PUMP PART OF KIT P/N 1810505C91 PART OF KIT P/N 1810366C91 | 1 |
| 30 | KFFZZ | 89346 | NSS-SEAL | ..SEAT, SEAL PART OF KIT P/N 1810505C91 PART OF KIT P/N 1810366C91 | 1 |

| (1) ITEM NO | (2) SMR CODE | (3) CAGEC | (4) PART NUMBER | (5) DESCRIPTION AND USABLE ON CODES (UOC) | (6) QTY |
|---|---|---|---|---|---|
| 31 | KFFZZ | 89346 | 1802248C91 | ..IMPELLER, PUMP PART OF KIT P/N 1810366C91 | 1 |
| | PAFZZ | 89346 | 1810505C91 | ..PARTS KIT, SEAL REPL<br>PACKING, PREFORMED ( 1) 145-28<br>SEAL, PUMP ( 1) 145-29<br>SEAL, SEAL ( 1) 145-30 | 2 |
| | PAFZZ | 89346 | 1810366C91 | ..PARTS KIT, ENGINE FU<br>IMPELLER, PUMP ( 1) 145-31<br>PACKING, PREFORMED ( 1) 145-28<br>SEAL, PUMP ( 1) 145-29<br>SEAL, SEAL ( 1) 145-30 | 2 |

END OF FIGURE

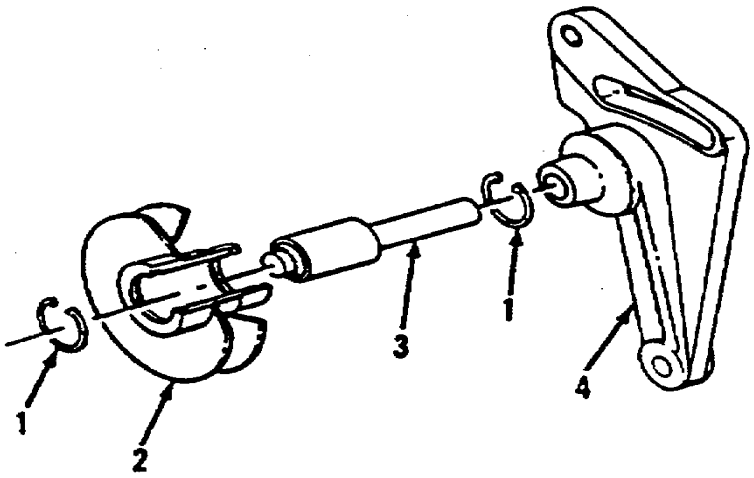


*Figure 146. Idler Pulley and Mounting*

| (1) ITEM NO | (2) SMR CODE | (3) CAGEC | (4) PART NUMBER | (5) DESCRIPTION AND USABLE ON CODES (UOC) | (6) QTY |
|---|---|---|---|---|---|
| | | | | GROUP 0216 DIESEL ENGINE ASSEMBLY | |
| | | | | FIG. 146 IDLER PULLEY AND MOUNTING | |
| 1 | PAFZZ | 89346 | 228275R1 | .RING, RETAINING | 2 |
| 2 | XBFZZ | 89346 | 690319C2 | .PULLEY, IDLER | 1 |
| 3 | PAFZZ | 89346 | 690294C91 | .BEARING, ROLLER, TAPE | 1 |
| | PBFZZ | 89346 | 24842R1 | .SCREW, CAP, HEXAGON H | 1 |
| | XBFZZ | 89346 | 332530R1 | .WASHER, FLAT | 1 |
| | XBFZZ | 89346 | 24859R1 | .SCREW, CAP | 1 |
| | XBFZZ | 89346 | 24864R1 | .SCREW, CAP | 1 |
| | XBFZZ | 89346 | 26273R1 | .WASHER, FLAT | 1 |
| | XBFZZ | 89346 | 613454C1 | .WASHER, FLAT | 1 |
| 4 | XBFZZ | 89346 | 690296C1 | .BRACKET, SUPPORT | 1 |
| | | | | END OF FIGURE | |

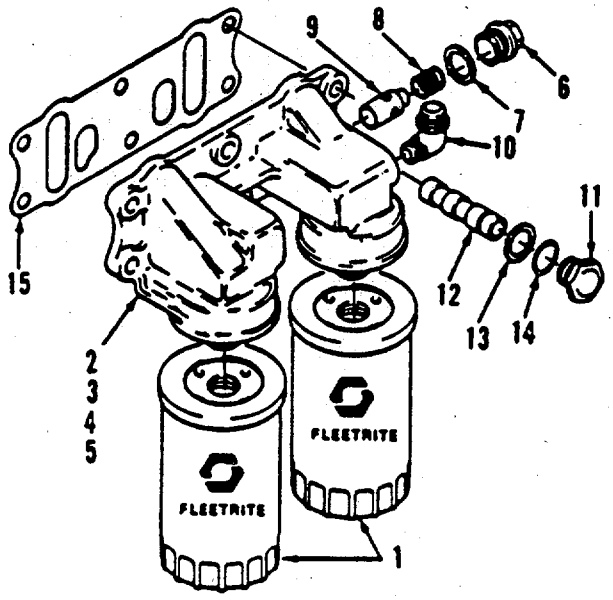


*Figure 147. Oil Filter and Connection*

| (1) ITEM NO | (2) SMR CODE | (3) CAGEC | (4) PART NUMBER | (5) DESCRIPTION AND USABLE ON CODES (UOC) | (6) QTY |
|---|---|---|---|---|---|
| | | | | GROUP 0216 DIESEL ENGINE ASSEMBLY | |
| | | | | FIG. 147 OIL FILTER AND CONNECTION | |
| 1 | PAOZZ | 89346 | 675616C91 | .FILTER ELEMENT, FLUI | 2 |
| 2 | XBOZZ | 89346 | 26311R1 | .SCREW, CAP | 5 |
| 3 | XBOZZ | 89346 | 690206C1 | .BGLT, STUD | 2 |
| 4 | PBOZZ | 89346 | 25896R1 | .WASHER | 6 |
| 5 | XBOOO | 89346 | 677323C1 | .BASE, OIL FILTER | 1 |
| 6 | XBOZZ | 89346 | 676135C1 | ..PLUG, PIPE | 1 |
| 7 | PAOZZ | 92679 | 676136C1 | ..GASKET | 1 |
| 8 | PAOZZ | 92679 | 676137C1 | ..SPRING, HELICAL, COMP | 1 |
| 9 | PAOZZ | 92679 | 601917C1 | ..VALVE, LUBRICATING 0 | 1 |
| 10 | XBOZZ | 89346 | 606845C1 | ..ELBOW | 1 |
| 11 | XBOZZ | 89346 | 675395C1 | .CAP, VALVE | 1 |
| 12 | PAOZZ | 89346 | 680237C93 | .VALVE, REGULATING, FU | 1 |
| 13 | XBOZZ | 89346 | 261624R1 | ..GASKET | 1 |
| 14 | XBOZZ | 89346 | 349055R2 | ..PACKING, PREFORMED | 1 |
| 15 | PAOZZ | 89346 | 675398C2 | ..GASKET | 1 |
| | | | | END OF FIGURE | |

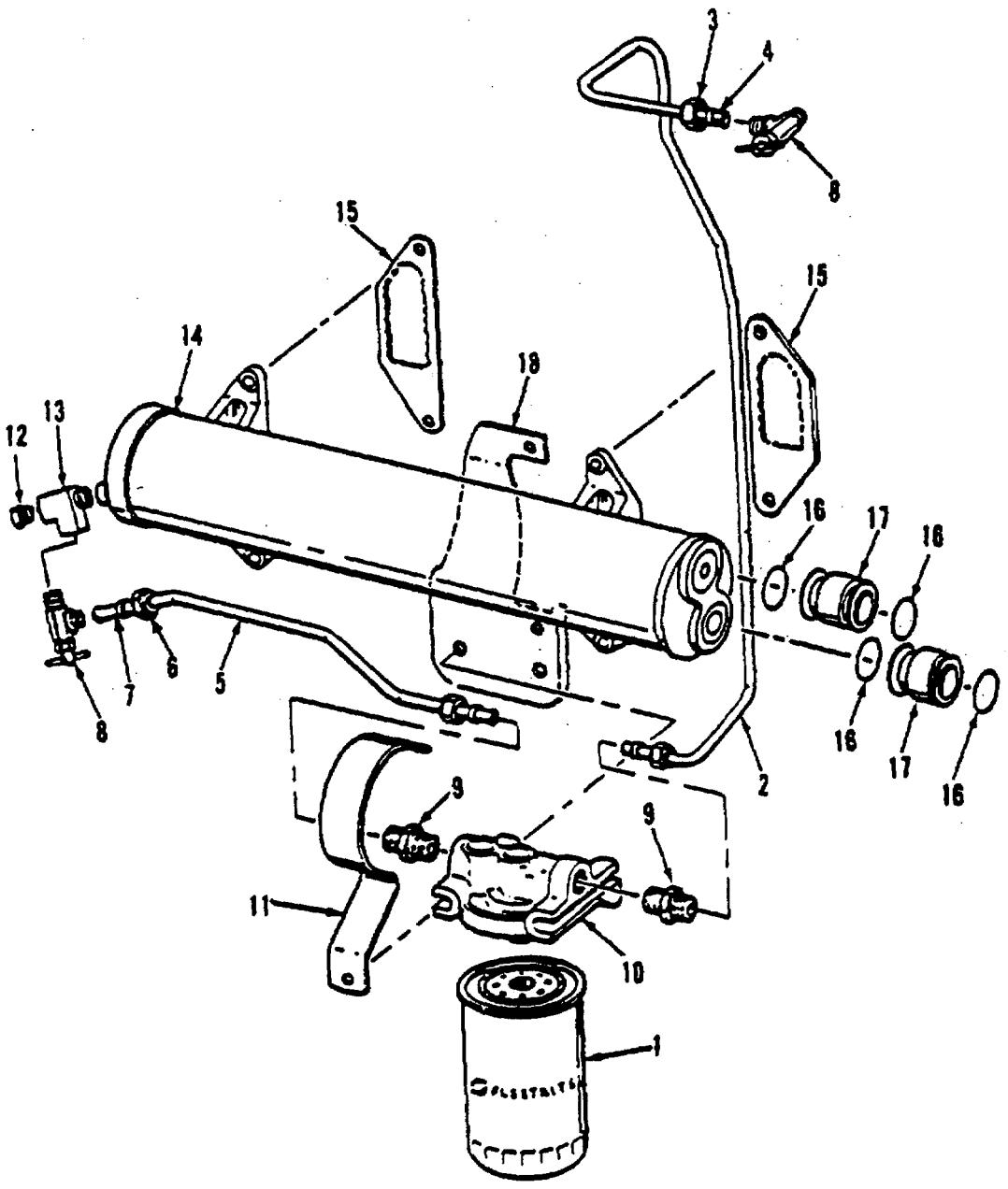


*Figure 148. Oil Cooler and Coolant Filter*

| (1) ITEM NO | (2) SMR CODE | (3) CAGEC | (4) PART NUMBER | (5) DESCRIPTION AND USABLE ON CODES (UOC) | (6) QTY |
|---|---|---|---|---|---|
| | | | | GROUP 0216 DIESEL ENGINE ASSEMBLY | |
| | | | | FIG. 148 OIL COOLANT AND COOLANT FILTER | |
| 1 | PAOZZ | 29510 | 1801090C1 | .FILTER ELEMENT, FLUI | 1 |
| 2 | PAOZZ | 89346 | 1800589C92 | .TUBE ASSEMBLY, METAL | 1 |
| 3 | PAOZZ | 29510 | 265205R1 | ..NUT | 2 |
| 4 | PAOZZ | 89346 | 265204R1 | .BUSHING, NONMETALLIC | 2 |
| 5 | PAOZZ | 89346 | 1800588C91 | .TUBE, METALLIC | 1 |
| 6 | PAOZZ | 29510 | 265205R1 | ..NUT | 2 |
| 7 | PAOZZ | 89346 | 265204R1 | ..BUSHING, NONMETALLIC | 2 |
| 8 | PAOZZ | 89346 | 121894C1 | .VALVE, SAFETY RELIEF | 2 |
| 9 | XBOZZ | 89346 | 333773R1 | .CONNECTOR, FLEX | 2 |
| | PBOZZ | 89346 | 25784R1 | .SCREW, CAP, HEXAGON H | 2 |
| | XBOZZ | 89346 | 142127R1 | .WASHER, SPECIAL | 1 |
| | PBOZZ | 89346 | 25896R1 | .WASHER | 8 |
| 10 | XBOZZ | 89346 | 1800029C1 | .HEADER, FILTER | 1 |
| 11 | XBOZZ | 89346 | 1801115C1 | .SPRING | 1 |
| 12 | XBOZZ | 89346 | 444613 | .PLUG, PIPE | 1 |
| 13 | XBOZZ | 89346 | 1800515C1 | .TEE, REDUCING | 1 |
| | XBOZZ | 89346 | 26311R1 | .SCREW, CAP | 4 |
| 14 | PBOZZ | 89346 | 678841C91 | .COOLER, LUBRICATING | 4 |
| 15 | PAOZZ | 92679 | 675513C1 | ..GASKET | 2 |
| 16 | PAOZZ | 29510 | 252483R1 | ..RING | 4 |
| 17 | PAOZZ | 92679 | 677110C1 | .COUPLING, TUBE | 2 |
| | XBOZZ | 89346 | 26312R1 | .SCREW, CAP | 2 |
| 18 | XBOZZ | 89346 | 1800690CI | .BRACKET | 1 |
| | | | | END OF FIGURE | |

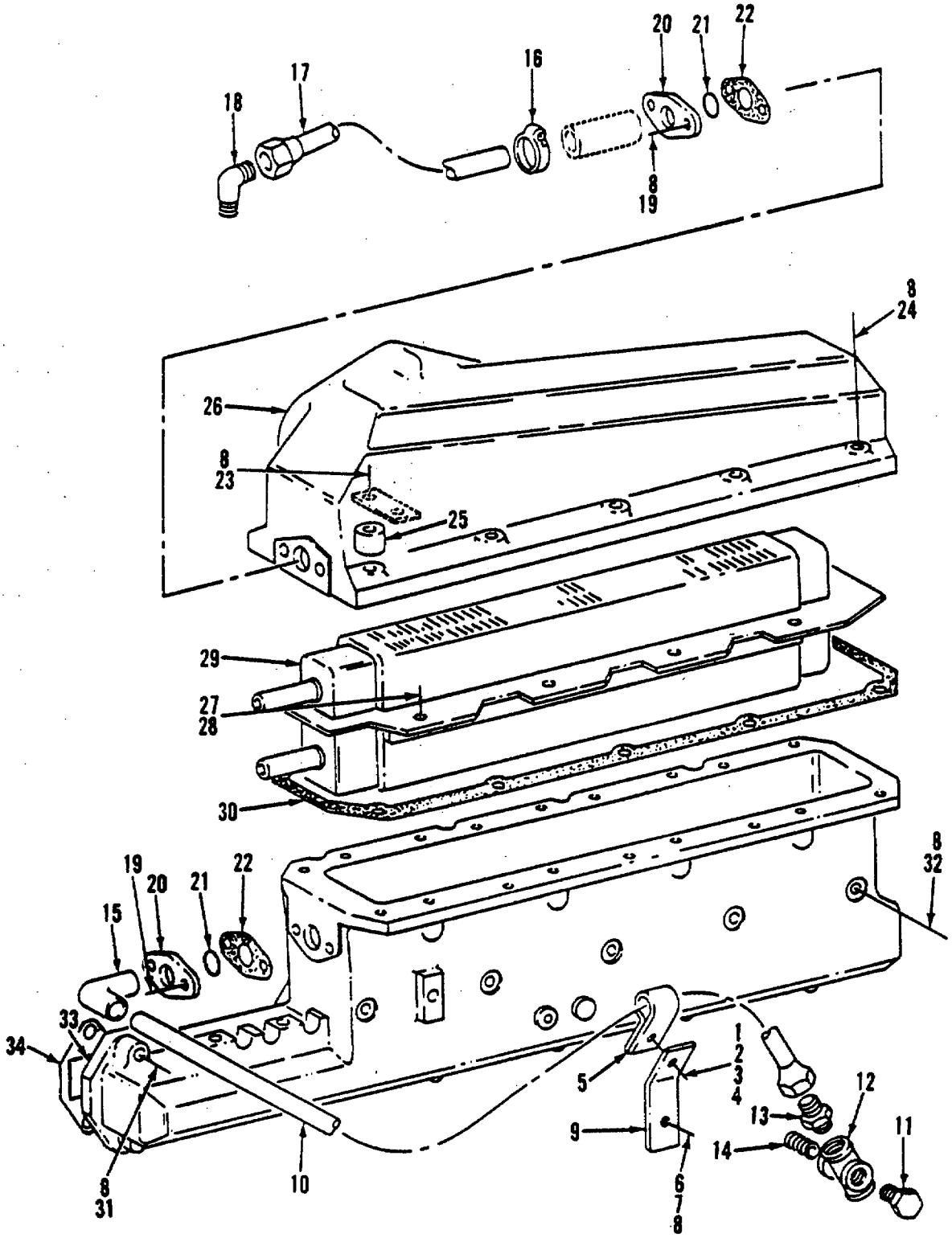


*Figure 149. Intercooler Mounting and Piping*

| (1) ITEM NO | (2) SMR CODE | (3) CAGEC | (4) PART NUMBER | (5) DESCRIPTION AND USABLE ON CODES (UOC) | (6) QTY |
|---|---|---|---|---|---|
| | | | | GROUP 0216 DIESEL ENGINE ASSEMBLY | |
| | | | | FIG. 149 INTERCOOLER MOUNTING AND PIPING | |
| 1 | PAOZZ | 89346 | 24840R1 | .BOLT | 1 |
| 2 | PAOZZ | 31007 | 25522R1 | .NUT | 1 |
| 3 | PAOZZ | 89346 | 25896R1 | .WASHER | 2 |
| 4 | PAOZZ | 96906 | MS35338-46 | .WASHER, LOCK | 1 |
| 5 | PAOZZ | 89346 | 129083R1 | .CLAMP, LOOP | 1 |
| 6 | XBOZZ | 89346 | 25493R1 | .SCREW, CAP, HEXAGON H | 1 |
| 7 | PBOZZ | 96906 | MS35338-45 | .WASHER, LOCK | 1 |
| 8 | PAOZZ | 89346 | 27326R1 | .WASHER, FLAT | 27 |
| 9 | XBOZZ | 89346 | 689381C1 | .BRACKET | 1 |
| 10 | PAOZZ | 89346 | 690075C91 | .TUBE ASSEMBLY, METAL | 1 |
| 11 | XBOZZ | 89346 | 444625 | .PLUG, PIPE | 1 |
| 12 | XBOZZ | 89346 | 115193 | .CROSS, PIPE | 1 |
| 13 | XBOZZ | 89346 | 285611C1 | .CONNECTOR, HOSE | 1 |
| 14 | XBOZZ | 89346 | 121207 | .NIPPLE, PIPE | 1 |
| 15 | XBOZZ | 89346 | 690108C1 | .ELBOW, HOSE | 1 |
| 16 | PAOZZ | 89346 | 576168C1 | .CLAMP, HOSE | 2 |
| 17 | PAOZZ | 89346 | 690067C91 | .TUBE ASSEMBLY, METAL | 1 |
| 18 | XBOZZ | 89346 | 312064C1 | .ELBOW | 1 |
| 19 | PAOZZ | 89346 | 25493R1 | .SCREW, CAP, HEXAGON H | 4 |
| 20 | XBOZZ | 89346 | 686146C1 | .FLANGE, HOSE | 2 |
| 21 | PAOZZ | 89346 | 350429R1 | .PACKING;PREFORMED | 2 |
| 22 | PAOZZ | 89346 | 686145C2 | .GASKET | 2 |
| 23 | XBOZZ | 89346 | 25234R1 | .SCREW, CAP | 1 |
| 24 | XBOZZ | 89346 | 25750R1 | .SCREW, CAP | 9 |
| 25 | XBOZZ | 89346 | 23776D | .SPACER | 1 |
| 26 | XBOZZ | 89346 | 686157C3 | .COVER, INTERCOOLER | 1 |
| 27 | PAOZZ | 89346 | 25493R1 | .SCREW, CAP, HEXAGON H | 8 |
| 28 | PAOZZ | 89346 | 684496C1 | .WASHER, FLAT | 8 |
| 29 | PBOZZ | 89346 | 686210C91 | .COOLER, LUBRICATING | 1 |
| 30 | PAOZZ | 89346 | 686142C2 | .GASKET | 1 |
| 31 | XBFZZ | 89346 | 26680R1 | .SCREW, CAP | 7 |
| 32 | XBFZZ | 89346 | 28565R1 | .SCREW, CAP | 5 |
| 33 | XBFZZ | 89346 | 1802157C1 | .HOUSING | 1 |
| 34 | PAFZZ | 29510 | 682199C1 | .GASKET | 1 |
| | XBFZZ | 89346 | 444614 | .PLUG, PIPE | 1 |
| | XBOZZ | 89346 | 688485C1 | .CLIP, EXTENSION | 1 |
| | XBOZZ | 89346 | 116487 | .CONNECTOR, PIPE-TUBE | 1 |
| | | | | END OF FIGURE | |

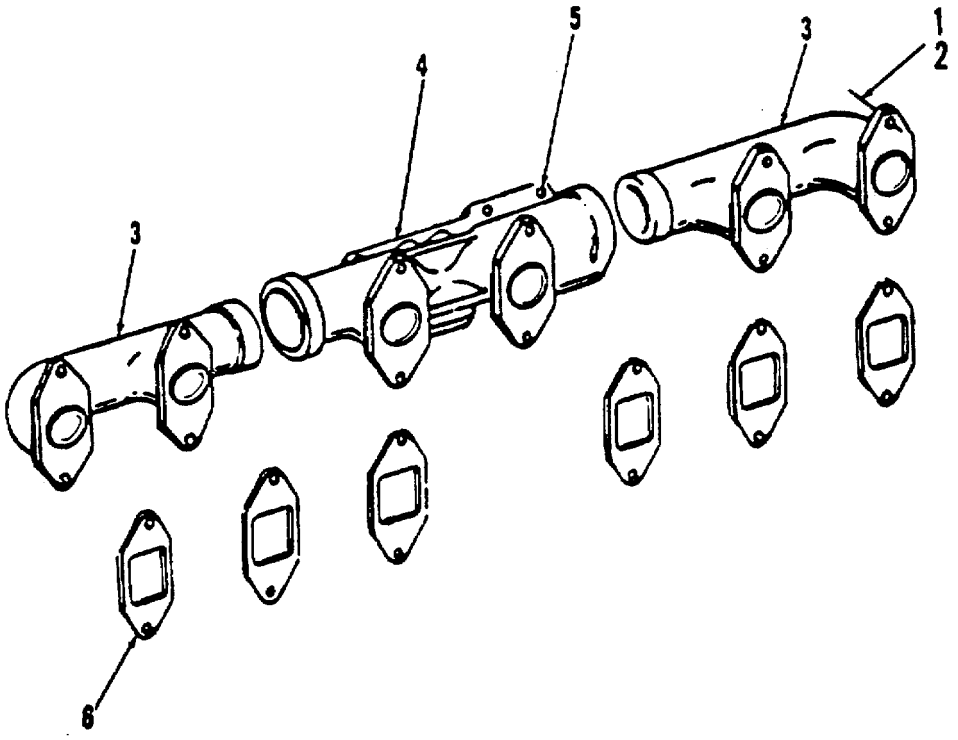


*Figure 150. Exhaust Manifold*

| (1) ITEM NO | (2) SMR CODE | (3) CAGEC | (4) PART NUMBER | (5) DESCRIPTION AND USABLE ON CODES (UOC) | (6) QTY |
|---|---|---|---|---|---|
| | | | | GROUP 0216 DIESEL ENGINE ASSEMBLY | |
| | | | | FIG. 150 EXHAUST MANIFOLD | |
| 1 | PAFZZ | 92679 | 682987C1 | .NUT, PLAIN, HEXAGON | 12 |
| 2 | PAFZZ | 92679 | 684034C1 | .WASHER, FLAT | 12 |
| 3 | XBFZZ | 89346 | 677628C1 | .MANIFOLD, EXHAUST | 1 |
| 4 | XBFZZ | 89346 | 677690C1 | .MANIFOLD, EXHAUST | 1 |
| 5 | XBFZZ | 89346 | 256333R1 | .STUD | 2 |
| | XBFZZ | 89346 | 444614 | .PLUG, PIPE | 2 |
| 6 | PAFZZ | 29510 | 688928C1 | .GASKET | 6 |
| | | | | END OF FIGURE | |

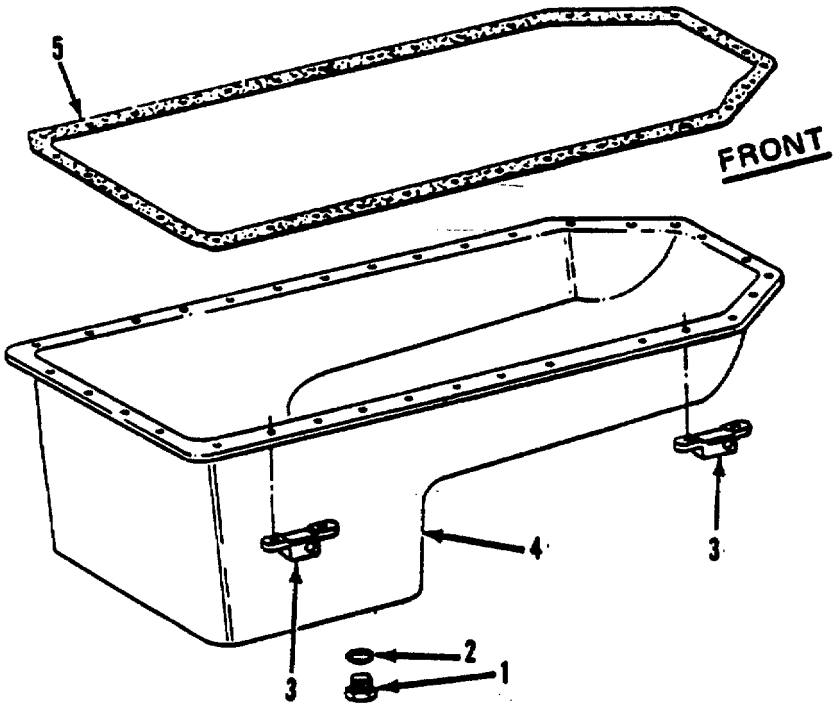


*Figure 151. Oil Pan*

| (1) ITEM NO | (2) SMR CODE | (3) CAGEC | (4) PART NUMBER | (5) DESCRIPTION AND USABLE ON CODES (UOC) | (6) QTY |
|---|---|---|---|---|---|
| | | | | GROUP 0216 DIESEL ENGINE ASSEMBLY | |
| | | | | FIG. 151 OIL PAN | |
| 1 | PAOZZ | 89346 | 688067C1 | .PLUG, MACHINE THREAD | 1 |
| 2 | PAOZZ | 29510 | 59658D | .WASHER, FLAT | 1 |
| | PAFZZ | 92679 | 677490C1 | .BOLT, ASSEMBLED WASH | 22 |
| | PAFZZ | 89346 | 690358C1 | .SCREW, CAP, HEX HD | 4 |
| | XBFZZ | 89346 | 444667 | .PLUG, PIPE | 1 |
| | XBFZZ | 89346 | 444655 | .PLUG, PIPE | 2 |
| | XBFZZ | 89346 | 273469 | .PLUG, PIPE | 2 |
| 3 | XBFZZ | 89346 | 1808957C1 | .SPACER | 4 |
| 4 | PBFZZ | 89346 | 1801398C91 | .OIL PAN | 1 |
| 5 | PAFZZ | 29510 | 671827C1 | .GASKET | 1 |
| | | | | END OF FIGURE | |

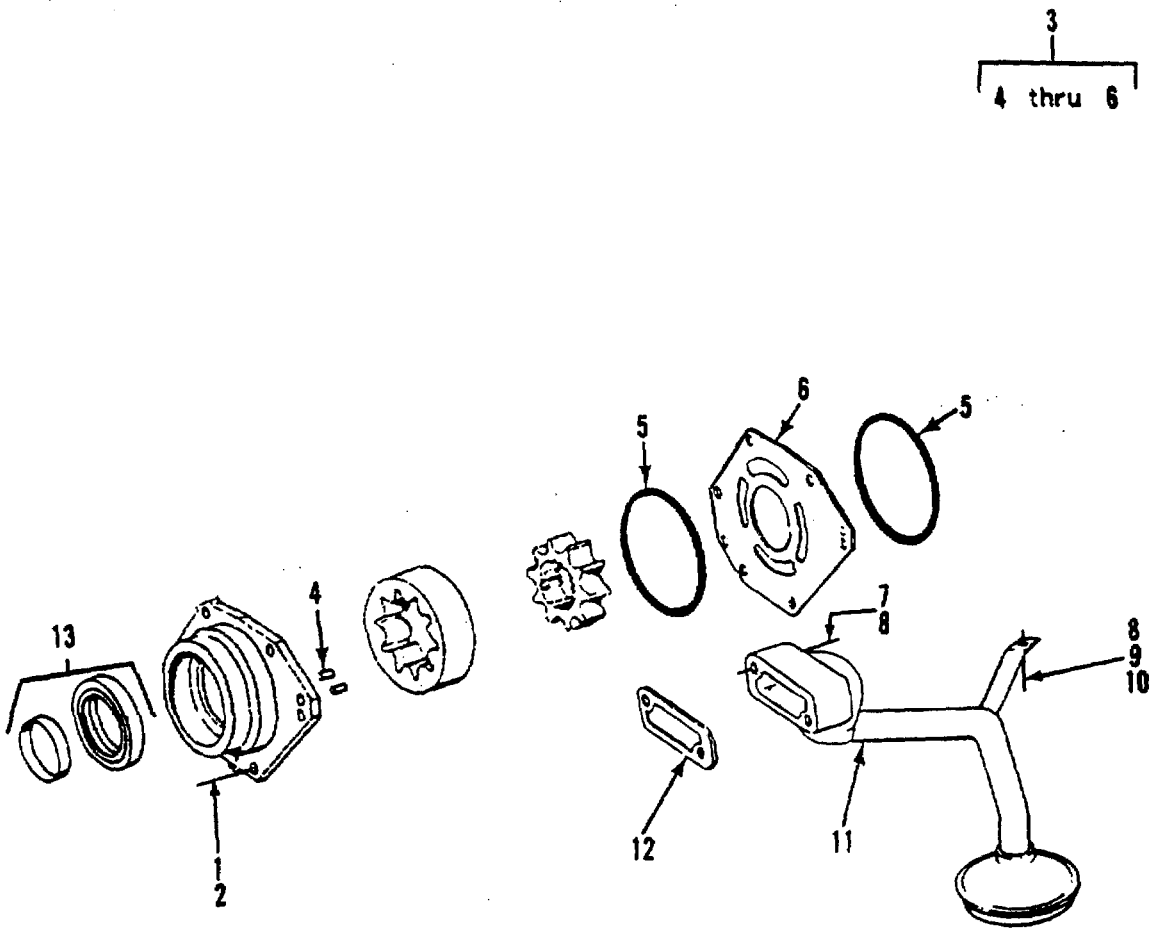


*Figure 152. Oil Pump*

| (1) ITEM NO | (2) SMR CODE | (3) CAGEC | (4) PART NUMBER | (5) DESCRIPTION AND USABLE ON CODES (UOC) | (6) QTY |
|---|---|---|---|---|---|
| | | | | GROUP 0216 DIESEL ENGINE ASSEMBLY | |
| | | | | FIG. 152 OIL PUMP | |
| 1 | PAFZZ | 89346 | 26679R1 | .BOLT, MACHINE | 6 |
| 2 | PAFZZ | 89346 | 27326R1 | .WASHERFLAT | 6 |
| 3 | PAFFF | 89346 | 1808832C91 | .PARTS KIT, ROTARY PU | 1 |
| 4 | XBFZZ | 89346 | 680482C1 | ..PIN, DOWEL | 2 |
| 5 | PAFZZ | 89346 | 675860C1 | ..RING, OIL PUMP HOUSI | 2 |
| 6 | PAFZZ | 89346 | 1802879C1 | ..OIL PUMP ASSEMBLY, E | 1 |
| 7 | PBFZZ | 89346 | 25232R1 | .SCREW, CAP, HEXAGON H | 2 |
| 8 | PBFZZ | 89346 | 27326R1 | .WASHER, FLAT | 3 |
| 9 | PBFZZ | 96906 | MS35338-45 | .WASHER, LOCK | 1 |
| 10 | PBFZZ | 89346 | 25492R1 | .SCREW, CAP, HEXAGON H | 1 |
| 11 | XBFZZ | 89346 | 1802866C1 | .TUBE, INLET | 1 |
| 12 | PAFZZ | 89346 | 1802867C2 | .GASKET | 1 |
| 13 | PAFZZ | 89346 | 690437C93 | .SEAL, PLAIN ENCASED | 1 |
| | | | | END OF FIGURE | |

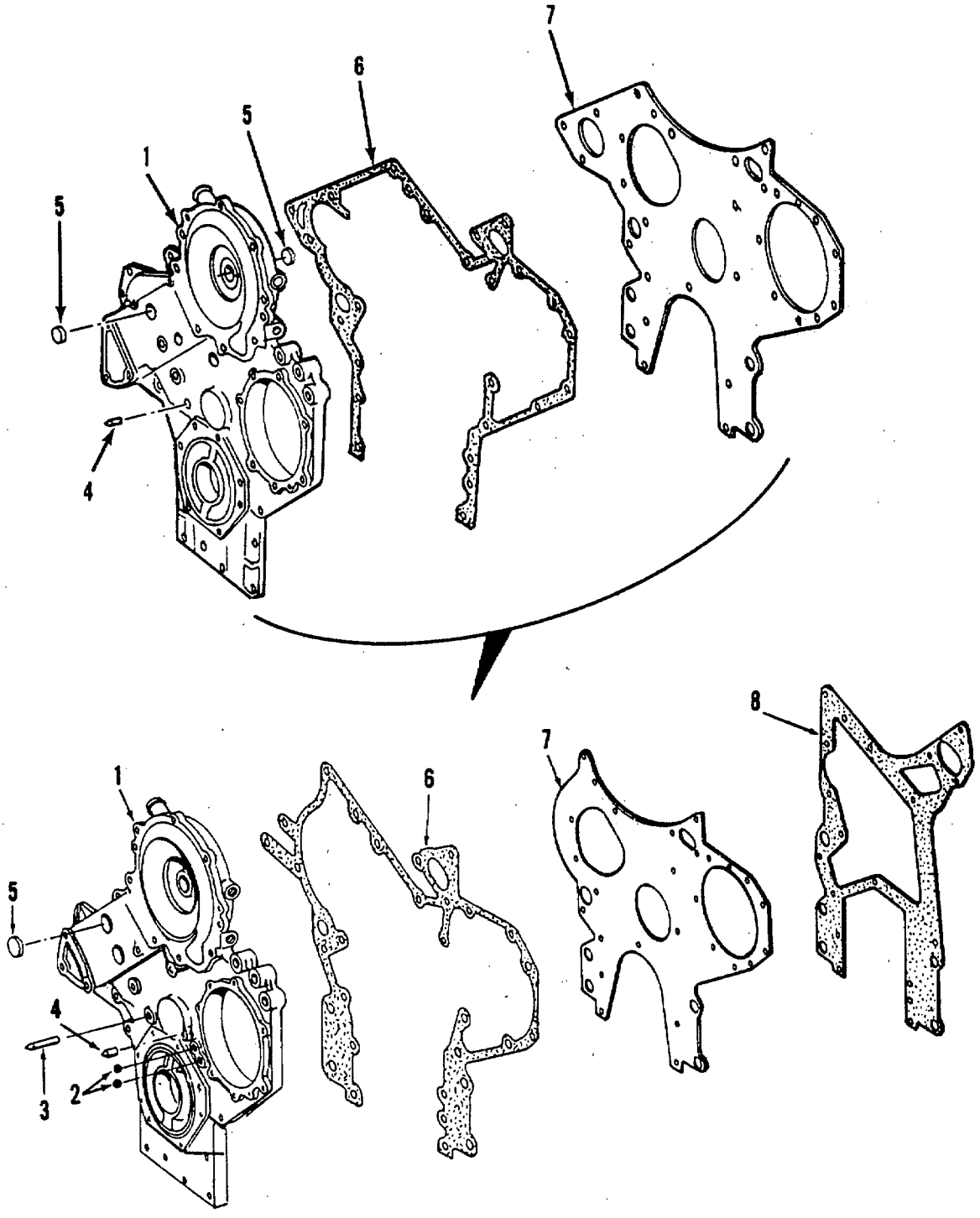


*Figure 153. Crankcase Front Cover*

| (1) ITEM NO | (2) SMR CODE | (3) CAGEC | (4) PART NUMBER | (5) DESCRIPTION AND USABLE ON CODES (UOC) | (6) QTY |
|---|---|---|---|---|---|
| | | | | GROUP 0216 DIESEL ENGINE ASSEMBLY | |
| | | | | FIG. 153 CRANKCASE FRONT COVER | |
| | PAFZZ | 89346 | 25228R1 | .SCREW, CAP, HEXAGON H | 2 |
| | PBFZA | 89346 | 25501R1 | .BOLT USED ON SERIAL NOS 672040 THRU 672044 | 2 |
| | XBFZZ | 89346 | 25654R1 | .SCREW, CAP | 2 |
| | XBFZZ | 89346 | 25234R1 | .SCREW, CAP | 5 |
| | PBFZZ | 89346 | 25678R1 | .SCREW, CAP, HEXAGON H | 2 |
| | PBFZZ | 89346 | 27326R1 | .WASHER, FLAT | 15 |
| | PAFZZ | 92679 | 25520R1 | .NUT, PLAIN, HEXAGON | 1 |
| | XBFZZ | 89346 | 25522R1 | .NUT, HEX USED ON SERIAL NOS 672040 THRU 672044 | 1 |
| | PBFZZ | 89346 | 24621R1 | .BOLT | 1 |
| | PBFZZ | 89346 | 25896R1 | .WASHER | 1 |
| | XBFZZ | 89346 | 444667 | .PLUG, PIPE | 2 |
| | XBFZZ | 89346 | 444630 | .PLUG, PIPE USED ON SERIAL NOS 672040 THRU 672044 | 2 |
| 1 | XBFZZ | 89346 | 1802246C91 | .COVER, FRONT | 1 |
| 1 | XBFZZ | 89346 | 1810542C92 | .COVER, FRONT USED ON SERIAL NOS 672040 THRU 672044 | 1 |
| 2 | XBFZZ | 89346 | 691379C1 | ..INDICATOR, TIMING | 1 |
| 3 | XBFZZ | 89346 | 17012R1 | ..BALL, BEARING | 2 |
| 4 | XBFZZ | 89346 | 367572R1 | ..POINTER, TIMING | 1 |
| 5 | XBFZZ | 89346 | 23624R1 | ..PLUG, CUP | 3 |
| | XBFZZ | 89346 | 444667 | ..PLUG, PIPE | 2 |
| 6 | PAFZZ | 29510 | 675813C1 | .GASKET | 1 |
| 6 | PAFZZ | 89346 | 1810510C3 | .GASKET USED ON SERIAL NOS 672040 THRU 672044 | 1 |
| 7 | XBFZZ | 89346 | 675811C1 | .PLATE, COVER | 1 |
| 7 | XBFZZ | 89346 | 1810511C1 | .PLATE, COVER USED ON SERIAL NOS 672040 THRU 672044 | 1 |
| 8 | PAFZZ | 29510 | 675812C1 | .GASKET | 1 |
| | XBOZZ | 89346 | 675455C1 | .EYE, LIFTING | 2 |
| | | | | END OF FIGURE | |

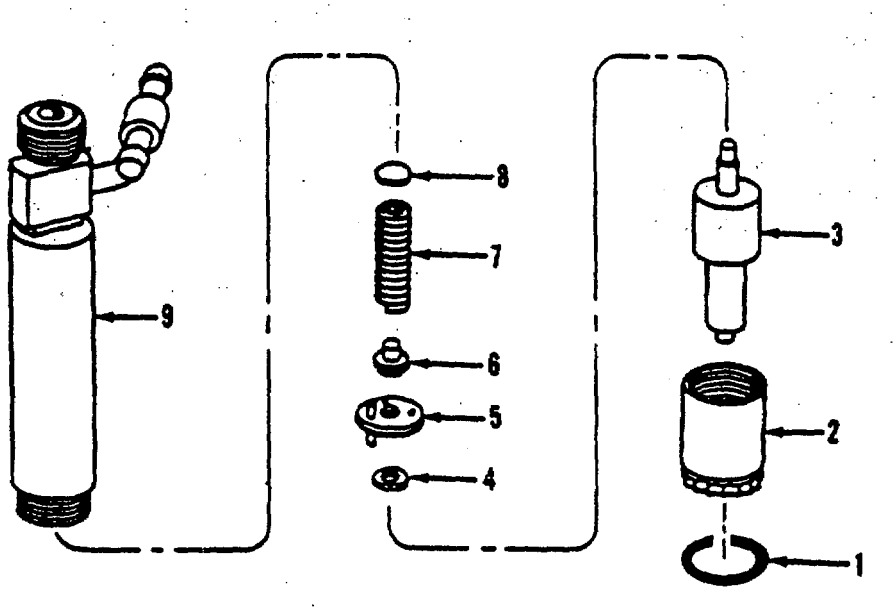


*Figure 154. Fuel Injection Nozzle*

| (1) ITEM NO | (2) SMR CODE | (3) CAGEC | (4) PART NUMBER | (5) DESCRIPTION AND USABLE ON CODES (UOC) | (6) QTY |
|---|---|---|---|---|---|
| | | | | GROUP 0216 DIESEL ENGINE ASSEMBLY | |
| | | | | FIG. 154 FUEL INJECTION NOZZLE | |
| | PAFHZ | 89346 | 1806407C91 | .NOZZLE, FUEL INJECTI . ..... | 6 |
| 1 | PAFZZ | 29510 | 675477C1 | ..GASKET ..... | 1 |
| 2 | XBHZZ | 89346 | 680435C1 | ..NUT, CAP ..... | 1 |
| 3 | PAHZZ | 89346 | 1806406C1 | ..NOZZLE, FUEL INJECTI ..... | 1 |
| 4 | XBHZZ | 89346 | 680414C1 | ..SPACER .PACER..... | 2 |
| 5 | XBHZZ | 89346 | 680434C1 | ..SPACER. ..... | 1 |
| 6 | XBOZZ | 89346 | 680433C1 | ..GUIDE, SPACER ..... | 1 |
| 7 | PAHZZ | 10988 | A44864 | ..SPRING, HELICALPCOMP ..... | 1 |
| 8 | PAHZZ | 89346 | 680415C1 | ..SPACER, RING .002 THICK ..... | 1 |
| 8 | PAHZZ | 89346 | 680416C1 | ..SPACER, SLEEVE .007 THICK ..... | 1 |
| 8 | PAHZZ | 89346 | 680418C1 | ..SPACER, SLEEVE .010 THICK ..... | 1 |
| 8 | PAHZZ | 89346 | 680419C1 | ..SPACER, SLEEVE .025 THICK ..... | 1 |
| 8 | PAHZZ | 89346 | 680421C1 | ..SPACER, SLEEVE ..028 THICK ..... | 1 |
| 8 | PAHZZ | 89346 | 680422C1 | ..SPACER, SLEEVE .030 THICK ..... | 1 |
| 8 | PAHZZ | 89346 | 680423C1 | ..SPACER, SLEEVE .035 THICK ..... | 1 |
| 8 | PAHZZ | 89346 | 680420C1 | ..SPACER, SLEEVE .037 THICK ..... | 1 |
| 9 | XBHZZ | 89346 | 680413C1 | ..BODY, NOZZLE HOLDER..... | 1 |
| | | | | END OF FIGURE | |

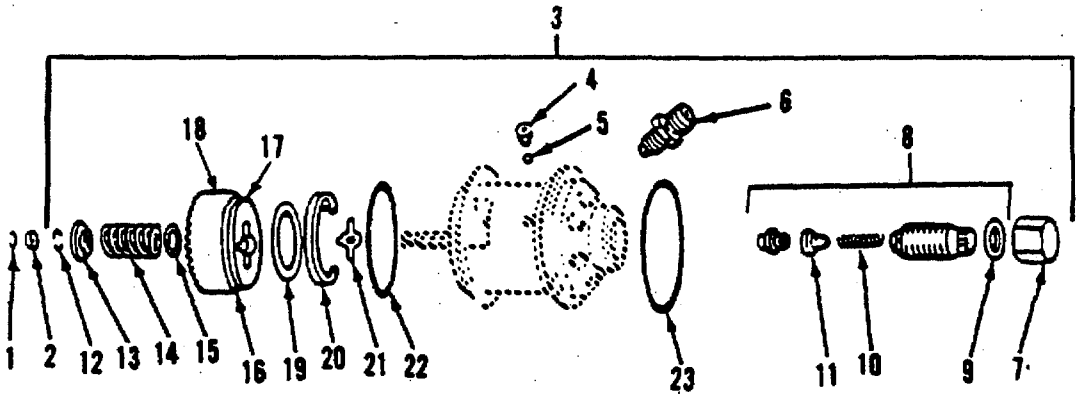


*Figure 155. Hydraulic Head*

| (1) ITEM NO | (2) SMR CODE | (3) CAGEC | (4) PART NUMBER | (5) DESCRIPTION AND USABLE ON CODES (UOC) | (6) QTY |
|---|---|---|---|---|---|
| | | | | GROUP 0216 DIESEL ENGINE ASSEMBLY | |
| | | | | FIG. 155 HYDRAULIC HEAD | |
| 1 | PAHZZ | 89346 | 674783C1 | .RING, RETAINING | 1 |
| 2 | XBHZZ | 89346 | 674949C2 | .BUTTON, PLUNGR IDENT A - .1071 INCH | 1 |
| 2 | XBHZZ | 89346 | 674925C2 | .BUTTON, PLUNGR IDENT B - .1091 INCH | 1 |
| 2 | XBHZZ | 89346 | 674926C2 | .BUTTON, PLUNGR IDENT C - .1110 INCH | 1 |
| 2 | XBHZZ | 89346 | 674948C2 | .BUTTON, PLUNGR IDENT D - .1130 INCH | 1 |
| 2 | XBHZZ | 89346 | 674775C2 | .BUTTON, PLUNGR IDENT E - .1150 INCH | 1 |
| 2 | XBHZZ | 89346 | 674776C2 | .BUTTON, PLUNGR IDENT F - .1169 INCH | 1 |
| 2 | XBHZZ | 89346 | 674777C2 | .BUTTON, PLUNGR IDENT G - .1189 INCH | 1 |
| 2 | XBHZZ | 89346 | 674778C2 | .BUTTON, PLUNGR IDENT H - .1209 INCH | 1 |
| 2 | XBHZZ | 89346 | 674779C2 | .BUTTON, PLUNGR IDENT J - .1228 INCH | 1 |
| 2 | XBHZZ | 89346 | 674780C2 | .BUTTON, PLUNGR IDENT K - .1248 INCH | 1 |
| 2 | XBHZZ | 89346 | 674781C2 | .BUTTON, PLUNGR IDENT L - .1268 INCH | 1 |
| 2 | XBHZZ | 89346 | 674782C2 | .BUTTON, PLUNGR IDENT M - .1287 INCH | 1 |
| 3 | PBHHH | 89346 | 684320C93 | .HEAD, HYDRAULIC MOTO | 1 |
| 4 | XBHZZ | 89346 | 674800C1 | ..SCREW, SET | 1 |
| 5 | PAHZZ | 89346 | 17006R1 | ..BALL, BUSHING, HYDRAU | 1 |
| 6 | XBHZZ | 89346 | 684399C1 | ..FITTING, DISCHARGE | 6 |
| 7 | XBHZZ | 89346 | 674786C2 | ..NUT, CAP | 1 |
| 8 | PAHZZ | 89346 | 684935C93 | ..VALVE, FLOAT | 1 |
| 9 | XBHZZ | 89346 | 674785C1 | ...GASKET | 1 |
| 10 | XBHZZ | 89346 | 674801C1 | ...SPRING, COMPRESSION | 1 |
| 11 | XBHZZ | 89346 | 674789C1 | ...GUIDE, SPRING 056 INCH, YELLOW.. | 1 |
| 11 | XBHZZ | 89346 | 674790C1 | ...GUIDE, SPRING 066 INCH, RED | 1 |
| 11 | XBHZZ | 89346 | 674791C1 | ...GUIDE, SPRING 076 INCH, BLUE | 1 |
| 11 | XBHZZ | 89346 | 674792C1 | ...GUIDE, SPRING 086 INCH, BLACK... . | 1 |
| 11 | BHZZ | 89346 | 674793C1 | ...GUIDE, SPR1NG 096 INCH, WHITE ... | 1 |
| 12 | XBHZZ | 89346 | 674797C1 | ..RING, SPLIT | 2 |
| 13 | XBHZZ | 89346 | 684310C1 | ..SEAT, SPRING | 1 |
| 14 | XBHZZ | 89346 | 674802C1 | ..SPR ING, COMPRESSION | 1 |
| 15 | XBHZZ | 89346 | 674804C1 | ..WASHER, FLAT | 1 |
| 16 | XBHZZ | 89346 | 681439C91 | ..GEAR ASSY | 1 |
| 17 | XAHZZ | 89346 | 1802399C1 | ...HUB, GEAR | 1 |
| 18 | XAHZZ | 89346 | 1802397C1 | ...GEAR | 1 |
| 19 | XBHZZ | 89346 | 674798C2 | ...WASHER, THRUST | 1 |
| 20 | XBHZZ | 89346 | 681496C1 | ..RETAINER, GEAR | 1 |
| 21 | XBHZZ | 89346 | 681426C1 | ..GUIDE, PLUNGER | 1 |
| 22 | PAHZZ | 89346 | 674772C1 | ..PACKING, PREFORMED | 1 |
| 23 | PAHZZ | 29510 | 327110R1 | ..PACKING, PREFORMED | 1 |
| | | | | END OF FIGURE | |

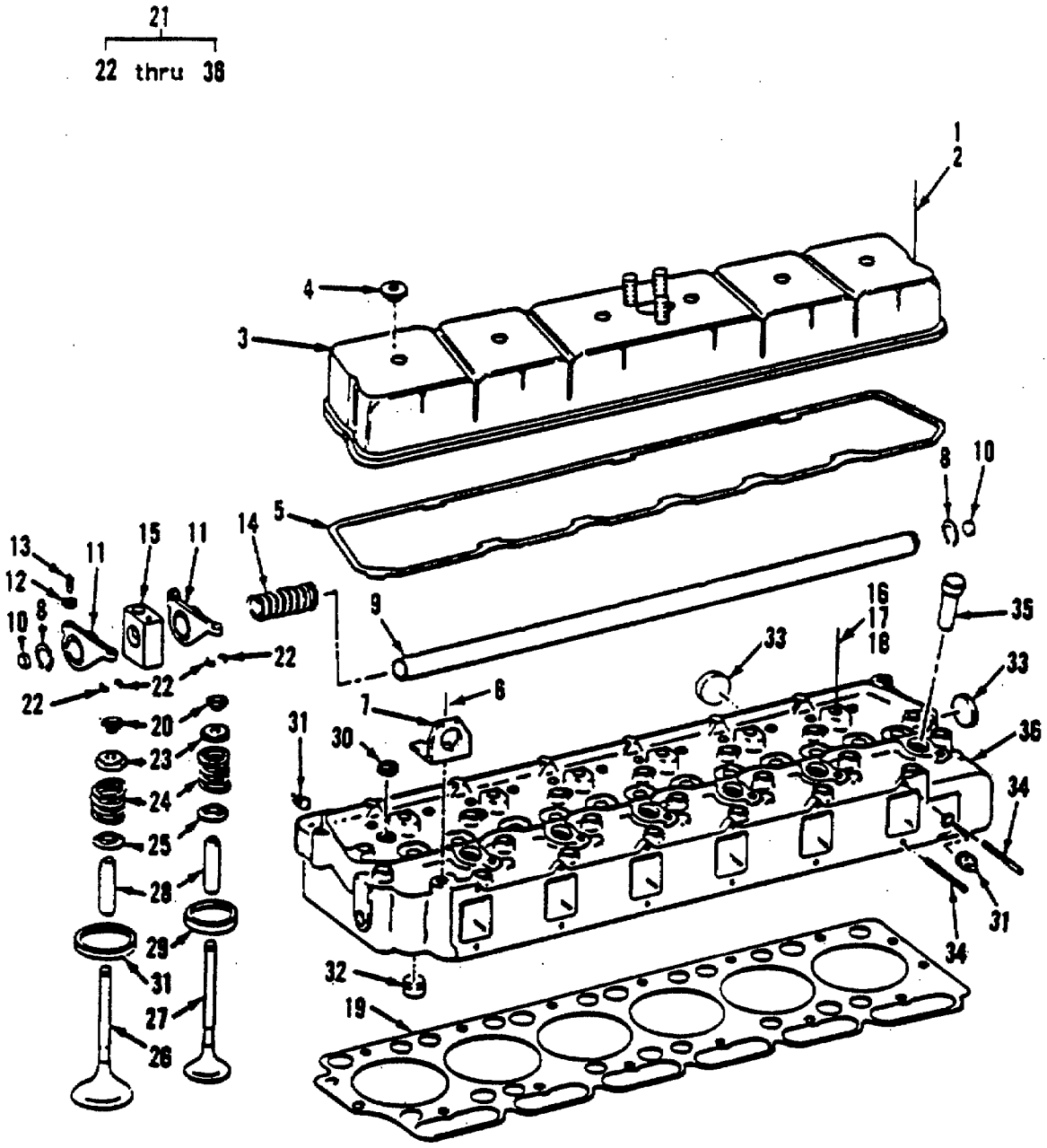


*Figure 156. Cylinder Head Group*

| (1) ITEM NO | (2) SMR CODE | (3) CAGEC | (4) PART NUMBER | (5) DESCRIPTION AND USABLE ON CODES (UOC) | (6) QTY |
|---|---|---|---|---|---|
| | | | | GROUP 0216 DIESEL ENGINE ASSEMBLY | |
| | | | | FIG. 156 CYLINDER HEAD GROUP | |
| 1 | XDFZZ | 92679 | 25654R1 | .BOLT | 5 |
| 2 | PAFZZ | 92679 | 689324C1 | .STUD, SHOULDERED | 1 |
| 3 | XBFZZ | 89346 | 690339C2 | .COVER, VALVE | 1 |
| 4 | PAFZZ | 92679 | 677692-C1 | .PACKING WITH RETAIN | 6 |
| 5 | PAFZZ | 92679 | 675109C2 | .GASKET | 1 |
| 6 | XBFZZ | 89346 | 25830R1 | .SCREW, CAP | 6 |
| 7 | XBFZZ | 89346 | 675455C1 | .EYE, LIFTING | 1 |
| 8 | PAFZZ | 92679 | 24577R1 | .RING, RETAINING | 1 |
| 9 | XBFZZ | 89346 | 675660C92 | .SHAFT, ROCKER ARM | 1 |
| 10 | XBFZZ | 89346 | 291171C1 | .PLUG, CUP | 2 |
| 11 | PAFZZ | 89346 | 688999C92 | .ROCKER ARM, ENGINE P | 12 |
| 11 | PAFZZ | 89346 | 688999C92 | .ROCKER ARM, ENGINE P USED ON SERIAL NOS 672040 THRU 672044 | 12 |
| 12 | XBFZZ | 89346 | 133093R1 | ..NUT, HEX | 1 |
| 13 | XBFZZ | 89346 | 16067DA | ..SCREW, ADJUSTINGA | 1 |
| 14 | PAFZZ | 92679 | 675105C1 | .SPRING, HELICAL, COMP | 5 |
| 15 | XBFZZ | 89346 | 1802461C2 | .BRACKET | 6 |
| 16 | PAFZZ | 89346 | 676120C1 | .BGLT, MACHINE | 20 |
| 17 | PAFZZ | 893.46 | 676119C1 | .BOLT, MACHINE | 6 |
| 18 | PAFZZ | 89346 | 252018R1 | .WASHER, FLAT | 26 |
| 19 | PAFZZ | 92679 | 1806226C2 | .GASKET | 1 |
| 19 | PAFZZ | 92679 | 1806226C2 | .GASKET USED ON SERIAL NOS 672040 THRU 672044 | 1 |
| 20 | PAFZZ | 31033 | VP107 | .ROTOR, ENGINE POPPET | 12 |
| 21 | PAFFF | 89346 | 691877C91 | .CYLINDER HEAD, DIESE | 1 |
| 21 | PBFFF | 89346 | 1811672C91 | .CYLINDER HEAD, DIESE USED ON SERIAL NOS 672040 THRU 672044 | 1 |
| 22 | PAFZZ | 29510 | 41339D | ..KEY, MACHINE | 24 |
| 23 | PAFZZ | 31033 | RC150 | ..ROTOR, ENGINE POPPET | 12 |
| 23 | PAFZZ | 89346 | 1811581C91 | ..ROTOR, ENGINE POPPET USED ON SERIAL NOS 672040 THRU 672044 | 12 |
| 24 | PAFZZ | 29510 | 682064C1 | ..SPRING, HELICAL, COMP | 12 |
| 24 | PAFZZ | 89346 | 677349C1 | ..SPRING, HELICAL, COMP USED ON. SERIAL NOS 67204d THRU 672044 | 12 |
| 25 | PAFZZ | 92679 | 675443C1 | ..SEAT, VALVE SPRING, D | 12 |
| 26 | PAFZZ | 29510 | 675046C2 | ..VALVE, POPPET, ENGINE | 6 |
| 27 | PAFZZ | 89346 | 676865C3 | ..VA, LVE, POPPET, ENGINE | 6 |
| 28 | XBFZZ | 89346 | 675439C1 | ..GUIDE, VALVE | 12 |
| 29 | PBFZZ | 92679 | 671563C1 | ..INSERT, ENGINE VALVE .002 OVERSIZE | 12 |
| 29 | XDFZZ | 92679 | 671565C1 | ..SEAT, VALVE .015 OVERSIZE | 12 |
| 29 | PBFZZ | 92679 | 671559C1 | ..SEAT, VALVE .002 OVERSIZE | 12 |
| 29 | PBFZZ | 92679 | 671561C1 | ..INSERT, ENGINE VALVE .015 OVERSIZE | 12 |
| 30 | XBFZZ | 89346 | 21427R1 | ..PLUG, CUP | 6 |
| 31 | XBFZZ | 89346 | 444667 | ..PLUG, PIPE | 2 |
| 32 | XBFZZ | 89346 | 691183C1 | ..DIRECTOR, WATER | 12 |
| 33 | XBFZZ | 89346 | 601093C1 | ..PLUG, CUP | 6 |
| 34 | XBFZZ | 89346 | 682840C1 | ..STUD | 12 |
| 35 | XBFZZ | 89346 | 675442C1 | ..SLEEVE, INJECTOR | 6 |

| (1) ITEM NO | (2) SMR CODE | (3) CAGEC | (4) PART NUMBER | (5) DESCRIPTION AND USABLE ON CODES (UOC) | (6) QTY |
|---|---|---|---|---|---|
| 36 | XAFZZ | 89346 | 687199C92 | ..HEAD, CYLINDER..... | 1 |

END OF FIGURE

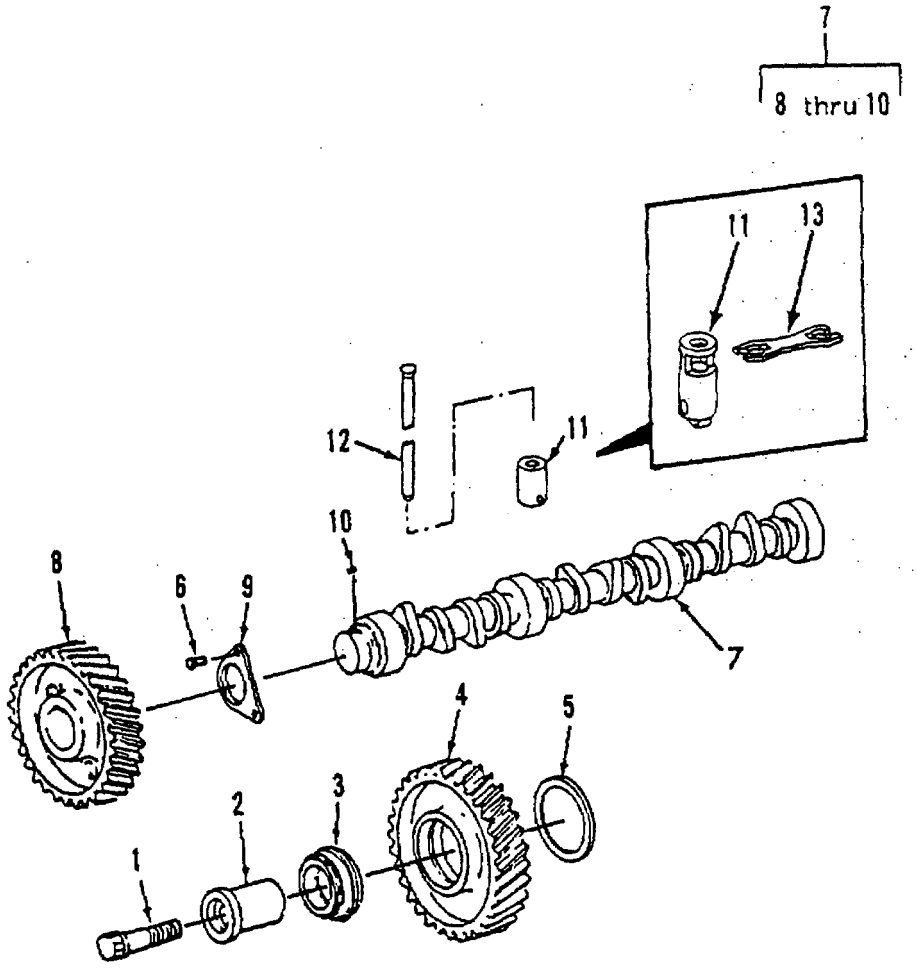


*Figure 157. Camshaft and Related Parts*

| (1) ITEM NO | (2) SMR CODE | (3) CAGEC | (4) PART NUMBER | (5) DESCRIPTION AND USABLE ON CODES (UOC) | (6) QTY |
|---|---|---|---|---|---|
| | | | | GROUP 0216 DIESEL ENGINE ASSEMBLY | |
| | | | | FIG. 157 CAMSHAFT AND RELATED PARTS | |
| 1 | PAHZZ | 89346 | 26044R1 | .BOLT, MACHINE | 1 |
| 2 | PAHZZ | 92679 | 675765C1 | .SHAFT, SHOULDERED | 1 |
| 3 | PAHZZ | 92679 | 327185R91 | .BEARING, ROLLER, TAPE | 1 |
| 4 | XBHZZ | 89346 | 675764C1 | .GEAR, IDLER | 1 |
| 5 | XBHZZ | 89346 | 675767C1 | .SPACER | 1 |
| 6 | PBHZZ | 89346 | 25228R1 | .SCREW, CAP, HEXAGON H | 2 |
| 7 | PBHZZ | 89346 | 1802339C92 | .CAMSHAFT, ENGINE | 1 |
| 7 | PBHZZ | 89346 | 1811649C91 | .CAMSHAFT, ENGINE USED ON SERIAL NOS 672040 THRU 672044 | 1 |
| 8 | XBHZZ | 89346 | 675600C1 | ..GEAR, CAMSHAFT | 1 |
| 9 | XBHZZ | 89346 | 676144C1 | ..PLATE, THRUST | 1 |
| 10 | XBHZZ | 89346 | 218211 | ..KEY, WOODRUFF | 1 |
| 11 | PAHZZ | 92679 | 1802340C1 | .TAPPET, ENGINE POPPE | 12 |
| 11 | PAHZZ | 89346 | 1809570C1 | .TAPPET, ENGINE POPPE USED ON SERIAL NOS 672040 THRU 672044 | 12 |
| 12 | PBHZZ | 92679 | 675621C1 | .PUSH ROD, ENGINE POP | 12 |
| 12 | PAHZZ | 89346 | 1809589C1 | .PUSH ROD, ENGINE POP USED ON SERIAL NOS 672040 THRU 672044 | 12 |
| 13 | XBHZZ | 89346 | 1811580C1 | .GUIDE, TAPPET | 12 |
| | | | | END OF FIGURE | |

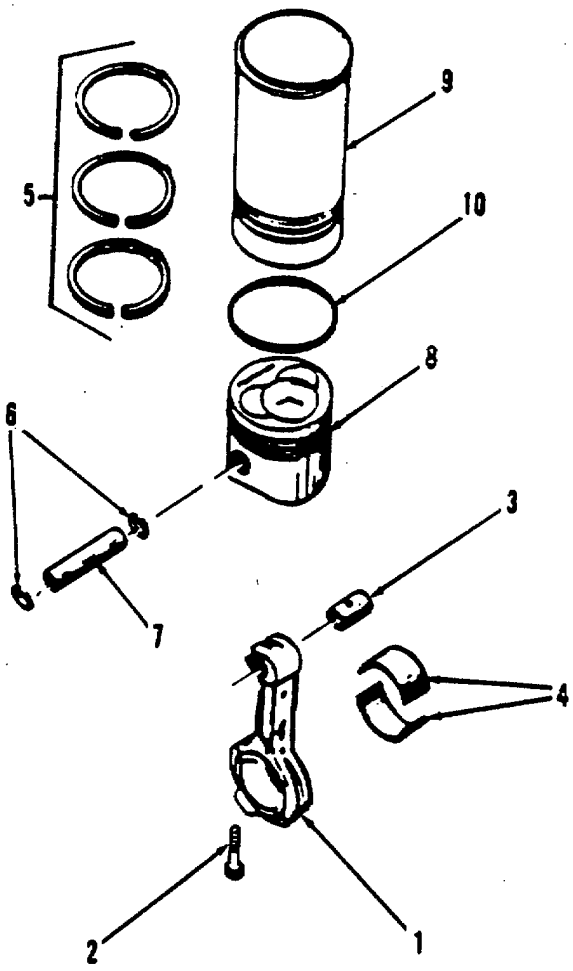


*Figure 158. Piston and Connecting Rod*

| (1) ITEM NO | (2) SMR CODE | (3) CAGEC | (4) PART NUMBER | (5) DESCRIPTION AND USABLE ON CODES (UOC) | (6) QTY |
|---|---|---|---|---|---|
| | | | | GROUP 0216 DIESEL ENGINE ASSEMBLY | |
| | | | | FIG. 158 PISTON AND CONNECTING ROD | |
| 1 | PBHZZ | 29510 | 688923C91 | .CONNECTING ROD, PIST | 6 |
| 2 | XBHZZ | 89346 | 676679C2 | ..BOLT | 2 |
| 3 | XBHZZ | 89346 | 675006C1 | ..BUSHING | 1 |
| 4 | XBHZZ | 89346 | 1808059C91 | ..BEARING, ROD | 1 |
| 4 | PBHZZ | 89346 | 808060C91 | ..BOLT, EXTERNALLY REL .010 UNDERSIZE | 1 |
| 4 | PBHZZ | 89346 | 1808061C91 | ..BOLT, EXTERNALLY REL .020 UNDERSIZE | 1 |
| 4 | PBHZZ | 89346 | 1808062C91 | ..BOLT, EXTERNALLY REL .030 UNDERSIZE | 1 |
| 5 | KFHZZ | 89346 | 1810358C91 | .RING SET, PISTON PART OF KIT P/N 1810359C92 | 6 |
| 6 | KFHZZ | 89346 | 326874R1 | .RETAINER, PIN PART OF KIT P/N 1810359C92 | 12 |
| 7 | KFHZZ | 89346 | 670675C1 | .PIN, PISTON PART OF KIT P/N 1810359C92 | 6 |
| 8 | KFHZZ | 89346 | 1809683C1 | .PISTON PART OF KIT P/N 1810359C92 | 6 |
| 8 | FHZZ | 89346 | 1810527C1 | .PISTON USED ON SERIAL NOS 672040 THRU 672044 PART OF KIT P/N 1811668C91 | 6 |
| 9 | KFHZZ | 89346 | 1810504C1 | .SLEEVE, CYLINDER PART OF KIT P/N 1810359092 | 6 |
| 10 | KFHZZ | 89346 | 680086C1 | .PACKING, PREFORMED PART OF KIT P/N 1810359C92 | 6 |
| | PAHZZ | 89346 | 1810359C92 | .CYLINDER SLEEVE AND | 6 |
| | | | | PACKING, PREFORMED ( 6) 158-10 | |
| | | | | PIN, PISTON ( 6) 158-7 | |
| | | | | PISTON ( 6) 158-8 | |
| | | | | RETAINER, PIN (12) 158-6 | |
| | | | | RING SET, PISTON ( 6) 158-5 | |
| | | | | SLEEVE, CYLINDER ( 6) 158-9 | |
| | PAHZZ | 89346 | 1811668C91 | .CYLINDER SLEEVE AND | 1 |
| | | | | PISTON ( 6) 158-8 | |
| | | | | END OF FIGURE | |

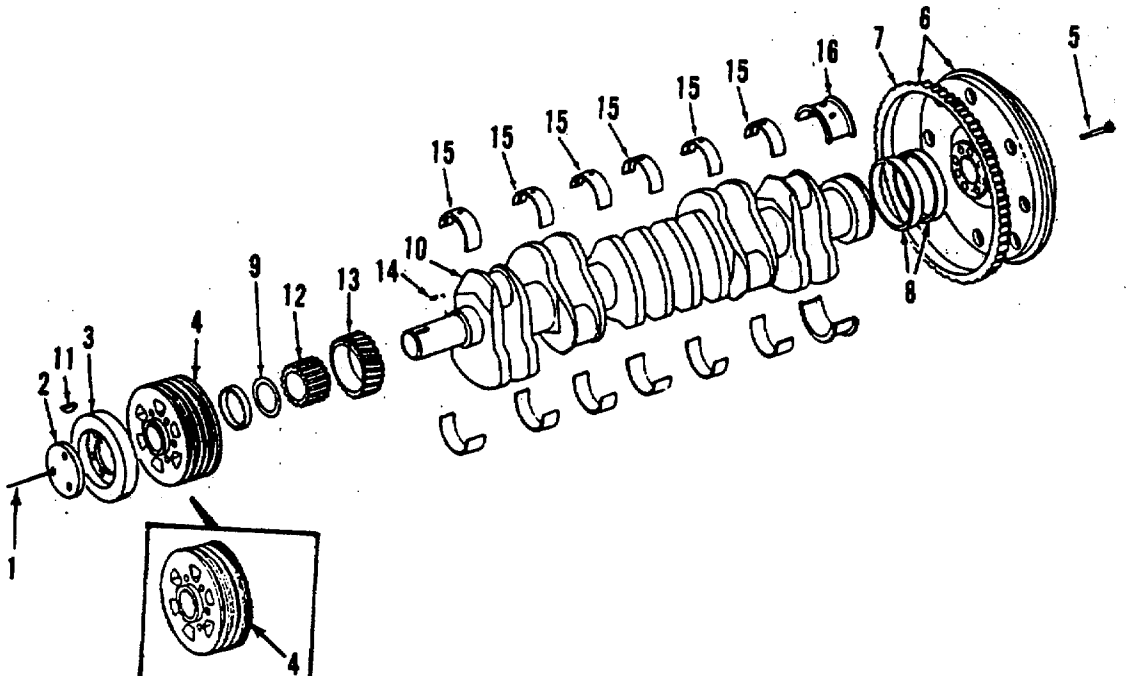


*Figure 159. Crankshaft and Related Parts*

| (1) ITEM NO | (2) SMR CODE | (3) CAGEC | (4) PART NUMBER | (5) DESCRIPTION AND USABLE ON CODES (UOC) | (6) QTY |
|---|---|---|---|---|---|
| | | | | GROUP 0216 DIESEL ENGINE ASSEMBLY | |
| | | | | FIG. 159 CRANKSHAFT AND RELATED PARTS | |
| 1 | XBHZZ | 89346 | 24862R1 | .SCREW, CAP | 1 |
| 2 | XBHZZ | 89346 | 75412C1 | .PLATE, RETAINING | 1 |
| 3 | XBHZZ | 89346 | 677781C91 | .DAMPER, VIBRATION | 1 |
| 4 | PAHZZ | 89346 | 1802393C93 | .PULLEY, FLAT | 1 |
| 4 | PBHZZ | 89346 | 1810746C91 | .PULLEY, CRANKSHAFT USED ON SERIAL NOS 672040 THRU 672044 | 1 |
| 5 | XBHZZ | 89346 | 25277R1 | .BOLT, FLYWHEEL | 8 |
| 6 | XBHZZ | 89346 | 681905C93 | .FLYWHEEL | 1 |
| 7 | XBHZZ | 89346 | 681926C2 | ..GEAR, RING | 1 |
| 8 | PAHZZ | 92679 | 691631C91 | .PARTS KIT, SEAL REPL | 1 |
| 9 | PAHZZ | 92679 | 687024C1 | .WASHER, SPRING TENSI | 1 |
| 10 | PBHHH | 89346 | 675669C92 | .CRANKSHAFT, ENGINE | 1 |
| 11 | XBHZZ | 89346 | 691044C1 | ..KEY, WOODRUFF | 1 |
| 12 | XBHZZ | 89346 | 675364C1 | ..SPLINE, DRIVE | 1 |
| 13 | XBHZZ | 89346 | 675406C1 | ..GEAR, CRANKSHAFT | 1 |
| 14 | XBHZZ | 89346 | 17135R1 | ..PIN, ROLL | 1 |
| 15 | XBHZZ | 89346 | 1808069C91 | .BEARING SET, CRANKSH | 1 |
| 15 | PAHZZ | 89346 | 1808070C91 | .BEARING SET, SLEEVE .010 UNDERSIZE | 1 |
| 15 | PAHZZ | 89346 | 1808071C91 | .BEARING SET, SLEEVE .020 UNDERSIZE | 1 |
| 15 | PAHZZ | 89346 | 1808072C91 | .BEARING SET, SLEEVE .030 UNDERSIZE | 1 |
| 16 | XBHZZ | 89346 | 684579C92 | .BEARING, REAR | 1 |
| 16 | PAHZZ | 92679 | 684582C93 | .BEARING HALF, SLEEVE .010 UNDERSIZE | 1 |
| 16 | PAHZZ | 89346 | 687394C2 | .LINER, BEARING HOUSI .020 UNDERSIZE | 1 |
| 16 | PAHZZ | 92679 | 684585C92 | .BEARING, SLEEVE .030 UNDERSIZE | 1 |
| | | | | END OF FIGURE, | |

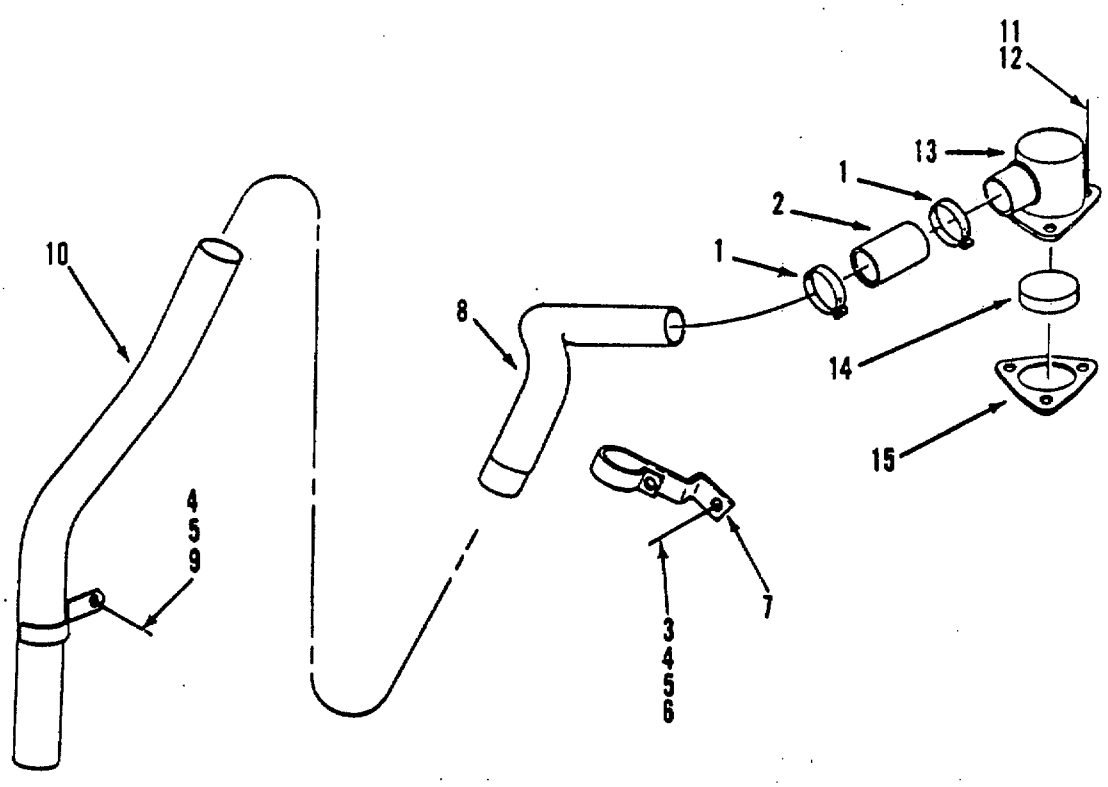


*Figure 160. Crankcase Vent*

| (1) ITEM NO | (2) SMR CODE | (3) CAGEC | (4) PART NUMBER | (5) DESCRIPTION AND USABLE ON CODES (UOC) | (6) QTY |
|---|---|---|---|---|---|
| | | | | GROUP 0216 DIESEL ENGINE ASSEMBLY | |
| | | | | FIG. 160 CRANKCASE VENT | |
| 1 | PAOZZ | 89346 | 279024R91 | .CLAMP, LOOP | 2 |
| 2 | PAOZZ | 89346 | 690460C1 | .HOSE, NONMETALLIC | 1 |
| 3 | XBOZZ | 89346 | 25522R1 | .NUT, HEX | 2 |
| 4 | XBOZZ | 96906 | MS35338-46 | .WASHER, LOCK | 3 |
| 5 | XBOZZ | 89346 | 25896R1 | .WASHER | 3 |
| 6 | XBOZZ | 89346 | 24840R1 | .BOLT | 2 |
| 7 | XBOZZ | 89346 | 690561C1 | .SUPPORT, TUBE | 1 |
| 8 | XBOZZ | 89346 | 690560C1 | .TUBE, BREATHER | 1 |
| 9 | XBOZZ | 89346 | 25523R1 | .NUT, HEX | 1 |
| 10 | XBOZZ | 89346 | 690580C1 | .TUBE, BREATHER | 1 |
| 11 | XBOZZ | 89346 | 25077R1 | .NUT, HEX | 3 |
| 12 | XBOZZ | 89346 | 691644C1 | .WASHER, SPECIAL | 3 |
| 13 | XBOZZ | 89346 | 690354C1 | .HOUSING, BREATHER | 1 |
| 14 | PAOZZ | 29510 | 690233C1 | .FILTERING DISK, FLUI | 1 |
| 15 | PAOZZ | 92679 | 673973C4 | .GASKET | 1 |
| | | | | END OF FIGURE | |

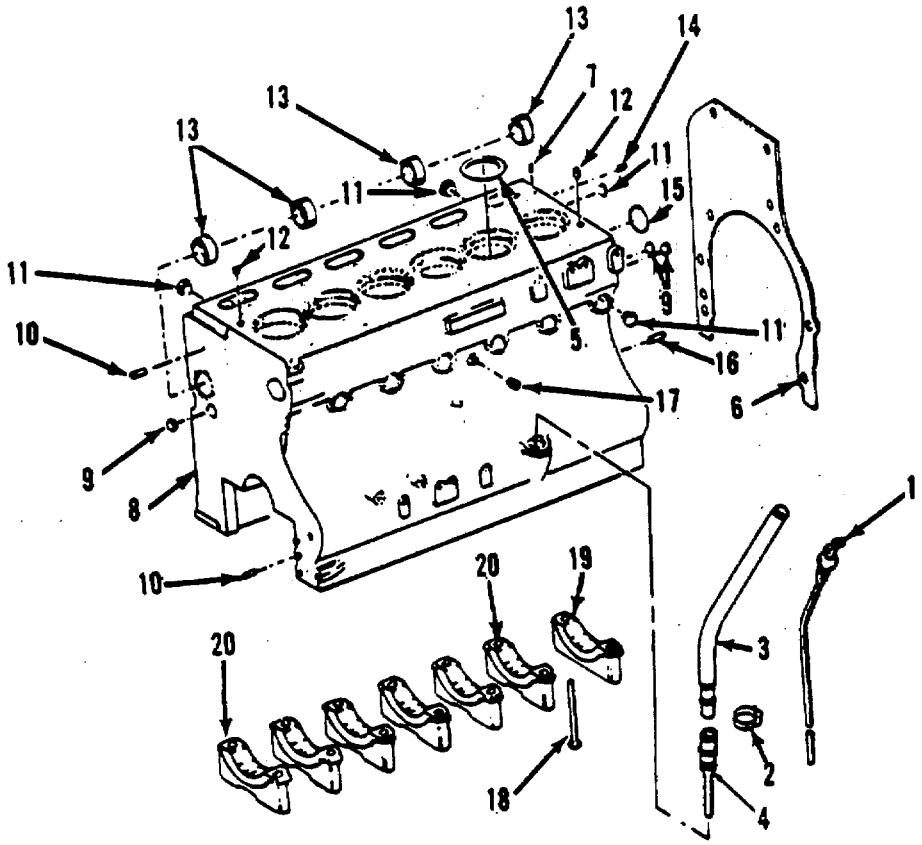


*Figure 161. Crankcase and Related Parts*

| (1) ITEM NO | (2) SMR CODE | (3) CAGEC | (4) PART NUMBER | (5) DESCRIPTION AND USABLE ON CODES (UOC) | (6) QTY |
|---|---|---|---|---|---|
| | | | | GROUP 0216 DIESEL ENGINE ASSEMBLY | |
| | | | | FIG. 161 CRANKCASE AND RELATED PARTS | |
| 1 | PAOZZ | 89346 | 691796C1 | .GAGE ROD, LIQUID LEV | 1 |
| 2 | PAOZZ | 89346 | 690835C1 | .CLAMP, LOOP | 1 |
| 3 | PAOZZ | 89346 | 691848C1 | .FILLER NECK | 1 |
| 4 | PAOZZ | 92679 | 691846C1 | .GUIDEGAGE, ROD, LIQU | 1 |
| | PAOZA | 29510 | 60352D | .GASKET | 1 |
| 5 | PAHZZ | 29510 | 680333C92 | .WASHER FLAT | 1 |
| 6 | PAHZZ | 29510 | 682945C1 | .GASKET | 1 |
| 7 | XBHZZ | 89346 | 617256C1 | .SCREW, SET | 1 |
| | XBHZZ | 89346 | 17013R1 | .BALL | 1 |
| 8 | XBHHH | 89346 | 1811995C91 | .CRANKCASEENGINE | 1 |
| 9 | XBHZZ | 89346 | 327412R1 | ..PLUG, CUP | 3 |
| 10 | XBHZZ | 89346 | 680483C1 | ..DOWEL. | 2 |
| 11 | XBHZZ | 89346 | 23623R1 | ..PLUG, CUP | 9 |
| 12 | XBHZZ | 89346 | 684902C1 | ..DOWEL | 2 |
| 13 | PAHZZ | 92679 | 680117C1 | ..BEARING SET, SLEEVE | 1 |
| 14 | PBHZZ | 89346 | 50410DA | ..PLUG, PIPE | 1 |
| 15 | XBHZZ | 89346 | 682444C1 | ..PLUG, EXPANSION | 1 |
| 16 | XBHZZ | 89346 | 680484C1 | ..DOWEL | 2 |
| 17 | XBHZZ | 89346 | 444625 | ..PLUG, PIPE | 1 |
| 18 | PAHZZ | 92679 | 1802582C1 | ..BOLT, MACHINE | 14 |
| 19 | PBHZZ | 92679 | 680243C1 | ..CAP, PILLOW BLOCK | 1 |
| 20 | PBHZZ | 92679 | 680241C1 | ..CAP, PILLOW BLOCK | 6 |
| | XBHZZ | 89346 | 454096 | ..ELBOW, STREET | 2 |
| | XBHZZ | 89346 | 273469 | ..PLUG, PIPE | 2 |
| | XBHZZ | 89346 | 343464R1 | ..TUBE, COOLING | 12 |
| | XBHZZ | 89346 | 17008R1 | ..BALL | 12 |
| | | | | END OF FIGURE | |

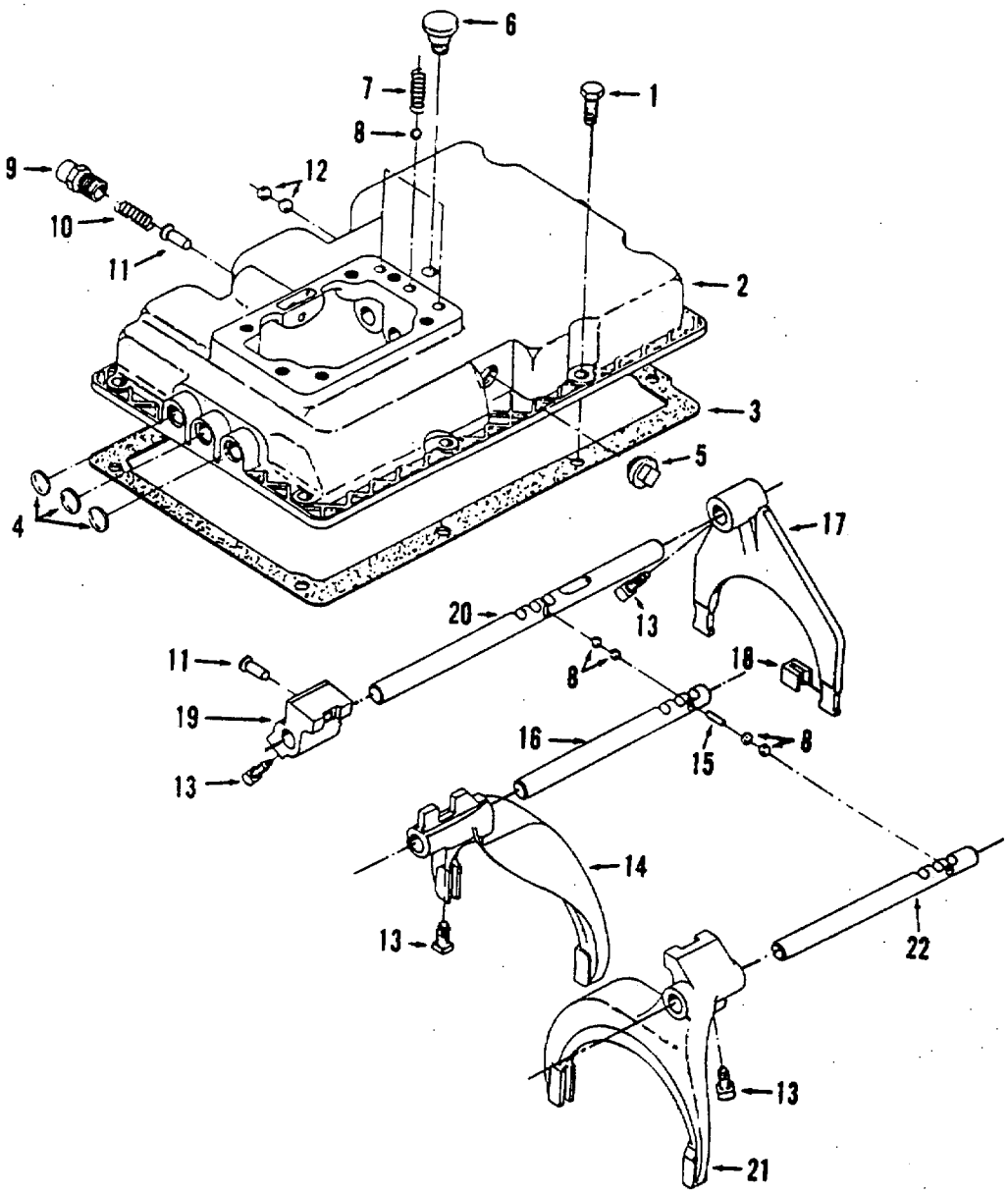


*Figure 162. Transmission Assembly (Sheet 1 of 3)*

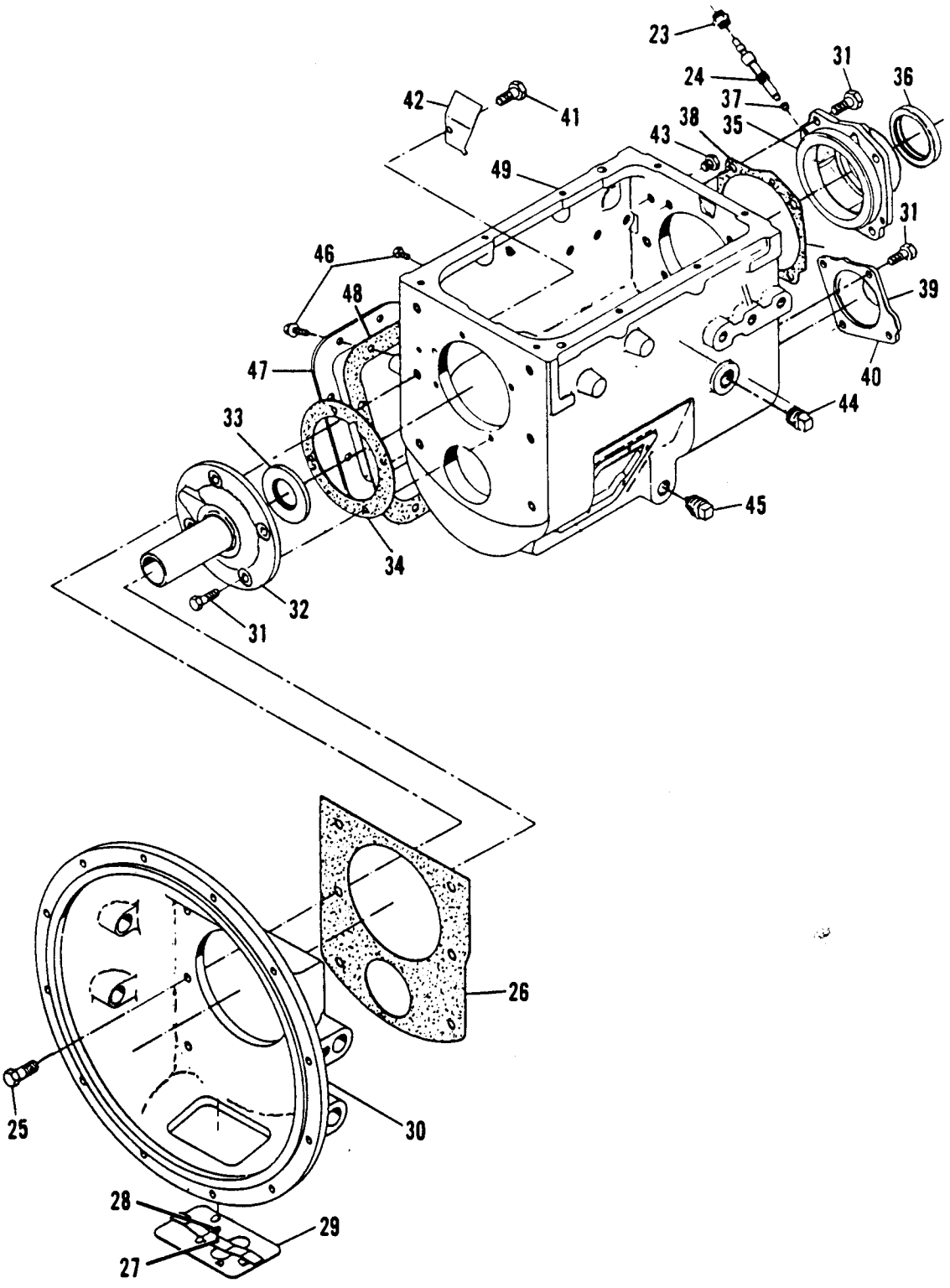


*Figure 162. Transmission Assembly (Sheet 2 of 3)*

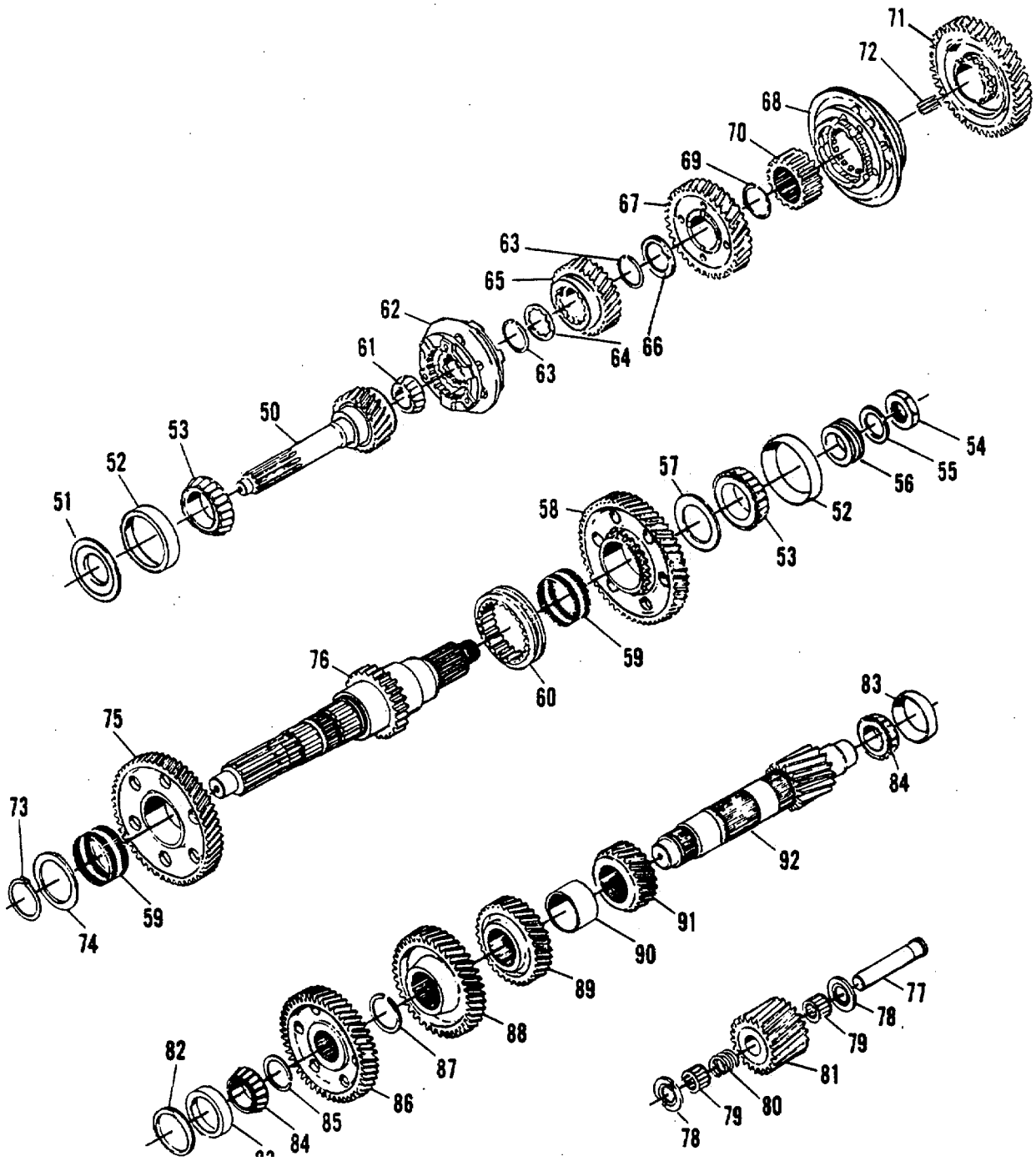


*Figure 162. Transmission Assembly (Sheet 3 of 3)*

GROUP 0217 TRANSMISSION

FIG. 162 TRANSMISSION ASSEMBLY

| (1) ITEM NO | (2) SMR CODE | (3) CAGEC | (4) PART NUMBER | (5) DESCRIPTION AND USABLE ON CODES (UOC) | (6) QTY |
|---|---|---|---|---|---|
| | PDFHH | 89346 | 1646579C91 | .TRANSMISSION, MECHAN | 1 |
| 1 | PAHZZ | 29510 | 26310R1 | ..BOLT, SELF-LOCKING | 6 |
| 2 | XBHZZ | 89346 | 478954C1 | ..HOUSING, SHIFTER | 1 |
| 3 | PAHZZ | 89346 | 478912C1 | ..GASKET | 1 |
| 4 | PAHZZ | 29930 | 172531 | ..PLUG, EXPANSION | 3 |
| 5 | XBHZZ | 89346 | 445090 | ..PLUG | 1 |
| 6 | PAHZZ | 89346 | 461452C1 | ..BREATHER | 1 |
| 7 | PAHZZ | 89346 | 593927C1 | ..SPRING, HELICAL, COMP | 3 |
| 8 | XBHZZ | 89346 | 17012R1 | ..BALL, BEARING | 11 |
| 9 | XBHZZ | 89346 | 29360H | ..RETAINER | 1 |
| 10 | XBHZZ | 89346 | 70311R1 | ..SPRING | 1 |
| 11 | XBHZZ | 89346 | 70326R1 | ..PLUNGER | 2 |
| 12 | XBHZZ | 89346 | 17016R1 | ..BALL | 2 |
| 13 | PAHZZ | 89346 | 266607C1 | ..SCREW, MACHINE | 4 |
| 14 | XBHZZ | 89346 | 593925C91 | ..FORK, SHIFT | 1 |
| 15 | XBHZZ | 89346 | 129286H | ..PIN, INTERLOCK | 1 |
| 16 | XBHZZ | 89346 | 105911R1 | ..BAR, SHIFT | 1 |
| 17 | XBHZZ | 89346 | 1653096C91 | ..FORK, SHIFT | 1 |
| 18 | XBHZZ | 89346 | 443600C1 | ...CLIP | 2 |
| 19 | XBHZZ | 89346 | 478953C2 | ..BRACKET | 1 |
| 20 | XBHZZ | 89346 | 478955C1 | ..BAR, SHIFT | 1 |
| 21 | XBHZZ | 89346 | 593926C1 | ..FORK, SHIFT | 1 |
| 22 | XBHZZ | 89346 | 478956C1 | ..BAR, SHIFT | 1 |
| 23 | PAHZZ | 02413 | 800E1486 | ..SLEEVE AND SEAL ASS | 1 |
| 24 | PAHZZ | 89346 | 546614C1 | ..GEAR, SPEEDO | 1 |
| 25 | PAHZZ | 89346 | 26318R1 | ..SCREW, CAP, HEXAGON H | 6 |
| 26 | PAHZZ | 89346 | 478908C1 | ..GASKET | 1 |
| 27 | XBHZZ | 89346 | 25752R1 | ..SCREW, CAP | 1 |
| 28 | XBHZZ | 89346 | 121637 | ..WASHER | 1 |
| 29 | XBHZZ | 89346 | 466829C3 | ..COVER | 1 |
| 30 | XBHZZ | 89346 | 581116C91 | ..HOUSING, CLUTCH | 1 |
| 31 | PAHZZ | 89346 | 27768R1 | ..SCREW, CAP, SOCKET HE | 14 |
| 32 | XBHZZ | 89346 | 483392C93 | ..RETAINER | 1 |
| 33 | PAHZZ | 89346 | 424469C91 | ...SEAL, PLAIN | 1 |
| 34 | PAHZZ | 89346 | 478910C1 | ..GASKET | 1 |
| 35 | XBHZZ | 89346 | 590677C91 | ..RETAINER | 1 |
| 36 | PAHZA | 29510 | 333750R91 | ..SEAL, PLAIN ENCASED | 1 |
| 37 | PAHZZ | 89346 | 26905H | ..BUSHING, SLEEVE | 1 |
| 38 | PAHZZ | 89346 | 590678C1 | ..GASKET | 1 |
| 39 | XBHZZ | 89346 | 1653052C1 | ..COVER | 1 |
| 40 | PAHZZ | 89346 | 478909C1 | ..GASKET | 1 |
| 41 | XBHZZ | 89346 | 441982C1 | ..BOLT.. | 1 |
| 42 | XBHZZ | 89346 | 593920C1 | ..TROUGH, OIL | 1 |
| 43 | XBHZZ | 89346 | 70352R1 | ..PLUG | 2 |
| 44 | XBFZZ | 89346 | 273469 | ..PLUG, PIPE | 1 |
| 45 | PAFZZ | 89346 | 243321R1 | ..PLUG, PIPE, MAGNETIC | 1 |
| 46 | XBHZZ | 89346 | 441366C1 | ..SCREW, CAP | 8 |
| 47 | XBHZZ | 89346 | 332603C1 | ..COVER | 1 |

| (1) ITEM NO | (2) SMR CODE | (3) CAGEC | (4) PART NUMBER | (5) DESCRIPTION AND USABLE ON CODES (UOC) | (6) QTY |
|---|---|---|---|---|---|
| 48 | PAHZZ | 89346 | 1653853C91 | ..GASKET | 1 |
| 49 | XBHZZ | 89346 | 1653054C91 | ..CASE, TRANSMISSION | 1 |
| 50 | XBHZZ | 89346 | 1653057C1 | ..GEAR | 1 |
| 51 | PAHZZ | 89346 | 593913C91 | ..PARTS KIT, TRANSMISS | 1 |
| 52 | PAHZZ | 29510 | 630204C1 | ..CUP, TAPERED ROLLER | 1 |
| 53 | PAHZA | 29510 | 630203C91 | ..CONE AND ROLLERS, TA | 1 |
| 54 | PAHZZ | 89346 | 591219C1 | ..NUT, PLAIN, HEXAGON | 1 |
| 55 | PAHZZ | 89346 | 591220C1 | ..WASHER, FLAT | 1 |
| 56 | XBHZZ | 89346 | 546615C1 | ..GEAR | 1 |
| 57 | PAHZZ | 89346 | 478932C1 | ..BEARING, WASHER, THRU | 1 |
| 58 | XBHZZ | 89346 | 593894C1 | ..GEAR | 1 |
| 59 | PAHZZ | 89346 | 478993C91 | ..BEARING, BALL, ANNULA | 2 |
| 60 | XBHZZ | 89346 | 478906C1 | ..COLLAR | 1 |
| 61 | PAHZZ | 24617 | 121694 | ..CONE AND ROLLERS, TA | 1 |
| 62 | PAHZZ | 89346 | 1653039C91 | ..SYNCHRONIZER, TRANSM | 1 |
| 63 | PAHZZ | 89346 | 593910C1 | ..RING, RETAINING | 2 |
| 64 | PAHZA | 89346 | 106312R1 | ..BEARING, WASHER, THRU | 1 |
| 65 | XBHZZ | 89346 | 1653050C1 | ..GEAR | 1 |
| 66 | PAHZZ | 89346 | 443610C1 | ..BEARING, WASHER, THRU | 1 |
| 67 | XBHZZ | 89346 | 1653048C1 | ..GEAR | 1 |
| 68 | PAHZZ | 89346 | 1649726C91 | ..SYNCHRONIZER, TRANSM | 1 |
| 69 | PAHZZ | 89346 | 92460R1 | ..RING, RETAINING | 1 |
| 70 | XBHZZ | 89346 | 1650622C1 | ..GEAR | 1 |
| 71 | XBHZZ | 89346 | 1653046C1 | ..GEAR | 1 |
| 72 | PAHZZ | 89346 | 1653051C1 | ..BEARING, ROLLER, NEED | 1 |
| 73 | PAHZZ | 89346 | 684645R1 | ..RING, RETAINING | 1 |
| 74 | PAHZZ | 89346 | 478922C1 | ..BEARING, WASHER, THRU | 1 |
| 75 | XBHZZ | 89346 | 1653044C1 | ..GEAR | 1 |
| 76 | XBHZZ | 89346 | 593909C1 | ..SHAFT, MAIN | 1 |
| 77 | XBHZZ | 89346 | 478921C1 | ..SHAFT, IDLER | 1 |
| 78 | PAHZZ | 89346 | 171053R1 | ..PEARING, WASHER, THRU | 2 |
| 79 | PAHZZ | 29510 | 321981R91 | ..ROLLER ASSEMBLY, JOU | 2 |
| 80 | XBHZZ | 89346 | 399647C1 | ..SPACER | 1 |
| 81 | XBHZZ | 89346 | 1653043C1 | ..GEAR | 1 |
| 82 | XBHZZ | 89346 | 478930C1 | ..SPACER | 1 |
| 83 | PAHZZ | 29930 | ST987 | ..CUP, TAPERED ROLLER | 2 |
| 84 | PAHZZ | 29930 | ST2069 | ..CONE AND ROLLERS, TA | 2 |
| 85 | PAHZZ | 89346 | 401756R1 | ..RING, RETAINING | 1 |
| 86 | XBHZZ | 89346 | 1653042C1 | ..GEAR | 1 |
| 87 | PAHZA | 29930 | 357194R1 | ..RING, RETAINING | 2 |
| 88 | XBHZZ | 89346 | 1653049C1 | ..GEAR | 1 |
| 89 | XBHZZ | 89346 | 1653047C1 | ..GEAR | 1 |
| 90 | XBHZZ | 89346 | 1653053C1 | ..SPACER | 1 |
| 91 | XBHZZ | 89346 | 1653045C1 | ..GEAR | 1 |
| 92 | XBHZZ | 89346 | 1653041C1 | ..SHAFT, COUNTER | 1 |

END OF FIGURE

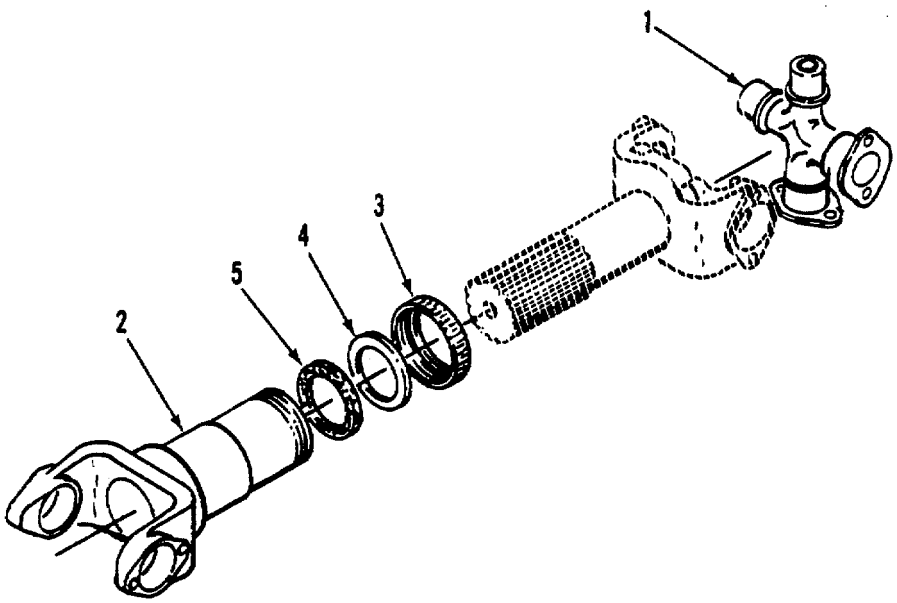


*Figure 163. Driveshaft - Transmission to Transfer Case*

| (1) ITEM NO | (2) SMR CODE | (3) CAGEC | (4) PART NUMBER | (5) DESCRIPTION AND USABLE ON CODES (UOC) | (6) QTY |
|---|---|---|---|---|---|
| | | | | GROUP 0218 DRIVESHAFT, TRANSFER CASE | |
| | | | | FIG. 163 DRIVESHAFT - TRANSMISSION TO TRANSFER CASE | |
| | PDOOF | 89346 | 2607803174 | .PROPELLER SHAFT TRANSMISSION TO TRANSFER CASE | 1 |
| 1 | PAOZZ | 72447 | 5-279X | ..SPIDER, UNIVERSAL JO | 2 |
| 2 | XBOZZ | 89346 | 363080C91 | ..SLIP YOKE | 1 |
| 3 | KFOZZ | 72447 | 5-14-29 | ...CAP, DUST PART OF KIT P/N D5C | 1 |
| 4 | KFOZZ | 72447 | 5-15-33 | ...WASHER, FLAT PART OF KIT P/N D5C | 2 |
| 5 | KFOZZ | 72447 | 5-16-33 | ...WASHER, NONMETALLIC PART OF KIT P/N D5C | 1 |
| | PAOZZ | 95019 | D5C | ..PARTS KIT, DUST CAP | 1 |
| | | | | CAP, DUST ( 1) 163-3 | |
| | | | | WASHER, FLAT ( 2) 163-4 | |
| | | | | WASHER, NONMETALLIC ( 1) 163-5 | |
| | | | | END OF FIGURE | |

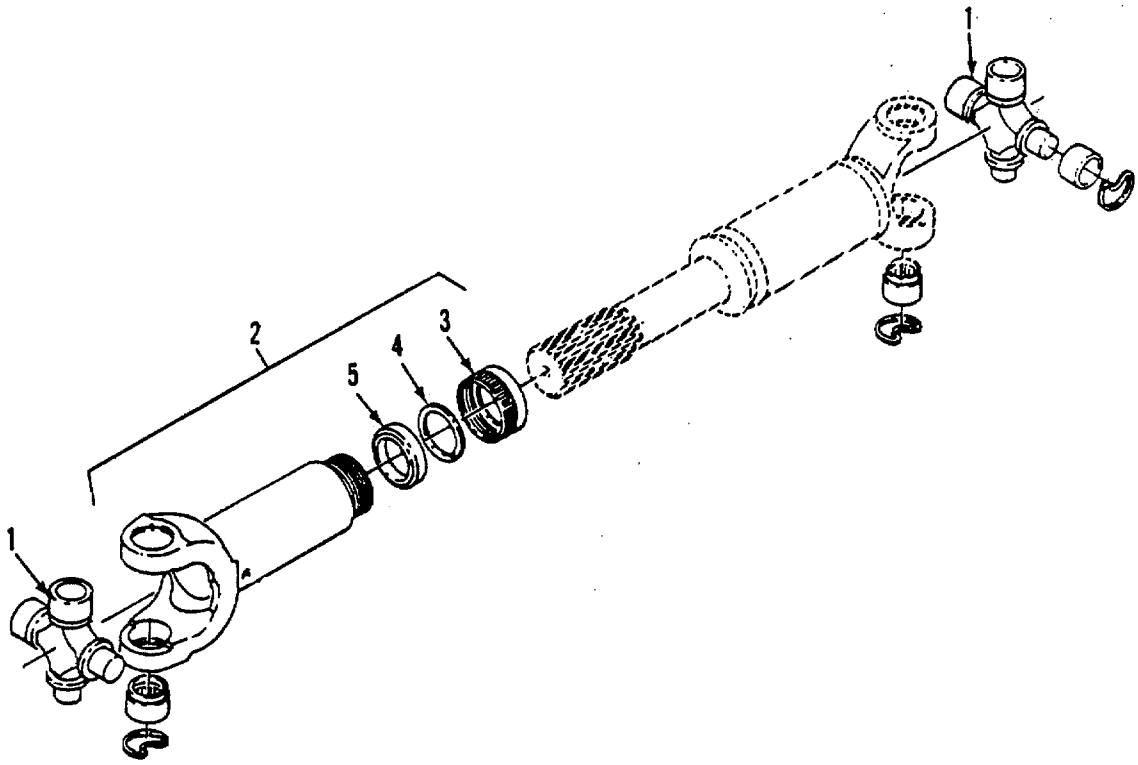


*Figure 164. Driveshaft - Transfer Case to Front Axle*

| (1) ITEM NO | (2) SMR CODE | (3) CAGEC | (4) PART NUMBER | (5) DESCRIPTION AND USABLE ON CODES (UOC) | (6) QTY |
|---|---|---|---|---|---|
| | | | | GROUP 0219 DRIVESHAFT, FRONT AXLE | |
| | | | | FIG. 164 DRIVESHAFT - TRANSFER CASE TO FRONT AXLE | |
| | PDOOF | 89346 | 2487802640 | .PROPELLER SHAFT TRANSFER CASE TO FRONT AXLE | 1 |
| 1 | PAOZZ | 97271 | 5-188X | ..JOURNAL AND BEARING | 2 |
| 2 | XBOZZ | 89346 | 240468R91 | ..SLIP YOKE | 1 |
| 3 | KFOZZ | 72447 | 3-14-59 | ..CAP, DUST PART OF KIT P/N D3H | 1 |
| 4 | KFOZZ | 72447 | 3-15-63 | ..WASHER, FLAT PART OF KIT P/N D3H | 1 |
| 5 | KFOZZ | 72447 | 3-16-103 | ..WASHER, NONMETALLIC PART OF KIT P/N D3H | 1 |
| | PAOZZ | 62707 | D3H | ..CAP, DUST, SHAFT | 1 |
| | | | | CAP, DUST ( 1) 164-3 | |
| | | | | WASHER, FLAT ( 1) 164-4 | |
| | | | | WASHER, NONMETALLIC ( 1) 164-5 | |
| | | | | END OF FIGURE | |

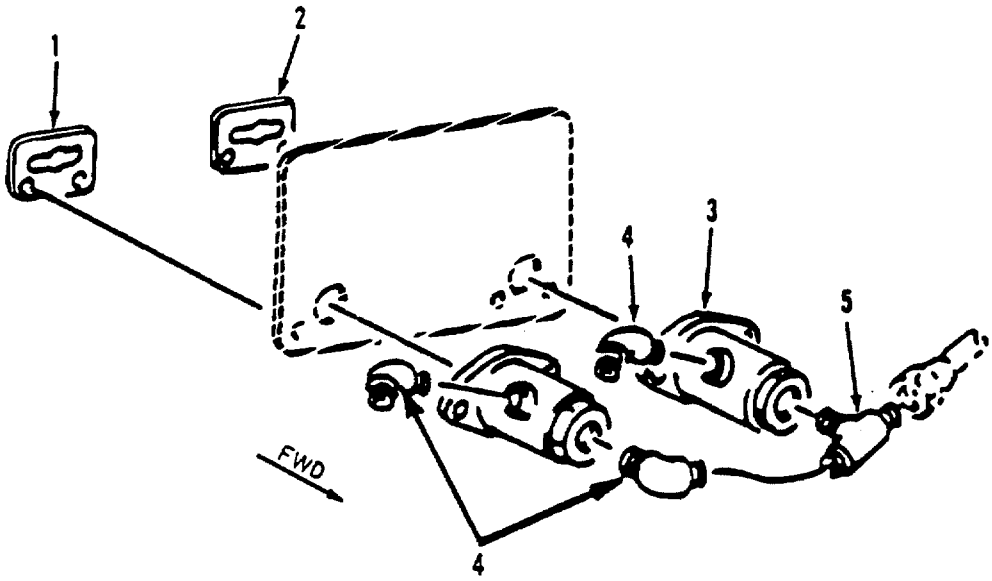


*Figure 165. Transfer Case Valve*

| (1) ITEM NO | (2) SMR CODE | (3) CAGEC | (4) PART NUMBER | (5) DESCRIPTION AND USABLE ON CODES (UOC) | (6) QTY |
|---|---|---|---|---|---|
| | | | | GROUP 0220 TRANSFER CASE | |
| | | | | FIG. 165 TRANSFER CASE VALVE | |
| 1 | XBOZZ | 89346 | 528800C1 | .PLATE, IDENT | 1 |
| 2 | XBOZZ | 89346 | 528801C1 | .PLATEIDENT | 1 |
| 3 | PAOZO | 89346 | 584368C1 | .VALVE, LINEAR, DIRECT | 2 |
| 4 | XBOZZ | 89346 | 141966H | .ELBOW | 3 |
| 5 | XBOZZ | 89346 | 444148 | .TEE, PIPE | 1 |
| | | | | END OF FIGURE | |

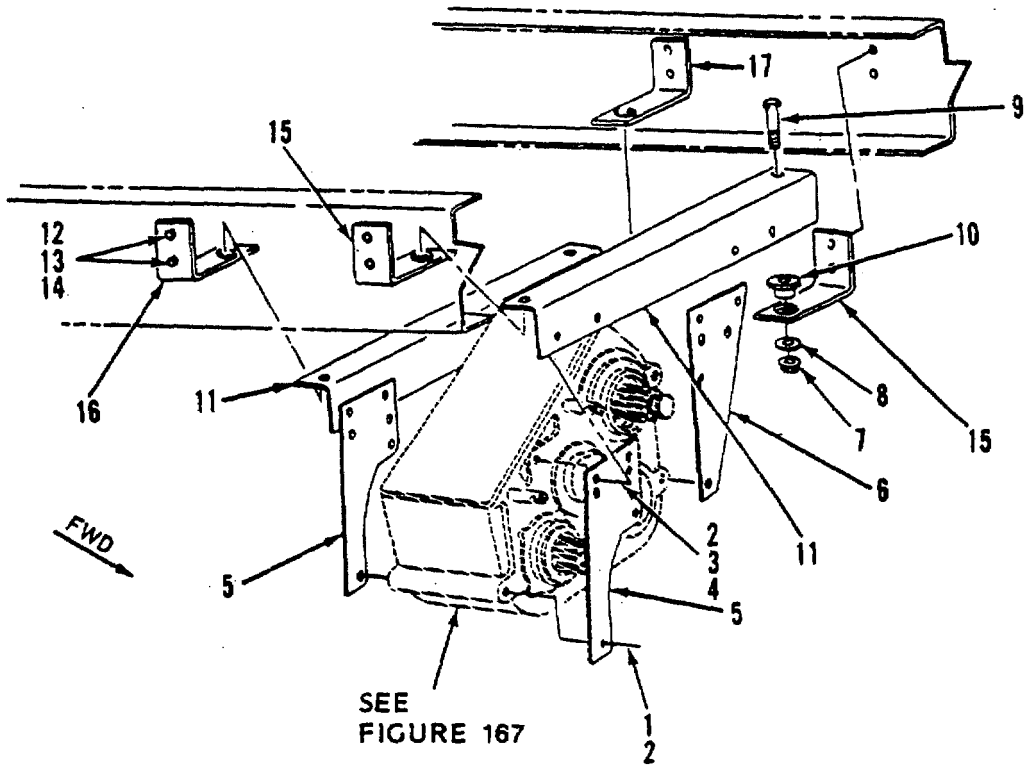


*Figure 166. Transfer Case Installation*

| (1) ITEM NO | (2) SMR CODE | (3) CAGEC | (4) PART NUMBER | (5) DESCRIPTION AND USABLE ON CODES (UOC) | (6) QTY |
|---|---|---|---|---|---|
| | | | | GROUP 0220 TRANSFER CASE | |
| | | | | FIG. 166 TRANSFER CASE INSTALLATION | |
| 1 | PAFZZ | 89346 | 24872R1 | .SCREW, CAP, HEXAGON H | 8 |
| 2 | PAFZZ | 96906 | MS35338-50 | .WASHER, LOCK | 8 |
| 3 | PAFZZ | 89346 | 24874R1 | .SCREW, CAP, HEXAGON H | 8 |
| 4 | PAFZZ | 31007 | 25528R1 | .NUT, PLAIN, HEXAGON | 8 |
| 5 | XBFZZ | 89346 | 584491C2 | .BRACKET | 2 |
| 6 | XBFZZ | 89346 | 584490C1 | .BRACKET | 2 |
| 7 | PAFZZ | 89346 | 414089C1 | .NUT, PLAIN, EXTENDED | 4 |
| 8 | PAFZZ | 89346 | 107813R1 | .WASHER, FLAT | 4 |
| 9 | PAFZZ | 89346 | 414082C1 | .BOLT, MACHINE | 4 |
| 10 | PAFZZ | 89346 | 470031C2 | .BRACKET, ANGLE | 4 |
| 11 | XBFZZ | 89346 | 584489C2 | .SUPPORT | 2 |
| 12 | PBFZZ | 89346 | 414087C1 | .NUT, DIFFERENTIAL | 8 |
| 13 | PBFZZ | 89346 | 414053C1 | .BOLT, MACHINE | 4 |
| 14 | PBFZZ | 89346 | 414052C1 | .BOLT | 4 |
| 15 | XBFZZ | 89346 | 584492C1 | .BRACKET | 2 |
| 16 | XBFZZ | 89346 | 585547C1 | .BRACKET | 1 |
| 17 | XBFZZ | 89346 | 585548C1 | .BRACKET | 1 |
| | | | | END OF FIGURE | |

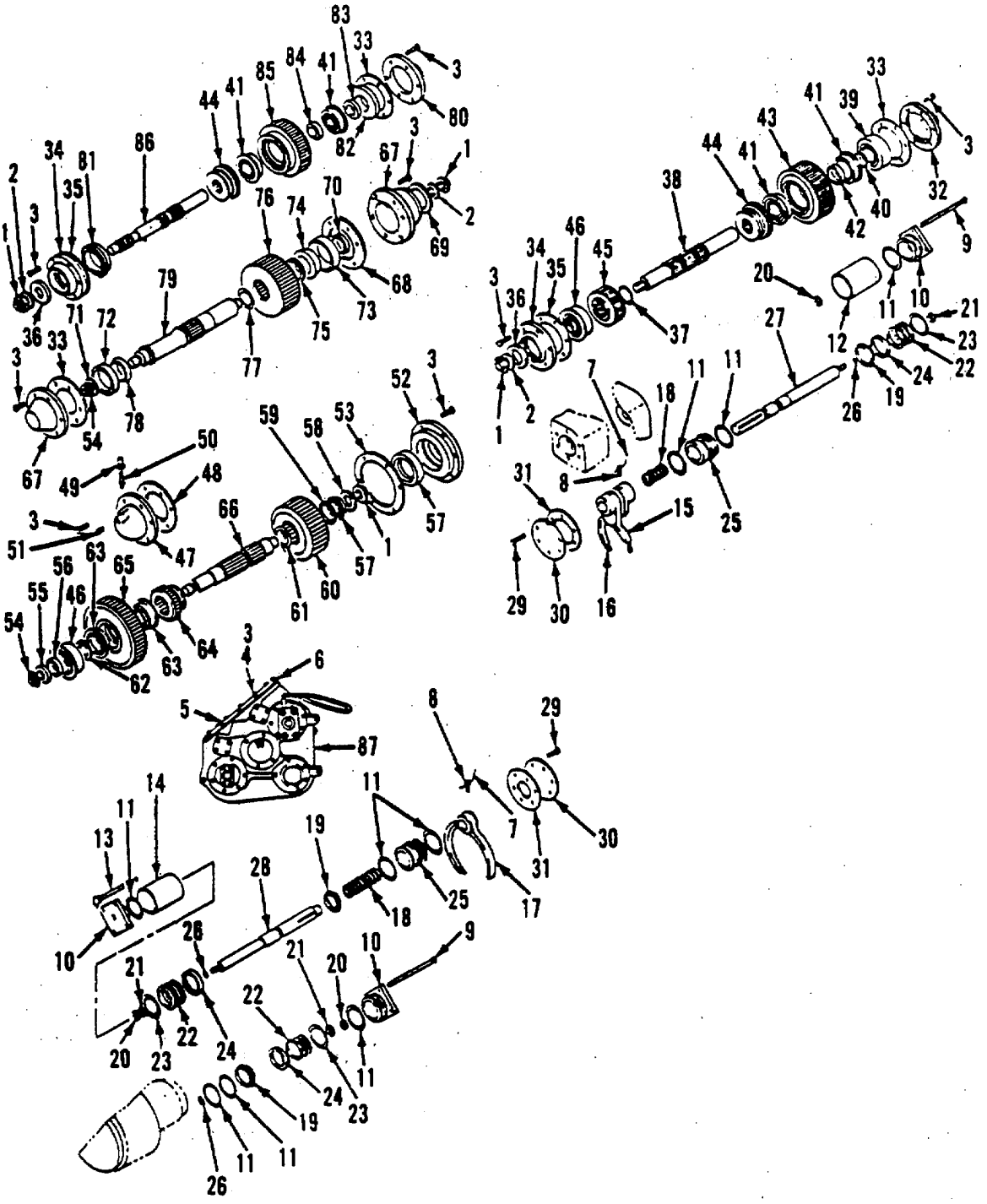

*Figure 167. Transfer Case Assembly*

GROUP 0220 TRANSFER CASE

FIG. 167 TRANSFER CASE ASSEMBLY

| (1) ITEM NO | (2) SMR CODE | (3) CAGEC | (4) PART NUMBER | (5) DESCRIPTION AND USABLE ON CODES (UOC) | (6) QTY |
|---|---|---|---|---|---|
| | PDFHH | 21292 | 872165001 | .TRANSFER TRANSMISSI | 1 |
| 1 | PAFZZ | 21292 | 688633 | ..NUT, SELF- LOCKING, HE | 4 |
| 2 | PAOZZ | 21292 | 927775004 | ..WASHER, FLAT | 3 |
| 3 | XBHZZ | 21292 | 265239 | ..SCREW, CAP | 16 |
| 3 | XBHZZ | 21292 | 265238 | ..SCREW, CAP | 48 |
| 4 | XBHZZ | 21292 | 927749 | ..WASHER, LOCK | 18 |
| 5 | XBHZZ | 21292 | 793377 | ..PLATE, COVER | 1 |
| 6 | PAHZZ | 21292 | 427464 | ..GASKET | 1 |
| 7 | XBHZZ | 21292 | 947223 | ..WIRE, LOCK | 5 |
| 8 | XBHZZ | 21292 | 724222 | ..SCREW, SET | 5 |
| 9 | XBHZZ | 21292 | 65982 | ..SCREW, CAP | 4 |
| 10 | XBHZZ | 21292 | 235372 | ..CAP, CYLINDER | 2 |
| 11 | PAHZZ | 21292 | 675224 | ..PACKING, PREFORMED | 2 |
| 12 | XBHZZ | 21292 | 883887003 | ..TUBE', CYLINDER | 1 |
| 13 | XBHZZ | 21292 | 265892 | ..SCREW, CAP | 4 |
| 14 | XBHZZ | 21292 | 883887006 | ..TUBE, CYLINDER | 1 |
| 15 | PBHZZ | 21292 | 367268 | ..SHIFTER FORK | 1 |
| 16 | PBHZZ | 21292 | 367259 | ..SHIFTER FORK | 1 |
| 17 | PBHZZ | 21292 | 367264 | ..SHIFTER FORK | 1 |
| 18 | PAHZZ | 21292 | 777485 | ..SPRING, HELICAL, COMP | 2 |
| 19 | PAHZZ | 21292 | 736747 | ..RING, RETAINING | 2 |
| 20 | XBHZZ | 21292 | 688464 | ..NUT | 2 |
| 21 | XBHZZ | 21292 | 927643 | ..WASHER | 2 |
| 22 | XBHZZ | 21292 | 753232 | ..PISTON | 2 |
| 23 | PAHZZ | 21292 | 675326 | ..PACKING, PREFORMED | 2 |
| 24 | PAHZZ | 21292 | 339223 | ..FELT, MECHANICAL, PRE | 2 |
| 25 | XBHZZ | 21292 | 883479 | ..ADAPTER, SHIFT | 2 |
| 26 | PAHZZ | 29930 | 355967R1 | ..RING, RETAINING | 2 |
| 27 | XBHZZ | 21292 | 742877 | ..SHAFT, SHIFT | 1 |
| 28 | XBHZZ | 21292 | 769285 | ..SHAFT, SHIFT | 1 |
| 29 | XBHZZ | 21292 | 265343 | ..SCREW, CAP | 8 |
| 30 | XBHZZ | 21292 | 235372 | ..CAP | 2 |
| 31 | PAHZZ | 21292 | 427399 | ..GASKET | 2 |
| 32 | XBHZZ | 21292 | 235485 | ..CAP, REAR | 1 |
| 33 | PAHZZ | 21292 | 7441322 | ..SHIM.031, CORAL | 1 |
| 33 | PAHZZ | 21292 | 7442322 | ..SHIM.016, PINK | 1 |
| 33 | PAHZZ | 21292 | 7443322 | ..SHIM.005, BLUE | 1 |
| 34 | XBHZZ | 21292 | 237435 | ..CARRIER, SEAL | 2 |
| 35 | PAHZZ | 89346 | 496345C1 | ..GASKET | 2 |
| 36 | PAHZA | 21292 | 732246 | ..SEAL, TRANSMISSION | 2 |
| 37 | PAHZZ | 21292 | 736833 | ..RING, RETAINING | 1 |
| 38 | XBHZZ | 21292 | 769279 | ..SHAFT, INPUT | 1 |
| 39 | PAHZZ | 21292 | 232238 | ..BEARING, BALL, ANNULA | 1 |
| 40 | XBHZZ | 21292 | 927224 | ..WASHER | 1 |
| 41 | PAHZZ | 21292 | 232234 | ..BEARING, BALL, ANNULA | 4 |
| 42 | XBHZZ | 21292 | 736235 | ..SPACER | 1 |
| 43 | XBHZZ | 21292 | 432557 | ..GEAR, HELICAL | 1 |
| 44 | XBHZZ | 21292 | 432236 | ..GEAR, CLUTCH | 2 |

| (1) ITEM NO | (2) SMR CODE | (3) CAGEC | (4) PART NUMBER | (5) DESCRIPTION AND USABLE ON CODES (UOC) | (6) QTY |
|---|---|---|---|---|---|
| 45 | XBHZZ | 21292 | 432478 | ..GEAR | 1 |
| 46 | PAHZZ | 89346 | 504221C91 | ..BEARING, BALL, ANNULA | 1 |
| 47 | XBHZZ | 21292 | 235446 | ..CAP, SPEEDO | 1 |
| 48 | PAHZZ | 89346 | 504211C1 | ..GASKET | 1 |
| 49 | XBHZZ | 21292 | 883473 | ..SLEEVE | 1 |
| 50 | XBHZZ | 21292 | 432235 | ..GEAR, SPEEDO | 1 |
| 51 | PAHZZ | 89346 | 968936R91 | ..BREATHER | 1 |
| 52 | XBHZZ | 21292 | 235487 | ..CAP | 1 |
| 53 | PAHZZ | 21292 | 427465 | ..GASKET | 1 |
| 54 | XBHZZ | 21292 | 688634 | ..NUT, SELF-LOCKING | 2 |
| 55 | XBHZZ | 21292 | 432234 | ..GEAR, SPEEDO | 1 |
| 56 | XBHZZ | 21292 | 736229 | ..SPACER | 1 |
| 57 | PAHZZ | 24617 | R1310WB | ..BEARING, ROLLER, CYLI | 1 |
| 58 | XBHZZ | 21292 | 927775003 | ..WASHER | 1 |
| 59 | XBHZZ | 21292 | 927757 | ..WASHER, SPECIAL | 1 |
| 60 | XBHZZ | 21292 | 432558 | ..GEAR, HELICAL | 1 |
| 61 | PAHZZ | 21292 | 762292 | ..RING, RETAINING | 1 |
| 62 | XBHZZ | 21292 | 927756 | ..WASHER, SPECIAL | 1 |
| 63 | PAHZZ | 21292 | 32388 | ..BEARING, BALL, ANNULA | 2 |
| 64 | XBHZZ | 21292 | 2432556 | ..GEAR | 1 |
| 65 | XBFZZ | 21292 | 432559 | ..GEAR | 1 |
| 66 | XBHZZ | 21292 | 769275 | ..SHAFT, INTERMEDIATE | 1 |
| 67 | XBHZZ | 21292 | 237434 | ..CARRIER, SHAFT | 1 |
| 68 | PAHZZ | 21292 | 427466 | ..GASKET | 1 |
| 69 | PAHZZ | 89346 | 596175C1 | ..SEAL, PLAIN | 1 |
| 70 | XBHZZ | 21292 | 736949 | ..SPACER | 1 |
| 71 | XBHZZ | 21292 | 927775001 | ..WASHER | 1 |
| 72 | PAHZZ | 24617 | 454460 | ..CUP, TAPERED ROLLER | 1 |
| 73 | PAHZZ | 29510 | 286648R1 | ..CUP, TAPERED ROLLER | 1 |
| 74 | PAHZZ | 90640 | 0051438-0 | ..CONE AND ROLLERS, TA | 1 |
| 75 | XBHZZ | 21292 | 927758 | ..WASHER, SPACER | 1 |
| 76 | XBHZZ | 21292 | 432554 | ..GEAR | 1 |
| 77 | PAHZZ | 21292 | 762292 | ..RING, RETAINING | 1 |
| 78 | PAHZZ | 60038 | HM804846 | ..CONE AND ROLLERS, TA | 1 |
| 79 | XBHZZ | 21292 | 769276 | ..SHAFT, OUTPUT | 1 |
| 80 | XBHZZ | 21292 | 235484 | ..COVER | 1 |
| 81 | XDHZZ | 21292 | 232252 | ..BEARING, BALL, ANNULA | 1 |
| 82 | PAHZA | 21292 | 232229 | ..BEARINGTRANSMISSIO | 1 |
| 83 | XBHZZ | 21292 | 736948 | ..SPACER | 1 |
| 84 | XBHZZ | 21292 | 736235 | ..SPACER | 1 |
| 85 | XBHZZ | 21292 | 432237 | ..GEAR | 1 |
| 86 | XBHZZ | 21292 | 769277 | ..SHAFT, OUTPUT | 1 |
| 87 | XAHZZ | 21292 | 468896 | ..CASE, TRANSMISSION | 1 |

END OF FIGURE

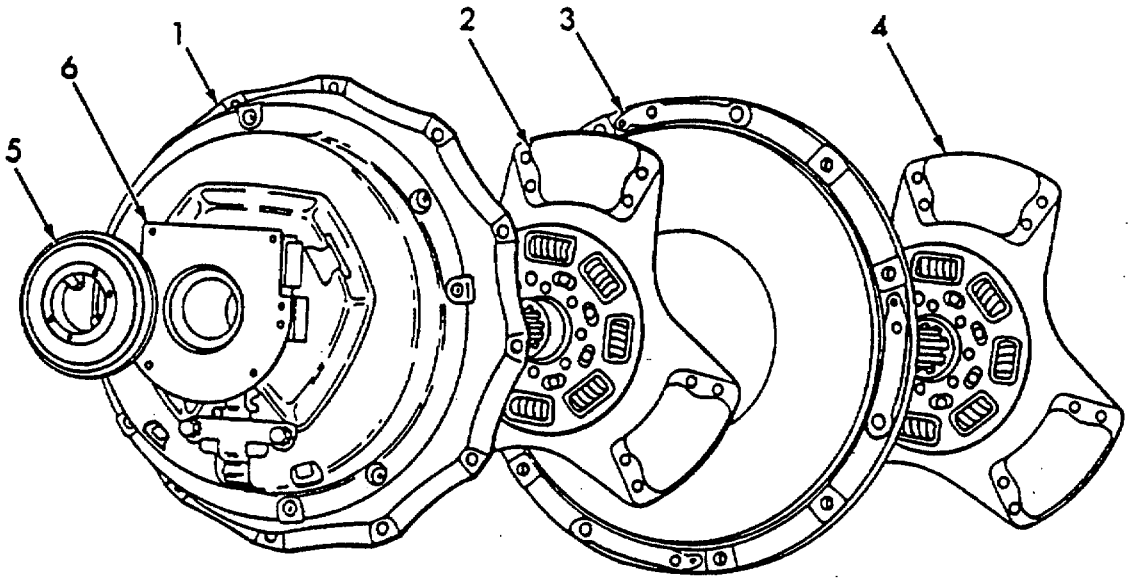


*Figure 168. Clutch Assembly*

| (1) ITEM NO | (2) SMR CODE | (3) CAGEC | (4) PART NUMBER | (5) DESCRIPTION AND USABLE ON CODES (UOC) | (6) QTY |
|---|---|---|---|---|---|
| | | | | GROUP 0221 CLUTCH ASSEMBLY | |
| | | | | FIG. 168 CLUTCH ASSEMBLY | |
| | PDFFF | 89346 | 1071376Z | .DISK, CLUTCH | 1 |
| 1 | XBFZZ | 89346 | 589996C92 | ..PLATE, PRESSURE | 1 |
| 2 | PBFZZ | 89346 | 574868C92 | ..DISK, CLUTCH | 1 |
| 3 | XBFZZ | 89346 | 1648215C1 | ..PLATE, INTERMEDIATE | 1 |
| 4 | PBFZZ | 89346 | 593107C92 | ..LINING, FRICTION | 1 |
| 5 | PAFZZ | 95019 | 127740K | ..DISK, CLUTCH | 1 |
| 6 | PAFZZ | 89346 | 69199C91 | ..BEARING, SLEEVE | 1 |
| | | | | END OF FIGURE | |

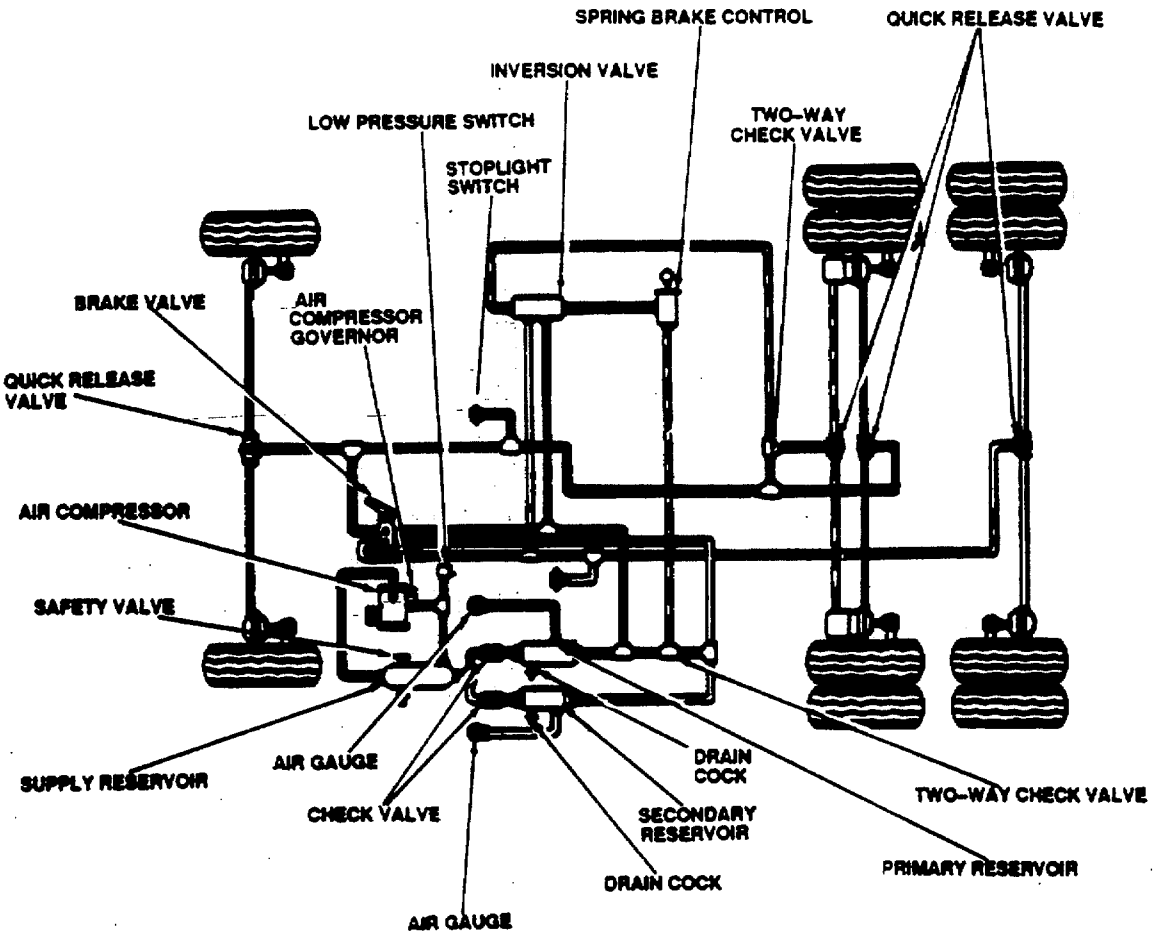


*Figure 169. Air Brake Piping*

| (1) ITEM NO | (2) SMR CODE | (3) CAGEC | (4) PART NUMBER | (5) DESCRIPTION AND USABLE ON CODES (UOC) | (6) QTY |
|---|---|---|---|---|---|
| | | | | GROUP 0222 AIR BRAKE CHAMBERS | |
| | | | | FIG. 169 AIR BRAKE PIPING | |
| | PAFZZ | 89346 | 873706C91 | .SWITCH, STOP LIGHT | 1 |
| | PAFZZ | 89346 | 299277C91 | .CLAMP, CUSHIONED | 1 |
| | XBFZZ | 89346 | 25930R1 | .NUT, HEX JAM | 1 |
| | PBFZZ | 89346 | 30761VX | .ELBOW, PIPE TO TUBE | 1 |
| | PAFZZ | 29510 | 417196C2 | .TUBE, GOVERNOR VACCU | 2 |
| | PAFZZ | 89346 | 30773V | .NUT, PLAIN, CONE SEAT | 4 |
| | PAFZZ | 89346 | 30774V | .SLEEVE, COMPRESSION | 4 |
| | PAFZZ | 89346 | 414504C1 | .INSERT, TUBE FITTING | 4 |
| | PAFZZ | 29510 | 417199C2 | .HOSE, NONMETALLIC | 2 |
| | PAFZZ | 89346 | 30643V | .NUT | 2 |
| | PAFZZ | 89346 | 30644V | .SLEEVE, COMPRESSION | 4 |
| | PAFZZ | 89346 | 414505C1 | .INSERT, TUBE FITTING | 4 |
| | PAFZZ | 89346 | 417200C2 | .TUBE | 1 |
| | XBFZZ | 89346 | 71466HX | .ELBOW | 2 |
| | XBFZZ | 89346 | 443990 | .NIPPLE, PIPE | 1 |
| | XBFZZ | 89346 | 452810C1 | .BLOCK, FITTING | 1 |
| | XBFZZ | 89346 | 91913R1 | .ELBOW, SPHERICAL | 2 |
| | XBFZZ | 89346 | 444040 | .ELBOW, PIPE STREET | 2 |
| | XBFZZ | 89346 | 101917R1 | .TEE, TUBE TO PIPE | 1 |
| | XBFZZ | 89346 | 359279C1 | .ELBOW, PIPE | 2 |
| | XBFZZ | 89346 | 444148 | .TEE, PIPE | 1 |
| | XBFZZ | 89346 | 59595DX | .CONNECTOR | 1 |
| | PAFZZ | 31007 | 47128H | .NUT, TUBE COUPLING | 2 |
| | XDFZZ | 89346 | 47126H | .SLEEVE | 2 |
| | XBFZZ | 89346 | 59588DX | .CONNECTOR | 1 |
| | XBFZZ | 89346 | 143406HX | .UNION | 3 |
| | PAFZZ | 89346 | 459017C1 | .HOSE ASSEMBLY, NONME | 2 |
| | AFFZZ | 89346 | 459016C1 | .HOSE, AIR | 2 |
| | PAFZZ | 89346 | 57489C1 | ..HOSE AXLE REAR | 2 |
| | PAFZZ | 89346 | 574897C91 | ..ADAPTER, STRAIGHT, PI | 2 |
| | XBFZZ | 89346 | 309449C1 | .COUPLING, TUBE | 4 |
| | XBFZZ | 89346 | 427652 | .NUT, SLOTTED | 2 |
| | XBFZZ | 89346 | 138572 | .WASHER, LOCK | 2 |
| | XBFZZ | 89346 | 300785C1 | .EXTENSION | 1 |
| | XBFZZ | 89346 | 230766R1 | .ELBOW, TUBE | 4 |
| | XBFZZ | 89346 | 539925C1 | .BRACKET, SUPPORT | 2 |
| | | | | END OF FIGURE | |

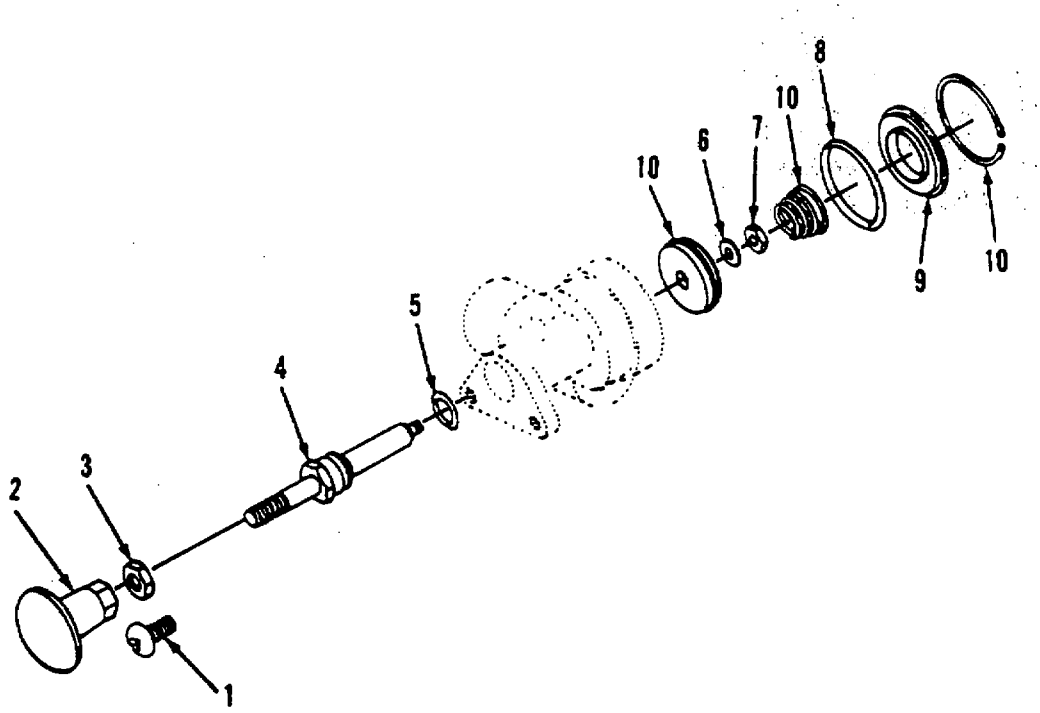


*Figure 170. Parking Brake Control Valve*

GROUP 0222 AIR BRAKE CHAMBERS

FIG. 170 PARKING BRAKE CONTROL VALVE

| (1) ITEM NO | (2) SMR CODE | (3) CAGEC | (4) PART NUMBER | (5) DESCRIPTION AND USABLE ON CODES (UOC) | (6) QTY |
|---|---|---|---|---|---|
| | PAFFZ | 89346 | 592699C1 | .VALVE, SAFETY RELIEF | 1 |
| 1 | XBFZZ | 89346 | 167164 | ..SCREW, MACHINE | 2 |
| 2 | PAOZZ | 89346 | 482528C1 | ..KNOB | 1 |
| 3 | XBFZZ | 89346 | 25930R1 | ..NUT, HEX JAM | 1 |
| 4 | XBFZZ | 89346 | 344025C1 | ..PISTON, VALVE | 1 |
| 5 | PBFZZ | 89346 | 355967R1 | ..RING, RETAINING | 1 |
| 6 | XBFZZ | 89346 | 344029C1 | ..WASHER, FLAT | 1 |
| 7 | XBFZZ | 89346 | 79061R1 | ..NUT, LOCK | 1 |
| 8 | XBFZZ | 89346 | 370943R1 | ..PACKING, PREFORMED | 1 |
| 9 | XAFZZ | 89346 | 344024C1 | ..CAP, END | 1 |
| 10 | PBFZZ | 89346 | 483381C91 | ..PARTS KIT, VALVE | 1 |

END OF FIGURE

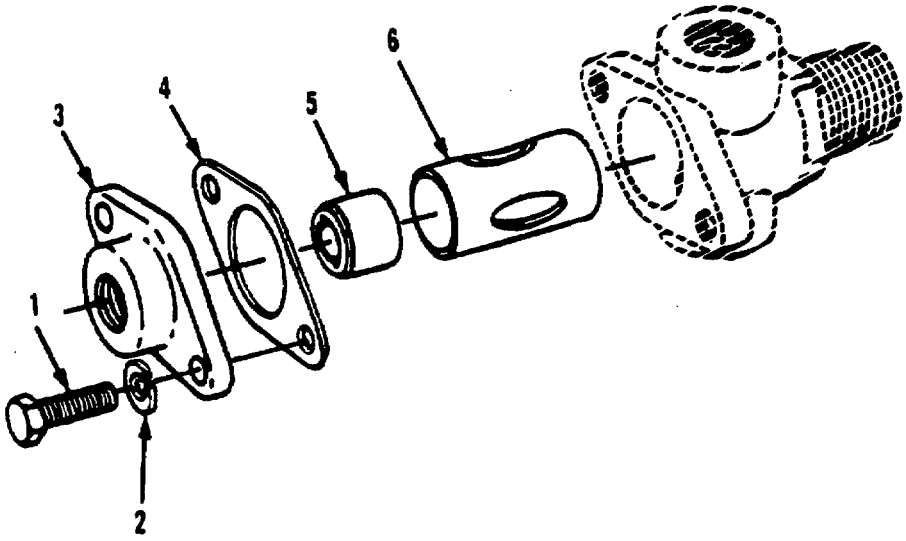


*Figure 171. Double Check Valve*

| (1) ITEM NO | (2) SMR CODE | (3) CAGEC | (4) PART NUMBER | (5) DESCRIPTION AND USABLE ON CODES (UOC) | (6) QTY |
|---|---|---|---|---|---|
| | | | | GROUP 0222 AIR BRAKE CHAMBERS | |
| | | | | FIG. 171 DOUBLE CHECK VALVE | |
| | PAFFF | 89346 | 764368C92 | .VALVE, SHUTTLE | 1 |
| 1 | XBFZZ | 89346 | 179071H2 | ..SCREW, CAP | 2 |
| 2 | XBFZZ | 89346 | 925428C1 | ..WASHER, SPECIAL | 1 |
| 3 | XBFZZ | 89346 | 179070H2 | ..COVER, VALVE | 1 |
| 4 | XBFZZ | 89346 | 382137R1 | ..PACKING, PREFORMED | 1 |
| 5 | XBFZZ | 89346 | 191246R1 | ..VALVE, SHUTTLE | 1 |
| 6 | XBFZZ | 89346 | 179067H1 | ..GUIDE, VALVE | 1 |
| | | | | END OF FIGURE | |

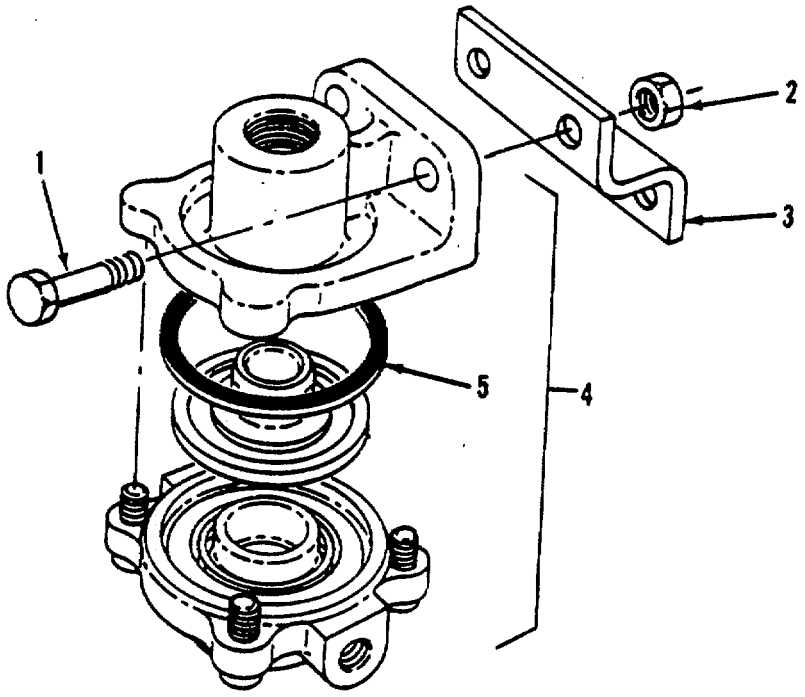


*Figure 172. Quick Release Valve*

| (1) ITEM NO | (2) SMR CODE | (3) CAGEC | (4) PART NUMBER | (5) DESCRIPTION AND USABLE ON CODES (UOC) | (6) QTY |
|---|---|---|---|---|---|
| | | | | GROUP 0222 AIR BRAKE CHAMBERS | |
| | | | | FIG. 172 QUICK RELEASE VALVE | |
| 1 | PAFZZ | 89346 | 25493R1 | .SCREW, CAP, HEXAGON H | 2 |
| 2 | PAFZZ | 89346 | 9413977 | .NUT, PLAIN, HEXAGON | 2 |
| 3 | XBFZZ | 89346 | 475932C1 | .BRACKET | 1 |
| 4 | PAFZF | 89346 | 473794C91 | .VALVE, LINEAR, DIRECT | 1 |
| 5 | XBFZZ | 89346 | 349962C1 | ..GASKET | 1 |
| | | | | END OF FIGURE | |

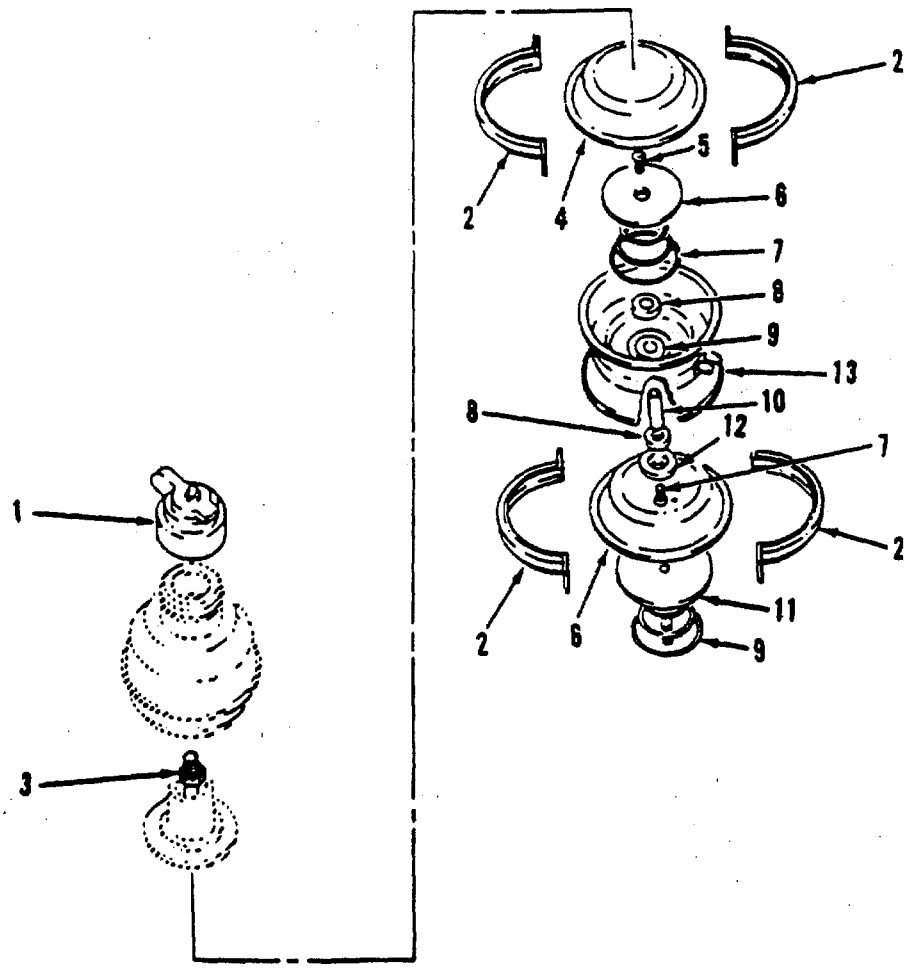


*Figure 173. Air Brake Chamber - Forward Rear Axle*

| (1) ITEM NO | (2) SMR CODE | (3) CAGEC | (4) PART NUMBER | (5) DESCRIPTION AND USABLE ON CODES (UOC) | (6) QTY |
|---|---|---|---|---|---|
| | | | | GROUP 0222 AIR BRAKE CHAMBERS. | |
| | | | | FIG. 173 AIR BRAKE CHAMBER-FORWARD REAR AXLE | |
| | PBFFZ | 89346 | 596003C91 | .CHAMBER, AIR BRAKE | 2 |
| 1 | XBFZZ | 89346 | 573219C1 | ..CAP ASSY | 1 |
| 2 | XBFZZ | 89346 | 683062R91 | ..CLAMP ASSY | 2 |
| | XBFZZ | 89346 | 18479R1 | ...BOLT, SQUARE NECK | 2 |
| | XBFZZ | 89346 | 19231R1 | ...NUT, HEX | 2 |
| 3 | XBFZZ | 89346 | 472151C1 | ..NUT | 1 |
| 4 | PAFZZ | 89346 | 871934R1 | ..DIAPHRAGM, CHAMBER, B | 2 |
| 5 | XBFZZ | 89346 | 356117C1 | ..SCREW | 2 |
| 6 | XBFZZ | 89346 | 352662C1 | ..PLATE, SPRING | 1 |
| 7 | PAFZZ | 89346 | 453120C1 | ..SPRING, EXPANDER, PIS | 2 |
| 8 | XBFZZ | 89346 | 418608C1 | ..BUSHING, GUIDE | 2 |
| 9 | PAFZZ | 89346 | 328235C1 | ..SEAL, CASE | 1 |
| 10 | XBFZZ | 89346 | 472149C1 | ..ROD, PUSH | 1 |
| 11 | XBFZZ | 89346 | 472152C91 | ..PISTON | 1 |
| 12 | XBFZZ | 89346 | 263082C11 | ..PLATE | 1 |
| 13 | XBFZZ | 89346 | 573216C1 | ..CASE, FLANGE | 1 |
| | | | | END OF FIGURE | |

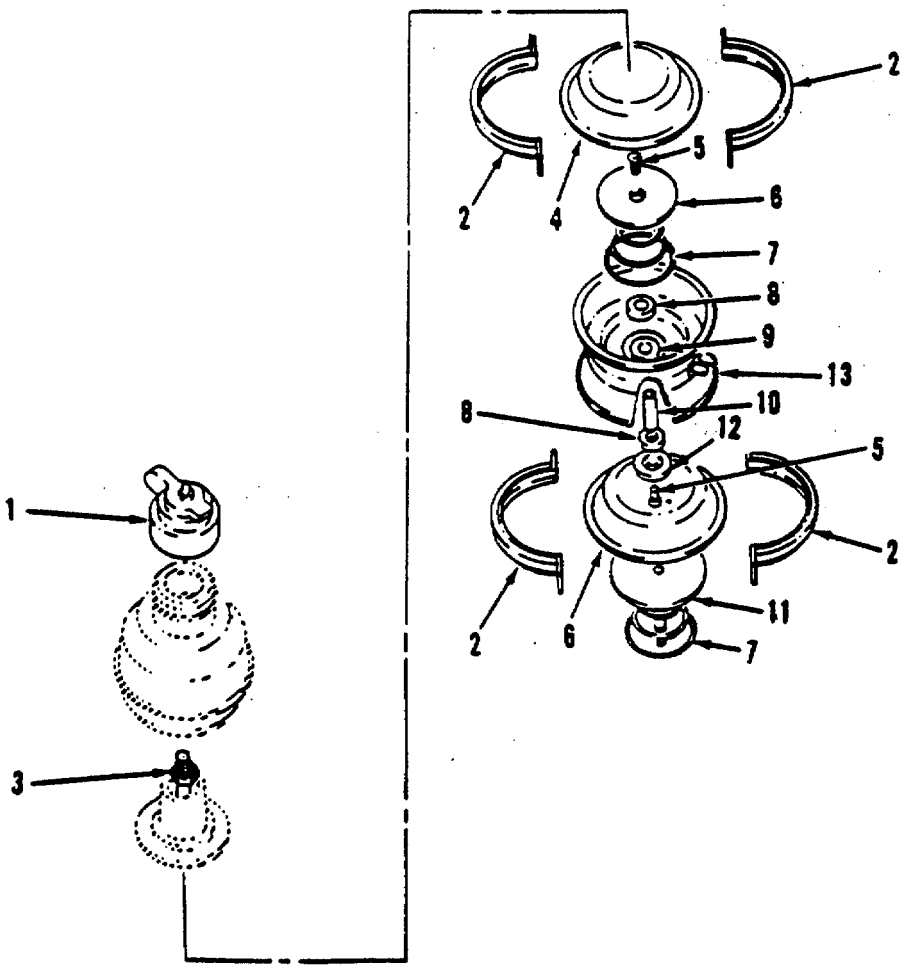


*Figure 174. Air Brake Chamber - Rear Rear Axle*

GROUP 0222 AIR BRAKE CHAMBERS

FIG. 174 AIR BRAKE CHAMBER - REAR REAR AXLE

| (1) ITEM NO | (2) SMR CODE | (3) CAGEC | (4) PART NUMBER | (5) DESCRIPTION AND USABLE ON CODES (UOC) | (6) QTY |
|---|---|---|---|---|---|
| | PBFFZ | 89346 | 573218C91 | .CHAMBER, AIR BRAKE | 2 |
| 1 | XBFZZ | 89346 | 573219C1 | ..CAP, BREATHER | 1 |
| 2 | XBFZZ | 89346 | 683062R91 | ..CLAMP ASSY | 2 |
| | XBFZZ | 89346 | 18479R1 | ...BOLT, SQUARE NECK | 2 |
| | XBFZZ | 89346 | 19231R1 | ...NUT, HEX | 2 |
| 3 | XBFZZ | 89346 | 472151C1 | ..NUT | 1 |
| 4 | PAFZZ | 89346 | 871934R1 | ..DIAPHRAGM, CHAMBERB | 2 |
| 5 | XBFZZ | 89346 | 356117C1 | ..SCREW | 2 |
| 6 | XBFZZ | 89346 | 352662C1 | ..PLATE, SPRING | 1 |
| 7 | PAFZZ | 89346 | 453120C1 | ..SPRING, EXPANDER, PIS | 2 |
| 8 | XBFZZ | 89346 | 418608C1 | ..BUSHING, GUIDE | 2 |
| 9 | PAFZZ | 89346 | 328235C1 | ..SEAL, CASE | 1 |
| 10 | XBFZZ | 89346 | 472149C1 | ..ROD, PUSH | 1 |
| 11 | XBFZZ | 89346 | 472152C91 | ..PISTON | 1 |
| 12 | XBFZZ | 89346 | 263082C11 | ..PLATE | 1 |
| 13 | XBFZZ | 89346 | 573216C1 | ..CASE, FLANGE | 1 |

END OF FIGURE

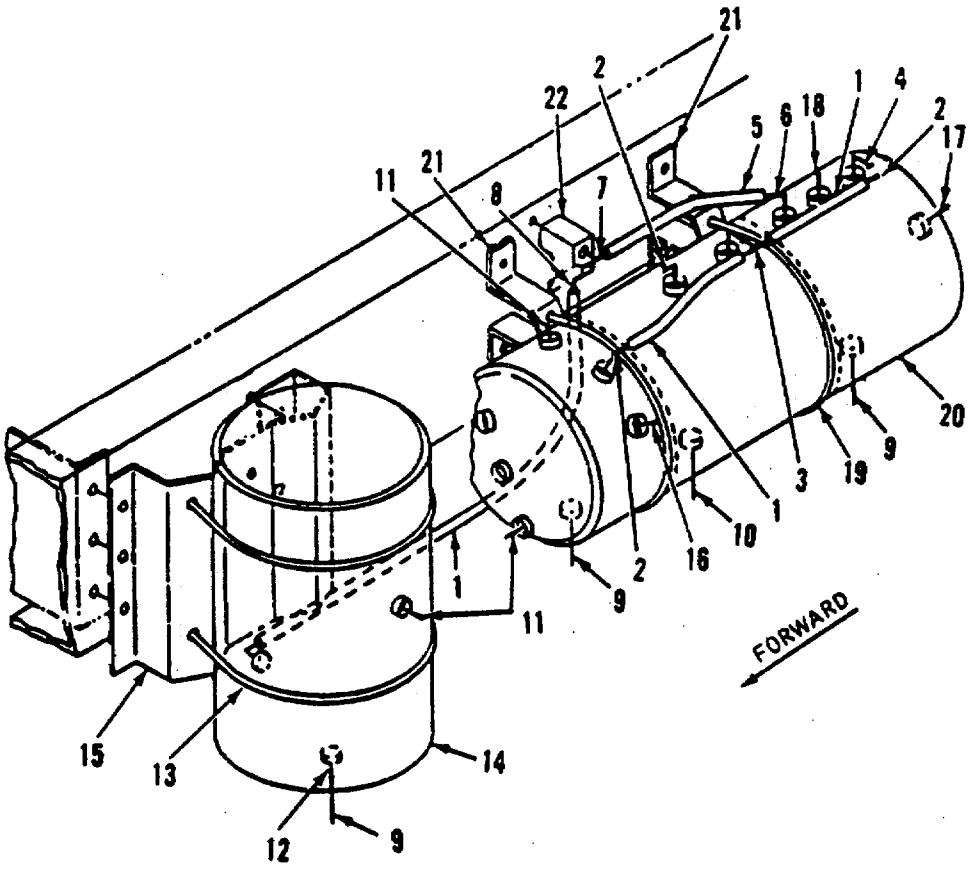


*Figure 175. Air Tanks and Mounting*

| (1) ITEM NO | (2) SMR CODE | (3) CAGEC | (4) PART NUMBER | (5) DESCRIPTION AND USABLE ON CODES (UOC) | (6) QTY |
|---|---|---|---|---|---|
| | | | | GROUP 0222 AIR BRAKE CHAMBERS | |
| | | | | FIG. 175 AIR TANKS AND MOUNTING | |
| 1 | PAFZZ | 89346 | 417201C2 | .HOSE, NONMETALLIC | 4 |
| | PAFZZ | 89346 | 55897R1 | .NUT, TUBE COUPLING | 6 |
| | PAFZZ | 03533 | 307-22 | .FERRULE , BRAZING, TUB | 6 |
| | PAFZZ | 89346 | 55896R1 | .SLEEVE, COMPRESSION | 6 |
| 2 | XBFZZ | 89346 | 55916R11 | .ELBOW, PIPE | 3 |
| 3 | XBFZZ | 89346 | 86879R1 | .TEE, PIPE TO TUBE | 1 |
| 4 | PAFZZ | 89346 | 483144C91 | .VALVE, CHECK | 1 |
| 5 | PAFZZ | 89346 | 417202C2 | .HOSE, NONMETALLIC | 2 |
| | PAFZZ | 89346 | 76262H | .NUT, TUBE COUPLING | 2 |
| | PAFZZ | 89346 | 76263H | .SLEEVE, COMPRESSION, | 2 |
| | PAFZZ | 89346 | 414507C1 | .INSERT, TUBE FITTING | 2 |
| 6 | XBFZZ | 89346 | 971620R91 | .ELBOW, PIPE TO TUBE | 1 |
| 7 | XBFZZ | 89346 | 56233R11 | .ELBOW, PIPE TO TUBE | 1 |
| 8 | XBFZZ | 89346 | 698562R91 | .ADAPTER, PIPE TO TUB | 1 |
| 9 | PAFZZ | 51501 | R519 | .COCK, DRAIN | 3 |
| 10 | PAFZZ | 89346 | 777915C92 | .VALVE, DIAPHRAGM, STO | 1 |
| 11 | XBFZZ | 89346 | 444655 | .PLUG, PIPE | 3 |
| 12 | PBFZZ | 89346 | 444033 | .BUSHING, PIPE | 1 |
| 13 | XBFZZ | 89346 | 475829C2 | .CABLE | 2 |
| 14 | XBFZZ | 89346 | 475831C3 | .TANK, AIR | 1 |
| | XBFZZ | 89346 | 414051C1 | .BOLT, FLANGE HEX | 5 |
| | PBFZZ | 89346 | 414052C1 | .BOLT | 5 |
| | PBFZZ | 89346 | 414053C1 | .BOLT, MACHINE | 3 |
| | XBFZZ | 89346 | 414054C1 | .BOLT, FLANGE HEX | 3 |
| | PBFZZ | 89346 | 414087C1 | .NUT, DIFFERENTIAL | 7 |
| | XBFZZ | 89346 | 124925 | .NUT, HEX | 8 |
| | XBFZZ | 89346 | 25522R1 | .NUT, HEX | 2 |
| | PBFZZ | 89346 | 25709R1 | .WASHER, FLAT | 4 |
| | XBFZZ | 96906 | MS35338-46 | .WASHER, LOCK | 2 |
| 15 | XBFZZ | 89346 | 508658C2 | .SUPPORT | 1 |
| 16 | PAFZZ | 89346 | 386398C91 | .VALVE, SAFETY RELIEF | 1 |
| 17 | XBFZZ | 89346 | 24776R1 | .PLUG, PIPE | 1 |
| 18 | XBFZZ | 89346 | 56233R11 | .ELBOW, PIPE TO TUBE | 1 |
| 19 | XBFZZ | 89346 | 452329C1 | .CABLE, MOUNTING | 2 |
| 20 | XBFZZ | 89346 | 485937C4 | .TANK, AIR | 1 |
| 21 | XBFZZ | 89346 | 507933C3 | .BRACKET | 2 |
| | XBFZZ | 89346 | 25222R1 | .SCREW, CAP | 1 |
| | PBFZZ | 89346 | 25483R1 | .SCREW, CAP, HEXAGON H | 1 |
| | PBFZZ | 96906 | MS35338-44 | .WASHER, LOCK | 1 |
| 22 | XBFZZ | 89346 | 459281C1 | .ELBOW, DROP | 1 |
| | XBFZZ | 89346 | 444138 | .TEE, PIPE | 1 |

END OF FIGURE

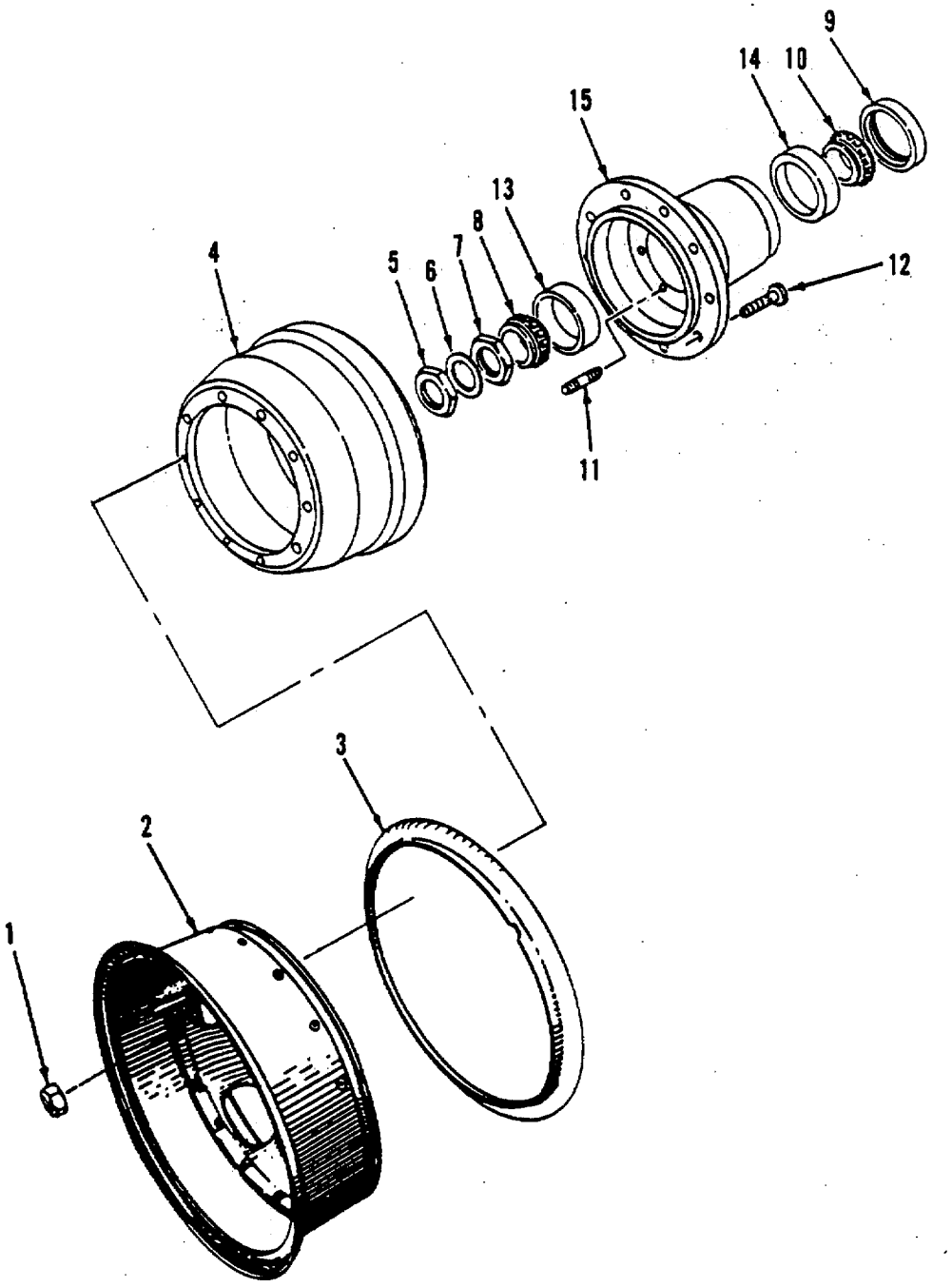


*Figure 176. Front Wheel, Hub and Drum*

| (1) ITEM NO | (2) SMR CODE | (3) CAGEC | (4) PART NUMBER | (5) DESCRIPTION AND USABLE ON CODES (UOC) | (6) QTY |
|---|---|---|---|---|---|
| | | | | GROUP 0223 HUB AND DRUM, FRONT | |
| | | | | FIG. 176 FRONT WHEEL, HUB AND DRUM | |
| 1 | PAOZZ | 89346 | 84712H | .NUT, SELF-LOCKING, SI | 20 |
| 1 | PAOZZ | 89346 | 84711H | .NUT, PLAIN, CONE SEAT | 20 |
| 2 | PBOZZ | 89346 | 180751R93 | .RIM, WHEEL, PNEUMATIC | 2 |
| 3 | PBOZZ | 89346 | 37661HC | .RING, SIDE AND LOCK, | 2 |
| 4 | PAOBZ | 89346 | 582559C1 | .BRAKE DRUM | 2 |
| 5 | XBOZZ | 89346 | 72334R1 | .NUT, LOCK | 2 |
| 6 | XBOZZ | 89346 | 72339R1 | .WASHER, FLAT | 2 |
| 7 | XBOZZ | 89346 | 263840R1 | .NUT, ADJUSTING | 2 |
| 8 | PAOZZ | 89346 | ST2098 | .BEARING, SLEEVE | 2 |
| 9 | PAOZZ | 89346 | 582587C1 | .PACKING ASSEMBLY | 2 |
| 10 | PAOZZ | 60038 | HM218248 | .CONE AND ROLLERS, TA | 2 |
| 11 | PBOZZ | 89346 | 111428H | .STUD, CONTINUOUS THR | 16 |
| 12 | FAOZZ | 89346 | 582605C1 | .STUD, PLAIN | 10 |
| 12 | PAOZZ | 89346 | 583278C1 | .STUD, PLAIN | 10 |
| 13 | PAOZZ | 29930 | ST968 | .CUP, TAPERED ROLLER | 2 |
| 14 | PAOZZ | 60038 | HM218210 | .CUP, TAPERED ROLLER | 2 |
| 15 | XBOZZ | 89346 | 582564C1 | .HUB, WHEEL | 2 |

END OF FIGURE

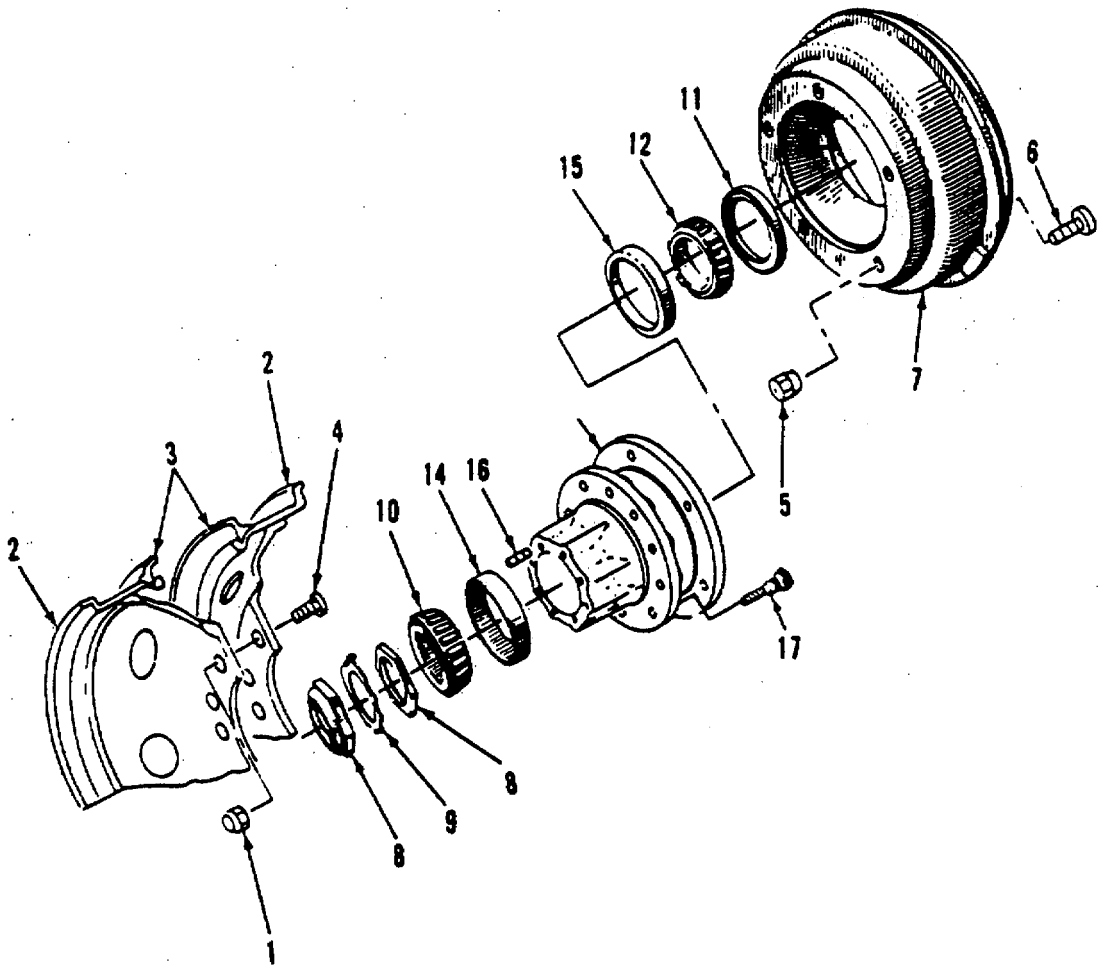


*Figure 177. Rear Wheel, Hub and Drum*

| (1) ITEM NO | (2) SMR CODE | (3) CAGEC | (4) PART NUMBER | (5) DESCRIPTION AND USABLE ON CODES (UOC) | (6) QTY |
|---|---|---|---|---|---|
| | | | | GROUP 0224 HUB AND DRUM, REAR | |
| | | | | FIG. 177 REAR WHEEL, HUB AND DRUM | |
| 1 | PAOZZ | 04741 | 11A7062 | .NUT, SELF-LOCKING, SI | 10 |
| 1 | PAOZZ | 89346 | 83155H | .NUT, PLAIN, SINGLE BA | 10 |
| 2 | PBOZZ | 89346 | 180751R93 | .RIM, WHEEL, PNEUMATIC | 2 |
| 3 | PBOZZ | 89346 | 37661HC | .RING, SIDE AND LOCK, | 4 |
| 4 | PAOZZ | 89346 | 41420V | .NUT, CAP, DUAL WHEEL | 10 |
| 4 | PAOZZ | 96906 | MS53068-1 | .NUT, CAP, DUAL WHEEL | 10 |
| 5 | PAOZZ | 29510 | 9413983 | .NUT | 10 |
| | PAOZZ | 89346 | 504150C1 | .WASHER, FLAT | 10 |
| 6 | PAOZZ | 89346 | 24889R1 | .BOLT, MACHINE | 10 |
| 7 | PAOBZ | 27767 | 3136B | .BRAKE DRUM | 2 |
| 8 | XBOZZ | 89346 | 67678R1 | .NUT, ADJUSTING | 4 |
| 9 | XBOZZ | 89346 | 470422C1 | .LOCK, NUT | 2 |
| 10 | PAOZZ | 29930 | ST2018A | .CONE AND ROLLERS, TA | 2 |
| 11 | PAOZZ | 89346 | 1654330C1 | .SEAL, OIL | 2 |
| 12 | PAOZZ | 29930 | ST2022 | .CONE AND ROLLERS, TA | 2 |
| 13 | XBOOO | 89346 | 1648524C91 | .HUB ASSY, REAR, LH | 1 |
| 13 | XBOOO | 89346 | 1648525C91 | .HUB ASSY, REAR, RH | 1 |
| 14 | PAOZZ | 29930 | ST967 | ..CUP, TAPERED ROLLER | 1 |
| 15 | PAOZZ | 29930 | ST969 | ..CUP, TAPERED ROLLER | 1 |
| 16 | PBOZZ | 89346 | 596006C1 | ..STUD, PLAIN | 8 |
| 17 | PAOZZ | 89346 | 212254R1 | ..BOLT, WHEEL | 10 |
| 17 | PAOZZ | 89346 | 212255R1 | ..BOLT, WHEEL | 10 |

END OF FIGURE

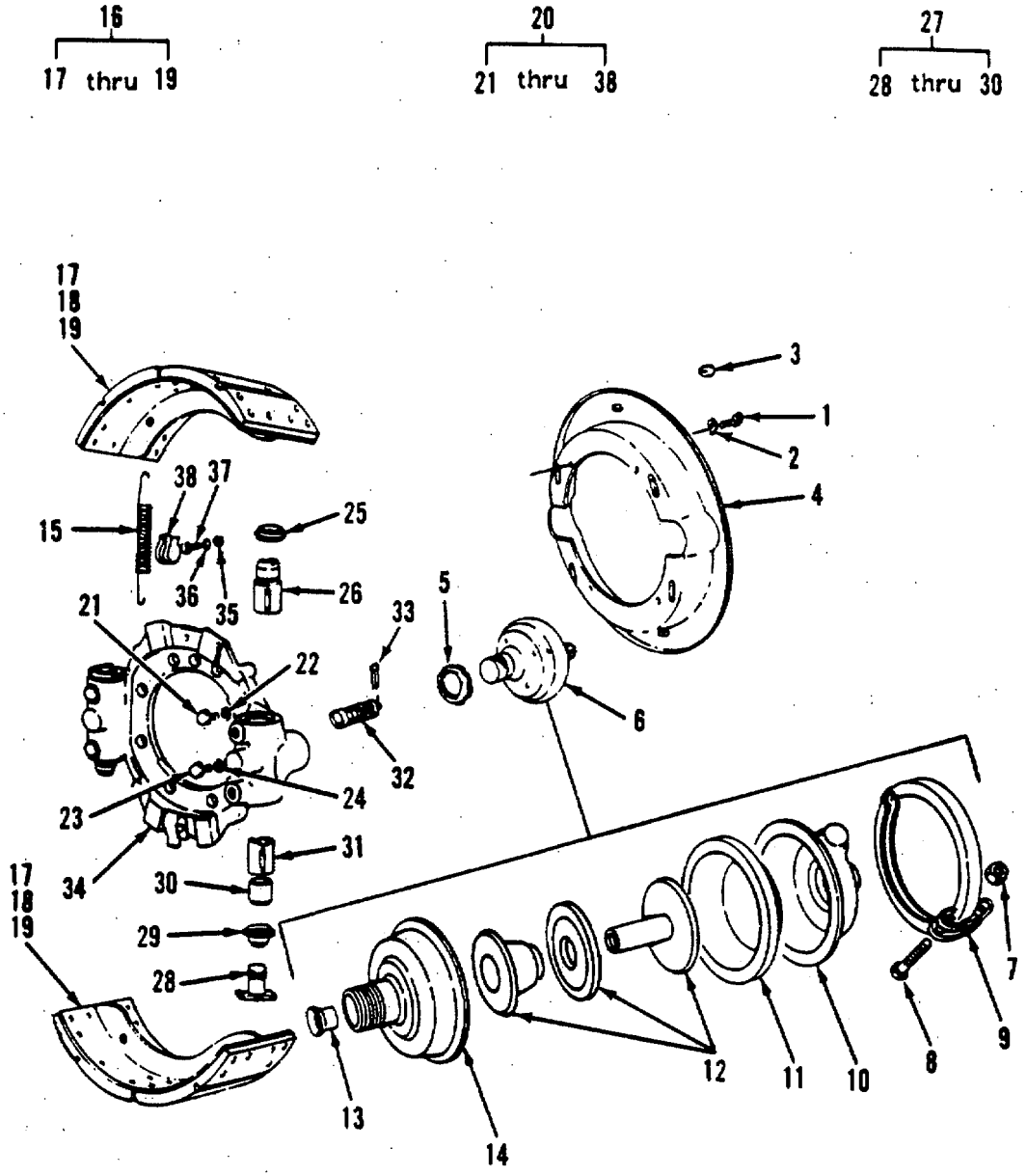


*Figure 178. Left Front Brake Assembly*

| (1) ITEM NO | (2) SMR CODE | (3) CAGEC | (4) PART NUMBER | (5) DESCRIPTION AND USABLE ON CODES (UOC) | (6) QTY | |
|---|---|---|---|---|---|---|
| | | | | GROUP 0225 BRAKE ASSEMBLY, FRONT | | |
| | | | | FIG. 178 LEFT FRONT BRAKE ASSEMBLY | | |
| | PAOOO | 78500 | RDA 1550-759 | . BRAKE, SHOE TYPE | 1 | |
| | PAOZZ | 78500 | S255 | .. SCREW | 4 | |
| 2 | PAOZZ | 78500 | 1229S513 | .. WASHER, LOCK | 4 | |
| 3 | PAOZZ | 78500 | 1707C 3 | .. CAP-PLUG, PROTECTIVE | 4 | |
| 4 | XBOZZ | 78500 | 3236D1798 | .. SHIELD, DUST | 1 | |
| 5 | PAOZZ | 78500 | 1727N40 | .. NUT, SELF-LOCKING, SI | 2 | |
| 6 | PBOOO | 89346 | 1671852C91 | .. CHAMBER, AIR BRAKE | 1 | |
| 7 | XBOZZ | 78500 | N35P | ... NUT | 1 | |
| 8 | XBOZZ | 78500 | 15X725 | ... SCREW, CAP | 1 | |
| 9 | XBOZZ | 78500 | 2797x102 | ... CLAMP | 1 | |
| 10 | XBOZZ | 78500 | A3780Q121 | HOUSING | 1 | |
| 11 | PAOZZ | 78500 | 2797R96 | :: DIAPHRAGM | 1 | |
| 12 | XBOZZ | 78500 | A431779W231 | PLATE ASSY, DIAPHRAM | 1 | |
| 13 | XBOZZ | 78500 | 1779Q433 | GUIDE | 1 | |
| 14 | XBOZZ | 78600 | Al 3780Y77 | ... HOUSING | 1 | |
| 15 | PAOZZ | 78500 | 2758W127 | .. SPRING | 2 | |
| 16 | PAOZZ | 78500 | A653722T358 | BRAKE SHOE | 2 | |
| 17 | XBOZZ | 78500 | A3722T358 | SHOE, BRAKE | 1 | |
| 18 | XBOZZ | 78500 | 2240E4815 | LINING, BRAKE | 1 | |
| 19 | XBOZZ | 78500 | RV3109 | RIVET | 16 | |
| 20 | XBOOO | 78500 | A23211Y2755 | .. SPIDER ASSY, BRAKE | 1 | |
| 21 | XBOZZ | 78500 | A1779M195 | ... GUIDE | 2 | |
| 22 | PAOZZ | 78500 | 1729B262 | .... WASHER, LOCK | 1 | |
| 23 | XBOZZ | 78500 | A12297U4597 | ... GUIDE ASSY, PAWL | 2 | |
| 24 | PAOZZ | 78500 | 17298262 | .... WASHER, LOCK | 1 | |
| 25 | PAOZZ | 78500 | 1205C1667 | SEAL RING, LABYRINTH | 2 | |
| 26 | XBOZZ | 78500 | 2297J4820 | PLUNGER, ANCHOR | 2 | |
| 27 | XBOOO | 78600 | A72297L3158 | ... ACTUATOR ASSEMBLY, A | 2 | * |
| 28 | XBOZZ | 78500 | A2297L3158 | .... 80LT ASSY | 1 | |
| 29 | KFOZZ | 78500 | 1205B1666 | .... SEAL (Part *of Kit* P/N 1168) | 1 | * |
| 30 | XBOZZ | 78500 | 3280K8175 | .... ACTUATOR | 2 | |
| 31 | KFOZZ | 78500 | 3280Y8163 | ... PLUNGER, ADJUSTING (Part of Kit P/N 1168) | 2 | * |
| 32 | PAOZZ | 78500 | A2247U47 | ... WEDGE ASSY | | |
| 33 | XBOZZ | 78500 | K235 | .... PIN, COTTER | 1 | |
| 34 | XBOZZ | 78500 | A133211Y2755 | ... SPIDER, BRAKE | 1 | |
| 35 | XBOZZ | 76500 | MN3061 | .... NUT | 2 | |
| 36 | XBOZZ | 78500 | 42x1064 | .... WASHER, LOCK | 2 | |
| 37 | XBOZZ | 78500 | MS20802 1 | .... SCREW, CAP | 2 | |
| 38 | XBOZZ | 78500 | 2257D108 | CLIP | 2 | |
| 39 | PAOZZ | 78500 | KIT 1168 | PARTS KIT, BRAKE ADJ | 1 | * |
| | | | | Seal (1) 178-29 | | * |
| | | | | Plunger, Adjusting (2) 178-31 | | * |
| | | | | Seal (1) 179-29 | | * |
| | | | | Plunger Adjusting (2) 179-31 | | * |
| | | | | Seal (1) 343-29 | | * |
| | | | | Plunger, Adjusting (2) 343-31 | | * |
| | | | | Seal (1) 344-29 | | * |
| | | | | Plunger, Adjusting (2) 344-31 | | * |

END OF FIGURE

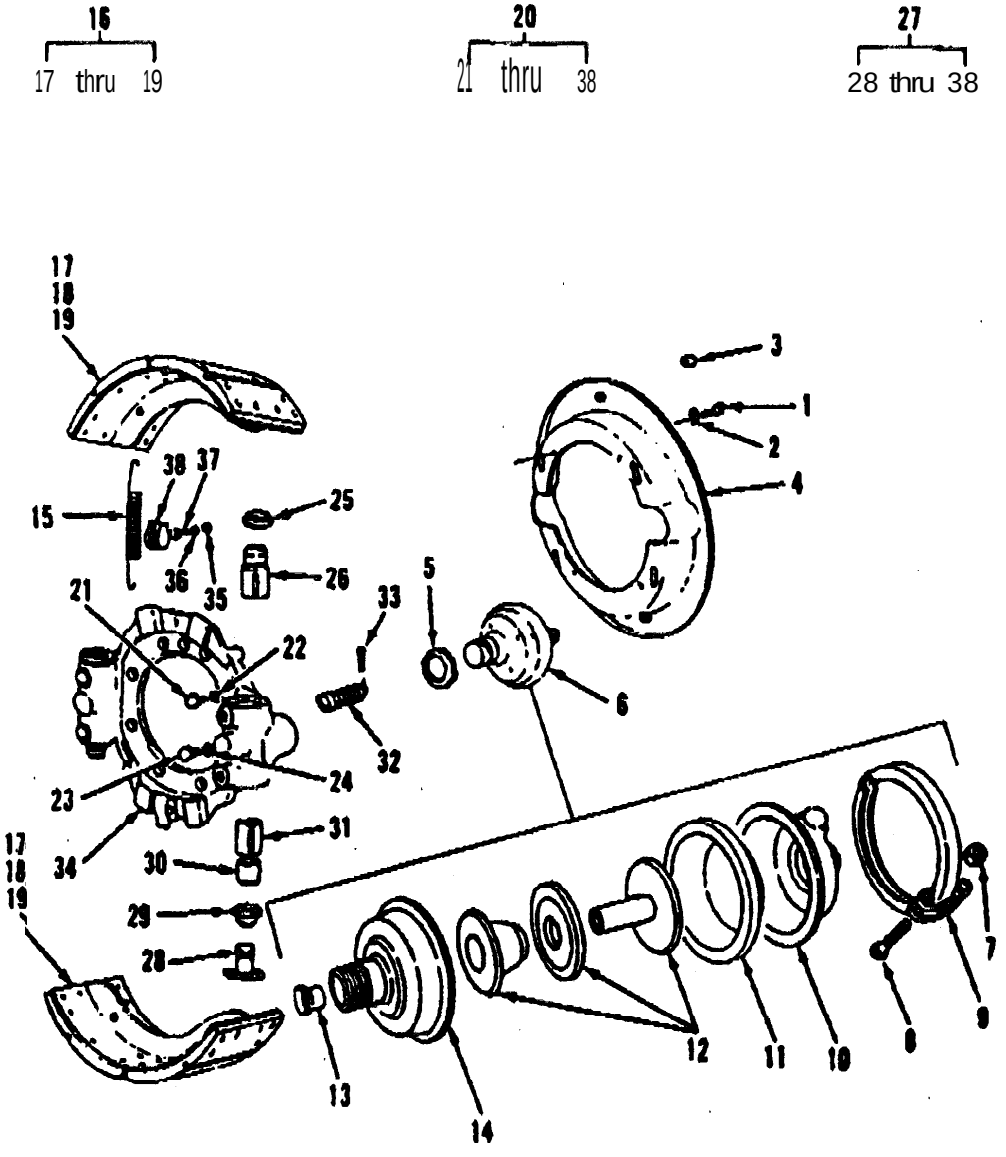


Figure **179. Right Front Brake Assembly**

| (1) ITEM NO | (2) SMR CODE | (3) CAGEC | (4) PART NUMBER | (5) DESCRIPTION AND USABLE ON CODES (UOC) | (6) QTY | |
|---|---|---|---|---|---|---|
| | | | | GROUP 0225 BRAKE ASSEMBLY, FRONT | | |
| | | | | FIG. 179 RIGHT FRONT BRAKE ASSEMBLY | | |
| | AOOOO | 78500 | RDA 1 550-760 | BRAKE ASSY, FRNT AH | 1 | |
| 1 | PAOZZ | 78500 | $255 | .. SCREW | | |
| 2 | PAOZZ | 78500 | 1229S513 | .. WASHER, LOCK | 4 | |
| 3 | PAOZZ | 78500 | 1707C3 | .. CAP-PLUG, PROTECTIVE | 4 | |
| 4 | XBOZZ | 78500 | 323601798 | .. SHIELD, DUST | 1 | |
| 5 | PAOZZ | 78500 | 1727N40 | .. NUT, SELF-LOCKING, St | 2 | |
| 6 | PBOOO | 89346 | 1671852C91 | .. CHAMBER, AIR BRAKE | 1 | |
| 7 | XBOZZ | 78500 | N35P | ... NUT | 1 | |
| 8 | XBOZZ | 78500 | 15X725 | ... SCREW, CAP | 1 | |
| 9 | XBOZZ | 78500 | 2797x102 | ... CLAMP | 1 | |
| 10 | XBOZZ | 78500 | A378OQ121 | ... HOUSING | 1 | |
| 11 | PAOZZ | 78500 | 2797R96 | ... DIAPHRAGM | 1 | |
| 12 | XBOZZ | 78500 | A431779W231 | ... PLATE ASSY | 1 | |
| 13 | XBOZZ | 78500 | 1779Q433 | ... GUIDE | 1 | |
| 14 | XBOZZ | 78500 | Al 3780Y77 | ... HOUSING | 1 | |
| 15 | PAOZZ | 78500 | 2758W127 | .. SPRING | 2 | |
| 16 | PAOZZ | 78500 | A653722T358 | . BRAKE SHOE | 2 | |
| 17 | XBOZZ | 78500 | A3722T358 | ... SHOE, BRAKE | 1 | |
| 18 | XBOZZ | 78500 | 224064815 | ... LINING, BRAKE | 1 | |
| 19 | XBOZZ | 78500 | RV3109 | RIVET | 16 | |
| 20 | X8000 | 78500 | A3321 1Y2755 | : SPIDER ASSY, BRAKE | 1 | |
| 21 | XBOZZ | 78500 | A1779M195 | ... GUIDE | 2 | |
| 22 | PAOZZ | 76500 | 17298262 | .... WASHER, LOCK | 1 | |
| 23 | XBOZZ | 78500 | A12297U4597 | ... GUIDE ASSY, PAWL | 2 | |
| 24 | PAOZZ | 78500 | 1729B262 | .... WASHER, LOCK | 1 | |
| 25 | PAOZZ | 78500 | 1205C1667 | ... SEAL RING, LABYRINTH | 2 | |
| 26 | XBOZZ | 78500 | 2297K4821 | ... PLUNGER, ANCHOR | 2 | |
| 27 | XBOOO | 78500 | A72297L3158 | ... ACTUATOR ASSEMBLY | 2 | * |
| 28 | XBOZZ | 78500 | A2297L3158 | .... BOLT ASSY | 1 | |
| 29 | KFOZZ | 78500 | 12O5B1666 | .... SEAL (Part of Kit P/N 1168) | 1 | * |
| 30 | XBOZZ | 78500 | 3280K8175 | .... ACTUATOR | 1 | |
| 31 | KFOZZ | 78500 | 3280Y8163 | ... PLUNGER, ADJUSTING (Fart of Kit P/N 1168) | 2 | * |
| 32 | PAOZZ | 78500 | A2247U47 | ... WEDGE ASSY | 2 | |
| 33 | XBOZZ | 78500 | K235 | .... PIN, COTTER | 1 | |
| 34 | XBOZZ | 78500 | A133211 Y2755 | ... SPIDER, BRAKE | 1 | |
| 35 | XBOZZ | 78500 | MN3081 | .... NUT | 2 | |
| 36 | XBOZZ | 78500 | 42X7064 | .... WASHER, LOCK | 2 | |
| 37 | XBOZZ | 78500 | MS208020 1 | SCREW, CAP | 2 | |
| 38 | XBOZZ | 78500 | 2257D108 | ..... CLIP | 2 | |
| 39 | PAOZZ | 78500 | KIT 1168 | .. PARTS KIT, BRAKE ADJ | 1 | * |
| | | | | Seal (1) 178-29 | | * |
| | | | | Plunger, Adjusting (2) 178-31 | | * |
| | | | | Seal (1) 179-29 | | * |
| | | | | Plunger, Adjusting (2) 179-31 | | * |
| | | | | Seal (1) 343-29 | | * |
| | | | | Plunger, Adjusting (2) 343-31 | | * |
| | | | | Seal (1) 344-29 | | * |
| | | | | Plunger, Adjusting (2) 344-31 | | * |

END OF FIGURE

5
6 thru 7

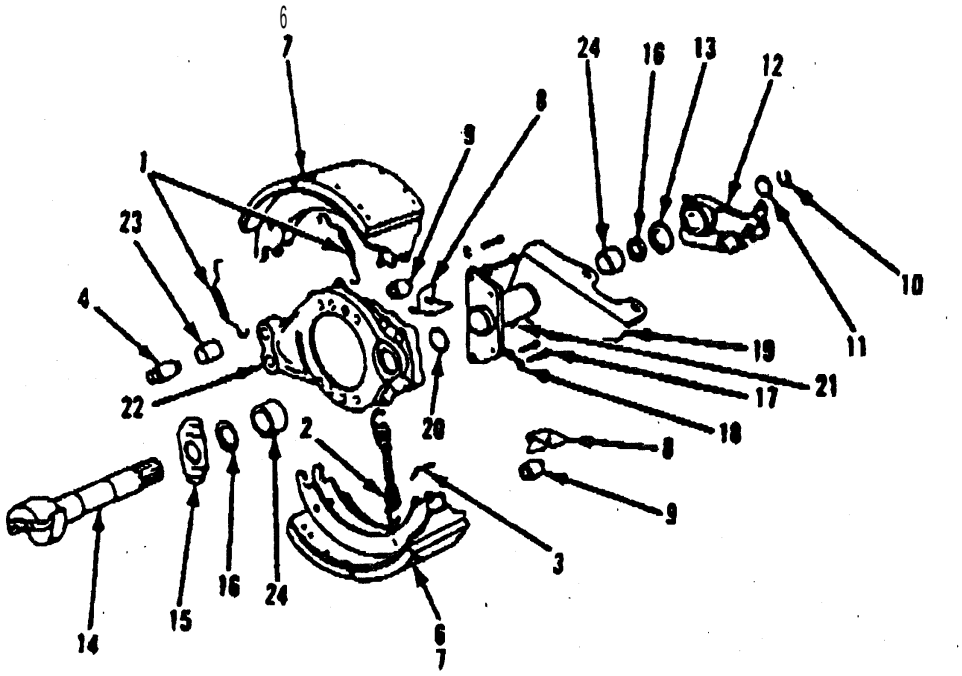


Figure 180. Left Forward Rear Brake

| (1) ITEM NO | (2) SMR CODE | (3) CAGEC | (4) PART NUMBER | (5) DESCRIPTION AND USABLE ON CODES (UOC) | (6) QTY |
|---|---|---|---|---|---|
| | | | | GROUP 0226 BRAKE ASSEMBLY, REAR | |
| | | | | FIG. 180 LEFT FORWARD REAR BRAKE ASSEMBLY | |
| | AOOOO | 89346 | 496897C91 | .BRAKE, FWD REAR, LH | 1 |
| 1 | PAOZZ | 89346 | 577655C1 | ..SPRING, SPECIAL | 2 |
| 2 | PAOZZ | 89346 | 492283C1 | ..SPRING, HELICAL, EXTE | 1 |
| 3 | XBOZZ | 89346 | 983622R1 | ..PIN, SPRING | 2 |
| 4 | XBOZZ | 89346 | 577653C1 | ..PIN, ANCHOR | 2 |
| 5 | PAOZZ | 89346 | 594885C91 | ..BRAKE SHOE SET | 2 |
| 6 | XBOZZ | 89346 | 594886C91 | ...LINING, BRAKE | 1 |
| 7 | XBOZZ | 89346 | 262365C1 | ...RIVET | 28 |
| 8 | XBOZZ | 89346 | 577652C1 | ..RETAINER | 2 |
| 9 | XBOZZ | 89346 | 126404R1 | ..ROLLER, SHOE | 2 |
| 10 | PBOZZ | 89346 | 152450R1 | ..RING, RETAINING | 1 |
| 11 | XBOZZ | 89346 | 586796C1 | ..WASHER, FLAT | 1 |
| 12 | PBOZZ | 89346 | 594891C1 | ..ADJUSTER, SLACK, BRAK | 1 |
| 13 | XBOZZ | 89346 | 574062C1 | ..WASHER, FLAT | 1 |
| 14 | XBOZZ | 89346 | 588987C91 | ..CAMSHAFT, BRAKE | 1 |
| 15 | XBOZZ | 89346 | 577654C1 | ..WASHER, FLAT | 1 |
| 16 | PAOZZ | 89346 | 56121R3 | ..SEAL ASSEMBLY | 2 |
| 17 | XBOZZ | 89346 | 77013R1 | ..BOLT, SPECIAL | 4 |
| 18 | XBOZZ | 96906 | MS35338-48 | ..WASHER, LOCK | 4 |
| 19 | XBOZZ | 89346 | 594889C91 | ..BRACKET, CAMSHAFT | 1 |
| 20 | PAOZZ | 89346 | 417488C1 | ..SEAL, FELT | 1 |
| 21 | PAOZZ | 29930 | 109461 | ..FITTING, LUBRICATION | 1 |
| 22 | XBOZZ | 89346 | 594874C91 | ..SPIDER, BRAKE | 1 |
| 23 | XBOZZ | 89346 | 577650C1 | ...BUSHING, PIN | 2 |
| 24 | XBOZZ | 89346 | 122407R1 | ...BUSHING, CAM | 2 |
| | | | | END OF FIGURE | |

5
6 thru 7

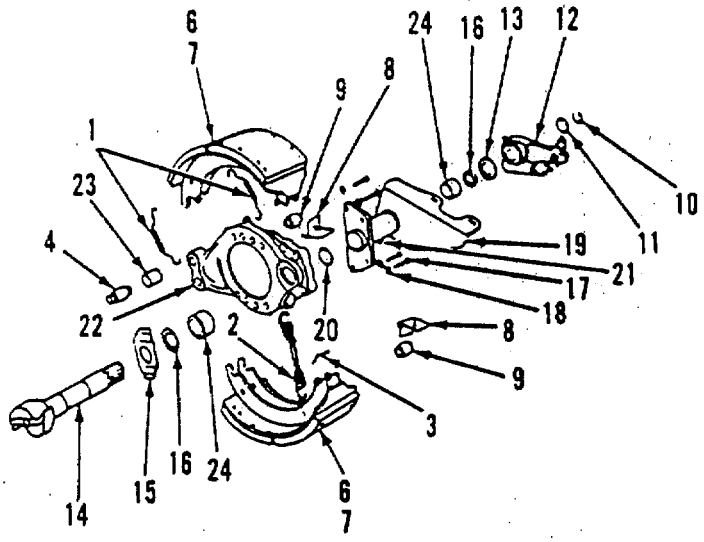


*Figure 181. Right Forward Rear Brake Assembly*

GROUP 0226 BRAKE ASSEMBLY, REAR

FIG. 181 RIGHT FORWARD REAR BRAKE ASSEMBLY

| (1) ITEM NO | (2) SMR CODE | (3) CAGEC | (4) PART NUMBER | (5) DESCRIPTION AND USABLE ON CODES (UOC) | (6) QTY |
|---|---|---|---|---|---|
| | AOOOO | 89346 | 496898C91 | .BRAKE, FWD REAR, RH | 1 |
| 1 | PAOZZ | 89346 | 577655C1 | ..SPRING, SPECIAL | 2 |
| 2 | PAOZZ | 89346 | 492283C1 | ..SPRING, HELICAL, EXTE | 1 |
| 3 | XBOZZ | 89346 | 983622R1 | ..PIN, SPRING | 2 |
| 4 | XBOZZ | 89346 | 577653C1 | ..PIN, ANCHOR | 2 |
| 5 | PAOZZ | 89346 | 594885C91 | ..BRAKE SHOE SET | 2 |
| 6 | XBOZZ | 89346 | 594886C91 | ...LINING, BRAKE | 1 |
| 7 | XBOZZ | 89346 | 262365C1 | ...RIVET | 28 |
| 8 | XBOZZ | 89346 | 577652C1 | ..RETAINER | 2 |
| 9 | XBOZZ | 89346 | 126404R1 | ..ROLLER, SHOE | 2 |
| 10 | PBOZZ | 89346 | 152450R1 | ..RING, RETAINING | 1 |
| 11 | XBOZZ | 89346 | 586796C1 | ..WASHER, FLAT | 1 |
| 12 | PBOZZ | 89346 | 594891C1 | ..ADJUSTER, SLACK, BRAK | 1 |
| 13 | XBOZZ | 89346 | 574062C1 | ..WASHER, FLAT | 1 |
| 14 | XBOZZ | 89346 | 588988C91 | ..CAMSHAFT, BRAKE | 1 |
| 15 | XBOZZ | 89346 | 577654C1 | ..WASHER, FLAT | 1 |
| 16 | PAOZZ | 89346 | 56121R3 | ..SEAL ASSEMBLY | 2 |
| 17 | XBOZZ | 89346 | 77013R1 | ..BOLT, SPECIAL | 4 |
| 18 | XBOZZ | 96906 | MS35338-48 | ..WASHER, LOCK | 4 |
| 19 | XBOZZ | 89346 | 594890C91 | ..BRACKET, CAMSHAFT | 1 |
| 20 | PAOZZ | 89346 | 417488C1 | ..SEAL, FELT | 1 |
| 21 | PAOZZ | 29930 | 109461 | ..FITTING, LUBRICATION | 1 |
| 22 | XBOZZ | 89346 | 594873C91 | ..SPIDER | 1 |
| 23 | XBOZZ | 89346 | 577650C1 | ...BUSHING, PIN | 2 |
| 24 | XBOZZ | 89346 | 122407R1 | ...BUSHING, CAM | |

END OF FIGURE

6 thru 7

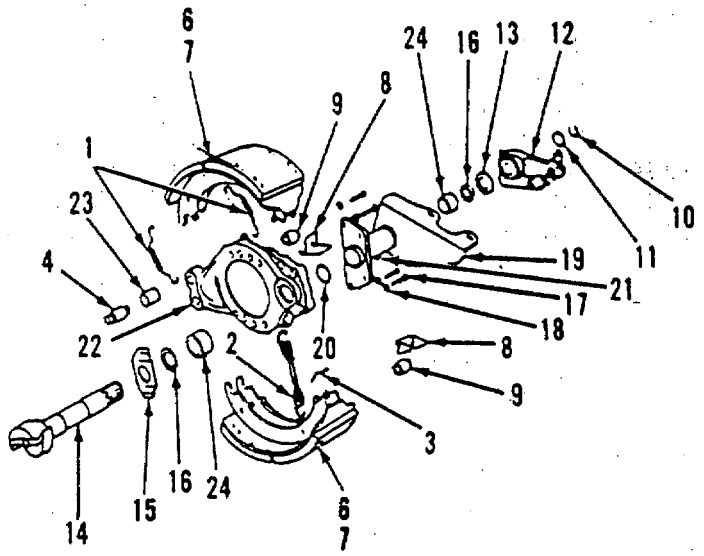


*Figure 182. Left Rear Rear Brake Assembly*

| (1) ITEM NO | (2) SMR CODE | (3) CAGEC | (4) PART NUMBER | (5) DESCRIPTION AND USABLE ON CODES (UOC) | (6) QTY |
|---|---|---|---|---|---|
| | | | | GROUP 0226 BRAKE ASSEMBLY, REAR | |
| | | | | FIG. 182 LEFT REAR REAR BRAKE ASSEMBLY | |
| | AOOOO | 89346 | 496905C91 | .BRAKE, REAR REAR, LH | 1 |
| 1 | PAOZZ | 89346 | 577655C1 | ..SPRING, SPECIAL | 2 |
| 2 | PAOZZ | 89346 | 492283C1 | ..SPRING, HELICAL, EXTE | 1 |
| 3 | XBOZZ | 89346 | 983622R1 | ..PIN, SPRING | 2 |
| 4 | XBOZZ | 89346 | 577653C1 | ..PIN, ANCHOR | 2 |
| 5 | PAOZZ | 89346 | 594885C91 | ..BRAKE SHOE SET | 2 |
| 6 | XBOZZ | 89346 | 594886C91 | ...LINING, BRAKE | 1 |
| 7 | XBOZZ | 89346 | 262365C1 | ...RIVET | 28 |
| 8 | XBOZZ | 89346 | 577652C1 | ..RETAINER | 2 |
| 9 | XBOZZ | 89346 | 126404R1 | ..ROLLER, SHOE | 2 |
| 10 | PBOZZ | 89346 | 152450R1 | ..RING, RETAINING | 1 |
| 11 | XBOZZ | 89346 | 586796C1 | ..WASHER, FLAT | 1 |
| 12 | PBOZZ | 89346 | 594891C1 | ..ADJUSTER, SLACK, BRAK | 1 |
| 13 | XBOZZ | 89346 | 574062C1 | ..WASHER, FLAT | 1 |
| 14 | XBOZZ | 89346 | 588988C91 | ..CAMSHAFT, BRAKE | 1 |
| 15 | XBOZZ | 89346 | 577654C1 | ..WASHER, FLAT | 1 |
| 16 | PAOZZ | 89346 | 56121R3 | ..SEAL ASSEMBLY | 2 |
| 17 | XBOZZ | 89346 | 77013R1 | ..BOLT, SPECIAL | 4 |
| 18 | XBOZZ | 96906 | MS35338-48 | ..WASHER, LOCK | 4 |
| 19 | XBOZZ | 89346 | 588984C91 | ..BRACKET, CAMSHAFT | 1 |
| 20 | PAOZZ | 89346 | 417488C1 | ..SEAL, FELT | 1 |
| 21 | PAOZZ | 29930 | 109461 | ..FITTING, LUBRICATION | 1 |
| 22 | XBOZZ | 89346 | 594877C91 | ..SPIDER, BRAKE | 1 |
| 23 | XBOZZ | 89346 | 577650C1 | ...BUSHING;PIN | 2 |
| 24 | XBOZZ | 89346 | 122407 | ...BUSHING, CAM | 2 |
| | | | | END OF FIGURE | |

5
6 thru 7

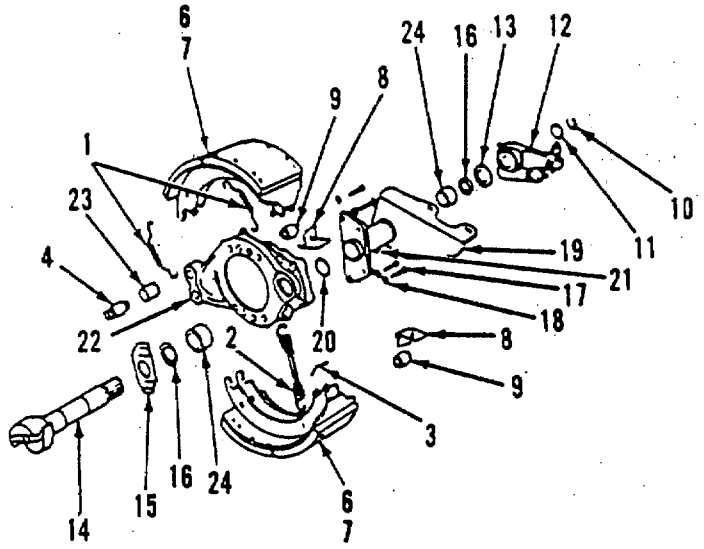


*Figure 183. Right Rear Rear Brake Assembly*

| (1) ITEM NO | (2) SMR CODE | (3) CAGEC | (4) PART NUMBER | (5) DESCRIPTION AND USABLE ON CODES (UOC) | (6) QTY |
|---|---|---|---|---|---|
| | | | | GROUP 0226 BRAKE ASSEMBLY, REAR | |
| | | | | FIG. 183 RIGHT REAR REAR BRAKE ASSEMBLY | |
| | AOOOO | 89346 | 496906C91 | .BRAKE, REAR REAR, RH | 1 |
| 1 | PAOZZ | 89346 | 577655C1 | ..SPRING, SPECIAL | 2 |
| 2 | PAOZZ | 89346 | 492283C1 | ..SPRING, HELICAL, EXTE | 1 |
| 3 | XBOZZ | 89346 | 983622R1 | ..PIN, SPRING | 2 |
| 4 | XBOZZ | 89346 | 577653C1 | ..PIN, ANCHOR | 2 |
| 5 | PAOZZ | 89346 | 594885C91 | ..BRAKE SHOE SET | 2 |
| 6 | XBOZZ | 89346 | 594886C91 | ...LINING, BRAKE | 1 |
| 7 | XBOZZ | 89346 | 262365C1 | ...RIVET | 28 |
| 8 | XBOZZ | 89346 | 577652C1 | ..RETAINER | 2 |
| 9 | XBOZZ | 89346 | 126404R1 | ..ROLLER, SHOE | 2 |
| 10 | PBOZZ | 89346 | 152450R1 | ..RING, RETAINING | 1 |
| 11 | XBOZZ | 89346 | 586796C1 | ..WASHER, FLAT | 1 |
| 12 | PBOZZ | 89346 | 594891C1 | ..ADJUSTER, SLACK, BRAK | 1 |
| 13 | XBOZZ | 89346 | 574062C1 | ..WASHER, FLAT | 1 |
| 14 | XBOZZ | 89346 | 588987C91 | ..CAMSHAFT, BRAKE | 1 |
| 15 | XBOZZ | 89346 | 577654C1 | ..WASHER, FLAT | 1 |
| 16 | PAOZZ | 89346 | 56121R3 | ..SEAL ASSEMBLY | 2 |
| 17 | XBOZZ | 89346 | 77013R1 | ..BOLT, SPECIAL | 4 |
| 18 | XBOZZ | 96906 | MS35338-48 | ..WASHER, LOCK | 4 |
| 19 | XBOZZ | 89346 | 588983C91 | ..BRACKET, CAMSHAFT | 1 |
| 20 | PAOZZ | 89346 | 417488C1 | ..SEAL, FELT | 1 |
| 21 | PAOZZ | 29930 | 109461 | ..FITTING, LUBRICATION | 1 |
| 22 | XBOZZ | 89346 | 594878C91 | ..SPIDER, BRAKE | 1 |
| 23 | XBOZZ | 89346 | 577650C1 | ...BUSHING, PIN | 2 |
| 24 | XBOZZ | 89346 | 122407R1 | ...BUSHING, CAM | 2 |
| | | | | END OF FIGURE | |

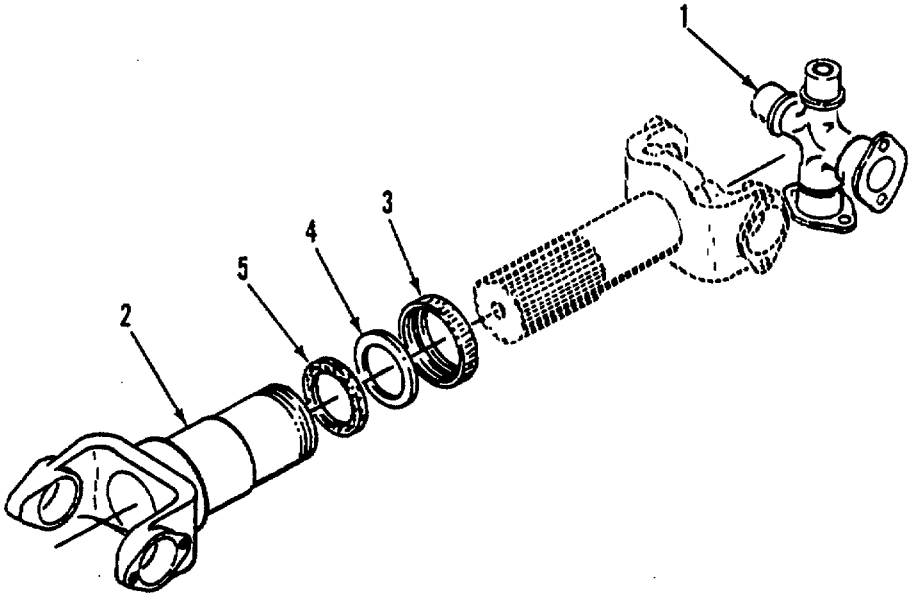


*Figure 184. Driveshaft-Transfer Case to Rear Axle*

| (1) ITEM NO | (2) SMR CODE | (3) CAGEC | (4) PART NUMBER | (5) DESCRIPTION AND USABLE ON CODES (UOC) | (6) QTY |
|---|---|---|---|---|---|
| | | | | GROUP 0227 DRIVESHAFT, REAR AXLE | |
| | | | | FIG. 184 DRIVESHAFT-TRANSFER CASETO REAR AXLE | |
| | PDOOF | 89346 | 260780 3552 | .PROPELLER SHAFT TRANSFER CASE TO REAR AXLE | 1 |
| 1 | PAOZZ | 72447 | 5-279X | ..SPIDER, UNIVERSAL JO | 2 |
| 2 | XBOZZ | 89346 | 363080C91 | ..SLIP YOKE | 1 |
| 3 | KFOZZ | 72447 | 5-14-29 | ...CAP, DUST PART OF KIT P/N D5C | 1 |
| 4 | KFOZZ | 72447 | 5-15-33 | ...WASHER, FLAT PART OF KIT P/N D5C | 1 |
| 5 | KFOZZ | 72447 | 5-16-33 | ...WASHER, NONMETALLIC PART OF KIT P/N D5C | 1 |
| | PAOZZ | 95019 | D5C | ..PARTS KIT, DUST CAP | 1 |
| | | | | CAP, DUST (1) 184-3 | |
| | | | | WASHER, FLAT (1) 184-4 | |
| | | | | WASHER, NONMETALLIC (1) 184-5 | |
| | | | | END OF FIGURE | |

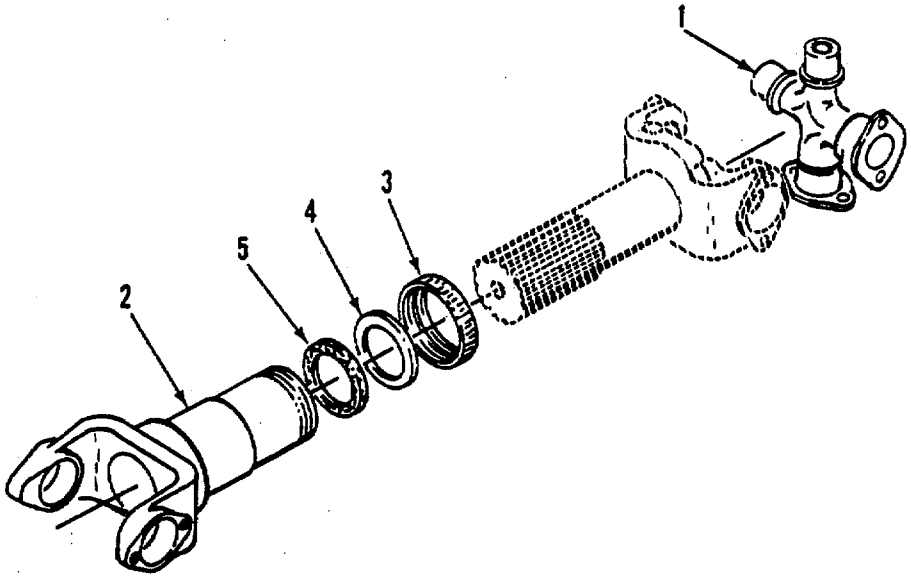


*Figure 185. Driveshaft-Rear Interaxle*

| (1) ITEM NO | (2) SMR CODE | (3) CAGEC | (4) PART NUMBER | (5) DESCRIPTION AND USABLE ON CODES (UOC) | (6) QTY |
|---|---|---|---|---|---|
| | | | | GROUP 0228 DRIVESHAFT, INTERAXLE | |
| | | | | FIG. 185 DRIVESHAFT-REAR INTERAXLE | |
| | PDOOF | 89346 | 2600545179 | .PROPELLER SHAFT INTERAXLE..... | 1 |
| 1 | PAOZZ | 72447 | 5-279X | ..SPIDER, UNIVERSAL JO..... | 2 |
| 2 | XBOZZ | 89346 | 571134C91 | ..SLIP YOKE ..... | 1 |
| 3 | KFOZZ | 72447 | 5-14-29 | ...CAP, DUST PART OF KIT P/N DC ..... | 1 |
| 4 | KFOZZ | 72447 | 5-15-33 | ...WASHER, FLAT PART OF KIT P/N 5C ..... | 1 |
| 5 | KFOZZ | 72447 | 5-16-33 | ...WASHER, NONMETALLIC PART OF KIT ..... P/N D5C..... | 1 |
| | PAOZZ | 95019 | D5C | ..PARTS KIT, DUST CAP ..... | 1 |
| | | | | CAP, DUST (1) 185-3 | |
| | | | | WASHER, FLAT (1) 185-4 | |
| | | | | WASHER, NONMETALLIC (1) 185-5 | |
| | | | | END OF FIGURE | |

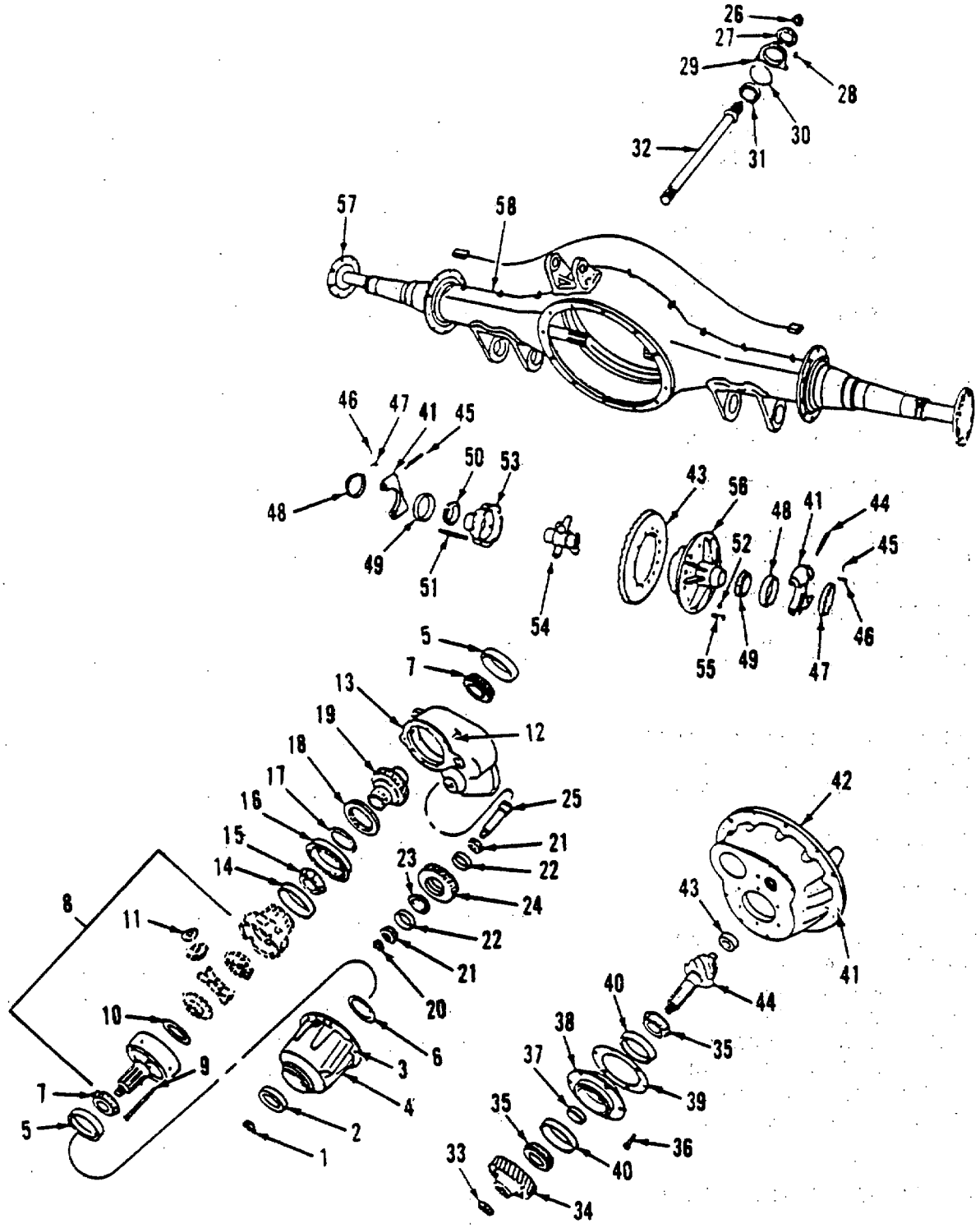


*Figure 186. Forward Rear Axle Assembly*

| (1) ITEM NO | (2) SMR CODE | (3) CAGEC | (4) PART NUMBER | (5) DESCRIPTION AND USABLE ON CODES (UOC) | (6) QTY |
|---|---|---|---|---|---|
| | | | | GROUP 0229 REAR AXLE GROUP | |
| | | | | FIG. 186 FORWARD REAR AXLE ASSEMBLY | |
| | AFFFF | 89346 | 1648900C91 | .AXLE ASSY, FWD REAR | 1 |
| 1 | KFFZZ | 89346 | 578881C1 | ..NUT PART OF KIT P/N 1651263C91 | 1 |
| 2 | KFFZZ | 89346 | 1651279C91 | ..SEAL, OIL PART OF KIT P/N 1651263C91 PART OF KIT P/N 1651523091 | 1 |
| 3 | PAFZZ | 89346 | 583164C1 | ..SCREW, CAP, HEXAGON H | 12 |
| 3 | PAFZZ | 89346 | 583165C1 | ..SCREW, CAP, HEXAGON H | 1 |
| 4 | KFFZZ | 89346 | 481119C2 | ..HOUSING PART OF KIT P/N 1651263C91 | 1 |
| 5 | KFFZZ | 89346 | 630695C1 | ..CUP, BEARING PART OF KIT P/N 1651263C91 PART OF KIT P/N 1651523091 | 2 |
| 6 | KFFZZ | 89346 | 496276C1 | ..SHIM .026 INCH PART OF KIT P/N 1651263C91 | 1 |
| 6 | KFFZZ | 89346 | 496277C1 | ..SHIM .033 INCH PART OF KIT P/N 1651263C91 | 1 |
| 6 | KFFZZ | 89346 | 482040C1 | ..SHIM .040 INCH PART OF KIT P/N 1651263C91 | 1 |
| 6 | PAFZZ | 89346 | 482041C1 | ..SHIM .047 INCH | 1 |
| 6 | PAFZZ | 89346 | 482042C1 | ..SHIM .054 INCH | 1 |
| 6 | PAFZZ | 89346 | 482043C1 | ..SHIM .061 INCH | 1 |
| 6 | PAFZZ | 89346 | 482044C1 | ..SHIM .068 INCH | 1 |
| 6 | PAFZZ | 89346 | 482045C1 | ..SHIM .075 INCH | 1 |
| 7 | KFFZZ | 89346 | 630694C91 | ..CONE, BEARING PART OF KIT P/N 1651263C91 PART OF KIT P/N 1651523091 | 2 |
| 8 | PBFFF | 89346 | 1651264C91 | ..GEAR ASSEMBLY | 1 |
| 9 | PAFZZ | 89346 | 27857R1 | ...SCREW, CAP, HEXAGON H | 1 |
| 10 | KFFZZ | 89346 | 396873C1 | ...RACE, BEARING PART OF KIT P/N 1651523091 PART OF KIT P/N 493205C91 | 1 |
| 10 | KFFZZ | 89346 | 464248C1 | ...BEARING, THRUST PART OF KIT P/N 1651523091 PART OF KIT P/N 493205C91 | 1 |
| 11 | KFFZZ | 89346 | 463413C1 | ...WASHER, THRUST PART OF KIT P/N 493205C91 | 4 |
| 12 | PAFZZ | 89346 | 583166C1 | ..SCREW, CAP, HEXAGONH | 6 |
| 13 | XBFZZ | 89346 | 592535C1 | ..CASE, INTER DIFF | 1 |
| | XBFZZ | 89346 | 586045C1 | ....PLUG, PIPE | 1 |
| | XBFZZ | 89346 | 587212C1 | ...SHAFT, CASE | 1 |
| | XBFZZ | 89346 | 592534C91 | ...CYLINDER, SHIFT | 1 |
| | XBFZZ | 89346 | 378066R1 | ...RING, RETAINING | 1 |
| | XBFZZ | 89346 | 25866R1 | ...PACKING, PREFORMED | 1 |
| 14 | KFFZZ | 89346 | 258452C1 | ..CUP, BEARING PART OF KIT P/N 1651263C91 PART OF KIT P/N 1651523091 | 1 |
| 15 | KFFZZ | 89346 | 258453C91 | ..CONE, BEARING PART OF KIT P/N 1651263C91 PART OF KIT P/N 1651523091 | 1 |
| 16 | KFFZZ | 89346 | ST 3022 | ..BEARING PART OF KIT P/N 1651263C91 PART OF KIT P/N 1651523091 | 1 |

| (1) ITEM NO | (2) SMR CODE | (3) CAGEC | (4) PART NUMBER | (5) DESCRIPTION AND USABLE ON CODES (UOC) | (6) QTY |
|---|---|---|---|---|---|
| 17 | KFFZZ | 89346 | 495024C1 | ..RING, RETAINING PART OF KIT P/N 1651523091 | 1 |
| 18 | XBFZZ | 89346 | 463430C2 | ..COLLAR, CLUTCH | 1 |
| 19 | KFFZZ | 89346 | 481108C1 | ..GEAR PART OF KIT P/N 1651263C91 | 1 |
| 20 | XBFZZ | 89346 | 440300C1 | ..NUT, STOP | 1 |
| 21 | KFFZZ | 89346 | 455387C91 | ..CONE, BEARING PART OF KIT P/N 1651523091 | 2 |
| 22 | KFFZZ | 89346 | 455386C1 | ..CUP, BEARING PART OF KIT P/N 1651523091 | 2 |
| 23 | PAFZZ | 89346 | 1654953C1 | ..SPACER, PLATE 1.632 THICK | 2 |
| 23 | PAFZZ | 89346 | 1654954Cl | ..SPACER, PLATE 1.637 THICK | 2 |
| 23 | PAFZZ | 89346 | 1654955C1 | ..SPACER, PLATE 1.642 THICK | 2 |
| 23 | PAFZZ | 89346 | 1654956C1 | ..SPACER, PLATE 1.647 THICK | 2 |
| 23 | PAFZZ | 89346 | 1654957C1 | ..SPACER, PLATE 1.652 THICK | 2 |
| 23 | PAFZZ | 89346 | 1654958C1 | ..SPACER, PLATE 1.657 THICK | 2 |
| 23 | PAFZZ | 89346 | 1654959C1 | ..SPACER, PLATE 1.662 THICK | 2 |
| 23 | PAFZZ | 89346 | 1654960C1 | ..SPACER, PLATE 1.665 THICK | 2 |
| 24 | PAFZZ | 89346 | 1654949C91 | ..SEAR, HELICAL | 1 |
| 25 | XBFZZ | 89346 | 463420C2 | ..SHAFT, IDLER | 1 |
| 26 | XBFZZ | 89346 | 589339C1 | ..NUT | 1 |
| 27 | KFFZZ | 89346 | 1651280C91 | ..SEAL, OIL PART OF KIT P/N 1651523091 | 1 |
| 28 | XBFZZ | 89346 | 26310R1 | ..SCREW, CAP | 4 |
| 28 | XBFZZ | 96906 | MS35338-46 | ..WASKER, LOCK | 4 |
| 29 | XBFZZ | 89346 | 481811C1 | ..RETAINER, BEARI | 1 |
| 30 | KFFZZ | 89346 | 660433R1 | ..RING, SNAP PART OF KIT P/N 1651523091 | 1 |
| 31 | KFFZZ | 89346 | ST 264 | ..BEARING PART OF KIT P/N 1651523091 | 1 |
| 32 | XBFZZ | 89346 | 464238C2 | ..SHAFT, OUTPUT | 1 |
| 33 | KFFZZ | 89346 | ETN0083799 | ..NUT, CASTELLATED PART OF KIT P/N 1651263C91 | 1 |
| | KFFZZ | 89346 | 19415R1 | ..PIN PART OF KIT P/N 1651263C91 | 1 |
| 34 | XBFZZ | 89346 | 483442C1 | ..GEAR | |
| 35 | KFFZZ | 89346 | 381926C91 | ..CONE, BEARING PART OF KIT P/N 16E1523091 | 1 |
| 36 | XBFZZ | 89346 | 584255C1 | ..BOLT | 8 |
| 37 | PAFZZ | 89346 | 360453C1 | ..SPACER, PLATE .718 THICK | 8 |
| 37 | PAFZZ | 89346 | 360457C1 | ..SPACER, PLATE .722 THICK | 8 |
| 37 | PAFZZ | 89346 | 360461C1 | ..SPACER, PLATE .726 THICK | 8 |
| 37 | PAFZZ | 89346 | 360465C1 | ..SPACER, PLATE .730 THICK | 8 |
| 37 | PAFZZ | 89346 | 360469C1 | ..SPACER, PLATE .734 THICK | 8 |
| 37 | PAFZZ | 89346 | 393975C1 | ..SPACER, PLATE .738 THICK | 8 |
| 37 | PAFZZ | 89346 | 393979C1 | ..SPACER, PLATE .742 THICK | 8 |
| 38 | XBFZZ | 89346 | 482787C91 | ..CAGE, BEARING | 1 |
| 39 | XBFZZ | 89346 | 157566R1 | ..SHIM .010 THICK | 1 |
| 39 | XBFZZ | 89346 | 157567R1 | ..SHIM .030 THICK | 1 |
| 40 | KFFZZ | 89346 | 65071H | ..CUP, TAPERED ROLLER PART OF KIT P/N 1651523091 | 1 |
| 41 | XBFZZ | 89346 | 583158C1 | ..BOLT | 12 |
| | XBFZZ | 96906 | MS35338-50 | ..WASHER LOCK | 12 |
| 42 | XBFZZ | 89346 | 464253C92 | ..CARRIER, DIFF | 1 |
| 43 | KFFZZ | 89346 | 91082R91 | ..SEARING, ROLLER, CYLI PART OF KIT | 1 |

| (1) ITEM NO | (2) SMR CODE | (3) CAGEC | (4) PART NUMBER | (5) DESCRIPTION AND USABLE ON CODES (UOC) | (6) QTY |
|---|---|---|---|---|---|
| | | | | P/N 1651523091 | 1 |
| 44 | KFFZZ | 89346 | 597242C91 | ..GEAR SET PART OF KIT P/N 1651263C91 | 1 |
| 45 | XBFZZ | 89346 | 24895R1 | ..BOLT | 4 |
| | XBFZZ | 89346 | 25712R1 | ..WASHER | 4 |
| 46 | PAFZZ | 96906 | MS24665-491 | ..PIN, COTTER | 2 |
| 47 | PAFZZ | 89346 | 157491R2 | ..WASHER, KEY | 2 |
| 48 | XBFZZ | 89346 | 69208RI | ..ADJUSTER | 2 |
| 49 | KFFZZ | 89346 | ST 2161 | ..CUP, BEARING PART OF KIT P/N 1651523091 | 2 |
| 50 | KFFZZ | 89346 | ST 2162 | ..CONE, BEARING PART OF KIT P/N 1651523091 | 2 |
| 51 | XBFZZ | 89346 | 157493R1 | ..BOLT | 8 |
| 52 | XBFZZ | 89346 | 27293R1 | ..NUT | 8 |
| 53 | KFFZZ | 89346 | 864358R2 | ..CASE PART OF KIT P/N 493205C91 | 1 |
| 54 | XBFZZ | 89346 | 579366C91 | ..DIFFERENTIAL | 1 |
| 55 | XBFZZ | 89346 | 157490R1 | ..RIVET | 12 |
| 56 | KFFZZ | 89346 | 505757C1 | ..CASE, DIFFERENTIAL PART OF KIT P/N 493205C91 | 1 |
| 57 | PBFZZ | 89346 | 571349C2 | ..SHAFT, AXLE, AUTOMOTI | 2 |
| | PAFZZ | 89346 | 895493R2 | ..GASKET | 2 |
| 58 | XBFZZ | 89346 | 595593C1 | ..HOUSING, AXLE | 1 |
| | PBFZZ | 89346 | 1651263C91 | ..PARTS KIT, DRIVING A | 1 |
| | | | | BEARING (1) 186-16 | |
| | | | | CONE, BEARING (2) 186-7 | |
| | | | | CONE, BEARING (1) 186-15 | |
| | | | | CUP, BEARING (2) 186-5 | |
| | | | | CUP, BEARING (1) 186-14 | |
| | | | | GEAR (1) 186-19 | |
| | | | | GEAR SET (1) 186-44 | |
| | | | | HOUSING (1) 186-4 | |
| | | | | NUT (1) 186-1 | |
| | | | | NUT, CASTELLATED (1) 186-33 | |
| | | | | PIN (1) 186- | |
| | | | | SEAL, OIL (1) 186-2 | |
| | | | | SHIM (1) 186-6 | |
| | | | | SHIM (1) 186-6 | |
| | | | | SHIM (1) 186-6 | |
| | PBFZZ | 89346 | 1651523091 | ..PARTS KIT, DRIVING A | 1 |
| | | | | BEARING (1) 186-16 | |
| | | | | BEARING (1) 186-31 | |
| | | | | BEARING, THRUST (1) 186-10 | |
| | | | | BEARING, ROLLER, CYLI (1) 186-43 | |
| | | | | CONE, BEARING (2) 186-7 | |
| | | | | CONE, BEARING (1) 186-15 | |
| | | | | CONE, BEARING (2) 186-21 | |
| | | | | CONE, BEARING (1) 186-35 | |
| | | | | CONE, BEARING (2) 186-50 | |
| | | | | CUP, BEARING (2) 186-5 | |
| | | | | CUP, BEARING (1) 186-14 | |
| | | | | CUP, BEARING (2) 186-22 | |
| | | | | CUP, BEARING (2) 186-49 | |

| (1) ITEM NO | (2) SMR CODE | (3) CAGEC | (4) PART NUMBER | (5) DESCRIPTION AND USABLE ON CODES (UOC) | | (6) QTY |
|---|---|---|---|---|---|---|
| | | | | CUP, TAPERED ROLLER | (1) 186-40 | |
| | | | | RACE, BEARING | (1) 186-10 | |
| | | | | RING, RETAINING | (1) 186-17 | |
| | | | | RING, SNAP | (1) 186-30 | |
| | | | | SEAL, OIL | (1) 186-2 | |
| | | | | SEAL, OIL | (1) 186-27 | |
| | PAFZZ | 89346 | 493205C91 | ..DIFFERENTIAL, STEER | ..... | 1 |
| | | | | BEARING, THRUST | (1) 186-10 | |
| | | | | CASE | (1) 186-53 | |
| | | | | CASE, DIFFERENTIAL | (1) 186-56 | |
| | | | | RACE, BEARING | (1) 186-10 | |
| | | | | WASHER, THRUST | (4) 186-11 | |

END OF FIGURE

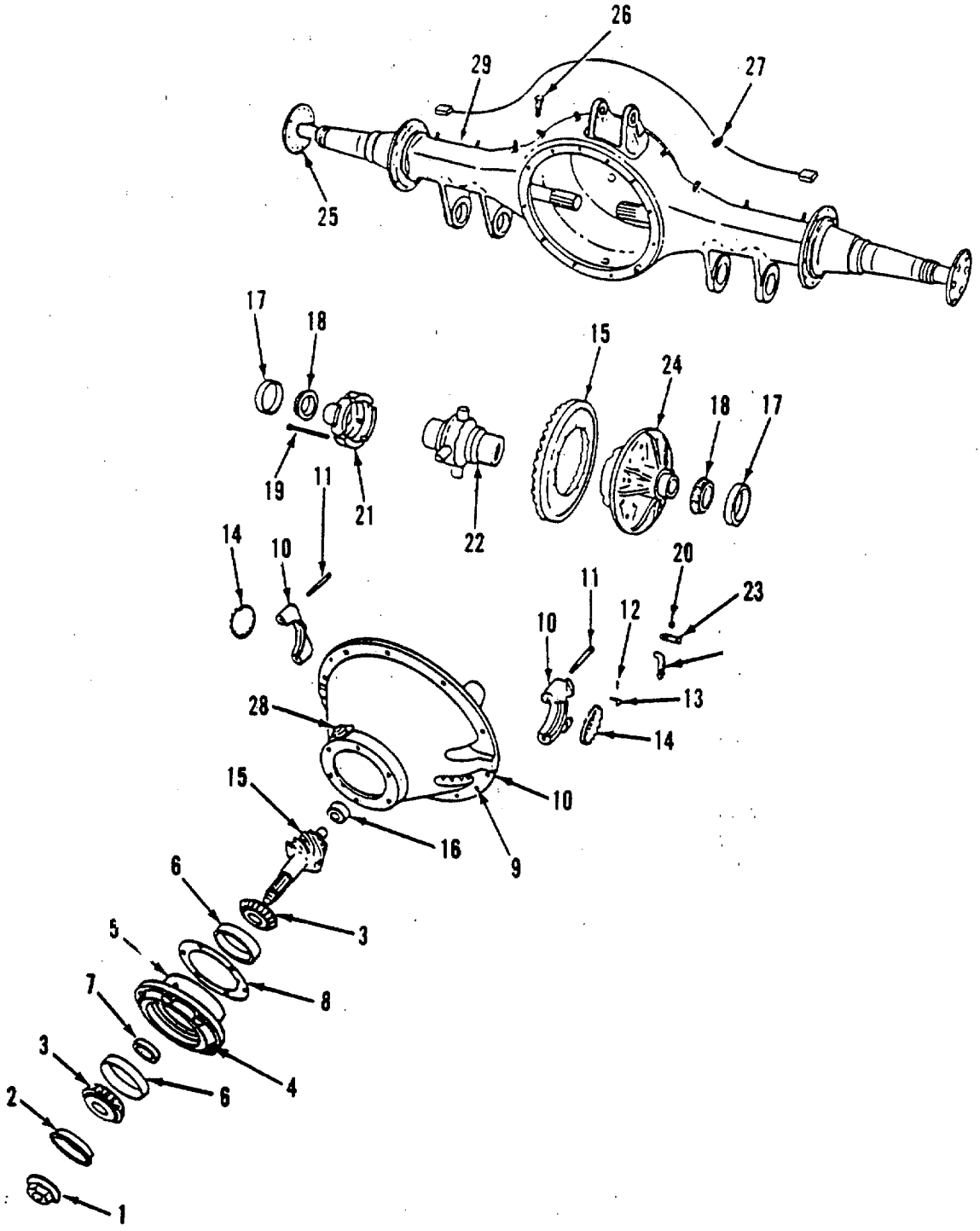


*Figure 187. Rear Rear Axle Assembly*

| (1) ITEM NO | (2) SMR CODE | (3) CAGEC | (4) PART NUMBER | (5) DESCRIPTION AND USABLE ON CODES (UOC) | (6) QTY |
|---|---|---|---|---|---|
| | | | | GROUP 0229 REAR AXLE GROUP | |
| | | | | FIG. 187 REAR REAR AXLE ASSEMBLY | |
| | AFFFF | 89346 | 595203C91 | .AXLE ASSY, REAR REAR | 1 |
| 1 | XBFZZ | 89346 | 578881C1 | ..NUT, HEX LOCK | 1 |
| | XBFZZ | 89346 | 390362R1 | ..WASHER | 1 |
| 2 | KFFZZ | 89346 | 1651281C91 | ..SEAL, OIL PART OF KIT P/N 1651517C91 | 1 |
| 3 | KFFZZ | 89346 | 381926C91 | ..CONE, BEARING PART OF KIT P/N 1651517C91 | 2 |
| 4 | XBFZZ | 89346 | 584255C1 | ..BOLT | 6 |
| 5 | XBFZZ | 89346 | 454719C91 | ..CAGE, BEARING | 1 |
| 6 | KFFZZ | 89346 | 65071H | ..CUP, TAPERED ROLLER PART OF KIT P/N 1651517C91 | 2 |
| 7 | PAFZZ | 89346 | 360453C1 | ..SPACER, PLATE .718 THICK | 1 |
| 7 | PAFZZ | 89346 | 360457C1 | ..SPACER, PLATE .722 THICK | 1 |
| 7 | PAFZZ | 89346 | 360461C1 | ..SPACER, PLATE .726 THICK | 1 |
| 7 | PAFZZ | 89346 | 360465C1 | ..SPACER, PLATE .730 THICK | 1 |
| 7 | PAFZZ | 89346 | 360469C1 | ..SPACER, PLATE .734 THICK | 1 |
| 7 | PAFZZ | 89346 | 393975C1 | ..SPACER, PLATE .738 THICK | 1 |
| 7 | PAFZZ | 89346 | 393979C1 | ..SPACER, PLATE .742 THICK | 1 |
| 8 | XBFZZ | 89346 | 896612R1 | ..SHIM .005 THICK | 1 |
| 8 | XBFZZ | 89346 | 157566R1 | ..SHIM .010 THICK, USED ON SERIAL NOS 672040 THRU 672044 | 1 |
| 8 | XBFZZ | 89346 | 157567R1 | ..SHIM .030 THICK, USED ON SERIAL NOS 672040 THRU 672044 | |
| 9 | XBFZZ | 89346 | 583158C1 | ..BOLT | |
| | XBFZZ | 96906 | MS35338-50 | ..WASHER, LOCK | |
| 10 | XBFZZ | 89346 | 161019R93 | ..CARRIER, DIFF | 1 |
| 11 | XBFZZ | 89346 | 24895R1 | ..BOLT | 4 |
| | XBFZZ | 89346 | 25712R1 | ..WASHER | 4 |
| 12 | PAFZZ | 96906 | MS24665-491 | ..PIN, COTTER | |
| 13 | PAFZZ | 89346 | 157491R2 | ..WASHER, KEY | 2 |
| 14 | XBFZZ | 89346 | 69208R1 | ..ADJUSTER | 2 |
| 15 | XBFZZ | 89346 | 597242C91 | ..GEAR SET | 1 |
| 16 | KFFZZ | 89346 | 91082R91 | ..BEARING, ROLLER, CYLI PART OF KIT P/N 1651517C91 | 1 |
| 17 | KFFZZ | 89346 | ST 2161 | ..CUP, BEARING PART OF KIT P/N 1651517C91 | 2 |
| 18 | KFFZZ | 89346 | ST 2162 | ..CONE, BEARING PART OF KIT P/N 1651517C91 | 2 |
| 19 | KFFZZ | 89346 | 157493R1 | ..BOLT PART OF KIT P/N 493205C91 | 8 |
| 20 | KFFZZ | 89346 | 27293R1 | ..NUT PART OF KIT P/N 493205C91 | 8 |
| 21 | KFFZZ | 89346 | 864358R2 | ..CASE PART OF KIT P/N 493205C91 | 1 |
| 22 | XBFZZ | 89346 | 579365C91 | ..DIFFERENTIAL | 1 |
| 23 | XBFZZ | 89346 | 157490R1 | ..RIVET | 12 |
| 24 | KFFZZ | 89346 | 505757C1 | ..CASE, DIFFERENTIAL PART OF KIT P/N 493205C91 | 1 |
| 25 | PBFZZ | 89346 | 571349C2 | ..SHAFT, AXLE, AUTOMOTI | 2 |
| | PAFZZ | 89346 | 895478R2 | ..GASKET | 2 |
| 26 | PAOZZ | 89346 | 91916R91 | ..BREATHER | 1 |

| (1) ITEM NO | (2) SMR CODE | (3) CAGEC | (4) PART NUMBER | (5) DESCRIPTION AND USABLE ON CODES (UOC) | (6) QTY |
|---|---|---|---|---|---|
| 27 | PAOZZ | 89346 | 586049C1 | ..PLUG, PIPE, MAGNETIC | 1 |
| 28 | XBFZZ | 89346 | 586045C1 | ..PLUG, PIPE | 1 |
| 29 | XBFZZ | 89346 | 595577C1 | ..HOUSING, AXLE | 1 |
| | PAFZZ | 89346 | 493205C91 | ..DIFFERENTIAL, STEERI | 1 |
| | | | | BOLT (8) 187-19 | |
| | | | | CASE (1) 187-21 | |
| | | | | CASE, DIFFERENTIAL (1) 187-24 | |
| | | | | NUT (8) 187-20 | |
| | PAFZZ | 89346 | 1651517C91 | ..PARTS KIT, BEARING R | 1 |
| | | | | BEARING, ROLLER, CYLI (1) 187-16 | |
| | | | | CONE, BEARING (2) 187-3 | |
| | | | | CONE, BEARING (2) 187-18 | |
| | | | | CUP, BEARING (2) 187-17 | |
| | | | | CUP, TAPERED ROLLER (2) 187-6 | |
| | | | | SEAL, OIL (1) 187-2 | |

END OF FIGURE

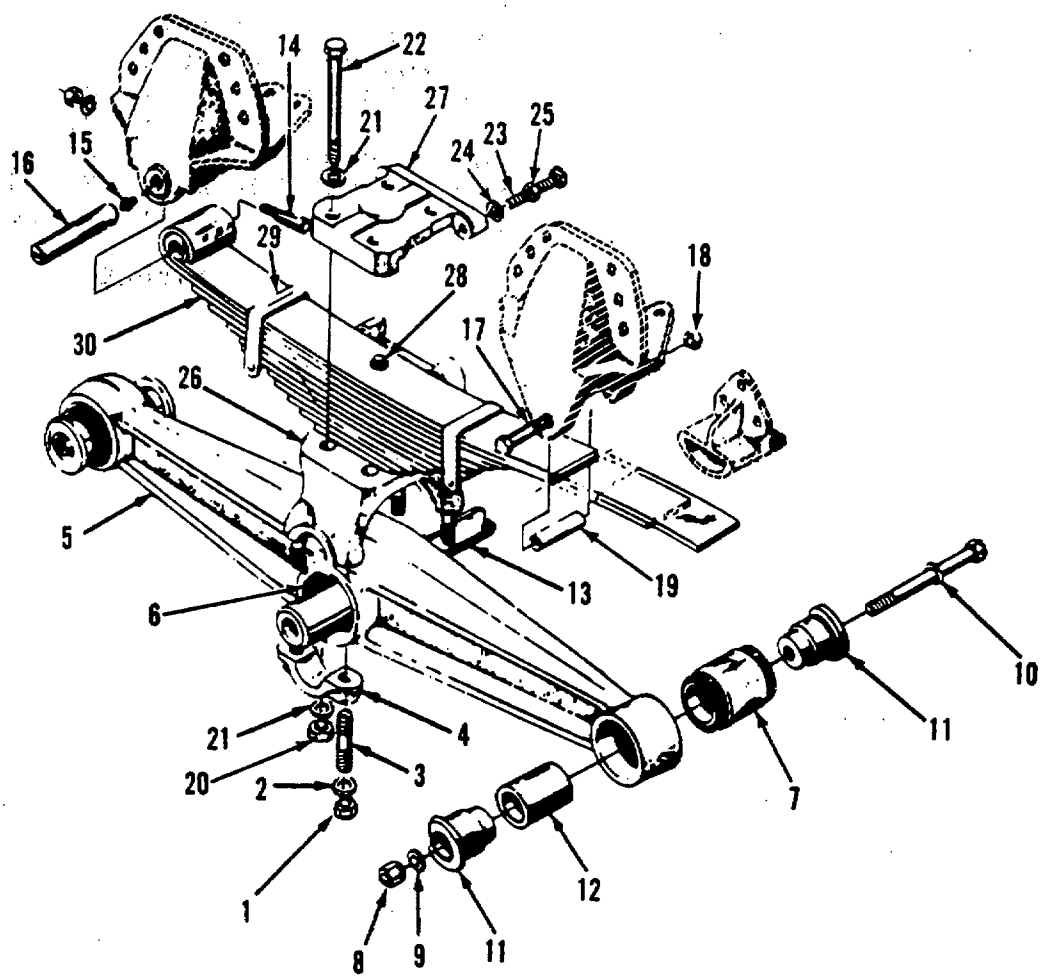


*Figure 188. Rear Suspension (Sheet 1 of 2)*

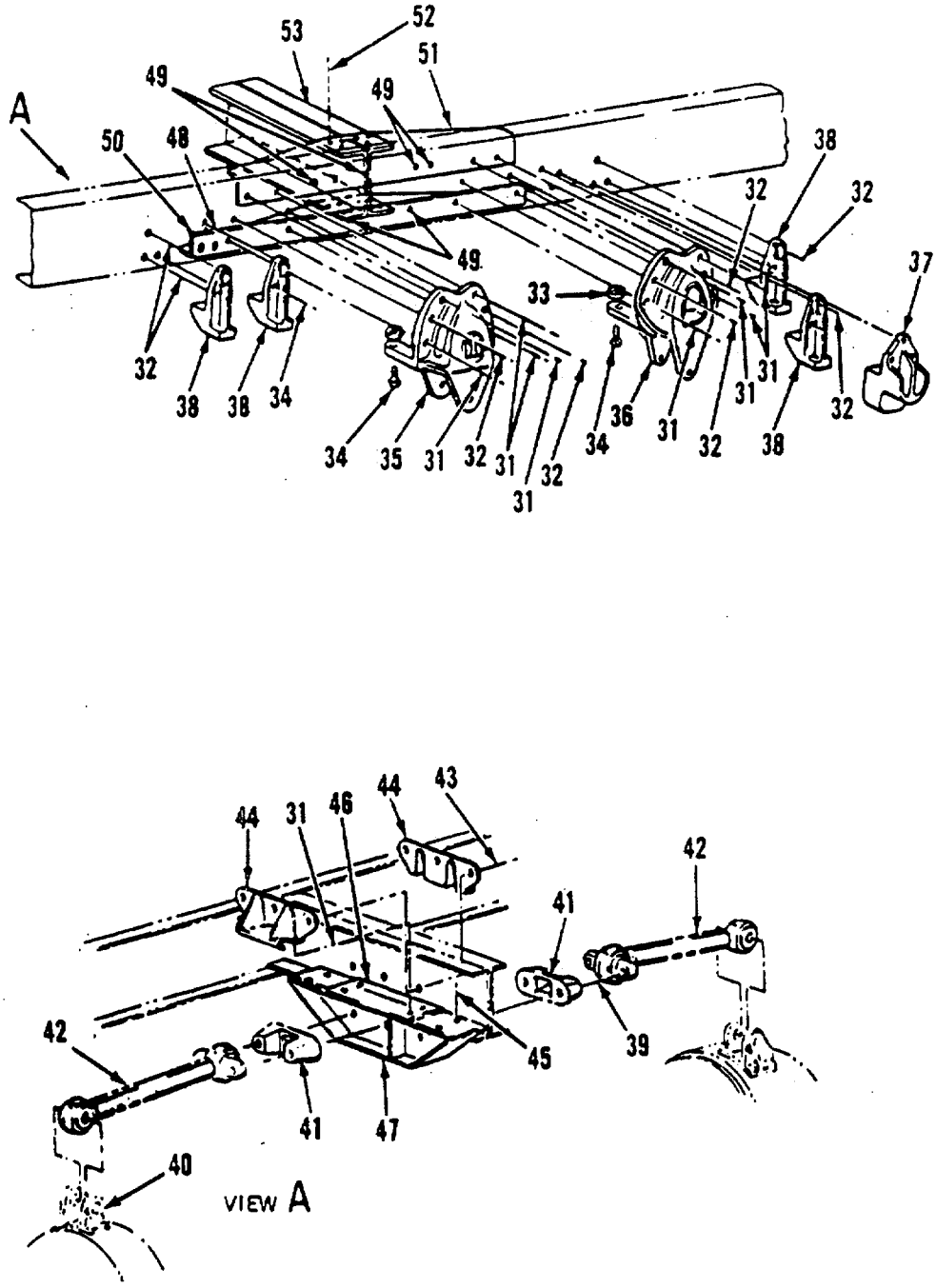


*Figure 188. Rear Suspension (Sheet 2 of 2)*

| (1) ITEM NO | (2) SMR CODE | (3) CAGEC | (4) PART NUMBER | (5) DESCRIPTION AND USABLE ON CODES (UOC) | (6) QTY |
|---|---|---|---|---|---|
| | | | | GROUP 0229 REAR AXLE GROUP | |
| | | | | FIG. 188 REAR SUSPENSION | |
| 1 | XBFZZ | 89346 | 130564R1 | .NUT, HEX | 8 |
| 2 | XBFZZ | 89346 | 332547C1 | .WASHER, FLAT | 8 |
| 3 | XBFZZ | 89346 | 130559R1 | .STUD | 8 |
| 4 | XBFZZ | 89346 | 124891R1 | .CAP, SADDLE | 4 |
| 5 | XBFZZ | 89346 | 470822C91 | .BEAM, EQUALIZER | 2 |
| 6 | KFFZZ | 89346 | 474910C91 | ..BUSHING, CENTER PART OF KIT P/N 43924C91 | 1 |
| 6 | KFFZZ | 89346 | 380336C91 | ..SEAL, BUSHING PART OF KIT P/N 439247C91 | 2 |
| 7 | PAFZZ | 89346 | 441302C92 | ..SPACER, SLEEVE | 2 |
| 8 | KFFZZ | 89346 | 496452C1 | .NUT, HEX LOCK PART OF KIT P/N 496530C91 | 4 |
| 9 | KFFZZ | 89346 | 757816C1 | .WASHER, FLAT PART OF KIT P/N 496530C91 | 8 |
| 10 | KFFZZ | 89346 | 496455C1 | .SCREW, CAP PART OF KIT P/N 496530C91 | 4 |
| 11 | KFFZZ | 89346 | 526000C1 | .ADAPTER, BEAM END PART OF KIT P/N 496530C91 | 8 |
| 12 | KFFZZ | 89346 | 526001C1 | .SPACER PART OF KIT P/N 496530C91 | 4 |
| 13 | XBFZZ | 89346 | 124896R2 | .TUBE, CROSS | 1 |
| 14 | PAFZZ | 89346 | 69104HA | .PIN, STRAIGHT, THREAD | 2 |
| 15 | PAFZZ | 29510 | 109460 | .FITTING, LUBRICATION | 2 |
| 16 | PAFZZ | 89346 | 422232C2 | .PIN, SPRING | 2 |
| 17 | PAFZZ | 89346 | 25296R1 | .SCREW, CAP, HEXAGON H | 2 |
| 18 | PAFZZ | 89346 | 9412230 | .NUT | 2 |
| 19 | PAFZZ | 89346 | 463580R1 | .SPACERSLEEVE | 2 |
| 20 | XBFZZ | 89346 | 359798C1 | .NUT, HEX | 8 |
| 21 | XBFZZ | 89346 | 304645C1 | .WASHER, FLAT | 16 |
| 22 | XBFZZ | 89346 | 310293C1 | .BOLT | 8 |
| 23 | XBFZZ | 89346 | 12436R1 | .SCREWSET | 4 |
| 24 | PBFZZ | 96906 | MS35338-51 | .WASHER, LOCK | 4 |
| 25 | XBFZZ | 89346 | 25529R1 | .NUT, HEX | 4 |
| 26 | XBFZZ | 89346 | 443646C92 | .SADDLE, REAR | 2 |
| 27 | XBFZZ | 89346 | 56677R2 | .PAD, TOP | 2 |
| 28 | XBFZZ | 89346 | 58694R1 | .BOLT, CENTER | 2 |
| | PBFZZ | 89346 | 25527R1 | .NUT, SPECIAL | 2 |
| 29 | XBFZZ | 89346 | 899214R11 | .CLIP, SPRING | 4 |
| 30 | XBFZZ | 89346 | 471347C91 | .SPRING ASSY, REAR | 2 |
| | XBFZZ | 89346 | 471348C91 | ..LEAF, SPRING, NO. 1 | 1 |
| | XBFZZ | 89346 | 471349C1 | ..LEAF, SPRING, NO. 2 | 1 |
| | XBFZZ | 89346 | 471350C1 | ..LEAF, SPRING, NO. 3 | 1 |
| 31 | PAFZZ | 89346 | 414079C1 | .BOLT, MACHINE | 20 |
| 32 | PAFZZ | 89346 | 414078C1 | .BOLT, MACHINE | 20 |
| | PAFZZ | 89346 | 414089C1 | .NUT, PLAIN, EXTENDED | 58 |
| 33 | XBFZZ | 89346 | 468893C2 | .SPACER | 4 |
| 34 | PAFZZ | 88044 | AN101723 | .BOLT, MACHINE | 8 |
| 35 | XBFZZ | 89346 | 469825C1 | .BRACKET, SPRING | 2 |
| 36 | XBFZZ | 89346 | 469785C3 | .BRACKET, SPRING | 2 |
| 37 | XBFZZ | 89346 | 493507C1 | .STOP, AXLE | 2 |

| (1) ITEM NO | (2) SMR CODE | (3) CAGEC | (4) PART NUMBER | (5) DESCRIPTION AND USABLE ON CODES (UOC) | (6) QTY |
|---|---|---|---|---|---|
| 38 | XBFZZ | 89346 | 468894C1 | .STOP, AXLE | 4 |
| 39 | XBFZZ | 89346 | 25360R1 | .BOLT | 2 |
| | XBFZZ | 89346 | 9413983 | .NUT, HEX LOCK | 2 |
| | XBFZZ | 89346 | 388418C1 | .WASHER, SPECIAL | 2 |
| 40 | PAFZZ | 89346 | 124755R1 | .STUD | 2 |
| 41 | XBFZZ | 89346 | 384190C2 | .BRACKET | 2 |
| 42 | PAFZZ | 89346 | 583841C91 | .TORQUE ROD, TANDEM A | 1 |
| 43 | PAFZA | 80020 | 87751-69 | .BOLT, MACHINE | 3 |
| | PAFZZ | 89346 | 1675448C1 | .NUT, SELF-LOCKING, EX | 3 |
| 44 | XBFZZ | 89346 | 425966C1 | .CLAMP, SUPPORT | 2 |
| 45 | PAFZZ | 89346 | 414053C1 | .BOLT, MACHINE | 4 |
| | PAFZZ | 89346 | 414087C1 | .NUT, DIFFERENTIAL | 4 |
| 46 | XBFZZ | 89346 | 492508C1 | .BAR, SPACER | 1 |
| 47 | XBFZZ | 89346 | 492506C1 | .SUPPORT, BRACKET | 1 |
| 48 | PAFZA | 80020 | J87882-31 | .BOLT, MACHINE | 8 |
| 49 | PAFZZ | 89346 | 414076C1 | .BOLT, MACHINE | 14 |
| 50 | XBFZZ | 89346 | 468904C3 | .GUSSET, LH | 1 |
| 50 | XBFZZ | 89346 | 468905C3 | .GUSSET , RH | 1 |
| 51 | XBFZZ | 89346 | 468900C2 | .GUSSET, LH | 1 |
| 51 | XBFZZ | 89346 | 468901C2 | .GUSSET, RH | 1 |
| 52 | XBFZZ | 89346 | 12015R1 | .RIVET | 12 |
| 53 | XBFZZ | 89346 | 468899C1 | .CROSSMEMBER, FRONT | 1 |
| 53 | XBFZZ | 89346 | 416744C3 | .CROSSMEMBER, REAR | 1 |
| | PAFZZ | 89346 | 496530C91 | .PARTS KIT, AXLE HOUS | 1 |
| | | | | ADAPTER, BEAM END (8) 188-11 | |
| | | | | NUT, HEX LOCK (4) 188-8 | |
| | | | | SCREW, CAP (4) 188-10 | |
| | | | | SPACER (4) 188-12 | |
| | | | | WASHER, FLAT (8) 188-9 | |
| PAFZZ | 89346 | 439247C91 | | .BUSHING | 1I |
| | | | | BUSHING, CENTER (1) 188-6 | |
| | | | | SEAL, BUSHING (2) 188-6 | |

END OF FIGURE

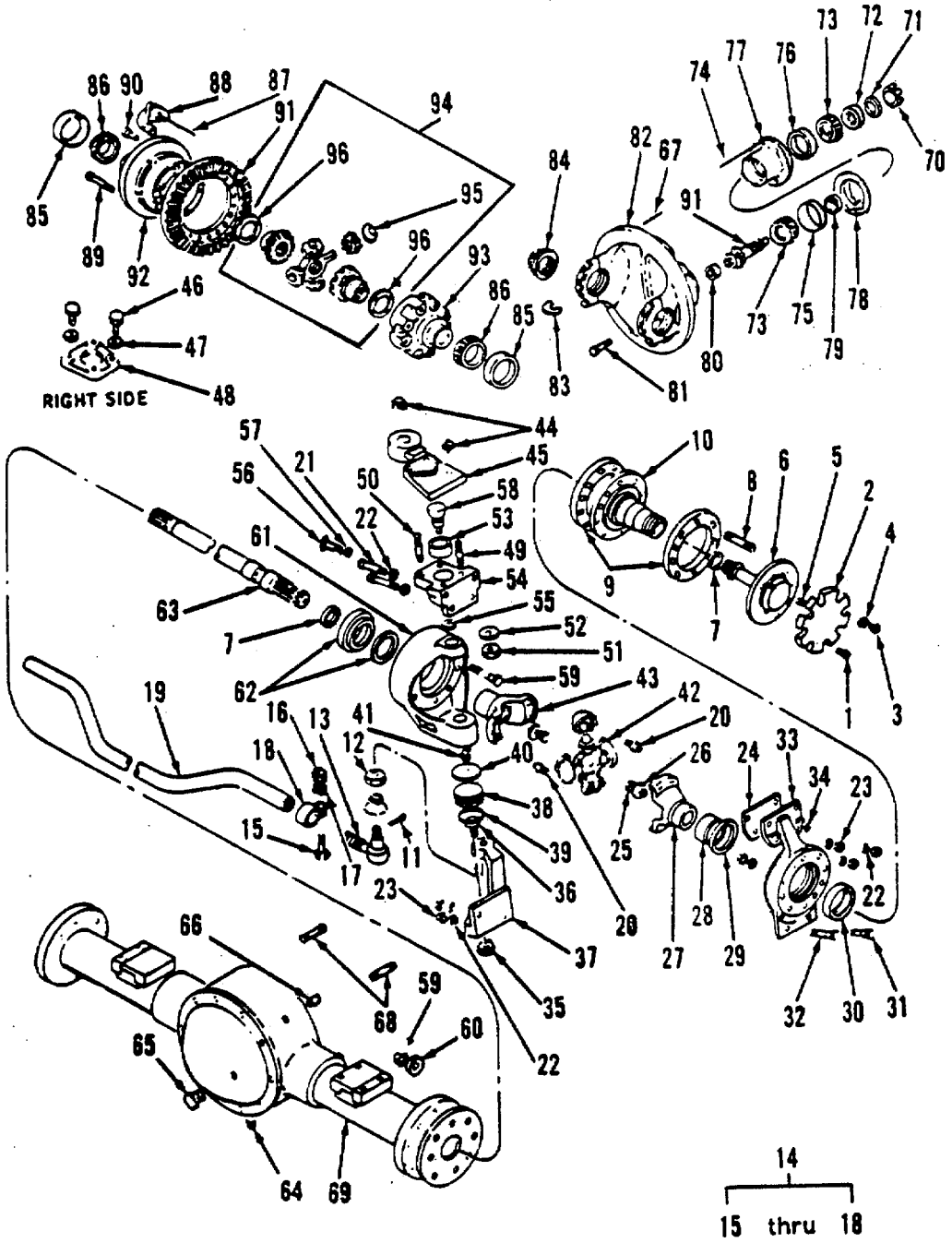


*Figure 189. Front Axle Assembly*

| (1) ITEM NO | (2) SMR CODE | (3) CAGEC | (4) PART NUMBER | (5) DESCRIPTION AND USABLE ON CODES (UOC) | (6) QTY |
|---|---|---|---|---|---|
| | | | | GROUP 0230 FRONT AXLE ASSEMBLY | |
| | | | | FIG. 189 FRONT AXLE ASSEMBLY | |
| | AFFFF | 89346 | 584251C91 | .AXLE ASSY, FRONT | 1 |
| 1 | PAFZZ | 89346 | 582550C1 | ..SCREW, CAP, HEXAGON H | 4 |
| 2 | PAFZZ | 89346 | 582567C1 | ..CAP, HUB | 2 |
| 3 | PAFZZ | 89346 | 582580C1 | ..NUT, PLAIN, HEXAGON | 16 |
| 4 | PAFZZ | 89346 | 583284C1 | ..WASHER, LOCK | 16 |
| 5 | PAFZZ | 89346 | 582590C1 | ..PLUG, PIPE | 1 |
| 6 | PBFZZ | 89346 | 582589C1 | ..SHAFT, AXLE, AUTOMOTI | 2 |
| 7 | XBFZZ | 89346 | 582588C1 | ..RING | 4 |
| 8 | XBFZZ | 89346 | 582597C1 | ..STUD | 16 |
| 9 | XBFZZ | 89346 | 474517C2 | ..GASKET | 4 |
| 10 | XBFZZ | 89346 | 582595C1 | ..SPINDLE, WHEEL | 2 |
| 11 | PAFZZ | 96906 | MS24665-495 | ..PIN, COTTER | 2 |
| 12 | PAFZZ | 96906 | MS35692-69 | ..NUT, PLAIN, SLOTTED, H | 2 |
| 13 | PAOZZ | 89346 | 110362R92 | ..TIE ROD END, STEERIN | 1 |
| 13 | PAFZZ | 89346 | 110363R92 | ..TIE ROD END, STEERIN | 1 |
| 14 | PAFZZ | 89346 | 582543C1 | ..CLAMP, LOOP | 2 |
| 15 | XBFZZ | 89346 | 583296C1 | ...BOLT | 1 |
| 16 | XBFZZ | 2L563 | 688265 | ...NUT, HEX LOCK | 1 |
| 17 | XBFZZ | 2L563 | 927276 | ...WASHER, LOCK | 1 |
| 18 | XBFZZ | 2L563 | 255446 | ...CLAMP | 1 |
| 19 | PBFZZ | 89346 | 1671201C1 | ..TIE ROD, STEERING | 1 |
| 20 | PBFZZ | 89346 | 582583C1 | ..BOLT, HEAD | 16 |
| 21 | XBFZZ | 89346 | 582548C1 | ..BOLT, SHORT | 4 |
| 21 | XBFZZ | 89346 | 582549C1 | ..BOLT, LONG | 4 |
| 22 | XBFZZ | 89346 | 582575C1 | ..NUT, HEX | 16 |
| 23 | XBFZZ | 89346 | 583287C1 | ..WASHER | 14 |
| 24 | PAFZZ | 89346 | 583279C1 | ..SHIM | 2 |
| 25 | XBFZZ | 89346 | 582545C1 | ..BOLT, YOKE | 4 |
| 26 | XBFZZ | 89346 | 583285C1 | ..WASHER, SEALING | 4 |
| 26 | XBFZZ | 89346 | 583292C1 | ..WASHER, RETAINING | 4 |
| 27 | XBFZZ | 89346 | 583299C91 | ..YOKE, OUTER | 2 |
| 28 | PAFZZ | 89346 | 582586C1 | ..CUP, TAPERED ROLLER | 1 |
| 29 | PAFZZ | 21292 | 732333 | ..SEAL, PLAIN ENCASED | 4 |
| 30 | PAFZZ | 89346 | 413923C91 | ..BEARING, ROLLER, CYL | 4 |
| 31 | XBFZZ | 89346 | 582598C1 | ..STUD | 4 |
| 32 | XBFZZ | 89346 | 582599C1 | ..STUD | 4 |
| 33 | XBFZZ | 89346 | 583294C1 | ..YOKE, SPINDLE | 2 |
| 34 | PAFZZ | 89346 | 583282C1 | ..VENT, SPINDLE | 2 |
| 35 | XBFZZ | 89346 | 582578C1 | ..NUT | 2 |
| 36 | XBFZZ | 89346 | 582533C1 | ..BALL STUD | 2 |
| 37 | XBFZZ | 89346 | 582552C1 | ..BRACKET, LH | 1 |
| 37 | XBFZZ | 89346 | 582553C1 | ..BRACKET, RH | 1 |
| 38 | XBFZZ | 89346 | 416187C1 | ..BEARING, TRUNNION | 2 |
| 39 | XBFZZ | 89346 | 582569C1 | ..PACKING, PREFORMED | 2 |
| 40 | XBFZZ | 89346 | 583280C1 | ..PLATE, BEARING | 2 |
| 41 | PAFZZ | 96906 | MS15003-4 | ..FITTING, LUBRICATION LOWER | 2 |
| 41 | PAFZZ | 89346 | 582557C1 | ..FITTING, LUBRICATION UPPER | 2 |
| 42 | PAFZZ | 89346 | 582556091 | ..YOKE, UNIVERSAL JOIN | 2 |

| (1) ITEM NO | (2) SMR CODE | (3) CAGEC | (4) PART NUMBER | (5) DESCRIPTION AND USABLE ON CODES (UOC) | (6) QTY |
|---|---|---|---|---|---|
| 43 | XBFZZ | 89346 | 583293C91 | ..YOKE, INNER | 2 |
| 44 | XBFZZ | 89346 | 582573C1 | ..NUT | 4 |
| 45 | XBFZZ | 89346 | 582555C1 | ..ARM STEE RING, LH | 1 |
| 46 | XBFZZ | 89346 | 582547C1 | ..BOLT | 4 |
| 47 | XBFZZ | 89346 | 583286C1 | ..WASHER, LOCK | 4 |
| 48 | XBFZZ | 89346 | 582542C1 | ..CAP, KINGPIN, RH | 1 |
| 49 | XBFZZ | 89346 | 582601C1 | ..STUD | 2 |
| 50 | XBFZZ | 89346 | 582600C1 | ..STUD | 2 |
| 51 | XBFZZ | 89346 | 582572C1 | ..NUT | 2 |
| 52 | XBFZZ | 89346 | 583289C1 | ..WASHER | 2 |
| | XBFZZ | 89346 | 582534C1 | ..BALL STUD | 2 |
| 53 | XBFZZ | 89346 | 582540C1 | ..BEARING | 2 |
| 54 | XBFZZ | 89346 | 582554C1 | ..BRACKET | 2 |
| 55 | PAFZZ | 89346 | 582568C1 | ..PACKING, PREFORMED | 2 |
| 56 | XBFZZ | 89346 | 582551C1 | ..BOLT, STOP | 2 |
| 57 | XBFZZ | 89346 | 95572HA | ..NUT | 2 |
| 58 | XBFZZ | 89346 | 582604C1 | ..STUD | 16 |
| 59 | XBFZZ | 89346 | 582576C1 | ..NUT | 16 |
| 60 | XBFZZ | 89346 | 583291C1 | ..WASHER | 16 |
| 61 | XBFZZ | 89346 | 583295C1 | ..YOKE | 2 |
| 62 | PAFZZ | 89346 | 582584C91 | ..SEAL, PLAIN | 2 |
| 63 | PBFZZ | 89346 | 590147C1 | ..SHAFT, AXLE, AUTOMOTI | 1 |
| 63 | PBFZZ | 89346 | 590148C1 | ..SHAFT, AXLE, AUTOMOTI | 1 |
| 64 | PAOZZ | 89346 | 582591C1 | ..PLUG, PIPE, MAGNETIC | 1 |
| 65 | PAOZZ | 89346 | 582592C1 | ..MANIFOLD, HYDRAULIC | 1 |
| 66 | PAOZZ | 89346 | 968936R91 | ..BREATHER | 1 |
| 67 | XBFZZ | 89346 | 70427R1 | ..SCREW, CAP | 6 |
| 67 | XBFZZ | 89346 | 24852R1 | ..SCREW, CAP | 2 |
| | PBFZZ | 96906 | MS35338-47 | ..WASHER, LOCK | 8 |
| 68 | XBFZZ | 89346 | 582596C1 | ..STUD | 2 |
| 69 | XAFZZ | 89346 | 582563C1 | ..HOUSING, AXLE | 1 |
| 70 | XBFZZ | 89346 | 117804H | ..NUT | 1 |
| 71 | XBFZZ | 89346 | 54557H | ..WASHER | 1 |
| 72 | KFFZZ | 89346 | 454755C1 | ..SEAL, OIL PART OF KIT P/N 1651515C91 | 1 |
| 73 | KFFZZ | 89346 | FHPM903249 | ..CONE, BEARING PART OF KIT P/N 1651515C91 | 2 |
| 74 | XBFZZ | 89346 | 584255C1 | ..BOLT | 6 |
| 75 | XBFZZ | 89346 | 138498 | ..WASHER, LOCK | 6 |
| 76 | KFFZZ | 89346 | FPHM903210 | ..CUP, BEARING PART OF KIT P/N 1651515C91 | 2 |
| 77 | XBFZZ | 89346 | 454711C91 | ..CAGE, BEARING | 1 |
| 78 | PAFZZ | 89346 | 683264R1 | ..SHIM .005 INCH | 1 |
| 78 | PAFZA | 89346 | 52748HA | ..SHIM .010 INCH | 1 |
| 78 | PAFZZ | 89346 | 52749HA | ..SHIM .030 INCH | 1 |
| 79 | PAFZZ | 89346 | 49413HA | ..SPACER RING .519 THICK | 1 |
| 79 | PAFZZ | 89346 | 49415HA | ..SPACER, PLATE .525 THICK | 1 |
| 79 | PAFZZ | 92679 | 49417HA | ..SPACER, PINION BEARI .531 THICK | 1 |
| 79 | XDFZZ | 89346 | 49419HA | ..SPACER, PINION BEARI .537 THICK | 1 |
| 79 | XDFZZ | 89346 | 49421HA | ..SPACER, PINION BEARI .543 THICK | 1 |
| 80 | PAFZZ | 89346 | 69023R92 | ..BEARING, ROLLER, CYLI | 1 |
| 81 | XBFZZ | 89346 | 69018R1 | ..BOLT, CAP | 4 |

| (1) ITEM NO | (2) SMR CODE | (3) CAGEC | (4) PART NUMBER | (5) DESCRIPTION AND USABLE ON CODES (UOC) | (6) QTY |
|---|---|---|---|---|---|
| 82 | XBFZZ | 89346 | 69016R93 | ..CARRIER, DIFFERENTIA | 1 |
| | PAFZZ | 96906 | MS24665-491 | ..PIN, COTTER | 2 |
| 83 | PAFZZ | 89346 | ETN0090186 | ..LOCK, FLUSH | 2 |
| 84 | XBFZZ | 89346 | 54528HA | ..ADJUSTER | 2 |
| 85 | KFFZZ | 89346 | FP3925 | ..CUP, BEARING PART OF KIT P/N 1651515C91 | 2 |
| 86 | KFFZZ | 89346 | FP3984 | ..CONE, BEARING PART OF KIT P/N 1651515C91 | 2 2 |
| 87 | XBFZZ | 89346 | 25752R1 | ..SCREW, CAP | 2 |
| | PBFZZ | 96906 | MS35338-44 | ..WASHER, LOCK | 2 |
| 88 | XBFZZ | 89346 | 83420R91 | ..SCOOP, OIL | 1 |
| 89 | KFFZZ | 89346 | 25293R91 | ..SCREW, CAP PART OF KIT P/N 493202C91 | 8 |
| | KFFZZ | 89346 | 9412230 | ..NUT PART OF KIT P/N 493202C91 | 8 |
| 90 | XBFZZ | 89346 | 69017R1 | ..RIVET | 4 |
| 91 | XBFZZ | 89346 | 578793C91 | ..GEAR SET | 1 |
| 92 | KFFZZ | 89346 | 436833C2 | ..CASE HALF PART OF KIT P/N 493202C91 | 1 |
| 93 | KFFZZ | 89346 | 436832C2 | ..CASE HALF PART OF KIT P/N 493202C91 | 1 |
| 94 | PAFZZ | 89346 | 1651273C91 | ..PARTS KIT, DRIVING A | 1 |
| 95 | XBFZZ | 89346 | 88015H | ...WASHER, THRUST | 4 |
| 96 | XBFZZ | 89346 | 86233H | ...WASH ER, THRUST | 2 |
| | PAOZZ | 89346 | 1651515C91 | ..PARTS KIT, BEARING R | 1 |
| | | | | CONE, BEARING (2) 189-73<br>CONE, BEARING (2) 189-86<br>CUP, BEARING (2) 189-76<br>CUP, BEARING (2) 189-85<br>SEAL, OIL (1) 189-72 | |
| | PAFZZ | 89346 | 493202C91 | CASE, DIFFUSER, TURBI | 1 |
| | | | | CASE HALF (1) 189-92<br>CASE HALF (1) 189-93<br>NUT (8) 189-<br>SCREW, CAP (8) 189-89 | |

END OF FIGURE

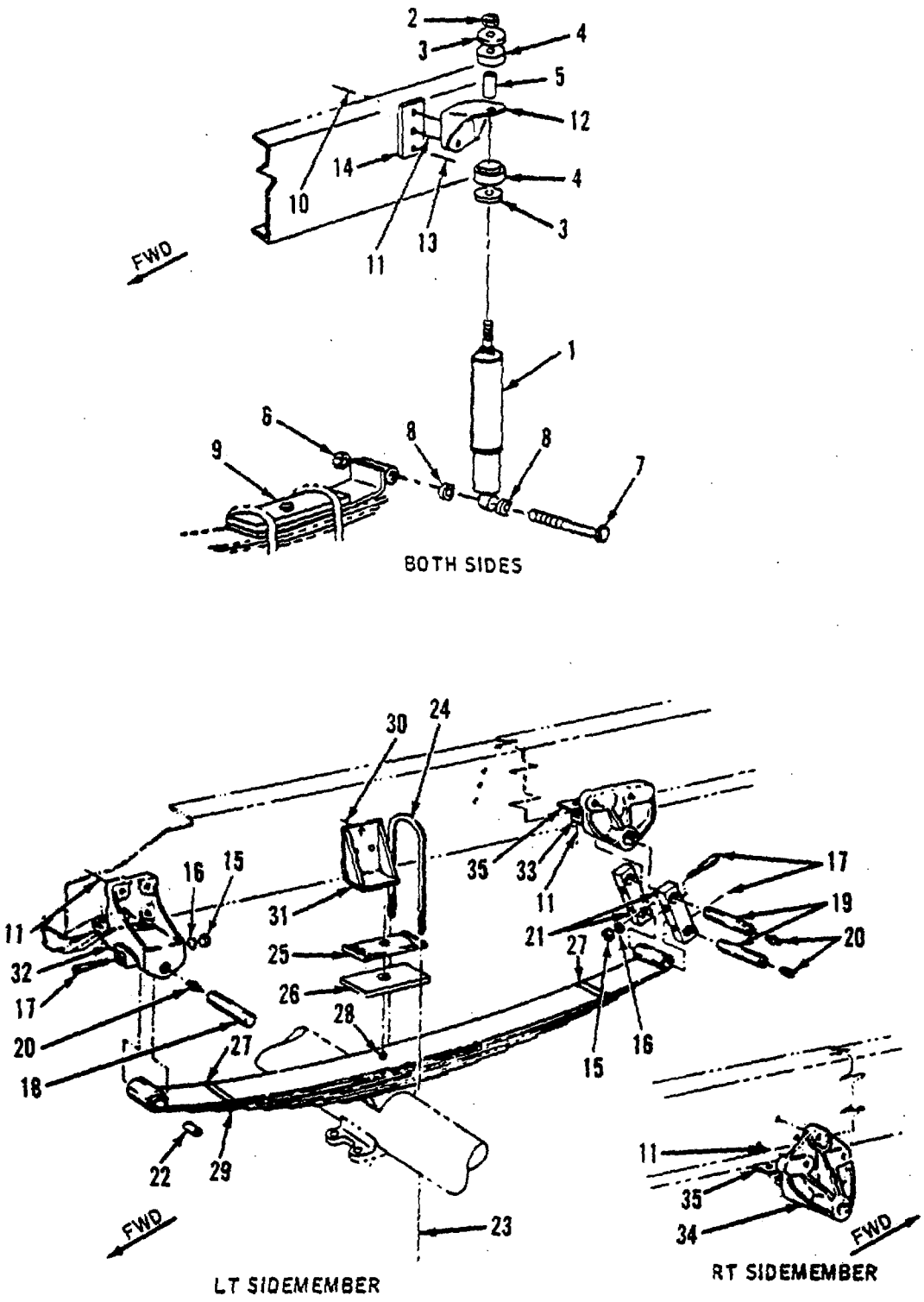


*Figure 190. Front Springs and Shocks*

| (1) ITEM NO | (2) SMR CODE | (3) CAGEC | (4) PART NUMBER | (5) DESCRIPTION AND USABLE ON CODES (UOC) | (6) QTY |
|---|---|---|---|---|---|
| | | | | GROUP 0230 FRONT AXLE ASSEMBLY | |
| | | | | FIG. 190 FRONT SPRINGS AND SHOCKS | |
| 1 | PAOZZ | 89346 | 506911C91 | .SHOCK ABSORBER, DIRE | 2 |
| 2 | PBOZZ | 89346 | 414087C1 | ..NUT, DIFFERENTIAL | 1 |
| 3 | XBOZZ | 89346 | 533388C1 | ..WASHER, FLAT | 2 |
| 4 | XBOZZ | 89346 | 472368C1 | ..BUSHING | 2 |
| 5 | XBOZZ | 89346 | 617605R1 | ..SPACER | 1 |
| 6 | PAOZZ | 29510 | 9412231 | .NUT | 2 |
| 7 | PAOZZ | 89346 | 25680R1 | .SCREW, CAP, HEXAGON H | 2 |
| 8 | PAOZZ | 89346 | 25711R1 | .WASHER, FLAT | 4 |
| 9 | XBFZZ | 89346 | 539907C2 | .BRACKET | 2 |
| 10 | PBFZZ | 89346 | 9412230 | .NUT | 8 |
| 10 | PBFZZ | 89346 | 414087C1 | .NUT, DIFFERENTIAL | 25 |
| 11 | XBFZZ | 89346 | 414054C1 | .BOLT, FLANGE HEX | 23 |
| 11 | XBFZZ | 89346 | 431309C1 | .SCREW, FL HD | 2 |
| 12 | XBFZZ | 89346 | 471876C1 | .BRACKET | 2 |
| 13 | PBFZZ | 89346 | 414053C1 | .BOLT, MACHINE | 2 |
| 14 | XBFZZ | 89346 | 487703C1 | .PLATE, SPACER | 2 |
| 15 | PBFZZ | 89346 | 9413979 | .NUT | 10 |
| 16 | PBFZZ | 89346 | 25709R1 | .WASHER, FLAT | 10 |
| 17 | XBFZZ | 89346 | 441246C1 | .KEY, DRAW | 10 |
| 18 | XBFZZ | 89346 | 1648111C1 | .PIN, STRAIGHT | 2 |
| 19 | XBFZZ | 89346 | 1648112C1 | .PIN, STRAIGHT | 4 |
| 20 | PAOZZ | 29930 | 109461 | .FITTING, LUBRICATION | 6 |
| 21 | XBFZZ | 89346 | 468699C1 | .SHACKLE, SPRING | 2 |
| 22 | XBFZZ | 89346 | 472479C1 | .BUSHING | 4 |
| 23 | XBFZZ | 89346 | 416743C1 | .NUT, FLANGE HEX | 8 |
| 24 | XBFZZ | 89346 | 465914C1 | .U-BOLT | 4 |
| 25 | XBFZZ | 89346 | 539519C1 | .SEAT | 2 |
| 26 | XBFZZ | 89346 | 539494C2 | .SPACER | 2 |
| 27 | XBFZZ | 89346 | 899209R11 | .CLIP, SPRING | 4 |
| 28 | XBFZZ | 89346 | 268223C1 | .BOLT, CENTER | 2 |
| | XBFZZ | 89346 | 273896 | .NUT | 2 |
| 29 | XBFZZ | 89346 | 539559C91 | .SPRINGFRONT | 2 |
| | XBFZZ | 89346 | 539560C1 | ..LEAF, SPRING NO. 1 | 1 |
| | XBFZZ | 89346 | 539561C1 | ..LEAF, SPRING NO. 2 | 1 |
| | XBFZZ | 89346 | 539562C | ..LEAF, SPRING NO. 3 | 1 |
| 30 | XBFZZ | 89346 | 24861R1 | .SCREW, CAP | 6 |
| 31 | XBFZZ | 89346 | 539460R1 | .STOP, AXLE, LH | 1 |
| 31 | XBFZZ | 89346 | 539899C1 | .STO P, AXLE, RH | 1 |
| 32 | XBFZZ | 89346 | 484082C1 | .BRACKET, SPRING, LH | 1 |
| 32 | XBFZZ | 89346 | 484084C1 | .BRACKET, SPRING, RH | 1 |
| 33 | XBFZZ | 89346 | 484086C91 | .BRACKET, SPRING, LH | 1 |
| 34 | XBFZZ | 89346 | 484090C91 | .BRACKET, SPRING, RH | 1 |
| 35 | XBFZZ | 89346 | 495873C1 | .SPACER | 2 |

.

END OF FIGURE

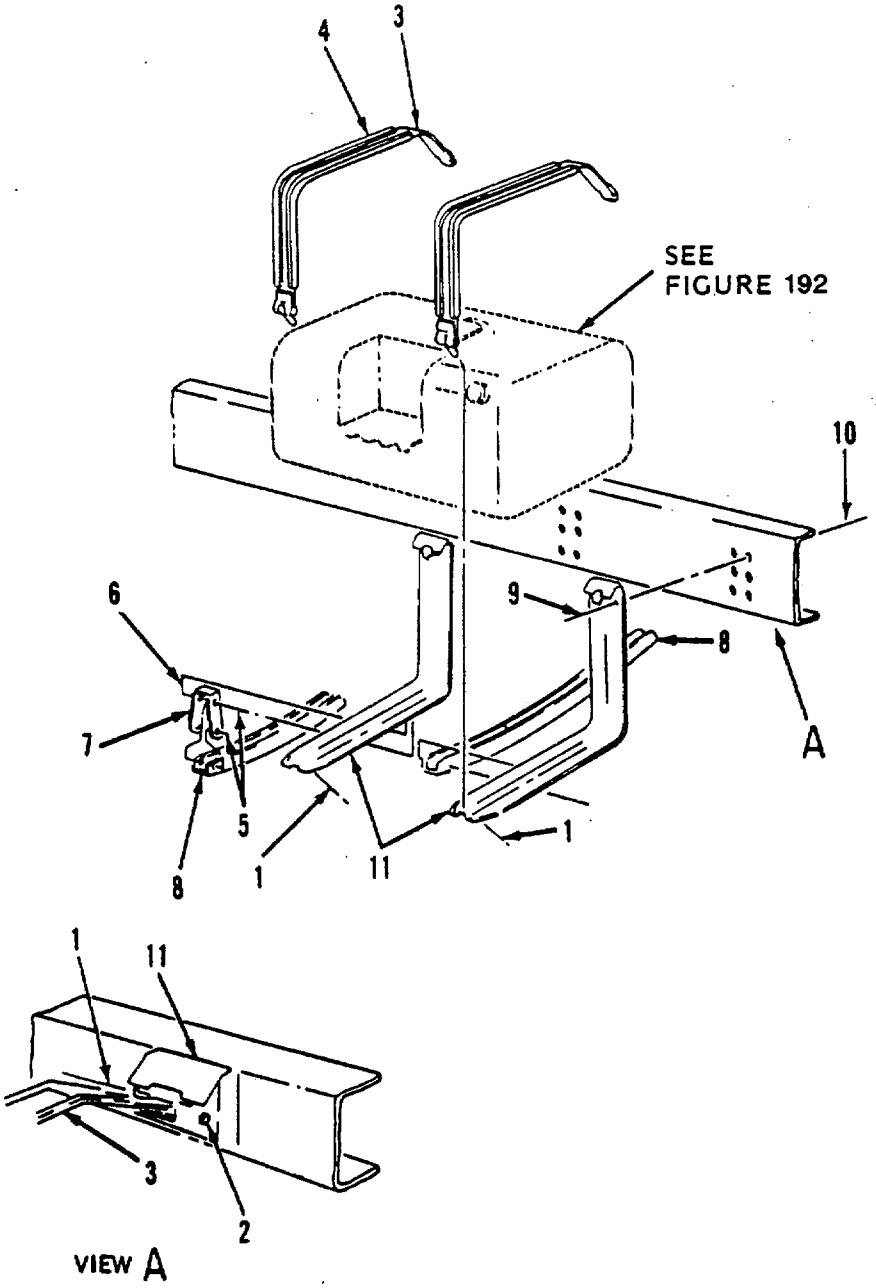


*Figure 191. Fuel Tanks Installation*

| (1) ITEM NO | (2) SMR CODE | (3) CAGEC | (4) PART NUMBER | (5) DESCRIPTION AND USABLE ON CODES (UOC) | (6) QTY |
|---|---|---|---|---|---|
| | | | | FIG. 191 FUEL TANKS INSTALLATION | |
| 1 | PBFZZ | 89346 | 9412230 | .NUT | 8 |
| 2 | XBFZZ | 89346 | 275635R1 | .SCREW, CAP | 4 |
| 3 | XBFZZ | 89346 | 471453C2 | .STRAP | 4 |
| 4 | XBFZZ | 89346 | 596589C1 | .LINING, STRAP | 4 |
| 5 | PBFZZ | 89346 | 24840R1 | .BOLT | 12 |
| | PBFZZ | 89346 | 25709R1 | .WASHER, FLAT | 8 |
| 6 | PBFZZ | 89346 | 9413979 | .NUT | 4 |
| 7 | XBFZZ | 89346 | 579741C1 | .SUPPORT, EQUALIZER | 2 |
| 8 | XBFZZ | 89346 | 494135C1 | .SUPPORT | 2 |
| 9 | PBFZZ | 89346 | 414052C1 | .BOLT | 14 |
| 9 | XBFZZ | 89346 | 414054CI | .BOLT, FLANGE HEX | 8 |
| 10 | PBFZZ | 89346 | 414087C1 | .NUT, DIFFERENTIAL | 22 |
| 11 | XBFZZ | 89346 | 483846C1 | .SUPPORT, FUEL TANK | 4 |
| | | | | END OF FIGURE | |

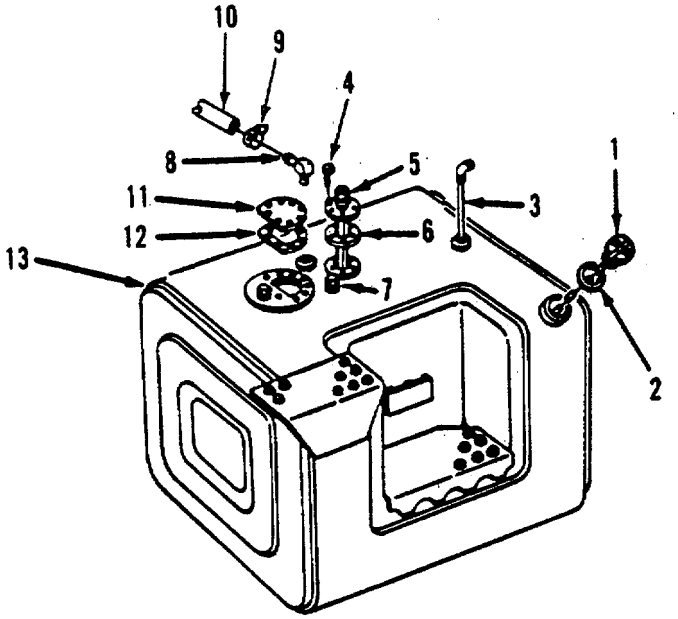


*Figure 192. Fuel Tank Assembly*

| (1) ITEM NO | (2) SMR CODE | (3) CAGEC | (4) PART NUMBER | (5) DESCRIPTION AND USABLE ON CODES (UOC) | (6) QTY |
|---|---|---|---|---|---|
| | | | | FIG. 192 FUEL TANK ASSEMBLY | |
| 1 | PAOZZ | 89346 | 289747R91 | .CAP, FILLER OPENING | 2 |
| 2 | PAOZZ | 89346 | 111442R1 | .GASKET | 2 |
| 3 | XBOZZ | 89346 | 162135R1 | .ELBOW | 2 |
| 4 | XBOZZ | 89346 | 26627R1 | .SCREW, MACHINE | 7 |
| 5 | PBOZZ | 89346 | 476846C1 | .TRANSMITTER, LIQUID | 2 |
| 6 | PAOZZ | 89346 | 345253C1 | .GASKET | 2 |
| 7 | XBOZZ | 89346 | 475255C1 | .OUTLET, FUEL TANK | 2 |
| 8 | PAOZZ | 89346 | 1649608C91 | .PLUG, VENT | 2 |
| | PAOZZ | 89346 | 48122H | .SPACER, RING | 2 |
| 9 | PAOZZ | 89346 | 553791C1 | .CLAMP, HOSE | 2 |
| 10 | PAOZZ | 89346 | 990686C1 | .HOSE, NONMETALLIC | 2 |
| 11 | XBOZZ | 89346 | 336024C1 | .COVER, HOLE | 2 |
| 12 | PAOZZ | 89346 | 217639R1 | .GASKET | 2 |
| 13 | XBFZZ | 89346 | 475277C95 | .TANK, FUEL | 2 |
| | | | | END OF FIGURE | |

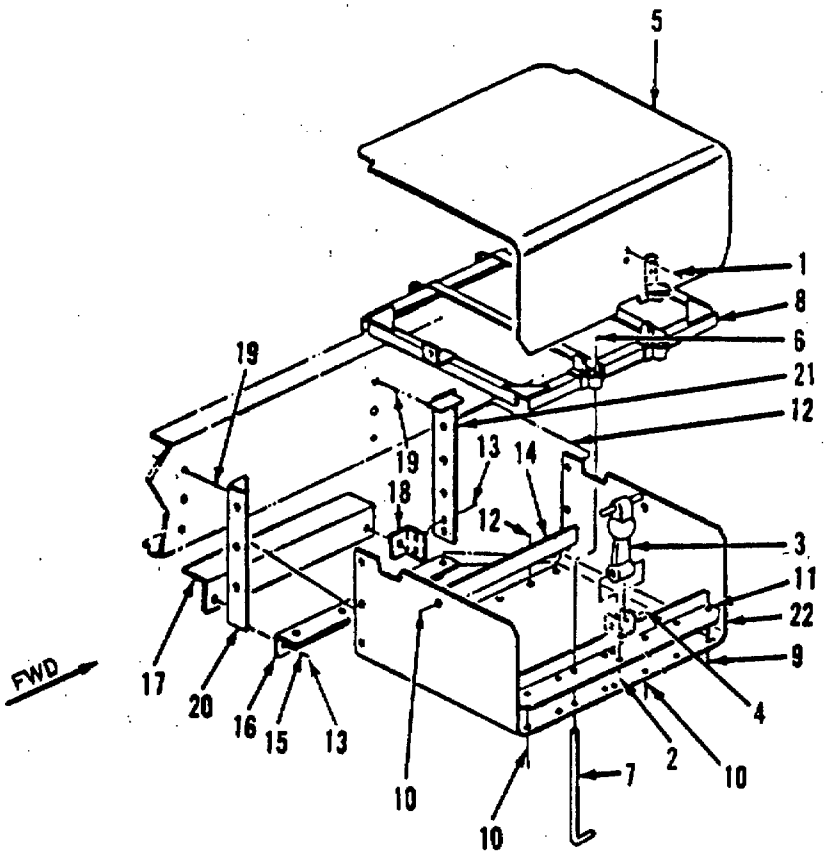


*Figure 193. Battery Box Installation*

| (1) ITEM NO | (2) SMR CODE | (3) CAGEC | (4) PART NUMBER | (5) DESCRIPTION AND USABLE ON CODES (UOC) | (6) QTY |
|---|---|---|---|---|---|
| | | | | FIG. 193. BATTERY BOX INSTALLATION | |
| 1 | PAOZZ | 89346 | 27216R1 | .SCREW, MACHINE | 2 |
| 2 | PAOZZ | 89346 | 25228R1 | .SCREW, CAP, HEXAGON H | 1 |
| | PAOZZ | 89346 | 9413979 | .NUT | 3 |
| 3 | PBOZZ | 89346 | 491668C92 | .BATTERY | 1 |
| 3 | PAOZZ | 89346 | 777812C91 | ..LATCH, RUBBER | 1 |
| 4 | PAOZZ | 89346 | 24641R1 | ..RIVET HINGED | 1 |
| 5 | XBOZZ | 89346 | 476348C3 | .COVER, BATTERY BOX | 1 |
| 6 | PAOZZ | 89346 | 9413977 | .NUT, PLAIN, HEXAGON | 6 |
| | PAOZZ | 89346 | 25708R1 | .WASHER, FLAT | 6 |
| 7 | PAOZZ | 89346 | 434764C1 | .BDLT, HOLD D O W N | 6 |
| 8 | XBOZZ | 89346 | 533092C3 | .CLAMP, HOLD DOWN | 1 |
| | PAOZZ | 89346 | 482633C92 | .CABLE, STRAP GROUND | 1 |
| | PAOZZ | 89346 | 482256C2 | .CABLE, ENGINE GROUND | 1 |
| | PAOZZ | 89346 | 70736R92 | .LEAD, STORAGE BATTER | 1 |
| | PAOZZ | 89346 | 1657226C91 | .LEAD, ELECTRICAL | 1 |
| | PAOZZ | 89346 | IHCLM31S | .BATTERY STORAGE | 3 |
| 9 | XBOZZ | 89346 | 104112 | .RIVET | 3 |
| 10 | PBOZZ | 89346 | 24839R1 | .SCREW, CAP, HEXAGON H | 6 |
| 11 | XBOZZ | 89346 | 476303C2 | .ANGLE, SUPPORT | 1 |
| 12 | XBOZZ | 89346 | 990347R91 | .RIVET | 9 |
| 13 | PBOZZ | 89346 | 24840R1 | .BOLT | 8 |
| 14 | XBOZZ | 89346 | 476301C1 | .ANGLE, SUPPORT | 1 |
| 15 | PBOZZ | 89346 | 5709R1 | .WASHER, FLAT | 2 |
| 16 | XBOZZ | 89346 | 504548C1 | .ANGLE, SUPPORT | 1 |
| 17 | XBOZZ | 89346 | 504917C1 | .SHIELD, HEAT | 1 |
| 18 | XBOZZ | 89346 | 504547C1 | .BRACKET | 1 |
| 19 | PBOZZ | 89346 | 414052C1 | .BOLT | 4 |
| 19 | PBOZZ | 89346 | 414053C1 | .BOLT, MACHINE | 4 |
| | PBOZZ | 89346 | 414087C1 | .NUT, DIFFERENTIAL | 8 |
| 20 | XBOZZ | 89346 | 505031C1 | .BRACKET | 1 |
| 21 | XBOZZ | 89346 | 505033C2 | .BRACKET | 1 |
| 22 | XBOZZ | 89346 | 476349C3 | .TRAY, BATTERY BOX | 1 |
| | | | | END OF FIGURE | |

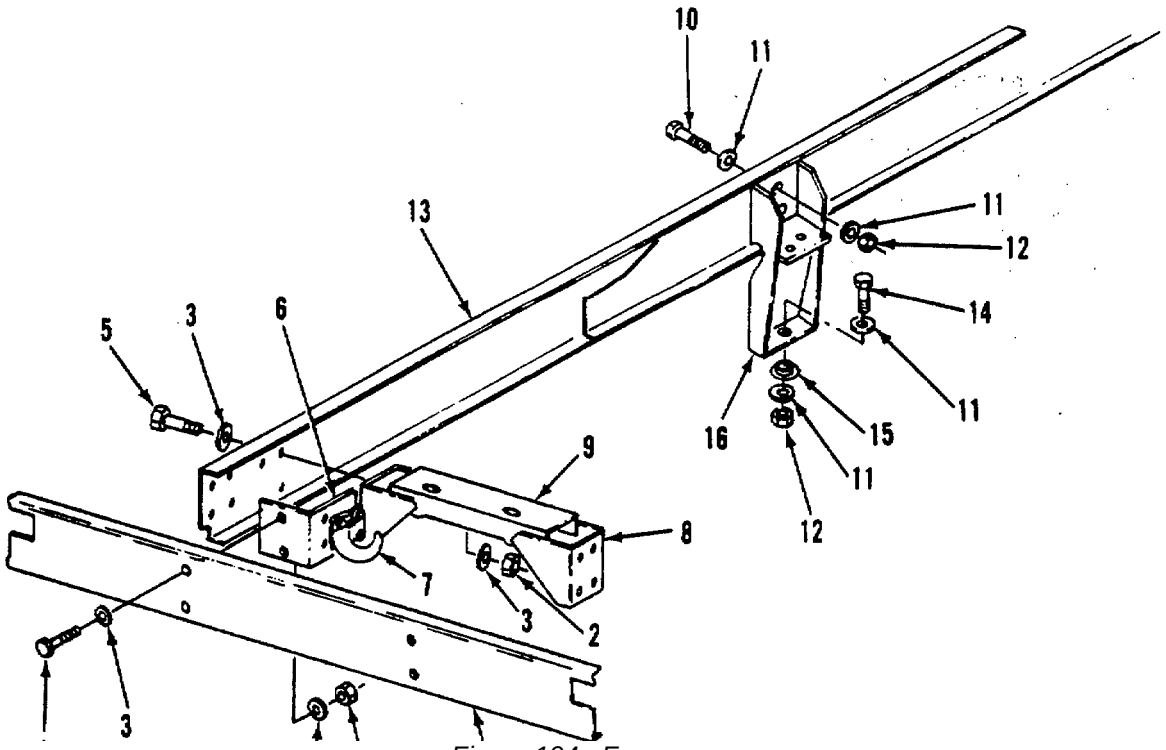


*Figure 194. Frame*

| (1) ITEM NO | (2) SMR CODE | (3) CAGEC | (4) PART NUMBER | (5) DESCRIPTION AND USABLE ON CODES (UOC) | (6) QTY |
|---|---|---|---|---|---|
| | | | | FIG. 194. FRAME | |
| | XCFFH | 7T253 | SD-20 | .FRAME | 1 |
| 1 | PBFZZ | 66195 | 22541R1 | ..SCREW, CAP, HEXAGON H 4 | 4 |
| 2 | PBFZZ | 96906 | MS51922-33 | ..NUT, SELF-LOCKING, HE | 24 |
| 3 | PBFZZ | 96906 | MS27183-17 | ..WASHER, FLAT | 48 |
| 4 | XBFZZ | 7T253 | 3153 | ..BUMPER | 1 |
| 5 | PBFZZ | 80204 | B1821BH050C175N | ..SCREW, CAP, HEXAGON H | 20 |
| 6 | XBFZZ | 7T253 | 2580 | ..BRACKET, RH | 1 |
| 6 | XBFZZ | 7T253 | 2581 | ..BRACKET, LH | 1 |
| 7 | XBFZZ | 89346 | 473210C1 | ..HOOK, TOW, LH | 1 |
| 7 | XBFZZ | 89346 | 492825C1 | ..HOOK, TOW, RH | 1 |
| 8 | XBFZZ | 89346 | 473322C2 | ..BRACKET, CROSSMEMBER | 2 |
| 9 | XBFZZ | 89346 | 473323C3 | ..CROSSMEMBER | 1 |
| 10 | PBFZZ | 80204 | B1821BH063C250N | ..SCREW, CAP, HEXAGON H | 4 |
| 11 | PBFZZ | 96906 | MS27183-21 | ..WASHER, FLAT | 12 |
| 12 | PBFZZ | 96906 | MS51922-49 | ..NUT, SELF-LOCKING, HE | 6 |
| 13 | XBFZZ | 7T253 | 476 | ..EXTENSION, FRAME | 2 |
| 14 | XBFZZ | 96906 | MS90728-174 | ..SCREW, CAP | 2 |
| 15 | XBFZZ | 74410 | XB-0011-1 | ..BUSHING | 4 |
| 16 | XBFZZ | 7T253 | 875 | ..BRACKET | 2 |
| | | | | END OF FIGURE | |

**SECTION III**

**NOT APPLICABLE**

## CROSS-REFERENCE INDEXES
## NATIONAL STOCK NUMBER INDEX


| STOCK NUMBER | FIG. | ITEM |
|---|---|---|
| 4730-00-005-4994 | 119 | |
| | 140 | 9 |
| 5310-00-007-9912 | 177 | 1 |
| 5315-00-012-0123 | 142 | 1 |
| 5230-00-018-5922 | 169 | |
| 6240-00-023-2290 | 111 | 2 |
| 2540-00-030-5924 | 103 | 23 |
| 5310-00-032-1814 | 124 | 5 |
| 3030-00-041-2922 | 123 | 1 |
| 4730-00-044-4688 | 161 | 14 |
| 5310-00-045-3296 | 124 | 2 |
| 5340-00-050-1593 | 162 | 4 |
| 5310-00-053-7804 | 176 | 1 |
| 5310-00-053-7808 | 177 | 1 |
| 5315-00-059-0206 | 186 | 46 |
| | 187 | 12 |
| | 189 | |
| 3110-00-061-4770 | 167 | 82 |
| 5330-00-062-3967 | 167 | 36 |
| 5305-00-068-0509 | 108 | 8 |
| 5305-00-068-0510 | 110 | 22 |
| 4730-00-069-1187 | 169 | |
| 5305-00-071-2069 | 194 | 1 |
| 5305-00-071-2070 | 194 | 5 |
| 5310-00-079-5996 | 143 | 1 |
| 5310-00-087-4652 | 108 | 1 |
| | 110 | 13 |
| | 114 | 3 |
| 5310-00-087-7493 | 108 | 2 |
| | 110 | 23 |
| | 114 | 2 |
| 3110-00-100-0544 | 162 | 83 |
| 3110-00-100-0589 | 177 | 15 |
| 3110-00-100-0728 | 162 | 61 |
| 3110-00-100-3101 | 167 | 74 |
| 3110-00-100-3543 | 162 | 84 |
| 3110-00-100-3611 | 177 | 12 |
| 3110-00-100-7332 | 189 | 80 |
| 3110-00-101-1789 | 167 | 73 |
| 5330-00-105-1740 | 192 | 12 |
| 3110-00-108-9247 | 122 | 3 |
| 5910-00-112-8051 | 124 | 40 |
| 5330-00-122-4543 | 149 | 21 |
| 5310-00-123-2572 | 178 | 5 |
| | 179 | 5 |
| 4320-00-125-4582 | 103 | 27 |
| 5330-00-126-3460 | 161 | |
| 2520-00-132-3160 | 167 | 51 |
| | 189 | 66 |
| 4730-00-132-4588 | 169 | |
| 5330-00-133-0758 | 140 | 3 |
| 2530-00-136-4443 | 176 | 3 |
| | 177 | 3 |
| 4820-00-142-3036 | 175 | 9 |
| 3110-00-143-7538 | 177 | 10 |
| 3110-00-143-7585 | 176 | 13 |
| 3110-00-143-7586 | 177 | 14 |
| 6240-00-144-4693 | 111 | 8 |
| | 112 | 13 |
| 5310-00-151-9018 | 128 | 1 |
| 3110-00-155-6596 | 167 | 57 |
| 4730-00-172-0028 | 189 | 41 |
| 4730-00-172-0031 | 188 | 15 |
| 5306-00-177-5439 | 188 | 34 |
| 5340-00-181-1546 | 178 | 3 |
| | 179 | 3 |
| 2990-00-190-9838 | 130 | 13 |
| 4730-00-202-6491 | 106 | 10 |
| 4730-00-204-3491 | 129 | 22 |
| 5306-00-206-9801 | 188 | 48 |
| 5310-00-209-0965 | 118 | 27 |
| | 119 | 13 |
| | 189 | |
| 5365-00-215-4108 | 189 | 79 |
| 5305-00-225-3843 | 108 | 13 |
| | 114 | 6 |
| | 126 | 49 |
| 5310-00-225-6993 | 194 | 2 |
| 5306-00-225-8492 | 113 | 25 |
| 5306-00-226-4831 | 106 | 4 |
| 2990-00-233-8057 | 130 | 2 |
| 5315-00-234-1664 | 189 | 11 |
| 5305-00-236-6531 | 118 | 1 |
| 3120-00-236-6552 | 130 | 17 |
| 2520-00-236-7515 | 163 | |
| | 184 | |
| | 185 | |
| 5330-00-245-3788 | 145 | 6 |
| 5305-00-269-3211 | 129 | 7 |
| 5305-00-269-3225 | 133 | 8 |
| | 148 | |
| 5310-00-269-4040 | 194 | 12 |
| 5365-00-274-4544 | 192 | |
| 4730-00-277-9741 | 175 | |
| 4730-00-278-4822 | 106 | 6 |
| 4730-00-278-5491 | 175 | |
| 5365-00-281-6623 | 180 | 10 |
| | 181 | 10 |
| | 182 | 10 |
| | 183 | 10 |

## CROSS-REFERENCE INDEXES
## NATIONAL STOCK NUMBER INDEX


| STOCK NUMBER | FIG. | ITEM | STOCK NUMBER | FIG. | ITEM |
|---|---|---|---|---|---|
| 2530-00-293-4373 | 173 | 4 | 6220-00-497-2178 | 111 | 1 |
| | 174 | 4 | 5365-00-529-8457 | 189 | 78 |
| 5930-00-307-8856 | 111 | 23 | 5310-00-531-9120 | 166 | 8 |
| 4730-00-355-3669 | 169 | | 2910-00-533-3945 | 128 | 14 |
| 5365-00-378-7253 | 189 | 78 | 5340-00-541-4076 | 115 | 5 |
| 2520-00-388-4197 | 163 | 1 | 5310-00-561-0461 | 135 | 15 |
| | 184 | 1 | 5306-00-576-1327 | 188 | 43 |
| | 185 | 1 | 4330-00-578-0166 | 135 | 2 |
| 5310-00-400-6438 | 176 | 1 | 4730-00-580-7417 | 175 | 12 |
| 2530-00-400-6439 | 177 | 4 | 5310-00-582-5965 | 103 | 20 |
| 5305-00-406-2281 | 123 | 11 | | 133 | 7 |
| | 145 | | | 134 | 3 |
| 5310-00-407-9566 | 103 | 29 | | 136 | 9 |
| | 105 | 6 | | 137 | 3 |
| | 118 | 3 | | 138 | 26 |
| | 123 | 10 | | 139 | 37 |
| | 133 | 13 | | 175 | |
| | 135 | 29 | | 189 | |
| | 140 | 2 | 5310-00-584-7888 | 188 | 24 |
| | 143 | 6 | 5310-00-594-9379 | 118 | 16 |
| | 149 | 7 | | 119 | 9 |
| | 152 | 9 | | 144 | 17 |
| 4730-00-408-9132 | 169 | | | 166 | 12 |
| 4730-00-409-6278 | 169 | | | 175 | |
| 5306-00-419-4683 | 177 | 17 | | 188 | |
| 5340-00-421-5015 | 116 | 9 | | 190 | 2 |
| 4820-00-424-7431 | 135 | 13 | | 190 | 10 |
| 5310-00-424-8307 | 151 | 2 | | 191 | 10 |
| 4730-00-426-8180 | 175 | | | 193 | |
| 4730-00-427-5121 | 106 | 9 | 5310-00-595-7237 | 103 | 3 |
| 5310-00-428-6461 | 124 | 33 | 3030-00-606-2293 | 140 | 7 |
| 5310-00-429-3127 | 124 | 46 | 3110-00-606-9574 | 167 | 72 |
| 4730-00-434-6396 | 175 | | 5315-00-616-5523 | 124 | 26 |
| 2520-00-446-7518 | 187 | 26 | 3110-00-618-0248 | 176 | 10 |
| 5305-00-450-0463 | 124 | 22 | 3110-00-618-0249 | 176 | 14 |
| 4720-00-450-9092 | 127 | 2 | 2520-00-630-0148 | 189 | 79 |
| 5305-00-451-1623 | 124 | 35 | 5310-00-637-9541 | 110 | 24 |
| 5306-00-456-2574 | 177 | 17 | | 118 | 20 |
| 5340-00-467-3734 | 115 | 3 | | 123 | 7 |
| 4720-00-470-0825 | 140 | 10 | | 149 | 4 |
| 2910-00-470-7075 | 135 | 1 | 5305-00-638-8920 | 110 | 16 |
| 5330-00-479-4267 | 177 | 11 | 2910-00-646-9727 | 128 | 3 |
| 5315-00-481-9829 | 188 | 14 | 3120-00-661-9380 | 162 | 37 |
| 5360-00-482-4422 | 178 | 15 | 4820-00-689-1899 | 175 | 16 |
| | 179 | 15 | 2530-00-693-1029 | 177 | 4 |
| 5930-00-482-7856 | 111 | 13 | 2530-00-695-3376 | 189 | 13 |
| 4730-00-482-8111 | 116 | 11 | 4310-00-702-6656 | 142 | |
| | 192 | 9 | 2520-00-706-5892 | 162 | 23 |
| 2530-00-491-5012 | 189 | 13 | 5305-00-724-7224 | 194 | 10 |
| 3120-00-493-3900 | 162 | 64 | 5330-00-757-5328 | 129 | 4 |

## CROSS-REFERENCE INDEXES
## NATIONAL STOCK NUMBER INDEX

| STOCK NUMBER | FIG. | ITEM |
|---|---|---|
| 4720-00-758-9140 | 115 | 9 |
| 5310-00-760-7442 | 178 | 2 |
| | 179 | 2 |
| 5310-00-763-8905 | 124 | 27 |
| 5305-00-781-3928 | 114 | 1 |
| 5330-00-788-5821 | 162 | 36 |
| 5310-00-809-3078 | 106 | 5 |
| | 113 | 37 |
| 5310-00-809-3079 | 113 | 11 |
| 5310-00-809-5997 | 194 | 3 |
| 3110-00-814-0630 | 167 | 78 |
| 5310-00-820-6653 | 166 | 2 |
| 5305-00-821-3869 | 110 | 14 |
| 5310-00-823-8803 | 118 | 9 |
| | 194 | 11 |
| 5310-00-823-8804 | 108 | 6 |
| | 114 | 9 |
| | 137 | 8 |
| 5310-00-835-2140 | 189 | 12 |
| 4730-00-836-4221 | 135 | 23 |
| 5310-00-843-3970 | 169 | |
| 5310-00-843-4093 | 169 | |
| 5310-00-844-2246 | 103 | 2 |
| 5945-00-844-6559 | 111 | 21 |
| 5305-00-846-5703 | 108 | 3 |
| 4730-00-846-6076 | 116 | 7 |
| | 127 | 9 |
| 2540-00-846-6108 | 106 | 2 |
| 4720-00-846-6541 | 116 | 2 |
| 2910-00-846-7646 | 135 | 37 |
| 5365-00-846-7660 | 129 | 6 |
| | 135 | 6 |
| | 148 | 4 |
| | 148 | 7 |
| 5330-00-847-5879 | 155 | 23 |
| 4730-00-848-2521 | 180 | 21 |
| | 181 | 21 |
| | 182 | 21 |
| | 183 | 21 |
| | 190 | 20 |
| 5310-00-880-7746 | 105 | 5 |
| 5330-00-891-0161 | 115 | 16 |
| | 129 | 20 |
| 5330-00-893-7633 | 148 | 16 |
| 4730-00-908-3194 | 129 | 11 |
| 3110-00-923-1246 | 162 | 79 |
| 5365-00-924-0088 | 167 | 26 |
| | 170 | 5 |
| 5310-00-929-1807 | 108 | 5 |
| | 114 | 7 |
| 5330-00-930-3254 | 130 | 14 |
| 5310-00-934-9751 | 124 | 3 |
| 5365-00-941-4024 | 146 | 1 |
| 5310-00-964-7811 | 178 | 22 |
| | 178 | 24 |
| | 179 | 22 |
| | 179 | 24 |
| 5310-00-983-8483 | 124 | 12 |
| 5310-00-984-3807 | 106 | 3 |
| 5305-00-984-6191 | 124 | 9 |
| 5305-00-984-6195 | 114 | 13 |
| 5365-00-986-1885 | 162 | 87 |
| 5305-00-993-1848 | 124 | 31 |
| 4720-01-006-8462 | 127 | 4 |
| 5330-01-012-2329 | 129 | 30 |
| 2940-01-014-2547 | 143 | 4 |
| 4720-01-014-4915 | 169 | |
| 2805-01-022-4254 | 156 | 26 |
| 5360-01-022-7907 | 156 | 24 |
| 3110-01-023-1841 | 162 | 53 |
| 3110-01-023-1842 | 162 | 52 |
| 5330-01-023-5287 | 154 | 1 |
| 5330-01-023-5289 | 145 | 4 |
| 5977-01-024-1213 | 124 | 16 |
| 5977-01-024-1218 | 124 | 6 |
| 5330-01-024-1788 | 135 | 59 |
| 5310-01-024-9658 | 166 | 4 |
| 2920-01-025-6801 | 124 | 39 |
| 2920-01-C25-9899 | 124 | 36 |
| 4820-01-043-8107 | 171 | |
| 5961-01-050-7906 | 124 | 8 |
| 2940-01-051-0695 | 147 | 1 |
| 5330-01-054-5899 | 178 | 11 |
| | 179 | 11 |
| 4730-01-056-4990 | 169 | |
| 5306-01-063-4985 | 117 | 5 |
| | 119 | 16 |
| | 120 | 4 |
| | | 153 |
| 5330-01-063-5018 | 138 | 82 |
| 5330-01-063-7883 | 135 | 20 |
| | 139 | 51 |
| 5330-01-063-8341 | 139 | 5 |
| 5310-01-063-9773 | 138 | 64 |
| 3120-01-063-9845 | 138 | 41 |
| 5330-01-064-1488 | 138 | 43 |
| 5360-01-064-1986 | 138 | 31 |
| 5365-01-064-2253 | 138 | 30 |
| 5365-01-064-2254 | 138 | 30 |
| 5365-01-064-2255 | 138 | 30 |

## CROSS-REFERENCE INDEXES
## NATIONAL STOCK NUMBER INDEX


| STOCK NUMBER | FIG. | ITEM | STOCK NUMBER | FIG. | ITEM |
|---|---|---|---|---|---|
| 5365-01-064-2256 | 138 | 30 | 5306-01-068-1071 | 149 | 1 |
| 5310-01-064-7558 | 138 | 64 | | 191 | 5 |
| 5310-01-064-7559 | 138 | 64 | | 193 | 13 |
| 5310-01-064-7589 | 190 | 6 | 5330-01-068-1081 | 173 | 9 |
| 5310-01-064-8669 | 129 | 5 | | 174 | 9 |
| | 135 | 7 | 5305-01-077-9659 | 124 | 28 |
| | 148 | 3 | 5310-01-078-7804 | 129 | 18 |
| | 148 | 6 | | 149 | 2 |
| 4720-01-065-0676 | 128 | 13 | 4710-01-083-4458 | 169 | |
| 4720-01-065-0809 | 116 | 12 | 5330-01-084-1063 | 180 | 16 |
| 4820-01-065-1793 | 175 | 10 | | 181 | 16 |
| 4730-01-065-1817 | 187 | 27 | | 182 | 16 |
| 2590-01-065-2167 | 111 | 25 | | 183 | 16 |
| 2530-01-065-2539 | 172 | 4 | 2520-01-084-3251 | 164 | 1 |
| 5310-01-065-2596 | 116 | 18 | 5310-01-094-2890 | 136 | 4' |
| | 119 | 4 | 2530-01-095-2497 | 178 | 32 |
| | 121 | 5 | | 179 | 32 |
| | 127 | | 5930-01-097-6517 | 145 | 5 |
| | 140 | 19 | 5330-01-099-7926 | 151 | 5 |
| | 175 | | 4720-01-103-0874 | 169 | |
| | 190 | 16 | 6685-01-108-5781 | 125 | 4 |
| | 191 | | 6685-01-108-5782 | 112 | 5 |
| | 193 | 15 | 6680-01-108-5783 | 112 | 9 |
| 2530-01-065-3769 | 141 | 19 | 6620-01-108-918i | 112 | 6' |
| 4310-01-065-4326 | 141 | 12 | 6620-01-111-9063 | 125 | 3 |
| 5330-01-065-5888 | 103 | 22 | 4330-01-116-7523 | 160 | 14 |
| 5330-01-065-6131 | 180 | 20 | 6620-01-118-2337 | 112 | 10 |
| | 181 | 20 | 5330-01-121-8367 | 192 | 6 |
| | 182 | 20 | 5330-01-126-9511 | 145 | 18 |
| | 183 | 20 | 5330-01-126-9512 | 153 | 8 |
| 4730-01-066-4100 | 103 | 24 | 5330-01-127-1377 | 153 | 6 |
| 5310-01-066-4366 | 138 | 64 | 5330-01-127-1378 | 161 | 6 |
| 5307-01-066-9104 | 188 | 40 | 5330-01-127-1380 | 150 | 6 |
| 5310-01-067-8403 | 118 | 8 | 5330-01-127-1381 | 149 | 34 |
| | 119 | 17 | 5330-01-127-1382 | 129 | 10 |
| | 127 | | 4720-01-131-1477 | 117 | 2 |
| | 190 | 15 | 5360-01-132-4645 | 154 | 7 |
| | 191 | 6 | 2940-01-132-4754 | 148 | 1 |
| | 193 | | 5365-01-133-8246 | 188 | |
| 5310-01-067-8980 | 177 | 5 | 5310-01-135-6758 | 113 | 26 |
| 5340-01-067-9037 | 144 | 8 | 5330-01-136-0046 | 178 | 29 |
| 5306-01-067-9561 | 144 | 11 | | 179 | 29 |
| 5305-01-067-9568 | 119 | 2 | 5340-01-136-1660 | 113 | '27 |
| | 121 | 4 | 5305-01-143-6416 | 124 | 47 |
| | 145 | | 4730-01-143-9460 | 127 | 1 |
| | 146 | | 5315-01-151-2072 | 156 | 22 |
| 5306-01-067-9569 | 153 | | 4720-01-151-6398 | 116 | 8 |
| 5340-01-067-9648 | 144 | 9 | 2930-01-153-9035 | 145 | 14 |
| 5306-01-068-1071 | 119 | 14 | 4730-01-153-9206 | 127 | 15 |
| | 140 | 17 | 2540-01-154-4203 | 103 | 1 |

## CROSS-REFERENCE INDEXES
## NATIONAL STOCK NUMBER INDEX


| STOCK NUMBER | FIG. | ITEM |
|---|---|---|
| 2940-01-154-8399 | 127 | 12 |
| 2520-01-157-7982 | 188 | |
| 3030-01-160-5801 | 119 | 7 |
| 5305-01-160-7408 | 178 | 1 |
| | 179 | 1 |
| 4310-01-161-6462 | 142 | 18 |
| 2990-01-162-5198 | 115 | 6 |
| 6220-01-162-6892 | 111 | 30 |
| 4820-01-163-2402 | 165 | 3 |
| 2815-01-163-2720 | 156 | 21 |
| 4820-01-165-7890 | 175 | 4 |
| 5310-01-166-0762 | 159 | 9 |
| 5365-01-166-0790 | 145 | 19 |
| 5365-01-166-0791 | 145 | 25 |
| 5365-01-166-0792 | 145 | 24 |
| 5365-01-166-0855 | 145 | 22 |
| 2815-01-166-1180 | 156 | 25 |
| 4720-01-166-4452 | 169 | |
| 5307-01-166-6166 | 156 | 2 |
| 4720-01-166-8457 | 145 | 2 |
| 5330-01-167-2432 | 156 | 19 |
| | 156 | 19 |
| 5330-01-167-2437 | 156 | 4 |
| 5330-01-167-4074 | 156 | 5 |
| 5306-01-167-8331 | 130 | 1 |
| 5360-01-167-9681 | 156 | 14 |
| 4730-01-168-3605 | 169 | |
| 4310-01-168-9536 | 142 | |
| 2815-01-169-7331 | 159 | 8 |
| 5307-01-172-7073 | 176 | 12 |
| 5307-01-173-0978 | 176 | 12 |
| 4310-01-173-4082 | 142 | |
| 3110-01-173-6518 | 167 | 46 |
| 3120-01-173-6699 | 176 | 8 |
| 4820-01-173-8616 | 128 | 8 |
| 5330-01-174-2684 | 167 | 35 |
| 5330-01-174-2685 | 167 | 48 |
| 3110-01-174-2950 | 157 | 3 |
| 6625-01-175-8055 | 112 | 4 |
| 2530-01-176-0590 | 176 | 2 |
| | 177 | 2 |
| 5365-01-176-5751 | 156 | 8 |
| 5306-01-177-0865 | 162 | 1 |
| 2015-01-177-2491 | 157 | 11 |
| 5310-01-177-3831 | 150 | 2 |
| 5330-01-177-8215 | 131 | 9 |
| 5360-01-177-8605 | 147 | 8 |
| 5306-01-177-9697 | 135 | 45 |
| 5306-01-178-2053 | 161 | 18 |
| 5310-01-178-2085 | 150 | 1 |
| 5330-01-178-2104 | 147 | 7 |
| 5330-01-178-3720 | 116 | 20 |
| 2815-01-178-8482 | 156 | 29 |
| 2815-01-178-8583 | 157 | 12 |
| 4730-01-178-8825 | 148 | 17 |
| 2815-01-178-9934 | 158 | 1 |
| 3130-01-179-4567 | 161 | 19 |
| 3040-01-179-5490 | 157 | 2 |
| 5330-01-179-5911 | 160 | 15 |
| 2815-01-179-6356 | 161 | 4 |
| 4820-01-179-6357 | 147 | 9 |
| 3120-01-180-4831 | 159 | 16 |
| 3130-01-180-4947 | 161 | 20 |
| 2815-01-180-5156 | 156 | 29 |
| 4720-01-181-1902 | 135 | 43 |
| 2920-01-181-7113 | 126 | |
| 2520-01-182-1838 | 189 | 42 |
| 2520-01-182-1854 | 189 | 6 |
| 2590-01-182-4482 | 110 | 7 |
| 2540-01-182-4580 | 111 | 12 |
| 5330-01-184-5810 | 148 | 15 |
| 3120-01-184-5888 | 161 | 13 |
| 5306-01-185-2070 | 151 | |
| 6680-01-186-2626 | 192 | 5 |
| 5330-01-186-3314 | 140 | 28 |
| 5310-01-186-4361 | 144 | 4 |
| | 166 | 7 |
| | 188 | |
| 5310-01-186-4979 | 118 | 36 |
| | 123 | 3 |
| | 126 | 3 |
| | 188 | 18 |
| | 190 | 10 |
| | 191 | 1 |
| 5310-01-186-4988 | 103 | 25 |
| 5306-01-186-4992 | 115 | 12 |
| | 118 | 19 |
| | 121 | 6 |
| | 123 | 6 |
| | 129 | 17 |
| 5310-01-186-5163 | 118 | 32 |
| | 153 | |
| 5315-01-186-5190 | 188 | 16 |
| 5306-01-186-6974 | 140 | 30 |
| 5306-01-186-6978 | 116 | 17 |
| | 145 | |
| 3130-01-187-6271 | 107 | 11 |
| 4730-01-187-6931 | 135 | 41 |
| 5310-01-187-8546 | 188 | |
| 5330-01-187-8634 | 186 | |

## CROSS-REFERENCE INDEXES
## NATIONAL STOCK NUMBER INDEX


| STOCK NUMBER | FIG. | ITEM | STOCK NUMBER | FIG. | ITEM |
|---|---|---|---|---|---|
| 5310-01-188-4635 | 140 | 25 | 5330-01-240-5035 | 113 | 41 |
| 5355-01-189-1975 | 106 | 16 | 5310-01-241-6122 | 127 | 17 |
| | 170 | 2 | | 172 | 2 |
| 5340-01-189-5454 | 135 | 46 | | 193 | 6 |
| 5340-01-189-8297 | 116 | 10 | 5310-01-242-0406 | 134 | 4 |
| 5310-01-189-8385 | 123 | 4 | 5306-01-242-1091 | 126 | 1 |
| | 144 | 12 | 5310-01-242-2521 | 161 | 5 |
| 2815-01-190-1052 | 156 | 20 | 5310-01-244-8937 | 129 | 2 |
| 3120-01-192-2174 | 159 | 16 | | 129 | 27 |
| 2815-01-192-4698 | 156 | 23 | | 131 | 7 |
| 5306-01-193-0868 | 144 | 16 | | 132 | 5 |
| | 166 | 14 | | 133 | 14 |
| | 175 | | | 135 | 30 |
| | 191 | 9 | | 136 | 3 |
| | 193 | 19 | | 149 | 8 |
| 2520-01-193-0883 | 169 | | | 152 | 2 |
| 4720-01-194-5335 | 129 | 23 | | 152 | 8 |
| 5305-01-195-5820 | 133 | 9 | | 153 | |
| 5355-01-197-4034 | 111 | 10 | 2930-01-246-5152 | 121 | 1 |
| 5340-01-197-4072 | 115 | 10 | 3110-01-249-9525 | 146 | 3 |
| 6140-01-201-0641 | 193 | 3 | 5306-01-250-0546 | 118 | 15 |
| 3110-01-201-3361 | 145 | 23 | | 144 | 19 |
| 6645-01-202-4114 | 111 | 19 | | 166 | 3l |
| 5930-01-202-5932 | 110 | 9 | | 175 | |
| 5310-01-204-3172 | 103 | 5 | | 188 | 45 |
| 6350-01-208-4915 | 111 | 20 | | 190 | 13 |
| | 125 | | | 193 | 19 |
| 5930-01-209-4012 | 111 | 11 | 2540-01-252-4875 | 102 | 2 |
| 4820-01-219-1436 | 156 | 29 | 5340-01-252-5233 | 124 | |
| 6220-01-222-8118 | 111 | 7 | 5330-01-252-5258 | 121 | 9 |
| 2910-01-224-8490 | 136 | 11 | 5310-01-254-4260 | 186 | 47 |
| 5360-01-227-1338 | 180 | 2 | | 187 | 13 |
| | 181 | 2 | 5340-01-257-4836 | 135 | 27 |
| | 182 | 2 | 5330-01-257-5026 | 187 | |
| | 183 | 2 | 5330-01-257-5027 | 162 | 34 |
| 2815-01-227-5998 | 152 | 5 | 2510-01-258-2403 | 190 | 1 |
| 5365-01-228-0515 | 154 | 8 | 2930-01-258-9392 | 145 | 10 |
| 5310-01-230-2349 | 115 | 14 | 5365-01-259-4031 | 110 | 5 |
| | 120 | 3 | 5930-01-260-6472 | 125 | 5 |
| | 129 | 8 | 2530-01-262-1186 | 121 | |
| | 133 | 10 | 6680-01-263-2270 | 112 | 8 |
| | 135 | 16 | 3120-01-263-4282 | 142 | 15 |
| | 145 | | 5310-01-263-8510 | 110 | 6 |
| | 145 | | 2530-01-264-3266 | 106 | 17 |
| | 147 | 4 | | 170 | |
| | 148 | | 4720-01-264-5596 | 160 | 2 |
| | 149 | 3 | 2520-01-266-3705 | 168 | 5 |
| | 153 | | 5970-01-266-6689 | 126 | 16 |
| 2920-01-235-8490 | 124 | 11 | 5970-01-267-0174 | 126 | 53 |
| 2530-01-238-1869 | 188 | 42 | 5970-01-267-0175 | 126 | 9 |

## CROSS-REFERENCE INDEXES

### NATIONAL STOCK NUMBER INDEX

| STOCK NUMBER | FIG. | ITEM |
|---|---|---|
| 3120-01-268-2659 | 142 | |
| 5945-01-268-6282 | 111 | 22 |
| 5340-01-268-9894 | 128 | 12 |
| 2530-01-269-9398 | 174 | |
| 2530-01-272-2946 | 180 | 12 |
| | 181 | 72 |
| | 182 | 12 |
| | 183 | 12 |
| 2520-01-272-5318 | 168 | 2 . |
| 4310-01-272-7624 | 142 | |
| 4820-01-272-7631 | 170 | 10 |
| 2590-01-273-1308 | 117 | 7 |
| 4720-W -273- 1428 | 116 | 5 |
| 5360-01-273-1 509 | 180 | 1 |
| | tat | 1 |
| | 182 | I |
| | 183 | 1 |
| 5970-01-273-2514 | 126 | 52 |
| 3120-01-273-4488 | 168 | 6 |
| 4720-01-273-5742 | 116 | 13 |
| 5330-01-274-3125 | 142 | 12 |
| 5306-01-274-5626 | 118 | 23 |
| 5310-01-274-5632 | 134 | 2 |
| 5310-01-275-1148 | 113 | 51 |
| 5340-01-275-3220 | 130 | 5 |
| 4730-01-275-4344 | 175 | |
| 2940-01-275-5333 | 127 | 11 |
| 5306-01-276-0830 | 188 | 49 |
| 3110-01 -276-3192 | 142 | 27 |
| 5330-01 -277-0918 | 189 | 62 |
| 3120-01-277-4263 | 110 | 4 |
| 5330-01-277-6122 | 167 | 69 |
| 2940-m-270-7996 | 121 | 12 |
| 5310-01-278-8289 | 113 | 48 |
| | 188 | |
| 5310-01-278-8436 | 126 | a |
| | 190 | 8 |
| 4810-01-279-1366 | t13 | |
| 5305-01-2828-0829 | 129 | 26 |
| | 153 | |
| 5306-01-282-2663 | 188 | 32 |
| 4720-01-283-0128 | 119 | |
| | 120 | I |
| 5310-01-283-7623 | 118 | 2 |
| | 193 | |
| 3120-01-285-5440 | 189 | |
| 2530-01-285-6227 | 168 | 4 |
| 3120-01-285-7065 | 187 | |
| 2920-01-285-7288 | 126 | |
| 2920-01-285-8394 | 124 | |
| 5330-01-286-2515 | 142 | 6 |
| 6680-01-290-1653 | 161 | 1 |
| 5306-01-292-2420 | 156 | 16 |
| 2520-01-293-2872 | 189 | 94 |
| 5930-01-293-3854 | 111 | 24 |
| 5306-01-293-6078 | 156 | 17 |
| 2930-01-294-4916 | 149 | 29 |
| 5330-01-295-2997 | 121 | 11 |
| 5330-01-295-8728 | 162 | 26 |
| 5330-01-295-8730 | 162 | 38 |
| 5330-01-295-8731 | 162 | 48 |
| 481 O-01 -297-I 425 | 121 | 10 |
| 2520-01-297-4519 | 168 | |
| 2520-01-297-9278 | 186 | |
| 2520-01-297-9287 | 162 | 51 |
| 29901-01-297-9301 | 130 | |
| 4730-01-297-9324 | 127 | 8 |
| 2910-01 -298-4276 | 145 | |
| 4810-01-298-8573 | 118 | 7 |
| 3020-01-299-7118 | 140 | a |
| 6680-01-300-0745 | 112 | 7 |
| 2530-01-300-5917 | 178 | 39 * |
| | 179 | 39 * |
| 5365-01-300-7007 | 139 | 12 |
| 5330-01-301-6373 | 164 | |
| 4810-01-302-2513 | 134 | 8 |
| 5306-01-303-2815 | 108 | 9 |
| 5320-01-307-5809 | 193 | 4 |
| 5330-01 -308-0098 | 189 | 55 |
| 4730-01-310-0005 | 135 | 32 |
| 2510-01-310-4506 | 114 | 5 |
| 5306-01-313-0228 | 188 | 31 |
| 6620-01-313-8164 | 125 | |
| 5330-01-315-2129 | 133 | 23 |
| 291 0-01 -31 5-2541 | 154 | |
| 2910-01-315-5512 | 136 | 10 |
| 5330-01-315-8707 | 113 | 38 |
| 5330-01-315-8708 | 113 | 21 |
| 5330-01-315-8741 | II3 | 9 |
| 5330-01-316-1294 | 113 | 53 |
| 5330-01-316-1295 | 113 | 7 |
| 5330-01-316-1296 | 113 | 4 |
| 5330-01-316-1326 | 113 | 17 |
| 5330-01-316-1327 | 113 | 22 |
| 3110-01-324-6650 | 189 | 28 |
| 4720-01-325-2951 | 119 | |
| 2810-01-325-2956 | 156 | 27 |
| 4320-01-325-8534 | 152 | 3 |
| 4720-01-325-9023 | 120 | 1 |
| 2520-01-325-9110 | 186 | 57 |
| | 187 | 25 |
| 5360-01-327-2616 | 156 | 24 |

## CROSS-REFERENCE INDEXES

### NATIONAL STOCK NUMBER INDEX

| STOCK NUMBER | FIG. | ITEM |
|---|---|---|
| 2530-01-327-3002 | 177 | 7 |
| 2530-01-329-1377 | 142 | |
| 2910-01-329-1425 | 136 | 7 |
| 2920-01-300-9409 | 126 | 5 |
| 3110-01-331-9936 | 189 | 30 |
| 2530-01-332-1622 | 180 | 5 |
| | 181 | 5 |
| | 182 | 5 |
| | 183 | 5 |
| 2530-01-332-9975 | 178 | 6 |
| | 179 | 6 |
| 2590-01-333-0016 | 161 | 3 |
| 2815-01-333-0205 | 152 | 6 |
| 2530-01-333-1917 | 173 | |
| 2815-01-333-3940 | 156 | 23 |
| 5340-01-334-3565 | 192 | 1 |
| 5365-01-336-0658 | 168 | 19 |
| 5330-01-336-6798 | 122 | 7 |
| 5360-01-336-9688 | 110 | 12 |
| 5325-01-337-0869 | 103 | 26 |
| 5306-01-342-5335 | 130 | 4 |
| 5360-01-342-5400 | 114 | 18 |
| 5360-01-342-5401 | 114 | 19 |
| 5360-01-342-5402 | 130 | 15 |
| 5360-01-342-5418 | 133 | 1 |
| 5360-01-342-5419 | 133 | 2 |
| 5360-01-342-5420 | 133 | 4 |
| 5305-01-342-5475 | 113 | 10 |
| 5310-01-342-5513 | 114 | 8 |
| 5340-01-342-5552 | 115 | 7 |
| 5305-01-342-5579 | 113 | 1 |
| 5340-01-342-5608 | 133 | 5 |
| 5340-01-342-5636 | 102 | 8 |
| 5365-01-342-7810 | 113 | 2 |
| 5310-01-342-7823 | 129 | 16 |
| 4730-01-342-8464 | 116 | 1 |
| | 145 | 1 |
| 4730-01-342-8465 | 116 | 4 |
| 4730-01-342-8466 | 116 | 6 |
| 4730-01-342-8467 | 113 | 58 |
| 4720-01-342-8676 | 129 | 9 |
| 4710-01-342-8841 | 129 | 3 |
| 3110-01-343-1028 | 113 | 29 |
| 5330-01-343-1066 | 129 | 29 |
| 5365-01-343-1085 | 113 | 5 |
| 5365-01-343-1086 | 130 | 18 |
| 5365-01-343-1087 | 130 | 21 |
| 5365-01-343-1088 | 133 | 3 |
| 3120-01-343-1096 | 130 | 19 |
| 2560-01-343-1985 | 102 | 9 |
| 4730-01-343-8415 | 115 | 15 |
| 3010-01-344-0800 | 110 | 17 |
| 5330-01-346-0312 | 124 | 7 |
| 5~30-01-346-0313 | 135 | 58 |
| 533-01-346-0314 | 147 | 15 |
| 5330-01-346-0315 | 192 | 2 |
| 5330-01-346-2355 | 149 | 22 |
| 5330-01-346-2356 | 149 | 30 |
| 5330-01-346-2357 | 152 | 12 |
| 5330-01-346-2358 | 153 | 6 |
| 5306-01-346-2890 | 135 | 14 |
| 5306-01-346-2891 | 135 | 34 |
| 533-01-346-2912 | 113 | 24 |
| 5330-01-346-2913 | 155 | 22 |
| 5330-01-346-2916 | 113 | 50 |
| 5330-01-346-2917 | 120 | 5 |
| 5330-01-346-2918 | 122 | 3 |
| 5305-01-346-2934 | 123 | 5 |
| 5305-01-346-2935 | 123 | 9 |
| 5305-01-346-2936 | 134 | 1 |
| | 175 | |
| 5305-01-346-2937 | 131 | 2 |
| | 136 | 1 |
| 5305-01-346-2938 | 136 | 2 |
| | 152 | 7 |
| 4710-10-346-3257 | 135 | 35 |
| 5306-01-346-3450 | 118 | 11 |
| 5310-01-346-3453 | 115 | 13 |
| 5305-01-346-3522 | 193 | 1 |
| 5310-01-346-3563 | 113 | 40 |
| 5310-01-346-3564 | 113 | 52 |
| 5310-01-346-3565 | 118 | 37 |
| 5310-01-346-3566 | 156 | 18 |
| 5305-01-346-3593 | 103 | 28 |
| | 118 | 5 |
| | 127 | 16 |
| | 133 | 12 |
| | 153 | |
| | 157 | 6 |
| | 193 | 2 |
| 5305-01-346-3594 | 113 | 36 |
| | 152 | 10 |
| 5305-01-346-3595 | 118 | 31 |
| | 129 | 1 |
| | 131 | 1 |
| | 132 | 1 |
| | 149 | 19 |
| | 149 | 27 |
| | 172 | 1 |
| 5305-01-346-3596 | 119 | 12 |

## CROSS-REFERENCE INDEXES
## NATIONAL STOCK NUMBER INDEX

| STOCK NUMBER | FIG. | ITEM | STOCK NUMBER | FIG. | ITEM |
|---|---|---|---|---|---|
| 5305-01-346-3596 | 140 | 24 | 5360-01-352-1957 | 136 | 20 |
| 4310-01-346-4364 | 151 | 4 | 5365-01-352-4209 | 138 | 64 |
| 4720-01-346-4686 | 135 | 38 | 5365-01-352-4210 | 138 | 64 |
| 4710-01-346-4767 | 135 | 36 | 5365-01-352-4211 | 138 | 64 |
| 6680-01-346-5191 | 111 | | 5365-01-352-4212 | 138 | 64 |
| 4710-01-346-6605 | 135 | 5 | 5365-01-352-4213 | 138 | 64 |
| 4710-01-346-6606 | 135 | 21 | 5330-01-352-4309 | 136 | 21 |
| 4730-01-346-7908 | 149 | 16 | 5330-01-352-4310 | 137 | 13 |
| 5310-01-346-9363 | 118 | 24 | 5330-01-352-4337 | 137 | 31 |
| 5310-01-346-9364 | 118 | 26 | | 139 | 9 |
| | 140 | 21 | 5330-01-352-5773 | 140 | 6 |
| 5310-01-346-9430 | 118 | 13 | 5330-01-352-5774 | 142 | |
| 5310-01-346-9431 | 118 | 28 | 5305-01-352-7537 | 137 | 7 |
| 5310-01-346-9432 | 149 | 28 | 5305-01-352-7541 | 142 | 13 |
| 4710-01-346-9999 | 135 | 8 | 5305-01-352-7602 | 140 | 1 |
| 5365-01-347-1158 | 113 | 30 | 5305-01-352-7603 | 140 | 5 |
| | 142 | 16 | | 143 | 5 |
| 5365-01-347-1159 | 113 | 43 | 5340-01-352-8803 | 138 | 22 |
| 5365-01-347-1160 | 113 | 54 | 5310-01-353-1895 | 136 | 8 |
| 5365-01-347-1161 | 119 | 8 | | 137 | 14 |
| 5365-01-347-1162 | 155 | 1 | | 138 | 18 |
| 5310-01-347-1176 | 143 | 2 | | 138 | 24 |
| 4720-01-347-2785 | 135 | 4 | 5310-01-353-1896 | 142 | 2 |
| 5330-01-347-3726 | 136 | 13 | 5310-01-353-2653 | 121 | 8 |
| 5330-01-347-3727 | 136 | 19 | 5306-01-353-5953 | 137 | 6 |
| 5360-01-347-5910 | 113 | 34 | 5340-01-353-5960 | 142 | 14 |
| 4720-01-347-7387 | 175 | 1 | 3120-01-353-6029 | 142 | 15 |
| 4720-01-347-7388 | 175 | 5 | 3120-01-353-6030 | 142 | 15 |
| 4310-01-347-7445 | 136 | 15 | 3120-01-353-6031 | 138 | 54 |
| 4730-01-348-1355 | 175 | | 5340-01-353-6053 | 115 | 1 |
| 5306-01-348-3274 | 152 | 1 | 2910-01-353-7629 | 137 | 5 |
| 5365-01-348-3300 | 151 | 1 | 5315-01-353-8894 | 142 | 17 |
| 6140-01-348-4055 | 193 | | 5310-01-355-0174 | 133 | 6 |
| 3120-01-348-6965 | 124 | 45 | 9905-01-355-2174 | 101 | 13 |
| 5365-01-348-8380 | 124 | 24 | 6150-01-355-3466 | 193 | |
| 2530-01-349-3790 | 122 | 1 | 4820-01-357-5636 | 155 | 8 |
| 2930-01-349-4495 | 124 | 25 | 2910-01-357-5703 | 154 | 3 |
| 4730-01-349-4735 | 135 | 3 | 2815-01-357-5705 | 156 | 11 |
| 5305-01-349-5133 | 135 | 26 | | 156 | 11 |
| | 193 | 10 | 3010-01-357-5708 | 110 | 25 |
| 5975-01-349-6697 | 124 | 37 | 4820-01-357-6505 | 148 | 8 |
| 5975-01-349-6698 | 124 | 38 | 4730-01-357-6521 | 127 | 5 |
| 5975-01-349-6699 | 124 | 41 | 4820-01-358-0633 | 106 | |
| 5975-01-349-6700 | 124 | 42 | 4710-01-358-0644 | 127 | 6 |
| 5975-01-349-6701 | 124 | 43 | 4820-01-358-0682 | 137 | 22 |
| 2530-01-350-6095 | 122 | | 4710-01-358-q687 | 148 | 2 |
| 2530-01-350-9071 | 122 | 14 | 5360-01-358-4558 | 136 | 14 |
| 5365-01-351-9382 | 138 | 64 | 5330-01-358-5406 | 189 | 29 |
| 2530-01-352-0038 | 110 | 1 | 4710-01-359-5055 | 149 | 10 |
| 5360-01-352-1191 | 138 | 52 | 4710-01-359-5056 | 149 | 17 |

## CROSS-REFERENCE INDEXES
## NATIONAL STOCK NUMBER INDEX

| STOCK NUMBER | FIG. | ITEM | STOCK NUMBER | FIG. | ITEM |
|---|---|---|---|---|---|
| 6685-01-359-7871 | 127 | 19 | 2530-01-362-1100 | 178 | 27 |
| 2520-01-359-9682 | 185 | | | 179 | 27 |
| 3020-01-360-1580 | 186 | 8 | 2530-01-362-1149 | 178 | |
| 2805-01-361-3379 | 159 | 10 | 2540-01-362-1157 | 103 | 4 |
| 2520-01-361-3383 | 162 | | 5310-01-362-1289 | 189 | 4 |
| 2520-01-361-3384 | 164 | | 5305-01-362-1303 | 186 | 3 |
| 2520-01-361-5029 | 167 | | 5305-01-362-1304 | 186 | 3 |
| 5340-01-361-6561 | 189 | 14 | 5305-01-362-1305 | 186 | 9 |
| 5310-01-361-6943 | 189 | 3 | 5305-01-362-1306 | 186 | 12 |
| 5340-01-361-6967 | 189 | 83 | 5305-01-362-1307 | 189 | 1 |
| 5340-01-361-6974 | 102 | 1 | 2520-01-362-1786 | 186 | |
| 2835-01-361-7029 | 189 | | | 187 | |
| 4730-01-361-8066 | 189 | 5 | 3020-01-362-1816 | 186 | 24 |
| 4730-01-361-8070 | 189 | 64 | 5307-01-362-2088 | 177 | 16 |
| 4730-01-361-8329 | 189 | 65 | 4610-01-362-2378 | 189 | 34 |
| 5306-01-361-8361 | 177 | 6 | 5365-01-362-2602 | 154 | 8 |
| 5365-01-361-8383 | 188 | 7 | 5365-01-362-2603 | 154 | 8 |
| 5310-01-361-8386 | 103 | 19 | 5365-01-362-2604 | 154 | 8 |
| | 128 | 5 | 5365-01-362-2605 | 154 | 8 |
| 5365-01-361-8394 | 186 | 6 | 5365-01-362-2606 | 154 | 8 |
| 5365-01-361-8395 | 186 | 6 | 5365-01-362-2607 | 154 | 8 |
| 5365-01-361-8396 | 186 | 6 | 5330-01-362-3365 | 176 | 9 |
| 5365-01-361-8397 | 186 | 6 | 5340-01-362-3378 | 166 | 10 |
| 5365-01-361-8398 | 186 | 6 | 3130-01-362-3410 | 159 | 16 |
| 5365-01-361-8399 | 189 | 24 | 2520-01-362-3505 | 186 | |
| 5365-01-361-8406 | 186 | 23 | 5306-01-362-4310 | 118 | 40 |
| 5365-01-361-8407 | 186 | 23 | 5306-01-362-4311 | 157 | 1 |
| 5365-01-361-8408 | 186 | 23 | 5306-01-362-4312 | 166 | 9 |
| 5365-01-361-8409 | 186 | 23 | 5365-01-362-4361 | 154 | 8 |
| 5365-01-361-8410 | 186 | 23 | 5340-01-362-4394 | 160 | 1 |
| 5365-01-361-8411 | 186 | 23 | 5340-01-362-4395 | 161 | 2 |
| 5365-01-361-8412 | 186 | 23 | 5305-01-362-4397 | 166 | 1 |
| 5365-01-361-8413 | 189 | 79 | 5305-01-362-4398 | 166 | 3 |
| 5365-01-361-9009 | 186 | 23 | 3120-01-362-4411 | 159 | 15 |
| 5365-01-361-9010 | 186 | 37 | 3120-01-362-4412 | 159 | 15 |
| | 187 | 7 | 5305-01-362-5009 | 103 | 18 |
| 5365-01-361-9011 | 186 | 37 | 5340-01-362-5027 | 192 | 8 |
| | 187 | 7 | 5340-01-362-5031 | 118 | 25 |
| 5365-01-361-9012 | 186 | 37 | 4720-01-362-5664 | 192 | 10 |
| | 187 | 7 | 2520-01-362-5766 | 189 | 63 |
| 5365-01-361-9013 | 186 | 37 | 3110-01-363-0588 | 162 | 59 |
| | 187 | 7 | 5330-01-363-0611 | 162 | 33 |
| 5365-01-361-9014 | 186 | 37 | 5330-01-363-0624 | 162 | 3 |
| | 187 | 7 | 5330-01-363-0625 | 162 | 40 |
| 5365-01-361-9015 | 186 | 37 | 5330-01-363-0626 | 139 | 48 |
| | 187 | 7 | 5310-01-363-0628 | 167 | 1 |
| 5365-01-361-9058 | 189 | 78 | 5310-01-363-0642 | 167 | 2 |
| 5365-01-361-9062 | 186 | 37 | 5310-01-363-1482 | 137 | 15 |
| | 187 | 7 | 5305-01-363-1504 | 138 | 56 |
| 2520-01-361-9303 | 184 | | 5305-01-363-1505 | 138 | 75 |

## CROSS-REFERENCE INDEXES
## NATIONAL STOCK NUMBER INDEX

| STOCK NUMBER | FIG. | ITEM | STOCK NUMBER | FIG. | ITEM |
|---|---|---|---|---|---|
| 5305-01-363-1506 | 138 | 76 | 5360-01-363-1712 | 167 | 18 |
| 5305-01-363-1507 | 139 | 1 | 5330-01-363-1715 | 138 | 19 |
| 5365-01-363-1508 | 162 | 63 | 5330-01-363-1719 | 138 | 87 |
| 5365-01-363-1509 | 162 | 69 | 5330-01-363-1720 | 139 | 2 |
| 5365-01-363-1510 | 162 | 73 | 5330-01-363-1721 | 139 | 22 |
| 5365-01-363-1511 | 162 | 85 | 5330-01-363-1722 | 139 | 66 |
| 5365-01-363-1512 | 139 | 26 | 5310-01-363-1740 | 144 | 3 |
| 3120-01-363-1514 | 138 | 95 | 5365-01-363-1757 | 139 | 34 |
| 5365-01-363-1515 | 117 | 6 | 5365-01-363-1758 | 139 | 34 |
| | 144 | 10 | 5330-01-363-1780 | 139 | 18 |
| 5305-01-363-1519 | 137 | 1 | 5330-01-363-1781 | 138 | 40 |
| 5305-01-363-1520 | 138 | 23 | 5330-01-363-1785 | 138 | 94 |
| 5305-01-363-1521 | 190 | 7 | 5330-01-363-1786 | 139 | 24 |
| 5365-01-363-1528 | 138 | 3 | 5330-01-363-1787 | 139 | 33 |
| 5365-01-363-1529 | 138 | 4 | 5330-01-363-1788 | 139 | 62 |
| 5365-01-363-1530 | 138 | 64 | 4730-01-363-2007 | 162 | 45 |
| 5365-01-363-1531 | 138 | 64 | 2520-01-363-2352 | 162 | 6 |
| 5365-01-363-1532 | 138 | 64 | 2520-01-363-2367 | 162 | 62 |
| 5365-01-363-1533 | 138 | 64 | 2520-01-363-2368 | 162 | 68 |
| 5365-01-363-1534 | 138 | 64 | 2530-01-363-2390 | 189 | 2 |
| 5365-01-363-1535 | 138 | 64 | 2530-01-363-2515 | 176 | 4 |
| 5365-01-363-1536 | 138 | 64 | 2920-01-363-2518 | 111 | 16 |
| 5365-01-363-1537 | 138 | 64 | 2815-01-363-2553 | 158 | |
| 5365-01-363-1538 | 138 | 64 | 2815-01-363-2555 | 139 | 31 |
| 5365-01-363-1539 | 138 | 71 | 2530-01-363-2568 | 189 | 19 |
| 5365-01-363-1540 | 138 | 74 | 5306-01-363-2626 | 189 | 20 |
| 5365-01-363-1541 | 139 | 34 | 5305-01-363-2642 | 138 | 16 |
| 5365-01-363-1542 | 139 | 34 | 5340-01-363-2647 | 149 | 5 |
| 5365-01-363-1543 | 139 | 34 | 5305-01-363-2648 | 188 | 17 |
| 5365-01-363-1544 | 139 | 34 | 5305-01-363-2649 | 135 | 19 |
| 5365-01-363-1545 | 139 | 34 | | 139 | 50 |
| 5365-01-363-1546 | 139 | 34 | 5305-01-363-2650 | 144 | 1 |
| 5365-01-363-1547 | 139 | 34 | 5305-01-363-2651 | 144 | 2 |
| 5365-01-363-1548 | 139 | 34 | 5305-01-363-2652 | 151 | |
| 5365-01-363-1549 | 139 | 34 | 5340-01-363-2653 | 138 | 2 |
| 5365-01-363-1550 | 139 | 34 | 5330-01-363-2839 | 167 | 6 |
| 5365-01-363-1551 | 139 | 34 | 5330-01-363-2840 | 167 | 31 |
| 5365-01-S63-1552 | 139 | 34 | 5330-01-363-2841 | 167 | 53 |
| 5365-01-363-1553 | 139 | 34 | 5330-01-363-2842 | 167 | 68 |
| 5365-01-363-1554 | 139 | 34 | 5330-01-363-2862 | 167 | 24 |
| 5365-01-363-1555 | 139 | 34 | 5365-01-363-2866 | 139 | 34 |
| 5365-01-363-1556 | 139 | 34 | 5365-01-363-2867 | 139 | 34 |
| 5365-01-363-1557 | 139 | 34 | 5365-01-363-2868 | 139 | 34 |
| 5365-01-363-1558 | 139 | 34 | 5330-01-363-2879 | 167 | 11 |
| 5365-01-363-1559 | 139 | 34 | 5330-01-363-2880 | 167 | 23 |
| 5365-01-363-1560 | 139 | 34 | 2520-01-363-3100 | 163 | |
| 5365-01-363-1561 | 139 | 34 | 2520-01-363-3105 | 189 | 63 |
| 5365-01-363-1565 | 139 | 15 | 3110-01-363-3113 | 139 | 54 |
| 5310-01-363-1697 | 137 | 11 | 5310-01-363-3146 | 139 | 55 |
| 5330-01-363-1705 | 152 | 13 | 5365-01-363-4080 | 139 | 34 |

## CROSS-REFERENCE INDEXES
## NATIONAL STOCK NUMBER INDEX

| STOCK NUMBER | FIG. | ITEM |
|---|---|---|
| 5365-01-363-4081 | 139 | 34 |
| 5365-01-363-4082 | 139 | 34 |
| 4810-01-363-4220 | 139 | 4 |
| 2910-01-363-4367 | 136 | 7 |
| 2520-01-363-4418 | 167 | 15 |
| 2520-01-363-4419 | 167 | 16 |
| 2520-01-363-4420 | 167 | 17 |
| 6150-01-363-4517 | 125 | 1 |
| 5360-01-363-4821 | 139 | 29 |
| 5360-01-363-4822 | 139 | 20 |
| 5360-01-363-4823 | 138 | 70 |
| 5360-01-363-4824 | 138 | 69 |
| 5360-01-363-4825 | 137 | 24 |
| 5360-01-363-4826 | 162 | 7 |
| 5360-01-363-4828 | 138 | 73 |
| 5360-01-363-4829 | 138 | 7 |
| 5305-01-363-4841 | 162 | 13 |
| 5306-01-363-4842 | 158 | 4 |
| 5306-01-363-4843 | 158 | 4 |
| 5306-01-363-4844 | 158 | 4 |
| 5307-01-363-4853 | 176 | 11 |
| 5305-01-363-4855 | 162 | 31 |
| 5305-01-363-4860 | 162 | 25 |
| 5365-01-363-4861 | 139 | 34 |
| 3120-01-363-5022 | 162 | 57 |
| 3120-01-363-5023 | 162 | 66 |
| 3120-01-363-5024 | 162 | 74 |
| 3120-01-363-5025 | 162 | 78 |
| 3120-01-363-5029 | 159 | 15 |
| 4730-01-363-5163 | 189 | 41 |
| 2530-01-363-5175 | 107 | 4 |
| | 108 | 18 |
| 2530-01-363-5176 | 109 | 5 |
| 3110-01-363-6018 | 167 | 39 |
| 3110-01-363-6019 | 167 | 41 |
| 3110-01-363-6020 | 167 | 63 |
| 5310-01-363-6053 | 162 | 54 |
| 5305-01-363-6073 | 138 | 21 |
| 5365-01-363-6075 | 167 | 19 |
| 5365-01-363-6076 | 167 | 37 |
| 5310-01-363-6082 | 162 | 55 |
| 5365-01-363-6095 | 167 | 33 |
| 4730-01-363-6734 | 139 | 3 |
| 3110-01-363-7114 | 162 | 72 |
| 2815-01-363-7390 | 139 | 21 |
| 2530-01-363-8088 | 155 | 5 |
| 2805-01-364-1520 | 157 | 7 |
| 5330-01-364-1939 | 113 | 42 |
| 5360-01-364-1945 | 173 | 7 |
| | 174 | 7 |
| 5360-01-364-3476 | 138 | 69 |
| 5360-01-364-3477 | 138 | 70 |
| 5360-01-364-3478 | 138 | 73 |
| 5365-01-364-4224 | 138 | 64 |
| 5365-01-364-4225 | 138 | 64 |
| 5365-01-364-4226 | 138 | 64 |
| 5365-01-364-4227 | 138 | 71 |
| 4730-01-364-4405 | 115 | 4 |
| | 115 | 8 |
| 5305-01-364-4776 | 138 | 76 |
| 5305-01-364-4777 | 138 | 79 |
| 3120-01-364-5062 | 113 | 44 |
| 5998-01-364-5143 | 112 | 16 |
| 3020-01-364-6322 | 159 | 4 |
| 2990-01-364-8834 | 115 | 2 |
| 2540-01-364-8900 | 101 | 10 |
| 5330-01-364-9024 | 145 | 27 |
| 5310-01-364-9059 | 177 | |
| 5365-01-364-9090 | 139 | 34 |
| 5306-01-364-9107 | 113 | 46 |
| 5330-01-364-9855 | 145 | 20 |
| 2910-01-365-2586 | 135 | |
| 2805-01-365-2744 | 157 | 11 |
| 2805-01-365-2745 | 157 | 12 |
| 3020-01-365-2753 | 159 | 4 |
| 4730-01-365-2904 | 169 | |
| 2530-01-365-2924 | 178 | 16 |
| | 179 | 16 |
| 2805-01-365-3050 | 158 | |
| 5340-01-365-4835 | 113 | 32 |
| 2930-01-365-5299 | 148 | 14 |
| 4320-01-365-5618 | 155 | 3 |
| 2815-01-365-5662 | 156 | 21 |
| 5330-01-365-5830 | 145 | |
| 4810-01-365-6929 | 122 | 9 |
| 2930-01-365-7064 | 145 | 9 |
| 2530-01-365-7066 | 106 | 18 |
| 5340-01-365-8079 | 193 | 3 |
| 4730-01-365-8956 | 130 | 2 |
| 4730-01-365-8957 | 130 | 5 |
| 3020-01-365-9216 | 162 | 24 |
| 5306-01-365-9638 | 193 | 7 |
| 6150-01-366-1581 | 193 | |
| 2835-01-366-2754 | 178 | 25 |
| | 179 | 25 |
| 2805-01-366-3468 | 157 | 7 |
| 5365-01-366-4838 | 145 | 21 |
| 4720-01-366-6104 | 120 | 1 |
| 4710-01-366-7078 | 148 | 5 |
| 2540-01-367-2044 | 111 | 15 |

CROSS-REFERENCE INDEXES
NATIONAL STOCK NUMBER INDEX

| STOCK NUMBER | FIG. | ITEM | STOCK NUMBER | FIG. | ITEM |
|---|---|---|---|---|---|
| 6150-01-367-5442 | 193 | | | | |
| 6150-01-367-7427 | 193 | | | | |

## CROSS-REFERENCE INDEXES

### PART NUMBER INDEX

| CAGEC | PART NUMBER | STOCK NUMBER | FIG. | ITEM |
|---|---|---|---|---|
| 1HN49 | ABL6-6A | | 114 | 15 |
| 88044 | AN101723 | 5306-00-177-5439 | 188 | 34 |
| 41625 | A036733 | | 108 | 16 |
| 78500 | A12297U4597 | | 178 | 23 |
| | | | 179 | 23 |
| 78500 | A133211Y2755 | | 178 | 34 |
| | | | 179 | 34 |
| 78500 | A13780Y77 | | 178 | 14 |
| | | | 179 | 14 |
| 78500 | A1779M195 | | 178 | 21 |
| | | | 179 | 21 |
| 78500 | A2247U47 | 2530-01-095-2497 | 178 | 32 |
| | | | 179 | 32 |
| 78500 | A2297L3158 | | 178 | 28 |
| | | | 179 | 28 |
| 78500 | A23211Y2755 | | 178 | 20 |
| 41625 | A303800 | | 109 | 1 |
| 41625 | A303804 | | 109 | 4 |
| 78500 | A33211Y2755 | | 179 | 20 |
| 78500 | A3722T358 | | 178 | 17 |
| | | | 179 | 17 |
| 78500 | A3780Q121 | | 178 | 10 |
| | | | 179 | 10 |
| 78500 | A431779W231 | | 178 | 12 |
| | | | 179 | 12 |
| 10988 | A44864 | 5360-01-132-4645 | 154 | 7 |
| 78500 | A653722T358 | 2530-01-365-2924 | 178 | 16 |
| | | | 179 | 16 |
| 78500 | A72297L3158 | 2530-01-362-1100 | 178 | 27 |
| | | | 179 | 27 |
| 12658 | BF979 | 2910-00-470-7075 | 135 | 1 |
| 80204 | B1821BH025C100N | 5305-00-225-3843 | 108 | 13 |
| | | | 114 | 6 |
| | | | 126 | 49 |
| 80204 | B1821BH025C125N | 5305-00-068-0509 | 108 | 8 |
| 80204 | B1821BH031C150N | 5306-00-226-4831 | 106 | 4 |
| 80204 | B1821BH038C100N | 5305-00-068-0510 | 110 | 22 |
| 80204 | B1821BH038C175N | 5305-00-821-3869 | 110 | 14 |
| 80204 | B1821BH038C225N | 5305-00-638-8920 | 110 | 16 |
| 80204 | B1821BH038C300N | 5305-00-846-5703 | 108 | 3 |
| 80204 | B1821BH038C400N | 5305-00-781-3928 | 114 | 1 |
| 80204 | B1821BH050C175N | 5305-00-071-2070 | 194 | 5: |
| 80204 | B1821BH063C250N | 5305-00-724-7224 | 194 | 10 |
| 62707 | D3H | 5330-01-301-6373 | 164 | |
| 41625 | D300669-004-120 | 2530-01-363-5175 | 107 | 4 |
| | | | 108 | 18 |
| 41625 | D301872-002-180 | 2530-01-363-5176 | 109 | 5 |
| 95019 | D5C | 2520-00-236-7515 | 163 | |
| | | | 184 | |
| | | | 185 | |
| 89346 | ETN0083799 | | 186 | 33 |

## CROSS-REFERENCE INDEXES

### PART NUMBER INDEX

| CAGEC | PART NUMBER | STOCKNUMBER | FIG. | ITEM | |
|---|---|---|---|---|---|
| 89346 | ETN0090186 | 5340-01-361-6967 | 189 | 83 | |
| 89346 | FHPM903249 | | 189 | 73 | |
| 89346 | FPHM903210 | | 189 | 76 | |
| 89346 | FP3925 | | 109 | 85 | |
| 89346 | FP3984 | | 189 | 86 | |
| 77640 | G 455076 | 5305-01-342-5475 | 113 | 10 | |
| 77640 | G 9430271 | 5305-01-342-5579 | 113 | 1 | |
| 60038 | HM218210 | 3110-00-618-0249 | 176 | 14 | |
| 60038 | HM218248 | 3110-00-618-0248 | 176 | 10 | |
| 60038 | HM804846 | 3110-00-814-0630 | 167 | 78 | |
| 89346 | IHCLM31S | 6140-01-348-4055 | 193 | | |
| 26786 | J1800AF60 | 2540-01-252-4875 | 102 | 2 | |
| 80020 | J87882-31 | 5306-00-206-9801 | 188 | 48 | |
| 78500 | KIT 1168 | 2530-01-300-5917 | 178 | 39 | * |
| | | | 179 | 39 | * |
| 78500 | K235 | | 178 | 33 | |
| | | | 179 | 33 | |
| 1JT45 | K753 | | 111 | 18 | |
| 1JT45 | LB3-ST | | 111 | 31 | |
| 55262 | MC716-S | 2540-01-364-8900 | 101 | 10 | |
| 78500 | MN3081 | | 178 | 35 | |
| | | | 179 | 35 | |
| 96906 | MS15003-4 | 4730-00-172-0028 | 189 | 41 | |
| 96906 | MS20068-145 | | 110 | 18 | |
| 78500 | MS20802 1 | | 178 | 37 | |
| 78500 | MS2060201 | | 179 | 37 | |
| 96906 | MS24665-355 | 5315-00-012-0123 | 142 | 1 | |
| 96906 | MS24665-491 | 5315-00-059-0206 | 166 | 46 | |
| | | | 187 | 12 | |
| | | | 189 | | |
| 96906 | MS24665-495 | 5315-00-234-1664 | 189 | 11 | |
| 96906 | MS271 83-11 | 5310-00-809-3078 | 106 | 5 | |
| | | | 113 | 37 | |
| 96906 | MS27183-13 | 5310-00-087-7493 | 108 | 2 | |
| | | | 110 | 23 | |
| | | | 114 | 2 | |
| 96906 | MS27183-17 | 5310-00-809-5997 | 194 | 3 | |
| 96906 | MS27183-19 | 5310-00-809-3079 | II3 | 11 | |
| 96906 | MS27183-21 | 5310-00-823-8803 | 118 | 0 | |
| | | | 194 | II | |
| 96906 | MS27183-5 | 5310-00-983-8483 | 124 | 12 | |
| 96906 | MS27183-9 | 5310-00-823-8804 | 108 | 6 | |
| | | | 114 | 9 | |
| | | | 137 | 8 | |
| 96906 | MS35206-243 | 5305-00-984-6191 | 124 | 9 | |
| 96906 | MS35206-247 | 5305-00-984-6195 | 114 | I3 | |
| 96906 | MS35207-265 | 5305-00-993-1848 | I24 | 31 | |
| 96906 | MS35333-42 | 5310-00-595-7237 | 103 | 3 | |
| 96906 | MS35338-30 | | 124 | 13 | |
| 96906 | MS35338-43 | 5310-00-045-3296 | 124 | 2 | |
| 96906 | MS35338-44 | 5310-00-582-5965 | 103 | 20 | |
| | | | 133 | 7 | |
| | | | 134 | 3 | |

## CROSS-REFERENCE INDEXES

### PART NUMBER INDEX

| CAGEC | PART NUMBER | STOCK NUMBER | FIG. | ITEM |
|---|---|---|---|---|
| 96906 | MS35338-44 | 5310-00-582-5965 | 136 | 9 |
| | | | 137 | 3 |
| | | | 138 | 26 |
| | | | 139 | 37 |
| | | | 175 | |
| | | | 189 | |
| 96906 | MS35338-45 | 5310-00-407-9566 | 103 | 29 |
| | | | 105 | 6 |
| | | | 118 | 3 |
| | | | 123 | 10 |
| | | | 133 | 13 |
| | | | 135 | 29 |
| | | | 140 | 2 |
| | | | 143 | 6 |
| | | | 149 | 7 |
| | | | 152 | 9 |
| 96906 | MS35338-46 | 5310-00-637-9541 | 110 | 24 |
| | | | 118 | 20 |
| | | | 119 | 3 |
| | | | 123 | 7 |
| | | | 145 | 8 |
| | | | 149 | 4 |
| | | | 160 | 4 |
| | | | 175 | |
| | | | 186 | 28 |
| 96906 | MS35338-47 | 5310-00-209-0965 | 118 | 27 |
| | | | 119 | 13 |
| | | | 189 | |
| 96906 | MS35338-48 | | 126 | 14 |
| | | | 140 | 18 |
| | | | 180 | 18 |
| | | | 181 | 18 |
| | | | 182 | 18 |
| | | | 183 | 18 |
| 96906 | MS35338-50 | 5310-00-820-6653 | 166 | 2 |
| | | | 186 | |
| | | | 187 | |
| 96906 | MS3533B-51 | 5310-00-584-7888 | 188 | 24 |
| 96906 | MS35649-3252 | | 124 | 4 |
| 96906 | MS35649-362 | | 106 | 14 |
| | | | 124 | 14 |
| 96906 | MS35650-302 | 5310-00-934-9751 | 124 | 3 |
| 96906 | MS3S692-69 | 5310-00-835-2140 | 189 | 12 |
| 96906 | MS51113-1 | 5930-00-307-8856 | 111 | 23 |
| 96906 | MS51922-13 | 5310-00-984-3807 | 106 | 3 |
| 96906 | MS5192247 | 5310-00-087-4652 | 108 | 1 |
| | | | 110 | 13 |
| | | | 114 | 3 |
| 96906 | MS51922-2 | 5310-00-929-1807 | 108 | 5 |
| | | | 114 | 7 |
| 94906 | MS51922-33 | 5310-00-225-6993 | 194 | 2 |

## CROSS-REFERENCE INDEXES

### PART NUMBER INDEX

| CAGEC | PART NUMBER | STOCK NUMBER | FIG. | ITEM |
|---|---|---|---|---|
| 96906 | MS51922-49 | 5310-00-269-4040 | 194 | 12 |
| 96906 | MS51967-14 | | 107 | 3 |
| 96906 | MS51967-8 | | 107 | 7 |
| 96906 | MS51968-20 | 5310-00-763-8905 | 124 | 27 |
| 96906 | MS51968-5 | 5310-00-880-7746 | 105 | 5 |
| 96906 | MS53068-1 | 2530-00-693-1029 | 177 | 4 |
| 96906 | MS90725-13 | 5306-01-303-2815 | 108 | 9 |
| 96906 | MS90725-27 | 5306-00-225-8492 | 113 | 25 |
| 96906 | MS90725-60 | 5305-00-269-3211 | 129 | 7 |
| 96906 | MS90728-174 | | 194 | 14 |
| 89346 | NSS-SEAL | | 145 | 29 |
| 89346 | NSS-SEAT | | 145 | 30 |
| 1DR34 | N10242-149 | 3010-01-344-0800 | 110 | 17 |
| 40342 | N20954D | 4820-01-358-0633 | 106 | |
| 40342 | N30072ED | 2530-01-365-7066 | 106 | 18 |
| 78500 | N35P | | 178 | 7 |
| | | | 179 | 7 |
| 1JT45 | PD250 | | 104 | 11 |
| 18265 | P10-5534 | 4720-00-450-9092 | 127 | 2 |
| 18265 | P10-5610 | 4720-01-006-8462 | 127 | 4 |
| 31033 | RC150 | 2815-01-192-4698 | 156 | 23 |
| 78500 | RDA 1550-759 | 2530-01-362-1149 | 178 | |
| 78500 | RDA 1550-760 | | 179 | |
| 89346 | RE268330 | 5340-01-361-6974 | 102 | I |
| 78500 | RV3109 | | 178 | 19 |
| | | | 179 | 19 |
| 24617 | R1310WB | 3110-00-155-6596 | 167 | 57 |
| 51501 | R519 | 4820-00-142-3036 | 175 | 9 |
| 7T253 | SD-12 | | 110 | |
| 7T253 | SD-13 | | 106 | |
| 7T253 | SD-14 | | 108 | |
| 7T253 | SD-15 | | 111 | |
| T253 | SD-16 | | 101 | |
| 7T253 | SD-17 | | 102 | |
| 7T253 | SD-18 | | 104 | |
| 7T253 | SD-19 | | 115 | |
| 7T253 | SD-20 | | 194 | |
| 7T253 | SD-31 | | 114 | |
| 7T253 | SD-32 | | 109 | |
| 7T253 | SD-33 | | 107 | |
| 7T253 | SD-39 | | 103 | |
| 01652 | SPA1740 | 5340-01-353-6053 | 115 | 1 |
| 06120 | SPG1002 | | 108 | 17 |
| 19220 | SS-13-4972-51UL | | 101 | 14 |
| 19220 | SS-13-4972-51UR | | 101 | 15 |
| 89346 | ST 2161 | | 186 | 49 |
| | | | 187 | 17 |
| 89346 | ST 2162 | | 186 | 50 |
| | | | 187 | 18 |
| 89346 | ST 264 | | 186 | 31 |
| 89346 | ST 3022 | | 186 | 16 |

## CROSS-REFERENCE INDEXES

### PART NUMBER INDEX

| CAGEC | PART NUMBER | STOCK NUMBER | FIG. | ITEM |
|---|---|---|---|---|
| 29930 | ST2018A | 3110-00-143-7538 | 177 | 10 |
| 29930 | ST2022 | 3110-00-100-3611 | 177 | 12 |
| 89346 | ST205A | 3110-01-276-3192 | 142 | 27 |
| 29930 | ST2069 | 3110-00-100-3543 | 162 | 84 |
| 89346 | ST2098 | 3120-01-173-6699 | 176 | 8 |
| 29930 | ST967 | 3110-00-143-7586 | 177 | 14 |
| 29930 | ST968 | 3110-00-143-7585 | 176 | 13 |
| 29930 | ST969 | 3110-00-100-0589 | 177 | 15 |
| 29930 | ST987 | 3110-00-100-0544 | 162 | 83 |
| 78500 | S255 | 5305-01-160-7408 | 178 | 1 |
| | | | 179 | 1 |
| 1JT45 | TC01010 | | 104 | 9 |
| 01652 | U350 | 5340-00-541-4076 | 115 | 5 |
| 01652 | U400 | 5340-00-467-3734 | 115 | 3 |
| 21335 | VAK1 | 3130-01-187-6271 | 107 | 11 |
| 35311 | VM1471 | 5305-00-236-6531 | 118 | 1 |
| 31033 | VP107 | 2815-01-190-1052 | 156 | 20 |
| 74410 | XB-0011-1 | | 194 | 15 |
| 89346 | ZZ102377 | 5315-01-353-8894 | 142 | 17 |
| 90640 | 0051438-0 | 3110-00-100-3101 | 167 | 74 |
| 79146 | 019004 | | 107 | 6 |
| 79146 | 019006 | | 107 | 2 |
| 79146 | 019061 | | 107 | 5 |
| 79146 | 019065 | | 107 | 1 |
| 77640 | 028426 | 5310-01-135-6758 | 113 | 26 |
| 77640 | 032647 | | 113 | 19 |
| 77640 | 032784 | 5330-01-364-1939 | 113 | 42 |
| 05333 | 062430 | | 114 | 23 |
| 19220 | 1-400-L25 | | 101 | 19 |
| 19220 | 1-400-R25 | | 101 | 20 |
| 89346 | 10-24X5/8 | | 121 | 2 |
| 64289 | 100-2425 | | 114 | 11 |
| 35510 | 100111 | | 124 | 15 |
| 89346 | 101917R1 | | 169 | |
| 89346 | 104112 | | 193 | 9 |
| 16764 | 10495183 | 5970-01-266-6689 | 126 | 16 |
| 89346 | 10498663 | | 126 | 8 |
| 89346 | 105911R1 | | 162 | 16 |
| 89346 | 106312R1 | 3120-00-493-3900 | 162 | 64 |
| 89346 | 1071376Z | 2520-01-297-4519 | 168 | |
| 89346 | 107813R1 | 5310-00-531-9120 | 166 | 8 |
| 29510 | 109460 | 4730-00-172-0031 | 188 | 15 |
| 29930 | 109461 | 4730-00-848-2521 | 180 | 21 |
| | | | 181 | 21 |
| | | | 182 | 21 |
| | | | 183 | 21 |
| | | | 190 | 20 |
| 04741 | 11A7062 | 5310-00-053-7808 | 177 | 1 |
| 89346 | 110 330 | 5310-00-079-5996 | 143 | 1 |
| 89346 | 110362R92 | 2530-00-491-5012 | 189 | 13 |
| 89346 | 110363R92 | 2530-00-695-3376 | 189 | 13 |

## CROSS-REFERENCE INDEXES

### PART NUMBER INDEX

| CAGEC | PART NUMBER | STOCK NUMBER | FIG. | ITEM |
|---|---|---|---|---|
| 89346 | 110668R1 | | 108 | 11 |
| 89346 | 111428H | 5307-01-363-4853 | 176 | 11 |
| 89346 | 111442R1 | 5330-01-346-0315 | 192 | 2 |
| 89346 | 1115598 | 2920-01-330-9409 | 126 | 5 |
| 89346 | 1116920 | 5945-00-844-6559 | 111 | 21 |
| 7T253 | 1146 | | 103 | 13 |
| 7T253 | 1147 | | 103 | 16 |
| 7T253 | 1148 | | 103 | 17 |
| 89346 | 115193 | | 149 | 12 |
| 89346 | 116487 | | 149 | |
| 89346 | 117804H | | 189 | 70 |
| 89346 | 117996 | | 142 | 26 |
| 89346 | 118624 | 5310-01-346-9363 | 118 | 24 |
| 89346 | 118748 | | 140 | 16 |
| 89346 | 118755 | | 135 | 9 |
| 89346 | 12015R1 | | 188 | 52 |
| 89346 | 120391 | | 124 | 29 |
| 78500 | 1205B1666 | 5330-01-136-0046 | 178 | 29 |
| | | | 179 | 29 |
| 78500 | 1205C1667 | 2835-01-366-2754 | 178 | 25 |
| | | | 179 | 25 |
| 89346 | 121207 | | 149 | 14 |
| 89346 | 121220 | | 128 | 10 |
| 89346 | 121322 | | 128 | 11 |
| 89346 | 121637 | | 162 | 28 |
| 24617 | 121694 | 3110-00-100-0728 | 162 | 61 |
| 89346 | 121894C1 | 4820-01-357-6505 | 148 | 8 |
| 92679 | 122316R91 | 4730-00-908-3194 | 129 | 11 |
| 89346 | 122407 | | 182 | 24 |
| 89346 | 122407R1 | | 180 | 24 |
| | | | 181 | 24 |
| | | | 183 | 24 |
| 78500 | 1229S513 | 5310-00-760-7442 | 178 | 2 |
| | | | 179 | 2 |
| 89346 | 12436R1 | | 188 | 23 |
| 89346 | 124543 | | 119 | 11 |
| | | | 122 | 4 |
| 89346 | 124755R1 | 5307-01-066-9104 | 188 | 40 |
| 89346 | 124818 | | 141 | 4 |
| 89346 | 124891R1 | | 188 | 4 |
| 89346 | 124896R2 | | 188 | 13 |
| 89346 | 124925 | | 175 | |
| 89346 | 125407H1 | 4810-01-298-8573 | 118 | 7 |
| 89346 | 126177 | 5310-00-151-9018 | 128 | 1 |
| 89346 | 126404R1 | | 180 | 9 |
| | | | 181 | 9 |
| | | | 182 | 9 |
| | | | 183 | 9 |
| 95019 | 127740K | 2520-01-266-3705 | 168 | 5 |
| 89346 | 129083R1 | 5340-01-363-2647 | 149 | 5 |
| 89346 | 129286H | | 162 | 15 |

## CROSS-REFERENCE INDEXES

### PART NUMBER INDEX

| CAGEC | PART NUMBER | STOCK NUMBER | FIG. | ITEM |
|---|---|---|---|---|
| 19220 | 13-4972-SS-50L | | 101 | 22 |
| 19220 | 13-4972-SS-50R | | 101 | 23 |
| 89346 | 130559R1 | | 188 | 3 |
| 89346 | 130564R1 | | 188 | 1 |
| 40342 | 13241A | | 111 | |
| 89346 | 133093R1 | | 156 | 12 |
| 89346 | 133214R91 | 3110-00-108-9247 | 122 | 3 |
| 35510 | 13657 | 5310-00-428-6461 | 124 | 33 |
| 89346 | 138498 | | 189 | 75 |
| 89346 | 138572 | | 169 | |
| 89346 | 140304 | | 128 | 9 |
| 29930 | 140483H | 5306-01-186-4992 | 115 | 12 |
| | | | 118 | 19 |
| | | | 121 | 6 |
| | | | 123 | 6 |
| | | | 129 | 17 |
| | | | 140 | 23 |
| | | | 145 | |
| 89346 | 141966H | | 165 | 4 |
| 89346 | 142127R1 | | 148 | |
| 89346 | 143406HX | | 169 | |
| 79470 | 1462X10 | | 106 | 12 |
| 79470 | 1468X12 | | 106 | 8 |
| 79470 | 1468X8X4 | | 106 | 13 |
| 79470 | 1469X10X6 | | 106 | 11 |
| 89346 | 15/16X1 L | | 142 | 20 |
| 78500 | 15X725 | | 178 | 8 |
| | | | 179 | 8 |
| 89346 | 1513791C1 | 4720-01-366-6104 | 120 | 1 |
| 89346 | 152450R1 | 5365-00-281-6623 | 180 | 10 |
| | | | 181 | 10 |
| | | | 182 | 10 |
| | | | 183 | 10' |
| 89346 | 157490R1 | | 186 | 55 |
| | | | 187 | 23 |
| 89346 | 157491R2 | 5310-01-254-4260 | 186 | 47 |
| | | | 187 | 13 |
| 89346 | 157493R1 | | 186 | 51 |
| | | | 187 | 19 |
| 89346 | 157566R1 | | 186 | 39 |
| | | | 187 | 8 |
| 89346 | 157567R1 | | 186 | 39 |
| | | | 187 | 8 |
| 89346 | 157725C1 | | 113 | 15 |
| 89346 | 160094R1 | | 141 | 1 |
| 89346 | 16067DA | | 156 | 13 |
| 89346 | 1609989C91 | 2930-01-365-7064 | 145 | 9 |
| 89346 | 161019R93 | | 187 | 10 |
| 89346 | 1614814C92 | 4720-01-325-9023 | 120 | 1 |
| 89346 | 162135R1 | | 192 | 3 |
| 89346 | 162304R1 | | 103 | 11 |

## CROSS-REFERENCE INDEXES

### PART NUMBER INDEX

| CAGEC | PART NUMBER | STOCK NUMBER | FIG. | ITEM |
|---|---|---|---|---|
| 89346 | 1646579C91 | 2520-01-361-3383 | 162 | |
| 89346 | 1648111C1 | | 190 | 18 |
| 89346 | 1648112C1 | | 190 | 19 |
| 89346 | 1648215C1 | | 168 | 3 |
| 89346 | 1648524C91 | | 177 | 13 |
| 89346 | 1648525C91 | | 177 | 13 |
| 89346 | 1648567C91 | | 112 | |
| 89346 | 1648900C91 | | 186 | |
| 89346 | 1649608C91 | 5340-01-362-5027 | 192 | 8 |
| 89346 | 1649641C91 | 2530-01-350-9071 | 122 | 14 |
| 89346 | 1649726C91 | 2520-01-363-2368 | 162 | 68 |
| 89346 | 1650622C1 | | 162 | 70 |
| 89346 | 1651263C91 | 2520-01-362-3505 | 186 | |
| 89346 | 1651264C91 | 3020-01-360-1580 | 186 | 8 |
| 89346 | 1651273C91 | 2520-01-293-2872 | 189 | 94 |
| 89346 | 1651279C91 | | 186 | 2 |
| 89346 | 1651280C91 | | 186 | 27 |
| 89346 | 1651281C91 | | 187 | 2 |
| 89346 | 1651515C91 | 3120-01-285-5440 | 189 | |
| 89346 | 1651517C91 | 3120-01-285-7065 | 187 | |
| 89346 | 1651523091 | 2520-01-297-9278 | 186 | |
| 89346 | 1652306C91 | 2920-01-363-2518 | 111 | 16 |
| 89346 | 1652453C91 | 2530-01-352-0038 | 110 | 1 |
| 89346 | 1653039C91 | 2520-01-363-2367 | 162 | 62 |
| 89346 | 1653041C1 | | 162 | 92 |
| 89346 | 1653042C1 | | 162 | 36 |
| 89346 | 1653043C1 | | 162 | 81 |
| 89346 | 1653044C1 | | 162 | 75 |
| 89346 | 1653045C1 | | 162 | 91 |
| 89346 | 1653046C1 | | 162 | 71 |
| 89346 | 1653047C1 | | 162 | 89 |
| 89346 | 1653048C1 | | 162 | 67 |
| 89346 | 1653049C1 | | 162 | 88 |
| 89346 | 1653050C1 | | 162 | 65 |
| 89346 | 1653051C1 | 3110-01-363-7114 | 162 | 72 |
| 89346 | 1653052C1 | | 162 | 39 |
| 89346 | 1653053C1 | | 162 | 90 |
| 89346 | 1653054C91 | | 162 | 49 |
| 89346 | 1653057C1 | | 162 | 50 |
| 89346 | 1653096C91 | | 162 | 17 |
| 89346 | 1653174C1 | | 112 | 2 |
| 89346 | 1653853C91 | 5330-01-295-8731 | 162 | 48 |
| 89346 | 1654330C1 | 5330-00-479-4267 | 177 | 11 |
| 89346 | 1654949C91 | 3020-01-362-1816 | 186 | 24 |
| 89346 | 1654953C1 | 5365-01-361-8406 | 186 | 23 |
| 89346 | 1654954C1 | 5365-01-361-8407 | 186. | 23 |
| 89346 | 1654955C1 | 5365-01-361-8408 | 186 | 23 |
| 89346 | 1654956C1 | 5365-01-361-8409 | 186 | 23 |
| 89346 | 1654957C1 | 5365-01-361-8410 | 186 | 23 |
| 89346 | 1654958C1 | 5365-01-361-8411 | 186 | 23 |
| 89346 | 1654959C1 | 5365-01-361-8412 | 186 | 23 |

## CROSS-REFERENCE INDEXES

### PART NUMBER INDEX

| CAGEC | PART NUMBER | STOCK NUMBER | FIG. | ITEM |
|---|---|---|---|---|
| 89346 | 1654960C1 | 5365-01-361-9009 | 186 | 23 |
| 89346 | 1655602C91 | | 122 | 5 |
| 89346 | 1655603C1 | 4810-01-365-6929 | 122 | 9 |
| 89346 | 1655605C1 | | 122 | 12 |
| 89346 | 1655606C91 | 2530-01-350-6095 | 122 | |
| 89346 | 1655608C91 | | 122 | 10 |
| 89346 | 1655609C91 | 2530-01-349-3790 | 122 | 1 |
| 89346 | 1655816C1 | | 125 | |
| 89346 | 1657226C91 | 6150-01-355-3466 | 193 | |
| 89346 | 16613745C91 | | 122 | 2 |
| 89346 | 1664732C2 | | 144 | 18 |
| 89346 | 166562R1 | 5330-00-133-0758 | 140 | 3 |
| 31007 | 166880R1 | 2540-00-846-6108 | 106 | 2 |
| 89346 | 1671201C1 | 2530-01-363-2568 | 189 | 19 |
| 89346 | 167164 | | 170 | 1 |
| 89346 | 1671852C91 | 2530-01-332-9975 | 178 | 6 |
| | | | 179 | 6 |
| 89346 | 167263 | 5305-01-362-5009 | 103 | 18 |
| 89346 1 | 675448C1 | 5310-01-187-8546 | 188 | |
| 08806 | 168 | 6240-00-144-4693 | 111 | 8 |
| | | | 112 | 13 |
| 89346 | 17006R1 | 2530-01-363-8088 | 155 | 5 |
| 89346 | 1700632C1 | | 138 | 42 |
| 89346 | 17008R1 | | 161 | |
| 89346 | 1700917C1 | | 138 | 47 |
| 89346 | 1700920C1 | | 138 | 27 |
| 89346 | 1700923C1 | 5330-01-064-1488 | 138 | 43 |
| 89346 | 1700924C91 | | 137 | 29 |
| 89346 | 1700925C1 | | 138 | 43 |
| 89346 | 1700926C1 | | 137 | 27 |
| 89346 | 1701015C1 | | 138 | 13 |
| 89346 | 17012R1 | | 153 | 3 |
| | | | 162 | 8 |
| 89346 | 17013R1 | | 161 | |
| 89346 | 17016R1 | | 162 | 12 |
| 78500 | 1707C 3 | 5340-00-181-1546 | 178 | 3 |
| 78500 | 1707C3 | 5340-00-181-1546 | 179 | 3 |
| 89346 | 171053R1 | 3120-01-363-5025 | 162 | 78 |
| 89346 | 17135R1 | | 159 | 14 |
| 29930 | 172531 | 5340-00-050-1593 | 162 | 4 |
| 78500 | 1727N40 | 5310-00-123-2572 | 178 | 5 |
| | | | 179 | 5 |
| 78500 | 1729B262 | 5310-00-964-7811 | 178 | 22 |
| | | | 178 | 24 |
| | | | 179 | 22 |
| | | | 179 | 24 |
| 81300 | 17495GL | 3030-00-606-2293 | 140 | 7 |
| 78500 | 1779Q433 | | 178 | 13 |
| | | | 179 | 13 |
| 89346 | 179067H1 | | 171 | 6 |
| 89346 | 179070H2 | | 171 | 3 |

## CROSS-REFERENCE INDEXES

### PART NUMBER INDEX

| CAGEC | PART NUMBER | STOCK NUMBER | FIG. | ITEM |
|---|---|---|---|---|
| 89346 | 179071H2 | | 171 | 1 |
| 89346 | 1800029C1 | | 148 | 10 |
| 89346 | 1800515C1 | | 148 | 13 |
| 89346 | 1800588C91 | 4710-01-366-7078 | 148 | 5 |
| 89346 | 1800589C92 | 4710-01-358-0687 | 148 | 2 |
| 89346 | 1800667C1 | | 129 | 14 |
| 89346 | 1800690C1 | | 148 | 18 |
| 29510 | 1801090C1 | 2940-01-132-4754 | 148 | 1 |
| 89346 | 1801115C1 | | 148 | 11 |
| 89346 | 1801244C1 | 4720-01-342-8676 | 129 | 9 |
| 89346 | 1801344C2 | | 134 | 7 |
| 89346 | 1801398C91 | 4310-01-346-4364 | 151 | 4 |
| 89346 | 1801427C1 | | 119 | 19 |
| 89346 | 1801433C1 | | 119 | 18 |
| 89346 | 1801452C1 | | 134 | 5 |
| 89346 | 1802054C1 | | 138 | 25 |
| 89346 | 1802064C1 | | 138 | 17 |
| 89346 | 1802132C1 | 5306-01-353-5953 | 137 | 6 |
| 89346 | 1802157C1 | | 149 | 33 |
| 89346 | 1802159C1 | | 136 | 17 |
| 89346 | 1802246C91 | | 153 | 1 |
| 89346 | 1802248C91 | | 145 | 31 |
| 89346 | 1802256C1 | 5365-01-363-1541 | 139 | 34 |
| 89346 | 1802257C1 | 5365-01-363-1542 | 139 | 34 |
| 89346 | 1802258C1 | 5365-01-363-1543 | 139 | 34 |
| 89346 | 1802259C1 | 5365-01-363-1544 | 139 | 34 |
| 89346 | 1802260C1 | 5365-01-363-1545 | 139 | 34 |
| 89346 | 1802261C1 | 5365-01-363-1546 | 139 | 34 |
| 89346 | 1802262C1 | 5365-01-363-1547 | 139 | 34 |
| 89346 | 1802263C1 | 5365-01-363-1548 | 139 | 34 |
| 89346 | 1802264C1 | 5365-01-363-1549 | 139 | 34 |
| 89346 | 1802265C1 | 5365-01-363-1550 | 139 | 34 |
| 89346 | 1802266C1 | 5365-01-363-1551 | 139 | 34 |
| 89346 | 1802267C1 | 5365-01-363-1552 | 139 | 34 |
| 89346 | 1802309C1 | | 138 | 67 |
| 89346 | 1802310C1 | . | 138 | 68 |
| 89346 | 1802339C92 | 2805-01-366-3468 | 157 | 7 |
| 92679 | 1802340C1 | 2815-01-177-2491 | 157 | 11 |
| 89346 | 1802393C93 | 3020-01-364-6322 | 159 | 4 |
| 89346 | 1802397C1 | | 155 | 8 |
| 89346 | 1802399C1 | | 155 | 17 |
| 89346 | 1802452C1 | | 135 | 44 |
| 92679 | 1802453C1 | 4730-01-187-6931 | 135 | 41 |
| 89346 | 1802461C2 | | 156 | 15 |
| 89346 | 1802561C1 | | 138 | 16 |
| 92679 | 1802582C1 | 5306-01-178-2053 | 161 | 18 |
| 89346 | 1802649C1 | | 139 | 57 |
| 89346 | 1802650C91 | 4810-01-302-2513 | 134 | 8 |
| 89346 | 1802705C1 | 5310-01-363-3146 | 139 | 55 |
| 89346 | 1802737C1 | | 135 | 60 |
| 89346 | 1802755C91 | 4710-01-346-4767 | 135 | 36 |

## CROSS-REFERENCE INDEXES

### PART NUMBER INDEX

| CAGEC | PART NUMBER | STOCK NUMBER | FIG. | ITEM |
|---|---|---|---|---|
| 89346 | 1802756C1 | 4730-01-349-4735 | 135 | 3 |
| 89346 | 1802796C91 | | 135 | 47 |
| 89346 | 1802800C91 | | 135 | 49 |
| 89346 | 1802812C1 | | 145 | 28 |
| 89346 | 1802826C91 | 2910-01-365-2586 | 135 | |
| 89346 | 1802866C1 | | 152 | 11 |
| 89346 | 1802867C2 | 5330-01-346-2357 | 152 | 12 |
| 89346 | 1802879C1 | 2815-01-333-0205 | 152 | 6 |
| 89346 | 1802942C1 | 5365-01-363-1529 | 138 | 4 |
| 89346 | 1802947C91 | | 135 | 50 |
| 89346 | 1802951C91 | | 135 | 51 |
| 89346 | 1802952C91 | | 135 | 52 |
| 89346 | 1802953C91 | | 135 | 53 |
| 89346 | 1802954C91 | | 135 | 54 |
| 89346 | 1802955C91 | | 135 | 55 |
| 89346 | 1802956C91 | | 135 | 56 |
| 89346 | 1802959C91 | | 135 | 48 |
| 89346 | 1803254C1 | | 134 | 6 |
| 89346 | 1806082C1 | | 130 | 23 |
| 92679 | 1806226C2 | 5330-01-167-2432 | 156 | 19 |
| | | | 156 | 19 |
| 89346 | 1806267C91 | 5330-01-364-9024 | 145 | 27 |
| 89346 | 1806268C91 | 5330-01-364-9855 | 145 | 20 |
| 89346 | 1806269C1 | | 139 | 35 |
| 89346 | 1806270C1 | 5365-01-363-1565 | 139 | 15 |
| 89346 | 1806272C1 | | 139 | 38 |
| 89346 | 1806273C91 | | 139 | 67 |
| 89346 | 1806274C1 | 5330-01-363-1722 | 139 | 66 |
| 89346 | 1806275C1 | | 139 | 65 |
| 89346 | 1806278C1 | | 139 | 44 |
| 89346 | 1806279C1 | 5340-01-342-5608 | 133 | 5 |
| 89346 | 1806281C1 | 5360-01-342-5420 | 133 | 4 |
| 89346 | 1806282C2 | | 133 | 15 |
| 89346 | 1806284C1 | | 139 | 69 |
| 89346 | 1806288C1 | | 139 | 17 |
| 89346 | 1806290C1 | 5330-01-363-1786 | 139 | 24 |
| 89346 | 1806291C1 | | 139 | 25 |
| 89346 | 1806292C1 | 5330-01-363-1780 | 139 | 18 |
| 89346 | 1806293C1 | | 139 | 7 |
| 89346 | 1806294C1 | | 139 | 16 |
| 89346 | 1806296C1 | 3120-01-363-1514 | 138 | 95 |
| 89346 | 1806297C1 | | 138 | 99 |
| 89346 | 1806298C1 | | 138 | 98 |
| 89346 | 1806299C1 | 5330-01-363-1785 | 138 | 94 |
| 89346 | 1806300C1 | | 138 | 93 |
| 89346 | 1806301C1 | | 138 | 90 |
| 89346 | 1806302C1 | | 138 | 96 |
| 89346 | 1806303C1 | | 138 | 92 |
| 89346 | 1806304C1 | | 138 | 84 |
| 89346 | 1806305C1 | | 138 | 86 |
| 89346 | 1806306C1 | 5305-01-363-1505 | 138 | 75 |

## CROSS-REFERENCE INDEXES

### PART NUMBER INDEX

| CAGEC | PART NUMBER | STOCK NUMBER | FIG. | ITEM |
|---|---|---|---|---|
| 89346 | 1806307C1 | 5305-01-364-4776 | 138 | 76 |
| 89346 | 1806309C1 | | 138 | 51 |
| 89346 | 1806310C1 | | 138 | 50 |
| 89346 | 1806314C1 | | 138 | 35 |
| 89346 | 1806328C1 | 5330-01-363-1721 | 139 | 22 |
| 89346 | 1806330C91 | | 138 | 1 |
| 89346 | 1806330C92 | | 138 | 1 |
| 89346 | 1806332C1 | 5360-01-363-4829 | 138 | 7 |
| 89346 | 1806335C1 | | 138 | 46 |
| 89346 | 1806336C91 | | 138 | 77 |
| 89346 | 1806337C1 | 5305-01-364-4777 | 138 | 79 |
| 89346 | 1806338C1 | | 138 | 78 |
| 89346 | 1806339C1 | | 138 | 80 |
| 89346 | 1806342C1 | | 137 | 26 |
| 89346 | 1806343C1 | | 137 | 2 |
| 89346 | 1806344C1 | 4820-01-358-0682 | 137 | 22 |
| 89346 | 1806345C1 | | 137 | 19 |
| 89346 | 1806346C1 | 5310-01-363-1482 | 137 | 15 |
| 89346 | 1806347C91 | | 137 | 18 |
| 89346 | 1806348C91 | | 137 | 10 |
| 89346 | 1806349C91 | | 137 | 12 |
| 89346 | 1806350C1 | 5310-01-363-1697 | 137 | 11 |
| 89346 | 1806352C91 | | 137 | 16 |
| 89346 | 1806353C1 | 5305-01-352-7537 | 137 | 7 |
| 89346 | 1806355C1 | | 138 | 53 |
| 89346 | 1806356C1 | 3120-01-353-6031 | 138 | 54 |
| 89346 | 1806357C1 | | 137 | 2 |
| 89346 | 1806358C91 | | 138 | 58 |
| 89346 | 1806359C1 | 5365-01-352-4209 | 138 | 64 |
| 89346 | 1806360C1 | 5365-01-352-4210 | 138 | 64 |
| 89346 | 1806361C1 | 5365-01-352-4211 | 138 | 64 |
| 89346 | 1806362C1 | 5365-01-352-4212 | 138 | 64 |
| 89346 | 1806363C1 | 5365-01-352-4213 | 138 | 64 |
| 89346 | 1806364C1 | 5365-01-364-4224 | 138 | 64 |
| 89346 | 1806365C1 | 5365-01-351-9382 | 138 | 64 |
| 89346 | 1806366C1 | 5365-01-363-1530 | 138 | 64 |
| 89346 | 1806367C1 | 5365-01-364-4225 | 138 | 64 |
| 89346 | 1806368C1 | 5365-01-363-1531 | 138 | 64 |
| 89346 | 1806369C1 | 5365-01-363-1532 | 138 | 64 |
| 89346 | 1806370C1 | 5365-01-363-1533 | 138 | 64 |
| 89346 | 1806371C1 | 5365-01-363-1534 | 138 | 64 |
| 89346 | 1806372C1 | 5365-01-364-4226 | 138 | 64 |
| 89346 | 1806373C1 | 5365-01-363-1535 | 138 | 64 |
| 89346 | 1806374C1 | 5310-01-064-7559 | 138 | 64 |
| 89346 | 1806375C1 | 5365-01-363-1536 | 138 | 64 |
| 89346 | 1806376C1 | 5365-01-363-1537 | 138 | 64 |
| 89346 | 1806377C1 | 5365-01-363-1538 | 138 | 64 |
| 89346 | 1806388C1 | 5365-01-343-1088 | 133 | 3 |
| 89346 | 1806389C1 | | 137 | 17 |
| 89346 | 1806406C1 | 2910-01-357-5703 | 154 | 3 |
| 89346 | 1806407C91 | 2910-01-315-2541 | 154 | |

## CROSS-REFERENCE INDEXES

### PART NUMBER INDEX

| CAGEC | PART NUMBER | STOCK NUMBER | FIG. | ITEM |
|---|---|---|---|---|
| 89346 | 1806416C1 | | 139 | 47 |
| 89346 | 1806484C91 | 5340-01-352-8803 | 138 | 22 |
| 89346 | 1806503C1 | 4720-01-346-4686 | 135 | 38 |
| 89346 | 1806504C1 | 5330-01-363-0626 | 139 | 48 |
| 89346 | 1806557C91 | | 138 | 88 |
| 89346 | 1806565C1 | | 139 | 23 |
| 89346 | 1806602C91 | 4710-01-346-6605 | 135 | 5 |
| 89346 | 1806610C1 | | 133 | 11 |
| 89346 | 1806792C1 | 5360-01-342-5418 | 133 | 1 |
| 89346 | 1806793C1 | 5360-01-342-5419 | 133 | 2 |
| 89346 | 1806833C91 | 2815-01-363-7390 | 139 | 21 |
| 89346 | 1806838C1 | | 137 | 20 |
| 89346 | 1806841C1 | | 137 | 9 |
| 89346 | 1806919C1 | | 139 | 45 |
| 89346 | 180751R93 | 2530-01-176-0590 | 176 | 2 |
| | | | 177 | 2 |
| 89346 | 1808025C1 | | 138 | 38 |
| 89346 | 1808059C91 | | 158 | 4 |
| 89346 | 1808060C91 | 5306-01-363-4842 | 158 | 4 |
| 89346 | 1808061C91 | 5306-01-363-4843 | 158 | 4 |
| 89346 | 1808062C91 | 5306-01-363-4844 | 158 | 4 |
| 89346 | 1808069C91 | | 159 | 15 |
| 89346 | 1808070C91 | 3120-01-362-4411 | 159 | 15 |
| 89346 | 1808071C91 | 3120-01-363-5029 | 159 | 15 |
| 89346 | 1808072C91 | 3120-01-362-4412 | 159 | 15 |
| 89346 | 1808129C1 | 5305-01-363-1520 | 138 | 23 |
| 89346 | 1808310C92 | 5330-01-363-1781 | 138 | 40 |
| 89346 | 1808474C1 | | 145 | 13 |
| 89346 | 1808579C1 | | 138 | 44 |
| 89346 | 1808652C1 | | 139 | 72 |
| 89346 | 1808734C1 | 5360-01-363-4825 | 137 | 24 |
| 89346 | 1808832C91 | 4320-01-325-8534 | 152 | 3 |
| 89346 | 1808957C1 | | 151 | 3 |
| 89346 | 1809553C1 | | 139 | 42 |
| 89346 | 1809570C1 | 2805-01-365-2744 | 157 | 11 |
| 89346 | 1809589C1 | 2805-01-365-2745 | 157 | 12 |
| 89346 | 1809590C91 | | 135 | 18 |
| 89346 | 1809617C1 | | 130 | 11 |
| 89346 | 1809618C1 | 5306-01-342-5335 | 130 | 4 |
| 89346 | 1809642C92 | 4710-01-346-6606 | 135 | 21 |
| 89346 | 1809683C1 | | 158 | 8 |
| 89346 | 1809690C1 | 4730-01-365-8957 | 130 | 5 |
| 89346 | 1809691C1 | | 130 | 23 |
| 89346 | 1809692C1 | 4730-01-365-8956 | 130 | 2 |
| 89346 | 1809693C91 | | 130 | 12 |
| 89346 | 1809694C1 | | 130 | 10 |
| 89346 | 1809695C1 | | 130 | 7 |
| 89346 | 1809696C91 | | 130 | 8 |
| 89346 | 1809796C1 | 4810-01-363-4220 | 139 | 4 |
| 89346 | 1809797C1 | 4730-01-363-6734 | 139 | 3 |
| 89346 | 1809798C1 | 5360-01-363-4821 | 139 | 29 |

## CROSS-REFERENCE INDEXES

### PART NUMBER INDEX

| CAGEC | PART NUMBER | STOCK NUMBER | FIG. | ITEM |
|---|---|---|---|---|
| 89346 | 1809829C91 | | 131 | 8 |
| 89346 | 1810057C91 | 2910-01-329-1425 | 136 | 7 |
| 89346 | 1810304C91 | 2990-01-297-9301 | 130 | |
| 89346 | 1810351C1 | | 132 | 6 |
| 89346 | 1810358C91 | | 158 | 5 |
| 89346 | 1810359C92 | 2805-01-365-3050 | 158 | |
| 89346 | 1810366C91 | 2910-01-298-4276 | 145 | |
| 89346 | 1810491C1 | 5305-01-363-1507 | 139 | 1 |
| 89346 | 1810504C1 | | 158 | 9 |
| 89346 | 1810505C91 | 5330-01-365-5830 | 145 | |
| 89346 | 1810510C3 | 5330-01-346-2358 | 153 | 6 |
| 89346 | 1810511C1 | | 153 | 7 |
| 89346 | 1810527C1 | | 158 | 8 |
| 89346 | 1810542C92 | | 153 | 1 |
| 89346 | 1810687C1 | | 139 | 36 |
| 89346 | 1810690C1 | | 139 | 63 |
| 89346 | 1810694C1 | 5360-01-364-3476 | 138 | 69 |
| 89346 | 1810695C1 | 5360-01-364-3477 | 138 | 70 |
| 89346 | 1810697C1 | 5360-01-364-3478 | 138 | 73 |
| 89346 | 1810717C1 | | 145 | 13 |
| 89346 | 1810746C91 | 3020-01-365-2753 | 159 | 4 |
| 89346 | 1810819C1 | 5305-01-363-2649 | 135 | 19 |
| | | | 139 | 50 |
| 89346 | 1811580C1 | | 157 | 13 |
| 89346 | 1811581C91 | 2815-01-333-3940 | 156 | 23 |
| 89346 | 1811649C91 | 2805-01-364-1520 | 157 | 7 |
| 89346 | 1811668C91 | 2815-01-363-2553 | 158 | |
| 89346 | 1811672C91 | 2815-01-365-5662 | 156 | 21 |
| 89346 | 1811680C91 | 2910-01-363-4367 | 136 | 7 |
| 89346 | 1811726C91 | | 139 | 58 |
| 89346 | 1811726C92 | | 139 | 58 |
| 89346 | 1811728C1 | | 139 | 60 |
| 89346 | 1811729C1 | | 139 | 68 |
| 89346 | 1811730C1 | | 139 | 40 |
| 89346 | 1811733C1 | 5360-01-352-1191 | 138 | 52 |
| 89346 | 1811925C1 | | 139 | 23 |
| 89346 | 1811926C91 | | 139 | 73 |
| 89346 | 1811928C91 | 2910-01-353-7629 | 137 | 5 |
| 89346 | 1811995C91 | | 161 | 8 |
| 89346 | 1812675C1 | 5360-01-363-4824 | 138 | 69 |
| 89346 | 1812677C1 | 5365-01-363-1539 | 138 | 71 |
| 89346 | 1812678C1 | | 138 | 72 |
| 89346 | 1813764C1 | | 137 | 23 |
| 89346 | 1813776C1 | | 138 | 6 |
| 89346 | 1814109CI | 5360-01-363-4823 | 138 | 70 |
| 89346 | 1814111C1 | 5360-01-363-4828 | 138 | 73 |
| 89346 | 1814119C1 | 5305-01-363-2642 | 138 | 16 |
| 89346 | 1814130C1 | | 139 | 27 |
| 89346 | 1814867C1 | 5305-01-363-1506 | 138 | 76 |
| 89346 | 1815544C1 | | 139 | 35 |
| 89346 | 18479R1 | | 173 | |

## CROSS-REFERENCE INDEXES

### PART NUMBER INDEX

| CAGEC | PART NUMBER | STOCK NUMBER | FIG. | ITEM |
|---|---|---|---|---|
| 89346 | 18479R1 | | 174 | |
| 89346 | 1851960 | | 126 | 46 |
| 89346 | 1852892 | | 126 | 26 |
| 89346 | 1894635 | | 126 | 44 |
| 89346 | 1894642 | | 126 | 61 |
| 89346 | 1894643 | | 126 | 60 |
| 1H540 | 190HOLD-DOWN | | 114 | 14 |
| 89346 | 1905125 | | 126 | 7 |
| 89346 | 1911644 | | 126 | 47 |
| 89346 | 191246R1 | | 171 | 5 |
| 89346 | 1916272 | | 126 | 50 |
| 35346 | 1918047 | | 126 | 54 |
| 89346 | 19231R1 | | 173 | |
| | | | 174 | |
| 89346 | 1934478 | | 126 | 57 |
| 89346 | 1936466 | | 126 | 55 |
| 08865 | 194-2 | | 112 | 12 |
| 89346 | 19415R1 | | 186 | |
| 89346 | 1945356 | | 126 | 29 |
| 89346 | 1948519 | | 126 | 37 |
| 89346 | 1948520 | | 126 | 35 |
| 89346 | 1948521 | | 126 | 34 |
| 89346 | 1948526 | | 126 | 33 |
| 89346 | 1948529 | | 126 | 62 |
| 89346 | 1948537 | | 126 | 40 |
| 89346 | 1955994 | | 126 | 23 |
| 89346 | 1964857 | | 126 | 30 |
| 89346 | 1968396 | | 126 | 56 |
| 89346 | 1968998 | | 126 | 25 |
| 89346 | 1972977 | | 126 | 43 |
| 89346 | 1977005 | | 126 | 45 |
| 89346 | 1978756 | | 126 | 42 |
| 89346 | 1979600 | | 126 | 12 |
| 89346 | 1985243 | | 126 | 36 |
| 89346 | 1985246 | | 126 | 19 |
| 89346 | 1985247 | | 126 | 64 |
| 89346 | 1985304 | | 126 | 39 |
| 89346 | 1985314 | | 126 | 27 |
| 89346 | 1985320 | | 126 | 21 |
| 89346 | 1985332 | | 126 | 4 |
| 89346 | 1985617 | | 126 | 24 |
| 89346 | 1987989 | | 126 | 59 |
| 89346 | 1988093 | | 126 | 65 |
| 89346 | 1988096 | | 126 | 48 |
| 89346 | 1988097 | | 126 | 63 |
| 89346 | 1988100 | 5970-01-273-2514 | 126 | 52 |
| 89346 | 1988111 | | 126 | 58 |
| 89346 | 1988121 | | 126 | 28 |
| 89346 | 1988126 | | 126 | 18 |
| 89346 | 1988128 | | 126 | 22 |
| 89346 | 1988135 | | 126 | 17 |

## CROSS-REFERENCE INDEXES

### PART NUMBER INDEX

| CAGEC | PART NUMBER | STOCK NUMBER | FIG. | ITEM |
|---|---|---|---|---|
| 89346 | 1988137 | | 126 | 41 |
| 89346 | 1988138 | | 126 | 20 |
| 89346 | 1988140 | | 126 | 38 |
| 16764 | 1988339 | 5970-01-267-0174 | 126 | 53 |
| 16764 | 1988340 | 5970-01-267-0175 | 126 | 9 |
| 89346 | 1989495 | | 126 | |
| 89346 | 1989497 | | 126 | |
| 16764 | 1989498 | 2920-01-285-7288 | 126 | |
| 89346 | 1990466 | 2920-01-181-7113 | 126 | |
| 53203 | 20000 | 2910-00-646-9727 | 128 | 3 |
| 08484 | 21080 | 4730-01-143-9460 | 127 | 1 |
| 08806 | 211-2 | 6240-00-023-2290 | 111 | 2 |
| 89346 | 212254R1 | 5306-00-419-4683 | 177 | 17 |
| 89346 | 212255R1 | 5306-00-456-2574 | 177 | 17 |
| 89346 | 212746R1 | | 122 | 8 |
| 89346 | 212747R1 | | 122 | 6 |
| 89346 | 21318R1 | | 122 | 11 |
| 89346 | 213262R1 | | 126 | 32 |
| 89346 | 21333R1 | 5310-01-346-3453 | 115 | 13 |
| 77640 | 213705 | 4730-01-342-8467 | 113 | 58 |
| 89346 | 21427R1 | | 156 | 30 |
| 77640 | 216191 | 3110-01-343-1028 | 113 | 29 |
| 89346 | 217639R1 | 5330-00-105-1740 | 192 | 12 |
| 89346 | 217877R92 | 4310-00-702-6656 | 142 | |
| 89346 | 218211 | | 157 | 10 |
| 89346 | 22191R1 | 5310-01-346-3565 | 118 | 37 |
| 78500 | 2240E4815 | | 178 | 18 |
| | | | 179 | 18 |
| 66195 | 22541R1 | 5305-00-071-2069 | 194 | 1 |
| 78500 | 2257D108 | | 178 | 38 |
| | | | 179 | 38 |
| 89346 | 228275R1 | 5365-00-941-4024 | 146 | 1 |
| 78500 | 2297J4820 | | 178 | 26 |
| 78500 | 2297K4821 | | 179 | 26 |
| 89346 | 23043R1 | 5310-01-346-9431 | 118 | 28 |
| 89346 | 230766R1 | | 169 | |
| 21292 | 232229 | 3110-00-061-4770 | 167 | 82 |
| 21292 | 232234 | 3110-01-363-6019 | 167 | 41 |
| 21292 | 232238 | 3110-01-363-6018 | 167 | 39 |
| 21292 | 232252 | | 167 | 81 |
| 21292 | 232388 | 3110-01-363-6020 | 167 | 63 |
| 21292 | 235372 | | 167 | 10 |
| | | | 167 | 30 |
| 21292 | 235446 | | 167 | 47 |
| 21292 | 235484 | | 167 | 80 |
| 21292 | 235485 | | 167 | 32 |
| 21292 | 235487 | | 167 | 52 |
| 89346 | 23623R1 | | 161 | 11 |
| 89346 | 23624R1 | | 153 | 5 |
| 21292 | 237434 | | 167 | 67 |
| 21292 | 237435 | | 167 | 34 |

## CROSS-REFERENCE INDEXES

### PART NUMBER INDEX

| CAGEC | PART NUMBER | STOCK NUMBER | FIG. | ITEM |
|---|---|---|---|---|
| 89346 | 23776D | | 149 | 25 |
| 89346 | 240468R91 | | 164 | 2 |
| 1CU61 | 242-1580 | | 101 | 11 |
| 06853 | 243009 | 2940-01-014-2547 | 143 | 4 |
| 89346 | 243321R1 | 4730-01-363-2007 | 162 | 45 |
| 92679 | 24577R1 | 5365-01-176-5751 | 156 | 8 |
| 89346 | 24621R1 | 5306-01-067-9569 | 153 | |
| 89346 | 24641R1 | 5320-01-307-5809 | 193 | 4 |
| 89346 | 24776R1 | | 175 | 17 |
| 89346 | 24839R1 | | 117 | 4 |
| | | 5305-01-349-5133 | 135 | 26 |
| | | | 193 | 10 |
| 89346 | 24840R1 | 5306-01-068-1071 | 119 | 14 |
| | | | 140 | 17 |
| | | | 149 | 1 |
| | | | 160 | 6 |
| | | | 191 | 5 |
| | | | 193 | 13 |
| 89346 | 24842R1 | 5305-01-067-9568 | 119 | 2 |
| | | | 121 | 4 |
| | | | 145 | |
| | | | 146 | |
| 89346 | 24843R1 | 5306-01-186-6974 | 140 | 30 |
| 89346 | 24844R1 | | 145 | |
| 89346 | 24846R1 | 5306-01-346-2890 | 135 | 14 |
| 89346 | 24850R1 | 5305-01-346-3596 | 119 | 12 |
| | | | 140 | 24 |
| 89346 | 24852R1 | | 189 | |
| | | | | 67 |
| 89346 | 24859R1 | | 146 | |
| 89346 | 24861R1 | | 190 | 30 |
| 89346 | 24862R1 | | 159 | 1 |
| 89346 | 24864R1 | | 146 | |
| 89346 | 24872R1 | 5305-01-362-4397 | 166 | 1 |
| 89346 | 24874R1 | 5305-01-362-4398 | 166 | 3 |
| 89346 | 24875R1 | 5305-01-363-2651 | 144 | 2 |
| 89346 | 2487802640 | 2520-01-361-3384 | 164 | |
| 89346 | 24879R1 | 5305-01-363-2650 | 144 | 1 |
| 89346 | 24881R1 | 5305-01-346-2934 | 123 | 5 |
| 89346 | 24889R1 | 5306-01-361-8361 | 177 | 6 |
| 89346 | 24895R1 | | 186 | 45 |
| | | | 187 | 11 |
| 1HN49 | 25N150WFEZ | 5310-01-342-5513 | 114 | 8 |
| 89346 | 25077R1 | | 160 | 11 |
| 89346 | 252018R1 | 5310-01-346-3566 | 156 | 18 |
| 89346 | 25222R1 | | 128 | 7 |
| | | | 175 | |
| 89346 | 25228R1 | 5305-01-346-3593 | 103 | 28 |
| | | | 118 | 5 |
| | | | 127 | 16 |
| | | | 133 | 12 |
| | | | 153 | |

## CROSS-REFERENCE INDEXES

### PART NUMBER INDEX

| CAGEC | PART NUMBER | STOCK NUMBER | FIG. | ITEM |
|---|---|---|---|---|
| 89346 | 25228R1 | 5305-01-346-3593 | 157 | 6 |
| | | | 193 | 2 |
| 89346 | 25232R1 | 5305-01-346-2938 | 136 | 2 |
| | | | 152 | 7 |
| 89346 | 25234R1 | | 149 | 23 |
| | | | 153 | |
| 89346 | 25235R1 | 5305-01-346-2937 | 131 | 2 |
| | | | 136 | 1 |
| 89346 | 25236R1 | 5305-01-346-2935 | 123 | 9 |
| 29510 | 252483R1 | 5330-00-893-7633 | 148 | 16 |
| 89346 | 25277R1 | | 159 | 5 |
| 89346 | 25293R1 | | 189 | 89 |
| 89346 | 25296R1 | 5305-01-363-2648 | 188 | 17 |
| 89346 | 25360R1 | | 188 | 39 |
| 89346 | 253629 | 5365-01-343-1085 | 113 | 5 |
| 29510 | 253660R1 | 5330-00-757-5328 | 129 | 4 |
| 89346 | 25483R1 | 5305-01-346-2936 | 134 | 1 |
| | | | 175 | |
| 89346 | 25492R1 | 5305-01-346-3594 | 113 | 36 |
| | | | 152 | 10 |
| 89346 | 25493R1 | 5305-01-346-3595 | 118 | 31 |
| | | | 129 | 1 |
| | | | 131 | 1 |
| | | | 132 | 1 |
| | | | 149 | 6 |
| | | | 149 | 19 |
| | | | 149 | 27 |
| | | | 172 | 1 |
| 89346 | 25501R1 | 5306-01-063-4985 | 117 | 5 |
| | | | 119 | 16 |
| | | | 120 | 4 |
| | | | 153 | |
| 92679 | 25519R1 | 53-10-01-242-0406 | 134 | 4 |
| 92679 | 25520R1 | 5310-01-186-5163 | 118 | 32 |
| | | | 131 | 6 |
| | | | 132 | 4 |
| | | | 153 | |
| 89346 | 25521R1 | | 135 | 28 |
| 89346 | 25522R1 | | 119 | 1 |
| | | | 120 | 2 |
| | | 5310-01-078-7804 | 129 | 18 |
| | | | 145 | |
| | | | 149 | 2 |
| | | | 153 | |
| | | | 160 | 3 |
| | | | 175 | |
| 89346 | 25523R1 | | 145 | 7 |
| | | | 160 | 9 |
| 89346 | 25524R1 | 5310-01-346-9364 | 118 | 26 |
| | | | 140 | 21 |
| 89346 | 25527R1 | 5310-01-278-8289 | 113 | 48 |

## CROSS-REFERENCE INDEXES

### PART NUMBER INDEX

| CAGEC | PART NUMBER | STOCK NUMBER | FIG. | ITEM |
|---|---|---|---|---|
| 89346 | 25527R1 | 5310-01-278-8289 | 188 | |
| 31007 | 25528R1 | 5310-01-024-9658 | 166 | 4 |
| 89346 | 25529R1 | | 188 | 25 |
| 2L563 | 255446 | | 189 | 18 |
| 89346 | 25552R1 | 5310-01-094-2890 | 136 | 4 |
| 89346 | 256333R1 | | 150 | 5 |
| 89346 | 25653R1 | 5305-01-352-7603 | 140 | 5 |
| | | | 143 | 5 |
| 92679 | 25654R1 | | 129 | 25 |
| | | | 153 | |
| | | | 156 | 1 |
| 89346 | 25678R1 | 5305-01-282-0829 | 129 | 26 |
| | | | 153 | |
| 89346 | 25680R1 | 5305-01-363-1521 | 190 | 7 |
| 29510 | 25684R1 | 5305-01-195-5820 | 133 | 9 |
| 89346 | 25707R1 | 5310-01-361-8386 | 103 | 19 |
| | | | 128 | 5 |
| 89346 | 25708R1 | 5310-01-283-7623 | 118 | 2 |
| | | | 193 | |
| 89346 | 25709R1 | 5310-01-065-2596 | 116 | 18 |
| | | | 119 | 4 |
| | | | 121 | 5 |
| | | | 127 | |
| | | | 140 | 19 |
| | | | 175 | |
| | | | 190 | 16 |
| | | | 191 | |
| | | | 193 | 15 |
| 89346 | 25710R1 | 5310-01-189-8385 | 123 | 4 |
| | | | 144 | 12 |
| 89346 | 25711R1 | 5310-01-278-8436 | 126 | 2 |
| | | | 190 | 8 |
| 89346 | 25712R1 | | 186 | |
| | | | 187 | |
| 89346 | 25750R1 | | 149 | 24 |
| 89346 | 25752R1 | | 162 | 27 |
| | | | 189 | 87 |
| 89346 | 25784R1 | 5305-00-269-3225 | 133 | 8 |
| | | | 148 | |
| 7T253 | 2580 | | 194 | 6 |
| 7T253 | 2581 | | 194 | 6 |
| 89346 | 25830R1 | | 156 | 6 |
| 89346 | 258452C1 | | 186 | 14 |
| 89346 | 258453C91 | | 186 | 15 |
| 89346 | 25847R1 | 5310-01-346-9430 | 118 | 13 |
| 89346 | 25866R1 | | 186 | |
| 89346 | 25896R1 | 5310-01-230-2349 | 115 | 14 |
| | | | 120 | 3 |
| | | | 129 | 8 |
| | | | 133 | 10 |
| | | | 135 | 16 |

## CROSS-REFERENCE INDEXES

### PART NUMBER INDEX

| CAGEC | PART NUMBER | STOCK NUMBER | FIG. | ITEM |
|---|---|---|---|---|
| 89346 | 25896R1 | 5310-01-230-2349 | 145 | |
| | | | 145 | |
| | | | 147 | 4 |
| | | | 148 | |
| | | | 149 | 3 |
| | | | 153 | |
| | | | 160 | 5 |
| 89346 | 25897R1 | 5330-01-315-8708 | 113 | 21 |
| 89346 | 25930R1 | | 169 | |
| | | | 170 | 3 |
| 89346 | 25933R1 | | 126 | 13 |
| 89346 | 25976R1 | 5310-01-363-1740 | 144 | 3 |
| 89346 | 2600545179 | 2520-01-359-9682 | 185 | |
| 89346 | 26030R1 | 5310-01-355-0174 | 133 | 6 |
| 89346 | 26044R1 | 5306-01-362-4311 | 157 | 1 |
| 89346 | 26057R1 | | 131 | 3 |
| | | | 132 | 2 |
| 89346 | 26070R1 | | 110 | 11 |
| 89346 | 260780 3552 | 2520-01-361-9303 | 184 | |
| 89346 | 2607803174 | 2520-01-363-3100 | 163 | |
| 89346 | 26110R1 | | 128 | 4 |
| 89346 | 261624R1 | | 147 | 13 |
| 35510 | 26175 | 5310-00-429-3127 | 124 | 46 |
| 89346 | 262365C1 | | 180 | 7 |
| | | | 181 | 7 |
| | | | 182 | 7 |
| | | | 183 | 7 |
| 89346 | 26269R1 | 5305-01-352-7602 | 140 | 1 |
| 89346 | 26273R1 | | 146 | |
| 89346 | 26282R1 | | 111 | 4 |
| 89346 | 263082C11 | | 173 | 12 |
| | | | 174 | 12 |
| 29510 | 26310R1 | 5306-01-177-0865 | 162 | 1 |
| | | | 186 | 28 |
| 89346 | 26311R1 | | 147 | 2 |
| | | | 148 | |
| 89346 | 26312R1 | | 148 | |
| 89346 | 26318R1 | 5305-01-363-4860 | 162 | 25 |
| 89346 | 263840R1 | | 176 | 7 |
| 89346 | 264230C1 | 5306-01-274-5626 | 118 | 23 |
| 89346 | 264231C1 | 5340-01-362-5031 | 118 | 25 |
| 89346 | 265204R1 | 5365-00-846-7660 | 129 | 6 |
| | | | 135 | 6 |
| | | | 148 | 4 |
| | | | 148 | 7 |
| 29510 | 265205R1 | 5310-01-064-8669 | 129 | 5 |
| | | | 135 | 7 |
| | | | 148 | 3 |
| | | | 148 | 6 |
| 21292 | 265238 | | 167 | 3 |
| 21292 | 265239 | | 167 | 3 |

## CROSS-REFERENCE INDEXES

### PART NUMBER INDEX

| CAGEC | PART NUMBER | STOCK NUMBER | FIG. | ITEM |
|---|---|---|---|---|
| 21292 | 265343 | | 167 | 29 |
| 89346 | 26586R1 | | 131 | 4 |
| | | | 132 | 3 |
| 21292 | 265892 | | 167 | 13 |
| 21292 | 265982 | | 167 | 9 |
| 89346 | 26627R1 | | 192 | 4 |
| 89346 | 266607C1 | 5305-01-363-4841 | 162 | 13 |
| 89346 | 26679R1 | 5306-01-348-3274 | 152 | 1 |
| 89346 | 26680R1 | | 149 | 31 |
| 89346 | 26703R1 | | 131 | 5 |
| 89346 | 26704R1 | | 123 | 2 |
| 89346 | 268223C1 | | 190 | 28 |
| 89346 | 268690C91 | 6350-01-208-4915 | 111 | 20 |
| | | | 125 | |
| 89346 | 26905H | 3120-00-661-9380 | 162 | 37 |
| 29510 | 269635R91 | 2910-00-533-3945 | 128 | 14 |
| 89346 | 27196R1 | | 111 | 6 |
| 89346 | 27216R1 | 5305-01-346-3522 | 193 | 1 |
| 89346 | 272842R1 | 5365-01-366-4838 | 145 | 21 |
| 89346 | 27293R1 | | 186 | 52 |
| | | | 187 | 20 |
| 89346 | 27326R1 | 5310-01-244-89371 | 29 | 2 |
| | | | 129 | 27 |
| | | | 131 | 7 |
| | | | 132 | 5 |
| | | | 133 | 14 |
| | | | 135 | 30 |
| | | | 136 | 3 |
| | | | 149 | 8 |
| | | | 152 | 2 |
| | | | 152 | 8 |
| | | | 153 | |
| 89346 | 273469 | | 151 | |
| | | | 161 | |
| | | | 162 | 44 |
| 89346 | 273896 | | 190 | |
| 89346 | 27392R1 | 4730-01-342-8466 | 116 | 6 |
| 31007 | 274085R91 | 4730-00-005-4994 | 119 | |
| | | | 140 | 9 |
| 89346 | 27439R1 | 5306-01-346-2891 | 135 | 34 |
| 89346 | 27463R1 | 5306-01-362-4310 | 118 | 40 |
| 89346 | 275635R1 | | 191 | 2 |
| 29510 | 27578R1 | 5306-01-242-1091 | 126 | 1 |
| 78500 | 2758W127 | 5360-00-482-4422 | 178 | 15 |
| | | | 179 | 15 |
| 29510 | 275804R1 | 5305-00-406-2281 | 123 | 11 |
| | | | 140 | 31 |
| | | | 145 | |
| 89346 | 27616R1 | 5310-01-274-5632 | 134 | 2 |
| 92679 | 277232R1 | 5306-01-186-6978 | 116 | 17 |
| | | | 127 | |

## CROSS-REFERENCE INDEXES

### PART NUMBER INDEX

| CAGEC | PART NUMBER | STOCK NUMBER | FIG. | ITEM |
|---|---|---|---|---|
| 92679 | 277232R1 | 5306-01-186-6978 | 145 | |
| 89346 | 27768R1 | 5305-01-363-4855 | 162 | 31 |
| 89346 | 27857R1 | 5305-01-362-1305 | 186 | 9 |
| 89346 | 279024R91 | 5340-01-362-4394 | 160 | 1 |
| 89346 | 27955R1 | 5306-01-346-3450 | 118 | 11 |
| 78500 | 2797R96 | 5330-01-054-5899 | 178 | 11 |
| | | | 179 | 11 |
| 78500 | 2797X102 | | 178 | 9 |
| | | | 179 | 9 |
| 89346 | 281911C92 | | 143 | |
| 89346 | 285611C1 | | 149 | 13 |
| 89346 | 28565R1 | | 149 | 32 |
| 89346 | 286234C2 | | 144 | 7 |
| 89346 | 286235C2 | 5340-01-067-9648 | 144 | 9 |
| 89346 | 286236C2 | 5340-01-067-9037 | 144 | 8 |
| 29510 | 286648R1 | 3110-00-101-1789 | 167 | 73 |
| 89346 | 289747R91 | 5340-01-334-3565 | 192 | 1 |
| 89346 | 289862C1 | | 117 | 1 |
| 89346 | 290308C1 | 5310-01-347-1176 | 143 | 2 |
| 89346 | 291171C1 | | 156 | 10 |
| 89346 | 29360H | | 162 | 9 |
| 89346 | 296446C1 | 6220-00-497-2178 | 111 | 1 |
| 89346 | 298608C11 | | 128 | 15 |
| 89346 | 299277C91 | 4730-01-365-2904 | 169 | |
| 89346 | 299340C1 | | 118 | 30 |
| 89346 | 299341C1 | | 118 | 29 |
| 89346 | 299398C1 | 5340-01-268-9894 | 128 | 12 |
| 89346 | 299566C1 | 4730-01-310-0005 | 135 | 32 |
| 89346 | 299608C1 | | 125 | 2 |
| 72447 | 3-14-59 | | 164 | 3 |
| 72447 | 3-15-63 | | 164 | 4 |
| 72447 | 3-16-103 | | 164 | 5 |
| 89346 | 300785C1 | | 169 | |
| 89346 | 300853C1 | | 111 | 3 |
| 89346 | 30192R1 | 5305-01-363-1504 | 138 | 56 |
| 7T253 | 302 | | 101 | 27 |
| 89346 | 30205 | | 126 | 15 |
| 89346 | 30208R1 | 5310-01-353-1895 | 136 | 8 |
| | | | 137 | 14 |
| | | | 138 | 18 |
| | | | 138 | 24 |
| 7T253 | 303 | | 101 | 28 |
| 89346 | 303986C1 | 5365-01-347-1161 | 119 | 8 |
| 89346 | 3046105R1 | | 141 | 14 |
| 89346 | 304645C1 | | 188 | 21 |
| 89346 | 3051337R1 | 5330-01-352-4337 | 137 | 31 |
| | | | 139 | 9 |
| 89346 | 3056409R1 | | 139 | 71 |
| 89346 | 306132C1 | 5340-01-189-8297 | 116 | 10 |
| 89346 | 30643V | 5310-00-843-4093 | 169 | |
| 89346 | 30644V | 4730-00-408-9132 | 169 | |

## CROSS-REFERENCE INDEXES

### PART NUMBER INDEX

| CAGEC | PART NUMBER | STOCK NUMBER | FIG. | ITEM |
|---|---|---|---|---|
| 03533 | 307-22 | 4730-00-434-6396 | 175 | |
| 89346 | 30761VX | 4730-00-069-1187 | 169 | |
| 89346 | 30773V | 5310-00-843-3970 | 169 | |
| 89346 | 30774V | 4730-00-409-6278 | 169 | |
| 89346 | 3078343R1 | | 138 | 79 |
| 89346 | 307924R1 | | 139 | 19 |
| 89346 | 309449C1 | | 169 | |
| 89346 | 310086R1 | 5365-01-347-1158 | 113 | 30 |
| | | | 142 | 16 |
| 89346 | 310293C1 | | 188 | 22 |
| 89346 | 312064C1 | | 149 | 18 |
| 89346 | 312690C91 | | 103 | 21 |
| 89346 | 3132382R1 | 5360-01-363-4822 | 139 | 20 |
| 27767 | 3136B | 2530-01-327-3002 | 177 | 7 |
| 79470 | 3152X6 | 4730-00-427-5121 | 106 | 9 |
| 89346 | 315209C1 | 5330-01-352-5773 | 140 | 6 |
| 7T253 | 3153 | | 194 | 4 |
| 89346 | 318300R1 | | 131 | 12 |
| 79470 | 3200X8X6 | | 106 | 7 |
| 89346 | 320230C1 | 4720-00-758-9140 | 115 | 9 |
| 29510 | 321738R1 | 2530-01-065-3769 | 141 | 19 |
| 89346 | 321739R1 | | 141 | 2 |
| 89346 | 321740R91 | | 141 | 3 |
| 89346 | 321741R1 | | 141 | 10 |
| 89346 | 321742R1 | | 141 | 11 |
| 29510 | 321743R91 | 4310-01-065-4326 | 141 | 12 |
| 89346 | 321744R1 | | 141 | 16 |
| 89346 | 321745R1 | | 141 | 17 |
| 89346 | 321746R1 | | 141 | 9 |
| 89346 | 321747R1 | | 141 | 6 |
| 89346 | 321748R1 | | 141 | 7 |
| 89346 | 321749R1 | | 141 | 8 |
| 29510 | 321981R91 | 3110-00-923-1246 | 162 | 79 |
| 79470 | 3220X6X4 | 4730-00-202-6491 | 106 | 10 |
| 98933 | 32214 | | 101 | 24 |
| | | | 114 | 17 |
| 35510 | 3231 | 5310-00-032-1814 | 124 | 5 |
| 78500 | 3236D1798 | | 178 | 4 |
| | | | 179 | 4 |
| 7T253 | 3251 | 2990-01-364-8834 | 115 | 2 |
| 7T253 | 3252 | 4730-01-364-4405 | 115 | 4 |
| | | | 115 | 8 |
| 89346 | 326874R1 | | 158 | 6 |
| 29510 | 327110R1 | 5330-00-847-5879 | 155 | 23 |
| 92679 | 327185R91 | 3110-01-174-2950 | 157 | 3 |
| 89346 | 327412R1 | | 161 | 9 |
| 78500 | 3280K8175 | | 178 | 30 |
| | | | 179 | 30 |
| 78500 | 3280Y8163 | | 178 | 31 |
| | | | 179 | 31 |
| 89346 | 328235C1 | 5330-01-068-1081 | 173 | 9 |

## CROSS-REFERENCE INDEXES

### PART NUMBER INDEX

| CAGEC | PART NUMBER | STOCK NUMBER | FIG. | ITEM |
|---|---|---|---|---|
| 89346 | 328235C1 | 5330-01-068-1081 | 174 | 9 |
| 75175 | 330-0100-B | 9905-01-355-2174 | 101 | 13 |
| 89346 | 332530R1 | | 146 | |
| 89346 | 332547C1 | | 188 | 2 |
| 89346 | 332603C1 | | 162 | 47 |
| 29510 | 333750R91 | 5330-00-788-5821 | 162 | 36 |
| 89346 | 333773R1 | | 148 | 9 |
| 89346 | 336024C1 | | 192 | 11 |
| 89346 | 338614C1 | 5340-01-197-4072 | 115 | 10 |
| 89346 | 338633C1 | | 114 | 10 |
| 21292 | 339223 | 5330-01-363-2862 | 167 | 24 |
| 29930 | 339544C1 | 5310-01-204-3172 | 103 | 5 |
| 79470 | 3400X6 | 4730-00-278-4822 | 106 | 6 |
| 89346 | 343464R1 | | 161 | |
| 29510 | 343847R1 | 2990-00-190-9838 | 130 | 13 |
| 89346 | 344024C1 | | 170 | 9 |
| 89346 | 344025C1 | | 170 | 4 |
| 89346 | 344029C1 | | 170 | 6 |
| 89346 | 345253C1 | 5330-01-121-8367 | 192 | 6 |
| 89346 | 346902R1 | | 113 | 55 |
| 89346 | 349055R2 | | 147 | 14 |
| 89346 | 349962C1 | | 172 | 5 |
| 89346 | 350429R1 | 5330-00-122-4543 | 149 | 21 |
| 89366 | 352662C1 | | 173 | 6 |
| | | | 174 | 6 |
| 29930 | 355967R1 | 5365-00-924-0088 | 167 | 26 |
| | | | 170 | 5 |
| 89346 | 356117C1 | | 173 | 5 |
| | | | 174 | 5 |
| 29930 | 357194R1 | 5365-00-986-1885 | 162 | 87 |
| 89346 | 359279C1 | | 169 | |
| 89346 | 359379C1 | | 143 | 3 |
| 89346 | 359798C1 | | 188 | 20 |
| 89346 | 360453C1 | 5365-01-361-9010 | 186 | 37 |
| | | | 187 | 7 |
| 89346 | 360457C1 | 5365-01-361-9011 | 186 | 37 |
| | | | 187 | 7 |
| 89346 | 360461C1 | 5365-01-361-9012 | 186 | 37 |
| | | | 187 | 7 |
| 89346 | 360465C1 | 5365-01-361-9013 | 186 | 7 |
| | | | 187 | 7 |
| 89346 | 360469C1 | 5365-01-361-9014 | 186 | 37 |
| | | | 187 | 7 |
| 89346 | 363080C91 | | 163 | 2 |
| | | | 184 | 2 |
| 89346 | 364357C1 | 4720-01-065-0809 | 116 | 12 |
| 89346 | 364358C1 | 4720-00-470-0825 | 140 | 10 |
| 89346 | 364361C1 | 4720-00-846-6541 | 116 | 2 |
| 21292 | 367259 | 2520-01-363-4419 | 167 | 16 |
| 21292 | 367264 | 2520-01-363-4420 | 167 | 17 |
| 21292 | 367268 | 2520-01-363-4418 | 167 | 15 |

## CROSS-REFERENCE INDEXES

### PART NUMBER INDEX

| CAGEC | PART NUMBER | STOCK NUMBER | FIG. | ITEM |
|---|---|---|---|---|
| 89346 | 367572R1 | | 153 | 4 |
| 89346 | 370943R1 | | 170 | 8 |
| 89346 | 371623C2 | 5365-01-363-1515 | 117 | 6 |
| | | | 144 | 10 |
| 89346 | 373522R1 | 5365-01-259-4031 | 110 | 5 |
| 89346 | 37661HC | 2530-00-136-4443 | 176 | 3 |
| | | | 177 | 3 |
| 89346 | 378066R1 | | 186 | |
| 89346 | 380336C91 | | 188 | 6 |
| 89346 | 381926C91 | | 186 | 35 |
| | | | 187 | 3 |
| 89346 | 382137R1 | | 141 | 15 |
| | | | 171 | 4 |
| 89346 | 382997C1 | 4720-01-273-5742 | 116 | 13 |
| 89346 | 384139C1 | 4720-01-325-2951 | 119 | |
| 89346 | 384190C2 | | 188 | 41 |
| 89346 | 384725C1 | | 110 | 2 |
| 89346 | 386398C91 | 4820-00-689-1899 | 175 | 16 |
| 89346 | 388418C1 | | 188 | |
| 89346 | 390362R1 | | 187 | |
| 89346 | 393435C2 | | 125 | |
| 89346 | 393975C1 | 5365-01-361-9015 | 186 | 37 |
| | | | 187 | 7 |
| 89346 | 393979C1 | 5365-01-361-9062 | 186 | 37 |
| | | | 187 | 7 |
| 89346 | 394120C91 | 2540-00-030-5924 | 103 | 23 |
| 29510 | 39677DA | 4820-00-424-7431 | 135 | 13 |
| 89346 | 396873C1 | | 186 | 10 |
| 89346 | 397270R1 | 730-01-357-6521 | 127 | 5 |
| 89346 | 397624C1 | | 139 | 49 |
| 89346 | 397630C1 | 5330-01-063-8341 | 139 | 5 |
| 89346 | 397643C91 | | 138 | 59 |
| 89346 | 397664C1 | 5365-01-363-1528 | 138 | 3 |
| 89346 | 397671C1 | 5310-01-066-4366 | 138 | 64 |
| 89346 | 397673C1 | 5310-01-063-9773 | 138 | 64 |
| 89346 | 397676C1 | 5310-01-064-7558 | 138 | 64 |
| 89346 | 397679C1 | | 138 | 63 |
| 89346 | 397680C1 | | 138 | 61 |
| 89346 | 397682C1 | | 138 | 60 |
| 89346 | 397689C1 | | 138 | 97 |
| 89346 | 397692C1 | | 138 | 5 |
| 89346 | 397695C1 | | 138 | 91 |
| 89346 | 397697C1 | | 138 | 89 |
| 89346 | 397701C1 | | 138 | 65 |
| 89346 | 397702C1 | | 138 | 55 |
| 89346 | 397703C1 | | 138 | 66 |
| 89346 | 397705C1 | | 138 | 57 |
| 89346 | 397720C1 | | 138 | 81 |
| 89346 | 397721C1 | 5330-01-063-5018 | 138 | 82 |
| 89346 | 397725C1 | 3120-01-063-9845 | 138 | 41 |
| 89346 | 397730C1 | | 138 | 34 |

## CROSS-REFERENCE INDEXES

### PART NUMBER INDEX

| CAGEC | PART NUMBER | STOCK NUMBER | FIG. | ITEM |
|---|---|---|---|---|
| 89346 | 397731C1 | | 138 | 33 |
| 89346 | 397738C1 | | 138 | 36 |
| 89346 | 397745C1 | | 138 | 11 |
| 89346 | 397746C1 | | 137 | 41 |
| | | | 138 | 10 |
| 89346 | 397748C1 | | 138 | 8 |
| 89346 | 397749C1 | 5305-01-363-6073 | 138 | 21 |
| 89346 | 397755C1 | | 138 | 14 |
| 89346 | 397769C1 | 5365-01-364-4227 | 138 | 71 |
| 98345 | 397773C1 | 5365-01-064-2253 | 138 | 30 |
| 89346 | 397774C1 | 5365-01-064-2254 | 138 | 30 |
| 89346 | 397775C1 | 5365-01-064-2256 | 138 | 30 |
| 89346 | 397776C1 | 5365-01-064-2255 | 138 | 30 |
| 89346 | 397777C1 | | 138 | 29 |
| 89346 | 397778C1 | 5305-01-363-1519 | 137 | 1 |
| 89346 | 397782C1 | | 138 | 32 |
| 89346 | 397783C1 | 5360-01-064-1986 | 138 | 31 |
| 89346 | 397817C1 | | 138 | 48 |
| 89346 | 399647C1 | | 162 | 80 |
| 19220 | 400-52 | | 101 | 21 |
| 70210 | 400450-1 | 5306-01-167-8331 | 130 | 1 |
| 89346 | 401756R1 | 5365-01-363-1511 | 162 | 85 |
| 89346 | 402015C1 | | 111 | 14 |
| 77640 | 402380 | 5340-01-136-1660 | 113 | 27 |
| 89346 | 403859C92 | | 117 | 9 |
| 89346 | 404617C1 | 5325-01-337-0869' | 103 | 26 |
| 89346 | 404618C1 | 4320-00-125-4582 | 103 | 27 |
| 89346 | 404619C1 | 5330-01-065-5888 | 103 | 22 |
| 89346 | 404620C1 | 5310-01-186-4988 | 103 | 25 |
| 89346 | 404621C1 | 4730-01-066-4100 | 103 | 24 |
| 89346 | 408011C1 | | 140 | 13 |
| 89346 | 410986C92 | | 141 | |
| 89346 | 411948C91 | 2590-01-065-2167 | 111 | 25 |
| 29510 | 41339D | 5315-01-151-2072 | 156 | 22 |
| 89346 | 413923C91 | 3110-01-331-9936 | 189 | 30 |
| 89346 | 414051C1 | | 175 | |
| 89346 | 414052C1 | 5306-01-193-0868 | 144 | 16 |
| | | | 166 | 14 |
| | | | 175 | |
| | | | 191 | 9 |
| | | | 193 | 19 |
| 89346 | 414053C1 | 5306-01-250-0546 | 118 | 15 |
| | | | 144 | 19 |
| | | | 166 | 13 |
| | | | 175 | |
| | | | 188 | 45 |
| | | | 190 | 13 |
| | | | 193 | 19 |
| 89346 | 414054C1 | | 175 | |
| | | | 190 | 11 |
| | | | 191 | 9 |

## CROSS-REFERENCE INDEXES

### PART NUMBER INDEX

| CAGEC | PART NUMBER | STOCK NUMBER | FIG. | ITEM |
|---|---|---|---|---|
| 89346 | 414076C1 | 5306-01-276-0830 | 188 | 49 |
| 89346 | 414078C1 | 5306-01-282-2633 | 188 | 32 |
| 89346 | 414079C1 | 5306-01-313-0228 | 188 | 31 |
| 89346 | 414082C1 | 5306-01-362-4312 | 166 | 9 |
| 89346 | 414087C1 | 5310-00-594-9379 | 118 | 16 |
| | | | 119 | 9 |
| | | | 144 | 17 |
| | | | 166 | 12 |
| | | | 175 | |
| | | | 188 | |
| | | | 190 | 2 |
| | | | 190 | 10 |
| | | | 191 | 10 |
| | | | 193 | |
| 89346 | 414089C1 | 5310-01-186-4361 | 144 | 4 |
| | | | 166 | 7 |
| | | | 188 | |
| 89346 | 41420V | 2530-00-400-6439 | 177 | 4 |
| 89346 | 414504C1 | 4730-00-132-4588 | 169 | |
| 89346 | 414505C1 | 4730-01-056-4990 | 169 | |
| 89346 | 414507C1 | 4730-01-275-4344 | 175 | |
| 89346 | 416187C1 | | 189 | 38 |
| 89346 | 416743C1 | | 190 | 23 |
| 89346 | 416744C3 | | 188 | 53 |
| 89346 | 417195C2 | 4720-01-065-0676 | 128 | 13 |
| 29510 | 417196C2 | 4710-01-083-4458 | 169 | |
| 29510 | 417199C2 | 4720-01-014-4915 | 169 | |
| 89346 | 417200C2 | 2520-01-193-0883 | 169 | |
| 89346 | 417201C2 | 4720-01-347-7387 | 175 | 1 |
| 89346 | 417202C2 | 4720-01-347-7388 | 175 | 5 |
| 89346 | 417488C1 | 5330-01-065-6131 | 180 | 20 |
| | | | 181 | 20 |
| | | | 182 | 20 |
| | | | 183 | 20 |
| 89346 | 418608C1 | | 173 | 8 |
| | | | 174 | 8 |
| 78500 | 42X1064 | | 178 | 36 |
| | | | 179 | 36 |
| 89346 | 422232C2 | 5315-01-186-5190 | 188 | 16 |
| 89346 | 422650C1 | | 144 | 6 |
| 89346 | 424469C91 | 5330-01-363-0611 | 162 | 33 |
| 89346 | 425966C1 | | 188 | 44 |
| 89346 | 425987C1 | | 138 | 12 |
| 21292 | 427399 | 5330-01-363-2840 | 167 | 31 |
| 21292 | 427464 | 5330-01-363-2839 | 167 | 6 |
| 21292 | 427465 | 5330-01-363-2841 | 167 | 53 |
| 21292 | 427466 | 5330-01-363-2842 | 167 | 68 |
| 89346 | 427640 | 5310-01-353-1896 | 142 | 2 |
| 89346 | 427652 | | 169 | |
| 89346 | 427698C1 | 4720-01-131-1477 | 117 | 2 |
| 89346 | 431309C1 | | 190 | 11 |

## CROSS-REFERENCE INDEXES

### PART NUMBER INDEX

| CAGEC | PART NUMBER | STOCK NUMBER | FIG. | ITEM |
|---|---|---|---|---|
| 89346 | 431606R1 | | 140 | 15 |
| 89346 | 432230 | | 126 | 10 |
| 21292 | 432234 | | 167 | 55 |
| 21292 | 432235 | | 167 | 50 |
| 21292 | 432236 | | 167 | 44 |
| 21292 | 432237 | | 167 | 85 |
| 21292 | 432478 | | 167 | 45 |
| 21292 | 432554 | | 167 | 76 |
| 21292 | 432556 | | 167 | 64 |
| 21292 | 432557 | | 167 | 43 |
| 21292 | 432558 | | 167 | 60 |
| 21292 | 432559 | | 167 | 65 |
| 89346 | 434345C1 | | 122 | 13 |
| 89346 | 434764C1 | 5306-01-365-9638 | 193 | 7 |
| 89346 | 434955C91 | | 105 | 8 |
| 89346 | 435693C1 | | 113 | 47 |
| 89346 | 435860C1 | 5306-01-364-9107 | 113 | 46 |
| 89346 | 436832C2 | | 189 | 93 |
| 89346 | 436833C2 | | 189 | 92 |
| 89346 | 437692C1 | | 103 | 9 |
| 89346 | 439184C1 | | 138 | 83 |
| 89346 | 439247C91 | 5365-01-133-8246 | 188 | |
| 89346 | 440300C1 | | 186 | 20 |
| 89346 | 441246C1 | | 190 | 17 |
| 89346 | 441302C92 | 5365-01-361-8383 | 188 | 7 |
| 89346 | 441366C1 | | 162 | 46 |
| 89346 | 441982C1 | | 162 | 41 |
| 89346 | 443600C1 | | 162 | 18 |
| 89346 | 443610C1 | 3120-01-363-5023 | 162 | 66 |
| 89346 | 443646C92 | | 188 | 26 |
| 89346 | 443990 | | 169 | |
| 89346 | 444000 | | 135 | 17 |
| 89346 | 444014 | | 140 | 14 |
| 89346 | 444033 | 4730-00-580-7417 | 175 | 12 |
| 89346 | 444040 | | 135 | 11 |
| | | | 169 | |
| 89346 | 444138 | | 175 | |
| 89346 | 444148 | | 165 | 5 |
| | | | 169 | |
| 89346 | 444613 | | 135 | 24 |
| | | | 148 | 12 |
| 89346 | 444614 | | 149 | |
| | | | 150 | |
| 89346 | 444624 | | 132 | 8 |
| 89346 | 444625 | | 131 | 11 |
| | | | 149 | 11 |
| | | | 161 | 17 |
| 89346 | 444630 | | 153 | |
| 89346 | 444631 | | 145 | |
| 89346 | 444655 | | 151 | |
| | | | 175 | 11 |

## CROSS-REFERENCE INDEXES

### PART NUMBER INDEX

| CAGEC | PART NUMBER | STOCK NUMBER | FIG. | ITEM |
|---|---|---|---|---|
| 89346 | 444667 | | 151 | |
| | | | 153 | |
| | | | 153 | |
| | | | 156 | 31 |
| 89346 | 444688 | | 140 | 4 |
| | | | 141 | 18 |
| 89346 | 444698 | | 140 | 27 |
| 89346 | 444944 | | 135 | 57 |
| 89346 | 445090 | | 162 | 5 |
| 89346 | 446738C1 | 3020-01-299-7118 | 140 | 8 |
| 89346 | 450499C1 | | 111 | 28 |
| 89346 | 451497C1 | | 102 | 6 |
| 89346 | 451677C92 | 6220-01-222-8118 | 111 | 7 |
| 89346 | 452187C1 | 5930-00-482-7856 | 111 | 13 |
| 89346 | 452329C1 | | 175 | 19 |
| 89346 | 452810C1 | 5360-01-364-1945 | 173 | 7 |
| | | | 174 | 7 |
| 89346 | 453435 | | 126 | 11 |
| 89346 | 453698C1 | | 128 | 6 |
| 89346 | 453699C1 | | 128 | 2 |
| 89346 | 454096 | | 161 | |
| 24617 | 454460 | 3110-00-606-9574 | 167 | 72 |
| 89346 | 454711C91 | | 189 | 77 |
| 89346 | 454719C91 | | 187 | 5 |
| 89346 | 454755C1 | | 189 | 72 |
| 89346 | 455386C1 | | 186 | 22 |
| 89346 | 455387C91 | | 186 | 21 |
| 89346 | 456652 | | 126 | 51 |
| 89346 | 458446C1 | 5365-01-342-7810 | 113 | 2 |
| 89346 | 459016C1 | | 169 | |
| 89346 | 459017C1 | 4720-01-166-4452 | 169 | |
| 89346 | 459281C1 | | 175 | 22 |
| 89346 | 459591C1 | | 118 | 10 |
| 89346 | 460684C91 | | 124 | 17 |
| 89346 | 460685C91 | | 124 | 21 |
| 89346 | 461042C1 | | 124 | 23 |
| 89346 | 461043C1 | | 124 | 44 |
| 35510 | 461044-C1 | 5977-01-024-1218 | 124 | 6 |
| 89346 | 461045C1 | 5977-01-024-1213 | 124 | 16 |
| 92679 | 461048C1 | 5910-00-112-8051 | 124 | 40 |
| 89346 | 461049C1 | 5365-01-348-8380 | 124 | 24 |
| 89346 | 461050C2 | 2930-01-349-4495 | 124 | 25 |
| 89346 | 461051C1 | | 124 | 10 |
| 89346 | 461052C1 | 5330-01-346-0312 | 124 | 7 |
| 89346 | 461054C1 | 5961-01-050-7906 | 124 | 8 |
| 89346 | 461056C91 | 2920-01-025-6801 | 124 | 39 |
| 89346 | 461057C91 | 2920-01-025-9899 | 124 | 36 |
| 89346 | 461058C1 | | 124 | 20 |
| 89346 | 461059C1 | | 124 | 18 |
| 89346 | 461060C1 | 3120-01-348-6965 | 124 | 45 |

## CROSS-REFERENCE INDEXES

### PART NUMBER INDEX

| CAGEC | PART NUMBER | STOCK NUMBER | FIG. | ITEM |
|---|---|---|---|---|
| 89346 | 461061C1 | 5975-01-349-6697 | 124 | 37 |
| 89346 | 461062C1 | 5975-01-349-6700 | 124 | 42 |
| 89346 | 461063C1 | 5975-01-349-6699 | 124 | 41 |
| 89346 | 461064C1 | | 124 | 1 |
| 89346 | 461065C1 | 5975-01-349-6698 | 124 | 38 |
| 89346 | 461066C1 | 5975-01-349-6701 | 124 | 43 |
| 89366 | 461449C1 | | 124 | 30 |
| 89346 | 461452C1 | 2520-01-363-2352 | 162 | 6 |
| 89346 | 463118C91 | | 124 | 19 |
| 89346 | 463179C1 | | 111 | 5 |
| 89346 | 463413C1 | | 186 | 11 |
| 89346 | 463420C2 | | 186 | 25 |
| 89346 | 463430C2 | | 186 | 18 |
| 89346 | 463526C1 | | 144 | 5 |
| 89346 | 463580R1 | 5365-01-336-0658 | 188 | 19 |
| 89346 | 463683C91 | 4820-01-173-8616 | 128 | 8 |
| 89346 | 463822C93 | 5930-01-293-3854 | 111 | 24 |
| 89346 | 464238C2 | | 186 | 32 |
| 89346 | 464248C1 | | 186 | 10 |
| 89346 | 464253C92 | | 186 | 42 |
| 7T253 | 465 | | 102 | 10 |
| 89346 | 465108C1 | | 116 | 16 |
| 89346 | 465914C1 | | 190 | 24 |
| 89346 | 466829C3 | | 162 | 29 |
| 89346 | 467842C91 | | 105 | 7 |
| 89346 | 467879C1 | | 105 | 11 |
| 89346 | 467880C1 | | 105 | 10 |
| 89346 | 468348C1 | | 118 | 43 |
| 89346 | 468349C4 | | 118 | 45 |
| 89346 | 468699C1 | | 190 | 21 |
| 89346 | 468796C1 | 5310-01-263-8510 | 110 | 6 |
| 89346 | 468893C2 | | 188 | 33 |
| 89346 | 468894C7 | | 188 | 38 |
| 21292 | 468896 | | 167 | 87 |
| 89346 | 468899C1 | | 188 | 53 |
| 89346 | 468900C2 | | 188 | 51 |
| 89346 | 468901C2 | | 188 | 51 |
| 89346 | 468904C3 | | 188 | 50 |
| 89346 | 468905C3 | | 188 | 50 |
| 89346 | 468962C1 | | 138 | 49 |
| 89346 | 469785C3 | | 188 | 36 |
| 89346 | 469825C1 | | 188 | 35 |
| 89346 | 469858C1 | 5355-01-197-4034 | 111 | 10 |
| 89346 | 469878C1 | 3120-01-277-4263 | 110 | 4 |
| 89346 | 469902C3 | | 110 | 3 |
| 89346 | 470031C2 | 5340-01-362-3378 | 166 | 10 |
| 89346 | 470184C92 | | 111 | 9 |
| 89346 | 470213C91 | 2590-01-182-4482 | 110 | 7 |
| 89346 | 470249C91 | 5930-01-209-4012 | 111 | 11 |
| '89346 | 470422C1 | | 177 | 9 |
| 89346 | 470822C91 | | 188 | 5 |

## CROSS-REFERENCE INDEXES

### PART NUMBER INDEX

| CAGEC | PART NUMBER | STOCK NUMBER | FIG. | ITEM |
|---|---|---|---|---|
| 89346 | 470841C91 | 6645-01-202-4114 | 111 | 19 |
| 89346 | 47126H | | 169 | |
| 31007 | 47128H | 4730-00-355-3669 | 169 | |
| 89346 | 471302C94 | 5930-01-202-5932 | 110 | 9 |
| 89346 | 471347C91 | | 188 | 30 |
| 89346 | 471348C91 | | 188 | |
| 89346 | 471349C1 | | 188 | |
| 89346 | 471350C1 | | 188 | |
| 89346 | 471453C2 | | 191 | 3 |
| 89346 | 471475C1 | | 118 | 39 |
| 89346 | 471477C1 | | 118 | 38 |
| 89346 | 471478C1 | | 118 | 44 |
| 89346 | 471496C92 | 2540-01-182-4580 | 111 | 12 |
| 89346 | 471530C1 | | 123 | 8 |
| 89346 | 471640C2 | | 144 | 20 |
| 89346 | 471641C2 | | 144 | 21 |
| 8?306 | 471876C1 | | 190 | 12 |
| 89346 | 472149C1 | | 173 | 10 |
| | | | 174 | 10 |
| 89346 | 472151C1 | | 173 | 3 |
| | | | 174 | 3 |
| 89346 | 472152C91 | | 173 | 11 |
| | | | 174 | 11 |
| 89346 | 472368C1 | | 190 | 4 |
| 89346 | 472479C1 | | 190 | 22 |
| 89346 | 472697C1 | | 114 | 22 |
| 89346 | 472698C1 | | 114 | 21 |
| 89346 | 473033C92 | | 142 | 8 |
| 89346 | 473035C92 | 4310-01-168-9536 | 142 | |
| 89346 | 473038C91 | 4310-01-161-6462 | 142 | 18 |
| 89346 | 473039C91 | | 142 | 18 |
| 89346 | 473040C91 | 2530-01-329-1377 | 142 | |
| 89346 | 473042C91 | 3120-01-263-4282 | 142 | 15 |
| 89346 | 473043C91 | 3120-01-353-6029 | 142 | 15 |
| 89346 | 473044C91 | 3120-01-353-6030 | 142 | 15 |
| 89346 | 473045C92 | 4310-01-173-4082 | 142 | |
| 89346 | 473046C92 | 4310-01-272-7624 | 142 | |
| 89346 | 473047C91 | 3120-01-268-2659 | 142 | |
| 89346 | 473052C1 | | 142 | 9 |
| 89346 | 473053C1 | | 142 | 11 |
| 89346 | 473055C2 | | 142 | 4 |
| 89346 | 473057C1 | 5330-01-352-5774 | 142 | |
| 89346 | 473059C91 | | 142 | 19 |
| 89346 | 473060C91 | 5340-01-353-5960 | 142 | 28 |
| 89346 | 473064C1 | | 142 | 10 |
| 89346 | 473065C91 | | 142 | 22 |
| | | | 142 | 23 |
| 89346 | 473070C1 | | 142 | 29 |
| 89346 | 473210C1 | | 194 | 7 |
| 89346 | 473322C2 | | 194 | 8 |

## CROSS-REFERENCE INDEXES

### PART NUMBER INDEX

| CAGEC | PART NUMBER | STOCK NUMBER | FIG. | ITEM |
|---|---|---|---|---|
| 89346 | 473323C3 | | 194 | 9 |
| 89346 | 473653C1 | | 142 | 3 |
| 89346 | 473794C91 | 2530-01-065-2539 | 172 | 4 |
| 89346 | 474466C1 | 5330-01-274-3125 | 142 | 12 |
| 89346 | 474467C1 | | 142 | 25 |
| 89346 | 474468C1 | | 142 | 24 |
| 89346 | 474469C1 | | 142 | 7 |
| 89346 | 474470C91 | | 142 | 21 |
| 89346 | 474517C2 | | 189 | 9 |
| 89346 | 474910C91 | | 188 | 6 |
| 89346 | 474923C1 | | 118 | 12 |
| 89346 | 475255C1 | | 192 | 7 |
| 89346 | 475277C95 | | 192 | 13 |
| 89346 | 475802C1 | 2510-01-310-4506 | 114 | 5 |
| 89346 | 475829C2 | | 175 | 13 |
| 89346 | 475831C3 | | 175 | 14 |
| 89346 | 475925C1 | 2540-01-154-4203 | 103 | 1 |
| 89346 | 475932C1 | | 172 | 3 |
| 7T253 | 476 | | 194 | 13 |
| 89346 | 476301C1 | | 193 | 14 |
| 89346 | 476303C2 | | 193 | 11 |
| 89346 | 476348C3 | | 193 | 5 |
| 89346 | 476349C3 | | 193 | 22 |
| 89346 | 476741C1 | 2940-01-154-8399 | 127 | 12 |
| 89346 | 476846C1 | 6680-01-186-2626 | 192 | 5 |
| 89346 | 478675C1 | 6685-01-108-5782 | 112 | 5 |
| 29930 | 478676C1 | 6620-01-108-9181 | 112 | 6 |
| 89346 | 478677C1 | 6625-01-175-8055 | 112 | 4 |
| 89346 | 478678C1 | 6680-01-108-5783 | 112 | 9 |
| 89346 | 478679C1 | 6620-01-118-2337 | 112 | 10 |
| 89346 | 478906C1 | | 162 | 60 |
| 89346 | 478908C1 | 5330-01-295-8728 | 162 | 26 |
| 89346 | 478909C1 | 5330-01-363-0625 | 162 | 40 |
| 89346 | 478910C1 | 5330-01-257-5027 | 162 | 34 |
| 89346 | 478912C1 | 5330-01-363-0624 | 162 | 3 |
| 89346 | 478921C1 | | 162 | 77 |
| 89346 | 478922C1 | 3120-01-363-5024 | 162 | 74 |
| 89346 | 478930C1 | | 162 | 82 |
| 89346 | 478932C1 | 3120-01-363-5022 | 162 | 57 |
| 89346 | 478953C2 | | 162 | 19 |
| 89346 | 478954C1 | | 162 | 2 |
| 89346 | 478955C1 | | 162 | 20 |
| 89346 | 478956C1 | | 162 | 22 |
| 89346 | 478993C91 | 3110-01-363-0588 | 162 | 59 |
| 89346 | 479220C1 | | 108 | 12 |
| 89346 | 479375C1 | | 144 | 14 |
| 89346 | 479376C1 | | 144 | 13 |
| 89346 | 479758C1 | 6685-01-108-5781 | 125 | 4 |
| 89346 | 480082C91 | 3030-01-160-5801 | 119 | 7 |
| 89346 | 480147C92 | 6680-01-346-5191 | 111 | |
| 89346 | 481108C1 | | 186 | 19 |

## CROSS-REFERENCE INDEXES

### PART NUMBER INDEX

| CAGEC | PART NUMBER | STOCK NUMBER | FIG. | ITEM |
|---|---|---|---|---|
| 89346 | 481119C2 | | 186 | 4 |
| 89346 | 48122H | 5365-00-274-4544 | 192 | |
| 89346 | 481366C1 | | 111 | 26 |
| 89346 | 481724C91 | | 111 | 29 |
| 89346 | 481775C1 | | 145 | 11 |
| 89346 | 481811C1 | | 186 | 29 |
| 89346 | 481979C3 | | 145 | 12 |
| 89346 | 482040C1 | | 186 | 6 |
| 89346 | 482041C1 | 5365-01-361-8394 | 186 | 6 |
| 89346 | 482042C1 | 5365-01-361-8395 | 186 | 6 |
| 89346 | 482043C1 | 5365-01-361-8396 | 186 | 6 |
| 89346 | 482044C1 | 5365-01-361-8397 | 186 | 6 |
| 89346 | 482045C1 | 5365-01-361-8398 | 186 | 6 |
| 89346 | 482167C1 | 2990-01-162-5198 | 115 | 6 |
| 89346 | 482244C3 | 5360-01-342-5401 | 114 | 19 |
| 89346 | 482256C2 | 6150-01-367-5442 | 193 | |
| 89346 | 482528C1 | 5355-01-189-1975 | 106 | 16 |
| | | | 170 | 2 |
| 89346 | 482633C92 | 6150-01-367-7427 | 193 | |
| 89346 | 482644C1 | 4730-01-153-9206 | 127 | 13 |
| 89346 | 482708C1 | | 118 | 14 |
| 89346 | 482731C1 | | 116 | 14 |
| 89346 | 482736C1 | | 127 | 14 |
| 89346 | 482737C1 | | 127 | 5 |
| 89346 | 482757C1 | | 127 | 3 |
| 89346 | 482758C1 | | 127 | 7 |
| 89346 | 482787C91 | | 186 | 38 |
| 89346 | 483127C2 | | 117 | 11 |
| 89346 | 483128C2 | | 117 | 10 |
| 89346 | 483144C91 | 4820-01-165-7890 | 175 | 4 |
| 89346 | 483381C91 | 4820-01-272-7631 | 170 | 10 |
| 89346 | 483391C1 | | 142 | 5 |
| 89346 | 483392C93 | | 162 | 32 |
| 89346 | 483442C1 | | 186 | 34 |
| 89346 | 483513C2 | | 118 | 33 |
| 89346 | 483533C6 | | 118 | 41 |
| 89346 | 483791C2 | | 118 | 22 |
| 89346 | 483792C2 | | 118 | 21 |
| 89346 | 483846C1 | | 191 | 11 |
| 89346 | 483916C2 | | 118 | 18 |
| 89346 | 483918C2 | | 118 | 17 |
| 89346 | 484082C1 | | 190 | 32 |
| 89346 | 484084C1 | | 190 | 32 |
| 89346 | 484086C91 | | 190 | 33 |
| 89346 | 484090C91 | | 190 | 34 |
| 89346 | 484534C91 | 6685-01-359-7871 | 127 | 19 |
| 89346 | 485200C3 | | 118 | 4 |
| 89346 | 485937C4 | | 175 | 20 |
| 89346 | 486129C92 | 4720-01-151-6398 | 116 | 8 |
| 89346 | 486855C4 | | 114 | 20 |
| 89346 | 486979C91 | | 110 | 26 |

## CROSS-REFERENCE INDEXES

### PART NUMBER INDEX

| CAGEC | PART NUMBER | STOCK NUMBER | FIG. | ITEM |
|---|---|---|---|---|
| 89346 | 487223C1 | | 111 | 27 |
| 89346 | 487331C1 | 5340-01-365-4835 | 113 | 32 |
| 89346 | 487332C1 | | 113 | 31 |
| 89346 | 487342C1 | | 113 | 13 |
| 89346 | 487343C1 | | 113 | 12 |
| 89346 | 487703C1 | | 190 | 14 |
| 89346 | 487704R1 | | 118 | 42 |
| 89346 | 488737C2 | | 103 | 30 |
| 89346 | 489862C1 | 5360-01-342-5400 | 114 | 18 |
| 89346 | 489904C92 | | 105 | |
| 89346 | 489906C92 | | 105 | 3 |
| 89346 | 489908C91 | | 105 | 1 |
| 89346 | 490661C1 | | 105 | 2 |
| 89346 | 490662C1 | | 105 | 4 |
| 89346 | 490687C1 | 2540-01-343-1985 | 102 | 9 |
| 89346 | 491000C92 | 2530-01-262-1186 | 121 | |
| 89346 | 491497C4 | | 118 | 35 |
| 89346 | 491499C4 | | 118 | 34 |
| 89346 | 491668C92 | 6140-01-201-0641 | 193 | 3 |
| 89346 | 491673C1 | | 103 | 14 |
| 89346 | 492146C1 | 2930-01-258-9392 | 145 | 10 |
| 89346 | 492283C1 | 5360-01-227-1338 | 180 | 2 |
| | | | 181 | 2 |
| | | | 182 | 2 |
| | | | 183 | 2 |
| 89346 | 492506C1 | | 188 | 47 |
| 89346 | 492508C1 | | 188 | 46 |
| 89346 | 492536C1 | | 140 | 12 |
| 89346 | 492825C1 | | 194 | 7 |
| 89346 | 492920C91 | 2940-01-275-5333 | 127 | 11 |
| 89346 | 493202C91 | 2835-01-361-7029 | 189 | |
| 89346 | 493205C91 | 2520-01-362-1786 | 186 | |
| | | | 187 | |
| 89346 | 493362C3 | | 118 | 6 |
| 89346 | 493507C1 | | 188 | 37 |
| 89346 | 49413HA | 5365-00-215-4108 | 189 | 79 |
| 89346 | 494135C1 | | 191 | 8 |
| 89346 | 49415HA | 5365-01-361-8413 | 189 | 79 |
| 92679 | 49417HA | 2520-00-630-0148 | 189 | 79 |
| 89346 | 49419HA | | 189 | 79 |
| 89346 | 49421HA | | 189 | 79 |
| 89346 | 495024C1 | | 186 | 17 |
| 89346 | 495873C1 | | 190 | 35 |
| 89346 | 496276C1 | | 186 | 6 |
| 89346 | 496277C1 | | 186 | 6 |
| 89346 | 496345C1 | 5330-01-174-2684 | 167 | 35 |
| 89346 | 496452C1 | | 188 | 8 |
| 89346 | 496455C1 | | 188 | 10 |
| 89346 | 496530C91 | 2520-01-157-7982 | 188 | |
| 89346 | 496897C91 | | 180 | |
| 89346 | 496898C91 | | 181 | |

## CROSS-REFERENCE INDEXES

### PART NUMBER INDEX

| CAGEC | PART NUMBER | STOCK NUMBER | FIG. | ITEM |
|---|---|---|---|---|
| 89346 | 496905C91 | | 182 | |
| 89346 | 496906C91 | | 183 | |
| 72447 | 5-14-29 | | 163 | 3 |
| | | | 184 | 3 |
| | | | 185 | 3 |
| 72447 | 5-15-33 | | 163 | 4 |
| | | | 184 | 4 |
| | | | 185 | 4 |
| 72447 | 5-16-33 | | 163 | 5 |
| | | | 184 | 5 |
| | | | 185 | 5 |
| 97271 | 5-188X | 2520-01-084-3251 | 164 | 1 |
| 72447 | 5-279X | 2520-00-388-4197 | 163 | 1 |
| | | | 184 | 1 |
| | | | 185 | 1 |
| 89346 | 500724C1 | | 112 | 14 |
| 89346 | 501707C1 | 5945-01-268-6282 | 111 | 22 |
| 89346 | 501811C1 | | 112 | 11 |
| 89346 | 503512C2 | 5365-01-347-1160 | 113 | 54 |
| 89346 | 50410DA | 4730-00-044-4688 | 161 | 14 |
| 89346 | 504150C1 | 5310-01-364-9059 | 177 | |
| 89346 | 504211C1 | 5330-01-174-2685 | 167 | 48 |
| 89346 | 504221C91 | 3110-01-173-6518 | 167 | 46 |
| 89346 | 504547C1 | | 193 | 18 |
| 89346 | 504548C1 | | 193 | 16 |
| 89346 | 504917C1 | | 193 | 17 |
| 89346 | 505026C1 | 2540-01-367-2044 | 111 | 15 |
| 89346 | 505031C1 | | 193 | 20 |
| 89346 | 505033C2 | | 193 | 21 |
| 89346 | 505757C1 | | 186 | 56 |
| | | | 187 | 24 |
| 89346 | 506911C91 | 2510-01-258-2403 | 190 | 1 |
| 89346 | 507933C3 | | 175 | 21 |
| 89346 | 508658C2 | | 175 | 15 |
| 89346 | 508789C1 | | 119 | 10 |
| 89346 | 508792C1 | | 119 | 15 |
| 89346 | 509048C1 | 5930-01-260-6472 | 125 | 5 |
| 7T253 | 515 | | 104 | 12 |
| 89346 | 515718C1 | 4710-01-358-0644 | 127 | 6 |
| 7T253 | 518 | | 104 | 1 |
| 89346 | 526000C1 | | 188 | 11 |
| 89346 | 526001C1 | | 188 | 12 |
| 89346 | 52748HA | 5365-00-529-8457 | 189 | 78 |
| 89346 | 52749HA | 5365-00-378-7253 | 189 | 78 |
| 89346 | 528800C1 | | 165 | 1 |
| 89346 | 528801C1 | | 165 | 2 |
| 35510 | 5291 | | 124 | 32 |
| 89346 | 530874R1 | 2590-01-273-1308 | 117 | 7 |
| 89346 | 532389C2 | 4720-01-283-0128 | 119 | |
| | | | 120 | 1 |
| 89346 | 533092C3 | | 193 | 8 |

## CROSS-REFERENCE INDEXES

### PART NUMBER INDEX

| CAGEC | PART NUMBER | STOCK NUMBER | FIG. | ITEM |
|---|---|---|---|---|
| 89346 | 533388C1 | | 190 | 3 |
| 89346 | 539460R1 | | 190 | 31 |
| 89346 | 539494C2 | | 190 | 26 |
| 89346 | 539519C1 | | 190 | 25 |
| 89346 | 539559C91 | | 190 | 29 |
| 89346 | 539560C1 | | 190 | |
| 89346 | 539561C1 | | 190 | |
| 89346 | 539562C1 | | 190 | |
| 89346 | 539899C1 | | 190 | 31 |
| 89346 | 539907C2 | | 190 | 9 |
| 89346 | 539925C1 | | 169 | |
| 89346 | 542098C1 | | 110 | 28 |
| | | | 113 | 45 |
| 89346 | 542489C91 | 4810-01-279-1366 | 113 | |
| 89346 | 54528HA | | 189 | 84 |
| 89346 | 54557H | | 189 | 71 |
| 89346 | 546614C1 | 3020-01-365-9216 | 162 | 24 |
| 89346 | 546615C1 | | 162 | 56 |
| 89346 | 548222R1 | 4730-01-297-9324 | 127 | 8 |
| 7T253 | 553 | | 102 | 7 |
| 89346 | 553791C1 | 4730-00-482-8111 | 116 | 11 |
| | | | 192 | 9 |
| 7T253 | 554 | | 102 | 5 |
| 89346 | 556915C91 | 6620-01-313-8164 | 125 | |
| 89346 | 55896R1 | 4730-00-426-8180 | 175 | |
| 89346 | 55897R1 | 4730-00-278-5491 | 175 | |
| 89346 | 55916R11 | | 175 | 2 |
| 89346 | 56121R3 | 5330-01-084-1063 | 180 | 16 |
| | | | 181 | 16 |
| | | | 182 | 16 |
| | | | 183 | 16 |
| 89346 | 56233R11 | | 175 | 7 |
| | | | 175 | 18 |
| 89346 | 56677R2 | | 188 | 27 |
| 89346 | 571134C91 | | 185 | 2 |
| 89346 | 571330C1 | 5305-01-352-7541 | 142 | 13 |
| 89346 | 571349C2 | 2520-01-325-9110 | 186 | 57 |
| | | | 187 | 25 |
| 89346 | 571792C92 | 6150-01-363-4517 | 125 | 1 |
| 89346 | 571809C91 | | 111 | 17 |
| 89346 | 571967C1 | 4720-01-273-1428 | 116 | 5 |
| 89346 | 573070C1 | | 112 | 3 |
| 89346 | 573216C1 | | 173 | 13 |
| | | | 174 | 13 |
| 89346 | 573218C91 | 2530-01-269-9398 | 174 | |
| 89346 | 573219C1 | | 173 | 1 |
| | | | 174 | 1 |
| 89346 | 574062C1 | | 180 | 13 |
| | | | 181 | 13 |
| | | | 182 | 13 |
| | | | 183 | 13 |

## CROSS-REFERENCE INDEXES

### PART NUMBER INDEX

| CAGEC | PART NUMBER | STOCK NUMBER | FIG. | ITEM |
|---|---|---|---|---|
| 89346 | 574868C92 | 2520-01-272-5318 | 168 | 2 |
| 89346 | 57489C1 | 4720-01-103-0874 | 169 | |
| 89346 | 574897C91 | 4730-01-168-3605 | 169 | |
| 89346 | 576168C1 | 4730-01-346-7908 | 149 | 16 |
| 89346 | 577650C1 | | 180 | 23 |
| | | | 181 | 23 |
| | | | 182 | 23 |
| | | | 183 | 23 |
| 89346 | 577652C1 | | 180 | 8 |
| | | | 181 | 8 |
| | | | 182 | 8 |
| | | | 183 | 8 |
| 89346 | 577653C1 | | 180 | 4 |
| | | | 181 | 4 |
| | | | 182 | 4 |
| | | | 183 | 4 |
| 89346 | 577654C1 | | 180 | 15 |
| | | | 181 | 15 |
| | | | 182 | 15 |
| | | | 183 | 15 |
| 89346 | 577655C1 | 5360-01-273-1509 | 180 | 1 |
| | | | 181 | 1 |
| | | | 182 | 1 |
| | | | 83 | 1 |
| 89346 | 578793C91 | | 189 | 91 |
| 89346 | 578881C1 | | 186 | 1 |
| | | | 187 | 1 |
| 89346 | 579365C91 | | 187 | 22 |
| 89346 | 579366C91 | | 186 | 54 |
| 89346 | 579741C1 | | 191 | 7 |
| 89346 | 581116C91 | | 162 | 30 |
| 89346 | 582487C1 | 5330-01-346-2916 | 113 | 50 |
| 89346 | 582488C91 | 3120-01-364-5062 | 113 | 44 |
| 89346 | 582489C1 | | 113 | 3 |
| 89346 | 582491C1 | 5330-01-316-1327 | 113 | 22 |
| 89346 | 582492C1 | 5330-01-315-2129 | 113 | 23 |
| 89346 | 582493C91 | 5330-01-315-8707 | 113 | 38 |
| 89346 | 582494C1 | 5330-01-316-1326 | 113 | 17 |
| 89346 | 582495C91 | 5330-01-316-1294 | 113 | 53 |
| 89346 | 582496C91 | 5330-01-316-1295 | 113 | 7 |
| 89346 | 582497C91 | 5330-01-316-1296 | 113 | 4 |
| 89346 | 582499C1 | 5310-01-346-3564 | 113 | 52 |
| 89346 | 582500C1 | 5310-01-275-1148 | 113 | 51 |
| 89346 | 582501C1 | | 113 | 6 |
| 89346 | 582502C1 | | 113 | 14 |
| 89346 | 582503C1 | 5360-01-347-5910 | 113 | 34 |
| 89346 | 582504C1 | | 113 | 33 |
| 89346 | 582505C91 | | 113 | 39 |
| 89346 | 582506C91 | | 113 | 8 |
| 89346 | 582507C91 | | 113 | 35 |
| 89346 | 582508C91 | | 113 | 57 |

## CROSS-REFERENCE INDEXES

### PART NUMBER INDEX

| CAGEC | PART NUMBER | STOCK NUMBER | FIG. | ITEM |
|---|---|---|---|---|
| 89346 | 582509C1 | 5330-01-346-2912 | 113 | 24 |
| 89346 | 582511C1 | | 113 | 59 |
| 89346 | 582513C1 | 5365-01-347-1159 | 113 | 43 |
| 89346 | 582514C1 | 5310-01-346-3563 | 113 | 40 |
| 89346 | 582515C91 | 5330-01-240-5035 | 113 | 41 |
| 89346 | 582516C1 | 5330-01-315-8741 | 113 | 9 |
| 89346 | 582517C91 | | 113 | 49 |
| 89346 | 582533C1 | | 189 | 36 |
| 89346 | 582534C1 | | 189 | |
| 89346 | 582540C1 | | 189 | 53 |
| 89346 | 582542C1 | | 189 | 48 |
| 89346 | 582543C1 | 5340-01-361-6561 | 189 | 14 |
| 89346 | 582545C1 | | 189 | 25 |
| 89346 | 582547C1 | | 189 | 46 |
| 89346 | 582548C1 | | 189 | 21 |
| 89346 | 582549C1 | | 189 | 21 |
| 89346 | 582550C1 | 5305-01-362-1307 | 189 | 1 |
| 89346 | 582551C1 | | 189 | 56 |
| 89346 | 582552C1 | | 189 | 37 |
| 89346 | 582553C1 | | 189 | 37 |
| 89346 | 582554C1 | | 189 | 54 |
| 89346 | 582555C1 | | 189 | 45 |
| 89346 | 582556091 | 2520-01-182-1838 | 189 | 42 |
| 89346 | 582557C1 | 4730-01-363-5163 | 189 | 41 |
| 89346 | 582559C1 | 2530-01-363-2515 | 176 | 4 |
| 89346 | 582563C1 | | 189 | 69 |
| 89346 | 582564C1 | | 176 | 15 |
| 89346 | 582567C1 | 2530-01-363-2390 | 189 | 2 |
| 89346 | 582568C1 | 5330-01-308-0098 | 189 | 55 |
| 89346 | 582569C1 | | 189 | 39 |
| 89346 | 582572C1 | | 189 | 51 |
| 89346 | 582573C1 | | 189 | 44 |
| 89346 | 582575C1 | | 189 | 22 |
| 89346 | 582576C1 | | 189 | 59 |
| 89346 | 582578C1 | | 189 | 35 |
| 89346 | 582580C1 | 5310-01-361-6943 | 189 | 3 |
| 89346 | 582583C1 | 5306-01-363-2626 | 189 | 20 |
| 89346 | 582584C91 | 5330-01-277-0918 | 189 | 62 |
| 89346 | 582586C1 | 3110-01-324-6650 | 189 | 28 |
| 89346 | 582587C1 | 5330-01-362-3365 | 176 | .9 |
| 89346 | 582588C1 | | 189 | 7 |
| 89346 | 582589C1 | 2520-01-182-1854 | 189 | 6 |
| 89346 | 582590C1 | 4730-01-361-8066 | 189 | 5 |
| 89346 | 582591C1 | 4730-01-361-8070 | 189 | 64 |
| 89346 | 582592C1 | 4730-01-361-8329 | 189 | 65 |
| 89346 | 582595C1 | | 189 | 10 |
| 89346 | 582596C1 | | 189 | 68 |
| 89346 | 582597C1 | | 189 | 8 |
| 89346 | 582598C1 | | 189 | 31 |
| 89346 | 582599C1 | | 189 | 32 |
| 89346 | 582600C1 | | 189 | 50 |

## CROSS-REFERENCE INDEXES

### PART NUMBER INDEX

| CAGEC | PART NUMBER | STOCK NUMBER | FIG. | ITEM |
|---|---|---|---|---|
| 89346 | 582601C1 | | 189 | 49 |
| 89346 | 582604C1 | | 189 | 58 |
| 89346 | 582605C1 | 5307-01-173-0978 | 176 | 12 |
| 89346 | 583158C1 | | 186 | 41 |
| | | | 187 | 9 |
| 89346 | 583164C1 | 5305-01-362-1303 | 186 | 3 |
| 89346 | 583165C1 | 5305-01-362-1304 | 186 | 3 |
| 89346 | 583166C1 | 5305-01-362-1306 | 186 | 12 |
| 89346 | 583274C2 | 6680-01-300-0745 | 112 | !7 |
| 89346 | 583278C1 | 5307-01-172-7073 | 176 | 12 |
| 89346 | 583279C1 | 5365-01-361-8399 | 189 | 24 |
| 89346 | 583280C1 | | 189 | 40 |
| 89346 | 583282CI | 4610-01-362-2378 | 189 | .34 |
| 89346 | 583284C1 | 5310-01-362-1289 | 189 | 4 |
| 89346 | 583285C1 | | 189 | 26 |
| 89346 | 583286C1 | | 189 | 47 |
| 89346 | 583287C1 | | 189 | 23 |
| 89346 | 583289C1 | | 189 | 52 |
| 89346 | 583291C1 | | 189 | 60 |
| 89346 | 583292C1 | | 189 | 26 |
| 89346 | 583293C91 | | 189 | .43 |
| 89346 | 583294C1 | | 189 | 33 |
| 89346 | 583295C1 | | 189 | 61 |
| 89346 | 583296C1 | | 189 | .15 |
| 89346 | 583299C91 | | 189 | 27 |
| 89346 | 583497C1 | 5360-01-336-9688 | 110 | 12 |
| 89346 | 583841C91 | 2530-01-238-1869 | 188 | 42 |
| 89346 | 583977C91 | 5340-01-342-5552 | 115 | 7 |
| 89346 | 584051C2 | 6620-01-111-9063 | 125 | 3 |
| 89346 | 584251C91 | | 189 | |
| 89346 | 584255C1 | | 186 | 36 |
| | | | 187 | 4 |
| | | | 189 | 74 |
| 89346 | 584368C1 | 4820-01-163-2402 | 165 | 3 |
| 89346 | 584489C2 | | 166 | 11 |
| 89346 | 584490C1 | | 166 | 6 |
| 89346 | 584491C2 | | 166 | 5 |
| 89346 | 584492C1 | | 166 | 15 |
| 89346 | 584702C1 | | 105 | 9 |
| 89346 | 584745C1 | 6680-01-263-2270 | 112 | 8 |
| 89346 | 584747C1 | | 112 | 1 |
| 89346 | 584960C91 | 5330-01-252-5258 | 121 | 9 |
| 89346 | 585547C1 | | 166 | 16 |
| 89346 | 585548C1 | | 166 | 17 |
| 89346 | 585744C1 | 2930-01-246-5152 | 121 | 1 |
| 89346 | 585765C1 | | 121 | 7 |
| 89346 | 585766C91 | 2940-01-278-7996 | 121 | 12 |
| 89346 | 585767C91 | 5330-01-295-2997 | 121 | 11 |
| 89346 | 585768C91 | 4810-01-297-1425 | 121 | 10 |
| 89346 | 585946C91 | 2920-01-285-8394 | 124 | |
| 89346 | 585949C1 | 2920-01-235-8490 | 124 | 11 |

## CROSS-REFERENCE INDEXES

### PART NUMBER INDEX

| CAGEC | PART NUMBER | STOCK NUMBER | FIG. | ITEM |
|---|---|---|---|---|
| 89346 | 586045C1 | | 186 | |
| | | | 187 | 28 |
| 89346 | 586049C1 | 4730-01-065-1817 | 187 | 27 |
| 89346 | 586531C2 | | 117 | 8 |
| 89346 | 586679C1 | 5998-01-364-5143 | 112 | 16 |
| 89346 | 586680C1 | | 112 | 15 |
| 89346 | 586686C91 | | 113 | 20 |
| 89346 | 586687C91 | | 113 | 28 |
| 89346 | 586796C1 | | 180 | 11 |
| | | | 181 | 11 |
| | | | 182 | 11 |
| | | | 183 | 11 |
| 89346 | 58694R1 | | 188 | 28 |
| 89346 | 587212C1 | | 186 | |
| 35510 | 58754 | 5305-00-450-0463 | 124 | 22 |
| 89346 | 588983C91 | | 183 | 19 |
| 89346 | 588984C91 | | 182 | 19 |
| 89346 | 588987C91 | | 180 | 14 |
| | | | 183 | 14 |
| 89346 | 588988C91 | | 181 | 14 |
| | | | 182 | 14 |
| 89346 | 589339C1 | | 186 | 26 |
| 89346 | 589996C92 | | 168 | 1 |
| 89346 | 590147C1 | 2520-01-362-5766 | 189 | 63 |
| 89346 | 590148C1 | 2520-01-363-3105 | 189 | 63 |
| 89346 | 590677C91 | | 162 | 35 |
| 89346 | 590678C1 | 5330-01-295-8730 | 162 | 38 |
| 89346 | 590745C1 | 5310-01-353-2653 | 121 | 8 |
| 89346 | 591219C1 | 5310-01-363-6053 | 162 | 54 |
| 89346 | 591220C1 | 5310-01-363-6082 | 162 | 55 |
| 89346 | 591238C1 | 5330-01-346-2918 | 121 | 3 |
| 89346 | 591597C2 | 5330-01-346-2917 | 120 | 5 |
| 89346 | 592534C91 | | 186 | |
| 89346 | 592535C1 | | 186 | 13 |
| 89346 | 592699C1 | | | |
| | | 2530-01-264-3266 | 106 | 17 |
| | | | 170 | |
| 7T253 | 593 | | 101 | 7 |
| 89346 | 593107C92 | 2530-01-285-6227 | 168 | 4 |
| 89346 | 593394C1 | | 127 | 18 |
| 89346 | 593894C1 | | 162 | 58 |
| 89346 | 593909C1 | | 162 | 76 |
| 89346 | 593910C1 | 5365-01-363-1508 | 162 | 63 |
| 89346 | 593913C91 | 2520-01-297-9287 | 162 | 51 |
| 89346 | 593920C1 | | 162 | 42 |
| 89346 | 593925C91 | | 162 | 14' |
| 89346 | 593926C1 | | 162 | 21 |
| 89346 | 593927C1 | 5360-01-363-4826 | 162 | 7 |
| 7T253 | 594 | | 101 | 9 |
| 89346 | 594873C91 | | 181 | 22 |
| 89346 | 594874C91 | | 180 | 22 |
| 89346 | 594877C91 | | 182 | 22 |

## CROSS-REFERENCE INDEXES

### PART NUMBER INDEX

| CAGEC | PART NUMBER | STOCK NUMBER | FIG. | ITEM |
|---|---|---|---|---|
| 89346 | 594878C91 | | 183 | 22 |
| 89346 | 594885C91 | 2530-01-332-1622 | 180 | 5 |
| | | | 181 | 5 |
| | | | 182 | 5 |
| | | | 183 | 5 |
| 89346 | 594886C91 | | 180 | 6 |
| | | | 181 | 6 |
| | | | 182 | 6 |
| | | | 183 | 6 |
| 89346 | 594889C91 | | 180 | 19 |
| 89346 | 594890C91 | | 181 | 19 |
| 89346 | 594891C1 | 2530-01-272-2946 | 180 | 12 |
| | | | 181 | 12 |
| | | | 182 | 12 |
| | | | 183 | 12 |
| 89346 | 595203C91 | | 187 | |
| 89346 | 595577C1 | | 187 | 29 |
| 89346 | 595593C1 | | 186 | 58 |
| 89346 | 59588DX | | 169 | |
| 89346 | 59595DX | | 169 | |
| 89346 | 595968C1 | | 127 | 10 |
| 89346 | 596003C91 | 2530-01-333-1917 | 173 | |
| 89346 | 596006C1 | 5307-01-362-2088 | 177 | 16 |
| 89346 | 596175C1 | 5330-01-277-6122 | 167 | 69 |
| 89346 | 596241C91 | 5330-01-336-6798 | 122 | 7 |
| 29510 | 59658D | 5310-00-424-8307 | 151 | 2 |
| 89346 | 596589C1 | | 191 | 4 |
| 89346 | 597242C91 | | 186 | 44 |
| | | | 187 | 15 |
| 89346 | 601093C1 | | 156 | 33 |
| 92679 | 601917C1 | 4820-01-179-6357 | 147 | 9 |
| 63108 | 602-1121A | | 101 | 4 |
| 63108 | 603-1121A | | 101 | 5 |
| 29510 | 60352D | 5330-00-126-3460 | 161 | |
| 89346 | 604844C1 | | 113 | 18 |
| 89346 | 606296C1 | | 135 | 40 |
| 89346 | 606845C1 | | 135 | 10 |
| | | | 147 | 10 |
| 89346 | 606885C1 | | 135 | 39 |
| 89346 | 606889C1 | | 135 | 12 |
| 89346 | 607146R91 | | 113 | 16 |
| 89346 | 61181H | | 116 | 15. |
| 89346 | 613454C1 | | 146 | |
| 29510 | 615175C91 | 5330-00-245-3788 | 145 | 6 |
| 89346 | 615739C1 | | 130 | 3 |
| 89346 | 615741C2 | | 130 | 9 |
| 89346 | 615745C2 | | 130 | 16 |
| 89346 | 615746C1 | 5330-00-930-3254 | 130 | 14 |
| 89346 | 615747C1 | 5360-01-342-5402 | 130 | 15 |
| 89346 | 617256C1 | | 161 | 7 |
| 89346 | 617605R1 | | 190 | 5 |

## CROSS-REFERENCE INDEXES

### PART NUMBER INDEX

| CAGEC | PART NUMBER | STOCK NUMBER | FIG. | ITEM |
|---|---|---|---|---|
| 89346 | 619174C1 | 5310-01-342-7823 | 129 | 16 |
| 3J335 | 622-503 | | 101 | 25 |
| 89346 | 624862R1 | 5306-01-067-9561 | 144 | 11 |
| 89346 | 625492C1 | 5330-01-352-4310 | 137 | 13 |
| 89346 | 625550C1 | 5330-01-347-3726 | 136 | 13 |
| 89346 | 625924C1 | | 139 | 6 |
| 89346 | 627771C1 | | 130 | 22 |
| 29510 | 627773C1 | 3120-00-236-6552 | 130 | 17 |
| 89346 | 627774C1 | 5365-01-343-1086 | 130 | 18 |
| 29510 | 630203C91 | 3110-01-023-1841 | 162 | 53 |
| 29510 | 630204C1 | 3110-01-023-1842 | 162 | 52 |
| 29510 | 630610C1 | 5340-01-275-3220 | 130 | 5 |
| 89346 | 630611C1 | | 130 | 6 |
| 89346 | 630614C91 | | 130 | 12 |
| 89346 | 630675C1 | | 130 | 6 |
| 89346 | 630694C91 | | 186 | 7 |
| 89346 | 630695C1 | | 186 | 5 |
| 35510 | 6399 | 5315-00-616-5523 | 124 | 26 |
| 89346 | 65071H | | 186 | 40 |
| | | | 187 | 6 |
| 89346 | 660433R1 | | 186 | 30 |
| 7T253 | 661 | | 102 | 11 |
| 7T253 | 663 | | 101 | 1 |
| 7T253 | 664 | | 101 | 6 |
| 7T253 | 668 | | 101 | 18 |
| 7T253 | 670 | | 102 | 4 |
| 29510 | 670073C1 | 5330-01-012-2329 | 129 | 30 |
| 29510 | 670079C1 | 5330-01-127-1382 | 129 | 10 |
| 89346 | 670675C1 | | 158 | 7 |
| 89346 | 670875C1 | 5330-01-363-1788 | 139 | 62 |
| 89346 | 670882C1 | 5330-01-347-3727 | 136 | 19 |
| 7T253 | 671 | | 102 | 3 |
| 92679 | 671559C1 | 4820-01-219-1436 | .156 | 29' |
| 92679 | 671561C1 | 2815-01-180-5156 | 156 | 29 |
| 92679 | 671563C1 | 2815-01-178-8482 | 156 | 29 |
| 92679 | 671565C1 | | 156 | 29 |
| 29510 | 671827C1 | 5330-01-099-7926 | 151 | 5 |
| 92679 | 672242C1 | 4720-01-166-8457 | 145 | 2 |
| 89346 | 672603C2 | 4330-00-578-0166 | 135 | 2 |
| 89346 | 673196C1 | | 135 | 42 |
| 92679 | 673308C2 | 5365-01-166-0790 | 145 | 19 |
| 92679 | 673396C1 | 5330-01-178-3720 | 116 | 20 |
| 89346 | 673622C1 | | 129 | 13 |
| 92679 | 673973C4 | 5330-01-179-5911 | 160 | 15 |
| 89346 | 674190C1 | | 140 | 20 |
| 89346 | 674772C1 | 5330-01-346-2913 | 155 | 22 |
| 89346 | 674775C2 | | 155 | 2 |
| 89346 | 674776C2 | | 155 | 2 |
| 89346 | 674777C2 | | 155 | 2 |
| 89346 | 674778C2 | | 155 | 2 |
| 89346 | 674779C2 | | 155 | 2 |

## CROSS-REFERENCE INDEXES

### PART NUMBER INDEX

| CAGEC | PART NUMBER | STOCK NUMBER | FIG. | ITEM |
|---|---|---|---|---|
| 89346 | 674780C2 | | 155 | 2 |
| 89346 | 674781C2 | | 155 | 2 |
| 89346 | 674782C2 | | 155 | 2 |
| 89346 | 674783C1 | 5365-01-347-1162 | 155 | 1 |
| 89346 | 674785C1 | | 155 | 9 |
| 89346 | 674786C2 | | 155 | 7 |
| 89346 | 674789C1 | | 155 | 11 |
| 89346 | 674790C1 | | 155 | 11 |
| 89346 | 674791C1 | | 155 | 11 |
| 89346 | 674792C1 | | 155 | 11 |
| 89346 | 674793C1 | | 155 | 11 |
| 89346 | 674797C1 | | 155 | 12 |
| 89346 | 674798C2 | | 155 | 19 |
| 89346 | 674800C1 | | 155 | 4 |
| 89346 | 674801C1 | | 155 | 10 |
| 89346 | 674802C1 | | 155 | 14 |
| 89346 | 674804C1 | | 155 | 15 |
| 89346 | 674925C2 | | 155 | 2 |
| 89346 | 674926C2 | | 155 | 2 |
| 89346 | 674948C2 | | 155 | 2 |
| 89346 | 674949C2 | | 155 | 2 |
| 89346 | 675006C1 | | 158 | 3 |
| 29510 | 675046C2 | 2805-01-022-4254 | 156 | 26 |
| 92679 | 675105C1 | 5360-01-167-9681 | 156 | 14 |
| 92679 | 675109C2 | 5330-01-167-4074 | 156 | 5 |
| 21292 | 675224 | 5330-01-363-2879 | 167 | 11 |
| 89346 | 675317C1 | | 129 | 21 |
| 21292 | 675326 | 5330-01-363-2880 | 167 | 23 |
| 89346 | 675364C | | 159 | 12 |
| 29510 | 675384C1 | 5330-01-023-5289 | 145 | 4 |
| 89346 | 675395C1 | | 147 | 11 |
| 89346 | 675398C2 | 5330-01-346-0314 | 147 | 15 |
| 89346 | 675406C1 | | 159 | 13 |
| 89346 | 675412C1 | | 159 | 2 |
| 89346 | 675439C1 | | 156 | 28 |
| 89346 | 675442C1 | | 156 | 35 |
| 92679 | 675443C1 | 2815-01-166-1180 | 156 | 25 |
| 89346 | 675455C1 | | 153 | |
| | | | 156 | 7 |
| 29510 | 675477C1 | 5330-01-023-5287 | 154 | 1 |
| 92679 | 675479C2 | 5340-01-189-5454 | 135 | 46 |
| 92679 | 675513C1 | 5330-01-184-5810 | 148 | 15. |
| 89346 | 675600C1 | | 157 | 8 |
| 29510 | 675609C1 | 5330-01-024-1788 | 135 | 59 |
| 89346 | 675616C91 | 2940-01-051-0695 | 147 | 1 |
| 92679 | 675621C1 | 2815-01-178-8583 | 157 | 12 |
| 89346 | 67566C92 | | 15 | 9 |
| 89346 | 675669C92 | 2805-01-361-3379 | 159 | 10 |
| 92679 | 675723C2 | 4720-01-194-5335 | 129 | 23 |
| 89346 | 675764C1 | | 157 | 4 |
| 92679 | 675765C1 | 3040-01-179-5490 | 157 | 2 |

## CROSS-REFERENCE INDEXES

### PART NUMBER INDEX

| CAGEC | PART NUMBER | STOCK NUMBER | FIG. | ITEM |
|---|---|---|---|---|
| 89346 | 675767C1 | | 157 | 5 |
| 29510 | 675808C2 | 5330-01-126-9511 | 145 | 18 |
| 89346 | 675811C1 | | 153 | 7 |
| 29510 | 675812C1 | 5330-01-126-9512 | 153 | 8 |
| 29510 | 675813C1 | 5330-01-127-1377 | 153 | 6 |
| 92679 | 675816C1 | 5330-01-177-8215 | 131 | 9 |
| | | | 132 | 7 |
| 89346 | 675859C2 | | 129 | 12 |
| 89346 | 675860C1 | 2815-01-227-5998 | 152 | 5 |
| 89346 | 676119C1 | 5306-01-293-6078 | 156 | 17 |
| 89346 | 676120C1 | 5306-01-292-2420 | 156 | 16 |
| 89346 | 676135C1 | | 147 | 6 |
| 92679 | 676136C1 | 5330-01-178-2104 | 147 | 7 |
| 92679 | 676137C1 | 5360-01-177-8605 | 147 | 8 |
| 89346 | 676144C1 | | 157 | 9 |
| 89346 | 676679C2 | | 158 | 2 |
| 89346 | 67678R1 | | 177 | 8 |
| 89346 | 676865C3 | 2815-01-325-2956 | 156 | 27 |
| 92679 | 677110C1 | 4730-01-178-8825 | 148 | 17 |
| 92679 | 677141C1 | 5365-01-166-0792 | 145 | 24 |
| 92679 | 677148C91 | 3110-01-201-3361 | 145 | 23 |
| 89346 | 677323C1 | | 147 | 5 |
| 89346 | 677349C1 | 5360-01-327-2616 | 156 | 24 |
| 92679 | 677490C1 | 5306-01-185-2070 | 151 | |
| 89346 | 677628C1 | | 150 | 3 |
| 89346 | 677690C1 | | 150 | 4 |
| 92679 | 677692-C1 | 5330-01-167-2437 | 156 | 4 |
| 92679 | 677715C1 | 5365-01-166-0855 | 145 | 22 |
| 89346 | 677755C91 | 4710-01-342-8841 | 129 | 3 |
| 89346 | 677781C91 | | 159 | 3 |
| 89346 | 677856C2 | | 145 | 17 |
| 7T253 | 678 | | 114 | 12 |
| 89346 | 678026C1 | | 136 | 5 |
| 89346 | 678841C91 | 2930-01-365-5299 | 148 | 14 |
| 89346 | 680086C1 | | 158 | 10 |
| 89346 | 680116C1 | 5340-01-257-4836 | 135 | 27 |
| 92679 | 680117C1 | 3120-01-184-5888 | 161 | 13 |
| 89346 | 680201C1 | | 137 | 9 |
| 89346 | 680237C93 | | 147 | 12 |
| 92679 | 680241C1 | 3130-01-180-4947 | 161 | 20 |
| 92679 | 680243C1 | 3130-01-179-4567 | 161 | 19 |
| 89346 | 680246C1 | 4720-01-181-1902 | 135 | 43 |
| 29510 | 680333C92 | 5310-01-242-2521 | 161 | 5 |
| 89346 | 680413C1 | | 154 | 9 |
| 89346 | 680414C1 | | 154 | 4 |
| 89346 | 680415C1 | 5365-01-228-0515 | 154 | 8 |
| 89346 | 680416C1 | 5365-01-362-2602 | 154 | 8 |
| 89346 | 680418C1 | 5365-01-362-2603 | 154 | 8 |
| 89346 | 680419C1 | 5365-01-362-2604 | 154 | 8 |
| 89346 | 680420C1 | 5365-01-362-2607 | 154 | 8 |
| 89346 | 680421C1 | 5365-01-362-2605 | 154 | 8 |

## CROSS-REFERENCE INDEXES

### PART NUMBER INDEX

| CAGEC | PART NUMBER | STOCK NUMBER | FIG. | ITEM |
|---|---|---|---|---|
| 89346 | 680422Ci | 5365-01-362-2606 | 154 | 8 |
| 89346 | 680423C1 | 5365-01-362-4361 | 154 | 8 |
| 89346 | 680433C1 | | 154 | 6 |
| 89346 | 680434C1 | | 154 | 5 |
| 89346 | 680435C1 | | 154 | 2 |
| 89346 | 680481C1 | | 131 | 10 |
| | | | 139 | 59 |
| 89346 | 680482C1 | | 145 | |
| 89346 | 680482C1 | | 152 | 4 |
| 89346 | 680483C1 | | 161 | 10 |
| 89346 | 680484C1 | | 161 | 16 |
| 89346 | 681426C1 | | 155 | 21 |
| 89346 | 681439C91 | | 155 | 16 |
| 89346 | 681496C1 | | 155 | 20 |
| 89346 | 681896C1 | 4730-01-342-8464 | 116 | 1 |
| | | | 145 | 1 |
| 89346 | 681905C93 | | 159 | 6 |
| 89346 | 681926C2 | | 159 | 7 |
| 7T253 | 682 | | 107 | 13 |
| 29510 | 682064C1 | 5360-01-022-7907 | 156 | 24 |
| 29510 | 682199C1 | 5330-01-127-1381 | 149 | 34 |
| 89346 | 682444C1 | | 161 | 15 |
| 89346 | 682840C1 | | 156 | 34 |
| 29510 | 682945C1 | 5330-01-127-1378 | 161 | 6 |
| 92679 | 682987C1 | 5310-01-178-2085 | 161 | 1 |
| 89346 | 683062R91 | | 173 | 2 |
| | | | 174 | 2 |
| 89346 | 683076C1 | 4730-01-343-8415 | 115 | 15 |
| 89346 | 683264R1 | 5365-01-361-9058 | 189 | 78 |
| 89346 | 683520C1 | | 129 | 19 |
| 92679 | 684034C1 | 5310-01-177-3831 | 150 | 2 |
| 89346 | 684108C1 | | 138 | 62 |
| 89346 | 684112C1 | | 138 | 28 |
| 29510 | 684245C1 | 2990-00-233-8057 | 130 | 2 |
| 89346 | 684310C1 | | 155 | 13 |
| 89346 | 684320C93 | 4320-01-365-5618 | 155 | 3 |
| 89346 | 684359C2 | 5365-01-343-1087 | 130 | 21 |
| 89346 | 684360C92 | | 130 | 20 |
| 89346 | 684364C1 | | 130 | 10 |
| 89346 | 684399C1 | | 155 | 6 |
| 29510 | 684492C93 | 2910-01-224-8490 | 136 | 11 |
| 89346 | 684496C1 | 5310-01-346-9432 | 149 | 28 |
| 89346 | 684579C92 | | 159 | 16 |
| 92679 | 684582C93 | 3120-01-192-2174 | 159 | 16 |
| 92679 | 684585C92 | 3120-01-180-4831 | 159 | 16 |
| 89346 | 684645R1 | 5365-01-363-1510 | 162 | 73 |
| 89346 | 684725C1 | | 136 | 16 |
| 89346 | 684830R1 | 4310-01-347-7445 | 136 | 15 |
| 89346 | 684830R1 | | 141 | 13 |
| 89346 | 684831R1 | | 141 | 5 |
| 89346 | 684850C1 | | 137 | 25 |

## CROSS-REFERENCE INDEXES

### PART NUMBER INDEX

| CAGEC | PART NUMBER | STOCK NUMBER | FIG. | ITEM |
|---|---|---|---|---|
| 89346 | 684858C1 | | 138 | 15 |
| 89346 | 684864C1 | | 138 | 48 |
| 89346 | 684871C1 | | 138 | 37 |
| 89346 | 684902C1 | | 161 | 12 |
| 89346 | 684935C93 | 4820-01-357-5636 | 155 | 8 |
| 92679 | 685152C1 | 5365-01-166-0791 | 145 | 25 |
| 89346 | 685153C2 | | 145 | 26 |
| 89346 | 685155C95 | 2930-01-153-9035 | 145 | 14 |
| 89346 | 685157C1 | | 145 | 16 |
| 89346 | 685158C1 | | 135 | 22 |
| 7T253 | 686 | | 107 | 12 |
| 89346 | 686142C2 | 5330-01-346-2356 | 149 | 30 |
| 89346 | 686145C2 | 5330-01-346-2355 | 149 | .22 |
| 89346 | 686146C1 | | 149 | 20 |
| 89346 | 686157C3 | | 149 | 26 |
| 89346 | 686181C1 | 5330-01-343-1066 | 129 | 29 |
| 89346 | 686210C91 | 2930-01-294-4916 | 149 | 29 |
| 89346 | 686617C91 | 3030-00-041-2922 | 123 | 1 |
| 89346 | 686704C4 | | 144 | 15 |
| 89346 | 686757C2 | | 145 | 3 |
| 89346 | 686839C1 | | 135 | 25 |
| 7T253 | 687 | | 107 | 10 |
| 29510 | 687018C2 | 5930-01-097-6517 | 145 | 5 |
| 92679 | 687024C1 | 5310-01-166-0762 | 159 | 9 |
| 89346 | 687199C92 | | 156 | 36 |
| 89346 | 687394C2 | 3130-01-362-3410 | 159 | 16 |
| 89346 | 687456C1 | 4730-00-204-3491 | 129 | 22 |
| 89346 | 687459C1 | | 136 | 6 |
| 89346 | 687965C1 | 3120-01-343-1096 | 130 | 19 |
| 7T253 | 688 | | 107 | 8 |
| 89346 | 688067C1 | 5365-01-348-3300 | 151 | 1 |
| 89346 | 688188C1 | 4720-01-347-2785 | 135 | 4 |
| 2L563 | 688265 | | 189 | 16 |
| 89346 | 688329C1 | | 129 | 28 |
| 21292 | 688464 | | 167 | 20 |
| 89346 | 688485C1 | | 149 | |
| 21292 | 688633 | 5310-01-363-0628 | 167 | 1 |
| 21292 | 688634 | | 167 | 54 |
| 29510 | 688923C91 | 2815-01-178-9934 | 158 | 1 |
| 29510 | 688928C1 | 5330-01-127-1380 | 150 | 6 |
| 89346 | 688999C92 | 2815-01-357-5705 | 156 | 11 |
| | | | 156 | 11 |
| 89346 | 689324C1 | | 135 | 31 |
| | | 5307-01-166-6166 | 156 | 2 |
| 89346 | 689342C1 | | 123 | 13 |
| 89346 | 689348C2 | | 140 | 32 |
| 89346 | 689349C2 | | 140 | 33 |
| 89346 | 689350C1 | | 140 | 29 |
| 89346 | 689351C1 | | 140 | 22 |
| 89346 | 689362C1 | | 119 | 5' |
| 89346 | 689366C1 | | 119 | 6 |

## CROSS-REFERENCE INDEXES

### PART NUMBER INDEX

| CAGEC | PART NUMBER | STOCK NUMBER | FIG. | ITEM |
|---|---|---|---|---|
| 89346 | 689381C1 | | 149 | 9 |
| 89346 | 689427C1 | | 123 | 12 |
| 89346 | 689432C92 | | 140 | 26 |
| 89346 | 689568C1 | 5330-01-346-0313 | 135 | 58 |
| 7T253 | 690 | | 107 | 9 |
| 89346 | 690067C91 | 4710-01-359-5056 | 149 | 17 |
| 89346 | 690075C91 | 4710-01-359-5055 | 149 | 10 |
| 89346 | 690108C1 | | 149 | 15 |
| 89346 | 69016R93 | | 189 | 82 |
| 89346 | 69017R1 | | 189 | 90 |
| 89346 | 69018R1 | | 189 | 81 |
| 89346 | 690206C1 | | 147 | 3 |
| 89346 | 69023R92 | 3110-00-100-7332 | 189 | 80 |
| 29510 | 690233C1 | 4330-01-116-7523 | 160 | 14' |
| 89346 | 690294C91 | 3110-01-249-9525 | 146 | 3 |
| 89346 | 690296C1 | | 146 | 4 |
| 89346 | 690319C2 | | 146 | 2 |
| 89346 | 690339C2 | | 156 | 3 |
| 89346 | 690354C1 | | 160 | 13 |
| 89346 | 690358C1 | 5305-01-363-2652 | 151 | |
| 89346 | 690437C93 | 5330-01-363-1705 | 152 | 13 |
| 89366 | 690460C1 | 4720-01-264-5596 | 160 | 2 |
| 89346 | 690560C1 | | 160 | 8 |
| 89346 | 690561C1 | | 160 | 7 |
| 89346 | 690580C1 | | 160 | 10 |
| 89346 | 690835C1 | 5340-01-362-4395 | 161 | 2 |
| 89346 | 69104HA | 5315-00-481-9829 | 188 | 14 |
| 89346 | 691044C1 | | 159 | 11 |
| 89346 | 691054C91 | 2910-01-315-5512 | 136 | 10 |
| 89346 | 691072C91 | 4710-01-346-9999 | 135 | 8 |
| 89346 | 691074C92 | 4710-01-346-3257 | 135 | 35 |
| 89346 | 691084C1 | | 138 | 72 |
| 89346 | 691085C1 | | 138 | 72 |
| 89346 | 691086C1 | | 138 | 72 |
| 89346 | 691087C1 | 5365-01-363-1540 | 138 | 74 |
| 89346 | 691092C1 | | 138 | 45 |
| 92679 | 691105C1 | 5306-01-177-9697 | 135 | 45 |
| 89346 | 691179C92 | | 129 | 24 |
| 89346 | 691183C1 | | 156 | 32 |
| 89346 | 691232C1 | 5365-01-363-1512 | 139 | 26 |
| 89346 | 691233C1 | | 139 | 27 |
| 89346 | 691234C1 | | 139 | 28 |
| 89346 | 691235C1 | | 139 | 30 |
| 89346 | 691236C91 | 2815-01-363-2555 | 139 | 31 |
| 89346 | 691243C1 | | 139 | 56 |
| 89346 | 691249C91 | 3110-01-363-3113 | 139 | 54 |
| 89346 | 691250C1 | | 139 | 53 |
| 89346 | 691251C1 | | 139 | 52 |
| 89346 | 691252C1 | | 139 | 70 |
| 89346 | 691255C1 | | 139 | 39 |
| 89346 | 691256C1 | | 139 | 41 |

## CROSS-REFERENCE INDEXES

### PART NUMBER INDEX

| CAGEC | PART NUMBER | STOCK NUMBER | FIG. | ITEM |
|---|---|---|---|---|
| 89346 | 691260C1 | | 139 | 11 |
| 89346 | 691261C1 | | 139 | 32 |
| 89346 | 691262C1 | 5330-01-363-1787 | 139 | 33 |
| 89346 | 691263C1 | | 139 | 10 |
| 89346 | 691265C1 | | 139 | 13 |
| 89346 | 691268C1 | | 139 | 46 |
| 89346 | 691270C1 | | 139 | 43 |
| 89346 | 691271C1 | | 137 | 30 |
| | | | 139 | 8 |
| 89346 | 691272C1 | 5330-01-352-4309 | 136 | 21 |
| 89346 | 691273C1 | 5330-01-363-1720 | 139 | 2 |
| 89346 | 691277C1 | 5330-01-363-1719 | 138 | 87 |
| 89346 | 691283C1 | | 138 | 85 |
| 89346 | 691306C1 | | 136 | 12 |
| 89346 | 691307C1 | 5360-01-352-1957 | 136 | 20 |
| 89346 | 691308C1 | | 136 | 18 |
| 89346 | 691315C1 | 5365-01-363-1553 | 139 | 34 |
| 89346 | 691316C1 | 5365-01-363-4080 | 139 | 34 |
| 89346 | 691317C1 | 5365-01-363-4081 | 139 | 34 |
| 89346 | 691318C1 | 5365-01-363-2866 | 139 | 34 |
| 89346 | 691319C1 | 5365-01-363-1757 | 139 | 34 |
| 89346 | 691320C1 | 5365-01-363-1758 | 139 | 34 |
| 89346 | 691321C1 | 5365-01-363-1554 | 139 | 34 |
| 89346 | 691322C1 | 5365-01-363-1555 | 139 | 34 |
| 89346 | 691323C1 | 5365-01-363-2867 | 139 | 34 |
| 89346 | 691324C1 | 5365-01-363-2868 | 139 | 34 |
| 89346 | 691325C1 | 5365-01-363-1556 | 139 | 34 |
| 89346 | 691326C1 | 5365-01-363-1557 | 139 | 34 |
| 89346 | 691327C1 | 5365-01-363-1558 | 139 | 34 |
| 89346 | 691328C1 | 5365-01-363-1559 | 139 | 34 |
| 89346 | 691329C1 | 5365-01-363-1560 | 139 | 34 |
| 89346 | 691330C1 | 5365-01-363-1561 | 139 | 34 |
| 89346 | 691331C1 | 5365-01-363-4861 | 139 | 34 |
| 89346 | 691332C1 | 5365-01-363-4082 | 139 | 34 |
| 89346 | 691333C1 | 5365-01-364-9090 | 139 | 34 |
| 89346 | 691342C'1 | | 145 | 15 |
| 89346 | 691349C1 | | 139 | 61 |
| 89346 | 691379C1 | | 153 | 2 |
| 89346 | 691402C1 | 5330-01-363-1715 | 138 | 19 |
| 92679 | 691631C91 | 2815-01-169-7331 | 159 | 8 |
| 89346 | 691644C1 | | 160 | 12 |
| 89346 | 691796C1 | 6680-01-290-1653 | 161 | 1 |
| 92679 | 691846C1 | 2815-01-179-6356 | 161 | 4 |
| 89346 | 691848C1 | 2590-01-333-0016 | 161 | 3 |
| 89346 | 691877C91 | 2815-01-163-2720 | 156' | 21 |
| 89346 | 69199C91 | 3120-01-273-4488 | 168 | 6 |
| 89346 | 69208R1 | | 186 | 48 |
| | | | 187 | 14 |
| 89346 | 698562R91 | | 175 | 8 |
| 1FM60 | 7INX1.75IN | | 101 | 17 |
| 7T253 | 700 | | 101 | 26 |

## CROSS-REFERENCE INDEXES

### PART NUMBER INDEX

| CAGEC | PART NUMBER | STOCK NUMBER | FIG. | ITEM |
|---|---|---|---|---|
| 7T253 | 701 | | 104 | 13 |
| 29510 | 702299C1 | 5330-00-891-0161 | 115 | 16 |
| | | | 129 | 20 |
| 89346 | 70311R1 | | 162 | 10 |
| 89346 | 70326R1 | | 162 | 11 |
| 89346 | 70352R1 | | 162 | 43 |
| 7T253 | 704 | | 114 | 4 |
| 89346 | 70427R1 | | 189 | 67 |
| 7T253 | 706 | | 104 | 2 |
| 89346 | 70736R92 | 6150-01-366-1581 | 193 | |
| 89346 | 71466HX | | 169 | |
| 89346 | 72336R1 | | 176 | 5 |
| 89346 | 72339R1 | | 176 | 6 |
| 21292 | 724222 | | 167 | 8 |
| 21292 | 732246 | 5330-00-062-3967 | 167 | 36 |
| 21292 | 732333 | 5330-01-358-5406 | 189 | 29 |
| 35510 | 73543. | 5305-00-451-1623 | 124 | 35 |
| 21292 | 736229 | | 167 | 56 |
| 21292 | 736235 | | 167 | 42 |
| | | | 167 | 84 |
| 21292 | 736747 | 5365-01-363-6075 | 167 | 19 |
| 21292 | 736833 | 5365-01-363-6076 | 167 | 37 |
| 21292 | 736948 | | 167 | 83 |
| 21292 | 736949 | | 167 | 70 |
| 21292 | 742877 | | 167 | 27 |
| 21292 | 7441322 | 5365-01-363-6095 | 167 | 33 |
| 21292 | 7442322 | | 167 | 33 |
| 21292 | 7443322 | | 167 | 33 |
| 21292 | 753232 | | 167 | 22 |
| 35510 | 75348 | 5305-01-143-6416 | 124 | 47 |
| 89346 | 757816C1 | | 188 | 9 |
| 89346 | 760583R1 | 5360-01-358-4558 | 136 | 14 |
| 19207 | 7617319 | 5310-00-561-0461 | 135 | 15 |
| 21292 | 762292 | | 167 | 61 |
| | | | 167 | 77 |
| 89346 | 76262H | 4730-01-348-1355 | 175 | |
| 89346 | 76263H | 4730-00-277-9741 | 175 | |
| 89346 | 764368C92 | 4820-01-043-8107 | 171 | |
| 21292 | 769275 | | 167 | 66 |
| 21292 | 769276 | | 167 | 79 |
| 21292 | 769277 | | 167 | 86 |
| 21252 | 769279 | | 167 | 38 |
| 21292 | 769285 | | 167 | 28 |
| 89346 | 77013R1 | | 180 | 17 |
| | | | 181 | 17 |
| | | | 182 | 17 |
| | | | 183 | 17 |
| 21292 | 777485 | 5360-01-363-1712 | 167 | 18 |
| 89346 | 777812C91 | 5340-01-365-8079 | 193 | 3 |
| 89346 | 777915C92 | 4820-01-065-1793 | 175 | 10 |
| 35510 | 78991 | 5305-01-077-9659 | 124 | 28 |

## CROSS-REFERENCE INDEXES

### PART NUMBER INDEX

| CAGEC | PART NUMBER | STOCK NUMBER | FIG. | ITEM |
|---|---|---|---|---|
| 35510 | 78997 | | 124 | 34 |
| 89346 | 79061R1 | | 170 | 7 |
| 7T253 | 793 | | 109 | 3 |
| 21292 | 793377 | | 167 | 5 |
| 7T253 | 794 | | 109 | 2 |
| 7T253 | 795 | | 101 | 12 |
| 7T253 | 796 | | 101 | 3 |
| 7T253 | 797 | | 101 | 8 |
| 7T253 | 798 | 5340-01-342-5636 | 102 | 8 |
| 02413 | 800E1486 | 2520-00-706-5892 | 162 | 23 |
| 7T253 | 810 | | 104 | 8 |
| 7T253 | 811 | | 104 | 10 |
| 7T253 | 812 | | 104 | 7 |
| 7T253 | 813 | | 104 | 6 |
| 7T253 | 814 | | 104 | 3 |
| 7T253 | 815 | | 104 | 4 |
| 7T253 | 816 | | 104 | 5 |
| 05409 | 819 | 2540-01-362-1157 | 103 | 4 |
| 7T253 | 821 | | 103 | 15 |
| 7T253 | 823 | | 103 | 12 |
| 7T253 | 828 | | 110 | 8 |
| 7T253 | 829 | | 110 | 10 |
| 7T253 | 830 | | 110 | 15 |
| 7T253 | 831 | | 110 | 19 |
| 89346 | 83155H | 5310-00-007-9912 | 177 | 1 |
| 7T253 | 833 | | 110 | 21 |
| 7T253 | 834 | | 110 | 20 |
| 89346 | 83420R91 | | 189 | 88 |
| 89346 | 83817HB | 5330-01-186-3314 | 140 | 28 |
| 7T253 | 842 | | 106 | 1 |
| 7T253 | 846 | | 106 | 15 |
| 89346 | 84711H | 5310-00-400-6438 | 176 | 1 |
| 89346 | 84712H | 5310-00-053-7804 | 176 | 1 |
| 7T253 | 849 | | 110 | 27 |
| 7T253 | 856 | | 108 | 10 |
| 7T253 | 859 | | 108 | 15 |
| 7T253 | 860 | | 108 | 4 |
| 89346 | 861432R1 | 5330-01-286-2515 | 142 | 6 |
| 7T253 | 862 | | 108 | 14 |
| 89346 | 86224H | | 135 | 33 |
| 89346 | 86233H | | 189 | 96 |
| 7T253 | 864 | | 108 | 7 |
| 89346 | 864358R2 | | 186 | 53 |
| | | | 187 | 21 |
| 89346 | 864454R1 | | 116 | 3 |
| 89346 | 864455R1 | | 119 | |
| 89346 | 864457R1 | | 140 | 11 |
| 7T253 | 866 | | 115 | 11 |
| 89346 | 866224R1 | | 113 | 56 |
| 89346 | 86879R1 | | 175 | 3 |
| 89346 | 871934R1 | 2530-00-293-4373 | 173 | 4 |

## CROSS-REFERENCE INDEXES

### PART NUMBER INDEX

| CAGEC | PART NUMBER | STOCK NUMBER | FIG. | ITEM |
|---|---|---|---|---|
| 89346 | 871934R1 | 2530-00-293-4373 | 174 | 4 |
| 21292 | 872165001 | 2520-01-361-5029 | 167 | |
| 89346 | 873706C91 | 5930-00-018-5922 | 169 | |
| 7T253 | 875 | | 194 | 16 |
| 89346 | 875520C1 | | 103 | 10 |
| 89346 | 875528C1 | | 129 | 15 |
| 80020 | 87751-69 | 5306-00-576-1327 | 188 | 43 |
| 7T253 | 879 | | 103 | 8 |
| 7T253 | 880 | | 103 | 7 |
| 89346 | 88015H | | 189 | 95 |
| 7T253 | 881 | | 103 | 6 |
| 21292 | 883473 | | 167 | 49 |
| 21292 | 883479 | | 167 | 25 |
| 21292 | 883887003 | | 167 | 12 |
| 21292 | 883887006 | | 167 | 14 |
| 7T253 | 885 | | 114 | 16 |
| 89346 | 895478R2 | 5330-01-257-5026 | 187 | |
| 89346 | 895493R2 | 5330-01-187-8634 | 186 | |
| 89346 | 896612R1 | | 187 | 8 |
| 89346 | 899209R11 | | 190 | 27 |
| 89346 | 899214R111 | | 188 | 29 |
| 7T253 | 909 | | 101 | 2 |
| 89346 | 91082R91 | | 186 | 43 |
| | | | 187 | 16 |
| 29510 | 915499R1 | 4730-00-836-4221 | 135 | 23 |
| 29510 | 915500R1 | 2910-00-846-7646 | 135 | 37 |
| 02843 | 917237MODEL215 | 3010-01-357-5708 | 110 | 25 |
| 89346 | 91913R1 | | 169 | |
| 89346 | 91916R91 | 2520-00-446-7518 | 187 | 26 |
| 75175 | 920-3301 | 6220-01-162-6892 | 111 | 30 |
| 89346 | 921454C2 | | 116 | 19 |
| 89346 | 92460R1 | 5365-01-363-1509 | 162 | 69 |
| 89346 | 925428C1 | | 171 | 2 |
| 21292 | 927224 | | 167 | 40 |
| 2L563 | 927276 | | 189 | 17 |
| 21292 | 927643 | | 167 | 21 |
| 21292 | 927749 | | 167 | 4 |
| 21292 | 927756 | | 167 | 62 |
| 21292 | 927757 | | 167 | 59 |
| 21292 | 927758 | | 167 | 75 |
| 21292 | 927775001 | | 167 | 71 |
| 21292 | 927775003 | | 167 | 58 |
| 21292 | 927775004 | 5310-01-363-0642 | 167 | 2 |
| 89346 | 931113R1 | | 138 | 20 |
| 89346 | 932618RI | | 138 | 39 |
| 92679 | 933608R1 | 5365-01-300-7007 | 139 | 12 |
| 29510 | 933697RI | 5330-01-063-7883 | 135 | 20 |
| | | | 139 | 51 |
| 89346 | 933833R1 | | 132 | 64 |
| 89346 | 933982R1 | | 137 | 28 |
| 89346 | 933983C1 | | 139 | 14 |

## CROSS-REFERENCE INDEXES

### PART NUMBER INDEX

| CAGEC | PART NUMBER | STOCK NUMBER | FIG. | ITEM |
|---|---|---|---|---|
| 89346 | 934030R1 | 5340-01-363-2653 | 138 | 2 |
| 89346 | 935522C1 | 5340-00-421-5015 | 116 | 9 |
| 89346 | 9409287 | | 119 | |
| 89346 | 9410977 | | 119 | |
| 89346 | 9411105 | | 119 | |
| 89346 | 9412230 | 5310-01-186-4979 | 118 | 36 |
| | | | 123 | 3 |
| | | | 126 | 3 |
| | | | 188 | 18 |
| | | | 189 | |
| | | | 190 | 10 |
| | | | 191 | 1 |
| 29510 | 9412231 | 5310-01-064-7589 | 190 | 6 |
| 89346 | 9412305 | | 126 | 31 |
| 89346 | 9413977 | 5310-01-241-6122 | 127 | 17 |
| | | | 172 | 2 |
| | | | 193 | 6 |
| 89346 | 9413979 | | 117 | 3 |
| | | 5310-01-067-8403 | 118 | 8 |
| | | | 119 | 17 |
| | | | 127 | |
| | | | 190 | 15 |
| | | | 191 | 6 |
| | | | 193 | |
| 89346 | 9413981. | 5310-01-188-4635 | 140 | 25 |
| 29510 | 9413983 | 5310-01-067-8980 | 177 | 5 |
| | | | 188 | |
| 89346 | 9440917 | | 126 | 6 |
| 21292 | 947223 | | 167 | 7 |
| 89346 | 95572HA | | 189 | 57 |
| 6B565 | 9611 | | 101 | 16 |
| 89346 | 966782R1 | 5310-00-844-2246 | 103 | 2 |
| 89346 | 968936R91 | 2520-00-132-3160 | 167 | 51 |
| | | | 189 | 66 |
| 89346 | 971620R91 | | 175 | 6 |
| 89346 | 983622R1 | | 180 | 3 |
| | | | 181 | 3 |
| | | | 182 | 3 |
| | | | 183 | 3 |
| 89346 | 98959R1 | 5340-01-252-5233 | 124 | |
| 89346 | 990347R91 | | 193 | 12 |
| 89346 | 990686C1 | 4720-01-362-5664 | 192 | 10 |
| 89346 | 995223R1 | 4730-01-342-8465 | 116 | 4 |
| 89346 | 995224R1 | 4730-00-846-6076 | 116 | 7 |
| | | | 127 | 9 |

## CROSS-REFERENCE INDEXES

### FIGURE AND NUMBER INDEX

| FIG. | ITEM | STOCK NUMBER | CAGEC. | PART NUMBER |
|---|---|---|---|---|
| 101 | | | 7T253 | SD-16 |
| 101 | 1 | | 7T253 | 663 |
| 101 | 2 | | 7T253 | 909 |
| 101 | 3 | | 7T253 | 796 |
| 101 | 4 | | 63108 | 602-1121A |
| 101 | 5 | | 63108 | 603-1121A |
| 101 | 6 | | 7T253 | 664 |
| 101 | 7 | | 7T253 | 593 |
| 101 | 8 | | 7T253 | 797 |
| 101 | 9 | | 7T253 | 594 |
| 101 | 10 | 2540-01-364-8900 | 55262 | MC716-S |
| 101 | 11 | | 1CU61 | 242-1580 |
| 101 | 12 | | 7T253 | 795 |
| 101 | 13 | 9905-01-355-2174 | 75175 | 330-0100-B |
| 101 | 14 | | 19220 | SS-13-4972-51UL |
| 101 | 15 | | 19220 | SS-13-4972-51UR |
| 101 | 16 | | 6B565 | 9611 |
| 101 | 17 | | 1FM60 | 7INX1.75IN |
| 101 | 18 | | 7T253 | 668 |
| 101 | 19 | | 19220 | 1-400-L25 |
| 101 | 20 | | 19220 | 1-400-R25 |
| 101 | 21 | | 19220 | 400-52 |
| 101 | 22 | | 19220 | 13-4972-SS-50L |
| 101 | 23 | | 19220 | 13-4972-SS-50R |
| 101 | 24 | | 98933 | 32214 |
| 101 | 25 | | 3J335 | 622-503 |
| 101 | 26 | | 7T253 | 700 |
| 101 | 27 | | 7T253 | 302 |
| 101 | 28 | | 7T253 | 303 |
| 102 | | | 7T253 | SD-17 |
| 102 | 1 | 5340-01-361-6974 | 89346 | RE268330 |
| 102 | 2 | 2540-01-252-4875 | 26786 | J1800AF60 |
| 102 | 3 | | 7T253 | 671 |
| 102 | 4 | | 7T253 | 670 |
| 102 | 5 | | 7T253 | 554 |
| 102 | 6 | | 89346 | 451497C1 |
| 102 | 7 | | 7T253 | 553 |
| 102 | 8 | 5340-01-342-5636 | 7T253 | 798 |
| 102 | 9 | 2540-01-343-1985 | 89346 | 490687C1 |
| 102 | 10 | | 7T253 | 465 |
| 102 | 11 | | 7T253 | 661 |
| 103 | | | 7T253 | SD-39 |
| 103 | 1 | 2540-01-154-4203 | 89346 | 475925C1 |
| 103 | 2 | 5310-00-844-2246 | 89346 | 966782R1 |
| 103 | 3 | 5310-00-595-7237 | 96906 | MS35333-42 |
| 103 | 4 | 2540-01-362-1157 | 05409 | 819 |
| 103 | 5 | 5310-01-204-3172 | 29930 | 339544C1 |
| 103 | 6 | | 7T253 | 881 |
| 103 | 7 | | 7T253 | 880 |
| 103 | 8 | | 7T253 | 879 |
| 103 | 9 | | 89346 | 437692C1 |

## CROSS-REFERENCE INDEXES

### FIGURE AND NUMBER INDEX

| FIG. | ITEM | STOCK NUMBER | CAGEC. | PART NUMBER |
|---|---|---|---|---|
| 103 | 10 | | 89346 | 875520C1 |
| 103 | 11 | | 89346 | 162304R1 |
| 103 | 12 | | 7T253 | 823 |
| 103 | 13 | | 7T253 | 1146 |
| 103 | 14 | | 89346 | 491673C1 |
| 103 | 15 | | 7T253 | 821 |
| 103 | 16 | | 7T253 | 1147 |
| 103 | 17 | | 7T253 | 1148 |
| 103 | 18 | 5305-01-362-5009 | 89346 | 167263 |
| 103 | 19 | 5310-01-361-8386 | 89346 | 25707R1 |
| 103 | 20 | 5310-00-582-5965 | 96906 | MS35338-44 |
| 103 | 21 | | 89346 | 312690C91 |
| 103 | 22 | 5330-01-065-5888 | 89346 | 404619C1 |
| 103 | 23 | 2540-00-030-5924 | 89346 | 394120C91 |
| 103 | 24 | 4730-01-066-4100 | 89346 | 404621C1 |
| 103 | 25 | 5310-01-186-4988 | 89346 | 404620C1 |
| 103 | 26 | 5325-01-337-0869 | 89346 | 404617C1 |
| 103 | 27 | 4320-00-125-4582 | 89346 | 404618C1 |
| 103 | 28 | 5305-01-346-3593 | 89346 | 25228R1 |
| 103 | 29 | 5310-00-407-9566 | 96906 | MS35338-45 |
| 103 | 30 | | 89346 | 488737C2 |
| 104 | | | 7T253 | SD-18 |
| 104 | 1 | | 7T253 | 518 |
| 104 | 2 | | 7T253 | 706 |
| 104 | 3 | | 7T253 | 814 |
| 104 | 4 | | 7T253 | 815 |
| 104 | 5 | | 7T253 | 816 |
| 104 | 6 | | 7T253 | 813 |
| 104 | 7 | | 7T253 | 812 |
| 104 | 8 | | 7T253 | 810 |
| 104 | 9 | | 1JT45 | TCO1010 |
| 104 | 10 | | 7T25F | 811 |
| 104 | 11 | | 1JT45 | PD250 |
| 104 | 12 | | 7T253 | 515 |
| 104 | 13 | | 7T253 | 701 |
| 105 | | | 89346 | 489904C92 |
| 105 | 1 | | 89346 | 489908C91 |
| 105 | 2 | | 89346 | 490661C1 |
| 105 | 3 | | 89346 | 489906C92 |
| 105 | 4 | | 89346 | 490662C1 |
| 105 | 5 | 5310-00-880-7746 | 96906 | MS51968-5 |
| 105 | 6 | 5310-00-407-9566 | 96906 | MS35338-45 |
| 105 | 7 | | 89346 | 467842C91 |
| 105 | 8 | | 89346 | 434955C91 |
| 105 | 9 | | 89346 | 584702C1 |
| 105 | 10 | | 89346 | 467880C1 |
| 105 | 11 | | 89346 | 467879C1 |
| 106 | | | 7T253 | SD-13 |
| 106 | | 4820-01-358-0633 | 40342 | N20954D |
| 106 | 1 | | 7T253 | 842 |
| 106 | 2 | 2540-00-846-6108 | 31007 | 166880R1 |

## CROSS-REFERENCE INDEXES

### FIGURE AND NUMBER INDEX

| FIG. | ITEM | STOCK NUMBER | CAGEC. | PART NUMBER |
|---|---|---|---|---|
| 106 | 3 | 5310-00-984-3807 | 96906 | MS51922-13 |
| 106 | 4 | 5306-00-226-4831 | 80204 | B1821BH031C150N |
| 106 | 5 | 5310-00-809-3078 | 96906 | MS27183-11 |
| 106 | 6 | 4730-00-278-4822 | 79470 | 3400X6 |
| 106 | 7 | | 79470 | 3200X8X6 |
| 106 | 8 | | 79470 | 1468X12 |
| 106 | 9 | 4730-00-427-5121 | 79470 | 3152X6 |
| 106 | 10 | 4730-00-202-6491 | 79470 | 3220X6X4 |
| 106 | 11 | | 79470 | 1469X1OX6 |
| 106 | 12 | | 79470 | 1462X10 |
| 106 | 13 | | 79470 | 1468X8X4 |
| 106 | 14 | | 96906 | MS35649-362 |
| 106 | 15 | | 7T253 | 846 |
| 106 | 16 | 5355-01-189-1975 | 89346 | 482528C1 |
| 106 | 17 | 2530-01-264-3266 | 89346 | 592699C1 |
| 106 | 18 | 2530-01-365-7066 | 40342 | N30072ED |
| 107 | | | 7T253 | SD-33 |
| 107 | 1 | | 79146 | 019065 |
| 107 | 2 | | 79146 | 019006 |
| 107 | 3 | | 96906 | MS51967-14 |
| 107 | 4 | 2530-01-363-5175 | 41625 | D300669-004-120 |
| 107 | 5 | | 79146 | 019061 |
| 107 | 6 | | 79146 | 019004 |
| 107 | 7 | | 96906 | MS51967-8 |
| 107 | 8 | | 7T253 | 688 |
| 107 | 9 | | 7T253 | 690 |
| 107 | 10 | | 7T253 | 687 |
| 107 | 11 | 3130-01-187-6271 | 21335 | VAK1 |
| 107 | 12 | | 7T253 | 686 |
| 107 | 13 | | 7T253 | 682 |
| 108 | | | 7T253 | SD-14 |
| 108 | 1 | 5310-00-087-4652 | 96906 | MS51922-17 |
| 108 | 2 | 5310-00-087-7493 | 96906 | MS27183-13 |
| 108 | 3 | 5305-00-846-5703 | 80204 | B1821BH038C300N |
| 108 | 4 | | 7T253 | 860 |
| 108 | 5 | 5310-00-929-1807 | 96906 | MS51922-2 |
| 108 | 6 | 5310-00-823-8804 | 96906 | MS27183-9 |
| 108 | 7 | | 7T253 | 864 |
| 108 | 8 | 5305-00-068-0509 | 80204 | B1821BH025C125N |
| 108 | 9 | 5306-01-303-2815 | 96906 | MS90725-13 |
| 108 | 10 | | 7T253 | 856 |
| 108 | 11 | | 89346 | 110668R1 |
| 108 | 12 | | 89346 | 479220C1 |
| 108 | 13 | 5305-00-225-3843 | 80204 | B1821BHO25C100N |
| 108 | 14 | | 7T253 | 862 |
| 108 | 15 | | 7T253 | 859 |
| 108 | 16 | | 41625 | A036733 |
| 108 | 17 | | 06120 | SPG1002 |
| 108 | 18 | 2530-01-363-5175 | 41625 | D300669-004-120 |
| 109 | | | 7T253 | SD-32 |
| 109 | 1 | | 41625 | A303800 |

## CROSS-REFERENCE INDEXES

### FIGURE AND NUMBER INDEX

| FIG. | ITEM | STOCK NUMBER | CAGEC. | PART NUMBER |
|---|---|---|---|---|
| 109 | 2 | | 7T253 | 794 |
| 109 | 3 | | 7T253 | 793 |
| 109 | 4 | | 41625 | A303804 |
| 109 | 5 | 2530-01-363-5176 | 41625 | D301872-002-180 |
| 110 | | | 7T253 | SD-12 |
| 110 | 1 | 2530-01-352-0038 | 89346 | 1652453C91 |
| 110 | 2 | | 89346 | 384725C1 |
| 110 | 3 | | 89346 | 469902C3 |
| 110 | 4 | 3120-01-277-4263 | 89346 | 469878C1 |
| 110 | 5 | 5365-01-259-4031 | 89346 | 373522R1 |
| 110 | 6 | 5310-01-263-8510 | 89346 | 468796C1 |
| 110 | 7 | 2590-01-182-4482 | 89346 | 470213C91 |
| 110 | 8 | | 7T253 | 828 |
| 110 | 9 | 5930-01-202-5932 | 89346 | 471302C94 |
| 110 | 10 | | 7T253 | 829 |
| 110 | 11 | | 89346 | 26070R1 |
| 110 | 12 | 5360-01-336-9688 | 89346 | 583497C1 |
| 110 | 13 | 5310-00-087-4652 | 96906 | MS51922-17 |
| 110 | 14 | 5305-00-821-3869 | 80204 | B1821BH038C175N |
| 110 | 15 | | 7T253 | 830 |
| 110 | 16 | 5305-00-638-8920 | 80204 | B1821BH038C225N |
| 110 | 17 | 3010-01-344-0800 | 1DR34 | N10242-149 |
| 110 | 18 | | 96906 | MS20068-145 |
| 110 | 19 | | 7T253 | 831 |
| 110 | 20 | | 7T253 | 834 |
| 110 | 21 | | 7T253 | 833 |
| 110 | 22 | 5305-00-068-0510 | 80204 | B1821BHO38C100N |
| 110 | 23 | 5310-00-087-7493 | 96906 | MS27183-13 |
| 110 | 24 | 5310-00-637-9541 | 96906 | MS35338-46 |
| 110 | 25 | 3010-01-357-5708 | 02843 | 917237MODEL215 |
| 110 | 26 | | 89346 | 486979C91 |
| 110 | 27 | | 7T253 | 849 |
| 110 | 28 | | 89346 | 542098C1 |
| 111 | | | 40342 | 13241A |
| 111 | | | 7T253 | SD-15 |
| 111 | | 6680-01-346-5191 | 89346 | 480147C92 |
| 111 | 1 | 6220-00-497-2178 | 89346 | 296446C1 |
| 111 | 2 | 6240-00-023-2290 | 08806 | 211-2 |
| 111 | 3 | | 89346 | 300853C1 |
| 111 | 4 | | 89346 | 26282R1 |
| 111 | 5 | | 89346 | 463179C1 |
| 111 | 6 | | 89346 | 27196R1 |
| 111 | 7 | 6220-01-222-8118 | 89346 | 451677C92 |
| 111 | 8 | 6240-00-144-4693 | 08806 | 168 |
| 111 | 9 | | 89346 | 470184C92 |
| 111 | 10 | 5355-01-197-4034 | 89346 | 469858C1 |
| 111 | 11 | 5930-01-209-4012 | 89346 | 470249C91 |
| 111 | 12 | 2540-01-182-4580 | 89346 | 471496C92 |
| 111 | 13 | 5930-00-482-7856 | 89346 | 452187C1 |
| 111 | 14 | | 89346 | 402015C1 |
| 111 | 15 | 2540-01-367-2044 | 89346 | 505026C1 |

## CROSS-REFERENCE INDEXES

### FIGURE AND NUMBER INDEX

| FIG. | ITEM | STOCK NUMBER | CAGEC. | PART NUMBER |
|---|---|---|---|---|
| 111 | 16 | 2920-01-363-2518 | 89346 | 1652306C91 |
| 111 | 17 | | 89346 | 571809C91 |
| 111 | 18 | | 1JT45 | K753 |
| 111 | 19. | 6645-01-202-4114 | 89346 | 470841C91 |
| 111 | 20 | 6350-01-208-4915 | 89346 | 268690C91 |
| 111 | 21 | 5945-00-844-6559 | 89346 | 1116920 |
| 111 | 22 | 5945-01-268-6282 | 89346 | 501707C1 |
| 111 | 23 | 5930-00-307-8856 | 96906 | MS51113-1 |
| 111 | 24 | 5930-01-293-3854 | 89346 | 463822C93 |
| 111 | 25 | 2590-01-065-2167 | 89346 | 411948C91 |
| 111 | 26 | | 89346 | 481366C1 |
| 111 | 27 | | 89346 | 487223C1 |
| 111 | 28 | | 89346 | 450499C1 |
| 111 | 29 | | 89346 | 481724C91 |
| 111 | 30 | 6220-01-162-6892 | 75175 | 920-3301 |
| 111 | 31 | | 1JT45 | LB3-ST |
| 112 | | | 89346 | 1648567C91 |
| 112 | 1 | | 89346 | 584747C1 |
| 112 | 2 | | 89346 | 1653174C1 |
| 112 | 3 | | 89346 | 573070C1 |
| 112 | 4 | 6625-01-175-8055 | 89346 | 478677C1 |
| 112 | 5 | 6685-01-108-5782 | 89346 | 478675C1 |
| 112 | 6 | 6620-01-108-9181 | 29930 | 478676C1 |
| 112 | 7 | 6680-01-300-0745 | 89346 | 583274C2 |
| 112 | 8 | 6680-01-263-2270 | 89346 | 584745C1 |
| 112 | 9 | 6680-01-108-5783 | 89346 | 478678C1 |
| 112 | 10 | 6620-01-118-2337 | 89346 | 478679C1 |
| 112 | 11 | | 89346 | 501811C1 |
| 112 | 12 | | 08865 | 194-2 |
| 112 | 13 | 6240-00-144-4693 | 08806 | 168 |
| 112 | 14 | | 89346 | 500724C1 |
| 112 | 15 | | 89346 | 586680C1 |
| 112 | 16 | 5998-01-364-5143 | 89346 | 586679C1 |
| 113 | | 4810-01-279-1366 | 89346 | 542489C91 |
| 113 | 1 | 5305-01-342-5579 | 77640 | G 9430271 |
| 113 | 2 | 5365-01-342-7810 | 89346 | 458446C1 |
| 113 | 3 | | 89346 | 582489C1 |
| 113 | 4 | 5330-01-316-1296 | 89346 | 58'2497C91 |
| 113 | 5 | 5365-01-343-1085 | 89346 | 253629 |
| 113 | 6 | | 89346 | 582501C1 |
| 113 | 7 | 5330-01-316-1295 | 89346 | 582496C91 |
| 113 | 8 | | 89346 | 582506C91 |
| 113 | 9 | 5330-01-315-8741 | 89346 | 582516C1 |
| 113 | 10 | 5305-01-342-5475 | 77640 | G 455076 |
| 113 | 11 | 5310-00-809-3079 | 96906 | MS27183-19 |
| 113 | 12 | | 89346 | 487343C1 |
| 113 | 13 | | 89346 | 487342C1 |
| 113 | 14 | | 89346 | 582502C1 |
| 113 | 15 | | 89346 | 157725C1 |
| 113 | 16 | | 89346 | 607146R91 |
| 113 | 17 | 5330-01-316-1326 | 89346 | 582494C1 |

## CROSS-REFERENCE INDEXES

### FIGURE AND NUMBER INDEX

| FIG. | ITEM | STOCK NUMBER | CAGEC. | PART NUMBER |
|---|---|---|---|---|
| 113 | 18 | | 89346 | 604844C1 |
| 113 | 19 | | 77640 | 032647 |
| 113 | 20 | | 89346 | 586686C91 |
| 113 | 21 | 5330-01-315-8708 | 89346 | 25897R1 |
| 113 | 22 | 5330-01-316-1327 | 89346 | 582491C1 |
| 113 | 23 | 5330-01-315-2129 | 89346 | 582492C1 |
| 113 | 24 | 5330-01-346-2912 | 89346 | 582509C1 |
| 113 | 25 | 5306-00-225-8492 | 96906 | MS90725-27 |
| 113 | 26 | 5310-01-135-6758 | 77640 | 028426 |
| 113 | 27 | 5340-01-136-1660 | 77640 | 402380 |
| 113 | 28 | | 89346 | 586687C91 |
| 113 | 29 | 3110-01-343-1028 | 77640 | 216191 |
| 113 | 30 | 5365-01-347-1158 | 89346 | 310086R1 |
| 113 | 31 | | 89346 | 487332C1 |
| 113 | 32 | 5340-01-365-4835 | 89346 | 487331C1 |
| 113 | 33 | | 89346 | 582504C1 |
| 113 | 34 | 5360-01-347-5910 | 89346 | 582503C1 |
| 113 | 35 | | 89346 | 582507C91 |
| 113 | 36 | 5305-01-346-3594 | 89346 | 25492R1 |
| 113 | 37 | 5310-00-809-3078 | 96906 | MS27183-11 |
| 113 | 38 | 5330-01-315-8707 | 89346 | 582493C91 |
| 113 | 39 | | 89346 | 582505C91 |
| 113 | 40 | 5310-01-346-3563 | 89346 | 582514C1 |
| 113 | 41 | 5330-01-240-5035 | 89346 | 582515C91 |
| 113 | 42 | 5330-01-364-1939 | 77640 | 032784 |
| 113 | 43 | 5365-01-347-1159 | 89346 | 582513C1 |
| 113 | 44 | 3120-01-364-5062 | 89346 | 582488C91 |
| 113 | 45 | | 89346 | 542098C1 |
| 113 | 46 | 5306-01-364-9107 | 89346 | 435860C1 |
| 113 | 47 | | 89346 | 435693C1 |
| 113 | 48 | 5310-01-278-8289 | 89346 | 25527R1 |
| 113 | 49 | | 89346 | 582517C91 |
| 113 | 50 | 5330-01-346-2916 | 89346 | 582487C1 |
| 113 | 51 | 5310-01-275-1148 | 89346 | 582500C1 |
| 113 | 52 | 5310-01-346-3564 | 89346 | 582499C1 |
| 113 | 53 | 5330-01-316-1294 | 89346 | 582495C91 |
| 113 | 54 | 5365-01-347-1160 | 89346 | 503512C2 |
| 113 | 55 | | 89346 | 346902R1 |
| 113 | 56 | | 89346 | 866224R1 |
| 113 | 57 | | 89346 | 582508C91 |
| 113 | 58 | 4730-01-342-8467 | 77640 | 213705 |
| 113 | 59 | | 89346 | 582511C1 |
| 114 | | | 7T253 | SD-31 |
| 114 | 1 | 5305-00-781-3928 | 80204 | B1821BH038C400N |
| 114 | 2 | 5310-00-087-7493 | 96906 | MS27183-13 |
| 114 | 3 | 5310-00-087-4652 | 96906 | MS51922-17 |
| 114 | 4 | | 7T253 | 704 |
| 114 | 5 | 2510-01-310-4506 | 89346 | 475802C1 |
| 114 | 6 | 5305-00-225-3843 | 80204 | B1821BHO25C100N |
| 114 | 7 | 5310-00-929-1807 | 96906 | MS51922-2 |
| 114 | 8 | 5310-01-342-5513 | 1HN49 | 25N150WFEZ |

## CROSS-REFERENCE INDEXES

### FIGURE AND NUMBER INDEX

| FIG. | ITEM | STOCK NUMBER | CAGEC. | PART NUMBER |
|---|---|---|---|---|
| 114 | 9 | 5310-00-823-8804 | 96906 | MS27183-9 |
| 114 | 10 | | 89346 | 338633C1 |
| 114 | 11 | | 64289 | 100-2425 |
| 114 | 12 | | 7T253 | 678 |
| 114 | 13 | 5305-00-984-6195 | 96906 | MS35206-247 |
| 114 | 14 | | 1H540 | 190HOLD-DOWN |
| 114 | 15 | | 1HN49 | ABL6-6A |
| 114 | 16 | | 7T253 | 885 |
| 114 | 17 | | 98933 | 32214 |
| 114 | 18 | 5360-01-342-5400 | 89346 | 489862C1 |
| 114 | 19 | 5360-01-342-5401 | 89346. | 482244C3 |
| 114 | 20 | | 89346 | 486855C4 |
| 114 | 21 | | 89346 | 472698C1 |
| 114 | 22 | | 89346 | 472697C1 |
| 114 | 23 | | 05333 | 062430 |
| 115 | | | 7T253 | SD-19 |
| 115 | 1 | 5340-01-353-6053 | 01652 | SPA1740 |
| 115 | 2 | 2990-01-364-8834 | 7T253 | 3251 |
| 115 | 3 | 5340-00-467-3734 | 01652 | U400 |
| 115 | 4 | 4730-01-364-4405 | 7T253 | 3252 |
| 115 | 5 | 5340-00-541-4076 | 01652 | U350 |
| 115 | 6 | 2990-01-162-5198 | 89346 | 482167C1 |
| 115 | 7 | 5340-01-342-5552 | 89346 | 583977C91 |
| 115 | 8 | 4730-01-364-4405 | 7T253 | 3252 |
| 115 | 9 | 4720-00-758-9140 | 89346 | 320230C1 |
| 115 | 10 | 5340-01-197-4072 | 89346 | 338614C1 |
| 115 | 11 | | 7T253 | 866 |
| 115 | 12 | 5306-01-186-4992 | 29930 | 140483H |
| 115 | 13 | 5310-01-346-3453 | 8934'6 | 21333R1 |
| 115 | 14 | 5310-01-230-2349 | 89346 | 25896R1 |
| 115 | 15 | 4730-01-343-8415 | 89346 | 683076C1 |
| 115 | 16 | 5330-00-891-0161 | 29510 | 702299C1 |
| 116 | 1 | 4730-01-342-8464 | 89346 | 681S96C1 |
| 116 | 2 | 4720-00-846-6541 | 89346 | 364361C1 |
| 116 | 3 | | 89346 | 864454R1 |
| 116 | 4 | 4730-01-342-8465 | 89346 | 995223R1 |
| 116 | 5 | 4720-01-273-1428 | 89346 | 571967C1 |
| 116 | 6 | 4730-01-342-8466 | 89346 | 27392R1 |
| 116 | 7 | 4730-00-846-6076 | 89346 | 995224R1 |
| 116 | 8 | 4720-01-151-6398 | 89346 | 486129C92 |
| 116 | 9 | 5340-00-421-5015 | 89346 | 935522C1 |
| 116 | 10 | 5340-01-189-8297 | 89346 | 306132C1 |
| 116 | 11 | 4730-00-482-8111 | 89346 | 553791C1 |
| 116 | 12 | 4720-01-065-0809 | 89346 | 364357C1 |
| 116 | 13 | 4720-01-273-5742 | 89346 | 382997C1 |
| 116 | 14 | | 89346 | 482731C1 |
| 116 | 15 | | 89346 | 61181H |
| 116 | 16 | | 89346 | 465108C1 |
| 116 | 17 | 5306-01-186-6978 | 92679 | 277232R1 |
| 116 | 18 | 5310-01-065-2596 | 89346 | 25709R1 |
| 116 | 19 | | 89346 | 921454C2 |

## CROSS-REFERENCE INDEXES

### FIGURE AND NUMBER INDEX

| FIG. | ITEM | STOCK NUMBER | CAGEC. | PART NUMBER |
|---|---|---|---|---|
| 116 | 20 | 5330-01-178-3720 | 92679 | 673396C1 |
| 117 | 1 | | 89346 | 289862C1 |
| 117 | 2 | 4720-01-131-1477 | 89346 | 427698C1 |
| 117 | 3 | | 89346 | 9413979 |
| 117 | 4 | | 89346 | 24839R1 |
| 117 | 5 | 5306-01-063-4985 | 89346 | 25501R1 |
| 117 | 6 | 5365-01-363-1515 | 89346 | 371623C2 |
| 117 | 7 | 2590-01-273-1308 | 89346 | 530874R1 |
| 117 | 8 | | 89346 | 586531C2 |
| 117 | 9 | | 89346 | 403859C92 |
| 117 | 10 | | 89346 | 483128C2 |
| 117 | 11 | | 89346 | 483127C2 |
| 118 | 1 | 5305-00-236-6531 | 35311 | VM1471 |
| 118 | 2 | 5310-01-283-7623 | 89346 | 25708R1 |
| 118 | 3 | 5310-00-407-9566 | 96906 | MS35338-45 |
| 118 | 4 | | 89346 | 485200C3 |
| 118 | 5 | 5305-01-346-3593 | 89346 | 25228R1 |
| 118 | 6 | | 89346 | 493362C3 |
| 118 | 7 | 4810-01-298-8573 | 89346 | 125407H1 |
| 118 | 8 | 5310-01-067-8403 | 89346 | 9413979 |
| 118 | 9 | 5310-00-823-8803 | 96906 | MS27183-21 |
| 118 | 10 | | 89346 | 459591C1 |
| 118 | 11 | 5306-01-346-3450 | 89346 | 27955R1 |
| 118 | 12 | | 89346 | 474923C1 |
| 118 | 13 | 5310-01-346-9430 | 89346 | 25847R1 |
| 118 | 14 | | 89346 | 482708C1 |
| 118 | 15 | 5306-01-250-0546 | 89346 | 414053C1 |
| 118 | 16 | 5310-00-594-9379 | 89346 | 414087C1 |
| 118 | 17 | | 89346 | 483918C2 |
| 118 | 18 | | 89346 | 483916C2 |
| 118 | 19 | 5306-01-186-4992 | 29930 | 140483H |
| 118 | 20 | 5310-00-637-9541 | 96906 | MS35338-46 |
| 118 | 21 | | 89346 | 483792C2 |
| 118 | 22 | | 89346 | 483791C2 |
| 118 | 23 | 5306-01-274-5626 | 89346 | 264230C1 |
| 118 | 24 | 5310-01-346-9363 | 89346 | 118624 |
| 118 | 25 | 5340-01-362-5031 | 89346 | 264231C1 |
| 118 | 26 | 5310-01-346-9364 | 89346 | 25524R1 |
| 118 | 27 | 5310-00-209-0965 | 96906 | MS35338-47 |
| 118 | 28 | 5310-01-346-9431 | 89346 | 23043R1 |
| 118 | 29 | | 89346 | 299341C1 |
| 118 | 30 | | 89346 | 299340C1 |
| 118 | 31 | 5305-01-346-3595 | 89346 | 25493R1 |
| 118 | 32 | 5310-01-186-5163 | 92679 | 25520R1 |
| 118 | 33 | | 89346 | 483513C2 |
| 118 | 34 | | 89346 | 49i499C4 |
| 118 | 35 | | 89346 | 491497C4 |
| 118 | 36 | 5310-01-186-4979 | 89346 | 9412230 |
| 118 | 37 | 5310-01-346-3565 | 89346 | 22191R1 |
| 118 | 38 | | 89346 | 471477C1 |
| 118 | 39 | | 89346 | 471475C1 |

## CROSS-REFERENCE INDEXES

### FIGURE AND NUMBER INDEX

| FIG. | ITEM | STOCK NUMBER | CAGEC. | PART NUMBER |
|---|---|---|---|---|
| 118 | 40 | 5306-01-362-4310 | 89346 | 27463R1 |
| 118 | 41 | | 89346 | 483533C6 |
| 118 | 42 | | 89346 | 487704R1 |
| 118 | 43 | | 89346 | 468348C1 |
| 118 | 44 | | 89346 | 471478C1 |
| 118 | 45 | | 89346 | 468349C4 |
| 119 | | | 89346 | 864455R1 |
| 119 | | | 89346 | 9409287 |
| 119 | | | 89346 | 9410977 |
| 119 | | | 89346 | 9411105 |
| 119 | | 4720-01-283-0128 | 89346 | 532389C2 |
| 119 | | 4720-01-325-2951 | 89346 | 384139C1 |
| 119 | | 4730-00-005-4994 | 31007 | 274085R91 |
| 119 | 1 | | 89346 | 25522R1 |
| 119 | 2 | 5305-01-067-9568 | 89346 | 24842R1 |
| 119 | 3 | | 96906 | MS35338-46 |
| 119 | 4 | 5310-01-065-2596 | 89346 | 25709R1 |
| 119 | 5 | | 89346 | 689362C1 |
| 119 | 6 | | 89346 | 689366C1 |
| 119 | 7 | 3030-01-160-5801 | 89346 | 480082C91 |
| 119 | 8 | 5365-01-347-1161 | 89346 | 303986C1 |
| 119 | 9 | 5310-00-594-9379 | 89346 | 414087C1 |
| 119 | 1'0 | | 89346 | 508789C1 |
| 119 | 11 | | 89346 | 124543 |
| 119 | 12 | 5305-01-346-3596 | 89346 | 24850R1 |
| 119 | 13 | 5310-00-209-0965 | 96906 | MS35338-47 |
| 119 | 14 | 5306-01-068-1071 | 89346 | 24840R1 |
| 119 | 15 | | 89346 | 508792C1 |
| 119 | 16 | 5306-01-063-4985 | 89346 | 25501R1 |
| 119 | 17 | 5310-01-067-8403 | 89346 | 9413979 |
| 119 | 18 | | 89346 | 1801433C1 |
| 119 | 19 | | 89346 | 1801427C1 |
| 120 | 1 | 4720-01-283-0128 | 89346 | 532389C2 |
| 120 | 1 | 4720-01-325-9023 | 89346 | 1614814C92 |
| 120 | 1 | 4720-01-366-6104 | 89346 | 1513791C1 |
| 120 | 2 | | 89346 | 25522R1 |
| 120 | 3 | 5310-01-230-2349 | 89346 | 25896R1 |
| 120 | 4 | 5306-01-063-4985 | 89346 | 25501R1 |
| 120 | 5 | 5330-01-346-2917 | 89346 | 591597C2 |
| 121 | | 2530-01-262-1186 | 89346 | 491000C92 |
| 121 | 1 | 2930-01-246-5152 | 89346 | 585744C1 |
| 121 | 2 | | 89346 | 10-24X5/8 |
| 121 | 3 | 5330-01-346-2918 | 89346 | 591238C1 |
| 121 | 4 | 5305-01-067-9568 | 89346 | 24842R1 |
| 121 | 5 | 5310-01-065-2596 | 89346 | 25709R1. |
| 121 | 6 | 5306-01-186-4992 | 29930 | 140483H |
| 121 | 7 | | 89346 | 585765Cl |
| 121 | 8 | 5310-01-353-2653 | 89346 | 590745C1 |
| 121 | 9 | 5330-01-252-5258 | 89346 | 584960C91 |
| 121 | 10 | 4810-01-297-1425 | 89346 | 585768C91 |
| 121 | 11 | 5330-01-295-2997 | 89346 | 585767C91 |

## CROSS-REFERENCE INDEXES

### FIGURE AND NUMBER INDEX

| FIG. | ITEM | STOCK NUMBER | CAGEC. | PART NUMBER |
|---|---|---|---|---|
| 121 | 12 | 2940-01-278-7996 | 89346 | 585766C91 |
| 122 | | 2530-01-350-6095 | 89346 | 1655606C91 |
| 122 | 1 | 2530-01-349-3790 | 89346 | 1655609C91 |
| 122 | 2 | | 89346 | 16613745C91 |
| 122 | 3 | 3110-00-108-9247 | 89346 | 133214R91 |
| 122 | 4 | | 89346 | 124543 |
| 122 | 5 | | 89346 | 1655602C91 |
| 122 | 6 | | 89346 | 212747R1 |
| 122 | 7 | 5330-01-336-6798 | 89346 | 596241C91 |
| 122 | 8 | | 89346 | 212746R1 |
| 122 | 9 | 4810-01-365-6929 | 89346 | 1655603C1 |
| 122 | 10 | | 89346 | 1655608C91 |
| 122 | 11 | | 89346 | 21318R1 |
| 122 | 12 | | 89346 | 1655605C1 |
| 122 | 13 | | 89346 | 434345C1 |
| 122 | 14 | 2530-01-350-9071 | 89346 | 1649641C91 |
| 123 | 1 | 3030-00-041-2922 | 89346 | 686617C91 |
| 123 | 2 | | 89346 | 26704R1 |
| 123 | 3 | 5310-01-186-4979 | 89346 | 9412230 |
| 123 | 4 | 5310-01-189-8385 | 89346 | 25710R1 |
| 123 | 5 | 5305-01-346-2934 | 89346 | 24881R1 |
| 123 | 6 | 5306-01-186-4992 | 29930 | 140483H |
| 123 | 7 | 5310-00-637-9541 | 96906 | MS35338-46 |
| 123 | 8 | | 89346 | 471530C1 |
| 123 | 9 | 5305-01-346-2935 | 89346 | 25236R1 |
| 123 | 10 | 5310-00-407-9566 | 96906 | MS35338-45 |
| 123 | 11 | 5305-00-406-2281 | 29510 | 275804R1 |
| 123 | 12 | | 89346 | 689427C1 |
| 123 | 13 | | 89346 | 689342C1 |
| 124 | | 2920-01-285-8394 | 89346 | 585946C91 |
| 124 | | 5340-01-252-5233 | 89346 | 98959R1 |
| 124 | 1 | | 89346 | 461064C1 |
| 124 | 2 | 5310-00-045-3296 | 96906 | MS35338-43 |
| 124 | 3 | 5310-00-934-9751 | 96906 | MS35650-302 |
| 124 | 4 | | 96906 | MS35649-3252 |
| 124 | 5 | 5310-00-032-1814 | 35510 | 3231 |
| 124 | 6 | 5977-01-024-1218 | 35510 | 461044-Cl |
| 194 | 7 | 5330-01-346-0312 | 89346 | 461052C1 |
| 124 | 8 | 5961-01-050-7906 | 89346 | 461054C1 |
| 124 | 9 | 5305-00-984-6191 | 96906 | MS35206-243 |
| 124 | 10 | | 89346 | 461051C1 |
| 124 | 11 | 2920-01-235-8490 | 89346 | 585949C1 |
| 124 | 12 | 5310-00-983-8483 | 96906 | MS27183-5 |
| 124 | 13 | | 96906 | MS35338-30 |
| 124 | 14 | | 96906 | MS35649-362 |
| 124 | 15 | | 35510 | 100111 |
| 124 | 16 | 5977-01-024-1213 | 89346 | 461045C1 |
| 124 | 17 | | 89346 | 460684C91 |
| 124 | 18 | | 89346 | 461059C1 |
| 124 | 19 | | 89346 | 463118C91 |
| 124 | 20 | | 89346 | 461058C1 |

## CROSS-REFERENCE INDEXES

### FIGURE AND NUMBER INDEX

| FIG. | ITEM | STOCK NUMBER | CAGEC. | PART NUMBER |
|---|---|---|---|---|
| 124 | 21 | | 89346 | 460685C91 |
| 124 | 22 | 5305-00-450-0463 | 35510 | 58754 |
| 124 | 23 | | 89346 | 461042C1 |
| 124 | 24 | 5365-01-348-8380 | 89346 | 461049C1 |
| 124 | 25 | 2930-01-349-4495 | 89346 | 461050C2 |
| 124 | 26 | 5315-00-616-5523 | 35510 | 6399 |
| 124 | 27 | 5310-00-763-8905 | 96906 | MS51968-20 |
| 124 | 28 | 5305-01-077-9659 | 35510 | 78991 |
| 124 | 29 | | 89346 | 120391 |
| 124 | 30 | | 89346 | 461449C1 |
| 124 | 31 | 5305-00-993-1848 | 96906 | MS35207-265 |
| 124 | 32 | | 35510 | 5291 |
| 124 | 33 | 5310-00-428-6461 | 35510 | 13657 |
| 124 | 34 | | 35510 | 78997 |
| 124 | 35 | 5305-00-451-1623 | 35510 | 73543 |
| 124 | 36 | 2920-01-025-9899 | 89346 | 461057C91 |
| 124 | 37 | 5975-01-349-6697 | 89346 | 461061C1 |
| 124 | 38 | 5975-01-349-6698 | 89346 | 461065C1 |
| 124 | 39 | 2920-01-025-6801 | 89346 | 461056C91 |
| 124 | 40 | 5910-00-112-8051 | 92679 | 461048C1 |
| 124 | 41 | 5975-01-349-6699 | 89346 | 461063C1 |
| 124 | 42 | 5975-01-349-6700 | 89346 | 461062C1 |
| 124 | 43 | 5975-01-349-6701 | 89346 | 461066C1 |
| 124 | 44 | | 89346 | 461043C1 |
| 124 | 45 | 3120-01-348-6965 | 89346 | 461060C1 |
| 124 | 46 | 5310-00-429-3127 | 35510 | 26175 |
| 124 | 47 | 5305-01-143-6416 | 35510 | 75348 |
| 125 | | | 89346 | 1655816C1 |
| 125 | | | 89346 | 393435C2 |
| 125 | | 6350-01-208-4915 | 89346 | 268690C91 |
| 125 | | 6620-01-313-8164 | 89346 | 556915C91 |
| 125 | 1 | 6150-01-363-4517 | 89346 | 571792C92 |
| 125 | 2 | | 89346 | 299608C1 |
| 125 | 3 | 6620-01-111-9063 | 89346 | 584051C2 |
| 125 | 4 | 6685-01-108-5781 | 89346 | 479758C1 |
| 125 | 5 | 5930-01-260-6472 | 89346 | 509048C1 |
| 126 | | | 89346 | 1989495 |
| 126 | | | 89346 | 1989497 |
| 126 | | 2920-01-181-7113 | 89346 | 1990466 |
| 126 | | 2920-01-285-7288 | 16764 | 1989498 |
| 126 | 1 | 5306-01-242-1091 | 29510 | 27578R1 |
| 126 | 2 | 5310-01-278-8436 | 89346 | 25711R1 |
| 126 | 3 | 5310-01-186-4979 | 89346 | 9412230 |
| 126 | 4 | | 89346 | 1985332 |
| 126 | 5 | 2920-01-330-9409 | 89346 | 1115598 |
| 126 | 6 | | 89346 | 9440917 |
| 126 | 7 | | 89346 | 1905125 |
| 126 | 8 | | 89346 | 10498663 |
| 126 | 9 | 5970-01-267-0175 | 16764 | 1988340 |
| 126 | 10 | | 89346 | 432230 |
| 126 | 11 | | 89346 | 453435 |

## CROSS-REFERENCE INDEXES

### FIGURE AND NUMBER INDEX

| FIG. | ITEM | STOCK NUMBER | CAGEC. | PART NUMBER |
|---|---|---|---|---|
| 126 | 12 | | 89346 | 1979600 |
| 126 | 13 | | 89346 | 25933R1 |
| 126 | 14 | | 96906 | MS35338-48 |
| 126 | 15 | | 89346 | 30205 |
| 126 | 16 | 5970-01-266-6689 | 16764 | 10495183 |
| 126 | 17 | | 89346 | 1988135 |
| 126 | 18 | | 89346 | 1988126 |
| 126 | 19 | | 89346 | 1985246 |
| 126 | 20 | | 89346 | 1988138 |
| 126 | 21 | | 89346 | 1985320 |
| 126 | 22 | | 89346 | 1988128 |
| 126 | 23 | | 89346 | 1955994 |
| 126 | 24 | | 89346 | 1985617 |
| 126 | 25 | | 89346 | 1968998 |
| 126 | 26 | | 89346 | 1852892 |
| 126 | 27 | | 89346 | 1985314 |
| 126 | 28 | | 89346 | 1988121 |
| 126 | 29 | | 89346 | 1945356 |
| 126 | 30 | | 89346 | 1964857 |
| 126 | 31 | | 89346 | 9412305 |
| 126 | 32 | | 89346 | 213262R1 |
| 126 | 33 | | 89346 | 1948526 |
| 126 | 34 | | 89346 | 1948521 |
| 126 | 35 | | 89346 | 1948520 |
| 126 | 36 | | 89346 | 1985243 |
| 126 | 37 | | 89346 | 1948519 |
| 126 | 38 | | 89346 | 1988140 |
| 126 | 39 | | 89346 | 1985304 |
| 126 | 40 | | 89346 | 1948537 |
| 126 | 41 | | 89346 | 1988137 |
| 126 | 42 | | 89346 | 1978756 |
| 126 | 43 | | 89346 | 1972977 |
| 126 | 44 | | 89346 | 1894635 |
| 126 | 45 | | 89346 | 1977005 |
| 126 | 46 | | 89346 | 1851960 |
| 126 | 47 | | 89346 | 1911644 |
| 126 | 48 | | 89346 | 1988096 |
| 126 | 49 | 5305-00-225-3843 | 80204 | B1821BHO25C100N |
| 126 | 50 | | 89346 | 1916272 |
| 126 | 51 | | 89346 | 456652 |
| 126 | 52 | 5970-01-273-2514 | 89346 | 1988100 |
| 126 | 53 | 5970-01-267-0174 | 16764 | 1988339 |
| 126 | 54 | | 89346 | 1918047 |
| 126 | 55 | | 89346 | 1936466 |
| 126 | 56 | | 89346 | 1968396 |
| 126 | 57 | | 89346 | 1934478 |
| 126 | 58 | | 89346 | 1988111 |
| 126 | 59 | | 89346 | 1987989 |
| 126 | 60 | | 89346 | 1894643 |
| 126 | 61 | | 89346 | 1894642 |
| 126 | 62 | | 89346 | 1948529 |

## CROSS-REFERENCE INDEXES

### FIGURE AND NUMBER INDEX

| FIG. | ITEM | STOCK NUMBER | CAGEC. | PART NUMBER |
|---|---|---|---|---|
| 126 | 63 | | 89346 | 1988097 |
| 126 | 64 | | 89346 | 1985247 |
| 126 | 65 | | 89346 | 1988093 |
| 127 | | | 89346 | 277232R1 |
| 127 | | 5310-01-065-2596 | 89346 | 25709R1 |
| 127 | | 5310-01-067-8403 | 89346 | 9413979 |
| 127 | 1 | 4730-01-143-9460 | 08484 | 21080 |
| 127 | 2 | 4720-00-450-9092 | 18265 | P10-5534 |
| 127 | 3 | | 89346 | 482757C1 |
| 127 | 4 | 4720-01-006-8462 | 18265 | P10-5610 |
| 127 | 5 | 4730-01-357-6521 | 89346 | 397270R1 |
| 127 | 6 | 4710-01-358-0644 | 89346 | 515718C1 |
| 127 | 7 | | 89346 | 482758C1 |
| 127 | 8 | 4730-01-297-9324 | 89346 | 548222R1 |
| 127 | 9 | 4730-00-846-6076 | 89346 | 995224R1 |
| 127 | 10 | | 89346 | 595968C1 |
| 127 | 11 | 2940-01-275-5333 | 89346 | 492920C91 |
| 127 | 12 | 2940-01-154-8399 | 89346 | 476741C1 |
| 127 | 13 | 4730-01-153-9206 | 89346 | 482644C1 |
| 127 | 14 | | 89346 | 482736C1 |
| 127 | 15 | | 89346 | 482737C1 |
| 127 | 16 | 5305-.01-346-3593 | 89346 | 25228R1 |
| 127 | 17 | 5310-01-241-6122 | 89346 | 9413977 |
| 127 | 18 | | 89346 | 593394C1 |
| 127 | 19 | 6685-01-359-7871 | 89346 | 484534C91' |
| 128 | 1 | 5310-00-151-9018 | 89346 | 126177 |
| 128 | 2 | | 89346 | 453699C1 |
| 128 | 3 | 2910-00-646-9727 | 53203 | 20000 |
| 128 | 4 | | 89346 | 26110R1 |
| 128 | 5 | 5310-01-361-8386 | 89346 | 25707R1 |
| 128 | 6 | | 89346 | 453698C1 |
| 128 | 7 | | 89346 | 25222R1 |
| 128 | 8 | 4820-01-173-8616 | 89346 | 463683C91 |
| 128 | 9 | | 89346 | 140304 |
| 128 | 10 | | 89346 | 121220 |
| 128 | 11 | | 89346 | 121322 |
| 128 | 12 | 5340-01-268-9894 | 89346 | 299398C1 |
| 128 | 13 | 4720-01-065-0676 | 89346 | 417195C2 |
| 128 | 14 | 2910-00-533-3945 | 29510 | 269635R91 |
| 128 | 15 | | 89346 | 298608C11 |
| 129 | 1 | 5305-01-346-3595 | 89346 | 25493R1 |
| 129 | 2 | 5310-01-244-8937 | 89346 | 27326R1 |
| 129 | 3 | 4710-01-342-8841 | 89346 | 677755C91 |
| 129 | 4 | 5330-00-757-5328 | 29510 | 253660R1 |
| 129 | 5 | 5310-01-064-8669 | 29510 | 265205R1 |
| 129 | 6 | 5365-00-846-7660 | 89346 | 265204R1 |
| 129 | 7 | 5305-00-269-3211 | 96906 | MS90725-60 |
| 129 | 8 | 5310-01-230-2349 | 89346 | 25896R1 |
| 129 | 9 | 4720-01-342-8676 | 89346 | 1801244C1 |
| 129 | 10 | 5330-01-127-1382 | 29510 | 670079C1 |
| 129 | 11 | 4730-00-908-3194 | 92679 | 122316R91 |

## CROSS-REFERENCE INDEXES

### FIGURE AND NUMBER INDEX

| FIG. | ITEM | STOCK NUMBER | CAGEC. | PART NUMBER |
|---|---|---|---|---|
| 129 | 12 | | 89346 | 675859C2 |
| 129 | 13 | | 89346 | 673622C1 |
| 129 | 14 | | 89346 | 1800667Cl |
| 129 | 15 | | 89346 | 875528C1 |
| 129 | 16 | 5310-01-342-7823 | 89346 | 619174C1 |
| 129 | 17 | 5306-01-186-4992 | 29930 | 140483H |
| 129 | 18 | 5310-01-078-7804 | 31007 | 25522R1 |
| 129 | 19 | | 89346 | 683520C1 |
| 129 | 20 | 5330-00-891-0161 | 29510 | 702299C1 |
| 129 | 21 | | 89346 | 675317C1 |
| 129 | 22 | 4730-00-204-3491 | 89346 | 687456C1 |
| 129 | 23 | 4720-01-194-5335 | 92679 | 675723C2 |
| 129 | 24 | | 89346 | 691179C92 |
| 129 | 25 | | 92679 | 25654R1 |
| 129 | 26 | 5305-01-282-0829 | 89346 | 25678R1 |
| 129 | 27 | 5310-01-244-8937 | 89346 | 27326R1 |
| 129 | 28 | | 89346 | 688329C1 |
| 129 | 29 | 5330-01-343-1066 | 89346 | 686181C1 |
| 129 | 30 | 5330-01-012-2329 | 29510 | 670073C1 |
| 130 | | 2990-01-297-9301 | 89346 | 1810304C91 |
| 130 | 1 | 5306-01-167-8331 | 70210 | 400450-1 |
| 130 | 2 | 2990-00-233-8057 | 29510 | 684245C1 |
| 130 | 2 | 4730-01-365-8956 | 89346 | 1809692C1 |
| 130 | 3 | | 89346 | 615739C1 |
| 130 | 4 | 5306-01-342-5335 | 89346 | 1809618C1 |
| 130 | 5 | 4730-01-365-8957 | 89346 | 1809690C1 |
| 130 | 5 | 5340-01-275-3220 | 29510 | 630610C1 |
| 130 | 6 | | 89346 | 630611C1 |
| 130 | 6 | | 89346 | 630675C1 |
| 130 | 7 | | 89346 | 1809695C1 |
| 130 | 8 | | 89346 | 1809696C91 |
| 130 | 9 | | 89346 | 615741C2 |
| 130 | 10 | | 89346 | 1809694C1 |
| 130 | 10 | | 89346 | 684364C1 |
| 130 | 11 | | 89346 | 1809617C1 |
| 130 | 12 | | 89346 | 1809693C91 |
| 130 | 12 | | 89346 | 630614C91 |
| 130 | 13 | 2990-00-190-9838 | 29510 | 343847R1 |
| 130 | 14 | 5330-00-930-3254 | 89346 | 615746C1 |
| 130 | 15 | 5360-01-342-5402 | 89346 | 615747C1 |
| 130 | 16 | | 89346 | 615745C2 |
| 130 | 17 | 3120-00-236-6552 | 29510 | 627773C1 |
| 130 | 18 | 5365-01-343-1086 | 89346 | 627774C1 |
| 130 | 19 | 3120-01-343-1096 | 89346 | 687965C1 |
| 130 | 20 | | 89346 | 684360C92 |
| 130 | 21 | 5365-01-343-1087 | 89346 | 684359C2 |
| 130 | 22 | | 89346 | 627771C1 |
| 130 | 23 | | 89346 | 1806082C1 |
| 130 | 23 | | 89346 | 1809691C1 |
| 131 | 1 | 5305-01-346-3595 | 89346 | 25493R1 |
| 131 | 2 | 5305-01-346-2937 | 89346 | 25235R1 |

## CROSS-REFERENCE INDEXES

### FIGURE AND NUMBER INDEX

| FIG. | ITEM | STOCK NUMBER | CAGEC. | PART NUMBER |
|---|---|---|---|---|
| 131 | 3 | | 89346 | 26057R1 |
| 131 | 4 | | 89346 | 26586R1 |
| 131 | 5 | | 89346 | 26703R1 |
| 131 | 6 | | 89346 | 25520R1 |
| 131 | 7 | 5310-01-244-8937 | 89346 | 27326R1 |
| 131 | 8 | | 89346 | 1809829C91 |
| 131 | 9 | 5330-01-177-8215 | 92679 | 675816C1 |
| 131 | 10 | | 89346 | 680481C1 |
| 131 | 11 | | 89346 | 444625 |
| 131 | 12 | | 89346 | 318300R1 |
| 132 | 1 | 5305-01-346-3595 | 89346 | 25493R1 |
| 132 | 2 | | 89346 | 26057R1 |
| 132 | 3 | | 89346 | 26586R1 |
| 132 | 4 | | 89346 | 25520R1 |
| 132 | 5 | 5310-01-244-8937 | 89346 | 27326R1 |
| 132 | 6 | | 89346 | 1810351C1 |
| 132 | 7 | | 89346 | 675816C1 |
| 132 | 8 | | 89346 | 444624 |
| 133 | 1 | 5360-01-342-5418 | 89346 | 1806792C1 |
| 133 | 2 | 5360-01-342-5419 | 89346 | 1806793C1 |
| 133 | 3 | 5365-01-343-1088 | 89346 | 1806388C1 |
| 133 | 4 | 5360-01-342-5420 | 89346 | 1806281C1 |
| 133 | 5 | 5340-01-342-5608 | 89346 | 1806279C1 |
| 133 | '6 | 5310-01-355-0174 | 89346 | 26030R1 |
| 133 | 7 | 5310-00-582-5965 | 96906 | MS35338-44 |
| 133 | 8 | 5305-00-269-3225 | 89346 | 25784R1 |
| 133 | 9 | 5305-01-195-5820 | 29510 | 25684R1 |
| 133 | 10 | 5310-01-230-2349 | 89346 | 25896R1 |
| 133 | 11 | | 89346 | 1806610C1 |
| 133 | 12 | 5305-01-346-3593 | 89346 | 25228R1 |
| 133 | 13 | 5310-00-407-9566 | 96906 | MS35338-45 |
| 133 | 14 | 5310-01-244-8937 | 89346 | 27326R1 |
| 133 | 15 | | 89346 | 1806282C2 |
| 134 | 1 | 5305-01-346-2936 | 89346 | 25483R1 |
| 134 | 2 | 5310-01-274-5632 | 89346 | 27616R1 |
| 134 | 3 | 5310-00-582-5965 | 96906 | MS35338-44 |
| 134 | 4 | 5310-01-242-0406 | 92679 | 25519R1 |
| 134 | 5 | | 89346 | 1801452C1 |
| 134 | 6 | | 89346 | 1803254C1 |
| 134 | 7 | | 89346 | 1801344C2 |
| 134 | 8 | 4810-01-302-2513 | 89346 | 1802650C91 |
| 135 | | 2910-01-365-2586 | 89346 | 1802826C91 |
| 135 | 1 | 2910-00-470-7075 | 12658 | BF979 |
| 135 | 2 | 4330-00-578-0166 | 89346 | 672603C2 |
| 135 | 3 | 4730-01-349-4735 | 89346 | 1802756C1 |
| 135 | 4 | 4720-01-347-2785 | 89346 | 688188C1 |
| 135 | 5 | 4710-01-346-6605 | 89346 | 1806602C91 |
| 135 | 6 | 5365-00-846-7660 | 89346 | 265204R1 |
| 135 | 7 | 5310-01-064-8669 | 29510 | 265205R1 |
| 135 | 8 | 4710-01-346-9999 | 89346 | 691072C91 |
| 135 | 9 | | 89346 | 118755 |

## CROSS-REFERENCE INDEXES

### FIGURE AND NUMBER INDEX

| FIG. | ITEM | STOCK NUMBER | CAGEC. | PART NUMBER |
|---|---|---|---|---|
| 135 | 10 | | 89346 | 606845C1 |
| 135 | 11 | | 89346 | 444040 |
| 135 | 12 | | 89346 | 606889C1 |
| 135 | 13 | 4820-00-424-7431 | 29510 | 39677DA |
| 135 | 14 | 5306-01-346-2890 | 89346 | 24846R1 |
| 135 | 15 | 5310-00-561-0461 | 19207 | 7617319 |
| 135 | 16 | 5310-01-230-2349 | 89346 | 25896R1 |
| 135 | 17 | | 89346 | 444000 |
| 135 | 18 | | 89346 | 1809590C91 |
| 135 | 19 | 5305-01-363-2649 | 89346 | 1810819C1 |
| 135 | 20 | 5330-01-063-7883 | 29510 | 933697R1 |
| 135 | 21 | 4710-01-346-6606 | 89346 | 1809642C9 |
| 135 | 22 | | 89346 | 685158C1 |
| 135 | 23 | 4730-00-836-4221 | 29510 | 915499R1 |
| 135 | 24 | | 89346 | 444613 |
| 135 | 25 | | 89346 | 686839C1 |
| 135 | 26 | 5305-01-349-5133 | 89346 | 24839R1 |
| 135 | 27 | 5340-01-257-4836 | 89346 | 680116C1 |
| 135 | 28 | | 89346 | 25521R1 |
| 135 | 29 | 5310-00-407-9566 | 96906 | MS35338-45 |
| 125 | 30 | 5310-01-244-8937 | 89346 | 27326R1 |
| 135 | 31 | | 89346 | 689324C1 |
| 135 | 32 | 4730-01-310-0005 | 89346 | 299566C1 |
| 135 | 33 | | 89346 | 86224H |
| 135 | 34 | 5306-01-346-2891 | 89346 | 27439R1 |
| 135 | 35 | 4710-01-346-3257 | 89346 | 691074C92 |
| 135 | 36 | 4710-01-346-4767 | 89346 | 1802755C9 |
| 135 | 37 | 2910-00-846-7646 | 29510 | 915500R1 |
| 135 | 38 | 4720-01-346-4686 | 89346 | 1806503C1 |
| 135 | 39 | | 89346 | 606885C1 |
| 135 | 40 | | 89346 | 606296C1 |
| 135 | 41 | 4730-01-187-6931 | 92679 | 1802453C1 |
| 135 | 42 | | 89346 | 673196C1 |
| 135 | 43 | 4720-01-181-1902 | 89346 | 680246C1 |
| 135 | 44 | | 89346 | 1802452C1 |
| 135 | 45 | 5306-01-177-9697 | 92679 | 691105C1 |
| 135 | 46 | 5340-01-189-5454 | 92679 | 675479C2 |
| 135 | 47 | | 89346 | 1802796C91 |
| 135 | 48 | | 89346 | 1802959C91 |
| 135 | 49 | | 89346 | 1802800C91 |
| 135 | 50 | | 89346 | 1802947C91 |
| 135 | 51 | | 89346 | 1802951C91 |
| 135 | 52 | | 89346 | 1802952C91 |
| 135 | 53 | | 89346 | 1802953C91 |
| 135 | 54 | | 89346 | 1802954C91 |
| 135 | 55 | | 89346 | 1802955C91 |
| 135 | 56 | | 89346 | 1802956C91 |
| 135 | 57 | | 89346 | 444944 |
| 135 | 58 | 5330-01-346-0313 | 89346 | 689568C1 |
| 135 | 59 | 5330-01-024-1788 | 29510 | 675609C1 |
| 135 | 60 | | 89346 | 1802737C1 |

## CROSS-REFERENCE INDEXES

### FIGURE AND NUMBER INDEX

| FIG. | ITEM | STOCK NUMBER | CAGEC. | PART NUMBER |
|---|---|---|---|---|
| 136 | 1 | 5305-01-346-2937 | 89346 | 25235R1 |
| 136 | 2 | 5305-01-346-2938 | 89346 | 25232R1 |
| 136 | 3 | 5310-01-244-8937 | 89346 | 27326R1 |
| 136 | 4 | 5310-01-094-2890 | 89346 | 25552R1 |
| 136 | 5 | | 89346 | 678026C1 |
| 136 | 6 | | 89346 | 687459C1 |
| 136 | 7 | 2910-01-329-1425 | 89346 | 1810057C91 |
| 136 | 7 | 2910-01-363-4367 | 89346 | 1811680C91 |
| 136 | 8 | 5310-01-353-1895 | 89346 | 30208R1 |
| 136 | 9 | 5310-00-582-5965 | 96906 | MS35338-44 |
| 136 | 10 | 2910-01-315-5512 | 89346 | 691054C91 |
| 136 | 11 | 2910-01-224-8490 | 29510 | 684492C93 |
| 136 | 12 | | 89346 | 691306C1 |
| 136 | 13 | 5330-01-347-3726 | 89346 | 625550C1 |
| 136 | 14 | 5360-01-358-4558 | 89346 | 760583R1 |
| 136 | 15 | 4310-01-347-7445 | 89346 | 684726C1 |
| 136 | 16 | | 89346 | 684725C1 |
| 136 | 17 | | 89346 | 1802159C1 |
| 136 | 18 | | 89346 | 691308C1 |
| 136 | 19 | 5330-01-347-3727 | 89346 | 670882C1 |
| 136 | 20 | 5360-01-352-1957 | 89346 | 691307C1 |
| 136 | 21 | 5330-01-352-4309 | 89346 | 691272C1 |
| 137 | 1 | 5305-01-363-1519 | 89346 | 397778C1 |
| 137 | 2 | | 89346 | 1806357C1 |
| 137 | 3 | 5310-00-582-5965 | 96906 | MS35338-44 |
| 137 | 4 | | 89346 | 397746C1 |
| 137 | 5 | 2910-01-353-7629 | 89346 | 1811928C91 |
| 137 | 6 | 5306-01-353-5953 | 89346 | 1802132C1 |
| 137 | 7 | 5305-01-352-7537 | 89346 | 1806353C1 |
| 137 | 8 | 5310-00-823-8804 | 96906 | MS27183-9 |
| 137 | 9 | | 89346 | 1806841C1 |
| 137 | 10 | | 89346 | 1806348C91 |
| 137 | 11 | 5310-01-363-1697 | 89346 | 1806350C1 |
| 137 | 12 | | 89346 | 1806349C91 |
| 137 | 13 | 5330-01-352-4310 | 89346 | 625492C1 |
| 137 | 14 | 9310-01-353-1895 | 89346 | 30208R1 |
| 137 | 15 | 5310-01-363-1482 | 89346 | 1806346C1 |
| 137 | 16 | | 89346 | 1806352C91 |
| 137 | 17 | | 89346 | 1806389C1 |
| 137 | 18 | | 89346 | 1806347C91 |
| 137 | 19 | | 89346 | 1806345C1 |
| 137 | 20 | | 89346 | 1806838C1 |
| 137 | 21 | | 89346 | 1806343C1 |
| 137 | 22 | 4820-01-358-0682 | 89346 | 1806344C1 |
| 137 | 23 | | 89346 | 1813764C1 |
| 137 | 24 | 5360-01-363-4825 | 89346 | 1808734C1 |
| 137 | 25 | | 89346 | 684850C1 |
| 137 | 26 | | 89346 | 1806342C1 |
| 137 | 27 | | 89346 | 1700926C1 |
| 137 | 28 | | 89346 | 933982R1 |
| 137 | 29 | | 89346 | 1700924C91 |

## CROSS-REFERENCE INDEXES

### FIGURE AND NUMBER INDEX

| FIG. | ITEM | STOCK NUMBER | CAGEC. | PART NUMBER |
|---|---|---|---|---|
| 137 | 30 | | 89346 | 691271C1 |
| 137 | 31 | 5330-01-352-4337 | 89346 | 3051337R1 |
| 138 | 1 | | 89346 | 1806330C91 |
| 138 | 1 | | 89346 | 1806330C92 |
| 138 | 2 | 5340-01-363-2653 | 89346 | 934030R1 |
| 138 | 3 | 5365-01-363-1528 | 89346 | 397664C1 |
| 138 | 4 | 5365-01-363-1529 | 89346 | 1802942C1 |
| 138 | 5 | | 89346 | 397692C1 |
| 138 | 6 | | 89346 | 1813776C1 |
| 138 | 7 | 5360-01-363-4829 | 89346 | 1806332C1 |
| 138 | 8 | | 89346 | 397748C1 |
| 138 | 9 | | 89346 | 680201C1 |
| 138 | 10 | | 89346 | 397746C1 |
| 138 | 11 | | 89346 | 397745C1 |
| 138 | 12 | | 89346 | 425987C1 |
| 138 | 13 | | 89346 | 1701015C1 |
| 138 | 14 | | 89346 | 397755C1 |
| 138 | 15 | | 89346 | 684858C1 |
| 138 | 16 | | 89346 | 1802561C1 |
| 138 | 16 | 5305-01-363-2642 | 89346 | 1814119C1 |
| 138 | 17 | | 89346 | 1802064C1 |
| 138 | 18 | 5310-01-353-1895 | 89346 | 30208R1 |
| 138 | 19 | 5330-01-363-1715 | 89346 | 691402C1 |
| 138 | 20 | | 89346 | 931113R1 |
| 138 | 21 | 5305-01-363-6073 | 89346 | 397749C1 |
| 138 | 22 | 5340-01-352-8803 | 89346 | 1806484C91 |
| 138 | 23 | 5305-01-363-1520 | 89346 | 1808129C1 |
| 138 | 24 | 5310-01-353-1895 | 89346 | 30208R1 |
| 138 | 25 | | 89346 | 1802054C1 |
| 138 | 26 | 5310-00-582-5965 | 96906 | MS35338-44 |
| 138 | 27 | | 89346 | 1700920C1 |
| 138 | 28 | | 89346 | 684112C1 |
| 138 | 29 | | 89346 | 397777C1 |
| 138 | 30 | 5365-01-064-2253 | 98345 | 397773C1 |
| 138 | 30 | 5365-01-064-2254 | 89346 | 397774C1 |
| 138 | 30 | 5365-01-064-2255 | 89346 | 397776C1 |
| 138 | 30 | 5365-01-064-2256 | 89346 | 397775C1 |
| 138 | 31 | 5360-01-064-1986 | 89346 | 397783C1 |
| 138 | 32 | | 89346 | 397782C1 |
| 138 | 33 | | 89346 | 397731C1 |
| 138 | 34 | | 89346 | 397730C1 |
| 138 | 35 | | 89346 | 1806314C1 |
| 138 | 36 | | 89346 | 397738C1 |
| 138 | 37 | | 89346 | 684871C1 |
| 138 | 38 | | 89346 | 1808025C1 |
| 138 | 39 | | 89346 | 932618R1 |
| 138 | 40 | 5330-01-363-1781 | 89346 | 1808310C92 |
| 138 | 41 | 3120-01-063-9845 | 89346 | 397725C1 |
| 138 | 42 | | 89346 | 1700632C1 |
| 138 | 43 | | 89346 | 1700925C1 |
| 138 | 43 | 5330-01-064-1488 | 89346 | 1700923C1 |

## CROSS-REFERENCE INDEXES

### FIGURE AND NUMBER INDEX

| FIG. | ITEM | STOCK NUMBER | CAGEC. | PART NUMBER |
|---|---|---|---|---|
| 138 | 44 | | 89346 | 1808579C1 |
| 138 | 45 | | 89346 | 691092C1 |
| 138 | 46 | | 89346 | 1806335C1 |
| 138 | 47 | | 89346 | 1700917C1 |
| 138 | 48 | | 89346 | 397817C1 |
| 138 | 48 | | 89346 | 684864C1 |
| 138 | 49 | | 89346 | 468962C1 |
| 138 | 50 | | 89346 | 1806310C1 |
| 138 | 51 | | 89346 | 1806309C1 |
| 138 | 52 | 5360-01-352-1191 | 89346 | 1811733C1 |
| 138 | 53 | | 89346 | 1806355C1 |
| 138 | 54 | 3120-01-353-6031 | 89346 | 1806356C1 |
| 138 | 55 | | 89346 | 397702C1 |
| 138 | 56 | 5305-01-363-1504 | 89346 | 30192R1 |
| 138 | 57 | | 89346 | 397705C1 |
| 138 | 58 | | 89346 | 1806358C91 |
| 138 | 59 | | 89346 | 397643C91 |
| 138 | 60 | | 89346 | 397682C1 |
| 138 | 61 | | 89346 | 397680C1 |
| 138 | 62 | | 89346 | 684108C1 |
| 138 | 63 | | 89346 | 397679C1 |
| 138 | 64 | 5310-01-063-9773 | 89346 | 397673C1 |
| 138 | 64 | 5310-01-064-7558 | 89346 | 397676C1 |
| 138 | 64 | 5310-01-064-7559 | 89346 | 1806374C1 |
| 138 | 64 | 5310-01-066-4366 | 89346 | 397671C1 |
| 138 | 64 | 5365-01-351-9382 | 89346 | 1806365C1 |
| 138 | 64 | 5365-01-352-4209 | 89346 | 1806359C1 |
| 138 | 64 | 5365-01-352-4210 | 89346 | 1806360C1 |
| 138 | 64 | 5365-01-352-4211 | 89346 | 1806361C1 |
| 138 | 64 | 5365-01-352-4212 | 89346 | 1806362C1 |
| 138 | 64 | 5365-01-352-4213 | 89346 | 1806363C1 |
| 138 | 64 | 5365-01-363-1530 | 89346 | 1806366C1 |
| 138 | 64 | 5365-01-363-1531 | 89346 | 1806368C1 |
| 138 | 64 | 5365-01-363-1532 | 89346 | 1806369C1 |
| 138 | 64 | 5365-01-363-1533 | 89346 | 1806370C1 |
| 138 | 64 | 5365-01-363-1534 | 89346 | 1806371C1 |
| 138 | 64 | 5365-01-363-1535 | 89346 | 1806373C1 |
| 138 | 64 | 5365-01-363-1536 | 89346 | 1806375C1 |
| 138 | 64 | 5365-01-363-1537 | 89346 | 1806376C1 |
| 138 | 64 | 5365-01-363-1538 | 89346 | 1806377C1 |
| 138 | 64 | 5365-01-364-4224 | 89346 | 1806364C1 |
| 138 | 64 | 5365-01-364-4225 | 89346 | 1806367C1 |
| 138 | 64 | 5365-01-364-4226 | 89346 | 1806372C1 |
| 138 | 65 | | 89346 | 397701C1 |
| 138 | 66 | | 89346 | 397703C1 |
| 138 | 67 | | 89346 | 1802309C1 |
| 138 | 68 | | 89346 | 1802310C1 |
| 138 | 69 | 5360-01-363-4824 | 89346 | 1812675C1 |
| 138 | 69 | 5360-01-364-3476 | 89346 | 1810694C1 |
| 138 | 70 | 5360-01-363-4823 | 89346 | 1814109C1 |
| 138 | 70 | 5360-01-364-3477 | 89346 | 1810695C1 |

## CROSS-REFERENCE INDEXES

### FIGURE AND NUMBER INDEX

| FIG. | ITEM | STOCK NUMBER | CAGEC. | PART NUMBER |
|---|---|---|---|---|
| 138 | 71 | 5365-01-363-1539 | 89346 | 1812677Cl |
| 138 | 71 | 5365-01-364-4227 | 89346 | 397769C1 |
| 138 | 72 | | 89346 | 1812678C1 |
| 138 | 72 | | 89346 | 691084C1 |
| 138 | 72 | | 89346 | 691085C1 |
| 138 | 72 | | 89346 | 691086C1 |
| 138 | 73 | 5360-01-363-4828 | 89346 | 1814111C1 |
| 138 | 73 | 5360-01-364-3478 | 89346 | 1810697C1 |
| 138 | 74 | 5365-01-363-1540 | 89346 | 691087C1 |
| 138 | 75 | 5305-01-363-1505 | 89346 | 1806306C1 |
| 138 | 76 | 5305-01-363-1506 | 89346 | 1814867C1 |
| 138 | 76 | 5305-01-364-4776 | 89346 | 1806307C1 |
| 138 | 77 | | 89346 | 1806336C91 |
| 138 | 78 | | 89346 | 1806338C1 |
| 138 | 79 | | 89346 | 3078343R1 |
| 138 | 79 | 5305-01-364-4777 | 89346 | 1806337C1 |
| 138 | 80 | | 89346 | 1806339C1 |
| 138 | 81 | | 89346 | 397720C1 |
| 138 | 82 | 5330-01-063-5018 | 89346 | 397721C1 |
| 138 | 83 | | 89346 | 439184C1 |
| 138 | 84 | | 89346 | 1806304C1 |
| 138 | 85 | | 89346 | 691283C1 |
| 138 | 86 | | 89346 | 1806305C1 |
| 138 | 87 | 5330-01-363-1719 | 89346 | 691277C1 |
| 138 | 88 | | 89346 | 1806557C91 |
| 138 | 89 | | 89346 | 397697C1 |
| 138 | 90 | | 89346 | 1806301C1 |
| 138 | 91 | | 89346 | 397695C1 |
| 138 | 92 | | 89346 | 1806303C1 |
| 138 | 93 | | 89346 | 1806300C1 |
| 138 | 94 | 5330-01-363-1785 | 89346 | 1806299C1 |
| 138 | 95 | 3120-01-363-1514 | 89346 | 1806296C1 |
| 138 | 96 | | 89346 | 1806302C1 |
| 138 | 97 | | 89346 | 397689C1 |
| 138 | 98 | | 89346 | 1806298C1 |
| 138 | 99 | | 89346 | 1806297C1 |
| 139 | 1 | 5305-01-363-1507 | 89346 | 1810491C1 |
| 139 | 2 | 5330-01-363-1720 | 89346 | 691273C1 |
| 139 | 3 | 4730-01-363-6734 | 89346 | 1809797C1 |
| 139 | 4 | 4810-01-363-4220 | 89346 | 1809796C1 |
| 139 | 5 | 5330-01-063-8341 | 89346 | 397630C1 |
| 139 | 6 | | 89346 | 625924C1 |
| 139 | 7 | | 89346 | 1806293C1 |
| 139 | 8 | | 89346 | 691271C1 |
| 139 | 9 | 5330-01-352-4337 | 89346 | 3051337R1 |
| 139 | 10 | | 89346 | 691263C1 |
| 139 | 11 | | 89346 | 691260C1 |
| 139 | 12 | 5365-01-300-7007 | 92679 | 933608R1 |
| 139 | 13 | | 89346 | 691265C1 |
| 139 | 14 | | 89346 | 933983C1 |
| 139 | 15 | 5365-01-363-1565 | 89346 | 1806270C1 |

## CROSS-REFERENCE INDEXES

### FIGURE AND NUMBER INDEX

| FIG. | ITEM | STOCK NUMBER | CAGEC. | PART NUMBER |
|---|---|---|---|---|
| 139 | 16 | | 89346 | 1806294C1 |
| 139 | 17 | | 89346 | 1806288C1 |
| 139 | 18 | 5330-01-363-1780 | 89346 | 1806292C1 |
| 139 | 19 | | 89346 | 307924R1 |
| 139 | 20 | 5360-01-363-4822 | 89346 | 3132382R1 |
| 139 | 21 | 2815-01-363-7390 | 89346 | 1806833C91 |
| 139 | 22 | 5330-01-363-1721 | 89346 | 1806328C1 |
| 139 | 23 | | 89346 | 1806565C1 |
| 139 | 23 | | 89346 | 1811925C1 |
| 139 | 24 | 5330-01-363-1786 | 89346 | 1806290C1 |
| 139 | 25 | | 89346 | 1806291C1 |
| 139 | 26 | 5365-01-363-1512 | 89346 | 691232C1 |
| 139 | 27 | | 89346 | 1814130C1 |
| 139 | 27 | | 89346 | 691233C1 |
| 139 | 28 | | 89346 | 691234C1 |
| 139 | 29 | 5360-01-363-4821 | 89346 | 1809798C1 |
| 139 | 30 | | 89346 | 691235C1 |
| 139 | 31 | 2815-01-363-2555 | 89346 | 691236C91 |
| 139 | 32 | | 89346 | 691261C1 |
| 139 | 33 | 5330-01-363-1787 | 89346 | 691262C1 |
| 139 | 34 | 5365-01-363-1541 | 89346 | 1802256C1 |
| 139 | 34 | 5365-01-363-1542 | 89346 | 1802257C1 |
| 139 | 34 | 5365-01-363-1543 | 89346 | 1802258C1 |
| 139 | 34 | 5365-01-363-1544 | 89346 | 1802259C1 |
| 139 | 34 | 5365-01-363-1545 | 89346 | 1802260C1 |
| 139 | 34 | 5365-01-363-1546 | 89346 | 1802261C1 |
| 139 | 34 | 5365-01-363-1547 | 89346 | 1802262C1 |
| 139 | 34 | 5365-01-363-1548 | 89346 | 1802263C1 |
| 139 | 34 | 5365-01-363-1549 | 89346 | 1802264C1 |
| 139 | 34 | 5365-01-363-1550 | 89346 | 1802265C1 |
| 139 | 34 | 5365-01-363-1551 | 89346 | 1802266C1 |
| 139 | 34 | 5365-01-363-1552 | 89346 | 1802267C1 |
| 139 | 34 | 5365-01-363-1553 | 89346 | 691315C1 |
| 139 | 34 | 5365-01-363-1554 | 89346 | 691321C1 |
| 139 | 34 | 5365-01-363-1555 | 89346 | 691322C1 |
| 139 | 34 | 5365-01-363-1556 | 89346 | 691325C1 |
| 139 | 34 | 5365-01-363-1557 | 89346 | 691326C1 |
| 139 | 34 | 5365-01-363-1558 | 89346 | 691327C1 |
| 139 | 34 | 5365-01-363-1559 | 89346 | 691328C1 |
| 139 | 34 | 5365-01-363-1560 | 89346 | 691329C1 |
| 139 | 34 | 5365-01-363-1561 | 89346 | 691330C1 |
| 139 | 34 | 5365-01-363-1757 | 89346 | 691319C1 |
| 139 | 34 | 5365-01-363-1758 | 89346 | 691320C1 |
| 139 | 34 | 5365-01-363-2866 | 89346 | 691318C1 |
| 139 | 34 | 5365-01-363-2867 | 89346 | 691323C1 |
| 139 | 34 | 5365-01-363-2868 | 89346 | 691324C1 |
| 139 | 34 | 5365-01-363-4080 | 89346 | 691316C1 |
| 139 | 34 | 5365-01-363-4081 | 89346 | 691317C1 |
| 139 | 34 | 5365-01-363-4082 | 89346 | 691332C1 |
| 139 | 34 | 5365-01-363-4861 | 89346 | 691331C1 |
| 139 | 34 | 5365-01-364-9090 | 89346 | 691333C1 |

## CROSS-REFERENCE INDEXES

### FIGURE AND NUMBER INDEX

| FIG. | ITEM | STOCK NUMBER | CAGEC. | PART NUMBER |
|---|---|---|---|---|
| 139 | 35 | | 89346 | 1806269C1 |
| 139 | 35 | | 89346 | 1815544C1 |
| 139 | 36 | | 89346 | 1810687C1 |
| 139 | 37 | 5310-00-582-5965 | 96906 | MS35338-44 |
| 139 | 38 | | 89346 | 1806272C1 |
| 139 | 39 | | 89346 | 691255C1 |
| 139 | 40 | | 89346 | 1811730C1 |
| 139 | 41 | | 89346 | 691256C1 |
| 139 | 42 | | 89346 | 1809553C1 |
| 139 | 43 | | 89346 | 691270C1 |
| 139 | 44 | | 89346 | 1806278C1 |
| 139 | 45 | | 89346 | 1806919C1 |
| 139 | 46 | | 89346 | 691268C1 |
| 139 | 47 | | 89346 | 1806416C1 |
| 139 | 48 | 5330-01-363-0626 | 89346 | 1806504C1 |
| 139 | 49 | | 89346 | 397624C1 |
| 139 | 50 | 5305-01-363-2649 | 89346 | 1810819C1 |
| 139 | 51 | 5330-01-063-7883 | 29510 | 933697R1 |
| 139 | 52 | | 89346 | 691251C1 |
| 139 | 53 | | 89346 | 691250C1 |
| 139 | 54 | 3110-01-363-3113 | 89346 | 691249C91 |
| 139 | 55 | 5310-01-363-3146 | 89346 | 1802705C1 |
| 139 | 56 | | 89346 | 691243C1 |
| 139 | 57 | | 89346 | 1802649C1 |
| 139 | 58 | | 89346 | 1811726C91 |
| 139 | 58 | | 89346 | 1811726C92 |
| 139 | 59 | | 89346 | 680481C1 |
| 139 | 60 | | 89346 | 1811728C1 |
| 139 | 61 | | 89346 | 691349C1 |
| 139 | 62 | 5330-01-363-1788 | 89346 | 670875C1 |
| 139 | 63 | | 89346 | 1810690C1 |
| 139 | 64 | | 89346 | 933833R1 |
| 139 | 65 | | 89346 | 1806275C1 |
| 139 | 66 | 5330-01-363-1722 | 89346 | 1806274C1 |
| 139 | 67 | | 89346 | 1806273C91 |
| 139 | 68 | | 89346 | 1811729C1 |
| 139 | 69 | | 89346 | 1806284C1 |
| 139 | 70 | | 89346 | 691252C1 |
| 139 | 71 | | 89346 | 3056409R1 |
| 139 | 72 | | 89346 | 1808652C1 |
| 139 | 73 | | 89346 | 1811926C91 |
| 140 | 1 | 5305-01-352-7602 | 89346 | 26269R1 |
| 140 | 2 | 5310-00-407-9566 | 96906 | MS35338-45 |
| 140 | 3 | 5330-00-133-0758 | 89346 | 166562R1 |
| 140 | 4 | | 89346 | 444688 |
| 140 | 5 | 5305-01-352-7603 | 89346 | 25653R1 |
| 140 | 6 | 5330-01-352-5773 | 89346 | 315209C1 |
| 140 | 7 | 3030-00-606-2293 | 81300 | 17495GL |
| 140 | 8 | 3020-01-299-7118 | 89346 | 446738C1 |
| 140 | 9 | 4730-00-005-4994 | 31007 | 274085R91 |
| 140 | 10 | 4720-00-470-0825 | 89346 | 364358C1 |

## CROSS-REFERENCE INDEXES

### FIGURE AND NUMBER INDEX

| FIG. | ITEM | STOCK NUMBER | CAGEC. | PART NUMBER |
|---|---|---|---|---|
| 140 | 11 | | 89346 | 864457R1 |
| 140 | 12 | | 89346 | 492536C1 |
| 140 | 13 | | 89346 | 408011C1 |
| 140 | 14 | | 89346 | 444014 |
| 140 | 15 | | 89346 | 431606R1 |
| 140 | 16 | | 89346 | 118748 |
| 140 | 17 | 5306-01-068-1071 | 89346 | 24840R1 |
| 140 | 18 | | 96906 | MS35338-48 |
| 140 | 19 | 5310-01-065-2596 | 89346 | 25709R1 |
| 140 | 20 | | 89346 | 674190C1 |
| 140 | 21 | 5310-01-346-9364 | 89346 | 25524R1 |
| 140 | 22 | | 89346 | 689351C1 |
| 140 | 23 | | 89346 | 140483H |
| 140 | 24 | 5305-01-346-3596 | 89346 | 24850R1 |
| 140 | 25 | 5310-01-188-4635 | 89346 | 9413981 |
| 140 | 26 | | 89346 | 689432C92 |
| 140 | 27 | | 89346 | 444698 |
| 140 | 28 | 5330-01-186-3314 | 89346 | 83817HB |
| 140 | 29 | | 89346 | 689350C1 |
| 140 | 30 | 5306-01-186-6974 | 89346 | 24843R1 |
| 140 | 31 | | 89346 | 275804R1 |
| 140 | 32 | | 89346 | 689348C2 |
| 140 | 33 | | 89346 | 689349C2 |
| 141 | | | 89346 | 410986C92 |
| 141 | 1 | | 89346 | 160094R1 |
| 141 | 2 | | 89346 | 321739R1 |
| 141 | 3 | | 89346 | 321740R91 |
| 141 | 4 | | 89346 | 124818 |
| 141 | 5 | | 89346 | 684831R1 |
| 141 | 6 | | 89346 | 321747R1 |
| 141 | 7 | | 89346 | 321748R1 |
| 141 | 8 | | 89346 | 321749R1 |
| 141 | 9 | | 89346 | 321746R1 |
| 141 | 10 | | 89346 | 321741R1 |
| 141 | 11 | | 89346 | 321742R1 |
| 141 | 12 | 4310-01-065-4326 | 29510 | 321743R91 |
| 141 | 13 | | 89346 | 684830R1 |
| 141 | 14 | | 89346 | 3046105R1 |
| 141 | 15 | | 89346 | 382137R1 |
| 141 | 16 | | 89346 | 321744R1 |
| 141 | 17 | | 89346 | 321745R1 |
| 141 | 18 | | 89346 | 444688 |
| 141 | 19 | 2530-01-065-3769 | 29510 | 321738R1 |
| 142 | | 2530-01-329-1377 | 89346 | 473040C91 |
| 142 | | 3120-01-268-2659 | 89346 | 473047C91 |
| 142 | | 4310-00-702-6656 | 89346 | 217877R92 |
| 142 | | 4310-01-168-9536 | 89346 | 473035C92 |
| 142 | | 4310-01-173-4082 | 89346 | 473045C92 |
| 142 | | 4310-01-272-7624 | 89346 | 473046C92 |
| 142 | | 5330-01-352-5774 | 89346 | 473057C1 |
| 142 | 1 | 5315-00-012-0123 | 96906 | MS24665-355 |

## CROSS-REFERENCE INDEXES

### FIGURE AND NUMBER INDEX

| FIG. | ITEM | STOCK NUMBER | CAGEC. | PART NUMBER |
|---|---|---|---|---|
| 142 | 2 | 5310-01-353-1896 | 89346 | 427640 |
| 142 | 3 | | 89346 | 473653C1 |
| 142 | 4 | | 89346 | 473055C2 |
| 142 | 5 | | 89346 | 483391C1 |
| 142 | 6 | 5330-01-286-2515 | 89346 | 861432R1 |
| 142 | 7 | | 89346 | 474469C1 |
| 142 | 8 | | 89346 | 473033C92 |
| 142 | 9 | | 89346 | 473052C1 |
| 142 | 10 | | 89346 | 473064C1 |
| 142 | 11 | | 89346 | 473053C1 |
| 142 | 12 | 5330-01-274-3125 | 89346 | 474466C1 |
| 142 | 13 | 5305-01-352-7541 | 89346 | 571330C1 |
| 142 | 14 | 5340-01-353-5960 | 89346 | 473060C91 |
| 142 | 15 | 3120-01-263-4282 | 89346 | 473042C91 |
| 142 | 15 | 3120-01-353-6029 | 89346 | 473043C91 |
| 142 | 15 | 3120-01-353-6030 | 89346 | 473044C91 |
| 142 | 16 | 5365-01-347-1158 | 89346 | 310086R1 |
| 142 | 17 | 5315-01-353-8894 | 89346 | ZZ102377 |
| 142 | 18 | | 89346 | 473039C91 |
| 142 | 18 | 4310-01-161-6462 | 89346 | 473038C91 |
| 142 | 19 | | 89346 | 473059C91 |
| 142 | 20 | | 89346 | 15/16X1 L |
| 142 | 21 | | 89346 | 474470C91 |
| 142 | 22 | | 89346 | 473065C91 |
| 142 | 23 | | 89346 | 473065C91 |
| 142 | 24 | | 89346 | 474468C1 |
| 142 | 25 | | 89346 | 474467C1 |
| 142 | 26 | | 89346 | 117996 |
| 142 | 27 | 3110-01-276-3192 | 89346 | ST205A |
| 142 | 28 | | 89346 | 473063C1 |
| 142 | 29 | | 89346 | 473070C1 |
| 143 | | | 89346 | 281911C92 |
| 143 | 1 | 5310-00-079-5996 | 89346 | 110 330 |
| 143 | 2 | 5310-01-347-1176 | 89346 | 290308C1 |
| 143 | 3 | | 89346 | 359379CI |
| 143 | 4 | 2940-01-014-2547 | 06853 | 243009 |
| 143 | 5 | 5305-01-352-7603 | 89346 | 25653R1 |
| 143 | 6 | 5310-00-407-9566 | 96906 | MS35338-45 |
| 144 | 1 | 5305-01-363-2650 | 89346 | 24879R1 |
| 144 | 2 | 5305-01-363-2651 | 89346 | 24875R1 |
| 144 | 3 | 5310-01-363-1740 | 89346 | 25976R1 |
| 144 | 4 | 5310-01-186-4361 | 89346 | 414089C1 |
| 144 | 5 | | 89346 | 463526C1 |
| 144 | 6 | | 89346 | 422650C1 |
| 144 | 7 | | 89346 | 286234C2 |
| 144 | 8 | 5340-01-067-9037 | 89346 | 286236C2 |
| 144 | .9 | 5340-01-067-9648 | 89346 | 286235C2 |
| 144 | 10 | 5365-01-363-1515 | 89346 | 371623C2 |
| 144 | 11 | 5306-01-067-9561 | 89346 | 624862R1 |
| 144 | 12 | 5310-01-189-8385 | 89346 | 25710R1 |
| 144 | 13 | | 89346 | 479376C1 |

## CROSS-REFERENCE INDEXES

### FIGURE AND NUMBER INDEX

| FIG. | ITEM | STOCK NUMBER | CAGEC. | PART NUMBER |
|---|---|---|---|---|
| 144 | 14 | | 89346 | 479375C1 |
| 144 | 15 | | 89346 | 686704C4 |
| 144 | 16 | 5306-01-193-0868 | 89346 | 414052C1 |
| 144 | 17 | 5310-00-594-9379 | 89346 | 414087C1 |
| 144 | 18 | | 89346 | 1664732C2 |
| 144 | 19 | 5306-01-250-0546 | 89346 | 414053C1 |
| 144 | 20 | | 89346 | 471640C2 |
| 144 | 21 | | 89346 | 471641C2 |
| 145 | | | 89346 | 140483H |
| 145 | | | 89346 | 24844R1 |
| 145 | | | 89346 | 25522R1 |
| 145 | | | 89346 | 444631 |
| 145 | | | 89346 | 680481C1 |
| 145 | | 2910-01-298-4276 | 89346 | 1810366C91 |
| 145 | | 5305-00-406-2281 | 29510 | 275804R1 |
| 145 | | 5305-01-067-9568 | 89346 | 24842R1 |
| 145 | | 5306-01-186-6978 | 92679 | 277232R1 |
| 145 | | 5310-01-230-2349 | 89346 | 25896R1 |
| 145 | | 5310-01-230-2349 | 89346 | 25896R1 |
| 145 | | 5330-01-365-5830 | 89346 | 1810505C91 |
| 145 | 1 | 4730-01-342-8464 | 89346 | 681896C1 |
| 145 | 2 | 4720-01-166-8457 | 92679 | 672242C1 |
| 145 | 3 | | 89346 | 686757C2 |
| 145 | 4 | 5330-01-023-5289 | 29510 | 675384C1 |
| 145 | 5 | 5930-01-097-6517 | 29510 | 687018C2 |
| 145 | 6 | 5330-00-245-3788 | 29510 | 615175C91 |
| 145 | 7 | | 89346 | 25523R1 |
| 145 | 8 | | 96906 | MS35338-46 |
| 145 | 9 | 2930-01-365-7064 | 89346 | 1609989C91 |
| 145 | 10 | 2930-01-258-9392 | 89346 | 492146C1 |
| 145 | 11 | | 89346 | 481775C1 |
| 145 | 12 | | 89346 | 481979C3 |
| 145 | 13 | | 89346 | 1808474C1 |
| 145 | 13 | | 89346 | 1810717C1 |
| 145 | 14 | 2930-01-153-9035 | 89346 | 685155C95 |
| 145 | 15 | | 89346 | 691342C1 |
| 145 | 16 | | 89346 | 685157C1 |
| 145 | 17 | | 89346 | 677856C2 |
| 145 | 18 | 5330-01-126-9511 | 29510 | 675808C2 |
| 145 | 19 | 5365-01-166-0790 | 92679 | 673308C2 |
| 145 | 20 | 5330-01-364-9855 | 89346 | 1806268C91 |
| 145 | 21 | 5365-01-366-4838 | 89346 | 272842R1 |
| 145 | 22 | 5365-01-166-0855 | 92679 | 677715C1 |
| 145 | 23 | 3110-01-201-3361 | 92679 | 677148C91 |
| 145 | 24 | 5365-01-166-0792 | 92679 | 677141C1 |
| 145 | 25 | 5365-01-166-0791 | 92679 | 685152C1 |
| 145 | 26 | | 89346 | 685153C2 |
| 145 | 27 | 5330-01-364-9024 | 89346 | 1806267C91 |
| 145 | 28 | | 89346 | 1802812C1 |
| 145 | 29 | | 89346 | NSS-SEAL |
| 145 | 30 | | 89346 | NSS-SEAT |

## CROSS-REFERENCE INDEXES

### FIGURE AND NUMBER INDEX

| FIG. | ITEM | STOCK NUMBER | CAGEC. | PART NUMBER |
|---|---|---|---|---|
| 145 | 31 | | 89346 | 1802248C91 |
| 146 | | | 89346 | 24859R1 |
| 146 | | | 89346 | 24864R1 |
| 146 | | | 89346 | 26273R1 |
| 146 | | | 89346 | 332530R1 |
| 146 | | | 89346 | 613454C1 |
| 146 | | 5305-01-067-9568 | 89346 | 24842R1 |
| 146 | 1 | 5365-00-941-4024 | 89346 | 228275R1 |
| 146 | 2 | | 89346 | 690319C2 |
| 146 | 3 | 3110-01-249-9525 | 89346 | 690294C91 |
| 146 | 4 | | 89346 | 690296C1 |
| 147 | 1 | 2940-01-051-0695 | 89346 | 675616C91 |
| 147 | 2 | | 89346 | 26311R1 |
| 147 | 3 | | 89346 | 690206C1 |
| 147 | 4 | 5310-01-230-2349 | 89346 | 25896R1 |
| 147 | 5 | | 89346 | 677323C1 |
| 147 | 6 | | 89346 | 676135C1 |
| 147 | 7 | 5330-01-178-2104 | 92679 | 676136C1 |
| 147 | 8 | 5360-01-177-8605 | 92679 | 676137C1 |
| 147 | 9 | 4820-01-179-6357 | 92679 | 601917C1 |
| 147 | 10 | | 89346 | 606845C1 |
| 147 | 11 | | 89346 | 675395C1 |
| 147 | 12 | | 89346 | 680237C93 |
| 147 | 13 | | 89346 | 261624R1 |
| 147 | 14 | | 89346 | 349055R2 |
| 147 | 15 | 5330-01-346-0314 | 89346 | 675398C2 |
| 148 | | | 89346 | 142127R1 |
| 148 | | | 89346 | 26311R1 |
| 148 | | | 89346 | 26312R1 |
| 148 | | 5305-00-269-3225 | 89346 | 25784R1 |
| 148 | | 5310-01-230-2349 | 89346 | 25896R1 |
| 148 | 1 | 2940-01-132-4754 | 29510 | 1801090C1 |
| 148 | 2 | 4710-01-358-0687 | 89346 | 1800589C92 |
| 148 | 3 | 5310-01-064-8669 | 29510 | 265205R1 |
| 148 | 4 | 5365-00-846-7660 | 89346 | 265204R1 |
| 148 | 5 | 4710-01-366-7078 | 89346 | 1800588C91 |
| 148 | 6 | 5310-01-064-8669 | 29510 | 265205R1 |
| 148 | 7 | 5365-00-846-7660 | 89346 | 265204R1 |
| 148 | 8 | 4820-01-357-6505 | 89346 | 121894C1 |
| 148 | 9 | | 89346 | 333773R1 |
| 148 | 10 | | 89346 | 1800029C1 |
| 148 | 11 | | 89346 | 1801115C1 |
| 168 | 12 | | 89346 | 444613 |
| 148 | 13 | | 89346 | 1800515C1 |
| 148 | 14 | 2930-01-365-5299 | 89346 | 678841C91 |
| 148 | 15 | 5330-01-184-5810 | 92679 | 675513C1 |
| 148 | 16 | 5330-00-893-7633 | 29510 | 252483R1 |
| 148 | 17 | 4730-01-178-8825 | 92679 | 677110C1 |
| 148 | 18 | | 89346 | 1800690C1 |
| 149 | | | 89346 | 116487 |
| 149 | | | 89346 | 444614 |

## CROSS-REFERENCE INDEXES

### FIGURE AND NUMBER INDEX

| FIG. | ITEM | STOCK NUMBER | CAGEC. | PART NUMBER |
|---|---|---|---|---|
| 149 | | | 89346 | 688485C1 |
| 149 | 1 | 5306-01-068-1071 | 89346 | 24840R1 |
| 149 | 2 | 5310-01-078-7804 | 31007 | 25522R1 |
| 149 | 3 | 5310-01-230-2349 | 89346 | 25896R1 |
| 149 | 4 | 5310-00-637-9541 | 96906 | MS35338-46 |
| 149 | 5 | 5340-01-363-2647 | 89346 | 129083R1 |
| 149 | 6 | | 89346 | 25493R1 |
| 149 | 7 | 5310-00-407-9566 | 96906 | MS35338-45 |
| 149 | 8 | 5310-01-244-8937 | 89346 | 27326R1 |
| 149 | 9 | | 89346 | 689381C1 |
| 149 | 10 | 4710-01-359-5055 | 89346 | 69b075C91 |
| 149 | 11 | | 89346 | 444625 |
| 149 | 12 | | 89346 | 115193 |
| 149 | 13 | | 89346 | 285611C1 |
| 149 | 14 | | 89346 | 121207 |
| 149 | 15 | | 89346 | 690108C1 |
| 149 | 16 | 4730-01-346-7908 | 89346 | 576168C1 |
| 149 | 17 | 4710-01-359-5056 | 89346 | 690067C91 |
| 149 | 18 | | 89346 | 312064C1 |
| 149 | 19 | 5305-01-346-3595 | 89346 | 25493R1 |
| 149 | 20 | | 89346 | 686146C1 |
| 149 | 21 | 5330-00-122-4543 | 89346 | 350429R1 |
| 149 | 22 | 5330-01-346-2355 | 89346 | 686145C2 |
| 149 | 23 | | 89346 | 25234R1 |
| 149 | 24 | | 89346 | 25750R1 |
| 149 | 25 | | 89346 | 23776D |
| 149 | 26 | | 89346 | 686157C3 |
| 149 | 27 | 5305-01-346-3595 | 89346 | 25493R1 |
| 149 | 28 | 5310-01-346-9432 | 89346 | 684496C1 |
| 149 | 29 | 2930-01-294-4916 | 89346 | 686210C91 |
| 149 | 30 | 5330-01-346-2356 | 89346 | 686142C2 |
| 149 | 31 | | 89346 | 26680R1 |
| 149 | 32 | | 89346 | 28565R1 |
| 149 | 33 | | 89346 | 1802157C1 |
| 149 | 34 | 5330-01-127-1381 | 29510 | 682199C1 |
| 150 | | | 89346 | 444614 |
| 150 | 1 | 5310-01-178-2085 | 92679 | 682987C1 |
| 150 | 2 | 5310-01-177-3831 | 92679 | 684034C1 |
| 150 | 3 | | 89346 | 677628C1 |
| 150 | 4 | | 89346 | 677690C1 |
| 150 | 5 | | 89346 | 256333R1 |
| 150 | 6 | 5330-01-127-1380 | 29510 | 688928C1 |
| 151 | | | 89346 | 273469 |
| 151 | | | 89346 | 444655 |
| 151 | | | 89346 | 444667 |
| 151 | | 5305-01-363-2652 | 89346 | 690358C1 |
| 151 | | 5306-01-185-2070 | 92679 | 677490C1 |
| 151 | 1 | 5365-01-348-3300 | 89346 | 688067C1 |
| 151 | 2 | 5310-00-424-8307 | 29510 | 59658D |
| 151 | 3 | | 89346 | 1808957C1 |
| 151 | 4 | 4310-01-346-4364 | 89346 | 1801398C91 |

## CROSS-REFERENCE INDEXES

### FIGURE AND NUMBER INDEX

| FIG. | ITEM | STOCK NUMBER | CAGEC. | PART NUMBER |
|---|---|---|---|---|
| 151 | 5 | 5330-01-099-7926 | 29510 | 671827C1 |
| 152 | 1 | 5306-01-348-3274 | 89346 | 26679R1 |
| 152 | 2 | 5310-01-244-8937 | 89346 | 27326R1 |
| 152 | 3 | 4320-01-325-8534 | 89346 | 1808832C91 |
| 152 | 4 | | 89346 | 680482C1 |
| 152 | 5 | 2815-01-227-5998 | 89346 | 675860C1 |
| 152 | 6 | 2815-01-333-0205 | 89346 | 1802879C1 |
| 152 | 7 | 5305-01-346-2938 | 89346 | 25232R1 |
| 152 | 8 | 5310-01-244-8937 | 89346 | 27326R1 |
| 152 | 9 | 5310-00-407-9566 | 96906 | MS35338-45 |
| 152 | 10 | 5305-01-346-3594 | 89346 | 25492R1 |
| 152 | 11 | | 89346 | 1802866C1 |
| 152 | 12 | 5330-01-346-2357 | 89346 | 1802867C2 |
| 152 | 13 | 5330-01-363-1705 | 89346 | 690437C93 |
| 153 | | | 89346 | 25234R1 |
| 153 | | | 89346 | 25522R1 |
| 153 | | | 89346 | 25654R1 |
| 153 | | | 89346 | 444630 |
| 153 | | | 89346 | 444667 |
| 153 | | | 89346 | 444667 |
| 153 | | | 89346 | 675455C1 |
| 153 | | 5305-01-282-0829 | 89346 | 25678R1 |
| 153 | | 5305-01-346-3593 | 89346 | 25228R1 |
| 153 | | 5306-01-063-4985 | 89346 | 25501R1 |
| 153 | | 5306-01-067-9569 | 89346 | 24621R1 |
| 153 | | 5310-01-186-5163 | 92679 | 25520R1 |
| 153 | | 5310-01-230-2349 | 89346 | 25896R1 |
| 153 | | 5310-01-244-8937 | 89346 | 27326R1 |
| 153 | 1 | | 89346 | 1802246C91 |
| 153 | 1 | | 89346 | 1810542C92 |
| 153 | 2 | | 89346 | 691379C1 |
| 153 | 3 | | 89346 | 17012R1 |
| 153 | 4 | | 89346 | 367572R1 |
| 153 | 5 | | 89346 | 23624R1 |
| 153 | 6 | 5330-01-127-1377 | 29510 | 675813C1 |
| 153 | 6 | 5330-01-346-2358 | 89346 | 1810510C3 |
| 153 | 7 | | 89346 | 1810511C1 |
| 153 | 7 | | 89346 | 675811C1 |
| 153 | 8 | 5330-01-126-9512 | 29510 | 675812C1 |
| 154 | | 2910-01-315-2541 | 89346 | 1806407C91 |
| 154 | 1 | 5330-01-023-5287 | 29510 | 675477C1 |
| 154 | 2 | | 89346 | 680435C1 |
| 154 | 3 | 2910-01-357-5703 | 89346 | 1806406C1 |
| 154 | 4 | | 89346 | 680414C1 |
| 154 | 5 | | 89346 | 680434C1 |
| 154 | 6 | | 89346 | 680433C1 |
| 154 | 7 | 5360-01-132-4645 | 10988 | A44864 |
| 154 | 8 | 5365-01-228-0515 | 89346 | 680415C1 |
| 154 | 8 | 5365-01-362-2602 | 89346 | 680416C1 |
| 154 | 8 | 5365-01-362-2603 | 89346 | 680418C1 |
| 154 | 8 | 5365-01-362-2604 | 89346 | 680419C1 |

## CROSS-REFERENCE INDEXES

### FIGURE AND NUMBER INDEX

| FIG. | ITEM | STOCK NUMBER | CAGEC. | PART NUMBER |
|---|---|---|---|---|
| 154 | 8 | 5365-01-362-2605 | 89346 | 680421C1 |
| 154 | 8 | 5365-01-362-2606 | 89346 | 680422C1 |
| 154 | 8 | 5365-01-362-2607 | 89346 | 680420C1 |
| 154 | 8 | 5365-01-362-4361 | 89346 | 680423C1 |
| 154 | 9 | | 89346 | 680413C1 |
| 155 | 1 | 5365-01-347-1162 | 89346 | 674783C1 |
| 155 | 2 | | 89346 | 674775C2 |
| 155 | 2 | | 89346 | 674776C2 |
| 155 | 2 | | 89346 | 674777C2 |
| 155 | 2 | | 89346 | 674778C2 |
| 155 | 2 | | 89346 | 674779C2 |
| 155 | 2 | | 89346 | 674780C2 |
| 155 | 2 | | 89346 | 674781C2 |
| 155 | 2 | | 89346 | 674782C2 |
| 155 | 2 | | 89346 | 674925C2 |
| 155 | 2 | | 89346 | 674926C2 |
| 155 | 2 | | 89346 | 674948C2 |
| 155 | 2 | | 89346 | 674949C2 |
| 155 | 3 | 4320-01-365-5618 | 89346 | 684320C93 |
| 155 | 4 | | 89346 | 674800C1 |
| 155 | 5 | 2530-01-363-8088 | 89346 | 17006R1 |
| 155 | 6 | | 89346 | 684399C1 |
| 155 | 7 | | 89346 | 674786C2 |
| 155 | 8 | 4820-01-357-5636 | 89346 | 684935C93 |
| 155 | 9 | | 89346 | 674785C1 |
| 155 | 10 | | 89346 | 674801C1 |
| 155 | 11 | | 89346 | 674789C1 |
| 155 | 11 | | 89346 | 674790C1 |
| 155 | 11 | | 89346 | 674791C1 |
| 155 | 11 | | 89346 | 674792C1 |
| 155 | 11 | | 89346 | 674793C1 |
| 155 | 12 | | 89346 | 674797C1 |
| 155 | 13 | | 89346 | 684310C1 |
| 155 | 14 | | 89346 | 674802C1 |
| 155 | 15 | | 89346 | 674804C1 |
| 155 | 16 | | 89346 | 681439C91 |
| 155 | 17 | | 89346 | 1802399C1 |
| 155 | 18 | | 89346 | 1802397C1 |
| 155 | 19 | | 89346 | 674798C2 |
| 155 | 20 | | 89346 | 681496C1 |
| 155 | 21 | | 89346 | 681426C1 |
| 155 | 22 | 5330-01-346-2913 | 89346 | 674772C1 |
| 155 | 23 | 5330-00-847-5879 | 29510 | 327110R1 |
| 156 | 1 | | 92679 | 25654R1 |
| 156 | 2 | 5307-01-166-6166 | 92679 | 689324C1 |
| 156 | 3 | | 89346 | 690339C2 |
| 156 | 4 | 5330-01-167-2437 | 92679 | 677692-C1 |
| 156 | 5 | 5330-01-167-4074 | 92679 | 675109C2 |
| 156 | 6 | | 89346 | 25830R1 |
| 156 | 7 | | 89346 | 675455C1 |
| 156 | 8 | 5365-01-176-5751 | 92679 | 24577R1 |

## CROSS-REFERENCE INDEXES

### FIGURE AND NUMBER INDEX

| FIG. | ITEM | STOCK NUMBER | CAGEC. | PART NUMBER |
|---|---|---|---|---|
| 156 | 9 | | 89346 | 675660C92 |
| 156 | 10 | | 89346 | 291171C1 |
| 156 | 11 | 2815-01-357-5705 | 89346 | 688999C92 |
| 156 | 11 | 2815-01-357-5705 | 89346 | 688999C92 |
| 156 | 12 | | 89346 | 133093R1 |
| 156 | 13 | | 89346 | 16067DA |
| 156 | 14 | 5360-01-167-9681 | 92679 | 675105C1 |
| 156 | 15 | | 89346 | 1802461C2 |
| 156 | 16 | 5306-01-292-2420 | 89346 | 676120C1 |
| 156 | 17 | 5306-01-293-6078 | 89346 | 676119C1 |
| 156 | 18 | 5310-01-346-3566 | 89346 | 252018R1 |
| 156 | 19 | 5330-01-167-2432 | 92679 | 1806226C2 |
| 156 | 19 | 5330-01-167-2432 | 92679 | 1806226C2 |
| 156 | 20 | 2815-01-190-1052 | 31033 | VP107 |
| 156 | 21 | 2815-01-163-2720 | 89346 | 691877C91 |
| 156 | 21 | 2815-01-365-5662 | 89346 | 1811672C91 |
| 156 | 22 | 5315-01-151-2072 | 29510 | 41339D |
| 156 | 23 | 2815-01-192-4698 | 31033 | RC150 |
| 156 | 23 | 2815-01-333-3940 | 89346 | 1811581C91 |
| 156 | 24 | 5360-01-022-7907 | 29510 | 682064C1 |
| 156 | 24 | 5360-01-327-2616 | 89346 | 677349C1 |
| 156 | 25 | 2815-01-166-1180 | 92679 | 675443C1 |
| 156 | 26 | 2805-01-022-4254 | 29510 | 675046C2 |
| 156 | 27 | 2815-01-325-2956 | 89346 | 676865C3 |
| 156 | 28 | | 89346 | 675439C1 |
| 156 | 29 | | 92679 | 671565C1 |
| 156 | 29 | 2815-01-178-8482 | 92679 | 671563C1 |
| 156 | 29 | 2815-01-180-5156 | 92679 | 671561C1 |
| 156 | 29 | 4820-01-219-1436 | 92679 | 671559C1 |
| 156 | 30 | | 89346 | 21427R1 |
| 156 | 31 | | 89346 | 444667 |
| 156 | 32 | | 89346 | 691183C1 |
| 156 | 33 | | 89346 | 601093C1 |
| 156 | 34 | | 89346 | 682840C1 |
| 156 | 35 | | 89346 | 675442C1 |
| 156 | 36 | | 89346 | 687199C92 |
| 157 | 1 | 5306-01-362-4311 | 89346 | 26044R1 |
| 157 | 2 | 3040-01-179-5490 | 92679 | 675765C1 |
| 157 | 3 | 3110-01-174-2950 | 92679 | 327185R91 |
| 157 | 4 | | 89346 | 675764C1 |
| 157 | 5 | | 89346 | 675767C1 |
| 157 | 6 | 65305-01-346-3593 | 89346 | 25228R1 |
| 157 | 7 | 72805-01-364-1520 | 89346 | 1811649C91 |
| 157 | 7 | 2805-01-366-3468 | 89346 | 1802339C92 |
| 157 | 8 | | 89346 | 675600C1 |
| 157 | 9 | | 89346 | 676144C1 |
| 157 | 10 | | 89346 | 218211 |
| 157 | 11 | 2815-01-177-2491 | 92679 | 1802340C1 |
| 157 | 12 | 2805-01-365-2745 | 89346 | 1809589C1 |
| 157 | 12 | 2815-01-178-8583 | 92679 | 675621C1 |

## CROSS-REFERENCE INDEXES

### FIGURE AND NUMBER INDEX

| FIG. | ITEM | STOCK NUMBER | CAGEC. | PART NUMBER |
|---|---|---|---|---|
| 157 | 13 | | 89346 | 1811580C1 |
| 158 | | 2805-01-365-3050 | 89346 | 1810359C92 |
| 158 | | 2815-01-363-2553 | 89346 | 1811668C91 |
| 158 | 1 | 2815-01-178-9934 | 29510 | 688923C91 |
| 158 | 2 | | 89346 | 676679C2 |
| 158 | 3 | | 89346 | 675006C1 |
| 158 | 4 | | 89346 | 1808059C91 |
| 158 | 4 | 5306-01-363-4842 | 89346 | 1808060C91 |
| 158 | 4 | 5306-01-363-4843 | 89346 | 1808061C91 |
| 158 | 4 | 5306-01-363-4844 | 89346 | 1808062C91 |
| 158 | 5 | | 89346 | 1810358C91 |
| 158 | 6 | | 89346 | 326874R1 |
| 158 | 7 | | 89346 | 670675C1 |
| 158 | 8 | | 89346 | 1809683C1 |
| 158 | 8 | | 89346 | 1810527C1 |
| 158 | 9 | | 89346 | 1810504C1 |
| 158 | 10 | | 89346 | 680086C1 |
| 159 | 1 | | 89346 | 24862R1 |
| 159 | 2 | | 89346 | 675412C1 |
| 159 | 3 | | 89346 | 677781C91 |
| 159 | 4 | 3020-01-364-6322 | 89346 | 1802393C93 |
| 159 | 4 | 3020-01-365-2753 | 89346 | 1810746C91 |
| 159 | 5 | | 89346 | 25277R1 |
| 159 | 6 | | 89346 | 681905C93 |
| 159 | 7 | | 89346 | 681926C2 |
| 159 | 8 | 2815-01-169-7331 | 92679 | 691631C91 |
| 159 | 9 | 5310-01-166-0762 | 92679 | 687024C1 |
| 159 | 10 | 2805-01-361-3379 | 89346 | 675669C92 |
| 159 | 11 | | 89346 | 691044C1 |
| 159 | 12 | | 89346 | 675364C1 |
| 159 | 13 | | 89346 | 675406C1 |
| 159 | 14 | | 89346 | 17135R1 |
| 159 | 15 | | 89346 | 1808069C91 |
| 159 | 15 | 3120-01-362-4411 | 89346 | 1808070C91 |
| 159 | 15 | 3120-01-362-4412 | 89346 | 1808072C91 |
| 159 | 15 | 3120-01-363-5029 | 89346 | 1808071C91 |
| 159 | 16 | | 89346 | 684579C92 |
| 159 | 16 | 3120-01-180-4831 | 92679 | 684585C92 |
| 159 | 16 | 3120-01-192-2174 | 92679 | 684582C93 |
| 159 | 16 | 3130-01-362-3410 | 89346 | 687394C2 |
| 160 | 1 | 5340-01-362-4394 | 89346 | 279024R91 |
| 160 | 2 | 4720-01-264-5596 | 89346 | 690460C1 |
| 160 | 3 | | 89346 | 25522R1 |
| 160 | 4 | | 96906 | MS35338-46 |
| 160 | 5 | | 89346 | 25896R1 |
| 160 | 6 | | 89346 | 24840R1 |
| 160 | 7 | | 89346 | 690561C1 |
| 160 | 8 | | 89346 | 690560C1 |
| 160 | 9 | | 89346 | 25523R1 |
| 160 | 10 | | 89346 | 690580C1 |
| 160 | 11 | | 89346 | 25077R1 |

## CROSS-REFERENCE INDEXES

### FIGURE AND NUMBER INDEX

| FIG. | ITEM | STOCK NUMBER | CAGEC. | PART NUMBER |
|---|---|---|---|---|
| 160 | 12 | | 89346 | 691644C1 |
| 160 | 13 | | 89346 | 690354C1 |
| 160 | 14 | 4330-01-116-7523 | 29510 | 690233C1 |
| 160 | 15 | 5330-01-179-5911 | 92679 | 673973C4 |
| 161 | | | 89346 | 17008R1 |
| 161 | | | 89346 | 17013R1 |
| 161 | | | 89346 | 273469 |
| 161 | | | 89346 | 343464R1 |
| 161 | | | 89346 | 454096 |
| 161 | | 5330-00-126-3460 | 29510 | 60352D |
| 161 | 1 | 6680-01-290-1653 | 89346 | 691796C1 |
| 161 | 2 | 5340-01-362-4395 | 89346 | 690835C1 |
| 161 | 3 | 2590-01-333-0016 | 89346 | 691848C1 |
| 161 | 4 | 2815-01-179-6356 | 92679 | 691846C1 |
| 161 | 5 | 5310-01-242-2521 | 29510 | 680333C92 |
| 161 | 6 | 5330-01-127-1378 | 29510 | 682945C1 |
| 161 | 7 | | 89346 | 617256C1 |
| 161 | 8 | | 89346 | 1811995C91 |
| 161 | 9 | | 89346 | 327412R1 |
| 161 | 10 | | 89346 | 680483C1 |
| 161 | 11 | | 89346 | 23623R1 |
| 161 | 12 | | 89346 | 684902C1 |
| 161 | 13 | 3120-01-184-5888 | 92679 | 680117C1 |
| 161 | 14 | 4730-00-044-4688 | 89346 | 50410DA |
| 161 | 15 | | 89346 | 682444C1 |
| 141 | 16 | | 89346 | 680484C1 |
| 161 | 17 | | 89346 | 444625 |
| 161 | 18 | 5306-01-178-2053 | 92679 | 1802582C1 |
| 161 | 19 | 3130-01-179-4567 | 92679 | 680243C1 |
| 161 | 20 | 3130-01-180-4947 | 92679 | 680241C1 |
| 162 | | 2520-01-361-3383 | 89346 | 1646579C91 |
| 162 | 1 | 5306-01-177-0865 | 29510 | 26310R1 |
| 162 | 2 | | 89346 | 478954C1 |
| 162 | 3 | 5330-01-363-0624 | 89346 | 478912C1 |
| 162 | 4 | 5340-00-050-1593 | 29930 | 172531 |
| 162 | 5 | | 89346 | 445090 |
| 162 | 6 | 2520-01-363-2352 | 89346 | 461452C1 |
| 162 | 7 | 5360-01-363-4826 | 89346 | 593927C1 |
| 162 | 8 | | 89346 | 17012R1 |
| 162 | 9 | | 89346 | 29360H |
| 162 | 10 | | 89346 | 70311R1 |
| 162 | 11 | | 89346 | 70326R1 |
| 162 | 12 | | 89346 | 17016R1 |
| 162 | 13 | 5305-01-363-4841 | 89346 | 266607C1 |
| 162 | 14 | | 89346 | 593925C91 |
| 162 | 15 | | 89346 | 129286H |
| 162 | 16 | | 89346 | 105911R1 |
| 162 | 17 | | 89346 | 1653096C91 |
| 162 | 18 | | 89346 | 443600C1 |
| 162 | 19 | | 89346 | 478953C2 |
| 162 | 20 | | 89346 | 478955C1 |

## CROSS-REFERENCE INDEXES

### FIGURE AND NUMBER INDEX

| FIG. | ITEM | STOCK NUMBER | CAGEC. | PART NUMBER |
|---|---|---|---|---|
| 162 | 21 | | 89346 | 593926C1 |
| 162 | 22 | | 89346 | 478956C1 |
| 162 | 23 | 2520-00-706-5892 | 02413 | 800E1486 |
| 162 | 24 | 3020-01-365-9216 | 89346 | 546614C1 |
| 162 | 25 | 5305-01-363-4860 | 89346 | 26318R1 |
| 162 | 26 | 5330-01-295-8728 | 89346 | 478908C1 |
| 162 | 27 | | 89346 | 25752R1 |
| 162 | 28 | | 89346 | 121637 |
| 162 | 29 | | 89346 | 466829C3 |
| 162 | 30 | | 89346 | 581116C91 |
| 162 | 31 | 5305-01-363-4855 | 89346 | 27768R1 |
| 162 | 32 | | 89346 | 483392C93 |
| 162 | 33 | 5330-01-363-0611 | 89346 | 424469C91 |
| 162 | 34 | 5330-01-257-5027 | 89346 | 478910C1 |
| 162 | 35 | | 89346 | 590677C91 |
| 162 | 36 | 5330-00-788-5821 | 29510 | 333750R91 |
| 162 | 37 | 3120-00-661-9380 | 89346 | 26905H |
| 162 | 38 | 5330-01-295-8730 | 89346 | 590678C1 |
| 162 | 39 | | 89346 | 1653052C1 |
| 162 | 40 | 5330-01-363-0625 | 89346 | 478909C1 |
| 162 | 41 | | 89346 | 441982C1 |
| 162 | 42 | | 89346 | 593920C1 |
| 162 | 43 | | 89346 | 70352R1 |
| 162 | 44 | | 89346 | 273469 |
| 162 | 45 | 4730-01-363-2007 | 89346 | 243321R1 |
| 162 | 46 | | 89346 | 441366C1 |
| 162 | 47 | | 89346 | 332603C1 |
| 162 | 48 | 5330-01-295-8731 | 89346 | 1653853C91 |
| 162 | 49 | | 89346 | 1653054C91 |
| 162 | 50 | | 89346 | 1653057C1 |
| 162 | 51 | 2520-01-297-9287 | 89346 | 593913C91 |
| 162 | 52 | 3110-01-023-1842 | 29510 | 630204C1 |
| 162 | 53 | 3110-01-023-1841 | 29510 | 630203C91 |
| 162 | 54 | 5310-01-363-6053 | 89346 | 591219C1 |
| 162 | 55 | 5310-01-363-6082 | 89346 | 591220C1 |
| 162 | 56 | | 89346 | 546615C1 |
| 162 | 57 | 3120-01-363-5022 | 89346 | 478932C1 |
| 162 | 58 | | 89346 | 593894C1 |
| 162 | 59 | 3110-01-363-0588 | 89346 | 478993C91 |
| 162 | 60 | | 89346 | 478906C1 |
| 162 | 61 | 3110-00-100-0728 | 24617 | 121694 |
| 162 | 62 | 2520-01-363-2367 | 89346 | 1653039C91 |
| 162 | 63 | 5365-01-363-1508 | 89346 | 593910C1 |
| 162 | 64 | 3120-00-493-3900 | 89346 | 106312R1 |
| 162 | 65 | | 89346 | 1653050C1 |
| 162 | 66 | 3120-01-363-5023 | 89346 | 443610C1 |
| 162 | 67 | | 89346 | 1653048C1 |
| 162 | 68 | 2520-01-363-2368 | 89346 | 1649726C91 |
| 162 | 69 | 5365-01-363-1509 | 89346 | 92460R1 |
| 162 | 70 | | 89346 | 1650622C1 |
| 162 | 71 | | 89346 | 1653046C1 |

## CROSS-REFERENCE INDEXES

### FIGURE AND NUMBER INDEX

| FIG. | ITEM | STOCK NUMBER | CAGEC. | PART NUMBER |
|---|---|---|---|---|
| 162 | 72 | 3110-01-363-7114 | 89346 | 1653051C1 |
| 162 | 73 | 5365-01-363-1510 | 89346 | 684645R1 |
| 162 | 74 | 3120-01-363-5024 | 89346 | 478922C1 |
| 162 | 75 | | 89346 | 1653044C1 |
| 162 | 76 | | 89346 | 593909C1 |
| 162 | 77 | | 89346 | 478921C1 |
| 162 | 78 | 3120-01-363-5025 | 89346 | 171053R1 |
| 162 | 79 | 3110-00-923-1246 | 29510 | 321981R91 |
| 162 | 80 | | 89346 | 399647C1 |
| 162 | 81 | | 89346 | 1653043C1 |
| 162 | 82 | | 89346 | 478930C1 |
| 162 | 83 | 3110-00-100-0544 | 29930 | ST987 |
| 162 | 84 | 3110-00-100-3543 | 29930 | ST2069 |
| 162 | 85 | 5365-01-363-1511 | 89346 | 401756R1 |
| 162 | 86 | | 89346 | 1653042C1 |
| 162 | 87 | 5365-00-986-1885 | 29930 | 357194R1 |
| 162 | 88 | | 89346 | 1653049C1 |
| 162 | 89 | | 89346 | 1653047C1 |
| 162 | 90 | | 89346 | 1653053C1 |
| 162 | 91 | | 89346 | 1653045C1 |
| 162 | 92 | | 89346 | 1653041C1 |
| 163 | | 2520-00-236-7515 | 95019 | D5C |
| 163 | | 2520-01-363-3100 | 89346 | 2607803174 |
| 163 | 1 | 2520-00-388-4197 | 72447 | 5-279X |
| 163 | 2 | | 89346 | 363080C91 |
| 163 | 3 | | 72447 | 5-14-29 |
| 163 | 4 | | 72447 | 5-15-33 |
| 163 | 5 | | 72447 | 5-16-33 |
| 164 | | 2520-01-361-3384 | 89346 | 2487802640 |
| 164 | | 5330-01-301-6373 | 62707 | D3H |
| 164 | 1 | 2520-01-084-3251 | 97271 | 5-188X |
| 164 | 2 | | 89346 | 240468R91 |
| 164 | 3 | | 72447 | 3-14-59 |
| 164 | 4 | | 72447 | 3-15-63 |
| 164 | 5 | | 72447 | 3-16-103 |
| 165 | 1 | | 89346 | 528800C1 |
| 165 | 2 | | 89346 | 528801C1 |
| 165 | 3 | 4820-01-163-2402 | 89346 | 584368C1 |
| 165 | 4 | | 89346 | 141966H |
| 165 | 5 | | 89346 | 444148 |
| 166 | 1 | 5305-01-362-4397 | 89346 | 24872R1 |
| 166 | 2 | 5310-00-820-6653 | 96906 | MS35338-50 |
| 166 | 3 | 5305-01-362-4398 | 89346 | 24874R1 |
| 166 | 4 | 5310-01-024-9658 | 31007 | 25528R1 |
| 166 | 5 | | 89346 | 584491C2 |
| 166 | 6 | | 89346 | 584490C1 |
| 166 | 7 | 5310-01-186-4361 | 89346 | 414089C1 |
| 166 | 8 | 5310-00-531-9120 | 89346 | 107813R1 |
| 166 | 9 | 5306-01-362-4312 | 89346 | 414082C1 |
| 166 | 10 | 5340-01-362-3378 | 89346 | 470031C2 |
| 166 | 11 | | 89346 | 584489C2 |

## CROSS-REFERENCE INDEXES

### FIGURE AND NUMBER INDEX

| FIG. | ITEM | STOCK NUMBER | CAGEC. | PART NUMBER |
|---|---|---|---|---|
| 166 | 12 | 5310-00-594-9379 | 89346 | 414087C1 |
| 166 | 13 | 5306-01-250-0546 | 89346 | 414053C1 |
| 166 | 14 | 5306-01-193-0868 | 89346 | 414052C1 |
| 166 | 15 | | 89346 | 584492C1 |
| 166 | 16 | | 89346 | 585547C1 |
| 166 | 17 | | 89346 | 585548C1 |
| 167 | | 2520-01-361-5029 | 21292 | 872165001 |
| 167 | 1 | 5310-01-363-0628 | 21292 | 688633 |
| 167 | 2 | 5310-01-363-0642 | 21292 | 927775004 |
| 167 | 3 | | 21292 | 265238 |
| 167 | 3 | | 21292 | 265239 |
| 167 | 4 | | 21292 | 927749 |
| 167 | 5 | | 21292 | 793377 |
| 167 | 6 | 5330-01-363-2839 | 21292 | 427464 |
| 167 | 7 | | 21292 | 947223 |
| 167 | 8 | | 21292 | 724222 |
| 167 | 9 | | 21292 | 265982 |
| 167 | 10 | | 21292 | 235372 |
| 167 | 11 | 5330-01-363-2879 | 21292 | 675224 |
| 167 | 12 | | 21292 | 883887003 |
| 167 | 13 | | 21292 | 265892 |
| 167 | 14 | | 21292 | 883887006 |
| 167 | 15 | 2520-01-363-4418 | 21292 | 367268 |
| 167 | 16 | 2520-01-363-4419 | 21292 | 367259 |
| 167 | 17 | 2520-01-363-4420 | 21292 | 367264 |
| 167 | 18 | 5360-01-363-1712 | 21292 | 777485 |
| 167 | 19 | 5365-01-363-6075 | 21292 | 736747 |
| 167 | 20 | | 21292 | 688464 |
| 167 | 21 | | 21292 | 927643 |
| 167 | 22 | | 21292 | 753232 |
| 167 | 23 | 5330-01-363-2880 | 21292 | 675326 |
| 167 | 24 | 5330-01-363-2862 | 21292 | 339223 |
| 167 | 25 | | 21292 | 883479 |
| 167 | 26 | 5365-00-924-0088 | 29930 | 355967R1 |
| 167 | 27 | | 21292 | 742877 |
| 167 | 28 | | 21292 | 769285 |
| 167 | 29 | | 21292 | 265343 |
| 167 | 30 | | 21292 | 235372 |
| 167 | 31 | 5330-01-363-2840 | 21292 | 427399 |
| 167 | 32 | | 21292 | 235485 |
| 167 | 33 | | 21292 | 7442322 |
| 167 | 33 | | 21292 | 7443322 |
| 167 | 33 | 5365-01-363-6095 | 21292 | 7441322 |
| 167 | 34 | | 21292 | 237435 |
| 167 | 35 | 5330-01-174-2684 | 89346 | 496345C1 |
| 167 | 36 | 5330-00-062-3967 | 21292 | 732246 |
| 167 | 37 | 5365-01-363-6076 | 21292 | 736833 |
| 167 | 38 | | 21292 | 769279 |
| 167 | 39 | 3110-01-363-6018 | 21292 | 232238 |
| 167 | 40 | | 21292 | 927224 |
| 167 | 41 | 3110-01-363-6019 | 21292 | 232234 |

## CROSS-REFERENCE INDEXES

### FIGURE AND NUMBER INDEX

| FIG. | ITEM | STOCK NUMBER | CAGEC. | PART NUMBER |
|---|---|---|---|---|
| 167 | 42 | | 21292 | 736235 |
| 167 | 43 | | 21292 | 432557 |
| 167 | 44 | | 21292 | 432236 |
| 167 | 45 | | 21292 | 432478 |
| 167 | 46 | 3110-01-173-6518 | 89346 | 504221C91 |
| 167 | 47 | | 21292 | 235446 |
| 167 | 48 | 5330-01-174-2685 | 89346 | 504211C1 |
| 167 | 49 | | 21292 | 883473 |
| 167 | 50 | | 21292 | 432235 |
| 167 | 51 | 2520-00-132-3160 | 89346 | 968936R91 |
| 167 | 52 | | 21292 | 235487 |
| 167 | 53 | 5330-01-363-2841 | 21292 | 427465 |
| 167 | 54 | | 21292 | 688634 |
| 167 | 55 | | 21292 | 432234 |
| 167 | 56 | | 21292 | 736229 |
| 167 | 57 | 3110-00-155-6596 | 24617 | R1310WB |
| 167 | 58 | | 21292 | 927775003 |
| 167 | 59 | | 21292 | 927757 |
| 167 | 60 | | 21292 | 432558 |
| 167 | 61 | | 21292 | 762292 |
| 167 | 62 | | 21292 | 927756 |
| 167 | 63 | 3110-01-363-6020 | 21292 | 232388 |
| 167 | 64 | | 21292 | 432556 |
| 167 | 65 | | 21292 | 432559 |
| 167 | 66 | | 21292 | 769275 |
| 167 | 67 | | 21292 | 237434 |
| 167 | 68 | 5330-01-363-2842 | 21292 | 427466 |
| 167 | 69 | 5330-01-277-6122 | 89346 | 596175C1 |
| 167 | 70 | | 21292 | 736949 |
| 167 | 71 | | 21292 | 927775001 |
| 167 | 72 | 3110-00-606-9574 | 24617 | 454460 |
| 167 | 73 | 3110-00-101-1789 | 29510 | 286648R1 |
| 167 | 74 | 3110-00-100-3101 | 90640 | 0051438-0 |
| 167 | 75 | | 21292 | 927758 |
| 167 | 76 | | 21292 | 432554 |
| 167 | 77 | | 21292 | 762292 |
| 167 | 78 | 3110-00-814-0630 | 60038 | HM804846 |
| 167 | 79 | | 21292 | 769276 |
| 167 | 80 | | 21292 | 235484 |
| 167 | 81 | | 21292 | 232252 |
| 167 | 82 | 3110-00-061-4770 | 21292 | 232229 |
| 167 | 83 | | 21292 | 736948 |
| 167 | 84 | | 21292 | 736235 |
| 167 | 85 | | 21292 | 432237 |
| 167 | 86 | | 21292 | 769277 |
| 167 | 87 | | 21292 | 468896 |
| 168 | | 2520-01-297-4519 | 89346 | 1071376Z |
| 168 | 1 | | 89346 | 589996C92 |
| 168 | 2 | 2520-01-272-5318 | 89346 | 574868C92 |
| 168 | 3 | | 89346 | 1648215C1 |
| 168 | 4 | 2530-01-285-6227 | 89346 | 593107C92 |

## CROSS-REFERENCE INDEXES

### FIGURE AND NUMBER INDEX

| FIG. | ITEM | STOCK NUMBER | CAGEC. | PART NUMBER |
|---|---|---|---|---|
| 168 | 5 | 2520-01-266-3705 | 95019 | 127740K |
| 168 | 6 | 3120-01-273-4488 | 89346 | 69199C91 |
| 169 | | | 89346 | 101917R1 |
| 169 | | | 89346 | 138572 |
| 169 | | | 89346 | 143406HX |
| 169 | | | 89346 | 230766R1 |
| 169 | | | 89346 | 25930R1 |
| 169 | | | 89346 | 300785C1 |
| 169 | | | 89346 | 309449C1 |
| 169 | | | 89346 | 359279C1 |
| 169 | | | 89346 | 427652 |
| 169 | | | 89346 | 443990 |
| 169 | | | 89346 | 444040 |
| 169 | | | 89346 | 444148 |
| 169 | | | 89346 | 452810C1 |
| 169 | | | 89346 | 459016C1 |
| 169 | | | 89346 | 47126H |
| 169 | | | 89346 | 539925C1 |
| 169 | | | 89346 | 59588DX |
| 169 | | | 89346 | 59595DX |
| 169 | | | 89346 | 71466HX |
| 169 | | | 89346 | 91913R1 |
| 169 | | 2520-01-193-0883 | 89346 | 417200C2 |
| 169 | | 4710-01-083-4458 | 29510 | 417196C2 |
| 169 | | 4720-01-014-4915 | 29510 | 417199C2 |
| 169 | | 4720-01-103-0874 | 89346 | 57489C1 |
| 169 | | 4720-01-166-4452 | 89346 | 459017C1 |
| 169 | | 4730-00-069-1187 | 89346 | 30761VX |
| 169 | | 4730-00-132-4588 | 89346 | 414504C1 |
| 169 | | 4730-00-355-3669 | 31007 | 47128H |
| 169 | | 4730-00-408-9132 | 89346 | 30644V |
| 169 | | 4730-00-409-6278 | 89346 | 30774V |
| 169 | | 4730-01-056-4990 | 89346 | 414505C1 |
| 169 | | 4730-01-168-3605 | 89346 | 574897C91 |
| 169 | | 4730-01-365-2904 | 89346 | 299277C91 |
| 169 | | 5310-00-843-3970 | 89346 | 30773V |
| 169 | | 5310-00-843-4093 | 89346 | 30643V |
| 169 | | 5930-00-018-5922 | 89346 | 873706C91 |
| 170 | | 2530-01-264-3266 | 89346 | 592699C1 |
| 170 | 1 | | 89346 | 167164 |
| 170 | 2 | 5355-01-189-1975 | 89346 | 482528C1 |
| 170 | 3 | | 89346 | 25930R1 |
| 170 | 4 | | 89346 | 344025C1 |
| 170 | 5 | 5365-00-924-0088 | 89346 | 355967R1 |
| 170 | 6 | | 89346 | 344029C1 |
| 170 | 7 | | 89346 | 79061R1 |
| 170 | 8 | | 89346 | 370943R1 |
| 170 | 9 | | 89346 | 344024C1 |
| 170 | 10 | 4820-01-272-7631 | 89346 | 483381C91 |
| 171 | | 4820-01-043-8107 | 89346 | 764368C92 |
| 171 | 1 | | 89346 | 179071H2 |

## CROSS-REFERENCE INDEXES

### FIGURE AND NUMBER INDEX

| FIG. | ITEM | STOCK NUMBER | CAGEC. | PART NUMBER |
|---|---|---|---|---|
| 171 | 2 | | 89346 | 925428C1 |
| 171 | 3 | | 89346 | 179070H2 |
| 171 | 4 | | 89346 | 382137R1 |
| 171 | 5 | | 89346 | 191246R1 |
| 171 | 6 | | 89346 | 179067H1 |
| 172 | 1 | 5305-01-346-3595 | 89346 | 25493R1 |
| 172 | 2 | 5310-01-241-6122 | 89346 | 9413977 |
| 172 | 3 | | 89346 | 475932C1 |
| 172 | 4 | 2530-01-065-2539 | 89346 | 473794C91 |
| 172 | 5 | | 89346 | 349962C1 |
| 173 | | | 89346 | 18479R1 |
| 173 | | | 89346 | 19231R1 |
| 173 | | 2530-01-333-1917 | 89346 | 596003C91 |
| 173 | 1 | | 89346 | 573219C1 |
| 173 | 2 | | 89346 | 683062R91 |
| 173 | 3 | | 89346 | 472151C1 |
| 173 | 4 | 2530-00-293-4373 | 89346 | 871934R1 |
| 173 | 5 | | 89346 | 356117C1 |
| 173 | 6 | | 89346 | 352662C1 |
| 173 | 7 | 5360-01-364-1945 | 89346 | 453120C1 |
| 173 | 8 | | 89346 | 418608C1 |
| 173 | 9 | 5330-01-068-1081 | 89346 | 328235C1 |
| 173 | 10 | | 89346 | 472149C1 |
| 173 | 11 | | 89346 | 472152C91 |
| 173 | 12 | | 89346 | 263082C11 |
| 173 | 13 | | 89346 | 573216C1 |
| 174 | | | 89346 | 18479R1 |
| 174 | | | 89346 | 19231R1 |
| 174 | | 2530-01-269-9398 | 89346 | 573218C91 |
| 174 | 1 | | 89346 | 573219C1 |
| 174 | 2 | | 89346 | 683062R91 |
| 174 | 3 | | 89346 | 472151C1 |
| 174 | 4 | 2530-00-293-4373 | 89346 | 871934R1 |
| 174 | 5 | | 89346 | 356117C1 |
| 174 | 6 | | 89346 | 352662C1 |
| 174 | 7 | 5360-01-364-1945 | 89346 | 453120C1 |
| 174 | 8 | | 89346 | 418608C1 |
| 174 | 9 | 5330-01-068-1081 | 89346 | 328235C1 |
| 174 | 10 | | 89346 | 472149C1 |
| 174 | 11 | | 89346 | 472152C91 |
| 174 | 12 | | 89346 | 263082C11 |
| 174 | 13 | | 89346 | 573216C1 |
| 175 | | | 89346 | 124925 |
| 175 | | | 89346 | 25222R1 |
| 175 | | | 89346 | 25522R1 |
| 175 | | | 89346 | 414051C1 |
| 175 | | | 89346 | 414054C1 |
| 175 | | | 89346 | 444138 |
| 175 | | | 96906 | MS35338-46 |
| 175 | | 4730-00-277-9741 | 89346 | 76263H |
| 175 | | 4730-00-278-5491 | 89346 | 55897R1 |

## CROSS-REFERENCE INDEXES

### FIGURE AND NUMBER INDEX

| FIG. | ITEM | STOCK NUMBER | CAGEC. | PART NUMBER |
|---|---|---|---|---|
| 175 | | 4730-00-426-8180 | 89346 | 55896R1 |
| 175 | | 4730-00-434-6396 | 03533 | 307-22 |
| 175 | | 4730-01-275-4344 | 89346 | 414507C1 |
| 175 | | 4730-01-348-1355 | 89346 | 76262H |
| 175 | | 5305-01-346-2936 | 89346 | 25483R1 |
| 175 | | 5306-01-193-0868 | 89346 | 414052CI |
| 175 | | 5306-01-250-0546 | 89346 | 414053C1 |
| 175 | | 5310-00-582-5965 | 96906 | MS35338-44 |
| 175 | | 5310-00-594-9379 | 89346 | 414087C1 |
| 175 | | 5310-01-065-2596 | 89346 | 25709R1 |
| 175 | 1 | 4720-01-347-7387 | 89346 | 417201C2 |
| 175 | 2 | | 89346 | 55916R11 |
| 175 | 3 | | 89346 | 86879R1 |
| 175 | 4 | 4820-01-165-7890 | 89346 | 483144C91 |
| 175 | 5 | 4720-01-347-7388 | 89346 | 417202C2 |
| 175 | 6 | | 89346 | 971620R91 |
| 175 | 7 | | 89346 | 56233R11 |
| 175 | 8 | | 89346 | 698562R91 |
| 175 | 9 | 4820-00-142-3036 | 51501 | R519 |
| 175 | 10 | 4820-01-065-1793 | 89346 | 777915C92 |
| 175 | 11 | | 89346 | 444655 |
| 175 | 12 | 4730-00-580-7417 | 89346 | 444033 |
| 175 | 13 | | 89346 | 475829C2 |
| 175 | 14 | | 89346 | 475831C3 |
| 175 | 15 | | 89346 | 508658C2 |
| 175 | 16 | 4820-00-689-1899 | 89346 | 386398C91 |
| 175 | 17 | | 89346 | 24776R1 |
| 175 | 18 | | 89346 | 56233R11 |
| 175 | 19 | | 89346 | 452329C1 |
| 175 | 20 | | 89346 | 485937C4 |
| 175 | 21 | | 89346 | 507933C3 |
| 175 | 22 | | 89346 | 459281C1 |
| 176 | 1 | 5310-00-053-7804 | 89346 | 84712H |
| 176 | 1 | 5310-00-400-6438 | 89346 | 84711H |
| 176 | 2 | 2530-01-176-0590 | 89346 | 180751R93 |
| 176 | 3 | 2530-00-136-4443 | 89346 | 37661HC |
| 176 | 4 | 2530-01-363-2515 | 89346 | 582559C1 |
| 176 | 5 | | 89346 | 72336R17 |
| 176 | 6 | | 89346 | 72339R1 |
| 176 | 7 | | 89346 | 263840R1 |
| 176 | 8 | 3120-01-173-6699 | 89346 | ST2098 |
| 176 | 9 | 5330-01-362-3365 | 89346 | 582587C1 |
| 176 | 10 | 3110-00-618-0248 | 60038 | HM218248 |
| 176 | 11 | 5307-01-363-4853 | 89346 | 111428H |
| 176 | 12 | 5307-01-172-7073 | 89346 | 583278C1 |
| 176 | 12 | 5307-01-173-0978 | 89346 | 582605C1 |
| 176 | 13 | 3110-00-143-7585 | 29930 | ST968 |
| 176 | 14 | 3110-00-618-0249 | 60038 | HM218210 |
| 176 | 15 | | 89346 | 582564C1 |
| 177 | | 5310-01-364-9059 | 89346 | 504150C1 |
| 177 | 1 | 5310-00-007-9912 | 89346 | 83155H |

CROSS-REFERENCE INDEXES

FIGURE AND ITEM NUMBER INDEX

| FIG. | ITEM | STOCK NUMBER | CAGEC | PART NUMBER |
|---|---|---|---|---|
| 177 | 1 | 5310-00-053-7808 | 04741 | 11A7062 |
| 177 | 2 | 2530-01-176-0590 | 89346 | 180751R93 |
| 177 | 3 | 2530-00-136-443 | 89346 | 37661HC |
| 177 | 4 | 2530-0-400-6439 | 89346 | 4 1420V |
| 177 | 4 | 2530-00-693-1029 | 96906 | MS53068-1 |
| 177 | 5 | 5310-01-067-8980 | 29510 | 9413983 |
| 177 | 6 | 5306-01-361-8361 | 89'346 | 24889R1 |
| 177 | 7 | 2530-01-327-3002 | 27767 | 3136B |
| 177 | 8 | | 89346 | 67678R1 |
| 177 | 9 | | 89346 | 470422C1 |
| 1 7 7 | 10 | 3110-00-143-7538 | 29930 | ST2018A |
| 177 | 11 | 5330-00-479-4267 | 89346 | 1654330C1 |
| 177 | 12 | 3110-00-100-3611 | 29930 | ST2022 |
| 177 | 13 | | 89346 | 1648524C91 |
| 177 | 13 | | 89346 | 1648525C91 |
| 177 | 14 | 3110-00-143-7586 | 29930 | ST967 |
| 177 | 15 | 3110-00-100-0589 | 29930 | ST969 |
| 177 | 16 | 5307-01-362-2088 | 89346 | 596006C1 |
| 177 | 17 | 5306-00-419-4683 | 89346 | 212254R1 |
| 177 | 17 | 5306-00-456-2574 | 89346 | 212255321 |
| 178 | | 2530-01-362-1149 | 78500 | RDA X550-7559 |
| 178 | 1 | 5305-01-160-7408 | 78500 | 5255 |
| 178 | 2 | 5310-00-760-7442 | 78500 | 1229S513 |
| 178 | 3 | 5340-00-181-1546 | 78500 | 1707C 3 |
| 178 | 4 | | 78500 | 323601798 |
| 178 | 5 | 5310-00-123-2572 | 78500 | 1727N40 |
| 178 | 6 | 2530-01-332-9975 | 89346 | 1671852C91 |
| 178 | 7 | | 78500 | N35P |
| 178 | 8 | | 78500 | 15X725 |
| 178 | 9 | | 78500 | 2797X102 |
| 178 | 10 | | 78500 | A37804121 |
| 178 | 11 | 5330-01-054-5899 | 78500 | 2797R96 |
| 178 | 12 | | 78500 | A431779W231 |
| 178 | 13 | | 78500 | 17794433 |
| 17.8 | 14 | | 78500 | A13780Y77 |
| 178 | 15 | 5360-00-482-4422 | 78500 | 2758W127 |
| 178 | 16 | 2530-W-365-2924 | 78500 | A653722T358 |
| 178 | 17 | | 78500 | A3722T358 |
| 178 | 18 | | 78500 | 2240E4815 |
| 178 | 19 | | 78500 | RV3109 |
| ,178 | 26 | | 78500 | A23211Y2755 |
| 178 | 21 | | 78500 | A1779M195 |
| 178 | 22 | 5310-00-964-7811 | 78500 | 17298262 |
| 178 | 23 | | 78500 | Al2297U4597 |
| 178 | 24 | 5310-00-964-7811 | '78500 | 1729B262 |
| 178 | 25 | 2835-01-366-2754 | 78500 | 1205C1667 |
| 178 | 26 | | 78500 | 2297J4820 |
| 178 | 27 | 2530-01-362-1100 | 78500 | A72297L3158 |
| 178 | 28 | | 78500 | A2297L3158 |
| 178 | 29 | 5330-01-136-0046 | 78500 | 120581666 |
| 178 | 30 | | 78500 | 3280K8175 |

## CROSS-REFERENCE INDEXES

FIGURE AND ITEM NUMBER INDEX

| | FIG. | ITEM | STOCK NUMBER | CAGEC | PART NUMBER |
|---|---|---|---|---|---|
| | 178 | 31 | | 78500 | 3280Y8163 |
| | 178 | 32 | 2530-01-095-2497 | 78500 | A2247U47 |
| | 178 | 33 | | 78500 | K235 |
| | 178 | 34 | | 78500 | A133211Y2755 |
| | 178 | 35 | | 78500 | MN3081 |
| | 178 | 36 | | 78500 | 42X1064 |
| | 178 | 37 | | 78500 | MS20802 1 |
| | 178 | 38 | | 78500 | 22570108 |
| * | 178 | 39 | 2530-01-300-5917 | 78500 | KIT 1168 |
| | 179 | | | 78500 | RDA 1550-760 |
| | 179 | 1 | 5305-01-160-7408 | 78500 | S255 |
| | 179 | 2 | 5310-00-760-7442 | 78500 | 1229S513 |
| | 179 | 3 | 5340-00-181-1546 | 78500 | 1707C3 |
| | 179 | 4 | | 78500 | 323601798 |
| | 179 | 5 | 5310-00-I 23-2572 | 78500 | 172N40 |
| | 179 | 6 | 2530-01-332-9975 | 89346 | 1671852C91 |
| | 179 | 7 | | 78500 | N35P |
| | 179 | 8 | | 78500 | 15X725 |
| | 179 | 9 | | 70500 | 2797X102 |
| | 179 | 10 | | 78500 | A3780Q121 |
| | 179 | 11 | 5330-01-054-5899 | 78500 | 2797R96 |
| | 179 | 12 | | 78500 | A431779W231 |
| | 179 | 13 | | 78500 | 1779Q433 |
| | 179 | 14 | | 78500 | A13780Y77 |
| | 179 | 15 | 5360-00-482-4422 | 78500 | 2758W127 |
| | 179 | 16 | 2530-01-365-2924 | 78500 | A653722T358 |
| | 379 | 17 | | 78500 | A3722T358 |
| | 179 | ta | | 78500 | 2240E4815 |
| | 179 | 19 | | 78500 | RV3109 |
| | 179 | 20 | | 78500 | A33211Y2755 |
| | $79 | 21 | | 78500 | A1779M195 |
| | 179 | 22 | 5310-00-964-7811 | 78500 | 1729B262 |
| | 179 | 23 | | 78500 | A12297U4597 |
| | 179 | 24 | 5310-00-964-7811 | 78500 | 17298262 |
| | 179 | 25 | 2835-01-366-2754 | 78500 | 1205C1667 |
| | 179 | 26 | | 78500 | 2297K4821 |
| | 179 | 27 | 2530-01-362-1100 | 78500 | A72297L3158 |
| | 179 | 28 | | 78500 | A2297L3158 |
| | 179 | 29 | 5330-01-136-0046 | 78500 | 1205B1666 |
| | 179 | 30 | | 78500 | 3280K8175 |
| | 179 | 31 | | 78500 | 3280Y8163 |
| | 179 | 32 | 2530-01-095-2497 | 78500 | A2247047 |
| | 179 | 33 | | 78500 | K235 |
| | 179 | 34 | | 78500 | A133211Y2755 |
| | 179 | 35 | | 78500 | MN3081 |
| | 179 | 36 | | 78500 | 42X1064 |
| | 179 | 37 | | 78500 | MS20802 1 |
| | 179 | 38 | | 78500 | 22570108 |
| * | 179 | 39 | 2530-01 -300-5917 | 78500 | KIT 1168 |
| | 180 | | | 89346 | 496897C91 |
| | 180 | 1 | 5360-01-273-1509 | 89346 | 577655C1 |
| | 180 | 2 | 5360-01-227-1338 | 88346 | 492283C1 |
| | 180 | 3 | | 89346 | 983622R1 |



☆U.S. GOVERNMENT PRINTING OFFICE: 1997 554-024/60197

P.

## CROSS-REFERENCE INDEXES

### FIGURE AND NUMBER INDEX

| FIG. | ITEM | STOCK NUMBER | CAGEC. | PART NUMBER |
|---|---|---|---|---|
| 180 | 4 | | 89346 | 577653C1 |
| 180 | 5 | 2530-01-332-1622 | 89346 | 594885C91 |
| 180 | 6 | | 89346 | 594886C91 |
| 180 | 7 | | 89346 | 262365C1 |
| 180 | 8 | | 89346 | 577652C1 |
| 180 | 9 | | 89346 | 126404R1 |
| 180 | 10 | 5365-00-281-6623 | 89346 | 152450R1 |
| 180 | 11 | | 89346 | 586796C1 |
| 180 | 12 | 2530-01-272-2946 | 89346 | 594891C1 |
| 180 | 13 | | 89346 | 574062C1 |
| 180 | 14 | | 89346 | 588987C91 |
| 180 | 15 | | 89346 | 577654C1 |
| 180 | 16 | 5330-01-084-1063 | 89346 | 56121R3 |
| 180 | 17 | | 89346 | 77013R1 |
| 180 | 18 | | 96906 | MS35338-48 |
| 180 | 19 | | 89346 | 594889C91 |
| 180 | 20 | 5330-01-065-6131 | 89346 | 417488C1 |
| 180 | 21 | 4730-00-848-2521 | 29930 | 109461 |
| 180 | 22 | | 89346 | 594874C91 |
| 180 | 23 | | 89346 | 577650C1 |
| 180 | 24 | | 89346 | 122407R1 |
| 181 | | | 89346 | 496898C91 |
| 181 | 1 | 5360-01-273-1509 | 89346 | 577655C1 |
| 181 | 2 | 5360-01-227-1338 | 89346 | 492283C1 |
| 181 | 3 | | 89346 | 983622R1 |
| 181 | 4 | | 89346 | 577653C1 |
| 181 | 5 | 2530-01-332-1622 | 89346 | 594885C91 |
| 181 | 6 | | 89346 | 594886C91 |
| 181 | 7 | | 89346 | 262365C1 |
| 181 | 8 | | 89346 | 577652C1 |
| 181 | 9 | | 89346 | 126404R1 |
| 181 | 10 | 5365-00-281-6623 | 89346 | 152450R1 |
| 181 | 11 | | 89346 | 586796C1 |
| 181 | 12 | 2530-01-272-2946 | 89346 | 594891C1 |
| 181 | 13 | | 89346 | 574062C1 |
| 181 | 14 | | 89346 | 588988C91 |
| 181 | 15 | | 89346 | 577654C1 |
| 181 | 16 | 5330-01-084-1063 | 89346 | 56121R3 |
| 181 | 17 | | 89346 | 77013R1 |
| 181 | 18 | | 96906 | MS35338-48 |
| 181 | 19 | | 89346 | 594890C91 |
| 181 | 20 | 5330-01-065-6131 | 89346 | 417488C1 |
| 181 | 21 | 4730-00-848-2521 | 29930 | 109461 |
| 181 | 22 | | 89346 | 594873C91 |
| 181 | 23 | | 89346 | 577650C1 |
| 181 | 24 | | 89346 | 122407R1 |
| 182 | | | 89346 | 496905C91 |
| 182 | 1 | 5360-01-273-1509 | 89346 | 577655C1 |
| 182 | 2 | 5360-01-227-1338 | 89346 | 492283C1 |
| 182 | 3 | | 89346 | 983622R1 |
| 182 | 4 | | 89346 | 577653C1 |

## CROSS-REFERENCE INDEXES

### FIGURE AND NUMBER INDEX

| FIG. | ITEM | STOCK NUMBER | CAGEC. | PART NUMBER |
|---|---|---|---|---|
| 182 | 5 | 2530-01-332-1622 | 89346 | 594885C91 |
| 182 | 6 | | 89346 | 594886C91 |
| 182 | 7 | | 89346 | 262365C1 |
| 182 | 8 | | 89346 | 577652C1 |
| 182 | 9 | | 89346 | 126404R1 |
| 182 | 10 | 5365-00-281-6623 | 89346 | 152450R1 |
| 182 | 11 | | 89346 | 586796C1 |
| 182 | 12 | 2530-01-272-2946 | 89346 | 594891C1 |
| 182 | 13 | | 89346 | 574062C1 |
| 182 | 14 | | 89346 | 588988C91 |
| 182 | 15 | | 89346 | 577654C1 |
| 182 | 16 | 5330-01-084-1063 | 89346 | 56121R3 |
| 182 | 17 | | 89346 | 77013R1 |
| 182 | 18 | | 96906 | MS35338-48 |
| 182 | 19 | | 89346 | 588984C91 |
| 182 | 20 | 5330-01-065-6131 | 89346 | 417488C1 |
| 182 | 21 | 4730-00-848-2521 | 29930 | 109461 |
| 182 | 22 | | 89346 | 594877C91 |
| 182 | 23 | | 89346 | 577650C1 |
| 182 | 24 | | 89346 | 122407 |
| 183 | | | 89346 | 496906C91 |
| 183 | 1 | 5360-01-273-1509 | 89346 | 577655C1 |
| 183 | 2 | 5360-01-227-1338 | 89346 | 492283C1 |
| 183 | 3 | | 89346 | 983622R1 |
| 183 | 4 | | 89346 | 577653C1 |
| 183 | 5 | 2530-01-332-1622 | 89346 | 594885C91 |
| 183 | 6 | | 89346 | 594886C91 |
| 183 | 7 | | 89346 | 262365C1 |
| 183 | 8 | | 89346 | 577652C1 |
| 183 | 9 | | 89346 | 126404R1 |
| 183 | 10 | 5365-00-281-6623 | 89346 | 152450R1 |
| 183 | 11 | | 89346 | 586796C1 |
| 183 | 12 | 2530-01-272-2946 | 89346 | 594891C1 |
| 183 | 13 | | 89346 | 574062C1 |
| 183 | 14 | | 89346 | 588987C91 |
| 183 | 15 | | 89346 | 577654C1 |
| 183 | 16 | 5330-01-084-1063 | 89346 | 56121R3 |
| 183 | 17 | | 89346 | 77013R1 |
| 183 | 18 | | 96906 | MS35338-48 |
| 183 | 19 | | 89346 | 588983C91 |
| 183 | 20 | 5330-01-065-6131 | 89346 | 417488C1 |
| 183 | 21 | 4730-00-848-2521 | 29930 | 109461 |
| 183 | 22 | | 89346 | 594878C91 |
| 183 | 23 | | 89346 | 577650C1 |
| 183 | 24 | | 89346 | 122407R1 |
| 184 | | 2520-00-236-7515 | 95019 | D5C |
| 184 | | 2520-01-361-9303 | 89346 | 260780 3552 |
| 184 | 1 | 2520-00-388-4197 | 72447 | 5-279X |
| 184 | 2 | | 89346 | 363080C91 |
| 184 | 3 | | 72447 | 5-14-29 |
| 184 | 4 | | 72447 | 5-15-33 |

## CROSS-REFERENCE INDEXES

### FIGURE AND NUMBER INDEX

| FIG. | ITEM | STOCK NUMBER | CAGEC. | PART NUMBER |
|---|---|---|---|---|
| 184 | 5 | | 72447 | 5-16-33 |
| 185 | | 2520-00-236-7515 | 95019 | D5C |
| 185 | | 2520-01-359-9682 | 89346 | 2600545179 |
| 185 | 1 | 2520-00-388-4197 | 72447 | 5-279X |
| 185 | 2 | | 89346 | 571134C91 |
| 185 | 3 | | 72447 | 5-14-29 |
| 185 | 4 | | 72447 | 5-15-33 |
| 185 | 5 | | 72447 | 5-16-33 |
| 186 | | | 89346 | 1648900C91 |
| 186 | | | 89346 | 19415R1 |
| 186 | | | 89346 | 25712R1 |
| 186 | | | 89346 | 25866R1 |
| 186 | | | 89346 | 378066R1 |
| 186 | | | 89346 | 586045C1 |
| 186 | | | 89346 | 587212C1 |
| 186 | | | 89346 | 592534C91 |
| 186 | | | 96906 | MS35338-50 |
| 186 | | 2520-01-297-9278 | 89346 | 1651523091 |
| 186 | | 2520-01-362-1786 | 89346 | 493205C91 |
| 186 | | 2520-01-362-3505 | 89346 | 1651263C91 |
| 186 | | 5330-01-187-8634 | 89346 | 895493R2 |
| 186 | 1 | | 89346 | 578881C1 |
| 186 | 2 | | 89346 | 1651279C91 |
| 186 | 3 | 5305-01-362-1303 | 89346 | 583164C1 |
| 186 | 3 | 5305-01-362-1304 | 89346 | 583165C1 |
| 186 | 4 | | 89346 | 481119C2 |
| 186 | 5 | | 89346 | 630695C1 |
| 186 | 6 | | 89346 | 482040C1 |
| 186 | 6 | | 89346 | 496276C1 |
| 186 | 6 | | 89346 | 496277C1 |
| 186 | 6 | 5365-01-361-8394 | 89346 | 482041C1 |
| 186 | 6 | 5365-01-361-8395 | 89346 | 482042C1 |
| 186 | 6 | 5365-01-361-8396 | 89346 | 482043C1 |
| 186 | 6 | 5365-01-361-8397 | 89346 | 482044C1 |
| 186 | 6 | 5365-01-361-8398 | 89346 | 482045C1 |
| 186 | 7 | | 89346 | 630694C91 |
| 186 | 8 | 3020-01-360-1580 | 89346 | 1651264C91 |
| 186 | 9 | 5305-01-362-1305 | 89346 | 27857R1 |
| 186 | 10 | | 89346 | 396873C1 |
| 186 | 10 | | 89346 | 464248C1 |
| 186 | 11 | | 89346 | 463413C1 |
| 186 | 12 | 5305-01-362-1306 | 89346 | 583166C1 |
| 186 | 13 | | 89346 | 592535C1 |
| 186 | 14 | | 89346 | 258452C1 |
| 186 | 15 | | 89346 | 258453C91 |
| 186 | 16 | | 89346 | ST 3022 |
| 186 | 17 | | 89346 | 495024C1 |
| 186 | 18 | | 89346 | 463430C2 |
| 186 | 19 | | 89346 | 481108C1 |
| 186 | 20 | | 89346 | 440300C1 |
| 186 | 21 | | 89346 | 455387C91 |

## CROSS-REFERENCE INDEXES

### FIGURE AND NUMBER INDEX

| FIG. | ITEM | STOCK NUMBER | CAGEC. | PART NUMBER |
|---|---|---|---|---|
| 186 | 22 | | 89346 | 455386C1 |
| 186 | 23 | 5365-01-361-8406 | 89346 | 1654953C1 |
| 186 | 23 | 5365-01-361-8407 | 89346 | 1654954C1 |
| 186 | 23 | 5365-01-361-8408 | 89346 | 1654955C1 |
| 186 | 23 | 5365-01-361-8409 | 89346 | 1654956C1 |
| 186 | 23 | 5365-01-361-8410 | 89346 | 1654957C1 |
| 186 | 23 | 5365-01-361-8411 | 89346 | 1654958C1 |
| 186 | 23 | 5365-01-361-8412 | 89346 | 1654959C1 |
| 186 | 23 | 5365-01-361-9009 | 89346 | 1654960C1 |
| 186 | 24 | 3020-01-362-1816 | 89346 | 1654949C91 |
| 186 | 25 | | 89346 | 463420C2 |
| 186 | 26 | | 89346 | 589339C1 |
| 186 | 27 | | 89346 | 1651280C91 |
| 186 | 28 | | 89346 | 26310R1 |
| 186 | 28 | | 96906 | MS35338-46 |
| 186 | 29 | | 89346 | 481811C1 |
| 186 | 30 | | 89346 | 660433R1 |
| 186 | 31 | | 89346 | ST 264 |
| 186 | 32 | | 89346 | 464238C2 |
| 186 | 33 | | 89346 | ETN0083799 |
| 186 | 34 | | 89346 | 483442C1 |
| 186 | 35 | | 89346 | 381926C91 |
| 186 | 36 | | 89346 | 584255C1 |
| 186 | 37 | 5365-01-361-9010 | 89346 | 360453C1 |
| 186 | 37 | 5365-01-361-9011 | 89346 | 360457C1 |
| 186 | 37 | 5365-01-361-9012 | 89346 | 360461C1 |
| 186 | 37 | 5365-01-361-9013 | 89346 | 360465C1 |
| 186 | 37 | 5365-01-361-9014 | 89346 | 360469C1 |
| 186 | 37 | 5365-01-361-9015 | 89346 | 393975C1 |
| 186 | 37 | 5365-01-361-9062 | 89346 | 393979C1 |
| 186 | 38 | | 89346 | 482787C91 |
| 186 | 39 | | 89346 | 157566R1 |
| 186 | 39 | | 89346 | 157567R1 |
| 186 | 40 | | 89346 | 65071H |
| 186 | 41 | | 89346 | 583158C1 |
| 186 | 42 | | 89346 | 464253C92 |
| 186 | 43 | | 89346 | 91082R91 |
| 186 | 44 | | 89346 | 597242C91 |
| 186 | 45 | | 89346 | 24895R1 |
| 186 | 46 | 5315-00-059-0206 | 96906 | MS24665-491 |
| 186 | 47 | 5310-01-254-4260 | 89346 | 157491R2 |
| 186 | 48 | | 89346 | 69208R1 |
| 186 | 49 | | 89346 | ST 2161 |
| 186 | 50 | | 89346 | ST 2162 |
| 186 | 51 | | 89346 | 157493R1 |
| 186 | 52 | | 89346 | 27293R1 |
| 186 | 53 | | 89346 | 864358R2 |
| 186 | 54 | | 89346 | 579366C91 |
| 186 | 55 | | 89346 | 157490R1 |
| 186 | 56 | | 89346 | 505757C1 |
| 186 | 57 | 2520-01-325-9110 | 89346 | 571349C2 |

## CROSS-REFERENCE INDEXES

### FIGURE AND NUMBER INDEX

| FIG. | ITEM | STOCK NUMBER | CAGEC | PART NUMBER |
|---|---|---|---|---|
| 186 | 58 | | 89346 | 595593C1 |
| 187 | | | 89346 | 25712R1 |
| 187 | | | 89346 | 390362R1 |
| 187 | | | 89346 | 595203C91 |
| 187 | | | 96906 | MS35338-50 |
| 187 | | 2520-01-362-1786 | 89346 | 493205C91 |
| 187 | | 3120-01-285-7065 | 89346 | 1651517C91 |
| 187 | | 5330-01-257-5026 | 89346 | 895478R2 |
| 187 | 1 | | 89346 | 578881C1 |
| 187 | 2 | | 89346 | 1651281C91 |
| 187 | 3 | | 89346 | 381926C91 |
| 167 | 4 | | 89346 | 584255C1 |
| 187 | 5 | | 89346 | 454719C91 |
| 187 | 6 | | 89346 | 65071H |
| 187 | 7 | 5365-01-361-9010 | 89346 | 360453C1 |
| 187 | 7 | 5365-01-361-9011 | 89346 | 360457C1 |
| 187 | 7 | 5365-01-361-9012 | 89346 | 360461C1 |
| 187 | 7 | 5365-01-361-9013 | 89346 | 360465C1 |
| 187 | 7 | 5365-01-361-9014 | 89346 | 360469C1 |
| 187 | 7 | 5365-01-361-9015 | 89346 | 393975C1 |
| 187 | 7 | 5365-01-361-9062 | 89346 | 393979C1 |
| 187 | 8 | | 89346 | 157566R1 |
| 187 | 8 | | 89346 | 157567R1 |
| 187 | 8 | | 89346 | 896612R1 |
| 187 | 9 | | 89346 | 583158C1 |
| 187 | 10 | | 89346 | 161019R93 |
| 187 | 11 | | 89346 | 24895R1 |
| 187 | 12 | 5315-00-059-0206 | 96906 | MS24665-491 |
| 187 | 13 | 5310-01-254-4260 | 89346 | 157491R2 |
| 187 | 14 | | 89346 | 69208R1 |
| 187 | 15 | | 89346 | 597242C91 |
| 187 | 16 | | 89346 | 91082R91 |
| 187 | 17 | | 89346 | ST 2161 |
| 187 | 18 | | 89346 | ST 2162 |
| 187 | 19 | | 89346 | 157493R1 |
| 187 | 20 | | 89346 | 27293R1 |
| 187 | 21 | | 89346 | 864358R2 |
| 187 | 22 | | 89346 | 579365C91 |
| 187 | 23 | | 89346 | 157490R1 |
| 187 | 24 | | 89346 | 505757C1 |
| 187 | 25 | 2520-01-325-9110 | 89346 | 571349C2 |
| 187 | 26 | 2520-00-446-7518 | 89346 | 91916R91 |
| 187 | 27 | 4730-01-065-1817 | 89346 | 586049C1 |
| 187 | 28 | | 89346 | 586045C1 |
| 187 | 29 | | 89346 | 595577C1 |
| 188 | | | 89346 | 388418C1 |
| 188 | | | 89346 | 471348C91 |
| 188 | | | 89346 | 471349C1 |
| 188 | | | 89346 | 471350C1 |
| 188 | | | 89346 | 9413983 |
| 188 | | 2520-01-157-7982 | 89346 | 496530C91 |

## CROSS-REFERENCE INDEXES

### FIGURE AND NUMBER INDEX

| FIG. | ITEM | STOCK NUMBER | CAGEC | PART NUMBER |
|---|---|---|---|---|
| 188 | | 5310-00-594-9379 | 89346 | 414087C1 |
| 188 | | 5310-01-186-4361 | 89346 | 414089C1 |
| 188 | | 5310-01-187-8546 | 89346 | 1675448C1 |
| 188 | | 5310-01-278-8289 | 89346 | 25527R1 |
| 188 | | 5365-01-133-8246 | 89346 | 439247C91 |
| 188 | 1 | | 89346 | 130564R1 |
| 188 | 2 | | 89346 | 332547C1 |
| 188 | 3 | | 89346 | 130559R1 |
| 188 | 4 | | 89346 | 124891R1 |
| 188 | 5 | | 89346 | 470822C91 |
| 188 | 6 | | 89346 | 380336C91 |
| 188 | 6 | | 89346 | 474910C91 |
| 188 | 7 | 5365-01-361-8383 | 89346 | 441302C92 |
| 188 | 8 | | 89346 | 496452C1 |
| 188 | 9 | | 89346 | 757816C1 |
| 188 | 10 | | 89346 | 496455C1 |
| 188 | 11 | | 89346 | 526000C1 |
| 188 | 12 | | 89346 | 526001C1 |
| 188 | 13 | | 89346 | 124896R2 |
| 188 | 14 | 5315-00-481-9829 | 89346 | 69104HA |
| 188 | 15 | 4730-00-172-0031 | 29510 | 109460 |
| 188 | 16 | 5315-01-186-5190 | 89346 | 422232C2 |
| 188 | 17 | 5305-01-363-2648 | 89346 | 25296R1 |
| 188 | 18 | 5310-01-186-4979 | 89346 | 9412230 |
| 188 | 19 | 5365-01-336-0658 | 89346 | 463580R1 |
| 188 | 20 | | 89346 | 359798C1 |
| 188 | 21 | | 89346 | 304645C1 |
| 188 | 22 | | 89346 | 310293C1 |
| 188 | 23 | | 89346 | 12436R1 |
| 188 | 24 | 5310-00-584-7888 | 96906 | MS35338-51 |
| 188 | 25 | | 89346 | 25529R1 |
| 188 | 26 | | 89346 | 443646C92 |
| 188 | 27 | | 89346 | 56677R2 |
| 188 | 28 | | 89346 | 58694R1 |
| 188 | 29 | | 89346 | 899214R11 |
| 188 | 30 | | 89346 | 471347C91 |
| 188 | 31 | 5306-01-313-0228 | 89346 | 414079C1 |
| 188 | 32 | 5306-01-282-2633 | 89346 | 414078C1 |
| 188 | 33 | | 89346 | 468893C2 |
| 188 | 34 | 5306-00-177-5439 | 88044 | AN101723 |
| 188 | 35 | | 89346 | 469825C1 |
| 188 | 36 | | 89346 | 469785C3 |
| 188 | 37 | | 89346 | 493507C1 |
| 188 | 38 | | 89346 | 468894C1 |
| 188 | 39 | | 89346 | 25360R1 |
| 188 | 40 | 5307-01-066-9104 | 89346 | 124755R1 |
| 188 | 41 | | 89346 | 384190C2 |
| 188 | 42 | 2530-01-238-1869 | 89346 | 583841C91 |
| 188 | 43 | 5306-00-576-1327 | 80020 | 87751-69 |
| 188 | 44 | | 89346 | 425966C1 |
| 188 | 45 | 5306-01-250-0546 | 89346 | 414053C1 |

## CROSS-REFERENCE INDEXES

### FIGURE AND NUMBER INDEX

| FIG. | ITEM | STOCK NUMBER | CAGEC | PART NUMBER |
|---|---|---|---|---|
| 188 | 46 | | 89346 | 492508C1 |
| 188 | 47 | | 89346 | 492506C1 |
| 188 | 48 | 5306-00-206-9801 | 80020 | J87882-31 |
| 188 | 49 | 5306-01-276-0830 | 89346 | 414076C1 |
| 188 | 50 | | 89346 | 468904C3 |
| 188 | 50 | | 89346 | 468905C3 |
| 188 | 51 | | 89346 | 468900C2 |
| 188 | 51 | | 89346 | 468901C2 |
| 188 | 52 | | 89346 | 12015R1 |
| 188 | 53 | | 89346 | 416744C3 |
| 188 | 53 | | 89346 | 468899C1 |
| 189 | | | 89346 | 582534C1 |
| 189 | | | 89346 | 584251C91 |
| 189 | | | 89346 | 9412230 |
| 189 | | 2835-01-361-7029 | 89346 | 493202C91 |
| 189 | | 3120-01-285-5440 | 89346 | 1651515C91 |
| 189 | | 5310-00-209-0965 | 96906 | MS35338-47 |
| 189 | | 5310-00-582-5965 | 96906 | MS35338-44 |
| 189 | | 5315-00-059-0206 | 96906 | MS24665-491 |
| 189 | 1 | 5305-01-362-1307 | 89346 | 582550C1 |
| 189 | 2 | 2530-01-363-2390 | 89346 | 582567C1 |
| 189 | 3 | 5310-01-361-6943 | 89346 | 582580C1 |
| 189 | 4 | 5310-01-362-1289 | 89346 | 583284C1 |
| 189 | 5 | 4730-01-361-8066 | 89346 | 582590C1 |
| 189 | 6 | 2520-01-182-1854 | 89346 | 582589C1 |
| 189 | 7 | | 89346 | 582588C1 |
| 189 | 8 | | 89346 | 582597C1 |
| 189 | 9 | | 89346 | 474517C2 |
| 189 | 10 | | 89346 | 582595C1 |
| 189 | 11 | 5315-00-234-1664 | 96906 | MS24665-495 |
| 189 | 12 | 5310-00-835-2140 | 96906 | MS35692-69 |
| 189 | 13 | 2530-00-491-5012 | 89346 | 110362R92 |
| 189 | 13 | 2530-00-695-3376 | 89346 | 110363R92 |
| 189 | 14 | 5340-01-361-6561 | 89346 | 582543C1 |
| 189 | 15 | | 89346 | 583296C1 |
| 189 | 16 | | 2L563 | 688265 |
| 189 | 17 | | 2L563 | 927276 |
| 189 | 18 | | 2L563 | 255446 |
| 189 | 19 | 2530-01-363-2568 | 89346 | 1671201C1 |
| 189 | 20 | 5306-01-363-2626 | 89346 | 582583C1 |
| 189 | 21 | | 89346 | 582548C1 |
| 189 | 21 | | 89346 | 582549C1 |
| 189 | 22 | | 89346 | 582575C1 |
| 189 | 23 | | 89346 | 583287C1 |
| 189 | 24 | 5365-01-361-8399 | 89346 | 583279C1 |
| 189 | 25 | | 89346 | 582545C1 |
| 189 | 26 | | 89346 | 583285C1 |
| 189 | 26 | | 89346 | 583292C1 |
| 189 | 27 | | 89346 | 583299C91 |
| 189 | 28 | 3110-01-324-6650 | 89346 | 582586C1 |
| 189 | 29 | 5330-01-358-5406 | 21292 | 732333 |

## CROSS-REFERENCE INDEXES

### FIGURE AND NUMBER INDEX

| FIG. | ITEM | STOCK NUMBER | CAGEC | PART NUMBER |
|---|---|---|---|---|
| 189 | 30 | 3110-01-331-9936 | 89346 | 413923C91 |
| 189 | 31 | | 89346 | 582598C1 |
| 189 | 32 | | 89346 | 582599C1 |
| 189 | 33 | | 89346 | 583294C1 |
| 189 | 34 | 4610-01-362-2378 | 89346 | 583282C1 |
| 189 | 35 | | 89346 | 582578C1 |
| 189 | 36 | | 89346 | 582533C1 |
| 189 | 37 | | 89346 | 582552C1 |
| 189 | 37 | | 89346 | 582553C1 |
| 189 | 38 | | 89346 | 416187C1 |
| 189 | 39 | | 89346 | 582569C1 |
| 189 | 40 | | 89346 | 583280C1 |
| 189 | 41 | 4730-00-172-0028 | 96906 | MS15003-4 |
| 189 | 41 | 4730-01-363-5163 | 89346 | 582557C1 |
| 189 | 42 | 2520-01-182-1838 | 89346 | 582556091 |
| 189 | 43 | | 89346 | 583293C91 |
| 189 | 44 | | 89346 | 582573C1 |
| 189 | 45 | | 89346 | 582555C1 |
| 189 | 46 | | 89346 | 582547C1 |
| 189 | 47 | | 89346 | 583286C1 |
| 189 | 48 | | 89346 | 582542C1 |
| 189 | 49 | | 89346 | 582601C1 |
| 189 | 50 | | 89346 | 582600C1 |
| 189 | 51 | | 89346 | 582572C1 |
| 189 | 52 | | 89346 | 583289C1 |
| 189 | 53 | | 89346 | 582540C1 |
| 189 | 54 | | 89346 | 582554C1 |
| 189 | 55 | 5330-01-308-0098 | 89346 | 582568C1 |
| 189 | 56 | | 89346 | 582551C1 |
| 189 | 57 | | 89346 | 95572HA |
| 189 | 58 | | 89346 | 582604C1 |
| 189 | 59 | | 89346 | 582576C1 |
| 189 | 60 | | 89346 | 583291C1 |
| 189 | 61 | | 89346 | 583295C1 |
| 189 | 62 | 5330-01-277-0918 | 89346 | 582584C91 |
| 189 | 63 | 2520-01-362-5766 | 89346 | 590147C1 |
| 189 | 63 | 2520-01-363-3105 | 89346 | 590148C1 |
| 189 | 64 | 4730-01-361-8070 | 89346 | 582591C1 |
| 189 | 65 | 4730-01-361-8329 | 89346 | 582592C1 |
| 189 | 66 | 2520-00-132-3160 | 89346 | 968936R91 |
| 189 | 67 | | 89346 | 24852R1 |
| 189 | 67 | | 89346 | 70427R1 |
| 189 | 68 | | 89346 | 582596C1 |
| 189 | 69 | | 89346 | 582563C1 |
| 189 | 70 | | 89346 | 117804H |
| 189 | 71 | | 89346 | 54557H |
| 189 | 72 | | 89346 | 454755C1 |
| 189 | 73 | | 89346 | FHPM903249 |
| 189 | 74 | | 89346 | 584255C1 |
| 189 | 75 | | 89346 | 138498 |
| 189 | 76 | | 89346 | FPHM903210 |

## CROSS-REFERENCE INDEXES

### FIGURE AND NUMBER INDEX

| FIG. | ITEM | STOCK NUMBER | CAGEC | PART NUMBER |
|---|---|---|---|---|
| 189 | 77 | | 89346 | 454711C91 |
| 189 | 78 | 5365-00-378-7253 | 89346 | 52749HA |
| 189 | 78 | 5365-00-529-8457 | 89346 | 52748HA |
| 189 | 78 | 5365-01-361-9058 | 89346 | 683264R1 |
| 189 | 79 | | 89346 | 49419HA |
| 189 | 79 | | 89346 | 49421HA |
| 189 | 79 | 2520-00-630-0148 | 92679 | 49417HA |
| 189 | 79 | 5365-00-215-4108 | 89346 | 49413HA |
| 189 | 79 | 5365-01-361-8413 | 89346 | 49415HA |
| 189 | 80 | 3110-00-100-7332 | 89346 | 69023R92 |
| 189 | 81 | | 89346 | 69018R1 |
| 189 | 82 | | 89346 | 69016R93 |
| 189 | 83 | 5340-01-361-6967 | 89346 | ETN0090186 |
| 189 | 84 | | 89346 | 54528HA |
| 189 | 85 | | 89346 | FP3925 |
| 189 | 86 | | 89346 | FP3984 |
| 189 | 87 | | 89346 | 25752R1 |
| 189 | 88 | | 89346 | 83420R91 |
| 189 | 89 | | 89346 | 25293R1 |
| 189 | 90 | | 89346 | 69017R1 |
| 189 | 91 | | 89346 | 578793C91 |
| 189 | 92 | | 89346 | 436833C2 |
| 189 | 93 | | 89346 | 436832C2 |
| 189 | 94 | 2520-01-293-2872 | 89346 | 1651273C91 |
| 189 | 95 | | 89346 | 88015H |
| 189 | 96 | | 89346 | 86233H |
| 190 | | | 89346 | 273896 |
| 190 | | | 89346 | 539560C1 |
| 190 | | | 89346 | 539561C1 |
| 190 | | | 89346 | 539562C1 |
| 190 | 1 | 2510-01-258-2403 | 89346 | 506911C91 |
| 190 | 2 | 5310-00-594-9379 | 89346 | 414087C1 |
| 190 | 3 | | 89346 | 533388C1 |
| 190 | 4 | | 89346 | 472368C1 |
| 190 | 5 | | 89346 | 617605R1 |
| 190 | 6 | 5310-01-064-7589 | 29510 | 9412231 |
| 190 | 7 | 5305-01-363-1521 | 89346 | 25680R1 |
| 190 | 8 | 5310-01-278-8436 | 89346 | 25711R1 |
| 190 | 9 | | 89346 | 539907C2 |
| 190 | 10 | 5310-00-594-9379 | 89346 | 414087C1 |
| 190 | 10 | 5310-01-186-4979 | 89346 | 9412230 |
| 190 | 11 | | 89346 | 414054C1 |
| 190 | 11 | | 89346 | 431309C1 |
| 190 | 12 | | 89346 | 471876C1 |
| 190 | 13 | 5306-01-250-0546 | 89346 | 414053C1 |
| 190 | 14 | | 89346 | 487703C1 |
| 190 | 15 | 5310-01-067-8403 | 89346 | 9413979 |
| 190 | 16 | 5310-01-065-2596 | 89346 | 25709R1 |
| 190 | 17 | | 89346 | 441246C1 |
| 190 | 18 | | 89346 | 1648111C1 |
| 190 | 19 | | 89346 | 1648112C1 |

## CROSS-REFERENCE INDEXES

### FIGURE AND NUMBER INDEX

| FIG. | ITEM | STOCK NUMBER | CAGEC | PART NUMBER |
|---|---|---|---|---|
| 190 | 20 | 4730-00-848-2521 | 29930 | 109461 |
| 190 | 21 | | 89346 | 468699C1 |
| 190 | 22 | | 89346 | 472479C1 |
| 190 | 23 | | 89346 | 416743C1 |
| 190 | 24 | | 89346 | 465914C1 |
| 190 | 25 | | 89346 | 539519C1 |
| 190 | 26 | | 89346 | 539494C2 |
| 190 | 27 | | 89346 | 899209R11 |
| 190 | 28 | | 89346 | 268223C1 |
| 190 | 29 | | 89346 | 539559C91 |
| 190 | 30 | | 89346 | 24861R1 |
| 190 | 31 | | 89346 | 539460R1 |
| 190 | 31 | | 89346 | 539899C1 |
| 190 | 32 | | 89346 | 484082C1 |
| 190 | 32 | | 89346 | 484084C1 |
| 190 | 33 | | 89346 | 484086C91 |
| 190 | 34 | | 89346 | 484090C91 |
| 190 | 35 | | 89346 | 495873C1 |
| 191 | | 5310-01-065-2596 | 89346 | 25709R1 |
| 191 | 1 | 5310-01-186-4979 | 89346 | 9412230 |
| 191 | 2 | | 89346 | 275635R1 |
| 191 | 3 | | 89346 | 471453C2 |
| 191 | 4 | | 89346 | 596589C1 |
| 191 | 5 | 5306-01-068-1071 | 89346 | 24840R1 |
| 191 | 6 | 5310-01-067-8403 | 89346 | 9413979 |
| 191 | 7 | | 89346 | 579741C1 |
| 191 | 8 | | 89346 | 494135C1 |
| 191 | 9 | | 89346 | 414054C1 |
| 191 | 9 | 5306-01-193-0868 | 89346 | 414052C1 |
| 191 | 10 | 5310-00-594-9379 | 89346 | 414087C1 |
| 191 | 11 | | 89346 | 483846C1 |
| 192 | | 5365-00-274-4544 | 89346 | 48122H |
| 192 | 1 | 5340-01-334-3565 | 89346 | 289747R91 |
| 192 | 2 | 5330-01-346-0315 | 89346 | 111442R1 |
| 192 | 3 | | 89346 | 162135R1 |
| 192 | 4 | | 89346 | 26627R1 |
| 192 | 5 | 6680-01-186-2626 | 89346 | 476846C1 |
| 192 | 6 | 5330-01-121-8367 | 89346 | 345253C1 |
| 192 | 7 | | 89346 | 475255C1 |
| 192 | 8 | 5340-01-362-5027 | 89346 | 1649608C91 |
| 192 | 9 | 4730-00-482-8111 | 89346 | 553791C1 |
| 192 | 10 | 4720-01-362-5664 | 89346 | 990686C1 |
| 192 | 11 | | 89346 | 336024C1 |
| 192 | 12 | 5330-00-105-1740 | 89346 | 217639R1 |
| 192 | 13 | | 89346 | 475277C95 |
| 193 | | 5310-00-594-9379 | 89346 | 414087C1 |
| 193 | | 5310-01-067-8403 | 89346 | 9413979 |
| 193 | | 5310-01-283-7623 | 89346 | 25708R1 |
| 193 | | 6140-01-348-4055 | 89346 | IHCLM31S |
| 193 | | 6150-01-355-3466 | 89346 | 1657226C91 |
| 193 | | 6150-01-366-1581 | 89346 | 70736R92 |

## CROSS-REFERENCE INDEXES

### FIGURE AND NUMBER INDEX

| FIG. | ITEM | STOCK NUMBER | CAGEC | PART NUMBER |
|---|---|---|---|---|
| 193 | | 6150-01-367-5442 | 89346 | 482256C2 |
| 193 | | 6150-01-367-7427 | 89346 | 482633C92 |
| 193 | 1 | 5305-01-346-3522 | 89346 | 27216R1 |
| 193 | 2 | 5305-01-346-3593 | 89346 | 25228R1 |
| 193 | 3 | 5340-01-365-8079 | 89346 | 777812C91 |
| 193 | 3 | 6140-01-201-0641 | 89346 | 491668C92 |
| 193 | 4 | 5320-01-307-5809 | 89346 | 24641R1 |
| 193 | 5 | | 89346 | 476348C3 |
| 193 | 6 | 5310-01-241-6122 | 89346 | 9413977 |
| 193 | 7 | 5306-01-365-9638 | 89346 | 434764C1 |
| 193 | 8 | | 89346 | 533092C3 |
| 193 | 9 | | 89346 | 104112 |
| 193 | 10 | 5305-01-349-5133 | 89346 | 24839R1 |
| 193 | 11 | | 89346 | 476303C2 |
| 193 | 12 | | 89346 | 990347R91 |
| 193 | 13 | 5306-01-068-1071 | 89346 | 24840R1 |
| 193 | 14 | | 89346 | 476301C1 |
| 193 | 15 | 5310-01-065-2596 | 89346 | 25709R1 |
| 193 | 16 | | 89346 | 504548C1 |
| 193 | 17 | | 89346 | 504917C1 |
| 193 | 18 | | 89346 | 504547C1 |
| 193 | 19 | 5306-01-193-0868 | 89346 | 414052C1 |
| 193 | 19 | 5306-01-250-0546 | 89346 | 414053C1 |
| 193 | 20 | | 89346 | 505031C1 |
| 193 | 21 | | 89346 | 505033C2 |
| 193 | 22 | | 89346 | 476349C3 |
| 194 | | | 7T253 | SD-20 |
| 194 | 1 | 5305-00-071-2069 | 66195 | 22541R1 |
| 194 | 2 | 5310-00-225-6993 | 96906 | MS51922-33 |
| 194 | 3 | 5310-00-809-5997 | 96906 | MS27183-17 |
| 194 | 4 | | 7T253 | 3153 |
| 194 | 5 | 5305-00-071-2070 | 80204 | B1821BHO50C175N |
| 194 | 6 | | 7T253 | 2580 |
| 194 | 6 | | 7T253 | 2581 |
| 194 | 7 | | 89346 | 473210C1 |
| 194 | 7 | | 89346 | 492825C1 |
| 194 | 8 | | 89346 | 473322C2 |
| 194 | 9 | | 89346 | 473323C3 |
| 194 | 10 | 5305-00-724-7224 | 80204 | B1821BH063C250N |
| 194 | 11 | 5310-00-823-8803 | 96906 | MS27183-21 |
| 194 | 12 | 5310-00-269-4040 | 96906 | MS51922-49 |
| 194 | 13 | | 7T253 | 476 |
| 194 | 14 | | 96906 | MS90728-174 |
| 194 | 15 | | 74410 | XB-0011-1 |
| 194 | 16 | | 7T253 | 875 |

By Order of the Secretary of the Army:

**GORDON R. SULLIVAN**
*General, United States Army*
*Chief of Staff*

Official:

**MILTON H. HAMILTON**
*Administrative Assistant to the*
*Secretary of the Army*
03808

DISTRIBUTION:
To be distributed in accordance with DA Form 12-25-E, block no. 4844, requirements for TM 5-3820-256-24P-2.

☆U.S GOVERNMENT PRINTING OFFICE: 1993-755-120/60160

RECOMMENDED CHANGES TO EQUIPMENT TECHNICAL PUBLICATIONS

*THEN...JOT DOWN THE DOPE ABOUT IT ON THIS FORM. CAREFULLY TEAR IT OUT, FOLD IT AND DROP IT IN THE MAIL.*

## SOMETHING WRONG WITH PUBLICATION

FROM: (PRINT YOUR UNIT'S COMPLETE ADDRESS)

DATE SENT

| PUBLICATION NUMBER | PUBLICATION DATE | PUBLICATION TITLE |
|---|---|---|
| | | |

BE EXACT PIN-POINT WHERE IT IS

| PAGE NO. | PARA-GRAPH | FIGURE NO. | TABLE NO. |
|---|---|---|---|
| | | | |

IN THIS SPACE, TELL WHAT IS WRONG AND WHAT SHOULD BE DONE ABOUT IT.

| PRINTED NAME, GRADE OR TITLE AND TELEPHONE NUMBER | SIGN HERE |
|---|---|
| | |

TEAR ALONG PERFORATED LINE

DA FORM 1 JUL 79 2028-2

PREVIOUS EDITIONS ARE OBSOLETE.

P.S.--IF YOUR OUTFIT WANTS TO KNOW ABOUT YOUR RECOMMENDATION MAKE A CARBON COPY OF THIS AND GIVE IT TO YOUR HEADQUARTERS.

# The Metric System and Equivalents

### *Linear Measure*

1 centimeter = 10 millimeters = .39 inch
1 decimeter = 10 centimeters = 3.94 inches
1 meter = 10 decimeters = 39.37 inches
1 dekameter = 10 meters = 32.8 feet
1 hectometer = 10 dekameters = 328.08 feet
1 kilometer = 10 hectometers = 3,280.8 feet

### *Weights*

1 centigram = 10 milligrams = .15 grain
1 decigram = 10 centigrams = 1.54 grains
1 gram = 10 decigram = .035 ounce
1 dekagram = 10 grams = .35 ounce
1 hectogram = 10 dekagrams = 3.52 ounces
1 kilogram = 10 hectograms = 2.2 pounds
1 quintal = 100 kilograms = 220.46 pounds
1 metric ton = 10 quintals = 1.1 short tons

### *Liquid Measure*

1 centiliter = 10 milliters = .34 fl. ounce
1 deciliter = 10 centiliters = 3.38 fl. ounces
1 liter = 10 deciliters = 33.81 fl. ounces
1 dekaliter = 10 liters = 2.64 gallons
1 hectoliter = 10 dekaliters = 26.42 gallons
1 kiloliter = 10 hectoliters = 264.18 gallons

### *Square Measure*

1 sq. centimeter = 100 sq. millimeters = .155 sq. inch
1 sq. decimeter = 100 sq. centimeters = 15.5 sq. inches
1 sq. meter (centare) = 100 sq. decimeters = 10.76 sq. feet
1 sq. dekameter (are) = 100 sq. meters = 1,076.4 sq. feet
1 sq. hectometer (hectare) = 100 sq. dekameters = 2.47 acres
1 sq. kilometer = 100 sq. hectometers = .386 sq. mile

### *Cubic Measure*

1 cu. centimeter = 1000 cu. millimeters = .06 cu. inch
1 cu. decimeter = 1000 cu. centimeters = 61.02 cu. inches
1 cu. meter = 1000 cu. decimeters = 35.31 cu. feet

# Approximate Conversion Factors

| *To change* | *To* | *Multiply by* | *To change* | *To* | *Multiply by* |
|---|---|---|---|---|---|
| inches | centimeters | 2.540 | ounce-inches | newton-meters | .007062 |
| feet | meters | .305 | centimeters | inches | .394 |
| yards | meters | .914 | meters | feet | 3.280 |
| miles | kilometers | 1.609 | meters | yards | 1.094 |
| square inches | square centimeters | 6.451 | kilometers | miles | .621 |
| square feet | square meters | .093 | square centimeters | square inches | .155 |
| square yards | square meters | .836 | square meters | square feet | 10.764 |
| square miles | square kilometers | 2.590 | square meters | square yards | 1.196 |
| acres | square hectometers | .405 | square kilometers | square miles | .386 |
| cubic feet | cubic meters | .028 | square hectometers | acres | 2.471 |
| cubic yards | cubic meters | .765 | cubic meters | cubic feet | 35.315 |
| fluid ounces | milliliters | 29,573 | cubic meters | cubic yards | 1.308 |
| pints | liters | .473 | milliliters | fluid ounces | .034 |
| quarts | liters | .946 | liters | pints | 2.113 |
| gallons | liters | 3.785 | liters | quarts | 1.057 |
| ounces | grams | 28.349 | liters | gallons | .264 |
| pounds | kilograms | .454 | grams | ounces | .035 |
| short tons | metric tons | .907 | kilograms | pounds | 2.205 |
| pound-feet | newton-meters | 1.356 | metric tons | short tons | 1.102 |
| pound-inches | newton-meters | .11296 | | | |

# Temperature (Exact)

| | | | | |
|---|---|---|---|---|
| °F | Fahrenheit temperature | 5/9 (after subtracting 32) | Celsius temperature | °C |

PIN: 049224-000

# This fine document...

Was brought to you by me:

## Liberated Manuals -- free army and government manuals

Why do I do it? I am tired of sleazy CD-ROM sellers, who take publicly available information, slap “watermarks” and other junk on it, and sell it. Those masters of search engine manipulation make sure that their sites that sell free information, come up first in search engines. They did not create it... They did not even scan it... Why should they get your money? Why are not letting you give those free manuals to your friends?

I am setting this document FREE. This document was made by the US Government and is NOT protected by Copyright. Feel free to share, republish, sell and so on.

I am not asking you for donations, fees or handouts. If you can, please provide a link to liberatedmanuals.com, so that free manuals come up first in search engines:

<A HREF=http://www.liberatedmanuals.com/>Free Military and Government Manuals</A>

- Sincerely
  Igor Chudov
  http://igor.chudov.com/
- Chicago Machinery Movers