TM 11-7025-210-10

OPERATOR'S MANUAL

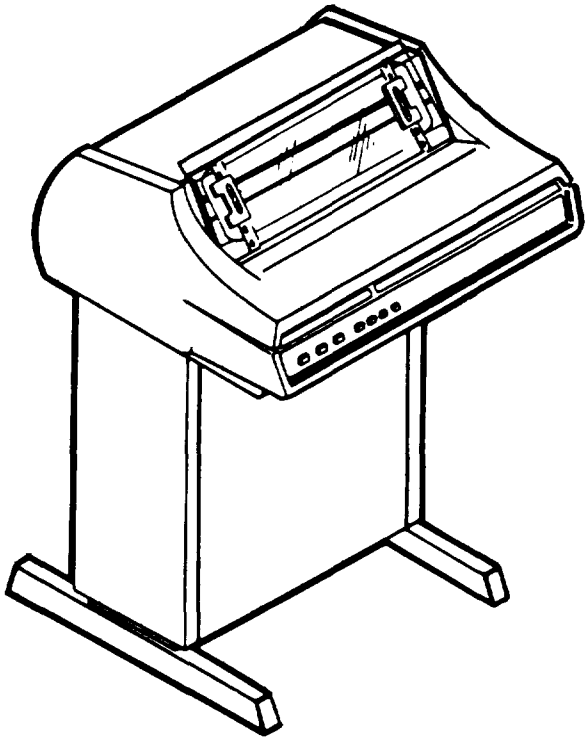

LINE PRINTER
RP-273/MYQ-4
(NSN 7010-01-079-1516)

HEADQUARTERS DEPARTMENT OF THE ARMY

FEBRUARY 1984

WARNING

HIGH VOLTAGE

High voltage is used in the operation of this equipment.

ELECTROCUTION ON CONTACT

Electrocution may result if you fail to observe these safety precautions.

Never perform maintenance on this equipment when it is powered on. If you have operating problems or equipment failure, power off and report the problem to your supervisor.

FLAMMABLE AGENTS

Isopropyl alcohol, when used as a cleaning fluid, is flammable. Keep away from heat and open flame.

5 SAFETY STEPS TO FOLLOW IF SOMEONE IS THE VICTIM OF ELECTRICAL SHOCK

1 DO NOT TRY TO PULL OR GRAB THE INDIVIDUAL

2 IF POSSIBLE, TURN OFF THE ELECTRICAL POWER

3 IF YOU CANNOT TURN OFF THE ELECTRICAL POWER, PULL, PUSH OR LIFT THE PERSON TO SAFETY USING A DRY WOODEN POLE OR A DRY ROPE OR SOME OTHER INSULATING MATERIAL

4 SEND FOR HELP AS SOON AS POSSIBLE

5 AFTER THE INJURED PERSON IS FREE OF CONTACT WITH THE SOURCE OF ELECTRICAL SHOCK, MOVE THE PERSON A SHORT DISTANCE AWAY AND IMMEDIATELY START ARTIFICIAL RESUSCITATION

TM 11-7025-210-10

TECHNICAL MANUAL

HEADQUARTERS
DEPARTMENT OF THE ARMY
Washington, DC, 20 February 1984

OPERATOR'S MANUAL

LINE PRINTER RP-273/MYQ-4

REPORTING ERRORS AND RECOMMENDING IMPROVEMENTS

You can help improve this manual. If you find any mistakes or if you know of a way to improve the procedures, please let us know. Mail your letter, DA Form 2028 (Recommended Changes to Publications and Blank Forms), or DA Form 2028-2 located in back of this manual, direct to: Commander, US Army Communications and Electronics Command and Fort Monmouth, ATTN: DRSEL-ME-MQ, Fort Monmouth, New Jersey 07703. A reply will be furnished to you.

HOW TO USE THIS MANUAL

This manual tells you how to operate and service Line Printer RP-273/MYQ-4.

LOCATION OF SUBJECTS IN MANUAL

In this manual, paragraphs are numbered in order by chapter. For example, paragraph 2-3 is the third paragraph in chapter 2. Pages are also numbered this way. Using this numbering system, there are two easy ways to locate the information you need in this manual.

- Front cover locators
- Subject index

Use the front cover locators and marked pages to quickly find the parts of the manual shown on the cover. If the information you need is not listed on the front cover, use the subject index at the back of this manual. It lists all subjects covered in the manual and directs you to the subject by page number.

OPERATING AND MAINTENANCE PROCEDURES

Operating and maintenance procedures in this manual have two features which help you perform them more easily:

- Initial setup boxes
- First-time performance aids

An initial setup box is used at the start of any procedure which requires setup items before you perform it. This box lists items such as tools and supplies needed to perform the procedure. If the box does not appear at the start of a procedure, it means no setup items are needed.

If you are using this manual to perform a procedure for the first time, always read through the entire procedure before you start. This will help you understand the task you will perform. Always perform the task steps in the order given. This will help assure correct performance. Use the illustrations beside the steps to find the parts of the equipment called out in the steps. Some steps include a reference to another paragraph. Go to that paragraph if you are not sure how the steps are done.

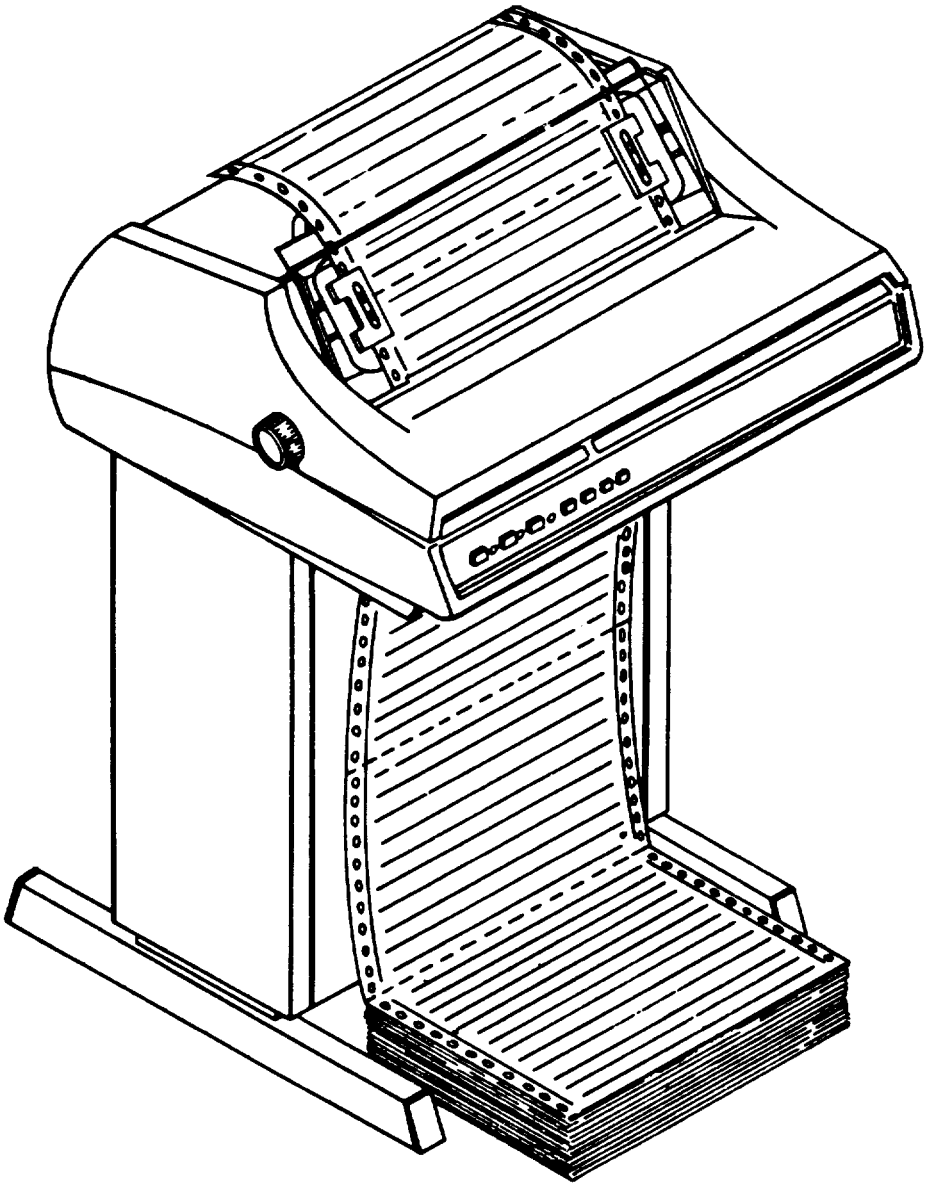

Figure 1-0. Line Printer RP-273/MYO-4

CHAPTER 1
INTRODUCTION

Section I. GENERAL INFORMATION

1-1. SCOPE

This manual is the operator's manual for Line Printer RP-273/MYQ-4 (fig. 1-0). In the rest of this manual it will be called the line printer, or printer. This manual describes the line printer and tells what it can do. It also shows you how to operate and maintain it.

The line printer prints computer output data on continuous-form paper.

1-2. MAINTENANCE FORMS AND RECORDS

Department of the Army forms and procedures used for equipment maintenance will be those prescribed by TM 38-750, The Army Maintenance Management System (TAMMS).

1-3. HAND RECEIPT (-HR) MANUALS

This manual has a companion document with a TM number followed by -HR (which stands for Hand Receipt). TM 11-7025-210-10-HR consists of preprinted hand receipts (DA Form 2062) that list end item related equipment (i.e., COEI, BII, and AAL) which you must account for. As an aid to property accountability, additional -HR manuals may be requisitioned from the following source in accordance with procedures in Chapter 3, AR310-2: The U.S. Army Adjutant General Publications Center ATTN: AGLD-OD 2800 Eastern Boulevard, Baltimore, MD 21220.

1-4. REPORTING EQUIPMENT IMPROVEMENT RECOMMENDATIONS (EIR)

If your line printer needs improvement, let us know. Send us an EIR. You, the user, are the only one who can tell us what you don't like about your equipment. Let us know why you don't like the design or performance. Put it on an SF 368 (Quality Deficiency Report). Mail it to us at Commander, US Army Communications and Electronics Command and Fort Monmouth, ATTN: DRSEL-ME-MQ Fort Monmouth, New Jersey 07703. We'll send you a reply.

1-5. REFERENCE INFORMATION

This listing includes the nomenclature cross reference list, list of abbreviations, and an explanation of terms (glossary) used in this manual.

1-6. NOMENCLATURE CROSS-REFERENCE LIST

Common names are used throughout this manual, but you must use the official nomenclature when filling out report forms, sending an EIR, or finding referenced technical manuals.

Common Name	Nomenclature
Line Printer or Printer	Line Printer RP-273/MYQ-4

1-7. LIST OF ABBREVIATIONS

CTA	Common Tools Authorization
FF	Form Feed
FONT	Full Count (signal)
1pi	lines per inch
1pm	lines per minute
PC	Print Complete (signal)
pr	pair
RFP	Ready From Printer (signal)
U/M	Unit of Measure
VFU	Vertical Format Unit
VT	Vertical Tabulation

1-8. GLOSSARY

Gate	Hinged cover that holds paper against tractor sprocket pins.
Line Set	Character set forming a line.
Opaque	Not allowing light to pass through.
Pin-feed (Fan-Fold) Paper	Paper with pin-holes that is advanced by tractors through the printer and folds in accordion-like fashion.
Tractor	Moving device with sprocket pins to advance paper through printer.

Section II. EQUIPMENT DESCRIPTION

1-9. EQUIPMENT PURPOSE, CAPABILITIES, AND FEATURES

The line printer prints computer output data on continuous-form paper. It can:

- Print 230 to 340 lines per minute using three sets of print characters on a moving belt
- Print 6 or 8 lines per inch
- Print on paper from 1 to 6 parts thick when front-loaded
- Print on paper one part thick when rear-loaded
- Advance paper to the first line of a new page or leave selected lines blank, under control of a vertical format unit (VFU) prepunched tape
- Sense rear low paper supply
- Sense paper out, and stop print operation

1-10. LOCATION AND DESCRIPTION OF MAJOR COMPONENTS

Major components of the line printer are a print mechanism and electronic controls.

1-11. PRINT MECHANISM

The print mechanism consists of printing components (fig. 1-1), and paper handling components. (fig. 1-2).

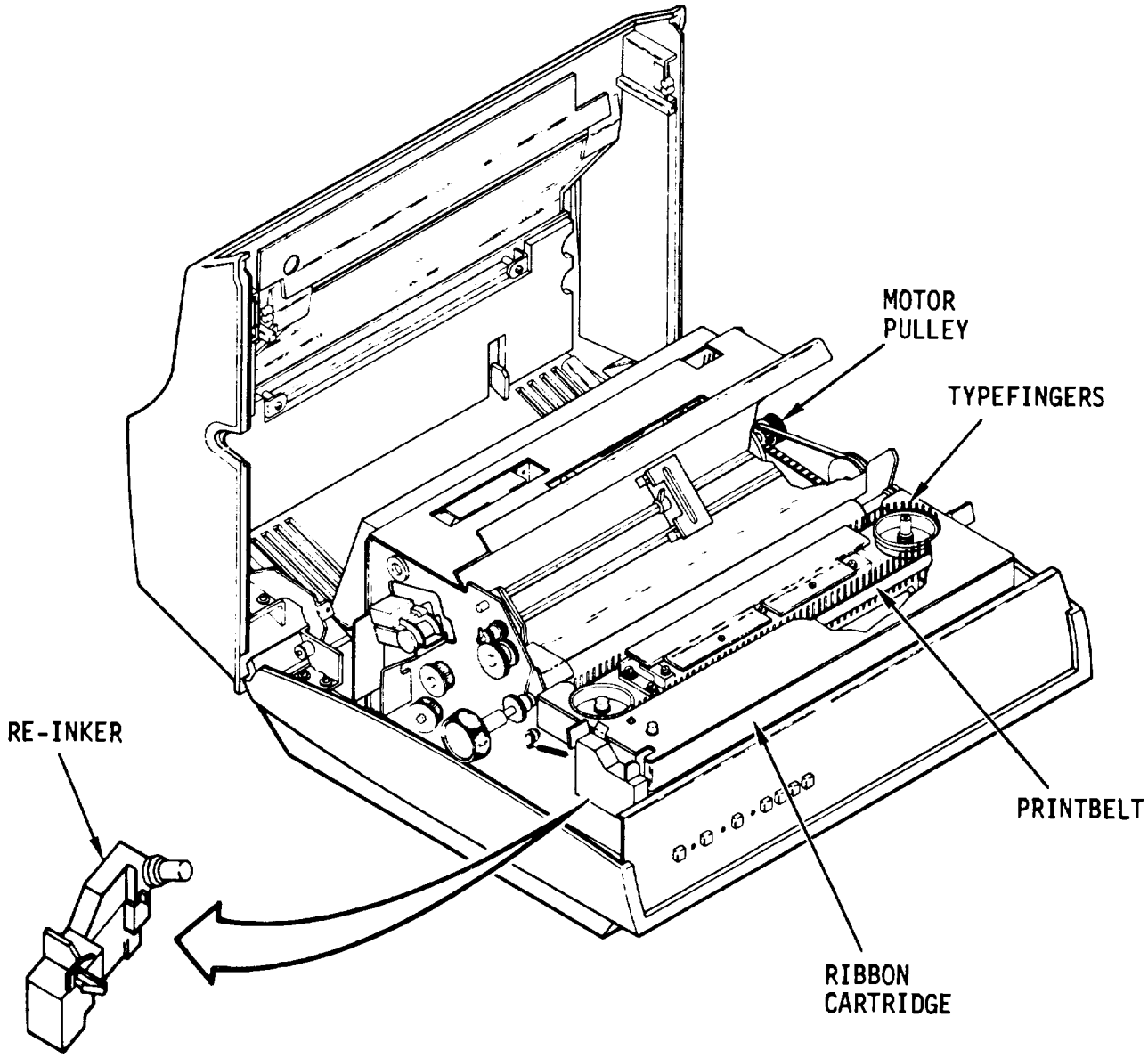

BELT AND TYPE ASSEMBLY - contains type fingers which print characters.

RIBBON CARTRIDGE AND RE-INKER - supplies type fingers with printing ink.

MOTOR PULLEY - moves belt and type assembly.

Figure 1-1. Printing Components

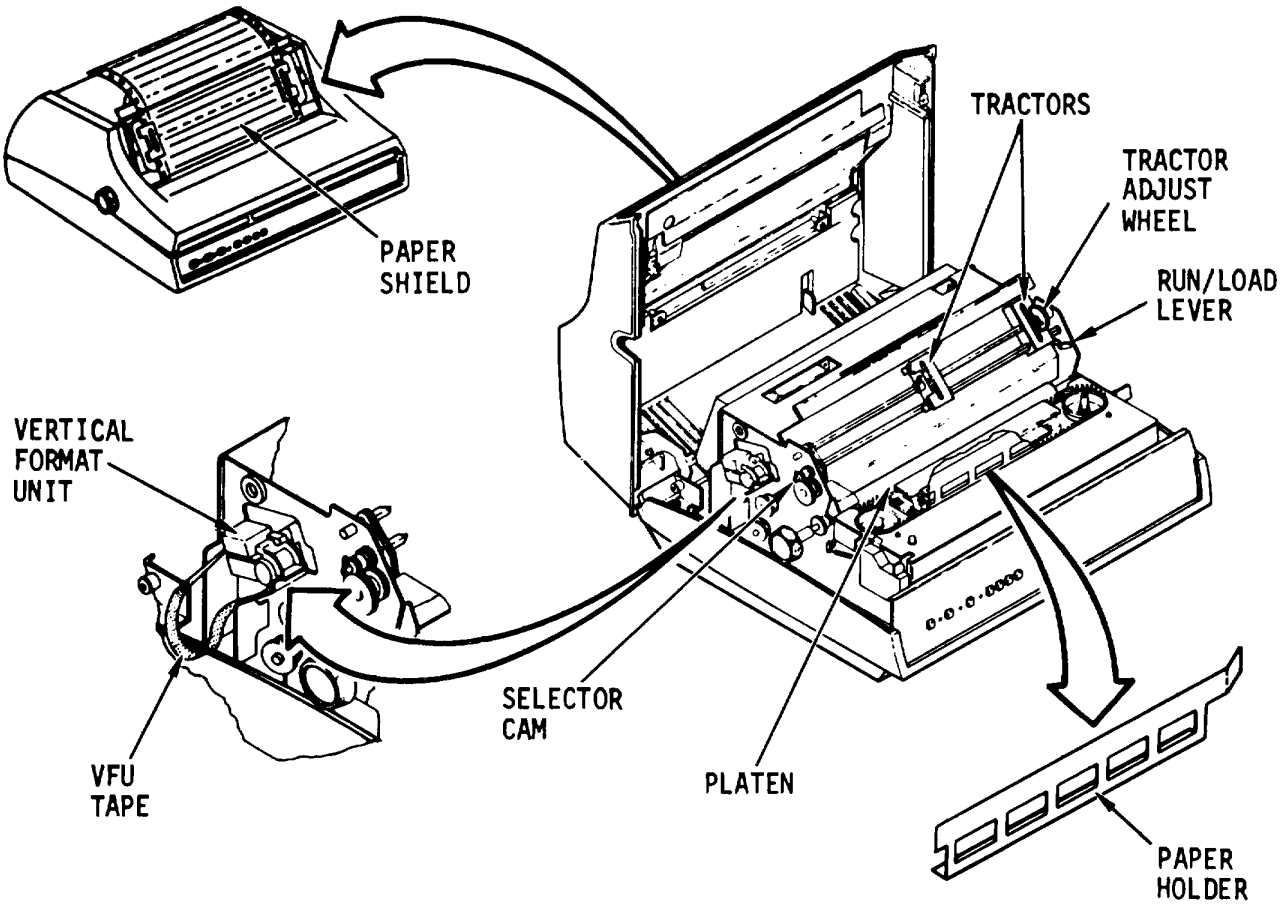

PAPTER SHIELD - Covers and protects paper. Top inner edge designed for paper tear-off.

TRACTORS - hold and advance paper.

TRACTOR ADJUST WHEEL - allows fine left and right adjustment of tractors.

RUN/LOAD LEVER - positions paper holder for installing/removing paper.

PAPER HOLDER - holds paper securely against platen.

PLATEN AND GEAR ASSEMBLY - supports paper, provides hard striking surface for type fingers.

SELECTOR CAM - sets platen and gear assembly to move at 6 or 8 lines per inch.

VERTICAL FORMAT UNT - contains, advances, reads VFU tape, controls line feed as programmed.

VFU TAPE - is opaque or mylar tape on which a line-feed program is punched.

Figure 1-2. Paper Handling Components

1-12. ELECTRONIC CONTROL COMPONENTS

Electronic controls (fig. 1-3) are contained on the control panel and on the pedestal. The control panel handles operating functions. The ON/OFF switch is for ac power.

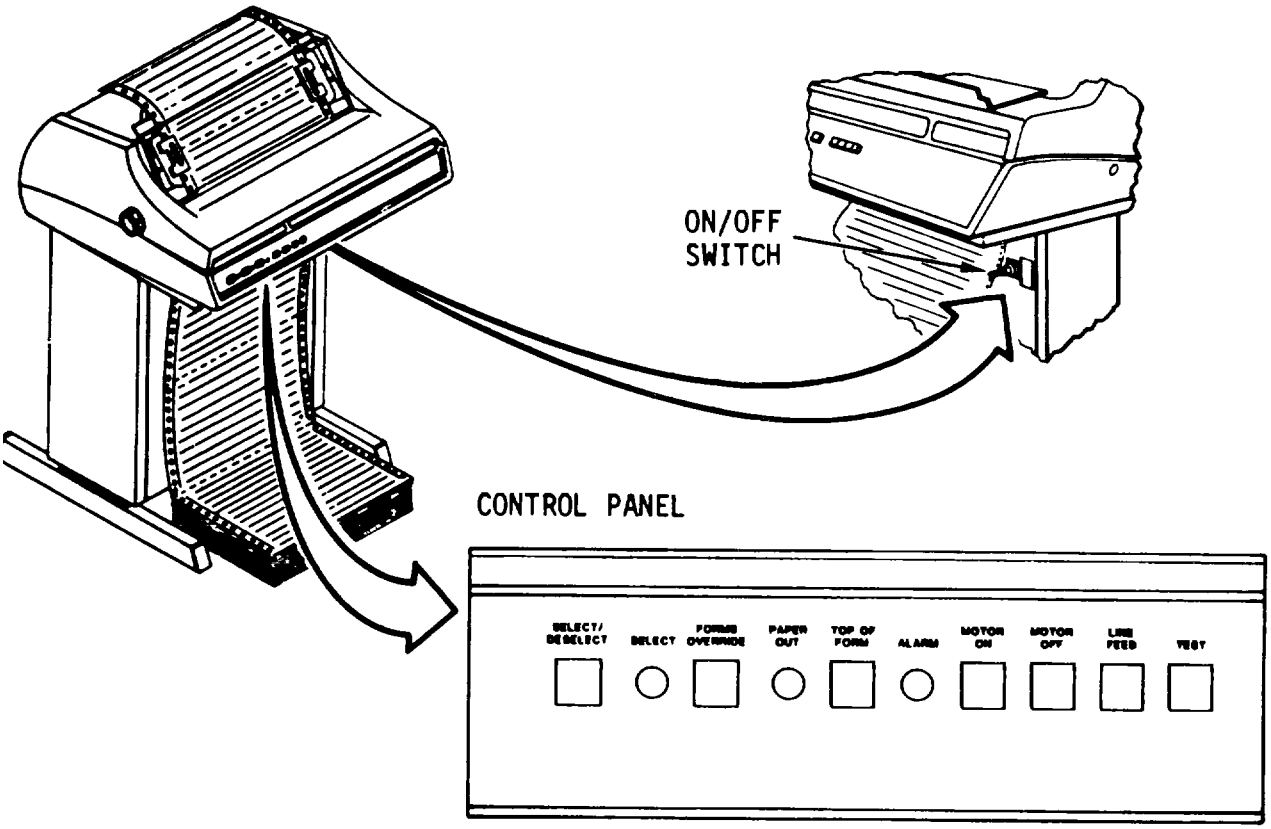

ON/OFF SWITCH - controls ac power to printer.

CONTROL PANEL - tests, prepares for, starts, and stops printer operation.

Figure 1-3. Electronic Controls

1-13. EQUIPMENT DATA

Weight and Dimensions:

Weight	(approximate)	135 lb	(61.2 kg)
Height	(without paper rack)	36.16 in.	(91.8 cm
	(with paper rack)	37.80 in.	(96.0 cm
	(with top open)	48.39 in.	(122.9 cm)
Width		26.14 in.	(66.4 cm)
Depth	(without paper rack)	21.54 in.	54.7 cm
	(with paper rack)	29.32 in.	(74.2 cm
	(with optional paper shelf)	35.47 in.	(90.1 cm
	(with optional paper shelf at maximum extension)	37.97 in.	(96.4 cm)

Operating Environment:
- Temperature 32OF to 1100F (OOC to 43.5oC)
- Relative Humidity 10% to 95% (noncondensing)
- Altitude 0 to 12, 000 feet (3, 660 m)

Power Requirements:
- Voltage 117 V ac to 120 V ac
- Frequency 60 Hz

Paper Requirements:
- Type Pin-Feed (Fan-Fold)
- Width 3.0 in. to 14.875 in. (7.6 cm to 37.8 cm)
- Weight 1 part 15 lb (6.8 kg) paper
  - 2, 3, 4 part 13.5 lb (6.1 kg) paper, 8 lb (3.6 kg) carbon
  - 5, 6 part 12 lb (5.4 kg) paper, 8 lb (3.6 kg) carbon

Thickness (maximum) 0.025 in. (0.64 mm)

Section III. TECHNICAL PRINCIPLES OF OPERATION

1-14. FUNCTIONAL DESCRIPTION

Before the line printer can print, it needs a data source from which it receives data for printing. The off-line data source is the self-test circuit inside the printer. The on-line data source is a computer.

The printer sends a Ready From Printer (RFP) signal to the data source that it is ready to print (fig. 1-4). The data source begins sending character line sets. The printer stores one line set at a time in its memory. At the same time, it sends a Full Count (FCNT) signal to the data source that its line set is complete. It then prints the line. Immediately, it sends an RFP signal to the data source, and starts the cycle over again. This continues until the printer receives no new data. It then generates a Print Complete (PC) signal and stops printing.

1-14. FUNCTIONAL DESCRIPTION (CONT)

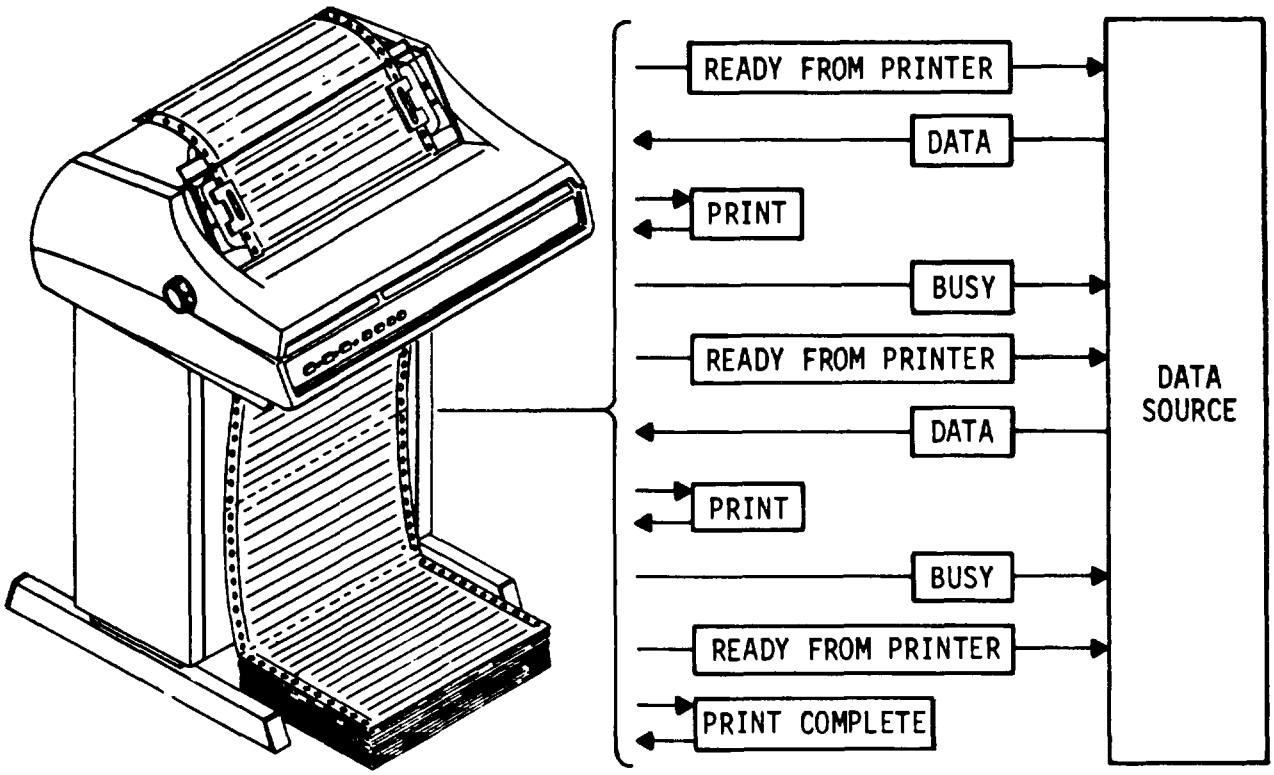

Figure 1-4. Functional Principles of Operation

1-15. OFF-LINE OPERATION

The off-line data source is the group of self-test circuits inside the printer (fig. 1-5). It contains two kinds of data: content data and command data.

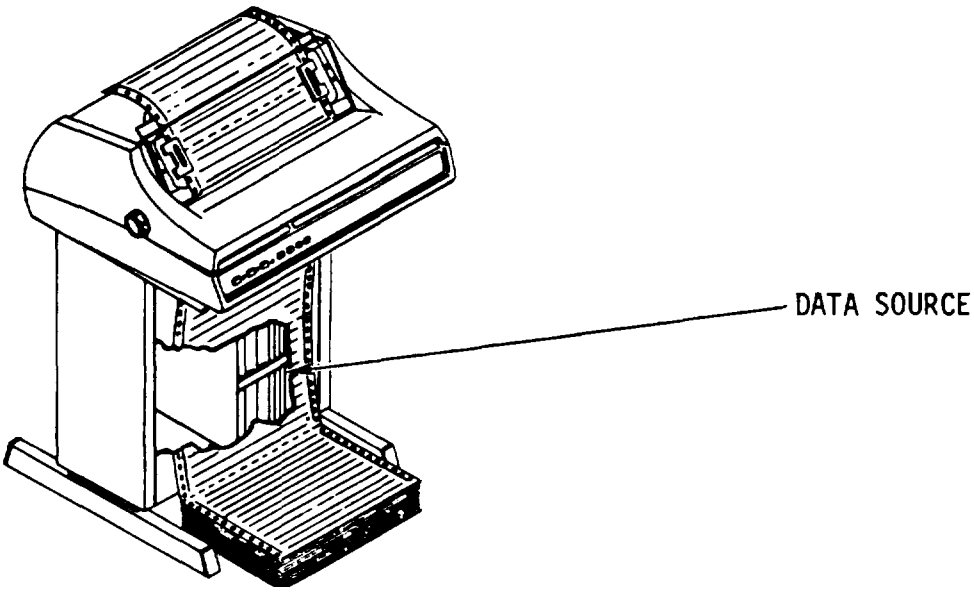

Figure 1-5. Off - Line Data Source

Content data is what the printer prints. Command data is the series of commands that tell the printer to operate.

Content data and command data are both sent to the printer when you press and hold the TEST button on the control panel (fig. 1-6). Command data only is sent to the printer when you press the MOTOR ON, MOTOR OFF, or TOP OF FORM buttons once, press and hold the FORMS OVERRIDE button, or press successively the LINE FEED button.

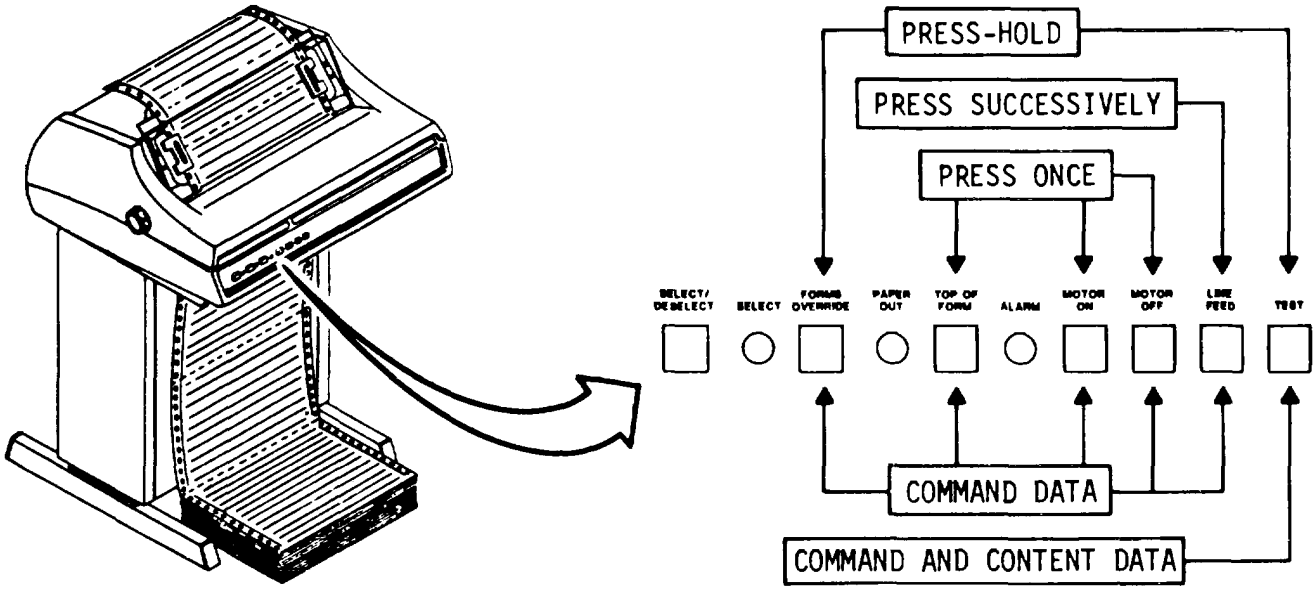

Figure 1-6. Off-line Data Source Control

1-16. ON-LINE OPERATION

The on-line data source is a computer. The printer interacts with the on-line data source when you press the SELECT/DESELECT button (fig. 1-7). At that moment, all other buttons on the control panel become inactive.

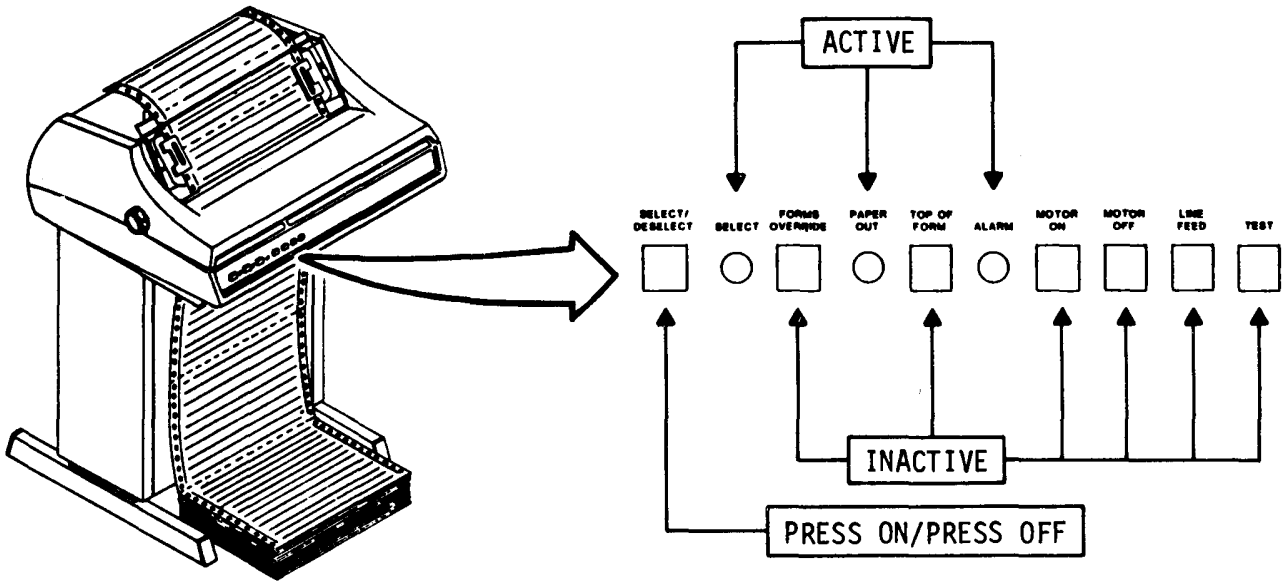

Figure 1-7. On- Line Data Source Control

CHAPTER 2
OPERATING INSTRUCTIONS

Index of Operating Procedures

Section I. DESCRIPTION AND USE OF OPERATOR'S CONTROLS AND INDICATORS

2-1. CONTROLS AND INDICATORS

The line printer is operated with mechanical and electronic controls.

a. Mechanical Controls. The following mechanical controls are used to prepare the printer for operation:

- M6tor Pulley. Moves printbelt during cleaning
- Tractors. Advance paper through printer
- Vernier Adjust Thumbwheel. Fine tunes tractor adjustment
- RUN/LOAD Lever. Positions paper holder for installing/removing paper or for printing
- Platen Knob. Turn platen and advance paper
- Selector Cam. Sets paper handling gears for 6 or 8 lpi

b. Electronic Controls. The following electronic controls are used to prepare and place the printer in on-line or off-line operation:

- ON/OFF Switch. Turns printer on and off
- Vertical Format Unit. Controls operational linefeed with operator-installed VFU tape
- RUN/LOAD Switch. Is located near the RUN/LOAD lever, and prevents the printer from operating when the RUN/LOAD lever is in LOAD position

- Control Panel. Contains switches and indicators that prepare for, start, stop operation and indicate that the printer is on line/off line, out of paper, or out of service (fig. 2-1)

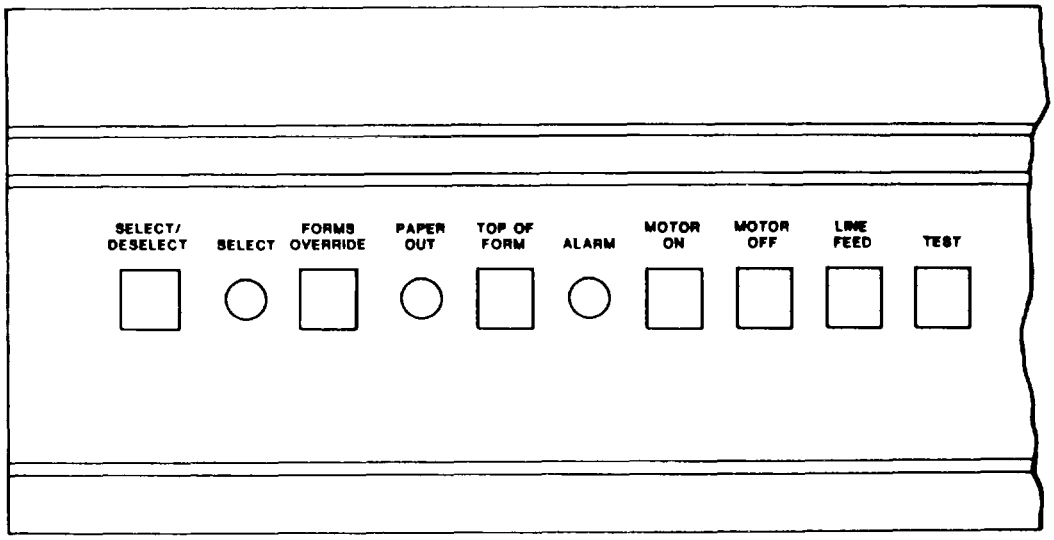

SELECT/DESELECT - puts printer on line and deactivates all other switches when in SELECT mode.

SELECT - indicator lights to indicate that the printer is on line. Does not light when the printer is off line.

FORMS OVERRIDE - deactivates front and rear low paper sensors when pressed and held. Prevents PAPER OUT indicator from lighting until paper is out.

PAPER OUT - indicator lights when paper is out. Lights also when front or rear low paper sensor is activated and 11 in. (27.9 cm) of paper remain before paper out switch shuts off printer operation.

TOP OF FORM - advances VFU tape to next FF code hole. Also advances paper in synchronization with same FF code hole.

ALARM - lights and sounds bell alarm. Indicates malfunction such as paper out, incorrect lever setting, or system failure.

MOTOR ON - powers on printer motor when pressed.

MOTOR OFF - powers off printer motor when pressed.

LINE FEED - advances paper one line when pressed. Advances paper continuously when pressed and held.

TEST - performs printer self-test when pressed and held.

Figure 2-1. Controls and Indictors on Control Panel

Section II. PREVENTIVE MAINTENANCE CHECKS AND SERVICES

2-2. GENERAL

Operator's Preventive Maintenance Checks and Services (PMCS) are the required daily and weekly inspection and care of the equipment necessary to keep it in good operating condition. PMCS shall be done before (B) operation, during (D) operation and after (A) operation. Other checks and services are done on a weekly (W) or monthly (M) cycle.

NOTE

Always observe all WARNINGS and CAUTIONS when you perform the PMCS procedures.

a. Before operation. Do your before (B) PMCS to be sure that the equipment is ready for operation.

b. During operation. Do your during (D) PMCS to be sure that the equipment is operating properly.

c. After operation. Do your after (A) PMCS so that the equipment will be ready for future operation.

d. If your equipment fails to operate. Refer to chapter 3 for troubleshooting procedures. Report any deficiency on DA Form 2404. See TM 38-750.

2-3. PMCS PROCEDURES

PMCS procedures are done at fixed intervals for the following purposes:

- Make sure that the equipment is operable
- Prevent equipment problems in future operation
- Identify and resolve minor problems in the equipment before they become major problems
- Scheduled cleaning of the equipment

a. PMCS Table. The PMCS procedures are contained in table 2-1. This information is given by item number, interval, item inspected, procedure and criteria for rejection. An explanation of the contents of each column is given below.

(1) Item Number Column. The checks and services are numbered in chronological order. The numbers in this column shall be used in the TM Item No. column of DA Form 2404, Equipment Inspection and Maintenance Worksheet, in recording results of PMCS.

(2) Interval Column. This column identifies the interval at which the check or service is performed. Only those columns are used which are pertinent to the equipment.

(3) Item To Be Inspected Column. The equipment or portion of the equipment being checked or serviced is listed in this column.

(4) Procedures Column. This column contains the check or service procedure.

(5) Equipment Is Not Ready/Available If: Column. The reason why an equipment will be classified as unable to perform its mission will be given in this column. An entry in this column will:

(a) Identify conditions that make the equipment not ready/available for readiness reporting purposes.

(b) Deny use of the equipment until corrective maintenance has been performed.

b. Routine Checks. Checks like equipment inventory, cleaning, dusting, washing, checking for frayed cables, storing items not in use, covering unused receptacles and checking for loose nuts and bolts are not listed in your PMCS. They are things you should do anytime you see they must be done. If you find a routine check like one of these listed in your PMCS, it was listed because other operators reported problems with this item.

Table 2-1. Preventive Maintenance Checks and Services

NOTE

If the equipment must be kept in continuous operation, check and service only those items that can be checked and serviced without disturbing operation. Make the complete checks and services when the equipment can be shut down.

NOTE: Within designated inverval, these checks are to be done in the order listed.

B = Before D = During W = Weekly

Perform weekly as well as before PMCS if:

(1) You are the assigned operator and have not operated the equipment since the last weekly.

(2) You are operating the equipment for the first time.

Table 2-1. Preventive Maintenance Checks and Services -- Continued

ITEM NO.	INTERVAL B	INTERVAL D	INTERVAL W	ITEM TO BE INSPECTED	PROCEDURE	Equipment is NOT READY/ AVAILABLE if:
1	•			Type Fingers	Check for ink buildup. Clean if required.	Type fingers completely smudged with ink.
2	•			Ribbon Cartridge	Inspect ribbon condition while turning drive knob on cartridge counterclockwise. Replace if ribbon cut, frayed, or jammed in cartridge.	Ribbon torn or jammed in cartridge.
3	•	•		Ribbon	Check inking condition. Run self-test. If necessary, install re-inker.	Print too light to read or self-test will not run.
4	•			VFU Tape	Check condition. Replace if torn or damaged.	Tape torn or damaged.
5			•	Platen	Check that platen is properly seated. Push in platen drive knob and turn.	Platen jammed.
6			•	Line Printer Exterior/ Paper Shield	Clean, as follows: 1. Dampen soft lint-free cloth with water. Wipe paper shield. 2. Dampen cloth with liquid cleanser. Wipe top and bottom cover, pedestal, and control panel. 3. Rinse cloth. Wipe printer clean. 4. Using soft dry cloth, wipe printer and paper shield dry.	

Section III. OPERATION UNDER USUAL CONDITIONS

2-4. ASSEMBLY AND PREPARATION FOR USE

See your system manual for information on location of the ac power source. Before you insert the ac power plug into the power source, check that the ON/OFF power switch is in the OFF position.

Make sure these components are installed before operation.

- Ribbon cartridge
- Re-inker
- Paper
- VFU tape

2-5. INITIAL ADJUSTMENTS, DAILY CHECKS, AND SELF-TEST

Perform the following initial adjustments, daily checks, and self-test before start up.

a. Set selector cam lever for 6 or 8 lpi.

b. Check paper supply. Install if necessary.

c. Check that tractors are locked into position.

d. Check that RUN/LOAD lever is in R position.

e. Check that printer is free from paper dust. If necessary, lift top cover and clean printer with vacuum.

f. Check inking condition of ribbon. Run self-test. If print is light, install re-inker and use until print becomes dark, then remove re-inker.

2-6. OPERATING PROCEDURES

The operating procedures which follow enable you to prepare the line printer for operation, operate it, remove it from operation, and place it in a standby condition or shutdown status.

2-7. OPERATE LINE PRINTER OFF LINE AND ON LINE

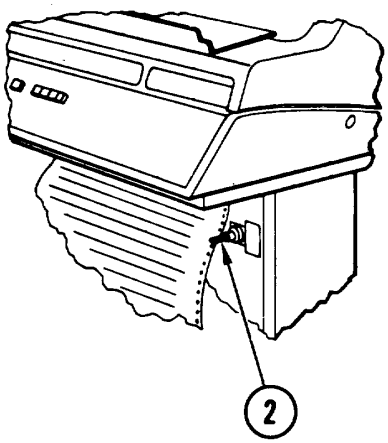

1. Check that paper is installed. If not, install paper (para 2-8).

2. Set ON/OFF switch to ON to place printer in off-line standby condition.

NOTE

Unit motor has a 5 to 8 second time-out device. If motor stops, press MOTOR ON button.

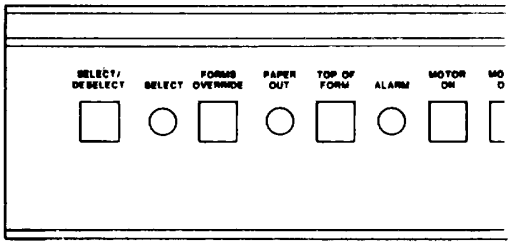

3. To operate printer off line, press m any desired button on control panel except SELECT/DESELECT and FORMS OVERRIDE.

NOTE

If on-line operation is desired, perform steps 4-7, otherwise go to step 7.

2-7. OPERATE LINE PRINTER OFF LINE AND ON LINE (CONT)

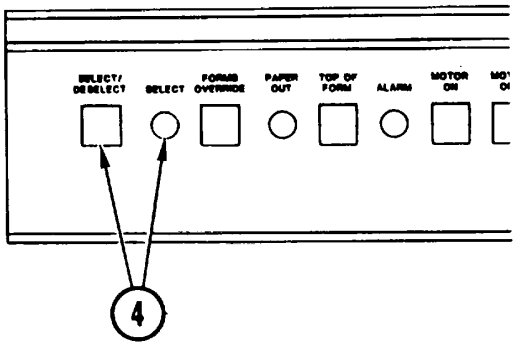

4. Press SELECT/DESELECT button to place printer in on-line standby condition. The SELECT indicator will light. If it does not, tell your supervisor.

5. When on-line operation is finished, do step 6 and/or step 7.

6. Press SELECT/DESELECT button and place the printer in off-line standby condition.

7. Press ON/OFF switch to OFF and place the printer the shutdown status.

2-8. INSTALL/REMOVE PAPER

INITIAL SETUP

Supplies
- Pin-feed (fan-fold) paper

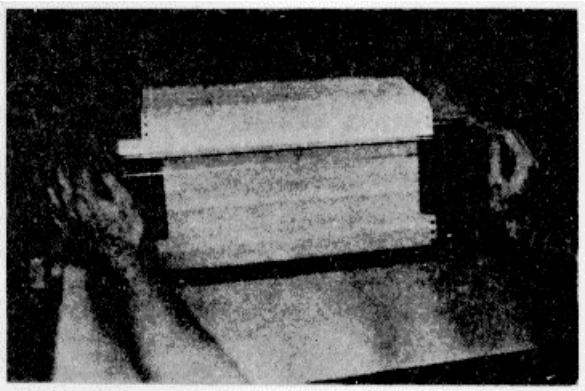

NOTE

In some installations, paper may be installed from rear of printer. Use instructions in part B for rear loading printer.

PART A, FRONT LOADING

WARNING

Do not install paper with power on. Install

1. Power OFF. Open clear plastic paper shield.

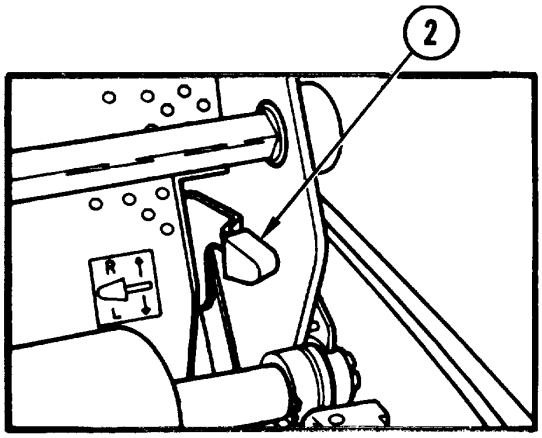

2. Push in, then press RUN/LOAD lever to L.

2-8. INSTALL/REMOVE PAPER (CONT)

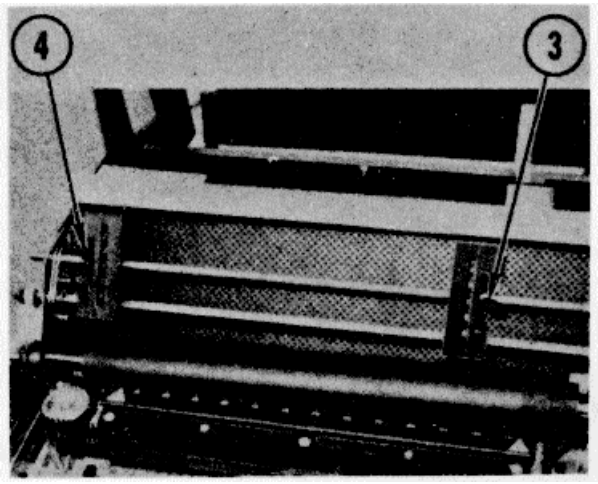

3. To release tractors, push down on tractor levers.

NOTE

Make sure paper is type specified in equipment data (para 1-13).

4. Open tractor gates.

5. Feed paper into printer. It should reappear in front of platen.

6. Grasp sides of paper. Pull up and over tractors.

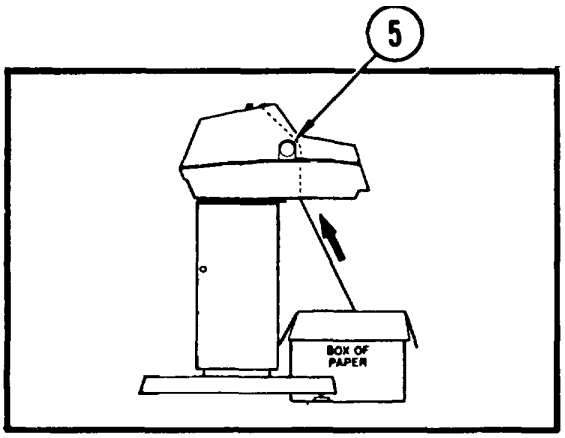

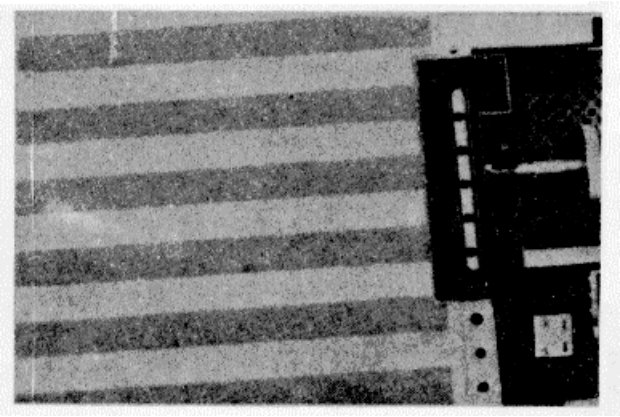

7. Align holes in paper with tractor pins.

2-8. INSTALL/REMOVE PAPER (CONT)

-

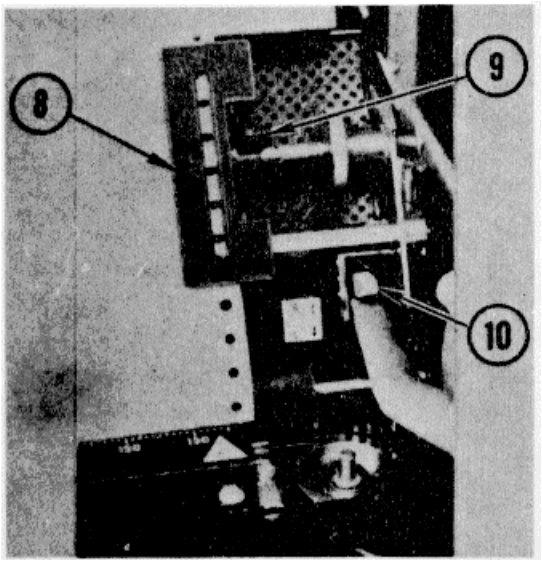

8. Close tractor gates.

NOTE

If there is slack in paper between tractors, slide tractors to get rid of slack.

9. Make sure tractor lock levers are pushed to lock.

10. Pull up RUN/LOAD lever to R.

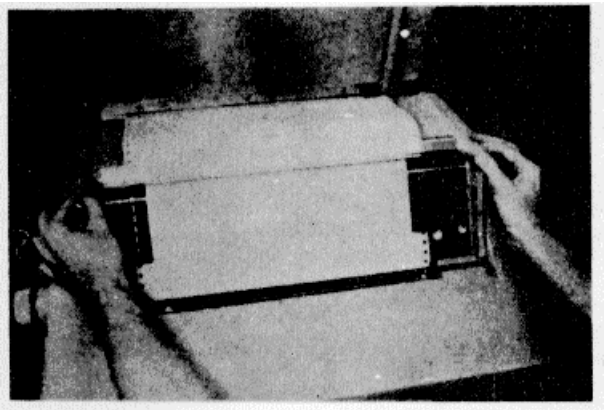

11. Close plastic shield.

CAUTION

Damage to gears will result if platen knob is not pushed in before turning.

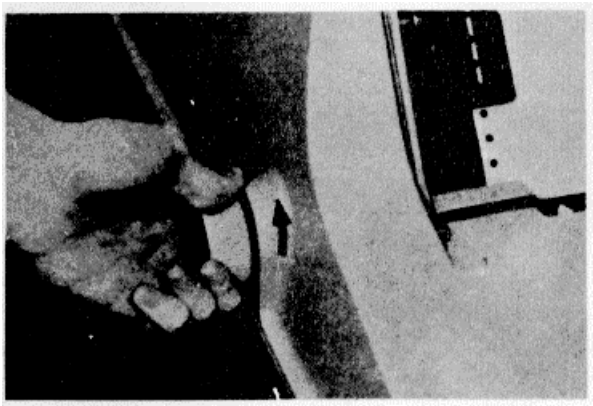

12. To advance paper, push in and turn platen knob.

13. If printer will be used on line, synchronize VFU tape with paper top of form (para 2-13).

14. Power ON.

15. Push TEST button. If print is not centered on form go to step 16.

2-8. INSTALL/REMOVE PAPER (CONT)

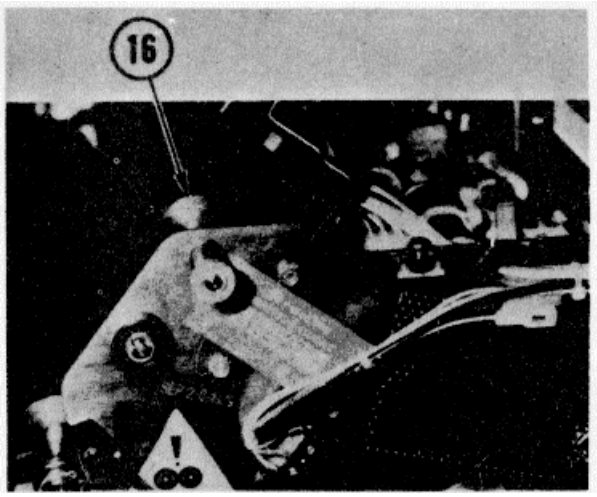

16. Rotate tractor adjust wheel to adjust printout. Repeat step 15.

Remove

WARNING

Do not remove paper with power on.

1Power OFF. Open plastic paper shield.

2. Push in, then press RUN/LOAD lever down to L.

3. Open tractor gates. Free paper from tractor pins.

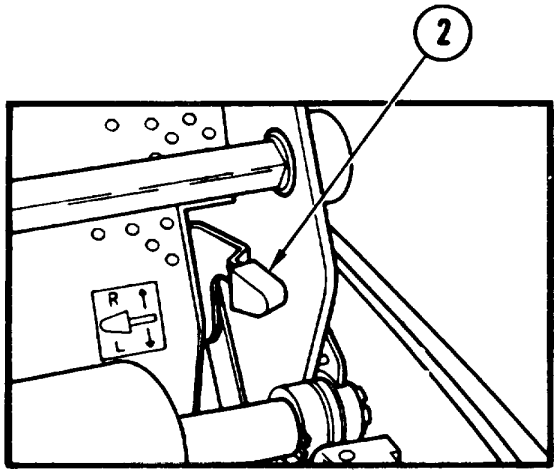

4. Grasping sides of paper, pull papE down and out.

5Close tractor gates.

6. Close plastic shield.

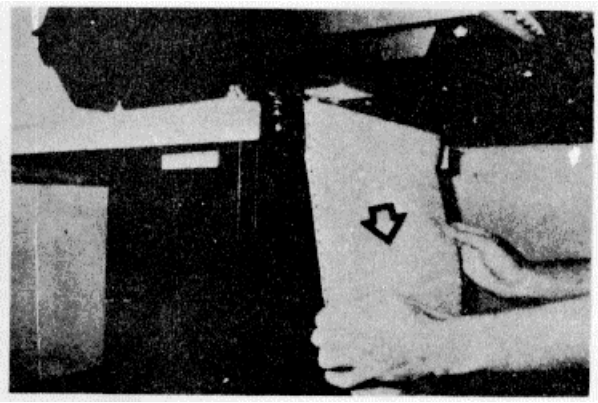

2-8. INSTALLIREMOVE PAPER (CONT)

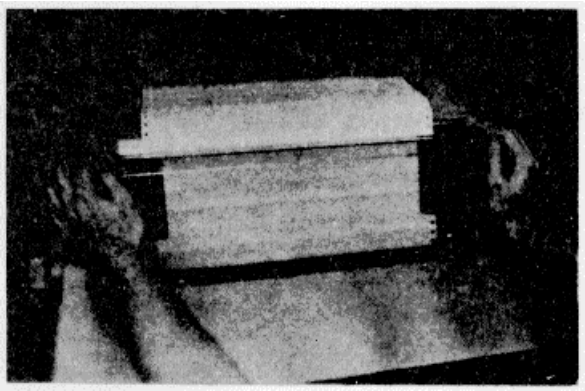

PART B, REAR LOADING
Part B. REAR LOADING
Install

WARNING

Do not install paper with power on.

CAUTION

Only 1 part paper may be rear loaded. Multiple part paper will damage the printer.

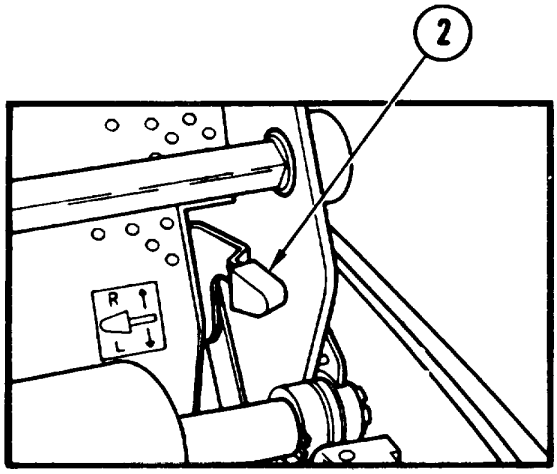

1. Open clear plastic paper shield.

2. Push in, then press RUN/LOAD lever down to L

.

2-8. INSTALL/REMOVE PAPER (CONT)

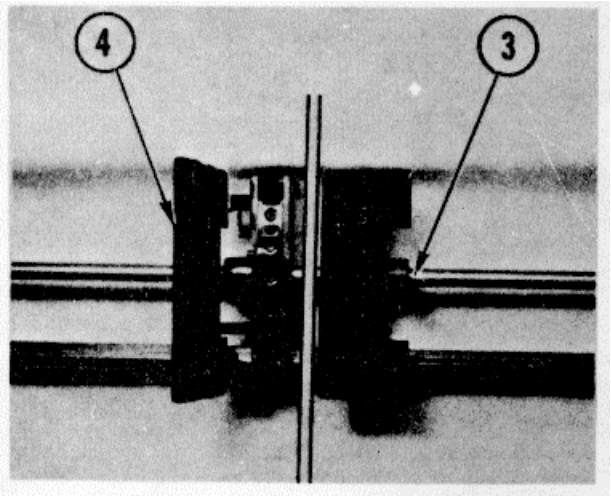

3. To release tractors, push down on tractor levers.

4. Open tractor gates.

5. Feed paper into printer. It should reappear in front of platen.

6. Grasp sides of paper. Pull up and over tractors.

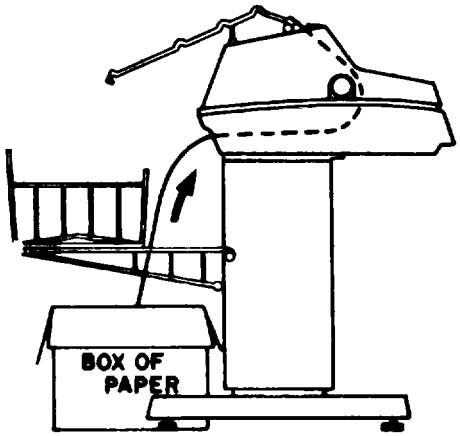

7Align holes in paper with tractor pins

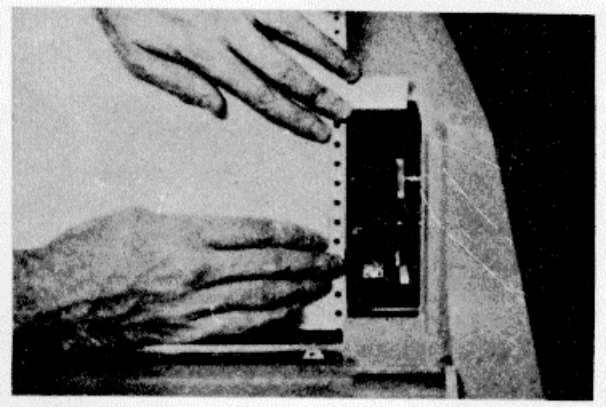

2-8. INSTALL/REMOVE PAPER (CONT)

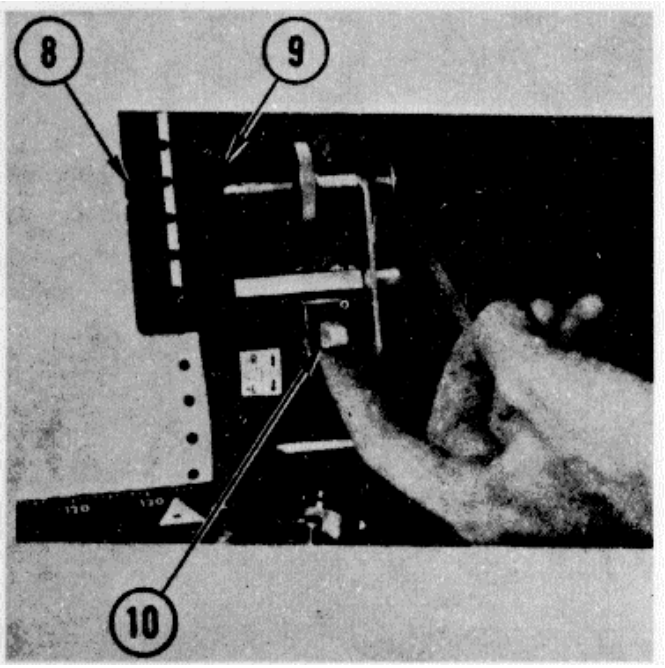

8. Close tractor gates.

NOTE

Make sure there is no slack in paper between tractors. If necessary, slide tractors to correct paper width.

9. Make sure tractor lock levers are pushed to lock.

10. Pull up RUN/LOAD lever to R.

11. Close plastic shield.

CAUTION

Damage to gears will result if platen is not pushed in before turning.

12. To advance paper, push in and turn platen knob.

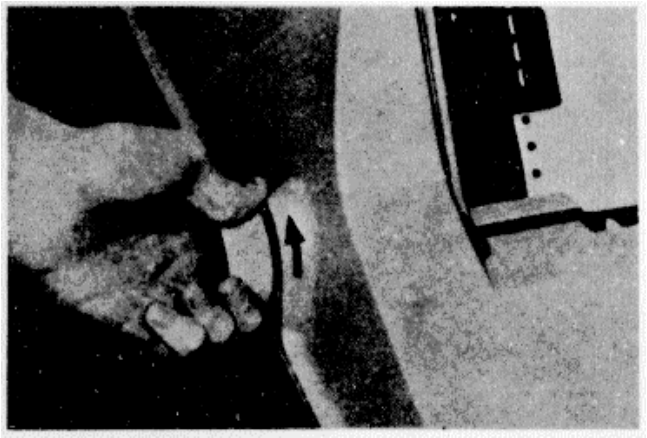

2-8. INSTALL/REMOVE PAPER (CONT)

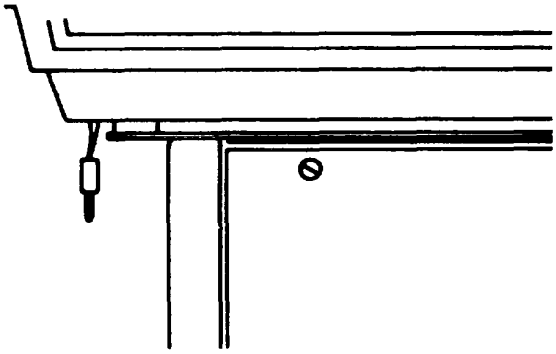

13. If using low paper sensor, pull out plug under printer.

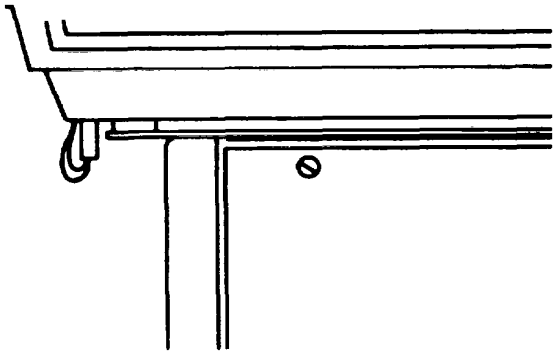

14. If not using low paper sensor, leave plug in place.
15. If printer will be used on line, synchronize VFU tape with paper top of form (para 2-13).
16. Power ON.
17. Push TEST button. If print is not centered on form, go to step 18.

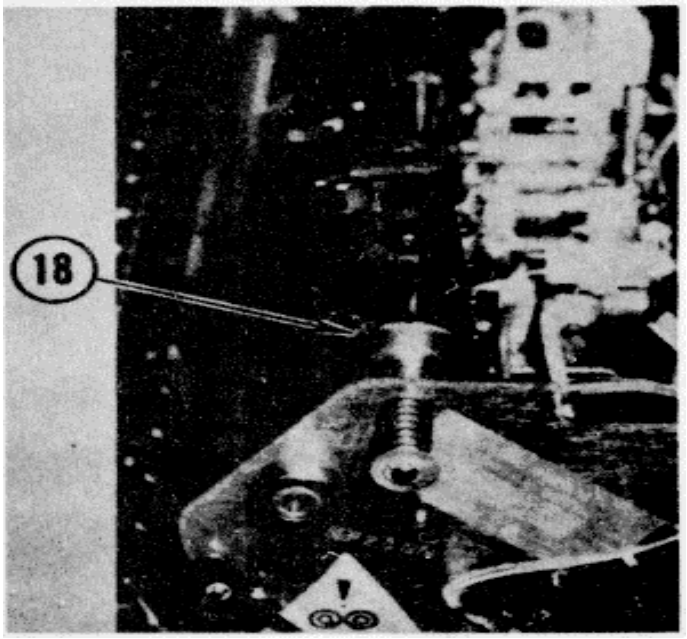

18. Rotate tractor adjust wheel to adjust printout. Repeat step 17.

2-8. INSTALL/REMOVE PAPER (CONT)

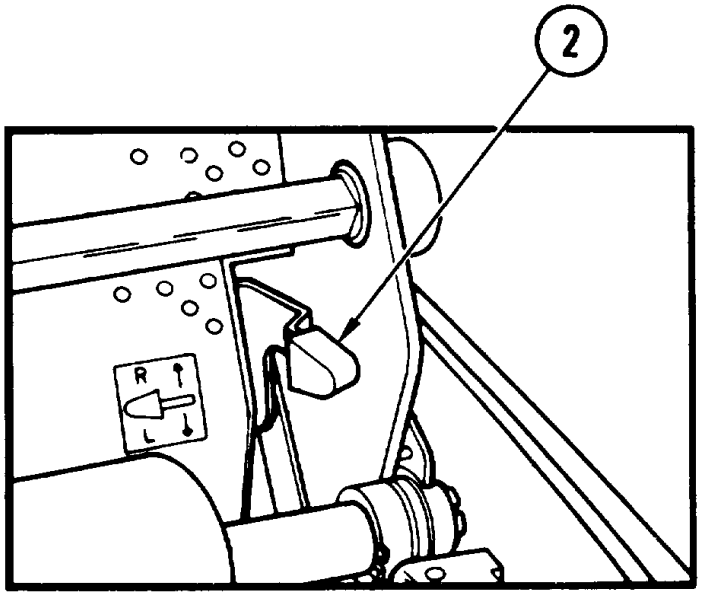

Remove

WARNING

Do not remove paper with power on. Power off.

1. Open plastic paper shield.
2. Push in, then press RUN/LOAD lever down to L.
3. Open tractor gates. Free paper from tractor pins.

4.Grasping sides of paper, pull paper down and out.

5.Close tractor gates.

6.Close plastic shield.

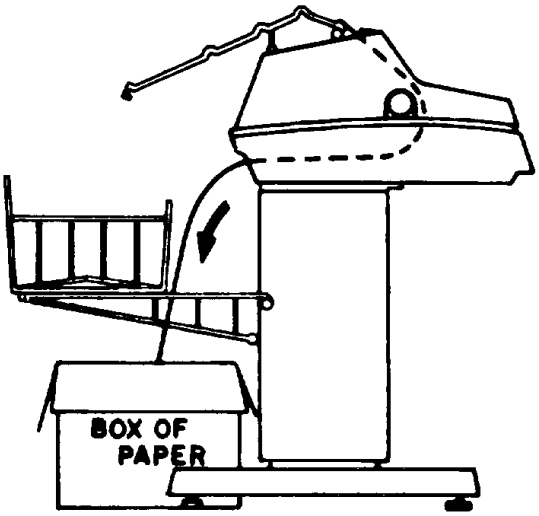

2-9. OPERATION OF AUXILIARY EQUIPMENT

Auxiliary equipment consists of the VFU assembly, VFU punched tape, and the punch and splicer device.

a. VFU Assembly. The VFU assembly advances the paper and spaces the printing as desired. It consists of:

- Sprocket Wheel. Holds and moves the VFU tape on traction pins
- Detector Assembly. Reads the Form Feed (FF) and Vertical Tab (VT) code holes punched in the tape. It then sends the information to the slew strobe assembly which moves and turns the VFU drive belt
- Drive Belt. Moves the sprocket wheel

b. VFU Punched Tape. The VFU punched tape is opaque or mylar tape containing prepunched sprocket holes. FF and VT code holes are punched in it with a punch and splicer device.

c. Punch and Splicer Device. This device is used to punch channel one (FF) code holes for Form Feed (FF) and channel six (VT) code holes for Vertical Tab in the VFU tape.

A manual punch and splicer device is available as auxiliary equipment to prepare punched tape for use in the vertical format unit (VFU).

2-10. USE OF VFU PUNCHED TAPE

The VFU uses punched tape to advance continuous pin-feed (fan-fold) paper (fig. 2-2) through the printer. This type of paper is divided by perforated fold lines into sections known as forms. Normally, print should appear on the form and not on the fold-lines. The VFU punched tape is used to advance the paper and space the printing properly (as desired) within the form.

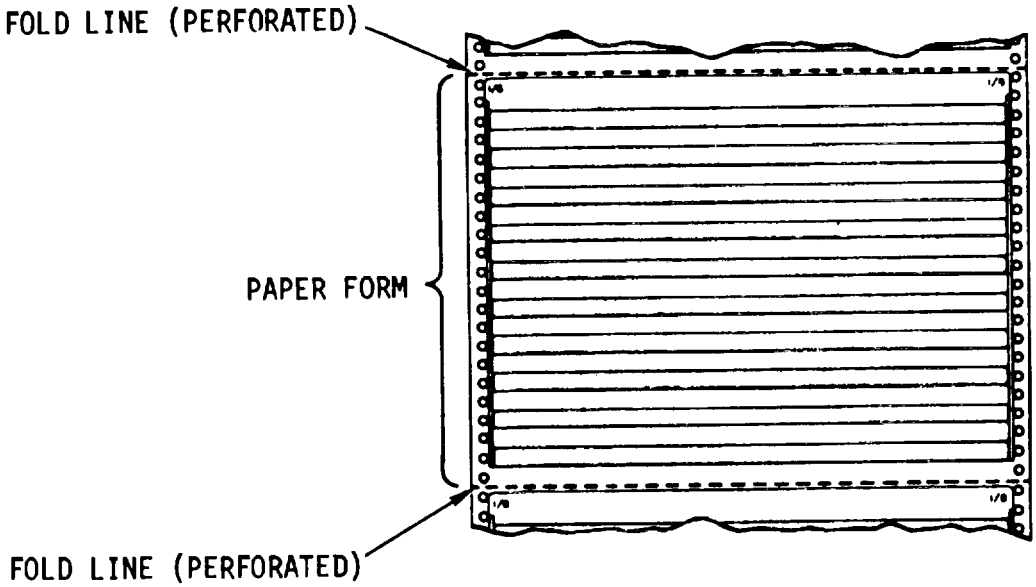

Figure 2-2. Continuous Pin-Feed (Fan-Fold) Paper

The VFU tape (fig. 2-3) is standard one-inch wide opaque paper or mylar tape. if comes with prepunched sprocket holes that correspond to the lines on a form. Additional holes, known as channel code holes, may be punched in the tape by the punch and splicer device. Although eight channel code holes may be punched, only two are recognized by the line printer. They are channel one code hole for Form Feed (FF) and channel six code hole for Vertical Tab (VT).

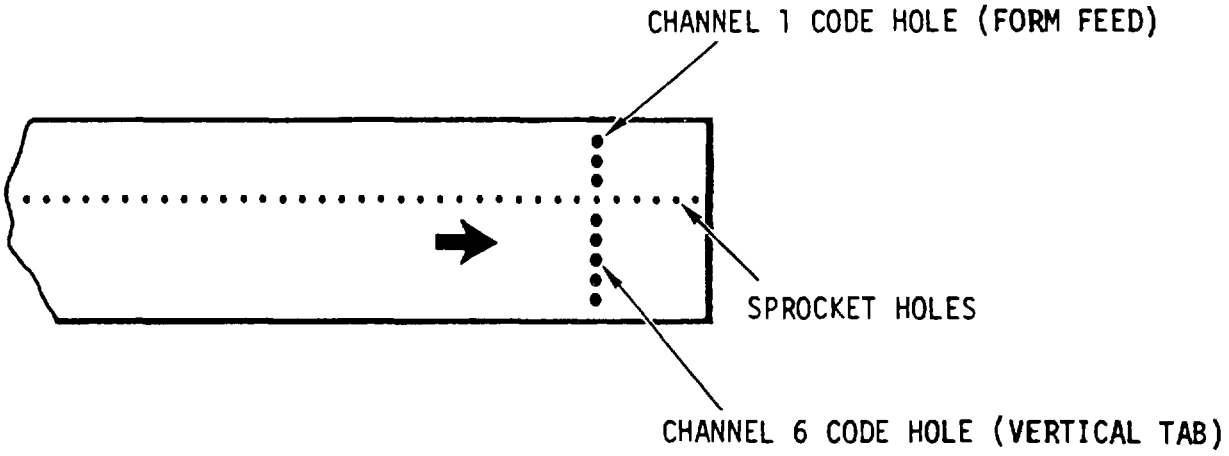

Figure 2-3. VFU Punched Tape

FF code holes in the tape are used to define top of form (fig. 2-4) and to ensure hat printout always begins in the right place on the form. VT code holes in the ape are used to skip lines on the form and, like a typewriter, stop the paper at a tab which, in this case, is a vertical tab (figure 2-4).

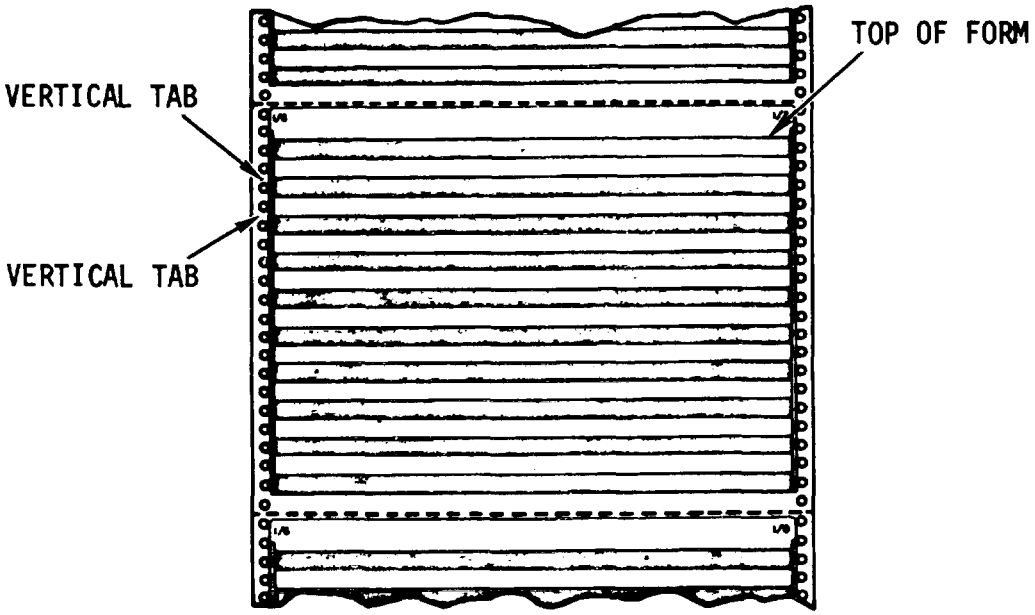

Figure 2-4. Top of Form and Vertical Tabs

The VFU receives instructions from the printer and from the computer. For example, when the VFU receives an FF code from the TOP OF FORM button on the control panel, it looks for an FF code hole on the tape and stops the paper linefeed when it finds one. When the VFU receives an FF command from the computer, it advances to the next FF hole and ignores any VT hole. When it receives a VT command from the computer, it advances to the next FF or VT hole.

To prepare a VFU tape, it is necessary to follow table 2-2, and perform the following steps:

a. Form Length. Measure, the form length (distance between fold-line perforations) in inches. Determine, from the run book or programmer's instructions, the number of lines per inch (lpi).

b. Number of Line Spaces Available. Multiply the form length by the number of lines per inch. For example, a form length of 6 inch X 6 1pi = 36 line spaces available.

c. Tape Length per Form Length. Knowing the number of lines on the form, look at table 2-2 and find the tape length per form length. If the tape length per form length is less than six inches, it will be too small to properly fit the VFU. Go to the next column in table 2-2.

d. Total Tape Length. Find the total tape length required. Count the sprocket holes. For example, there are 10 sprocket holes per inch. A tape length of 7.2 in. contains 72 sprocket holes.

e. Number of Repetitive VTFF Formats. If tape length per form length is less than six inches, more than one VTFF format is required. For each repetition of the VTFF (format, an FF hole is required in line one. The run book or programmer's instructions will state where and how many VT holes are required. The VT holes must be repeated for each repetition of the VTFF format.

f. Example. You have a 6 inch form at 6 1pi with tabs on lines 10, 20, and 30. A 6 inch form at 6 1pi has 36 line spaces. Table 2-2 says tape length per form length is 3.6 inch total tape length is 7.2 inch (72 sprocket holes), and 2 VTFF repetitions are needed. Line 1 and 37 on the tape will need FF holes, and lines 10, 20, 30 46, 56, and 66 will need VT holes.

Table 2-2. Length of Tape Data

FORM LENGTH 6 LPI		FORM LENGTH 8 LPI		NO. OF LINE SPACES	TAPE LENGTH PER FORM LENGTH		TOTAL TAPE LENGTH		NO. OF REPETITIVE VTFF FORMATS
IN.	CM	IN.	CM	AVAILABLE	IN.	CM	IN.	CM	
				1	0.1	0.25	6.0	15.2	60
				2	0.2	0.51	6.0	15.2	30
0.5	1.3			3	0.3	0.76	6.0	15.2	20
		0.5	1.3	4	0.4	1.02	6.0	15.2	15
				5	0.5	1.27	6.0	15.2	12
1.0	2.5			6	0.6	1.52	6.0	15.2	10
				7	0.7	1.78	6.3	16.0	9
		1.0	2.5	8	0.8	2.0	6.4	16.3	8
1.5	3.8			9	0.9	2.3	6.3	16.0	7
				10	1.0	2.5	6.0	15.2	6
				11	1.1	2.8	6.6	16.8	6
2.0	5.1	1.5	3.8	12	1.2	3.0	6.0	15.2	5
				13	1.3	3.3	6.5	16.5	5
				14	1.4	3.6	7.0	17.8	5
2.5	6.4			15	1.5	3.8	6.0	15.2	4
		2.0	5.1	16	1.6	4.1	6.4	16.3	4
				17	1.7	4.3	6.8	17.3	4
3.0	7.6			18	1.8	4.6	7.2	18.3	4
				19	1.9	4.8	7.6	19.3	4
		2.5	6.4	20	2.0	5.1	6.0	15.2	3
3.5	8.9			21	2.1	5.3	6.3	16.0	3
				22	2.2	5.6	6.6	16.8	3
				23	2.3	5.8	6.9	17.5	3
4.0	10.2	3.0	7.6	24	2.4	6.1	7.2	18.3	3
				25	2.5	6.4	7.5	19.1	3
				26	2.6	6.6	7.8	19.8	3
4.5	11.4			27	2.7	6.9	8.1	20.6	3
		3.5	8.9	28	2.8	7.1	8.4	21.3	3
				29	2.9	7.4	8.7	22.1	3
5.0	12.7			30	3.0	7.6	6.0	15.2	2
				31	3.1	7.9	6.2	15.7	2
		4.0	10.2	32	3.2	8.1	6.4	16.3	2
5.5	14.0			33	3.3	8.4	6.6	16.8	2
				34	3.4	8.6	6.7	17.0	2
				35	3.5	8.9	7.0	17.8	2
6.0	15.2	4.5	11.4	36	3.6	9.1	7.2	18.3	2
				37	3.7	9.4	7.4	18.8	2
				38	3.8	9.7	7.6	19.3	2
6.5	16.5			39	3.9	9.9	7.8	19.8	2
		5.0	12.7	40	4.0	10.2	8.0	20.3	2
				41	4.1	10.4	8.2	20.8	2
7.0	17.8			42	4.2	10.7	8.4	21.3	2
				43	4.3	10.9	8.6	21.8	2
		5.5	14.0	44	4.4	11.2	8.8	22.4	2
7.5	19.1			45	4.5	11.4	9.0	22.9	2
				46	4.6	11.7	9.2	23.4	2

Table 2-2. Length of Tape Data -- Continued

FORM LENGTH 6 LPI		FORM LENGTH 8 LPI		NO. OF LINE SPACES	TAPE LENGTH PER FORM LENGTH		TOTAL TAPE LENGTH		NO. OF REPETITIVE VTFF FORMATS
IN.	CM	IN.	CM	AVAILABLE	IN.	CM	IN.	CM	
				47	4.7	11.9	9.4	23.9	2
8.0	20.3	6.0	15.2	48	4.8	12.2	9.6	24.4	2
				49	4.9	12.4	9.8	24.9	2
				50	5.0	12.7	10.0	25.4	2
8.5	21.6			51	5.1	13.0	10.2	25.9	2
		6.5	16.5	52	5.2	13.2	10.4	26.4	2
				53	5.3	13.5	10.6	26.9	2
9.0	22.9			54	5.4	13.7	10.8	27.4	7
				55	5.5	14.0	11.0	27.9	2
		7.0	17.8	56	5.6	14.2	11.2	28.4	2
9.5	24.1			57	5.7	14.5	11.4	29.0	2
				58	5.8	14.7	11.6	29.5	2
				59	5.9	15.0	11.8	30.0	2
10.0	25.4	7.5	19.1	60	6.0	15.2	6.0	15.2	1
				61	6.1	15.5	6.1	15.5	1
				62	6.2	15.7	6.2	15.7	1
10.5	26.7			63	6.3	16.0	6.3	16.0	1
		8.0	20.3	64	6.4	16.3	6.4	16.3	1
				65	6.5	16.5	6.5	16.5	1
11.0	27.9			66	6.6	16.8	6.6	16.8	1
				67	6.7	17.0	6.7	17.0	1
		8.5	21.6	68	6.8	17.3	6.8	17.3	1
11.5	29.2			69	6.9	17.5	6.9	17.5	1
				70	7.0	17.8	7.0	17.8	1
				71	7.1	18.0	7.1	18.0	1
12.0	30.5	9.0	22.9	72	7.2	18.3	7.2	18.3	1
				73	7.3	18.5	7.3	18.5	1
				74	7.4	18.8	7.4	18.8	1
12.5	31.8			75	7.5	19.1	7.5	19.1	1
		9.5	24.1	76	7.6	19.3	7.6	19.3	1
				77	7.7	19.6	7.7	19.6	1
13.0	33.0			78	7.8	19.8	7.8	19.8	1
				79	7.9	20.1	7.9	20.1	1
		10.0	25.4	80	8.0	20.3	8.0	20.3	1
13.5	34.3			81	8.1	20.6	8.1	20.6	1
				82	8.2	20.8	8.2	20.8	1
				83	8.3	21.1	8.3	21.1	1
14.0	35.6	10.5	26.7	84	8.4	21.3	8.4	21.3	1
		11.0	27.9	88	8.8	22.4	8.8	22.4	1
		14.0	35.6	122	11.2	28.4	11.2	28.4	1

2-11. PREPARE VFU PUNCHED TAPE

INITIAL SETUP

Materials/Spare Parts	Support Equipment
• VFU Opaque/Mylar Tape	• VFU Punch and Splicer Device
• Pen or pencil	
• Ruler	

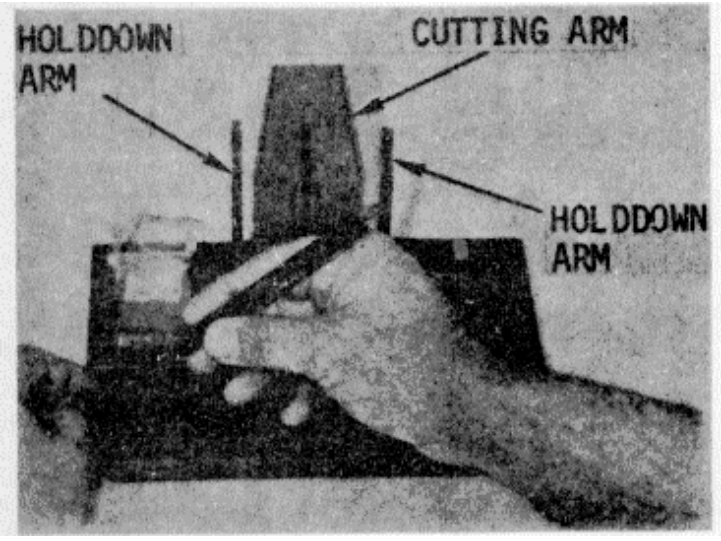

1.Raise cutting arm and both holddown arms as shown.

2. Mark off length of tape needed for form you will use.

NOTE

Use table 2-2 to determine information required for punching your VFU tape. Use a ruler or count the sprocket holes to measure off the tape length.

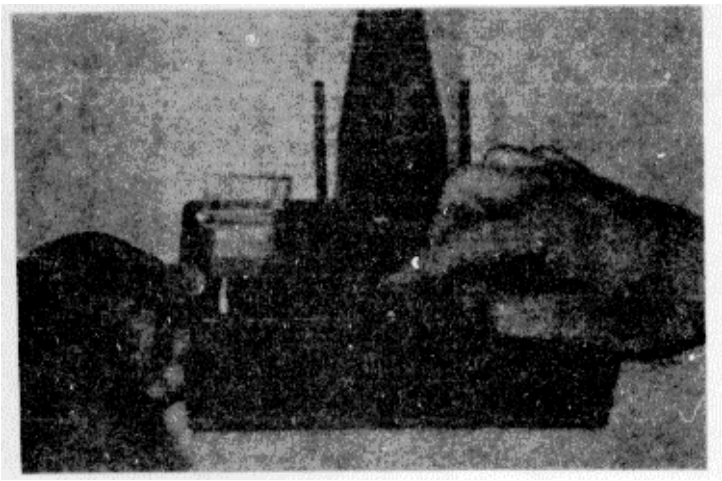

3. Set tape in place on track and press onto sprockets as shown.

2-11. PREPARE VFU PUNCHED TAPE (CONT)

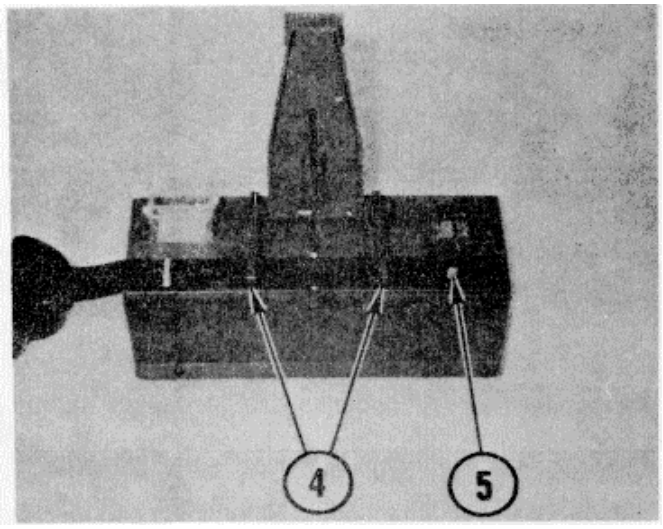

4. Lower both holddown arms.

5. Set hole punch to desired channel.

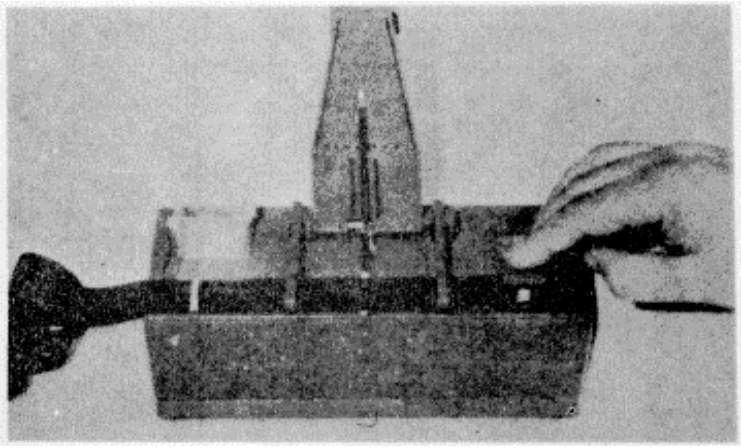

6. Press hole punch.

7. Repeat steps 3 thru 6 to encode rest of tape.

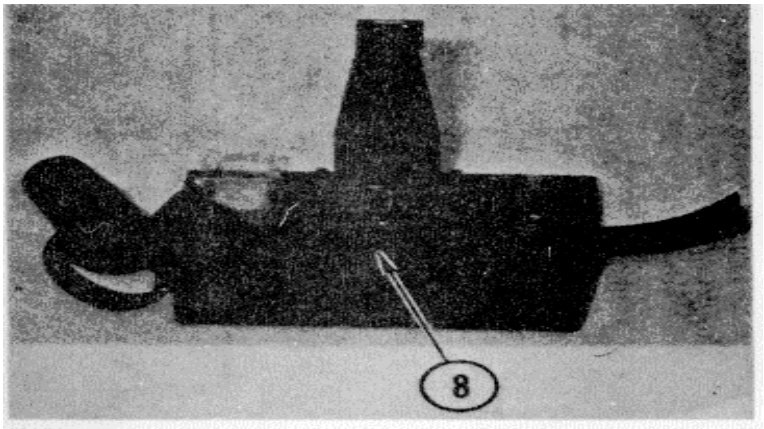

8. W hen you have punched last hole, move .tape so cutting mark is across cut line.

2-11. PREPARE VFU PUNCHED TAPE (CONT)

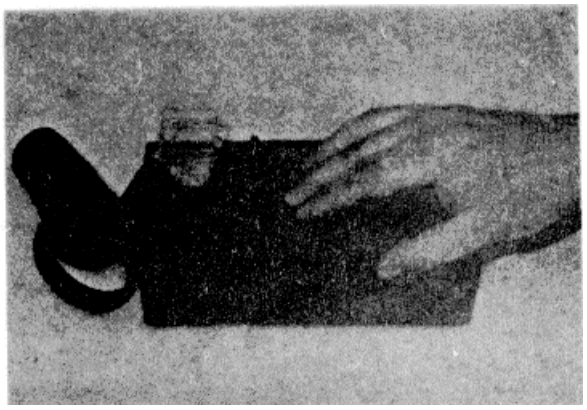

• Lower and press cutting arm.

NOTE

It is important to place data patch on TOP of tape so directional arrow is visible.

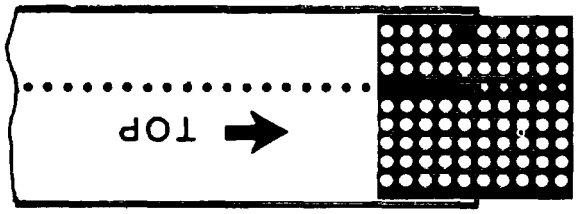

10. Set data patch on one end of tape as shown. Press with your finger to bind patch to tape.

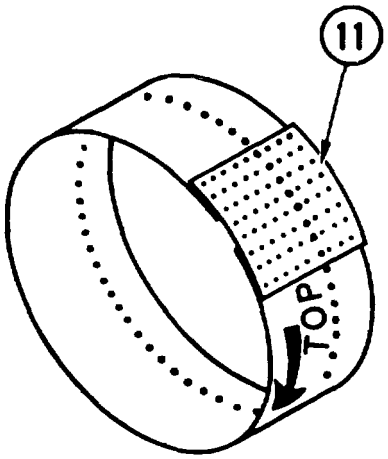

11. Remove tape. Set data patch on other end so both ends touch each other. Press to bind patch to tape.

12. If necessary mark arrow on tape to show feed direction.

2-12. INSTALL/REMOVE VFU TAPE

INITIAL SETUP

Supplies
• Punched VFU tape

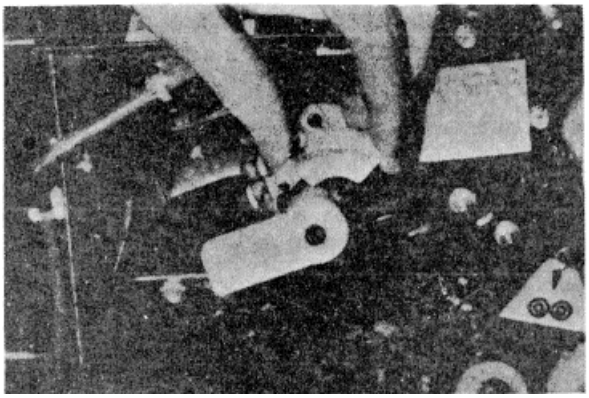

Install

1. Power OFF (para 2-7).
2. Open top cover.
3. Lift tape cover as shown.

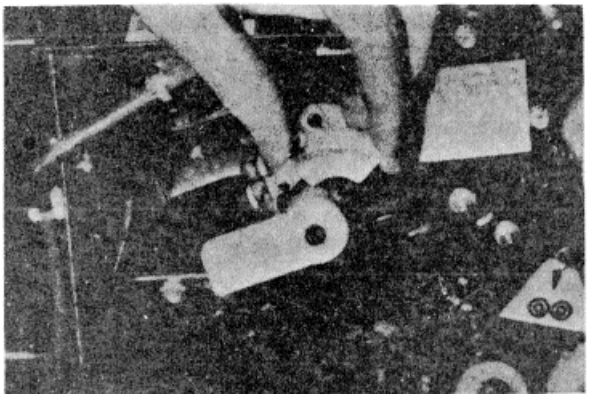

4. Insert tape with arrow pointing as shown. Position sprocket holes over sprocket teeth.

2-12. INSTALL/REMOVE VFU TAPE (CONT)

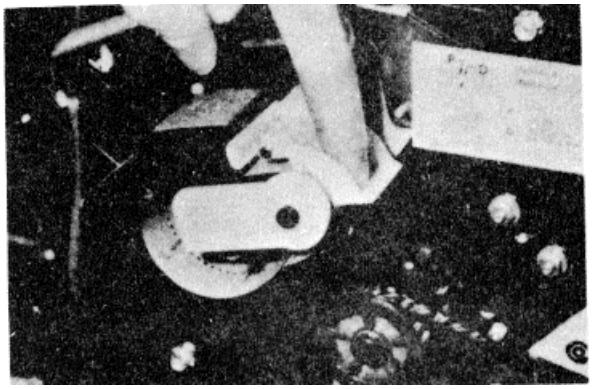

5.Lower tape cover.

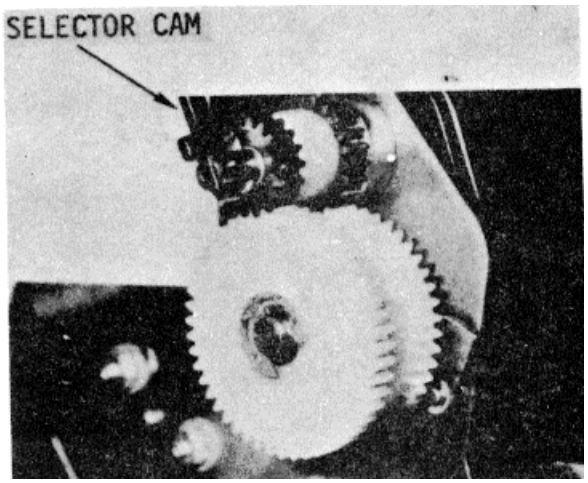

6. If the VFU tape is punched for:

   - Six lines per inch, pull selector cam lever out and push up firmly
   - Eight lines per inch, pull selector cam lever out and push down firmly

7. Lower printer cover.

Remove

1. Power OFF.
2. Open line printer cover.
3. Lift tape cover.
4. Lift tape off sprocket teeth. Slide out.
5. Lower tape cover.
6. Lower printer cover.

2-13. SYNCHRONIZE VFU TOP OF FORM CODE HOLE WITH PAPER TOP OF FORM

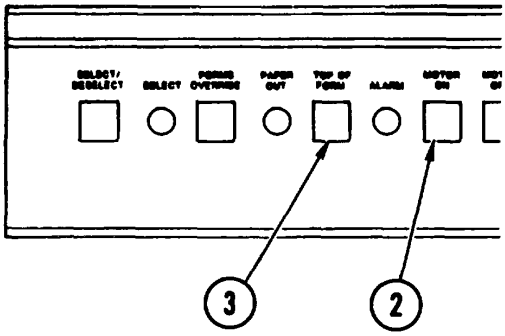

1. Install VFU tape (para 2-12).

2. Power ON. Press MOTOR ON button

3. Press TOP OF FORM button on control panel once.

CAUTION

Damage to gears will result if platen knob is not pjshed in before turning.

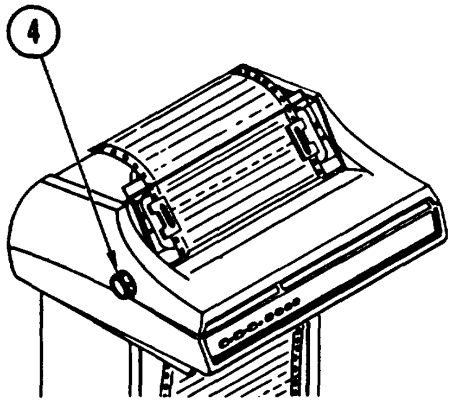

4. Advance paper until perforated top of form (paper) appears one inch above ribbon.

NOTE

Step 4 applies to standard size form paper. For other sizes a different adjustment may be required.

2-14. PREPARATION FOR MOVEMENT

Your system manual contains instructions for preparing the line printer for movement. In most installations, the platen, unused paper, re-inker, and sometimes the ribbon cartridge are removed and stored to prepare the line printer for movement.

2-15. OPERATING INSTRUCTIONS ON DECALS AND INSTRUCTION PLATES

There are many decals on the line printer. Only two are used by the operator. They are the RUN/LOAD lever and the VFU tape decals.

a. RUN/LOAD Lever Decal. This decal is located near the RUN/LOAD lever (fig. 2-9) and shows how the lever must be set for RUN (R) or for LOAD (L).

b. VFU Tape Decal. This decal (fig. 2-9) is located on the VFU assembly and

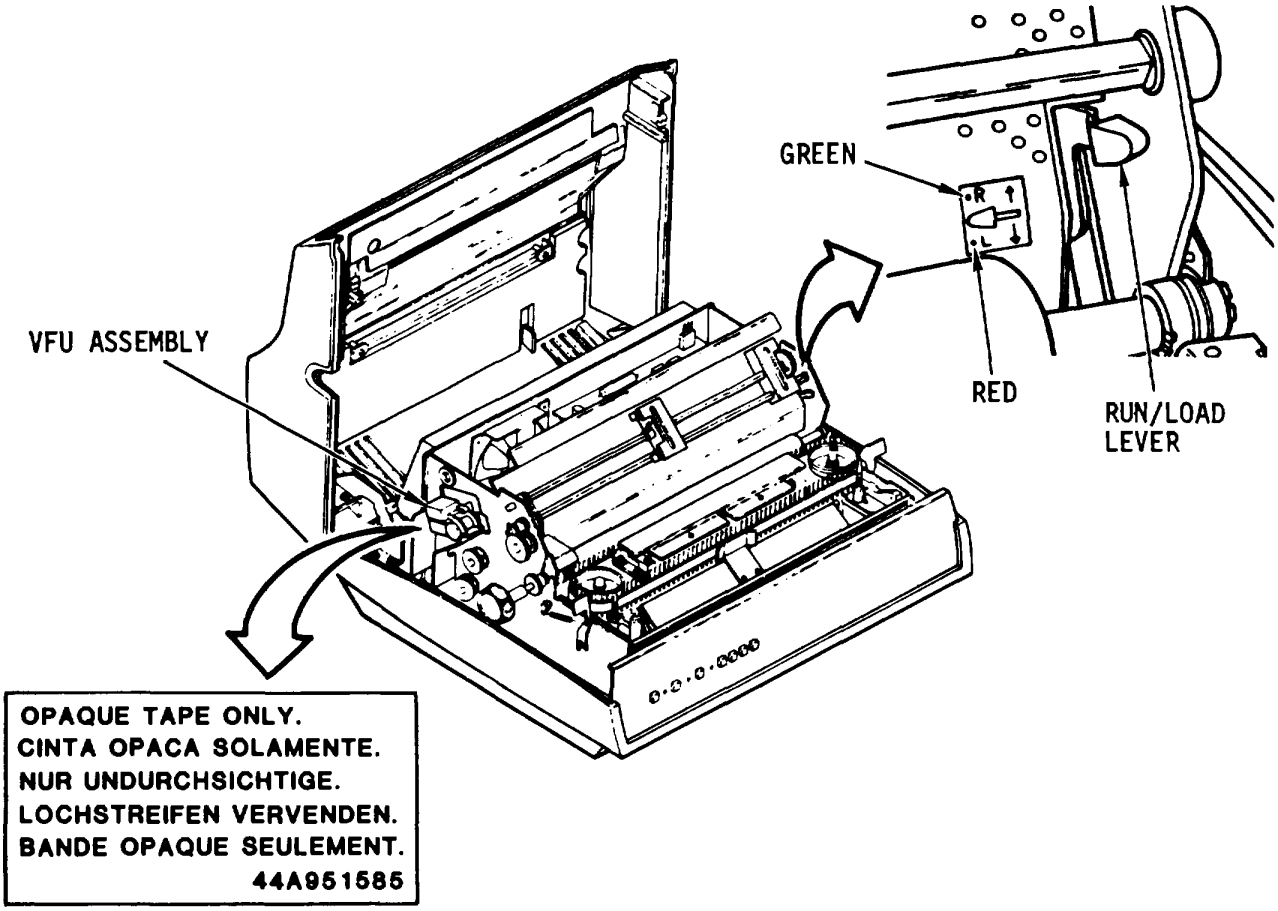

Figure 2-9. Operation Decals

Section IV. OPERATION UNDER UNUSUAL CONDITIONS

2-16. OPERATION IN UNUSUAL WEATHER|

The line printer is designed to operate normally in a climate controlled area protected from dust and extreme dryness. If the climate control equipment fails, you may continue to operate the line printer if the room temperature is not lower than 32OF (0oC) or higher than 1lOOF (43.50C).

WARNING

Do not allow wet cloths used for emergency humidification to drip on floor or near electronic equipment in operating area. A shock hazard will be present.

When operating in extremely dry climate you must use a humidifier to raise the relative humidity above 10%. If the humidifier fails, soak cloths or towels with water and hang them in the work area away from equipment. The evaporation which results will raise the humidity and allow you to continue operation. Monitor the humidity while you operate to make sure it is at least 10%.

12-17. EMERGENCY PROCEDURES

If the ac power goes out at the power source while the line printer is on, turn off the printer at the ON/OFF power switch. When ac power is restored, restart the printer. If the printer was operating on line before power interruption, you will have to start the program being run from the beginning.

If ac power interruption affects entire ADP system, see your system manual for start-up procedure.

CHAPTER 3
MAINTENANCE INSTRUCTIONS

Index of Maintenance Procedures

Section I. LUBRICATION INSTRUCTIONS

3-1. LUBRICATION

The line printer requires no lubrication by the operator.

Section II. TROUBLESHOOTING PROCEDURES

3-2. GENERAL

Table 3-1 lists the common malfunctions which you may find during the operation or maintenance of the line printer or its components. You should perform the tests/inspections and corrective actions in the order listed.

This manual cannot list all malfunctions that may occur, nor all tests or inspections and corrective actions. If a malfunction is not listed or is not corrected by listed corrective actions, notify your supervisor.

Table 3-1. Troubleshooting

MALFUNCTION
TEST OR INSPECTION
CORRECTIVE ACTION

1 PRINTER WILL NOT POWER ON.

Step 1 Check if ac power cord is plugged into outlet.
If not, plug it in.

Step 2. Check if power switch is ON.
If not, set it ON.

Table 3-1. Troubleshooting -- Continued

MALFUNCTION TEST OR INSPECTION CORRECTIVE ACTION
Step 3. If printer is plugged in and powered ON, but will not run, Tell your supervisor.
2. MOTOR WILL NOT RUN.
Step 1 Check if MOTOR ON is ON. Push MOTOR ON button.
Step 2. Check if top cover is fully closed. Close top cover.
Step 3. Check if out of paper. Load paper.
Step 4. Check if RUN/LOAD lever is in R position. Set to R position.
Step 5.If motor still does not run, tell your supervisor.
3. PRINTS LIGHT ON ALL CHARACTERS.
Step 1. Check if ribbon moves. If ribbon does not move, check, adjust ribbon (para 3-4).
Step 2. Check if re-inker is in place. If not, install re-inker (para 3-6).
Step 3.Check ink supply in re-inker. If empty, install new ribbon cartridge and re-inker (para 3-5).
Step 4. If ribbon moves and re-inker is in place, check if ribbon-is frayed and worn. If it is, replace the ribbon cartridge with a new one (para 3-5).
Step 5. If printer still prints light, tell your supervisor.

Table 3-1. Troubleshooting -- Continued

MALFUNCTION TEST OR INSPECTION CORRECTIVE ACTION

4. PRINTS LIGHT ON ONE CHARACTER.

Step 1. Check if type finger is bent, broken or not seated in print belt.
Tell your supervisor.

5. PRINT IS BLURRED FOR ONE OR MORE CHARACTERS

Step 1. Check for ink buildup on typefinger(s).
Clean type fingers (para 3-7).

6. PAPER PULLS TO ONE SIDE.

Step 1 Check if paper path is blocked.
Remove object blocking paper path.

Step 2. Check tractor width.
Adjust tractor width.

Step 3. Check if platen is jammed.
Push in and turn platen drive knob.
If still jammed, tell your supervisor.

Step 4. Check alignment of paper on tractor pins.
Aline paper. If paper still pulls to one side, tell your supervisor.

Section III. MAINTENANCE PROCEDURES

3-3. GENERAL

This section contains the maintenance procedures you are authorized to perform on the line printer. These include checks and adjustments, removal and installation of components, cleaning and testing. Operator maintenance on the line printer is required whenever a preventive maintenance check or troubleshooting procedure calls for it.

3-4. CHECK/ADJUST RIBBON

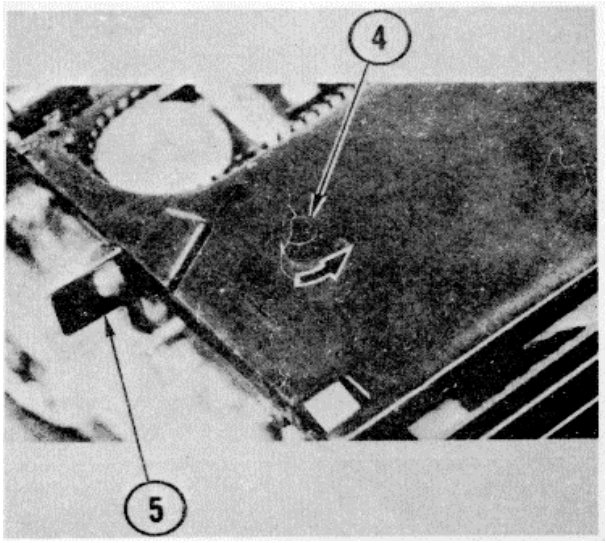

1. Power OFF.

2. Remove paper (para 2-11).

3. Open top cover.

4. Press down on ribbon cartridge and turn drive knob counterclockwise.

5. Push both cartridge latch handles forward. Cartridge should now be firmly seated.

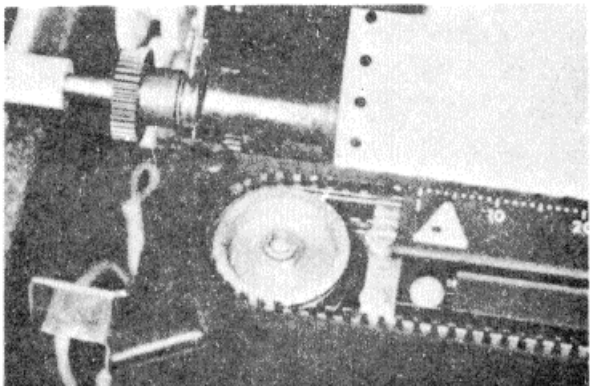

6. Make sure ribbon is between type fingers and paper holder.
7. Make sure all type fingers are inside ribbon, as shown.

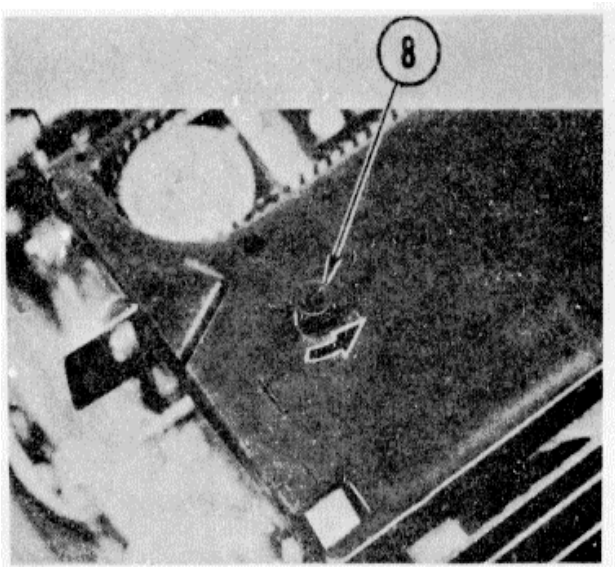

8. Make sure ribbon is tight. Turn drive knob as shown.

9. Close top cover.

10. Install paper (para 2-11).

3-5. REMOVE/REPLACE RIBBON CARTRIDGE

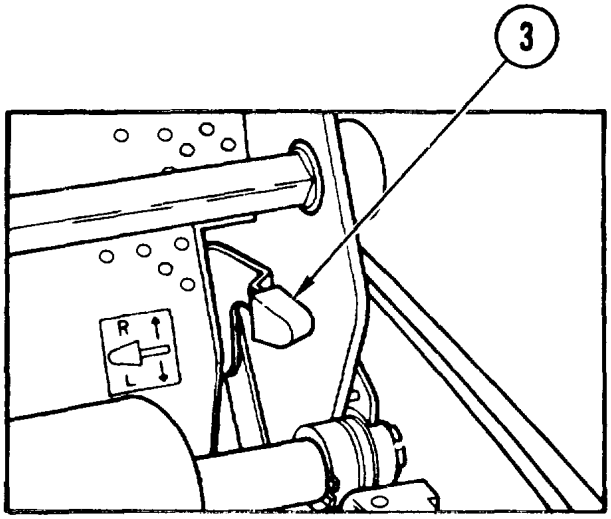

Remove

CAUTION

Never operate line printer without ribbon cartridge in place. Type fingers will be damaged.

1. Power OFF.
2. Open top cover.
3. Push in, press RUN/LOAD lever to L.
4. Remove re-inker if in use.

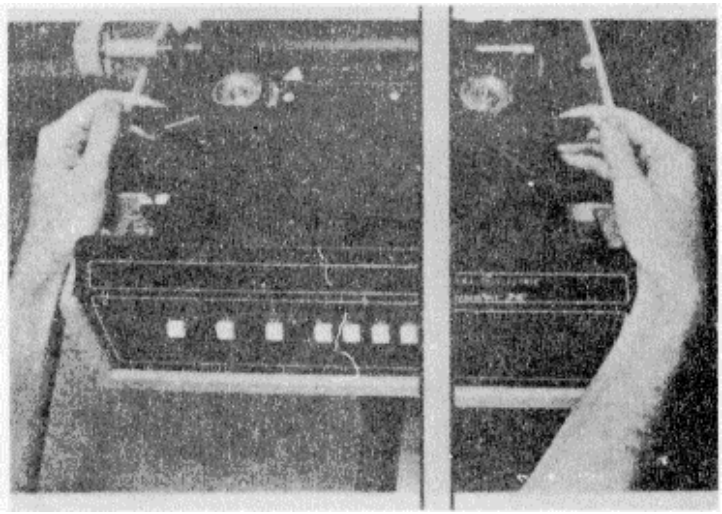

5. Pull back both cartridge release levers.
6. Lift cartridge up and off.

3-5. REMOVE/REPLACE RIBBON CARTRIDGE (CONT)

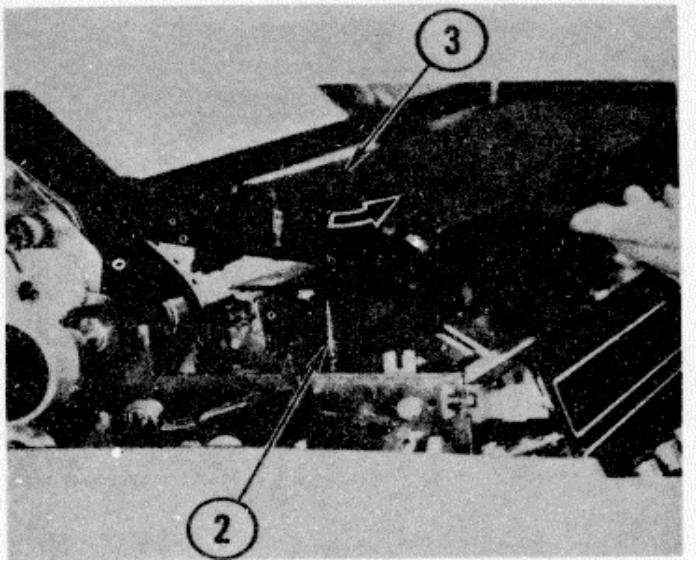

Replace

1. Pull up RUN/LOAD lever to R.
2. Load cartridge onto two locator pins and press down tightly.
3. Turn drive knob counterclockwise **IF** .until ribbon drive shaft engages drive gear.
4. Press cartridge release levers forward to lock.

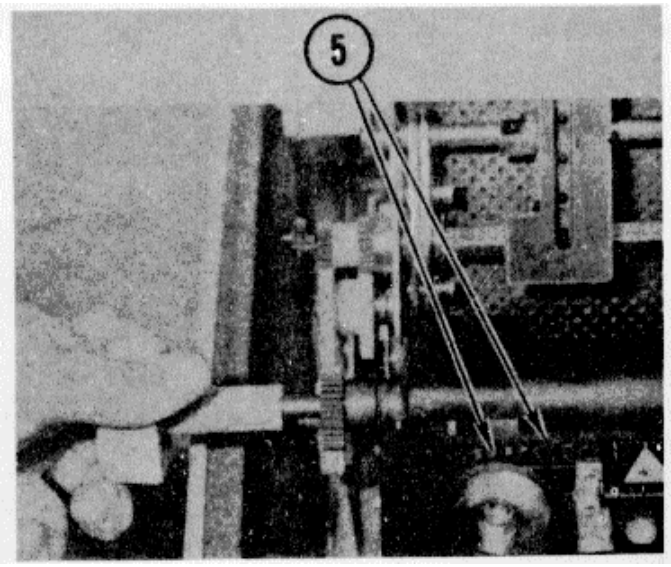

CAUTION

Damage to type fingers will result if ribbon catches in type fingers.

5. Make sure ribbon is between type fingers and paper holder, and all type fingers are on same side of ribbon.

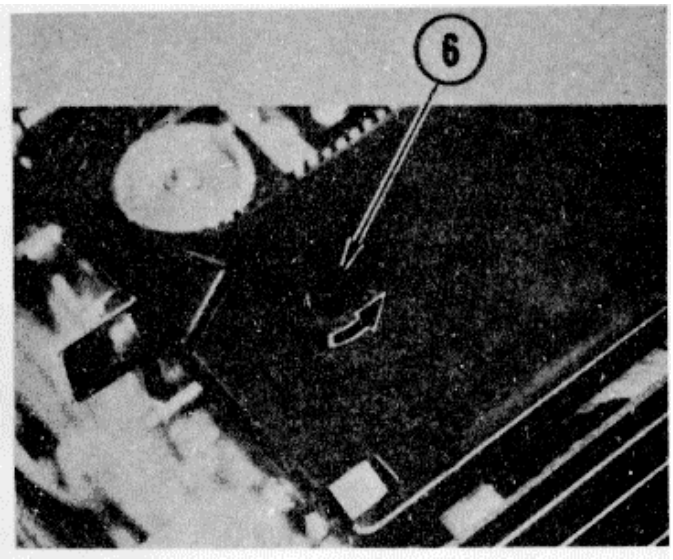

6. Tighten ribbon by turning drive knob as shown.
7. Replace re-inker, if necessary. (para 3-6).
8. Close top cover.
9. Power ON.

3-6. REMOVE/REPLACE RE-INKER

INITIAL SETUP
Supplies
- Dry cloth
- Isopropyl alcohol

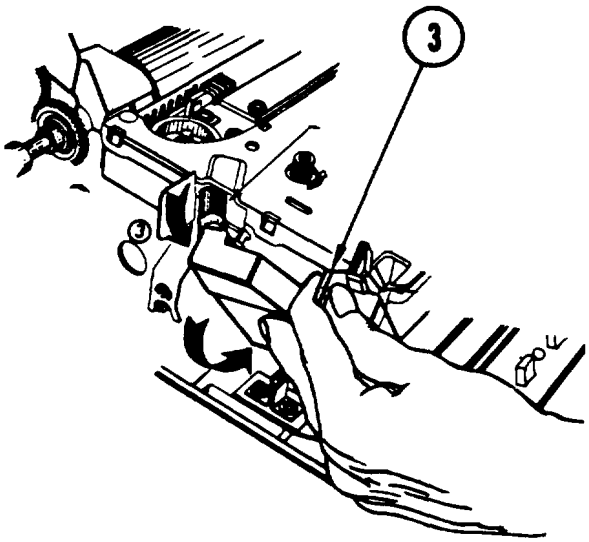

Remove

1. Power OFF.

2. Open cover.

3. Hold tab on top of re-inker.

4. Tilt bottom inward. Pull up and out. Screw on storage cap.

WARNING

Isopropyl alcohol, when used as a cleaning fluid, is flammable. Keep away from heat and open flame.

5. Wipe off ink with dry cloth. Dampen with isopropyl alcohol if needed to remove ink from hands or line printer.

6. Store in location shown.

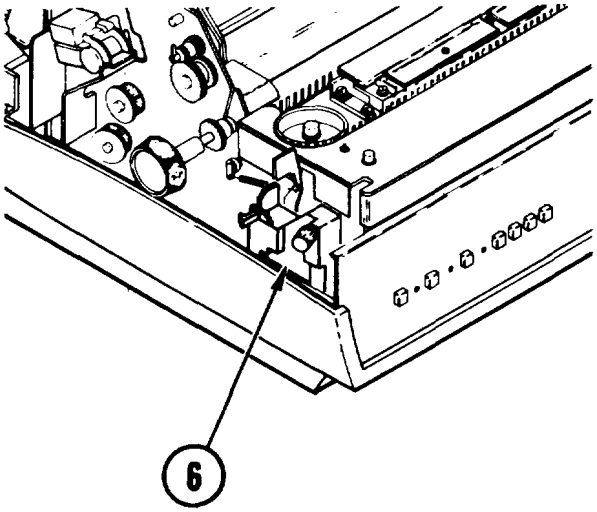

3-6. REMOVE/REPLACE RE-INKER (CONT)

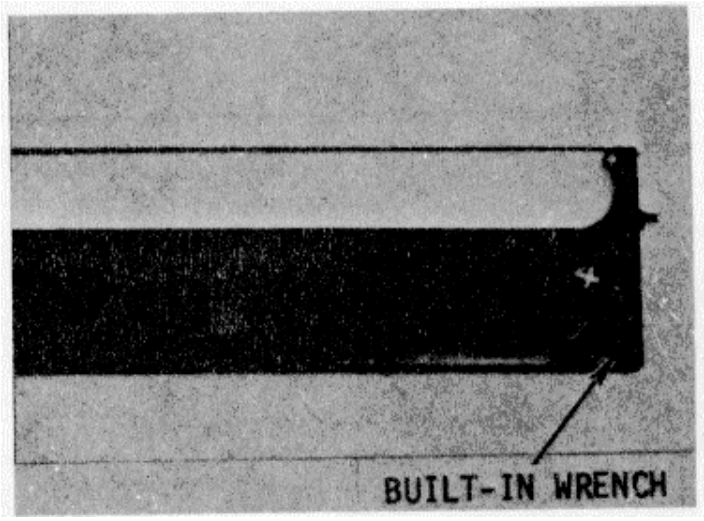

Replace

CAUTION

The re-inker should be used only when print becomes light Do not over-ink.

NOTE

The ribbon cartridge has a built-in wrench to help you unscrew cap. It is on the bottom of the ribbon cartridge under the re-inker slot, as shown.

1. Unscrew cap on replacement re-inker. Store for future use.
2. Hold tab on top of re-inker.

3. Tilt bottom of re-inker inward. Insert. Re-inker snaps into place.

4. Close cover.

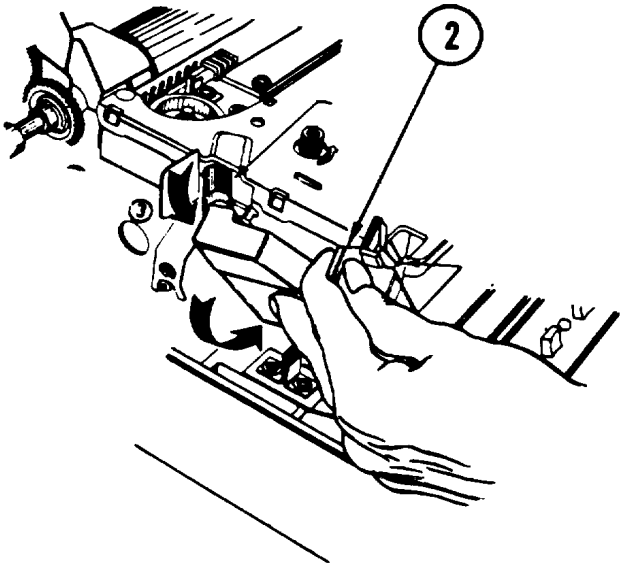

3-7. CLEAN TYPE FINGERS

INITIAL SETUP

Common tools
- Typewriter brush

Supplies
- 3X5 in. card or punch card

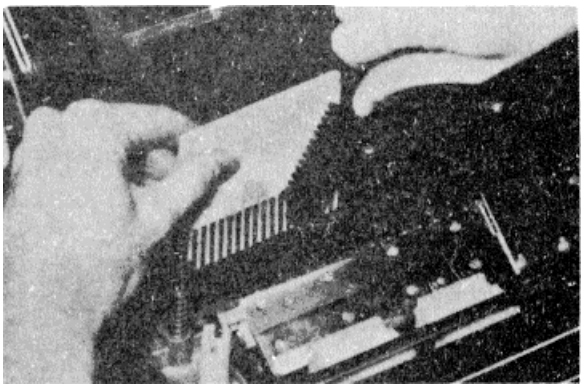

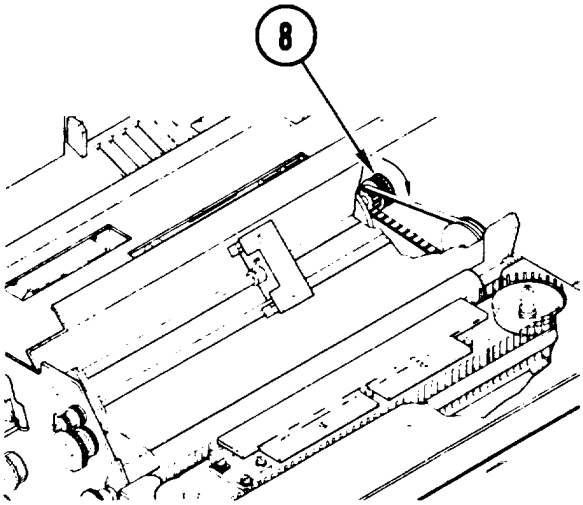

1. Power OFF.

2. Open cover.

3. Remove paper (para 2-11).

4. Remove re-inker (para 3-6).

5. Remove ribbon cartridge (para 3-5).

6. Place a punch card between the print belt and the type fingers.

CAUTION

To clean type fingers, brush upward only. Brushing any other way could bend/destroy fingers.

7. Brush keys with typewriter brush.

8. To locate and clean the next set of type fingers, rotate motor pulley counterclockwise.

9. Clean all type fingers.

10. Remove punch card.

11. Replace ribbon cartridge (para 3-5).

12. Replace re-inker (para 3-6).

13. Install paper (para 2-11).

14. Close cover.

15. Power ON

APPENDIX A

REFERENCES

A-1. SCOPE

This appendix lists all forms, field manuals and technical manuals referenced in, or required for use with, this technical manual.

A-2. FORMS

Equipment Inspection and Maintenance Worksheet ..... DA Form 2404
Quality Deficiency Report ..... Form SF 368
Recommended Changes to Equipment Technical Manuals ..... DA Form 2028-2
Recommended Changes to Publications and Blank Forms ..... DA Form 2028

A-3. TECHNICAL MANUALS

Hand Receipt Manual: Line Printer RP-2731 /MYQ-4 ..... TM 11-7025-210-10-HR
The Army Maintenance Management System (TAMMS) ..... TM 38-750

A-4. MISCELLANEOUS PUBLICATIONS

Consolidated Index of Army Publications and Blank Forms ..... DA Pam 310-1

APPENDIX B
COMPONENTS OF END ITEM AND BASIC ISSUE ITEMS LISTS

Section I. INTRODUCTION

B-1. SCOPE

This appendix lists components of end item and basic issue items for the line printer to help you inventory items required for safe and efficient operation.

B-2. GENERAL

The Components of End Item and Basic Issue Items Lists are divided into the following sections:

a. Section II. Components of End Item. This listing is for informational purposes only, and is not authority to requisition replacements. These items are part of the end item, but are removed and separately packaged for transportation or shipment. As part of the end item, these items must be with the end item whenever it is issued or transferred between property accounts. Illustrations are furnished to assist you in identifying the items.

b. Section III. Basic issue Items. These are the minimum essential items required to place the line printer in operation, to operate it, and to perform emergency repairs.. Although shipped separately packaged BII must be with the line printer during operation and whenever it is transferred between property accounts. The illustrations will assist you with hard-to-identify items. This manual is your authority to request/requisition replacement BII, based on TOE/MTOE authorization of the end item.

B-3. EXPLANATION OF COLUMNS

The following provides an explanation of columns found in the tabular listings:

Column (1) -Illustration Number (Illus Number). This column indicates the number of the illustration in which the item is shown.

Column (2) -National Stock Number. Indicates the National stock number assigned to the item and will be used for requisitioning purposes.

Column (3) -Description. Indicates the National item name and, if required, a minimum description to identify and locate the item. The last line for each item indicates the Federal Source Code for Manufacturer (FSCM) in parentheses followed by the part number. If item needed differs for different models of this equipment, the model is shown under the "Usable On" heading in this column.

These codes are identified as:

Code	Used On
PAA	Model XXX
PAB	Model XXXX
PAC	Model XXXX

Column (4) -Unit of Measure (U/M). Indicates the measure used in performing the actual operational/maintenance function. This measure is expressed by a two-character alphabetical abbreviation (e.g., ea, in., pr).

Column (5) -Quantity required (Qty rqr). Indicates the quantity of the item authorized to be used with/on the equipment.

Section II. COMPONENTS OF END ITEM

(Not applicable)

Section III. BASIC ISSUE ITEMS

(Not applicable)

APPENDIX C
ADDITIONAL AUTHORIZATION LIST

Section I. INTRODUCTION

C-1. SCOPE

This appendix lists additional items you are authorized for the support of the line printer.

C-2. GENERAL

This list identifies items that do not have to accompany the line printer and that do not have to be turned in with it. These items are all authorized to you by CTA, MTOE, .TDA, or JTA.

C-3. EXPLANATION OF LISTING

National stock numbers, descriptions, and quantities are provided to help you identify and request the additional items you require to support this equipment. The items are listed in alphabetical sequence by item name under the type document (i.e., CTA, MTOE, TDA, or JTA) which authorizes the item(s) to you.

Section II. ADDITIONAL AUTHORIZATION LIST

(Not applicable)

APPENDIX D
EXPENDABLE SUPPLIES AND MATERIALS LIST

Section I. INTRODUCTION

D-1. SCOPE

This appendix lists expendable supplies and materials you will need to operate and maintain the line printer. These items are authorized to you by CTA 50-970, Expendable Items (Except Medical, Class V, Repair Parts, and Heraldic Items).

D-2. EXPLANATION OF COLUMNS

Column (1) -- Item number. This number is assigned to the entry in the listing and is referenced in the narrative instructions to identify the material (e.g, "Use cleaning compound, item 5, App. D").

Column (2) -- Level. This column identifies the lowest level of maintenance that requires the listed item.

C -- Operator/Crew

D-- Organizational Maintenance

F -- Direct Support Maintenance

Column (3) -National Stock Number. This is the National stock number assigned to the item; use it to request or requisition the item.

Column (4) -Description. Indicates the Federal item name and, if required, a description to identify the item. The last line for each item indicates the Federal Supply Code for Manufacturer (FSCM) in parentheses followed by the part number.

Column (5) -Unit of Measure (U/M). Indicates the measure used in performing the actual maintenance function. This measure is expressed by a two-character alphabetical abbreviation (e.g., ea, in., pr). If the unit of measure differs from the unit of issue, requisition the lowest unit of issue that will satisfy your requirements.

Section II. EXPENDABLE SUPPLIES AND MATERIALS LIST

(1) Item Number	(2) Level	(3) National Stock Number	(4) Description	(5) U/M
	C	8305-00-222-2423	Cloth, Lintfree	YD
	C	6810-00-753-4993	Alcohol, Isopropyl 81348 TTI735	CN

INDEX

I

L

M

N

O

P

R

S

T

U

V

By Order of the Secretary of the Army:

JOHN A. WICKHAM JR.
General, United States Army
Chief of Staff

Official:

ROBERT M. JOYCE
Major General, United States Army,
The Adjutant General

Distribution:

To be distributed in accordance with special list.

*U. S. GOVERNMENT PRINTING OFFICE : 1985 - 491-202 (20448)

TEAR ALONG PERFORATED LINE

RECOMMENDED CHANGES TO EQUIPMENT TECHNICAL PUBLICATIONS

THEN. . JOT DOWN THE DOPE ABOUT IT ON THIS FORM, CAREFULLY TEAR IT OUT, FOLD IT AND DROP IT IN THE MAIL!

SOMETHING WRONG WITH THIS PUBLICATION?

FROM: (PRINT YOUR UNIT'S COMPLETE ADDRESS)

DATE SENT

PUBLICATION NUMBER	PUBLICATION DATE	PUBLICATION TITLE

BE EXACT. . .PIN-POINT WHERE IT IS

PAGE NO.	PARA-GRAPH	FIGURE NO	TABLE NO.	IN THIS SPACE TELL WHAT IS WRONG AND WHAT SHOULD BE DONE ABOUT IT:

PRINTED NAME, GRADE OR TITLE, AND TELEPHONE NUMBER	SIGN HERE:

DA FORM 1 JUL 79 2028-2

PREVIOUS EDITIONS ARE OBSOLETE.

P.S.—IF YOUR OUTFIT WANTS TO KNOW ABOUT YOUR RECOMMENDATION MAKE A CARBON COPY OF THIS AND GIVE IT TO YOUR HEADQUARTERS.

PIN: 054824-000

This fine document...

Was brought to you by me:

Liberated Manuals -- free army and government manuals

Why do I do it? I am tired of sleazy CD-ROM sellers, who take publicly available information, slap “watermarks” and other junk on it, and sell it. Those masters of search engine manipulation make sure that their sites that sell free information, come up first in search engines. They did not create it... They did not even scan it... Why should they get your money? Why are not letting you give those free manuals to your friends?

I am setting this document FREE. This document was made by the US Government and is NOT protected by Copyright. Feel free to share, republish, sell and so on.

I am not asking you for donations, fees or handouts. If you can, please provide a link to liberatedmanuals.com, so that free manuals come up first in search engines:

<A HREF=http://www.liberatedmanuals.com/>Free Military and Government Manuals</A>

- Sincerely
  Igor Chudov
  http://igor.chudov.com/
- Chicago Machinery Movers