TM 11-6625-444-15

DEPARTMENT OF THE ARMY TECHNICAL MANUAL

OPERATOR'S, ORGANIZATIONAL, DIRECT SUPPORT, GENERAL SUPPORT, AND DEPOT MAINTENANCE MANUAL

DIGITAL VOLTMETER AN/GSM-64

This copy is a reprint which includes current pages from Change 1.

HEADQUARTERS, DEPARTMENT OF THE ARMY

OCTOBER 1969

WARNING

Be careful when working on the 100 to 125-volt ac line connections, and the 230-volt ac source if used. Serious injury or DEATH may occur.

TECHNICAL MANUAL
No. 11-6625-444-15

HEADQUARTERS
DEPARTMENT OF THE ARMY
WASHINGTON, D. C., *28 October 1969*

Operator's Organizational, Direct Support, General Support and Depot Maintenance Manual
DIGITAL VOLTMETER AN/GSM-64

*This manual supersedes TM 11-6625-444-15, 27 February 1962, including all changes.

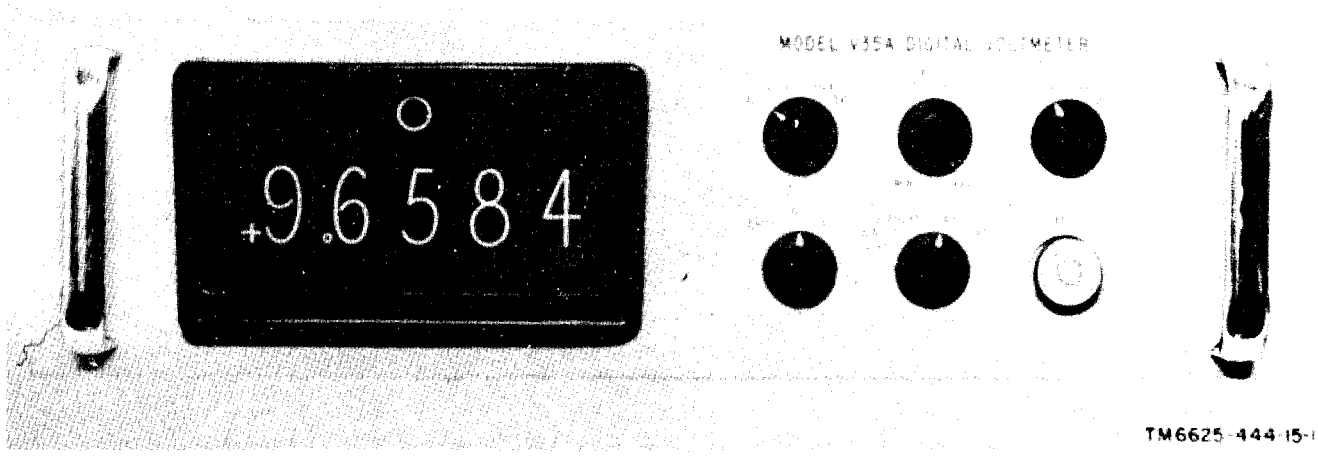

Figure 1-1. Digital Voltmeter AN/GSM-64.

CHAPTER 1
INTRODUCTION

Section I. GENERAL

1-1. Scope

a. This manual contains instructions covering operation, organizational, direct support, general support, and depot maintenance of Digital Voltmeter AN/GSM-64 (fig. 1-1). It includes instructions for troubleshooting, testing, aligning, and repairing the equipment. Also included is the functioning of the AN/GSM-64.

b. Appendix C is current as of 1 August 1968.

1-2. Indexes of Publications

a. DA Pam 310-4. Refer to the latest issue of DA Pam 310-4 to determine whether there are new editions, changes, or additional publications pertaining to the equipment.

b. DA Pam 310-7. Refer to DA Pam 310-7 to determine whether there are modification work orders (MWO's) pertaining to the equipment.

1-3. Forms and Records

a. Reports of Maintenance and Unsatisfacto~ Equipment. Maintenance forms, records, and reports which are to be used by maintenance personnel at all maintenance levels are listed in and prescribed by TM 38-750.

b. Report of Packaging and Handling Deficiencies. Fill out and forward DD Form 6 (report of Packaging and Handling Deficiencies) as prescribed in AR 700-58 (Army)/NAVSUP Pub 378 (Navy)/AFR 71-4 (Air Force)MCO P4030.29 (Marine Corps), and DSAR 4145.8.

c. Discrepancy in Shipment Report (DISREP) (SF 361). Fill out and forward Discrepancy in Shipment Report (DISREP) (SF 361) as prescribed in AR 55-38 (Army)/NAVSUPINST 4610.33/AFM 75-18/MCO P4610.19A (Marine Corps), and DSAR 4500.15.

1-3.1. Reporting of Errors

The reporting of errors, omissions, and recommendations for improving this publication by the individual user is encouraged. Reports should be submitted on DA Form 2028 (Recommended Changes to Publications) and forwarded direct to Commander, US Army Electronics Command, ATTN: AMSEL-MA-C Fort Monmouth, NJ 07703.

Section II. DESCRIPTION AND DATA

1-4. Purpose and Use

a. Digital Voltmeter AN/GSM-64 (digital voltmeter) is used for rapid and accurate measurements of direct current (dc) voltages and dc voltage ratios. The range of dc measurement is from 100 microvolts to 1,000 volts, and the range of dc ratio measurements is up to 100:1.

b. In addition to the front panel readout, a print output is provided through a rear panel connector.

1-5. Technical Characteristics

Absolute dc measurements:
- Ranges ..... ±0.0001 to +999.99 volts in three ranges of 9.9999, 99.999, and 999.99.
- Accuracy ..... ±0.01% of reading, or ±1 digit.
- Resolution ..... ±digit.
- Input impedance at balance 10 megohms.

DC voltage ratio measurements:
- Range ..... ±00.001% to ±99.999%.
- Accuracy (overall) ..... ±0.005%, or ±1 digit.
- Input impedance at balance for signal input ..... 1,000 megohms.
- External reference voltage range ..... Up to ±100 volts dc.

Input impedance (reference) ..... 50 K Ω
Balancing time ..... 2.3 seconds, maximum
Line-voltage input ..... 115 volts ±10%, 60 Hz.
Power consumption:
- Standby ..... 20 watts.
- Balancing ..... 50 watts.

Signal ground connection ..... Isolated from frame of instrument.
Weight:
- Net ..... 45 lb.
- Shipping ..... 65 lb.

Front panel paint ..... Light gray (MIL-E-15090B, type 3, Class 1).

1-5.1. Items Comprising an Operable Equipment

FSN	QTY	Nomenclature	Fig. No.
6625-870-2264		Voltmeter, Digital AN/GSM-64 consisting of	1-1
6625-823-2495	1	Cable Assembly, Special Purpose Electrical CX-7494/GSM-64	1-3
6625-823-2494	1	Cable Assembly, Special Purpose Electrical CX-7495/GSM-64	1-3
5935-823-0742	1	Connector, Plug Electrical U-231/GSM-64	
5935-823-0738	1	Connector, Plug Electrical U-232/GSM-64	
6625-870-2263	1	Voltmeter, Digital ME-218/GSM-64	1-1

1-6. Components of Digital Voltmeter AN/GSM-64

Qty	Item	Dimensions(in.) Height	Depth	Width	Unit wt (lb)	Fig. No.
1	Digital Voltmeter AN/GSM-64	5.218	17	19	45	1-1
1	Signal Input Cable Assembly CX-7495/GSM-64.					1-3
1	External Reference Supply Cable Assembly CX-7494/GSM-64.					1-3
1	Connector Plug, Electrical V-231/GSM-64.					
1	Connector, Plug, Electrical V-232/GSM-4.					
2	Technical manaul					1-1
1	Voltmeter, Digital ME-218/GSM-64.					

1-7. Description of Digital Voltmeter AN/GSM-64

a. The AN/GSM-64 is a solid-state, stepping switch digital voltmeter which measures dc voltages and de voltage ratios. The change from dc function to dc voltage ratio function is accomplished by a front panel switch. No internal connections or disconnections are required where the AN/GSM-64 changes from one function to the other. The signal input connector and all operating controls are located on the front panel (fig. l-l). Except for ratio measurements, all functions normally controlled from the front panel may also be remotely controlled through a rear panel connector. The instrument provides contact closures between terminals of a rear panel connector to operate a printing device. The signal input is completely isolated from chassis ground, permitting operation with both input leads either above or below chassis ground.

b. The external reference supply connector, and the remote connector, and the print output connector are located at the rear panel (fig. 1-2).

1-8. Description of Minor Assemblies

a. The CX-7495/GSM-64 (fig. 1-3) connects dc input voltages to the equipment. The CX-7495/GSM-64 plugs into either the front panel signal input connector (fig. 1-1) or rear panel signal input connector J-115 (fig. 1-2).

b. The CX-7494/GSM-64 (fig. 1-3) connects external dc reference voltages to the instrument for measuring dc ratios. The CX-7494/GSM-64 plugs into rear panel external reference supply connector J-114 (fig. 1-2).

c. No additional equipment is required.

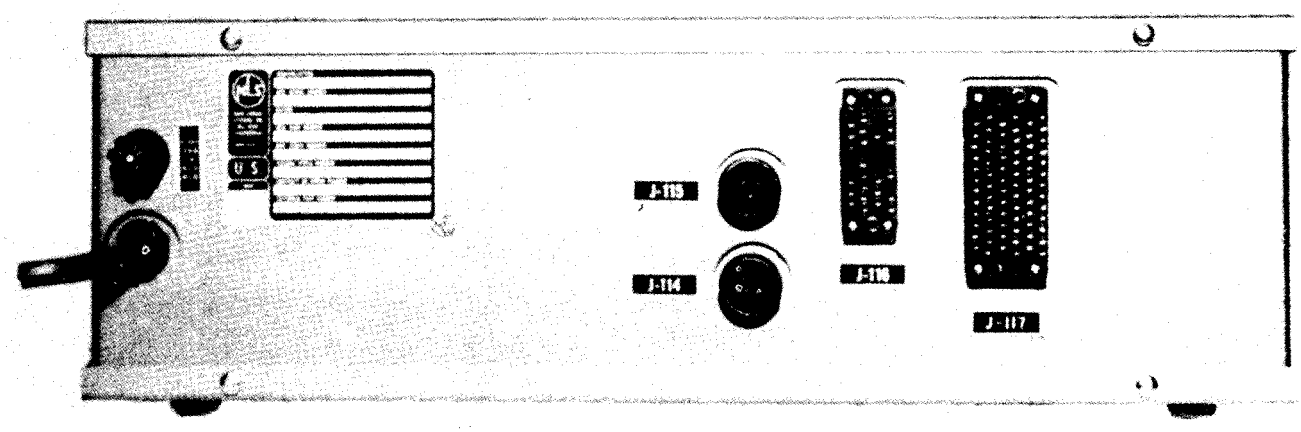

TM 6625-444-15-2

Figure 1-2. Digital Voltmeter AN/GSM-64, rear panel.

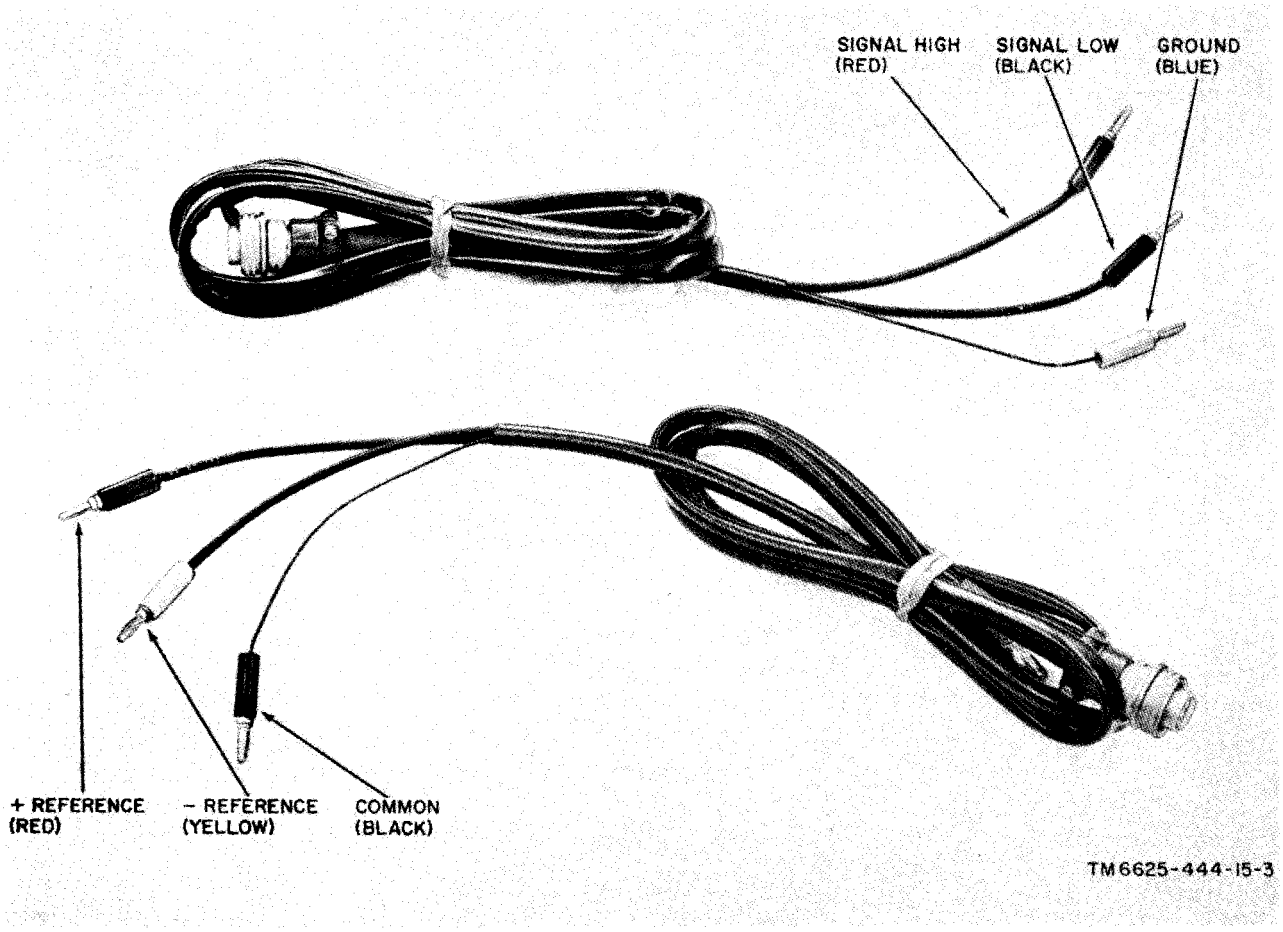

Figure 1-3. Signal input cable assembly CX–7495/GSM-64 (top), and External reference supply cable CX-7494/GSM-64 (bottom).

CHAPTER 2
INSTALLATION

2-1. Unpacking

a. Packaging Data. When packed for shipment, Digital Voltmeter AN/GSM—64 is placed in a two-piece styrofoam protector and packed in a corrugated shipping box. A typical shipping box and its contents are shown in figure 2-1.

b. Removal of Contents.

(1) Open the end of the shipping box.

(2) Stand the shipping box on the floor, or bench, with the open end down.

(3) Slide the shipping box up and away from the styrofoam protector.

(4) Lay the styrofoam protector flat and cut and fold back the metal straps.

(5) Remove the top half of the styrofoam protector and remove the carton which contains the technical manual and cables.

(6) Remove the equipment wrapped in a moisture-vaporproof barrier.

(7) Open the moisture-vaporproof barrier and remove the equipment.

(8) If possible, save the packing materials.

2-2. Checking Unpacked Equipment

a. Inspect the equipment for damage incurred during shipment. If the equipment has been damaged, report the damage on DD Form 6 (para 1-3).

b. Check to see that the equipment is complete as listed on the packing slip. Report all discrepancies in accordance with instructions given in TM 38-750. Shortage of a minor assembly or part that does not affect proper functioning of the equipment should not prevent use of the equipment.

c. If the equipment has been used or reconditioned, check to see whether it has been changed by a modification work order (MWO). If the equipment has been modified, the MWO number will appear on the front panel near the nomenclature plate. If equipment is modified, check to see that any operational instruction changes resulting from the modification have been entered into the equipment manual.

NOTE

Current MWO's applicable to the equipment are listed in DA Pam 310-7.

2-3. Placement of Equipment

The AN/GSM-64 may be placed on a work-bench, or installed in a standard 19-inch rack mount.

2-4 installation of Fuse

CAUTION

Use a l-ampere, slo-blo fuse when replacing the fuse. Overfusing can result in damage to the equipment.

Be sure that the proper fuse is inserted in the fuseholder. The fuse is at the rear panel and maybe extracted for inspection (fig. 1-2).

2-5. Connections

a. Power Connection-s. The AN/GSM-64 operates on 105 to 125 volts alternating current (at), 50 to 60 Hertz (Hz).

b. Signal Input Connections. The CX-7495/GSM-64 terminates in three banana pins: red, black, and blue (fig. 1-3). The red pin is signal high, the black pin is signal low, and the blue pin is guard ground.

NOTE

The AN/GSM-64, up to serial number 11.3810, internal] y connects the blue pin to the metal frame of the ME-218/GSM-64. The frame is connected to earth ground through the third pin of the power plug in all ME-218/GSM-64.

(1) The red and black pins completely float and have no dc connection to other circuits. The black pin must always have a return path to the blue pin (provided by external connections). The blue pin should be connected to the common ground point of the circuit in which measurements are to be made. When measurements relative to the common ground are to be made, the black pin must also be connected to the common ground. When differential readings are to be taken, the black pin must be connected to the point with the lowest impedance to the common ground, and the red pin to the other point. If the impedance from the black pin to the blue pin is excessive, an error due to ac bias effects will result. This error will be minimized, or totally eliminated, if a capacitor of up to 1-microfarad value is connected from the blue pin to the black pin, provided the circuit under measurement permits. Also, the circuitry being measured should be inclosed in a metal shield which is connected to earth ground.

(2) When the digital voltmeter is used to measure voltages from power supplies connected to the 115-volt ac powerline, the point to which the blue pin is attached should be grounded to earth for the most

accurate results (Refer to the note following *b* above.)

(3) Where it is undesirable to ground the blue pin, the impedance to earth ground must be kept at a minimum to reduce the offset caused by ac leakage currents coming from the circuit under test.

(4) For stable operation, the input leads must be shielded to minimize electrical pickup. This action is particularly important when the impedance of the source to be measured is high. Excessive electrical noise pickup and ground loops can cause instability, or an offset effect in the readings, or both.

c. *External Reference Supply Connections.* The CX-7494/GSM-64 terminates in three banana pins: red, black, and yellow (fig. 1-3). The red pin is positive external reference, the black pin is negative external reference, and the yellow pin is external reference common. To compare positive and negative signal input voltages to the external reference supply, the ratio-measuring circuits are connected as shown in figure 2-1. If the signal input voltage is of a single polarity, external reference A or B is eliminated (fig. 2-2).

d. Printer Connections. Seventy-five-pin plug J-117 at the rear of the AN/GSM-64 (fig. 1-2) permits connection with a printing device.

e. Remote Control Connections. Rear panel connector J-116 (fig. 1-2) provides connections for remotely controlling all positions of all front panel controls, except the function switch RATIO function.

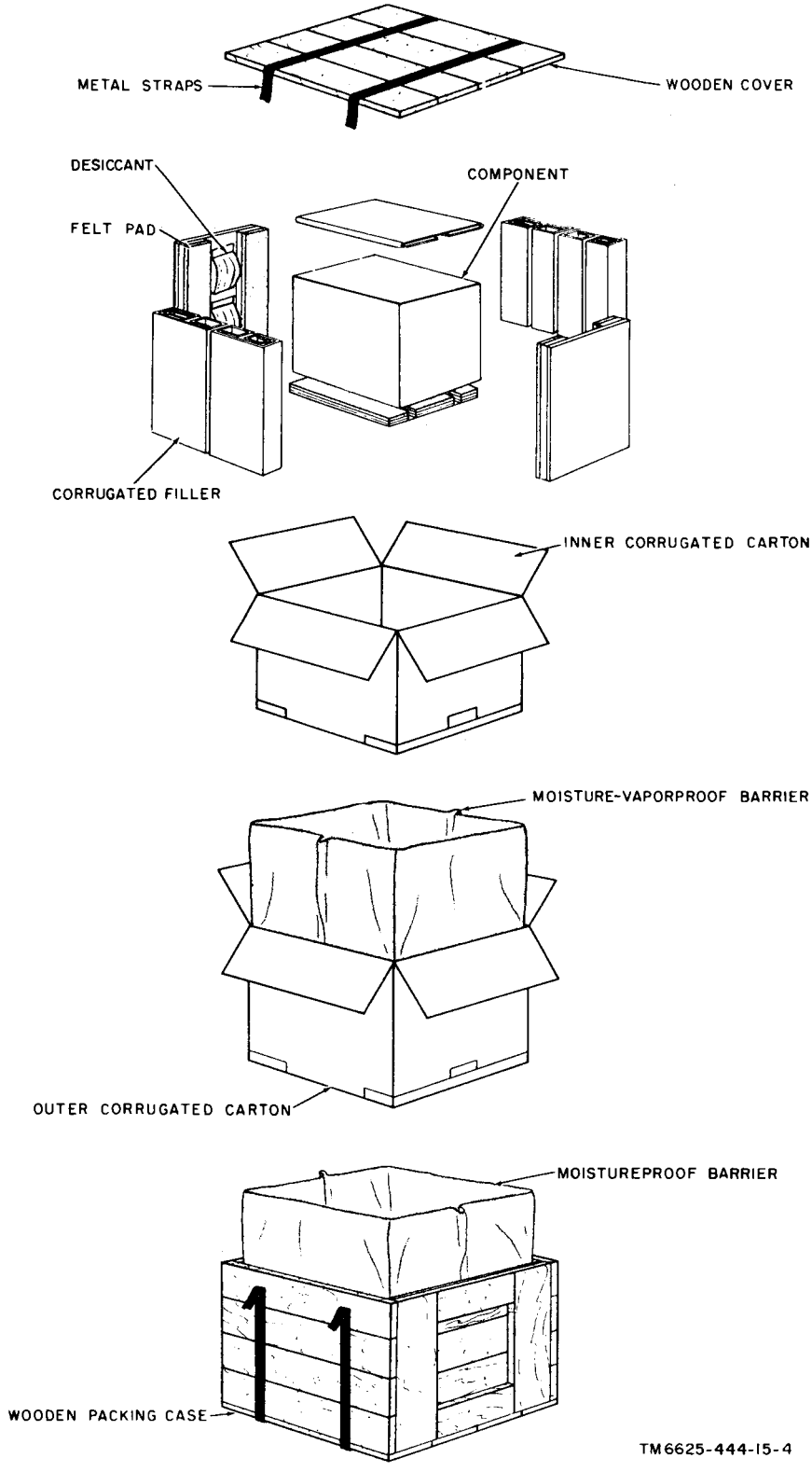

Figure 2–1. Typical packaging.

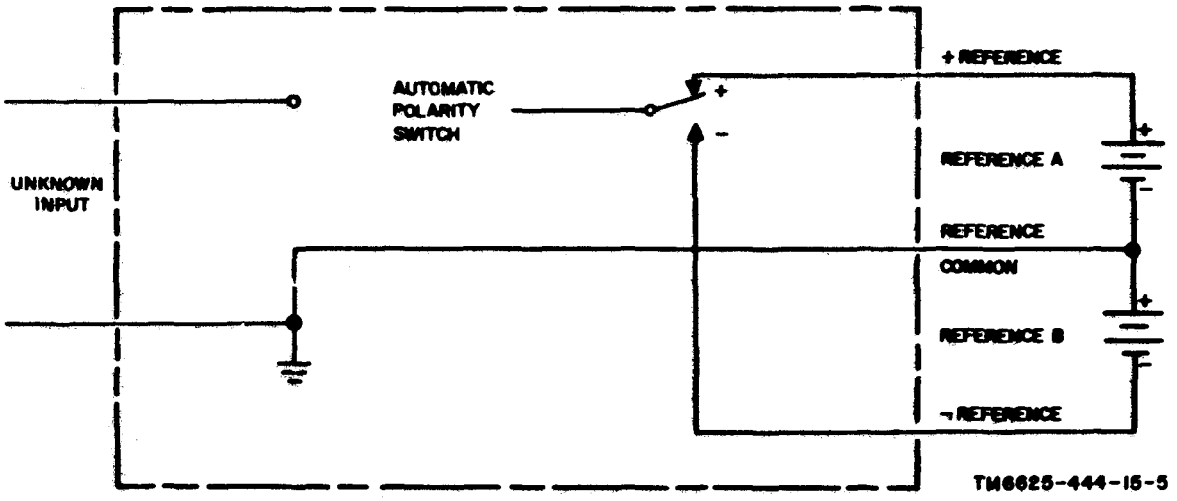

Figure 2-2. External reference supply connection to measure positive and negative input voltages.

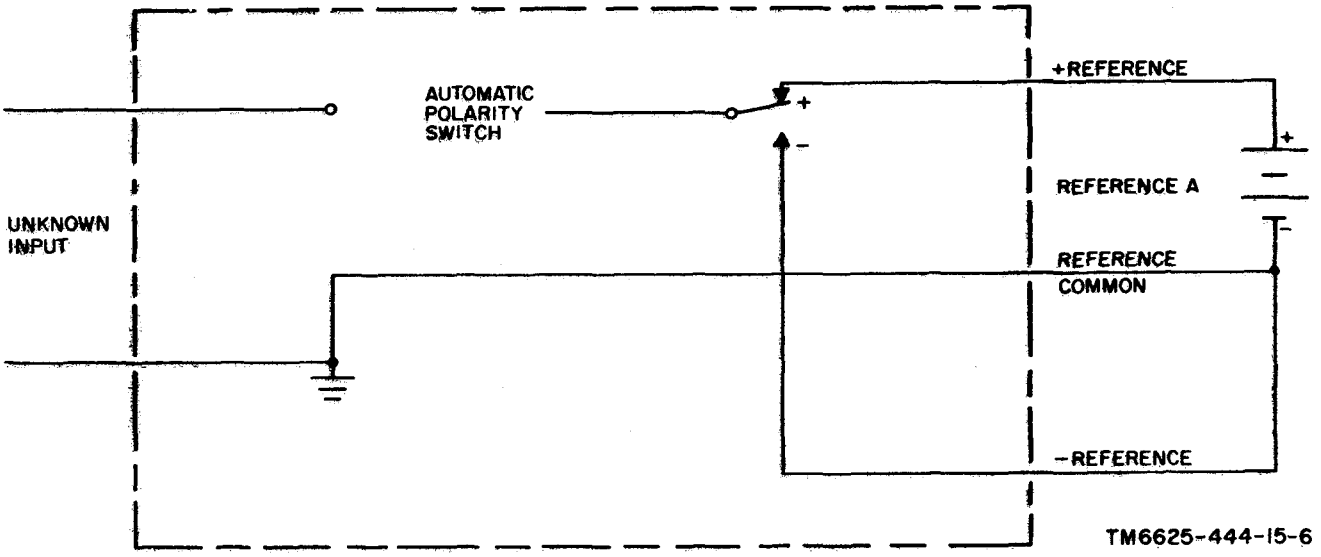

Figure 2-3. External reference supply connection to measure input voltages of single polarity.

CHAPTER 3

OPERATING INSTRUCTIONS

Section I. OPERATOR'S CONTROLS AND INDICATORS

3-1. Digital Voltmeter, Front Panel Operating Controls, Indicators, and Connectors (fig. 3-1)

Control, indicator, or connector	Function
Digital readout indicator	Indicates value of voltage and whether it is positive or negative.
Range switch	Selects fullscale range of input voltage (1OV, 100V, or 1000V) . AUTO position enables the digital voltmeter to automatically select the range.
AUTO TRIGGER control	When power switch is set to AUTO PRINT, AUTO TRIGGER control determines plus/minus limits within which digital voltmeter will issue a print command. When mode switch is set to AUTO, AUTO TRIGGER control plus/minus limits within which signal input may vary without triggerng another scan.

Control, indicator or connector	Sw pos	Function Action
Power switch	OFF	Instrument is completely deenergized.
	ON	I nstrument operates but the print command is inhibited.
	PRINT	At end of each reading: *a*. A print command is issued. *b*. Digital voltmeter locks up and does not scan, and remains locked up until the printer commands it to scan again, or until power switch is set to ON.
	AUTO PRINT	Functions same way as PRINT position, except that, if an error in excess of amount set by AUTO TRIGGER control exists at end of scan, print command is inhibited. In AUTO or CONT mode, digital voltmeter automatically recycles until a valid reading is obtained (SINGLE SCAN mode is not used with AUTO PRINT position).
Function switch	RATIO	Used to measure dc voltage ratios with an external reference supply.
	DC	For measuring dc voltages.
	AC	Used for measuring ac voltages when ac-dc converter is connected to digital voltmeter.
Mode switch	SINGLE SCAN	In this spring-loaded position, digital voltmeter makes single measurement and locks up.
	STANDBY	Keeps digital voltmeter warm while avoiding needless stepping switch and relay wear. Also permits readout to be locked to preserve a particular reading.
	AUTO	Digital voltmeter scans whenever there is variation in signal input amplitude. Amount of change necessary to initiate new scan is regulated by AUTO TRIGGER control. Digital voltmeter continually scans. Normally used when digital voltmeter is part of a system.
INPUT connector		Connects dc signal input voltages to instrument.

3-2. Digital Voltmeter, Rear Panel Fuse, Cable, and Connectors

Fuse, connector, or cable	Function
FUSE	Powerline fuse.
Power cable	Connects line-voltage power to digital voltmeter.
J-115	Connected in parallel with front panel INPUT connector.

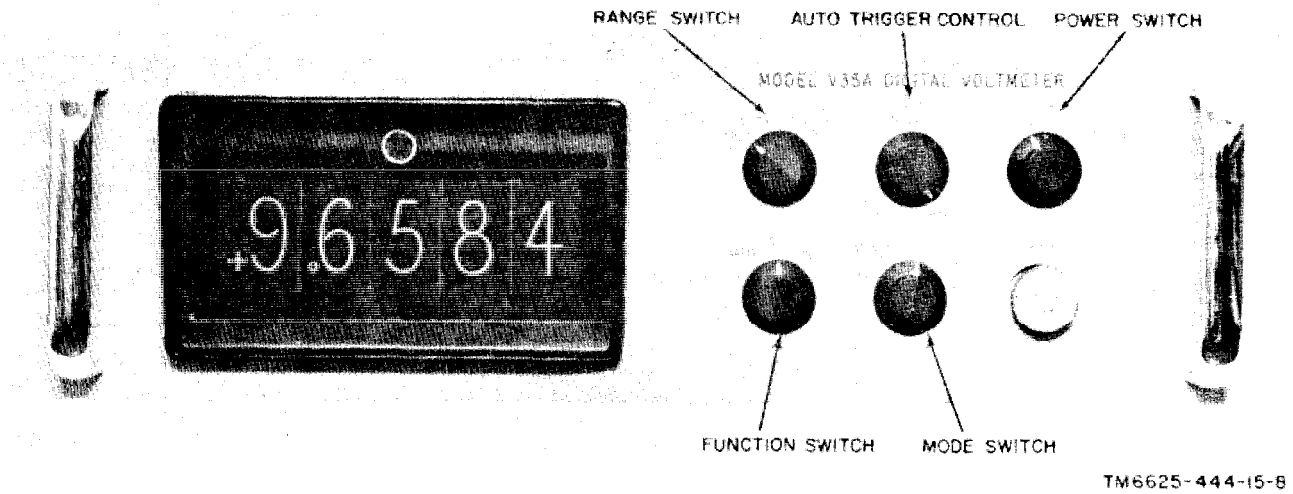

Figure 3- 1. Digital Voltmeter AN/GM-64 front panel controls.

Fuse, connector, or cable	Function
J-114	External reference supply connector. Connects external reference supply Voltage to digital voltmeter for use when measuring ratios.
J-4116	Remote control connector. Contact *closures* between terminals of J-116 remotely program any position of front panel centrals, except function switch RATIO function. Connector is also used for operation with an ac-dc converter.
J-117	Print output connector. Digital voltmeter provides contact closures between terminals of J-117 to provide printout suitable for use by printing device. Used only when power switch is set to PRINT or AUTO PRINT.

Section II. OPERATION UNDER USUAL CONDITIONS

3-3. Types of Operation

a. The digital voltmeter may be operated to measure dc voltages or the ratio of a dc voltage to an external dc reference supply. The print output may be used to operate a recording device. Any front panel control position can be remotely programed, except the RATIO function.

b. Perform the procedures given below for any type operation.

(1) Starting procedure (para 3-4).

(2) Procedures for desired type of operation (para 3-5 through 3-8),

(3) Stopping procedure (para 3-9).

3-4. Starting Procedure

a. Preliminary. Set the front panel controls as follows:

(1) Power switch: OFF.

(2) Range switch: Any position.

(3) AUTO TRIGGER control: MIN.

(4) Function switch: Any position.

(5) Mode switch: STANDBY.

b. Starting.

(1) Set the power switch to ON and allow a 15-minute warmup period. The digital voltmeter may be left in the STANDBY mode for an indefinite period without causing damage.

NOTE

If the digital voltmeter is turned on while the input leads are shorted, the readings may oscillate between positive and negative; this action is normal. Open the input leads to permit the digital voltmeter to complete the first scan, and be prepared for operation.

(2) If the mode switch is set to AUTO, the AUTO TRIGGER control must be adjusted to set the limits within which the signal input may vary without triggering another scan. When the AUTO TRIGGER control is set to MIN, approximately a ±100-digit triggering level is pro-

vided; the triggering level is continuously variable to approximately the ±0.8 digit when the AUTO TRIGGER control is set to MAX. Approximate settings are: 9 o'clock, 75 digits; 12 o'clock, 15 digits; and 3 o'clock, 1 to 2 digits.

(3) Connect the signal input leads to the voltage source to be measured.

3–5. DC Voltage Measurement

Start the equipment as instructed in, paragraph 34 and measure dc voltage as follows:

a. Set the range switch to AUTO, the function switch to DC, and the mode switch as desired (para 3 - 1).

b. The amplitude and polarity of the dc voltage is indicated on the front panel.

3-6. DC Voltage Ratio Measurement

Connect the external reference voltage as instructed in paragraph 2-5c. The digital voltmeter may use up to ±100 volts for the external dc reference supply. When the digital voltmeter is used in the AUTO mode, the AUTO TRIGGER control should be set to a position appropriate to the reference voltage used. The digital voltmeter, with an external reference of ±100 volts dc, requires that the AUTO TRIGGER control be set at approximately 12 o'clock. This setting allows approximately a ±0.8-digit change in signal voltage before initiating a new scan. Less than 10-volt external reference may be used with the digital voltmeter, but with a resulting loss of resolution. The digital voltmeter, but with a resulting loss of resolution. The digital voltmeter may be used with external dc voltages up to ±200 volts dc with some degradation of linearity because of heating of the components. Start the equipment as instructed in paragraph 3-4, and measure dc voltage ratios as follows:

a. Set the function switch to RATIO, and the mode switch as desired (para 3-1).

b. Unless the approximate ratio of the signal input voltage to the external reference supply is known, position the range switch to 1,000.

NOTE

If the signal input voltage is close to zero and the test setup shown in figure 2-2 is used, a battery may have to be connected in place of the eliminated reference to stabilize the digital voltmeter.

c. If a 0 appeared in the extreme left window of the readout in step *b* above, position the range switch to 100. If the 0 still appears in the extreme left window, position the range switch to 10.

d. The amplitude and polarity of the ratio of the signal input voltage, divided by the external reference supply, is indicated on the readout.

3–7. Operation with Printing Device

Connect a printing device as instructed in paragraph *2–5d. Start* the equipment as instructed in paragraph 3 - 4 and proceed as follows:

a. Set the range, function, and mode switches as necessary to measure the signal input (para 3-5 and 3-6).

b. Set the power switch to PRINT or AUTO PRINT.

c. The amplitude and polarity of the signal input is recorded on the output of the printing device.

3–8. Remote Operation

Set the front panel function switch to DC, the mode switch to STANDBY, 'the AUTO TRIGGER control to MAX, the range switch to AUTO, and the power switch to OFF. Connect the remote controls as indicated in paragraph 2-5e. Using the remote controls, the instrument may be operated as described in paragraphs 3-5, 3-6, and 3-7.

3–9. Stopping Procedure

a. To place the digital voltmeter in a standby condition, set the mode switch to STANDBY.

b. To shut down the equipment completely, set the power switch to OFF.

CHAPTER 4

OPERATOR'S AND ORGANIZATIONAL MAINTENANCE

4-1. Scope of Maintenance

a. The maintenance duties assigned to the operator of the digital voltmeter are listed below, together with a reference to the paragraphs covering the specific maintenance functions. The duties assigned do not require tools or test equipment other than those issued with the equipment.

(1) Operators daily preventive maintenance checks and services chart (para 4-4).

(2) Operator's weekly preventive maintenance checks and services chart (para 4-5).

(3) Cleaning (para 4-7).

b. The maintenance duties assigned to the organizational maintenance repairmen of the digital voltmeter are listed below, together with a reference to the paragraphs covering the specific functions. The duties assigned do not require tools or test equipment other than those issued with the equipment.

(1) Organizational monthly preventive maintenance checks and services chart (para 4-6).

(2) Rustproofing and painting (para 4-8).

4-2. Preventive Maintenance

Preventive maintenance is the systematic care, servicing, and inspection of equipment to prevent the occurrence of trouble, reduce downtime, and assure that the equipment is serviceable.

a. *Systematic Care*. The procedures given in paragraphs 4-4 through 4-7 cover routine systematic care and cleaning essential to proper upkeep and operation of the equipment.

b. *Preventive Maintenance Checks and Services*. The preventive maintenance checks and services charts (Para 4-4 and 4-5) outline functions to be performed at specific intervals. These checks and services are designed to maintain Army equipment in a combat-serviceable condition; that is, in good general (physical) condition and in good operating condition. To assist operators in maintaining combat serviceability, the charts indicate what to check, how to check, and the normal conditions; the *references* column lists the paragraphs that contain detailed repair or replacement procedures. If the defect cannot be remedied by the operator, a higher category of maintenance or repair is required. Records and reports of these checks and services must be made in accordance with instructions given in TM 38-750.

4-3. Preventive Maintenance Checks and Services Periods

Preventive maintenance checks and services of the digital voltmeter are required daily, weekly, and monthly.

a. Paragraph 4-4 specifies the checks and services that must be accomplished daily, or under the special conditions listed below:

(1) Before the equipment is taken on a mission.

(2) When the equipment is initially installed.

(3) When the equipment is reinstalled after removal for any reason.

(4) At least once a week if the equipment is maintained in standby condition,.

b. Paragraphs 4-5 and 4-6 specify *additional* checks and services that must be performed weekly and monthly. Perform the maintenance functions indicated in the monthly preventive maintenance checks and services chart (para 4-6) once each month. A month is defined as approximately 30 calendar days of 8-hour-per-day operation. If the equipment is operated 16 hours a day, the monthly preventive maintenance checks and services should be performed at 15-day intervals. Adjustment of the maintenance interval must be made to compensate for any unusual operating conditions. Equipment maintained in a standby (ready for immediate operation) condition must have monthly preventive maintenance checks and services. Equipment in limited storage (requires service before operation) does not require monthly preventive maintenance.

4-4. Operator's Daily Preventive Maintenance Checks and Services Chart

Sequence No.	Item to beinspected	Procedure	References
1	Digital voltmeter	Check equipment for complet.emxw and general condition.	App B.
2	Exterior surfaces	Clean exterior surfaces of equipment.	Para 4-7.
3	External receptacles	Inspect external receptacles for breakage and for firm seating.	
4	Nixie tubes	Inspect front panel glass window for damaged housing, broken glass, physical damage, dust, or moisture.	
5	Knobs, controls, and switches.	During operation (item 6) check knobs, controls, and switches for proper mechanical action. Action must be positive, without backlash, binding, or scraping.	
6	Operation	During operation, be alert for any abnormal indications.	
7	Cables	*a.* Connect CX-7495/GSM-64 to the INPUT connector.	Fig. 1-2 and 1-3.
		b. Connect power cord to 115-volt, 60-Hz source.	Para 2-5.
		c. Connect *black* and *blue* pins of CX-7495/GSM-64 together.	
		d. Connect *red* pin of CX-7495/GSM-64 to positive terminal of dc power source (up to 1,000 volts), and *black* and *blue* pins to dc power source ground.	
8	Controls	Set digital voltmeter controls as follows :	Fig. 3-1.
		a. Power switch: ON.	
		b. Mode switch: STANDBY.	
		c. Function switch: DC.	
		d. Range switch: AUTO.	
		e. AUTO TRIGGER control: Midposition.	
9	Mode switch	Set to SINGLE SCAN; digital voltmeter should make one scan and then lock readout.	Para 3-1.
		b. Set to AUTO, digital voltmeter should scan whenever variation occurs in dc voltage amplitude. After initial scan, readout will lock until variation in amplitude occurs.	
		c. Set to CONT; digital voltmeter should scan continually.	Para 3-1.
10	Stopping procedure	Set controls as follows:	Para 3-1.
		a. Mode switch: STANDBY.	
		b. Power switch: OFF.	
		c. Disconnect power and signal cables.	

4-5. Operator's Weekly Preventive Maintenance Checks and Services Chart

Sequence No.	Item to be inspected	Procedure	References
1	Cables	Inspect external cables for cuts, cracked or gouged jackets, fraying, or kinks.	
2	Hardware	Inspect all exterior hardware for looseness and damage.	
3	Preservation	Inspect equipment to determine that it is free of bare spots, rust, and corrosion. If three conditions exist, refer to higher category maintenance for repair.	Para 4-7 and 4-8.

4-6. Organizational Monthly Preventive Maintenance Checks and Services Chart

sequence No.	Item to be inspected	Procedure	References
1	publications	Check to see that publications are complete, serviceable, and current.	DA Pam 310-4.
2	Modification work orders	Check to see that all URGENT MWO's have been applied and that all NORMAL MWO's have been scheduled.	DA Pam 310-7.
3	Completeness	Check equipment for completeness and general condition.	App B.
4	Cleanliness	Clean exterior surfaces of equipment	Para 4-7.
5	Preservation	Inspect equipment to determine that it is free of bare spots, rust, and corrosion.	Para 4-8.
6	External receptacles	Inspect external receptacles for breakage and firm seating.	
7	Nixie tubes	Inspect front panel glass window for damaged housing, broken glass, physical damage, dust, or moisture.	
8	Cables	Inspect external cables for cuts, cracked or gouged jackets, fraying, or kinks.	
9	Hardware	Inspect all exterior hardware for looseness and damage.	
10	Operation	During operation, be alert for any abnormal indications,	

4-7. Cleaning

The exterior surface of the digital voltmeter should be free of dust, dirt, grease, and fungus.

a. Remove dust and loose dirt with a clean, soft cloth.

WARNING

Prolonged breathing of cleaning compound is dangerous; provide adequate ventilation. Cleaning compound is flammable; do *not* use near a flame. Avoid contact with the skin; wash off any that spills on the hands.

b. Remove grease, fungus, and ground-in dirt from the cases; use a cloth dampened (not wet) with Cleaning Compound (Federal stock No. 7930--395-9542) .

c. Remove dust or dirt from plugs and jacks with a brush.

CAUTION

Do not press on the nixie tubes (glass) when cleaning; the tubes may become damaged.

d. Clean the front panel, nixie tubes, and control knobs; use a soft, clean sloth. If necessary, dampen the cloth with water; mild soap may be used for more effective cleaning.

4-8. Rustproofing and Painting

a. *Rustproofing*. When the finish on the digital voltmeter has become badly scarred or damaged, rust and corrosion can be prevented by touching up the bare surfaces. Use No. 000 sandpaper to clean the surface down to the bare metal. Obtain a bright, smooth finish.

b. *Painting*. Remove rust and corrosion from metal surfaces by lightly sanding them with fine sandpaper. Brush two thin coats of paint on the bare metal to protect it from further corrosion. Refer to the applicable cleaning and refinishing practices specified in TB 746-10.

4–9. Lubrication Instructions

a. Gasoline should not be used as a cleaning fluid for any purpose. When the digital voltmeter is overhauled, or repairs are made, clean the parts with the cleaning compound.

b. Do not use excessive amounts of Lubricating Oil, (OAI) (FSN 9150–664–6518), and do not allow connections to become greasy.

c. Be sure that lubricants and points to be lubricated are free from sand, grit, or dirt. Use the cleaning compound to clean all parts. Before

lubrication, clean all surfaces to be lubricated; use a lint-free cloth dampened with the cleaning compound. Keep the cleaning compound off surrounding parts.

d. Lubrication intervals designated are for daily 8-hour periods of operation. For longer periods of operation, intervals should be shortened.

CHAPTER 5

FUNCTIONING

5-1. Basic Functioning

Digital Voltmeter AN/GSM–64 is basically a closed-loop servo in which a feedback voltage is driven to equal an unknown input voltage. The value of this feedback voltage is then displayed on the digital voltmeter readout.

5-2. Block Diagram

a. Figure 5–1 is a block diagram of the digital voltmeter. The unknown input voltage is fed through the input attenuator to one side of a nonshorting chopper. The feedback voltage is fed to the other side of the chopper. The output of the chopper is fed to the error amplifier which compares the input with the feedback and produces one of three outputs: U, an up pulse (signal more positive than the feedback); D, a down pulse (signal more negative than the feedback); or $\overline{UD}$, no U or D pulse (signal equal to the feedback). These three pulse lines are fed to the digital logic circuits. The timing generaor drives the chopper and controls the timing of the digital logic circuits. The timing generator drives the chopper and controls the timing of the digital logic circuits.

b. The transfer switch (fig. 6-18) is the center or focal point of the scan logic. It routes the output pulses from the digital logic circuits to the proper stepping switch in the Kelvin-Varley divider (or to the input attenuator relays) and selects the proper output from the Kelvin-Varley divider to be used as the feedback voltage. The novel scan logic utilizes the normal output of the Kelvin-Varley divider, as well as other outputs from various points in the divider. The Kelvin-Varley divider is fed by a precision reference voltage supply. The output voltage of this supply is very closely controlled by a stable, low temperature, coefficient Zener diode mounted in a crystal oven.

c. The input attenuator divides the signal by 1:1, 10:1, and 100:1. The input attenuator also controls the position of the decimal point in the digital voltmeter readout.

5-3. Scan Logic Description

a. Figure 10-1 is a simplified schematic diagram of the stepping switch-controlled Kelvin-Varley divider and the transfer switch circuitry.

b. The Kelvin-Varley divider is a decade voltage divider in which each decade has two outputs and two inputs. Each decade is identical and is composed of one 12,500-ohm and eleven 5,000-ohm precision resistors and a stepping switch, all contained in a plug-in oil bath can. The stepping switch is wired so that two adjacent 5,000-ohm resistors are always paralled by 10,000 ohms of resistance (12,500-ohms in parallel with the 50,000-ohm input resistance of the following decade). Thus, the resulting input resistance is 50,000 ohms and the output voltage across the two resistors is one-tenth of the input voltage. Also, this voltage may be positioned at any 10-percent increment of the input voltage; therefore, each decade has a low and a high input, and a low and a high output. The various output voltages for a low input of 0 volt and a high input of 10 volts is shown in the chart below. Two additional levels on the stepping switch provide data to the readout and to the external printer connector (fig. 6-17).

Digit displayed in readout	Low output voltage	High output voltage
0	0	1
1	1	2
2	2	3
3	3	4
4	4	5
5	5	6
6	6	7
7	7	8
8	8	9
9	9	10

c. As shown in figure 10-1, the decades are connected so that each decade floats on the output of the preceding decade, dividing, in turn, the input voltage by ten. If each decade is adjusted in sequence to bracket the signal, starting

with decade 5 and proceeding through to decade 1, each approximation will be more accurate, resulting in a final accuracy of 5 decimal digits. The transfer switch scans the outputs of each decade in proper sequence, One level of the transfer switch selects the feedback, and the other two levels route the drive pulse to the correct decade stepping switch coil. The outputs of the error amplifier, in conjunction with the logic circuits, drive each decade so that the two outputs bracket the input signal. Observe that the error amplifier must not load the divider or error will result.

d. Figure 10-1 shows the Zener reference supply feeding through the polarity relay and calibrating resistor RI to the divider. Resistor R1 is adjusted so that the input voltage to the divider (REF) is exactly 10 volts. The 50,000-hm resistor on the output of the divider is added to properly load decade 1. Note that only the low output of decade 1 is used since it is the final output of the divider and bracketing is not" necessary,

e. To determine whether a particular decade is positioned correctly or must be changed (fig. 10-4) the logic circuits require three sources of information: amplifier output, polarity, and transfer switch position. Polarity information is necessary since the amplifier output determines only whether the signal is more positive or negative than the feedback, not whether it is numerically greater or smaller. Exact transfer switch position data is not used since the logic is the same for every other position of the transfer switch. The odd-even flip-flop is used to supply this information to the logic circuits. This flip-flop changes state each time the transfer switch moves.

f. The timing generator controls both the chopper drive and the stepping switch drive. Each sample of the chopper wiIl generate a pulse out of the amplifier, U, D, or $\overline{UD}$ on one of three pulse lines. For each amplifier pulse, one stepping switch drive pulse is generated.

g. Stepping switches operate as follows: A drive pulse energizes the switch coil which, in turn, cocks a spring without moving the switch. At the end of the drive pulse, the spring moves the switch; thus, the switch moves only one step for each drive pulse. Because the switch does not move during the drive pulse, a pulse may be routed to the coil of a stepping switch through its own contacts. This characteristic is used without the need for passing high-current pulses through the contacts since each stepping switch has its own power amplifier.

h. The output of the logic circuits is the compute pulse line (CPL). If conditions call for changing a particular decade, a compute pulse (CP) will occur on the CPL. The CP is routed through the transfer switch to the power amplifier associated with the proper decade switch, and the decade switch moves one step. If a pulse does not occur on CPL, the transfer switch will move one step. This condition is termed a no-compute pulse ($\overline{CP}$).

i. For a particular decade to be properly positioned, the low output must be equal to, or leas than, the signal, and the high output must be greater than the signal. When scanning, the transfer switch first connects the low output of a decade to the feedback. If the low output is not equal to, or less than, the signal, CP's occur and the decade switch is driven one step at a time until the required condition is met. Since the switch moves in one direction *(0* to *9),* the switch will move up to *9* and on the next step will go to *0.* At this point, the feedback should be equal to, or less, than the signal. As a result, CP's stop, producing $\overline{CP}$, and the transfer switch moves to the high output position. If the feedback is not equal to, or less than, the signal when the decade has reached *0* (because of the signal changing or some previous error), the logic circuts will generate a CP. This action could cause the decade to step continuously if it were not for the transfer switch connecting a fail-safe diode from the 0 readout light to CPL. When the decade switch reaches *0* the fail-safe diode conducts, shorting any CP's to ground, resulting in $\overline{CP}$, and the transfer switch moves on the next position; the scan is completed, and the error is corrected on the next scan.

j. When the transfer switch connects the high output of a decade to the feedback, CP's are generated, unless the feedback is greater than, the signal. If the feedback is equal to the signal at this point, a CP must be generated since an exact null cannot be reached unless the decase switch is advanced one more step; for example, a 6.0000-volt signal cannot be nulled with decade 5 high output in the 6 state. If CP's still exist when the decade reaches 9, they are shorted to ground by a fail-safe diode connected to the 9 indicator through the transfer switch, resulting in $\overline{CP}$. Again, this action prevents the decade from stepping continuously (never reaching a null).

k. Automatic polarity and ranging are accomplished by relays. Two relays are used for po-

larity: one to switch the Zener reference supply, and one to provide the readout and print data. Four relays are used for ranging: two to switch the input attenuator, and two to provide readout and print data. All of the relays are connected as flip-flop loads. The range relays are driven by two commutatively coupled flip-flops, which provide three ranges. At the start of each scan, the range flip-flops are set, putting the instrument in the lowest range. If a higher range is necessary to null the signal, CP's step the range attenuator one range at a time until the proper range is reached. When the range switch is set to AUTO, the range flip-flops are locked in the condition commanded by the range switch.

l. Table 5-1 presents the logic for the AN/GSM–64. In conjunction with figure 5-1, several of the symbols used on the schematic diagrams are explained. The A flip-flop refereed to is zero for all positions of the transfer switch, except position 11 (DIL), and is set when the transfer switch moves into position 11. The flip-flop is zeroed at the beginning of each scan when the transfer switch moves from position 11 to position 1 (SIG LOW). Since the high output of decade 1 is not used as feedback, the logic for decade 1 is slightly different from that of the other decades. The A flip-flop informs the logic circuits that the transfer switch is in position 11.

m. At the start of a scan, the range flip-flops are set to the lowest range condition, and the transfer switch is moved from position 11 to position 1. The first test is for polarity. The feedback is signal low, the odd-even flip-flop is odd (OE), CPL is connected to $\triangle$P, and the A flip-flop is zero. If the signal is positive, the amplifier output will be a U pulse; and if the signal is negative, the output will be a D pulse. If the polarity relay is in the positive position and a D pulse occurs, the polarity is incorrect and must be changed. In this event, the logic causes a CP to occur and the polarity is changed. Conversely, a CP will be generated if the polarity relay is in the negative position and a U pulse occurs. At the next sampling time, the polarity will be corrected; CP will occur, and the transfer switch will move to position 2 (REF).

n. The second test is for range. The feedback is REF (input to the bridge), the odd-even flip-flop is even ($\overline{OE}$), and CPL is connected to AQ. If the polarity is now positive and the signal is over 10 volts, a U pulse occurs, causing a CP which changes the range to the next higher range. CP's continue until the correct range is reached, at which point $\overline{CP}$ occurs and the transfer switch moves to position 3. If the polarity relay is in the negative position, CP is generated by D pulses. If the signal is exactly ±10 (or ±100) volts, no U or D pulse occurs; however, $\overline{UD}$ causes CP to be generated, stepping the range attenuator to the next higher range.

o. Table 5-1 shows that the logic is the same for all even steps of the transfer switch. Similarly, the logic is the same for all odd steps. UD causes a CP for all even steps, except step 12. When in step 12, A being set eliminates the generation of CP's by $\overline{UD}$. The information contained in table 5–1 can be summed up in the following equation, (parentheses indicate the five alternative):

$$CP = (OE \cdot P \cdot D) + (OE \cdot P \cdot U) + (OE \cdot P \cdot U) + (\overline{OE} \cdot \overline{P} \cdot D) + (\overline{OE} \cdot \overline{UD} \cdot \overline{A})$$

where:

U	=	Up pulse
D	=	Down pulse
$\overline{UD}$	=	Neither up nor down pulse
OE	=	Odd transfer switch positions
$\overline{OE}$	=	Even transfer switch positions
P	=	Positive polarity
$\overline{P}$	=	Negative polarity
$\overline{A}$	=	Transfer switch not in position 11
·	=	And
+	=	Or
=	=	Exists if

Table 5-1. SCAN LOGIC

Logic step	Transfer switch position	Feedback	Odd-even flip-flop	Polarity	Am[illegible] necessary for compute pulse (CP)	Com[illegible] pulse when no up or down pulse? (UD)	A flip-flop	Compute pulse line (CPL) connected to:
1	1	Signal low (SIG Low).	ODD (OE)	Pos (P) Neg ($\overline{P}$)	Down (D) UP (U)	No	Zero ($\overline{A}$)	Change polarity ($\triangle$P).
2	2	Reference (REF)	Even ($\overline{OE}$)	Pos (P) Neg ($\overline{P}$)	Up (U) Down (D)	Yes	Zero ($\overline{A}$)	Change range ($\triangle$Q).
3	3	Decade 5 low (D5L).	Odd ($\overline{OE}$)	Pos (P) Neg ($\overline{P}$)	Down (D) Up (U)	No	Zero ($\overline{A}$)	
4	4	Decade 5 high (D5H).	Even ($\overline{OE}$)	Pos (P) Neg ($\overline{P}$)	Up (U) Down (D)	Yes	Zero ($\overline{A}$)	Decade 5 (D5).
5	5	Decade 4 low (D4L).	Odd (OE)	Pos (P) Neg ($\overline{P}$)	Down (D) UP (U)	No	Zero ($\overline{A}$)	
6	6	Decade 4 high (D4H).	Even $\overline{OE}$	Pos (P) Neg ($\overline{P}$)	Up (U) Down (D)	Yes	Zero ($\overline{A}$)	Decade 4 (D4).
7	7	Decade 3 low (D3L).	Odd (OE)	Pos (P) Neg ($\overline{P}$)	Down (D) Up (U)	No	Zero ($\overline{A}$)	
8	8	Decade 3 high (D3H).	Even ($\overline{OE}$)	Pos (P) Neg ($\overline{P}$)	Up (U) Down (D)	Yes	Zero ($\overline{A}$)	Decade 3 (D3).
9	9	Decade 2 low (D2L).	Odd (OE)	Pos (P) Neg ($\overline{P}$)	Down (D) UP (U)	No	Zero ($\overline{A}$)	
10	10	Decade 2 high (D2H).	Even ($\overline{OE}$)	Pos (P) Neg ($\overline{P}$)	UP (U) Down (D)	Yes	Zero ($\overline{A}$)	Decade 2 (D2).
11	11	Decade 1 low (D1L).	Odd (OE)	Pos (P) Neg ($\overline{P}$)	Down (D) UP (U)	No	Set (A)	Decade 1 (D1).
12	12	Decade 1 low (D1L).	Even ($\overline{OE}$)	Pos (P) Neg ($\overline{P}$)	UP (U) Down (D)	No	Set (A)	

p. A compute pulse exists when:

(1) The odd-even flip-flop is odd and the polarity relay is positive and a down pulse occurs.

(2) The cdci-even flip-flop is odd and the polarity relay is negative and an up pulse occurs.

(3) The odd-even flip-flop is even and the polarity relay is positive and an up pulse occurs.

(4) The odd-even flip-flop is even and the polarity relay is negative and a down pulse occurs.

(5) The odd-even flip-flop is even and neither an up nor a down pulse occurs, and the transfer switch is not in position 11.

q. After ranging, the transfer switch scans through decades 5, 4, 3, 2, and finally 1. At this point, the scan, is complete and the readout displays the unknown signal input voltage to five decimal places. Note that logic used in this digital voltmeter avoids homing each decade to zero at the beginning of every scan, thus increasing speed and extending switch life. If the signal changes from –5.5555 to –5.5655 volts, only decade 3 moves; if the signal changes from –5.5555 volts to +5.5555 volts, only the polarity relay changes.

r. The fail-safe diodes for decade 1 are 1ocated on the B board, and are routed to transfer switch position, 11 (TS11).

5-4. End-of-Scan Logic Description

a. When the transfer switch reaches 11, the end-of-scan logic continues the functions of the transfer switch in positions 1 through 11, except that the feedback is not switched; it remains connected to the output of the Kelvin-Varley divider at position 11 of the transfer switch. Also, print, standby, and scan command switching are accomplished by this logic (fig. 10-5).

b. Four flip-flops (termed FF), A, OE, ES, and PD are associated with the end-of-scan logic as well as timing pulses T and $\overline{T}$, gate pulses C and $\overline{C}$, and error pulses U and D. The A FF is always zero, except at the end of scan, and locks the transfer switch in position 11. The OE FF is zero on the even-numbered steps of the transfer switch, and set on the odd-numbered stops. During the end of scan, the OE FF continues to flip, as if the transfer switch had positions 12 and 13. The ES FF is always zero until all computing is completed, at which time the ES FF is set. The PD FF is set *only* after the ES FF is set and the power switch is in the PRINT or AUTO PRINT position (in AUTO PRINT only if no U or D pulse is present).

c. The sequence of operation is shown in table 5–2. In step 1, at the 1/2 bit time, drive power is removed from the transfer switch and the OE FF is set. In step 2, at approximately 3/4 bit time, the transfer switch has been spring-driven to position 11; and the A FF is set by TS11. When the A FF is set, the transfer switch is locked in position 11. As with the other decades, both low-output and high-output logic are perfommed on decade 1 even though only the low output is used as a feedback. The one exception is that $\overline{UD}$ is inhibited by the A FF being set; thus $\overline{UD}$ does not produce CP's in, position 11. During step 2, low-output logic is performed, and decade 1 is driven until the feedback is equal to, or less than, the signal. Once this condition is reached, $\overline{CP}$ occurs and the OE FF is zeroed in both the low- and high-output logic. Table 5–2 assumes that decade 1 is initially correct and $\overline{CP}$ exists to show the timing. During step 3, 'high-output logic is performed, and decade 1 is driven until the feedback is equal to, or greater than, the signal. The $\overline{CP}$ occurs, the OE FF is set, and the ES FF is set. At this point, the power switch setting determines the events to follow. The top portion of table 5-2 shows the sequence with the power switch set to ON, while the bottom portion of the chart shows the sequence with the power switch set to a print position. If the power switch is set to ON, the OE FF is zeroed by T when time = 3 in step 5. The zeroing of the OE FF removes a lockout on the A FF, allowing the A FF to be zeroed in step 6. The A FF may be zeroed in step 6 by T in the CONT or SINGLE SCAN modes, or by U or D in the AUTO mode. When the A FF is zeroed in step 6, the ES FF is zeroed in step 7 and a new scan is initiated.

Table 5-2. End-of-Scan Logic

Logic step	Time (bits) Auto scan	Time (bits) Cont scan	State of flip-flops (see inset below for PD) A	OE	ES	FF	Transfer switch	Compute pulse line (CPL)	Condition for change of state
0	0	0	Zero	Zero	Zero		Unlocked	Unshorted	
1	1/2	1/2	Zero	Set	Zero		Unlocked	Unshorted	Automatically.
2	3/4	3/4	Set	Set	Zero		Locked	Unshorted	Transfer switch moves to position 11. No compute pulse ($\overline{CP}$).
3	1 1/2	1 1/2	Set	Zero	Zero		Locked	Unshorted	$\overline{CP}$.
4	2 1/2	2 1/2	Set	Set	Set		Locked	Shorted	POWER switch on (AUTO PRINT). Continuously scans when U or D exists.
5	3	3	Set	Zero	Set		Locked	Shorted	
6	3 1/100	3 1/2	Zero	Zero	Set		Unlocked	Shorted	
7 (New scan)	3 1/2	4 1/2	Zero	Set	Zero		Unlocked	Unshorted	Automatically.

Logic	Bits	A	OE	ES	PD		Notes
4	2 1/2	Set	Set	Set	Zero	Power switch set to PRINT.	△Time variable depending on print feedback signal.
4+	3 1/2	Set	Zero	Set	Set		
5	△	Set	Zero	Set	Zero		
4	2 1/2	Set	Set	Set	Zero	Power switch set to AUTO PRINT; U or D exists.	
5	3 1/100	Set	Zero	Set	Zero		
6	4 1/100	Zero	Zero	Set	Zero		
4	2 1/2	Set	Set	Set	Zero	Power switch set to AUTO Print; no U or D.	
4+	3 1/2	Set	Zero	Set	Zero		
5	△	Set	Zero	Set	Zero		

p. A compute pulse exists when:

(1) The odd-even flip-flop is odd and the polarity relay is positive and a down pulse occurs.

(2) The odd-even flip-flop is odd and the polarity relay is negative and an up pulse occurs.

(3) The odd-even flip-flop is even and the polarity relay is positive and an up pulse occurs.

(4) The odd-even flip-flop is even and the polarity relay is negative and a down pulse occurs.

(5) The odd-even flip-flop is even and neither an up nor a down pulse occurs, and the transfer switch is not in position 11.

q. After ranging, the transfer switch scans through decades 5, 4, 3, 2, and finally 1. At this point, the scan is complete and the readout displays the unknown signal input voltage to five decimal places. Note that logic used in this digital voltmeter avoids homing each decade to zero at the beginning of every scan, thus increasing speed and extending switch I if e. If the signal changes from –5.5555 to –5.5655 volts, only decade 3 moves; if the signal changes from –5.5555 volts to +5.5555 volts, only the polarity relay changes.

r. The fail-safe diodes far decade 1 are located on the B board, and are routed to transfer switch position, 11 (TS11).

5-4. End-of-Scan Logic Description

a. When the transfer switch reaches 11, the end-of-scan logic continues the functions of the transfer switch in positions 1 through 11, except that the feedback is not switched; it remains connected to the output of the Kelvin-Varley divider at position 11 of the transfer switch. Also, print, standby, and scan command switching are accomplished by this logic (fig. 10-5).

b. Four flip-flops (termed FF), A, OE, ES, and PD are associated with the end-of-scan logic as well as timing pulses T and $\overline{T}$, gate pulses C and $\overline{C}$, and error pulses U and D. The A FF is always zero, except at the end of scan, and locks the transfer switch in position 11. The OE FF is zero on the even-numbered steps of the transfer switch, and set on the odd-numbered stops. During the end of scan, the OE FF continues to flip, as if the transfer switch had positions 12 and 13. The ES FF is always zero until all computing is completed, at which time the ES FF is set. The PD FF is set *only* after the ES FF is set and the power switch is in the PRINT or AUTO PRINT position (in AUTO PRINT only if no U or D pulse is present).

c. The sequence of operation is shown in table 5–2. In step 1, at the 1/2 bit time, drive power is removed from the transfer switch and the OE FF is set. In step 2, at approximately 3/4 bit time, the transfer switch has been spring-driven to position 11; and the A FF is set by TS11. When the A FF is set, the transfer switch is (locked in position 11. As with the other decades, both low-output and high output logic are perfommed on decade 1 even though only the low output is used as a feedback. The one exception is that $\overline{UD}$ is inhibited by the A FF being set; thus $\overline{UD}$ does not produce CP's in, position 11. During step 2, low-output logic is performed, and decade 1 is driven until the feedback is equal to, or less than, the signal. Once this condition is reached, $\overline{CP}$ occurs and the OE FF is zeroed in both the low- and high-output logic. Table 5–2 assumes that decade 1 is initially correct and $\overline{CP}$ exists to show the timing. During step 3, thigh-output logic is performed, and decade 1 is driven until the feedback is equal to, or greater than, the signal. The $\overline{CP}$ occurs, the OE FF is set, and the ES FF is set. At this point, the power switch setting determines the events to follow. The top portion of table 5–2 shows the sequence with the power switch set to ON, while the bottom portion of the chart shows the sequence with the power switch set to a print position. If the power switch is set to ON, the OE FF is zeroed by T when time = 3 in step 5. The zeroing of the OE FF removes a lockout on the A FF, allowing the A FF to be zeroed in step 6. The A FF may be zeroed in step 6 by T in the CONT or SINGLE SCAN modes, or by U or D in the AUTO mode. When, the A FF is zeroed in step 6, the ES FF is zeroed in step 7 and a new scan is initiated.

Table 5-2. End-of-Scan Logic

Logic step	Time (bits) Auto scan	Time (bits) Cont scan	State of flip-flops (see inset below for PD) A	OE	ES	FF	Transfer switch	Compute pulse line (CPL)	Condition for change of state
0	0	0	Zero	Zero	Zero		Unlocked	Unshorted	
1	1/2	1/2	Zero	Set	Zero		Unlocked	Unshorted	Automatically.
2	3/4	3/4	Set	Set	Zero		Locked	Unshorted	Transfer switch moves to position 11. No compute pulse ($\overline{CP}$).
3	1 1/2	1 1/2	Set	Zero	Zero		Locked	Unshorted	$\overline{CP}$.
4	2 1/2	2 1/2	Set	Set	Set		Locked	Shorted	POWER switch on (AUTO PRINT). Continuously scans when U or D exists.
5	3	3	Set	Zero	Set		Locked	Shorted	
6	3 1/100	3 1/2	Zero	Zero	Set		Unlocked	Shorted	
7 (New scan)	3 1/2	4 1/2	Zero	Set	Zero		Unlocked	Unshorted	Automatically.

Logic	Bits	A	OE	ES	PD		Notes
4	2 1/2	Set	Set	Set	Zero	Power switch set to PRINT.	△Time variable depending on print feedback signal.
4+	3 1/2	Set	Zero	Set	Set		
5	△	Set	Zero	Set	Zero		
4	2 1/2	Set	Set	Set	Zero	Power switch set to AUTO PRINT; U or D exists.	
5	3 1/100	Set	Zero	Set	Zero		
6	4 1/100	Zero	Zero	Set	Zero		
4	2 1/2	Set	Set	Set	Zero	Power switch set to AUTO Print; no U or D.	
4+	3 1/2	Set	Zero	Set	Zero		
5	△	Set	Zero	Set	Zero		

d. when the power switch is set to PRINT (see table 5-2 inset), the OE FF is not zeroed at bit 3 but is zeroed 1/2 bit later at step 4 and PD is set; the PD FF remains set and the digital voltmeter is locked until a print feedback signal zeros PD From this point on, the logic is the same as when the power switch is set to ON.

e. When the power switch is set to AUTO PRINT and U or D occurs, the logic is the same as when the power switch is set to ON, except that logic steps 5, 6, and 7 occur at different times (table 5-2). As long as U or D exists, 'the instrument continuously recycles and does not issue a print command. When the power switch is set to AUTO PRINT, and U or D does not exist, the sequence is the same as for print.

f. Fail safe 0 and 9 grounding of CPL is required in decade 1 as it is in the other decades. This is accomplished on the B board by a diode matrix and an emitter follower.

5-5. Logic Circuitry Description

a. Figure 5–2 is an example of AND-OR gates. If X_1 or X_2 (or both) are at ground potential, et is at ground. If both X_1 and X_2 go negative, e_1 is pulled negative by R_1; therefore, when both X_1 and X_2 are negative, e_1 is negatitve. The same applies to e_2 with respect to X_3 and X_4. The ohmic value of R_2 is several times that of R_1. If both e_1 and e_2 are at ground, e_3 is also at ground. but if either e_1 or e_2 goes negative, e_3 goes negative. The output of the circuit in figure 5–4 may be expressed: $X_1 : X_2 + X_3 : X_4$. This means that the output is negative if X_1 and X_2 are negative or X_3 and X_4 are negative.

b. Figure 5-3 is a sample flip-flop trigger circuit used in the AN/GSM-64. X_1, X_2, and X_3 are fed into an AND gate. When they all go negative, e_1 is pulled negative by R_1. Since R_1 is very large compared to R_3 and R_4 in parallel, the current through C_1 is small and the voltage at e_2 remains near zero. When X_1, X_2, or X_3 goes to ground, a surge of current limited by R, (R_2 is small compared to R_3 and R_4) flows through C_1, causing e_2 to go Positive, The PNP transistor is turned off when e, goes positive with respect to ground.

c. *Figure 5-4* is a schematic diagram of a typical logic flip-flop used in the AN/GSM–64. The flip-flop has two outputs: X and **X.** If X is negative, X is 0, and if X is 0, X is negative. Figure 5-4 illustrates the flip-flop with its trigger circuits. The 27,000-ohm resistors connected to the collectors serve the same function as R_1 in figure 5-3. The dotted circuit at the bottom of the diagram illustrates an additional set trigger. Parallel triggers such as this accomplish OR logic without the necessity for AND-OR gates.

5-6. A Board Analysis

a. Located on the A board are the timing generators, a compute matrix, and the compute pulse flip-flop. Figure 5-5 is a block diagram of the plug-in assembly and figure 5–6 illustrates the timing of the pulses generated. Figure 10–2 is a schematic diagram of the assembly. The monostable flip-flop (Q1 and Q2) is triggered f rem the 60-Hz power source and provides an 11 2/3-millisecond delay from the trigger time. The timing binary flip-flop (Q3 and Q4) divides the frequency by two, providing a 30-Hz square wave, the bit rate of the Instrument. These two waves are added to drive the bistable chopper drive flip-flop (Q7 and Q8), producing an asymmetrical wave with a 5-millisecond duration and a 30-Hz repetition rate.

b. The center-tapped chopper coil is driven by CD and CD. At the end of the 5-millisecond square wave, C (Q5 and Q6) is set, and approximately 1/3 millisecond later the amplifier produces U, D, or no output. If the logic equation derived in paragraph 5-5 is satisfied, the compute matrix passes the positive-going trailing edge of C and sets the compute pulse flip-flop (Q9 and Q10), causing a CP to be generated on CPL. As described previously, this CP may be shorted to ground by the 0 or 9 indicator (para 55-4), or by the ES FF (para 5-4).

5-7. B Board Analysis

a. Figure 10-6 is a schematic diagram of the assembly. Located on the B board, as shown in figure 5–7 are the ES (Ql and Q2), A (Q3 and Q4), OE (Q5 and Q6), and PD (Q9 and Q10) flip-flops associated with the end-of-scan logic; an inverter (Q7); and an emitter follower (Q8). The functions of all flip-flops except the inverter, are described in, paragraph 5-4. The inventer in conjunction with T and $\overline{C}$, provides the inverse $(\overline{CP})$ of CP which drives the transfer switch through DT. As described in paragraph 5-4, the transfer switch is locked out in position 11 when the A FF is set by TS11. A diode connected from $\overline{A}$ to DT provides this lockout function, therefore, except at TS11, a $\overline{CP}$ (no CP) drives the transfer switch and a CP drives a compute relay or decade, one step for each time bit.

b. All flip-flops in the instrument are triggered by positive pulses, as described in para-

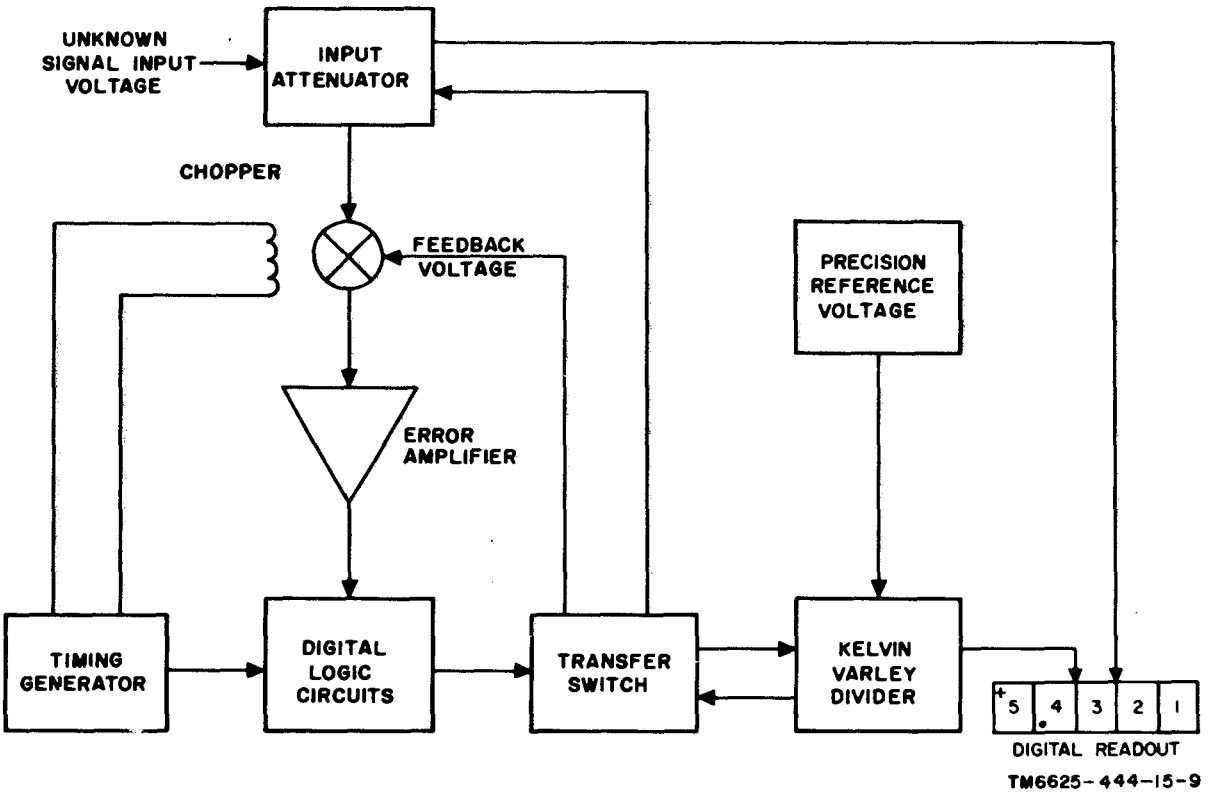

Figure 5–1. AN/GSM–64, block diagram.

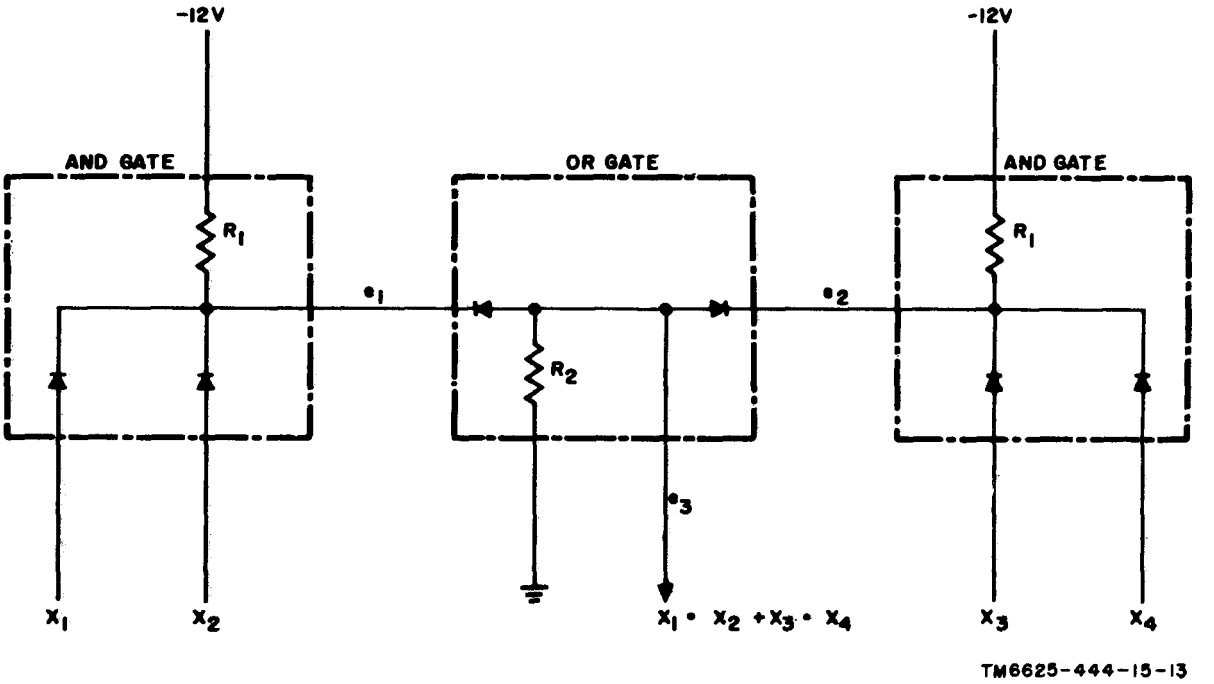

Figure 5–2. AND-OR gates.

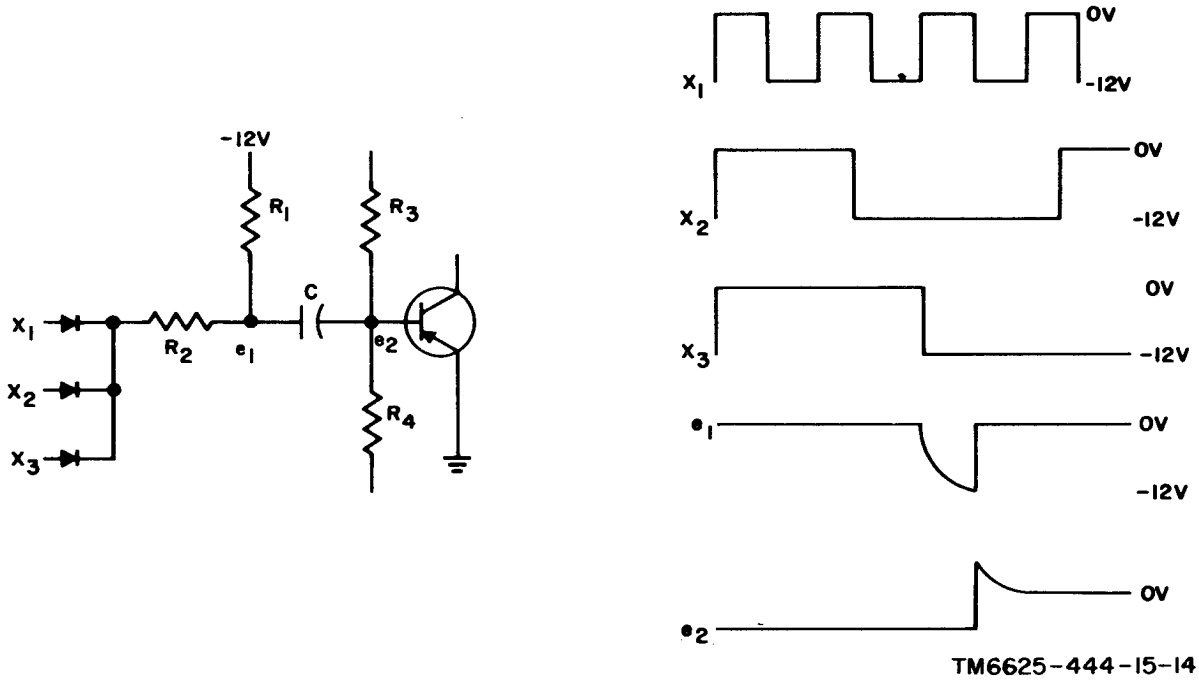

Figure 5-3. Flip-flop trigger circuits.

graph 5-4, except the A FF. Figure 5-6 shows the A FF trigger, diodes reversed. The triggers for the A FF operate in the same way as in the other flip-flops, except that the **trigger** turns the transistor on rather than off.

5-8. C Board Analysis

a. The C board contains the flip-flops which drive all of the relays in the instrument (fig. 10-3). A block diagram is shown in figure 5-8. The print command (PC) flip-flop is a 50- to 100-millisecond monostable flip-flop. The PC FF drives the print command relay, and is triggered by the setting of the A FF when the power switch is set to PRINT. The △ (transfer switch position 2) drives the Q FF through an inverter. The Q, in turn, drives the R FF. The Q and R are connected to the coils of the two relays which provide range data to the readout and the external printer. The Q and R FF's are set to the lowest range at the beginning of each scan by the zeroing of A. AP (transfer switch position 1) drives the P FF through an inverter. The P is connected to the coil of the relay which switches the zener reference supply. The P is connected to the coil of the relay which provides the polarity data. CP's on △Q or △P change the range or polarity flip-flops.

b. The grounding of R_1L, R_2L, R_3L, or R_4L provides for locking the Q and R flip-flops in a selected manual range. In the AN/GSM–64, R_1L is grounded for the 10-volt range, R_2L for the 100-volt range, and R_3L for the 1,000-volt range. The grounding of any of these points shorts △Q to ground. The Q and R remain in the condition commanded by the range switch. (When Q or R, or both, are grounded, they cannot be set by the A FF at the beginning of each scan.) The ACL is grounded when the function switch is set to AC. When ACL is grounded, the digital voltmeter is locked in positive polarity and the 10V range.

5–9. D Board Analysis

The digital voltmeter contains two identical D boards (fig. 6–19). Each board has three identical stepping-switch power amplifiers. The power amplifier consists of a driver (2N1374) and power transistor (2N1540). A diode, a capacitor, and a 4,700-ohm resistor enable the power transistor to absorb the energy stored in the magnetic field of the stepping switch coil. The capacitors are connected to the stepping switch coils. The diodes are connected to the transfer switch, or to the B board (DT). The –15-volt supply is slightly higher than the B-voltage used through-

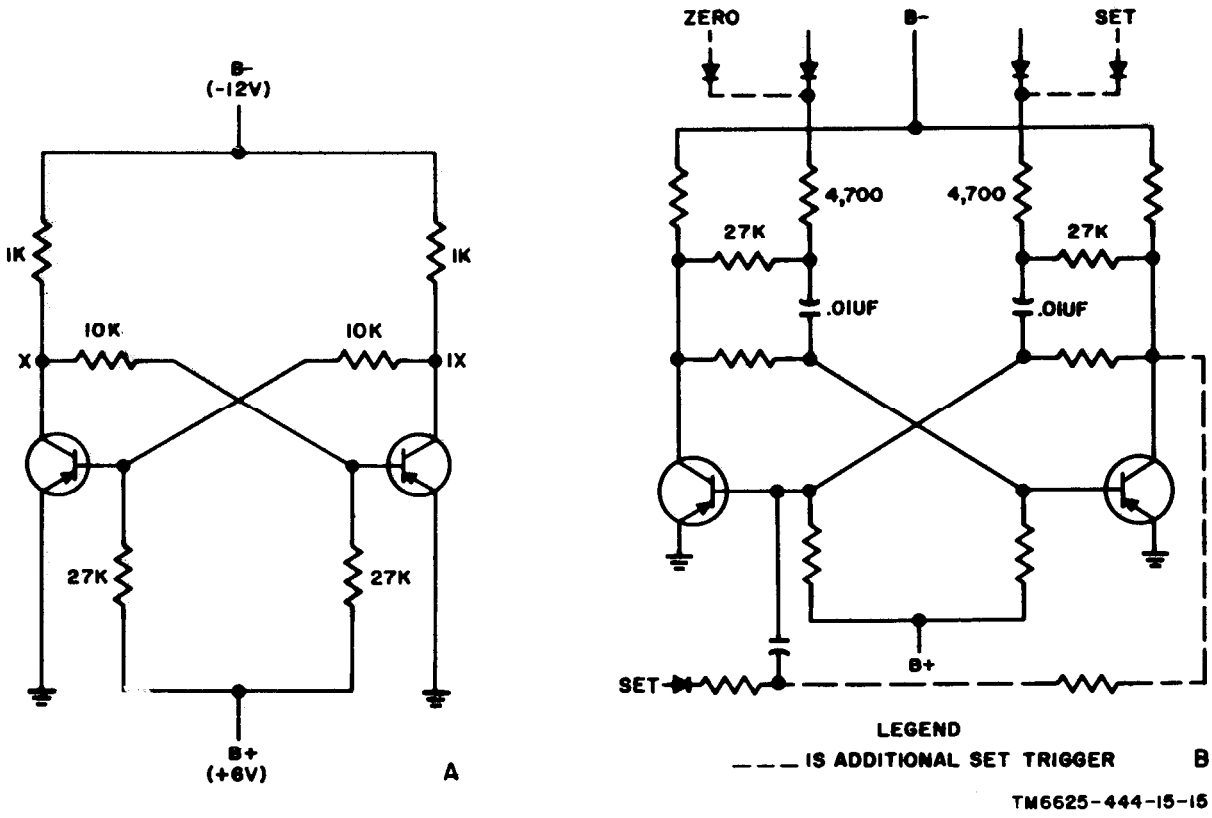

Figure 5-4. A board, block diagram.

out the digital voltmeter. The other ends of the coils are connected to the -15-volt supply.

5-10. Error Amplifier Analysis

a. Figure 5-9 is a block diagram of the error amplifier. The schematic diagram of the error amplifier is shown in figure 10-7. The unknown signal is fed through the input attenuator to one side of the chopper. The input attenuator is controlled by relays Q and R. The voltage across the chopper is limited to a nominal ±15 volts by Zener diode CR1.

b. Capacitor C2 is shorted across the primary of isolation transformer T1 for approximately 28 milliseconds. Approximately 5 milliseconds before the zero bit time, the chopper switches C2 to the signal and C2 charges toward the signal. Since the other side of C2 is connected to the feedback, it is not required that C2 be charged to the exact signal voltage; only direction of error is involved, Capacitor C2 should be charged close to the signal to avoid excessive losses in the resultant error signal to T1. The input attenuator has a maximum output impedance of 1 megohm; therefore C2 charges to approximately 0.95 of the signal. At zero bit time the chopper is driven. Approximately 350 microseconds later, the chopper transfers C2 in shunt with the primary of T1. Unless the feedback exactly equals the signal, C2 contains a charge; this energy is transferred to T1, resulting in an approximate 1-microsecond pulse to Q1. The direction of current flow depends on the polarity of the error. The error pulse is amplified by a three-stage transformer-coupled amplifier, The gain of the amplifier is controlled by R18. If the signal is more positive than the feedback, the UP (U) FF is set. If the signal is less positive than the feedback, the DOWN (D) FF is set. The U and D flip-flops are moss-coupled so that if one of them is set, the other is held zeroed. If either D is set, $\overline{U}\overline{D}$ is held at ground by Q10. R628 is adjusted so that the sensitivity of the U and D flip-flops is equal. At zero bit time $\overline{C}$ is zeroed. Approximately 1 1/2 milliseconds later, $\overline{C}$ is set. When $\overline{C}$ is set, U and D are zeroed and held in this condition until after $\overline{C}$ is

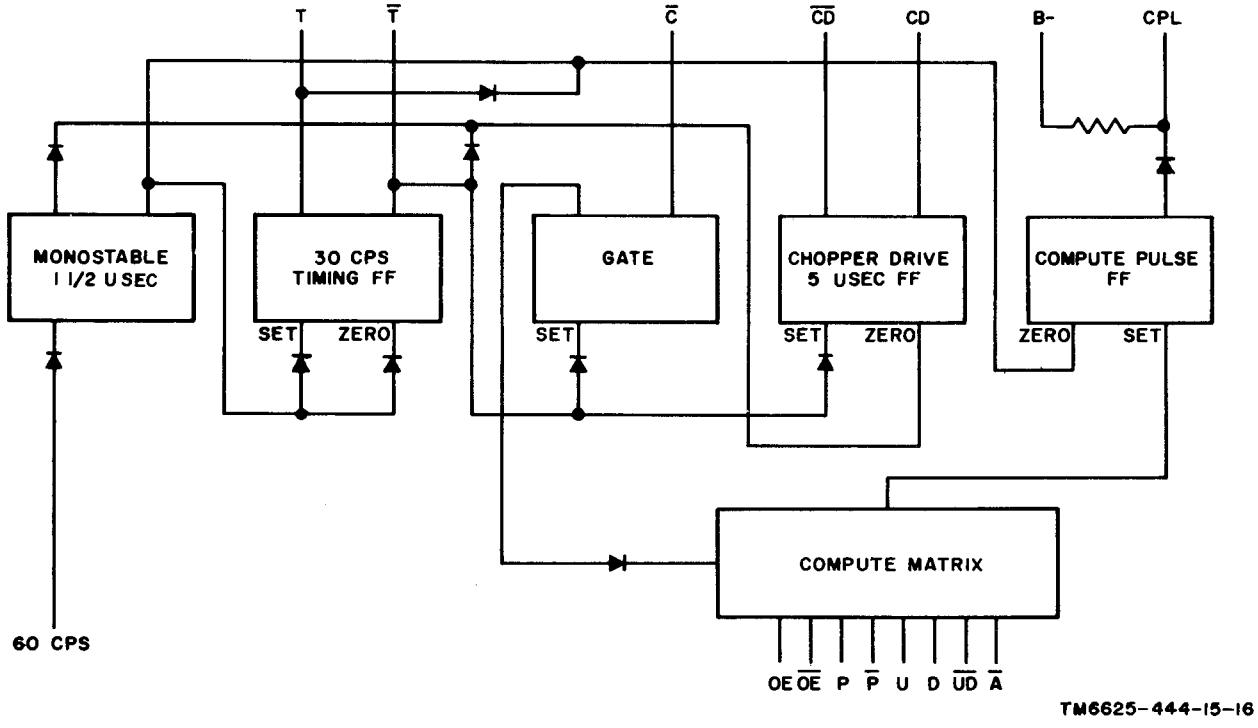

Figure 5-5. A board, block diagram.

zeroed (approximately 250 microseconds). This delay is accomplished by the network composed of CR15, C8, and R53.

c. When the mode switch is set to AUTO, and the power switch is set to AUTO PRINT, Q5 determines the error necessary to produce U or D when at the end of scan (ES). Q5 is connected as an emitter follower series regulator; the voltage at its emitter is approximately that of its base. This voltage is derived by the voltage divider composed of R22, R16, and R3. The AUTO TRIGGER control is a 2,500-ohm log rheostat. R16 adjusts the maximum digits error required to trigger a scan, and is adjusted with the AUTO TRIGGER control set to MIN (fully counterclockwise), which grounds the auto lead. Nominally, R16 is adjusted for ±100 digits; however, up to 1,000 digits can, be obtained. Q4 serves as a gate which clamps the emitter of Q5 to the Zener-regulated (nominally 4 volts) positive voltage source at all times, except at the end of scan; therefore, the voltage supplied to the emitter resistors of Q1 and Q2 is held at 4 volts during scan by Q4, and is held at a lesser voltage set by the AUTO TRIGGER control at the end of scan, resulting in a reduction of gain in Q1 and Q2.

5-11. Zener Reference Supply Analysis

The Zener reference supply consists of a rectifier and a current regulator driving a Zener-diode bridge circuit (fig. 6-20). The current regulator greatly reduces the effects of varying powerline voltage. The bridge circuit compensates for the dynamic impedance of the Zener diodes. A full-wave rectifier and filter are incorporated to supply dc to the Zener oven heater. The polarity relay, the binary coded calibrating resistors, and calibrating potentiometer R10 are also located on this board. Resistor R4 controls the current to the bridge, and R10 is adjusted to compensate for the dynamic resistance of the particular Zener diodes used. Potentiometer R4 and R10 are set at the factory and normally should not require adjustment unless the Zener diodes are changed. These potentiometers are *not* calibrating adjustments. When the function switch is set to RATIO, K1 selects the external reference connected to the CX–7494/GSM–64 (fig. 10-5).

5-12. Relay Boards Analysis

The two relay boards (fig. 6-21, and 6-22) are *range and polarity* and *function ac/dc.* These

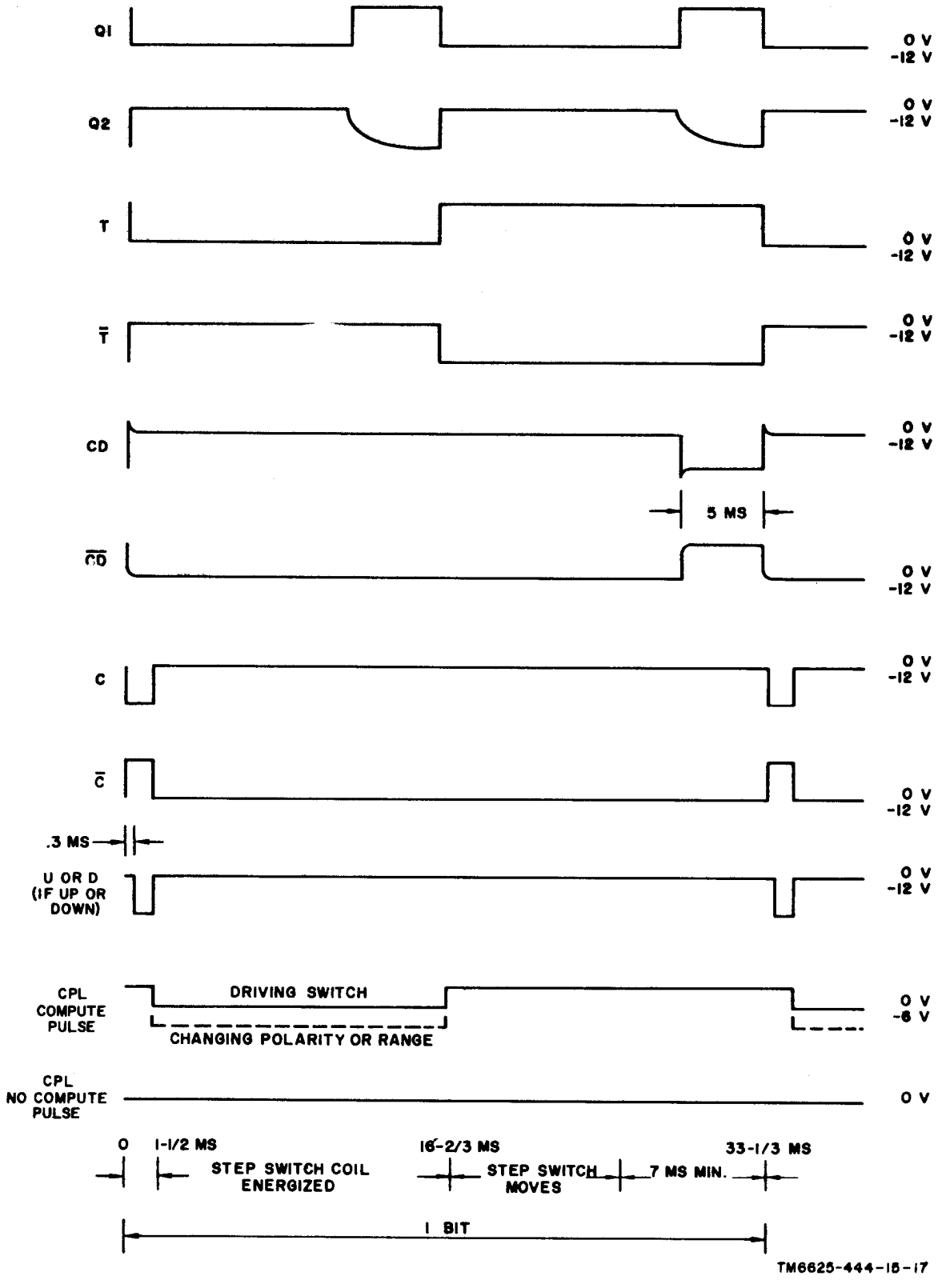

Figure 5-6. Timing chart.

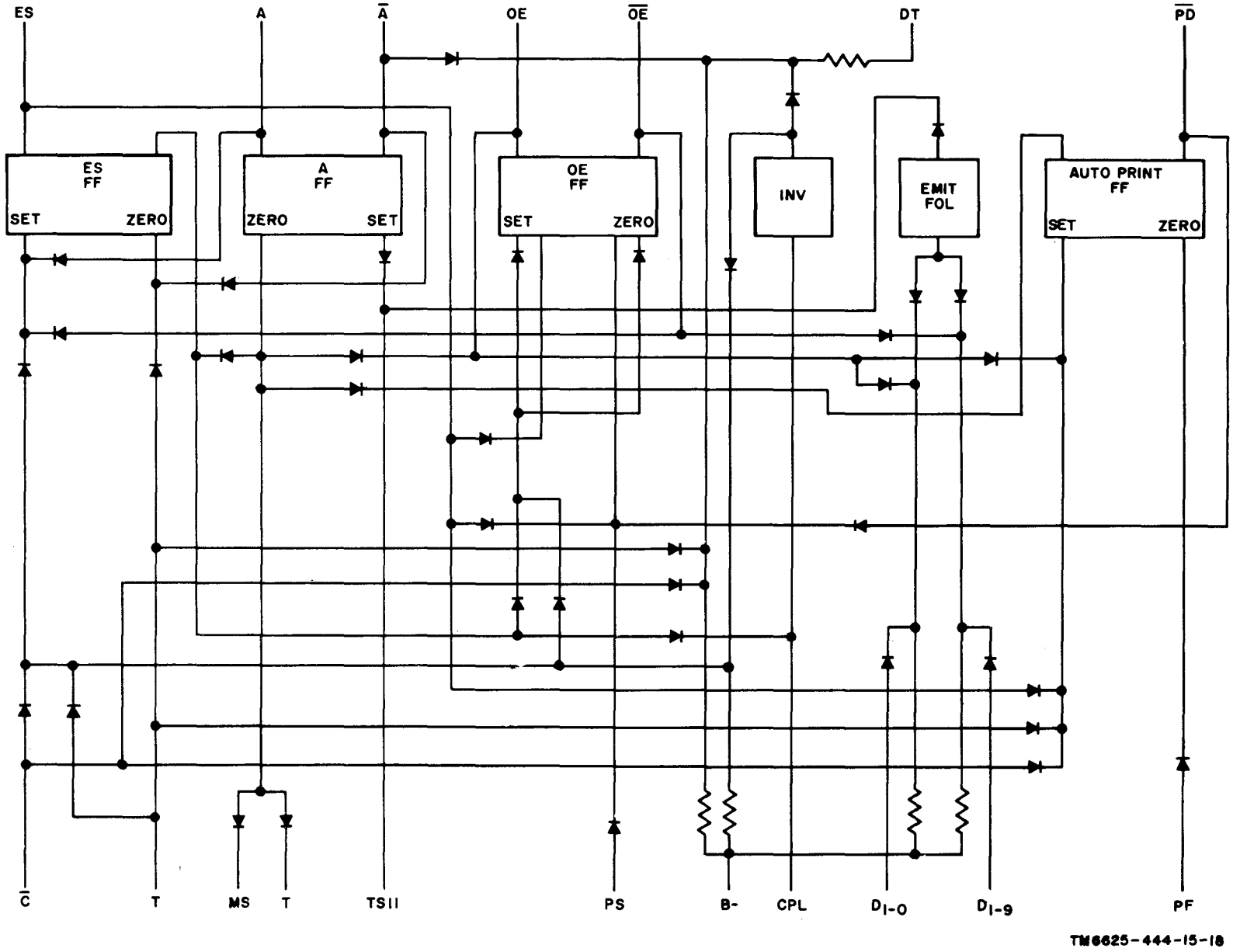

Figure 5-7. B board, block diagram.

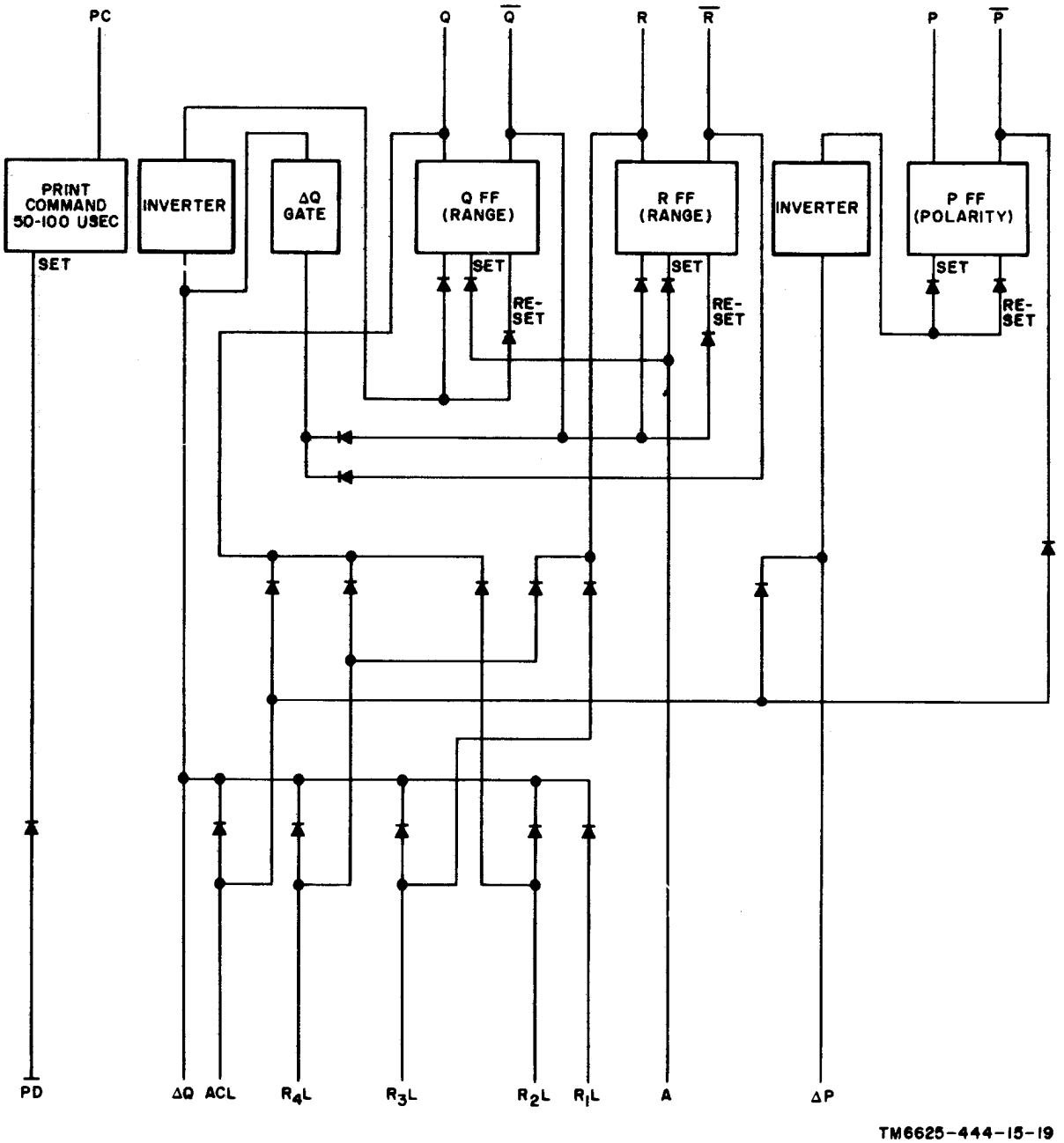

Figure 5-8. C board, block diagram.

boards provide for supplying range, polarity, and function information to the readout and the printer; the boards also permit remote control of these items.

5-13. Decimal Check Board Analysis

The decimal check board (fig. 6–23) causes the digital-voltmeter to recycle automatically if an incorrect range selection is made. Because of the nature of the scan logic used in the AN/GSM-64, a disturbance in 'the signal source after a scan has been initiated may cause the digital voltmeter to uprange erroneously; for example, 07.634. Although balance has been achieved, and the answer is correct, resolution is lost by a factor of 10. When the function switch is set to

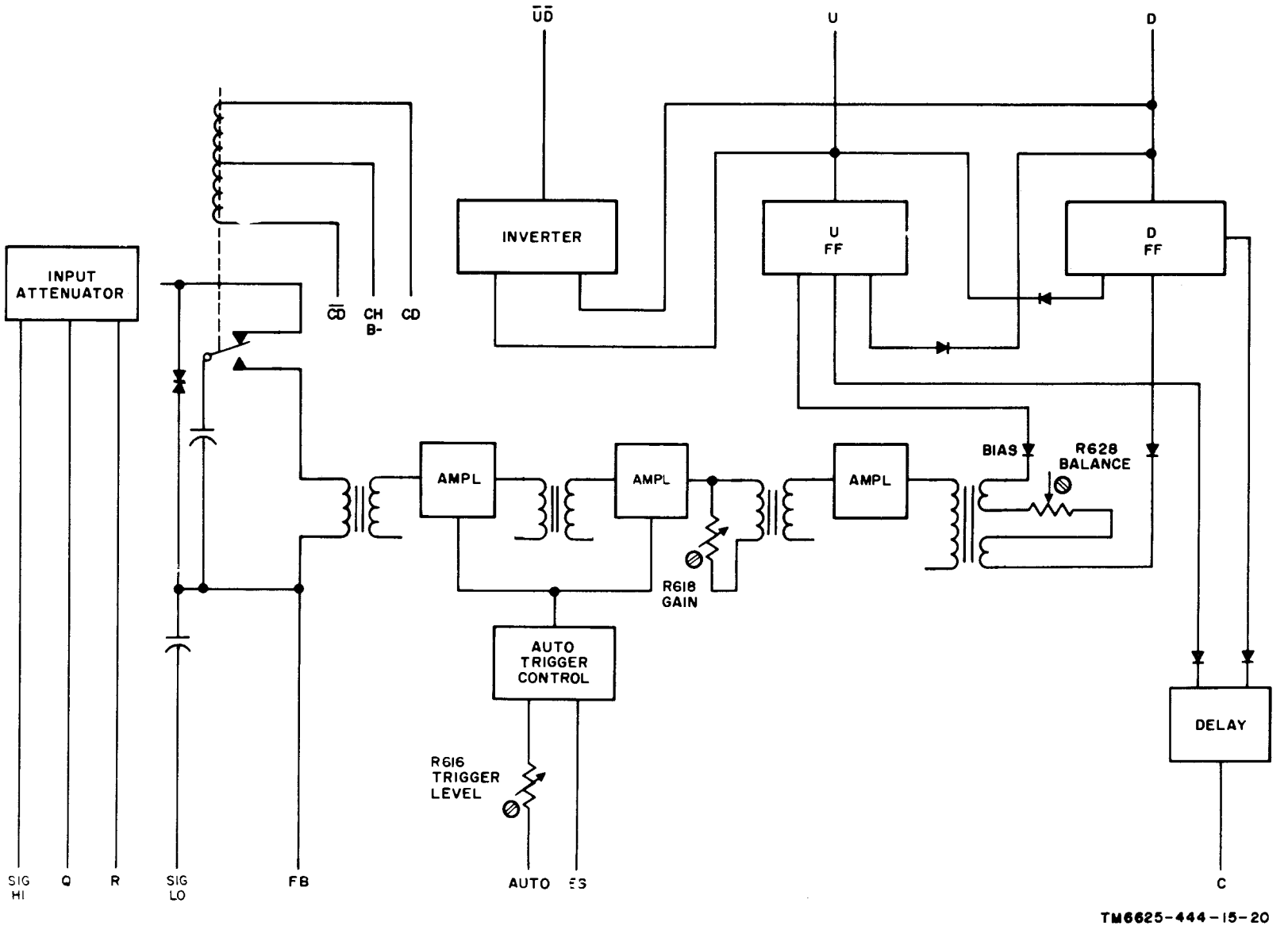

Figure 5-9. Error amplifier, block diagram.

DC and the mode switch is set to AUTO, the circuitry causes the instrument to recycle if a zero appears in the most significant decade and the decimal is *not* at LD4 (extreme left position).

5-14. Power Supply Analysis

a. The power transformer has two secondary windings (fig.10-5). One winding supplies voltage to tlhe Zener reference supply, and the (other provides voltage for the four power supplies:

(1) Zener oven.
(2) -15 volts.
(3) B-.
(4) B+.

b. CR1, CR2, and C1 are on the Zener reference board and provide rectified dc for the –l5-volt-power supply and the B-power supply. Capacitor C3 provides filtering for the –15-volt power supply, and L1, along with C6, provide isolation and additional filtering for the B- power supply (approximately –12.5 wilts). The foregoing are all conventional, unregulated power supplies. CR7 and CR8, together with C4, R12, and C5 provide a filtered B + voltage which is regulated to a nominal +8 volts dc by CR9.

5-15. Print Output Circuitry

a. Rear panel connector J–117 (fig. 10-5) provides for connection with a printing device.

b. All decode and symbol commons, as well as all numbers and symbols, are connected to the 75-pin connector so that either serial or parallel printing may be used without modifying the wiring. The print command (para 5-4) is wired to provide contact closures for a printer; however, several jumper wires (fig. 10-5) may be moved to provide the correct print command for a printer.

5-16. Remote Control Circuitry

a. Remote control of all front panel controls except, function switch RATIO function, is available at rear panel connector J–116 (fig. 10-5).

b. If the remote control cable is longer than 6 feet, the wires to pins Y, Z, AB, AC, AE, AJ, and AK (fig. 10-5) should be shielded and the wires to pins A and B should be a shielded, twisted pair.

CHAPTER 6

TROUBLESHOOTING

Section I. GENERAL TROUBLESHOOTING INFORMATION

WARNING

When troubleshooting the digital voltmeter, be extremely careful of high voltages.

6-1. General Instructions

Troubleshooting at depot maintenance category includes all the techniques outlined for organizational maintenance and any special or additional techniques required to isolate a defective part. Depot localization and isolating techniques and a troubleshooting chart are given in paragraphs 6-2 through 6–7.

6-2. Organization of Troubleshooting Procedures

a. General. The first step in servicing a defective digital voltmeter is to localize the fault. Localization means tracing the fault to a defective stage responsible for the abnormal condition. The second step is isolation. Isolation means the locating of the defective part or parts. Some defective parts, such as burned-out resistors and arcing shorted transformers, can often be located by sight, smell, and hearing; however, most defective parts must be isolated by making voltage and resistance measurements.

b. Localization and Isolation, Listed below is a group of tests arranged to reduce unnecessary work and aid in tracing a trouble to a specific component, In general, the trouble is traced to a section of the digital voltmeter, and the faulty component in the section is remedied. Follow the procedure in the sequence listed below.

(1) *Visual inspection.* Visual inspection is used to locate faults without testing or measuring circuits. The front panel readout, meter readings, or other visual signs should be observed and an attempt made to localize the fault to a particular stage.

(2) *0perational tests.* Operational tests frequently indicate the general location of trouble. In many instances, the tests will help in determining the exact nature of the fault. Operational tests are given in paragraphs 3-3 through 3-9.

(3) *Localization.* The localization procedures applicable to the digital voltmeter are listed in the troubleshooting chart and should be used in localizing the trouble to a particular stage. The troubleshooting chart (para 6-5) lists symptoms of common troubles and gives (or references) corrective measures. Such a chart obviously cannot include all trouble symptoms that may occur. The repairman should use this chart as a guide in analyzing symptoms that may not be listed.

(4) *Iso!ution.* Procedures for isolating troubling are given in paragraph 6-5.

(5) *Techniques* In performing the localization and isolation procedures, one or more of the techniques given below may be applied. Apply these techniques only as indicated and observe all cautions.

(a) Voltage and resistance measurements. This equipment is transistorized. When measuring voltages or resistance, use tape or sleeving (spaghetti) to insulate the entire test prod, except for the extreme tip. A momentary short can ruin a transistor. Use the same or equivalent multimeter specified in paragraph 6–3.

CAUTION

Before using any ohmmeter to test transistors or transistor circuits, check the open circuit voltage across the ohmmeter test leads. Do not use the ohmmeter if the open circuit voltage exceeds 1.5 volt. Also, since the RXL range normally connects the ohmmeter internal battery directly across the test leads, the comparatively high current (50 milliampere (ma) or more) may

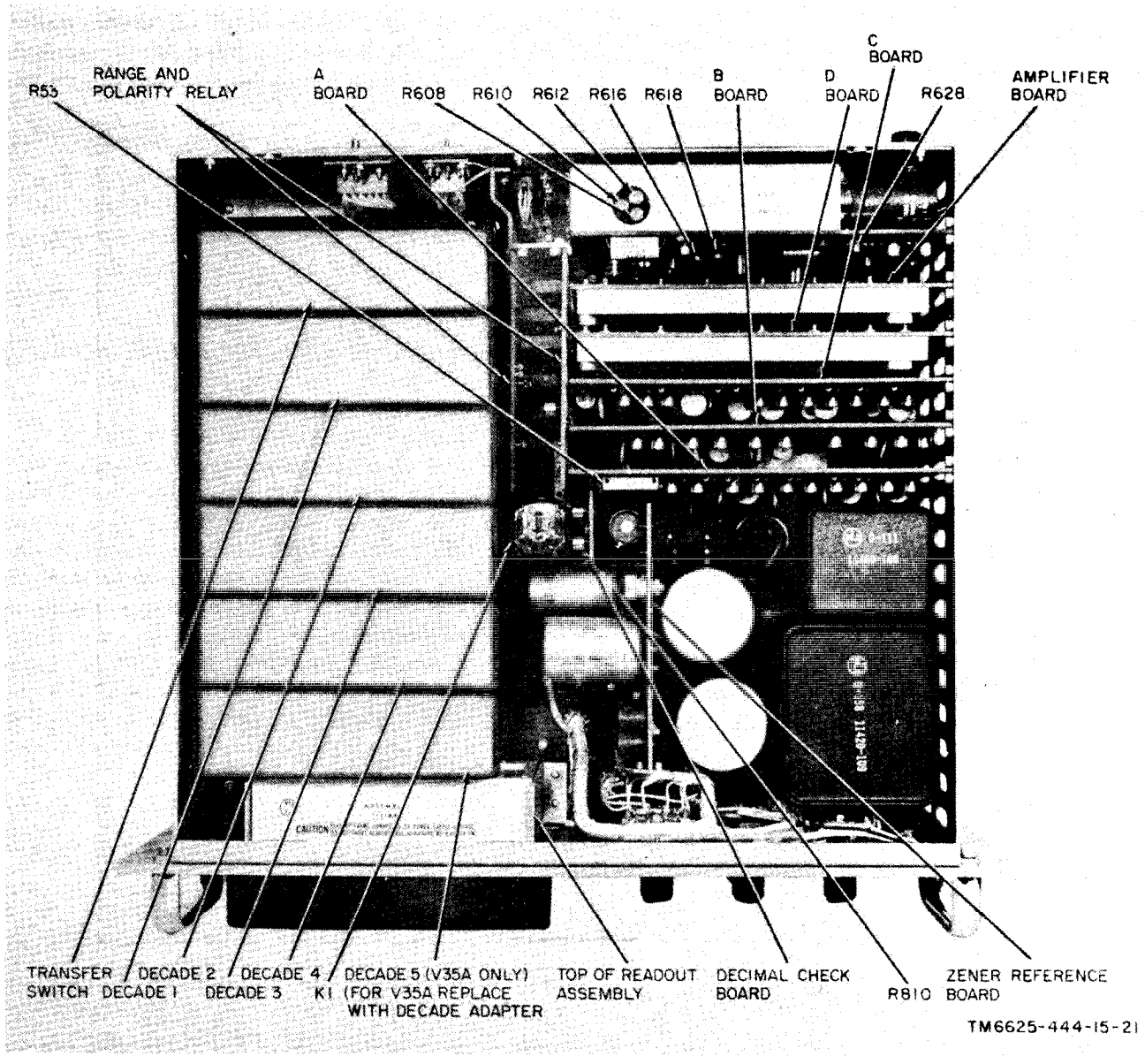

Figure 6-1. Digital Voltmeter AN/GSM-64 plug-in board assembly and adjustment control locations.

damage the transistor under test. As a general rule, the RXL range of any ohmmeter should not be used when testing low-powered transistors.

(b) Test points. The digital voltmeter is equipped with test jacks to f acilitate connection of test equipment (para 6-3). The test points should be used whenever possible to avoid needless disassembly of the equipment. These test points are shown on the schematic diagrams and on the parts location figures.

(c) Intermittent troubles. In all the tests, the possibility of intermittent troubles should not be overlooked. If present, this type of trouble often may be made to appear by tapping or jarring the equipment. Make a visual inspection of the wiring and connections in the equipment. Minute cracks in printed circuit boards can cause intermittent operation. A magnifying glass is often helpful in locating defects in printed circuit boards. Continuity measurements of printed conductors may be made using the same technique ordinarily used on hidden conventional wiring; observe ohmmeter precautions discussed in (2) above.

6-3. Test Equipment Required

The chart below lists test equipment required for troubleshooting Digital Voltmeter AN/GSM-64. The associated technical manuals are also listed.

CAUTIONS

1. The equipment contains transistor circuits. If any equipment item does not have an isolation transformer in its power supply circuit, connect one in the power input circuit. A suitable transformer is identified by FSN 5950–256-1779.
2. Do not connect the test equipment (other than the multimeter outputs) /directly to a transistor circuit; use a coupling capacitor.
3. Be careful when making test equipment connections so that shorts are not caused by exposed test equipment connectors. Tape or sleeve (spaghetti) test prods or clips as necessary to leave as little exposed as needed o make contact to the circuitry under test.

Teat quipment	Technical manual	Common name
Dummy Amplifier Nonlinear Part **No.** 3017-025.		Dummy amplifier.
Multimeter TS-352B/U	TM 11-6625-366-15	Multimeter.
Oscilloscope AN/USM-281, or AN/USM-140B.	TM 11-6625-535-15-1	Oscilloscope.
Electro-Scientific Industries. Dekavider Model RV622 (voltage divider) .		
Tool Kit Electronic Equipment TK-100/G.		

Section II. TROUBLESHOOTING DIGITAL VOLTMETER AN/GSM-64

CAUTION

Do not attempt removal or replacement of parts before reading the instructions given in paragraph 6-1.

6-4. Checking Power Supply

CAUTION

This equipment is transistorized. Read the caution in paragraphs *6-2d(5) (a)* and 6-3.

a. The digital voltmeter power supply test points are as follows:

(1) *Dc* ***measurements.***

Measurement	Test point
B	High side of R8 (fig. 6-2 and 6-3) .
B+	Anode of CR9 (fig. 6-2 and 6-3).
-15 volt	Low side of (C3 (fig 6-2 and 6-3).
Zene oven	Across C1 (fig. 6-4).

b. Short the input leads and performed the measurements shown in the chart below. A variation greater than ten percent from the values given in the chart indicates a malfunction in the power supply circuits. The dc measurements are made with the multimeter (para 6-3), and the ac measurements are made with the oscilloscope (para 6-3).

Dc measurements			Zener oven power supply		Mode switch setting
B - power supply	B + power supply	-15 volt power supply	O~n	Oven on	
-12.5	+8.1	–15.2	+19.3	+15.8	STANDBY
-12.5	+8.1	–15.1	g19.3	+15.8	CONTINUOUS

(2) ***Ac measurements. Set*** the oscilloscope for peak-to-peak volts.

AC measurements			Zener oven power supply		Mode switch setting
B - power supply	B + power supply	-15 volt power supply	'Oven off	Oven on	
	0.02	1.0	0.001	***3.0***	STANDBY
1.0	0.03	2.8	0001	3.0	CONTINUOUS

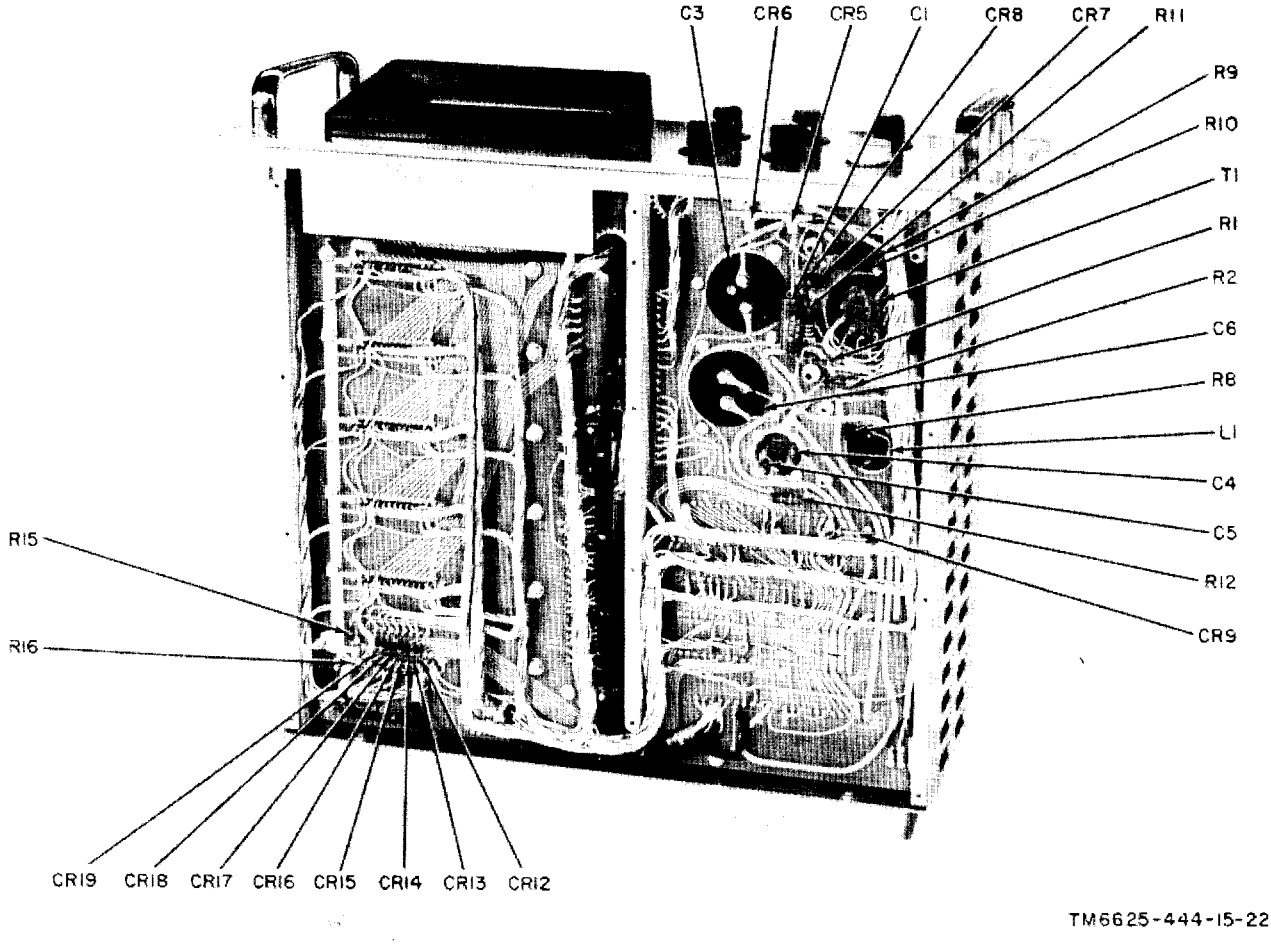

Figure 6-2. Digital *voltmeter, up to serial number* 11.3810, *bottom view.*

6-5. Localizing Troubles

a. General. The trouble may be localized by systematically replacing existing boards with spare boards until the trouble is remedied (fig. 6-1). If no spare boards are available, use the troubleshooting chart *(e* below). In the troubleshooting chart, procedures are outlined for checking the front panel controls, sectionalizing troubles to the digital or analog section, and localizing troubles to an assembly within one of the two sections.

(1) The digital section cosists of the following assemblies:

(a) A board.
(b) B board.
(C) C board.
(d) D board.
(e) Transfer switch (logic levels only).

(2) The analog section consists of the following assemblies:

(a) Range relays.
(b) Amplifier.
(c) Transfer switch (non-logic levels).
(d) Chopper.
(e) Decade switches.
(f) Zener reference Supply.

b. Location of Parts. Parts locations for the nblies are indicated in figures 6-4 through 6–12.

c. Use of chart. When an abnormal symptom has been observed in the equipment, look for the symptom in the trouble symptom column and perform the corrective measure prescribed. (If no operational symptoms are known, the chart gives procedures for using a dummy amplifier to determine the symptoms.) If a dummy amplifier is not available, begin with item 3 of the Organizational Monthly Preventive Maintenance Checks and Services Chart (para 4-6) and proceed until a trouble symptom appears.

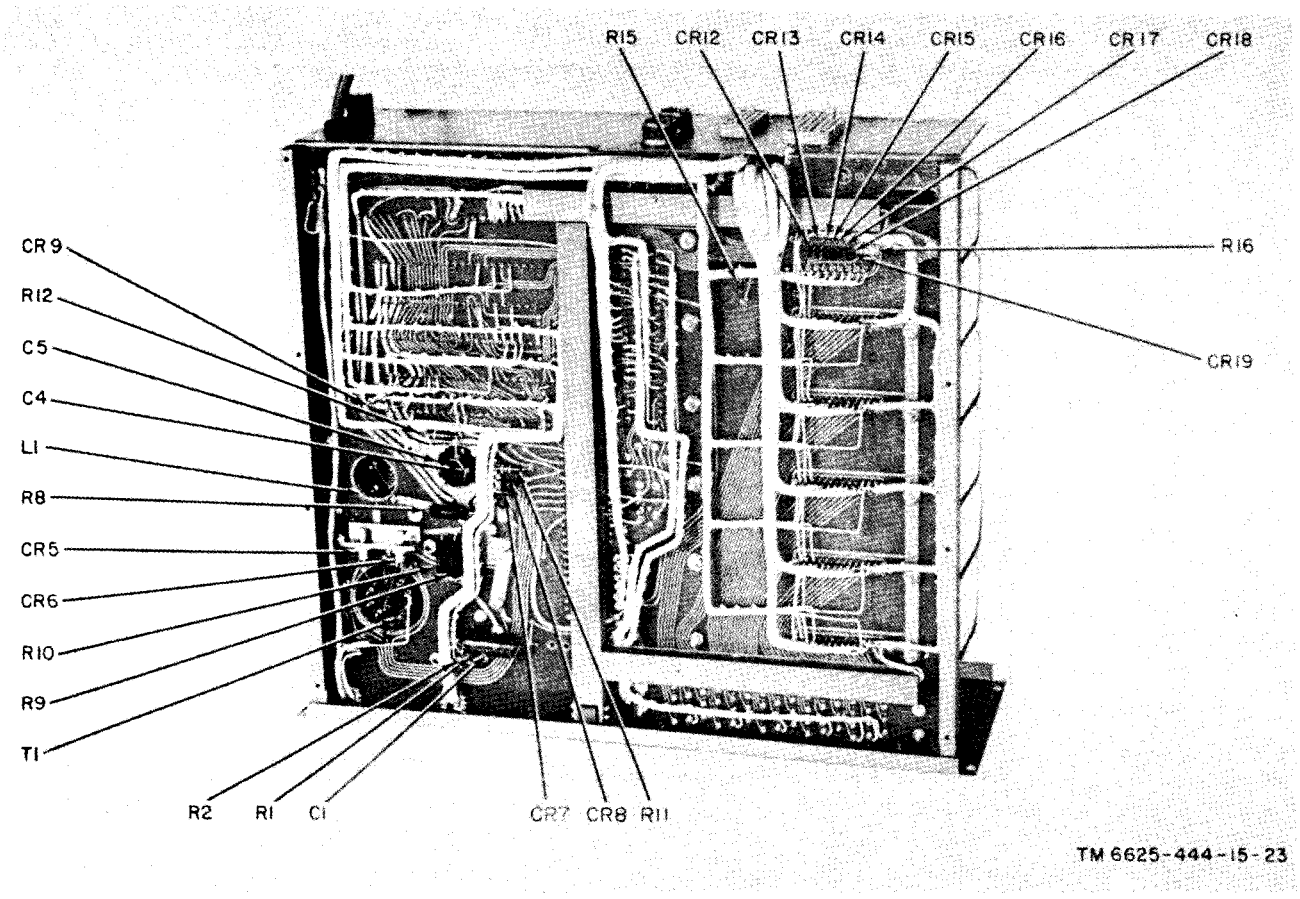

Figure 6-3. Digital voltmeter, serial number 11.3810 and up, bottom view.

d. Test Setup.

(1) Remove the top cover and the amplifier board (fig. 6-1).

(2) Insert the dummy amplifier in place of the amplifier board,

(3) Set the function switch to DC, the mode switch to STANDBY, and the power switch to ON.

e. Troubleshooting Chart.

Item No.	Trouble symptom	Probable trouble	Checks and corrective measureas
1	No readout when the power switch is set to ON.	No line voltage	Check power cable Check line voltage.
		Open fuse 101 in power supply	Repeax.e fuse (rear panel).
2	Digital volmeter scans in STANDBY made with dummy amplifier switch set to any position.	Mode switch defective	Check mode switch and wiring (fig. 10-5) .
3	Digital voltmeter scans more than once when mode switch is set to SINGLE SCAN.	Mode switch defective	Check mode switch and wiring (fig, 10-5).
4	Digital voltmeter does not scan continuously when mode switch is set to AUTO, with dummy amplifier switch set to U or D.	Mode switch defective	Check mode switch and wiring (fig. 10-5).

Item No.	Trouble symptom	Probable trouble	Checks and corrective measuren
5	Digital voltmeter scans when mode switch is set to AUTO with dummy amplifier switch set to UD	Mole switch defective	Check mode switch and wiring (fig. 10-5).
6	Digital voltmeter does not scan continuously in all positions of dummy amplifier switch when mode switch is set to CONT.	Mode switch dafective	Check mode switch and wiring (fig. 10-5).
7	Digital voltmeter does not scan once, lock up, and give print command when mode switch is set to CONT and power switch set to PRINT. (Print command relay closure is audible.)	Power switch defective	Check power switch and wiring (fig, 10-5).
8	Digital voltmeter does not scan once lock up, and give print command where mode switch is set to CONT, power switch is set to AUTO PRINT, and dummy amplifier switch is set to UD.	Power switch defective	Check power switch and wiring (fig. 10-5).
9	Digital voltmeter does not continuously recycle when mode switch is set to CONT or AUTO, power switch is set to AUTO PRINT, and dummy amplifier switch is set to U or D.	Power switch defective	Check power switch and wiring (fig. 10-5).
10	Digital voltmeter does not lock up and give print comnmand when mode switch is set to CONT or AUTO, AUTO PRINT, and dummy amplifier switch is set to UD.	Power switch defective	Check power switch and wiring (fig. 10-5).
11	Digital voltmeter does not a count to all 9's when SINGLE SCAN, and dummy amplifier switch is set to U or D.	Problems in digital section	See steps 13 through 23 below.
12	Digital voltmeter counts to all 9's when function switch is set to DC, mode switch is set to SINGLE SCAN, and dummy amplifier switch is set to U or D, but does not operate properly with normal amplifier board installed.	Problems in analog section	See steps 24 through 34 below.
13	Digital voltmeter fails to scan	*a.* No timing pulses	*a. Check* A board (fig. 10-2).
		b. End-of-scan flip-flop defective	*b.* Check B board (fig. 10-6.
		c. Transfer switch drive circuit defective.	*c.* Check B board (fig. 10-6).
		d. Power amplifier defective	*d.* Check D boards (fig. 6-19).
		e. Open decade switch coil	*e.* Check decade switches (fig. 6-17).
		f. Open transfer switch coil	*f.* Check transfer switch (fig. 6-18).
14	Errors occur in one polarity but not in other.	a. A board defective	*a.* Check A board (fig. 10-2).
		b. Polarity relay defective	*b.* Check polwity relay (fig. 6-4).
15	Digital voltmeter scans but does not change readout.	A board defective	Check A board (fig. 10-2),

Item No.	Trouble symptom	Probable trouble	Checks and corrective measures
16	Decade 1 rolls	B board defective	Check B board (fig. (10-6).
17	Decade other than 1 rolls	0 or 9 fail-safe diodes defective	Check diodes under transfer switch cm master board (fig. 6-2 and 6-3).
18	Some or all, decades go to 9	B board defective	Check B board (fig. 10-6).
19	Digital voltmeter scans when mode switch is set to STANDBY	B board defective	Check B board (fig 10-6).
20	Digital voltmeter scans more than once when mode switch is set to SINGLE SCAN.	B board defective	Check B board (fig. 10-6).
21	Improper polarity and range changing.	C board defective	Check C board (fig. 10-3).
22	No print command	*C board* defective	Check C board (fig. 10-3).
23	Error every 3d, 6th, 9th etc scan, or two out of three scans.	Transfer switch defective	Check transfer switch (fig. 6-18).
		a. Improper printer connection.	*a* Check printer connections (fig. 1-2).
		b. High-contact resistance on polarity relay.	*b.* Replace polarity relay (fig. 6-4).
		c. Zener reference supply defective	*c.* Check zener reference supply (para 6-7).
24	Errors in one range, but not in other ranges.	Range relays defective	Check range relays on amplifier board (fig. 10-7)
25	Readings erratic	*a. Amplifier* board defective	*a.* Check amplifier board (para 6-7)
		b. Transfer switch defective	*b.* Check transfer switch (fig. 6-18).
		c. Decade switch defective	*c.* Check decade switches (fig. 6-17).
26	Offset in low range, but not in either ranges.	Amplifier board defective	Check amplifier board (para 6-7).
27	Errors in high range	Amplifier board defective	Check amplifier board (para 6-7).
28	Drift	Amplifier board defective	Check amplifier board (para 6-7).
29	Lockup in all nines	Zener reference supply defective	Check Zener reference supply (para 6-7)
30	Polarity, readout, or printout incorrect	Two- or four-relay board defective	Check two and four-relay boards (para 6-7).
31	Function and range controls do not control equipment properly.	Two- or four-relay board defective	Check two- and four-relay boards (para 6-7).
32	Incorrect decimal position	Decimal check board defective	Check decimal check board (fig. 6-23).
33	Blank decade in readout	*a.* Burned out lamp bulb	*a.* Replace lamp bulb (para 6-7).
		b. Bent bulb contact	*b.* Check bulb contacts (para 6-7).

6-6. Isolating Troubles

a. General. When trouble has been, localized to an assembly, isolate the defective part by performing voltage or resistance measurement.

CAUTION

Before attempting to perform voltage and resistance measurements, read paragraphs 6-2 and 6-3.

b. Transistor Testing. If the transistor can be removed without the use of a soldering iron, they should be tested out of the circuit. If a transistor tester is available, test the pluckout transistor before making other circuit tests. If the transistors are wired in the circuit, every effort should be made to troubleshoot the equipment without physically unsoldering and removing the transistors.

c. Schematic Diagrams. Use the schematic diagrams (fig. 6-17 through 6-23 and 10-2 through 10–7), to circuit trace and isolate the faulty part.

d. Analysis of Measurements. When measuring resistance of circuit elements connected across the junctions of a transistor, measure the resistance one way and then reverse the leads; if the reading is the same in both cases, the transistor is probably defective.

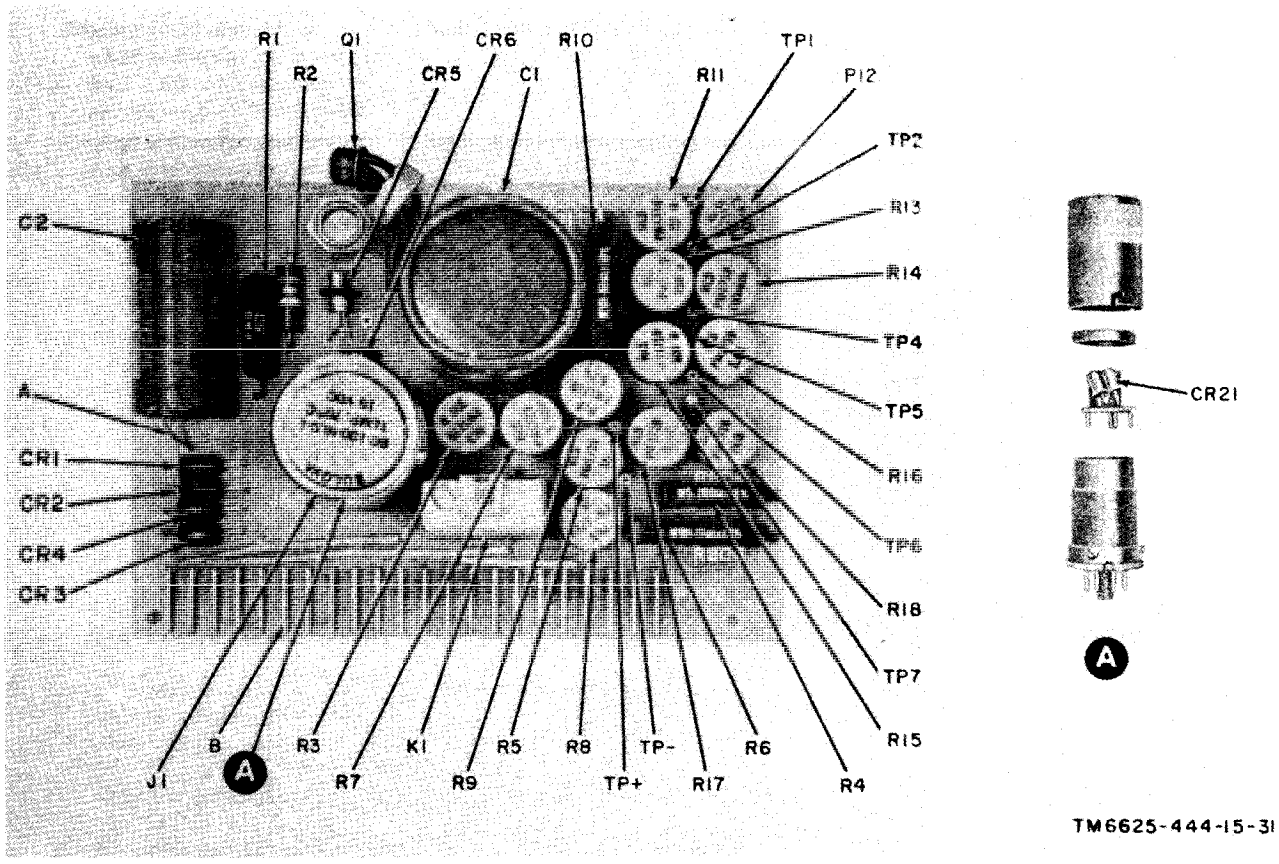

Figure 6-4. Zener supply assembly parts identification.

6-7. Additional Troubleshooting Data

a. Zener *Reference Supply.*

(1) Remove the Zener reference supply from its slot (fig. 6-1) insert the extender board, and mount the Zener reference supply on the extender board.

(2) With the line voltage at 115 volts ac, measure 7.7 volts dc between TP– and TP+ (fig. 6-4), Vary the line voltage between 105 and 125 volts ac and observe that the voltage between TP– and TP+ does not vary more than ±0.2 percent.

(3) If the regulation is within ±0.2 percent, but the voltage is not 7.7 volts dc with a 115-volt line voltage, vary R4 and repeat the procedures given in (2) above until the condition is met.

(4) If it is not possible to reset the condition given in (3) above, measure 36 volts dc ±1 across C2 with the line voltage at 115 volts. If the voltage across C2 is not. correct, check CR3, CR4, R2, C2, and the ac supply to pins 16, 17, and 18.

(5) If the voltage across C2 is not correct, check Q1, CR6, and R3 through R9.

(6) If the voltage between TP– and TP+ is very low, or zero, CR21 is defective, or there is an open component in the associated circuitry,

(7) If the Zener oven power supply voltage is not correct (para 6-4), check HR21 and S21.

(8) Connect a 30,000-ohm resistor in series with a 1-microfarad (mf) capacitor between TP+ and pin 17. Connect the oscilloscope ground to pin 6 and the input to pin 5. The oscilloscope must be floating (isolated) from the powerline ground.

(9) Connect the test setup as shown in figure 6-14 and adjust the input for +0.0005 at null.

(10) Vary R6 for minimum ripple on the oscilloscope ; typically, this should be less than 1 millivolt. With the resistor and the capacitor removed, the ripple should be less than 200 microvolts, with a low reading at balance in either polarity.

b. Two-relay and Four-Relay Assemblies (fig. 6-21 and 6-22).

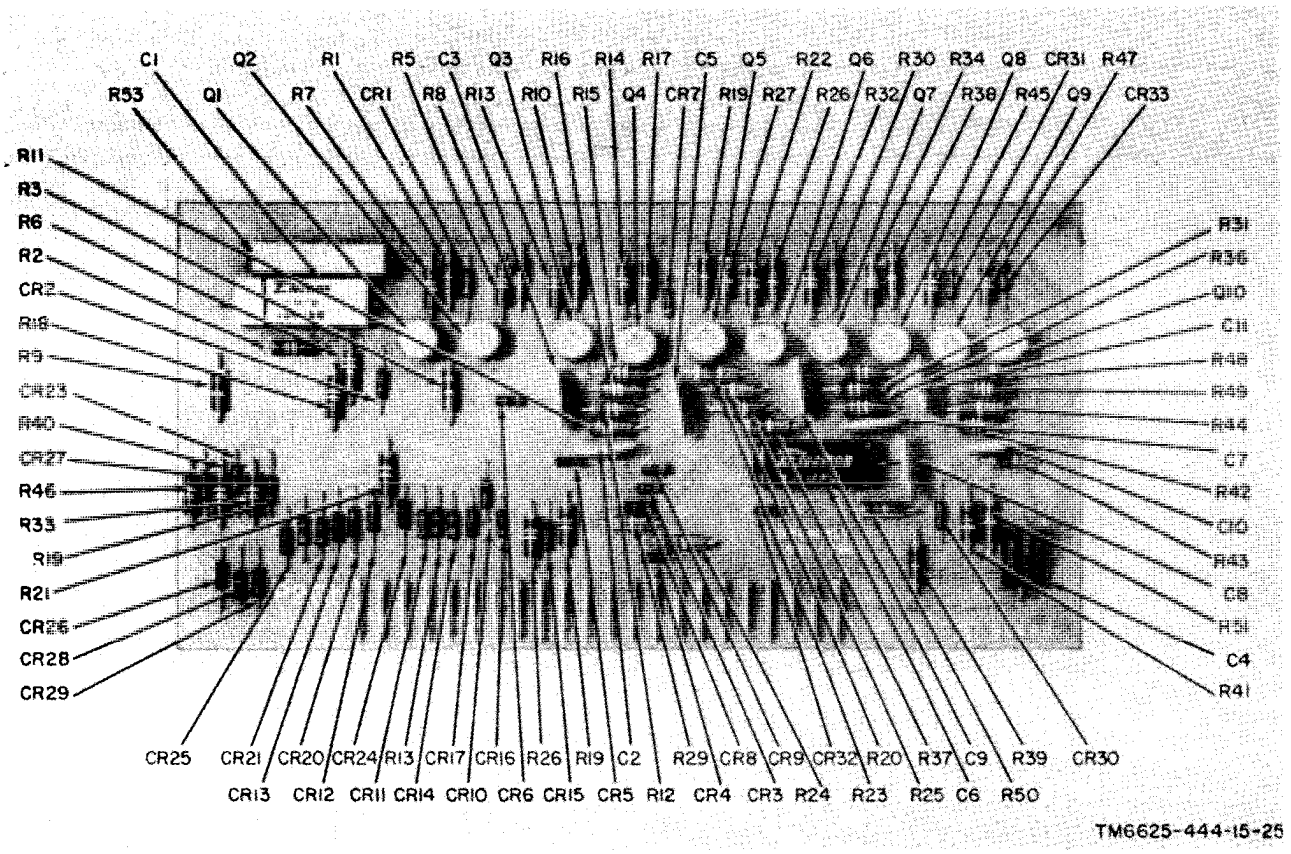

Figure 6-5 A board, parts identification

(1) Check the relay action of all relays.

(2) Check the resistance of diodes.

(3) Ground pin 4 of the four-relay board (fig. 6-11).

(4) Apply +8 volts dc to pin 5 and -12 volts dc to pin 15. Observe that Q1 conducts and K1 and K2 are energized.

(5) Ground pin 6 and observe that Q1 turns off and K1 and K2 reenergize.

c. ***Digital readout.***

(1) Gently lift the Mack readout visor; then, pull it outward.

(2) Spread the two retaining side brackets and gently rotate the readout forward from the top, allowing the bottom to pivot.

(3) Continue to rotate the readout on the pivots until it Teaches the end of travel; then, lift it free. Be careful not to bend the lamp contact springs.

(4) Replace lamp bulbs as follows:

(a) Check for bent contact springs. If any are bent down, gently lift them to the level of the others.

(b) The proper bulb location is shown on figures 6-15 and 6-23. On figure 6–23, note that the diagram is for the readout contact board.

(5) Clean the readout plates and the polaroid filter as follows:

(a) Remove one structural end plate.

(b) Slide the plates and the filter out; be careful to note the position of each one.

(c) Remove the abrasive materials with a small, artist's brush.

(d) Clean the plates and the filter with isopropyl alcohol and lint-free paper.

(e) Reinsert the plates in their slots. The engraved side of the readout plates faces the rear of the digital voltmeter. Look through the polaroid filter at a piece of shiny metal. If the metal shows a violet cast, the filter f rent is the surface closest to the eye.

(f) Replace the structural end plate.

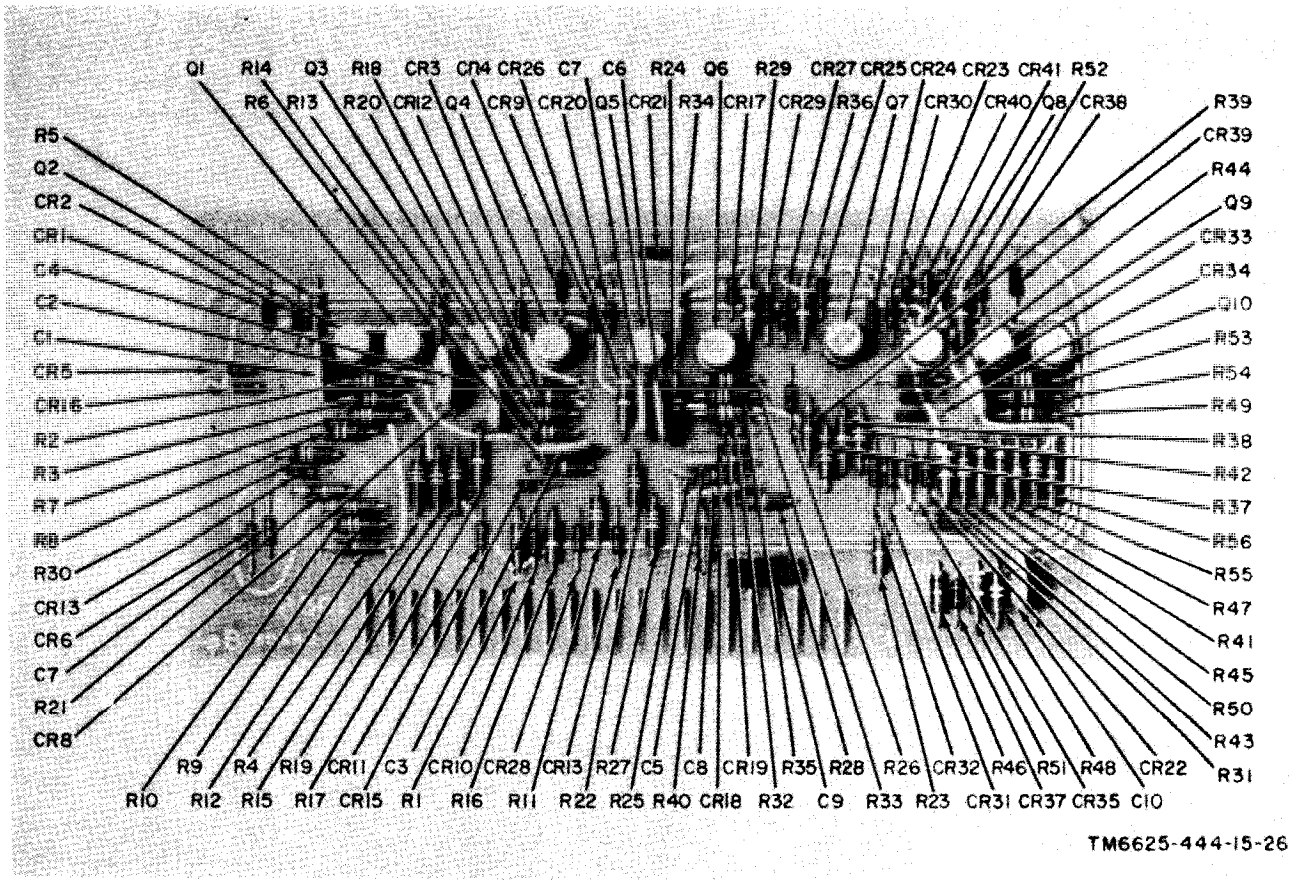

Figure 6-6. B board, parts identification.

(6) Replace the readout as follows:

(a) Spread aside the retaining end brackets on the digital voltmeter.

(b) Engage the pivots in the pivot slots.

(c) Rotate the readout into place and allow the retaining end brackets to fall into position.

(7) Replace the visor.

d. Amplifier Assembly.

NOTE

No amplifier adjustment are to be performed until all other portions of the equipment are operating properly.

(1) Connect the test setup as shown in figure 6–14.

(2) Short TP3 to pin 1 (fig. 6-9),

(3) Adjust the test setup for a +0.00050-volt output. Observe that the readout indicates +0.0005 ±1 digit.

(4) Connect the oscilloscope to the amplifier as follows:

(a) Ground to pin 1.

(b) Input to TP1.

(c) Trigger to pin 3.

(5) Set the oscilloscope control as follows:

(a) DC input.

(b) 0.2 v/cm sensitivity (1:1 probe).

(c) 100 microseconds/cm sweep rate.

(d) External + ac slow trigger.

(6) Adjust the test setup to +0.0015 volt, center the pulse on the oscilloscope, and expand the sweep by 50.

(7) Adjust the test setup to +0.00050 and vary the 1/10,000 dial of the voltage divider for a minimum pulse on the oscilloscope. The amount of voltage divider that must be moved to obtain minimum pulse is the null offset of the digital voltmeter. If the null offset is greater than 0.00004, there is ac pickup in the signal feedback. Correct this trouble before proceeding with the adjustments.

(8) Repeat steps (4) through (7) above.

(9) Decrease the voltage divider setting by 0.00005 from the null; for example; if the null was 0.00048, the new setting is 0.00043.

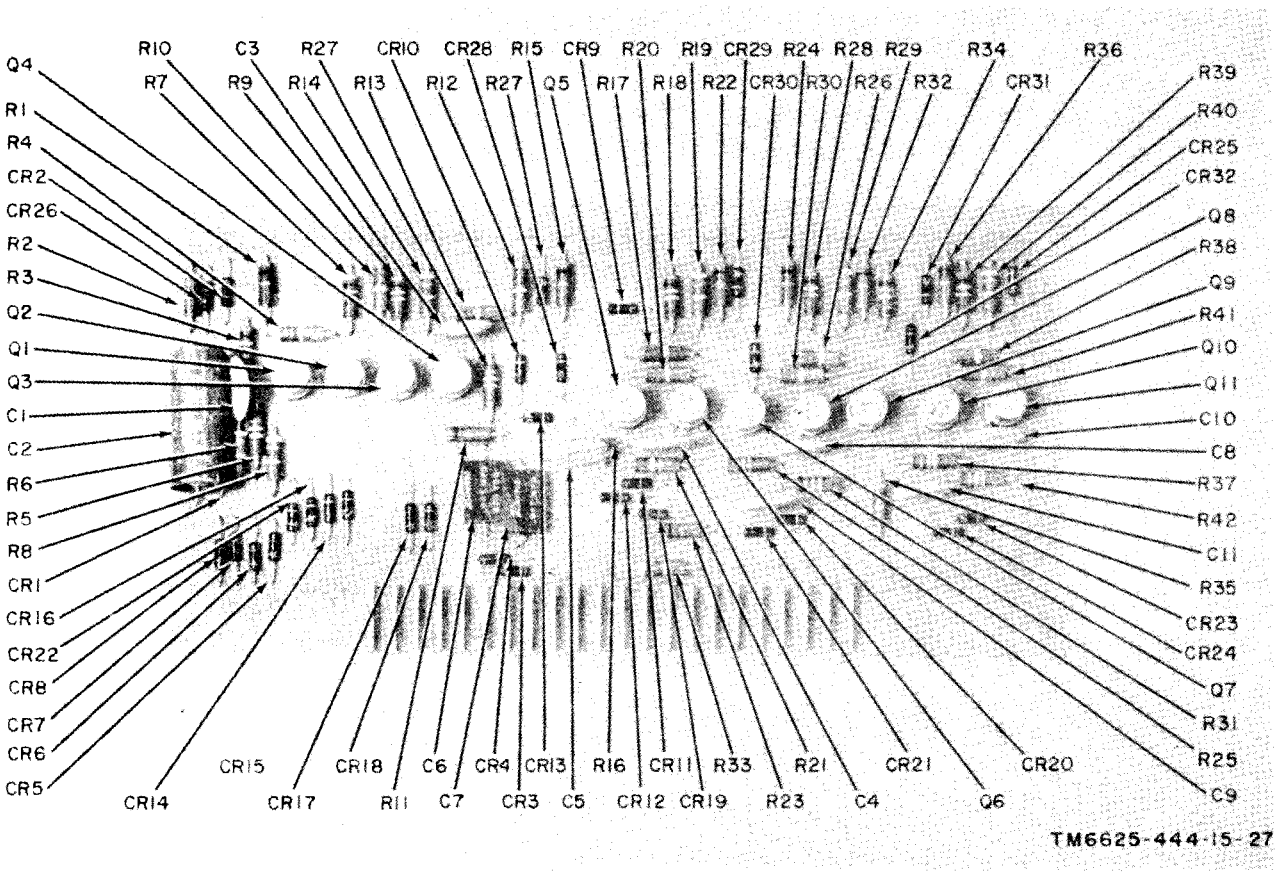

Figure 6-7. C board, parts identification.

(10) If a steady square wave (leading edge at the same point as the error puke) now appears, rotate R–618 counterclockwise (CCW) until the square wave just starts to *blip.* If no square wave is preset, rotate R-618 clockwise (CW) until a steady square wave appears, and then ccw until the square wave just starts to *blip.*

(11) Move the oscilloscope input to TP2 and adjust the voltage divider to a setting of 0.00005 more than the null; for example, if the null was 0.00048, the new setting is 0.00053.

(12) If a steady square wave appears, rotate balance control R28 cw until the square wave just starts to *blip;* then, return R28 ccw one-half the turns to the initial setting. If the square wave is *blipping* initially, rotate R28 ccw until the same degree of *blipping* is present as described in (10) above; then, return R28 cw one-half the turns to the initial setting. The balance potentiometer should now be balanced and require only slight adjustment in the recheck procedures given in (13), (14), and (15) below.

(13) The amplitude of the square waves should be within 20 percent of that shown in (10) and (12) above. If the amplitude in (10) above is less, Q6 is defective; if the amplitude in (12) above is less, Q8 is defective. Repeat the procedures given in (9) through (12) above to check the amplitudes and refine the adjustment.

(14) Slowly turn R18 cw until the *blipping just* stops. Decrease the setting of the voltage divider by 0.000015; for example, if the setting was 0.000530, the new setting is 0.000515. If the square wave is still present, the amplifier requires repair.

(15) Without changing the voltage divider setting, move the oscilloscope input to TP1. Observe that the pulse-to-noise ratio is greater than 3:1 (fig. 6-16).

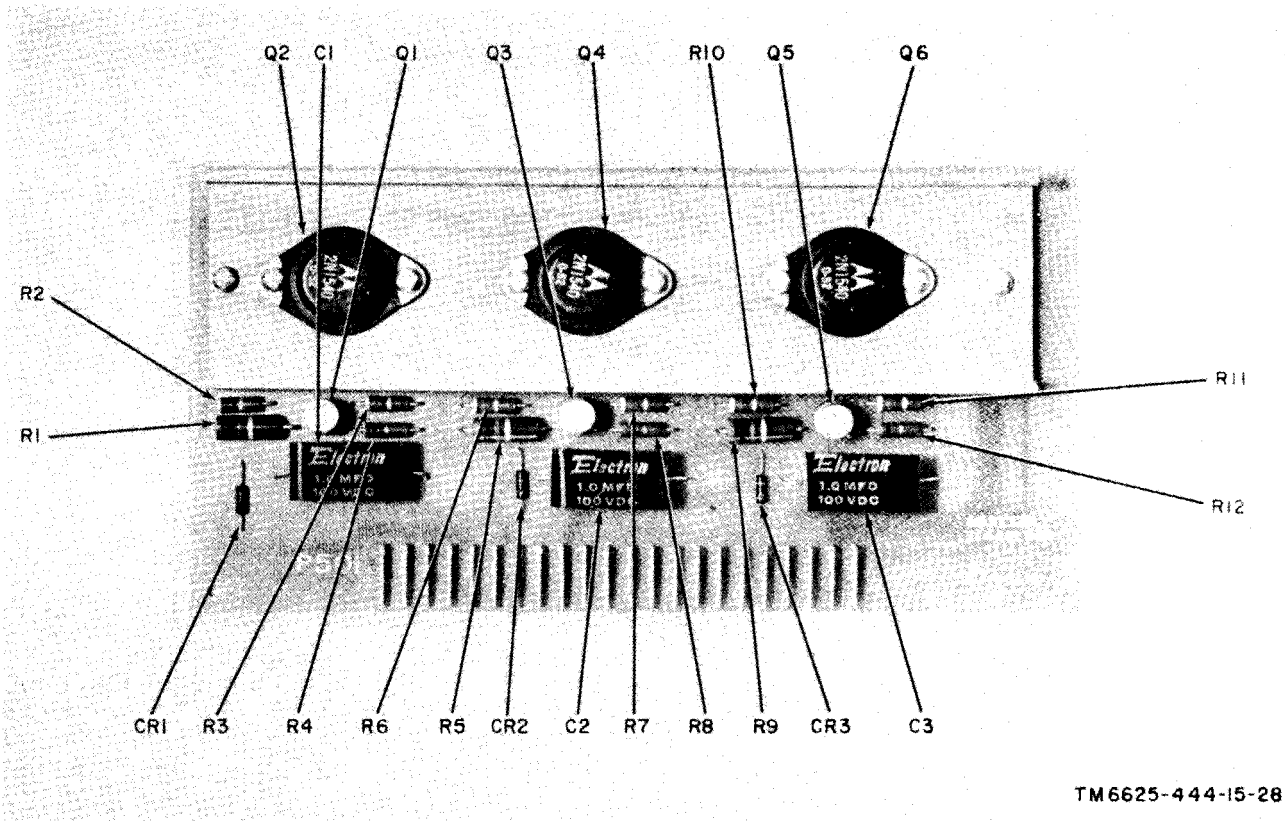

Figure 6–8. D board, parts identification.

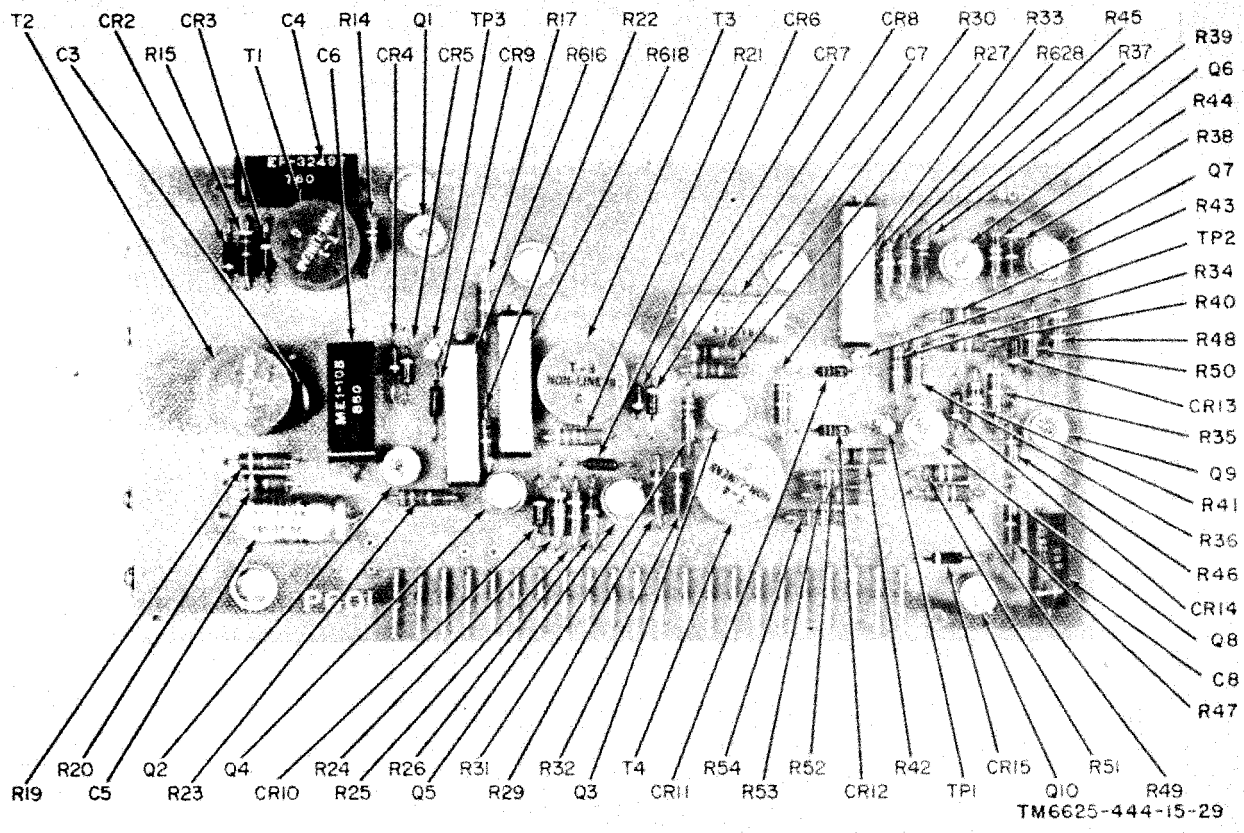

Figure 6-9. Amplifier board, parts identification.

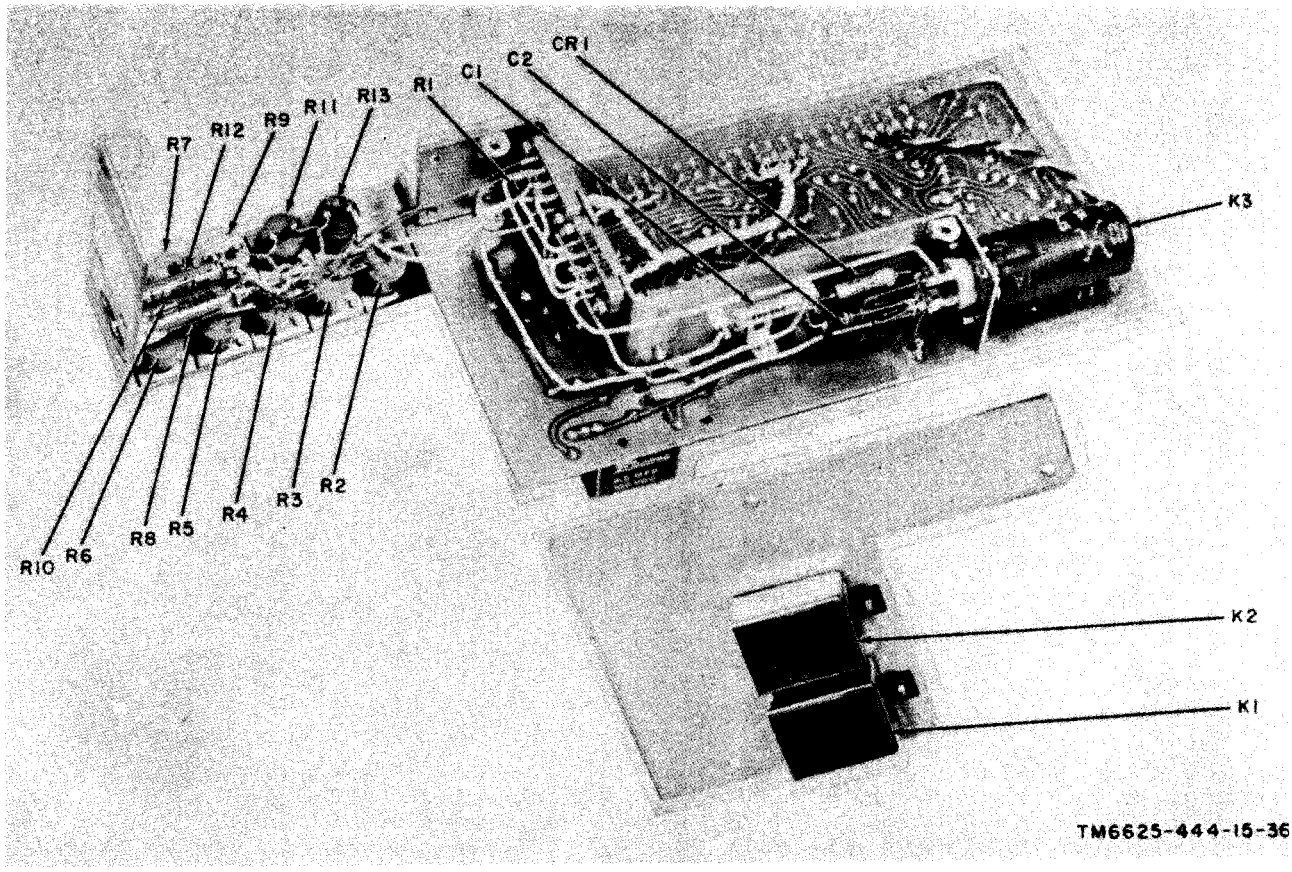

Figure 6-10. Amplifier board showing shield partially disassembled.

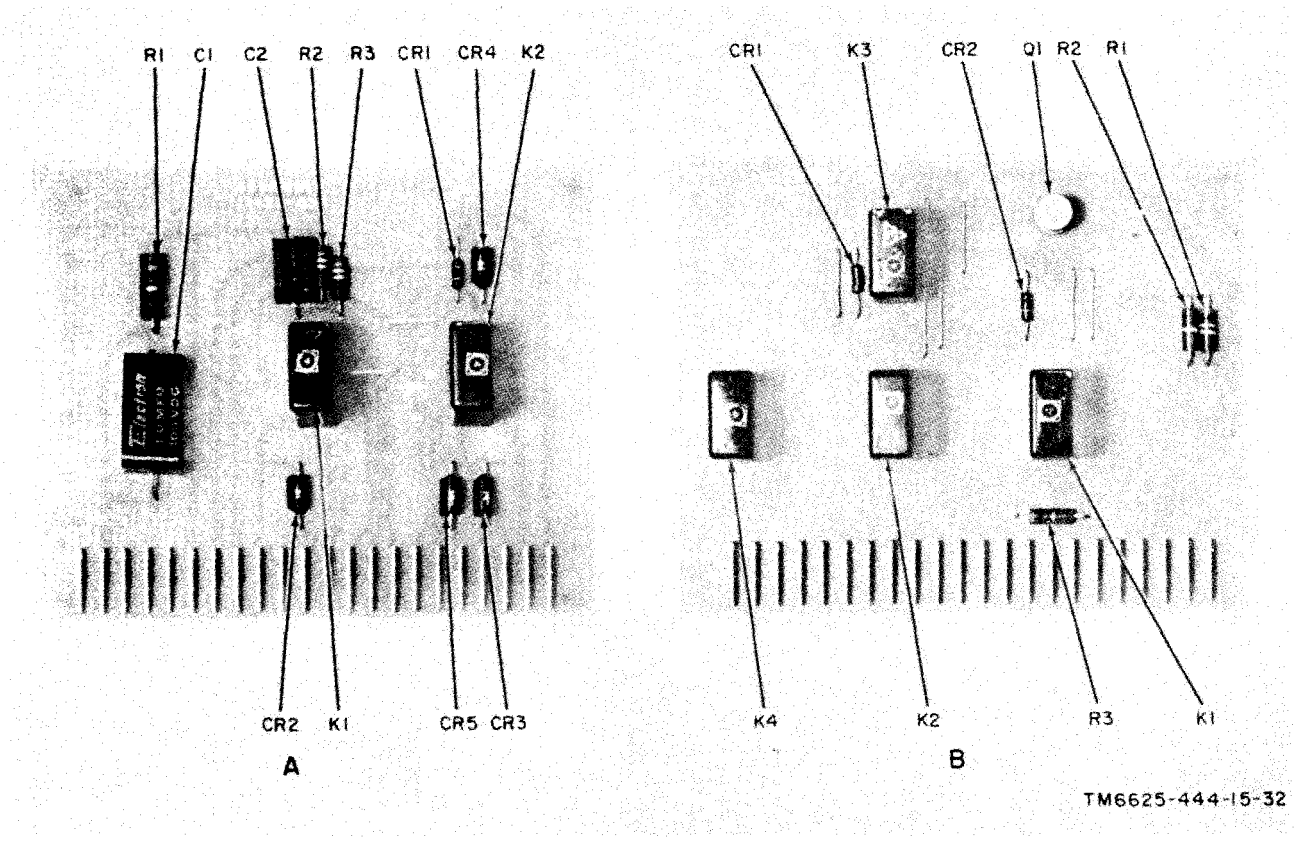

Figure 6-11. Two-relay and four-relay boards, parts identification.

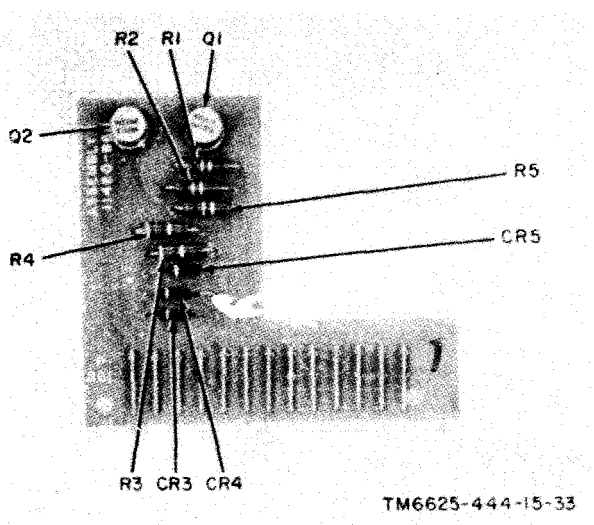

Figure 6-12. Decimal check board, parts identification.

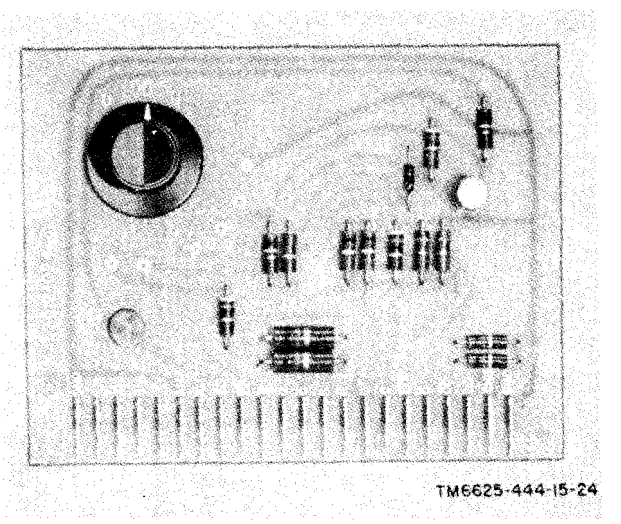

Figure 6-13. Dummy amplifier board.

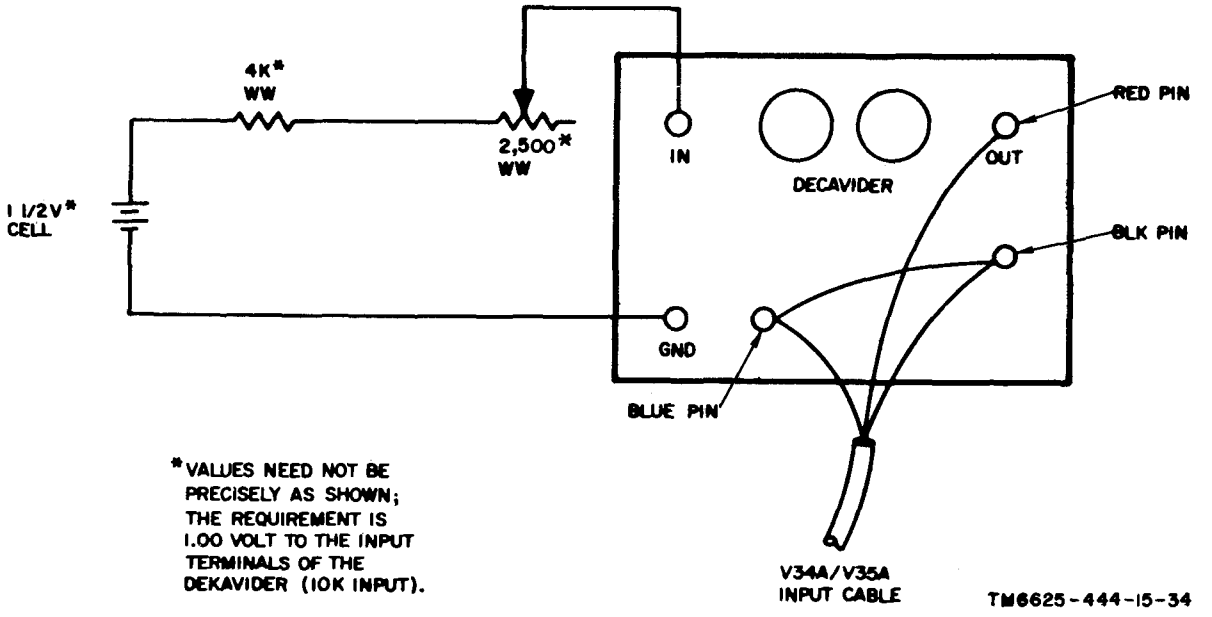

Figure 6-14. Troubleshooting test setup.

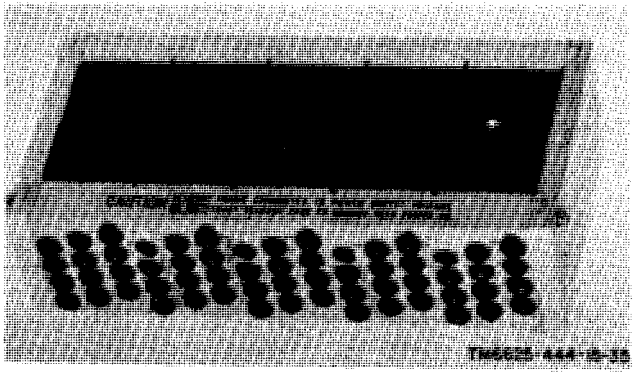

Figure 6-15. Front view of readout showing bulbs correctly positioned.

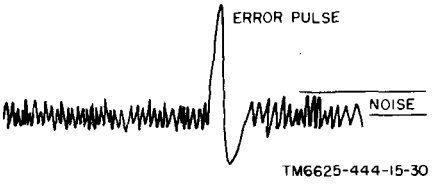

Figure 6-16. Amplifier output waveform.

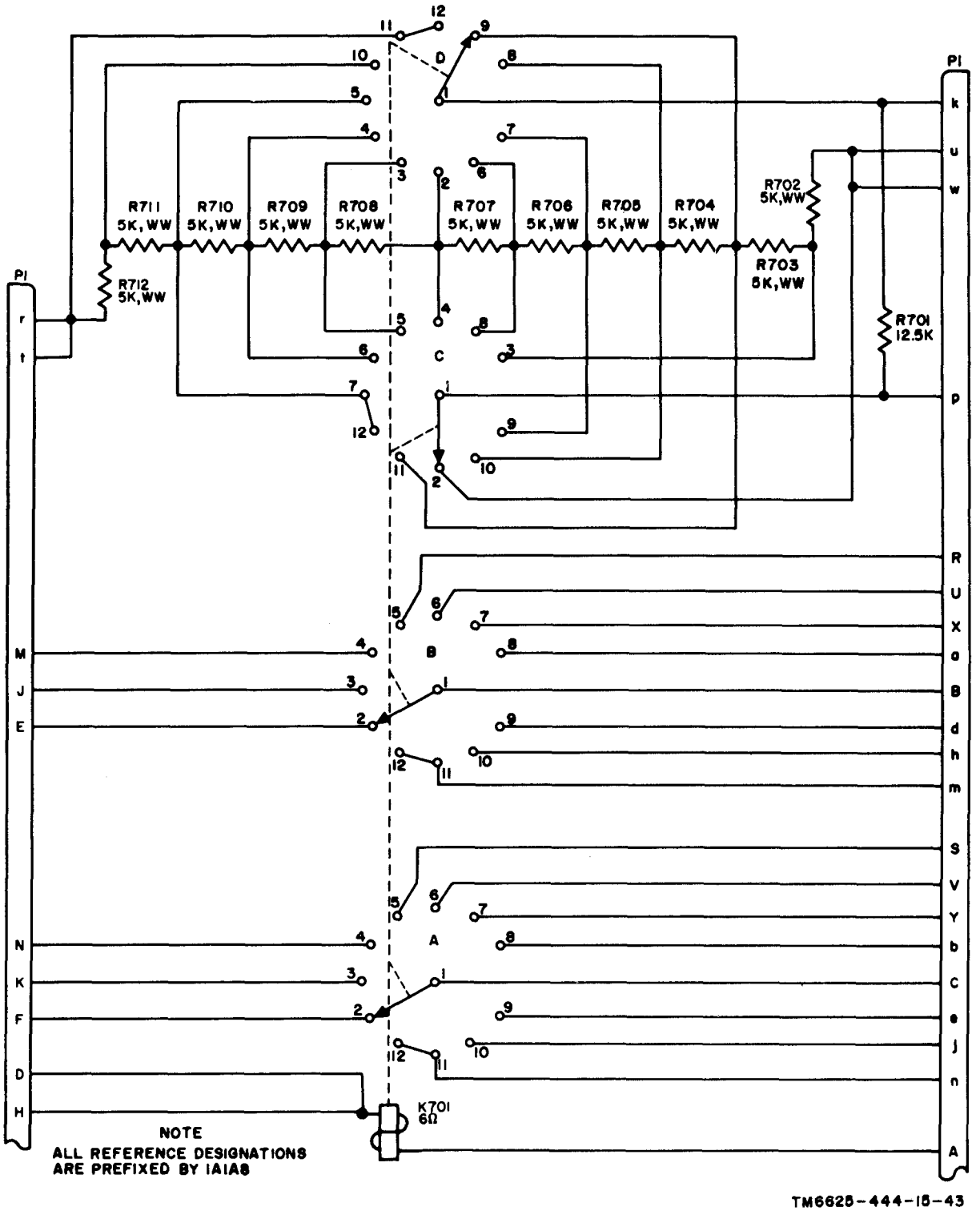

Figure 6-17. Decade switch assembly, schematic diagram.

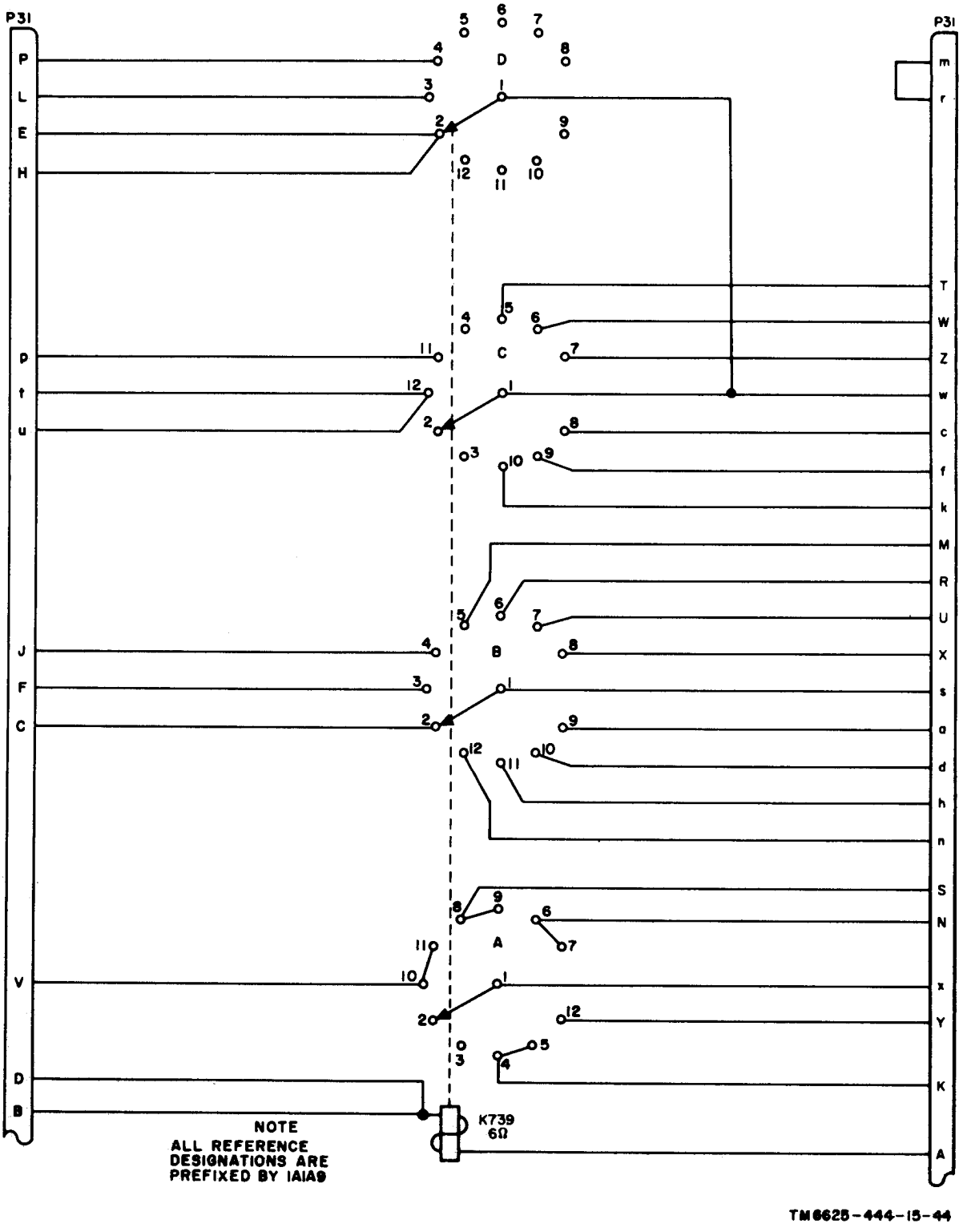

Figure 6-18. Transfer switch assembly, schematic diagram.

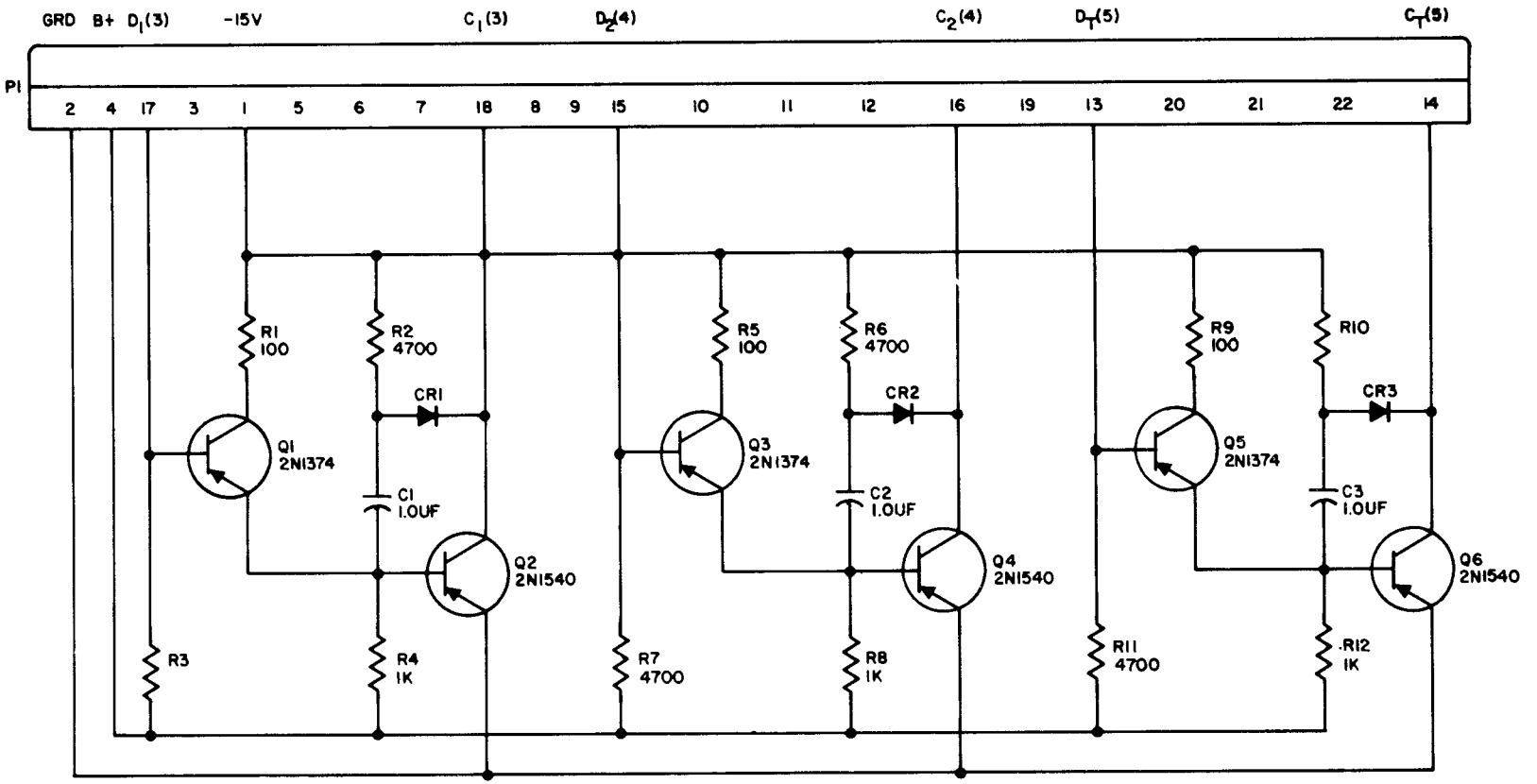

NOTES:
1. REFERENCE DESIGNATIONS ARE PREFIXED BY 1A1A6
2. DIODES ARE TYPE 5003-002

TM6625-444-15-48

Figure 6–19. D board assembly, schematic diagram.

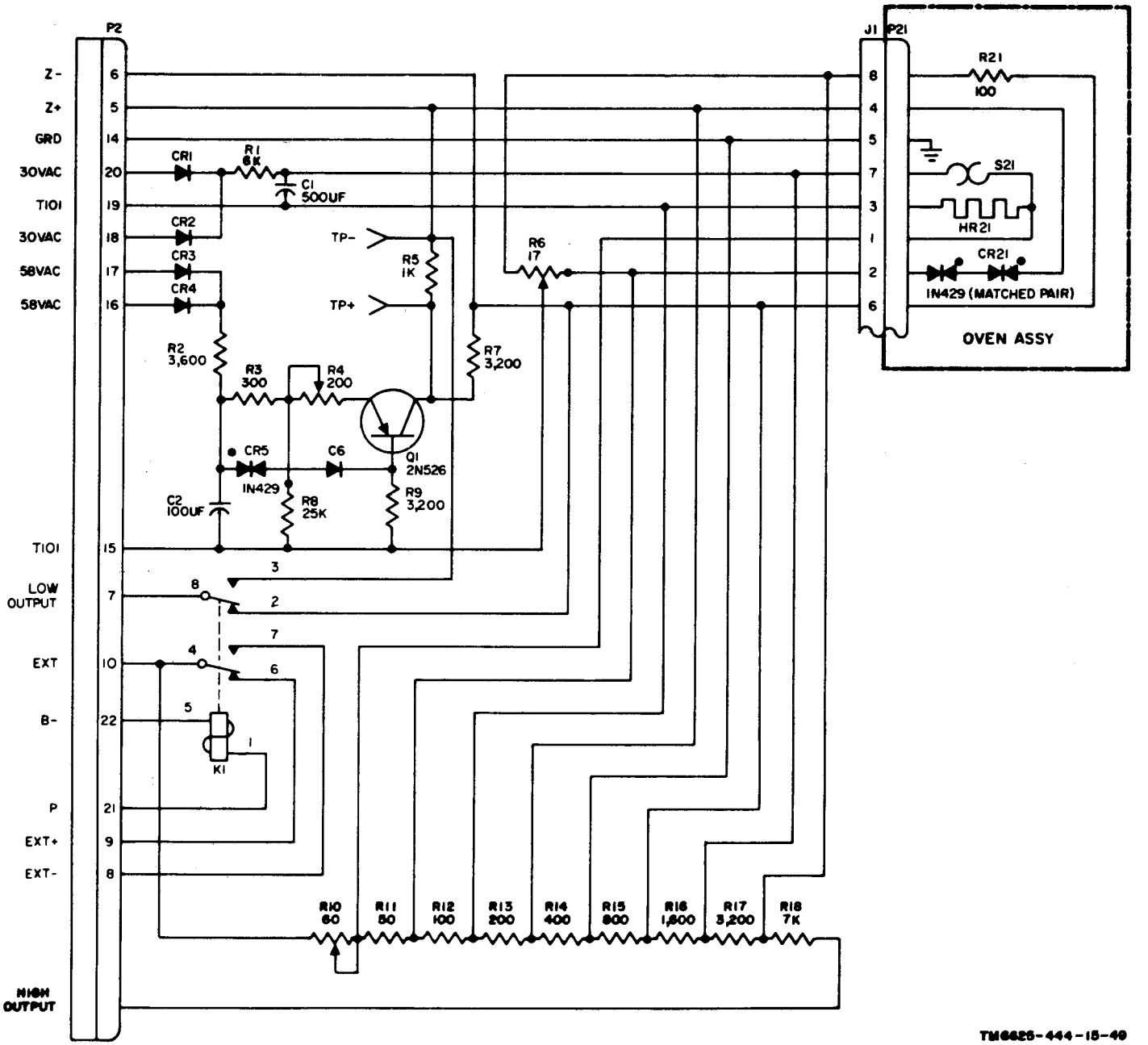

Figure 6-20. Zener supply assembly, schematic diagram.

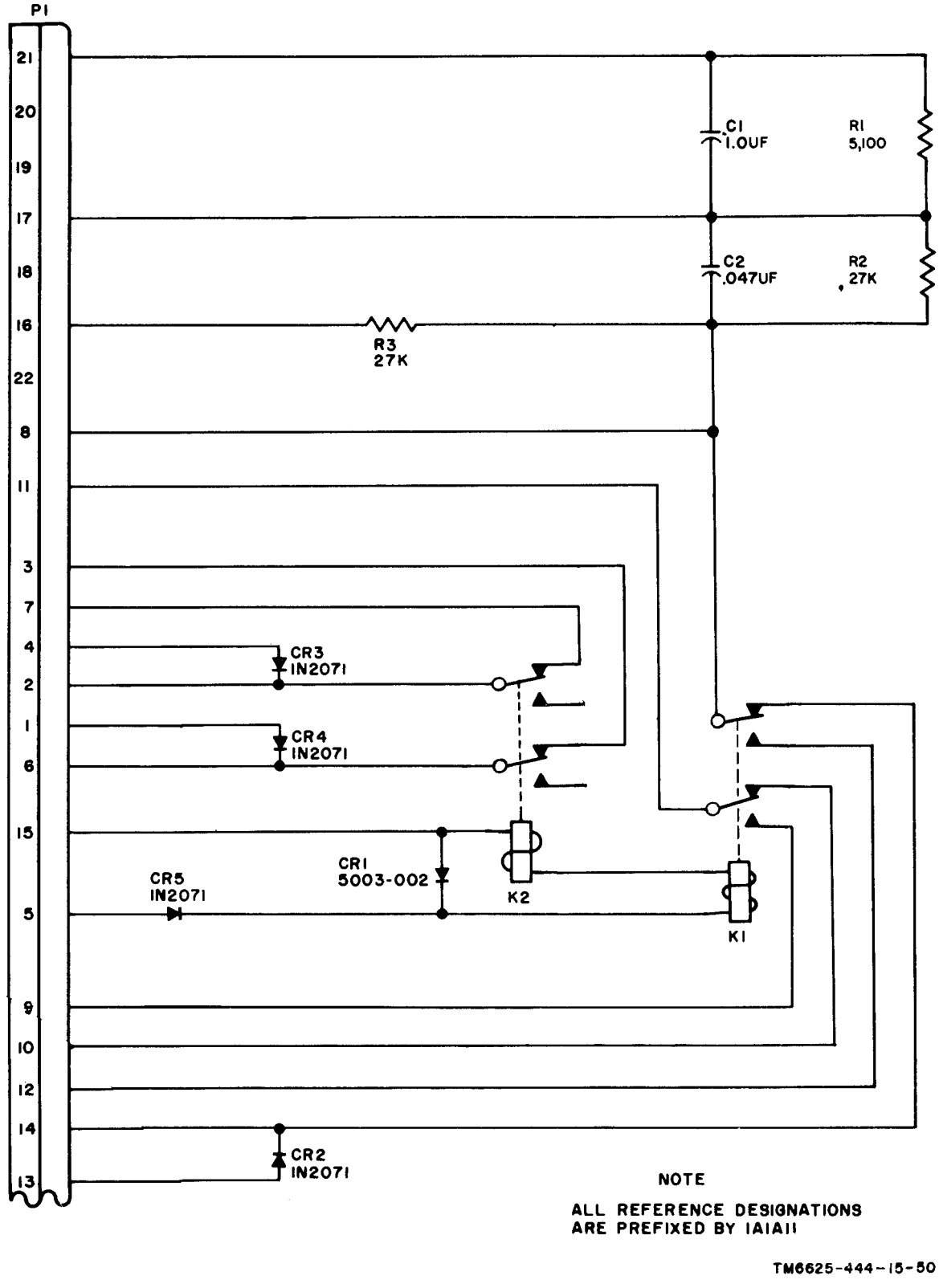

Figure 6-21. Two-relay board assembly, schematic diagram.

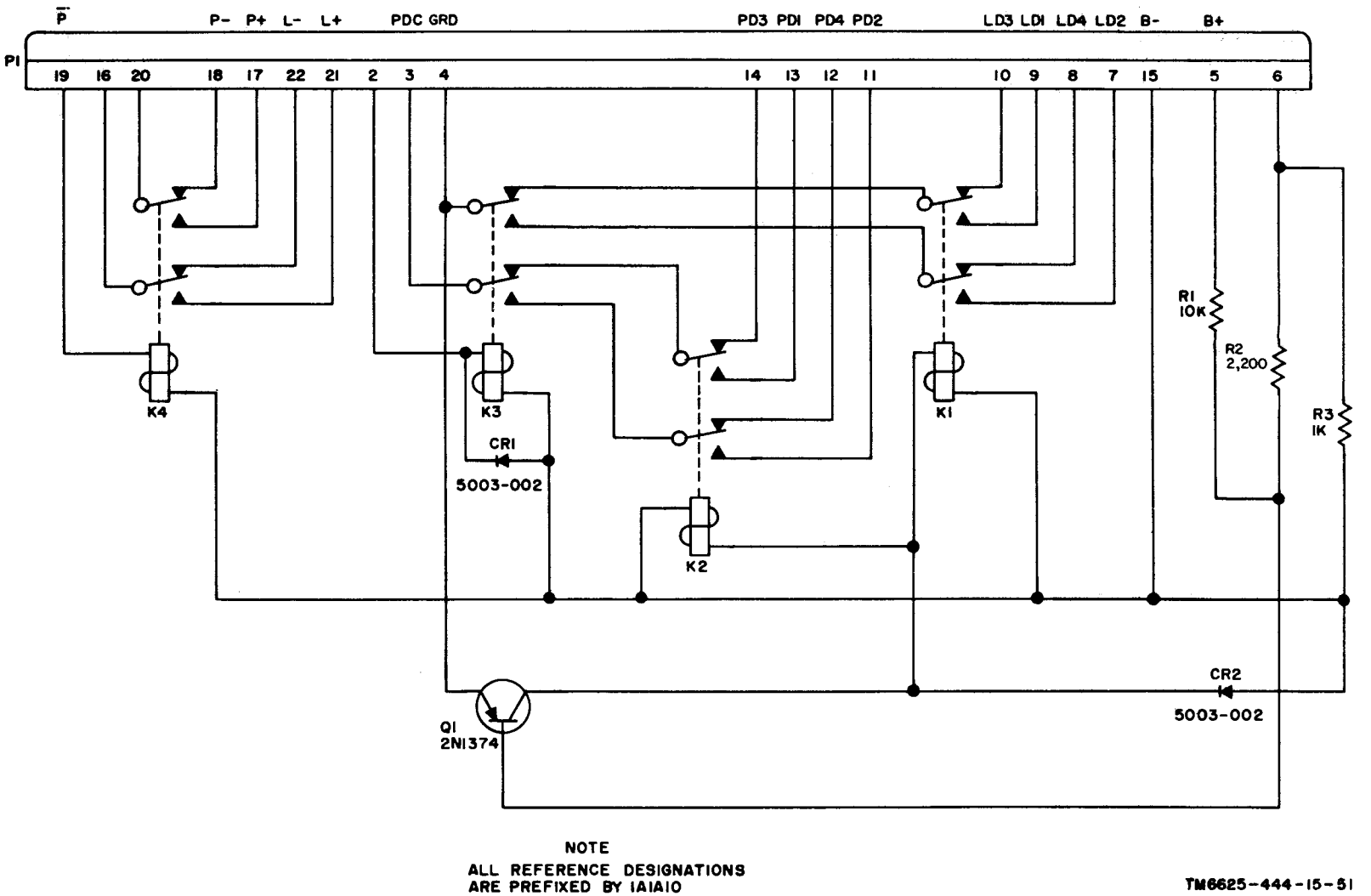

Figure 6-22. Four-relay board assembly, schematic diagram.

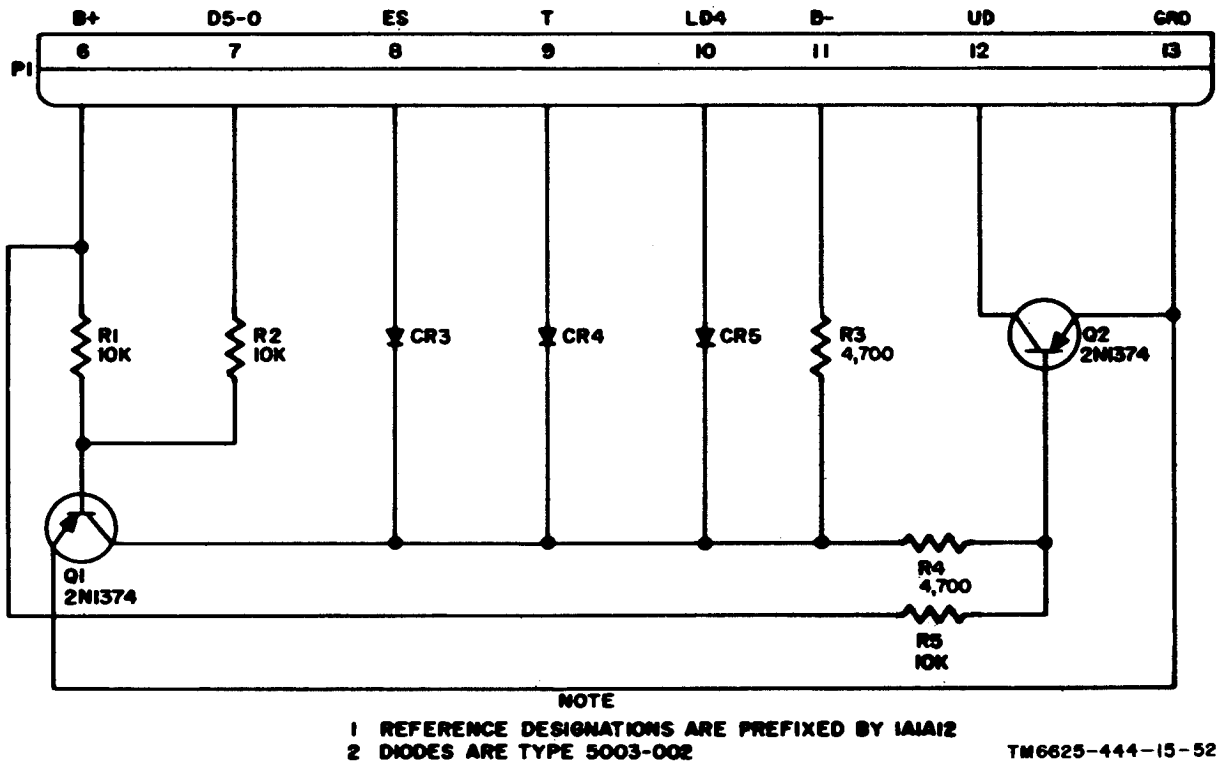

Figure 6-23. Decimal check board assembly, schematic diagram.

CHAPTER 7

REPAIRS AND ALIGNMENT

7-1. General Parts Replacement Techniques

a. Do not disturb the setting of variable resistors R4 and R6 on the Zener reference supply (fig. 6-4). The adjustments are made at the factory and should not be touched. Because of the techniques involved, it is recommended that the Zener reference supply be returned to the factory for repair.

b. Use a pencil-type iron with a 25-watt maximum capacity. Digital Voltmeter AN/GSM-64 is transistorized. If the soldering iron must be used with ac, use an isolating transformer between the iron and line voltage. Do not use a soldering gun; damaging voltages can be induced into components.

c. When soldering transistor leads, solder quickly; wherever wiring permits, use a heat sink (such as long-nosed pliers) between the soldered joint and the transistor leads as used originally.

d. Standard electronic parts may be acquired locally; however, it is recommended that precision electronic parts be ordered directly from the factory.

7-2. Test Equipment Required for Alignment

The test equipment required for alignment of the digital voltmeter is as follows:

a. Voltage divider, calibrated for a 10-megohm load, at least 0.005 percent accurate.

b. Stable and accurate dc source of 9 to 9.999, 90 to 99.99. and 900 to 999.9 volts.

c. Stable and accurate, to 0.005 percent (or better), dc source of between 9 and 9.9999 volts. Nine standard cells in series provide 9.1646 volts.

7-3. Alignment Instructions

The procedures are included in the chart (*c* below). The physical location of the adjustment controls are given in figure 3-1. Prepare the equipment for alignment as fallows:

a. Set the front panel controls as follows:

(1) Range switch: AUTO.

(2) AUTO TRIGGER control: MAX.

(3) Power switch: ON.

(4) Function switch: DC.

(5) Mode switch: STANDBY.

b. Allow a 30-minute warmup period.

c. Remove the top cover, set the mode switch to AUTO, and perform the alignment steps in the sequence listed.

NOTE

The jumper connections on the Zener reference supply are shown in figure 7-1. If R10 reaches its clockwise limit before alignment is achieved, change the jumpers to those on the line above the initial jumper connections (fig. 7-1). If R10 reaches its counterclockwise limit before alignment is acheived, change the jumpers to those on the line below the initial jumper connections (fig. 7-1).

AN/GSM-64 Alignment

Step No.	Source[a]	Ratio[b]	Readout display[c] (volts)	Adjustment	Purpose
1R[d]	+90 volt	10:1	9		
2	+90 volt	1:1	90	R8	
3	–90 volt	10:1	9		
4	–90 volt	1.1	90	R8	
5R[d]	+900 volt	100:1	9		Ranging
6	+900 volt	1:1	900	R10	
7	–900 volt	100:1	9		
8	–900 volt	1:1	900	R10	
9	+9-volt std cells		9	R10	Absolute
10	–9-volt std cells		9	R10	Accuracy

[a] Voltage source indicated, while not exactly at the voltage listed, is within the range shown in paragraph 7–2*b*. Paragraph 7–2*c* covers the absolute accuracy source requirement.

[b] Obtain the 1:1 ratios with the voltage divider connected so that the 10-megohm load is constant for all adjustments.

[c] The readout in steps 1 through 4 must have digital correspondence (without regard for decimal point position) within specifications. The same requirement also applies to steps 5 through 8.

[d] *R* means record the reading at that point. In each case, the following three steps must show correspondence.

RANGE OF R810

VOLTS	JUMPERS
12.682-12.670	
.672 - .660	1-2
.662- .650	2-3
.652 - .640	1-3
.642- .630	3-4
.632- .620	3-4,1-2
.622- .610	2-4
.612- .600	1-4
.602- .590	4-5
.592- .580	4-5,1-2
.582- .570	4-5,2-3
.572- .560	4-5,1-3
.562- .550	3-5
.552- .540	3-5,1-2
.542- .530	2-5
.532- .520	1-5
.522- .510	5-6
.512- .500	5-6,1-2
.502- .490	5-6,2-3
.492- .480	5-6,1-3
.482- .470	5-6,3-4
.472- .460	5-6,3-4,1-2
.462- .450	5-6,2-4
.452- .440	5-6,1-4
.442- .430	4-6
.432- .420	4-6,1-2
.422- .410	4-6,2-3
.412- .400	4-6,1-3
.402- .390	3-6
.392- .380	3-6,1-2
.382- .370	2-6
.372- .360	1-6
.362- .350	6-7
.352- .340	6-7,1-2
.342- .330	6-7,2-3
.332- .320	6-7,1-3
.322- .310	6-7,3-4
.312- .300	6-7,1-2,3-4
.302- .290	6-7,2-4
.292- .280	6-7,1-4
.282- .270	6-7,4-5
.272- .260	6-7,4-5,1-2
.262- .250	6-7,4-5,2-3
.252- .240	6-7,4-5,1-3
.242- .230	6-7,3-5
.232- .220	6-7,3-5,1-2
.222- .210	6-7,2-5
.212- .200	6-7,1-5
.202- .190	5-7
.192- .180	5-7,1-2
.182- .170	5-7,2-3
.172- .160	5-7,1-3
.162- .150	5-7,3-4
.152- .140	5-7,3-4,1-2
.142- .130	5-7,2-4
.132- .120	5-7,1-4
.122- .110	4-7
.112- .100	4-7,1-2
.102- .090	4-7,2-3
.092- .080	4-7,1-3
.082- .070	3-7
.072- .060	3-7,1-2
.062- .050	2-7
.052- .040	1-7

RANGE OF R810

VOLTS	JUMPERS
12.042-12.030	7-8
.032- .020	7-8,1-2
.022- .010	7-8,2-3
.012-12.000	7-8,1-3
.002-11.990	7-8,3-4
11.992- .980	7-8,3-4,1-2
.982- .970	7-8,2-4
.972- .960	7-8,1-4
.962- .950	7-8,4-5
.952- .940	7-8,4-5,1-2
.942- .930	7-8,4-5,2-3
.932- .920	7-8,4-5,1-3
.922- .910	7-8,3-5
.912- .900	7-8,3-5,1-2
.902- .890	7-8,2-5
.892- .880	7-8,1-5
.882- .870	7-8,5-6
.872- .860	7-8,5-6,1-2
.862- .850	7-8,5-6,2-3
.852- .840	7-8,5-6,1-3
.842- .830	7-8,5-6,3-4
.832- .820	7-8,5-6,3-4,1-2
.822- .810	7-8,5-6,2-4
.812- .800	7-8,5-6,1-4
.802- .790	7-8,4-6
.792- .780	7-8,4-6,1-2
.782- .770	7-8,4-6,2-3
.772- .760	7-8,4-6,1-3
.762- .750	7-8,3-6
.752- .740	7-8,3-6,1-2
.742- .730	7-8,2-6
.732- .720	7-8,1-6
.722- .710	6-8
.712- .700	6-8,1-2
.702- .690	6-8,2-3
.692- .680	6-8,1-3
.682- .670	6-8,3-4
.672- .660	6-8,3-4,1-2
.662- .650	6-8,2-4
.652- .640	6-8,1-4
.642- .630	6-8,4-5
.632- .620	6-8,4-5,1-2
.622- .610	6-8,4-5,2-3
.612- .600	6-8,4-5,1-3
.602- .590	6-8,3-5
.592 - .580	6-8,3-5,1-2
.582 - .570	6-8,2-5
.572 - .560	6-8,1-5
.562- .550	5-8
.552- .540	5-8
.542- .530	5-8,2-3
.532- .520	5-8,1-3
.522- .510	5-8,3-4
.512- .500	5-8,3-4,1-2
.502- .490	5-8,2-4
.492- .480	5-8,1-4
.482- .470	4-8
.472- .460	4-8,1-2
.462- .450	4-8,2-3
.452- .440	4-8,1-3
.442- .430	3-8
.432- .420	3-8,1-2
.422- .410	2-8
.412- .400	1-8

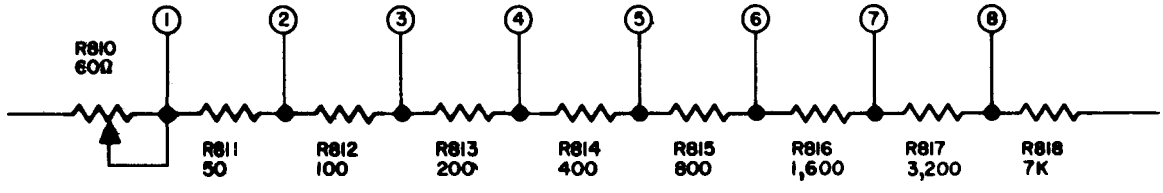

TM6625-444-15-37

Figure 7-1. Jumper connections for 10-volt alignment resistors.

CHAPTER 8

DEPOT OVERHAUL STANDARDS

8-1. Applicability of Depot Inspection Standards

The trots outlined in this chapter are designed to measure the performance capability of a repaired equipment. Equipment that is to be returned to stock should meet the standards given in these tests.

8-2. Applicable References

a. Repair Standards. Applicable procedures of the depots performing these tests and the general standards for repaired electronic equipment given in TB SIG 355–1, TB 355–2, and TB SIG 355–3 form a part of the requirements for testing this equipment.

b. Technical Publications. The technical publication applicable to the equipments to be tested is TM 11-6625-444-15.

c. Modificatiom Work Orders. Perform all modification work orders applicable to this equipment before making the tests specified. DA Pam 310-7 lists all available MWO's.

8-3. Test Facilities Required

The following items are required for depot testing.

Item	Technical manual	Common name
John Fluke, Voltage Standard, Model 332A9.	--. . . ---------- — - — ---- — ------ —------	Voltage standard.
Voltmeter, Electronic ME-30E/U	TM 11-6625-320-12	Electronic voltmeter.
Electronic Light Assembly MK-1292/PAQ.		
Electro Scientific Industries, Dekavider, Model RV622.	-- ——--____ —-- _____ —_, _ — _ -, _____	Voltage divider.
Transformer, Variable, Power CN-16B/U.	TM l1-5950-205-15P	Variac.
Shallcross Manufacturing Co. three-pole two-position switch P/N 12628.	_----_ -~-------__------____ -_____	--Three-pole, two-position switch.

8-4. Physical Tests and Inspections

a. Test equipment and Materials. Electronic Light Assembly MX-1292/PAQ.

b. Test Connection and Conditions.

(1) No connections necessary.

(2) Remove the top cover and all the plug-in boards and assemblies.

c. Procedure.

Step No.	Test equipment	Control settings: Equipment under test	Test procedure	Performance standard
1	None	Controls may be in any position.	*a.* Inspect case and chassis for damage, missing parts, and conditions of paint.	*a.* No damage evident or parts missing. External surfaces intended to be painted will not show bare metal. Panel lettering will be legible.
			NOTE Touchup painting is recommended in place of refinishing whenever practical; screwheads, binding posts, receptacles, and other plated parts will not be painted or polished with abrasives.	
			b. Inspect all controls and mechanical assemblies for loose or missing screws, bolts, and nuts.	*b.* Screws, bolts, and nuts will be tight and none missing.
			c. Inspect all connectors, sockets, and receptacles, fuseholders, and meter for looseness, damage, or missing parts.	*c.* No loose, damaged, or missing parts.
2	None	Controls may be in any position.	*a.* Rotate all panel controls throughout their limits of travel.	*a.* Controls will rotate freely without binding or excessive looseness.
			b. Inspect dial stops for damage or bending, and for proper operation.	*b.* Stops will operate properly without evidence of damage. **NOTE** SINGLE SCAN is a spring-return position of the mode switch which should return to STANDBY when released.
			c. Install CX-7495/GSM-64 in front panel INPUT connector, and CX-7494/GSM-64 in rear panel connector J-114.	*c.* Connectors must seat properly without evidence of wear or looseness.
3	MX-1292/PAQ: Connect mercury-vapor lamp. Install wide transmission filter in lamp.	Controls may be in any position.	Turn on mercury-vapor lamp and expose portion of equipment that has been repaired or disturbed to direct rays of lamp.	All repaired or disturbed electrical components and chassis surfaces will be covered. There must be no varnish on switch contacts or moving parts of mechanical assemblies. **NOTE** Moisture fungiproofing varnish glows gray green under rays of a mercury-vapor lamp.

8-5. General Test Requirements

The initial settings of the front panel controls are shown below. Testing will be simplifiied if these settings are made initially and changes are made as required for the individual tests.

a. Set the front panel controls as follows:

(1) Range switch: AUTO.
(2) AUTO TRIGGER control: MAX.
(3) Power switch: ON.
(4) Function switch: DC.
(5) Mode switch: STANDBY.

b. Connect the blue signal input lead to the black signal input lead.

c. Connect the power cable to 115 volts ac.

d. Allow at least 1/2 hour for the digital voltmeter to reach a stabilized temperature.

8-6. Operational Test

Connect the equipment as shown in figure 8-1 and posit ion the front panel controls as described in paragraph 8-5.

a. Adjust the CN–16B/U for a 115-volt indication on the ME–30E/U.

b. Set the mode switch to AUTO.

c. Adjust the voltage standard for a readout of all zeros on the digital voltmeter; then increase the setting to cause the digital voltmeter to account to 0.0001.

d. Repeat the procedure given in *c* above three times to be sure that all three wipers on the stepping switch are operating.

e. Adjust the voltage standard for a readout of 0.0001 on the digital voltmeter; then increase the setting to cause the digital voltmeter to count to 0.0002.

f. Repeat the procedure given in e above three times. Continue to advance in a similar way until all numbers in the least significant decade are checked three times. Reverse the polarity of the input at various times in the test to see that the instrument indicates the same values in both polarities.

g. Adjust the voltage standard for a readout of 0.0019 on the digital voltmeter; then, increase the setting to cause the digital voltmeter to transfer to 0.0020.

h. Repeat the procedure given in *g* above three times. Continue to advance the count of the second decade until all transfers are checked three times (including 0.0099 to 0.0100).

i. Turn the AUTO TRIGGER control counterclockwise and repeat the procedures given in g and *h* above to determine the effect of the new setting. When the AUTO TRIGGER control is turned fully counterclockwise, a change of approximately 100 digits may be made in the signal input before the instrument will rescan.

j. Turn the AUTO TRIGGER control to MAX (fully clockwise) and decrease the setting of the variac until the ME-30 E/U Indicates 105 volts ac.

k. With a readout of 0.0100, decrease the setting of the voltage standard to cause the least significant decade to count down one digit at a time (at least 10 digits).

l. Increase the setting of the voltage standard to cause the least significant decade to count up one digit at a time, back up to 0.0099. If the digital voltmeter counts up one digit at a time, but counts down two digits at a time, the gain of the amplifier is too low.

m. Increase the setting of the variac until the ME–30E/U indicates 125 volts ac and repeat the procedure given in *l* above.

n. Adjust the CN–16/U for a 115-volt indication on the ME–30E/U.

o. Adjust the voltage standard for a readout of 0.0199 on the digital voltmeter; then increase the setting to cause the digital voltmeter to transfer to 0.0200. Repeat this procedure three times.

p. By adjusting the voltage standard in a way similar to that described in o above, check the following transfers three times each:

(1) 0.0299 to 0.300.
(2) 0.0399 to 0.0400.
(3) 0.0499 to 0.0500.
(4) 0.0599 to 0.0600.
(5) 0.0699 to 0.0700.
(6) 0.0799 to 0.0800.
(7) 0.0899 to 0.0900.
(8) 0.0999 to 0.1000.
(9) 0.1999 to 0.2000.
(10) 0.2999 to 0.3000.
(11) 0.3999 to 0.4000.
(12) 0.4999 to 0,5000.
(13) 0.5999 to 0.6000.
(14) 0.6999 to 0.7000.
(15) 0.7999 to 0.8000.
(16) 0.8999 to 0.9000.

q. By adjusting the voltage standard, check the transfer from 0.9999 to 1.0000 three times. The tolerance for this transfer is 2 digits; for example, 0.9998 to 1.0000, or 0.9999 to 1.0001.

r. By adjusting the voltage standard, check the following transfers three times:

(1) 1.9999 to 2.0000.
(2) 2.9999 to 3.0000.

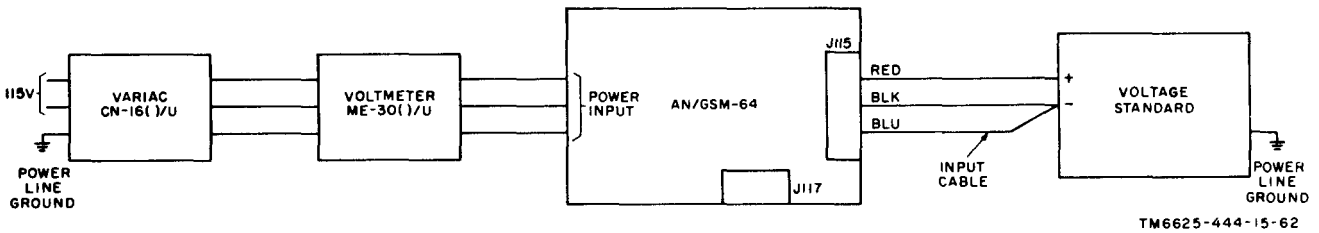

Figure 8–1. Operational test setup.

(3) 3.9999 to 4.0000.
(4) 4.9999 to 5.0000.
(5) 5.9999 to 6.0000.
(6) 6.9999 to 7.0000.
(7) 7.9999 to 8.0000.
(8) 8.9999 to 9.0000.

s. Position the range switch to 10V, and then back to AUTO; observe that the readout is 9.0000 in both positions.

t. Position the mode switch to CONT and check the transfer from 9.9999 to 10.0000 three times. The tolerance for this transfer is three digits (9.9997 to 10.0000, or 9.9998 to 10.00-01).

u. Position the range switch to 100V, and then back to AUTO; observe that the readout is the same in both positions, with an input signal of 10.001.

v. By adjusting the voltage standard, check the transfer from 99.999 to 100.00 three times. The tolerance for this transfer is three digits (99.997 to 100.00, or 99.998 to 100.01).

w. Position the range switch to 1000V, and then back to AUTO; observe that the readout is the same in both positions, with an input signal of 100.01.

x. If any malfunction was encountered in the procedures given in c through *w* above, it should be corrected.

y. Disconnect the signal input leads from the voltage standard and short them together. Turn the mode switch to SINGLE SCAN; observe that the readout indicates 0.0000. Reconnect the signal input leads to the voltage standard (para 8-5).

z. Adjust the voltage standard for a readout of 1.1111 on the digital voltmeter.

8-7. Standardization Test

Connect the equipment as shown in figure 8-2 and position the front panel controls set forth in paragraph 8-5.

a. Connect the red signal input lead to the red terminal of the voltage standard, and the blue and black leads to the black terminal dial 9.5000V on the voltage standard.

b. Position the mode switch to AUTO and record the readout indication; readout should equal the dialed setting of the voltage standard. If it does not, calibrate the equipment.

c. Record the readout indication.

d. Make the consecutive measurements in 1-volt steps down through one. observe that the readout indication is the same as the dialed values for the voltage standard within 20 digits.

e. Reverse the polarity of the signal input and repeat *d* above.

8-8. Ranging and Polarity (±Offset) Test

Connect the equipment as shown in figure 8-2, and position the front panel controls as set forth in paragraph 8–5.

a. Set the mode switch to AUTO.

WARNING

Be careful when working on 900-volt voltage standard. Serious injury or DEATH may occur.

b. Apply 900 volts from the voltage standard.

c. Record the readout indication.

d. Reverse the polarity and record the readout indication.

e. Change the power switch on the voltage standard to STANDBY, down range the voltage standard to the 10V range, and set the POWER switch to OPERATE. Record the readout indication.

f. Repeat the procedure given in d above,

g. Observe that the readout indications in c through *f* above are the same (± 0.01 percent (20 digits)), except that the decimal indicator has moved two decades to the left in e and *f.*

h. Apply 90 volts dc from the voltage standard.

i. Repeat the procedures given in c through g above. Note that one least significant place is dropped because the decimal indicator can move

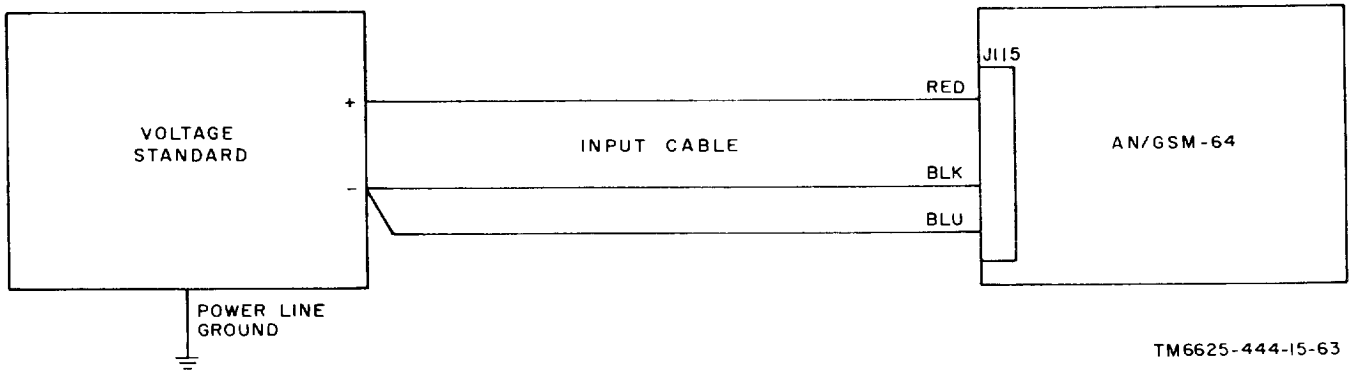

Figure 8-2. Standardization, ranging and polarity (±offset).

only one decade to the left in e and *f* above; by rounding off the indications in *c* and *d* above, the indication should agree with ± 0.01 percent.

8-9. Dc Voltage Ratio Test

Connect the equipment as shown in figure 8–3, and position the front panel controls as described in paragraph 8-5. Use shielded cables for interconnections.

a. Position the function switch to RATIO and mode switch to AUTO.

b. Set the output voltage from the voltage standard at 10.000 volts.

c. Position the voltage divider controls to 00000 and observe that the readout indication is +00.000.

d. Change the polarity of S1 (fig. 8–3) and observe that the readout indication is –00.000.

e. Position the voltage divider controls to 11111 and observe that the readout indication is -11.111 *00.001.

f. Change the polarity of S1 (fig. 8–3) and observe that the readout indication is + 11.111 ±00.001.

g. Position the voltage divider controls to 22222 and observe that the readout indication is +22.222 ±00.002.

h. Change the polarity of S1 (fig. 8–3) and observe that the readout indication is –22.222 ±00.()()2.

i. Position the voltage divider controls to 333-33 and observe that the readout indication is 33.333 ± 00.002.

j. Change the polarity of S1 (fig. 8–3) and observe that the readout is + 33.333 &00.002.

k. Position the voltage divider controls to 44444 and-observe that the readout indication is + 44.444 ?00.003.

1. Change the polarity of S1 (fig. 8–3) and observe that the readout indication is –44.444 ±00.003.

m. Position the voltage divider controls to 55555 and observe that the readout indication is --55.555 ± 00.003.

n. Change the polarity of S1 (fig. 8–3) and observe that the readout indication is + 55.555 + 00.003.

0. Position the voltage divider controls to 66666 and observe that the readout indication is + 66.666 ±00.003.

p. Change the polarity of S1 (fig. 8–3) and observe that the readout indication is –66.666 ±00.003.

q. Position the voltage divider controls to 77777 and observe that the readout indication is –77.777 ± 00.003.

r. Change the polarity of S1 (fig. 8–3) and observe that the readout indication is + 77,777 ± .00.003.

s. Position the voltage divider controls to 88888 and observe that the readout indication is +88.888 *00.003.

t. Change the polarity of S1 (fig. 8–3) and observe that the readout indication is –88.888 ± 00.003.

u. Position the voltage divider controls to 99999 and observe that the readout indication is –99.999 ± 00.003.

v. Change the polarity of S1 (fig. 8–3) and observe that the readout indication is + 99.999 ±00.003.

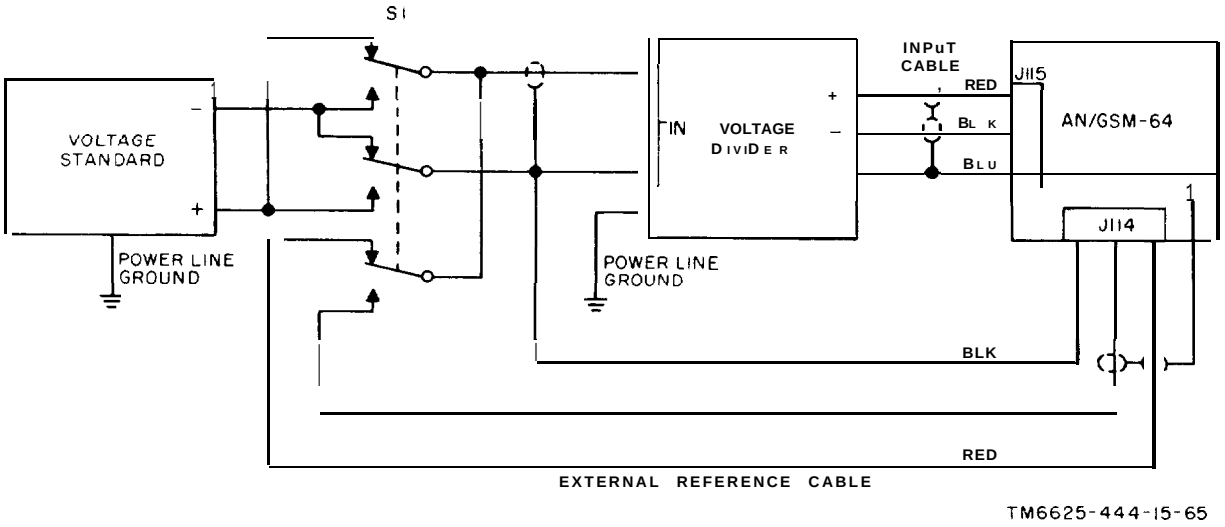

Figure 8–3. Dc voltage ratio test setup.

CHAPTER 9

SHIPMENT AND LIMITED STORAGE, AND DEMOLITION TO PREVENT ENEMY USE

Section 1. SHIPMENT AND LIMITED STORAGE

9–1. Disassembly of Equipment

Prepare the AN/GSM–64 for shipment and storage as follows:

a. Disconnect the power cable from the power source.

b. Disconnect the CX–7495/GSM–64 and the CX–7494/GSM–64 from any voltage sources.

c. Disconnect the CX–7495/GSM–64 and the CX–7494/GSM–64 from the AN/GSM–64.

G?. Roll all cables into neat rolls and secure them with a small piece of twine.

9–2. Repacking for Shipment or Limited Storage

a. Material Requirements. The materials listed in the chart below are required for packaging Digital Voltmeter AN/GSM–64. If the original packaging material is available, only the tape is required. For stock numbers of materials, refer to SB 38–100.

Material	Quantity
Barrier material, waterproof.	36 sq ft.
Tape, cloth backing, waterproof.	20 ft.
Fiberboard, corrugated	36 sq ft.
Tape, gummed paper	20 ft.
Cushioning material	26 sq ft.

b. Packaging. Package the digital voltmeter as follows:

(1) Seal the AN/GSM–64 in the barrier material.

(2) Cushion the AN/GSM–64 on all sides, except the top, with pads of cushioning material; or, preferably, the bottom half of the two-piece styrofoam protector.

(3) Seal the CX–7495/GSM–64, the CX–7494/GSM–64, and the technical manual in the barrier material and package them in a small flat wrap of corrugated material. Secure the wrap with gummed tape.

(4) Place the package on top of the digital voltmeter.

(5) Cushion the top of the package with a pad of cushioning material, or, preferably, the top half of the styrofoam protector.

(6) Place the cushioned unit within a wrap of corrugated fiberboard, or, preferably, the original corrugated shipping box. Secure the wrap or box with the cloth-backing tape.

Section II. DEMOLITION OF MATERIEL TO PREVENT ENEMY USE

9-3. Authority for Demolition

The demolition procedures given in paragraph 9-4 should be used to prevent the enemy from using or salvaging the equipment. Demolition of the equipment will be accomplished only upon the order of the commander.

9-4. Methods of Destruction

a. Smash. Use sledges, axes, hammers, crowbars, and any other heavy tool available to smash the interior portion of the AN/GSM–64.

(1) Use the heaviest tool on hand to smash the connectors, controls, and indicator lights.

NOTE

Heavy tools will effectively destroy the external parts mentioned in (1) above, but the remainder of the exposed surfaces of the equipment are constructed of steel plate; attempts to damage it by smashing will be useless.

(2) Remove the digital voltmeter from the cabinet (if it is mounted in a cabinet) and remove the top cover. With a heavy hammer or bar, smash as many of the exposed parts as possible.

b. *Cut.* use axes, handaxes, machetes, or similar tools to cut cabling, cording, and wiring. Use a heavy axe or machette to cut the power cable. Cut all cords and cables in a number of places.

WARNING

Be extremely careful with explosives and incendiary devices. Use these items only when the need is urgent.

c. Burn. Burn the technical manuals first. Burn as much of the equipment as is flammable; use gasoline, oil, flamethrowers, and similar materials. Pour gasoline on the cut cables and internal wiring and ignite it. Use incendiary grenades to complete the destruction of the AN/GSM-64.

d. Explode. Use explosives to complete demolition, or to cause maximum damage before burning when time does not permit complete demolition by other means. Powder charges, fragmentation grenades, or incendiary grenades may be used. Incendiary grenades usually are most effective if destruction of small parts and wiring is desired.

e. Dispose. Bury or scatter destroyed parts, or throw them into nearby waterways. This is particularly important if a number of parts have not been completely destroyed.

CHAPTER 10

ILLUSTRATIONS

APPENDIX A

REFERENCES

DA Pam 310–4 ..... Index of Technical Manuals, Technical Bulletins, Supply Manuals, (types 7, 8, and 9), Supply Bulletins, and Lubrication Orders.

DA Pam 310–7 ..... U.S. Army Equipment Index of Modification Work Orders.

SB 38-100 ..... Preservation, Packaging and Packing Materials, Supplies, and Equipment Used by the Army.

TB SIG 355–1 ..... Depot Inspection Standard for Repaired Equipment.

TB SIG 355–2 ..... Depot Inspection Standard for Refinishing Repaired Signal Equipment.

TB SIG 355–3 ..... Depot Inspection Standard for Moisture and Fungus Resistant Treatment.

TB 746–10 ..... Field Instructions for Painting and Preserving Electronics Command Equipment.

TM 11-5950-205-15P ..... Operator's, Organizational, Field, and Depot Maintenance Repair Parts and Special Tool Lists and Maintenance Allocation Chart: Transformer, Variable, Power CN–16/U, CN–16A/U, and CN–16B/U.

TM 11-6625-320-12 ..... Operator and Organizational Maintenance Manual: Voltmeter, Meter, ME–30A/U and Voltmeters, Electronic ME–30B/U, ME–30C/U, and ME–30E/U.

TM 11-6625–366–15 ..... Organizational, DS, GS, and Depot Maintenance Manual: Multimeter TS–352B/U.

TM 11-6625–444–15 ..... Operator, Organizational, DS, GS, and Depot Maintenance Manual: Digital Voltmeters AN/GSM–64 and V–34A.

TM 11-6625-535-15-1 ..... Organizational, DS, GS, and Depot Maintenance Manual: oscilloscopes AN/USM–140B and AN/USM–141A.

TM 38–750 ..... Army Equipment Record Procedures.

APPENDIX C

MAINTENANCE ALLOCATION

Section L INTRODUCTION

C–1. General

This appendix provides a summary of the maintenance operations covered in the equipment literature for Voltmeter, Digital AN/GSM–64. It authorizes categories of maintenance for specific maintenance functions on repairable items and components and the tools and equipment required to perform each function. This appendix may be used as an aid in planning maintenance operations.

C–2. Explanation of Format for Maintenance Allocation Chart

u. *Group Number.* Not used.

b. Component Assembly Nomenclature. This column lists the item names of component units, assemblies, subassemblies, and modules on which maintenance is authorized.

c. *Maintenance Function.* This column indicates the maintenance category at which pm-formance of the specific maintenance funtion is authorized. Authorization to perform a function at any category also includes authorization to perform that function at [higher categories. The codes used represent the various maintenance categories as follows:

Code	Maintenance category
C	— Operator/crew
O	— Organizational maintenance
F	— Direct support maintenance
H	— General support maintenance
D	— Depot maintenance

d. Tools and Equipment. The numbers appearing in this column refer to specific tools and equipment which are identified by these numbers in section III.

e. *Remarks.* Self-explanatory.

C–3. Explanation of Format for Tool and Test Equipment Requirements

The columns in the tool and test equipment requirements chart are as follows:

a. Tools and Equipment. The numbers in this column coincide with the numbers used in the tools and equipment column of the MAC. The numbers indicate the applicable tool for the maintenance function.

b. Maintenance Category. The codes in this column indicate the maintenance category normally allocated the facility.

c. Nomenclature. This column lists tools, test, and maintenance equipment required to perform the maintenance functions.

d. *Federal Stock Number.* This column lists the Federal stock number.

e. *Tool Number.* Not used.

SECTION II. MAINTENANCE ALLOCATION CHART

GROUP NUMBER	COMPONENT ASSEMBLY NOMENCLATURE	MAINTENANCE FUNCTIONS											TOOLS AND EQUIPMENT	REMARKS
		INSPECT	TEST	SERVICE	ADJUST	ALIGN	CALIBRATE	INSTALL	REPLACE	REPAIR	OVERHAUL	REBUILD		
	VOLTMETER, DIGITAL AN/GSM-64	O	M	O		M							10 1 thru 4	
										D	D		6 1 thru 9	
	AMPLIFIER, TRIGGER PULSE ASSEMBLY								D	D	D		6 1 thru 9	
	BOARD ASSEMBLIES								D	D	D		6 1 thru 9	
	INDICATOR, DIGITAL ASSEMBLY									D				
	ZENER SUPPLY ASSEMBLY								D	D			6	
	CABLE ASSEMBLIES									D			6	

SECTION III. TOOL AND TEST EQUIPMENT REQUIREMENTS

TOOLS AND EQUIPMENT	MAINTENANCE CATEGORY	NOMENCLATURE	FEDERAL STOCK NUMBER	TOOL NUMBER
		AN/GSM-64 (cont.)		
1	D	AUTOTRANSFORMER, VARIABLE CN-16/U	5950-235-2086	
2	D	DEKAVIDER, ELECTRO SCIENTIFIC INDUSTRIES MODEL RV622		
3	D	DUMMY AMPLIFIER: Non-Linear systems part No. 3017-024		
4	D	MULTIMETER TS-352B/U	6625-553-0142	
5	D	OSCILLOSCOPE AN/USM-281 (Use AN/USM-140 until AN/USM-281 is available)	6625-053-3112	
6	D	TOOL KIT, ELECTRONIC EQUIPMENT TK-100/G	5180-605-0079	
7	D	VOLTMETER ME-30E/U	6625-643-1670	
8	D	VOLTAGE STANDARD: John Fluke Model 332A9		
9	D	SWITCH: Shallcross Mfg. Co. Part Number 12628		
10	O	TOOLS AND TEST EQUIPMENT NORMALLY SUPPLIED TO THE REPAIRMAN USER BECAUSE OF HIS ASSIGNED MISSION		

INDEX

By Order of the Secretary of the Army:

W. C. WESTMORELAND,
General, United States Army,
Chief of Staff.

Official:

KENNETH G. WICKHAM,
Major General, United States Army,
The Adjutant General.

Distribution:

Active Army :

USASA (2)
CNGB (1)
ACSC-E (2)
Dir of Trans (1)
Cof Engrs (1)
TSG (1)
CofSpts (1)
USAARENBD (2)
USA CDC Agcy (2)
USAMC (5)
USCONARC (5)
ARADCOM (5)
ARADCOM Rgn (2)
OS Maj Comd (4)
LOGCOMD (2) except
1st Log Cored (10)
9th Log Comd (10)
USAMICOM (4)
USATECOM (2)
USASTRATCOM (4)
USAESC (70)
MDW (1)
Armies (2)
corps (2)
1st Cav Div (5)
Svc Colleges (2)
USASCS (20)
USAESS (20)
USAADS (2)
USAAMS (2)
USAARMS (2)
USAIS (2)
USAES (2)
USAINTS (3)
USATC Armor (2)
USATC Inf (2)
USASTC (2)
WRAMC (1)
Army Pic Cen (2)
USACDCEC (10)
Instl (2) except
Fort Gordon (10)
Fort Huachuca (10)
WSMR (5)
Fort Carson (25)
Fort Knox (12)
Amy Dep (2) except
LBAD (14)
SAAD (30)
TOAD (14)
LEAD (7)
SHAD (3)
NAAD (5)
SVAD (5)
CHAD (3)
ATAD (10)
GENDEPS (2)
Sig Sec GENDEPS (5)
Sig Dep (12)
Sig FLDMS (2)
TOPOCOM (1)
USAERDAA (2)
USAERDAW (13)
USACRREL (2)
MAAG (2)
USARMIS (2)
USMACV (50)
Units org under fol TOE
(2 cys ea)
11-57
11-96
ll-97
11-98
11-117
11-127
11-155
11-157
11-158
11-500 (AA-AC)
11-587
11-592
11-597
29-134
29-402
29-437
29-500 (FD, KH)
44-546
44-547
44–568

NG: State AG (3)

USAR: None.

For explanation of abbreviations used, see AR 320-50

☆U.S. GOVERNMENT PRINTING OFFICE : 1993 - 342-421 (62296)

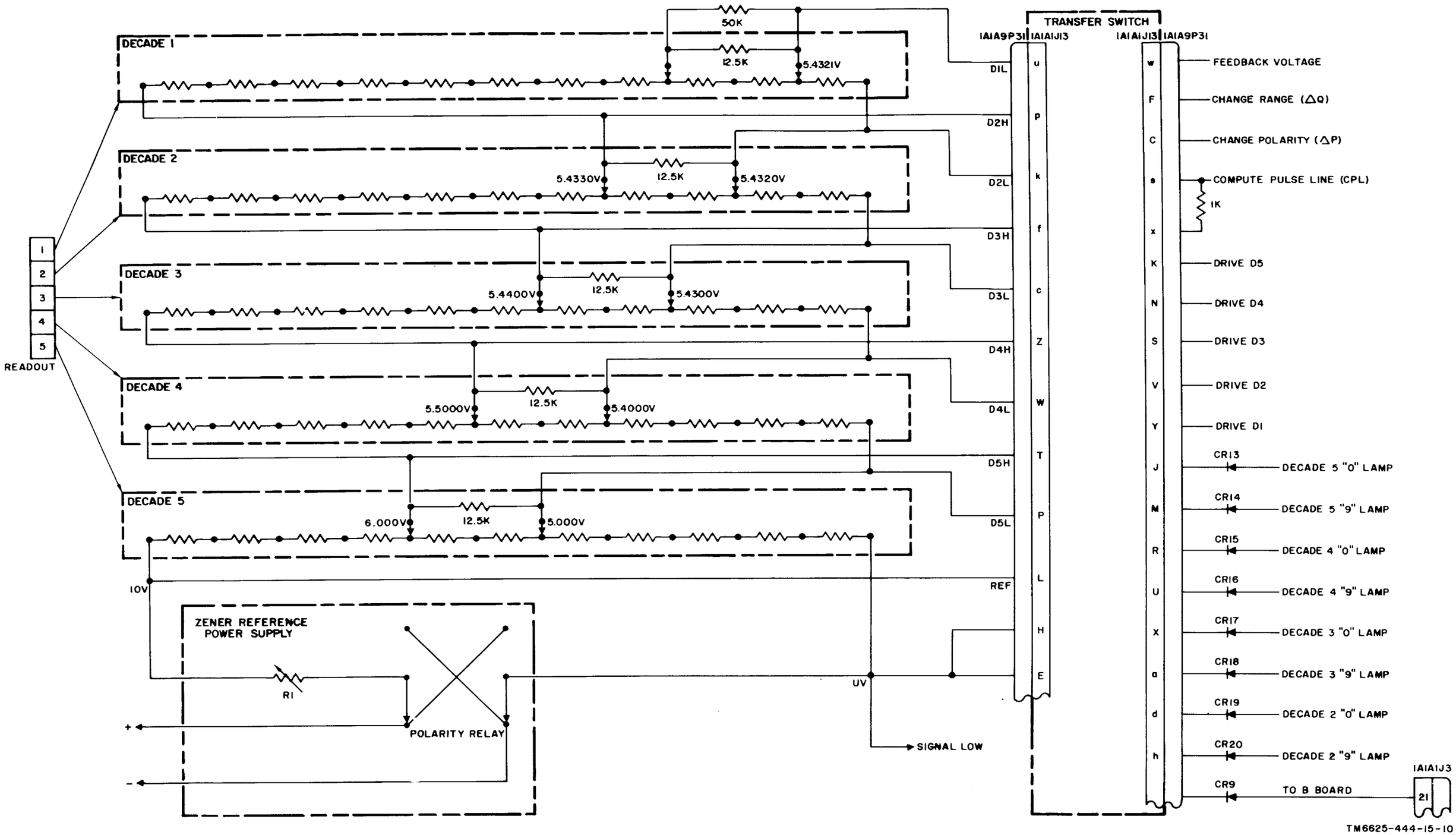

Figure 10-1. Stepping switch, Kelvin-Varley divider, and transfer switch circuitry.

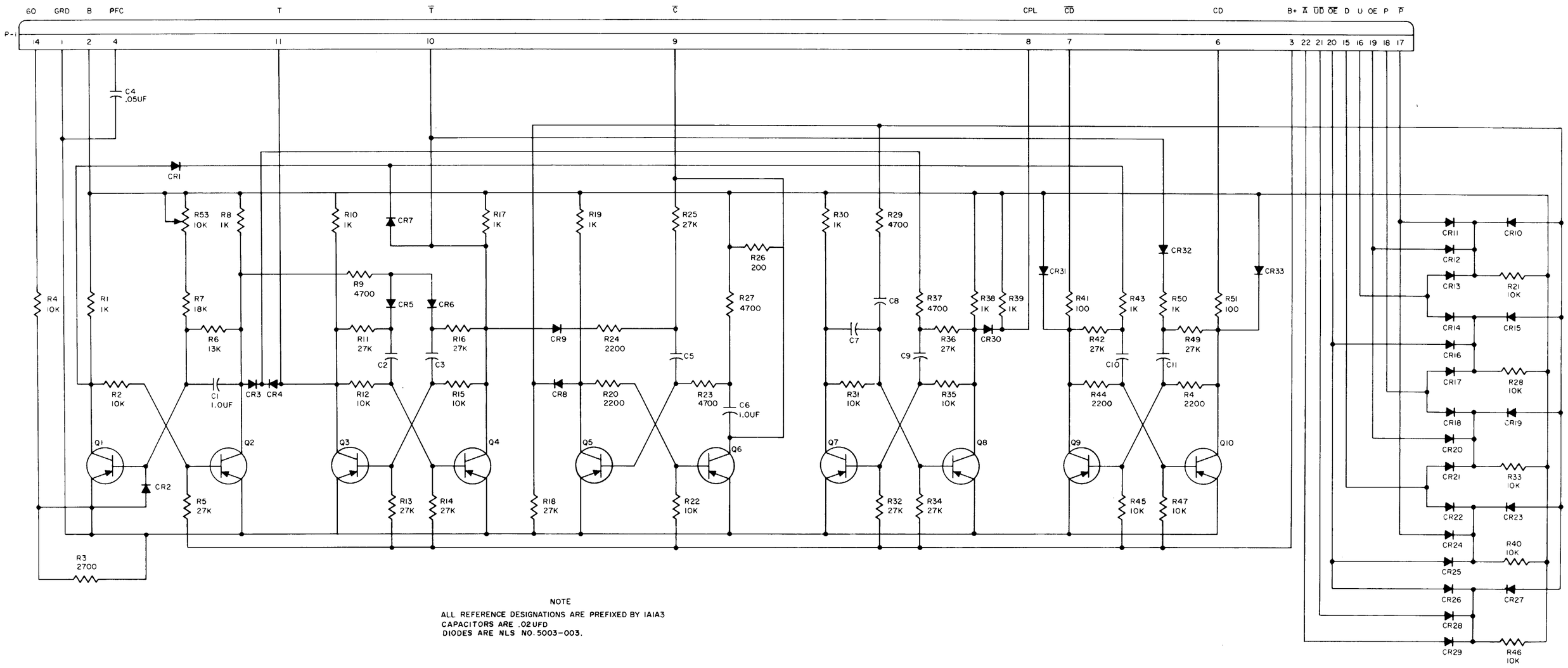

NOTE

ALL REFERENCE DESIGNATIONS ARE PREFIXED BY 1A1A3
CAPACITORS ARE .02UFD
DIODES ARE NLS NO. 5003-003.

Figure 10-2. A board assembly, schematic diagram.

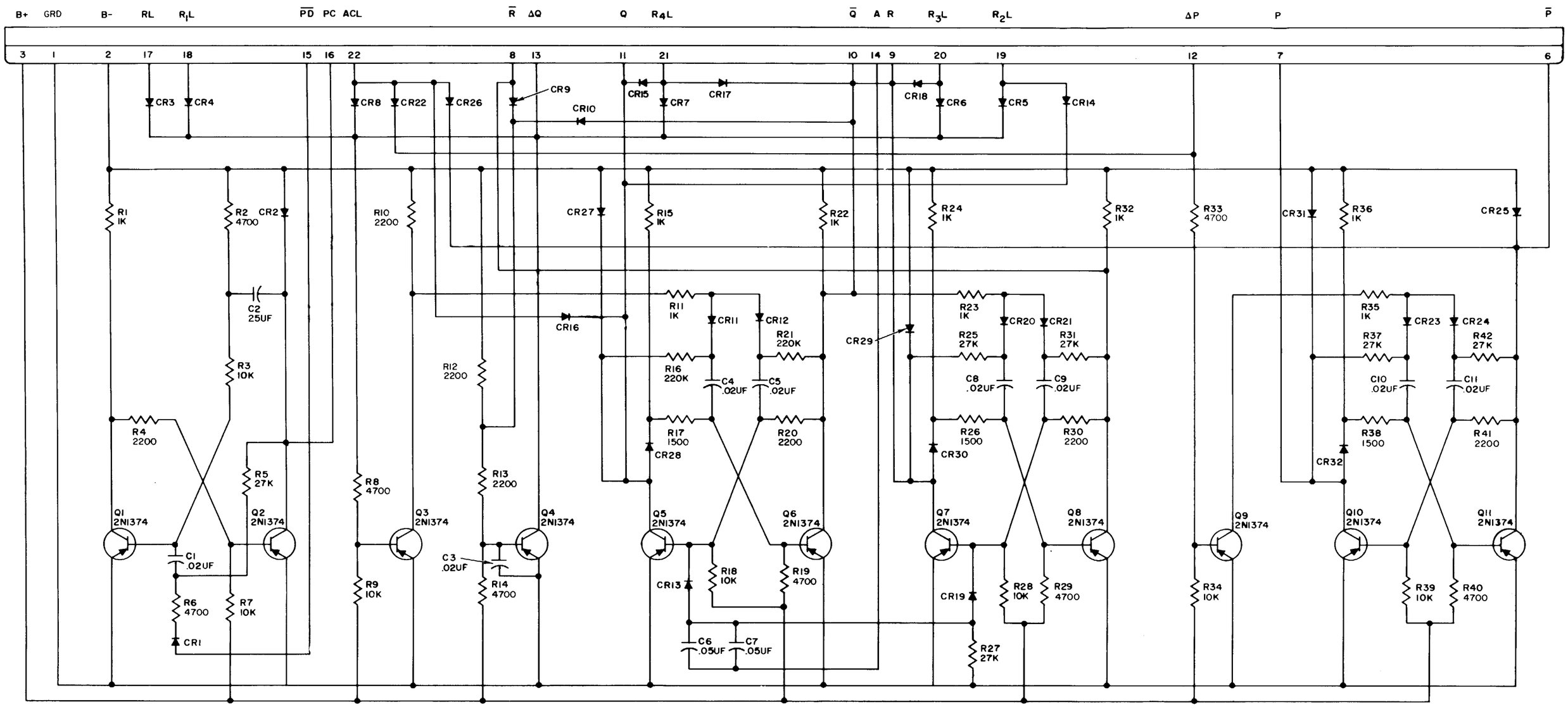

NOTE
UNLESS OTHERWISE SPECIFIED
ALL REFERENCE DESIGNATIONS ARE PREFIXED BY 1A1A5
ALL DIODES ARE TYPE 5003-002.
CAPACITORS ARE .02 MFD.

TM6625-444-15-47

Figure 10-3. C board assembly, schematic diagram.

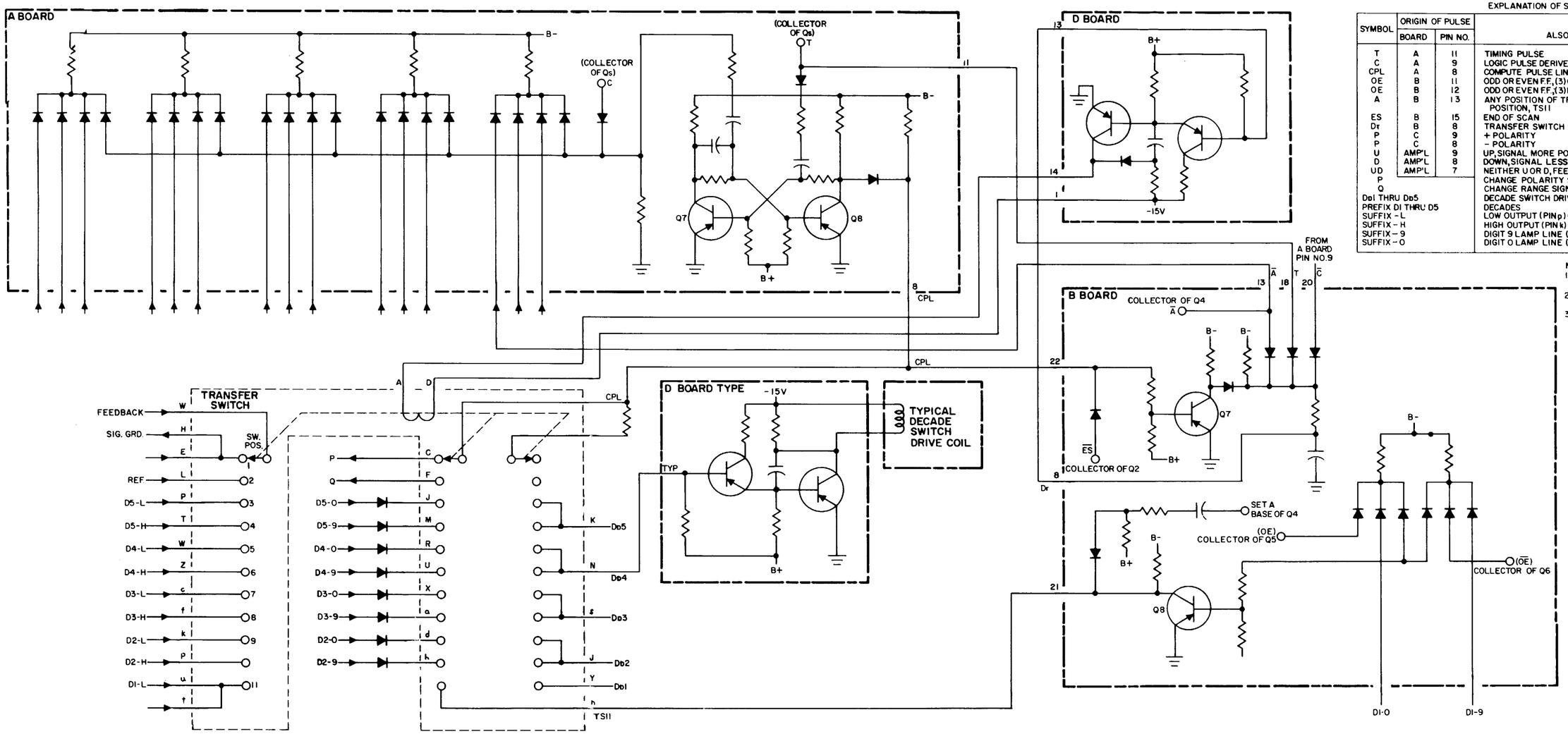

EXPLANATION OF SYMBOLS USED

SYMBOL	ORIGIN OF PULSE		DEFINITION ALSO SEE FIG. 1-7 & TEXT
	BOARD	PIN NO.	
T	A	11	TIMING PULSE
C	A	9	LOGIC PULSE DERIVED FROM THE CHOPPER DRIVE, CD.
CPL	A	8	COMPUTE PULSE LINE
OE	B	11	ODD OR EVEN F.F., (3) ODD POSITIONS OF TRANSFER SW.
OE	B	12	ODD OR EVEN F.F., (3) EVEN POSITIONS OF TRANSFER SW.
A	B	13	ANY POSITION OF TRANSFER SW. EXPECT THE LAST POSITION, TS11
ES	B	15	END OF SCAN
Dr	B	8	TRANSFER SWITCH DRIVE SIGNAL
P	C	9	+ POLARITY
P	C	8	- POLARITY
U	AMP'L	9	UP, SIGNAL MORE POSITIVE THAN FEEDBACK
D	AMP'L	8	DOWN, SIGNAL LESS POSITIVE THAN FEEDBACK
UD	AMP'L	7	NEITHER U OR D, FEEDBACK ≅ SIGNAL
P			CHANGE POLARITY SIGNAL
Q			CHANGE RANGE SIGNAL
Dp1 THRU Dp5			DECADE SWITCH DRIVE SIGNALS.
PREFIX D1 THRU D5			DECADES
SUFFIX - L			LOW OUTPUT (PIN p) OF PREFIX DECADE
SUFFIX - H			HIGH OUTPUT (PIN k) OF PREFIX DECADE
SUFFIX - 9			DIGIT 9 LAMP LINE (READOUT) OF PREFIX DECADE
SUFFIX - 0			DIGIT 0 LAMP LINE (READOUT) OF PREFIX DECADE

NOTES:
1. ALL LETTERS OR NUMBERS IN IN CIRCLES ARE PLUG PIN NO.
2. —— INDICATES DIRECTION OF INFORMATION FLOW
3. OE & OE BOTH OCCUR AT POSITION 11 OF THE TRANSFER SWITCH

TM6625-444-15-56

Figure 10-4. Simplified schematic diagram of logic circuits.

THIS IS AN
OVERSIZE PAGE

PG.

#10-11

THIS IS AN
OVERSIZE PAGE

PG.

#10-13

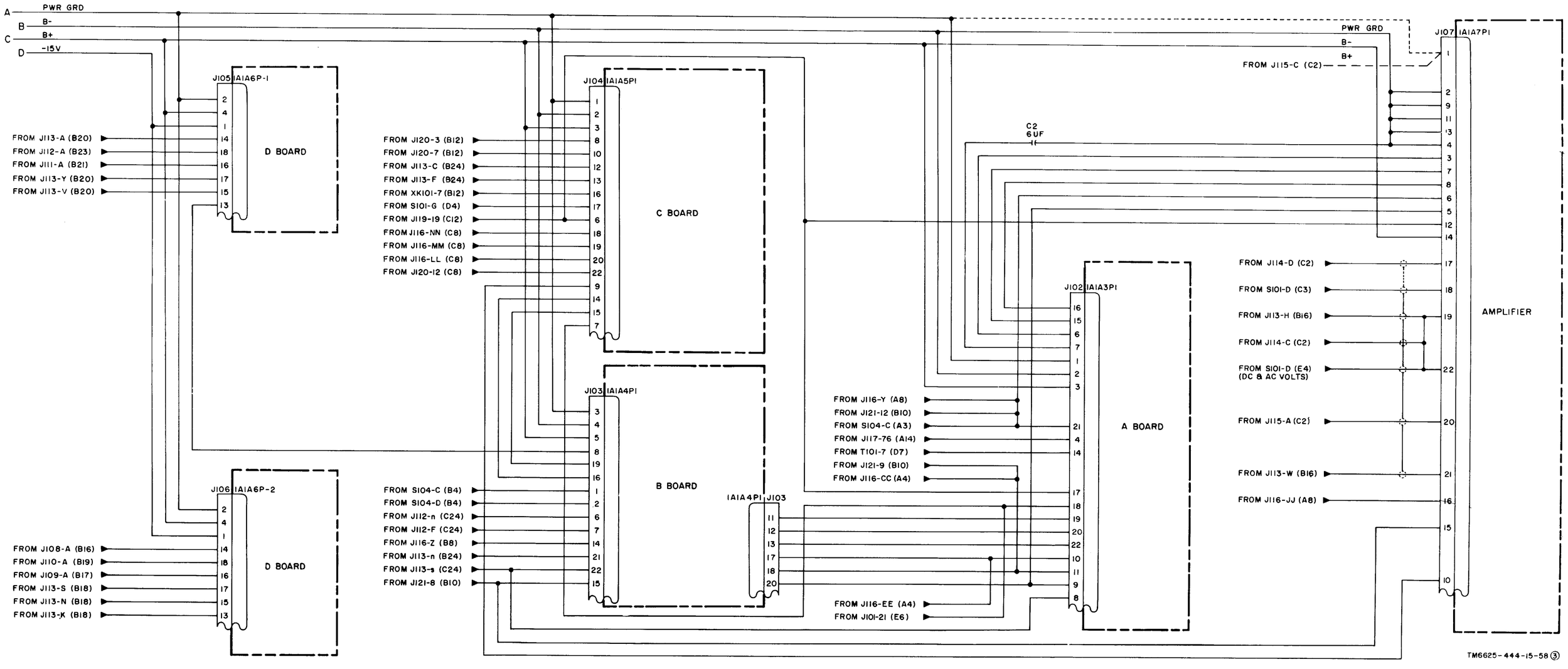

Figure 10-5(3). Digital Voltmeter AN/GSM-64, main board assembly, schematic diagram (part 3 of 3).

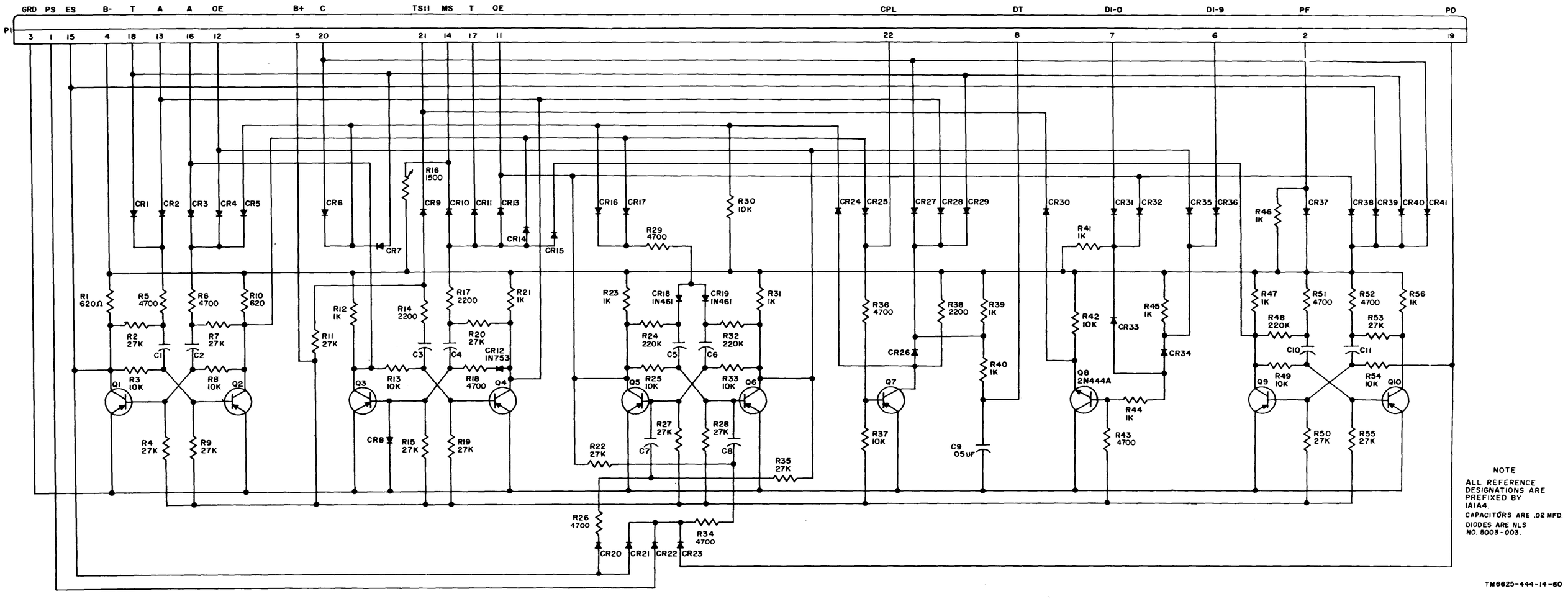

Figure 10-6. B board assembly, schematic diagram.

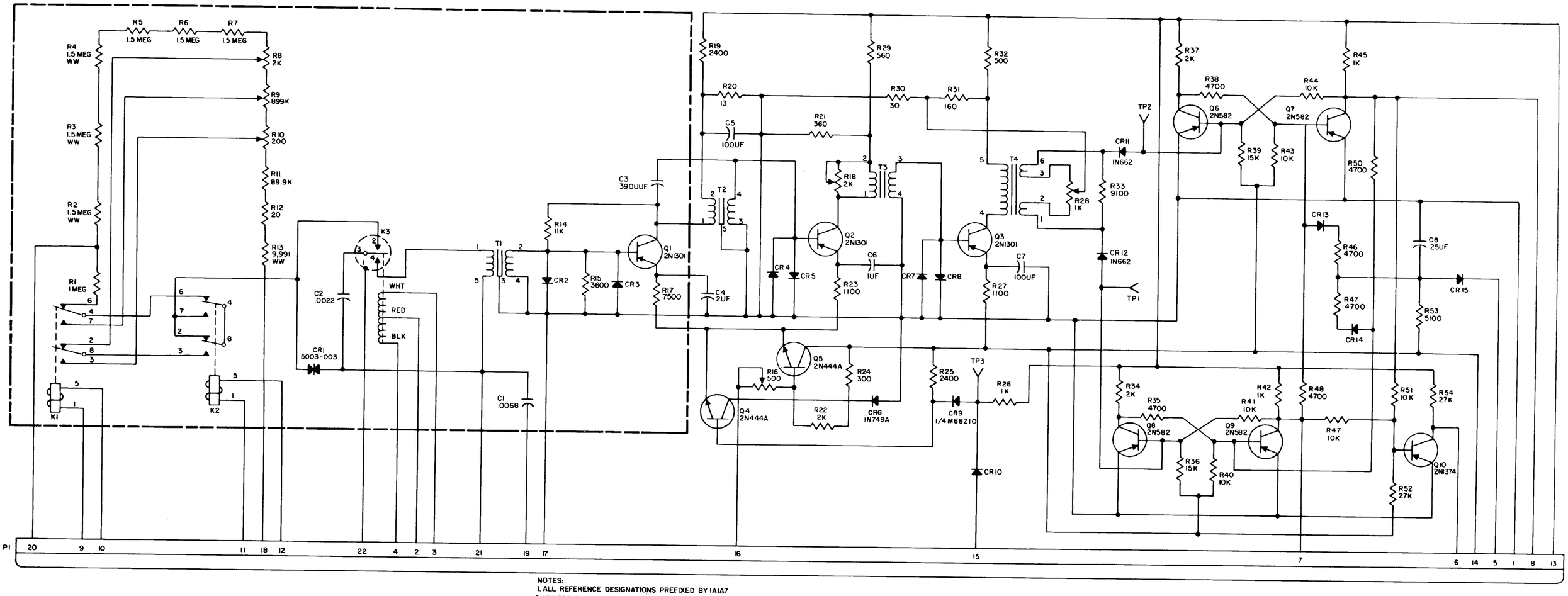

NOTES:
1. ALL REFERENCE DESIGNATIONS PREFIXED BY 1A1A7
2. UNLESS OTHERWISE INDICATED, DIODES ARE TYPE 5003-002
3. CAPACITOR VALUES ARE IN MICROFARADS, UNLESS OTHERWISE SPECIFIED.

TM6625-444-15-61

Figure 10-7. Error amplifier assembly, schematic diagram.

PIN : 023300-000

This fine document...

Was brought to you by me:

Liberated Manuals -- free army and government manuals

Why do I do it? I am tired of sleazy CD-ROM sellers, who take publicly available information, slap “watermarks” and other junk on it, and sell it. Those masters of search engine manipulation make sure that their sites that sell free information, come up first in search engines. They did not create it... They did not even scan it... Why should they get your money? Why are not letting you give those free manuals to your friends?

I am setting this document FREE. This document was made by the US Government and is NOT protected by Copyright. Feel free to share, republish, sell and so on.

I am not asking you for donations, fees or handouts. If you can, please provide a link to liberatedmanuals.com, so that free manuals come up first in search engines:

<A HREF=http://www.liberatedmanuals.com/>Free Military and Government Manuals</A>

- Sincerely
  Igor Chudov
  http://igor.chudov.com/
- Chicago Machinery Movers