TM 11-6625-2781-24P-1

TECHNICAL MANUAL

ORGANIZATIONAL, DIRECT SUPPORT, AND GENERAL SUPPORT MAINTENANCE REPAIR PARTS AND SPECIAL TOOLS LIST (INCLUDING DEPOT MAINTENANCE REPAIR PARTS AND SPECIAL TOOLS)

FOR

IF PLUG-IN PL-1388/U

(HEWLETT-PACKARD MODEL 8552B)

(NSN 6625-00-431-9339)

HEADQUARTERS, DEPARTMENT OF THE ARMY
11 AUGUST 1978

TECHNICAL MANUAL
No. 11-6625-2781-24P-1

HEADQUARTERS
DEPARTMENT OF THE ARMY
WASHINGTON, DC, *11 August 1978*

ORGANIZATIONAL, DIRECT SUPPORT, AND GENERAL SUPPORT MAINTENANCE REPAIR PARTS AND SPECIAL TOOLS LIST (INCLUDING DEPOT MAINTENANCE REPAIR PARTS AND SPECIAL TOOLS) FOR

IF PLUG-IN PL-1388/U

(HEWLETT-PACKARD MODEL 85526)

(NSN 6625-00-431-9339)

Current as of 27 January 1978

REPORTING OF ERRORS

You can improve this manual by recommending improvements using DA Form 2028-2 located in the back of the manual. Simply tear out the self-addressed form, fill it out as shown on the sample, fold it where shown, and drop it in the mail.

If there are no blank DA Form 2028-2 in the back of your manual, use the standard DA Form 2028 (Recommended Changes to Publications and Blank Forms) and forward to the Commander, US Army Communications and Electronics Materiel Readiness Command, ATTN: DRSEL-MA-Q, Fort Monmouth, NJ 07703.

In either case a reply will be furnished direct to you.

Table of Contents

		Page	Illus Figure
SECTION	I. Introduction	1	
	II. Repair Parts List	5	
GROUP	00 IF Plug-In PL-1388/U (Hewlett-Packard Model 8552B)	5	1
	01 Circuit Card Assembly, LC Filter, A1	9	2
	02 3-M Hz Amplifier Board Assembly, A2	13	3
	0201 Circuit Card Assembly, 300 KHz, A2A1	17	4
	03 50 -M Hz Converter, A3	19	5
	0301 Filter Assembly, 50 MHz, A3A1 No Parts Authorized)		
	0302 Oscillator Assembly, 47 MHz, A3A2 (No Parts Authorized)		
	04 Circuit Card Assembly, Crystal Filter, A4	23	6
	05 Circuit Card Assembly, Power Supply, A	27	7
	06 Circuit Card Assembly, Scan Generator, A6	31	8
	07 Circuit Card Assembly, Deflection Amplifier, A7	35	9
	08 Circuit Card Assembly, Log Amplifier, A8	39	10
	09 Switch Assembly, Scan Time, A9,	43	11
	10 Switch Assembly, Reference Level, A10.	45	12
	11 Switch Assembly, Video Filter, A11	47	13
	12 Circuit Card Assembly, 47-MHz APC, A12	49	14
	13 Circuit Card Assembly, 2-MHz Oscillator, A13.	51	15

		Page	Illus Figure
SECTION	III. Special Tools List	53	
GROUP	14 Special Tools	53	16
SECTION	IV. National Stock Number and Part Number Index	54	

SECTION I
INTRODUCTION

1. Scope

This manual lists spares and repair parts; special tools; special test, measurement, and diagnostic equipment (TMDE), and other special support equipment required for performance of organizational and general support maintenance of the PL-1388/U (Hewlett-Packard Model 8552B). It authorizes the requisitioning and issue of spares and repair parts as indicated by the source and maintenance codes.

2. General

This Repair Parts and Special Tools List is divided into the following sections:

a Section II. Repair Parts List. A list of spares and repair parts authorized for use in the performance of maintenance. The list also includes parts which must be removed for replacement of the authorized parts. Parts lists are composed of functional groups in numeric sequence, with the parts in each group listed in figure and item number sequence.

b. Section III. Special Tools List. A list of special tools, special TMDE, and other special support equipment authorized for the performance of maintenance.

c. Section IV. National Stock Number and Part Number Index. A list, in National item identification number (NIIN) sequence, of all National stock numbers (NSN) appearing in the listings, followed by a list, in alphameric sequence, of all part numbers appearing in the listings. National stock numbers and part numbers are cross-referenced to each illustration figure and item number appearance.

3. Explanation of Columns

a Illustration. This column is divided as follows:

(1) *Figure number.* Indicates the figure number of the illustration on which the item is shown.

(2) *Item number.* The number used to identify item called out in the illustration.

b. Source, Maintenance, and Recoverability (SMR) Codes.

(1) *Source code.* Source codes indicate the manner of acquiring support items for maintenance, repair , or overhaul of end items. Source codes are entered in the first and second positions of the Uniform SMR Code format as follows:

Code	*Definition*
PA–	Item procured and stocked for anticipated or known usage.
PE–	Support equipment procured and stocked for initial issue or outfitting to specified maintenance repair activities.
XD–	A support item that is not stocked. When required, item will be procured through normal supply channels.

NOTE

Cannibalization or salvage may be used as a source of supply for any items source coded above except those coded XA and aircraft support items as restricted by AR 700-42.

(2) *Maintenance code.* Maintenance codes are assigned to indicate the levels of maintenance authorized to USE and REPAIR support items. The maintenance males are entered in the third and fourth positions of the Uniform SMR Code format as follows:

(a) The maintenance code entered in the third position will indicate the lowest maintenance level authorized to remove, replace, and use the support item. The maintenance code entered in the third position will indicate one of the following levels of maintenance:

Code	*Application/Explanation*
O–	Support item is removed, replaced, used at the organizational level.
H–	Support item is removed, replaced, used at the general support level.
D–	Support items that are removed, replaced, used at depot, mobile depot, specialized repair activity only.

(b) The maintenance code entered in the fourth position indicates whether the item is to be repaired and identifies the lowest maintenance level with the capability to perform complete repair (i.e., all authorized maintenance functions). This position will contain one of the following maintenance codes

Code	*Application/Explanation*
H–	The lowest maintenance level capable of complete repair of the support item is the general support level.
D–	The lowest maintenance level capable of complete repair of the support item is the depot level.
Z–	Nonreparable. No repair is authorized.

(3) *Recoverability code.* Recoverability codes are assigned to support items to indicate the disposition action on unserviceable items. The recoverability code is entered in the fifth position of the Uniform SMR Code format as follows:

Recoverability codes	*Definition*
Z–	Nonreparable item. When unserviceable, condemn and dispose at the level indicated in position 3.
H–	Reparable item. When uneconomically reparable, condemn and dispose at the general support level.
L–	Reparable item. Repair, condemnation, and disposal not authorized below depot/specialized repair activity level.

c. National Stock Number. Indicates the National stock number assigned to the item and will be used for requisitioning purposes.

d. Part Number. Indicates the primary number used by the manufacturer (individual, company, firm, corporation, or Government activity), which controls the design and characteristics of the item by means of its engineering drawings, specifications, standards, and inspection requirements to identify an item or range of items.

NOTE

When a stock-numbered item is requisitioned, the repair part received may have a different part number than the part being replaced.

e. Federal Supply Code for Manufacturer (FSCM). The FSCM is a 5-digit numeric code listed in SB 708-42 which is used to identify the manufacturer, distributor, or Government agency, etc.

f. Description. Indicates the Federal item name and, if required, a minimum description to identify the item. In the Special Tools List, the initial basis of issue (BOI) appears as the last line in the entry for each special tool, special TM DE, and other special support equipment. When density of equipments supported exceeds density spread indicated in the basis of issue, the total authorization is increased accordingly.

g. Unit of Measure (U/M). Indicates the standard of the basic quantity of the listed item as used in performing the actual maintenance function. This measure is expressed by a two-character alphabetical abbreviation (e.g., ea, in, pr, etc). When the unit of measure differs from the unit of issue, the lowest unit of issue that will satisfy the required units of measure will be requisitioned.

h. Quantity Incorporated in Unit. Indicates the quantity of the item used in the breakout shown on the illustration figure, which is prepared for a functional group, subfunctional group, or an assembly.

4. Special Information

a. The following publication pertains to the PL-1388/U (Hewlett-Packard Model 8552B) and its components.

TM 11-6625-2781-14-1, IF Plug-In PL-1388/U (Hewlett-Packard Model 8552B)

b. National stock numbers (NSN's) that are missing from P source coded items have been applied for and will be added to the TM by future change/revision when they are entered in the Army Master Data File (AMDF). Until the NSN's are established and published, submit exception requisitions to: Commander, US Army Communications and Electronics Materiel Readiness Command, ATTN: DRSEL-MM, Fort Monmouth, New Jersey 07703 for the part required to support your equipment.

5. How to Locate Repair Parts

a. When National stock number or part number is unknown.

(1) *First.* Using the table of contents, determine the functional group within which the item belongs. This is necessary since illustrations are prepared for functional groups and listings are divided into the same groups.

(2) *Second.* Find the illustration covering the functional group to which the item belongs.

(3) *Third.* Identify the item on the illustration and note the illustration figure and item number of the item.

(4) *Fourth.* Using the Repair Parts Listing, find the figure and item number noted on the illustration.

b. When National stock number or part number is known.

(1) *First.* Using the Index of National Stock Numbers and Part Numbers, find the pertinent National stock number or part number. This index is in NIIN sequence followed by a list of part numbers in alphameric sequence, cross-referenced to the illustration figure number and item number.

(2) *Second.* After finding the figure and item number, locate the figure and item number in the repair parts list.

6. Abbreviation

Not applicable.

(Next printed page is 4.1.)

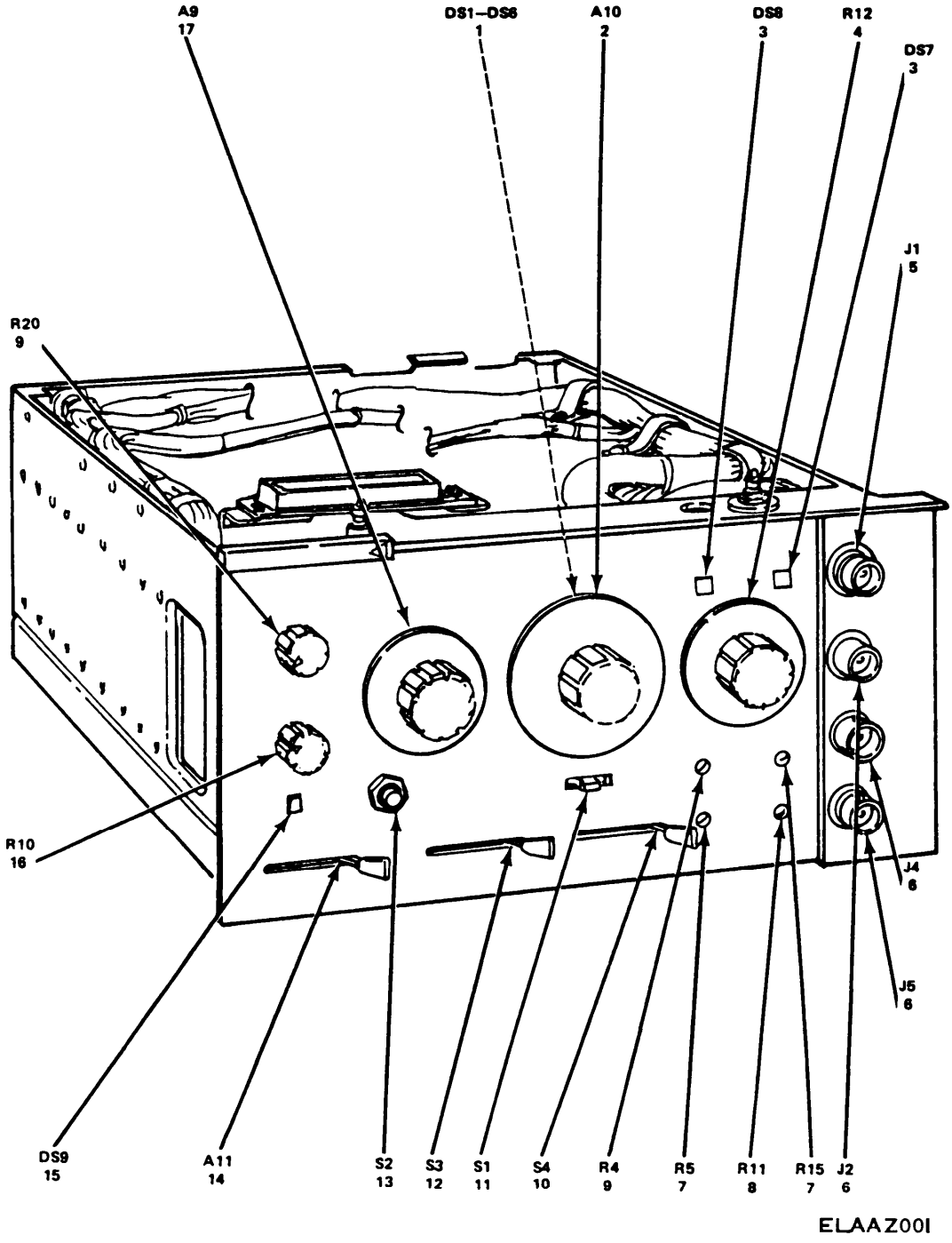

Figure 1. IF Plug-In PL-1388/U (Hewlett-Packard Model 8552B) (Sheet 1 of 6)

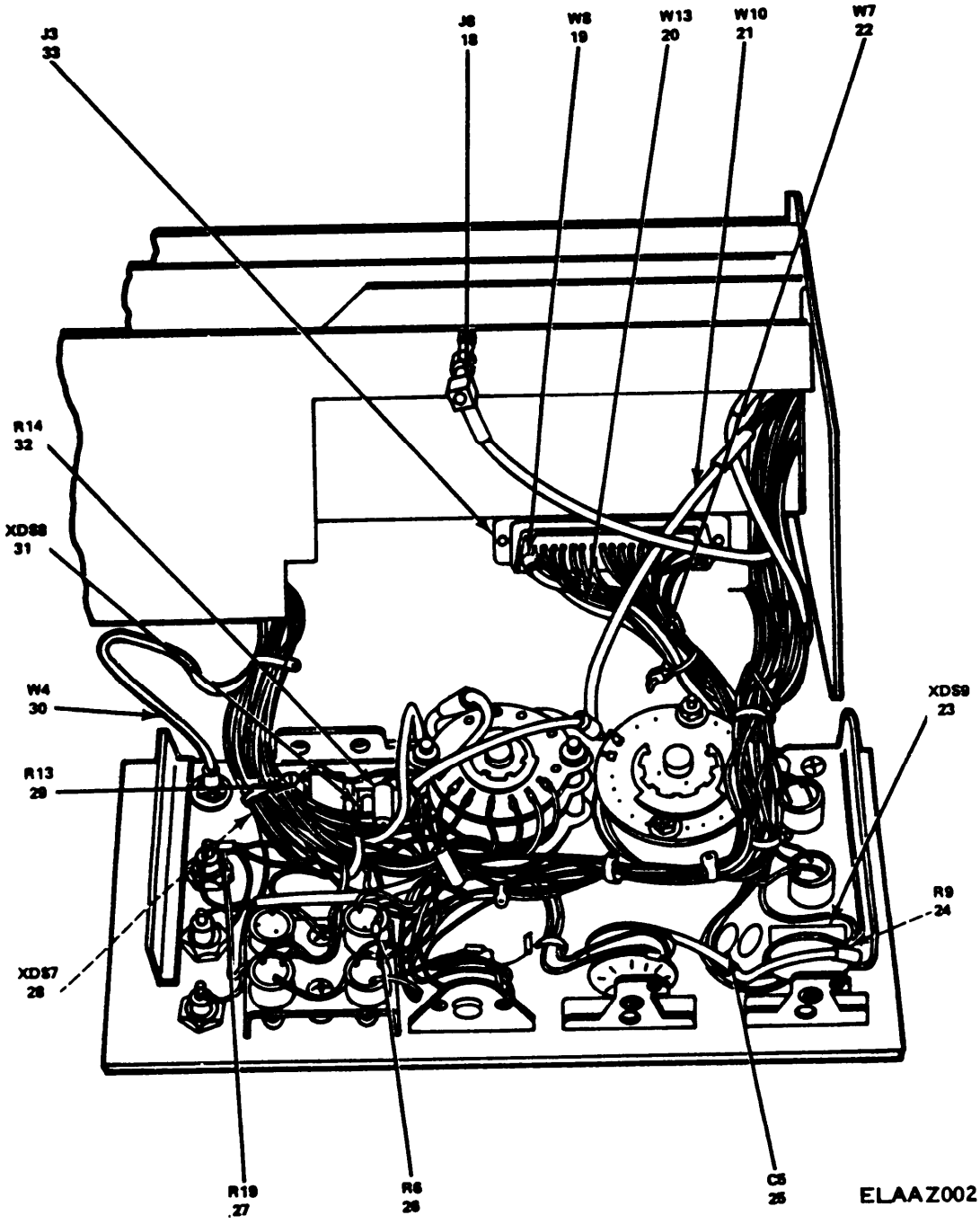

Figure 1. IF Plug-In PL-1388/U (Hewlett-Packard Model 8552B) (Sheet 2 of 6)

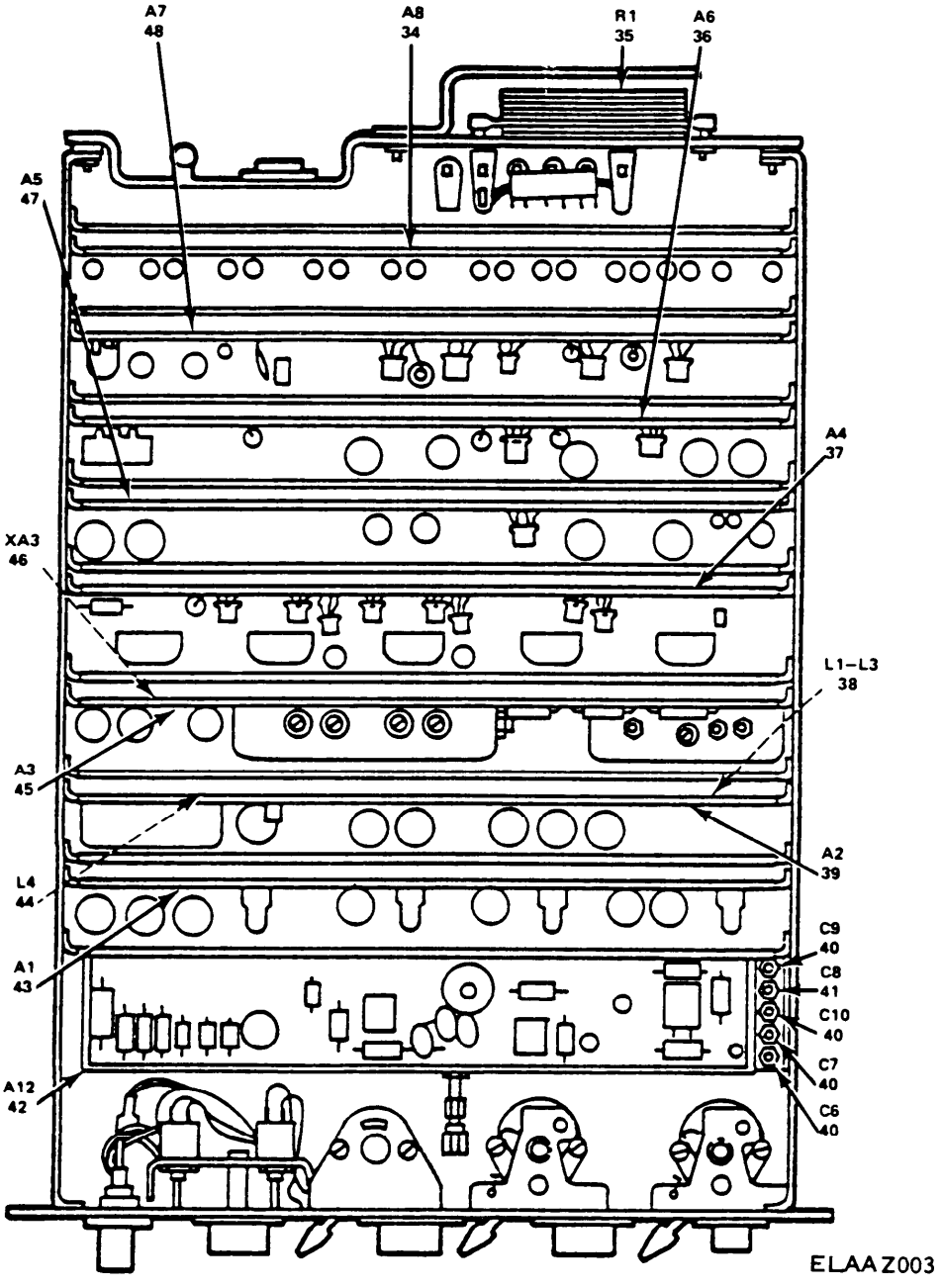

Figure 1. IF Plug-In PL-1388/U (Hewlett-Packard Model 8552b) (Sheet 3 of 6)

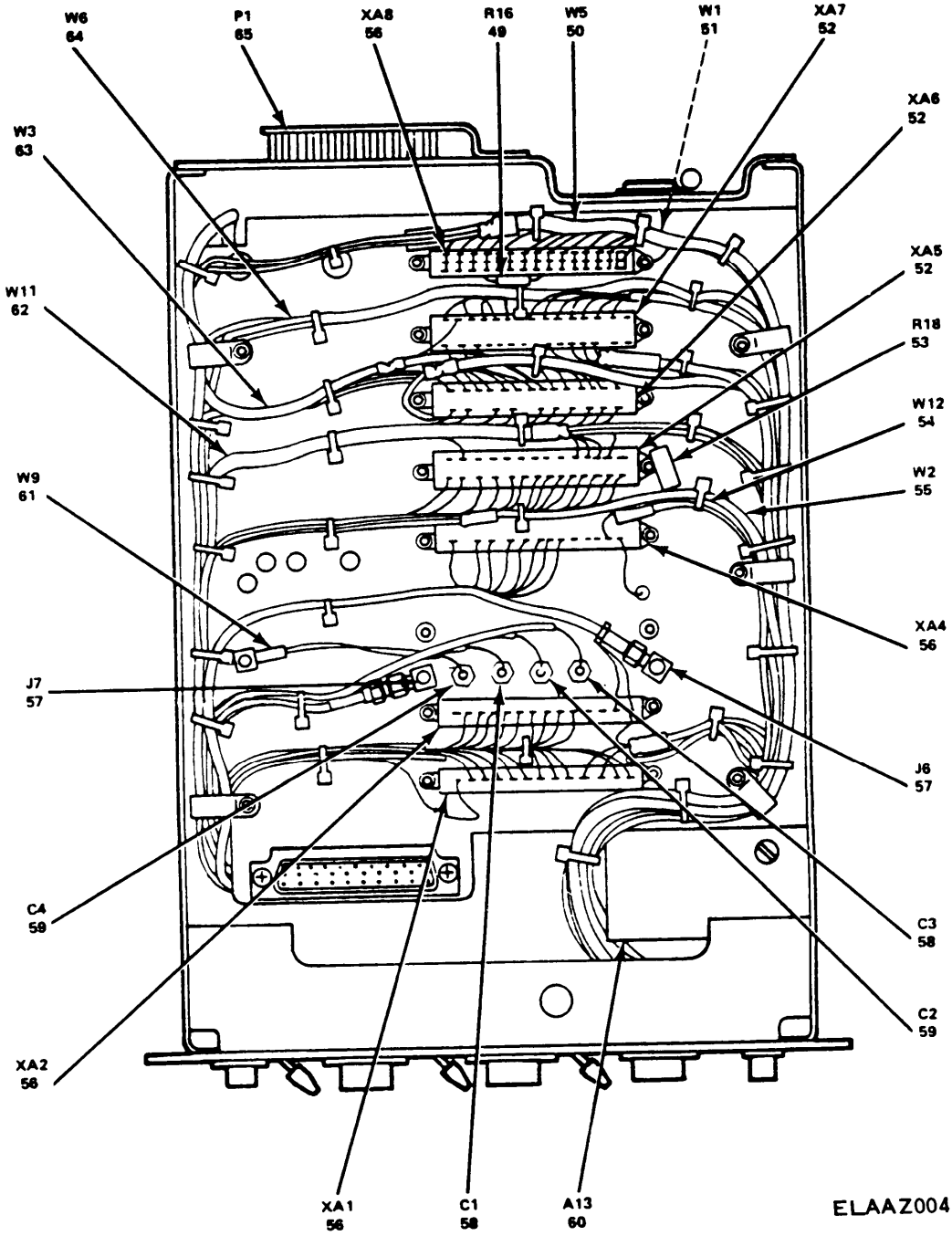

Figure 1. IF Plug-In PL-1388/U (Hewlett-Packard Model 8552B) (Sheet 4 of 6)

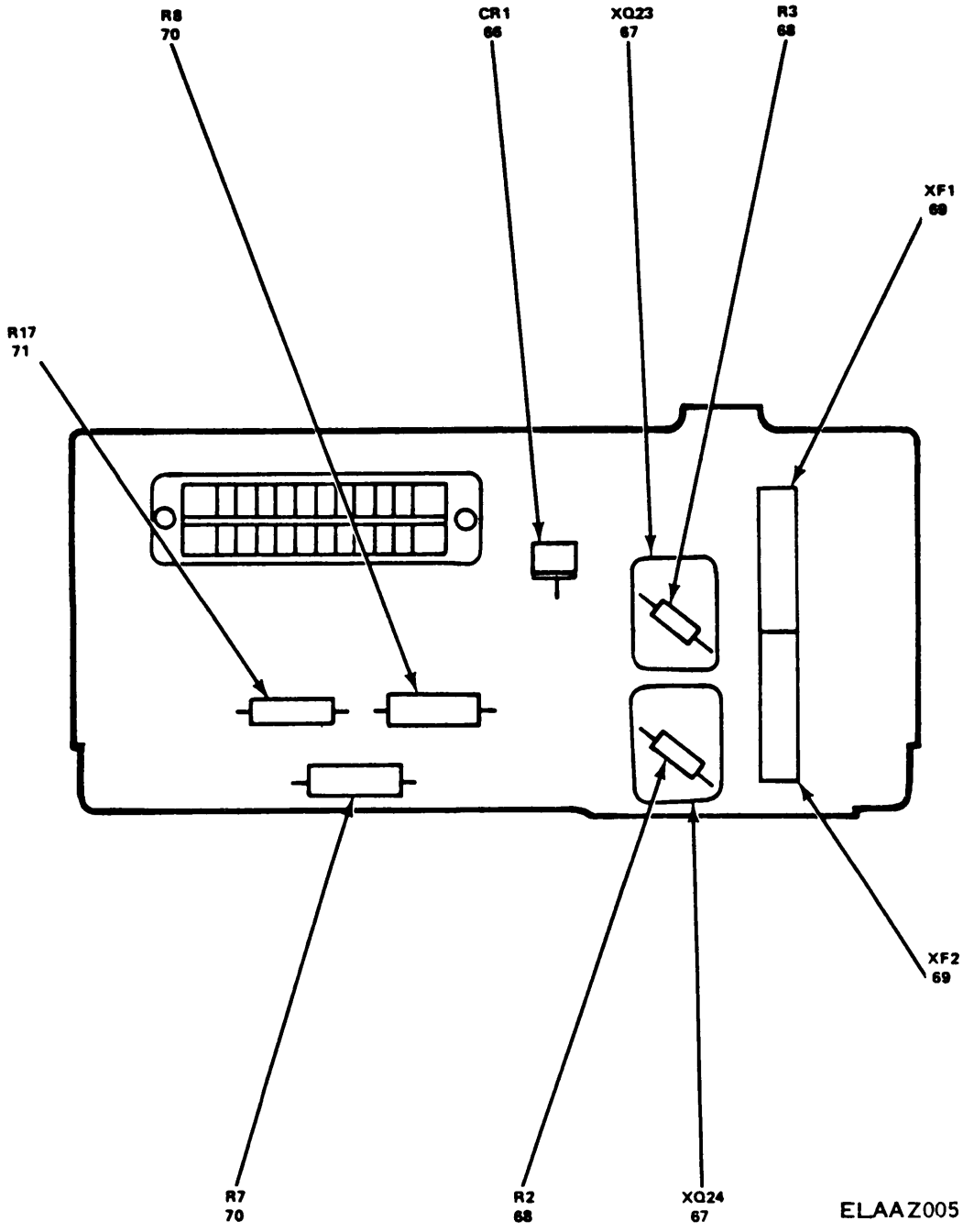

Figure 1. IF Plug-In PL-1388/U (Hewlett-Packard Model 8552B) (Sheet 5 of 6)

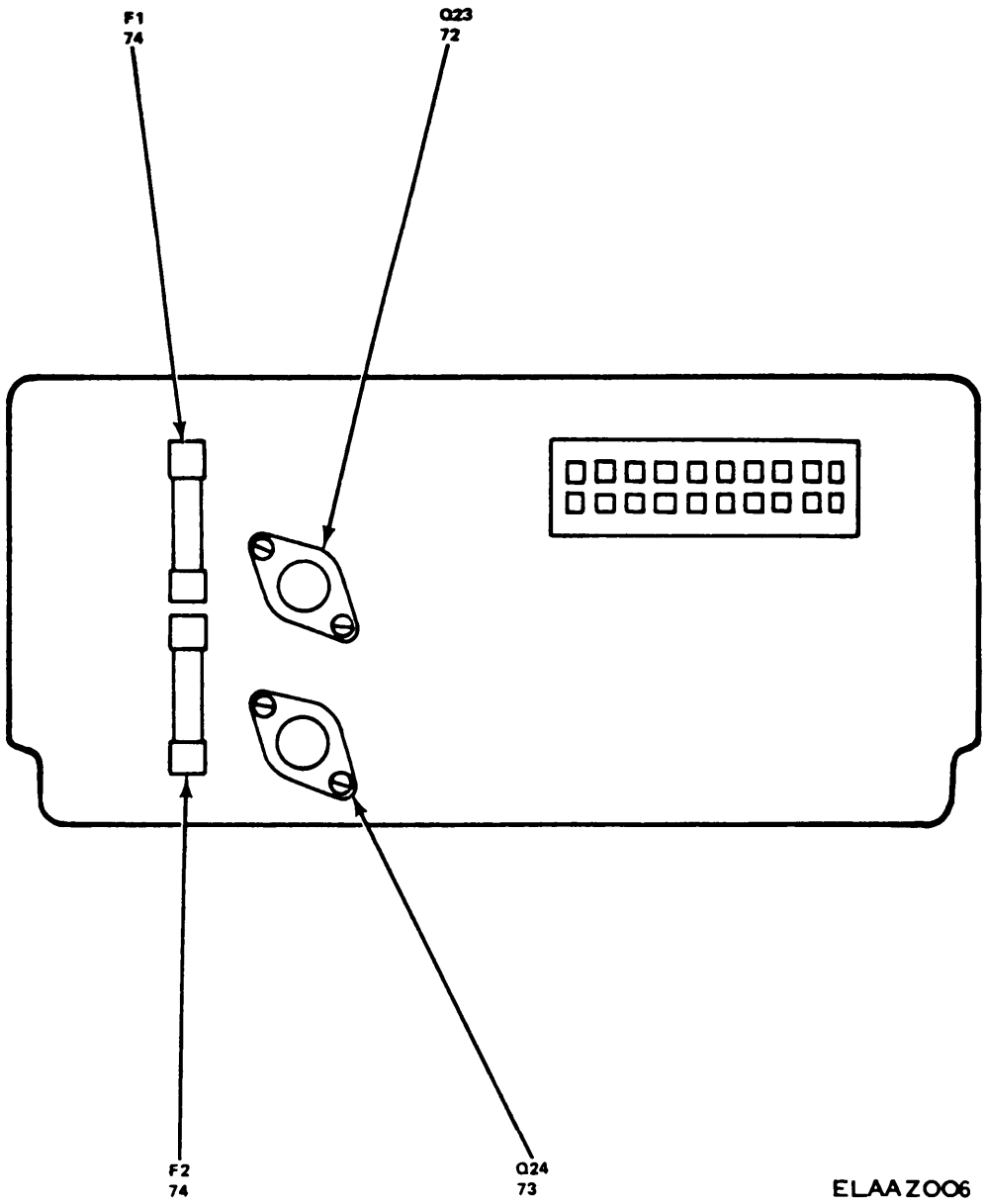

Figure 1. IF Plug-In PL-1388/U (Hewlett-Packard Model 8552B) (Sheet 6 of 6)

(1) ILLUSTRATION (A) FIG. NO.	(1) ILLUSTRATION (B) ITEM NO.	(2) SMR CODE	(3) NATIONAL STOCK NUMBER	(4) PART NUMBER	(5) FSCM	(6) DESCRIPTION USABLE ON CODE	(7) U/M	(8) QTY INC IN UNIT
						.GROUP 00 IF PLUG-IN PL-1388/U (HEWLETT-PACKARD MODEL 8552B)		
1	1	PAHZZ	6240-00-067-7526	367	08806	LAMP, INCANDESCENT	EA	6
1	2	PAHHH	5930-00-004-4986	0855260134	28480	SWITCH, ROTARY	EA	1
1	3	PAHZZ		2107D	71744	LAMP,INCANDESCENT	EA	2
1	4	PAHZZ	5905-00-431-3183	2100-2501	28480	RESISTOR, VARIABL	EA	1
1	5	PAHZZ	5935-00-059-1126	1250-0252	28480	CONNECTOR, ELEC	EA	1
1	6	PAHZZ	5935-00-897-9351	1250-0118	28480	CONNECTOR,RECEPT	EA	3
1	7	PAHZZ	5905-00-407-0068	2100-2488	28480	RESISTOR,VARIABL	EA	2
1	8	PAHZZ	5905-00-484-7386	2100-2661	28480	RESISTOR,VARIABL	EA	1
1	9	PAHZZ	5905-00-407-0069	2100-2492	28480	RESISTOR,VARIABL	EA	2
1	10	PAHZZ	5930-00-787-7464	08532-60L35	28480	SWITCH, ROTARY	EA	1
1	11	PAHZZ	5930-00-789-7481	3101-0897	28480	SWITCH, SLIDE	EA	1
1	12	PAHZZ	5930-00-787-7446	08552-60105	28480	SWITCH,ROTARY	EA	1
1	13	PAHZZ	5930-00-902-3143	3101-0052	28480	SWITCH,PUSH	EA	1
1	14	PAHHH	6625-00-968-1861	08552-60106	28480	SWITCH,ASSEMBLY	EA	1
1	15	PAHZZ	6240-00-892-4420	NE2D	08806	LAMP,GLOW	EA	1
1	16	PAHZZ	5905-00-828-5540	2100-2806	28480	RESISTOR,VARIABL	EA	1
1	17	PAHHH	6625-00-004-4985	08552-60123	28480	SWITCH ASSEMBLY	EA	1
1	18	PAHZZ	5935-00-828-1587	50-043-4610	98291	CONNECTOR, PLUG,ELECTICAL	EA	1
1	19	PAHZZ		08552-6039	28480	CABLE ASSEMBLY, SPECIAL PURPOSE,ELECTRICAL	EA	1
1	20	PAHZZ		08552-60083	28480	CABLE ASSEMBLY,SPECIAL PURPOSE,ELECTRICAL	EA	1
1	21	PAHZZ		08552-60132	28480	CABLE ASSEMBLY,SPECIAL PURPOSE,ELECTRICAL	EA	1
1	22	PAHZZ		08552-6038	28480	CABLE ASSEMBLY,SPECIAL PURPOSE,ELECTRICAL	EA	1
1	23	PAHZZ	6250-00-910-8305	5040-0234	28480	LAMPHOLDER	EA	1
1	24	PAHZZ	5905-00-089-7577	0757-0461	28480	RESISTOR,FIXED	EA	1
1	25	PAHZZ	5910-00-542-2010	801K800011	72982	CAPACITOR,FIXED	EA	1
1	26	PAHZZ	5905-00-858-6799	0757-0441	28480	RESISTOR,FIXED	EA	1
1	27	PAHZZ	5905-00-959-1202	CB1045	01121	RESISTOR,FIXED	EA	1
1	28	PAHZZ	6250-00-448-5451	08552-8002	28480	LAMPHOLDER	EA	1
1	29	PAHZZ	5905-00-405-2867	0698-3399	28480	RESISTOR,FIXED	EA	1
1	30	PAHZZ		08552-60118	28480	CABLE ASSEMBLY, SPECIAL PURPOSE,ELECTRICAL	EA	1
1	31	PAHZZ	6250-00-150-6316	08552-8001	28480	LAMPHOLDER	EA	1
1	32	PAHZZ	5905-00-489-2042	0698-3400	28480	RESISTOR,FIXED,FILM	EA	1
1	33	PAHZZ		DDMF43W2	83148	CONNECTOR,PLUG,ELECTRICAL	EA	1
1	34	PAHDL	6625-00-490-6806	5	28480	CIRCUIT CARD ASSEMB	EA	1
1	35	PAHZZ	5905-00-407-0066	08552-6007	28480	RESISTOR,FIXED	EA	1
1	36	PAHDL	6625-00-139-7801	0811-2501	28480	CIRCUIT CARD ASSEMB	EA	1
1	37	PAHDL	6625-00-004-4984	08552-60137	28480	CIRCUIT CARD ASSEMB	EA	1
1	38	PAHZZ	5950-00-971-1645	08552-60111 09-4436-4K	82142	COIL RADIO FREQ	EA	3

(1) ILLUSTRATION (A) FIG. NO.	(1) ILLUSTRATION (B) ITEM NO.	(2) SMR CODE	(3) NATIONAL STOCK NUMBER	(4) PART NUMBER	(5) FSCM	(6) DESCRIPTION USABLE ON CODE	(7 UM	(8) QTY INC IN UNIT
1	39	PAHDL	6625-00-003-9108	08552-60116	28480	CIRCUIT CARD ASSEMB	EA	1
1	40	PAHZZ	5910-00-431-3956	2425-000X5V502P	72982	CAPACITOR,FIXED,CERAMIC DIELECTRIC	EA	4
1	41	PAHZZ	5910-00-472-5005	2425-000X5P100G	72982	CAPACITOR,FIXED,CERAMIC DIELECTRIC	EA	1
1	42	PAHDL	6625-00-004-1214	08552-60115	28480	CIRCUIT CARD ASSEMB	EA	1
1	43	PAHDL	6625-00-004-4988	08552-60109	28480	CIRCUIT CARD ASSEMB	EA	1
1	44	PAHZZ	5950-00-431-3195	9100-1615	28480	COIL,ELECTRICAL	EA	1
1	45	PAHHH	6625-00-003-9109	08552-60149	28480	CIRCUIT CARD ASSEMB	EA	1
1	46	PAHZZ	5935-00-948-9078	1251-0194	28480	CONNECTOR,RECEPT	EA	1
1	47	PAHDL	6625-00-003-9110	08552-60107	28480	CIRCUIT CARD ASSEMB	EA	1
1	48	PAHDL	6625-00-130-1790	08552-60084	28480	CIRCUIT CARD ASSEMB	EA	1
1	49	PAHZZ	5905-00-195-6758	E82731	01121	RESISTOR, FIXED	EA	1
1	50	PAHZZ		08552-60136	28480	CABLE ASSEMBLY,SPECIAL PURPOSE,ELECTRICAL	EA	1
1	51	PAHZZ	6145-00-591-5122	8120-1110	28480	CABLE,RADIO FREQ	EA	1
1	52	PAHZZ	5935-00-867-0119	251-15-30-261	71785	CONNECTOR,RECEPT	EA	3
1	53	PAHZZ	5905-00-402-7082	0811-1666	28480	RESISTOR,FIXED	EA	1
1	54	PAHZZ		08552-6028	28480	CABLE ASSEMBLY, SPECIAL PURPOSE, ELECTIRCAL	EA	1
1	55	PAHZZ		8120-1111	28480	CABLE ASSEMBLY,RADIO FREQUENCY	EA	1
1	56	PAHZZ	5935-00-972-9764	1251-0135	28480	CONNECTOR, RECEPT	EA	4
1	57	PAHZZ	5935-00-818-7134	50-047-0000	98191	CONNECTOR,RECEPT	EA	2
1	58	PAHZZ	5910-00-247-8593	0160-2049	28480	CAPACITOR,FIXED	EA	2
1	59	PAHZZ	5910-00-430-5821	0160-3219	28480	CAPACITOR,ELEC	EA	3
1	60	PAHDL	6625-00-968-3123	08552-60117	28480	CIRCUIT CARD ASSEMB	EA	1
1	61	PAHZZ		08552-60122	28480	CABLE ASSEMBLY,SPECIAL PURPOSE,ELECTRICAL	EA	1
1	62	PAHZZ		08552-60131	28480	CABLE ASSEMBLY,SPECIAL PURPOSE,ELECTRICAL	EA	1
1	63	PAHZZ		08552-6015	28480	CABLE ASSEMBLY,SPECIAL PURPOSE,ELECTRICAL	EA	1
1	64	PAHZZ		08552-60119	28480	CABLE ASSEMBLY,SPECIAL PURPOSE,ELECTIRCAL	EA	1
1	65	PAHZZ	5935-00-623-7199	1251-0055	28480	CONNECTOR,RECEPT	EA	1
1	66	PAHZZ	5961-00-867-9264	1901-0416	28480	SEMICONDUCTOR	EA	1
1	67	PAHZZ	5935-00-124-5081	1200-0168	28480	SOCKET,PLUG-IN	EA	2
1	68	PAHZZ	5905-00-909-3965	CB3315	01121	RESISTOR,FIXED	EA	2
1	69	PAHZZ	5920-00-035-4842	2110-0087	28480	FUSEHOLDER,BLOCK	EA	2
1	70	PAHZZ	5905-00-807-7336	0767-0010	28480	RESISTOR,FIXED	EA	2
1	71	PAHZZ	5905-00-489-2052	0812-0100	28480	RESISTOR,FIXED	EA	1
1	72	PAHZZ	5961-00-927-5042	2N3740	80131	TRANSISTOR	EA	1
1	73	PAHZZ	5961-00-222-6426	1854-0341	28480	TRANSISTOR	EA	1
1	74	PADZZ	5920-00-280-8342	312001	75915	FUSE,CARTRIDGE	EA	2

LEGEND

REF DES	ITEM NO	REF DES	ITEM NO	REF DES	ITEM NO
C1	1	CR8	10	R19	19
C2	1	CR9	10	R20	20
C3	2	CR10	10	R21	21
C4	3	CR11	10	R22	20
C5	4	CR12	10	R23	22
C6	1	CR13	10	R24	23
C7	1	CR14	10	R25	24
C8	1	CR15	10	R26	25
C9	2	CR16	10	R27	25
C10	3	CR17	10	R28	19
C11	4	CR18	10	R29	20
C12	1	CR19	10	R30	21
C13	1	CR20	10	R31	20
C14	1	CR21	10	R32	26
C15	2	CR22	10	R33	22
C16	3	L1	11	R34	23
C17	4	L2	11	R35	27
C18	1	L3	12	R36	25
C19	1	L4	12	R37	25
C20	1	L5	12	R38	28
C21	2	L6	12	R39	19
C22	3	L7	13	R40	19
C23	4	L8	14	R41	25
C24	1	L9	11	R42	29
C25	5	L10	15	R43	23
C26	5	Q1	16	R44	23
C27	1	Q2	16	R45	23
C28	1	Q3	16	R46	30
C29	1	Q4	16	R47	24
C31	1	Q5	16	R48	29
C32	1	Q6	17	R49	19
C33	1	Q7	18	R50	19
C34	1	R1	19	R51	31
C35	6	R2	20	R52	32
C36	1	R3	20	R53	33
C37	7	R4	21	R54	34
C38	1	R5	22	R55	23
C39	8	R6	23	R56	35
C40	7	R7	24	R57	30
C41	8	R8	25	R58	36
C42	8	R9	25	R59	37
C43	9	R10	19	R60	38
C44	8	R11	20	R61	30
CR1	10	R12	21	R62	30
CR2	10	R13	20	TP1	39
CR3	10	R14	22	TP2	39
CR4	10	R15	23	TP3	39
CR5	10	R16	24	TP4	39
CR6	10	R17	25	TP5	39
CR7	10	R18	25	TP6	39

PREFIX ALL REFERENCE DESIGNATORS WITH A1

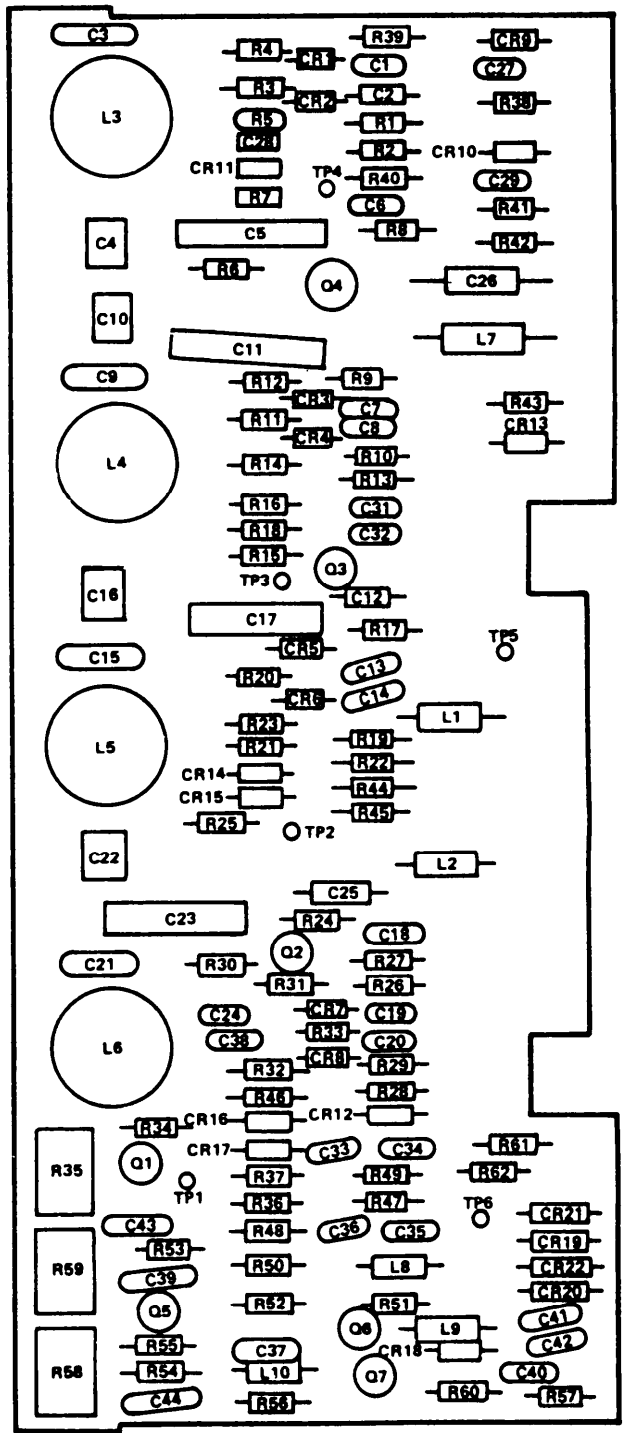

Figure 2. Circuit Card Assembly, LC Filter

(1) ILLUSTRATION (A) FIG. NO.	(1) ILLUSTRATION (B) ITEM NO.	(2) SMR CODE	(3) NATIONAL STOCK NUMBER	(4) PART NUMBER	(5) FSCM	(6) DESCRIPTION USABLE ON CODE	(7 UM	(8) QTY INC IN UNIT
						.GROUP 01 CIRCUIT CARD ASEMBLY,LC FILTER, A1		
2	1	XDDZZ	5910-00-211-1611	0160-2055	28480	CAPACITOR,FIXED	EA	21
2	2	XDDZZ	5910-00-430-6138	0160-3024	28480	CAPACITOR,ELEC	EA	4
2	3	XDDZZ	5910-00-761-1216	0121-0105	28480	CAPACITOR,VARIAB	EA	4
2	4	XDDZZ		0160-3132	28480	CAPACITOR,FIXED,CERAMIC DIELECTRIC	EA	4
2	5	XDDZZ	5910-00-809-4701	150D685X9035B2DY S	56289	CAPACITOR,FIXED,ELECTROLYTIC	EA	2
2	6	XDDZZ	5910-00-464-9932	RDM15E510J1C	72136	CAPACITOR,FIXED,MICA DIELECTRIC	EA	1
2	7	XDDZZ	5910-00-957-2054	0160-2150	28480	CAPACITOR,FIXED,MICA DIELECTRIC	EA	2
2	8	XDDZZ	5910-00-008-4458	0160-3460	28480	CAPACITOR,FIXED	EA	4
2	9	XDDZZ	5910-00-006-5732	0160-3060	28480	CAPACITR,FIXED	EA	1
2	10	XDDZZ	5961-00-928-7939	FDG1088	34148	SEMICONDUCTOR	EA	22
2	11	XDDZZ	5950-00-431-3216	9140-0237	28480	COIL,ELECTRICAL	EA	3
2	12	XDDZZ	5950-00-431-3174	08552-6025	28480	REACTOR	EA	4
2	13	XDDZZ	5950-00-984-3433	9140-0137	28480	COIL,RADIO FREQ	EA	1
2	14	XDDZZ	5950-00-431-3198	9100-1630	28480	COIL,ELECTRICAL	EA	1
2	15	XDDZZ	5950-00-431-3215	15-1315-12J	82142	COIL,RADIO FREQ	EA	1
2	16	XDDZZ	5961-00-137-4608	1854-0071	28480	TRANSISTOR	EA	5
2	17	XDDZZ	5961-00-904-2540	1853-0020	28480	TRANSISTOR	EA	1
2	18	XDDZZ	5961-00-919-4566	1854-0019	28480	TRANSISTOR	EA	1
2	19	XDDZZ	5905-00-929-2529	0757-0438	28480	RESISTOR,FIXED	EA	8
2	20	XDDZZ	5905-00-998-1794	0757-0428	28480	RESISTOR,FIXED	EA	8
2	21	XDDZZ	5905-00-974-6081	0698-3153	28480	RESISTOR,FIXED	EA	4
2	22	XDDZZ	5905-00-493-4289	0698-3445	28480	RESISTOR,FIXED	EA	4
2	23	XDDZZ	5905-00-981-7529	0757-0401	28480	RESISTOR,FIXED	EA	8
2	24	XDDZZ	5905-00-891-4219	0757-0421	28480	RESISTOR,FIXED	EA	4
2	25	XDDZZ	5905-00-974-6732	0698-0084	28480	RESISTOR,FIXED	EA	9
2	26	XDDZZ	5905-00-493-5404	0757-0420	28480	RESISTOR,FIXED	EA	1
2	27	XDDZZ	5905-00-407-0079	2100-1757	28480	RESISTOR,VARIABL	EA	1
2	28	XDDZZ	5905-00-170-9449	0698-4087	28480	RESISTOR,FIXED	EA	1
2	29	XDDZZ	5905-00-858-6795	0757-0440	28480	RESISTOR,FIXED	EA	2
2	30	XDDZZ	5905-00-853-8190	0757-0280	28480	RESISTOR,FIXED	EA	4
2	31	XDDZZ	5905-00-433-6904	0698-3157	28480	RESISTOR,FIXED	EA	1
2	32	XDDZZ	5905-00-489-6773	0698-3442	28480	RESISTOR,FIXED	EA	1
2	33	XDDZZ	5905-00-998-1795	0757-0416	28480	RESISTOR,FIXED	EA	1
2	34	XDDZZ	5905-00-407-0075	0698-3429	28480	RESISTOR,FIXED	EA	1
2	35	XDDZZ	5905-00-232-3122	0698-4037	28480	RESISTOR,FIXED	EA	1
2	36	XDDZZ	5905-00-407-0078	2100-1755	28480	RESISTOR,VARIABL	EA	1
2	37	XDDZZ	5905-00-402-1156	2100-1756	28480	RESISTOR,VARIABL	EA	1

(1) ILLUSTRATION (A) FIG. NO.	(1) ILLUSTRATION (B) ITEM NO.	(2) SMR CODE	(3) NATIONAL STOCK NUMBER	(4) PART NUMBER	(5) FSCM	(6) DESCRIPTION USABLE ON CODE	(7 UM	(8) QTY INC IN UNIT
2	38	XDDZZ	5905-00-194-0341	0698-3443	28480	RESISTOR,FIXED	EA	1
2	39	XDDZZ		0360-1514	28480	TERMINAL,STUD	EA	6

LEGEND

REF DES	ITEM NO	REF DES	ITEM NO	REF DES	ITEM NO
A1	1	CR8	11	R23	35
C1	2	CR9	11	R24	19
C2	2	CR10	11	R25	31
C3	3	CR11	11	R26	32
C4	3	CR12	11	R27	36
C5	3	L1	12	R28	31
C10	3	L2	12	R29	37
C11	4	L3	12	R30	35
C12	3	L4	12	R31	28
C13	5	L5	12	R32	29
C14	6	L10	13	R33	28
C15	7	L11	14	R34	38
C16	5	L12	15	R35	21
C17	3	L13	13	R36	39
C18	3	Q1	16	R37	25
C19	3	Q2	17	R38	28
C20	3	Q3	17	R39	29
C21	3	Q4	16	R40	28
C22	3	Q5	17	R41	30
C23	3	Q6	17	R42	21
C24	3	Q7	18	R43	26
C25	6	Q8	17	R44	40
C26	8	Q9	17	R45	37
C27	3	Q10	18	R46	23
C28	3	R1	19	R47	23
C29	6	R2	20	R48	41
C30	3	R3	21	R49	31
C31	9	R4	22	R50	23
C32	10	R5	23	R51	42
C33	3	R6	23	R52	31
C34	3	R7	24	R53	26
C35	4	R8	25	R54	21
C36	3	R9	26	R55	24
C38	3	R10	27	R56	24
C39	3	R11	28	R57	26
C40	9	R12	29	R58	31
C41	10	R13	23	R60	26
C42	3	R14	30	R61	26
C43	3	R15	28	TP1	43
CR1	11	R16	31	TP2	43
CR2	11	R17	21	TP3	43
CR3	11	R18	32	TP4	43
CR4	11	R19	25	Z1	44
CR5	11	R20	33		
CR6	11	R21	34		
CR7	11	R22	31		

PREFIX ALL REFERENCE DESIGNATORS WITH A2

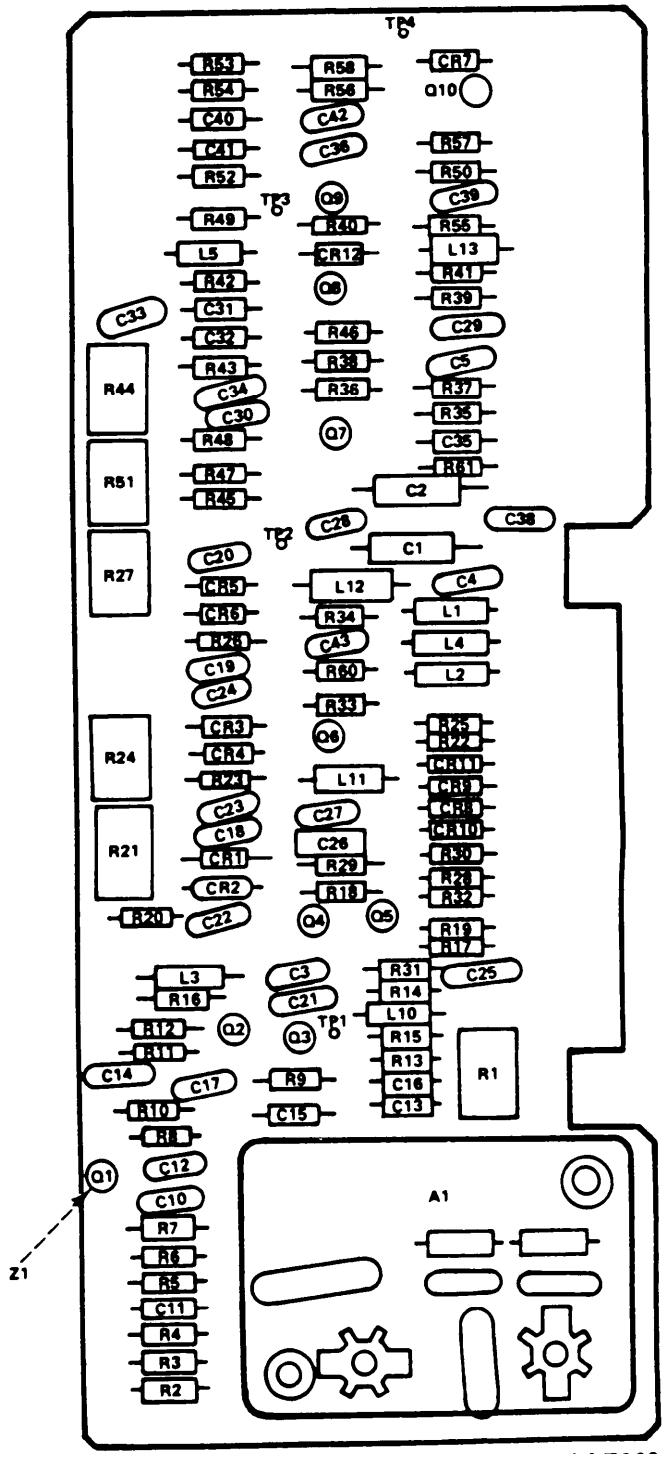

Figure 3. 3-MHz Amplifier Board Assembly

(1) ILLUSTRATION (A) FIG. NO.	(1) ILLUSTRATION (B) ITEM NO.	(2) SMR CODE	(3) NATIONAL STOCK NUMBER	(4) PART NUMBER	(5) FSCM	(6) DESCRIPTION USABLE ON CODE	(7 UM	(8) QTY INC IN UNIT
						GROUP 02 3-MHz AMPLIFIER BOARD ASSEMBLY,A2		
3	1	PAHDL	6625-00-004-4982	08552-60129	28480	CIRCUIT CARD ASSEMB	EA	1
3	2	XDDZZ	5910-00-809-4701	150D685X903582DYS	56289	CAPACITOR,FIXED,ELECTROLYTIC	EA	2
3	3	XDDZZ	5910-00-211-1611	0160-2055	28480	CAPACITOR,FIXED	EA	23
3	4	XDDZZ	5910-00-456-4474	150D105X9035A2DYS	56289	CAPACITOR,FIXED,ELECTROLYTIC	EA	2
3	5	XDDZZ	5910-00-430-5617	0122-0221	28480	CAPACITOR,ELEC	EA	2
3	6	XDDZZ	5910-00-782-1853	RDM15E620J3C	00853	CAPACITOR,FIXED	EA	3
3	7	XDDZZ	5910-00-180-4180	0122-0211	28480	CAPACITOR,ELEC	EA	1
3	8	XDDZZ		301-000C0H0100J	72982	CAPACITOR,FIXED,CERAMIC DIELECTRIC	EA	1
3	9	XDDZZ	5910-00-430-5607	0122-0043	28480	CAPACITOR,ELEC	EA	2
3	10	XDDZZ	5961-00-430-5609	0122-0044	34148	SEMICONDUCTOR	EA	2
3	11	XDDZZ	5961-00-928-7939	FDG1088	28480	SEMICONDUCTOR	EA	12
3	12	XDDZZ	5950-00-431-3216	9140-0237	28480	COIL,ELECTRICAL	EA	5
3	13	XDDZZ	5950-00-438-4375	9100-1611	28480	COIL,ELECTRICAL	EA	2
3	14	XDDZZ	5950-00-431-3199	9100-1636	28480	COIL,ELECTRICAL	EA	1
3	15	XDDZZ	5950-00-984-3433	9140-0137	80131	COIL,RADIO FREQ	EA	1
3	16	XDDZZ	5961-00-943-7572	2H3563	28480	TRANSISTOR	EA	2
3	17	XDDZZ	5961-00-931-6998	1853-0010	28480	TRANSISTOR	EA	6
3	18	XDDZZ	5961-00-137-4608	1854-0071	28480	TRANSISTOR	EA	2
3	19	XDDZZ	5905-00-407-0078	2100-1755	28480	RESISTOR,VARIABL	EA	2
3	20	XDDZZ	5905-00-246-8634	0698-3151	28480	RESISTOR,FIXED	EA	1
3	21	XDDZZ	5905-00-984-7513	0757-0199	28480	RESISTOR,FIXED	EA	5
3	22	XDDZZ	5905-00-981-7530	0757-0447	28480	RESISTOR,FIXED	EA	1
3	23	XDDZZ	5905-00-998-1792	0757-0442	28480	RESISTOR,FIXED	EA	6
3	24	XDDZZ	5905-00-840-8162	0698-3162	28480	RESISTOR,FIXED	EA	3
3	25	XDDZZ	5905-00-917-0580	0757-1094	28480	RESISTOR,FIXED	EA	3
3	26	XDDZZ	5905-00-981-7529	0757-0401	28480	RESISTOR,FIXED	EA	6
3	27	XDDZZ	5905-00-221-8310	0757-0279	28480	RESISTOR,FIXED	EA	1
3	28	XDDZZ	5905-00-998-1906	0757-0346	28480	RESISTOR	EA	6
3	29	XDDZZ	5905-00-974-6083	0698-3446	28480	RESISTOR,FIXED	EA	3
3	30	XDDZZ	5905-00-891-4238	0698-3428	28480	RESISTOR,FIXED	EA	2
3	31	XDDZZ	5905-00-853-8190	0757-0280	28480	RESISTOR,FIXED	EA	7
3	32	XDDZZ	5905-00-493-0777	0757-0276	28480	RESISTOR,FIXED	EA	2
3	33	XDDZZ	5905-00-412-4037	0757-0418	28480	RESISTOR,FIXED	EA	1
3	34	XDDZZ	5905-00-407-0079	2100-1757	28480	RESISTOR,VARIABL	EA	1
3	35	XDDZZ	.5905-00-974-6076	0698-3441	28480	RESISTOR,FIXED	EA	2
3	36	XDDZZ	5905-00-407-0077	2100-1754	28480	RESISTOR,VARIABL	EA	1
3	37	XDDZZ	5905-00-974-6073	0698-0084	28480	RESISTOR,FIXED	EA	2
3	38	XDDZZ	5905-00-493-5404	0757-0420	28480	RESISTOR,FIXED	EA	1

(1) ILLUSTRATION (A) FIG. NO.	(1) ILLUSTRATION (B) ITEM NO.	(2) SMR CODE	(3) NATIONAL STOCK NUMBER	(4) PART NUMBER	(5) FSCM	(6) DESCRIPTION USABLE ON CODE	(7 UM	(8) QTY INC IN UNIT
3	39	XDDZZ	5905-00-858-8959	0757-0460	28480	RESISTOR,FIXED	EA	1
3	40	XDDZZ	5905-00-229-1971	2100-1760	28480	RESISTOR,VARIABL	EA	1
3	41	XDDZZ	5905-00-193-4318	0757-0288	28480	RESISTOR,FIXED	EA	1
3	42	XDDZZ	5905-00-228-5989	2100-1758	28480	RESISTOR,VARIABL	EA	1
3	43	XDDZZ	5940-00-993-9338	0360-0124	28480	TERMINAL,STUD	EA	4
3	44	XDDZZ		9170-0847	28480	SHIELDING BEAD,ELEC	EA	1

LEGEND

REF DES	ITEM NO
C1	1
C2	2
C3	3
C4	4
L1	5
L2	6
L3	7
L4	8

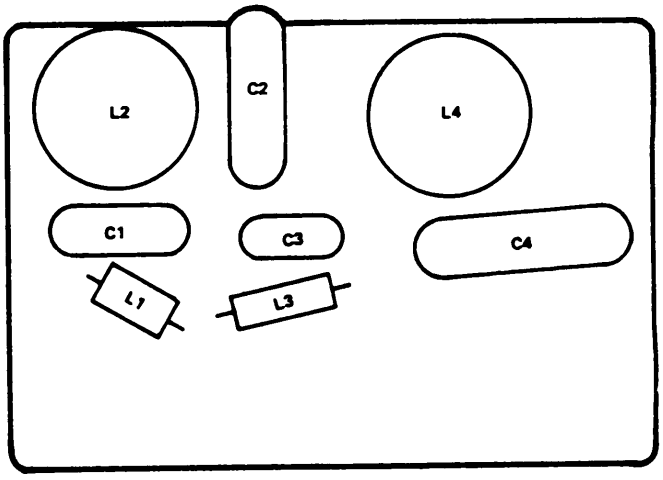

Figure 4. Circuit Card Assembly, 300 KHz

(1) ILLUSTRATION (A) FIG. NO.	(1) ILLUSTRATION (B) ITEM NO.	(2) SMR CODE	(3) NATIONAL STOCK NUMBER	(4) PART NUMBER	(5) FSCM	(6) DESCRIPTION USABLE ON CODE	(7 UM	(8) QTY INC IN UNIT
						GROUP 0201 CIRCUIT CARD ASSEMBLY,300 KHZ A2A1		
4	1	XDDZZ	5910-00-138-9048	0160-3046	28480	CAPACITOR,FIXED	EA	1
4	2	XDDZZ	5910-00-195-8823	0160-3047	28480	CAPACITOR,ELEC	EA	1
4	3	XDDZZ	5910-00-195-8818	0160-3045	28480	CAPACITOR,FIXED	EA	1
4	4	XDDZZ	5910-00-430-5815	0160-3048	28480	CAPACITOR,ELEC	EA	1
4	5	XDDZZ	5950-00-452-1255	10132-17	82142	COIL,RADIO FREQ	EA	1
4	6	XDDZZ	5950-00-430-6806	08552-6012	28480	REACTOR	EA	1
4	7	XDDZZ	5950-00-452-1257	10176-40	82142	COIL,RADIO FREQ	EA	1
4	8	XDDZZ	5950-00-431-3172	08552-6011	28480	REACTOR	EA	1

LEGEND

REF DES	ITEM NO	REF DES	ITEM NO
A1	1	L5	14
A2	2	L6	14
C1	3	L7	11
C2	3	L8	14
C3	3	L9	14
C4	4	Q1	15
C6	4	Q2	16
C7	3	R1	17
C8	3	R2	18
C9	5	R3	19
C10	6	R4	20
C11	7	R5	21
C12	8	R6	22
C13	8	R7	23
C14	7	R8	24
C15	3	R9	25
C16	3	R10	26
C17	9	R11	27
C18	3	R12	27
C19	7	R13	27
C20	8	R14	27
CR1	10	R15	28
CR2	10	R16	29
CR3	10	R17	30
CR4	10	T1	31
L1	11	T2	32
L2	12	T3	31
L3	12	T4	32
L4	13		

PREFIX ALL REFERENCE DESIGNATORS WITH A3

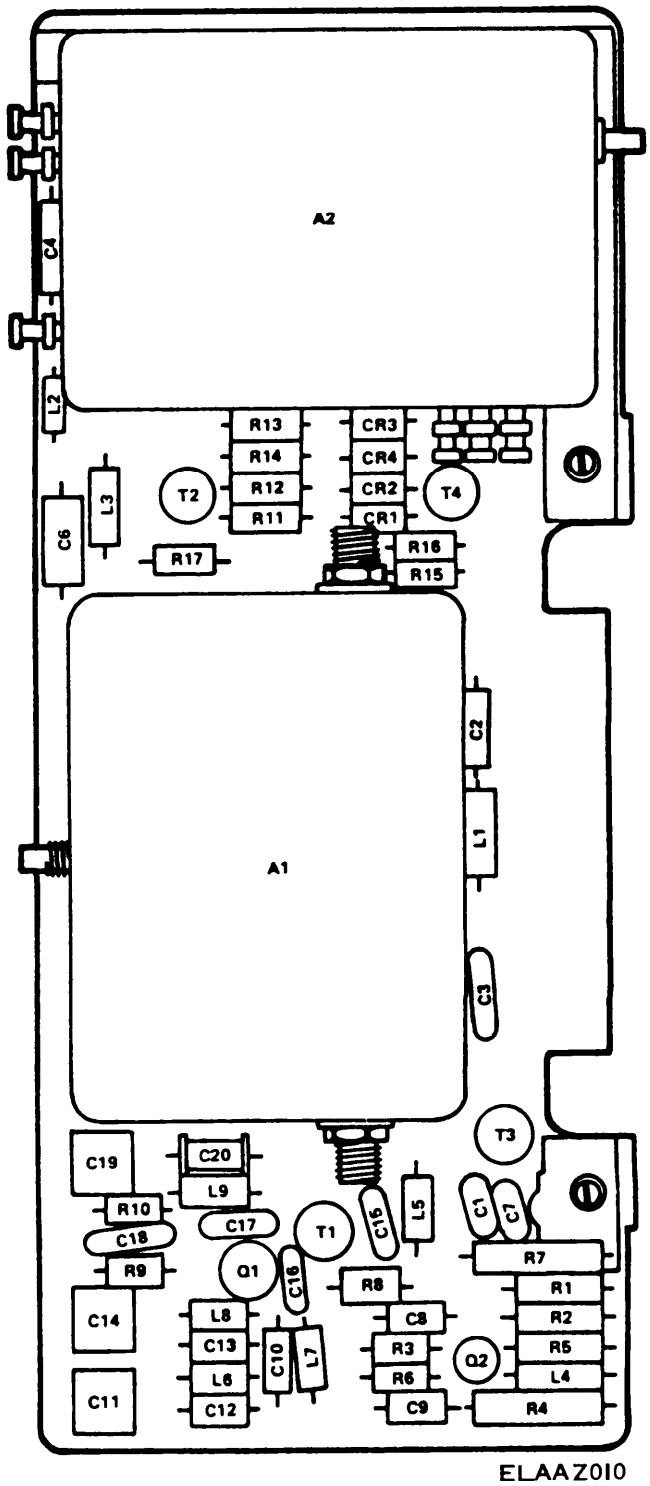

Figure 5. 50-MHz Converter

(1) ILLUSTRATION (A) FIG. NO.	(1) ILLUSTRATION (B) ITEM NO.	(2) SMR CODE	(3) NATIONAL STOCK NUMBER	(4) PART NUMBER	(5) FSCM	(6) DESCRIPTION USABLE ON CODE	(7) U/M	(8) QTY INC IN UNIT
						GROUP 03 50-MHZ CONVERTER,A3		
5	1	PAHZZ	5915-00-874-0493	08552-60148	28480	FILTER ASSEMBLY	EA	1
5	2	PAHZZ	6625-00-004-4983	08552-60112	50436	CIRCUIT CARD ASSEMBLY	EA	1
5	3	PAHZZ	5910-01-014-2874	0160-3456	28480	CAPACITOR,FIXED	EA	8
5	4	PAHZZ	5910-00-809-4701	150D685X9035B2DY S	56289	CAPACITOR,FIXED,ELECTROLYTIC	EA	2
5	5	PAHZZ	5910-00-430-5626	0160-2142	28480	CAPACITOR,ELEC	EA	1
5	6	PAHZZ	5910-00-406-9675	0160-2307	28480	CAPACITOR,FIXED	EA	1
5	7	PAHZZ	5910-00-776-4185	0121-0059	28480	CAPACITOR,VARIAB	EA	3
5	8	PAHZZ		301-000COH0759C	72982	CAPACITOR,FIXED,CERAMIC DIELECTRIC	EA	3
5	9	PAHZZ	5910-00-464-9932	RDM15E510J1C	72136	CAPACITOR,FIXED,MICA DIELECTRIC	EA	1
5	10	PAHZZ	5961-00-914-7496	1901-0050	28480	SEMICONDUCTOR	EA	4
5	11	PAHZZ	5950-00-657-8167	9140-0114	28480	COIL,RADIO FREQ	EA	2
5	12	PAHZZ	5950-00-845-6927	9140-0129	28480	COIL,RADIO FREQ	EA	2
5	13	PAHZZ	5950-00-780-7332	9100-0346	28480	COIL,RADIO FREQUENCY	EA	1
5	14	PAHZZ	5950-00-925-5249	1537-12	99800	COIL,RADIO FREG	EA	4
5	15	PAHZZ	5961-00-464-4049	1854-0247	28480	TRANSISTOR	EA	1
5	16	PAHZZ	5961-00-179-8478	2N4917	80131	TRANSISTOR	EA	1
5	17	PAHZZ	5905-00-929-2529	0757-0438	28480	RESISTOR,FIXED	EA	1
5	18	PAHZZ	5905-00-976-3418	0698-3155	28480	RESISTOR,FIXED	EA	1
5	19	PAHZZ	5905-00-493-5404	0757-0420	28480	RESISTOR,FIXED	EA	1
5	20	PAHZZ	5905-00-830-6677	0757-0159	28480	RESISTOR,FIXED	EA	1
5	21	PAHZZ	5905-00-407-0075	0698-3429	28480	RESISTOR,FIXED	EA	1
5	22	PAHZZ	5905-00-974-6076	0698-3441	28480	RESISTOR,FIXED	EA	1
5	23	PAHZZ	5905-00-412-0754	0757-1092	28480	RESISTOR,FIXED,FILM	EA	1
5	24	PAHZZ	5905-00-974-6080	0698-3438	28480	RESISTOR,FIXED	EA	1
5	25	PAHZZ	5905-00-407-0076	0698-3433	28480	RESISTOR,FIXED	EA	1
5	26	PAHZZ	5905-00-972-4907	0757-0180	28480	RESISTOR,FIXED	EA	1
5	27	PAHZZ	5905-00-412-4036	0757-0394	28480	RESISTOR,FIXED	EA	4
5	28	PAHZZ	5905-00-788-0291	0757-0398	28480	RESISTOR,FIXED,FILM	EA	1
5	29	PAHZZ	5905-00-974-6075	0698-0082	28480	RESISTOR,FIXED	EA	1
5	30	PAHZZ	5905-00-904-4412	0757-0465	28480	RESISTOR,FIXED	EA	1
5	31	PAHZZ	5956-00-787-7479	08552-80105	50436	TRANSFORMER,RADIO	EA	2
5	32	PAHZZ	5950-00-431-3175	06552-6044	28480	TRANSFORMER, ELEC	EA	2

LEGEND

REF DES	ITEM NO	REF DES	ITEM NO	REF DES	ITEM NO
C1	1	CR12	17	R18	37
C2	2	CR13	17	R19	38
C3	2	CR14	17	R20	39
C5	3	CR15	17	R21	40
C6	4	CR16	17	R22	41
C8	2	CR17	17	R23	39
C9	2	CR18	18	R24	42
C11	2	CR19	17	R25	43
C12	2	CR20	17	R26	44
C13	2	CR21	17	R27	36
C14	2	CR22	17	R28	29
C15	6	CR23	17	R29	40
C16	7	CR48	17	R30	36
C17	3	CR49	17	R31	45
C18	8	L3	20	R32	31
C19	9	L4	21	R33	46
C20	10	L6	19	R34	47
C21	11	L7	19	R35	47
C22	2	L8	19	R36	48
C23	2	L9	19	R37	47
C24	10	L10	21	R38	49
C25	2	L11	22	R39	39
C26	12	L12	22	R40	39
C27	2	L13	21	R41	41
C28	2	L14	22	R42	39
C29	13	L15	22	R43	42
C30	14	L17	22	R44	50
C31	3	L18	22	R45	51
C32	8	Q1	26	R46	36
C33	10	Q2	26	R47	29
C34	9	Q3	26	R48	40
C35	2	Q4	27	R49	36
C36	2	Q5	25	R50	45
C37	10	Q6	26	R51	31
C38	2	Q7	26	R52	46
C39	12	Q8	27	R53	47
C40	2	Q9	25	R54	47
C41	2	Q10	26	R55	48
C46	10	R1	28	R56	47
C47	9	R2	29	R57	52
C48	11	R3	30	R58	39
C49	2	R4	31	R59	39
C50	10	R5	32	R60	41
C52	2	R6	30	R62	42
C96	11	R7	31	R64	40
CR1	17	R8	32	R65	38
CR2	17	R9	33	R133	63
CR3	17	R11	31	TP1	64
CR5	17	R12	34	TP2	64
CR6	17	R13	31	TP6	64
CR7	17	R14	35	TP7	64
CR8	17	R15	31	W1	65
CR9	17	R16	31	Y1	66
CR10	17	R17	36	Y2	66
CR11	18			Y3	66

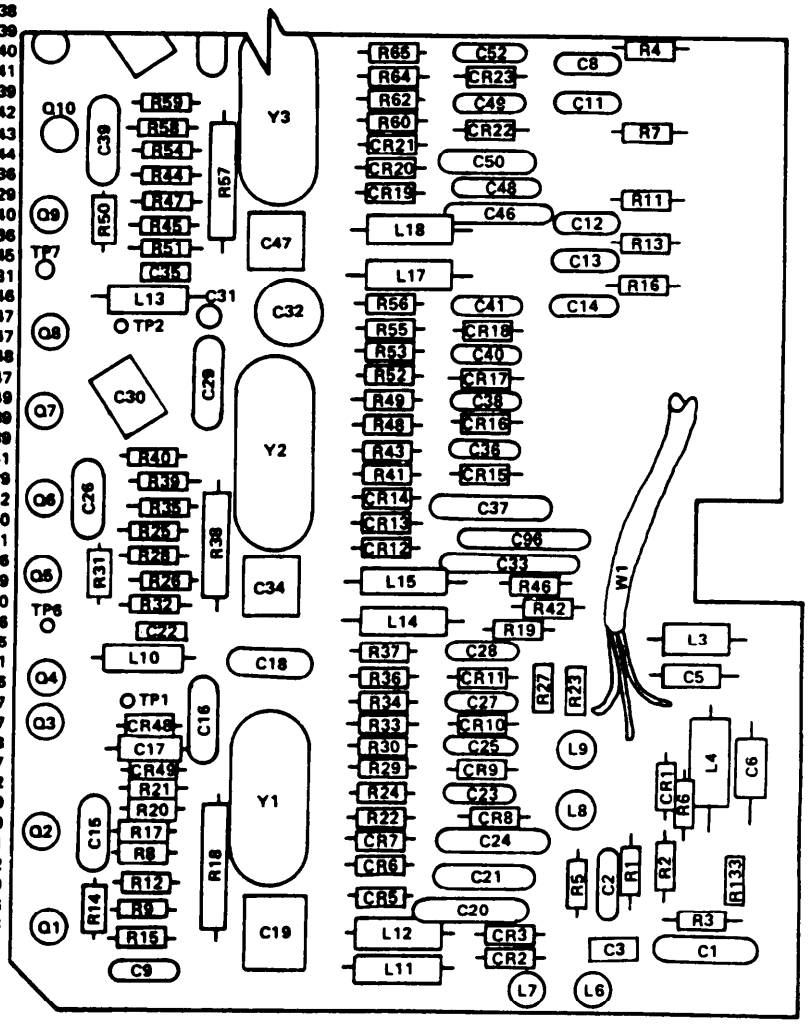

PREFIX ALL REFERENCE DESIGNATORS WITH A4

ELAAZ011

Figure 6. Circuit Card Assembly, Crystal Filter (Sheet 1 of 2)

LEGEND

REF DES	ITEM NO	REF DES	ITEM NO	REF DES	ITEM NO
C4	2	CR33	18	R81	50
C7	5	CR34	17	R82	51
C10	2	CR35	17	R83	42
C42	13	CR36	17	R84	29
C43	14	CR37	17	R85	31
C44	3	CR38	17	R86	38
C45	8	CR39	17	R87	45
C51	2	CR40	17	R88	47
C53	2	CR41	18	R89	40
C54	2	CR42	17	R90	36
C55	12	CR43	17	R91	52
C56	13	CR44	17	R92	46
C57	14	CR45	17	R93	47
C58	3	CR46	17	R94	39
C59	8	CR47	17	R95	39
C60	10	L1	19	R96	48
C61	9	L2	19	R97	47
C62	11	L5	21	R98	41
C63	2	L16	21	R99	39
C64	2	L19	21	R100	31
C65	10	L20	22	R101	42
C66	12	L21	22	R102	30
C67	2	L22	21	R103	36
C68	2	L23	22	R104	28
C69	2	L24	22	R105	40
C70	14	L25	21	R106	36
C71	2	L26	23	R107	30
C72	3	MP1	24	R108	46
C73	8	MP10	24	R109	47
C74	9	Q11	26	R110	54
C75	11	Q12	27	R111	38
C76	10	Q13	25	R112	48
C77	2	Q14	26	R113	47
C78	10	Q15	26	R114	55
C79	2	Q16	27	R115	31
C80	2	Q17	25	R116	56
C81	2	Q18	26	R117	47
C82	2	Q19	26	R118	36
C83	15	Q20	27	R119	31
C84	16	Q21	25	R120	47
C85	2	Q22	26	R121	57
C86	10	Q23	25	R122	36
C87	15	Q24	27	R123	58
C88	3	R10	32	R124	36
C89	2	R61	39	R125	59
C90	10	R63	36	R126	46
C91	2	R66	46	R127	47
C92	2	R67	47	R128	28
C93	2	R68	53	R129	60
C94	2	R69	47	R130	47
C95	2	R70	50	R131	61
CR4	17	R71	51	R132	62
CR24	17	R72	29	TP3	64
CR25	18	R73	31	TP4	64
CR26	17	R74	45	TP5	64
CR27	17	R75	47	TP8	64
CR28	17	R76	52	TP9	64
CR29	17	R77	39	TP10	64
CR30	17	R78	39	W2	65
CR31	17	R79	41	Y4	66
CR32	17	R80	39	Y5	66

PREFIX ALL REFERENCE DESIGNATORS WITH A4

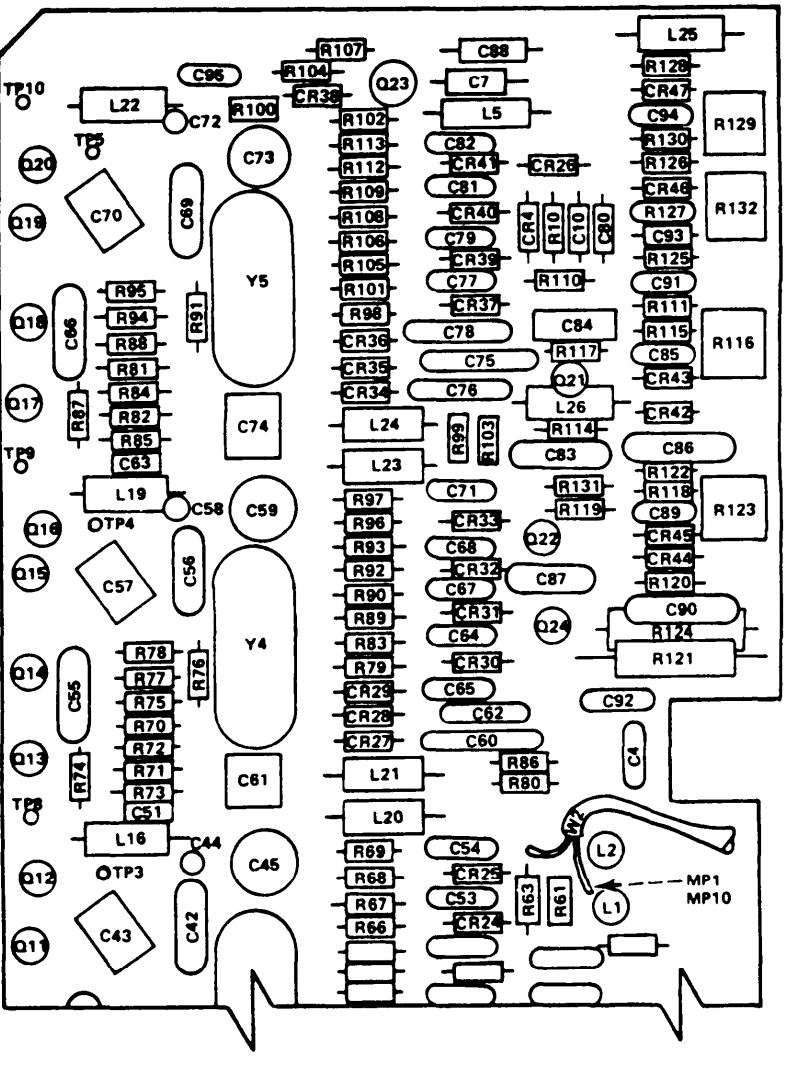

Figure 6. Circuit Card Assembly, Crystal Filter (Sheet 2 of 2)

(1) ILLUSTRATION (A) FIG. NO.	(1) ILLUSTRATION (B) ITEM NO.	(2) SMR CODE	(3) NATIONAL STOCK NUMBER	(4) PART NUMBER	(5) FSCM	(6) DESCRIPTION USABLE ON CODE	(7) U/M	(8) QTY INC IN UNIT
						GROUP 04 CIRCUIT ASSEMBLY,CRYSTAL FILTER,A4		
6	1	XDDZZ		0160-0121	28480	CAPACITOR,FIXED,PAP	EA	1
6	2	XDDZZ	5910-00-211-1611	0160-2055	28480	CAPACITOR,FIXED	EA	43
6	3	XDDZZ		150D225X9020A2DY S	56289	CAPACITOR,FIXED,ELECTROLYTIC	EA	7
6	4	XDDZZ	5910-00-456-4474	1500105X9035A2DY S	56289	CAPACITOR,FIXED,ELECTROLYTIC	EA	1
6	5	XDDZZ		0180-1745	28480	CAPACITOR,FIXED,ELECTROLYTIC	EA	1
6	6	XDDZZ		0160-2308	28480	CAPACITOR,FIXED	EA	1
6	7	XDDZZ	5910-00-719-9879	0160-2202	28480	CAPACITOR,ELEV	EA	1
6	8	XDDZZ	5910-00-858-9211	0121-0443	28480	CAPACITOR,VARIAB	EA	5
6	9	XDDZZ	5910-00-761-1216	0121-0105	28480	CAPACITOR,VARIAB	EA	5
6	10	XDDZZ	5910-00-008-4458	0160-3460	28480	CAPACITOR,FIXED	EA	12
6	11	XDDZZ	5910-00-006-5732	0160-3060	28480	CAPACITOR,FIXED	EA	5
6	12	XDDZZ		RDM15E560J300V	19701	CAPACITOR,FIXED,MICA DIELECTRIC	EA	4
6	13	XDDZZ	5910-00-782-1853	RDM15E620J3C	00853	CAPACITOR,FIXED	EA	6
6	14	XDDZZ	5910-00-463-5960	0121-0036	28480	CAPACITOR,VARIAB	EA	4
6	15	XDDZZ	5910-00-957-2054	0160-2150	28480	CAPACITOR,FIXED,MICA DIELECTRIC	EA	2
6	16	XDDZZ		301-000COH0100J	72982	CAPACITOR,FIXED,CERAMIC DIELECTRIC	EA	1
6	17	XDDZZ	5961-00-928-7939	FDG1088	34148	SEMICONDUCTOR	EA	44
6	18	XDDZZ	5961-00-787-3394	1901-0639	28480	SEMICONDUCTOR	EA	5
6	19	XDDZZ		9100-1648	28480	COIL,RADIO FREQ	EA	6
6	20	XDDZZ	5950-00-845-6927	9140-0129	28480	COIL,RADIO FREQ	EA	1
6	21	XDDZZ		9100-1629	28480	COIL,RADIO FREQUENCY	EA	8
6	22	XDDZZ	5950-00-431-3197	9100-1622	28480	COIL,ELECTRICAL	EA	10
6	23	XDDZZ	5950-00-431-3215	15-1315-12J	82142	COIL,RADIO FREQ	EA	1
6	24	XDDZZ	5940-00-993-9338	0360-0124	28480	TERMINAL,STUD	EA	2
6	25	XDDZZ	5961-00-137-4608	1854-0071	28480	TRANSISTOR	EA	7
6	26	XDDZZ	5961-00-904-2540	1853-0020	28480	TRANSISTOR	EA	11
6	27	XDDZZ	5961-00-919-4566	1854-0019	28480	TRANSISTOR	EA	6
6	28	XDDZZ		0698-7253	28480	RESISTOR,FIXED,FILM	EA	3
6	29	XDDZZ		0698-7223	28480	RESISTOR,FIXED,FILM	EA	5
6	30	XDDZZ		0698-7267	28480	RESISTOR,FIXED,FILM	EA	4
6	31	XDDZZ	590500-138-7305	0698-7212	28480	RESISTOR,FIXED	EA	13
6	32	XDDZZ		0698-7260	28480	RESISTOR,FIXED,FILM	EA	3
6	33	XDDZZ		0698-7268	28480	RESISTOR,FIXED,FILM	EA	1
6	34	XDDZZ		0698-7213	28480	RESISTOR,FIXED,FILM	EA	1
6	35	XDDZZ		0698-7209	28480	RESISTOR,FIXED,FILM	EA	1
6	36	XDDZZ		0698-7236	28480	RESISTOR,FIXED,FILM	EA	14
6	37	XDDZZ	5905-00-407-2350	0698-3334	28480	RESISTOR,FIXED	EA	1

(1) ILLUSTRATION (A) FIG. NO.	(1) ILLUSTRATION (B) ITEM NO.	(2) SMR CODE	(3) NATIONAL STOCK NUMBER	(4) PART NUMBER	(5) FSCM	(6) DESCRIPTION USABLE ON CODE	(7) U/M	(8) QTY INC IN UNIT
6	38	XDDZZ		0698-7284	28480	RESISTOR,FIXED,FILM	EA	2
6	39	XDDZZ		0698-7231	28480	RESISTOR,FIXED,FILM	EA	14
6	40	XDDZZ		0698-7227	28480	RESISTOR,FIXED,FILM	EA	6
6	41	XDDZZ		0698-7202	28480	RESISTOR,FIXED,FILM	EA	5
6	42	XDDZZ		0698-7214	28480	RESISTOR,FIXED,FILM	EA	5
6	43	XDDZZ		0698-7269	28480	RESISTOR,FIXED,FILM	EA	1
6	44	XDDZZ		0698-7275	28480	RESISTOR,FIXED,FILM	EA	1
6	45	XDDZZ	5905-00-161-8936	0698-7200	28480	RESISTOR,FIXED	EA	4
6	46	XDDZZ	5905-00-163-0847	0698-7240	28480	RESISTOR,FIXED	EA	6
6	47	XDDZZ		0698-7244	28480	RESISTOR,FIXED,FILM	EA	18
6	48	XDDZZ		0698-7256	28480	RESISTOR,FIXED,FILM	EA	4
6	49	XDDZZ		0757-1060	28480	RESISTOR,FIXED,FILM	EA	1
6	50	XDDZZ		0698-7270	28480	RESISTOR,FIXED,FILM	EA	3
6	51	XDDZZ		0698-7278	28480	RESISTOR,FIXED,FILM	EA	3
6	52	XDDZZ		0757-1090	28480	RESISTOR,FIXED,FILM	EA	3
6	53	XDDZZ		0698-7257	28480	RESISTOR,FIXED,FILM	EA	1
6	54	XDDZZ		0698-7265	28480	RESISTOR,FIXED,FILM	EA	1
6	55	XDDZZ		0698-7224	28480	RESISTOR,FIXED,FILM	EA	1
6	56	XDDZZ	5905-00-139-2307	2100-2574	28480	RESISTOR,VARIABL	EA	1
6	57	XDDZZ	5905-00-469-2957	0698-3403	28480	RESISTOR,FIXED	EA	1
6	58	XDDZZ	5905-00-476-5796	2100-2633	28480	RESISTOR,VARIABL	EA	1
6	59	XDDZZ	5905-01-009-1560	0698-7229	28480	RESISTOR,FIXED	EA	1
6	60	XDDZZ	5905-00-476-5797	2100-2522	28480	RESISTOR,VARIABL	EA	1
6	61	XDDZZ		0698-7188	28480	RESISTOR,FIXED,FILM	EA	1
6	62	XDDZZ	5905-00-105-1774	2100-2489	28480	RESISTOR,VARIABL	EA	1
6	63	XDDZZ	5905-00-407-2402	2100-1788	28480	RESISTOR,VARIABL	EA	1
6	64	XDDZZ		0360-1514	28480	TERMINAL,STUD	EA	10
6	65	XDDZZ		08552-60128	28480	CABLE ASSEMBLY,CRYSTAL	EA	2
6	66	PADZZ	5955-00-885-7556	0410-0404	28480	CRYSTAL UNIT,QUA	EA	5

LEGEND

REF DES	ITEM NO	REF DES	ITEM NO	REF DES	ITEM NO
C1	1	Q13	24	R37	50
C2	2	Q14	22	R38	50
C3	3	Q15	25	R39	51
C4	4	Q16	23	R40	52
C5	5	Q17	23	R41	50
C6	2	Q18	22	R42	53
C7	4	Q19	22	R43	54
C8	2	Q20	22	R44	46
C9	6	Q21	22	R45	55
C10	7	Q22	23	R46	56
C11	8	Q23	22	R47	57
C12	7	Q24	23	R48	58
C13	9	Q25	22	R49	59
C14	10	Q26	26	R50	60
C15	10	Q27	23	R51	61
C16	11	R2	27	R52	62
C17	12	R3	28	R53	63
C18	12	R4	29	R54	64
C19	10	R5	30	R55	65
C20	12	R6	31	R56	36
CR1	13	R7	32	R57	66
CR2	14	R8	33	R58	67
CR3	13	R9	34	R59	31
CR4	15	R10	35	R60	68
CR5	16	R11	36	R61	69
CR6	17	R12	37	R62	70
CR7	13	R13	38	R63	59
CR8	13	R14	36	R64	71
CR9	13	R15	39	R65	72
CR10	15	R16	40	R66	73
CR11	18	R17	41	R67	74
CR12	19	R19	29	R68	30
CR13	13	R20	42	R69	49
CR14	17	R21	43	R70	37
CR15	13	R22	31	R71	55
CR16	20	R23	30	R72	37
CR17	21	R24	35	R74	75
CR18	21	R25	44	R75	76
Q1	22	R26	33	R76	77
Q2	23	R27	45	R77	78
Q3	22	R28	46	R78	79
Q4	22	R29	47	R79	80
Q5	22	R30	45	TP1	81
Q6	22	R31	48	TP2	81
Q7	22	R32	40	TP3	81
Q8	22	R33	41	U1	82
Q9	22	R34	45	U2	82
Q10	24	R35	49	Z1	83
Q11	23	R36	49	Z2	84
Q12	23				

PREFIX ALL REFERENCE DESIGNATORS WITH A5

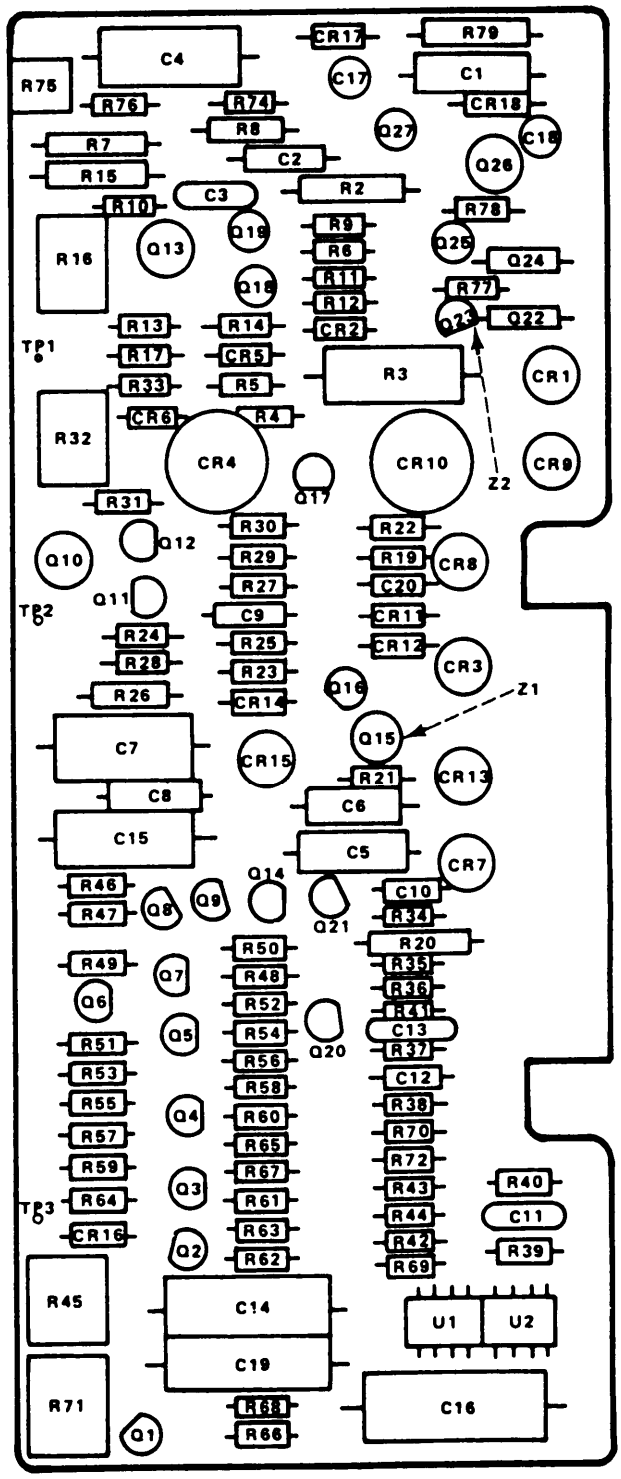

Figure 7. Circuit Card Assembly, Power Supply

(1) ILLUSTRATION (A) FIG. NO.	(1) ILLUSTRATION (B) ITEM NO.	(2) SMR CODE	(3) NATIONAL STOCK NUMBER	(4) PART NUMBER	(5) FSCM	(6) DESCRIPTION USABLE ON CODE	(7) U/M	(8) QTY INC IN UNIT
						GROUP 05 CIRCUIT ASSEMBLY,POWER SUPPLY,A5		
7	1	XDDZZ	5910-00-893-1261	182P33382PTS	56289	CAPACITOR,FIXED	EA	1
7	2	XDDZZ	5910-00-809-4701	150D685X903582DY S	56289	CAPACITOR,FIXED,ELECTROLYTIV	EA	3
7	3	XDDZZ	5910-00-430-5685	0160-2208	28480	CAPACITOR,ELEC	EA	1
7	4	XDDZZ		0180-1747	28480	CAPACITOR,FIXED,ELECTROLYTIC	EA	2
7	5	XDDZZ	5910-00-850-2162	192P22392PTS	56289	CAPACITOR,FIXED,PLASTIC DIELECTRIC	EA	1
7	6	XDDZZ	5910-00-965-9728	192P1029PTS	56289	CAPACITOR,FIXED	EA	1
7	7	XDDZZ		150D225X9J20A2DY S	56289	CAPACITOR,FIXED,ELECTROLYTIC	EA	2
7	8	XDDZZ		0160-0121	28480	CAPACITOR,FIXED,PAP	EA	1
7	9	XDDZZ		0160-2211	28480	CAPACITOR,FIXED,MICA DIELECTRIC	EA	1
7	10	XDDZZ	5910-00-027-7069	0180-0058	28480	CAPACITOR,FIXED	EA	3
7	11	XDDZZ	5910-00-187-2609	0180-2215	28480	CAPACITOR,FIXED	EA	1
7	12	XDDZZ	5910-00-211-1611	0160-2055	28480	CAPACITOR,FIXED	EA	3
7	13	XDDZZ	5961-00-867-9264	1901-0416	28480	SEMICONDUCTOR	EA	7
7	14	XDDZZ	5961-00-995-2310	1902-3104	28480	SEMICONDUCTOR	EA	1
7	15	XDDZZ	5961-00-945-3380	2N3528	02735	TRANSISTOR	EA	2
7	16	XDDZZ	5961-00-412-0858	1902-3268	28480	SEMICONDUCTOR	EA	1
7	17	XDDZZ	5961-00-103-7417	1N823	04713	SEMICONDUCTOR	EA	2
7	18	XDDZZ	5961-00-412-0957	1902-3256	28480	SEMICONDUCTOR	EA	1
7	19	XDDZZ	5961-00-007-9067	1902-0040	28480	SEMICONDUCTOR	EA	1
7	20	XDDZZ		FD2387	07263	SEMICONDUCTOR DEVICE,DIODE	EA	1
7	21	XDDZZ	5961-00-931-6989	1902-3070	28480	SEMICONDUCTOR	EA	2
7	22	XDDZZ	5961-00-137-4608	1854-0071	28480	TRANSISTOR	EA	15
7	23	XDDZZ	5961-00-904-2540	1853-0020	28480	TRANSISTOR	EA	8
7	24	XDDZZ	5961-00-836-1887	1854-0221	28480	SEMICONDUCTOR	EA	2
7	25	XDDZZ	5961-00-728-7874	2N3134	80131	TRANSISTOR	EA	1
7	26	XDDZZ	5961-00-890-5369	1854-0003	28480	TRANSISTOR	EA	1
7	27	XDDZZ	5905-00-931-4067	0698-3420	28480	RESISTOR,FIXED	EA	1
7	28	XDDZZ		0764-0018	28480	RESISTOR,FIXED,FILM	EA	1
7	29	XDDZZ	5905-00-493-0777	0757-0276	28480	RESISTOR,FIXED	EA	2
7	30	XDDZZ	5905-00-898-1795	0757-0416	28480	RESISTOR,FIXED	EA	3
7	31	XDDZZ	5905-00-096-4167	0757-0405	28480	RESISTOR,FIXED	EA	3
7	32	XDDZZ	5905-00-891-4217	0698-3408	28480	RESISTOR,FIXED	EA	1
7	33	XDDZZ	5905-00-898-1953	EB27G1	01121	RESISTOR	EA	2
7	34	XDDZZ	5905-00-110-0851	0757-0278	28480	RESISTOR,FIXED	EA	1
7	35	XDDZZ	5905-00-853-8190	0757-0280	28480	RESISTOR,FIXED	EA	2
7	36	XDDZZ	5905-00-858-8959	0757-0460	28480	RESISTOR,FIXED	EA	3
7	37	XDDZZ	5905-00-481-1357	0698-3150	28480	RESISTOR,FIXED	EA	3

(1) ILLUSTRATION (A) FIG. NO.	(1) ILLUSTRATION (B) ITEM NO.	(2) SMR CODE	(3) NATIONAL STOCK NUMBER	(4) PART NUMBER	(5) FSCM	(6) DESCRIPTION USABLE ON CODE	(7) U/M	(8) QTY INC IN UNIT
7	38	XDDZZ	5905-00-891-4247	0698-3136	28480	RESISTOR,FIXED,FILM	EA	1
7	39	XDDZZ	5905-00-195-3485	0698-0089	28480	RESISTOR,FIXED	EA	1
7	40	XDDZZ	5905-00-402-1156	2100-1754	28480	RESISTOR,VARIABL	EA	2
7	41	XDDZZ	5905-00-493-5404	0757-0420	28480	RESISTOR,FIXED	EA	2
7	42	XDDZZ	5905-00-407-0057	0698-3419	28480	RESISTOR,FIXED	EA	1
7	43	XDDZZ	5905-00-974-6073	0698-0084	28480	RESISTOR,FIXED	EA	1
7	44	XDDZZ	5905-00-244-7189	0757-0317	28480	RESISTOR,FIXED	EA	1
7	45	XDDZZ	5905-00-981-7513	0757-0199	28480	RESISTOR,FIXED	EA	3
7	46	XDDZZ	5905-00-858-6799	0757-0441	28480	RESISTOR,FIXED	EA	2
7	47	XDDZZ	5905-00-412-4037	0757-0418	28480	RESISTOR,FIXED	EA	1
7	48	XDDZZ	5905-00-974-6083	0698-3446	28480	RESISTOR,FIXED	EA	1
7	49	XDDZZ	5905-00-904-4412	0757-0465	28480	RESISTOR,FIXED	EA	3
7	50	XDDZZ	5905-00-078-1548	0698-3453	28480	RESISTOR,FIXED	EA	3
7	51	XDDZZ		0698-4519	28480	RESISTOR,FIXED,FILM	EA	1
7	52	XDDZZ	5905-00-405-3726	0698-3458	28480	RESISTOR,FIXED	EA	1
7	53	XDDZZ	5905-00-828-0404	0698-3447	28480	RESISTOR,FIXED	EA	1
7	54	XDDZZ	5905-00-858-9132	0757-0444	28480	RESISTOR,FIXED	EA	1
7	55	XDDZZ	5905-00-229-1971	2100-1760	28480	RESISTOR,VARIABL	EA	2
7	56	XDDZZ	5905-00-974-6079	0698-3444	28480	RESISTOR,FIXED	EA	1
7	57	XDDZZ	5905-00-998-1902	0757-0400	28480	RESISTOR,FIXED	EA	1
7	58	XDDZZ	5905-00-826-3262	0698-3450	28480	RESISTOR,FIXED	EA	1
7	59	XDDZZ	5905-00-981-7529	0757-0401	28480	RESISTOR,FIXED	EA	2
7	60	XDDZZ	5905-00-840-8162	0698-3162	28480	RESISTOR,FIXED	EA	1
7	61	XDDZZ	5905-00-405-8091	0757-0402	28480	RESISTOR,FIXED	EA	1
7	62	XDDZZ	5905-00-494-4628	0757-0458	28480	RESISTOR,FIXED	EA	1
7	63	XDDZZ	5905-00-412-4023	0757-0403	28480	RESISTOR,FIXED	EA	1
7	64	XDDZZ	5905-00-997-9579	0757-0459	28480	RESISTOR,FIXED	EA	1
7	65	XDDZZ	5905-00-402-7080	0698-3437	28480	RESISTOR,FIXED	EA	1
7	66	XDDZZ	5905-00-974-6080	0698-3438	28480	RESISTOR,FIXED	EA	1
7	67	XDDZZ	5905-00-089-7577	0757-0461	28480	RESISTOR,FIXED	EA	1
7	68	XDDZZ	5905-00-493-0783	0757-0462	28480	RESISTOR,FIXED	EA	1
7	69	XDDZZ	5905-00-929-2529	0757-0438	28480	RESISTOR,FIXED	EA	1
7	70	XDDZZ	5905-00-998-1814	0698-0085	28480	RESISTOR,FIXED	EA	1
7	71	XDDZZ	5905-00-407-0059	0698-3439	28480	RESISTOR,FIXED	EA	1
7	72	XDDZZ	5905-00-764-2026	0757-0463	28480	RESISTOR,FIXED	EA	1
7	73	XDDZZ	5905-00-828-0377	0698-3440	28480	RESISTOR,FIXED	EA	1
7	74	XDDZZ	5905-00-420-7155	0757-0464	28480	RESISTOR,FIXED	EA	1
7	75	XDDZZ	5905-00-193-4298	0757-0453	28480	RESISTOR,FIXED	EA	1
7	76	XDDZZ	5905-00-103-1774	2100-2489	28480	RESISTOR,VARIABL	EA	1
7	77	XDDZZ	5905-00-954-8681	0757-0122	28480	RESISTOR,FIXED	EA	1

(1) ILLUSTRATION (A) FIG. NO.	(1) ILLUSTRATION (B) ITEM NO.	(2) SMR CODE	(3) NATIONAL STOCK NUMBER	(4) PART NUMBER	(5) FSCM	(6) DESCRIPTION USABLE ON CODE	(7) U/M	(8) QTY INC IN UNIT
7	78	XDDZZ	5905-00-998-1792	0757-0442	28480	RESISTOR,FIXED	EA	1
7	79	XDDZZ	5905-00-221-8310	0757-0279	28480	RESISTOR,FIXED	EA	1
7	80	XDDZZ	5905-00-196-6747	0757-0795	28480	RESISTOR,FIXED	EA	1
7	81	XDDZZ		0360-1514	28480	TERMINALM,STUD	EA	3
7	82	PADZZ	5962-00-247-9568	1826-0013	28480	MICROCIRCUIT,LIN	EA	2
7	83	XDDZZ	5950-00-784-0475	56-590-65-38	02114	COIL,RADIO FREQ	EA	1
7	84	XDDZZ	5950-00-406-6419	9170-0029	28480	CORE,FERRITE BEA	EA	1

LEGEND

REF DES	ITEM NO	REF DES	ITEM NO
C1	1	R6	29
C2	2	R7	34
C3	3	R8	34
C4	4	R9	35
C5	3	R10	36
C6	3	R11	37
C7	5	R12	38
C8	5	R13	39
C9	6	R14	40
C10	7	R15	41
C11	8	R16	42
C12	3	R17	29
C13	9	R18	36
C14	10	R19	43
C15	11	R20	44
C16	12	R21	34
C17	13	R22	45
C18	12	R23	35
C19	14	R24	46
C20	15	R25	47
C21	12	R26	32
C22	5	R27	47
CR1	16	R28	46
CR2	17	R29	35
CR3	17	R30	43
CR4	17	R31	40
CR5	17	R32	48
CR6	17	R33	41
CR7	17	R34	49
CR8	17	R35	50
CR9	17	R36	36
CR10	17	R37	40
CR11	17	R38	46
CR12	18	R39	45
CR13	19	R40	34
CR14	20	R41	29
CR15	17	R42	51
CR16	17	R43	36
L1	21	R44	52
L2	21	R45	47
L3	21	R46	53
L4	22	R47	54
L5	23	R48	55
Q1	24	R49	55
Q2	24	R50	56
Q3	25	R51	51
Q4	24	R52	29
Q5	26	R53	32
Q6	25	R54	56
Q7	24	R55	57
Q8	25	R56	58
Q9	24	R57	59
Q10	25	R58	60
Q11	24	R59	61
Q12	27	R60	62
Q13	25	R61	29
Q14	25	R62	42
Q15	24	S1	63
Q16	24	TP1	64
Q17	28	TP2	64
Q18	28	TP3	64
R1	29	TP4	64
R2	30	TP5	64
R3	31	U1	65
R4	32	U2	65
R5	33	Y1	66

PREFIX ALL REFERENCE DESIGNATORS WITH A6

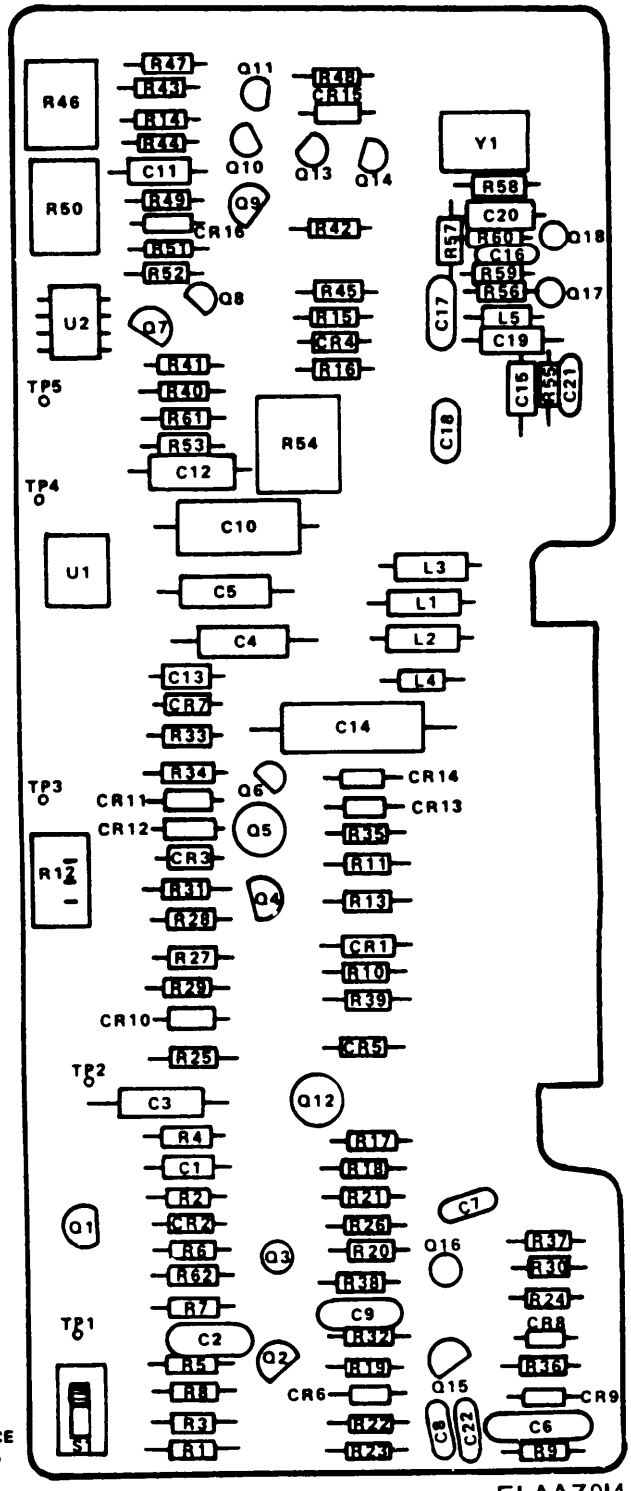

ELAAZ014

Figure 8. Circuit Card Assembly, Scan Generator

(1) ILLUSTRATION (A) FIG. NO.	(1) ILLUSTRATION (B) ITEM NO.	(2) SMR CODE	(3) NATIONAL STOCK NUMBER	(4) PART NUMBER	(5) FSCM	(6) DESCRIPTION USABLE ON CODE	(7) U/M	(8) QTY INC IN UNIT
						GROUP 06 CIRCUIT CARD ASSEMBLY,SCAN GENERATOR,A6		
8	1	XDDZZ		1500104X9035A2DYS	56289	CAPACITOR,FIXED,ELECTROLYTIC	EA	1
8	2	XDDZZ	5910-00-914-2605	RDM15F2G1J3C	72136	CAPACITOR,FIXED,MICA DIELECTRIC	EA	1
8	3	XDDZZ	5910-00-809-4701	150D685X9035B2DYS	56289	CAPACITOR,FIXED,ELECTROLYTIC	EA	4
8	4	XDDZZ	5910-00-261-3413	0160-2218	28480	CAPACITOR,FIXED	EA	1
8	5	XDDZZ	5910-00-211-1611	0160-2055	28480	CAPACITOR,FIXED	EA	3
8	6	XDDZZ	5910-00-455-0119	0160-0939	28480	CAPACITOR,ELEC	EA	1
8	7	XDDZZ	5910-00-917-0668	192P10492PTS	56289	CAPACITOR,FIXED	EA	1
8	8	XDDZZ	5910-00-965-9728	192P10292PTS	56289	CAPACITOR,FIXED	EA	1
8	9	XDDZZ		0180-2195	28480	CAPACITOR,FIXED,ELECTROLYTIC	EA	1
8	10	XDDZZ	5910-00-138-3397	0180-2268	28480	CAPACITOR,ELEC	EA	1
8	11	XDDZZ	5910-00-776-4185	0121-0059	28480	CAPACITOR,VARIAB	EA	1
8	12	XDDZZ	5910-00-784-0927	0150-0050	28480	CAPACITOR,FIXED,CERAMIC DIELECTRIC	EA	3
8	13	XDDZZ	5910-00-430-5674	0160-2205	28480	CAPACITOR,ELEC	EA	1
8	14	XDDZZ		301-000COH0100J	72982	CAPACITOR,FIXED,CERAMIC DIELECTRIC	EA	1
8	15	XDDZZ	5910-00-082-0042	301-000COK0159C	72982	CAPACITOR,FIXED	EA	1
8	16	XDDZZ	5961-00-847-5242	1902-3171	28480	SEMICONDUCTOR DEVICE	EA	1
8	17	XDDZZ		F02387	07263	SEMICONDUCTOR DEVICE,DIODE	EA	12
8	18	XDDZZ		1N936	04713	SEMICONDUCTOR DEVICE,DIODE	EA	1
8	19	XDDZZ	5961-00-873-0857	1902-0202	28480	SEMICONDUCTOR DEVICE	EA	1
8	20	XDDZZ	5961-00-476-5740	1902-0556	28480	SEMICONDUCTOR DEVICE	EA	1
8	21	XDDZZ	5950-00-431-3215	15-1315-12J	82142	COIL,RADIO FREQ	EA	3
8	22	XDDZZ	5950-00-430-6909	9100-2267	28480	COIL,ELECTRICAL	EA	1
8	23	XDDZZ	5950-00-779-3472	1025-24	99800	COIL,RADIO FREQ	EA	1
8	24	XDDZZ	5961-00-137-4608	1854-0071	28480	TRANSISTOR	EA	8
8	25	XDDZZ	5961-00-904-2540	1853-0020	28480	TRANSISTOR	EA	6
8	26	XDDZZ	5961-00-985-9073	2N3053	80131	TRANSISTOR	EA	1
8	27	XDDZZ	5961-00-229-1963	1854-0232	28480	TRANSISTOR	EA	1
8	28	XDDZZ	5961-00-919-4566	1854-0019	28480	TRANSISTOR	EA	2
8	29	XDDZZ	5905-00-929-2529	0757-0438	28480	RESISTOR,FIXED	EA	6
8	30	XDDZZ	5905-00-998-1906	0757-0346	28480	RESISTOR	EA	1
8	31	XDDZZ	5905-00-089-7577	0757-0461	28480	RESISTOR,FIXED	EA	1
8	32	XDDZZ	5905-00-891-4215	0698-3154	28480	RESISTOR,FIXED	EA	3
8	33	XDDZZ	5905-00-764-2026	0757-0463	28480	RESISTOR,FIXED	EA	1
8	34	XDDZZ	5905-00-412-4037	0757-0418	28480	RESISTOR,FIXED	EA	4
8	35	XDDZZ	5905-00-853-8190	0757-0280	28480	RESISTOR,FIXED	EA	3
8	36	XDDZZ	5905-00-891-4247	0698-3136	28480	RESISTOR,FIXED,FILM	EA	4
8	37	XDDZZ	5905-00-858-6799	0757-0441	28480	RESISTOR,FIXED	EA	1

(1) ILLUSTRATION (A) FIG. NO.	(1) ILLUSTRATION (B) ITEM NO.	(2) SMR CODE	(3) NATIONAL STOCK NUMBER	(4) PART NUMBER	(5) FSCM	(6) DESCRIPTION USABLE ON CODE	(7) U/M	(8) QTY INC IN UNIT
8	38	XDDZZ	5905-00-229-1971	2100-1760	28480	RESISTOR,VARIABLE	EA	1
8	39	XDDZZ	5905-00-407-0060	0698-3455	28480	RESISTOR, FIXED	EA	1
8	40	XDDZZ	5905-00-858-8826	0757-0290	28480	RESISTOR, FIXED	EA	3
8	41	XDDZZ	5905-00-998-1795	0757-0416	28480	RESISTOR, FIXED	EA	2
8	42	XDDZZ	5905-00-904-4412	0757-0465	28480	RESISTOR, FIXED	EA	2
8	43	XDDZZ	5905-00-974-6077	0698-3454	28480	RESISTOR, FIXED	EA	2
8	44	XDDZZ	5905-00-840-8162	0698-3162	28480	RESISTOR, FIXED	EA	1
8	45	XDDZZ	5905-00-998-1792	0757-0442	28480	RESISTOR, FIXED	EA	2
8	46	XDDZZ	5905-00-954-8684	0757-0123	28480	RESISTOR, FIXED	EA	3
8	47	XDDZZ	5905-00-405-3677	0698-3451	28480	RESISTOR, FIXED	EA	3
8	48	XDDZZ	5905-00-858-8927	0698-3158	28480	RESISTOR, FIXED,FILM	EA	1
8	49	XDDZZ	5905-00-420-7130	0698-3152	28480	RESISTOR, FIXED	EA	1
8	50	XDDZZ	5905-00-974-6084	0698-3156	28480	RESISTOR, FIXED	EA	1
8	51	XDDZZ	5905-00-407-0052	0698-0083	28480	RESISTOR, FIXED	EA	2
8	52	XDDZZ	5905-00-998-1908	0757-0289	28480	RESISTOR, FIXED	EA	1
8	53	XDDZZ	5905-00-228-5989	2100-1758	28480	RESISTOR, VARIABLE	EA	1
8	54	XDDZZ	5905-00-974-6078	0698-3160	28480	RESISTOR, FIXED	EA	1
8	55	XDDZZ	5905-00-998-1814	0698-0085	28480	RESISTOR, FIXED	EA	2
8	56	XDDZZ	5905-00-407-0079	2100-1757	28480	RESISTOR, VARIABLE	EA	2
8	57	XDDZZ		0698-7232	28480	RESISTOR, FIXED, FILM	EA	1
8	58	XDDZZ	5905-00-161-8936	0698-7200	28480	RESISTOR, FIXED	EA	1
8	59	XDDZZ		0698-7236	28480	RESISTOR, FIXED, FILM	EA	1
8	60	XDDZZ		0698-7205	28480	RESISTOR, FIXED, FILM	EA	1
8	61	XDDZZ		0698-7238	28480	RESISTOR, FIXED, FILM	EA	1
8	62	XDDZZ		0698-7243	28480	RESISTOR, FIXED, FILM	EA	1
8	63	XDDZZ	5930-00-455-0120	3101-0973	28480	SWITCH, ELEC	EA	1
8	64	XDDZZ		0360-1514	28480	TERMINAL, STUD	EA	5
8	65	XDDZZ	5962-00-247-9568	1826-0013	28480	MICROCIRCUIT, LIN	EA	2
8	66	XDDZZ	5955-00-885-7551	0410-0301	28480	CRYSTAL UNIT, OUA	EA	1

LEGEND

REF DES	ITEM NO	REF DES	ITEM NO
C1	1	R2	25
C2	1	R3	26
C3	2	R4	27
C4	3	R5	28
C5	4	R6	26
C6	5	R7	29
C7	5	R8	30
C8	6	R9	25
C9	5	R10	30
C10	7	R11	31
C11	8	R12	32
C12	9	R13	29
C13	7	R14	33
C14	9	R15	34
C15	7	R16	35
C16	10	R17	36
C17	11	R18	29
C18	11	R19	37
C19	8	R20	38
C20	12	R21	39
CR1	13	R22	29
CR2	14	R23	40
CR3	14	R24	41
CR4	13	R25	34
CR5	14	R26	42
CR6	14	R27	25
CR7	14	R28	43
CR8	15	R29	44
CR9	15	R30	44
CR10	14	R31	32
CR11	14	R32	32
CR12	16	R33	26
CR13	17	R34	45
CR14	17	R35	46
CR15	17	R36	47
CR16	14	R37	48
CR17	17	R38	26
CR18	17	R39	44
CR19	17	R40	49
CR20	17	R41	39
K1	18	R42	41
L1	19	R43	25
L2	19	R44	50
Q1	20	R45	45
Q2	21	R46	51
Q3	22	R47	25
Q4	23	R48	52
Q5	23	R49	25
Q6	23	R50	52
Q7	23	R51	53
Q8	23	R52	53
Q9	23	R53	54
Q10	21	R54	55
Q11	21	R55	55
Q12	23	R56	56
Q13	23	R57	57
Q14	23	R58	58
Q15	22	R59	58
Q16	22	R60	59
Q17	23	R61	59
Q18	23	U1	60
Q19	21	U2	60
R1	24	U3	61

PREFIX ALL REFERENCE DESIGNATORS WITH A7

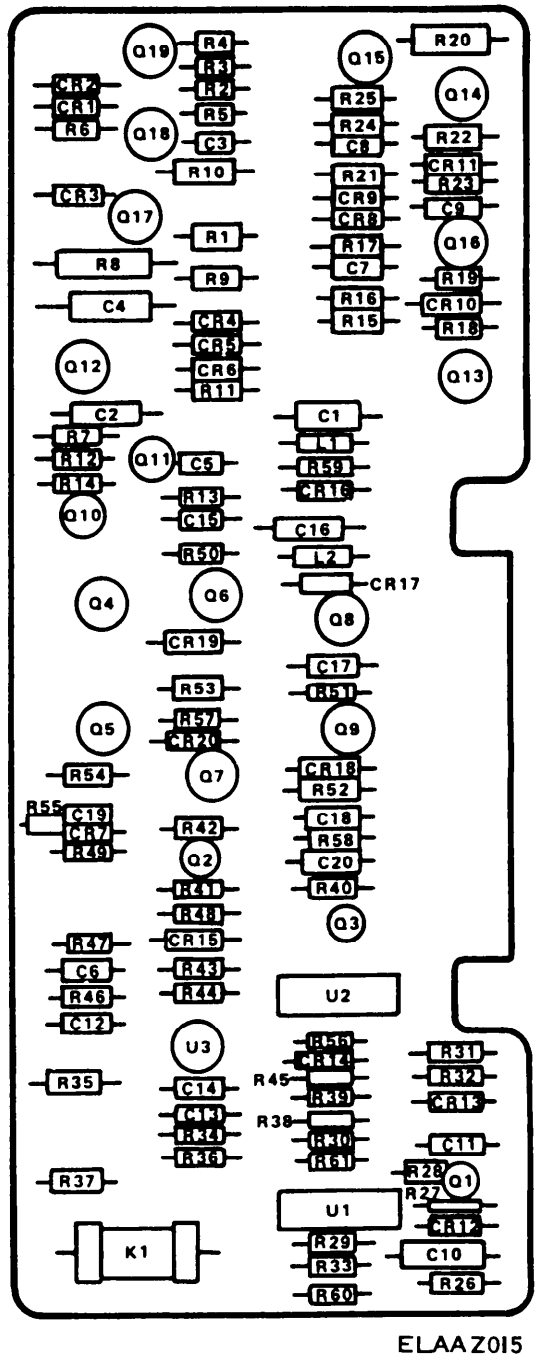

Figure 9. Circuit Card Assembly, Deflection Amplifier

(1) ILLUSTRATION (A) FIG. NO.	(1) ILLUSTRATION (B) ITEM NO.	(2) SMR CODE	(3) NATIONAL STOCK NUMBER	(4) PART NUMBER	(5) FSCM	(6) DESCRIPTION USABLE ON CODE	(7) U/M	(8) QTY INC IN UNIT
						GROUP 07 CIRCUIT CARD ASSEMBLY, DEFLECTION AMPLIFIER, A7		
9	1	XDOZZ	5910-00-809-4701	150D685X903582DYS	56289	CAPACITOR, FIXED, ELECTROLYTIC	EA	2
9	2	XDDZZ	5910-00-444-6725	301NP022PF	72982	CAPACITOR, ELEC	EA	1
9	3	XDDZZ	5910-00-043-1396	0180-0269	28480	CAPACITOR, FIXED	EA	1
9	4	XDDZZ	5910-00-581-7084	000160-3448	28480	CAPACITOR, FIXED	EA	1
9	5	XDDZZ	5910-00-914-2606	RDM15F111J3C	72136	CAPACITOR, FIXED	EA	3
9	6	XDDZZ		301-000C0J0369C	72982	CAPACITOR, FIXED	EA	1
9	7	XDDZZ	5910-00-725-0495	192P1539PTS	56289	CAPACITOR, FIXED	EA	3
9	8	XDDZZ	5910-00-464-9932	RDM15E510J1C	72136	CAPACITOR, FIXED, MICA DIELECTRIC	EA	1
9	9	XDDZZ		1500225X9020A2DYS	56289	CAPACITOR, FIXED, ELECTROLYTIC	EA	2
9	10	XDDZZ	5910-00-430-6036	0180-1746	28480	CAPACITOR, ELEC	EA	1
9	11	XDDZZ		301-00C0K0919C	72982	CAPACITOR, FIXED, CERAMIC DIELECTRIC	EA	2
9	12	XDDZZ	5910-00-719-4370	192P33292PTS	56089	CAPACITOR,FIXED	EA	1
9	13	XDDZZ	5961-00-904-0296	1901-0096	28480	SEMICONDUCTOR	EA	2
9	14	XDDZZ	5961-00-064-3630	FD1415	07263	SEMICONDUCTOR	EA	8
9	15	XDDZZ	5961-00-412-0955	1902-0683	28480	SEMICONDUCTOR	EA	2
9	16	XDDZZ	5961-00-914-3087	1902-0025	28480	SEMICONDUCTOR	EA	1
9	17	XDDZZ	5941-00-928-7939	FDG1088	34148	SEMICONDUCTOR	EA	7
9	18	XDDZZ	5945-00-477-9296	0490-0399	28480	RELAY, ARMATURE	EA	1
9	19	XDDZZ	5950-00-845-6927	9140-0129	28480	COIL, RADIO FREQ	EA	2
9	20	XDDZZ	5961-00-987-4700	1653-0034	28480	TRANSISTOR	EA	1
9	21	XDDZZ	5961-00-408-9807	1654-0404	28480	TRANSISTOR	EA	4
9	22	XDDZZ	5961-00-765-6071	2N3251	80131	TRANSISTOR	EA	3
9	23	XDDZZ	5961-00-229-1963	1854-0232	28480	TRANSISTOR	EA	11
9	24	XDDZZ	5905-00-981-7530	0757-0447	28480	RESISTOR, FIXED	EA	1
9	25	XDDZZ	5905-00-891-4252	0757-0443	28480	RESISTOR, FIXED	EA	5
9	26	XDDZZ	5905+00-420-7130	0698-3152	28480	RESISTOR, FIXED	EA	4
9	27	XDDZZ	5905-00-974-6075	0698-0082	28480	RESISTOR, FIXED	EA	1
3	28	XDDZZ	5905-00-420-7155	0575-0464	28480	RESISTOR, FIXED	EA	1
9	29	XDDZZ	5905-00-974-6079	0698-3444	28480	RESISTOR, FIXED	EA	4
9	30	XDDZZ	5905-00-407-0056	0698-3418	28480	RESISTOR, FIXED	EA	2
9	31	XDDZZ	5905-00-990-0303	0757-0439	28480	RESISTOR, FIXED	EA	1
9	32	XDDZZ	5905-00-853-8190	0757-0280	28480	RESISTOR, FIXED	EA	3
9	33	XDDZZ	5905-00-891-4215	0698-3154	28480	RESISTOR, FIXED	EA	1
9	34	XDDZZ	5905-00-858-8959	0757-0460	28480	RESISTOR, FIXED	EA	1
9	35	XDDZZ	5905-00-405-8092	0757-0470	28480	RESISTOR, FIXED	EA	1
9	36	XDDZZ	5905-00-858-8927	0698-3158	28480	RESISTOR, FIXED, FILM	EA	1
9	37	XDDZZ	5905-00-493-4289	0698-3445	28480	RESISTOR, FIXED	EA	1

(1) ILLUSTRATION (A) FIG. NO.	(1) ILLUSTRATION (B) ITEM NO.	(2) SMR CODE	(3) NATIONAL STOCK NUMBER	(4) PART NUMBER	(5) FSCM	(6) DESCRIPTION USABLE ON CODE	(7) U/M	(8) QTY INC IN UNIT
9	38	XDDZZ		0698-3421	28480	RESISTOR, FIXED, FILM	EA	1
9	39	XDDZZ	5905-00-221-8310	0757-0279	28480	RESISTOR, FIXED	EA	2
9	40	XDDZZ	5905+00-407-0060	0698-3455	28480	RESISTOR, FIXED	EA	1
9	41	XDDZZ	5905-00-078-0548	0698-3453	28480	RESISTOR, FIXED	EA	2
9	42	XDDZZ	5905-00-764-2026	0757-0463	28480	RESISTOR, FIXED	EA	2
9	43	XDDZZ	5905-00-828-0388	0698-3132	28480	RESISTOR, FIXED	EA	1
9	44	XDDZZ	5905-00-858-0326	0757-0290	28480	RESISTOR, FIXED	EA	3
9	45	XDDZZ	5905-00-904-4412	0757-0465	28480	RESISTOR, VARIABLLE	EA	2
9	46	XDDZZ	5905-00-828-5431	2100-2514	28480	RESISTOR, FIXED	EA	1
9	47	XDDZZ	5905-00-891-4219	0757-0421	28480	RESISTOR, VARIABLE	EA	1
9	48	XDDZZ	5905-00-138-5086	2100-2413	28480	RESISTOR, FIXED	EA	1
3	49	XDDZZ	5905-00-998-1902	0757-0400	28480	RESISTOR, FIXED	EA	1
9	50	XDDZZ	5905-00-997-9579	0757-0459	28480	RESISTOR, FIXED	EA	1
9	51	XDDZZ	5905-00-433-6904	0698-3157	28480	RESISTOR, FIXED	EA	1
9	52	XDDZZ	5905-00-493-5404	0757-0420	28480	RESISTOR, FIXED	EA	2
9	53	XDDZZ	5905-00-826-3262	0698-3450	28480	RESISTOR, FIXED, FILM	EA	2
9	54	XDDZZ		0764-0012	28480	RESISTOR, FIXED	EA	1
9	55	XDDZZ	5905-00-858-6792	0757-0436	28480	RESISTOR, FIXED	EA	2
9	56	XDDZZ	5905-00-481-1357	0698-3150	28480	RESISTOR, FIXED	EA	1
9	57	XDDZZ	5905-00-998-1792	0757-0442	28480	RESISTOR, FIXED	EA	1
9	58	XDDZZ	5905-00-407-0052	0698-0083	28480	RESISTOR, FIXED	EA	2
9	59	XDDZZ	5905-00-974-6083	0698-3446	28480	RESISTOR, FIXED	EA	2
9	60	XDDZZ	5962-00-412-1023	CA3046	02735	MICROCIRCUIT, LIN	EA	2
9	61	XDDZZ		L4318H	12040	ICROCIRCUIT,LINEAR	EA	1

LEGEND

REF DES	ITEM NO	REF DES	ITEM NO	REF DES	ITEM NO
C1	1	Q6	19	R38	29
C2	1	Q7	19	R39	25
C3	1	Q8	19	R40	22
C4	2	Q9	19	R41	26
C5	2	Q10	19	R42	27
C6	1	Q11	19	R43	26
C7	1	Q12	19	R44	28
C8	3	Q13	19	R45	22
C9	1	Q14	19	R46	30
C10	4	Q15	19	R47	31
C11	1	Q16	19	R48	29
C12	4	Q17	19	R49	22
C13	1	Q18	19	R50	31
C14	4	Q19	19	R51	24
C15	1	Q20	19	R52	32
C16	4	Q21	19	R53	33
C17	1	Q22	19	R54	28
C18	4	Q23	19	R55	27
C19	1	Q24	19	R56	26
C20	2	Q25	20	R57	26
C21	1	Q26	21	R58	33
C22	1	Q27	19	R59	22
C23	1	Q28	20	R60	30
C24	1	Q29	20	R61	31
C25	4	R1	22	R62	24
C26	2	R2	22	R63	34
C27	1	R3	23	R64	35
C28	4	R4	24	R65	36
C29	1	R5	25	R66	25
C30	1	R6	26	R67	37
C31	5	R7	27	R68	25
C32	1	R8	28	R69	22
C33	4	R9	28	R70	28
C34	6	R10	29	R71	27
C35	7	R11	29	R72	26
C36	8	R12	25	R73	26
C37	9	R13	22	R74	22
C38	10	R14	26	R75	30
CR1	11	R15	27	R76	29
CR2	11	R16	26	R77	25
CR3	12	R17	28	R78	22
CR4	12	R18	22	R79	38
CR5	13	R19	30	R80	27
L1	14	R20	29	R81	26
L2	15	R21	25	R82	26
L3	15	R22	22	R83	29
L4	15	R23	26	R84	22
L5	15	R24	27	R85	31
L6	15	R25	26	R86	39
L7	15	R26	28	R87	40
L8	15	R27	22	R88	40
L9	15	R28	30	R89	25
L10	15	R29	29	R90	41
L11	15	R30	25	R91	42
L12	16	R31	22	R92	43
L13	17	R32	26	R93	44
L14	18	R33	27	R94	45
Q1	19	R34	26	R95	46
Q2	19	R35	28	R96	30
Q3	19	R36	22	R97	42
Q4	19	R37	30	R98	47
Q5	19				

PREFIX ALL REFERENCE DESIGNATORS WITH A8

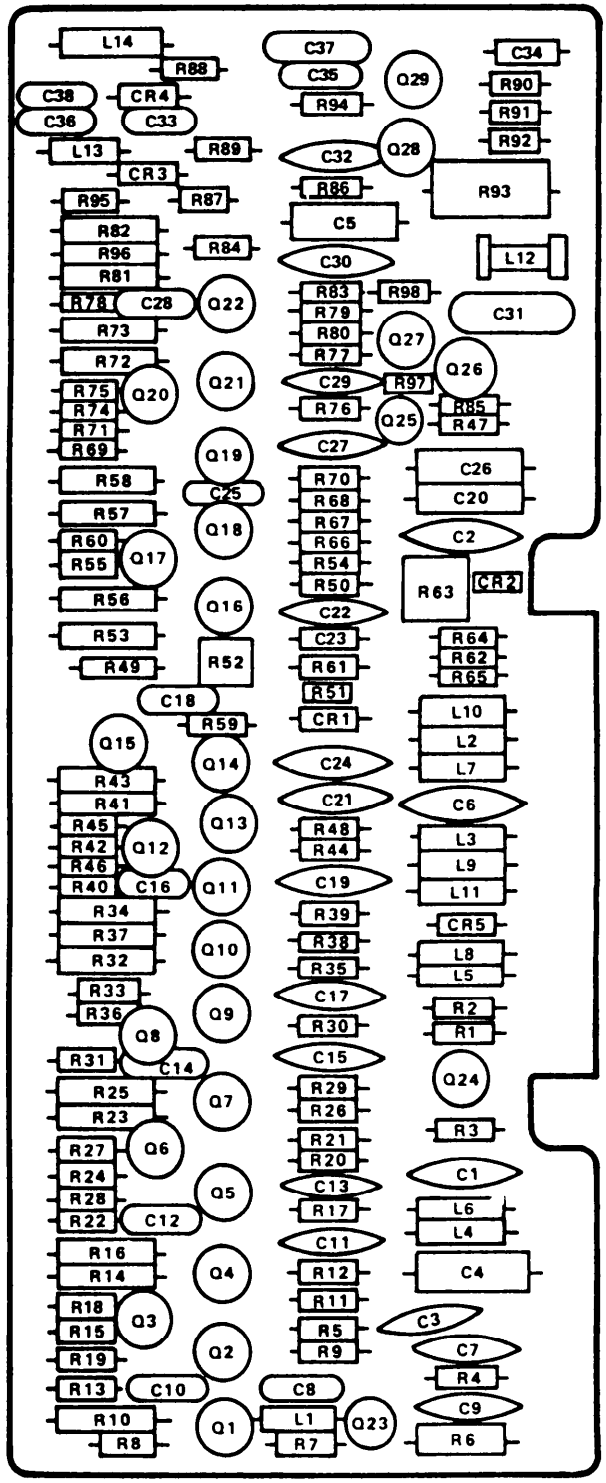

Figure 10. Circuit Card Assembly, Log Amplifier

(1) ILLUSTRATION (A) FIG. NO.	(1) ILLUSTRATION (B) ITEM NO.	(2) SMR CODE	(3) NATIONAL STOCK NUMBER	(4) PART NUMBER	(5) FSCM	(6) DESCRIPTION USABLE ON CODE	(7) U/M	(8) QTY INC IN UNIT
						GROUP 08 CIRCUIT CARD ASSEMBLY, LOG AMPLIFIER, A8		
10	1	XDDZZ	5910-00-430-5820	0160-3208	28480	**CAPACITOR, ELEC**	EA	19
10	2	XDDZZ	5910-00-850-2162	192P22392PTS	56289	**CAPACOTOR, FIXED, PLASTIC DIELECTRIC**	EA	4
10	3	XDDZZ	5910-00-772-6754	0160-0339	28480	**CAPACITOR, FIXED**	EA	1
10	4	XDDZZ	5910-00-430-5675	0160-2207	28480	**CAPACITOR, ELEC**	EA	8
10	5	XDDZZ	5910-00-430-5815	0160-3048	28480	**CAPACITOR, ELEC**	EA	1
10	6	XDDZZ		1500225X902QA2DY S	56289	**CAPACITOR, FIXED, ELECTROLYTIC**	EA	1
10	7	XDDZZ	5910-00-950-6822	0150-0121	28480	**CAPACITOR, FIXED,CERAMIC DIELECTRIC**	EA	1
10	8	XDDZZ	5910-00-244-7164	0160-2199	72136	**CAPACITOR, FIXED**	EA	1
10	9	XDDZZ	5910-00-914-2606	RDM15F111J3C	28480	**CAPACITOR, FIXED**	EA	1
10	10	XDDZZ	5910-00-774-7319	0140-0193	28480	**CAPACITOR, FIXED**	EA	1
10	11	XDDZZ	5961-00-914-7496	1901-0050	28480	**SEMICONDUCTOR**	EA	2
10	12	XDDZZ	5961-00-853-7934	1901-0179	28480	**SEMICONDUCTOR**	EA	2
10	13	XDDZZ	5961-00-951-1505	SR1358-9	04713	**SEMICONDUCTOR**	EA	1
10	14	XDDZZ	5950-00-452-1256	10133-4	82142	**COIL, RADIO FREQ**	EA	1
10	15	XDDZZ	5950-00-431-3203	9100-1641	28480	**COIL ELECTRICAL**	EA	10
10	16	XDDZZ	5950-00-431-3173	08552-6013	28480	**REACTOR**	EA	1
10	17	XDDZZ	5950-00-431-3199	9100-1636	28480	**COIL, ELECTRICAL**	EA	1
10	18	XDDZZ	5950-00-431-3204	9100-1644	28480	**COIL, ELECTRICAL**	EA	1
10	19	XDDZZ	5961-00-892-8706	2M3904	04713	**TRANSISTOR**	EA	25
10	20	XDDZZ	5961-00-931-6998	1853-0010	28480	**TRANSISTOR**	EA	3
10	21	XDDZZ	5961-00-985-9073	2N3053	80131	**TRANSISTOR**	EA	1
10	22	XDDZZ	5905-00-853-8190	0757-0280	28480	**RESISTOR, FIXED**	EA	16
10	23	XDDZZ	5905-00-407-0052	0698-0083	28480	**RESISTOR, FIXED**	EA	1
10	24	XDDZZ	5905-00-828-0377	0698-3440	28480	**RESISTOR, FIXED**	EA	3
10	25	XDDZZ	5905-00-981-7529	0757-0401	28480	**RESISTOR, FIXED**	EA	9
10	26	XDDZZ	5905-00-407-0057	0698-3419	28480	**RESISTOR, FIXED**	EA	16
10	27	XDDZZ	5905-00-412-4017	0698-6694	28480	**RESISTOR, FIXED**	EA	8
10	28	XDDZZ		0698-6696	28480	**RESISTOR, FIXED,FILM**	EA	7
10	29	XDDZZ	5905-00-221-8310	0757-0279	28480	**RESISTOR, FIXED**	EA	8
10	30	XDDZZ	5905-00-858-6795	0757-0440	28480	**RESISTOR, FIXED**	EA	7
10	31	XDDZZ	5905-00-974-6083	0698-3446	28480	**RESISTOR, FIXED**	EA	4
10	32	XDDZZ	5905-00-138-5086	2100-2413	28480	**RESISTOR, VARIABL**	EA	1
10	33	XDDZZ		0698-3417	28480	**RESISTOR, FIXED, FILM**	EA	2
10	34	XDDZZ	5905-00--407-0078	2100-1755	28480	**RESISTOR, VARIABL**	EA	1
10	35	XDDZZ	5905-00-974-6073	0698-0084	28480	**RESISTOR, FIXED**	EA	1
10	36	XDDZZ	5905-00-337-6238	0698-3159	28480	**RESISTOR, FIXED, FILM**	EA	1
10	37	XDDZZ	5905-00-420-7130	0698-3152	28480	**RESISTOR, FIXED**	EA	1

(1) ILLUSTRATION (A) FIG. NO.	(1) ILLUSTRATION (B) ITEM NO.	(2) SMR CODE	(3) NATIONAL STOCK NUMBER	(4) PART NUMBER	(5) FSCM	(6) DESCRIPTION USABLE ON CODE	(7) U/M	(8) QTY INC IN UNIT
10	38	XDDZZ	5905-00-493-5404	0757-0420	28480	**RESISTOR, FIXED**	EA	1
10	39	XDDZZ	5905-00-998-1906	0757-03466	28480	**RESISTOR**	EA	1
10	40	XDDZZ	5905-00-998-1795	0757-0416	28480	**RESISTOR, FIXED**	EA	2
10	41	XDDZZ	5905-00-826-3262	0698-3450	28480	**RESISTOR, FIXED**	EA	1
10	42	XDDZZ	5905-00-891-4215	0698-3154	28480	**RESISTOR, FIXED**	EA	2
10	43	XDDZZ	5905-00-974-6084	0698-3156	28480	**RESISTOR, FIXED**	EA	1
10	44	XDDZZ		0764-0012	28480	**RESISTOR, FIXED,FILM**	EA	1
10	45	XDDZZ	5905-00-412-4036	0757-0394	28480	**RESISTOR, FIXED**	EA	1
10	46	XDDZZ	5905-00-493-0736	0757-0424	28480	**RESISTOR, FIXED**	EA	1
10	47	XDDZZ	5905-00-929-2529	0757-0438	28480	**RESISTOR, FIXED**	EA	1

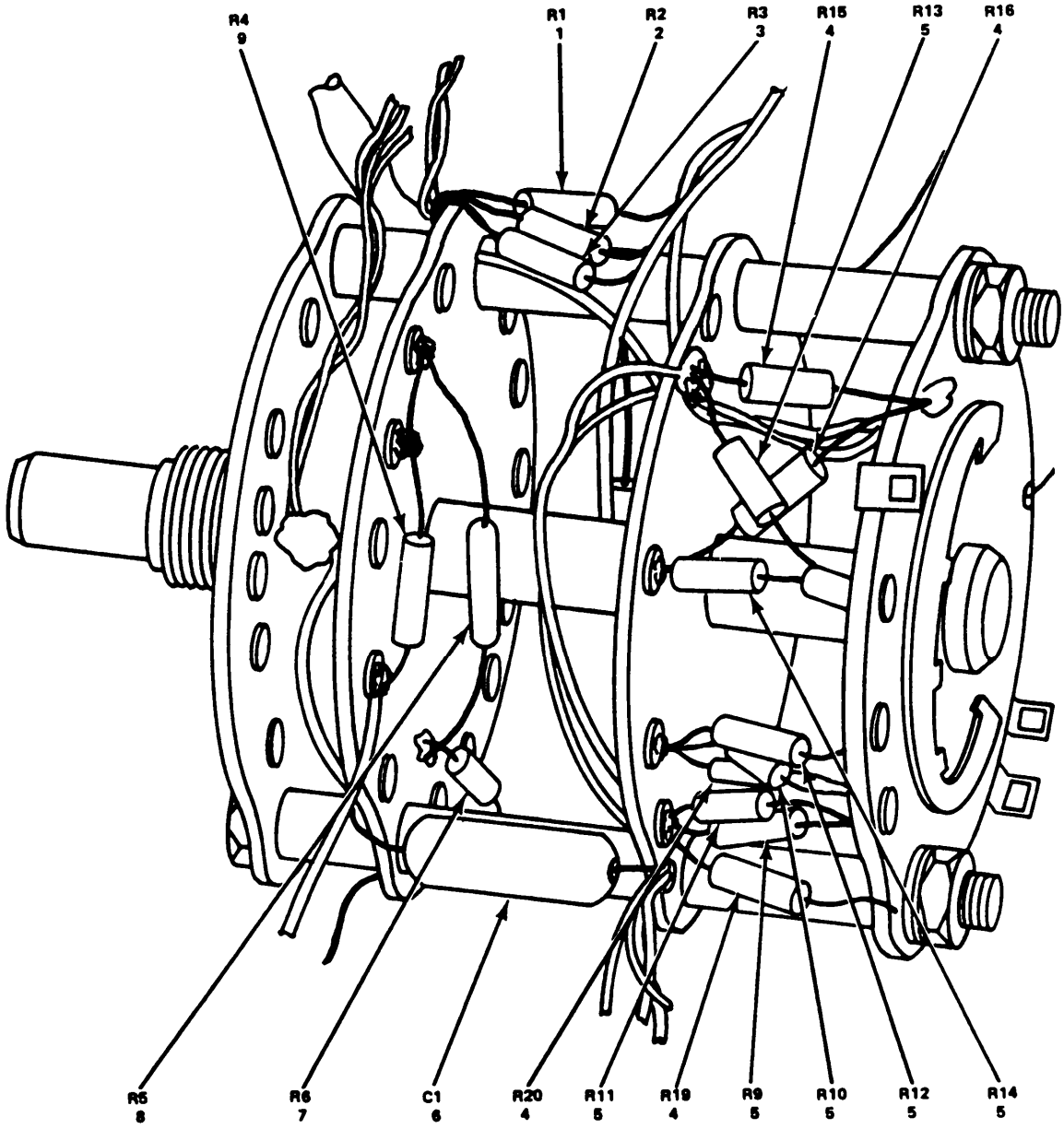

Figure 11. Switch Assembly, Scan Time (Sheet 1 of 2)

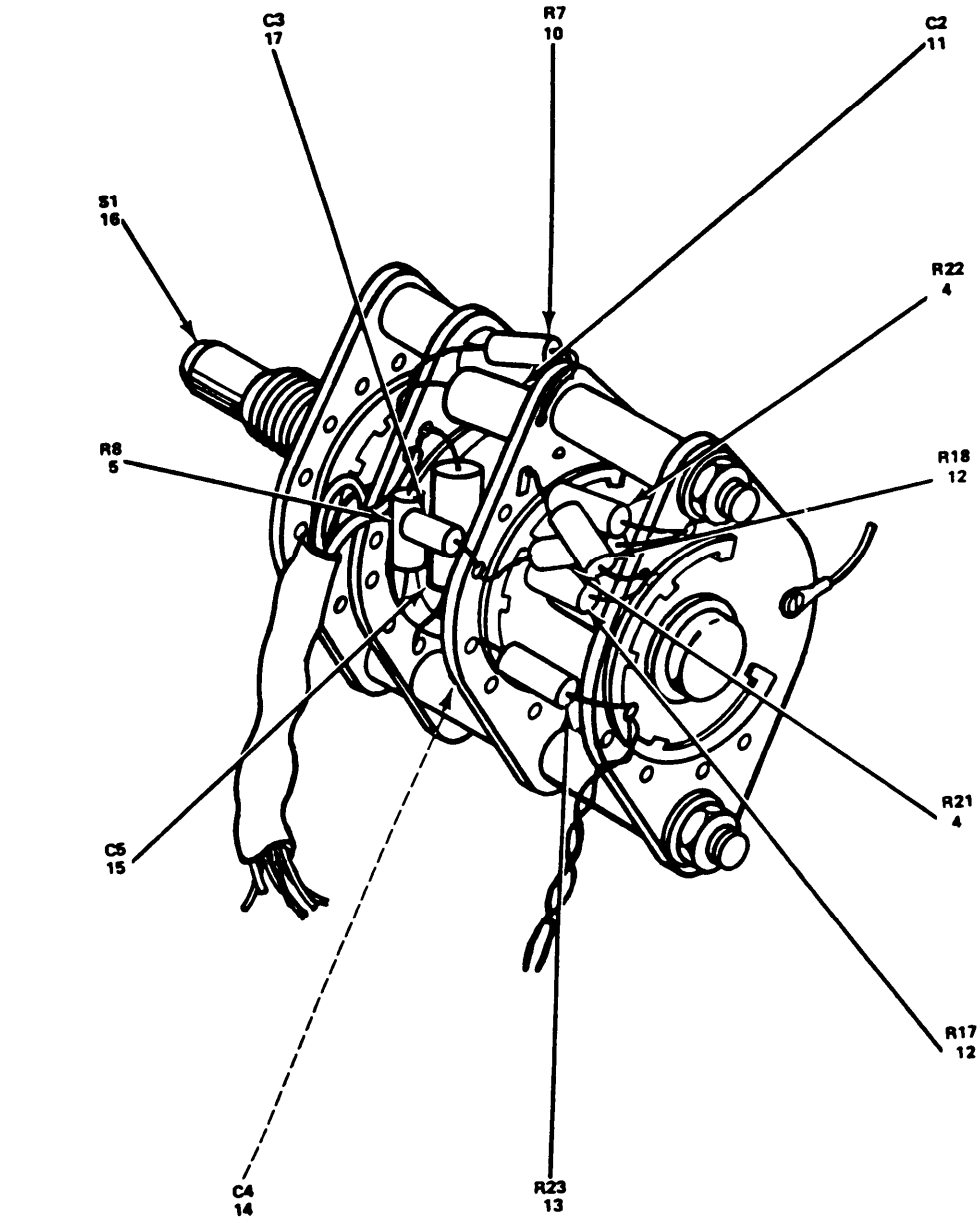

Figure 11. Switch Assembly, Scan Time (Sheet 2 of 2)

(1) ILLUSTRATION (A) FIG. NO.	(1) ILLUSTRATION (B) ITEM NO.	(2) SMR CODE	(3) NATIONAL STOCK NUMBER	(4) PART NUMBER	(5) FSCM	(6) DESCRIPTION USABLE ON CODE	(7) U/M	(8) QTY INC IN UNIT
						GROUP 09 SWITCH ASSEMBLY, SCAN TIME,A9		
11	1	PAHZZ	5905-00-997-9579	0757-0459	28480	**RESISTOR, FIXED**	EA	1
11	2	PAHZZ	5905-00-828-0397	0698-3449	28480	**RESISTOR, FIXED**	EA	1
11	3	PAHZZ	5905-00-891-4252	0757-0443	28480	**RESISTOR, FIXED**	EA	1
11	4	PAHZZ	5905-00-407-0054	0698-3271	28480	**RESISTOR, FIXED**	EA	6
11	5	PAHZZ	5905-00-998-1809	0698-3260	28480	**RESISTOR,**	EA	7
11	6	PAHZZ	5905-00-430-6077	0180-2125	28480	**CAPACITOR, ELEC**	EA	1
11	7	PAHZZ	5905-00-826-3262	0698-3450	28480	**RESISTOR, FIXED,**	EA	1
11	8	PAHZZ	5905-01-028-0165	0757-0485	28480	**RESISTOR, FIXED,FILM**	EA	1
11	9	PAHZZ	5905-00-402-4264	CB3355	28480	**RESISTOR, FIXED**	EA	1
11	10	PAHZZ	5905-00-974-6081	0698-3153	28480	**RESISTOR, FIXED**	EA	1
11	11	PAHZZ	5910-00-430-6082	0180-2126	28480	**CAPACITOR, ELEC**	EA	1
11	12	PAHZZ	5905-00-433-6904	0698-3157	28480	**RESISTOR, FIXED**	EA	2
11	13	PAHZZ	5905-00-929-2529	0757-0438	28480	**RESISTOR, FIXED**	EA	1
11	14	PAHZZ	5910-00-430-5813	0160-3017	28480	**CAPACITOR, FIXED, ELECTROLYTIC**	EA	1
11	15	PAHZZ	5910-00-809-4701	150D685X903582DY S	56289	**SWITCH ROTARY**	EA	1
11	16	PAHZZ	5930-00-006-4447	3100-2126	28480	**CAPACITOR, ELEC**	EA	1
11	17	PAHZZ	5910-00-430-6085	0180-2127	28480			

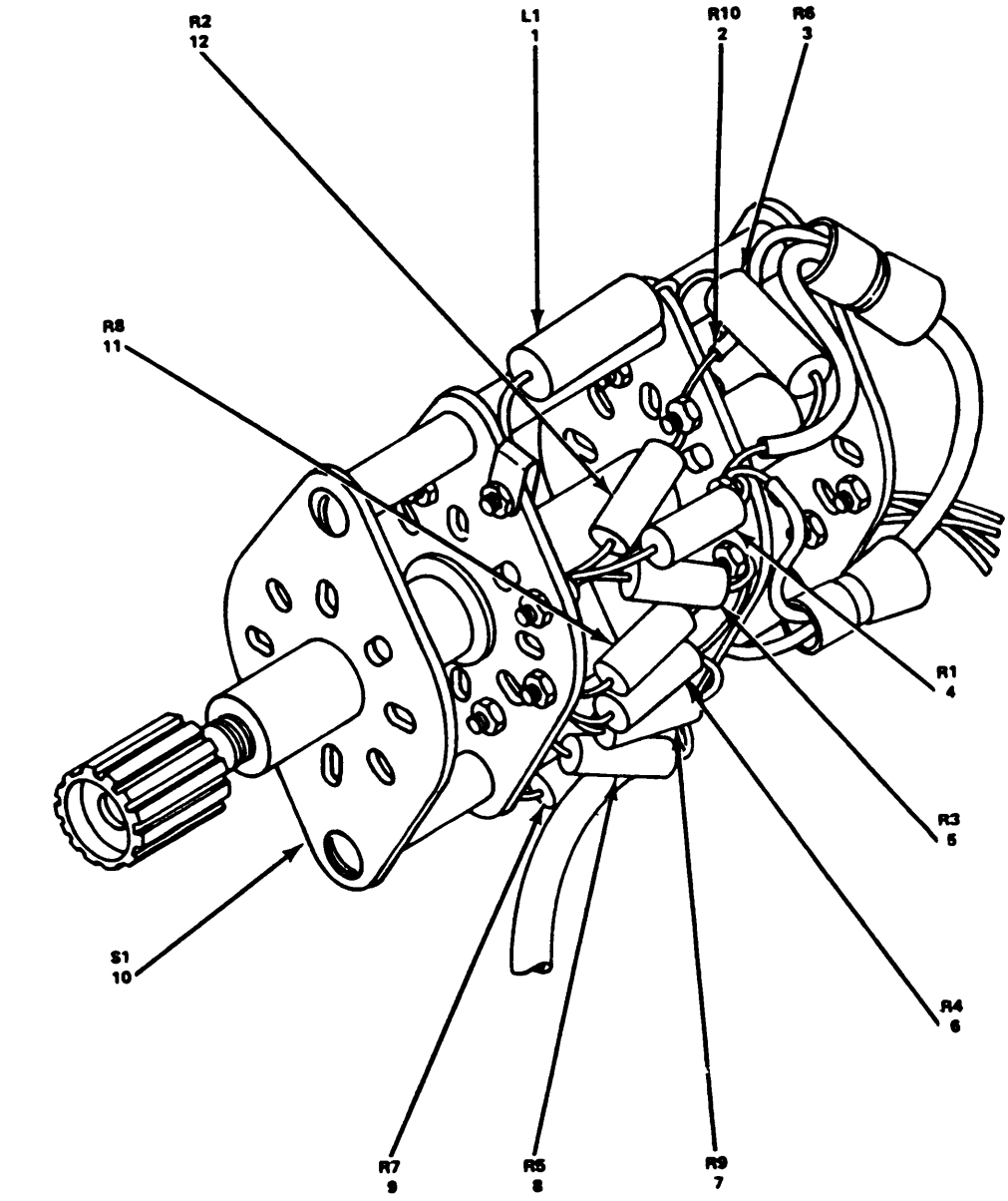

Figure 12. Switch Assembly, Reference Level

(1) ILLUSTRATION (A) FIG. NO.	(1) ILLUSTRATION (B) ITEM NO.	(2) SMR CODE	(3) NATIONAL STOCK NUMBER	(4) PART NUMBER	(5) FSCM	(6) DESCRIPTION USABLE ON CODE	(7) U/M	(8) QTY INC IN UNIT
						GROUP 10 SWITCH ASSEMBLY, REFERENCE LEVEL A10		
12	1	PAHZZ	5950-00-431-3198	9100-1630	28480	**COIL, ELECTRICAL**	EA	1
12	2	PAHZZ	5905-00-110-0849	0757-0001	28480	**RESISTOR, FIXED, FILM**	EA	1
12	3	PAHZZ	5905-00-412-4018	0698-6941	28480	**RESISTOR, FIXED**	EA	1
12	4	PAHZZ	5905-00-430-5344	0698-6310	28480	**RESISTOR, FIXED**	EA	1
12	5	PAHZZ	5905-00-412-4035	0698-6311	28480	**RESISTOR, FIXED**	EA	1
12	6	PAHZZ	5905-00-974-6075	0698-0082	28480	**RESISTOR, FIXED,**	EA	1
12	7	PAHZZ	4905-00-974-6078	0698-3160	28480	**RESISTOR, FIXED,**	EA	1
12	8	PAHZZ	5905-00-917-0580	0757-1094	28480	**RESISTOR, FIXED**	EA	1
12	9	PAHZZ	5905-00-858-6795	0757-0440	28480	**RESISTOR, FIXED**	EA	1
12	10	PAHZZ	5930-00-402-1844	3100-2092	28480	**SWITCH ROTARY**	EA	1
12	11	PAHZZ	5905-00-998-1792	0757-0442	28480	**RESISTOR, FIXED**	EA	1
12	12	PAHZZ	5905-00-412-4014	0698-5401	28480	**RESISTOR, FIXED**	EA	1

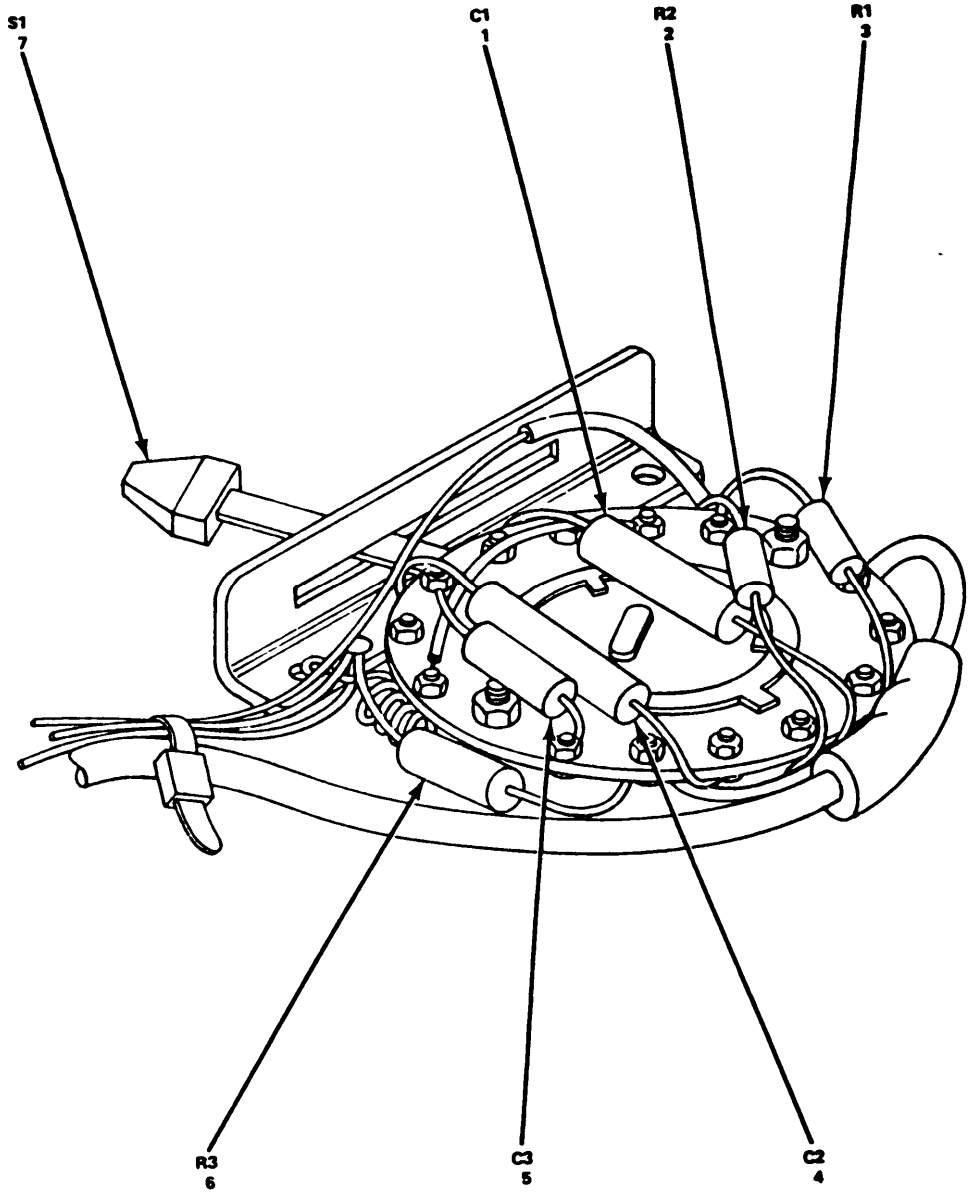

Figure 13. Switch Assembly, Video Filter

(1) ILLUSTRATION (A) FIG. NO.	(1) ILLUSTRATION (B) ITEM NO.	(2) SMR CODE	(3) NATIONAL STOCK NUMBER	(4) PART NUMBER	(5) FSCM	(6) DESCRIPTION USABLE ON CODE	(7) U/M	(8) QTY INC IN UNIT
						GROUP 11 SWITCH ASSEMBLY,VIDEO FILTER,A11		
13	1	PAHZZ		150D106X902062DY S	56289	CAPACITOR,FIXED,ELECTROLYTIC	EA	1
13	2	PAHZZ	5905-00-412-4012	0698-4507	28480	RESISTOR,FIXED,FILM	EA	1
13	3	PAHZZ	5905-00-891-2811	0757-0454	28480	RESISTOR,FIXED	EA	1
13	4	PAHZZ	5910-00-911-9271	192P10392PTS	56289	CAPACITOR,FIXED	EA	1
13	5	PAHZZ	5910-00-456-4474	150D105X9035A2DY S	56289	CAPACITOR,FIXED,ELECTROLYTIC	EA	1
13	6	PAHZZ	5905-00-126-1718	0698-4207	28480	RESISTOR,FIXED	EA	1
13	7	PAHZZ	5930-00-160-5452	3100-2673	28480	SWITCH,LEVER	EA	1

LEGEND

REF DES	ITEM NO	REF DES	ITEM NO
C1	1	Q1	16
C2	2	Q2	17
C3	1	R1	18
C4	3	R2	19
C5	4	R3	20
C6	4	R4	20
C7	5	R5	21
C8	6	R6	22
C9	7	R7	21
C10	8	R8	20
C11	9	R9	23
C12	8	R10	24
C13	1	R11	25
C14	1	R12	25
CR1	10	R13	26
E1	11	R14	27
E2	11	R15	25
L1	12	R16	26
L2	12	T1	28
L3	13	TP1	29
L4	14	U1	30
L5	14	XA13	31
L6	15	Y1	32

PREFIX ALL REFERENCE DESIGNATORS WITH A12

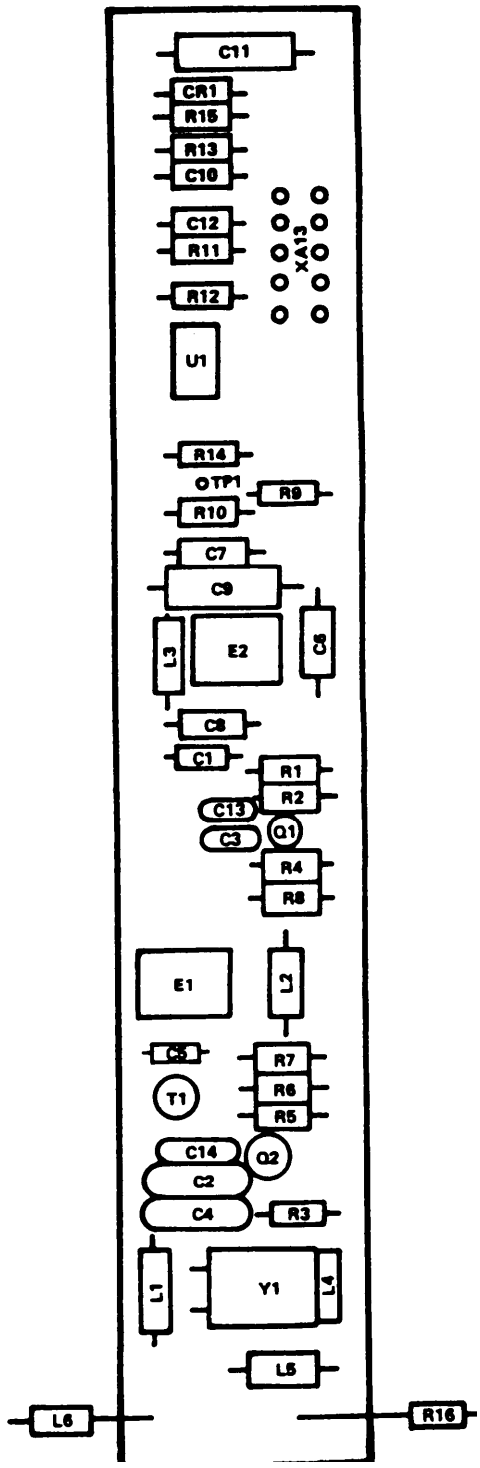

Figure 14. Circuit Card Assembly, 47-MHz APC

(1) ILLUSTRATION (A) FIG. NO.	(1) ILLUSTRATION (B) ITEM NO.	(2) SMR CODE	(3) NATIONAL STOCK NUMBER	(4) PART NUMBER	(5) FSCM	(6) DESCRIPTION USABLE ON CODE	(7) U/M	(8) QTY INC IN UNIT
						GROUP 12 CIRCUIT CARD ASSEMBLY,47-MHZ APC, A12		
14	1	XDDZZ	5910-01-014-2874	0160-3456	28480	CAPACITOR,FIXED	EA	4
14	2	XDDZZ		RDM15E560J300V	19701	CAPACITOR,FIXED,MICA DIELECTRIC	EA	1
14	3	XDDZZ	5910-00-104-3615	RDM15F221J3C	14655	CAPACITOR,FIXED	EA	1
14	4	XDDZZ	5910-00-914-4732	RDM15F391J3C	72136	CAPACITOR,FIXED	EA	2
14	5	XDDZZ	5910-00-945-9728	192P10292PTS	56289	CAPACITOR,FIXED	EA	1
14	6	XDDZZ		192P15292PTS	56289	CAPACITOR,FIXED,PLASTIC DIELECTRIC	EA	1
14	7	XDDZZ		192P18392PTS	56289	CAPACITOR,FIXED,PLASTIC DIELECTRIC	EA	1
14	8	XDDZZ		150D225X902DA2DY S	56289	CAPACITOR,FIXED,ELECTROLYTIC	EA	2
14	9	XDDZZ	5910-00-893-1261	192P33392PTS	56289	CAPACITOR,FIXED	EA	1
14	10	XDDZZ	5961-00-914-3087	1902-0025	28480	SEMICONDUCTOR	EA	1
14	11	XDDZZ		10534C	28480	MICROCIRCUIT,DIGITAL	EA	2
14	12	XDDZZ	5950-00-805-5186	1537-20	99800	COIL,RADIO, FREQ	EA	2
14	13	XDDZZ	5950-00-727-7954	1537-42	99800	COIL,RADIO FREQ	EA	1
14	14	XDDZZ	5950-00-431-3196	9100-1618	28480	COIL,ELECTRICAL	EA	2
14	15	XDDZZ	5950-00-431-3216	9140-0237	28480	COIL, ELECTRICAL	EA	1
14	16	XDDZZ	5961-00-919-4566	1854-0019	28480	TRANSISTOR	EA	1
14	17	XDDZZ	5961-00-987-4700	1853-0034	28480	TRANSISTOR	EA	1
14	18	XDDZZ	5905-00-981-7475	0757-0316	28480	RESISTOR,FIXED	EA	1
14	19	XDDZZ	5905-00-405-8091	0757-0402	28480	RESISTOR,FIXED	EA	1
14	20	XDDZZ	5905-00-929-2529	0757-0438	28480	RESISTOR,FIXED	EA	3
14	21	XDDZZ	5905-00-110-0854	0757-0382	28480	RESISTOR,FIXED	EA	2
14	22	XDDZZ	5905-00-232-3125	0757-0397	28480	RESISTOR,FIXED	EA	1
14	23	XDDZZ	5905-00-412-4034	0757-0394	28480	RESISTOR,FIXED	EA	1
14	24	XDDZZ	5905-00-974-6073	0498-0084	28480	RESISTOR,FIXED	EA	1
14	25	XDDZZ	5905-00-904-4412	0757-0465	28480	RESISTOR,FIXED	EA	3
14	26	XDDZZ	5905-00-853-8190	0757-0280	28480	RESISTOR,FIXED	EA	2
14	27	XDDZZ	5905-00-998-1795	0757-0416	28480	RESISTOR,FIXED	EA	1
14	28	XDDZZ	5950-00-008-441	08552-80101	50436	REACTOR	EA	1
14	29	XDDZZ		0360-1514	28480	TERMINAL,STUD	EA	1
14	30	XDDZZ	5962-00-247-9568	1826-0013	28480	MICROCIRCUIT,LIN	EA	1
14	31	XDDZZ	5935-00-009-1275	252-06-30-340	71785	CONNECTOR,RECEPT	EA	1
14	32	XDDZZ	5955-00-885-7582	0410-0406	28480	CRYSTAL UNIT,QUA	EA	1

LEGEND

REF DES	ITEM NO	REF DES	ITEM NO
C1	1	R2	13
C2	1	R3	14
C3	2	R4	15
C4	3	R5	16
C5	4	R6	12
C6	5	R7	17
C7	4	R8	14
C8	4	R9	18
C9	4	R10	19
C10	6	R11	13
C11	7	R12	20
C12	2	R13	18
L1	8	R14	20
L2	8	R15	21
Q1	9	R16	22
Q2	10	R17	15
Q3	11	T1	23
Q4	10	TP1	24
R1	12		

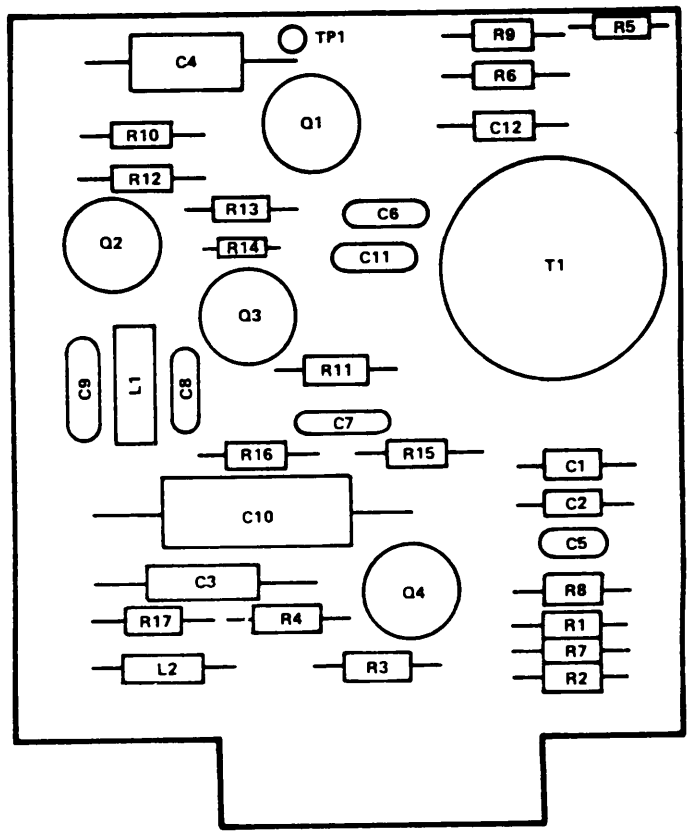

ELAAZ022

PREFIX ALL REFERENCE DESIGNATORS WITH A13

Figure 15. Circuit Card Assembly, 2-MHz Oscillator

(1) ILLUSTRATION (A) FIG. NO.	(1) ILLUSTRATION (B) ITEM NO.	(2) SMR CODE	(3) NATIONAL STOCK NUMBER	(4) PART NUMBER	(5) FSCM	(6) DESCRIPTION USABLE ON CODE	(7) U/M	(8) QTY INC IN UNIT
						GROUP 13 CIRCUIT CARD ASSEMBLY,2-MHZ OSCILLATOR,A13		
15	1	XDDZZ	5961-00-828-5411	0122-0051	28480	SEMICONDUCTOR	EA	2
15	2	XDDZZ	5910-00-430-6036	0180-1746	28480	CAPACITOR,ELEC	EA	2
15	3	XDDZZ	5910-00-725-0495	192P15392PTS	56289	CAPACITOR,FIXED	EA	1
15	4	XDDZZ	5910-00-006-5732	0160-3060	28480	CAPACITOR,FIXED	EA	4
15	5	XDDZZ	5910-00-211-1611	0160-2055	28480	CAPACITOR,FIXED	EA	1
15	6	XDDZZ		150D101X901OR2DYS	56289	CAPACITOR,FIXED,ELECTROLYTIC	EA	1
15	7	XDDZZ		150D225X9020A2DYS	56289	CAPACITOR,FIXED,ELECTROLYTIC	EA	1
15	8	XDDZZ	5950-00-431-3216	9140-0237	28480	COIL, ELECTRICAL	EA	2
15	9	XDDZZ	5961-00-138-7314	1853-0050	28480	TRANSISTOR	EA	1
15	10	XDDZZ	5961-00-137-4608	1854-0071	28480	TRANSISTOR	EA	2
15	11	XDDZZ	5961-00-941-2056	2N2904A	80131	TRANSISTOR	EA	1
15	12	XDDZZ	5905-00-981-1530	0757-0447	28480	RESISTOR,FIXED	EA	2
15	13	XDDZZ	5905-00-898-1792	0757-0442	28480	RESISTOR,FIXED	EA	2
15	14	XDDZZ	5905-00-493-4289	0698-3445	28480	RESISTOR,FIXED	EA	2
15	15	XDDZZ	5905-00-407-0052	0698-0083	28480	RESISTOR,FIXED	EA	2
15	16	XDDZZ	5905-00-476-5797	2100-2522	28480	RESISTOR,VARIABL	EA	1
15	17	XDDZZ	5905-00-826-3262	0698-3450	28480	RESISTOR,FIXED	EA	1
15	18	XDDZZ	5905-00-412-4036	0757-0394	28480	RESISTOR,FIXED	EA	2
15	19	XDDZZ	5905-00-433-6904	0698-3157	28480	RESISTOR,FIXED	EA	1
15	20	XDDZZ	5905-00-974-6076	0698-3441	28480	RESISTOR,FIXED	EA	2
15	21	XDDZZ		0698-3435	28480	RESISTOR,FIXED,FILM	EA	1
15	22	XDDZZ	5905-00-420-7136	0698-3430	28480	RESISTOR,FIXED	EA	1
15	23	XDDZZ	5950-00-787-7475	08552-80104	50436	REACTOR	EA	1
15	24	XDDZZ		0360-1514	28480	TERMINAL,STUD	EA	1

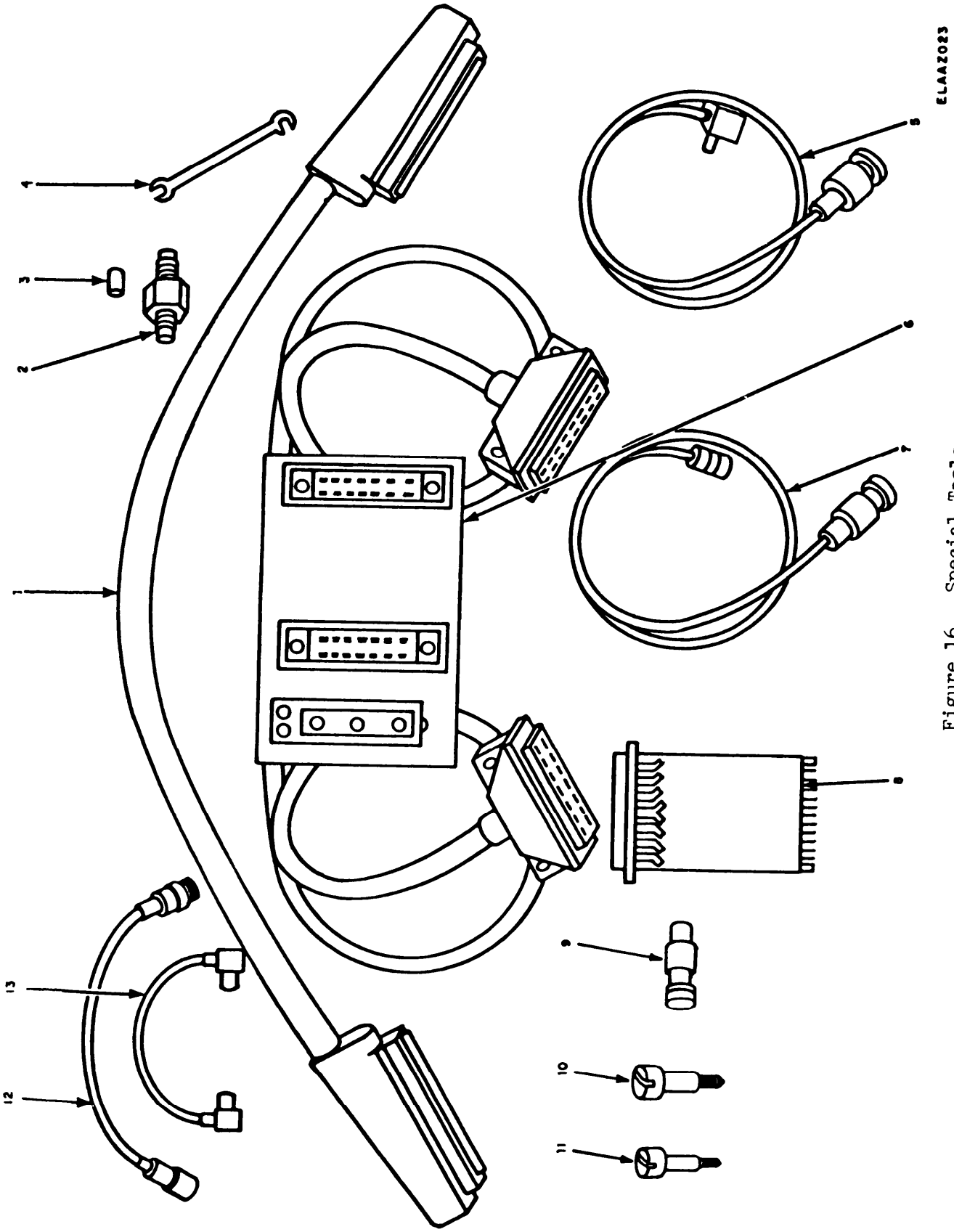

Figure 16. Special Tools.

(1) ILLUSTRATION (A) FIG. NO.	(1) ILLUSTRATION (B) ITEM NO.	(2) SMR CODE	(3) NATIONAL STOCK NUMBER	(4) PART NUMBER	(5) FSCM	(6) DESCRIPTION USABLE ON CODE	(7) U/M	(8) QTY INC IN UNIT
						GROUP 14 SPECIAL TOOLS		
16	1	PEHZZ		11592-60016	28480	CABLE ASSEMBLY,POWER,ELECTRICAL BOI: 1 AUTH FOR 1-25 EQUIP	EA	1
16	2	PEHZZ		1250-0827	28480	ADAPTER,CONNECTOR BOI: 1 AUTH FOR 1-25 EQUIP	EA	1
16	3	PEHZZ		1250-1158	56289	ADAPTER,CONNECTOR BOI: 1 AUTH FOR 1-25 EQUIP	EA	1
16	4	PEHZZ		8710-0946	28480	WRENCH,OPEN END BOI: 1 AUTH FOR 1-25 EQUIP	EA	1
16	5	PEHZZ		11592-60001	28480	CABLE ASSEMBLY,SPEC BOI: 1 AUTH FOR 1-25 EQUIP	EA	1
16	6	PEHZZ		11592-60015	28480	CABLE ASSEMBLY,POWER,ELECTRICAL BOI: 1 AUTH FOR 1-25 EQUIP	EA	1
16	7	PEHZZ		11592-60013	28480	CABLE ASSEMBLY,RADIO FREQUENCY BOI: 1 AUTH FOR 1-25 EQUIP	EA	1
16	8	PEHZZ		11592-60011	28480	EXTENDER CARD,ELECT BOI: 1 AUTH FOR 1-25 EQUIP	EA	1
16	9	PEHZZ		1250-1200	28480	PLUG ADAPTER BOI: 1 AUTH FOR 1-25 EQUIP	EA	1
16	10	PEHZZ		1390-0170	28480	FASTENER BOI: 1 AUTH FOR 1-25 EQUIP	EA	1
16	11	PEHZZ		11592-20001	28480	FASTENR BOI: 1 AUTH FOR 1-25 EQUIP	EA	1
16	12	PEHZZ		11592-60003	28480	CABLE ASSEMBLY,RADIO FREQUENCY BOI: 1 AUTH FOR 1-25 EQUIP	EA	1
16	13	PEHZZ		11592-60002	28480	CABLE ASSEMBLY,RADIO FREQUENCY BOI: 1 AUTH FOR 1-25 EQUIP	EA	1

NOTE: LATEST NATIONAL STOCK NUMBER AND PART NUMBER ASSIGNMENTS ARE INCLUDED AT END OF INDEX

STOCK NUMBER	FIGURE NO.	ITEM NO.
5910-00-006-5732	2	9
5910-00-006-5732	6	11
5910-00-006-5732	15	4
5961-00-007-9067	7	19
5910-00-008-4458	2	8
5910-00-008-4458	6	10
5950-00-008-4461	14	28
5930-00-008-4467	11	16
5935-00-009-1275	14	31
5910-00-027-7069	7	10
5920-00-035-4842	1	69
5910-00-043-1396	9	3
5935-00-059-1126	1	5
5961-00-064-3630	9	14
6240-00-067-7526	1	1
5905-00-078-1548	7	50
5905-00-078-1546	9	41
5910-00-082-0042	8	15
5905-00-089-7577	1	24
5905-00-089-7577	7	67
5905-00-089-7577	8	31
5905-00-096-4167	7	31
5961-00-103-7417	7	17
5905-00-105-1774	6	62
5905-00-105-1774	7	16
5910-00-106-3615	14	3
5905-00-110-0851	7	34
5905-00-110-0856	14	21
5935-00-124-5081	1	67
5905-00-126-1718	13	6
5961-00-137-4608	2	16
5941-00-137-4608	3	18
5961-00-137-4608	6	25
5961-00-137-4608	7	22
5961-00-137-4608	8	24
5961-00-137-4608	15	10
5910-00-138-3397	8	10
5910-00-138-5048	4	1
5905-00-138-5086	9	48
5905-00-138-5086	10	32
5905-00-138-7305	6	31
5961-00-138-7314	15	9
5905-00-139-2307	6	56
5930-00-160-5452	13	1
5905-00-161-8936	6	45
5905-00-161-8936	8	58
5905-00-163-0847	6	46
5905-00-170-9449	2	28
5961-00-179-8478	5	16
5910-00-180-4180	3	7
5910-00-187-2609	7	11
5905-00-193-4298	7	75
5905-00-193-4318	3	41
5905-00-194-0341	2	38
5905-00-195-3485	7	39
5905-01-195-6758	1	49
5910-00-195-8818	4	3
5910-00-195-8823	4	2
5905-00-196-6747	7	80
5910-00-211-1611	2	1
5910-00-211-1611	3	3
5910-00-211-1611	6	2
5910-00-211-1611	7	12
5910-00-211-1611	8	5
5910-00-211-1611	15	5
5905-00-221-8310	3	27
5905-00-221-8310	7	79
5905-00-221-8310	9	39
5905-00-221-8310	10	29
5961-00-222-6426	1	73
5905-00-228-5989	3	42
5905-00-228-5989	8	53
5961-00-229-1963	8	27
5961-00-229-1963	9	23
5905-00-229-1971	3	40
5905-00-229-1971	7	55
5905-00-229-1971	8	38
5905-00-232-3122	2	35
5905-00-232-3125	14	22
5910-00-244-7164	10	8
5905-00-244-7189	7	44
5905-00-246-8634	3	20
5910-00-247-8593	1	58
5962-00-247-9568	7	82
5962-00-247-9568	8	65
5962-00-247-9568	14	30
5910-00-261-3413	8	4
5920-00-280-8342	1	74
5905-00-337-6238	10	36
5905-00-402-1156	2	37
5905-00-402-1156	7	40
5930-00-402-1844	12	10
5905-00-402-4264	11	9
5905-00-402-1080	7	65
5905-00-402-7082	1	53
5905-00-405-2867	1	29
5905-00-405-3677	8	47
5905-00-405-3726	7	52
5905-00-405-8091	7	61
5905-00-405-8091	14	19
5905-00-405-8092	9	35
5950-00-406-6419	7	84
5910-00-406-9675	5	6
5905-00-407-0052	8	51
5905-00407-0052	9	58
5905-00-407-0052	10	23
5905-00-407-0052	15	15
5905-00-407-0054	11	4
5905-00-407-0056	9	30
5905-00-407-0057	7	42
5905-00-407-0057	10	26
5905-00-407-0059	7	71
5905-00-407-0060	8	39
5905-00-407-0060	9	40
5905-00-407-0066	1	35
5905-00-407-0068	1	7
5905-00-407-0069	1	9
5905-00-407-0075	2	34
5905-00-407-0075	5	21
5905-00-407-0076	5	25
5905-00-407-0077	3	36
5905-00-407-0078	2	36
5905-00-407-0078	3	19
5905-00-407-0078	10	34
5905-00-407-0079	2	27
5905-00-407-0079	3	34
5905-00407-0079	8	56
5905-00-407-2350	6	37
5905-00-407-2402	6	63
5961-00-408-9807	9	21
5961-00-412-0955	9	15
5961-00-412-0957	7	18
5961-00-412-0958	7	16
5962-00-412-1023	9	60
5901-00-412-4012	13	2
5905-00-412-4014	12	12
5905-00-412-4017	10	27
5905-00-412-4018	12	3
5905-00-412-4023	7	63
5905-00-412-4035	12	5
5905-00-412-4036	5	27
5905-00-412-4036	10	45
5905-00-412-4036	14	23
5905-00-412-4036	15	18
5905-00-412-4037	3	33
5905-00-412-4037	7	47
5905-00-412-4037	8	34
5905-00-420-7130	8	49
5905-00-420-7130	9	26
5905-00-420-7130	10	37
5905-00-420-7136	15	22
5905-00-420-7155	7	74
5905-00-420-7155	9	28
5905-00-430-5344	12	4
5910-00-430-5607	3	9
5961-00-430-5609	3	10
5910-00-430-5617	3	5
5910-00-430-5626	5	5
5910-00430-5674	8	13
5910-00-430-5675	10	4

STOCK NUMBER	FIGURE NO.	ITEM No.
5910-00-430-5685	7	3
5910-00-430-5813	11	14
5910-00-430-5815	4	4
5910-00-430-5815	10	5
5910-00-430-5820	10	1
5910-00-430-5821	1	59
5910-00-430-6036	9	10
5910-00-430-6036	15	2
5910-00-430-6077	11	6
5910-00-430-6082	11	11
5910-00-430-6085	11	17
5910-00-430-6138	2	2
5950-00-430-6806	4	6
5950-00-430-6909	8	22
5950-00-431-3172	4	8
5950-00-431-3173	10	12
5950-00-431-3174	2	12
5950-00-431-3175	5	32
5905-00-431-3183	1	4
5950-00-431-3195	1	44
5950-00-431-3196	14	14
5950-00-431-3197	6	22
5950-00-431-3198	2	14
5950-00-431-3198	12	1
5950-00-431-3199	3	14
5950-00-431-3199	10	17
5950-00-431-3203	10	15
5950-00-431-3204	10	18
5950-00-431-3215	2	15
5950-00-431-3215	6	23
5950-00-431-3215	8	21
5950-00-431-3216	2	11
5950-00-431-3216	3	12
5950-00-431-3216	14	15
5950-00-431-3216	15	8
5910-00-431-3956	1	40
5905-00-433-6904	2	31
5905-00-433-6904	9	51
5905-00-433-6904	11	12
5905-00-433-6904	15	19
5950-00-438-4375	3	13
5910-00-444-6725	9	2
5950-00-452-1255	4	5
5950-00-452-1256	10	14
5950-00-452-1257	4	7
5910-00-455-0119	8	6
5930-00-455-0120	8	63
5910-00-456-4474	3	4
5910-00-456-4474	6	4
5910-00-456-4474	13	5
5910-00-463-5960	6	14
5961-00-464-4049	5	15
5910-00-464-9932	2	6
5910-00-464-9932	5	9
5910-00-464-9932	9	8
5905-00-469-2957	6	57
5961-00-476-5740	8	20
5905-00-476-5796	6	58
5905-00-476-5797	6	60
5905-00-476-5797	15	16
5945-00-477-9296	9	18
5905-00-481-1357	7	37
5905-00-481-1357	9	56
5905-00-484-7386	1	8
5905-00-489-2052	1	71
5905-00-489-6773	2	32
5905-00-493-0736	10	46
5905-00-493-0777	3	32
5905-00-493-0777	7	29
5905-00-493-0783	7	68
5905-00-493-4289	2	22
5905-00-493-4289	9	37
5905-00-493-4289	15	14
5905-00-493-5404	3	26
5905-00-493-5404	2	38
5905-00-493-5404	5	19
5905-00-493-5404	7	41
5905-00-493-5404	9	52
5905-00-493-5404	10	38
5905-00-494-4628	7	62
5910-00-542-2010	1	25
5910-00-581-7084	9	4
5935-00-623-7199	1	65
5950-00-657-8167	5	11
5910-00-719-4370	9	12
5910-00-719-9879	6	7
5910-00-725-0495	9	7
5910-00-725-0495	15	3
5950-00-727-7958	14	13
5961-00-728-7874	7	25
5910-00-761-1216	2	3
5910-00-761-1216	6	9
5905-00-764-2026	7	72
5905-00-764-2026	8	33
5905-00-764-2026	9	42
5961-00-765-6071	9	22
5910-00-772-6754	10	3
5910-00-774-7319	10	10
5910-00-776-4185	5	7
5910-00-77b-4185	8	11
5950-00-779-3472	8	23
5950-00-780-7332	5	13
5910-00-782-1853	3	6
5910-00-782-1853	6	13
5950-00-784-0475	7	83
5910-00-784-0927	8	12
5961-00-787-3394	6	18
5930-00-787-7446	1	12
5930-00-787-7464	1	10
5950-00-787-7475	15	23
5950-00-787-7479	5	31
5930-00-787-7481	1	11
5905-00-788-0291	5	28
5950-00-805-5106	14	12
5995-00-807-7336	1	70
5910-00-809-4701	2	5
5910-00-809-4701	3	2
5910-00-809-4701	5	4
5910-00-809-4701	7	2
5910-00-809-4701	8	3
5910-00-809-4701	9	1
5910-00-809-4701	11	15
5935-00-818-7134	1	57
5905-00-826-3262	7	58
5905-00-826-3262	9	53
5905-00-826-3262	10	41
5905-00-826-3262	11	7
5905-00-826-3262	15	17
5905-00-828-0377	7	73
5905-00-828-0377	10	24
5905-00-828-0388	9	43
5905-00-828-0397	11	2
5905-00-828-0404	7	53
5935-00-828-1587	1	18
5961-00-828-5411	15	1
5905-00-828-5431	9	46
5905-00-828-5540	1	16
5905-00-830-6677	5	20
5961-00-836-1887	7	24
5905-00-840-8162	3	24
5905-00-840-8162	7	60
5905-00-840-8162	8	44
5950-00-845-6927	5	12
5950-00-845-6927	6	20
5950-00-845-6927	9	19
5961-00-847-5242	8	16
5910-00-850-2162	7	5
5910-00-850-2162	10	2
5961-00-853-7934	10	12
5905-00-853-8190	2	30
5905-00-853-8190	3	31
5905-00-853--8190	7	35
5905-00-853-8190	8	35
5905-00-853-8190	9	32
5905-00-853-8190	10	22
5905-00-853-8190	14	26
5905-00-858-6792	9	26
5905-00-858-6795	2	29
5905-00-858-6795	10	30
5905-00-858-6795	12	9

STOCK NUMBER	FIGURE NO.	ITEM NO.
5905-00-858-6799	1	26
5905-00-858-6799	7	46
5905-00-858-6799	8	37
5905-00-858-8826	8	40
5905-00-858-8826	9	44
5905-00-858-8927	8	48
5905-00-858-8927	9	36
5905-00-858-8959	3	39
5905-00-858-8959	7	36
5905-00-858-8959	9	34
5905-00-858-9132	7	54
5910-00-858-9211	6	8
5935-00-867-0119	1	52
5961-00-867-9264	1	66
5961-00-867-9264	7	13
5961-00-873-0867	8	19
5915-00-874-0493	5	1
5955-00-885-7551	8	66
5955-00-885-7556	6	66
5955-00-885-7582	14	32
5905-00-891-2811	13	3
5905-00-891-4215	8	32
5905-00-691-4215	9	33
5905-00-891-4215	10	42
5905-00-691-4217	7	32
5905-00-891-4219	2	24
5905-00-891-4219	9	47
5905-00-8914238	3	30
5905-00-891-4247	7	38
5905-00-891-4247	8	36
5905-00-891-4252	9	25
5905-00-891-4252	11	3
6240-00-892-4420	1	15
5961-00-892-8706	10	19
5910-00-893-1261	7	1
5910-00-893-1261	14	9
5935-00-897-9351	1	6
5930-00-902-3143	1	13
5961-00-904-0296	9	13
5961-00-904-2540	2	17
5961-00-904-2540	6	26
5961-00-904-2540	7	23
5961-00-904-2540	8	29
5905-00-904-4412	5	30
5905-00-904-4412	7	49
5905-00-904-4412	8	42
5905-00-904-4412	9	45
5905-00-904-4412	14	29
5905-00-909-3965	1	68
6250-00-910-8305	1	23
5910-00-911-9271	13	4
5910-00-914-2605	8	2
5910-00-914-2606	9	5
5910-00-914-2606	10	9
5961-00-914-3087	9	16
5961-00-914-3087	14	10
5910-00-9144732	14	4
5961-00-914-7496	5	10
5911-00-914-7496	10	11
5905-00-917-0580	3	25
5905-00-917-0580	12	8
5910-00-917-0668	8	7
5961-00-919-4566	2	18
5961-00-919-4566	6	27
5961-00-919-4566	8	28
5911-00-919-4566	14	16
5950-00-925-5249	5	14
5961-00-927-5042	1	72
5961-00-928-7939	2	10
5961-00-928-7939	3	11
5961-00-928-7939	6	17
5961-00-928-7939	9	17
5905-00-429-2529	2	19
5905-00-929-2529	5	17
5905-00-929-2529	7	69
5905-00-929-2529	8	29
5905-00-929-2529	10	47
5905-00-929-2529	11	13
5905-00-929-2529	14	20
5905-00-931-4067	7	27
5961-00-931-6989	7	21
5961-00-931-6998	3	17
5961-00-931-6998	10	20
5961-00-941-2056	15	11
5961-00-943-7572	3	16
5961-00-945-3380	7	15
5935-00-948-9078	1	46
5910-00-950-6822	10	7
5961-00-951-1505	10	13
5905-00-954-8681	7	77
5905-00-954-8684	8	46
5910-00-957-2054	2	7
5910-00-957-2054	6	15
5905-00-959-1202	1	27
5910-00-965-9728	7	6
5910-00-965-9728	6	8
5910-00-965-9728	14	5
5950-00-971-1645	1	38
5905-00-972-4907	5	26
5935-00-972-9464	1	56
5905-00-974-6073	2	25
5905-00-974-6073	3	37
5905-00-974-6073	7	43
5905-00-974-6073	10	35
5905-00-974-6073	14	24
5905-00-974-6075	5	29
5905-00-974-6075	9	27
5905-00-974-6075	12	6
5905-00-974-6076	3	35
5905-00-974-6076	5	22
5905-00-974-6076	15	20
5905-00-974-6077	6	43
5905-00-974-6078	8	54
5905-00-974-6078	12	7
5905-00-974-6079	7	56
5905-00-974-6079	9	29
5905-00-974-6080	5	24
5905-00-974-6080	7	66
5905-00-974-6081	2	21
5905-00-974-6081	11	10
5905-00-974-60683	3	29
5905-00-974-6083	7	48
5905-00-974-6083	9	59
5905-00-974-6083	10	31
5905-00-974-6084	8	50
5905-00-974-6084	10	43
5905-00-976-3418	5	18
5905-00-981-7475	14	18
5905-00-981-7513	3	21
5905-00-981-7513	7	45
5905-00-981-7529	2	23
5905-00-981-7529	3	26
5905-00-981-7529	7	59
5905-00-981-7529	10	25
5905-00-981-7530	3	22
5905-00-98l-7530	9	24
5905-00-981-7530	15	12
5950-00-964-3433	2	13
5950-00-984-3433	3	15
5961-00-985-9073	8	26
5961-00-985-9073	10	21
5961-00-987-4700	9	20
5961-00-987-4700	14	17
5905-00-990-0303	9	31
5961-00-990-5369	7	26
5940-00-993-9338	3	43
5940-00-993-9338	6	24
5961-00-995-2310	7	14
5905-00-997-9579	7	64
5905-00-997-9579	9	50
5905-00-997-9579	11	1
5905-00-998-1792	3	23
5905-00-998-1792	7	76
5905-00-998-1792	8	45
5905-00-998-1792	9	57
5905-00-998-1792	12	11
5905-00-998-1792	15	13
5905-00-998-1794	2	20
5905-00-998-l795	2	33
5905-00-998-1795	7	30

STOCK NUMBER	FIGURE NO.	ITEM NO.
5905-00-998-1795	8	41
5905-00-998-1795	10	40
5905-00-998-1795	14	27
5905-00-998-1809	11	5
5905-00-998-1814	7	70
5905-00-998-1814	8	55
5905-00-998-1902	7	57
5905-00-998-1902	9	49
5905-00-998-1906	3	28
5905-00-998-1906	8	30
5905-00-998-1906	10	39
5905-00-998-1908	8	52
5905-00-998-1953	7	33
5905-01-009-7560	6	59

PART NUMBER	FSCM	FIG. NO.	ITEM NO.
CA3046	02735	9	60
CB1045	01121	1	27
CB3315	01121	1	68
CB3355	01121	11	9
DOMF43W2S	81348	1	33
EB27G1	01121	7	33
EB2731	01121	1	49
FOG1088	34148	2	10
FDG1088	34148	3	11
FDG1088	34148	6	17
FDG1088	34148	9	17
FD1415	07263	9	14
FD2387	07263	7	20
FD2387	07263	8	17
LM318H	12040	9	61
NE20	08806	1	15
RDM15E510J1C	72136	2	6
RDM15E510J1C	72136	5	9
RDM15E510J1C	72136	9	8
RDM15E560J300V	19701	6	12
RDM15E560J300V	19701	14	2
RDM15E620J3C	00853	3	6
RDM15E620J3C	00853	6	13
RDM15F111J3C	72136	9	5
RDM15F111J3C	72136	10	9
RDM15F201J3C	72136	8	2
RDM15F221J3C	14655	14	3
RDM15F391J3C	72136	14	4
SR1358-9	04713	10	13
0121-0036	28480	6	14
0121-0059	28480	5	7
0121-0059	28480	8	11
0121-0105	28480	2	3
0121-0105	28480	6	9
0121-0443	28480	6	8
0122-0043	28480	3	9
0122-0044	28480	3	10
0122-0051	28480	15	1
0122-0211	28480	3	7
0122-0221	28480	3	5
0140-0193	28480	10	10
0150-0050	28480	8	12
0150-0121	28480	10	7
0160-0121	28480	6	1
0160-0121	28480	7	8
0160-0339	28480	10	3
0160-0939	28480	8	6
0160-2049	28480	1	58
0160-2055	28480	2	1
0160-2055	28480	3	3
0160-2055	28480	6	2
0160-2055	28480	7	12
0160-2055	28480	8	5
0160-2055	28480	15	5
0160-2142	28480	5	5
0160-2150	88480	2	7
0160-2150	28480	6	15
0160-2199	28480	10	8
0160-2202	28480	6	7
0160-2205	28480	8	13
0160-2207	28480	10	4
0160-2208	28480	7	3
0160-2211	28480	7	9
0160-2218	28480	8	4
0160-2307	28480	5	6
0160-2308	28480	6	6
0160-3017	28480	11	14
0160-3024	28480	2	2
0160-3045	28480	4	3
0160-3046	28480	4	1
0160-3047	28480	4	1
0160-3048	28480	10	4
0160-3048	28480	10	5
0160-3060	28480	2	9
0160-3060	28480	6	11
0160-3060	28480	15	4
0160-3132	28480	2	4
0160-3208	28480	10	1
0160-3219	28480	10	59
0160-3448	28480	9	4
0160-3456	28480	5	3
0160-3456	28480	14	1
0160-3460	28480	2	8
0160-3460	28480	6	10
0180-0058	28480	7	10
0180-0269	28480	9	3
0180-1745	28480	6	5
0180-1746	28480	9	10
0180-1746	28480	15	2
0180-1747	28480	7	4
0180-2125	28480	11	6
0180-2126	28480	11	11
0180-2127	28480	11	17
0180-2195	28480	8	9
0180-2215	28480	7	11
0180-2268	28480	8	10
0360-0124	26480	3	43
0360-0124	26480	6	24
0360-1514	28480	2	39
0360-1514	28480	6	64
0360-1514	28480	7	81
0360-1514	28480	8	64
0360-1514	28480	14	29
0360-1514	28480	15	24
0410-0301	28480	8	66
0410-0404	28480	6	66
0410-0406	28480	14	32
0490-0399	28480	9	18
0698-0082	28480	5	29
0698-0082	28480	9	27
0698-0082	28480	12	6
0698-0083	28480	8	51
0698-0083	28480	9	58
0698-0083	28480	10	23
0698-0083	28480	15	15
0698-0084	28480	2	25
0698-0084	28480	3	37
0698-0084	28480	7	43
0698-0084	28480	10	35
0698-0084	28480	14	24
0698-0085	28480	7	70
0698-0085	28480	8	55
0698-0089	28480	7	39
0698-3132	28480	9	43
0698-3136	28480	7	38
0698-3136	28480	8	36
0698-3150	28480	7	37
0698-3150	28480	9	56
0698-3151	26480	3	20
0698-3152	28480	8	49
0698-3152	28480	9	26
0698-3132	28480	10	37
0698-3153	28480	2	21
0698-3153	28480	11	10
0698-3154	28480	0	32
0698-3154	28480	9	33

PART NUNBER	FSCM	FIG. NO.	ITEM NO.
0698-3154	28480	10	42
0698-3155	28480	5	18
0698-3156	28480	8	50
0698-3156	28480	10	43
0698-3157	28480	2	31
0698-3157	28480	9	51
0698-3137	28480	11	12
0698-3157	28480	15	19
0698-3158	28480	8	48
0698-3158	28480	9	36
0698-3159	28480	10	36
0698-3160	28480	6	54
0698-3160	28480	12	7
06983162	28480	3	24
0698-3162	28480	7	60
0698-3162	28480	8	44
0698-3260	28480	11	5
0698-3271	28480	11	4
0698-3334	28480	6	37
0698-3399	29480	1	29
0698-3400	28480	1	32
0698-3403	28480	6	57
0698-3408	28480	7	32
0698-3417	28480	10	33
0698-3418	28480	9	30
O698-3419	28480	7	42
0698-3419	28480	10	26
O698-3420	28480	7	27
0698-3421	28480	9	38
0698-3428	28480	3	30
0698-3429	28480	2	34
0698-3429	28480	5	21
0698-3430	28480	15	22
0698-3433	28480	5	25
0698-3435	28480	15	21
0698-3437	28480	7	65
0698-3438	28480	5	24
0698-3438	28480	7	66
0698-3439	28480	7	71
0698-3440	28480	1	73
0698-3440	28480	10	24
0698-3441	28480	3	35
0698-3441	28480	5	22
0698-3441	28480	15	20
0698-3442	28480	2	32
0698-3443	28480	2	38
0698-3444	28480	1	56
0698-3444	28480	9	29
0698-3445	28480	2	22
0698-3445	28480	9	37
0698-3445	28480	15	14
0698-3446	28480	3	29
0698-3446	28480	7	48
0698-3446	28480	9	59
0698-3446	28480	10	31
0698-3447	28480	7	53
0698-3449	28480	11	2
0698-3450	28480	7	58
0698-3450	28480	9	53
0698-3450	28480	10	41
0698-3450	28480	11	7
0698-3450	28480	15	17
0698-3451	28480	8	47
0698-3453	28480	7	50
0698-3453	28480	9	41
0698-3454	28480	8	43
0698-3455	28480	8	39
0698-3455	28480	9	40
0698-3458	28480	7	52
0698-4037	28480	2	35
0698-4087	28480	2	28
0698-4207	26480	13	6
0698-4507	28480	13	2
0698-4519	28480	7	51
0698-5401	28480	12	12
0698-6310	28480	12	4
0698-6311	28480	12	5
0698-6694	28480	10	27
0698-6696	28480	10	28
0698-6941	28480	12	3

PART NUMBER	FSCM	FIG. NO.	ITEM NO.
0698-7188	28480	6	61
0698-7200	28480	6	45
0698-7200	28480	8	58
0698-7202	28480	6	41
0698-7205	28480	6	60
0698-7209	28480	6	35
0698-7212	28480	6	31
0698-7213	28480	6	34
0698-1214	28480	6	42
0698-7223	28480	6	29
0698-7224	28480	6	55
0698-7227	28480	6	40
0698-7229	28480	6	59
0698-7231	28480	6	39
0698-7232	28480	8	57
0698-7236	28480	6	36
0698-7236	28480	8	59
0698-7238	28480	8	61
0698-7240	28480	6	46
0698-7243	28480	8	62
0698-7244	28480	6	47
0698-7253	28480	6	28
0698-1256	28480	6	48
0698-7257	28480	6	53
0698-7260	28480	6	32
0698-7265	28480	6	54
0698-7267	28480	6	30
0698-7268	28480	6	33
0698-7269	28480	6	43
0698-7270	28480	6	50
0698-7275	28480	6	44
0698-7278	28480	6	51
0698-7284	28480	6	38
0757-0001	28480	12	2
0757-0122	28480	7	77
0757-0123	28480	8	46
0757-0159	28480	5	20
0757-0180	28480	5	26
0757-0199	28480	3	21
0757-0199	28480	7	45
0157-0276	28480	3	32
0757-0276	28480	7	29
0757-0276	28480	7	34
0151-0219	28480	3	27
0757-0219	28480	7	79
0757-0219	28480	9	39
0757-0279	28480	10	29
0757-0280	28480	2	30
0757-0280	28480	3	31
0757-0280	28480	7	35
0757-0280	28480	8	35
0751-0280	28480	9	32
0757-0280	28480	10	22
0757-0280	28480	14	26
0757-0288	28480	3	41
0757-0289	28480	8	52
0757-0290	28480	8	40
0757-0290	28480	9	44
0757-0316	28480	14	18
0757-0317	28480	7	44
0757-0346	28480	3	28
0757-0346	28480	8	30
0757-0346	28480	10	39
0757-0382	28480	14	21
0757-0394	28480	5	27
0757-0394	28480	10	45
0757-0394	28480	14	23
0757-0394	28480	15	18
0157-0391	28480	14	22
0757-0396	28480	5	28
0757-0400	28480	7	57
0757--0400	28480	9	49
0757-0401	28480	2	23
0757-0401	28480	3	26
0751-0401	28480	7	59
0757-0401	28480	10	25
0751-0402	28480	7	61
0757-0402	28480	14	19
0757-0403	28480	7	63
0757-0405	28480	7	31

PART NUMBER	FSCM	FIG. NO.	ITEM NO.
0757-0416	28480	2	33
0757-0416	28480	7	30
0757-0416	28480	8	41
0757-0416	28480	10	40
0757-0416	28480	14	27
0757-0418	28480	3	33
0757-0418	28480	7	47
0757-0418	28480	8	34
0757-0420	28480	2	26
0757-0420	28480	3	38
0757-0420	28480	5	19
0757-0420	28480	7	41
0757-0420	28480	9	52
0757-0420	28480	10	38
0757-0421	28480	2	24
0757-0421	28480	9	47
0757-0424	28480	10	46
0757-0428	28480	2	20
0757-0436	28480	9	55
0757-0438	28480	2	19
0757-0438	28480	5	17
0757-0438	28480	7	69
0757-0438	28480	4	29
0757-0438	28480	10	47
0757-0438	28480	11	13
0757-0438	28480	14	20
0757-0439	28480	9	31
0757-0440	28480	2	29
0757-0440	28480	10	30
0757-0440	28480	12	9
0757-0441	28480	1	26
0757-0441	28480	7	46
0757-0441	28480	8	37
0757-0442	28480	3	23
0757-0442	28480	7	78
0757-0442	28480	8	45
0757-0442	28480	9	57
0757-0442	28480	12	11
0757-0442	28480	15	13
0757-0443	28480	9	25
0757-0443	28480	11	3
0757-0444	28080	7	54
0757-0447	28480	3	22
0757-0447	28480	9	24
0757-0447	28480	15	12
0757-0453	28480	7	75
0757-0454	28480	13	3
0757-0458	28480	7	62
0757-0459	28480	7	64
0757-0459	28480	9	50
0757-0459	28480	11	1
0757-0460	28480	3	39
0757-0460	28480	7	36
0757-0460	28480	9	34
0757-0461	28480	1	24
0757-0461	28480	7	67
0757-0461	28480	8	31
0757-0462	28480	7	68
0757-0463	28480	7	72
0757-0463	28480	8	33
0757-0463	28480	9	42
0757-0464	28480	7	74
0757-0464	28480	9	28
0757-0465	28480	5	30
0757-0465	28480	7	49
0757-0465	28480	8	42
0757-0465	28480	9	45
0757-0465	28480	14	25
0757-0470	28480	9	35
0757-0485	28480	11	8
0757-0195	28480	7	80
0757-1060	28480	6	49
0757-1090	28480	6	52
0757-1092	28480	5	23
0757-1094	28480	3	25
0757-1094	28480	12	8
0764-0012	28480	9	54
0764-0012	28480	10	44
0764-0018	28480	1	28
0764-0010	28480	1	70
0811-1666	28480	1	53
0811-2501	28480	1	35
0812-0100	28480	1	71
08552-6007	28480	1	34
08552-60083	28480	1	20
08552-60084	28480	1	48
08552-60105	28480	1	12
08552-60106	28480	1	14
08552-60107	28480	1	47
08552-60109	28480	1	43
08552-6011	28480	4	8
08552-60111	28480	1	37
08552-60112	50436	5	2
08552-60115	28480	1	42
08552-60116	28480	1	39
08552-60117	28480	1	60
08552-60118	28480	1	30
08552-60119	28480	1	64
08552-6012	28480	4	6
08552-60122	28480	1	61
08552-60123	28480	1	17
08552-60128	28480	6	65
08552-60129	28480	3	1
08552-6013	28480	10	16
08552-60131	28480	1	62
08552-60132	28480	1	21
08552-60134	28480	1	2
08552-60135	28480	1	10
08552-60136	28480	1	50
08552-60137	28480	1	36
08552-60148	28480	5	1
08552-60149	28480	1	45
08552-6015	28480	1	63
08552-6025	28480	2	12
08552-6028	28480	1	54
08552-6036	28480	1	22
08552-6039	28480	1	19
06552-6044	28480	5	32
08552-8001	28480	1	31
08552-8002	28480	1	28
08552-80101	50436	14	28
08552-80104	50436	15	23
08552-80105	50436	5	31
09-4436-4K	82142	1	38
lN823	04713	7	17
lN936	04713	8	18
10132-17	82142	4	5
10133-4	82142	10	14
10176-40	82142	4	7
1025-24	99800	8	23
10534C	28480	14	11
1200-0168	28480	1	67
1250-0118	28480	1	6
1250-0252	28480	1	5
1251-0055	28480	1	65
1251-0135	28480	1	56
1251-0194	28480	1	46
15-1315-12J	82142	2	15
15-1315-12J	82142	6	23
15-1315-12J	82142	8	21
1500101X9010R20YS	56289	15	6
1500104X9035A2EDYS	56289	8	1
1500105X9035/2DYS	56289	3	4
1500105X9035A2DYS	56289	6	4
1500105X9035A2DYS	56289	13	5
150D106X9020B2DYS	56289	13	1
1500225X9O20AZDYS	56289	6	3
1500225X9020A2DYS	56289	7	7
1500225X9020A2DYS	56289	9	9
1500ZZ5X90Z0AZDYS	56289	10	6
150D225X9020A2DYS	56289	14	8
1500225X9020A2DYS	56289	15	7
1500685X9035B2DYS	56289	2	5
1500685X9035B2DYS	56289	3	2
1500685X903582DYS	56289	5	4
150DtB5X9035B20YS	56289	7	2
1500685X9035B2DYS	56289	8	3
1500685X9035B2DYS	56289	9	1
1500685X9035B2DYS	56289	11	15
1537-12	99800	5	14

PART NUMBER	FSCM	FIG. NO.	ITEM NO.
1537-20	99800	14	12
1537-42	99800	14	13
1826-0013	28480	7	82
1826-0013	28480	8	65
1826-0013	28480	14	30
1853-0010	28480	3	17
1853-0010	28480	10	20
1853-0020	28480	2	17
1853-0020	28480	6	26
1853-0020	28480	7	23
1853-0020	28480	8	25
1853-0034	28480	9	20
1853-0034	28480	14	17
1853-0050	28480	15	9
1854-0003	28480	7	26
1854-0019	20480	2	18
1854-0019	28480	6	27
1854-0019	28480	8	28
1854-0019	28480	14	16
1854-0071	28480	2	16
1854-0071	28480	3	18
1854-0071	28480	6	25
1854-0071	28480	7	22
1854-0071	28480	8	24
1854-0071	28480	15	10
1854-0221	28480	7	24
1854-0232	28480	8	27
1854-0232	28480	9	23
1854-0247	28480	5	15
l854-0341	28480	1	73
1854-0404	28480	9	21
1901-0050	28480	5	10
1901-0050	28480	10	11
1901-0096	28480	9	13
1901-0179	28480	10	12
1901-04168	28480	1	66
1901-0416	28480	7	13
1901-0639	28480	6	18
1902-0025	28480	9	16
1902-0025	28480	14	10
1902-0040	28480	7	19
1902-0202	28480	8	19
1902-0556	28480	8	20
1902-0683	28480	9	15
1902-3070	28480	7	21
1902-3104	28480	7	14
1902-3171	28480	8	16
1902-3256	28480	7	18
1902-3268	28480	7	16
192P10292PTS	56289	7	6
192P10292PTS	56289	8	8
l92Pl0292PTS	56289	14	5
192P10392PTS	56289	13	4
192P10492PTS	56289	8	7
192P15292PTS	56289	14	6
192Pl5392PTS	56289	9	7
192P15392PTS	56289	15	3
192P18392PTS	56289	14	7
192P22392PTS	56289	7	5
192P22392PTS	56289	10	2
192P33292PTS	56289	9	12
192P33392PTS	56289	7	1
192P33392PTS	56289	14	9
2N2904A	80131	15	11
2N3053	80131	8	26
2N3053	80131	10	21
2N3134	80131	7	25
2N3251	80131	9	22
2N3528	02735	7	15
2N3563	80131	3	16
2N3740	80131	1	72
2N3904	04713	10	19
2N4917	80131	5	16
2100-1754	28480	3	36
2100-1755	28480	2	36
2100-1755	28480	3	19
2100-1755	28480	10	34
2100-1756	28480	2	37
2100-1756	28480	7	40
2100-1757	28480	2	27
2100-1757	28480	3	34
2100-1757	28480	8	56
2100-1758	28480	3	42
2100-l758	28480	8	53
2100-1760	28480	3	40
2100-1760	28480	7	55
2100-1760	28480	8	38
2100-1788	28480	6	63
2100-2413	28480	9	48
2100-2413	28480	10	32
2100-2488	28480	1	7
2100-2489	28480	6	62
2100-2489	28480	7	76
2100-2492	284E	1	9
2100-2501	28480	1	4
2100-2514	28480	9	46
2100-2522	28480	6	60
2100-2522	28480	15	16
2100-2574	28480	6	56
2100-2633	28480	6	58
2100-2661	28480	1	8
2100-2806	28480	1	16
21070	71744	1	3
2110-0087	28480	1	69
2425-000X5Pl00G	72982	1	41
2425-000X5V502P	72982	1	40
251-15-30-261	11785	1	52
252-06-30-340	71785	14	31
301-000COHO100J	72982	3	8
30l-000COHO100J	72982	6	16
301-000COHO100J	72982	8	14
301-000COHO759C	72982	5	8
301-000COJ0369C	72982	9	6
301-C00COK0159C	72982	8	15
301-000COK0919C	72982	9	11
30lNP022PF	72982	9	2
3100-2092	28480	12	10
3100-2656	28480	11	16
3100-2673	28480	13	
3101-0052	28480	1	13
3101-0897	28480	1	11
3101-0973	28480	8	63
312001	75915	1	74
367	08806	1	1
50-043-4610	98291	1	18
50-047-0000	98291	1	57
5040-0234	28480	1	23
50-590-65-38	02114		83
801K800011	12982	1	25
8120-1110	28480	1	51
8120-1111	28480	1	55
9100-0346	28480	5	13
9100-1611	28480	3	13
9100-1615	28480	1	44
9100-1618	28480	14	14
9100-1622	28480	6	22
9100-1629	28480	6	21
9100-1630	28480	2	14
9100-1630	28480	12	1
9100-1636	28480	3	14
9100-1636	28480	10	17
9100-1641	28480	10	15
9l00-1644	28480	10	18
9100-1648	28480	6	19
9100-2267	28480	8	22
9140-0114	28480	5	11
9140-0129	28480	5	12
9140-0129	28480	6	20
9140-0129	28480	9	19
9140-0137	28480	2	13
9140-0137	28480	3	15
9140-0237	28480	2	11
9140-0237	28480	3	12
9140-0237	28480	14	15
9140-0237	28480	15	8
9170-0029	28480	7	84
9170-0847	28480	3	44

LATEST NATIONAL STOCK NUMBER ASSIGNMENTS

STOCK NUMBER	FIGURE NO.	ITEM NO.
6625-00-003-9306	1	39
6625-00-003-9109	1	45
6625-00-003-9110	1	47
6625-00-004-1214	1	42
6625-00-004-4982	3	1
6625-00-004-49683	5	2
6625-00-004-4984	1	37
6625-00-004-4985	1	17
5930-00-004-4986	1	2
6625-00-004-4988	1	43
5905-00-110-0849	12	2
6625-00-130-1790	1	48
6625-00-139-7601	1	36
6250-00-150-6316	1	31
5905-00-412-0754	5	23
6250-00-448-5451	1	28
5930-00-472-5005	1	41
5905-00-469-2042	1	32
6625-00-490-6606	1	34
6145-00-591-5222	11	51
6625-00-968-1861	1	14
6625-00-968-3123	1	60
5930-01-014-2674	5	3
5910-01-014-2674	14	1
5905-01-026-0165	11	8

LATEST PART NUMBER ASSIGNMENTS

PART NUMBER	FSCM	FIG. NO.	ITEM NO.
11592-20001	28480	16	11
11592-60001	28480	16	5
11592-60002	28480	16	13
11592-60003	28480	16	12
11592-60022	28480	16	8
11592-60013	28480	16	7
11592-60015	28480	16	6
11592-6001.6	28480	16	1
1250-0627	28480	16	2
1250-1156	28480	16	3
1250-1200	28480	16	9
1390-0170	28480	16	10
8710-0946	28480	16	4

By Order of the Secretary of the Army:

BERNARD W. ROGERS
General, United States Army
Chief of Staff

Official:

J. C. PENNINGTON
Brigadier General, United States Army
The Adjutant General

Distribution:

Active Army:

USAINSCOM (2)
COE (1)
TSG (1)
USAARENBD(1)
DARCOM (1)
TRADOC (2)
OS Maj Comd (4)
TECOM (2)
USACC (4)
MDW(1)
Armies (2)
Corps (2)
Svc Colleges (1)
USASIGS (5)
USAADS (2)
USAFAS (2)
USAARMS (2)
USAIS(2)
USAES(2)
USAICS(3)
MAAG (1)
USARMIS(1)
USAERDAA(1)
USAERDAW (1)
USASAE (2)
USASATC&S (2)
Ft Monmouth (HISA) (33)
Ft Richardson (CERCOM) (2)
Fort Gordon (10)
Fort Huachuca (10)
Fort Carson (5)
Fort Gillem (10)
Army Dep (1) except
LBAD (14)
SAAD (30)
TOAD(14)
SHAD (3)
USA Dep (1)
Sig Sec USA Dep (1)
Units org under fol TOE:
(1 cy each unit UNIONDC)
29-134
29-135
32-52
32-57
29-207 (2)
29-610 (2)

NG: None

USAR: None

For explanation of abbreviations used, see AR 310-50.

*U.S. GOVERNMENT PRINTING OFFICE: 1993 - 342-421/62574

RECOMMENDED CHANGES TO EQUIPMENT TECHNICAL MANUALS

SOMETHING WRONG WITH THIS MANUAL?

THEN. . .JOT DOWN THE DOPE ABOUT IT ON THIS FORM, TEAR IT OUT, FOLD IT AND DROP IT IN THE MAIL!

FROM: (YOUR UNIT'S COMPLETE ADDRESS)
Commander
Stateside Army Depot
ATTN: AMSTA-US
Stateside, N.J. 07703

DATE 10 July 1975

PUBLICATION NUMBER	DATE	TITLE
TM 11-5840-340-12	23 Jan 74	Radar Set AN/[illegible]-76

BE EXACT. . .PIN-POINT WHERE IT IS				IN THIS SPACE TELL WHAT IS WRONG AND WHAT SHOULD BE DONE ABOUT IT:
PAGE NO.	PARAGRAPH	FIGURE NO.	TABLE NO.	
2-25	2-28			Recommend that the installation antenna alignment procedure be changed throughout to specify a 2° IFF antenna lag rather than 1° REASON: Experience has shown that with only a 1° lag, the antenna servo system is too sensitive to wind gusting in excess of [illegible] knots, and has a tendency to rapidly accelerate and decelerate as it hunts, causing strain to the drive train. Hunting is minimized by adjusting the lag to 2° without degradation of operation.
3-10	3-3		3-1	Item 5, Function column. Change "2 db" to "3db." REASON: The adjustment procedure for the TRANS POWER FAULT indicator calls for a 3 db (500 watts) adjustment to light the TRANS POWER FAULT indicator.
5-6	5-8			Add new step f.1 to read, "Replace cover plate removed in step e.1, above." REASON: To replace the cover plate.
		F03		Zone C 3. On J1-2, change "+24 VDC to "+5 VDC." REASON: This is the output line of the 5 VDC power supply. + 24 VDC is the input voltage.

TYPED NAME, GRADE OR TITLE, AND TELEPHONE NUMBER	SIGN HERE:
SSG I. M. DeSpiritof 999-1776	SSG I. M. DeSpiritof

DA FORM 1 AUG 74 2028-2

P.S.--IF YOUR OUTFIT WANTS TO KNOW ABOUT YOUR MANUAL "FINDS," MAKE A CARBON COPY OF THIS AND GIVE IT TO YOUR HEADQUARTERS.

HISA 1686-75

TEAR ALONG DOTTED LINE

RECOMMENDED CHANGES TO EQUIPMENT TECHNICAL MANUALS

SOMETHING WRONG WITH THIS MANUAL?

THEN. . .JOT DOWN THE DOPE ABOUT IT ON THIS FORM, TEAR IT OUT, FOLD IT AND DROP IT IN THE MAIL!

FROM: (YOUR UNIT'S COMPLETE ADDRESS)

DATE

PUBLICATION NUMBER	DATE	TITLE
TM 11-6625-2781-24P-1	11 AUG 78	

BE EXACT. . .PIN-POINT WHERE IT IS

PAGE NO.	PARAGRAPH	FIGURE NO.	TABLE NO.

IN THIS SPACE TELL WHAT IS WRONG AND WHAT SHOULD BE DONE ABOUT IT:

TYPED NAME, GRADE OR TITLE, AND TELEPHONE NUMBER

SIGN HERE:

DA FORM 1 AUG 74 2028-2

P.S.--IF YOUR OUTFIT WANTS TO KNOW ABOUT YOUR MANUAL "FIND," MAKE A CARBON COPY OF THIS AND GIVE IT TO YOUR HEADQUARTERS.

TEAR ALONG DOTTED LINE

FILL IN YOUR UNIT'S ADDRESS

FOLD BACK

DEPARTMENT OF THE ARMY

OFFICIAL BUSINESS

Commander
US Army Communications and
Electronics Materiel Readiness Command
ATTN: DRSEL-MA-Q
Fort Monmouth, New Jersey 07703

TEAR ALONG DOTTED LINE

FOLD BACK

REVERSE OF DA FORM 2028-2

RECOMMENDED CHANGES TO EQUIPMENT TECHNICAL MANUALS

SOMETHING WRONG WITH THIS MANUAL?

THEN. . .JOT DOWN THE DOPE ABOUT IT ON THIS FORM, TEAR IT OUT, FOLD IT AND DROP IT IN THE MAIL!

FROM: (YOUR UNIT'S COMPLETE ADDRESS)

DATE

PUBLICATION NUMBER	DATE	TITLE
TM 11-6625-2781-24P-1	11 AUG 78	

BE EXACT. . .PIN-POINT WHERE IT IS

PAGE NO.	PARAGRAPH	FIGURE NO.	TABLE NO.

IN THIS SPACE TELL WHAT IS WRONG AND WHAT SHOULD BE DONE ABOUT IT:

TYPED NAME, GRADE OR TITLE, AND TELEPHONE NUMBER

SIGN HERE:

DA FORM 1 AUG 74 2028-2

P.S.--IF YOUR OUTFIT WANTS TO KNOW ABOUT YOUR MANUAL "FIND," MAKE A CARBON COPY OF THIS AND GIVE IT TO YOUR HEADQUARTERS.

TEAR ALONG DOTTED LINE

FILL IN YOUR UNIT'S ADDRESS

FOLD BACK

DEPARTMENT OF THE ARMY

OFFICIAL BUSINESS

Commander
US Army Communications and
Electronics Materiel Readiness Command
ATTN: DRSEL-MA-Q
Fort Monmouth, New Jersey 07703

TEAR ALONG DOTTED LINE

FOLD BACK

REVERSE OF DA FORM 2028-2

RECOMMENDED CHANGES TO EQUIPMENT TECHNICAL MANUALS

SOMETHING WRONG WITH THIS MANUAL?

THEN. . .JOT DOWN THE DOPE ABOUT IT ON THIS FORM, TEAR IT OUT, FOLD IT AND DROP IT IN THE MAIL!

FROM: (YOUR UNIT'S COMPLETE ADDRESS)

DATE

PUBLICATION NUMBER	DATE	TITLE
TM 11-6625-2781-24P-1	11 AUG 78	

BE EXACT. . .PIN-POINT WHERE IT IS

PAGE NO.	PARAGRAPH	FIGURE NO.	TABLE NO.

IN THIS SPACE TELL WHAT IS WRONG AND WHAT SHOULD BE DONE ABOUT IT:

TYPED NAME, GRADE OR TITLE, AND TELEPHONE NUMBER

SIGN HERE:

TEAR ALONG DOTTED LINE

DA FORM 1 AUG 74 2028-2

P.S.--IF YOUR OUTFIT WANTS TO KNOW ABOUT YOUR MANUAL "FIND," MAKE A CARBON COPY OF THIS AND GIVE IT TO YOUR HEADQUARTERS.

FILL IN YOUR UNIT'S ADDRESS

FOLD BACK

DEPARTMENT OF THE ARMY

OFFICIAL BUSINESS

Commander
US Army Communications and
Electronics Materiel Readiness Command
ATTN: DRSEL-MA-Q
Fort Monmouth, New Jersey 07703

TEAR ALONG DOTTED LINE

FOLD BACK

REVERSE OF DA FORM 2028-2

THE METRIC SYSTEM AND EQUIVALENTS

LINEAR MEASURE

. Centimeter = 10 Millimeters = 0.01 Meters = 0.3937 Inches
1 Meter = 100 Centimeters = 1000 Millimeters = 39.37 Inches
1 Kilometer = 1000 Meters = 0.621 Miles

WEIGHTS

Gram = 0.001 Kilograms = 1000 Milligrams = 0.035 Ounces
1 Kilogram = 1000 Grams = 2.2 lb.
1 Metric Ton = 1000 Kilograms = 1 Megagram = 1.1 Short Tons

LIQUID MEASURE

1 Milliliter = 0.001 Liters = 0.0338 Fluid Ounces
1 Liter = 1000 Milliliters = 33.82 Fluid Ounces

SQUARE MEASURE

1 Sq. Centimeter = 100 Sq. Millimeters = 0.155 Sq. Inches
1 Sq. Meter = 10,000 Sq. Centimeters = 10.76 Sq. Feet
1 Sq. Kilometer = 1,000,000 Sq. Meters = 0.386 Sq. Miles

CUBIC MEASURE

1 Cu. Centimeter = 1000 Cu. Millimeters = 0.06 Cu. Inches
1 Cu. Meter = 1,000,000 Cu. Centimeters = 35.31 Cu. Feet

TEMPERATURE

5/9(°F - 32) = °C
212° Fahrenheit is evuivalent to 100° Celsius
90° Fahrenheit is equivalent to 32.2° Celsius
32° Fahrenheit is equivalent to 0° Celsius
9/5C° + 32 =°F

APPROXIMATE CONVERSION FACTORS

TO CHANGE	TO	MULTIPLY BY
Inches	Centimeters	2.540
Feet	Meters	0.305
Yards	Meters	0.914
Miles	Kilometers	1.609
Square Inches	Square Centimeters	6.451
Square Feet	Square Meters	0.093
Square Yards	Square Meters	0.836
Square Miles	Square Kilometers	2.590
Acres	Square Hectometers	0.405
Cubic Feet	Cubic Meters	0.028
Cubic Yards	Cubic Meters	0.765
Fluid Ounces	Milliliters	29.573
ıts	Liters	0.473
arts	Liters	0.946
allons	Liters	3.785
Ounces	Grams	28.349
Pounds	Kilograms	0.454
Short Tons	Metric Tons	0.907
Pound-Feet	Newton-Meters	1.356
Pounds per Square Inch	Kilopascals	6.895
Miles per Gallon	Kilometers per Liter	0.425
Miles per Hour	Kilometers per Hour	1.609

TO CHANGE	TO	MULTIPLY BY
Centimeters	Inches	0.394
Meters	Feet	3.280
Meters	Yards	1.094
Kilometers	Miles	0.621
Square Centimeters	Square Inches	0.155
Square Meters	Square Feet	10.764
Square Meters	Square Yards	1.196
Square Kilometers	Square Miles	0.386
Square Hectometers	Acres	2.471
Cubic Meters	Cubic Feet	35.315
Cubic Meters	Cubic Yards	1.308
Milliliters	Fluid Ounces	0.034
Liters	Pints	2.113
Liters	Quarts	1.057
ers	Gallons	0.264
ms	Ounces	0.035
ograms	Pounds	2.205
Metric Tons	Short Tons	1.102
Newton-Meters	Pounds-Feet	0.738
Kilopascals	Pounds per Square Inch	0.145
lometers per Liter	Miles per Gallon	2.354
meters per Hour	Miles per Hour	0.621

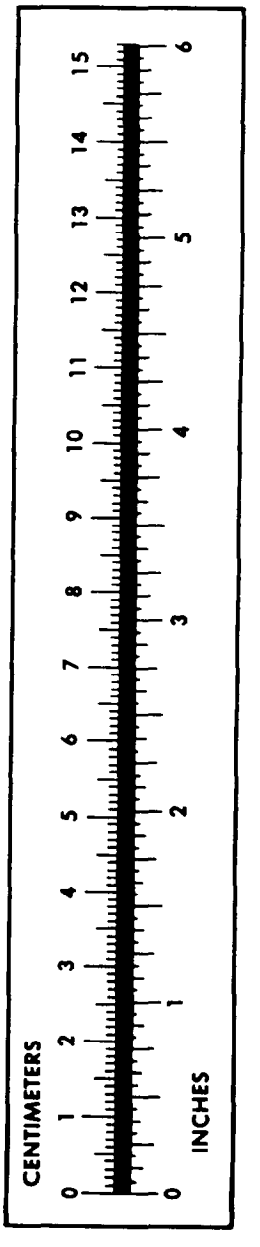

PIN: 035000-000

This fine document...

Was brought to you by me:

Liberated Manuals -- free army and government manuals

Why do I do it? I am tired of sleazy CD-ROM sellers, who take publicly available information, slap “watermarks” and other junk on it, and sell it. Those masters of search engine manipulation make sure that their sites that sell free information, come up first in search engines. They did not create it... They did not even scan it... Why should they get your money? Why are not letting you give those free manuals to your friends?

I am setting this document FREE. This document was made by the US Government and is NOT protected by Copyright. Feel free to share, republish, sell and so on.

I am not asking you for donations, fees or handouts. If you can, please provide a link to liberatedmanuals.com, so that free manuals come up first in search engines:

<A HREF=http://www.liberatedmanuals.com/>Free Military and Government Manuals</A>

- Sincerely
  Igor Chudov
  http://igor.chudov.com/
- Chicago Machinery Movers