TECHNICAL MANUAL

GENERAL SUPPORT

MAINTENANCE MANUAL

RADIO TEST SET

AN/ARM-92B

(NSN 6625-00-631-5501)

This copy is a reprint which includes current pages from Changes 1 and 2.

HEADQUARTERS, DEPARTMENT OF THE ARMY

JULY 1977

WARNING

Be careful when working on the 115-volt,400-Hz circuit. Serious injury or death may result from contact with this circuit.

DON’T TAKE CHANCES!

CHANGE NO. 2

HEADQUARTERS
DEPARTMENT OF THE ARMY
WASHINGTON, DC *4 May 1981*

General Support Maintenance Manual
RADIO TEST SET AN/ARM-92B
(NSN 6625-00-631-5501)

TM 11-6625-2709-40, 28 July 1977, is changed as follows:

1. New or changed material is indicated by a vertical bar in the margin.
2. A new or changed illustration is indicated by a vertical bar next to the figure number.
3. Remove old pages and insert new pages as indicated below:

Remove	*Insert*
i amd ii	i and ii
1-1 through 1-3(1-4 blank)	1-1 through 1-3/(1-4 blank)
1-5 through 1-8	1-5 through 1-8
None	2-14.3 and 2-14.4
3-1 and 3-2	3-1 and 3-2

4. File this change sheet in front of the manual for reference purposes.

By Order of the Secretary of the Army:

E. C. MEYER
General, United States Army
Chief of Staff

Official:

J. C. PENNINGTON
Major General, United States Army
The Adjutant General

Distribution:

To be distributed in accordance with DA Form 12-36A, Direct and General Support maintenance requirements for AN/ARM-92.

CHANGE No. 1

HEADQUARTERS
DEPARTMENT OF THE ARMY
WASHINGTON, DC, *10 July 1980*

General Support Maintenance Manual
RADIO TEST SET AN/ARM-92B
(NSN 6625-00-631-5501)

TM 11-6625-2709-40, 28 July 1977, is changed as follows:

1. New or changed material is indicated by a vertical bar in the margin.
2. A new or changed illustration is indicated by a vertical bar next to the figure number.
3. Remove old pages and insert new pages as indicated below.

Remove	*Insert*
i through iii/(iv blank)	i and ii
1-1 and 1-2	1-1 and 1-2
2-5 through 2-10	2-5 through 2-10
None	2-14.1/(2-14.2 blank)
2-15 through 2-22	2-15 through 2-22.(6)
2-23 through 2-26	2-23 through 2-26
3-5 and 3-6	3-5 and 3-6
4-1 through 4-8	4-1 through 4-8
4-11 through 4-16	4-11 through 4-16
4-19 through 4-24	4-19 through 4-24
4-27 through 4-30	4-27 through 4-30
4-35/(4-36 blank)	4-35/(4-36 blank)
A-1 and A-2	A-1 and A-2
Forms 2028-2	Forms 2028-2

4. File this change sheet in front of the manual for reference purposes.

By Order of the Secretary of the Army:

E. C. MEYER
General, United States Army
Chief of Staff

Official:
J. C. PENNINGTON
Major General, United States Army
The Adjutant General

Distribution:
To be distributed in accordance with DA Form 12-36A Direct and General Support maintenance requirements for AN/ARM-92.

TECHNICAL MANUAL
No. 11-6625-2709-40

HEADQUARTERS
DEPARTMENT OF THE ARMY
WASHINGTON, DC, *28 July 1977*

GENERAL SUPPORT MAINTENANCE MANUAL
RADIO TEST SET AN/ARM-92B
(NSN 6625-00-631-5501)

REPORTING OF ERRORS

You can help improve this manual. If you find any mistakes or if you know of a way to improve the procedures, please let us know. Mail your DA Form 2028 (Recommended Changes to Publications and Blank Forms), or DA Form 2028-2 located in back of this manual direct to: Commander, US Army Communications and Electronics Materiel Readiness Command, ATTN: DRSEL-ME-MQ, Fort Monmouth, NJ 07703.

A riply will be furnished direct to you.

TABLE OF CONTENTS

LIST OF ILLUSTRATIONS

CHAPTER 1
FUNCTIONING

Section I. GENERAL FUNCTIONING OF RADIO TEST SET AN/ARM-92B

1-1. Scope

This manual contains general support maintenance instructions for Radio Test Set AN/ARM-92B. It includes instructions appropriate to these categories of maintenance for troubleshooting, testing, aligning, and repairing the equipment. The manual also lists tools, materials, and test equipment for maintenance. Detailed functions of the equipment are also covered.

NOTE

For other applicable forms and records, refer to paragraph 1-3, TM 11-6625-820-12.

1-2. Indexes of Publications

a. DA Pam 310-4. Refer to the latest issue of DA Pam 310-4 to determine whether there are new editions, changes, or additional publications pertaining to the equipment.

b. DA Pam 310-7. Refer to DA Pam 310-7 to determine whether there are modification work orders (MWO's) pertaining to the equipment.

1-3. Reporting Equipment Improvement Recommendations (EIR)

If your Radio Test Set AN/ARM-92B needs improvement, let us know. Send us an EIR. You, the user, are the only one who can tell us what you don't like about your equipment. Let us know why you don't like the design. Tell us why a procedure is hard to perform. Put it on an SF 368 Form (Quality Deficiency Report). Mail it to Commander, US Army Communications and Electronics Materiel Readiness Command, ATTN: DRSEL-ME-MQ, Fort Monmouth, NJ 07703. We'll send you a reply.

1-4. Block Diagram Functioning of Radio Test Set AN/ARM42B

(fig. 1-1)

a. General. Radio Test Set AN/ARM-92B provides for complete testing of Radio Receiving Sets AN/ARN-82, AN/ARN-82A, AN/ARN-82B, and AN/ARN-123(V) (receiving set) when used with external test equipment. The test set can also be used to test Radio Receiver R-1963/ARN (GS/MB receiver) and provides for flag and deviation loading. The functions of Radio Test Set AN/ARM-92B are as follows:

(1) Power distribution
(2) Phase shifting
(3) Resolver signal transmission
(4) Current measuring
(5) Compass simulation
(6) Self-test of control unit and functions of the test set

b. Power Distribution Circuits. Radio Set Control C-6873/ARN-82 (control unit), power relay K1, and power transformer T1 comprise the power distribution circuits. The test set connects 27.5-volt direct current (dc) from an external power source to the control unit, which applies or removes the 27.5 volts dc from the remaining power circuits. When the control unit applies this voltage to the remaining power circuits, 27.5 volts dc is applied to the radio receiver being tested, or to the GS/MB receiver, and to power relay K1. The relay then energizes and connects 115 volts, 400 Hz to power transformer T1. Transformer T1 steps the voltage down to 26 volts, 400 Hz, which is applied to the radio receiver. The control unit also supplies the tuning information required by the radio receiver or the GS/MB receiver.

c. Phase-Shifting Circuits. The phase-shifting circuits consist of precision bearing transformers T2 and T3, Course Indicator ID-1347C/ARN-82 (OBS), MODE switch S3, BEARING switch S4, and

BRG-OBS switch S5. These circuits are used to shift the phase of the 30-Hz reference signal obtained from the receiver being tested. Either the OBS resolver or precision hearing transformer T2 performs the phase shifting; BRG-OBS switch S5 selects the one to be used. The OBS resolver shifts the phase of the 30-Hz reference signal anywhere from 0 to 360 degrees; percision bearing transformer T2 shifts the phase of the signal in precise 30-degree increments. The exact 30-degree increment is selected by BEARING switch S4. MODE switch S3 removes transformer T3 from the circuit and adjusts the remaining circuits for phase shifting.

d. Resolver Transmitter Circuit. The resolver transmitter circuit consists of precision bearing transformers T2 and T3, Course Indicator ID-1347C/ARN-82 (OBS), MODE switch S3, BEARING switch S4, and BRG-OBS switch S5. This circuit supplies 400-Hz bearing information to the receiver being tested. BRG-OBS switch S5 selects either the OBS resolver or the simulated resolver comprised of transformers T2 and T3. MODE swith S3 connects transformers T2 and T3 to form a simulated resolver and switches the input to 400-Hz input. BEARING switch S4 selects the 30-degree increment equivalent to the OBS resolver position.

e. Current Measuring Circuits. TO-FROM meter M3 connects directly to the radio receiver and measures its to-from current, DEVIATION meter M1 and FLAG meter M2 are connected to either the radio receiver or the GS/MB receiver, depending on the position of IND TEST switch S6. These two meters measure the deviation current and flag current from either receiver.

f. Compass Simulator Circuit. The COMPASS SIMIULATOR indicator simulates a magnetic heading signal that is applied to the radio receiver. The simulated magnetic heading signal is also supplied to RMI Indicator ID-250A/ARN on the test set to drive the RMI card.

g. Aid Box. The aid box checks the wirimg harness in an aircraft installation of Radio Receiving Set AN/ARN-82B and checks the control unit installed in the test set or aircraft. It also provides a quick check of the accuracy of the meters in the test set. The aid box receives frequency information from the control unit in the test set or aircraft. This frequency information lights the lamps on the aid box in specific combinations. The aid box also receives 26 volts, 400 Hz from the test set or from the aircraft. A portion of this voltage is rectified and then divided to specific levels. Specific levels of dc voltage are applied to the meter circuits in the test set or to the aircraft indicaters. A portion of the 26 volts, 400 Hz is also used to check the audio wiring.

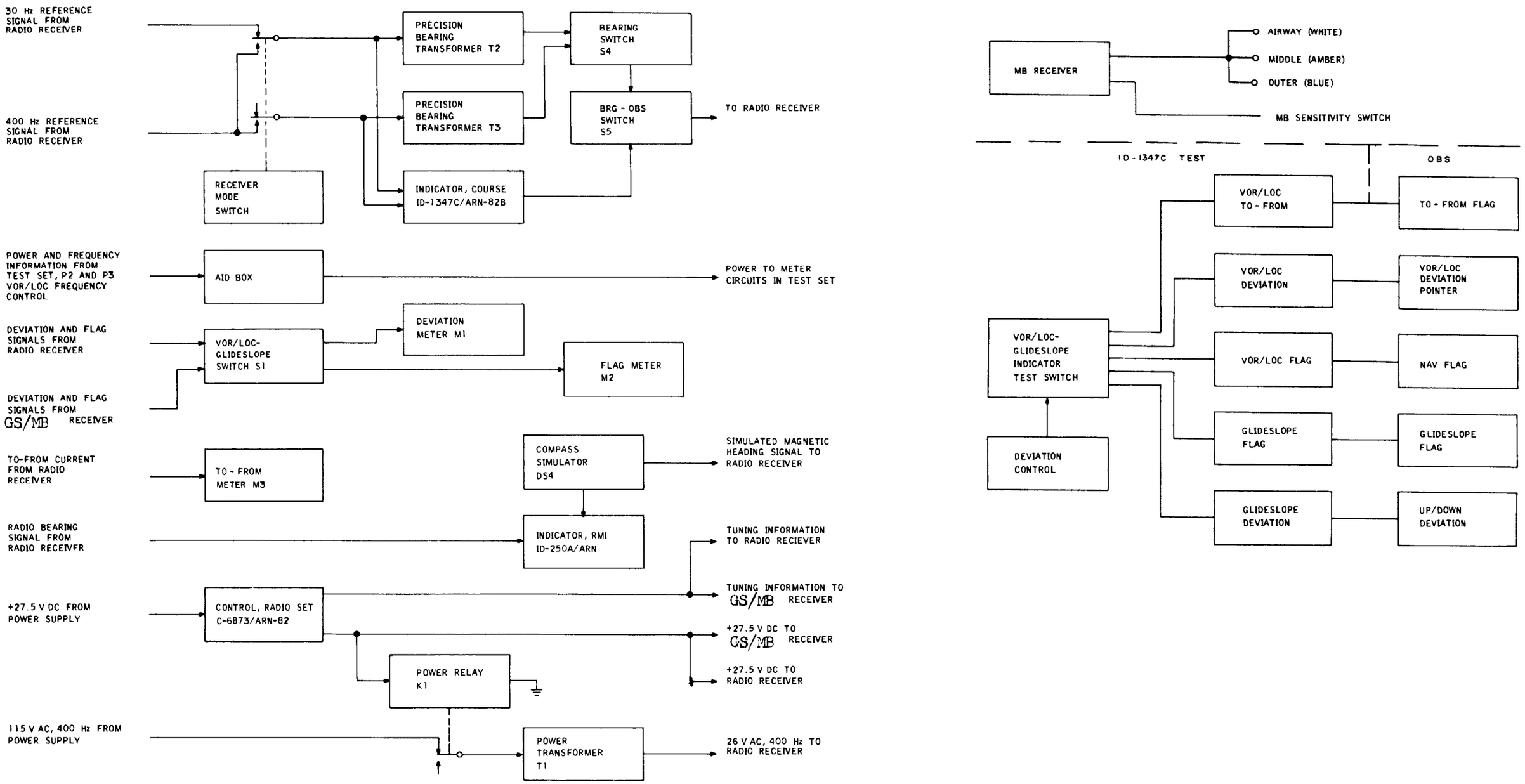

Figure 1-1. Radio Test Set AN/ARM-92B, block diagram.

Section II. DETAILED CIRCUIT FUNCTIONING

1-5. Power Distribution Circuits.

The test set supplies all the necessary power connections for the operation of a VOR radio receiver or a glideslope or marker beacon receiver. The operation of these power circuits is described below. Refer to appropriate test set schematic as indicated while reading paragraphs *a*, *b*, and *c* below.

a. The external sources of power are connected to J6 by Electrical Power Cable Assembly CX-11568/ARM-92 (power cable) (figure 1-2). The 27.5 volts dc is applied bettween pins A and B, the positive side to pin A, ground to pin B. The 115 volts, 400 Hz is applied with the high side to pin D. The connection from J6-A is made through fuse F2 to P5-Z on the control unit (figure 4-12). When the control unit power switch is in the PWR or TEST position, the 27.5-volt dc circuit is completed to P5-M (figure 4-11). The 27.5 volts is then routed to relay K1. This voltage energizes relay K1, and the circuit is completed for the 115 volts, 400 Hz from J6-D through fuse F1 to transformer T1. Transformer T1 steps down the 115 volts, 400 Hz to 26 volts, 400 Hz. The 26 volts, 400 Hz is routed to RMI connector P4, compass simulator connector P1, and connector P3 of the radio receiver.

b. When the control unit is in the PWR or TEST position, the 27.5 volts dc is routed from P5-M to connector P2 of the radio receiver. It is also routed from P5-T through fuse F3 to connector P7 of the glideslope or marker beacon receiver.

c. Tuning information from the control unit is routed to connectors P2 and P7. For further information on the control unit, refer to TM 11-5826-226-34 for Radio Receiving Set AN/ARN-82B. A schematic diagram of the control unit is shown in figure 4-11.

1-6. Phase-Shifting Circuits.

In the test set, the two circuits that shift the phase of the 30-Hz reference signal are the OBS resolver and precision bearing transformer T2. Their operation is described below. In Radio Test Set TS-2500B/ARM-92, MODE switch S3 disables precision bearing transformer T3 and adjusts the circuit of transformer T2 whenever the phase-shifting mode is needed (switch position, 30 HZ).

a. BRG-OBS switch S5 determines which phase-shifting circuit is used. When switch S5 is in the OBS position, the OBS resolver is used to produce the

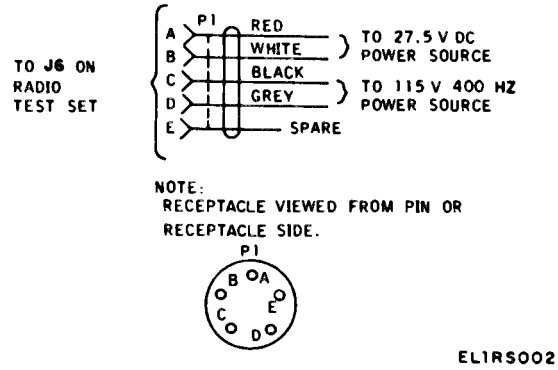

Figure 1-2. Electrical Power Cable Assembly CX-11568/ARM-92, schematic diagram.

desired phase shift. The OBS indicator is the same type as used in an aircraft installation. The 30-Hz reference signal is applied to the rotor of the resolver in the OBS indicator. When the rotor is turned, the phase of the signal at stator output is shifted. A compass card is attached to the rotor, providing an indication of the number of degrees of phase shift. This voltage is routed to the radio receiver. For more information on the OBS indicator, refer to TM 11-5826-226-34 for Radio Receiving Set AN/ARN-82B. A schematic diagram of the OBS indicator is shown in figure 1-3.

b. A resolver has the same electrical characteristics as a transformer. Therefore, a transformer can be used to simulate a resolver. When switch S5 is in the BRG position, precision bearing transformer T2 and its switching circuits are used to produce the desired phase shift. The 30-Hz reference signal from the radio receiver is applied through switch S5 to the primary of transformer T2. This primary winding and resistor R11 simulate the rotor of a resolver. The phase shift through the secondary winding of the transformer must be the same as the phase shift in the stator windings of the resolver. This phase shift through transformer T2 is adjusted to 83 degrees at a dial setting of 300 degrees by the loading on the tertiary winding. The design of the transformer is such that the phase shift it produces is stable with variations in alternating current (ac) or direct current through the primary winding. The combination of the precisely tapped secondary windings of transformer T2 and the switching arrangement (S4) produces the various voltage ratios that correspond to the stator output of a standard

resolver. Each clockwise position of switch S4 simulates a clockwise rotation of a resolver rotor in precise 30-degree increments. With switch S5 in the BRG position, the output voltage path from transformer T2 is through switch S4, through switch S3 in Radio Test Set TS-2500B/ARM-92, through switch S5, and out to the radio receiver through P2-F and -D. In Radio Test Set TS-2500B/ARM-92, stators E and G connect to P2-E and -G through switches S3, S5, and S4.

1-7. Resolver Transmitter Circuit.

The radio receiver requires 400-Hz resolver signals to derive course deviation and to-from outputs. The test set produces these signals either by energizing the OBS resolver or by energizing the precision bearing transformers.

a. BRG-OBS switch S5 determines which resolver circuit is used. When switch S5 is in the OBS position, the OBS resolver is used to produce the desired course. The OBS indicator is the same type as used in an aircraft installation. The 400-Hz reference signal is applied to the rotor of the resolver in the OBS indicator. When the rotor is turned, the voltage of the signal at stator output is varied. A compass card is attached to the rotor, providing an indication of the course selected. The voltage is routed to the radio receiver. For more information on the OBS indicator, refer to TM 11-5826-226-34 for Radio Receiving Set

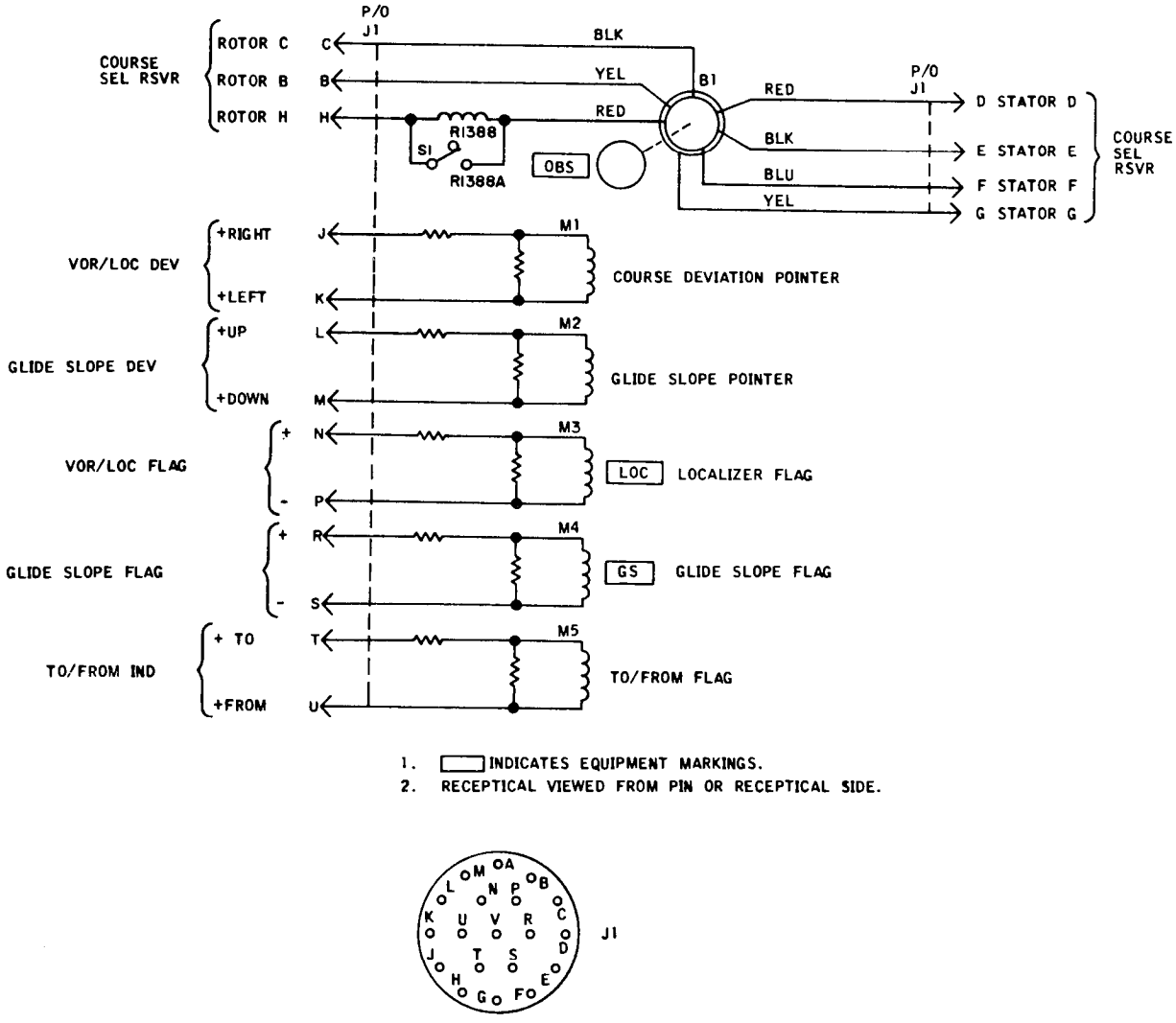

Figure 1-3. Course Indicator ID-1347C/ARN-82B, schematic diagram.

AN/ARN-82B. A schematic diagram of the OBS indicator is shown in figure 1-3.

b. A resolver has the same electrical characteristics as a transformer. Therefore, a transformer can be used to simulate a resolver. When switch S5 is in the BRG position and MODE switch S3 is in the 400 HZ position, precision bearing transformers T2 and T3 and their switching circuits are used to produce the desired stator voltages. The 400-Hz reference signal from the radio receiver is applied through switches S5, S3, and S4 to the primaries of transformers T2 and T3. These primary windings simulate the rotor of a resolver.

c. A combination of the precisely tapped secondary windings of transformers T2 and T3 and the switching arrangement (S4) produces a various voltage ratio that corresponds to the stator output of a standard resolver. Each clockwise position of switch S4 simulates a clockwise rotation of a resolver rotor in precise 30-degree increments. With switch S5 in the BRG position, the output voltage path from transformers T2 and T3 is through switches S3 and S5 to the radio receiver on P2-D, -E, -F, and -G.

1-8. Measuring Circuits (fig. 4-12, sh 3 of 3).

The outputs of four circuits in the radio receiver are measured in the test set. These measuring circuits are described below.

a. To-from current from the radio receiver is read on meter M3. TO-FROM meter M3 indicates the direction and amplitude of the current. Resistor R8 is a shunt resistor to provide normal to-from loading.

b. Deviation current from either the radio receiver or the glideslope receiver is read on meter M1. With switch S6 in the RCVR V/L position, P2-m, P, and B connect through switch S6A to the DEVIATION meter. The return path from meter M1 is through switch S6B to J2-n. When switch S6 is in the RCVR G/S position, P7-D and J2-r connect through switch S6A to the DEVIATION meter. The completed path of meter M1 is through switch S613 to P7-E and P2-s.

c. Flag current from either the radio receiver or the glideslope receiver is read on FLAG meter M2. When switch S6 is in the RCVR V/L (very-high-frequency omnidirectional radio range/localizer) position, meter M2 is connected through switch S6D to P2-b. The completed path from the meter is through switch S6C to P2-a. With switch S6 in the RCVR GS position, meter M2 is connected to P7-B and P2-e by switch S6C. The completed path of meter M2 is through switch S6D to P7-C and P2-q.

1-9. Compass Simulator Circuit (fig 4-12, sh 1 of 3).

The COMPASS SIMULATOR indicator contains a synchro transmitter of the same type used with the compass in an aircraft installation. As the dial is turned, the synchro generates a varying voltage from the 26 volts, 400 Hz that is applied to the COMPASS SIMULATOR indicator. The output voltage from the synchro transmitter is routed to the radio receiver and the RMI card to simulate a magnetic heading. The pointer simulates the magnetic heading of the aircraft.

1-10. RMI Circuits (fig 4-12, sh 1 of 3).

The RMI card gives an indication of simulated magnetic heading. The simulated magnetic heading signal originates in the compass simulator, and is routed to the RMI card. The RMI needles give an indication of the direction of a very-high-frequency omnirange (VOR) station. In the test set, two needles are electrically jumpered together. This makes the two needles track together. The VOR signals are routed from the radio receiver to the needle connections on P4. If the RMI card rotates to indicate a magnetic heading, the needles will follow the card rotation to keep in the direction of the VOR station. For more information on the RMI, refer to TM 11-5826-211-50 for RMI Indicator ID-250A/ARN. The RMI is shown in figure 1-4.

1-11. Aid Box

The TS-2501/ARM-92 (aid box) (fig. 1-5) is primarily intended for testing a new radio receiver installation wiring harness, hut it can he used for a quick check on the test set. The main circuits are as follows:

a. Light Circuitry. The light circuitry is provided to indicate when a circuit is made complete or when it is energized. Frequency control information is given in a code by the lamps. The lamps that check the power circuits glow when a current flows through them, indicating an energized circuit.

b. Meter Circuitry. The 26 volts, 400 Hz is applied to J1-G and is routed to zener diode CR1, Resistor R8 and zener diode CR1 form the 10-volt dc power supply for the meter circuits. Resistor R6 is a current-limiting resistor for the TO-FROM meter. Resistor R5 is a current-limiting resistor for the DEVIATION meter. Resistor R3 (a 511-ohm load) and resistor R4 (a 1000-ohm load) are the loading resistors for the DEVIATION meter. Resistor R2 is the current-

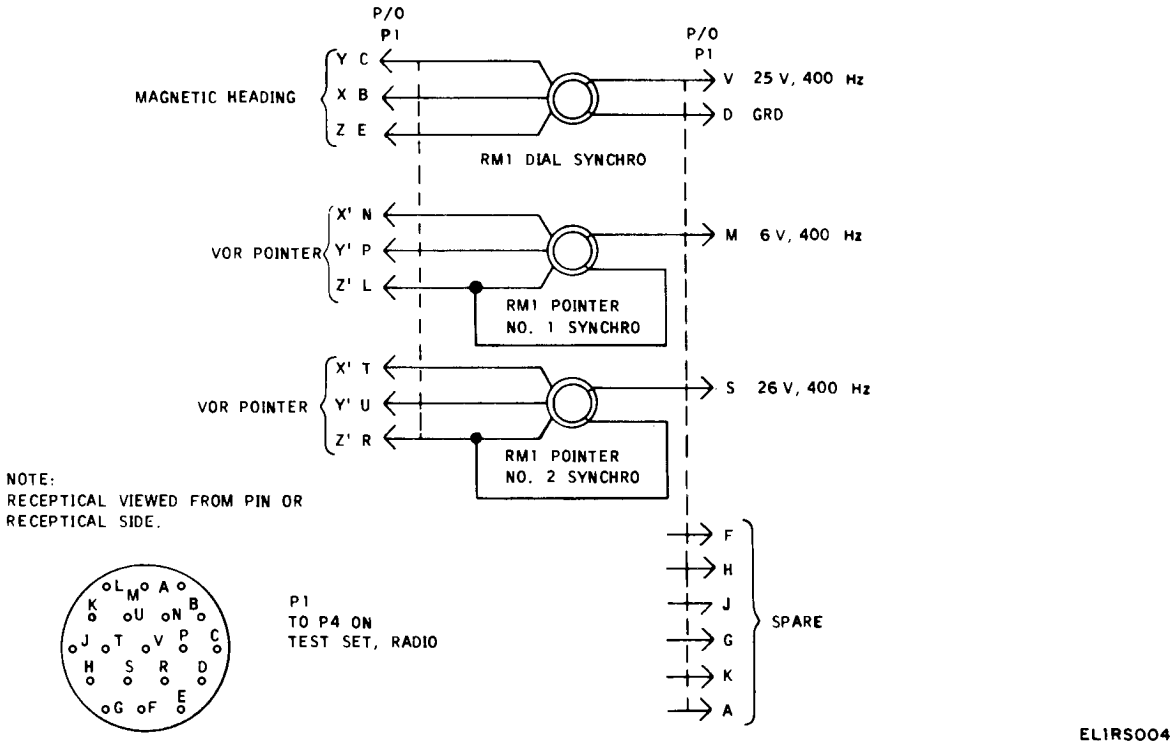

Figure 1-4. RMI Indicator for ID-250A/ARN, schematic diagram.

limiting resistor for the FLAG meter, and resistor R1 is a 1000-ohm load for the FLAG meter.

c. Audio Circuit. Resistor R7 drops the 26 volts, 400 Hz to the voltage level desired, and this 400-Hz tone is fed to J2-L.

d. Compass RMI Circuit. The signal from the compass simulator at J1-C and -D is connected to the RMI needle circuit through J1-H and -K. This makes both needle number 1 and needle number 2 of the RMI follow the rotation of the RMI card when the aid box is used to check the test set.

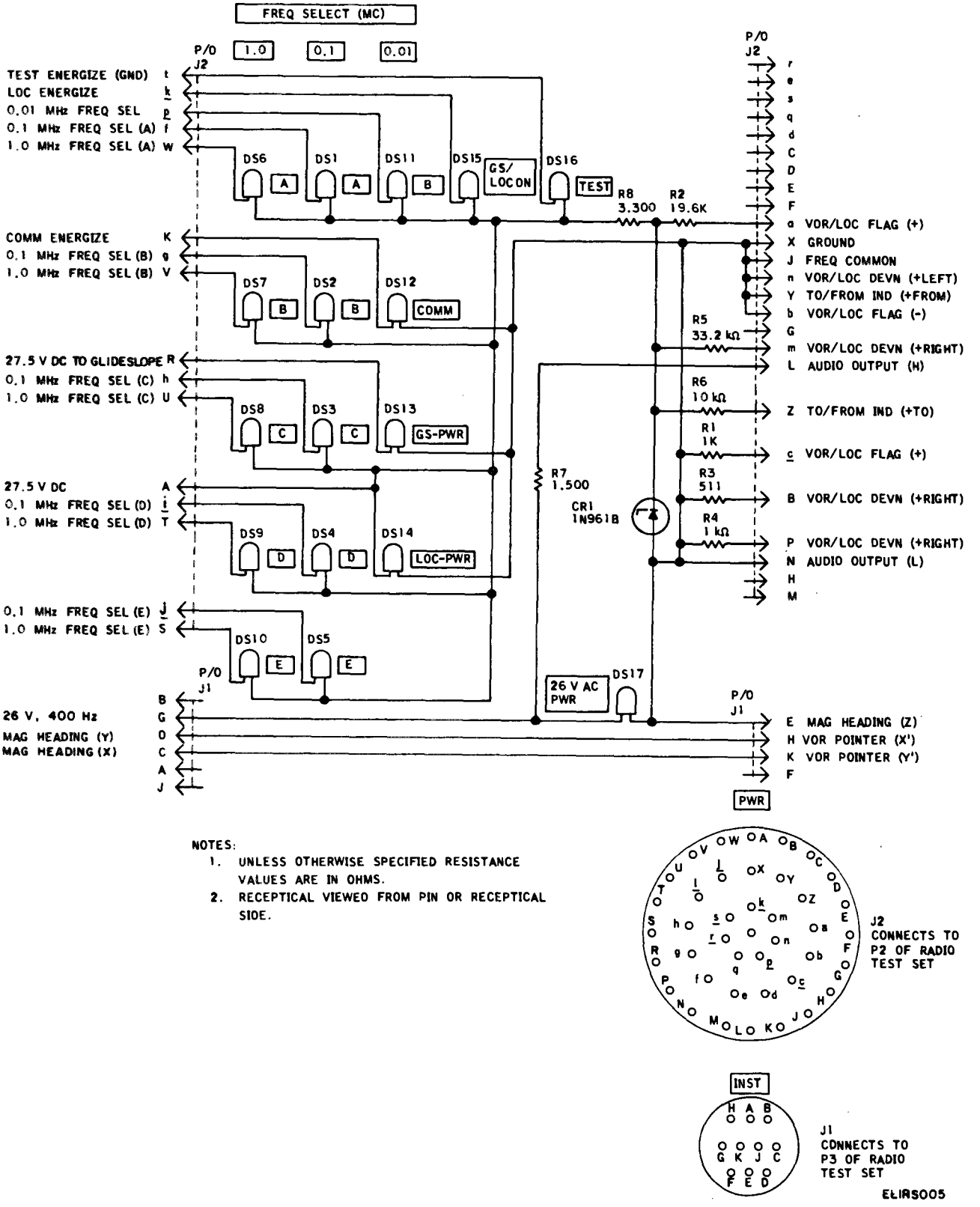

Figure 1-5. Aircraft Test Set Wiring Harness TS-2501/ARM-92, schematic diagram.

CHAPTER 2

TROUBLESHOOTING

Section I. GENERAL TROUBLESHOOTING TECHNIQUES

Warning: **Be careful when working on the 115-volt, 400-Hz circuit. Serious injury or death may result from contact with this circuit.**

2-1. General.

The general support maintenance procedures in this manual supplement the procedures in the organizational maintenance manual. The systematic troubleshooting procedure, which begins with the operational and sectionalization checks that can be performed at an organizational category, is carried to a higher category in this manual. Sectionalizing, localizing, and isolating techniques used in the troubleshooting procedures are more advanced.

2-2. Organization of Troubleshooting Procedures.

a. General. The first step in servicing a malfunctioning test set is to sectionalize the fault. Sectionalization means tracing the fault to a unit or circuit. The second step is to localize the fault. Localization means tracing the fault to a defective part responsible for the abnormal condition. Some faults, such as burned-out resistors and arcing and shorted transformers, can often be located by sight, smell, and hearing. The majority of faults, however, must he isolated by checking voltages and resistance.

b. Sectionalization. Listed below is a group of tests arranged to reduce unnecessary work and to aid in tracing trouble in a malfunctioning test set. Radio Test Set AN/ARM-92B consists of five units: the test set, the control unit, the RMI, the OBS indicator, and the aid box. The first step is to locate the unit or units at fault by the following methods:

(1) *Visual inspection.* The purpose of visual inspection is to locate faults without testing or measuring circuits. Indications on the RMI or meters, or other visual signs, should be observed during all operating modes, and an attempt should be made to sectionalize the fault to a particular unit.

(2) *Operational tests.* Operational tests frequently indicate the general location of trouble. In many instances, the tests will help in determining the exact nature of the fault. The intermediate preventive maintenance checks and services chart (TM 11-6625-2709-12) contains a list of operational checks that help to sectionalize trouble to a unit.

c. Localization. After the trouble has been sectionalized (step *b.* above), the methods listed below will aid in localizing the trouble to a circuit in the suspected unit. Refer to the troubleshooting chart for help in finding the trouble. RMI and meter indications or lack of indications and operational checks provide a systematic method of localizing trouble to a circuit. The procedures provided in the troubleshooting charts (para 2-5 through 2-9) will provide additional information for localizing trouble.

d. Isolation. After the trouble has been localized (step *c* above), the methods in steps (1) through (4) below will help in isolating the trouble to a defective circuit element.

Caution: **Be sure that the multimeter is not placed across a meter in the test set. The currrent from the ohmmeter might damage the microampere movement of a meter of the test set.**

(1) *Resistance measurements.* Resistance measurements are used to check for continuity and to check the value of resistance in a circuit. For these checks use Multimeter ME-26(*)/U, or equivalent.

(2) *Voltage measurements.* Voltage measurements are used to check if the proper amount of voltage is being routed through the test set and aid box. For these measurements, use Multimeter ME-26(*)/U, or equivalent.

(3) *Intermittent troubles.* In all these tests, the possibility of intermittent troubles should not be overlooked. If present, this type of trouble may often be made to appear by tapping or jarring the equipment. Make a visual inspection of the wiring and connections.

(4) *Resistor color code.* The resistor color code diagram (figure 4-10) is provided to aid maintenance personnel in determining the value and tolerance of resistors.

2-3. Test Equipment Required.

The following chart lists equipment required for troubleshooting Radio Test Set AN/ARM-92B. It also lists the associated technical manuals.

a. Make test equipment connections with care so that shorts will not be caused by exposed test equipment connectors. Tape or sleeve (spaghetti) test prods or clips as necessary to leave as little exposed metal as needed to make contact to the circuit under test.

b. Observe polarity; a negative ground is required on the 27.5-volt dc line. The low side of the ac line is also grounded.

Test equipment	Technical manual	Common name
Modulator MD-83A/ARN	TM 11-6625-588-15	VOR modulator
Output Meter TS-585(*)/U[1]	TM 11-5017	Output meter
Multimeter ME-26(*)/U[2]	TM 11-6625-200-12	Multimeter
Oscilloscope AN/USM-281A[3] (HP 1551 A with option 21, FSN 6625-00-228-2201)		
Meter Voltmeter ME-30A/U and Electronic Voltmeter ME-30(*)/U[4]	TM 11-6625-320-12	Vtvm
Resolver Test Set AN/ASM-101	TM 11-6625-492-12	Resolver test set
Meter Test Set TS-682A/GSM-1	TM 11-25535B	Meter calibrator

1 Indicates Output Meters TS-585A/U, TS-585B/U, and TS-585C/U, and Audio Level Meter TS-585D/U.
2 Indicates Multimeter ME-26A/U, ME-26B/U, and ME-26C/U.
3 Alternate, Oscilloscope AN/USM-140A.
4 Indictes Meter Voltmeter ME-30A/U and Electronic Voltmeters ME-30B/U and ME-30C/U.

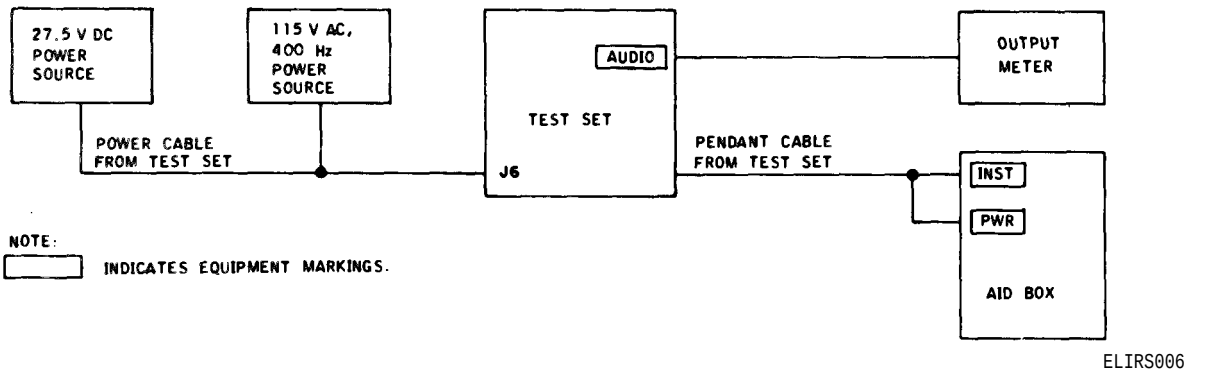

Figure 2-1. Equipment test setup to test control, RMI, OBS, and test set.

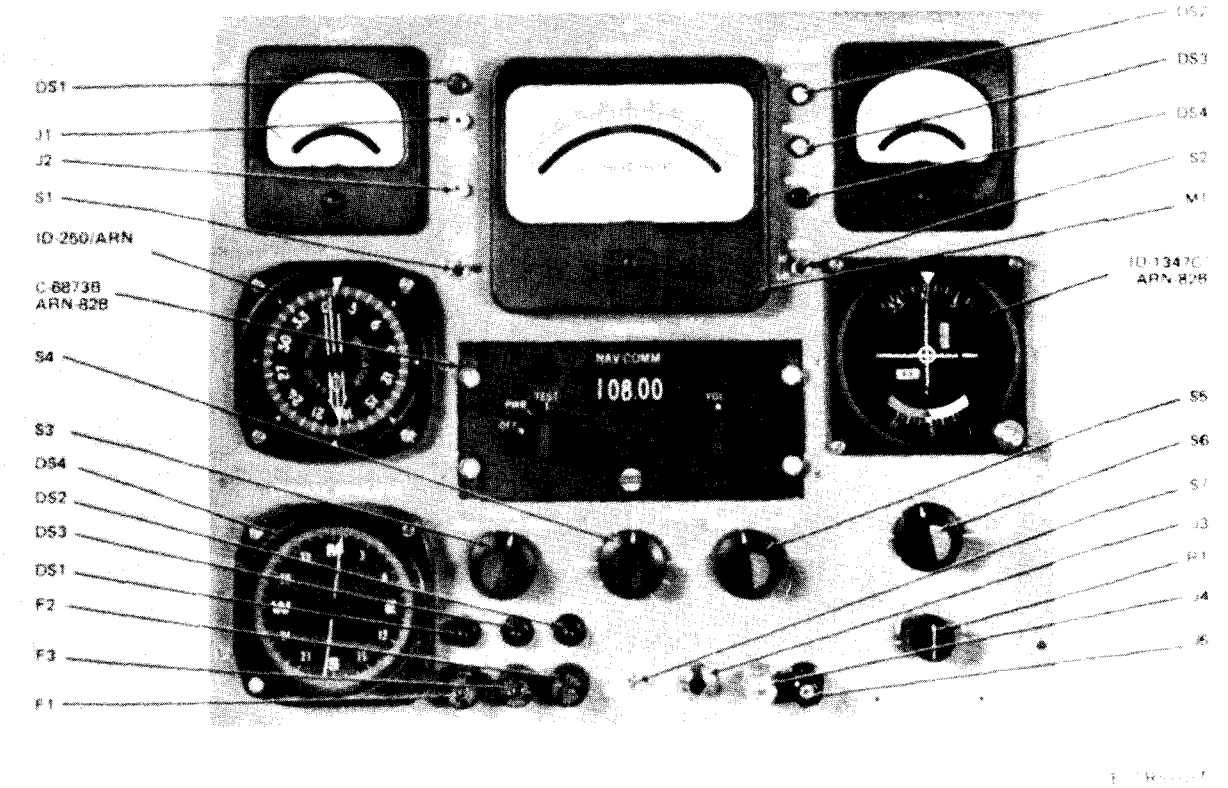

Figure 2-2. Radio Test Set TS-2500B/ARM-92, front panel.

Section II. TROUBLESHOOTING PROCEDURES

2-4. General.

The troubleshooting procedures are divided into two parts. The first part (para 2-5 and 2-6) gives procedures to troubleshoot the aid box. The second part (para 2-7 through 2-9) gives procedures to troubleshoot the control unit, the RMI, the OBS indicator, and the test set.

2-5. Troubleshooting Aid Box.

Because of the simplicity of the aid box circuitry, any trouble may he quickly isolated by the following checks.

a. Remove the bottom of the aid box by removing the six screws on the bottom of the aid box.

b. Connect P2 and P3 of the test set to the aid box.

c. Connect the test set to a 27.5-volt dc power source, and a 115-volt, 400-Hz power source.

d. Set the power switch on the control unit to PWR.

e. Connect the dc lead to the multimeter to the junction of zener diode CR1 and resistor R8. Connect the COMMON lead to the anode of zener diode CR1.

f. The multimeter should indicate 10 ±0.05 volts dc. If the indication is improper, replace defective zener diode CR1.

g. All other circuits in the aid box may be checked by using the resistance chart in paragraph 2-6. Remove all equipment connected to the aid box before attempting resistance measurements. When an improper resistance reading is obtained, refer to the schematic diagram in figure 1-5 to isolate the trouble.

2-6. Resistance Chart for Aid Box.

Multimeter connection		Proper indication (ohms)	Multimeter connection		Proper indication (ohms)
From	To		From	To	
J2-A	J2-a	22,900 ±2290	J2-A	J2-k	< 160
J2-J	J2-X	0	J2-A	J2-p	< 160
J2-J	J2-n	0	J2-A	J2-f	< 160
J2-J	J2-Y	0	J2-A	J2-W	< 160
J2-J	J2-b	0	J2-A	J2-g	< 160
J2-J	J2-c	1000 ±100	J2-A	J2-V	< 160
J2-J	J2-B	511 ±51	J2-A	J2-h	< 160
J2-J	J2-P	1000 ±100	J2-A	J2-U	< 160
J2-J	J2-N	0	J2-A	J2-i	< 160
J2-J	J1-E	0	J2-A	J2-T	< 160
J2-A	J2-m	36,500 ±3650	J2-A	J2-j	< 160
J2-A	J2-Z	13,300 ±1330	J2-A	J2-S	< 160
J2-L	J1-G	1500 ±150	J2-A	J2-X	< 160
J1-D	J1-H	0	J2-R	J2-X	< 160
J1-C	J1-K	0	J2-K	J2-X	< 160
J2-A	J2-t	< 160	J1-G	J1-E	< 160

2-7. Troubleshooting Control Indicators and Test Set

a. Perform the general support testing procedures for the aid box in paragraph 4-7. If the general support testing procedures indicate trouble, perform the troubleshooting procedures described in paragraph 2-5.

b. Connect the test set to the aid box and external power as shown in figure 2-1.

c. Set the power switch on the test set control unit to PWR.

d. Set the IND TEST switch on the test set to RCVR V/L, the FLAG LOAD switch to position 5, and the AUDIO switch to V/L. (All other switches and controls may be set in any position.)

e. Perform the procedures in the troubleshooting chart of paragraph 2-8. This chart gives various operational procedures for the test set. The proper indication for each operational procedure is then given. If the equipment produces an improper indication, the chart lists the probable trouble and, in the Correction column, suggests how to isolate the trouble.

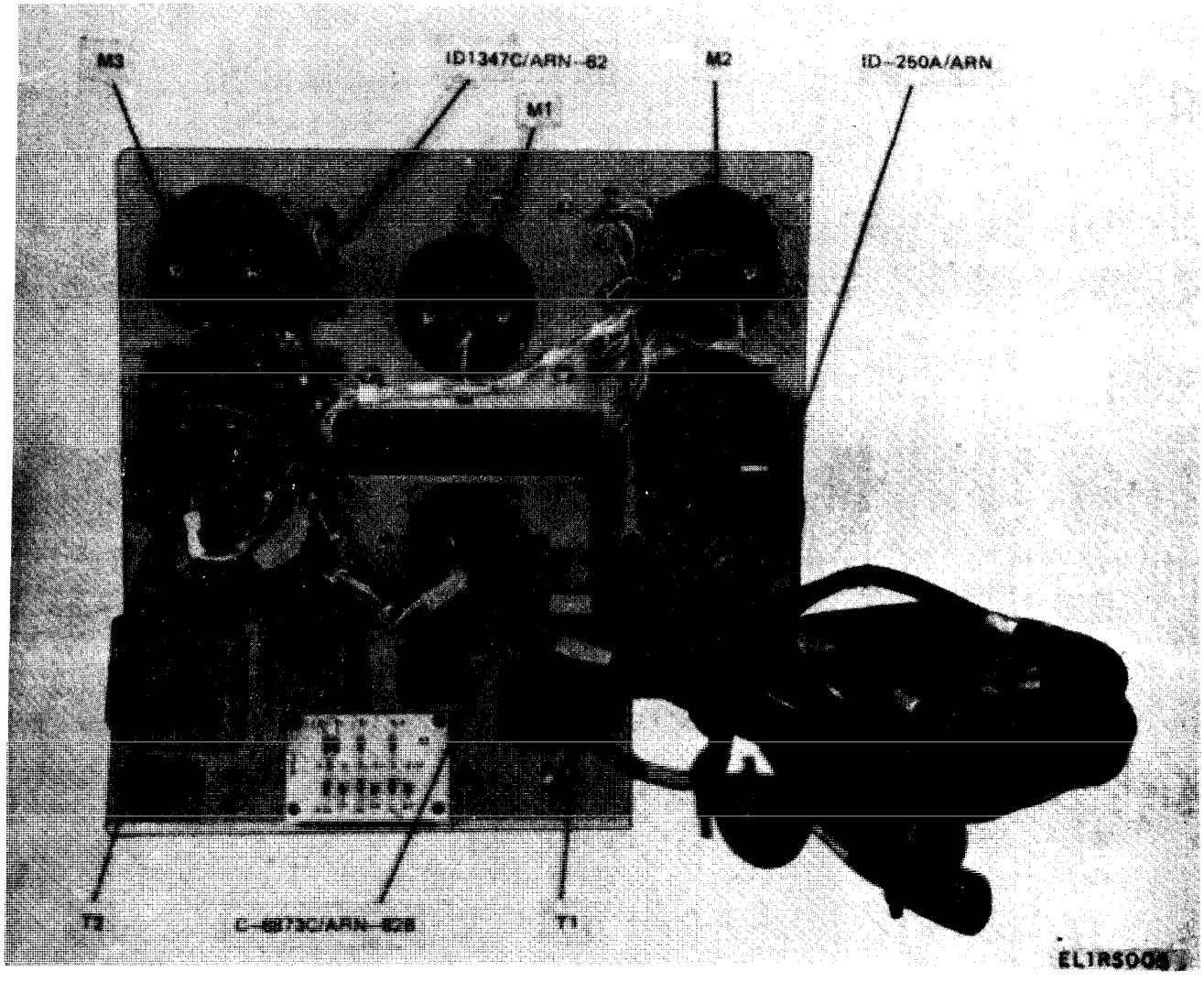

Figure 2-3. Rear side of radio test set TS2500B/ARM- 92, front panel.

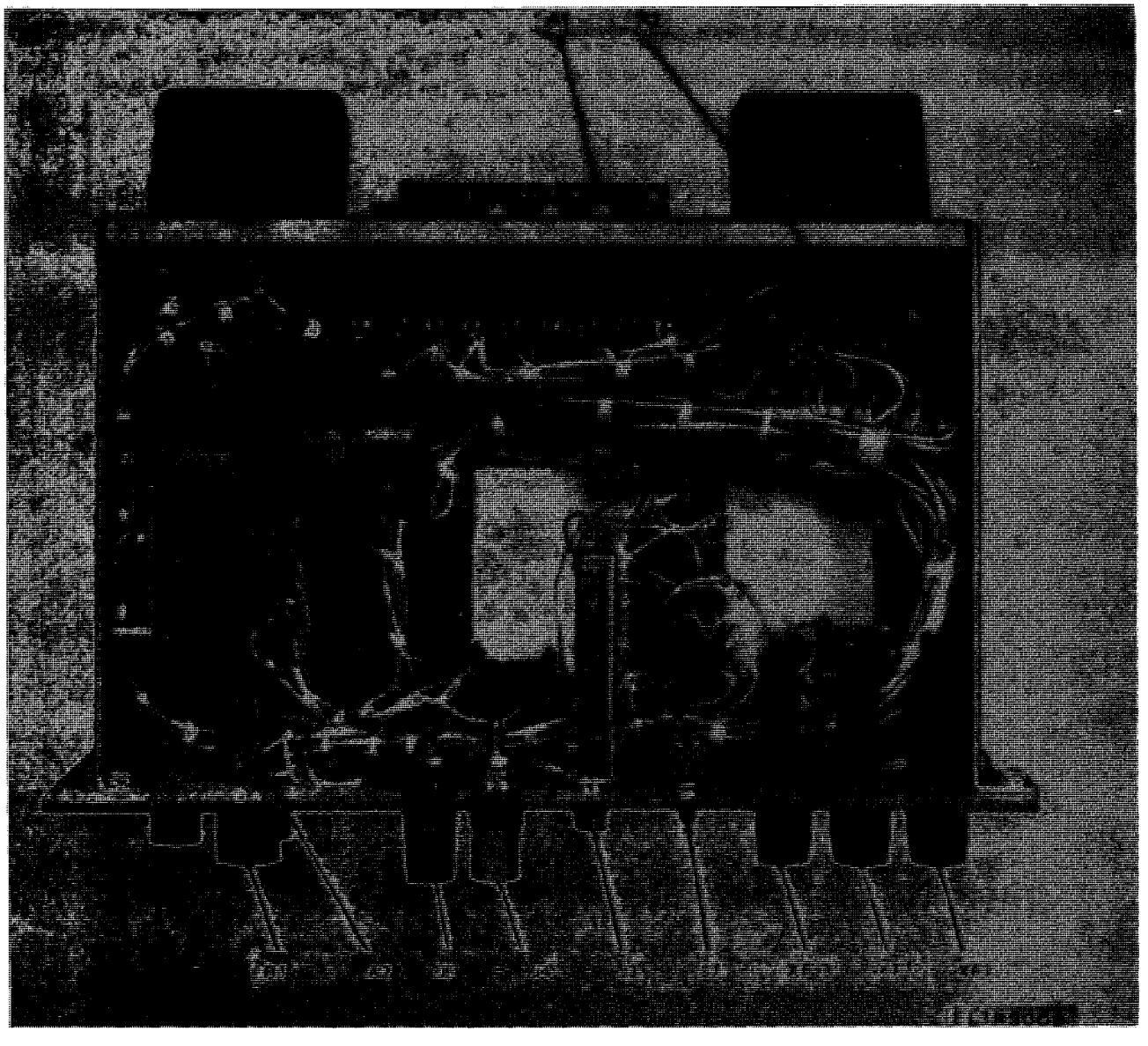

Figure 2-4. Bottom view of radio test set TS-2500B/ARM-92B, front panel.

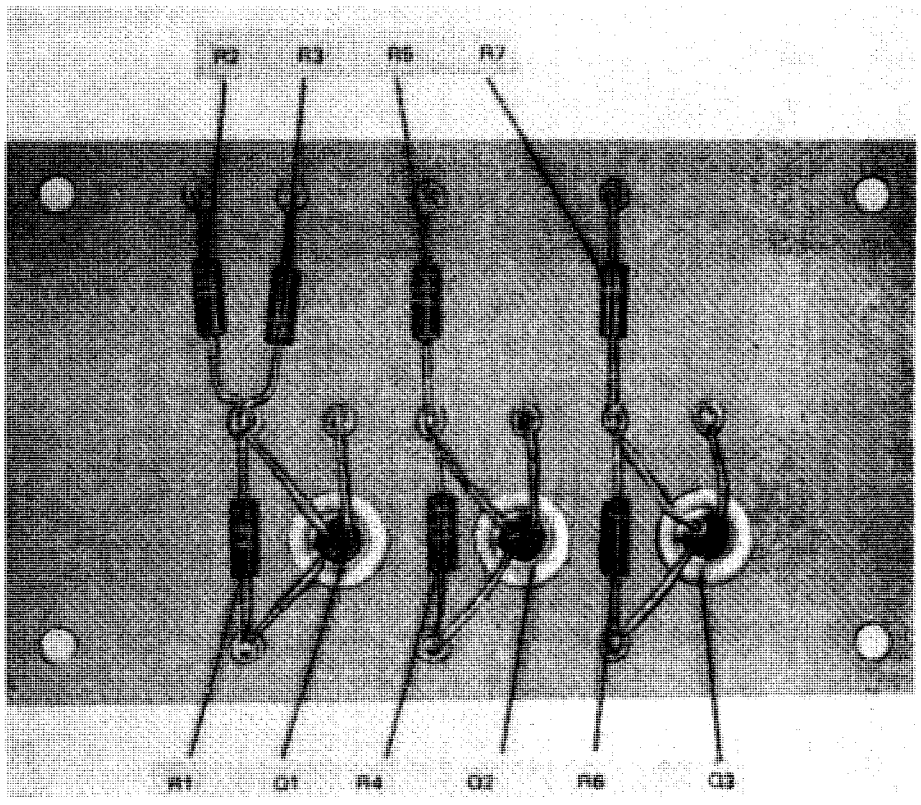

Figure 2-5. Terminal board TB1 (A1).

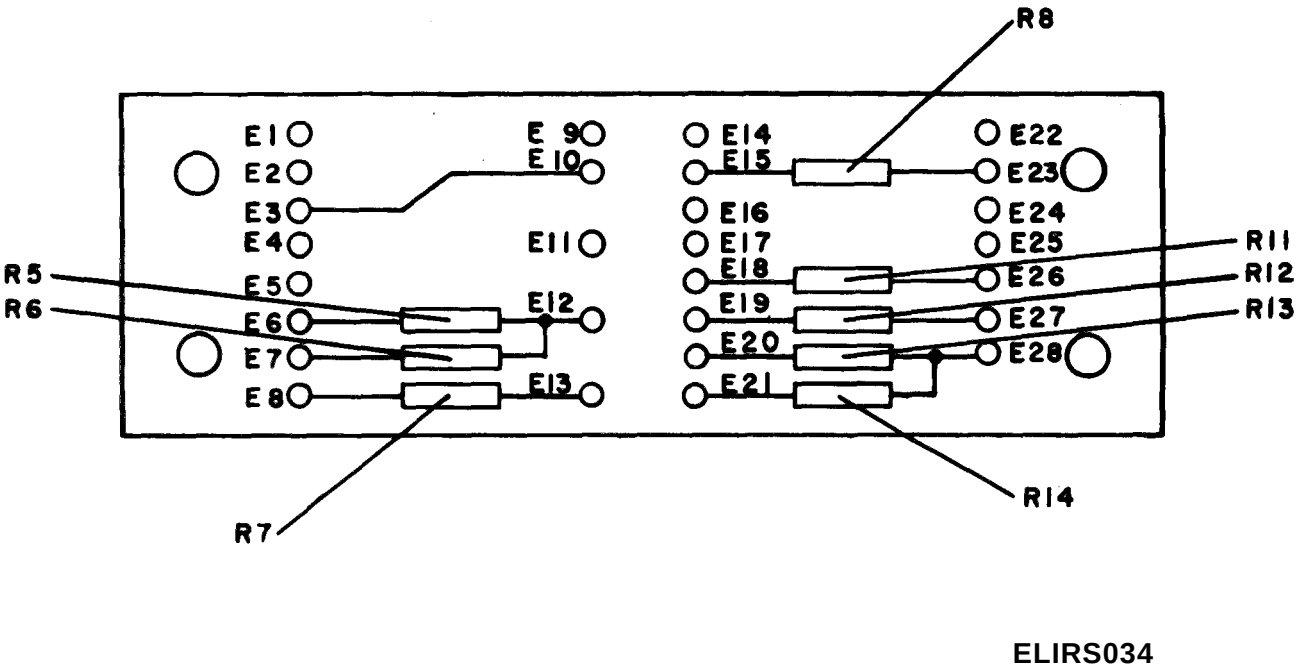

Figure 2-6. Terminal board TB2 (A2).

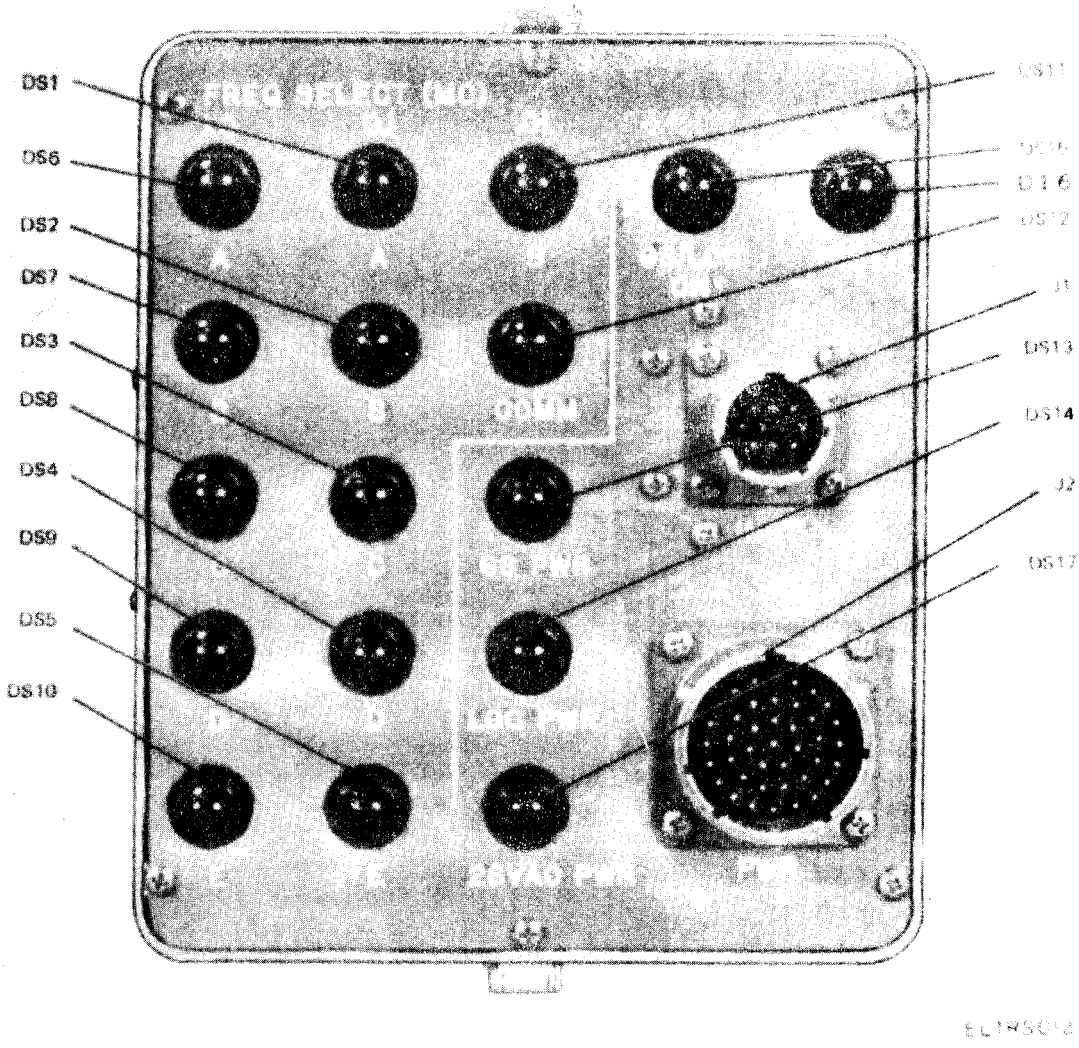

Figure 2-7. Aid box, front panel.

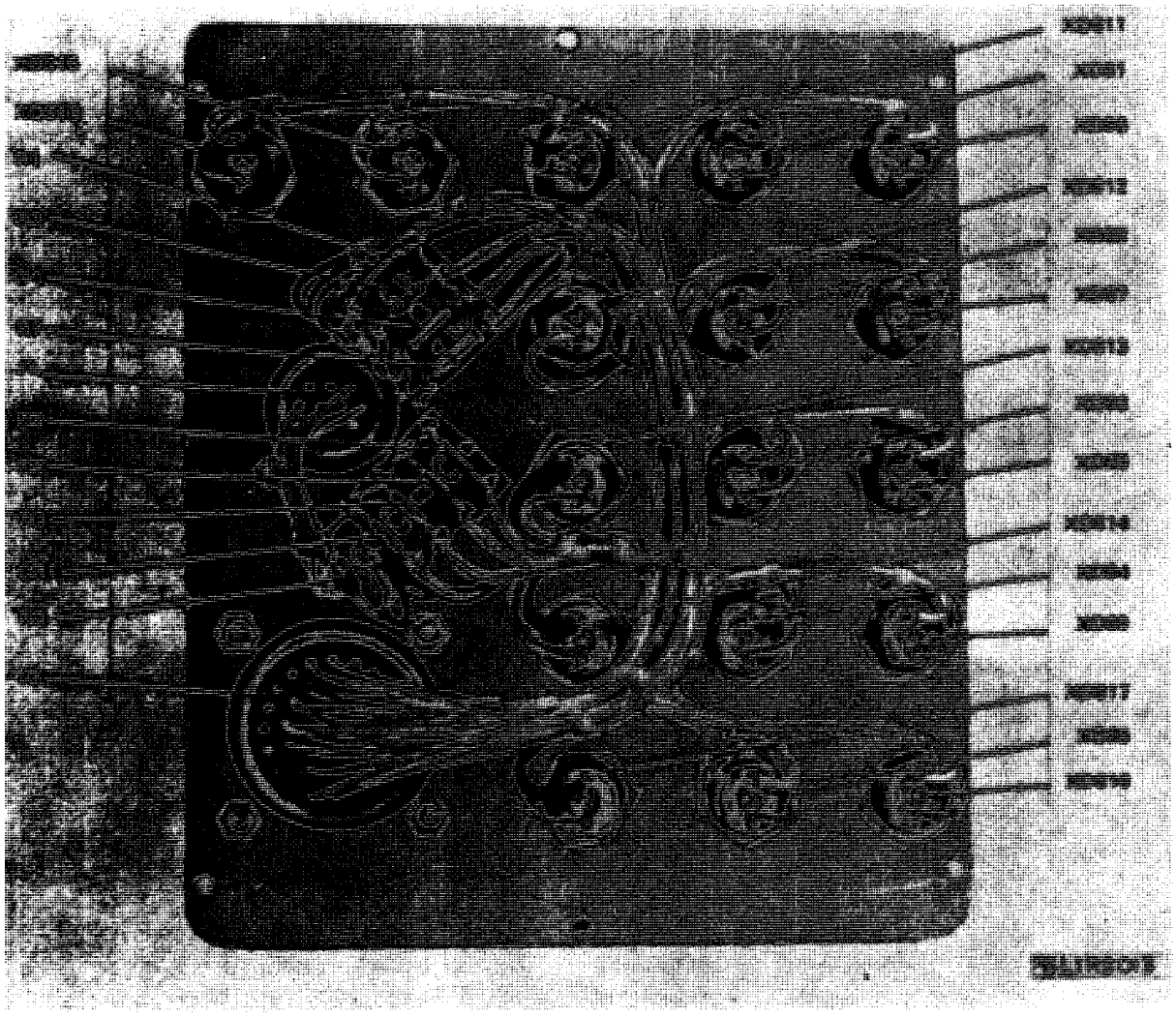

Figure 2-8. Parts location of aid box.

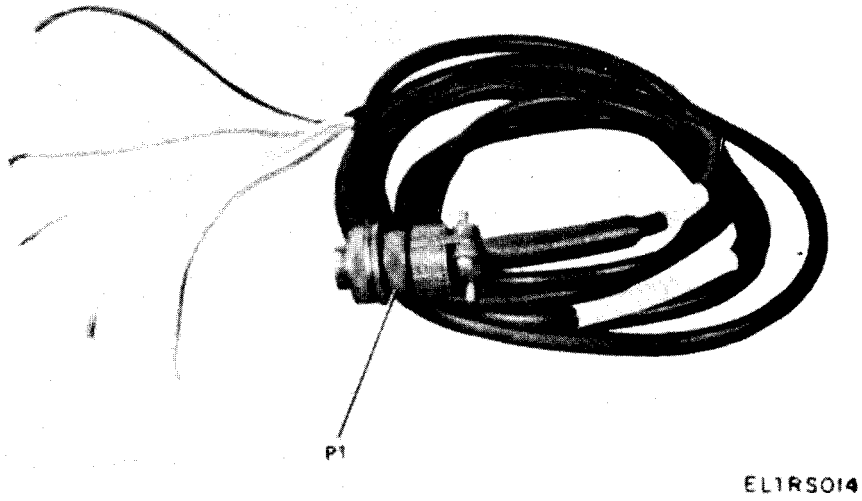

Figure 2-9. Electrical Power Cable Assembly CX-11568/ARM-92.

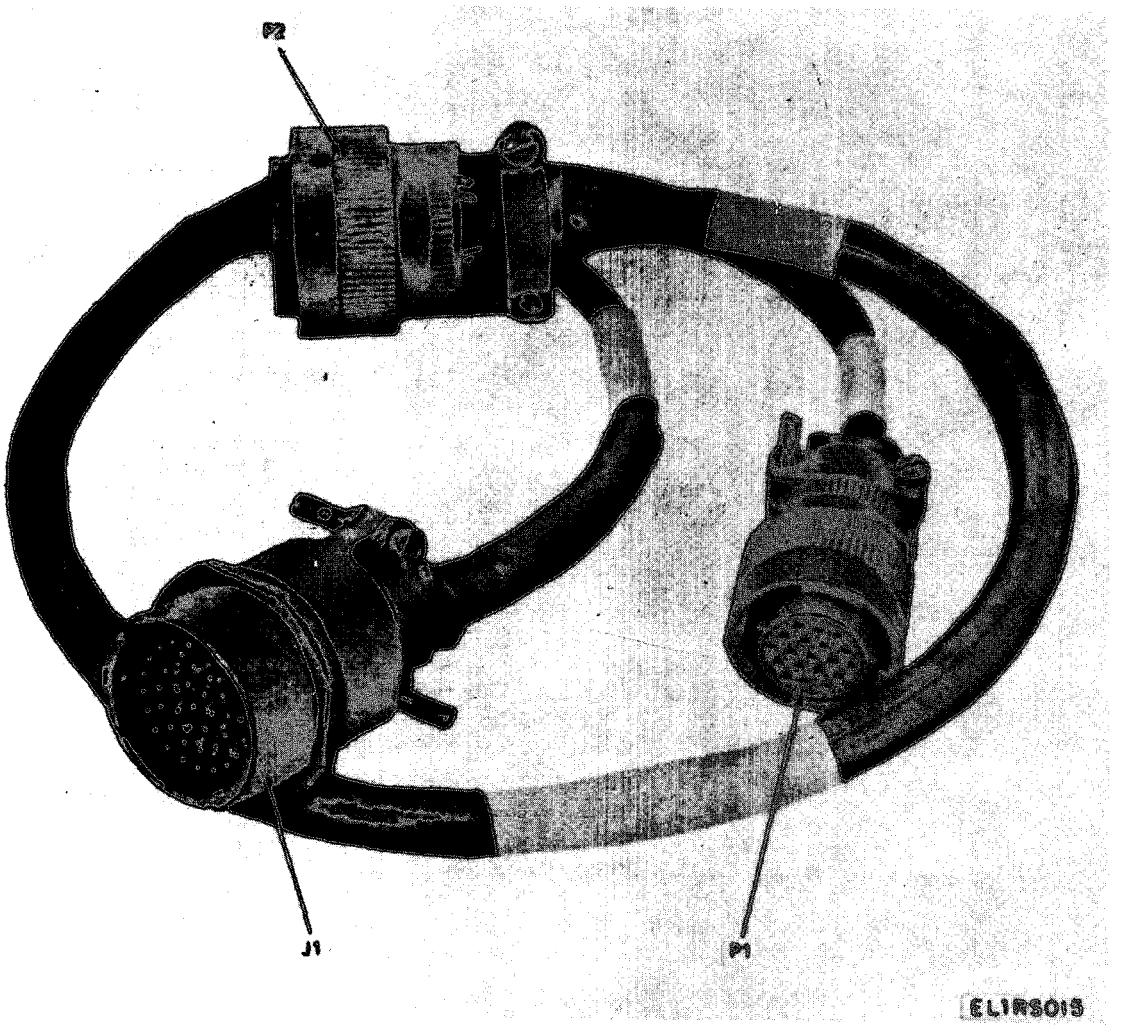

Figure 2-10. Test cable W-2/ARN-92.

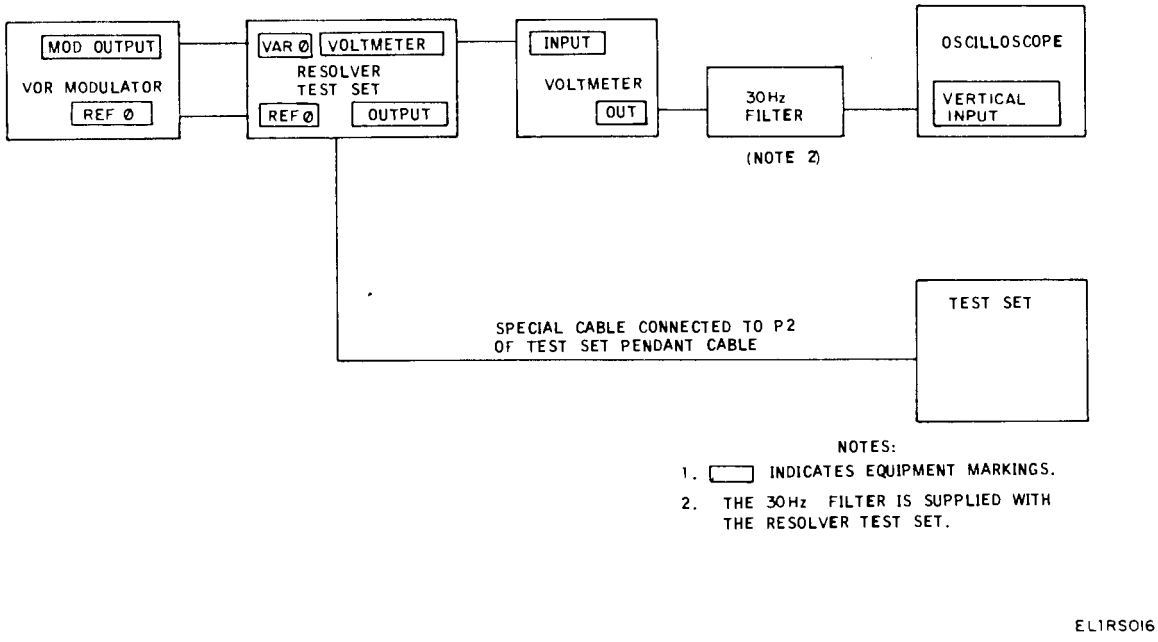

Figure 2-11. Equipment setup to test precision bearing circuit.

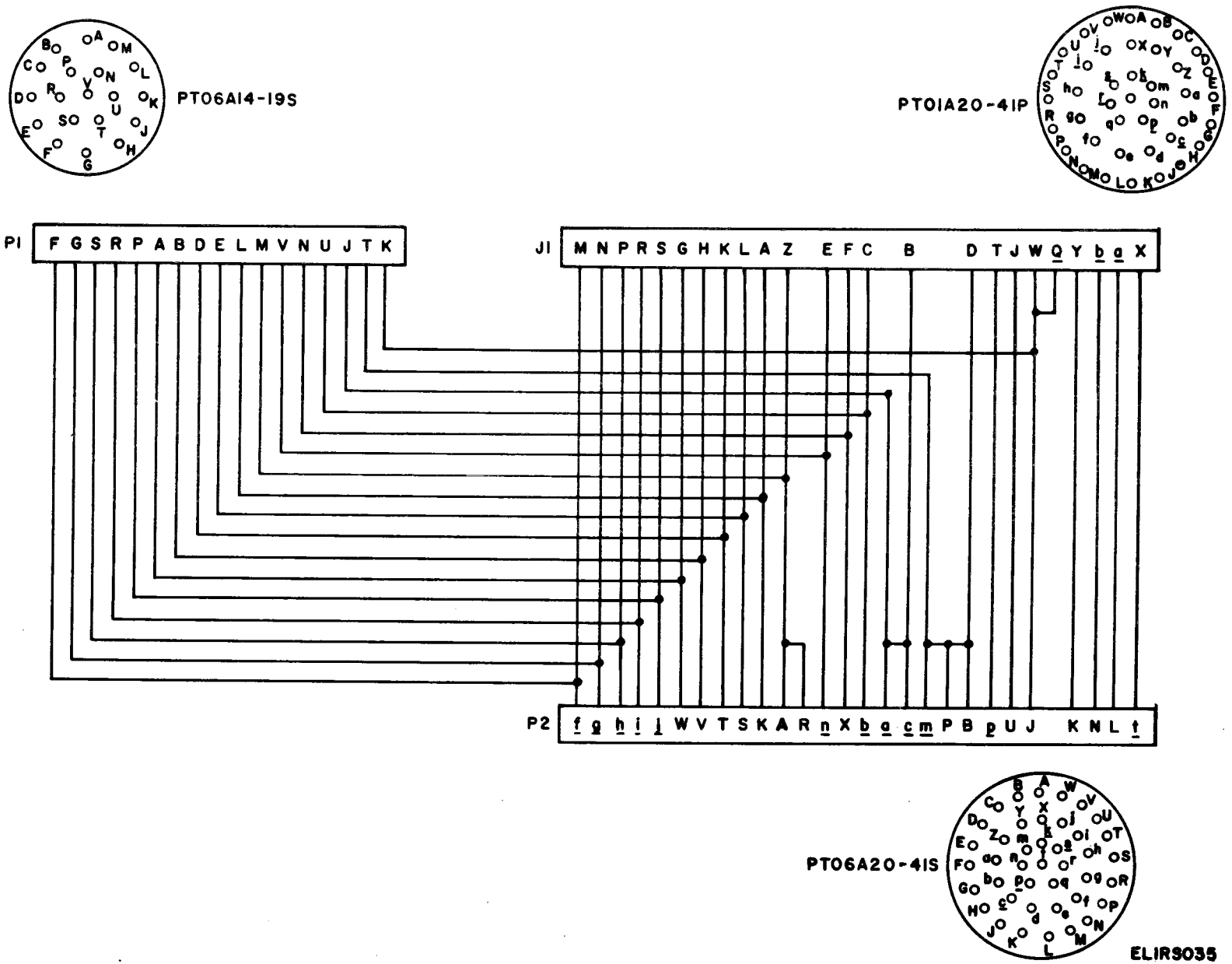

Figure 2-12. Test cable W-21ARM-92, schematic diagram.

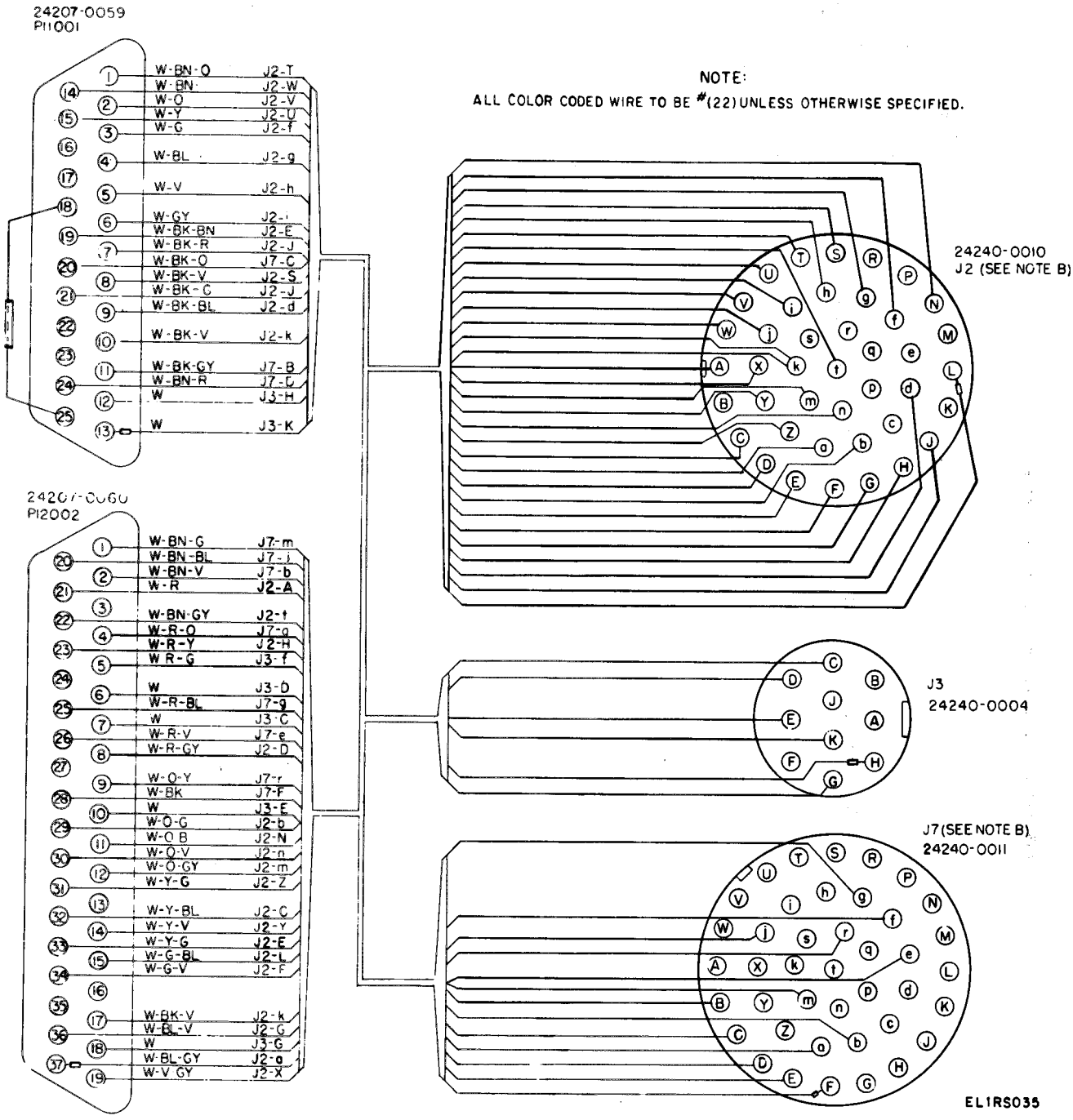

Figure 2-13. Special Adapter Cable CX-13034/AR.

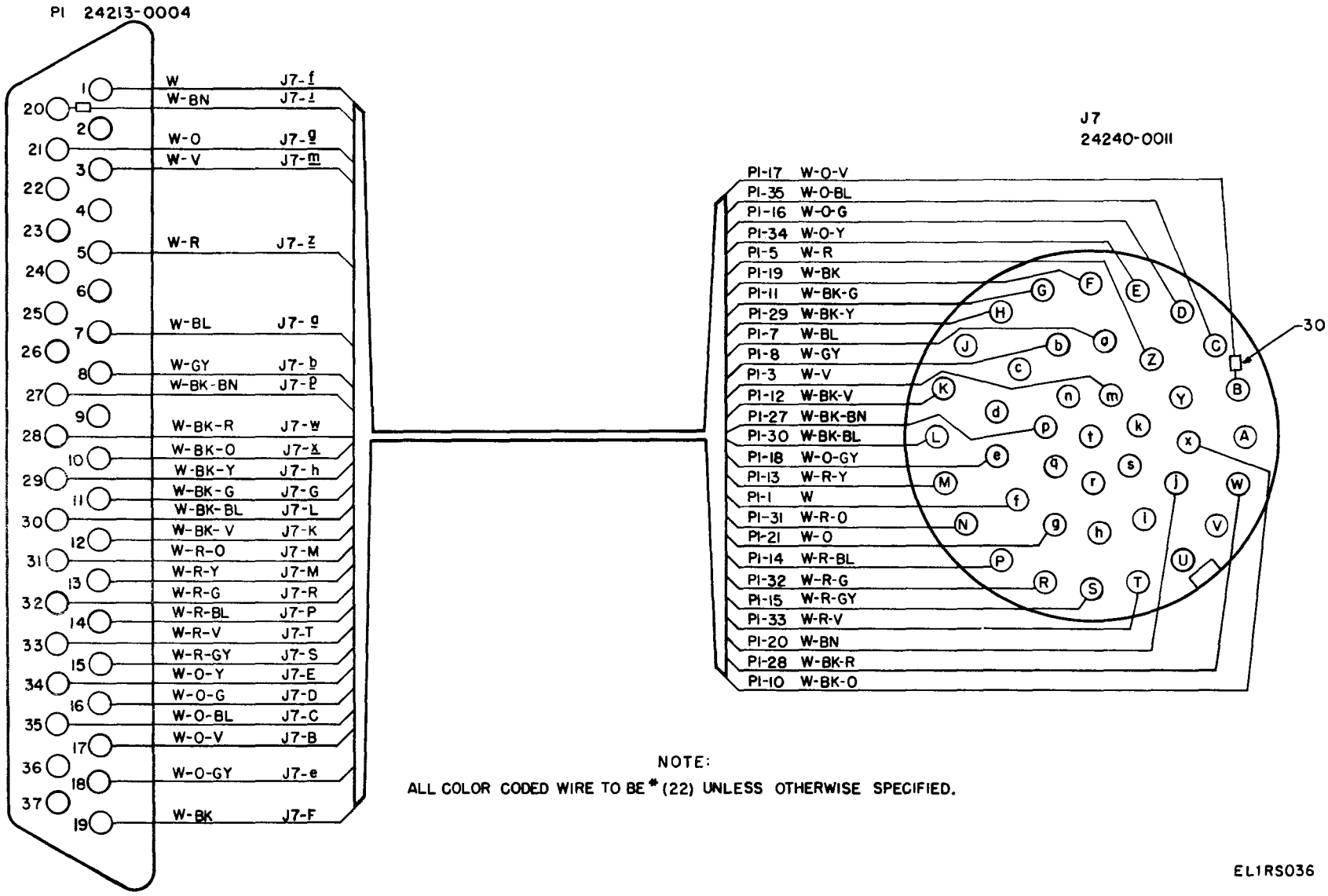

Figure 2-14. Special Adapter Cable CX-13035/AR.

2.8. Troubleshooting Chart.

Step	Procedure	Proper indication	Probable trouble for improper indication	Correction
1	Connect the multimeter to the test point located in the ceter of the VOR/LOC 2A fuse cap.	Multimeter should indicate 27.5 volts dc.	VOR/LOC 2A fuse (F2) is blown.	Replace F2 with a 2-ampere fuse.
2	Set the megahertz and kilohertz selectors on the control unit to 108.00 MHz.	The following lamps should light:		
		a. LOC PWR and GS PWR lamps on aid box.	*a.* If LOC PWR and/or GS PWR lamps on aid box does not light, either a break in the circuit is present between P5-M and P2-A/R or switch S6A in the control unit is defective.	*a.* If a break in the circuit is present between P5-M and P2-A, make resistance measurements to find the break. If no breaks are present, troubleshoot the control unit as described in TM 11-5826-226-34.
		b. VOR/LOC DC lamp on test set.	*b.* If VOR/LOC DC lamp on test set does not light, DS10 is faulty.	*b.* Replace DS10.
		c. 26 VAC PWR lamp on aid box.	*c.* If 26 VAC PWR lamp on aid box does not light, VOR/LOC 1A fuse is blown, relay K1 is defective, or transformer T1 is defective.	*c.* Measure the ac voltage at test point located at the center of the VOR/LOC 1A fuse cap. If 115 volts ac is not present, replace fuse F1. If 115 volts ac is still not present, check for a defective relay K1 by measuring its coil resistance (para 2-9). If defective, replace relay K1. Check for a defective transformer by measuring its resistances (para 2-9). Replace if defective.
		d. VOR/LOC AC lamp on test set.	*d.* If VOR/LOC AC lamp on test set does not light, DS9 is faulty.	*d.* Replace DS9.
		e. GS DC lamp on test set.	*e.* If GS DC lamp on test set does not light, either GS 1A fuse (F3) is blown or GS DC lamp (DS11) is burned out.	*e.* Measure the dc voltage at the test point located at the center of the G3 1A fuse cap. If 27.5 volts dc is not present replace fuse F3. If 27.5 volts dc is present, replace lamp DS11.

(Cont)

2-8. Troubleshooting Chart-Continued

Step	Procedure	Proper indication	Probable trouble for improper indication	Correction
2 (Cont)		*f.* 1.0 FREQ SELECT (MHz) lamp A on aid box.	*f.* If 1.0 FREQ SELECT (MHz) lamp A does not light, either a break in the circuit is present between P2-W and P5-V, or the megahertz selector in the control unit is defective.	*f.* If a break in the circuit is present, make resistance measurements to find the break. If no break is present, troubleshoot the control unit as described in TM 11-5826-226-34.
		g. 1.0 FREQ SELECT (MHz) lamp D on aid box.	*g.* If 1.0 FREQ SELECT (MHz) lamp D does not light, either a break in the circuit is present between P2-T and P5-F, or the megahertz selector in the control unit is defective.	*g.* If a break in the circuit is present, make resistance measurements to find the break. If no break is present, troubleshoot the control unit as described in TM 11-5826-226-34.
		h. 0.1 FREQ SELECT (MHz) lamp B on aid box.	*h.* If 0.1 FREQ SELECT (MHz) lamp B does not light, either a break in the circuit is present between P2-g and P5-D, or the kilohertz selector in the control unit is defective.	*h.* If a break in the circuit is present, make resistance measurements to find the break. If no break is present, troubleshoot the control unit as described TM 11-5826-226-34.
		i. 0.1 FREQ SELECT (MHz) lamp E on aid box.	*i.* If 0.1 FREQ SELECT (MHz) lamp E does not light, either a break in the circuit is present between P2-j and P5-B, or the kilohertz selector in the control unit is defective.	*i.* If a break in the circuit is present, make resistance measurements to find the break. If no break is present, troubleshoot the control unit as described in TM 11-5826-226-34.
		j. 0.01 FREQ SELECT (MHz) lamp B on aid box.	*j.* If 0.01 FREQ SELECT (MHz) lamp B does not light, either a break in the circuit is present between P2-p and P5-g, or the kilohertz selector in the control unit is defective.	*j.* If a break in the circuit is present, make resistance measurements to find the break. If no break is present, troubleshoot the control unit as described in TM 11-5826-226-34.
		k. FLAG meter should indicate 250 ±15.0 microampere.	*k.* If FLAG meter does not indicate 250 ±15.0 microamperes, switch S6 or FLAG meter M2 is defective.	*k.* Refer to figure 4-12 and make continuity checks on the circuit comprised of S6 and M2 to isolate the trouble.
(Cont)		*l.* DEVIATION meter should indicate 75 ±10 microamperes to the right of 0.	*l.* If DEVIATION meter does not indicate 75 ±10 microamperes to the right of 0, switch S6 or DEVIATION meter M1 is defective.	*l.* Refer to figure 4-12 and make continuity checks on the circuit comprised of S6 and M1 to isolate the trouble.

2-8. Troubleshooting Chart -Continued

Step	Procedure	Proper indication	Probable trouble for improper indication	Correction
2 (Cont		*m.* TO-FROM meter should indicate 500 ±25.0 microamperes to the left of zero.	*m.* If TO-FROM meter does not indicate 500 ±25.0 microamperes to the left of zero, resistor R8, switch S6, or TO-FROM meter M3 is defective.	*m.* Refer to figure 4-12 and make resistance checks on S6, M3, and associated circuits.
3	Set the power switch on the control unit to TEST.	TEST lamp on aid box should light in addition to the lamps lighted in step 2 above. *Note:* 1.0 FREQ SELECT (MHz) lamps A and D should remain lighted in steps 4 through 22 below.	Either a break in the circuit is present between P2-t and P5-L, or switch S6C in the control unit is defective.	If a break in the circuit is present between P2-t and P5-L, make resistance measurements to find the break. If no break is present, troubleshoot the control unit as described in TM 11-5826-226-34.
4	Set the power Switch on the control unit to PWR. Set the megahertz and kilohertz selectors to 108.05.	0.1 FREQ SELECT (MHz) lamps B and E should light.	If either one, or both, of the lamps do not light, the kilohertz selector on the control unit is defective.	Troubleshoot the control unit as described in TM 11-5826-226-34.
5	Set the megahertz and kilohertz selectors to 108.10.	0.1 FREQ SELECT MHz) lamps A and B should light. 0.01 FREQ SELECT MHz) lamp B should light. GS/LOC ON lamp should light.	*a.* If 0.1 FREQ SELECT (MHz) lamp A does not light, either a break in the circuit is present between P2-f and P5-C, or the kilohertz selector in the control unit is defective. *b.* If 0.1 FREQ SELECT (MHz) lamp B does not light, the kilohertz selector on the control unit is defective. *c.* If GS/LOC ON lamp does not light, either a break in the circuit is present between P2-k and P5-Y, or the kilohertz selector in the control unit is defective.	*a.* If a break in the circuit is present, make resistance measurements to find the break. If no break is present, troubleshoot the control unit as described in TM 11-5826-226-34. *b.* Troubleshoot the control unit as described in TM 11-5826-226-34. *c.* If a break in the circuit is present, make resistance measurements to find the break. If no break is present, troubleshoot the control unit as described in TM 11-5826-226-34.

2-8. Troubleshooting Chart - Continued

Step	Procedure	Proper indication	Probable trouble for improper indication	Correction
6	Set the megahertz and kilohertz selectors to 108.15.	0.1 FREQ SELECT (MHz) lamps A and B should light.	If either one, or both, of the lamps do not light, the kilohertz selector on the control unit is defective.	Troubleshoot the control unit as described in TM 11-5826-226-34.
7	Set the megahertz and kilohertz selectors to 108.20.	0.1 FREQ SELECT (MHz) lamps A and C should light. 0.01 FREQ SELECT (MHz) lamp B should light.	*a.* If 0.1 FREQ SELECT (MHz) lamp A does not light, the kilohertz selector on the control unit is defective.	*a.* Troubleshoot the control unit as described in TM 11-5826-226-34.
			b. If 0.1 FREQ SELECT (MHz) lamp C does not light, either a break in the circuit is present between P2-h and P5-E, or the kilohertz selector in the control unit is defective.	*b.* If a break in the circuit is present, make resistance measurements to find the break. If no break is present, troubleshoot the control unit as described in TM 11-5826-226-34.
			c. If 0.01 FREQ SELECT (MHz) lamp B does not light, the kilohertz selector in the control unit is defective.	*c.* Troubleshoot the control unit as described in TM 11-5826-226-34.
8	Set the megahertz and kilohertz selectors to 108.25.	0.1 FREQ SELECT (MHz) lamps A and C should light.	If either one, or both, of the lamps do not light, the kilohertz selector in the control unit is defective.	Troubleshoot the control unit as described in TM 11-5826-226-34.
9	Set the megahertz and kilohertz selectors to 108.30.	0.1 FREQ SELECT (MHz) lamps B and C should light. 0.1 FREQ SELECT (MHz) lamp B should light. GS/LOC ON lamp should light.	If any one of these lamps does not light, the kilohertz selector in the control unit is defective.	Troubleshoot the control unit as described in TM 11-5826-226-34.
10	Set the megahertz and kilohertz selectors to 108.35.	0. 1 FREQ SELECT (MHz) lamps B snd C should light. GS/LOC ON lamp should light.	If any of the lamps do not light, the kilohertz selector in the control unit is defective.	Troubleshoot the control unit as described in TM 11-5826-226-34.
11	Set the megahertz and kilohertz selectors to 108.40.	0.1 FREQ SELECT (MHz) lamps B and D should light. 0.01 FREQ SELECT (MHz) lamp B should light.	*a.* If 0.1 FREQ SELECT (MHz) lamp B does not light, the kilohertz selector in the control unit is defective.	*a.* Troubleshoot the control unit as described in TM 11-5826-226-34.
(Cont)			*b.* If 0.1 FREQ SELECT (MHz) lamp D does not light, either a break in the circuit is present between P2-i and P5-f, or the kilohertz selector in the control unit is defective.	*b.* If a break in the control circuit is not present, make resistance measurements to find the break. If no break is present, troubleshoot the control unit as described in TM 11-5826-226-34.

2-8. Troubleshooting Chart - Continued

Step	Procedure	Proper indication	Probable trouble for improper indication	Correction
11 (Cont)			*c.* If 0.01 FREQ SELECT (MHz) lamp B does not light, the kilohertz selector in the control unit is defective.	*c.* Troubleshoot the control unit as described in TM 11-5826-226-34.
12	Set the megahertz and kilohertz selectors to 108.45.	0.1 FREQ SELECT (MHz) lamps B and D should light.	The kilohertz selector in the control unit is defective.	Troubleshoot the control unit as described in TM 11-5826-226-34.
13	Set the megahertz and kilohertz selectors to 108.50.	0.1 FREQ SELECT (MHz) lamps C and D should light. 0.01 FREQ SELECT (MHz) lamp B should light. GS/LOC ON lamp should light.	Same as step 12 above.	Same as step 12 above.
14	Set the megahertz and kilohertz selectors to 108.55.	0.1 FREQ SELECT (MHz) lamps C and D should light.	Same as step 12 above.	Same as step 12 above.
15	Set the megahertz and kilohertz selectors to 108.60.	0.1 FREQ SELECT (MHz) lamps C and E should light. 0.01 FREQ SELECT (MHz) lamp B should light.	Same as step 12 above.	Same as step 12 above.
16	Set the megahertz and kilohertz selectors to 108.65.	0.1 FREQ SELECT (MHz) lamps C and E should light.	Same as step 12 above.	Same as step 12 above.
17	Set the megahertz and kilohertz selectors to 108.70.	0.1 FREQ SELECT (MHz) lamps D and E should light. 0.01 FREQ SELECT (MHz) lamp B should light. GS/LOC ON lamp should light.	Same as step 12 above.	Same as step 12 above.
18	Set the megahertz and kilohertz selectors to 108.75.	0.1 FREQ SELECT (MHz) lamps D and E should light. GS/LOC ON lamp should light.	Same as step 12 above.	Same as step 12 above.
19	Set the megahertz and kilohertz selectors to 108.80.	0.1 FREQ SELECT (MHz) lamps A and D should light. 0.01 FREQ SELECT (MHz) lamp B should light.	Same as step 12 above.	Same as step 12 above.
20	Set the megahertz and kilohertz selectors to 108.85.	0.1 FREQ SELECT (MHz) lamps A and D should light.	Same as step 12 above.	Same as step 12 above.
21	Set the megahertz and kilohertz selectors to 108.90.	0.1 FREQ SELECT (MHz) lamps A and E should light. 0.01 FREQ SELECT (MHz) lamp B should light. GS/LOC ON lamp should light.	Same as step 12 above.	Same as step 12 above.

2-8. Troubleshooting Chart - Continued

Step	Procedure	Proper indication	Probable trouble for improper indication	Correction
22	Set the megahertz and kilohertz selectors to 108.95.	0.1 FREQ SELECT (MHz) lamps A and E should light. GS/LOC ON lamp should light. *Note:* 0.1 FREQ SELECT (MHz) lamps B and E and 0.01 FREQ SELECT (MHz) lamp B should remain lit in steps 23 through 40 below.	Same as step 12 above.	Same as step 12 above.
23	Set the megahertz and kilohertz selectors to 109.00.	1.0 FREQ SELECT (MHz) lamps A and E should liqht.	*a.* If 1.0 FREQ SELECT (MHz) lamp A does not light, the megahertz selector in the control unit is defective. *b.* If 1.0 FREQ SELECT (MHz) lamp E does not light, either a break in the circuit is present between P2-S and P5-W, or the megahertz selector in the control unit is defective.	*a.* Troubleshoo the control unit as described in TM 11-5826-226-34. b. If a break in the circuit is present, make resistance measurements to find the break. If no break is present, troubleshoot the control unit as described in TM 11-5826-226-34.
24	Set the megahertz and kilohertz selectors to 110.00.	1.0 FREQ SELECT (MHz) lamps B and E should light.	*a.* If 1.0 FREQ SELECT (MHz) lamp B does not light, either a break in the circuit is present between P2-V and P5-X, or the megahertz selector in the unit is defective. *b.* If 1.0 FREQ SELECT (MHz) lamp E does not light, the megahertz selector in the control unit is defective.	*a.* If a break in the circuit is present, make resistance measurements to find the break. If no break is present, troubleshoo the control unit as described in TM 11-5826-226-34. *b.* Troubleshoot the control unit as described in TM 11-5826-226-34.
25	Set the megahertz and kilohertz selectors to 111.00.	1.0 FREQ SELECT (MHz) lamps A and B should light.	The megahertz seltector in the control unit is defective.	Troubleshoot the control unit as described in TM 11-5826-226-34.
26	Set the megahertz and kilohertz selectors to 112.00.	1.0 FREQ SELECT (MHz) lamps A and C should light.	*a.* If 1.0 FREQ SELECT (MHz) lamp A does not light, the megahertz selector in the control unit is defective. *b.* If 1.0 FREQ SELECT (MHz) lamp C does not light, either a break in the circuit is present	a. Troubleshoot the control unit as described in TM 11-5826-226-34. *b.* If a break in the circuit is present, make resistance measurements to find the break. If no

(Cont)

2-8. Troubleshooting Chart - Continued

Step	Procedure	Proper indication	Probable trouble for improper indication	Correction
26 (Cont)			between P2-U and P5-G, or the megahertz selector in the control unit is defective.	break is present, troubleshoot the control unit as described in TM-5826-226-34.
27	Set the megahertz and kilohertz selectcms to 113.00.	1.0 FREQ SELECT (MHz) lamps B and C should light.	The megahertz selector in the control unit is defective.	Troubleshoot the control unit as described in TM 11-5826-226-34.
28	Set the megahertz and kilohertz selectors to 114.00.	1.0 FREQ SELECT (MHz) lamps B and D should light.	Same as step 27 above.	Same as step 27 above.
29	Set the megahertz and kilohertz selectors to 115.00.	1.0 FREQ SELECT (MHz) lamps C and D should light.	Same as step 27 above.	Same as step 27 above.
30	Set the megahertz and kilohertz selectors to 116.00.	1.0 FREQ SELECT (MHz) lamps C and E should light.	Same as step 27 above.	Same as step 27 above.
31	Set the megahertz and kilohertz selectors to 117.00.	1.0 FREQ SELECT (MHz) lamps D and E should light.	Same as step 27 above.	Same as step 27 above.
32	Set the megahertz and kilohertz selector to 118.00.	1.0 FREQ SELECT (MHz) lamps A and D should light. COMM lamp should light.	*a.* If either one, or both, of the 1.0 FREQ SELECT (MHz) lamps do not light, the megahertz selector in the control unit is defective.	*a.* Troubleshoot the control unit as described in TM 11-5826-226-34.
			b. If the COMM lamp does not light, either a break in the circuit is present, between P2-K and P5-a, or the megahertz selector in the control unit is defective.	*b.* If a break in the circuit is present, make resistance measurements to find the break. If no break is present, troubleshoot the control unit as described in TM 11-5826-226-34.
33	Set the megahertz and kilohertz selectors to 119.00.	1.0 FREQ SELECT (MHz) lamps A and E should light. COMM lamp should light.	The megahertz selector in the control unit is defective.	Troubleshoot the control unit as described in TM 11-5826-226-34.
34	Set the megahertz and kilohertz selectors to 120.00.	1.0 FREQ SELECT (MHz) lamps B and E should light. COMM lamp should light.	Same as step 33 above.	Same as step 33 above.
35	Set the megahertz and kilohertz selectors to 121.00.	1.0 FREQ SELECT (MHz) lamps A and B should light. COMM lamp should light.	Same as step 33 above.	Same as step 33 above.
36	Set the megahertz and kilohertz selectors to 122.00.	1.0 FREQ SELECT (MHz) lamps A and C should light. COMM lamp should light.	Same as step 33 above.	Same as step 33 above.

2-8. Troubleshooting Chart–Continued

Step	Procedure	Proper indication	Probable trouble for improper indication	Correction
37	Set the megahertz and kilohertz selectors to 123.00.	1.0 FREQ SELECT (MHz) lamps B and C should light, COMM lamp should light.	Same as step 33 above.	Same as step 33 above.
38	Set the megahertz and kilohertz selectors to 124.00.	1.0 FREQ SELECT (MHz) lamps B and D should light. COMM lamp should light.	Same as step 33 above.	Same as step 33 above.
39	Set the megahertz and kilohertz selectors to 125.00.	1.0 FREQ SELECT (MHz) lamps C and D should light. COMM lamp should light.	Same as step 33 above.	Same as step 33 above.
40	Set the megahertz and kilohertz selectors to 126.00.	1.0 FREQ SELECT (MHz) lamps C and E should light. COMM lamp should light.	Same as step 33 above.	Same as step 33 above.
41	Rotate the COMPASS SIMULATOR from N (0 degree) to E (90 degrees).	RMI card should follow rotation of COMPASS SIMULATOR. RMI card should indicate within 1 degree of COMPASS SIMULATOR when RMI is tapped lightly on the bezel.	*a.* COMPASS SIMULATOR out of alignment. *b.* Defective RMI. *c.* Defective RMI circuitry in the test set.	*a.* Align the COMPASS SIMULATOR as described in paragraph 3-10. *b.* Troubleshoot the RMI as described in TM 11-5826-211-50. *c.* Refer to figure 4-12 and make continuity checks on the RMI circuitry in test set.
42	Rotate the COMPASS SIMULATOR needle one complete revolution (360 degrees).	RMI needle number 1 should indicate 180 ±2 degrees, and stay at this position as the COMPASS SIMULATOR is rotated.	Defective RMI.	Troubleshoot the RMI as described in TM 11-5826-211-50.
43	Output meter connected to audio jacks Fig 4-5.	Output meter should indicate 100 ±15 milliwatts.	If output meter does not indicate 100 ±15 milliwatts, PHONE Jack J3, or switch S7 Is defective.	Refer to figure 4-12 and make continuity checks of the circuit comprised of J3 and S7 to isolate the trouble.

2-8. Troubleshooting Chart - Continued

Step	Procedure	Proper Indication	Probable trouble for improper indication	Correction
44	Connect the equipment as shown in figure 4-6. Set the megahertz and kilohertz selectors on the control unit to 108.00 MHz. Set the test set IND TEST switch to RCVR GS, AUDIO to MB, and FLAG LOAD to 5. Set the control unit power switch to PWR.	The following lamps should light:		
		a. LOC PWR and GS PWR on aid box.	*a.* If LOC PWR and GS PWR lamps on aid box do not light, either a break in the circuit is present between P5-T and P7-Z, switch S6A in the control unit is defective, or GS 1A fuse (F3) is blown on the test set.	*a.* Measure the dc voltage at the test point located at the center of the GS 1A fuse cap. If 27.5 volts dc is not present, replace fuse F3. If a break in the circuit is present between P5-T and P7-Z, make resistance measurements to find the break. If no breaks are present, troubleshoot the control unit as described in TM 11-5826-226-34.
		b. VOR/LOC DC lamp on test set.	*b.* If VOR/LOC DC lamp on test set does not light, DS10 is faulty.	*b.* Replace DS10.
		c. 26 VAC PWR lamp on aid box.	*c.* If 26 VAC PWR lamp on aid box does not light, VOR/LOC 1A fuse is blown, relay K1 is defective, or transformer T1 is defective.	*c.* Measure the ac voltage at test point located at the center of the VOR/LOC 1A fuse cap. If 115 volts ac is not present, replace fuse F1. If 115 volts sc is still not present, check for a defective relay K1 by measuring its coil resistance (para 2-9). If defective, replace K1. Check for a defective transformer by measuring its resistances (para 2-9). Replace if defective.
		d. VOR/LOC AC lamp on tesl set.	*d.* If VOR/LOC AC lamp on test set does not lit, DS9 is faulty.	*d.* Replace DS9.
		e. GS DC lamp on test set.	*e.* If GS DC lamp on test set does not light, GS DC tamp (DS11) is burned out.	*e.* Replace DS11.
		f. 1.0 FREQ SELECT (MHz) lamp A on aid box.	*f.* If 1.0 FREQ SELECT (MHz) lamp A does not light, either a break in the circuit is present between P7-G and P5-N or the megahertz selector in the control unit is defective.	*f.* If a break in the circuit is present, make resistance measurements to find the break. If no break is present, troubleshoot the control unit as described in TM 11-5826-266-34.
		g. 1.0 FREQ SELECT (MHz) lamp D on aid box.	*g.* If 1.0 FREQ SELECT (MHz) lamp D does not light, either a break in the circuit is present between P7-K and P5-T, or the megahertz selector in the control unit is defective.	*g.* If a break in the circuit is present, make resistance measurements to find the break. If no break is present, troubleshoot the control unit as described in TM 11-5826-226-34.
		h. 0.1 FREQ SELECT (MHz)lamp B on aid box.	*h.* If 0.1 FREQ SELECT (MHz) tamp B does not tight, either a break in the circuit is present between P7-N and P5-J, or the kilohertz selector in the control unit is defective.	*h.* If a break in the circuit is present, make resistance measurements to find the break. If no break is present, troubleshoot the control unit as described in TM 11-5826-226-34.
		i. 0.1 FREQ SELECT (MHz) lamp E on aid box.	*i.* If 0.1 PREQ SELECT (MHz) lamp E does not light, either a break in the circuit is present between P7-S and P5-N, or the kilohertz selector in the control unit is defective.	*i.* If a break in the circuit is present, make resistance measurements to find the break. If no break is present, troubleshoot the control unit as described in TM 11-5826-226-34.
		j. FLAG meter should indicate 250 ±15.0 microamperes.	*j.* If FLAG meter does not indicate 250 ±15.0 microamperes, switch S6 or FLAG METER M2 is defective.	*j.* Refer to figure 4-12 and make continuity checks on the circuit comprised of S6 and M2 to isolate the trouble.
		k. DEVIATION meter	*k.* If DEVIATION meter does not	*k.* Refer to figure 4-12 and make

2-8. Troubleshooting Chart - Continued

Step	Procedure	Proper Indication	Probable trouble for improper indication	Correction
44		should indicate 75 ±5.0 microamperes to the right of 0.	indicate 75 ±5.0 microamperes to the right of 0, switch S6 or DEVIATION meter M1 is defective.	continuity checks on the circuit comprised of S6 and M1 to isolate the trouble.
		l. Output meter should indicate 100 ±15 milliwatts.	*l.* If output meter does not indicate 100 ±15 milliwatts, PHONE jack J3 or switch S7 is defective.	*l.* Refer to figure 4-12 and make continuity checks of the circuit comprised of J3 and S7 to isolate the trouble.
		NOTE 1.0 FREQ SELECT (MHz) lamps A and D should remain lighted in steps 45 through 63 below.		
45	Set the megahertz and kilohertz selectors to 108.05.	0.1 FREQ SELECT (MHz) lamps B and E should light. 0.01 FREQ SELECT (MHz) lamp B should light.	*a.* If 0.5 FREQ SELECT lamps A or B do not light, the kilohertz selector in the control unit is defective. *b.* If 0.01 FREQ SELECT (MHz) lamp B does not light, either a break in the circuit is present between P7-T and P5-R, or the kilohertz selector in the control unit is defective.	*a.* Troubleshoot the control unit as described in TM 11-5826-226-34. *b.* If a break in the circuit is present, make resistance measurements to find the break. If no break is present, troubleshoot the control unit as described in TM 11-5826-226-34.
46	Set the megahertz and kilohertz selectors to 108.10.	0.1 FREQ SELECT (MHz) lamps A and B should light. GS/LOC ON lamp should light. TEST lamp should light.	*a.* If 0.1 FREQ SELECT (MHz) lamp A does not light, either a break in the circuit is present between P7-M and P5-I, or the kilohertz selector in the control unit is defective. *b.* If 0.1 FREQ SELECT (MHz) lamp does not light, the kilohertz selector on the control unit is defective. *c.* If GS/LOC ON lamp does not light, either a break in the circuit is present between P7-A and P5-Y, or the kilohertz selector in the control unit is defective. *d.* If TEST lamp does not light, either a break in the circuit is present between P7-X and P5-J, or switch S6 in the control unit is defective.	*a.* If a break in the circuit is present, make resistance measurements to find the break. If no break is present, troubleshoot the control unit as described in TM 11-5826-226-34. *b.* Troubleshoot the control unit as described in TM 11-5826-226-34. *c.* If a break in the circuit is present, make resistance measurements to find the break. If no break is present, troubleshoot the control unit as described in TM 11-5826-226-34. *d.* If a break in the circuit is present between P7-Y and P5-J, make resistance measurements to find the break. If no break is present, troubleshoot the control unit as described in TM 11-5826-226-34.
47	Set the megahertz and kilohertz selectors to 108.15.	0.1 FREQ SELECT (MHz) lamps A and B should light. GS/LOC ON lamp should light. TEST lamp should light.	If any of the lamps do not light, the kilohertz selector on the control unit is defective.	Troubleshoot the control unit as described in TM 11-5826-226-34.
48	Set the megahertz and kilohertz selectors to 108.20.	0.1 FREQ SELECT (MHZ) lamps A and C should light.	*a.* If 0.1 FREQ SELECT (MHz) lamp does not light, the kilohertz selector on the control unit is defective. *b.* If 0.1 FREQ SELECT (MHz) lamp C does not light, either a break in the circuit is present between P7-P and P5-K, or the kilohertz selector in the control unit is defective.	a. Troubleshoot the control unit as described in TM 11-5826-226-34. b. If a break in the circuit is present, make resistance measurements to find the break. If no break is present, troubleshoot the control unit as described in TM 11-5826-226-34.

2-8. Troubleshooting Chart - Continued

Step	Procedure	Proper Indication	Probable trouble for improper indication	Correction
49	Set the megahertz and kilohertz selectors to 108.25.	0.1 FREQ SELECT (MHz) lamps A and C should light. 0.01 FREQ SELECT (MHz) lamp B should light.	If any of the lamps do not light, the kilohertz selector in the control unit is defective.	Troubleshoot the control unit as described in TM 11-5826-226-34.
50	Set the megahertz and kilohertz selectors to 108.30.	0.1 FREQ SELECT (MHz) lamps B and C should light. GS/LOC ON lamp should 1ight. TEST lamp should light.	If any one of these lamps does not light, the kilohertz selector in the control unit is defective.	Troubleshoot the control unit as described in TM 11-5826-226-34.
51	Set the megahertz and kilohertz selectors to 108.35.	0.1 FREQ SELECT (MHz) lamps B and C should light. 0.01 FREQ SELECT (MHz) lamp B should light. GS/LOC ON lamp should light. TEST lamp should light.	If any of the lamps do not light, the kilohertz selector in the control unit is defective.	Troubleshoot the control unit as described in TM 11-5826-226-34.
52	Set the megahertz and kilohertz selectors to 108.40.	0.1 FREQ SELECT (MHz) lamps B and D should light.	*a.* If 0.1 FREQ SELECT (MHz) lamp B does not light, the kilohertz selector in the control unit is defective. *b.* If 0.1 FREQ SELECT (MHz) lamp D does not light, either a break in the circuit is present between P7-R and P5-M, or the kilohertz selector in the control unit is defective.	*a.* Troubleshoot the control unil as described in TM 11-5826-226-34. *b.* If a break in the control circuit is not present, make resistance measurements to find the break. If no break is present, troubleshoot the control unit as described in TM 11-5826-226-34.
53	Set the megahertz and kilohertz selectors to 108.45.	0.1 FREQ SELECT (MHz) lamps B and D should light. 0.01 FREQ SELECT (MHz) lamp B should light.	If any lamps do not light, the kilohertz selector in the control unit is defective.	Troubleshoot the control unit as described in TM 11-5826-226-34.
54	Set the megahertz and kilohertz selectors to 108.50.	0.1 FREQ SELECT (MHz) lamps C snd D should light. GS/LOC ON lamp should light. TEST lamp should light.	Same as step 53 above.	Same as step 53 above.
55	Set the megahertz and kilohertz selectors to 108.55.	0.1 FREQ SELECT (MHz) lamps C and D should light. 0.01 FREQ SELECT (MHz) lamp B should light, GS/LOC ON lamp should light. TEST lamp should light.	Same as step 53 above.	Same as step 53 above.
56	Set the megahertz and kilohertz selectors to 108.60.	0.1 FREQ SELECT (MHz) lamp C and E should light.	Same as step 53 above.	Same as step 53 above.
57	Set the megahertz and kilohertz selectors to 108.65.	0.1 FREQ SELECT (MHz) lamps C and E should light. 0.01 FREQ SELECT (MHZ) lamp B should light.	Same as step 53 above.	Same as step 53 above.
58	Set the megahertz and kilohertz selectors to 108.70.	0.1 FREQ SELECT (MHz) lamp D and E should light. GS/LOC ON lamp should light. TEST lamp should light.	Same as step 53 above.	Same as step 53 above.
59	Set the megahertz and kilohertz selectors to 108.75.	0.1 FREQ SELECT (MHz) lamps D and E should light. 0.01 FREQ SELECT (MHZ) lamp B should light. GS/LOC ON lamp should light. TEST lamp should light.	Same as step 53 above.	Same as step 53 above.
60	Set the megahertz and kilohertz selectors to 108.85.	0.1 FREQ SELECT (MHz) lamp A and D should light.	Same as step 53 above	Same as Step 53 above.

2-8. Troubleshooting Chart - Continued

Step	Procedure	Proper Indication	Probable trouble for improper indication	Correction
61	Set the megahertz and kilohertz selectors to 108.85.	0.1 FREQ SELECT (MHz) lamps A and D should light. 0.01 FREQ SELECT (MHz) lamp B should light.	Same as step 53 above.	Same as step 53 above.
62	Set the megahertz and kilohertz selectors to 108.90.	0.1 FREQ SELECT (MHz) lamps A and E should light. GS/LOC ON lamp should light, TEST lamp should light.	Same as step 53 above.	Same as step 53 above.
63	Set the megahertz and kilohertz selectors to 108.95.	0.1 FREQ SELECT (MHz) lamps A and E should light. 0.01 FREQ SELECT (MHz) lamp B should light. GS/LOC ON lamp should light. TEST lamp should light. **NOTE** 0.1 FREQ SELECT (MHz) lamps B and E should remain lit in steps 64 through 81 below.	Same as step 53 above.	Same as step 53 above.
64	Set the megahertz and kilohertz selectors to 109.00.	1.0 FREQ SELECT (MHz) lamps A and E should light.	*a.* If 1.0 FREQ SELECT (MHz) lamp does not light, the megahertz selector in the control unit is defective. *b.* If 1.0 FREQ SELECT (MHz) lamp E does not light, either a break in the circuit is present between P7-L and P5-Q, or the megahertz selector in the control unit is defective.	*a.* Troubleshoot the control unit as described in TM 11-6625-226-34. *b.* If a break in the circuit is present, make resistance measurements to find the break. If no break is present, troubleshoot the control unit as described in TM 11-6625-226-34.
65	Set the megahertz and kilohertz selectors to 110.00.	1.0 FREQ SELECT (MHz) lamps B and E should light.	*a.* If 1.0 FREQ SELECT (MHz) lamp B does not light either a break in the circuit is present between P7-H and P5-S, or the megahertz selector in the unit is defective. *b.* If 1.0 FREQ SELECT (MHz) lamp E does not light, the megahertz selector in the control unit is defective.	*a.* If a break in the circuit is present, make resistance measurements to find the break. If no break is present, troubleshoot the control unit as described in TM 11-5826-226-34. *b.* Troubleshoot the control unit as described in TM 11-5826-226-34.
66	Set the megahertz and kilohertz selectors to 111.00.	1.0 FREQ SELECT (MHz) lamps A and B should light.	The megahertz selector in the control unit is defective.	Troubleshoot the control unit as described in TM 11-5826-226-34.
67	Set the megahertz and kilohertz selectors to 112.00.	1.0 FREQ SELECT (MHz) lamps A and C should light.	*a.* If 1.0 FREQ SELECT (MHz) lamp A does not light, the megahertz selector in the control unit is defective. *b.* If 1.0 FREQ SELECT (MHz) lamp C does not light, either a break in the circuit is present between P7-J and P5-P, or the megahertz selector in the control unit is defective.	*a.* Troubleshoot the control unit as described in TM 11-5826-226-34. *b.* If a break in the circuit is present, make resistance measurements to find the break. lf no break is present troubleshoot the control unit as described in TM 11-5826-226-34.
68	Set the megahertz and kilohertz selectors to 113.00.	1.0 FREQ SELECT (MHz) lamps B and C should light.	The megahertz selector in the control unit is defective.	Troubleshoot the control unit as described in TM 11-5826-226-34.
69	Set the megahertz and kilohertz selectors to 114.00.	1.0 FREQ SELECT (MHz) lamps B and D should light.	Same as step 68 above.	Same as step 68 above.
70	Set the megahertz and kilohertz selectors to 115.00.	1.0 FREQ SELECT (MHz) lamps C and D should light.	Same as step 68 above.	Same as step 68 above.

2-8. Troubleshooting Chart - Continued

Step	Procedure	Proper Indication	Probable trouble for improper indication	Correction
71	Set the megahertz and kilohertz selectors to 116.00.	1.0 FREQ SELECT (MHz) lamps C and E should light.	Same as step 68 above.	Same as step 68 above.
72	Set the megahertz and kilohertz selectors to 117.00.	1.0 FREQ SELECT (MHz) lamps D and E should light.	Same as step 68 above.	Same as step 68 above.
73	Set the megahertz and kilohertz selectors to 118.00.	1.0 FREQ SELECT (MHz) lamps A and D should fight. COMM lamp should light. DME DSBL light on test set should light.	a. If either one, or both, of the 1.0 FREQ SELECT (MHz) lamps do not light, the megahertz selector in the control unit is defective.	a. Troubleshoot the control unit as described in TM 11-5826-226-34.
			b. If the COMM lamp does not light, either a break in the circuit is present, between P7-Y and P5-S, or the megahertz selector in the control unit is defective.	b. If a break in the circuit is present make resistance measurements to find the break. If no break is present, troubleshoot the control unit as described in TM 11-5836-226-34.
			c. If the DME DSBL does not light, DS1 is faulty.	c. Replace DS1.
		NOTE DME DSBL lamp on test set should remain on in steps 74 through 81 below.		
74	Set the megahertz and kilohertz selectors to 119.00.	1.0 FREQ SELECT (MHz) lamps A and E should light. COMM lamp should light.	The megahertz selector in the control unit is defective.	Troubleshoot the control unit as described in TM 11-5826-226-34.
75	Set the megahertz and kilohertz selectors to 120.00.	1.0 FREQ SELECT (MHz) lamps B and E should light. COMM lamp should light.	Same as step 74 above.	Same as step 74 above.
76	Set the megahertz and kilohertz selectors to 121.00.	1.0 FREQ SELECT (MHz) lamps A and B should light. COMM lamp should light.	Same as step 74 above.	Same as step 74 above.
77	Set the megahertz and kilohertz selectors to 122.00.	1.0 FREQ SELECT (MHz) lamps A and C should light. COMM lamp should light.	Same as step 74 above.	Same as step 74 above.
78	Set the megahertz and kilohertz selectors to 123.00.	1.0 FREQ SELECT (MHz) lamps B and C should light. COMM lamp should light.	Same as step 74 above.	Same as step 74 above.
79	Set the megahertz and kilohertz selectors to 124.00.	1.0 FREQ SELECT (MHz) lamps B and D should light. COMM lamp should light.	Same as step 74 above.	Same as step 74 above.
80	Set the megahertz and kilohertz selectors to 125.00.	1.0 FREQ SELECT (MHz) lamps C and D should light. COMM lamp should light.	Same as step 74 above.	Same as step 74 above.
81	Set the megahertz and kilohertz selectors to 126.00.	1.0 FREQ SELECT (MHz) lamps C and E should light. COMM lamp should light.	Same as step 74 above.	Same as step 74 above.
82	Disconnect pendant cable plugs P3 and P7. Jumper P7-P to P7-G.	AIRWAYS lamp should light.	If AIRWAYS lamp does not light, DS2 is defective.	Replace DS2.
83	Jumper P7-Z to P7-I.	AIRWAYS lamp should light.	If AIRWAYS lamp does not light, Q1, R1, or R3 is defective.	Refer to figure 4-12 and check circuit comprised of Q1, R1, and R3 to isolate the trouble.
84	Place an 18.1 k Ω resistor in series between P7-P and P7-H.	AIRWAYS lamp should light.	If AIRWAYS lamp does not light, R2 is defective.	Replace R2.
85	Jumper P7-P to P7-J.	MIDDLE lamp should light.	If MIDDLE lamp does not light, DS3 is defective.	Replace DS3.
86	Place an 18.1 k Ω resistor in series between P7-P and P7-K.	MIDDLE lamp should light.	If MIDDLE lamp does not light, Q2, R4 or R5 is defective.	Refer to figure 4-12 and check circuit comprised of Q2, R4, and R5 to isolate the trouble.

2-8. Troubleshooting Chart - Continued

Step	Procedure	Proper Indication	Probable trouble for improper indication	Correction
87	Jumper P7-P to P7-M.	OUTER lamp should light.	If OUTER lamp does not light, DS4 is defective.	Replace DS4.
88	Place an 18.1 k Ω resistor in series between P7-P and P7-N.	OUTER lamp should light.	If OUTER lamp does not light, Q3, R6, or R7 is defective.	Refer to figure 4-2 and check circuit comprised of Q3, R6, or R7 to isolate the trouble.
89	Connect the equipment as shown in figure 2-11. Course Indicator ID-1347C/ARN-82 must be used. On Radio Test Set TS2500B/ARM-92, MODE switch must be in the 30 Hz position. A schematic diagram of the fabricated cable is shown in figure 4-1. Cali-	Minimum null should appear on the oscilloscope with the OBS indicator set to 300 degrees.	Course Indicator ID-1347C/ARN-82 is defective or misaligned.	Troubleshoot the OBS indicator as described in TM 11-5826-226-34.

2-8. Troubleshooting Chart - Continued

Step	Procedure	Proper indication	Probable trouble for improper indication	Correction
89 (Cont)	brate the resolver test set. (Refer to TM 11-6625-492-12 for calibration of the resolver test set. Disconnect the MOD OUTPUT of the VOR modulator from the VAR connector on the resolver test set. Connect the INPUT lead of the vtvm to the VOLTMETER connector on the resolver test set. Set the function switch on the resolver test set to ORZ. Adjust the INPUT LEVEL control on the resolver test set for a 4.25-volt indication on the vtvm. Remove the INPUT lead of the vtvm from the VOLTMETER connector, and connect it to the OUTPUT connector on the resolver test set. Set the test set BRG-OBS switch to OBS. Set the SWEEP TIME on the oscilloscope to 20 milliseconds. Adjust the oscilloscope vertical gain until the pattern fills the grid. Rotate the OBS control on the test set and the AMP BAL control on the resolver test set until the least possible signal amplitude (minimum null) is observed on the oscilloscope.			

2-8. Troubleshooting Chart - Continued

Step	Procedure	Proper indication	Probable trouble for improper indication	Correction
89 (Cont)		*Note:* As the null is approached. increase the oscilloscope vertical gain.		
90	Set the BRG-OBS switch on the test set to BRG.	Oscilloscope indication should not change from the indication obtained in step 89 above.	*a.* Resistor R2 out of adjustment. *b.* Precision bearing circuit in test set is defective.	*a.* Adjust resistor R2 (para 3-9). *b.* Refer to figure 4-12. Make continuity checks on the precision bearing circuit. Refer to paragraph 2-9 for the resistance of the transformer winding for T2 and T3.
91	*a.* Connect test set pendant cable P2 to indicator test set jack J2 using cable fabricated per instructions in paragraph 4-4 (fig 4-2). Use Course Indicator ID-1347C/ ARN-82 with test set. Set SYNCHRO SELECTOR switch on indicator test set to EZ. Set test BRG-OBS switch to 0BS. Set test set MODE switch to 400 HZ. Adjust course index on course indicator around 300 degrees for zero reading on indicator test set SYNCHRO METER.	*a.* Course index on course indicator should read 300 ±3 degrees when indicator test set SYNCHRO METER reads zero.	*a.* Course Indicator ID-1347C/ARN-82 is defective or misaligned.	*a.* Troubleshoot the OBS indicator as described in TM 11-5826-226-34.
	b. Rotate course index on course selector counterclockwise.	*b.* Indicator test set SYNCHRO METER deflects to the right.	*b.* Same as step *a* above.	*b.* Same as step *a* above.
(Cont)	*c.* Set SYNCHRO SELECTOR switch on indicator test set	*c.* Course index on course indicator should read 30 ±3 degrees when	*c.* Same as step *a* above.	*c.* Same as step *a* above.

2-8. Troubleshooting Chart - Continued

Step	Procedure	Proper indication	Probable trouble for improper indication	Correction
91 (Cont)	to RW2. Adjust course index on course indicator around 30 degrees for zero reading on indicator test set SYNCHRO METER.	indicator test set SYNCHRO METER reads zero.		
	d. Rotate course index on course indicater counterclockwise.	*d.* Indicator test set SYNCHRO METER deflects to the left.	*d.* Same as step *a* above.	*d.* Same as step *a* above.
92	Connect test set pendant cable plugs P2 and P3 to the cable fabricated per instructions in paragraph 4-4 (fig. 4-3). Set test set controls as follows: BRG-OBS: BRG BEARING: 300 MODE: 400 HZ Measure the ac voltage from J1 to J2 on the fabricated cable. This voltage is V1 max. Set test set BEARING switch to 30. Measure the ac voltage from J3 to J4 on the fabricated cable. This voltage is V2 max. Measure the ac voltage from J1 to J2 and J3 to J4 for each setting of the test set BEARING switch.	Bearing — J4 to J5 — J3 to J6 300 — V1 max — 0 330 — 0.86 (V1 max) — 0.5 (V2 max) 0 — 0.5 (V1 max) — 0.86 (V2 max) 30 — 0 — V2 max 60 — 0.5 (V1 max) — 0.86 (V2 max) 90 — 0.86 (V1 max) — 0.5 (V2 max) 120 — V1 max — 0 150 — 0.86 (V1 max) — 0.5 (V2 max) 180 — 0.5 (V1 max) — 0.86 (V2 max) 210 — 0 — V2 max 240 — 0.5 (V1 max) — 0.86 (V2 max) 270 — 0.86 (V1 max) — 0.5 (V2 max) (10% tolerance is allowed on above readings.)	Broken part or connection. Defective transformer T2 or T3.	Check for defective parts or connections.

2-9. DC Resistance of Transformers and Relay Coils.

Transformer or relay coil	Terminals	Ohms
T2 and T3 in Radio Test Set TS-2500B/ARM-92	11 to 12	13 ±3
	11 to 10	36 ±7
	8 to 7	52±10
	7 to 6	36 ±7
	6 to 5	12 ±2
	1 to 2	30 ±6
	3 to 4	195 ±39
T1	3 to 2	9 ±2
	2 to 1	1
K1	1 to 6	280 ±28

CHAPTER 3

REPAIR AND ALIGNMENT

Section I. REPAIRS

3-1. General Parts Replacement Techniques.

The following general precautions should be observed when replacing parts in this equipment.

a. When soldering or unsoldering components, solder quickly to allow as little heat conduction as possible. Whenever wiring permits, use a heat sink (such as long-nosed pliers) between the solder joint and the component. Use approximately the same length and dress of leads as used originally.

b. Use a pencil-type iron with a 25-watt maximum capacity. If the iron must be used with ac, use an isolation transformer between the iron and the line. Check soldering irons for shorts to the iron tip before using.

c. Whenever an electrical part such as a resistor or diode is to be removed, note the exact position of the component before removing it. Replace the component in the same position.

3-2.Removal and Replacement Techniques.

The procedures for removal and disassembly of the units in the test set are described in paragraph 3-3. The corresponding replacement, reassembly, and lubrication techniques are described in paragraph 3-4. The procedures for disassembly of the aid box are described in paragraph 3-5. The corresponding reassembly techniques are described in paragraph 3-6.

3-3. Removal and Disassembly Techniques for Radio Test Set TS-2500B/ARM-92.

a. Removal of Test Set Front Panel.

(1) Remove the 7 screws from perimeter of front panel.

(2) Lift front panel away from test set.

(3) Disconnect power cable from chassis.

***Note:* To allow enough slack to conveniently work on the test set, the pendant cables may be pulled through the porthole in the bottom of test set.**

b. Removal of Control Unit.

(1) Loosen the four Dzus fasteners.

(2) Pull the control unit away from test set front panel.

(3) Disconnect cable attached to control unit.

c. Disassembly of Control Unit. Refer to TM 11-5826-226-34 for disassembly procedures of Radio Set Control C-6873B/ARN-82.

d. Removal of OBS Indicator.

(1) Remove the four screws that hold OBS in. dicator to test set front panel.

(2) Pull the OBS indicator away from test set front panel.

(3) Disconnect cable attached to OBS indicator.

e. Disassimbly of OBS Indicator. Refer to TM 11-5826-226-34 for disassembly procedures of Course Indicator ID-1347C/ARN-82.

f. Removal of RMI.

(1) Remove the four screws that hold RMI to test set front panel.

(2) Pull RMI away from test set front panel.

(3) Disconnect cable attached to RMI.

g. Diassimbly of RMI. Refer to TM 11-5826-211-50 for disassembly procedures for RMI Indicator ID-250A/ARN.

h. Removal of COMPASS SIMULATOR Indicator.

(1) Remove test set front panel (step *a* above).

(2) Remove the three screws that hold COMPASS SIMULATOR indicator to test set front panel.

(3) Pull COMPASS SIMULATOR indicator away from front panel.

(4) Disconnect cable attached to COMPASS SIMULATOR indicator.

i. Disassembly of COMPASS SIMULATOR Indicator (fig. 3-1).

(1) Remove four screws (30) and four lockwashers (29) from connector P1 (28).

(2) Pull connector P1 (28) away from rear housing (23) to allow enough space to unsolder leads attached to connector. Label these leads to identify them for reassembly. Remove gasket (27).

(3) Set COMPASS SIMULATOR indicator down on a flat surface.

(4) Remove eight screws (25) and eight lockwashers (24).

(5) Pull front cover (5) away from rear housing (23).

(6) Remove gasket (22).

(7) Separate front cover (5) from synchro housing (17).

Note: To remove dial window (9), push carefully on front side of dial window (9) to remove it from front cover (5) and window seal (8).

(8) Loosen two setscrews (2, 3). Remove knob (1) and spring washer (4).

(9) Pull out drive gear (7). Remove shaft sleeve (6).

(10) Pull needle (11) straight off shaft of synchro B1 (21).

(11) Rotate synchro gear (13) until setscrew (14) lines up with hole in smaller rim of synchro housing (17). Loosen this setscrew.

(12) Repeat step in (11) above to loosen setscrew (14).

(13) Remove dial retainer (10) and dial (12).

(14) Remove synchro gear (13) and idler gear (16).

(15) Remove three screws (20), three lockwashers (19), and three synchro clamps (18).

(16) Pull synchro B1 (21) off synchro housing (17).

j. Removal of FLAG Meter.

(1) Remove test set front panel (step *a* above).

(2) Disconnect the two wires attached to meter. Label these wires for identification when replacing meter.

(3) Remove the four nuts that hold meter to test set.

(4) Pull meter out of front panel

k. Removal of DEVIATION Meter.

(1) Remove test set front panel (step *a* above).

(2) Disconnect the two wires attached to meter. Label these wires for identification when replacing meter.

(3) Remove the four nuts that hold meter to test set.

(4) Pull meter out of front panel.

l. Removal of TO-FROM Meter.

(1) Remove test set front panel (step *a* above).

(2) Disconnect the two wires attached to meter. Label these wires for identification when replacing meter.

(3) Remove the four nuts that hold meter to test set.

(4) Pull meter out of front panel.

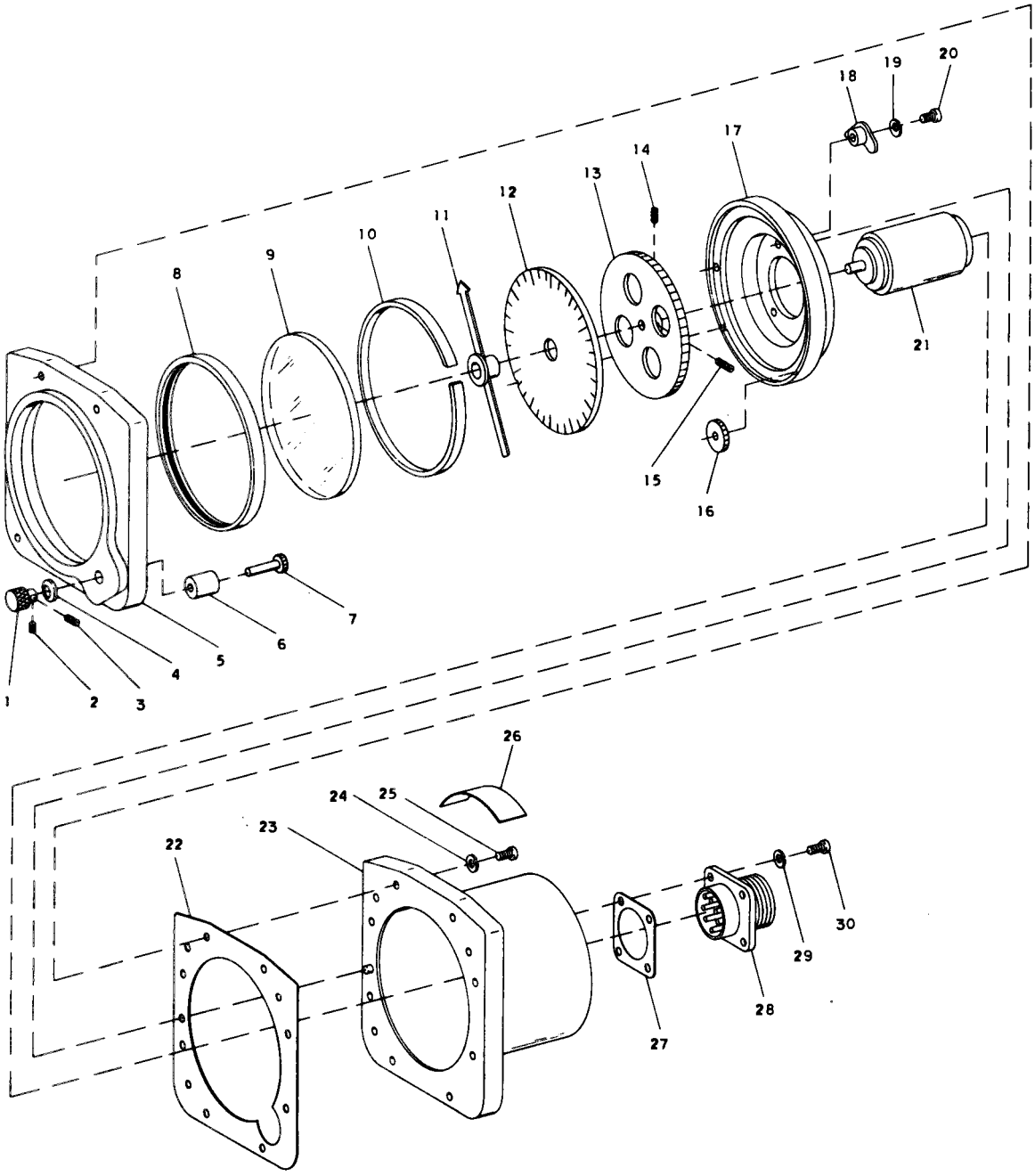

Figure 3-1. COMPASS SIMULATOR indicator, exploded view.

ELIRS017

3-4. Replacement, Reassembly, and Lubrication Techniques for Radio Test Set TS-2500B/ARM-92.

a. Replacement of TO-FROM meter.

(1) Place meter back in front panel.

(2) Replace the four nuts, to hold meter to front panel.

(3) Connect the two wires to their proper terminal on meter.

(4) Replace test set front panel (step (4) below).

b. Replacement of Deviation Meter.

(1) Place meter back in front panel.

(2) Replace the four nuts, to hold meter to front panel.

(3) Connect the two wires to their proper terminal on meter.

(4) Replace test set front panel (step (4) above).

c. Rekplacement of FLAG Meter.

(1) Place meter back in front panel.

(2) Replace the four nuts, to hold meter to front panel.

(3) Connect the two wires to their proper terminals on meter.

(4) Replace test set front panel (step (4) above).

d. Reassembly of COMPASS SIMULATOR Indicator (fig. 3-1).

(1) Replace synchro B1 (21) to synchro housing (17).

(2) Replace three synchro clamps (18), three lockwashers (19), and three screws (20).

(3) Replace synchro gear (13).

(4) Rotate synchro gear (13) until setscrew (15) lines up with hole in smaller rim of synchro housing (17). Tighten this setscrew.

(5) Repeat step (4) above to tighten setscrew (14).

(6) Replace idler gear (16).

(7) Replace dial (12) and retainer (10).

(8) Push needle (11) straight on the shaft of synchro B1 (21) until it is properly in place. Align the COMPASS SIMULATOR indicator (para 3-10).

(9) Replace shaft sleeve (6). Lubricate inside of shaft sleeve (6) with Dow Corning Stopcock grease. Replace drive gear (7).

(10) Replace spring washer (4). Replace knob (1) and tighten two setscrews (2, 3).

(11) Replace front cover (5) to synchro housing (17).

Note: If dial window (9) has been removed, replace the window by very carefully pushing it back into the front cover (5) before replacing the front cover.

(12) Replace gasket (22) to rear housing (23).

(13) Replace front cover (5) to rear housing (23).

(14) Replace eight lockwashers (24) and tighten eight screws (25).

(15) Replace gasket (27).

(16) Solder leads to proper points on connector P1 (28).

(17) Replace four lockwashers (29) and tighten four screws (30).

e. Replacement of COMPASS SIMULATOR Indicator.

(1) Connect P1 to COMPASS SIMULATOR indicator.

(2) Replace COMPASS SIMULATOR indicator in front panel.

(3) Replace the three screws and nuts, to hold COMPASS SIMULATOR indicator to front panel.

(4) Replace test set front panel (step (1) below).

f. Reassembly and Lubrication of RMI. Refer to TM 11-5826-211-50 for reassembly and lubrication procedures for RMI Indicator ID-250A/ARN.

g. Replacement of RMI.

(1) Connect P4 to RMI connector.

(2) Replace RMI in front panel.

(3) Replace the four screws, to hold RMI to front panel.

(4) Replace test set front panel (step (1) below).

h. Reassembly and Lubrication of OBS Indicator. Refer to TM 11-5826-226-34 for reassembly and lubrication procedures for Course Indicator ID-1347C/ARN-82.

i. Replacement of OBS Indicator.

(1) Connect P6 to OBS connector.

(2) Replace OBS indicator in front panel.

(3) Replace the four screws, to hold OBS indicator to front panel.

(4) Replace test set front panel (step (1) below).

j. Reassembly and Lubrication of Control Unit. Refer to TM 11-5826-226-34 for reassembly and lubrication procedures for Radio Set Control C-6873B/ARN-82.

k. Replacement of Control Unit.

(1) Connect P5 to control unit connector.

(2) Replace control unit in front panel.

(3) Tighten the four Dzus fasteners.

l. Replacement of Front Panel.

(1) Connect power cable to J5.

(2) Place front panel back in lower carrying case. Be sure no cables are pinched between chassis and carrying case.

(3) Replace the 7 screws in perimeter of front panel.

3-5. Disassembly Techniques for Aircraft Test Set Wiring Harness TS-2501/ARM-92.

Remove bottom panel of aid box as follows:

a. Remove the six screws that hold bottom panel in place.

b. Lift bottom panel away.

3-6. Reassembly Techniques for Aircraft Test Set Wiring Harness TS-2501/ARM-92.

Replace bottom panel of aid box as follows:

a. Place bottom panel on aid box.

b. Replace the six screws, to hold bottom panel in place.

Section II. ALIGNMENT

3-7. General.

Alignment procedures for Radio Test Set AN/ARM-92B are given in paragraphs 3-9 through 3-12. The precision bearing alignment is given in paragraph 3-9.

Alignment of the COMPASS SIMULATOR indicator is given in paragraph 3-10. References to the alignment procedures are given for the OBS indicator and RMI in paragraphs 3-11 and 3-12. References to the test equipment required are given in paragraph 3-8.

3-8. Test Equipment Required for Alignment.

Refer to paragraph 2-3 for a list of the test equipment required for alignment procedures.

3-9. Precision Bearing Alignment.

a. Remove the test set front panel (para 3-3a).

b. A special cable is required for precision bearing alignment. Refer to paragraph 4-4 for construction details of this cable.

c. Connect the equipment as shown in figure 2-11, and adjust the resolver test set. (Refer to TM 11-6625-492-12 for calibration of Resolver Test Set AN/ASM-101.

d. Disconnect the MOD OUTPUT connector of the VOR modulator from the VAR connector of the resolver test set.

e. Connect the INPUT of the vacuum tube voltmeter (vtvm) to the VOLTMETER connector on the resolver test set.

f. Set the function switch on the resolver test set to SET ORZ.

g. Adjust the INPUT LEVEL control on the resolver test set for a 4.25-volt indication of the vtvm.

h. Remove the INPUT of the vtvm from VOLTMETER connector, and connect it to the OUTPUT connector on the resolver test set.

i. Set the IND TEST switch on the test set to RCVR V/L.

j. Set the BEARING selector switch on the test set to 300.

k. Unlock potentiometer R2 located behind test set front panel.

l. Alternately adjust the AMP. BAL. control on the resolver test set and potentiometer R2 in the test set to obtain the least possible signal amplitude (minimum null) as observed on the oscilloscope.

Note: As the null is approached, increase the vertical gain of the **oscilloscope.**

m. Lock potentiometer R2 shaft.

n. Disconnect the equipment and replace the test set front panel.

3-10. COMPASS SIMULATOR Indicator Alignment.

a. Remove the test set front panel (paragraph 3-3a).

b. Connect the test set to a 27.5-volt dc power source, and a 115-volt, 400-Hz power source.

c. Set the power switch on the control unit to PWR. (All other controls and switches on the control unit and test set may be in any position.)

***Caution:* In the fallowing steps, remove the vtvm power cord from ground to eliminate the possibility of shorting across the external power source.**

d. Connect the vtvm between pins C and D of connector P3 of the test set pendant cable.

e. With the compass simulator control, rotate the COMPASS SIMULATOR indicator for a null indication on the vtvm.

***Note;* A 360-degree rotation of the COMPASS SIMIULATOR indicator will produce two nulls on the vtvm. To determine the correct null, measure the ac voltage between pins C and G of connector P3. This ac voltage will be less than 26 volts ac when the correct null is found.**

f. With the COMPASS SIMULATOR indicator set to the correct null, perform the following procedure to zero the COMPASS SIMULATOR indicator needle.

(1) Remove the rear housing of the COMPASS SIMULATOR indicator.

(2) Loosen the three screws that hold synchro B1 to the housing.

(3) Rotate the entire synchro until the COMPASS SIMULATOR indicator needle points exactly to N.

(4) Tighten the three screws that hold synchro B1 to the housing.

(5) Set the power switch on the control unit to OFF.

(6) Replace the rear housing of the COMPASS SIMULATOR indicator.

g. Disconnect the equipment, and replace the front panel on the test set.

3-11. OBS Indicator Alignment.

Refer to TM 11-5826-226-34 for alignment procedures of Course Indicators ID-1347C/ARN-82 and ID-1346A/ARN-82.

3-12. RMI Alignment.

Refer to TM 11-5826-211-50 for alignment procedures of RMI Indicator ID-250A/ARN.

CHAPTER 4
GENERAL SUPPORT TESTING PROCEDURES

4-1. General.

a. Testing procedures are prepared for use by general support and depot maintenance shops responsible for general support and depot maintenance of electronic equipment to determine the acceptability of repaired electronic equipment. These procedures set forth specific requirements that repaired electronic equipment must meet before it is returned to the using organization. The testing procedures are to be used for both general support testing procedures and depot overhaul standards. Applicable procedures of the Army depots performing these tests and the general standards for repaired electronic equipment given in TB SIG 355-1, TB SIG 355-2, and TB SIG 355-3 form a part of the requirements for testing this equipment.

b. Comply with the instructions preceding the body of each chart before proceeding to the chart. Perform each test in sequence. Do not vary the sequence. For each step, perform all the actions required in the Control settings column; then perform each specific test procedure, and verify it against its performance standard.

4-2. Test Equipment, Tools, and Materials.

All test equipment, tools, materials, and other equipment required to perform the testing procedures given in this section are listed in the following charts and are authorized under TA-11-17, Signal Field Maintenance Shops, and TA-11-100(11-17), Allowances of Signal Corps Expendable Supplies for Field Maintenance Shop, Continental United States.

Nomenclature	Federal stock number	Technical manual
Modulator MD-83A/ARN	6625-00-539-8563	TM 11-6625-588-15
Output Meter TS-585(*)/U	6625-00-244-0501	TM 11-5017
Meter Voltmeter ME-30A/U and Electronic Voltmeter ME-30(*)/U	6625-00-669-0742	TM 11-6625-320-12
Multimeter ME-26(*)/U	6625-00-542-6407	TM 11-6625-200-12
Resolver Test Set AN/ASM-101	6625-00-086-7844	TM 11-6625-492-12
Oscilloscope AN/USM-281A Alternate, Oscilloscope AN/USM-140A	6625-00-987-6603	TM 11-6625-535-15
Meter Test Set TS-682A/GSM- 1	6625-00-669-0747	TM 11-25535B

b. Tools. All tools required are contained in Electronic Eqllipment Tool Kit TK-105/G, Federal stock number 5180-610-8177.

c. Materials.

(1) 1/4-inch barrel diameter.

(2) Telephone plug (1/4-inch diameter barrel).

(3) Wire, copper, insulated, stranded #22 AWG (40 feet long).

(4) Connectors (three), Bendix PT01A-20-40P(SR).

(5) Connector, Bendix PT01A-20-40P(SR).

(6) Clamp MS3057-10A.

(7) Connector MS3106A-18-1S.

(8) Connector MS3116A-18-32SW.

(9) Binding posts (seven), Superior Electric Company, DF 30RC.

(10) Spaghetti, 3/4-inch diameter (5.5 feet long).

(11) Small, enclosed metal box 3 x 4 x 5 inches.

4-3. Test Facilities.

Primary power requirements are 27.5 volts dc at 33 watts and 115 volts, 400 Hz at 92 watts. Temperature, humidity, and atmospheric pressure are not critical.

4-4. Fabricated Cable Construction Details.

Fabricated cables are required to connect the test set to Resolver Test Set AN/ASM-101 and Course Indicator Test Set AN/ASM-110. Refer to figures 4-1, 4-2. and 4-3, and construct the cables as described below:

a. Resolver Test Set and Indicator Test Set Cables.

(1) Solder six 2-foot lengths of #22 AWG stranded, insulated wire to pins C, D, E, F, G, and H of each male connector P1.

(2) Label the loose ends of the six wires with the pin number to which each wire is connected.

(3) Slip a 2-inch length of spaghetti over the loose ends of the six wires.

(4) Place clamp MS3057-10A over the end of the spaghetti on the resolver test set cable.

(5) Connect the loose ends of the six wires to the pins of the J1 female connectors as shown in figures 4-1 and 4-2.

(6) Tighten the clamps around the J1 connectors on each cable.

(1) Solder six 2-foot lengths of #22 AWG stranded insulated wire to pins C, D, E, F, G, and H of male connector P1.

(2) Solder two 2-foot lengths of #22 AWG stranded insulated wires to pins G and E of male connector P2.

(3) Label the loose ends of the six wires with the pin number to which each wire is connected.

(4) Slip a 2-inch length of spaghetti over the loose ends of the eight wires.

(5) Mount and label seven binding posts on a small, enclosed metal box (figure 4-3).

(6) Connect a 21.5-kilohm, ±1%, 1/2-watt resistor from binding post J4 to binding post J5.

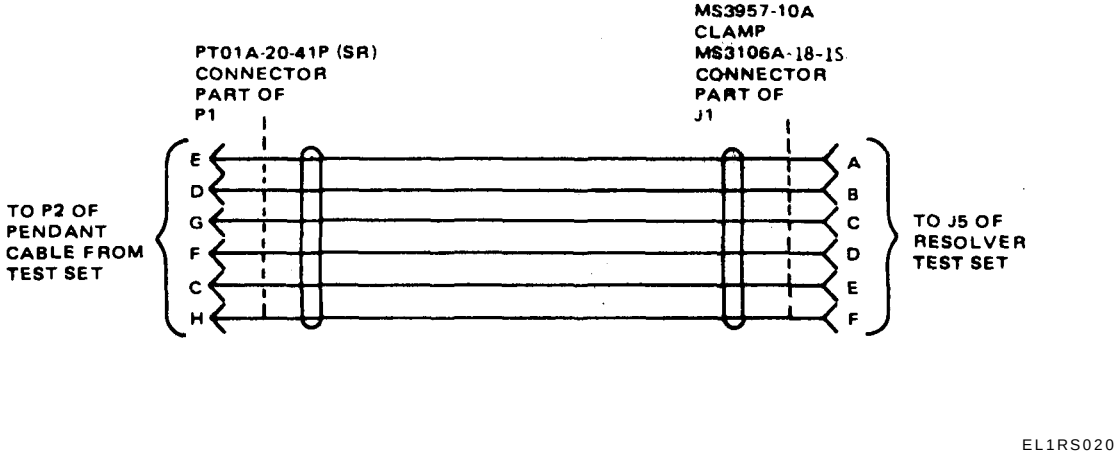

Figure 4-1. Fabricated cable to resolver test set, construction details.

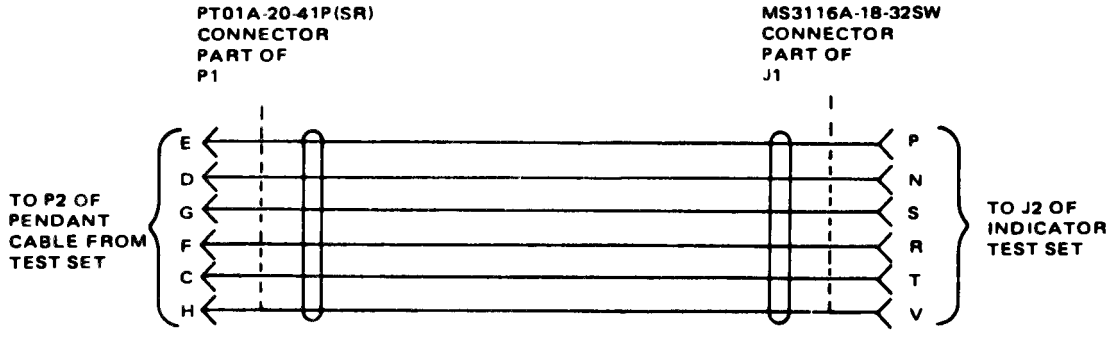

ELIRS021

Figure 4-2. Fabricated cable to indicator test set, construction details.

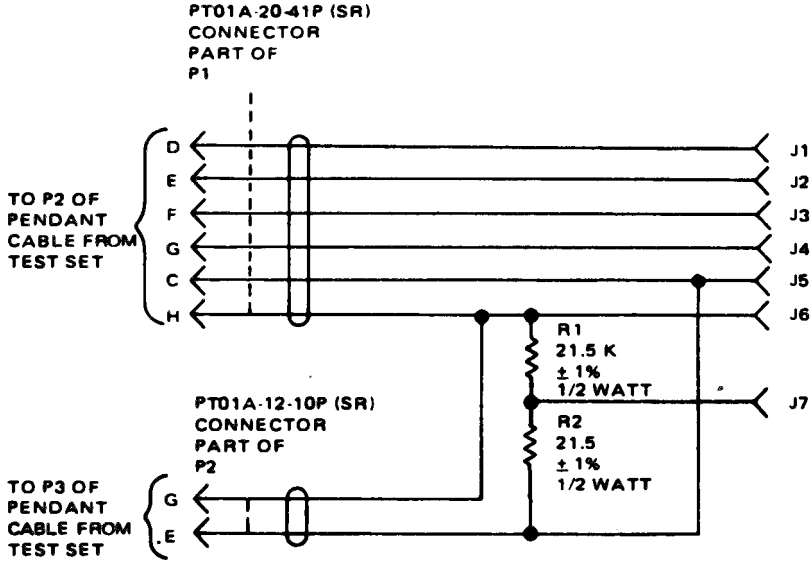

ELIRS022

Figure 4-3. Fabricated cable to resolver bridge. construction details.

(7) Connect a 21.5-ohm, ±1%, 1/2-watt resistor from binding post J5 to binding post J7.

(8) Connect the loose ends of the eight wires to the binding posts as shown in figure 4-3.

4-5. Modification Work Orders.

The performance standards listed in the tests (para 4-6 through 4-15) assume that the modification work orders, if any, have been performed. A listing of current modification work orders will be found in DA Pam 310-4.

4-6. Aircraft Test Set Wiring Harness TS-2501/ ARM-92 Physical Tests and Inspection.

Inspect unit for bent, damaged, or broken components and surfaces.

4-7. Aid Box Test.

a. Test Equipment and Materials. Multimeter ME-26(*)/U is required for the following procedure.

b. Test Connections and Conditions. Connect the equipment as shown in A, figure 4-4. Refer to figure 1-2 for power connections.

c. Procedure.

Step	Control settings: Test equipment	Control settings: Equipment under test	Test procedure	Performance standard
1	ME-26(*)/U SELECTOR switch: + Range switch: 30V	TS-2500B/ARM-92 VOR/LOC-GLIDESLOPE: V/I BRG-OBS: OBS C-6873B/ARN-82 Megahertz and kilohertz selectors: 108.00 VOL control: maximum ccw Power switch: PWR	*a* Remove aid box cover by removing six screws. Connect the COMMON lead of ME-26(*)/U to the anode of CR1 in the aid box. Connect the dc lead of ME-26(*)/U to the cathode of CR1.	*a.* ME-26(*)/U should indicate 10 ±0.5 volts dc.
			b Inspect the chassis for the condition of the finish and panel lettering. *Note* Touchup painting is recommended instead of refinishing whenever practicable Screw heads, binding posts, and plated fastener parts will not be painted or polished with abrasives.	*b.* External surfaces intended to be painted will not show bare metal. Panel lettering will be legible.
			c Check the aid box for applicable modification work orders (para 4-5).	
2	ME-26(*)/U SELECTOR switch: OHMS Range switch: as required	C-6873B/ARN-82 Power switch: OFF	*a.* Disconnect connectors P2 and P3. Connect the COMMON lead of ME-26(*)/U to J2-A and the OHMS lead to J2-a.	*a.* ME-26(*)/U should indicate 22,900 ±2290 ohms.
			b. Connect the COMMON lead of ME-26(*)/U to J2-J and the OHMS lead to J2-X.	*b.* ME-26(*)/U should indicate 0 ohm.
(Cont)			*c.* Connect the COMMON lead of ME-26(*)/U to J2-J and the OHMS lead to J2-n.	*c.* ME-26(*)/U should indicate 0 ohm.

4-7. Aid Box Test - Continued

Step	Control settings		Test procedure	Performance standard
	Test equipment	Equipment under test		
2 (Cont			d. Connect the COMMON lead of ME-26(*)/U to J2-J and the OHMS lead to J2-Y.	d. Same as step c.
			e. Connect the COMMON lead of ME-26(*)/U to J2-J and the OHMS lead to J2-b.	e. ME-26(*)/U should indicate 0 ohm.
			f. Connect the COMMON lead of ME-26(*)/U to J2-J and the OHMS lead to J2-c.	f. ME-26(*)/U should indicate 1000 ±100 ohms.
			g. Connect the COMMON lead of ME-26(*)/U to J2-J and the OHMS lead to J2-B.	g. ME-26(*)/U should indicate 511 ±51 ohms.
			h. Connect the COMMON lead of ME-26(*)/U to J2-J and the OHMS lead to J2-P.	h. ME-26(*)/U should indicate 1000 ±100 ohms.
			i. Connect the COMMON lead of ME-26(*)/U to J2-J and the OHMS lead to J2-N.	i. ME-26(*)/U should indicate 0 ohm.
			j. Connect the COMMON lead of ME-26(*)/U to J2-J and the OHMS lead to J1-E.	j. ME-26(*)/U should indicate 0 ohm.
			k. Connect the COMMON lead of ME-26(*)/U to J2-A and the OHMS lead to J2-m.	k. ME-26(*)/U should indicate 36,500 ±3650 ohms.
			l. Connect the COMMON lead of ME-26(*)/U to J2-A and the OHMS lead to J2-Z.	l. ME-26(*)/U should indicate 13,300 ±1330 ohms.
			m. Connect the COMMON lead of ME-26(*)/U to J2-L and the OHMS lead to J1-G.	m. ME-26(*)/U should indicate 1500 ±150 ohms.
			n. Connect the COMMON lead of ME-26(*)/U to J1-D and the OHMS lead to J1-H.	n. ME-26(*)/U should indicate 0 ohm.
(Cont			o. Connect the COMMON lead of ME-26(*)/U to J1-C and the OHMS lead to J1-K.	o. ME-26(*)/U should indicate 0 ohm.

4-7. Aid Box Test - Continued

Step	Control settings: Test equipment	Control settings: Equipment under test	Test procedure	Performance standard
2 (Cont			p Connect the COMMON lead of ME-26(*)/U to J2-A and the OHMS lead to J2-t.	p ME-26(*)/U should indicate less than 160 ohms.
			q Connect the COMMON lead of ME-26(*)/U to J2-A and the OHMS lead to J2-k.	q ME-26(*)/U should indicate less than 160 ohms.
			r Connect the COMMON lead of ME-26(*)/U to J2-A and the OHMS lead to J2-p.	ME-26(*)/U should indicate less than 160 ohms.
			s Connect the COMMON lead of ME-26(*)/U to J2-A and the OHMS lead to J2-f.	ME-26(*)/U should indicate less than 160 ohms.
			t Connect the COMMON lead of ME-26(*)/U to J2-A and the OHMS lead to J2-W.	ME-26(*)/U should indicate less than 160 ohms.
			u Connect the COMMON lead of ME-26(*)/U to J2-A and the OHMS lead to J2-g.	u ME-26(*)/U should indicate less than 160 ohms.
			v Connect the COMMON lead of ME-26(*)/U to J2-A and the OHMS lead to J2-V.	ME-26(*)/U should indicate less than 160 ohms.
			w Connect the COMMON lead of ME-26(*)/U to J2-A and the OHMS lead to J2-h.	w ME-26(*)/U should indicate less than 160 ohms.
			x Connect the COMMON lead of ME-26(*)/U to J2-A and the OHMS lead to J2-U.	ME-26(*)/U should indicate less than 160 ohms.
			y Connect the COMMON lead of ME-26(*)/U to J2-A and the OHMS lead to J2-i.	ME-26(*)/U should indicate less than 160 ohms.
			z Connect the COMMON lead of ME-26(*)/U to J2-A and the OHMS lead to J2-T.	ME-26(*)/U should indicate less than 160 ohms.
(Cont)			aa Connect the COMMON lead of ME-26(*)/U to J2-A and the OHMS lead to J2-j.	aa ME-26(*)/U should indicate less than 160 ohms.

4-7. Aid Box Test - Continued

Step	Control settings: Test equipment	Control settings: Equipment under test	Test procedure	Performance standard
2 (Cont			ab. Connect the COMMON lead of ME-26(*)/U to J2-A and the OHMS lead to J2-S.	ab. ME-26(*)/U should indicate less than 160 ohms.
			ac. Connect the COMMON lead of ME-26(*)/U to J2-A and the OHMS lead to J2-X.	ac. ME-26(*)/U should indicate less than 160 ohms.
			ad. Connect the COMMON lead of ME-26(*)/U to J2-K and the OHMS lead to J2-X.	ad. ME-26(*)/U should indicate less than 160 ohms.
			ae. Connect the COMMON lead of ME-26(*)/U to J1-G and the OHMS lead to J1-E.	ae. ME-26(*)/U should indicate less than 160 ohms.
			af. Connect the COMMON lead of ME-26(*)/U to J2-R and the OHMS lead to J2-X.	af. ME-26(*)/U should indicate less than 160 ohms.
			ag. Replace cover.	

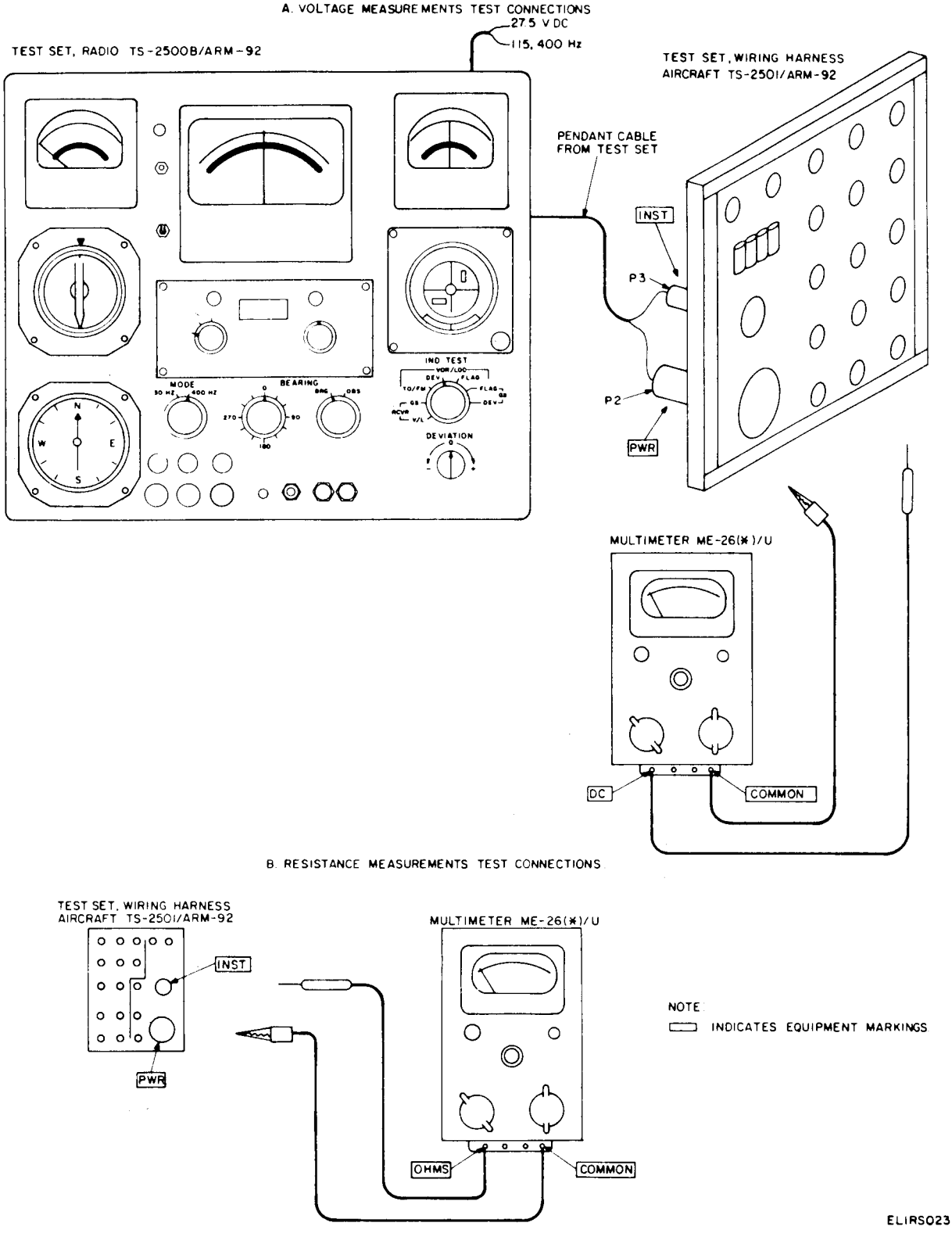

4-4. Aid box test.

4-8. Radio Set Control C-6873B/ARN-82 Physical Tests and Inspection.

a. Test Equipment and Materials. None required.

b. Test Connections and Conditions. Remove the control unit from the test set, and remove the rear cover from the control unit by removing two screws on either side of connector.

c. Procedure.

Step	Control settings		Test procedure	Performance standard
	Test equipment	Equipment under test		
1	NA	Controls may be set to any position.	*a.* Inspect all controls and mechanical assemblies for loose or missing screws, bolts, or nuts.	Screws, bolts, and nuts will be tight; none missing.
			b. Inspect dial lights and rear connector for looseness and damage.	No looseness or damage evident.
			c. Inspect cover and chassis for damage, missing parts, and condition of finish. Inspect condition of finish and lettering on front panel.	No damage or missing parts evident. External surfaces intended to be painted will not show bare metal. Panel lettering will be legible.
			Note Touchup painting is recommended instead of refinishing whenever practicable. Screwheads, binding posts, and plated fastener parts will not be painted or polished with abrasives	
2	NA	Controls may be set to any position.	*a.* Rotate the VOL control through its limits of travel.	Control will rotate freely without binding or excessive looseness.
			b. Rotate the power switch from OFF to PWR, then to TEST.	Operates freely without binding and rubbing against the panel. Switch should have positive detent action.
			c. Rotate the kilohertz selector through its 20 positions.	Operates freely without binding or excessive looseness. Switch should have positive detent action.
			d. Rotate the megahertz selector through its 19 positions.	Same as step *c* above.
3	NA	NA	Check the control unit for applicable modification work orders (para 4-5).	None.
4	NA	NA	Install cover on control unit and secure with two screws.	

4-9. Control Unit Test (V/L).

a. Test Equipment and Materials.

(1) Multimeter ME-26(*)/U.

(2) Output Meter TS-585/(*)/U.

(3) Telephone plug.

b. Test Connections and Conditions. Connect the equipment as shown in figure 4-5.

c. Procedure.

Step	Control settings: Test equipment	Control settings: Equipment under test	Test procedure	Performance standard
1	ME-26(*)/U SELECTOR switch: + Range switch: 30V TS-585(*)/U IMPEDANCE MULTIPLIER: X10 50 OHMS MULTIPLIER: 10	C-6873B/ARN-82 Power switch: OFF Megahertz and kilohertz selectors: 108.00 VOL: fully cw TS-2500B/ARM-92 IND TEST switch: RCVR V/L BRG-OBS: BRG BEARING: 0 FLAG LOAD: 5	*a.* Observe all lamps on test set and on aid box. *b.* Set power switch on control unit to PWR.	*a.* No lamps should light. *b.* The following lamps should light, and the following indications should be observed: (1) VOR/LOC DC lamp on test set. (2) VOR/LOC AC lamp on test set. (3) GS DC lamp on test set. (4) Control unit panel lamps. (5) 26 VAC PWR lamp on aid box. (6) LOC-PWR lamp on aid box. (7) GS-PWR lamp on aid box. (8) 1.0 FREQ SELECT (MHz) lamps A and D on aid box. (9) 0.1 FREQ SELECT (MHz) lamps B and E on aid box. (10) 0.01 FREQ SELECT (MHz) lamp B on aid box. (11) FLAG meter on test set should indicate 250 ±15 microamperes. (12) DEVIATION meter on test set should indicate 75 ±5 microamperes to the right of 0. (13) TO-FROM meter on test set should indicate 500 ±25 microamperes to the left of 0.

(Cont)

4-9. Control Unit Test (V/L) - Continued

Step	Control settings: Test equipment	Control settings: Equipment under test	Test procedure	Performance standard
				(14) TS-585(*)/U indicates 100 ±15 milliwatts.
				Note: In steps c through u below, GS PWR, LOC PWR and 26 VAC PWR lamps on aid box should remain lighted.
			c. Set megahertz and kilohertz selectors on control unit to 109.05.	c. 1.0 FREQ SELECT (MHz) lamps A and E should light. 0.1 FREQ SELECT (MHz) lamps B and E should light.
			d. Set megahertz and kilohertz selectors on control unit to 110.10.	d. 1.0 FREQ SELECT (MHz) lamps B and E should light. 0.1 FREQ SELECT (MHz) lamps A and B should light. 0.01 FREQ SELECT (MHz) lamp B should light. GS/LOC ON lamp should light.
			e. Set megahertz and kilohertz selectors on control unit to 111.15.	e. 1.0 FREQ SELECT (MHz) lamps A and B should light. 0.1 FREQ SELECT (MHz) lamps A and B should light. GS/LOC ON lamp should light.
			f. Set megahertz and kilohertz selectors on control unit to 112.20.	f. 1.0 FREQ SELECT (MHz) lamps A and C should light. 0.1 FREQ SELECT (MHz) lamps A and C should light. 0.01 FREQ SELECT (MHz) lamp B should light.
			g. Set megahertz and kilohertz selectors on control unit to 113.25.	g. 1.0 FREQ SELECT (MHz) lamps B and C should light. 0.1 FREQ SELECT (MHz) lamps A and C should light.
			h. Set megahertz and kilohertz selectors on control unit to 114.30.	h. 1.0 FREQ SELECT (MHz) lamps B and D should light. 0.1 FREQ SELECT (MHz) lamps B and C should light. 0.01 FREQ SELECT (MHz) lamp B should light.
			i. Set megahertz and kilohertz selectors on control unit to 115.35.	i. 1.0 FREQ SELECT (MHz) lamps C and D should light. 0.1 FREQ SELECT (MHz) lamps B and C should light.
			j. Set megahertz and kilohertz selectors on control unit to 116.40.	j. 1.0 FREQ SELECT (MHz) lamps C and E should light. 0.1 FREQ SELECT (MHz) lamps B and D should light. 0.01 FREQ SELECT (MHz) lamp B should light.
(Cont)				

Step	Control settings		Test procedure	Performance standard
	Test equipment	Equipment under test		
1 (Cont)			*k.* Set megahertz and kilohertz selectors on control unit to 117.45.	*k.* 1.0 FREQ SELECT (MHz) lamps D and E should light. 0.1 FREQ SELECT (MHz) lamps B and D should light.
			l. Set megahertz and kilohertz selectors on control unit to 118.50.	1.0 FREQ SELECT (MHz) lamps A and D should light. 0.1 FREQ SELECT (MHz) lamps C and D should light. 0.01 FREQ SELECT (MHz) lamp B should light. COMM lamp should light.
				Note: In steps *m* through *u* below, COMM lamp should remain lighted.
			m Set megahertz and kilohertz selectors on control unit to 119.55.	*m* 1.0 FREQ SELECT (MHz) lamps A and E should light. 0.1 FREQ SELECT (MHz) lamps C and D should light.
			n. Set megahertz and kilohertz selectors on control unit to 120.60.	*n.* 1.0 FREQ SELECT (MHz) lamps B and E should light. 0.1 FREQ SELECT (MHz) lamps C and E should light. 0.01 FREQ SELECT (MHz) lamp B should light.
			o. Set megahertz and kilohertz selectors on control unit to 121.65.	*o.* 1.0 FREQ SELECT (MHz) lamps A and B should light. 0.01 FREQ SELECT (MHz) lamps C and E should light.
			p Set megahertz and kilohertz selectors on control unit to 122.70.	*p.* 1.0 FREQ SELECT (MHz) lamps A and C should light. 0.1 FREQ SELECT (MHz) lamps D and E should light. 0.01 FREQ SELECT (MHz) lamp B should light.
			q Set megahertz and kilohertz selectors on control unit to 123.75.	*q.* 1.0 FREQ SELECT (MHz) lamps B and C should light. 0.1 FREQ (MHz) lamps D and E should light.
			r Set megahertz and kilohertz selectors on control unit to 124.80.	*r.* 1.0 FREQ SELECT (MHz) lamps B and D should light. 0.1 FREQ SELECT (MHz) lamps A and D should light. 0.01 FREQ SELECT (MHz) lamp B should light.
(Cont			*s* Set megahertz and kilohertz selectors on control unit to 125.85.	*s.* 1.0 FREQ SELECT (MHz) lamps C and D should light. 0.1 FREQ SELECT (MHz) lamps A and D should light.

Step	Control settings		Test procedure	Performance standard
	Test equipment	Equipment under test		
			t. Set megahertz and kilohertz selectors on control unit to 126.90.	*t.* 1.0 FREQ SELECT (MHz) lamps C and E should light. 0.1 FREQ SELECT (MHz) lamps A and E should light. 0.01 FREQ SELECT (MHz) lamp B should light.
			u. Set megahertz and kilohertz selectors on control unit to 126.95.	*u.* 1.0 FREQ SELECT (MHz) lamps C and E should light. 0.1 FREQ SELECT (MHz) lamps A and E should light.
			v. Disconnect leads of TS-585(*)/U from AUDIO terminals on test set. Plug telephone plug into PHONE jack on test set. Connect leads of TS-585(*)/U to telephone plug. *Note:* Leads of the TS-585(*)/U are disconnected from AUDIO terminals on the test set when headset is plugged into PHONE jack.	*v.* Not less than 25 milliwatts.
			w. Turn VOLUME control on control unit fully counterclockwise.	*w.* TS-585(*)/U should indicate 0 milliwatt.
			x. Set power switch on control unit to TEST.	TEST lamp on aid box should light, in addition to the lamps already lighted.

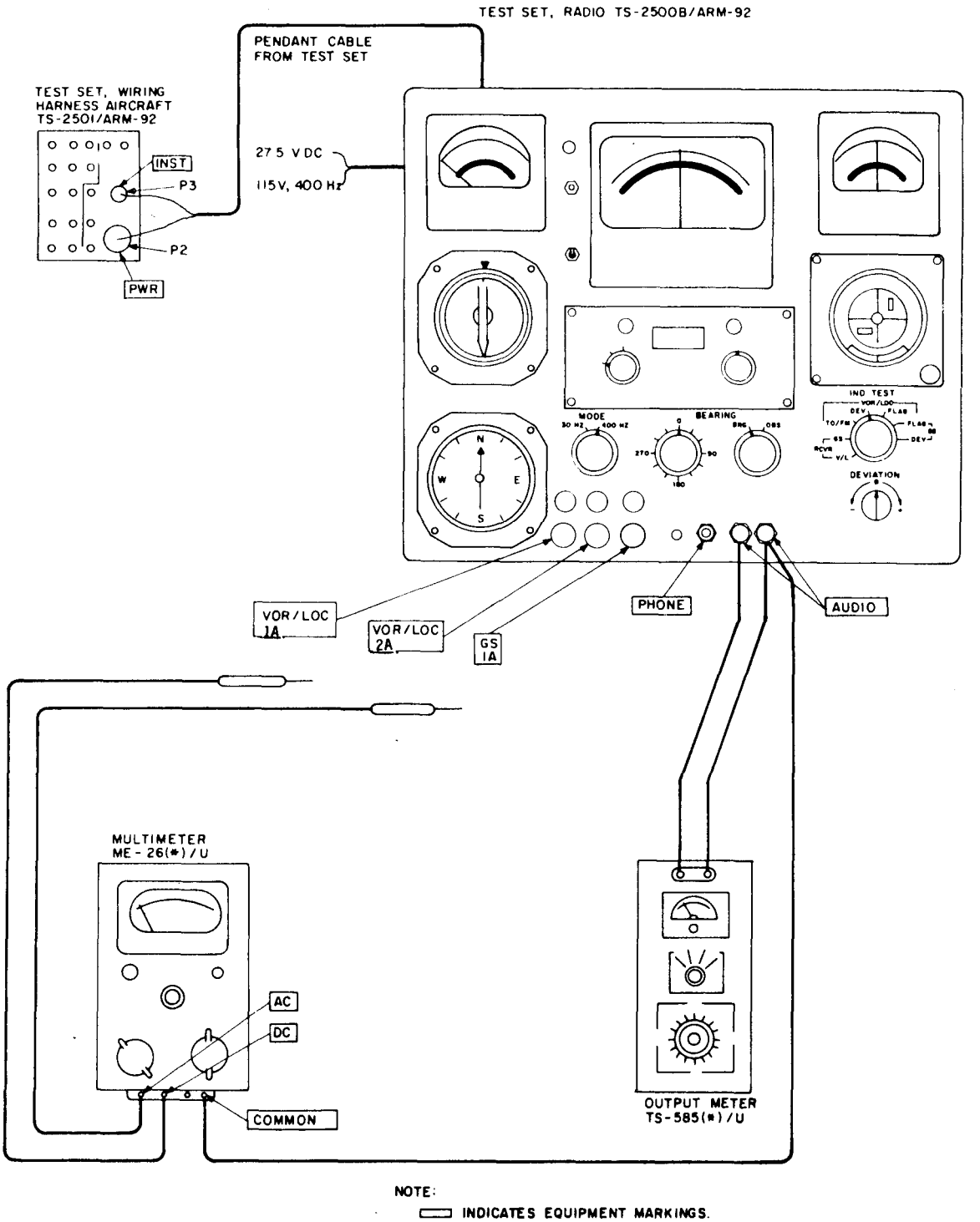

ELIRS024

Figure 4-5. Control unit test (V/L function).

4-10. Control Unit Test (G/S).

a. Test Equipment and Materials.

(1) Multimeter ME-26(*)/U.

(2) Output Meter TS-585/(*)/U.

(3) Telephone plug.

b. Test Connections and Conditions. Connect the equipment as shown in figure 4-6.

c. Procedure.

Step	Control settings: Test equipment	Control settings: Equipment under test	Test procedure	Performance standard
1	ME-26(*)/U SELECTOR switch: + Range switch: 30V TS-585(*)/U IMPEDANCE MULTIPLIER: X10 OHMS 50 MULTIPLIER: 10	C-6873B/ARN-82 Power switch: OFF Megahertz and kilohertz selectors: 108.00 VOL: fully clockwise TS-2500B/ARM-92 IND TEST switch: RCVR GS BRG-OBS: BRG BEARING: 0 AUDIO: MB FLAG LOAD : 5	*a.* Observe all lamps on test set and on aid box. *b.* Set power switch on control unit to PWR.	*a.* No lamps should be lit. *b.* The following lamps should light, and the following indications should be observed: (1) VOR/LOC DC lamp on test set. (2) VOR/LOC AC lamp on test set. (3) GS DC lamp on test set. (4) Control unit panel lamps. (5) 26 VAC PWR lamp on aid box. (6) LOC-PWR lamp on aid box. (7) GS-PWR lamp on aid box. (8) 1.0 FREQ SELECT (MHz) lamps A and D on aid box. (9) 0.1 FREQ SELECT (MHz) lamps B and E on aid box. (10) FLAG meter on test set should indicate 250 ±15 microamperes. (11) DEVIATION meter on test set should indicate 75 ±5 microamperes to the right of 0. (12) TS-585(*)/U indicates 100 ±15 milliwatts. *Note:* In steps c through u below, LOC PWR, GS PWR, and 26 VAC PWR lamps on aid box should remain lighted.
(Cont)				

4-10. Control Unit Test (G/S) - Continued

Step	Co ol settings: Test Equipment	Co ol settings: Equipment under test	Test procedure	Performance standard
1 (Cont)			c. Set megahertz and kilohertz selectors on control unit to 109.05.	1.0 FREQ SELECT (MHz) lamps A and E should light. 0.1 FREQ SELECT (MHz) lamps B and E should light. 0.01 FREQ SELECT (MHz) lamp B should light.
			d. Set megahertz and kilohertz selectors on control unit to 110.10.	d. 1.0 FREQ SELECT (MHz) lamps B and E should light. 0.1 FREQ SELECT (MHz) lamps A and B should light. GS/LOC ON lamp should light. Test lamp should light.
			e. Set megahertz and kilohertz selectors on control unit to 111.15.	e. 1.0 FREQ SELECT (MHz) lamps A and B should light. 0.1 FREQ SELECT (MHz) lamps A and B should light. 0.01 FREQ SELECT (MHz) lamp B should light. GS/LOC ON lamp should light. Test lamp should light.
			f. Set megahertz and kilohertz selectors on control unit to 112.20.	f. 1.0 FREQ SELECT (MHz) lamps A and C should light. 0.1 FREQ SELECT (MHz) lamps A and C should light.
			g. Set megahertz and kilohertz selectors on control unit to 113.25.	g. 1.0 FREQ SELECT (MHz) lamps B and C should light. 0.1 FREQ SELECT (MHz) lamps A and C should light. 0.01 FREQ SELECT (MHz) lamp B should light.
			h. Set megahertz and kilohertz selectors on control unit to 114.30.	h. 1.0 FREQ SELECT (MHz) lamps B and D should light. 0.1 FREQ SELECT (MHz) lamps B and C should light.
			i. Set megahertz and kilohertz selectors on control unit to 115.35.	i. 1.0 FREQ SELECT (MHz) lamps C and D should light. 0.1 FREQ SELECT (MHz) lamps B and C should light. 0.01 FREQ SELECT (MHz) lamp B should light.
			j. Set megahertz and kilohertz selectors on control unit to 116.40.	j. 1.0 FREQ SELECT (MHz) lamps C and E should light. 0.1 FREQ SELECT (MHz) lamps B and D should light.
			k. Set megahertz and kilohertz selectors on control unit to 117.45.	k. 1.0 FREQ SELECT (MHz) lamps D and E should light. 0.1 FREQ SELECT (MHz) lamps B and D should light. 0.01 FREQ SELECT (MHz) lamp B should light.
				NOTE In all steps below, DME DSBL light on test set should light.
			l. Set megahertz and kilohertz selectors on control unit to 118.50.	l. 1.0 FREQ SELECT (MHz) lamps A and D should light. 0.1 FREQ SELECT (MHz) lamps C and D should light. COMM lamp should light.

Step	Control settings: Test equipment	Control settings: Equipment under test	Test procedure	Performance standard
)				Note. In steps m through u below, COMM annunciator should remain lighted
			m. Set megahertz and kilohertz selectors on control unit to 119.55.	m. 1.0 FREQ SELECT (MHz) lamps A and E should light. 0.1 FREQ SELECT (MHz) lamps C and D should light. 0.01 FREQ SELECT (MHz) lamp B should light.
			n. Set megahertz and kilohertz selectors on control unit to 120.60.	n. 1.0 FREQ SELECT (MHz) lamps B and E should light. 0.1 FREQ SELECT (MHz) lamps C and E should light.
			o. Set megahertz and kilohertz selectors on control unit to 121.65.	o. 1.0 FREQ SELECT (MHz) lamps A and B should light. 0.1 FREQ SELECT (MHz) lamps C and E should light. 0.01 FREQ SELECT (MHz) lamp B should light.
			p. Set megahertz and kilohertz selectors on control unit to 122.70.	p. 1.0 FREQ SELECT (MHz) lamps A and C should light. 0.1 FREQ SELECT (MHz) lamps D and E should light.
			q. Set megahertz and kilohertz selectors on control unit to 123.75.	q. 1.0 FREQ SELECT (MHz) lamps B and C should light. 0.1 FREQ (MHz) lamps D and E should light. 0.01 FREQ SELECT (MHz) lamp B should light.
			r. Set megahertz and kilohertz selectors on control unit to 124.80.	r. 1.0 FREQ SELECT (MHz) lamps B and D should light. 0.1 FREQ SELECT (MHz) lamps A and D should light.
			s. Set megahertz and kilohertz selectors on control unit to 125.85.	s. 1.0 FREQ SELECT (MHz) lamps C and D should light. 0.1 FREQ SELECT (MHz) lamps A and D should light. 0.01 FREQ SELECT (MHz) lamp B should light.
			t. Set megahertz and kilohertz selectors on control unit to 126.90.	t. 1.0 FREQ SELECT (MHz) lamps C and E should light. 0.1 FREQ SELECT (MHz) lamps A and E should light.
(Cont			u. Set megahertz and kilohertz selectors on control unit to 126.95.	u. 1.0 FREQ SELECT (MHz) lamps C and E should light. 0.1 FREQ SELECT (MHz) lamps A and E should light. 0.01 FREQ SELECT (MHz) lamp B should light.

Step	Control settings		Test procedure	Performance standard
	Test equipment	Equipment under test		
1 (Cont)			*v.* Disconnect leads of TS-585(*)/U from AUDIO terminals on test set. Plug telephone plug into PHONE jack on test set. Connect leads of TS-585(*)/U to telephone plug.	*v.* TS-585(*)/U should indicate 25 milliwatts minimum.
			w. Turn VOLUME control on control unit fully counterclockwise.	*w.* TS-585(*)/U should indicate 0 milliwatt.

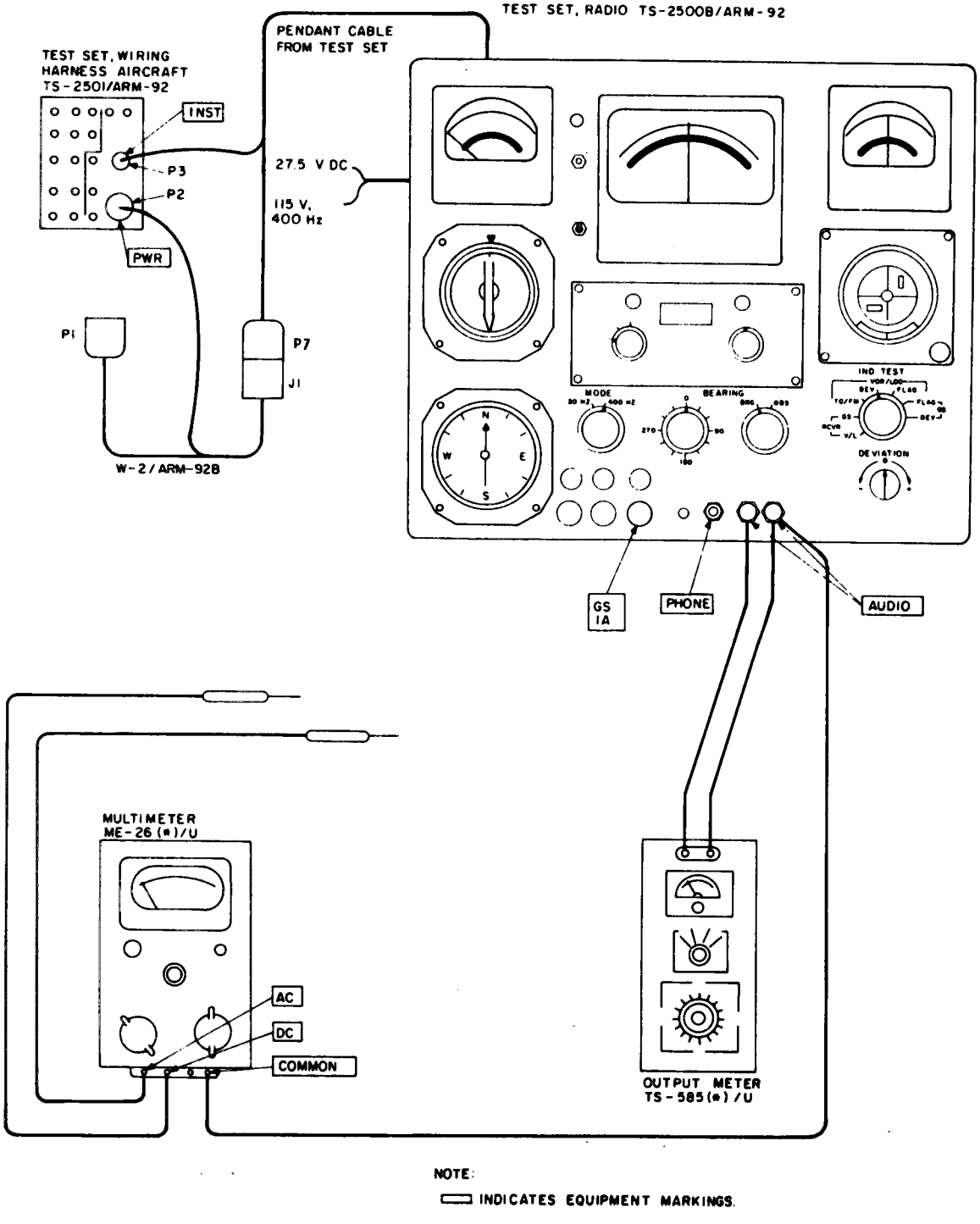

Figure 4-6. Control unit test (G/S function).

4-11. Course Indicator ID-1347C/ARN-82 Physical Tests and Inspection.

a. Equipment and Materials. Not required.

b. Test Connections and Conditions. Remove the OBS indicator from the test set. Disconnect P6 from the OBS indicator.

c. Procedure.

Step	Control settings		Test procedure	Performance standard
	Test equipment	Equipment under test		
1	NA	OBS indicator may be set to any position.	*a.* Inspect connector for bent pins and cracked insulation.	*a.* No bent pins or cracked insulation evident.
			b. Inspect meter glass for cracks or scratches.	*b.* No cracks or scratches evident.
			c. Inspect meter housing for condition of finish. Inspect condition of lettering on front knob.	*c.* Surfaces intended to be painted will not show bare metal. Lettering will be legible.
			d. Rotate OBS indicator knob.	*d.* Knob operates freely without binding or excessive looseness.
2	NA	NA	Check OBS indicator for applicable modification work orders (para 4-5).	

4-12. OBS Indicator and Test Set, Precision Bearing Test.

a. Test Equipment and Materials.

(1) Modulator MD-83A/ARN.

(2) Meter Voltmeter ME-30(*)/U.

(3) Resolver Test Set AN/ASM-101.

(4) Course Indicator Test Set AN/ASM-110.

(5) Oscilloscope AN/USM-281A.

(6) Fabricated cables.

b. Test Connections and Conditions. Remove all power from the test set. In steps 1 and 2, connect the equipment as shown in figure 4-7. In step 3, connect indicator test set jack J2 to test set plug P2 using cable fabricated in paragraph 4-4 (fig. 4-2). In step 4, apply power to test set and connect cable fabricated in paragraph 4-4 (fig. 4-3) to test set pendant cable plugs P2 and P3.

c. Procedure.

4-12. OBS Indicator and Test Set, Precision Bearing Test - Continued

Step	Control settings: Test equipment	Control settings: Equipment under test	Test procedure	Performance standard
(Cont)	MD-8 3A/ARN POWER: ON 1000: OFF TONE LO-CALIZER SELECTOR: SPECIFIC SIGNAL SPECIFIC SIGNAL SELECTOR: 30 VAR MASTER ATTENUA-TOR: midrange AN/ASM-101 Function switch: SET ORZ ME-30(*)/U Range switch: 10V Power: ON AN/USM-281A POWER: ON Vertical selector: CHANNEL A Vertical AC-DC selector: AC calibrated SENSITIVITY: 5 VERNIER SENSITIVITY: maximum cw POLARITY: +UP VERTICAL POSITION: midrange	C-6873 B/ARN-82 Power switch: OFI TS-2500B/ARM-92 BRG-OBS: OBS BEARING: 300 MODE: 30 HZ	Adjust INPUT LEVEL control on AN/ASM-101 for a 4.25-volt indication on ME-30(*)/U. Disconnect ME-30(*)/U INPUT lead from VOLTMETER connector on AN/ASM-101, and connect it to OUTPUT connector on AN/ASM-101. Rotate knob on OBS indicator and AMP BAL control on AN/ASM-101 until a minimum null is obtained on AN/USM-281A. *Note For easier observation of the minimum null, increase the AN/USM-281A vertical gain as the null is approached.*	**OBS indicator should be set to approximately 300 degrees with a minimum null indicated on AN/USM-281A.** *NOTE:* **This null will be lower than the null obtained at approx. 120 degrees.**

4-12. OBS Indicator and Test Set, Precision Bearing Test - Continued

Step	Control settings		Test procedure	Performance standard
	Test equipment	Equipment under test		
1 (Cont)	Horizontal AC-DC selector: AC SWEEP TIME: 20 m/cm VERNIER SWEEP TIME: maximum cw INTENSITY MODULATION NORMAL SWEEP OCCURRENCE: NORMAL HORIZONTAL DISPLAY: INTERNAL SWEEP X1 SWEEP MODE: FREE RUN TRIGGER SOURCE: INT TRIGGER LEVEL: midrange TRIGGER SLOPE: midrange HORIZONTAL POSITION: midrange			
2	No change from step 1.	No change from step 1.	Set BRG-OBS switch on test set to BRG.	Indications on AN/USM-281A should not change.

4-12. OBS Indicator and Test Set, Precision Bearing Test - Continued

Step	Control settings: Test equipment	Control settings: Equipment under test	Test procedure	Performance standard
3	N/ASM-110 POWER: ON SYNCHRO SELECTOR: EZ	C-6873B/ARN-82 Power switch: OFF TS-2500B/ARM-92 BRG-OBS: OBS BEARING: 300 MODE: 400 HZ	Note: Use Course Indicator ID-1317C/ARN-82.	
			a. Adjust course index card on course indicator around 30 degrees for zero reading on indicator test set SYNCHRO METER.	*a.* Course indicator course index card reads approximately 30 degrees.
			b. Rotate course indicator course index card clockwise.	*b.* **Indicator test SYNCHRO METER deflects to the right.**
			c. Set indicator test set SYNCHRO SELECTOR to RW2. Adjust course indicator course index card around 300 degrees for zero reading on indicator test set SYNCHRO METER.	*c.* Course indicator course index card reads approximately 300 degrees.
			d. Rotate course indicator course index card counterclockwise.	*d.* Indicator test set SYNCHRO METER deflects to the left.
	A	C-6 873 B/ARN-82 Power switch: ON TS-2500B/ARM-92 BRG-OBS: BRG BEARING: 300 MODE: 400 HZ	*a.* Measure ac voltage from J1 to J2 on fabricated cable. This voltage is V1 max. Set test set BEARING switch to 30. Measure ac voltage from J3 to J4 on fabricated cable. This voltage is V2 max.	
			b. Measure the ac voltages from J1 to J2 and from J3 to J4 for each setting of the test set BEARING switch.	Brg — J1 to J2 — J3 to J4 300 — V1 max — 0 330 — 0.86 (V1 max) — 0.5 (V2 max) 0 — 0.5 (V1 max) — 0.86 (V2 max) 30 — 0 — V2 max 60 — 0.5 (V1 max) — 0.86 (V2 max) 90 — 0.86 (V1 max) — 0.5 (V2 max) 120 — V1 max — 0 150 — 0.86 (V1 max) — 0.5 (V2 max) 180 — 0.5 (V1 max) — 0.86 (V2 max) 210 — 0 — V2 max 240 — 0.5 (V1 max) — 0.86 (V2 max) 270 — 0.86 (V1 max) — 0.5 (V2 max) **(10% tolerance)**

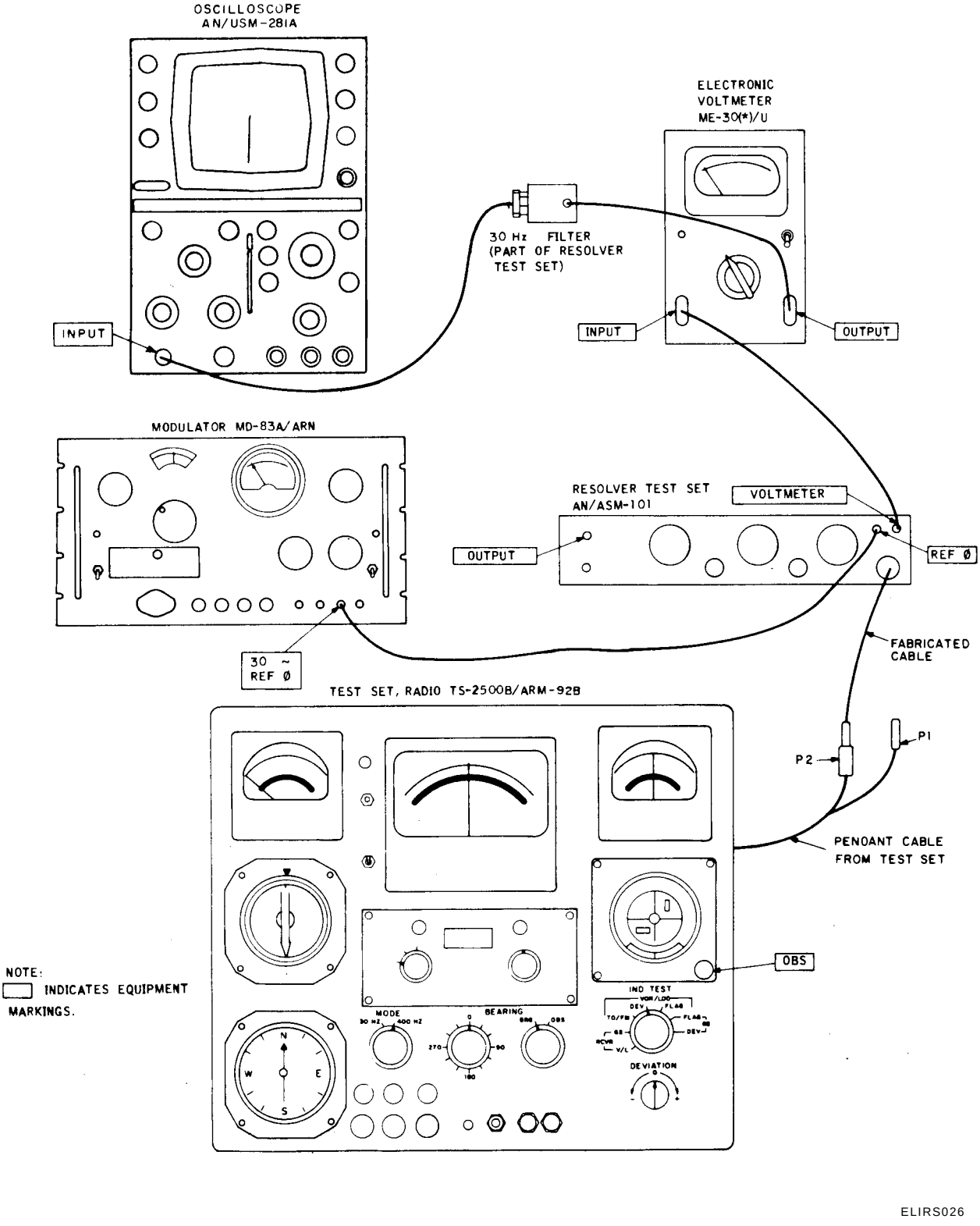

Figure 4-7. OBS indicator and test set precision beaing test.

4-13. Radio Test Set TS-2500B/ARM-92 Physical Tests and Inspection.

a. Test Equipment and Materials. None required.

b. Test Connections and Conditions. Remove the test set front panel.

c. Procedure.

Step	Control settings: Test equipment	Control settings: Equipment under test	Test procedure	Performance standard
1	NA	Controls may be set in any position.	*a.* Inspect all controls and switches for loose or missing screws, bolts, or nuts.	*a.* Screws, bolts, and nuts will be tight; none missing.
			b. Inspect insulation of wiring for cuts or pinches.	*b.* No cuts or pinches evident.
			c. Inspect soldered connections for cold-soldered connections.	*c.* No soldered connections evident.
			d. Inspect terminal board for cracks.	*d.* No cracks evident.
			e. Inspect all connectors for pins and cracked insulation.	*e.* No bent pins or cracked insulation evident.
			f. Inspect case and chassis for damage, missing parts, and condition of finish. Inspect condition of lettering on front panel.	*f.* No damage or missing parts evident. External surfaces intended to be painted will not show bare metal. Panel lettering will be legible.
2	NA	Controls may be set in any position.	*a.* Set IND TEST switch to RCVR GS and RCVR V/L.	*a.* Switch operates freely without binding or excessive looseness. Switch should have positive detent action.
			b. Set BRG-OBS switch to BRG and to OBS.	*b.* Same as step *a* above.
			c. Set BEARING switch to each of its 12 positions.	Same as step *a* above.
			d. Rotate compass simulator control on the COMPASS SIMULATOR.	*d.* Control operates freely without binding and rubbing against the panel. Operates with no excessive looseness.
			e. On Radio Test Set TS-2500B/ARM-92, set MODE switch to 30 HZ and 400 HZ positions.	Same as above.
3	NA	NA	Check test set for applicable modification work orders (para 4-5).	None.

4-14. Compass Simulator and Indicator Test Set, RMI Indicator ID-250A/ARN Test.

a. Test Equipment and Materials. None required.

b. Test Connections and Conditions. Connect the equipment as shown in figure 4-8.

c. Procedure.

Step	Control settings: Test equipment	Control settings: Equipment under test	Test procedure	Performance standard
1	NA	TS-2500B/ARM-92 IND TEST switch: RCVR V/L C-6873B/ARN-82 Power switch: OFF Megahertz and kilohertz selectors: 108.00 FLAG LOAD: 5	*a.* Set power switch on control unit to PWR.	*a.* The following lamps should light, and the following indications should be observed: (1) VOR/LOC DC, VOR/LOC AC, and GS DC lamps on test set should light. (2) 26 VAC PWR, LOC PWR, and GS-PWR lamps on aid box should light. (3) 1.0 FREQ SELECT (MHz) lamps A and D on aid box should light. (4) 0.1 FREQ SELECT (MHz) lamps B and E on aid box should light. (5) 0.01 FREQ SELECT (MHz) lamp B on aid box should light. (6) FLAG meter on test set should indicate 250 ±15 microamperes. (7) DEVIATION meter on test set should indicate 75 ±5 microamperes to the right of 0. (8) TO-FROM meter on test set should indicate 500 ±25 microamperes to the left of 0.
			b. Rotate COMPASS SIMULATOR with compass simulator control. Set COMPASS SIMULATOR needle to N (0 degree).	*b.* RMI card should follow COMPASS SIMULATOR needle within 2 degrees. *c.* RMI needle number 1 should indicate 180 ±1 degrees. RMI card should indicate 0 ± 1 degree.

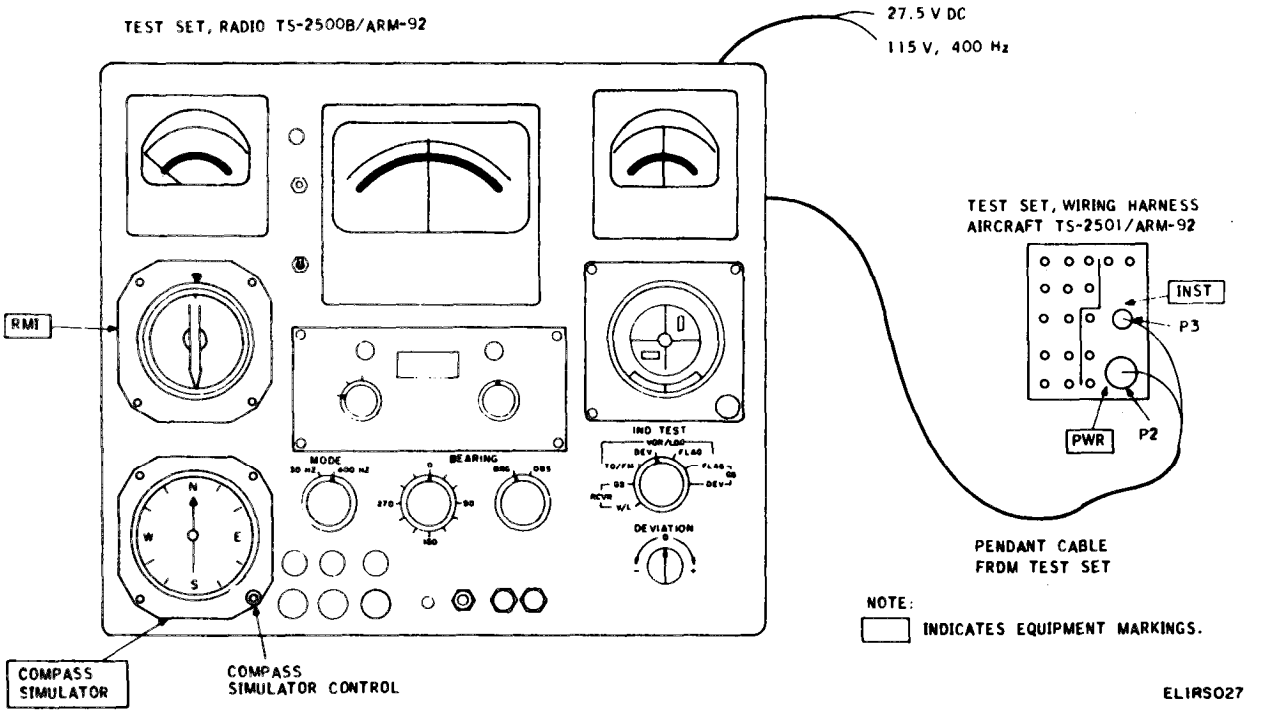

Figure 4-8. Compass simulator test set and RMI Indicator ID-250A/ARN test.

4-15. Meter Movement Accuracy Test.

a. Test Equipment and Materials. Meter Test Set TS-682A/GSM-1 is required for the following procedure.

b. Test Connections and Conditions. Remove all power from the test set. Set the AC LINE and BATTERY switches on the TS-682A/GSM-1 to OFF. Connect the equipment as shown in figure 4-9 with the COMMON binding post of the TS-682A/GSM-1 connected to P2-b, and the 500 UA current jack connected to P2-a. Rotate the DIRECT CURRENT COARSE control and the DIRECT CURRENT FINE control to their fully counterclockwise positions. Set the AC LINE switch to ON, and allow a 1-minute warmup period.

c. Procedure.

	Control settings		Test procedure	Performance standard
	Test equipment	Equipment under test		
(Cont)	TS-682A/ GSM-1: Set BATTERY switch to ON. Adjust meter zero-adjusting knobs until AC	C-6873B/ARN-82 Power switch: OFF TS-2500B/ARM-92 IND TEST: RCVR V/L FLAG LOAD : 4	Rotate the DIRECT CURRENT COARSE control cw until the DC MICROAMPERE meter indicates 500 microamperes. Press and hold the BUZZER switch while adjusting the DIRECT CURRENT FINE	FLAG meter on test set should indicate 500 ±10 microamperes.

4-15. Meter Movement Accuracy Test - Continued

Step	Control settings		Test procedure	Performance standard
	Test equipment	Equipment under test		
1 (Cont)	MILLIAMPERES, DC MICROAMPERES, and DC MILLIVOLTS meters all indicate 0. Set the left-hand selector switch to ALL OTHER AC & DC SCALES. Set the center selector switch to DC MA & UA. Set the right-hand selector switch to AC & DC MA & UA.		control for a 500-microampere indication on the DC MICROAMPERE meter. Release the BUZZER switch.	
2	No change from step 1.	No change from step 1.	Rotate the DIRECT CURRENT COARSE control and the DIRECT CURRENT FINE control fully ccw. Connect the COMMON binding post of TS-682A/GS M-1 to P2-Z. Disconnect the cable from the 500 UA current jack and connect the 1-milliampere current jack to P2-Y. Rotate the CIRECT CURRENT COARSE control cw until the DC MICROAMPERE meter indicates 1 milliampere. Press and hold the BUZZER switch while adjusting the DIRECT CURRENT FINE control for a 1-milliampere indication on the DC MICROAMPERE meter. Release the BUZZER switch.	TO-FROM meter on test set should indicate 500 ±10 microamperes on the left side of 0.
3 (Cont)	No change from step 1.		Rotate the DIRECT CURRENT COARSE control and the DIRECT CURRENT FINE control fully ccw. Connect the COMMON binding post of TS-682A/GSM-1 to P2-m. Disconnect the cable from the 1-milliampere current jack and plug it into the 200-μA current jack. Connect the	DEVIATION meter on test set should indicate 150 ± 3 microamperes on the left side of 0.

4-15. Meter Movement Accuracy Test - Continued

Step	Control settings		Test procedure	Performance standard
	Test equipment	Equipment under test		
3 (Cont)			other end of this cable t P2-n. Rotate the DIRE CURRENT COARSE con trol cw until the D C MICROAMPERE meter indicates 150 microa m-peres. Press and hold the BUZZER switch whi adjusting the DIRECT CURRENT FINE contro for a 150-microampere indication on the DC MICROAMPERE meter. Release the BUZZER switch.	
4	No change from step 1.	No change from step 1.	Rotate the DIRECT CUI R ENT COARSE control the D IR ECTCURRENT FINE control fully ccw. Connect the COMMON binding post of TS-682A GSM-1 to P2-n, and the 200 UA current jack to P2-m. Rotate the DIRECT CURRENT COARSE control cw unt the DC MICROAMPERE meter indicates 150 microamperes. Press hold the BUZZER switc while adjusting the DIRECT CURRENT FIN control for a 150-microampere indication on the DC MICROAMPE meter. Release the BUZZER switch.	DEVIATION meter on test set should indicate ±3 microamperes on the right side of 0.

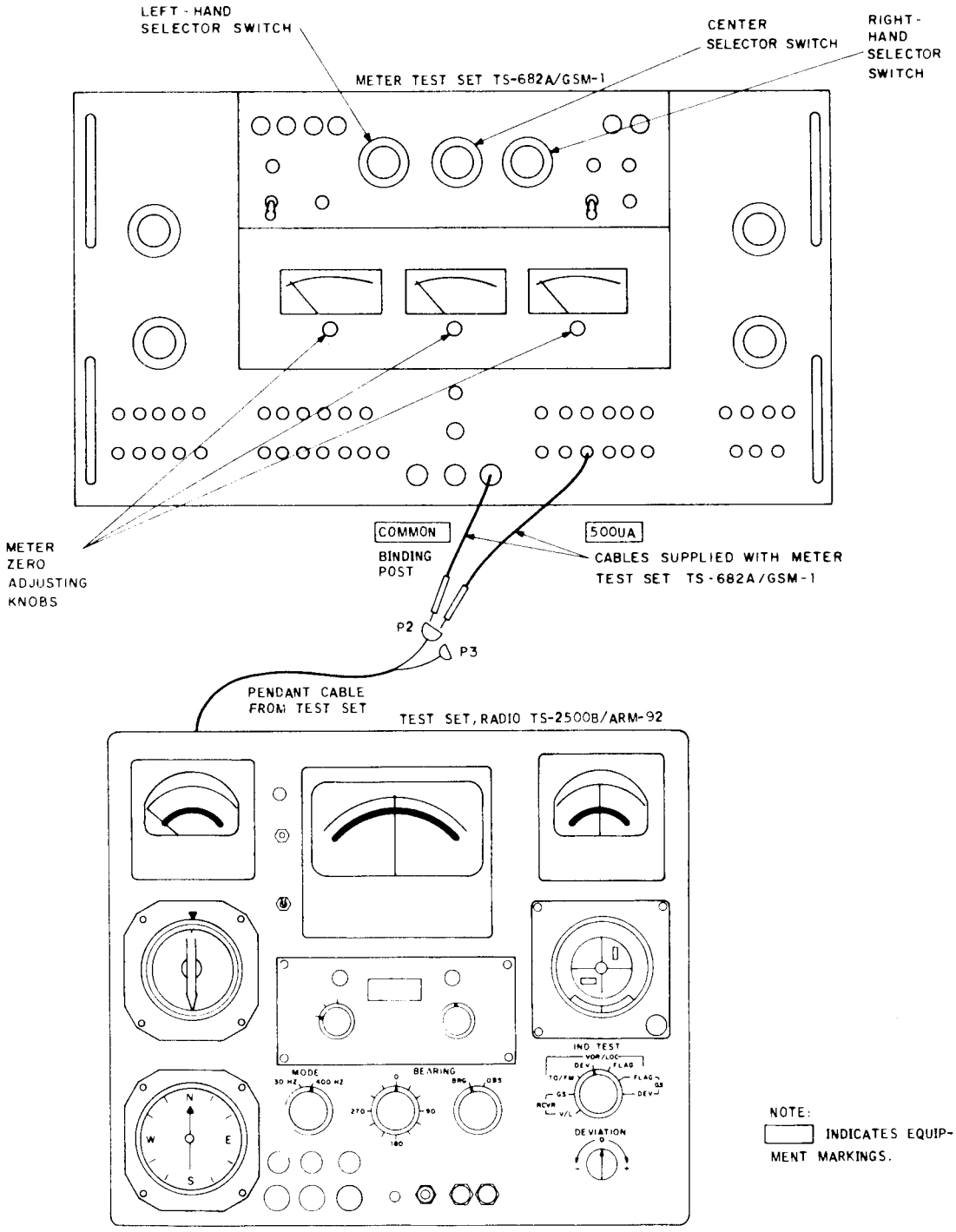

Figure 4-9. Meter movement accuracy test.

COLOR CODE MARKING FOR MILITARY STANDARD RESISTORS

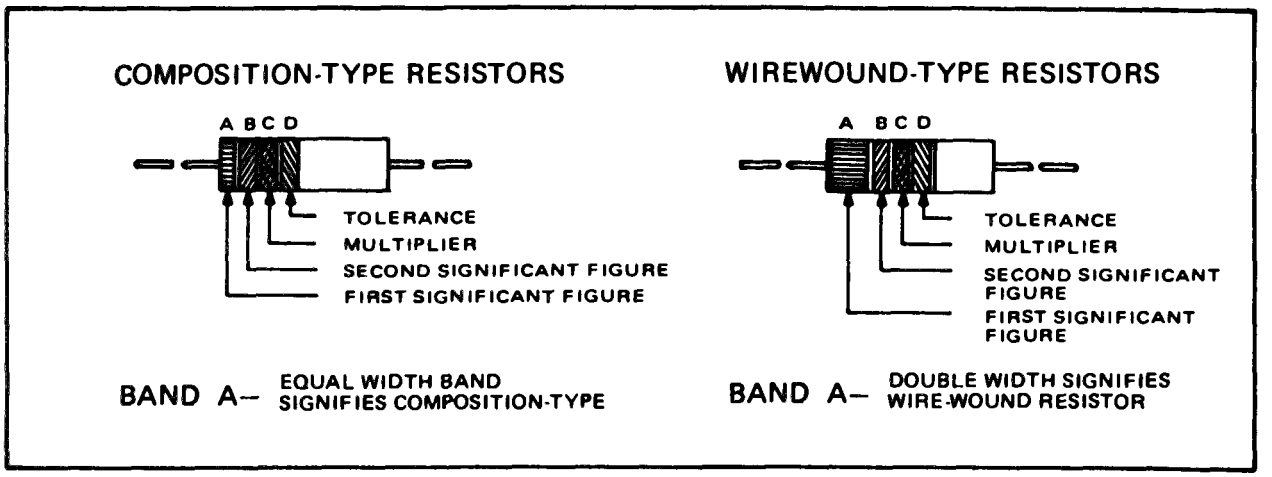

BAND A		BAND B		BAND C		BAND D*	
COLOR	FIRST SIGNIFICANT FIGURE	COLOR	SECOND SIGNIFICANT FIGURE	COLOR	MULTIPLIER	COLOR	RESISTANCE TOLERANCE (PERCENT)
BLACK	0	BLACK	0	BLACK	1		
BROWN	1	BROWN	1	BROWN	10		
RED	2	RED	2	RED	100		
ORANGE	3	ORANGE	3	ORANGE	1,000		
YELLOW	4	YELLOW	4	YELLOW	10,000	SILVER	± 10
GREEN	5	GREEN	5	GREEN	100,000	GOLD	± 5
BLUE	6	BLUE	6	BLUE	1,000,000		
PURPLE (VIOLET)	7	PURPLE (VIOLET)	7				
GRAY	8	GRAY	8	SILVER	0.01		
WHITE	9	WHITE	9	GOLD	0.1		

EXAMPLES OF COLOR CODING

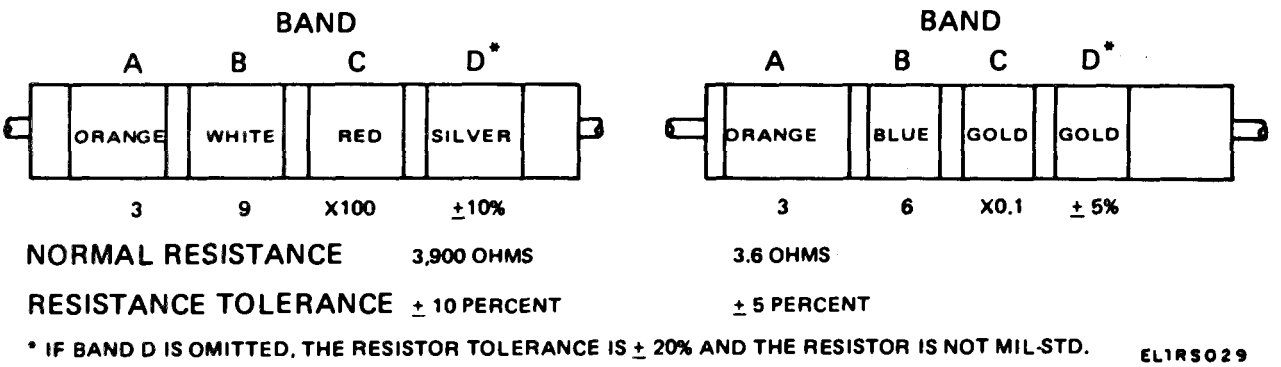

* IF BAND D IS OMITTED, THE RESISTOR TOLERANCE IS ± 20% AND THE RESISTOR IS NOT MIL-STD. EL1RS029

Figure 4-10. Color code marking for MIL-STD resistors.

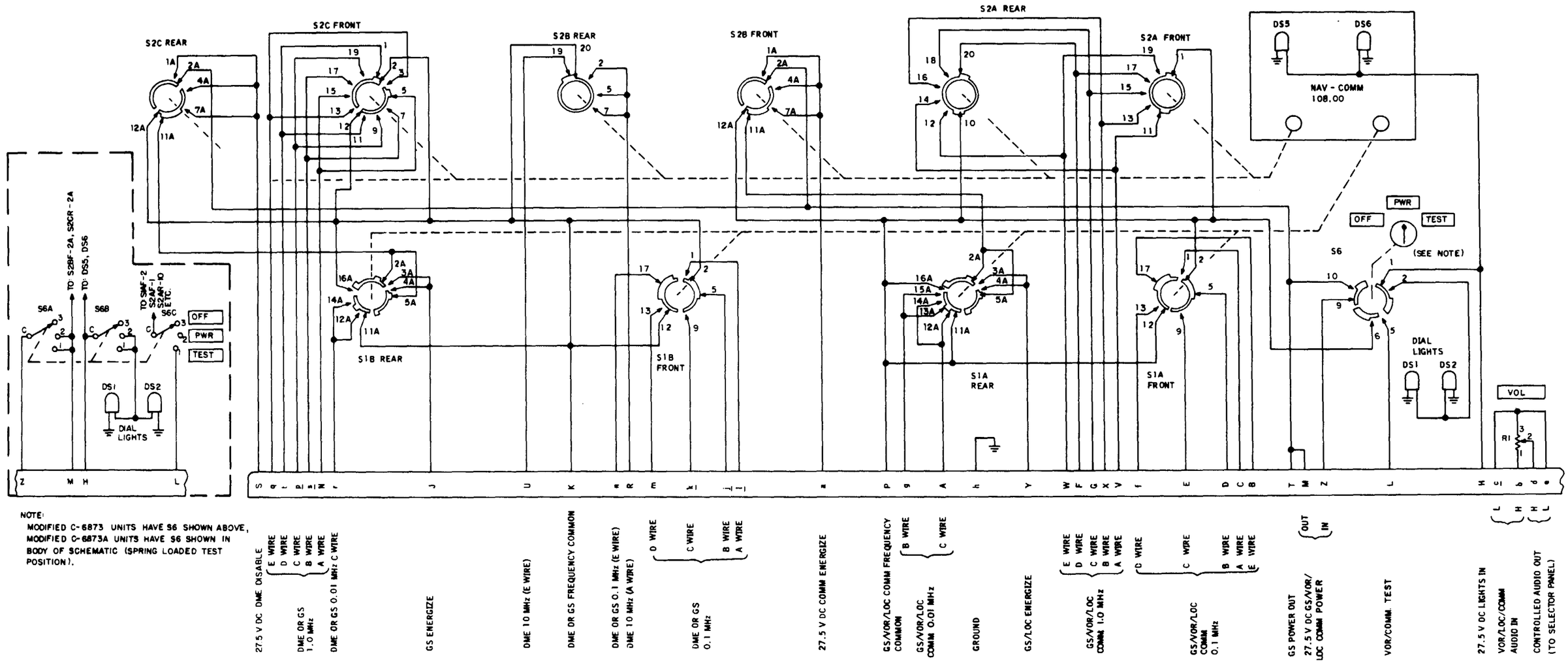

Figure 4-11. Radio Set Control C-6873B/ARN-82, schematic diagram.

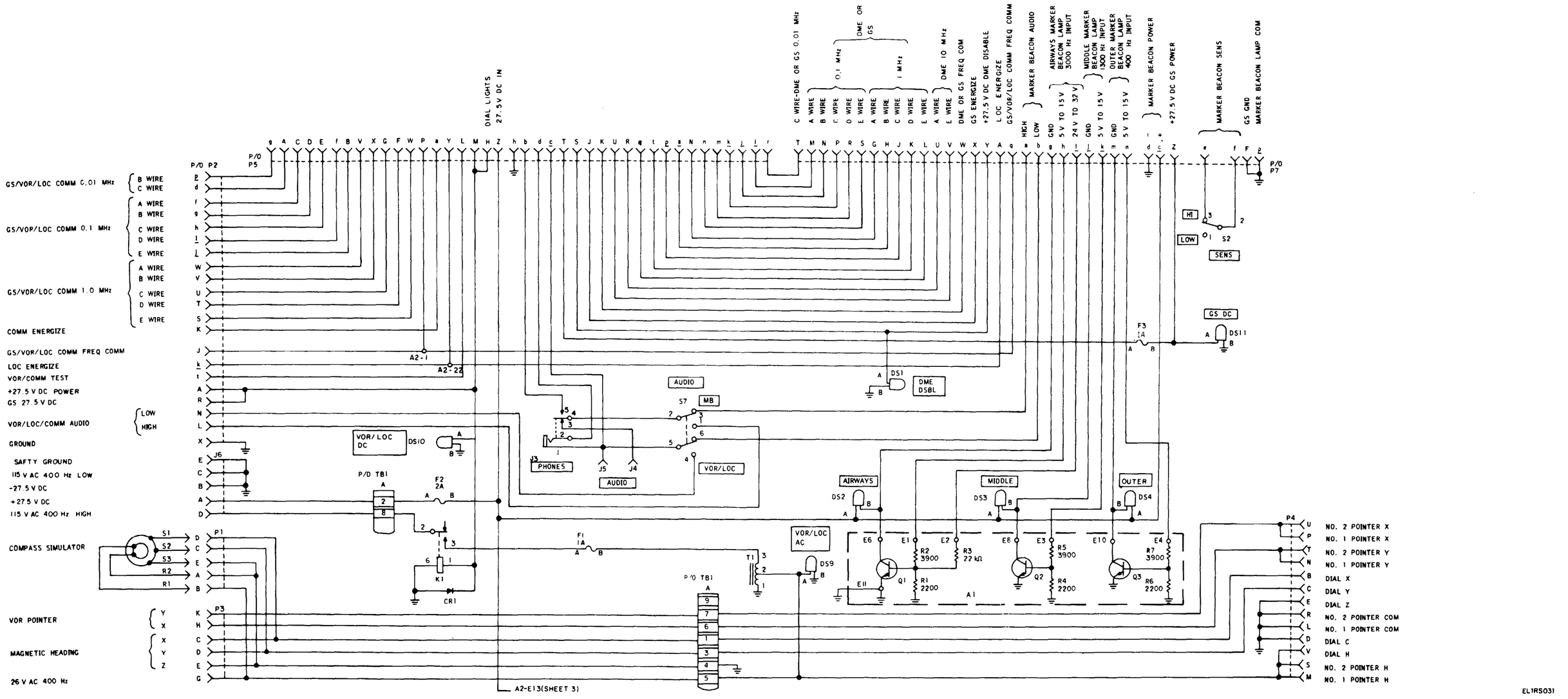

Figure 4-12. Radio Test Set TS-2500B/ARM-92, schematic diagram (sheet 1 of 3).

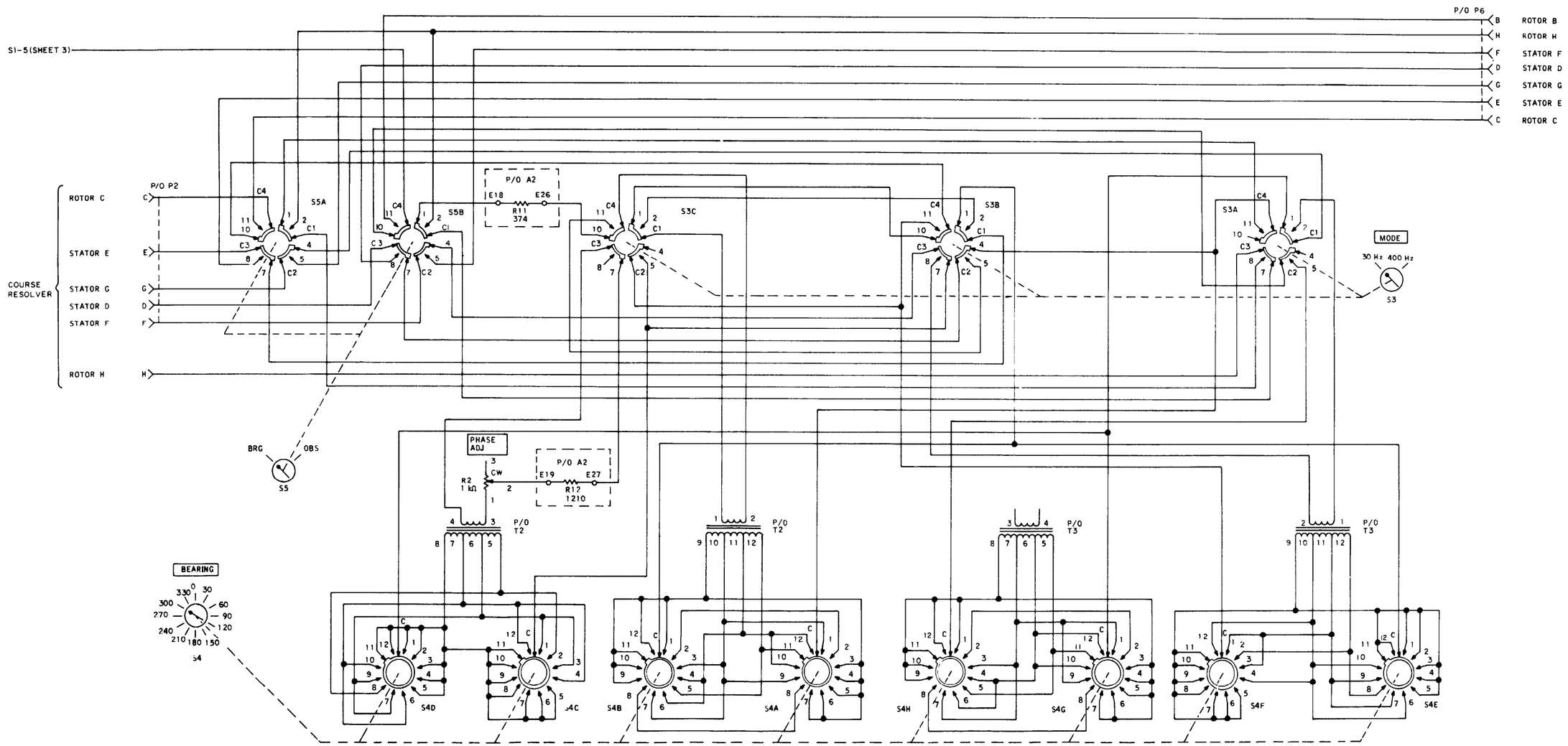

Figure 4-12. Radio Test SetTS-2500B/ARM-92, schematic diagram (sheet 2 of 3).

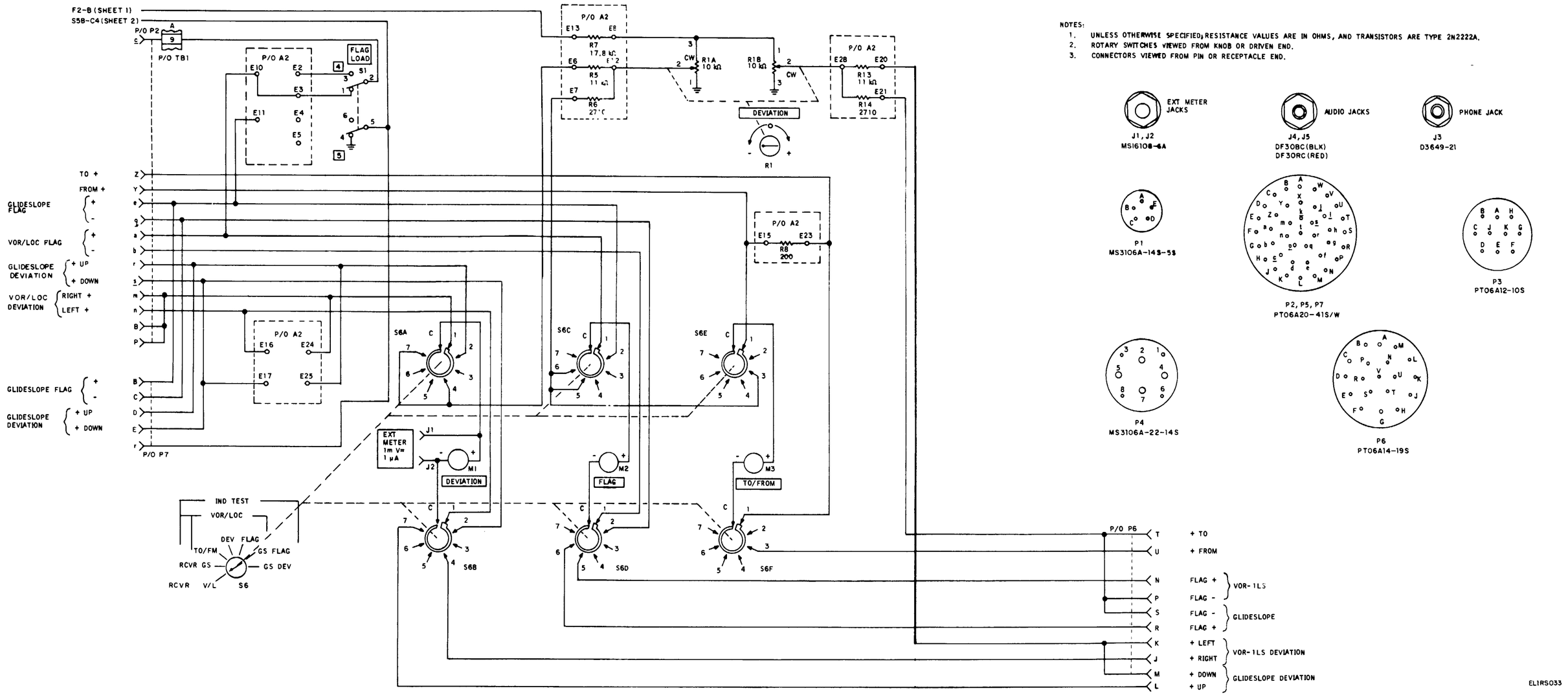

Figure 4-12. Radio Test Set TS-2500B/ARM-92, schematic diagram (sheet 3 of 3).

APPENDIX A
REFERENCES

DA Pam 310-4 Index of Technical Manuals, Technical Bulletins, Supply Manuals (Types 7, 8, and 9), Supply Bulletins, and Lubrication Orders.

DA Pam 310-7 US Army Index of Modification Work Orders.

TB SIG 355-1 Depot Inspection Standard for Repaired Signal Equipment.

TB SIG-355-2 Depot Inspection Standard for Refinishing Repaired Signal Equipment.

TB SIG-355-3 Depot Inspection Standard for Moisture and Fungus Resistant Treatment.

TM 11-6625-277-14 Operator's, Organizational, Direct Support, and General Support Maintenance Manual: Meter Test Sets TS-682/GSM-1 and TS-682A/GSM-1 (NSN 6625-00-669-0747)

TM 11-5017 Output Meters TS-585A/U, TS-585B/U, TS-585C/U, TS-585D/U.

TM 11-5826-226-34 Direct Support, General Support, and Depot Maintenance Manual: Radio Receiving Sets AN/ARN-82 and AN/ARN-82A.

TM 11-6625-200-15 Operator's, Organizational, DS, GS, and Depot Maintenance: Multimeters ME-26A/U, ME-26B/U, ME-26C/U, and ME-26D/U.

TM 11-6625-820-12 Operator and Organization. al Maintenance Manual: Voltmeter, Meter ME-30A/U and Voltmeters, Electronic ME-30B/U, ME-30C/U, and ME-30E/U.

TM 11-6625-320-35 DS, GS, and Depot Maintenance Manual: Voltmeter, Meter ME-30A/U and Voltmeters, Electronic ME-30B/U and ME-30C/U.

TM 11-6625-481-12 Operator and Organizational Maintenance Manual: Test Set, Indicator AN/ASM-110 and Control, Navigational SM-254/ASM.

TM 11-6625-481-45 Field (Fourth Echelon) and Depot Maintenance Manual: Test Set, Indicator AN/ASM-110 and Control, Navigational SM-254 /ASM-57.

TM 11-6625-492-12 Operator and Organizational Maintenance Manual: Test Set, Resolver AN/ASM-101.

TM 11-6625-492-35 Field and Depot Maintenance Manual: Test Set Resolver AN/ASM-101.

TM 11-6625-535-15 Operator, Organizational, Direct Support, General Support, and Depot Maintenance Manual: Oscilloscope AN/USM-140A.

TM 11-6625-588-15 Organizational, Direct Support, General Support, and Depot Maintenance Manual Including Repair Parts and Special Tools Lists: Modulator MD-83A/ARN.

TM 11-6625-820-12 Operator and Organizational Maintenance Manual Including Repair Parts and Special Tool Lists: Test Sets, Radio AN/ARM-92 and AN/ARM-92A.

TM 11-6625-820-45 General Support and Depot Maintenance Manual Including Repair Parts and Special Tool Lists, Test Sets, Radio AN/ARM-92 and AN/ARM-92A.

TM 11-6625-1703-15 Operator, Organizational, DS, GS, and Depot Maintenance Manual Including Repair Parts and Special Tool Lists: Oscilloscope AN/USM-281A.

By Order of the Secretary of the Army:

BERNARD W. ROGERS
General, United States Army
Chief of Staff

Official:

PAUL T. SMITH
Major General, United States Army
The Adjutant General

DISTRIBUTION:

To be distributed in accordance with DA Form 12-36A, Direct and General Support maintenance requirements for AN/ARM-92.

☆ U.S. GOVERNMENT PRINTING OFFICE : 1985 O - 461-421 (21531)

RECOMMENDED CHANGES TO EQUIPMENT TECHNICAL PUBLICATIONS

SOMETHING WRONG WITH PUBLICATION

FROM: (PRINT YOUR UNIT'S COMPLETE ADDRESS)

DATE SENT

PUBLICATION NUMBER	PUBLICATION DATE	PUBLICATION TITLE

BE EXACT PIN-POINT WHERE IT IS

PAGE NO.	PARA-GRAPH	FIGURE NO.	TABLE NO.

IN THIS SPACE, TELL WHAT IS WRONG AND WHAT SHOULD BE DONE ABOUT IT.

PRINTED NAME, GRADE OR TITLE AND TELEPHONE NUMBER	SIGN HERE

TEAR ALONG PERFORATED LINE

DA FORM 1 JUL 79 2028-2

PREVIOUS EDITIONS ARE OBSOLETE.

P.S.--IF YOUR OUTFIT WANTS TO KNOW ABOUT YOUR RECOMMENDATION MAKE A CARBON COPY OF THIS AND GIVE IT TO YOUR HEADQUARTERS.

032901-002

This fine document...

Was brought to you by me:

Liberated Manuals -- free army and government manuals

Why do I do it? I am tired of sleazy CD-ROM sellers, who take publicly available information, slap “watermarks” and other junk on it, and sell it. Those masters of search engine manipulation make sure that their sites that sell free information, come up first in search engines. They did not create it... They did not even scan it... Why should they get your money? Why are not letting you give those free manuals to your friends?

I am setting this document FREE. This document was made by the US Government and is NOT protected by Copyright. Feel free to share, republish, sell and so on.

I am not asking you for donations, fees or handouts. If you can, please provide a link to liberatedmanuals.com, so that free manuals come up first in search engines:

<A HREF=http://www.liberatedmanuals.com/>Free Military and Government Manuals</A>

- Sincerely
  Igor Chudov
  http://igor.chudov.com/
- Chicago Machinery Movers