TECHNICAL MANUAL

OPERATOR AND ORGANIZATIONAL MAINTENANCE MANUAL

TEST SET, GYRO STABILIZED PLATFORM AN/SM-385, FSN 6625-404-3281

This copy is a reprint which includes current pages from Change 1.

HEADQUARTERS, DEPARTMENT OF THE ARMY

SEPTEMBER 1971

WARNING

Be careful when working with the 115-volt power connections. SERIOUS INJURY or DEATH may result from contact with these terminals.

CAUTION

This equipment contains highly sophisticated, complicated circuitry. Maintenance personnel should not attempt any maintenance without reading and fully understanding the applicable section relating to that maintenance.

TECHNICAL MANUAL
No. 11-6625-2440-12

HEADQUARTERS
DEPARTMENT OF THE ARMY
WASHINGTON, D. C., *8 September 1971*

Operator and Organizational Maintenance Manual
TEST SET, GYRO STABILIZED PLATFORM AN/ASM-385

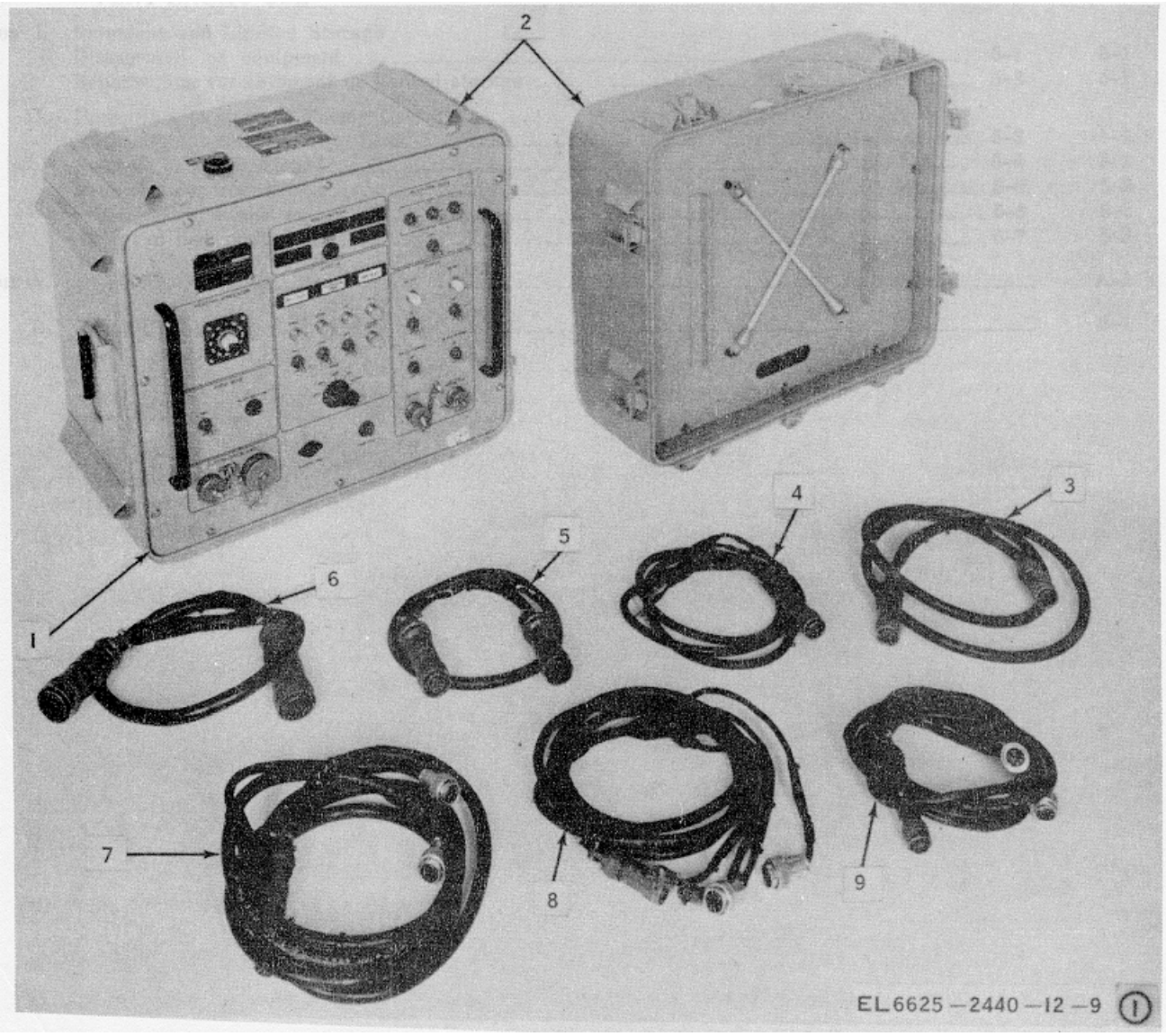

1 Control-Display, Test Set C-8316/ASM-385
2 Combination case
3 Cable Assembly, Power, Electrical CX-12107/U (1W1)
4 Cable Assembly, Power, Electrical CX-12108/U (1W2)
5 Cable Assembly, Special Purpose, Electrical CX-12114/U (1W3)
6 Cable Assembly, Special Purpose, Electrical CX-12115/U (1W4)
7 Cable Assembly, Special Purpose, Electrical CX-12118/U (1W12)
8 Cable Assembly, Special Purpose, Electrical CX-12117/U (1W11)
9 Cable Assembly, Special Purpose, Electrical CX-12116/U (1W9)

Figure 1-1①. Test Set, Gyro Stabilized Platform AN/ASM385 (part 1 of 2).

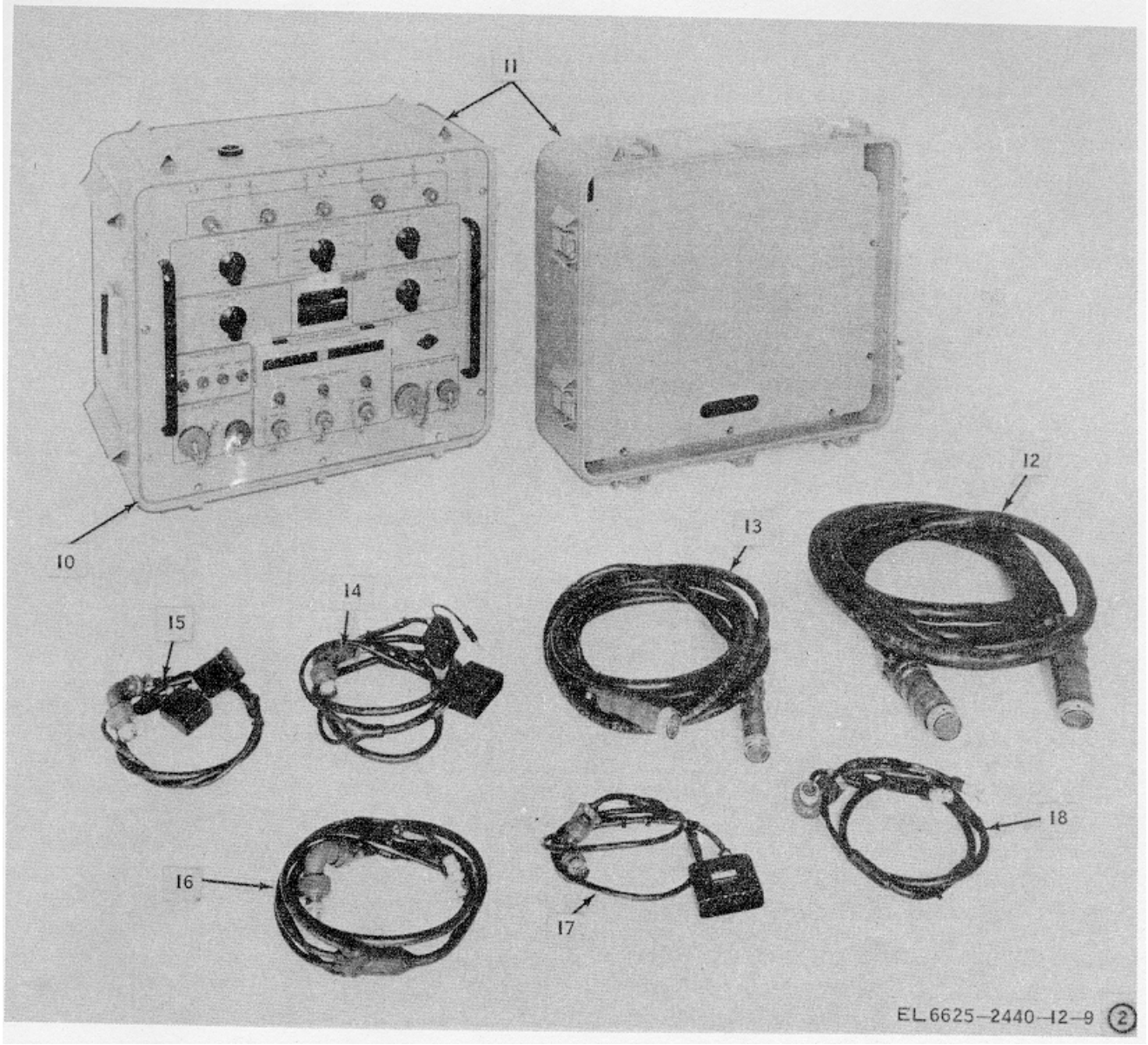

10 Electronic Switching Unit, Test Set TS-2907/ASM-385
11 Combination case
12 Cable Assembly, Special Purpose, Electrical CX-12120/U (2W14)
13 Cable Assembly, Special Purpose, Electrical CX-12119/U (2W13)
14 Cable Assembly, Special Purpose, Electrical CX-12113/U (2W10)
15 Cable Assembly, Special Purpose, Electrical CX-12112/U (2W8)
16 Cable Assembly, Special Purpose, Electrical CY-12112/T (2W7)
17 Cable Assembly, Special Purpose, Electrical CX-12110/U (2W6)
18 Cable Assembly, Special Purpose, Electrical CX-12109/U (2W5)

Figure 1-1② Test Set, Gyro Stabilized Platform AN/ASM-385 (part 2 of 2).

CHAPTER 1
INTRODUCTION

Section I. GENERAL

1-1. Scope of Manual

a. This manual covers the operation and organizational maintenance of Test Set, Gyro Stabilized Platform AN/ASM-385 (fig. 1-1). Technical characteristics, installation, operation under unusual conditions and troubleshooting are also included.

b. The organizational repair parts and special tools list appears in TM 11-6625-2440-20P.

NOTE

The maintenance allocation chart appears in appendix B. Appendix B is current as of 1 July 1971.

1-2. Indexes of Publications

a. DA Pam 310-4. Refer to the latest issue of DA Pam 310-4 to determine whether there are new editions, changes, or additional publications pertaining to this equipment.

b. DA Pam 310-7. Refer to DA Pam 310-7 to determine whether there are modification work orders (MWO's) pertaining to the equipment.

1-3. Forms and Records

a. Reports of Maintenance and Unsatisfactory Equipment. Maintenance forms, records, and reports which are to be used by maintenance personnel at all maintenance levels are listed in and prescribed by TM 38-750.

b. Report of Packaging and Handling Deficiencies. Fill out and forward DD Form 6 (Packaging Improvement Report) as prescribed in AR 700-58/NAVSUPINST 4030.29/AFR 71-13/MCO P4030.29A and DSAR 4145.8.

c. Discrepancy in Shipment Report (DISREP) (SF 361). Fill out and forward Discrepancy in Shipment Report (DISREP) (SF 361) as prescribed in AR 55-38/NAVSUPINST 4610.33/AFR 75-18/MCO P4610. 19B and DSAR 4500. 15.

d. Reporting of Errors. Reporting of errors, omissions, and recommendations for improving this publication by the individual user is encouraged. Reports should be submitted on DA Form 2028 (Recommended Changes to Publications and Blank Forms) and forwarded direct to Commander, US Army Electronics Command, ATTN: DRSEL-MA-Q, Fort Monmouth, NJ 07703.

e. Reporting Equipment Improvement Recommendations (EIR). EIR will be prepared using DA Form 2407, Maintenance Request. Instructions for preparing EIR's are provided in TM 38-750, The Army Maintenance Management System. EIR's should be mailed directly to Commander, US Army Electronics Command, ATTN: DRSEL-MA-Q, Fort Monmouth, NJ 07703. A reply will be furnished directly to you.

f. Administrative Storage. For procedures, forms and records, and inspections required during administrative storage of this equipment, refer to TM 74090-1.

Section II. DESCRIPTION AND DATA

1-4. Purpose and Use

a. Purpose. Test Set, Gyro Stabilized Platform AN/ASM-385 (fig. 1-1) provides for testing the operational status of a platform, such as Platform, Gyro Stabilized MX-8123/ASN-86 (platform) a unit of Navigation Set, Inertial AN/ASN-86 (navigation set). The test set functions to simulate Computer, Navigation CP941/ASN-86 (computer) and Control-Indicator ID-1579/ASN-86 (control-indicator) which are also part of the navigation set. The test set provides for all loads, operating voltages, test control signals as well as the conditioning of platform outputs for monitoring by test equipment.

b. Use. The test set is a manually operated device with semiautomatic features wherever practicable. Its use enables testing of the platform and fault isolation to a module or replaceable assembly within the platform.

1-5. Technical Characteristics

The test set utilizes positive logic with +0. 25 (± 0.25) V representing a 0, false, or low state and + 3. 8 (± 1.4) V representing a 1, true, or high state. Other test set characteristics are listed in the following charts.

a. Input Power.

Voltage	Frequency (Hz)	Phase	Maximum current (amperes)
Note. An incorrect input phase sequence is automatically corrected by, the test set.			
3-phase, wye:			
115 (± 11.5)V	400 (± 20	A	0.6
115 (± 11 5)V	400 (± 20)	B	9.6
115 (± 11.5)V	400 (± 20)	C	9.6
0V		N	2.2
27 (2)V			10.0

b. Output Power.

Voltage	Frequency (Hz)	Phase	Maximum current (amperes)
3-phase, wye:			
115 (+ 7.0—11.0)V	400 (± 20)	A	0.3
115 (+ 7.0—11.0)V	400 (± 20)	B	9.3
115 (+ 7.0—11.0)V	400 (± 20)	C	9.3
0V		N	2.2
26 (± 2)V	400 (± 20)	A	0.6
27.5 (+ 2)V			6.0

1-6. Items Comprising an Operable Equipment

(fig. 1-1)

a. Components.

National stock No.	Item	Qty	Dimensions (in.) Height	Depth	Width	Weight (lb)
6625-00-404-3281	Test Set, Gyro Stabilized Platform AN/ASM-385, consisting of:					
6625-00-411-4838	Electronic Switching Unit, Test Set TS-2907/ASM-385 (Electronics unit)	1	19	19	22	85
6625-00-234-6151	Control-Display, Test Set C-8316/ASM-385 (Control display unit)1	1	19	19	22	85

b. Cable Assemblies.

National stock No.	Item	Qty	Length (inches) approx.
6625-00-245-1739	Cable Assembly, Power, Electrical CX- 12107/U (1W1)	1	72
6625-00-247-7220	Cable Assembly, Power, Electrical CX-12108/U (1W2)	1	69
6625-00-245-1736	Cable Assembly, Special Purpose, Electrical CX- 12109/U (2W5)	1	36
6625-00-245-1735	Cable Assembly, Special Purpose, Electrical CX- 121 10 /U (2W6)	1	50
6625-00-245-1737	Cable Assembly, Special Purpose, Electrica l CX-12111/U (2W7)	1	39
6625-00-245-1650	Cable Assembly, Special Purpose, Electrical CX- 12112/U (2W8)	1	30
6625-00-410-9914	Cable Assembly, Special Purpose, Electrical CX) 12113/U (2W10)	1	57
6625-00-234-6153	Cable Assembly, Special Purpose, Electrical CX- 12114/U(1W3)	1	38
6625-00-463-4691	Cable Assembly, Special Purpose, Electrical CX- 12115/U (1W4)	1	38
6625-00-234-6157	Cable Assembly, Special Purpose, Electrical CX- 12116/U (1W9)	1	108
6625-00-245-1745	Cable Assembly, Special Purpose, Electrical CX- 12 117/U(1W11)	1	108
6625-00-411-5836	Cable Assembly, Special Purpose, Electrical CX- 12118/U (1W 12)	1	108
6625-00-245-8471	Cable Assembly, Special Purpose, Electrical CX- 121 19/U (2W13)	1	180
6625-00-245-8479	Cable Assembly, Special Purpose, Electrical CX- 12l20/U, (2W14)	1	180

1-7. Description of Electronics Unit

The electronics unit is housed in an aluminum, waterproof, combination case which also provides storage for the cable assemblies shown in figure 1-1 (2). A BREATHER VALVE is located at the top of the combination case to provide a two-way pressure equalization. All connectors and operating controls, except the LATITUDE switch, are located on the front panel. The LATITUDE switch is located at the rear of the chassis. Access to this switch is required only when changing the operating location from one hemisphere (north-south) to the other. A cover is provided for the LATITUDE CORRECTION thumbwheel switches to prevent accidental changing of their positions.

The electronics unit must be interconnected with . he control-display unit for use.

1-8. Description of Control-Display Unit (fig. 1-1 1)

The control-display unit is housed in an aluminum, waterproof, combination case which also provides storage for the cable assemblies shown in figure 1-10. A BREATHER VALVE is located at the top of the combination case to provide two- way pressure equalization. All connectors, controls, and indicators are located on the front panel. The control-display unit must be interconnected with the electronics unit for use.

1-9. Additional Equipment Required

The following chart lists the additional equipment required when the test set is used for testing the operational status of Platform, Gyro Stabilized MX-8123/ASN-86.

Nomenclature (common name)	Manufacture and model	Purpose
Counter, Electronic Digital Readout AN/USM-207 (counter).		Provides precise frequency measurements during tests.
Voltmeter, Electronic ME-202A/U (differential voltmeter).		Monitors ac and dc voltages
*decade synchro bridge	Gertsch, DSB-5C-4R	Used in conjunction with phase angle voltmeter to measure the angle of synchro signals during platform tests.
*Phase Angle Voltmeter ME-223 (phase angle voltmeter).		Measures magnitude and phase of ac signals during platform test.
Oscilloscope AN/USM-281(w/Plug In Units P-1186 and PL-1187/ USM-281).		Displays test signal waveforms and frequency and voltage measurements.
Stopwatch	Monte Carlo, 1002	Times various mode sequences.
*Recorder AN/USM-365(V1) (recorder).		Provides measurement record of platform and test set output signals during platform tests.
Recorder Preamplifier PL--1306( )/U (2).		Provides high-grain dc preamplification for the recorder.
Recorder, Preamplifier PL--1305( )/U (2).		Provides medium-gain dc preamplification for the recorder.
Recorder, Preamplifier PL--1307( )/U (2).		Provides phase-sensitive demodulation for the recorder.
Test Stand, Gyro Stabilizer Platform MT-4145/ASN-86 (test stand).		Provides for mounting platform under test and for positioning the platform in attitude and heading.

*These equipments are used during checkout and troubleshooting of airborne units and are listed here for information only.

CHAPTER 2

INSTALLATION

WARNING

During installation of this equipment, conform to all safety requirements set forth in TB SIG 291. Injury or DEATH could result from failure to comply with safe practices.

Section I. SERVICE UPON RECEIPT OF EQUIPMENT

2-1. Packaging Data

The two units of the test set are packed in separate fiberboard cartons and cushioned with polyurethane ester foam. The following chart lists the contents, dimensions, and shipping weights of the cartons.

Carton contents	Carton dimensions (in.)	Carton volume (in.3)	Unit shipping weight (lb)
Electronics unit	33 X 291/8 X 281/2	27,648	160
Control-display unit	33 X 291/8 X 281/2	27,648	160

2-2. Unpacking Instructions

CAUTION

The control-display unit and electronics unit contain delicate electronic gear. Be extremely careful when removing each item from the container.

a. Since the control-display unit and electronics unit are packaged in the same manner, only the unpacking of the electronics unit is illustrated.

b. Unpack electronics unit as shown in figure 2-1.

NOTE

Save all packaging material for use in reshipment of the test set.

2-3. Checking Unpacked Equipment

a. Inspect the equipment for damage that may have occurred during shipment. If the equipment has been damaged, fill out and forward DD Form 6 (para 1-3b).

b. Check to see that the equipment is complete as listed in the packing slip. If a packing slip is not available, check the equipment against the listing in paragraph 1-6. Report all discrepancies in accordance with TM 38-750. The equipment should be placed in service even though a minor assembly or part that does not affect proper functioning is missing.

c. Check to see whether the equipment has been modified. If the equipment has been modified, the MWO number will appear on the front panel, near the identification plate. Check also to see whether all MWO's current at the time the equipment is placed in use, have been applied.

NOTE

Current MWO's applicable to the equipment are listed in DA Pam 310-7.

d. Check the latest issue of DA Pam 310-4 (never more than 1 year old) and its latest changes (never more than 6 months old) to see whether you have the latest editions of all applicable maintenance literature. (Equipment issued by depots may have been in stock for some time and may contain superseded manuals.)

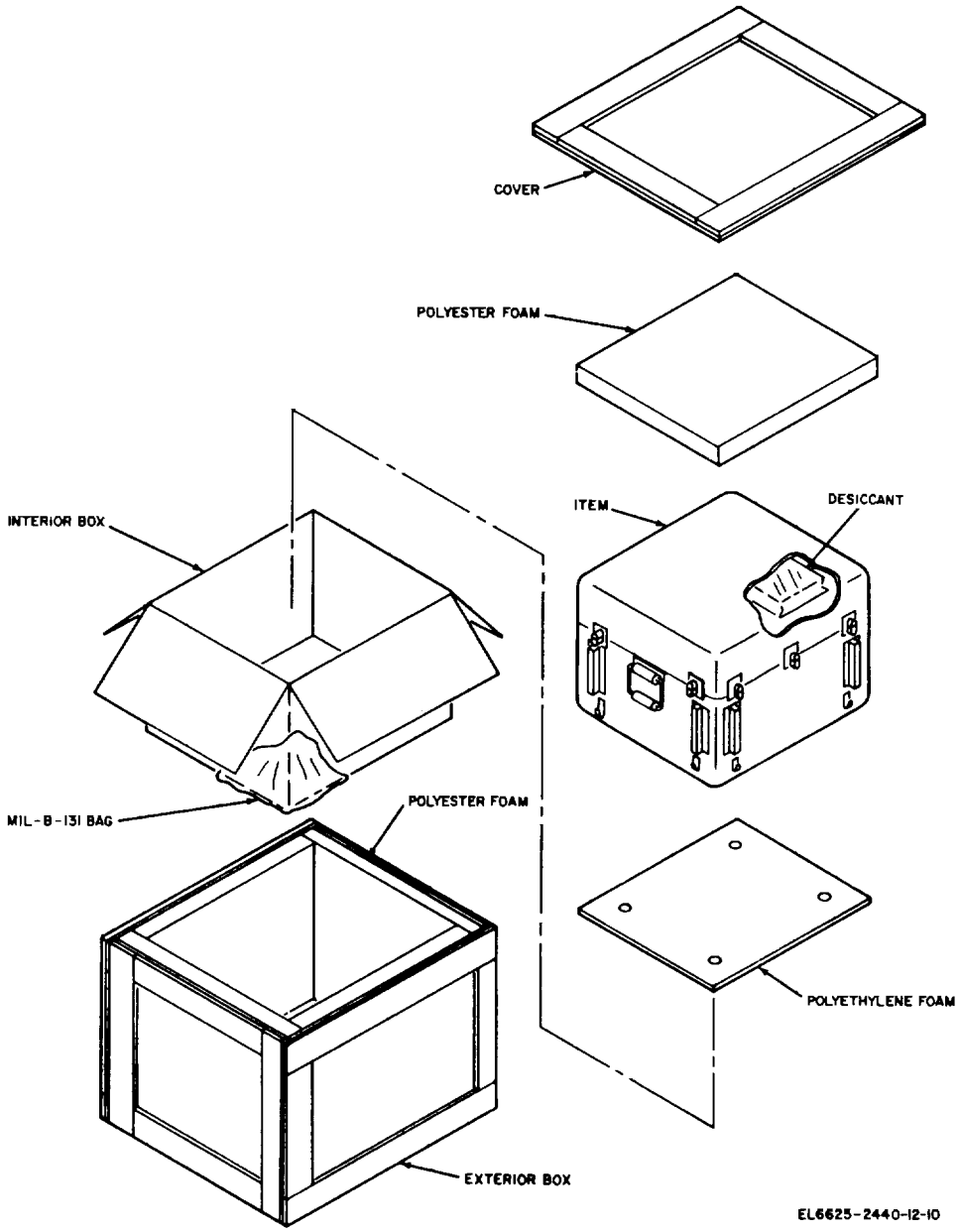

Figure 2-1. Packaging diagram.

Section II. INSTALLATION INSTRUCTIONS

WARNING

During installation of this equipment, con form to all safety requirements of TB SIG 291. Injury or DEATH could result from failure to comply with safe practices.

2-4. Tools, Test Equipment, and Materials Required

Except for a blade screwdriver (P/O TK-105/, U), no tools, test equipment, or special materials are required for installing the test set.

2-5. Installation Instructions

a. Press BREATHER VALVE pushbutton located on top of each combination case.

b. Unlatch and remove combination case covers from test set.

c. Remove electronics unit chassis from combination case (para 4-17) and verify that LATITUDE switch, located at the rear of chassis, is set to NORTH or SOUTH in accordance with the hemisphere in which the test site is located. Replace chassis in combination case.

d. Set all control-display unit and electronics unit front panel switches and circuit breakers to the OFF or down position.

CAUTION

Turn off primary ac and dc power at source before connecting cables, otherwise damage to electronic components may result.

NOTE

Before connecting digital voltmeter, insure that ground bus between COM and GRD is removed.

e. Connect test set and ancillary test equipment (para 1-9) as shown in figure 2-2. Insure that all connectors are properly mated and locking rings completely engaged.

2-6. Initial Checks and Adjustments

Initial checking consists of verification that the test set is operating properly and the LATITUDE CORRECTION thumbwheel switches are set for the specific latitude of the test site.

a. Perform the self-test procedures described in paragraph 3-6.

b. Set the LATITUDE CORRECTION LEVEL AXIS and HEADING AXIS thumbwheel switches as described in paragraph 3-5.

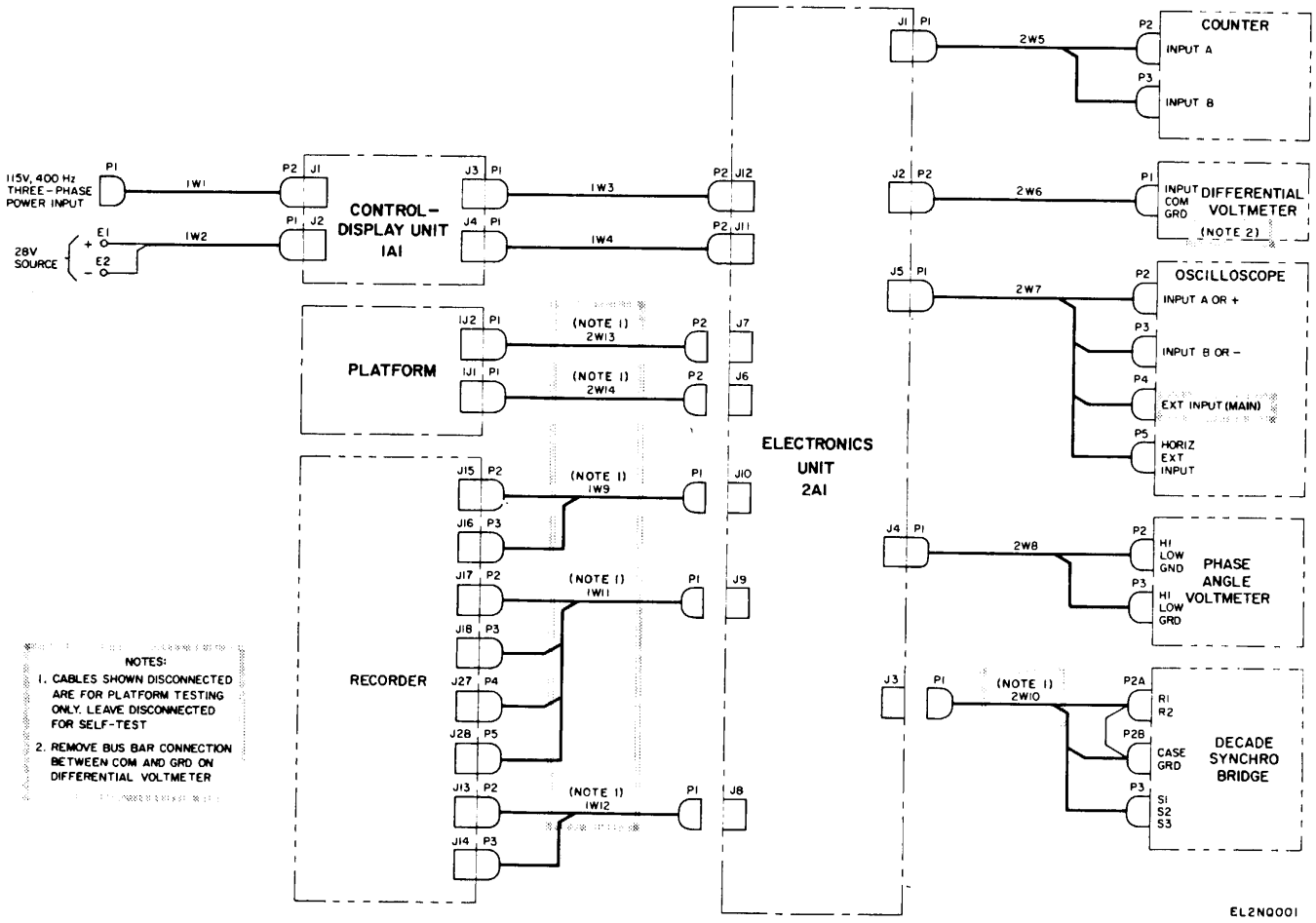

Figure 2-2. Cable connection diagram.

CHAPTER 3

OPERATING INSTRUCTIONS

Section I. OPERATOR'S CONTROLS AND INDICATORS

3-1. Damage From Improper Settings

No combination of control settings will cause damage to equipment or create a hazard to personnel.

3-2. Operating Controls and Indicators

a. Control-Display Unit; Controls, Indicators, and Connectors (fig. 3-1). The following chart lists controls, indicators, and connectors with their reference designations and functional descriptions. Unless otherwise specified, functional descriptions relate to operations within the test set. Control-display unit is abbreviated C-D unit in the chart.

Control, indicator, or connector	Ref des	Function
28 VDC connector J2	1A1FL2	Provides input connection for 28 vdc test set operating power.
28 VDC PRIMARY circuit breaker	1A1CB2	Controls application of and provides overload protection for test set 28 vdc primary power.
28 VDC switch	1A1S2	Controls application of primary 28 vdc and operating voltages to test set.
28 VDC indicator	1A1DS2	Indicates 28 vdc power is applied to test set.
115 VAC indicator	1A1DS1	Monitors C-D unit power supply +15 vdc output when 115 vac and 28 vdc power are applied to power supply.
115 VAC switch	1A1S1	Controls application of 115 vac primary power to test set.
115 VAC PRIMARY circuit breaker	1CB1	Controls application of and provides overload protection for test set 115 vac primary power.
115 VAC 400 Hz 3PH connector J1	1A1FL1	Provides input connection for 115 vac 400 Hz, 3-phase test set operating power.
MODE switch	1A1S3	OFF: Functions to inhibit platform power circuits and clear the test set align mode control logic.
		STBY: Functions to provide power to platform heaters, magnetic heading servo, and part of transformer-buffer assembly and to clear the test align mode control logic.
		ALIGN: Provides the functions listed for STBY position and enables test set and platform mode control logic to sequence through the align mode. The phases of the align mode are cage (32 seconds), level (2minutes), gyrocompass 1 (4 minutes), and gyrocompass 2 (no time limit).
		NAV: Inhibits platform AV inputs to test set velocity torque logic and switches only earth rate correction signals to platform. Also latches platform coarse heaters off.
		AIR DATA: Functions to deenergize platform power supply and heaters and to maintain operational status of platform magnetic heading servo and part of transformer-buffer assembly.
CAGE switch	1A1S11	HOLD: Provides switching to place and hold the test set and platform mode control logic in the cage phase of align mode for 32 seconds and until switched to OFF.
		OFF: Permits test set and platform mode control logic to sequence through cage phase of align mode.
CAGE indicator	1A1DS13	Lights when test set and platform mode control logic is in cage phase of align mode.
LEVEL switch	1A1S5	HOLD: Provides switching to place and hold the test set and platform mode control logic in the level phase of align mode for 2 minutes and until switched to OFF.
		OFF: Permits test set and platform mode control logic to sequence through level phase of align mode.

Control, indicator, or connector	Ref des	Function
LEVEL indicator	1A1DS12	Lights when test set and platform mode control logic is in level phase of align mode.
GC1 switch	1A1S6	HOLD: Provides switching to place and hold the test set and platform mode control logic in the GC1 phase of align mode for 4 minutes and until switched to OFF.
		OFF: Permits test set and platform mode control logic to sequence through GC1 phase of align mode.
GC1 indicator	1A1DS14	Lights when test set and platform mode control logic is in GC1 phase of align mode.
GC2 indicator	1A1DS15	Lights when test set and platform mode control logic is in GC2 phase of align mode.
COARSE HEATER indicator	1A1DS11	Indicates platform coarse heaters are energized.
SELF-TEST indicator	1A1DS3	Indicates test set is in self-test mode.
PLATF PWR indicator	1A1DS10	Indicates 115 vac and 28 vdc are applied to platform.
GSP TEST indicator	1A1DS4	Indicates test set is in platform test mode.
X switch	1A1S8	PLUS: Provides for manual slewing of platform stable element in a positive direction about the X (pitch) axis.
		MINUS: Provides for manual slewing of platform stable element in a negative direction about the X (pitch) axis.
		OFF: Inhibits manual slewing of platform stable element about the X (pitch) axis.
Y switch	1A1S9	PLUS: Provides for manual slewing of platform stable element in a positive direction about the Y (roll) axis.
		MINUS: Provides for manual slewing of platform stable element in a negative direction about the Y (roll) axis.
		OFF: Inhibits manual slewing of platform stable element about the Y (roll) axis.
Z switch	1A1S10	PLUS: Provides for manual slewing of stable element in a positive direction about the Z (heading) axis.
		MINUS: Provides for manual slewing of platform stable element in a negative direction about the Z (heading) axis.
		OFF: Inhibits manual slewing of platform stable element about the Z (heading) axis.
FAST-SLOW switch	1A1S12	Operates in series with C-D unit PLATFORM SLEW switches to provide two-speed selection for platform stable element slewing.
GB1-GB2 switch	1A1S14	Sets velocity torque logic in C-D unit for gyro bias 1 or gyro bias 2 operation.
PLATF RE CAGE switch	1A1S7	Generates platform reset signal, causing platform mode logic in C-D unit and platform to sequence through the cage phase and initiate the level phase of the align mode.
PLATFORM indicator	1A1DS6	Indicates a malfunction in platform power turn-on sequence logic.
MONITOR indicator	1A1DS7	Indicates a platform malfunction.
OVERTEMP indicator	1A1DS5	Indicates overtemperature condition in platform.
TEST SET indicator	1A1DS9	Indicates test set malfunction.
MONITOR OVERRIDE switch	1A1S13	Overrides platform malfunction indicated by CD unit MONITOR indicator and allows operation of platform.
MAT HDG SERVO indicator	1A1DS8	Indicates a platform magnetic heading servo malfunction.
READING SIMULATOR	1A1B1	Provides selection of a desired azimuth angle to which a platform stable element will be driven, with respect to platform heading during the cage phase of align mode.
LAMP TEST switch	1A1S4	Energizes all indicator lamp circuits when pressed, as a test of the indicator lamps.
ELAPSED TIME meter	1A1M1	Indicates total time that CD unit has been in operation.
Connector J3	1A1J3	Provides power connection between CD unit and electronics unit.
Connector J4	1A1J4	Provides control signal connection between CD unit and electronics unit.
BREATHER VALVE		Provides two-way pressure equalization.

b. Electronics Unit; Controls, Indicators, and Connectors (fig. 3-2). The following chart lists controls, indicators, and connectors with their reference designations and functional descriptions. All controls and indicators, except the LATITUDE switch, are located on the front panel. The LATITUDE switch is located inside the combination case at the rear of the unit (fig. 4-2). Control-display unit is abbreviated C-D unit in the chart.

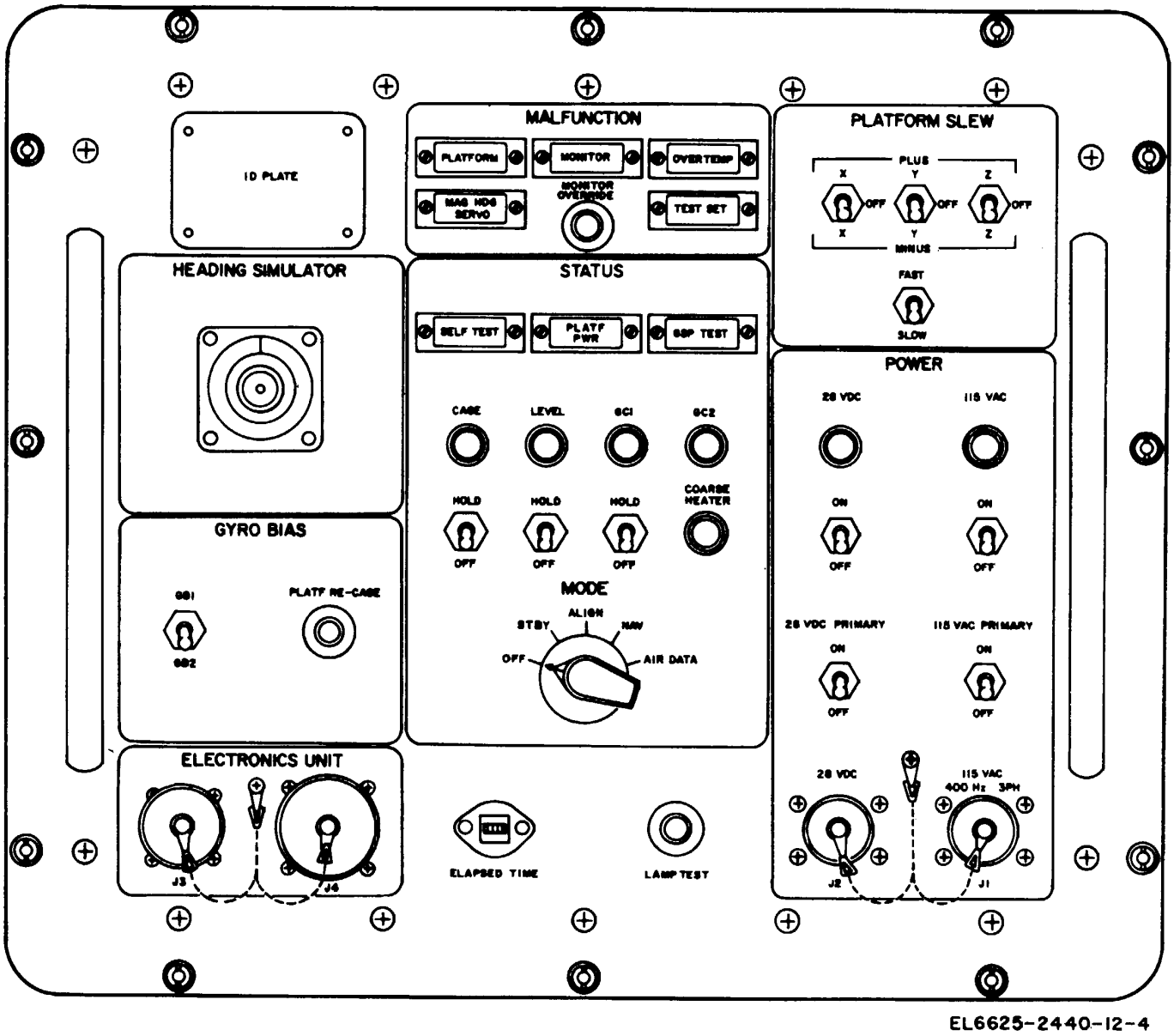

Figure 3-1. Control-display unit; controls, indicators, and connectors.

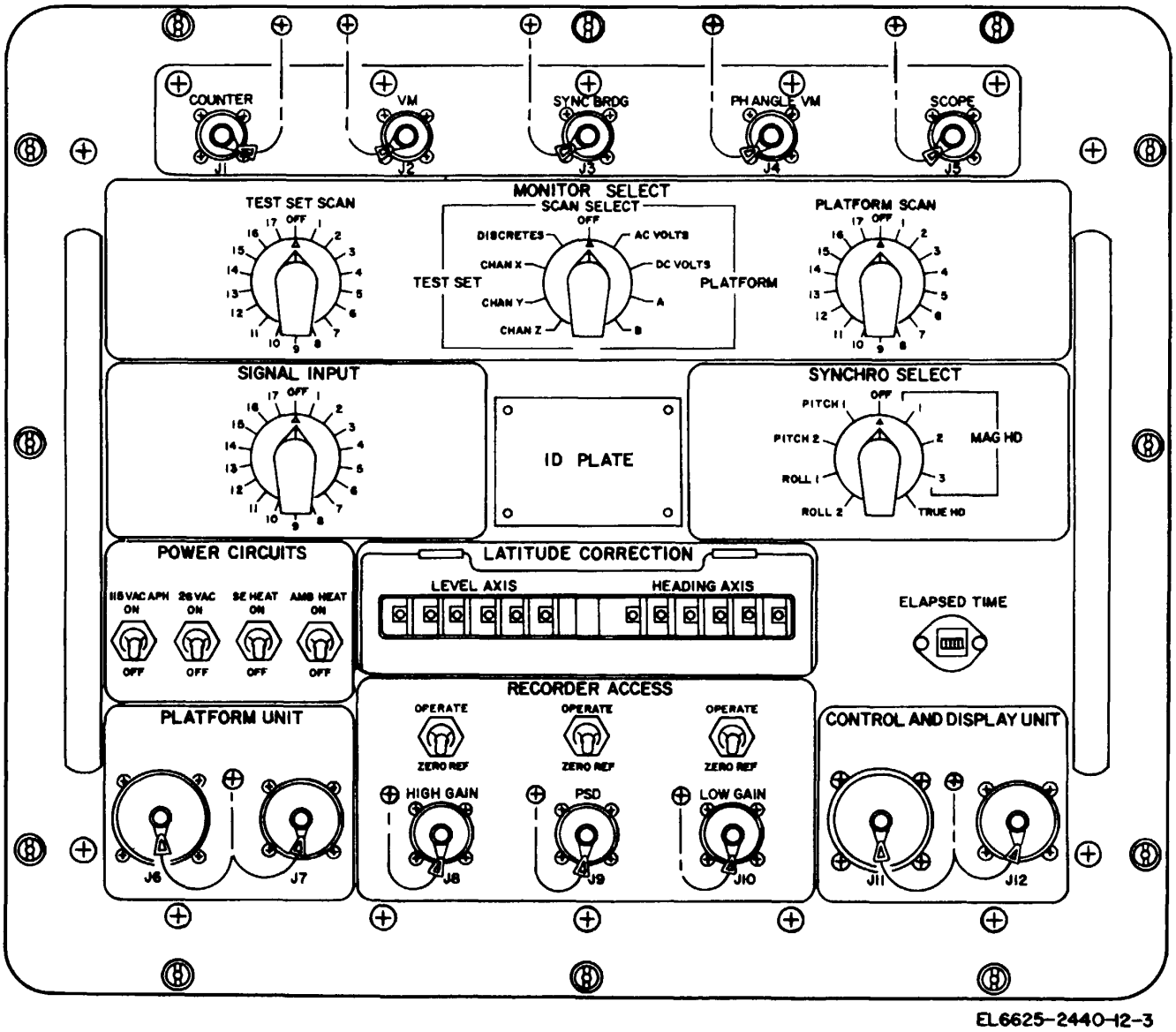

Figure 3-2. Electronics unit; controls, indicators, and connectors.

Control, indicator, or connector	Ref des	Function
TEST SET SCAN switch	2A1S1	Used with SCAN SELECT switch to select functions (1 thru 17) within the test set for monitoring by ancillary test equipment.
SCAN SELECT switch	2A1S2	Operates with TEST SET SCAN and PLATFORM SCAN switches to select functions within the test set or platform under test for monitoring by ancillary test equipment.
PLATFORM SCAN switch	2A1S3	Used with SCAN SELECT switch to select functions (1 thru 17) within the platform under test for monitoring by ancillary test equipment.
SYNCHRO SELECT switch	2A1S4	PITCH 1/PITCH 2: Selects platform pitch synchro signals and routes them to decade synchro bridge for angular measurement. ROLL 1/ROLL 2: Selects platform roll synchro signals and routes them to decade synchro bridge for angular measurement. TRUE HD: Selects azimuth signals from platform synchros and routes them to decade synchro bridge for angular measurement. MAG HD 1/2/3: With SIGNAL INPUT switch set to positions 1 through 6, selects simulated azimuth signals from platform magnetic heading servos and routes them to decade synchro bridge for angular measurement. OFF: Disconnects platform synchro signals from decade synchro bridge.
SIGNAL INPUT switch	2A1S5	OFF: No connection. Positions 1 through 6: Provides selection of six simulated magnetic heading outputs to the platform. Position 8: Initiates plus ΔVx and minus ΔVy velocity torque logic self-test. Position 9: Initiates minus ΔVx and plus ΔVy velocity torque logic self-test. Positions 7 and 10 through 17: Not used.
LEVEL AXIS thumbwheel switches	2A1S6	Used to select the local level axis earth rate correction frequency to be applied to the platform stable element.
HEADING AXIS thumbwheel switches	2A1S7	Used to select the local heading axis earth rate correction frequency to be applied to the platform stable element.
HIGH GAIN switch	2A1S8	OPERATE: Routes platform Ax and Ay accelerometer signals to recorder channels 1 and 2 respectively. ZERO REF: Shorts the input of the recorder high-gain channels to ground.
PSD switch	2A1S9	OPERATE: Routes the platform azimuth synchro and decade synchro bridge outputs to recorder channels 5 and 6 respectively. ZERO REF: Shorts the input of the recorder phase-sensitive demodulator channels to ground.
LOW GAIN switch	2AS10	OPERATE: Routes the platform ΔVx and ΔVy ramp voltages to recorder channels 3 and 4 respectively. ZERO REF: Shorts the inputs of the recorder low-gain channels.
LOW GAIN connector J10	2A1J10	Provides output connection to recorder low-gain channel.
PSD connector J9	2A1J9	Provides output connection to recorder phase-sensitive demodulator.
HIGH GAIN connector J8	2A1J8	Provides output connection to recorder high-gain channel.
115 VAC APH circuit breaker	2A1CB1	Controls application and provides overload protection for 115 vac, A-phase power to platform.
26 VAC circuit breaker	2A1CB4	Controls application and provides overload protection for 26 vac power to platform azimuth, pitch, outer roll, and magnetic heading servo synchros.
SE HEAT circuit breaker	2A1CB3	Controls application and provides overload protection for 115 vac, C-phase power to platform stable element heaters and reference transformer.
AMB HEAT circuit breaker	2A1CB2	Controls application and provides overload protection for 115 vac, C-phase power to platform ambient heaters, reference transformer, and blowers.
ELAPSED TIME meter	2A1M1	Indicates total time that electronics unit has been in operation.
Connector J6	2A1J6	Provides power and control signal output connection to platform and provides platform test signal input connection to test set.
Connector J7	2A1J7	Provides platform test signal input to test set.
COUNTER connector J1	2A1J1	Provides test output connection to counter.
VM connector J2	2A1J2	Provides test output connection to differential voltmeter.
SYNC BRDG connector J3	2A1J3	Provides test output connection to decade synchro bridge.
PH ANGLE VM connector J4	2A1J4	Provides test output connection to phase angle voltmeter.
SCOPE connector J5	2A1J5	Provides test output connection to oscilloscope.

Control, indicator, or connector	Ref des	Function
Connector J11	2A1J11	Provides control signal connection between electronics unit and C-D unit.
Connector J12	2A1J12	Provides power connection between electronics unit and C-D unit.
LATITUDE switch (internal)	2A1S11	NORTH: Provides polarity of platform stable element heading axis earth rate correction for proper operation in the northern hemisphere. SOUTH: Provides polarity of platform stable element heading axis earth rate correction for proper operation in the southern hemisphere. Note. This switch is set during installation and need not be moved unless the test set is moved across the equator. (See chapter 2.)
BREATHER VALVE		Provides two-way pressure equalization.

Section II. OPERATION UNDER USUAL CONDITIONS

3-3. General

The test set is operated normally to test and troubleshoot a platform and to perform a self-test of the test set. Operation for performing test and troubleshooting procedures on a platform are contained in the maintenance manual for the platform being tested. To perform test procedures on a platform, it is necessary to set the LATITUDE CORRECTION thumbwheel switches to compensate for the earth's rotational velocity at the specific latitude of the test site. Instructions and calculations for inserting latitude corrections are detailed in paragraph 3-5. Test set self-test procedures are included in paragraph 3-6. Under normal conditions, self-test of the test set should be performed after installation, monthly when in continuous use, before each platform test when used intermittently, or when the test set operational status is questionable.

3-4. Operating Procedures

NOTE

Before performing any operating procedures, read and fully understand the information in paragraph 3-2.

a. Preliminary Control Settings. Verify the following test set conditions or perform the necessary operations:

(1) Test set primary ac and dc power sources are off.

(2) Control-display unit 28 VDC and 115 VAC switches are set to OFF.

(3) Control-display unit 28 VDC PRIMARY and 115 VAC PRIMARY circuit breakers are set to OFF.

(4) Electronics unit 115 VAC APH, 26 VAC, SE HEAT, and AMB HEAT circuit breakers are set to OFF.

NOTE

Disregard setting of LATITUDE CORRECTION thumbwheel switches.

(5) All other control-display unit and electronics unit switches are set to OFF or down position.

b. Power Application.

(1) Turn on test set primary ac and dc power sources.

(2) Set control-display unit 28 VDC PRIMARY and 115 VAC PRIMARY circuit breakers to ON.

(3) Set electronics unit 115 VAC APH, 26 VAC, SE HEAT, and AMB HEAT circuit breakers to ON.

(4) Set control-display unit 115 VAC switch to ON.

(5) Set control-display unit 28 VDC switch to ON.

(6) Verify that the 28 VDC, 115 VAC, and SELF TEST indicators light and that the ELAPSED TIME meters on both units are functioning.

(7) Turn on ancillary test equipment.

NOTE

Allow a 30-minute warmup for ancillary test equipment.

c. Standby Condition.

(1) Set control-display unit 28 VDC switch to OFF.

(2) Set control-display unit 115 VAC switch to OFF.

NOTE

Maintain test set in standby condition at all times except when moving test set to a new location.

d. Power Turnoff.

(1) Set controls to positions indicated in a (2) through (5) above.

(2) Turn off test set ac and dc power sources.

3-5. Latitude Earth Rate Correction

Each position of each of the LEVEL AXIS and HEADING AXIS thumbwheel switches represents a specific frequency. Any frequency required by the platform may be obtained by selecting combinations of these switch settings. A list of these specific frequencies and the thumbwheel switch settings required to obtain them is provided in a below. The requirements and method for making the computations necessary to determine the thumbwheel switch setting for the specific latitude of the test site are given in *b* through *d* below.

a. Thumbwheel Switch Frequency Chart.

NOTE

The thumbwheel switches are designated (left to right) A through F for each switch group.

LEVEL AXIS or HEADING AXIS switch	Setting	Frequency (Hz)
A ----------	0	0
	1	18.75
	2	37.50
	3	56.25
	4	75.00
	5	93.75
	6	112.50
	7	131.25
B ----------	0	0
	1	2.34375
	2	4.68750
	3	7.03125
	4	9.37500
	5	11.71875
	6	14.06250
	7	16.40625
C ----------	0	0
		10.292969
	2	0.685938
	3	0.878906
	4	1.171875
	5	1.464844
	6	1.757813
	7	2.050782
D ----------	0	0
	1	0.036621
	2	0.073242
	3	0.109863
	4	0.146484
	5	0.183105
	6	0.219726
	7	0.256347
E ----------	0	0
	1	0.004577
	2	0.009155
	3	0.013733
	4	0.018311
	5	0.022888
	6	0.027466
	7	0.032043
F ----------	0	0
	1	0.00057
	2	0.00114
	3	0.00171
	4	0.00228
	5	0.00285
	6	0.00342
	7	0.00399

b. Level Axis Latitude Correction. The level axis latitude correction frequency (F) for any earth-latitude position may be determined by completing the following:

(1) Obtain the earth-latitude position (λ) of the test site from the local cognizant authority.

(2) Determine the cos λ to the nearest tenth of a minute using sine and cosine interpolation described in *d* below.

(3) Calculate the frequency by substituting the value determined in (2) above for cos λ in the equation F = (80. 28668 cos λ) Hz. Record the calculated frequency.

(4) Using the thumbwheel switch frequency chart in *a* above, determine the correct LEVEL AXIS thumbwheel switch settings for the calculated frequency and set thumbwheel switches accordingly. The sequence for setting the thumbwheel switches is as follows:

(a) Select highest A-switch setting which represents but does not exceed the calculated frequency.

(b) Subtract frequency represented by A switch setting from calculated frequency.

(c) Select highest B-switch setting which represents but does not exceed the frequency remainder calculated in *(b)* above.

(d) Subtract frequency represented by B-switch setting from frequency represented by A-switch setting.

(e) Select highest C-switch setting which represents but does not exceed the frequency remainder calculated in *(d)* above.

(f) Repeat *(d)* and *(e)* above for each of the remaining thumbwheel switches in order, left to right.

Example: Assuming the test site latitude *(λ)* to be 34°14.1"; the formula becomes F = (80.28668 cos 34°14.1") Hz.

Substituting the value of the cosine function (ref *d* below); the formula becomes F = (80. 28668 X 0.8267398) Hz or F = 66. 376194 Hz.
From thumbwheel switch frequency chart (*a* above), select highest A-switch setting which represents but does not exceed the frequency 66. 376194 Hz.
A-switch setting is 3, representing a frequency of 56. 25 Hz.
Subtract 56. 25 from 66. 376194 Hz. Remainder is 10.126194.
Select highest B-switch setting which represents but does not exceed the frequency remainder from A-switch setting.
B-switch setting is 4, representing 9. 375 Hz.
Subtract 9. 375 from 10. 126194 Hz. Remainder is 0.751194.
Select highest C-switch setting which represents but does not exceed the frequency remainder from B-switch setting.
C-switch setting is 2, representing 0. 585938 Hz.
Subtract 0. 585938 from 0. 751194 Hz. Remainder is 0.165256.
Select highest D-switch setting which represents but does not exceed the frequency remainder from C-switch setting.
D-switch setting is 4, representing 0. 146484 Hz.
Subtract 0. 146484 from 0. 165256 Hz. Remainder is 0.018772.
Select highest E-switch setting which represents but does not exceed the frequency remainder from D-switch setting.
E-switch setting is 4, representing 0. 018311 Hz.
Subtract 0. 018311 Hz from 0. 018772. Remainder is 0.000461.
Select highest F-switch setting which represents but does not exceed the frequency remainder from E-switch setting.
F-switch setting is 0.
The complete LEVEL AXIS thumbwheel switch setting should be 342440, indicating the assumed latitude of 34°14.1".

c. Heading Axis Latitude Correction. The heading axis latitude correction frequency (F) for any earth-latitude position may be determined by completing the following:

(1) Obtain the earth-latitude position (λ) of the test site from the local cognizant authority.

(2) Determine the sin λ to the nearest tenth of a minute as described in *d* below.

(3) Calculate the frequency by substituting the value for sin λ in the equation F = (40.14323 sin λ) Hz. Record the calculated frequency.

(4) Using the thumbwheel switch frequency chart in *a* above, determine the correct HEADING AXIS thumbwheel switch setting for the calculated frequency and set thumbwheel switches accordingly. The sequence and procedure for setting the thumbwheel switches is the same as in *b* (4) above.

d. Sine and Cosine Interpolation to 0.1 Minute. To find the sine or cosine of latitude to the nearest 0. 1 minute, use a natural trigonometric functions table (TM 11-684) and proceed as follows:

(1) In natural trigonometric functions table, find and record sin or cos of given latitude to nearest lower minute and nearest higher minute.

(2) Subtract lower value from higher value.

(3) Multiply difference by number of tenths of minutes to which latitude is given.

(4) Add product to lower of sin value or subtract product from higher cos value.

Example:

(a) Find the sin of latitude to nearest 0.1 minute.
Given latitude = 18°4.2'
Sin 18°4' = 0.31012.
Sin 18°5' = 0.31040.
(b) Subtract lower value from higher value:
sin 185°5'--sin 18°4' = 0.31040--0.31012= 0. 00028.
(c) Multiply difference by desired tenths of a minute:
0.00028 X 0.2 = 0.000056.
(d) Add product to lower sin value:
0.31012 + 0.000056 = 0.310176.

NOTE

When cos of latitude to nearest 0.1minute is being determined, subtract product from higher cos value.

3-6. Self-Test Procedures

Operation of the test set can be checked by performing preliminary operations *(a* below) and procedures in the self-test chart (*c* below). A stopwatch is required for performing tests in the chart. Explanations of self-test chart column headings are listed in *b* below.

a. Preliminary Operations for Self-Test. Perform the following:

(1) Verify the initial conditions and control settings as indicated in paragraph 3-4a.

(2) Verify that test set and ancillary test equipment are connected as shown in figure 2-2 (bridge and recorder not used).

(3) Turn on test set primary ac and dc power sources.

(4) Turn on ancillary test equipment.

NOTE

Allow a 30-minute warmup for ancillary test equipment.

b. Self-Test Chart Column Explanations. An explanation of the information in each of the self-test chart columns is as follows:

(1) *Sequence No. column.* Lists the sequence in which the tests must be performed. The sequence number also serves as a cross-reference to procedures in the troubleshooting chart (para 4-16).

(2) *Item column.* Specifies the circuit or function being tested.

(3) *Procedure column.* Specifies the unit and lists all action to be performed relating to specific operations, observations, and records. The normal indications or results of these actions are included in this column. The following abbreviations are used in this column:

C-D (control-display unit)
EU (electronics unit)
DVM (voltmeter)
Scope (oscilloscope)
PAV (phase angle voltmenter)

(4) *Reference column.* Lists troubleshooting paragraph relating to abnormal indications resulting from the actions in the procedure column.

NOTE

The LATITUDE switch, located at the rear of the electronics unit chassis, is set to NORTH or SOUTH during installation of the test set (para 2-5). This switch is set in accordance with the hemisphere in which the test site is located. In the procedures in the self-test chart below, indications affected by the switch setting are given for both NORTH and SOUTH positions of the switch. The switch setting should not be changed when performing the self-test procedures, and the indication that is not applicable should be disregarded.

c. Self-Test Chart.

Seq No.	Item	Procedure	Reference
1	C-D blower.....	*a.* Set C-D 115 VAC PRIMARY and 28 VDC PRIMARY circuit breakers to ON. *b.* Set C-D 115 VAC switch to ON. C-D blower operates (audible)	Paragraphs 4-15 and 4-16.
2	Primary power.....	*a.* Set EU 115 VAC APH, 26 VAC, SE HEAT, and AMB HEAT circuit breakers to ON *b.* Set EU SCAN SELECT switch to AC VOLTS *c.* Set EU PLATFORM SCAN switch to positions, indicated below, and observe PAV and counter kor voltages and frequencies listed. *Switch position* — *Voltage* — *Frequency (Hz)* 1 115 (± 11.5)/0° — 400 (± 20) 2 115 (± 11.5)/240° — 400 (± 20) 3 115 (± 11.5)/120° — 400 (± 20)	Paragraphs 4-15 and 4-16.
3	26v, 400-Hz circuitry	Set EU PLATFORM SCAN switch to 4, and observe PAV for indication of 26 (±+2) V/iO and counter for an indication 400 (± 20) HZ.	Paragraphs 4-15 and 4-16.
4	Dc voltages	*a.* Set EU PLATFORM SCAN switch to OFF. *b* Set C-D 28 VDC switch to ON. *c.* Observe the following: (1) C-D 28 VDC, 115 VAC, and SELF-TEST indicators light. (2) C-D TEST SET indicator does not light. (3) C-D anti EU ELAPSED TIME meters run.	Paragraphs 4-15 and 4-16.
5	Power supply voltages	*a.* Set EU SCAN SELECT switch to DISCRETES *b.* Set EU TEST SET SCAN switch to positions indicated below, and observe scope and DVM for voltages listed. *Switch position* — *Voltage* 1 + 5 (± 0.5) 2 + 15(± 1.00) 3 - 15 (± 1.0)	Paragraphs 4-15 and 4-16.

Seq No.	Item	Procedure	Reference
6	Indicators	*a.* Set EU TEST SET SCAN switch to OFF. *b.* Press and hold C-D LAMP TEST switch, and observe that all C-D indicators light.	Paragraphs 4-15 and 4-16.
7	Indicators	Release C-D LAMP TEST switch, and Observe that all indicators except 28 VDC, 115 VAC, and SELF TEST go out.	Paragraphs 4-15 and 4-16.
8	Lamp drivers	Set EU TEST SET SCAN switch to 16, and observe that PLATFORM. MONITOR, OVERTEMP, and MAG HDC SERVO indicators light.	Paragraphs 4-15 and 4-16.
9	Lamp drivers	Set EU TEST SET SCAN switch to OFF, and observe that PLATFORM, MONITOR, OVERTEMP, and MAG HDG SERVO indicators go out. **NOTE** When the EU TEST SET SCAN switch is, set to 16. the PLATFORM, MONITOR, OVERTEMP and MAG HDG SERVO indicators will light. Disregard the lighting of these indicators at this switch setting for the remainder of test procedure.	Paragraphs 4-15 and 4-16.
10	Clock generator	Set EU TEST SET SCAN to 17, and observe Scope and DVM for an indication of + 28 (± 1.4) V.	Paragraphs 4-15 and 4-16.
11	Clock generator	*a.* Set EU SCAN SELECT switch to CHAN Z *b.* Set EU TEST SET SCAN switch to positions listed below, and observe counter and scope for frequencies and waveform listed. Switch position — Freq. (Hz) — Waveform (fig. 3-3) 7 — 300 (± 1) — A 8 — 300 (± 1) — A 9 — 150 (± 1) — B 10 — 2.4 k (+ 1) — C	Paragraphs 4-15 and 4-16.
12	Mode control	Set EU TEST SET SCAN switch to positions indicated below, and observe counter for frequencies listed. *Switch position* — *Frequency (Hz)* 11 — 4.68(± 0.1) 12 — 2.34 (±0.1)	Paragraphs 4-15 and 4-16.
13	Mode control	*a.* Set C-D CAGE switch to HOLD. *b.* Set C-D MODE switch to ALIGN, CAGE, PLATFORM, MONITOR, OVERTEMP, and MAG HDG SERVO indicators light.	Paragraphs 4-15 and 4-16.
14	Mode control	*a.* Set EU SCAN SELECT switch to DISCRETES. *b.* Set EU TEST SET SCAM switch position indicated below, and observe scope and DVM for voltages listed *Switch positions* — *Voltage* 4 — +0.25 (± 0.25) 5 — +0.25 (± 0.25) 6 — +3.8 (± 1.4) 8 — +0.25(± 0.25) 9 — +0.25 (± 0.25) 10 — +3.8 (± 1.4) 11 — +3.8 (± 1.4) 12 — +0025 (± 0.25)	Paragraphs 4-15 and 4-16.
15	Mode control	*a.* Set EU SCAN SELECT switch to A. *b.* Set EU PLATFORM SCAN switch to positions indicated below, and observe scope for voltages listed.	Paragraphs 4-15 and 4-16.

Seq No.	Item	Procedure	Reference
		Switch position — *Voltage* 11 — +3.8 (± 1.4) 12 — +3.8 (± 1.4)	
16	Mode control	Note. When the C-D CAGE switch is set to OFF, the test set will sequence through level, GC1, and GC2 modes. When the C-D CAGE switch In set to OFF, the C-D LEVEL indicator lights. Within 120 (± 12) seconds, the C-D LEVEL indicator goes out and the C-D GC1 indicator lights. Within 240 (-24) seconds after C-D GC1 indicator lights, the C-D GC1 indicator goes out and the C-D GC2 indicator lights. As soon as each mode indicator lights, tests relating to each mode must be performed within the specified time. Simultaneously start stopwatch and set C-D CAGE switch to OFF; then perform the following steps *a.* Observe that C-D CAGE indicator goes out and C-D LEVEL indicator lights. *b.* Set EU SCAN SELECT switch to DISCRETES. *c.* Set EU TEST SET SCAN switch to positions indicated below, and observe scope and DVM for voltages listed. *Switch position* — *Voltage* 4 — +3.8 (± 1.4) 5 — +3.8 (± 1.4) 6 — +3.8 (± 1.4) 8 — +0.25 (± 0.25) 9 — +0.25 (± 0.25) 10 — +3.8 (± 1.4) 11 — +0.25 (± 0.25) 12 — +3.8 (± 1.4) *d.* Set EU SCAN SELECT switch to A. *e.* Set EU PLATFORM SCAN switch to positions indicated below, and observe scope for voltages listed. *Switch position* — *Voltage* 11 — +3.8 (±1. 4) 12 — +0.25 (± 0.25) *f.* At T=120 (± 12) seconds, observe that C-D LEVEL indicator goes out and C-D GC1 indicator lights start stopwatch and perform *g* through *k* below. *g.* Set EU SCAN SELECT switch to DISCRETES. *h.* Set EU TEST SET SCAN switch to positions indicated below, and observe scope and DVM for voltages listed. *Switch position* — *Voltage* 4 — +3.8 (± 1.4) 5 — +0.26 (± 0.2) 8 — +3.8 (±:1.4) 9 — +0.25 (± 0.25) 10 — +3.8 (± 1. 4) 11 — +0.25 (± 0.25) 12 — +3.8 (± 1.4) *i.* Set EU SCAN SELECT switch to A *j.* Set EU PLATFORM SCAN switch to positions indicated below, and observe scope for voltages listed. *Switch position* — *Voltage* 11 — +0.25 (± 0.25) 12 — +3.8 (± 1.4) *k.* At T-240 (± 24) seconds, observe that C-D GC1 indicator goes out and C-D GC2 indicator lights.	Paragraphs 4-15 and 4-16

Seq No.	Item	Procedure	Reference
		l. Set EU SCAN SELECT switch to DISCRETES. *m.* Set EU TEST SET SCAN switch to positions indicated below, and observe scope and DVM for voltages listed. *Switch position* — *Voltage* 4 — +3.8 (± 1.4) 5 — +0.25 (± 0.25) 6 — +3.8 (± 1.4) 8 — +0.25 (± 0.25) 10 — +3.8 (± 1.4) 11 — +3.8 (± 1.4) 12 — +0.25 (± 0.25) *n.* Set EU SCAN SELECT switch to A *o.* Set EU PLATFORM SCAN switch to positions indicated below, and observe scope for voltages listed. *Switch position* — *Voltage* 11 — +3.8 (± 1.4) 12 — +3.8 (± 1.4)	
17	Latitude correction logic	*Note.* If LATITUDE CORRECTION thumbwheel switches are set for the specific latitude of the test site record LEVEL AXIS and HEADING AXIS thumbwheel switch settings. *a.* Set LEVEL AXIS thumbwheel switches to settings indicated below. *Switch* — *Setting* A — 3 B — 7 C — 7 D — 7 E — 7 F — 7 *b.* Set HEADING AXIS thumbwheel switches to settings indicated below. *Switch* — *Setting* A — 2 B — 7 C — 7 D — 7 E — 7 F — 7 *c.* Set EU SCAN SELECT switch to CHAN X *d.* Set EU TEST SET SCAN switch to 10, and observe counter for an indication of 75.000 (± 0.008) Hz.	Paragraphs 4-15 and 4-16.
18	Latitude correction logic	*a.* Set EU SCAN SELECT switch to CHAN Z *b.* Set EU TEST SET SCAN switch to 3, and observe counter for an indication of 56.250 (± 0.006) Hz.	Paragraphs 4-15 and 4-16.
19	Torque logic	*a.* Set EU SCAN SELECT switch to CHAN X *b.* Set EU TEST SET SCAN switch to 5, and observe counter for an indication of 75.000 (± 0.008) Hz.	Paragraphs 4-15 and 4-16.
20	Torque logic	*a.* Set EU SCAN SELECT switch to CHAN Z *b.* Set EU TEST SET SCAN switch to 4 *c.* Observe that with LATITUDE switch set to NORTH, counter indicates 56.250 (± 0.006) Hz; with LATITUDE switch set to SOUTH counter indicates 0.	Paragraphs 4-15 and 4-16.

Seq No.	Item	Procedure	Reference
21	Torque logic	a. Set EU TEST SET SCAN switch to 5 *b.* Observe that with LATITUDE switch set to NORTH, counter indicates 0; with LATITUDE switch set to SOUTH, counter indicates 56.250 (± 0.006) Hz.	Paragraphs 4-15 and 4-16.
22	Torque logic	*a.* Set C-D GYRO BIAS switch to GB1 *b.* Set EU SCAN SELECT switch to CHAN Y, and observe counter for an indication of 75.000 (± 0.008) Hz.	Paragraphs 4-15 and 4-16.
23	Torque logic	*a.* Set EU SCAN SELECT switch to CHAN X *b.* Set EU TEST SET SCAN switch to 7, and observe counter for an indication of 112.5 (±1.0) Hz.	Paragraphs 4-15 and 4-16.
24	Torque logic	Set EU SCAN SELECT switch to CHAN Y, and observe counter for an indication of 150 (± 1) Hz.	Paragraphs 4-15 and 4-16.
25	Torque logic	*a.* Set EU SCAN SELECT switch to CHAN Z *b.* Set EU TEST SET SCAN switch to 6. *c.* Observe that with LATITUDE switch set to NORTH, counter indicates 122 (± 1) Hz; with LATITUDE switch set to SOUTH, counter indicates 172 (± 1) Hz.	Paragraphs 4-15 and 4-16.
26	Torque logic	*a.* Set C-D GYRO BIAS switch to GB2 *b.* Set EU SCAN SELECT switch to CHAN X. *c.* Set EU TEST SET SCAN switch to 7, and observe counter for an indication of 150 (±1) Hz.	Paragraphs 4-15 and 4-16.
27	Torque logic	*a.* Set EU SCAN SELECT switch to CHAN Y, And observe counter for an indication of 112.5 (± 1.0) Hz.	Paragraphs 4-15 and 4-16.
28	Torque logic	*a.* Set EU SCAN SELECT switch to CHAN Z *b.* Set EU TEST SET SCAN switch to 6 *c.* Observe that the LATITUDE switch set to NORTH, counter indicates 122 (± 1) Hz; with LATITUDE switch set to SOUTH, counter indicates 172 (±1) Hz.	Paragraphs 4-15 and 4-16.
29	Torque logic	*a.* Set EU SCAN SELECT switch to B *b.* Set EU PLATFORM SCAN switch to 3 *c.* Set C-D PLATFORM SLEW X switch to PLUS and observe scope for an indication of +0.25 (± 0.25) V.	Paragraphs 4-15 and 4-16.
30	Torque logic	Set C-D PLATFORM SLEW X switch to MINUS, and observe scope for an indication of +3.8 (± 1.4) V.	Paragraphs 4-15 and 4-16.
31	Torque logic	*a.* Set EU PLATFORM SCAN switch to 4 *b.* Set C-D PLATFORM SLEW Y switch to PLUS and observe scope for an indication of ±:0.25 (± 0.25) V.	Paragraphs 4-15 and 4-16.
32	Torque logic	Set C-D PLATFORM SLEW Y switch to MINUS, and observe scope for an indication of ± 3. 8 (±:1.4) V.	Paragraphs 4-15 and 4-16.
33	Torque logic	*a.* Set EU PLATFORM SCAN switch to 5 *b.* Set C-D PLATFORM SLEW Z switch to PLUS, and observe scope for an indication of +0. 25 (:0. 25) V.	Paragraphs 4-15 and 4-16.
34	Torque logic	Set C-D PLATFORM SLEW Z switch to To MINUS, and observe scope for an indication of +3. 8 (*1. 4) V.	Paragraphs 4-15 and 4-16.
35	Δ V self-test.....	*a.* Set EU SIGNAL INPUT switch to 8 *b.* Set EU SCAN SELECT switch to CHAN X *c.* Set EU TEST SET SCAN switch to 1 *d.* Observe counter for an indication of 1.0 (± 0.5) Hz and scope for waveform D, figure 3-3.	Paragraphs 4-15 and 4-16.
36	Δ V self-test.....	*a.* Set EU SCAN SELECT switch to CHAN Y *b.* Observe counter for an indication of 1.0 (± 0.5) Hz and scope for waveform D, figure 3-3.	Paragraph 4-15 and 4-16.

Seq No.	Item	Procedure	Reference
37	Δ V self-test	a. Set EU SIGNAL INPUT switch to 9 *b.* Set EU TEST SET SCAN switch to 2 *c.* Observe counter for an indication of 1.0 (± 0.5) Hz and scope for waveform D, figure 3-3.	Paragraphs 4-15 and 4-16.
38	Δ V self-test.....	a. Set EU SCAN SELECT switch to CHAN X *b.* Observe counter for an indication of 1.0 (± 0.5) Hz and scope for waveform D, figure 3-3.	Paragraphs 4-15 and 4-16.
39	Δ V self-test.....	Set EU TEST SET SCAN switch to 3, and Observe scope for waveform E, figure 3-3.	Paragraphs 4-15 and 4-16.
40	Δ V self-test.....	Set EU SCAN SELECT switch to CHAN Y, and observe scope for waveform E, figure 3-3.	Paragraphs 4-15 and 4-16.
41	Δ V self-test.....	*a.* Set EU SIGNAL INPUT switch to 8 *b.* Set EU TEST SET SCAN switch to 4, and observe scope for waveform E, figure 3-3.	Paragraphs 4-15 and 4-16.
42	Δ V self-test.....	Set EU SCAN SELECT switch to CHAN X, and observe scope for waveform E, figure 3-3.	Paragraphs 4-15 and 4-16.
43	Δ V self-test.....	*a.* Set EU SCAN SELECT switch to Z *b.* Set EU TEST SET SCAN switch to 1, and observe scope for waveform F, figure 3-3.	Paragraphs 4-15 and 4-16.
44	Δ V self-test.....	*a.* Set EU SIGNAL INPUT switch to 9 *b.* Set EU TEST SET SCAN switch to 2, and observe scope for waveform F, figure 3-3.	Paragraphs 4-15 and 4-16.
45	Δ V self-test.....	*a.* Set C-D GYRO BIAS switch to GB1 *b.* Set EU TEST SET SCAN switch to 1, and observe scope for waveform F, figure 3-3.	Paragraphs 4-15 and 4-16.
46	Δ V self-test.....	*a.* Set EU SIGNAL INPUT switch to 8 *b.* Set EU TEST SET SCAN switch to 2, and observe scope for waveform F, figure 3-3. *Note.* Procedures In sequence numbers 47 through 52 must be performed with counter set to at least 100-second gate.	Paragraphs 4-15 and 4-16.
47	Velocity-torque logic	*a.* Set EU SCAN SELECT switch to CHAN X *b.* Set EU TEST SET SCAN switch to 7, and observe that counter indicates between 113.25 and 114.75 Hz.	Paragraphs 4-15 and 4-16.
48	Velocity-torque logic	Set EU SIGNAL INPUT switch to 9, and observe that counter indicates between 110.25 and 111.75 Hz.	Paragraphs 4-15 and 4-16.
49	Velocity-torque logic	*a.* Set C-D GYRO BIAS switch to GB2 *b.* Set EU SCAN SELECT switch to Y, and observe that counter indicates between 110.25 and 111.75 Hz.	Paragraphs 4-15 and 4-16.
50	Velocity-torque logic	Set EU SIGNAL INPUT switch to 8, and observe that counter indicates between 113.25 and 114.75 Hz.	Paragraphs 4-15 and -16.
51	Velocity-torque logic	*a.* Set EU SCAN SELECT switch to CHAN Z *b.* Set EU TEST SET SCAN switch to 6 *c.* Observe that with LATITUDE switch set to NORTH, counter indicates between 37.88 and 93.88 Hz; with LATITUDE switch set to SOUTH, counter indicates between 54.12 and 150.12 Hz.	Paragraphs 4-15 and 4-16.
52	Velocity-torque logic	*a.* Set EU SIGNAL INPUT switch to 9 *b.* Observe that with LATITUDE switch set to NORTH, counter indicates between 149.88 and 205.88 Hz; with LATITUDE switch set to SOUTH, counter indicates between 206.12 and 262.12 Hz.	Paragraphs 4-15 and 4-16.
53	Mode control	Set C-D GC1 switch to HOLD, and observe that GC2 indicator goes out and GC1 indicator lights.	Paragraphs 4-15 and 4-16.
54	Divide-by-5 logic	Set EU TEST SET SCAN switch to 3, and observe counter for an indication of 11.25 (± 1) Hz.	Paragraphs 4-15 and 4-16.

Seq No.	Item	Procedure	Reference
55	Mode control	Set C-D LEVEL switch to HOLD and GC1 switch to OFF, and observe that GC1 indicator goes out and LEVEL indicator lights.	Paragraphs 4-15 and 4-16.
56	Divide-by-5 logic	*a.* Set EU SCAN SELECT switch to CHAN X *b.* Set EU TEST SET SCAN switch to 10, and observe counter for an indication of 15 (± 1) Hz.	Paragraphs 4-15 and 4-16.
57	Δ Vx gain change	*a.* Set EU SIGNAL INPUT switch to 8 *b.* Set EU SCAN SELECT switch to CHAN X c. Set EU TEST SET SCAN switch to 4, and observe scope for waveform G, figure 3-3.	Paragraphs 4-15 and 4-16.
58	Δ Vy gain change	Set EU SCAN SELECT switch to CHAN Y, and observe scope for waveform G, figure 3-3.	Paragraphs 4-15 and 4-16.
59	Mode control	Set C-D CAGE switch to HOLD and LEVEL switch to OFF, and observe that LEVEL indicator goes out and CAGE indicator lights.	Paragraphs 4-15 and 4-16.
60	Mode control	*a.* Set EU SCAN SELECT switch to A *b.* Set EU PLATFORM SCAN switch to 17 *c.* Set EU CAGE switch to OFF, and observe that LEVEL indicator lights and scope indicates waveform H, figure 3-3.	Paragraphs 4-15 and 4-16.
61	Shutdown	*a.* Set C-D MODE switch to OFF; LEVEL PLATFORM, MONITOR, OVERTEMP, and MAG HDG SERVO indicators go out. *b.* Set EU TEST SET SCAN, SCAN SELECT, PLATFORM SCAN and SIGNAL INPUT switches to OFF. *c.* Set C-D 28 VDC and 115 VAC switches to OFF; SELF TEST, 28 VDC, and 115 VAC indicators go out. *d.* If the LATITUDE CORRECTION thumb-wheel switch settings for the specific latitude of the test site have been recorded, set the LEVEL AXIS and HEADING AXIS thumbwheel switches to the recorded settings.	None.

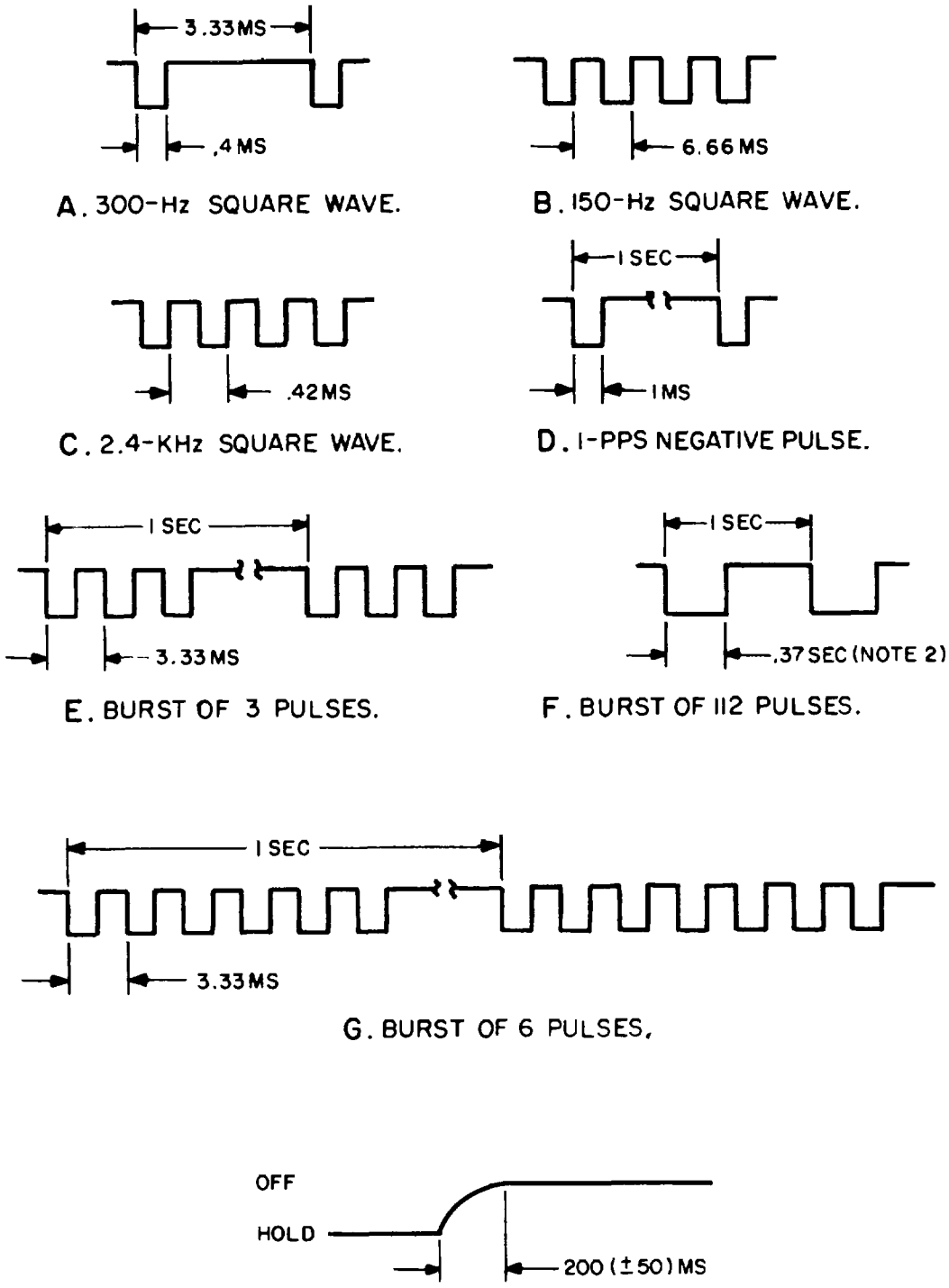

H. MODE CONTROL DELAY PULSE

NOTES:

1. **ALL WAVEFORM AMPLITUDES VARY BETWEEN +.25(± .25)V AND + 3. 8(± 1. 4)V.**
2. **EACH .37 SEC AREA CONTAINS 112 PULSES OCCURRING AT A 300Hz RATE.**

EL6625-2440-12-12

Figure 3-3. Test and troubleshooting waveforms.

Section III. OPERATION UNDER UNUSUAL CONDITIONS

3-7. Operation at Temperature Extremes

Temperatures affecting operation of the test set include both the operating temperature extremes and the nonoperating ambient temperature extremes. The chart below lists the extremes for operation and exposure of the test set without degradation in specified performance.

	Nonoperating temperature	*Operating* temperatures
Low maximum	32'F	-65F
High maximum	120'F	155*F

3-8. Operation in Tropical Climates

A moisture and fungus proof (MFP) coating in accordance with MILV-173 is applied as specified in MIL-T-152 to equipment, assemblies, and parts which have been cleaned prior to coating, to remove such contaminants as lubricating oils, mold release agents, sand, corrosion products, solder fluxes, fingerprints, and dust. The printed circuit boards have received a conformal coating per MILI-46058, and do not require the MFP coating at any time.

CHAPTER 4

ORGANIZANIZATIONAL MAINTENANCE

Section I. GENERAL

4-1. Scope of Organizational Maintenance

The maintenance duties assigned to the operator of the test set are listed below with a reference to the paragraphs covering the specific maintenance function.

a. Preventive maintenance checks and services (paras 4-3 through 4-12)
b. Cleaning (para 4-13)
c. Touchup painting instructions (para 4-14)
d. Troubleshooting (paras 4-15 and 4-16)
e. Removal and replacement (paras 4-17 through 4-21)

4-2. Test Equipment, Tools, and Materials Required

a. Test Equipment. Test equipment necessary for organizational maintenance is listed in the following chart:

Test equipment	Federal stock No.
Counter, Electronic Digital Readout AN/USM-2007( ).	6625-911-6368
Voltmeter, Fluge 887A.	
Oscilloscope AN/USM-281 (w/Plug-ins PL-1186/USM-281 and PL-1187/USM-281).	6625-053-2112
Voltmeter, Phase Angle ME-223-----	6625-810-3917
Stopwatch, Monte Carlo 1002	

b. Tools. Tools required for organizational maintenance are included in standard issue Tool Kits TK-101/G and TK-105/G.

c. Materials. The following chart lists the materials necessary for organizational maintenance:

Material	Federal stock No.
Fine sandpaper No. 000.....	5350-235-0124
Clean, dry, lint free cloth	8305-267-3015
Soft bristle brush	8020-260-1306
Cleaning compound (trichloroethane).	
Paint	8010-817-1213

Section II. PREVENTIVE MAINTENANCE CHECKS AND SERVICES

4-3. Preventive Maintenance

Preventive maintenance is the systematic care, servicing, and inspection of equipment to prevent the occurrence of trouble, to reduce downtime, and to insure that the equipment is serviceable.

a. Systematic Care. The procedures given in paragraphs 4-6 through 4-14 cover routine systematic care and cleaning essential for proper upkeep and operation of the equipment.

b. Preventive Maintenance Checks and Services. The preventive maintenance checks and services charts outline functions to be performed at specific intervals. These checks and services are to maintain electronic equipment in a combat serviceable condition; that is, in good general (physical) condition and in good operating condition. To assist operators in maintaining combat serviceability, the charts indicate what to check, how to perform the check and what action to take to correct a faulty indication. The *Reference* column lists the illustration, paragraph, or other manual that contains detailed repair or replacement instructions. If the defect cannot be remedied by performing the corrective action indicated, a higher category of maintenance is required.

4-4. Preventive Maintenance Checks and Services Periods

Preventive maintenance checks and services on the test set are required daily, weekly, monthly, and quarterly.

a. Paragraph 4-6 specifies checks and services that must be accomplished daily.

b. Paragraphs 4-7 through 4-12 specify *additional* checks and services that must be performed on a weekly, monthly, and quarterly basis, respectively.

4-5. Daily Preventive Maintenance Checks and Services

Daily Preventive maintenance includes checks and services to be performed on external surfaces and devices.

4-6. Daily Preventive Maintenance Checks and Services Chart

Seq. no.	Item	Procedure	Reference
1	Completeness	Check that all equipment is present	Paragraph 1-6.
2	Exterior surfaces	Remove dirt and moisture from exposed surfaces of cases, front panels, interconnecting plugs, and cables.	Paragraph 4-13.
3	Indicator lenses	Check for cracks and clips; replace lenses as necessary.	Paragraph 4-20.
4	Control knobs	Check that control knobs are unbroken and are tightly installed, but not binding against panel. Tighten loose knobs, adjust and retighten binding knobs, replace broken knobs.	Paragraph 4-20.
5	Switches	Check that switches work smoothly and that no excessive looseness exists. If switch movement is faulty but does not downgrade the tests, repair if feasible or leave as is; otherwise refer switch repair to higher level of maintenance.	None.

4-7. Weekly Preventive Maintenance Checks and **Services**

Weekly preventive maintenance includes checks and services to be performed on metal surfaces, connectors, and cables. These checks and services are in addition to daily maintenance.

4-8. Weekly Preventive Maintenance Checks and Services Chart

Seq. no.	Item	Procedure	Reference
1.	Metal surfaces	Inspect metal surfaces for rust or corrosion. Clean and touch up paint as required.	Paragraph 4-14.
2.	Front panel connectors	Check control panel connectors for bent or damaged pins, Refer damaged connectors to higher level of maintenance.	None.
3.	Cables and cable Connectors	Check cables for cracked or frayed insulation, broken wires, damaged connector. Refer damaged cable to higher level of maintenance.	None.

4-9. Monthly Preventive Maintenance Checks and Services

Monthly preventive maintenance checks services checks and services check the test set electronics. These are in addition to daily and weekly maintenance.

4-10. Monthly Preventive Maintenance Checks and Services Chart

Seq. no.	Item	Procedure	Reference
1	Test set.....	Perform test set self-test.....	Paragraph 3-6c.

4-11. Quarterly Preventive Maintenance Checks and Services

Quarterly preventive maintenance includes checksand sevices to be performed on software and spare parts. These checks and services are in addition to daily, weekly, and monthly maintenance.

4-12. Quarterly Preventive Maintenance Checks and Services Chart

Seq No.	Symptom	Probable Cause	Corrective action
1	Publications	Check that all publications are complete, serviceable, and current.	DA Pam 310-4.
2	Modifications	Check to see if new applicable MWO's have been published. All Urgent MWO's must be applied immediately. Normal MWO's must be scheduled.	DA Pam 310-7
3	Spare parts	Check all spare parts for general condition and method of storage. There should be no over-stock and shortages must be on requisition.	TM 11-6625-2440-20P.

4-13. Cleaning

WARNING

The fumes of trichloroethane are toxic. Provide thorough ventilation whenever used; DO NOT use near an open flame. Trichloroethane is not flammable, but exposure of the fumes to an open flame converts the fumes to highly toxic, dangerous gases.

CAUTION

Do not use trichloroethane on any painted or silk-screened surface of the test set. Clean the front panel and control knobs with a soft, clean cloth. If dirt is difficult to remove, dampen the cloth with water and use a mild soap. Clean exterior metal surfaces as follows:

a. Remove moisture and loose dirt with a clean cloth.

b. Remove grease, fungus, and ground-in dirt with isopropyl alcohol.

c. Clean unpainted surfaces with trichloroethane.

d. Remove dirt from hard-to-reach areas with a brush.

4-14. Touchup Painting Instructions

Remove rust and corrosion from metal surfaces by lightly sanding with fine sandpaper, (FSN 5350-235-0124). Brush two thin coats of paint (FSN 8010-817-1213), on the bare metal to protect from further corrosion. Refer to applicable cleaning and refinishing practices specified in TB 746-10.

Section III. TROUBLESHOOTING

4-15. General Troubleshooting Information

Troubleshooting of this equipment is based upon the self-test procedure (para 3-6). The self-test should be performed after installation, monthly when in continuous use, before each platform test when used intermittently, or when the test set operational status is questionable. Proceed through the tests in the self-test chart until an abnormal indication or result is observed. When an abnormal indication or result is observed, note the sequence number and turn to the corresponding sequence number in the troubleshooting chart (para 4-16). Perform the corrective actions indicated in the troubleshooting chart. If the corrective actions indicated do not result in correction of the trouble, a higher category of maintenance is required.

4-16. Troubleshooting Chart

Seq No.	Symptom	Probable Cause	Remedial Action
			Note. Replacement of power supplies and circuit cards requires removal of the chaa,is from the combination case. Refer to paragraph 4-17.
1	Blower does not operate	Blower faulty	Refer to higher category of maintenance.
2	a. Voltage indicated for PLATFORM SCAN switch position 1, 2, or 3 is 0 v.	a. Circuit card 2A1A17 faulty	a. Replace circuit card 2AlA17 (para 4-21).

Seq No.		Symptom	Corrective action
	b. Voltage indicated for PLATFORM SCAN switch position 1, 2, or 3 is not in proper phase or is out of tolerance.	*b.* Primary power circuitry faulty.	*b.* Refer to higher category of maintenance.
3	Voltage indicated is out of tolerance	26 v, 400-Hz circuitry faulty	Refer to higher category of maintenance.
4	a. 28 VDC indicator does not light	a. Lamp burned out	a. Replace lamp (para 4-20).
	b. TEST SET indicator lights	b. Power supply 1A1PS1 faulty	b. Replace power supply 1A1PS1 (para 4-19).
	c. C-D ELAPSED TIME meter fails to run and 115 VAC in dicator does not light.	c. Power supply 1A1PS1 faulty	c. Perform procedure in sequence No. 5 (para 3-6c).
	d. 115 VAC indicator does not light.	d. Lamp burned out	*d.* Replace lamp (para 4-20).
	e. ELAPSED TIME meter fails to run.	e. ELAPSED TIME meter faulty	e. Refer to higher category of maintenance.
	f. SELF TEST indicator does not light. faulty.	f. Lamp burned out or circuit card 1A1A3, 1A1A2, or 1A1A1	f. Replace lamp (para 4-20). If this fails to correct the trouble, replace circuit cards in the following order until faulty circuit card is located: 1A1A3, 1A1A2, 1A1A1 (para 4-18).
5	a. Voltage for TEST SET SCAN switch position 1, 2, or 3 is indicated on scope but not DVM.	a. Circuit card 2A1A16 faulty	a. Replace circuit card 2A1A16 (para 4-18).
	b. Voltage indicated for TEST SET SCAN switch position 1, 2, or 3 is out of tolerance.	b. Power supply 1A1PS1 faulty	b. Replace power supply 1A1PS1 (para 4-19).
6	a. PLATFORM, MONITOR, OVERTEMP, MAG HDG SERVO, or GSP TEST indicator does not light.	a. Lamp burned out or circuit card 1A1A3 faulty.	a. Replace lamp (para 4-20). If this fails to correct the trouble, replace rcircuit card 1A1A3 (para 4-18).
	b. CAGE, LEVEL, GC1, GC2, or COARSE HEATER indi-	b. Lamp burned out or circuit card 1A1A3 or 1A1A2 faulty.	b. Replace lamp (para 4-20). If this fails to correct the trouble, replace If trouble is still present, replace circuit card 1A1A3 (para 4-18).
	c. PLATF PWR indicator does not light.	c. Lamp burned out or circuit card 1A1A3, 1A1A2, or 1A1A1 faulty	c. Replace lamp (para 4-20). If this fails to correct the trouble, replace circuit cards in the following order until faulty circuit card is located: 1A1A3, 1A1A2, 1A1A1 (para 4-18).
7	a. PLATFORM, MONITOR, OVERTEMP, MAG HDG SERVO, or GSP TEST indicator light does not go out.	a. Circuit card 1A1AS faulty	a. Replace circuit card 1A1A3 (para 4-18).
	b. CAGE, LEVEL, GC1, or GC2 indicator does not go out.	b. Circuit card 1A1A3, 1A1A2, or 2A1A10 faulty	b. Replace circuit cards in the following order until faulty circuit card is located: 1A1A3, lAlA2, 2AlA10 (para 4-18).
	c. COARSE HEATER indicator does not go out.	c. Circuit card 1A1A2 or 1A1A3 Faulty	c. Replace circuit card 1A1A2 (para 4-18). If this fails to correct the trouble, replace circuit card 1A1A3 para 4-18).
	d. PLATF PWR indicator does not go out.	d. Circuit card 1A1A2, 1A1A1, or 1A1A3 faulty.	d. Replace circuit cards in the following order until faulty circuit card is located: 1A1A2, 1A1A1, 1A1A3, (para 4-18).

Seq No.	Symptom	Probable Cause	Corrective action
8	PLATFORM, MONITOR, OVER-TEMP, or MAG HDG SERVO indicator does not light.	Circuit card 1A1A1 or 1A1A3 faulty.	Replace circuit card 1A1A1 (para 4-18). If this fails to correct the trouble, replace circuit card 1A1A3 (para 4-18).
9	PLATFORM, MONITOR, OVER-TEMP, or MAG HDG SERVO indicator does not go out.	Circuit card 1A1A1 or 1A1A3 faulty.	Replace circuit card 1A1A1 para (4-18). If this fails to correct the trouble replace circuit card 1A1A3 (para 4-18).
10	Voltage indicated is out of Tolerance.	Circuit card 1A1A3 faulty	Replace circuit card 1A1A3 (para 4-18).
11	Frequency or waveform indicated for TEST SET SCAN switch position 7, 8, 9, or 10 is out of tolerance.	Circuit card 2A1A9 or 2A1A16 faulty.	Replace circuit card 2A1A9 (para 4-18). If this fails to correct the trouble, replace circuit card 2A1A16 (para 4-18).
12	Frequency indicated for TEST SET SCAN switch position 11 or 12 is out of tolerance.	Circuit card 2A1A12 faulty	Replace circuit card 2A1A12 (para 4-18).
13	a. CAGE indicator does not light.	a. Circuit card 2A1A10 or 2A1A16 faulty.	a. Replace circuit card 2A1A10 (para 4-18). If this fails to correct the trouble, replace circuit card 2A1A16 (para 4-18).
	b. PLATFORM, MONITOR, OVERTEMP, or MAG HDG SERVO indicator does not light.	b. Circuit card 2A1A3 faulty	b. Replace circuit card 2A1A3 (para 4-18).
14	a. Voltage indicated for TEST SET SCAN switch position 4, 5, 6, 8, 11, or 12 is out of tolerance.	a. Circuit card 2A1A10 faulty	a. Replace circuit card 2A1A10 (para 4-18).
	b. Voltage indicated for TEST SET SCAN switch position 9 is out of tolerance.	b. Circuit card 2A1A11, 2A1A10, 2A1A9, or 2A1A16 faulty.	b. Replace circuit cards in the following order until faulty circuit card is located: 2A1A11, 2A1A10, 2A1A9, 2A1A16 (para 4-18).
	c. Voltage indicated for TEST SET SCAN switch position 10 is out of tolerance.	c. Circuit card 2A1A11 faulty	c. Replace circuit card 2A1A11 (para 4-18).
15	Voltage indicated for PLATFORM SCAN switch position 11, or 12 Is out of tolerance.	Circuit card 2A1A10 faulty	Replace circuit card 2A1A10 (para 4-18)
16	a. CAGE indicator does not go out or LEVEL indicator does not light when CAGE switch is set to OFF.	a. Circuit card 2A1A10 faulty	a. Replace circuit card 2A1A10 (para 4-18).
	b. Level mode voltage indicated for TEST SET SCAN switch position 4, 5, 8, 11, or 12 is out of tolerance.	*b.* Circuit card 2A1A10 faulty	b. Replace circuit card 2A1A10 (para 4-18).
	c. Level mode voltage indicated for TEST SET SCAN switch position 6 is out of tolerance.	c. Circuit card 2A1A10 or 2A1A11 faulty.	c. Replace circuit card 2A1A10 (para 4-18). If this fails to correct the trouble, replace circuit card 2A1A11 (para 4-18).
	d. Level mode voltage indicated for TEST SET SCAN switch position 9 is out of tolerance.	d. Circuit card 2A1A11, 2A1A9, or 2A1A16 faulty.	d. Replace circuit cards in the following order until faulty circuit card is located: 2A1A11, 2A1A9, 2A1A16 (para 4-18).
	e. Level mode voltage indicated for TEST SET SCAN switch position 10 is out of tolerance.	c. Circuit card 2A1A11, 2A1A10, 2A1A9, or 2A1A16 faulty.	c. Replace circuit cards in the following order until faulty circuit card is located: 2A1A11, 2A1A10, 2A1A9, 2A1A16 (para 4-18).

Seq No.	Symptom	Probable Cause	Corrective action
f.	Level mode voltage indicated for PLATFORM SCAN switch position 11 or 12 is out of tolerance.	f. Circuit card 2A1A10 faulty	f. Replace circuit card 2A1A10 (para 4-18).
g.	LEVEL indicator does not go out or GC1 indicator does not light in	g. Circuit card 2A1A10 faulty	g. Replace circuit card 2A1A10 (para 4-18).
h.	GC1 mode voltage indicated for TEST SET SCAN switch position 4, 5, 8, 11, or 12 is out of tolerance.	h. Circuit card 2A1A10 faulty	h. Replace circuit card 2A1A10 (para 4-18).
i.	GC1 mode voltage indicated for TEST SET SCAN switch position 6 is out of tolerance.	i. Circuit card 2A1A10 or 2A1A11 faulty.	i. Replace circuit card 2A1A10 (para 4-18). If this fails to correct the trouble, replace circuit card 2A1A11 (para 4-18)
j.	GC1 mode voltage indicated for TEST SET SCAN switch position 9 or 10 is out of tolerance.	j. Circuit card 2A1A11, 2A1A10, 2A1A9, or 2A1A16 faulty.	j. Replace circuit cards in the following order until faulty circuit card is located: 2A1A11, 2A1A10, 2A1A9, 2A1A16 (para 4-18).
k.	GC1 mode voltage indicated for PLATFORM SCAN switch position 11 or 12 is out of tolerance.	k. Circuit card 2A1A10 faulty	k. Replace circuit card 2A1A10 (para 4-18).
1.	GC1 indicator does not go out or GC2 indicator does not light in	l. Circuit card 2A1A10 faulty	l. Replace circuit card 2A1A10 (para 4-18).
m.	GC2 mode voltage indicated for TEST SET SCAN switch position 4, 5, 8, 11, or 12 is out of tolerance.	m. Circuit card 2A1A10 faulty	m. Replace circuit card 2A1A10 (para 4-18).
n.	GC2 mode voltage indicated for TEST SET SCAN switch position 6 is out of tolerance.	n. Circuit card 2A1A10 or 2A1A11 faulty.	n. Replace circuit card 2A1A10 (para 4-18). If this fails to correct the trouble, replace circuit card 2A1A11 (para 4-18).
o.	GC2 mode voltage indicated for TEST SET SCAN switch position 9 or 10 is out of tolerance.	o. Circuit card 2A1A11, 2A1A10, 2A1A9, or 2A1A16 faulty.	o. Replace circuit cards in the following order until faulty circuit card is located: 2A1A11, 2A1A10, 2A1A9, 2A1A16 (para 4-18).
p.	GC2 mode voltage indicated for PLATFORM SCAN switch position 11 or 12 is out of tolerance.	p. Circuit card 2A1A10 faulty	p. Replace circuit card 2A1A10 (para 4-18).
17	Counter indication is out of tolerance.	Circuit card 2A1A12, 2A1A13, 2A1A14, or 2AlA15 faulty.	Replace circuit cards in the following order until faulty circuit card is located: 2A1A12, 2A1A13, 2A1A14, 2A1A15 (para 4-18).
18	Counter indication is out of tolerance.	Circuit card 2A1A12, 2A1A13, 2A1A14, or 2A1A15 faulty.	Replace circuit cards in the following order until faulty circuit card is located: 2A1A13, 2A1A18, 2A1A14, 2A1A15 (para 4-18).
19	Counter indication is out of tolerance.	Circuit card 2A1A7 faulty	Replace circuit card 2A1A7 (para 4-18).
20	Counter indication is not as specified	Circuit card 2A1A5 faulty	Replace circuit card 2A1A5 (para 4-18).
21	Counter indication is not as specified	Circuit card 2A1A5 faulty	Replace circuit card 2A1A5 (para 4-18).
22	Counter indication is out of tolerance.	Circuit card 2A1A6 faulty	Replace circuit card 2A1A6 (para 4-18).
23	Counter indication is out of tolerance.	Circuit card 2A1A8 faulty	Replace circuit card 2A1A8 (para 4-18).
24	Counter indication is out of tolerance.	Circuit card 2A1A8 faulty	Replace circuit card 2A1A8 (para 4-18).
25	Counter indication is not as specified	Circuit card 2A1A8 faulty	Replace circuit card 2A1A8 (para 4-18).
26	Counter indication is out of tolerance.	Circuit card 2A1A8 faulty	Replace circuit card 2A1A8 (para 4-18).
27	Counter indication is out of tolerance.	Circuit card 2A1A8 faulty	Replace circuit card 2A1A8 (para 4-18).
28	Counter indication is not as specified.	Circuit card 2A1A8 faulty	Replace circuit card 2A1A8 para 4-18).

Seq No.	Symptom	Probable Cause	Corrective action
29 Through 35 Through 38	Scope indication is out of tolerance Counter or scope indication is out of tolerance.	Circuit card 2A1A8 faulty ..... Circuit card 2A1A1 faulty	Replace circuit card 2A1A8 (para 4-18). Replace circuit card 2A1A2 (para 4-1 8).
39	Scope indication not as specified	Circuit card 2A1A2 faulty	Replace circuit card 2A1A2 (para 4-18).
40 and 41	Scope indication not as specified	Circuit card 2A1A3 faulty	Replace circuit card 2A1A3 (para 4-18).
42 43 and 44	Scope indication not as specified- Scope Indication not as specified	Circuit card 2A1A2 faulty ..... Circuit card 2A1A4 or 2A1A10 faulty.	Replace circuit card 2A1A2 (para 4-18). Replace circuit card 2A1A4 (para 4-18) If this fails to correct the trouble, replace circuit card 2A1A10 (para 4-18).
46 47 and 48	Scope indication not as specified Counter indication out of tolerance	Circuit card 2A1A4 faulty ..... Circuit card 2A1A6 or 2A1A8 faulty.....	Replace circuit card 2A1A4 (para 4-18) Replace circuit card 2A1A6 (para 4-18) If this fails to correct the trouble. replace circuit card 2A1A8 (para 4-18).
49 and 50	Counter indication out of tolerance	Circuit card 2A1A7or 2A1A8 faulty	Replace circuit card 2A1A7 (para. 4-18). If this fails to correct the trouble, replace circuit card 2A1A8 (para 4-18).
51 and 52	Counter indication is not specified	Circuit card 2A1A5 or 2A1A8 faulty	Replace circuit card 2A1A5 (para. 4-18). If this fails to correct the trouble,. replace circuit card 2A1A8 (para 4-1 8)
53	GC(2 indicator does not go out or GC1 indicator does not light.	Circuit card 2A1A1 or 2A1A16 faulty	Replace circuit card 2A1A10 (para 4-18) If this fails to correct the trouble, replace circuit card 2A1A16 (para 4-1 8).
54	Counter indication is not as specified.	Circuit card 2A1A15 or 2A1A10 faulty	Replace circuit card 2A1A15 (para 4-18) If this fails to correct the trouble, replace circuit card 2A1A15 para 4-18).
55	GC1 indicator does not go out or LEVEL indicator does not light.	Circuit card 2A1A10 or 2A1A16 faulty	Replace circuit card 2A1A10 (para 4-18) If this fails to correct the trouble, replace circuit card 2A1416 (para 4-18).
56	Counter indication is not as specified.	Circuit card 2A1A15 or 2A1A10 faulty.	Replace circuit card 2A1A15 (para 4-18) If this fails to correct the trouble, replace circuit card 2A1A10 (para 4-18).
57	Scope indication is not as specified.	Circuit card 2A1A2 faulty.	Replace circuit card 2A1A2 (para 4-18).
58	Scope indication is not as specified.	Circuit card 2A1A3 faulty.	Replace circuit card 2A1A3 (para 4-18).
59	LEVEL Indicator does not go out or cage indicator does not light.	Circuit card 2A1A10 or 2A1A16 faulty	Replace circuit card 2A1A10 (para 4-1 8). If this does not correct the trouble, replace circuit card 2A1A16 (para 4-18).
60	Scope Indication is not as Indicated.	Circuit card 2A1A4 faulty.	Replace circuit card 2A1A4 (para (4-18).

4-17. Chassis Removal and Replacement Control-display unit chassis removal and replacement is typical for both units of the test set and is illustrated in figure 4-1.

a. Removal. Remove 12 stud nuts (1) and remove chassis from combination case (2).

b. Replacement. Replace chassis in combination case (2) and secure with 12 stud nuts (1).

4-18. Circuit Cards 1A1A1 through 1A1A4 and 2A1A1 through 2A1A16, Removal and Replacement.
(fig. 4-1 and fig. 4-2)

Control-display unit card removal and replacement for cards 1A1A1 through 1A1A4 is typical for electronics unit cards 2A1A1 through 2A1A6. Card 1A1A4 is exploded in figure 4-1.

CAUTION

Use care when removing and replacing circuit cards; rough handling may damage connector pins.

a. Removal. Loosen two thumbscrews (3) and slide retainer (4),on card cage (5) to the right so that cards are not obstructed; carefully remove card 1A A4 (6).

b. Replacement. Carefully insert card 1A1A4 (6); slide retainer (4) to the left so that cards are locked in; tighten two thumbscrews (3).

4-19. Power Supply
1A1 PSI, Removal and Replacement
(fig. 4-1)

a. Removal.

(1) Remove nine screws (7) and washers (8);, pull out rear mounting plate (9) with attached heat sink and power supply.

(2) Remove eight screws (1), lockwashers (11), and washers (12) to release rear mounting plate (9) from heat sink and power supply.

(3) Remove eight screws (13) and washers (14) to release heat sink (17), with attached screws (15) and standoffs (16), from power supply.

(4) Disconnect connector 1A1P1 (18) and remove power supply (19).

b. Replacement.

(1) Connect connector 1A1P1 (18) to power supply (19).

(2) Tighten screws (15) to standoffs (16) and secure seat sink (17) to power supply (19) by replacing eight screws (13) and washers (14).

(3) Secure rear mounting plate (9) to standoffs (16) by replacing eight screws (10), lockwashers (11), and washers (12).

(4) Insert power supply assembly into chassis and secure rear mounting plate (9) by replacing nine screws (7) and washers (8).

4-20. Panel Components, Removal and Replacement

Control-display unit knob and indicator parts removal and replacement is typical for similar electronics unit components and is illustrated in figure 4-1.

a. Knob Removal. Loosen two setscrews (2) and pull knob (2 1).

b. Knob Replacement. Install knob (21) on shaft and tighten two setscrews (20).

c. Single-Lamp Type Indicator Lens and Lamp Removal. Unscrew lens (28) and pull defective lamp (29) from lens.

d. Single-Lamp Type Indicator Lens and Lamp Replacement. Insert lamp (29) into lens (28) and screw lens
into socket.

e. Dual-Lamp Type Indicator Lamp Removal. Remove two screws (22) to release legend plateholder (23), legend plate (24), and gasket (25);

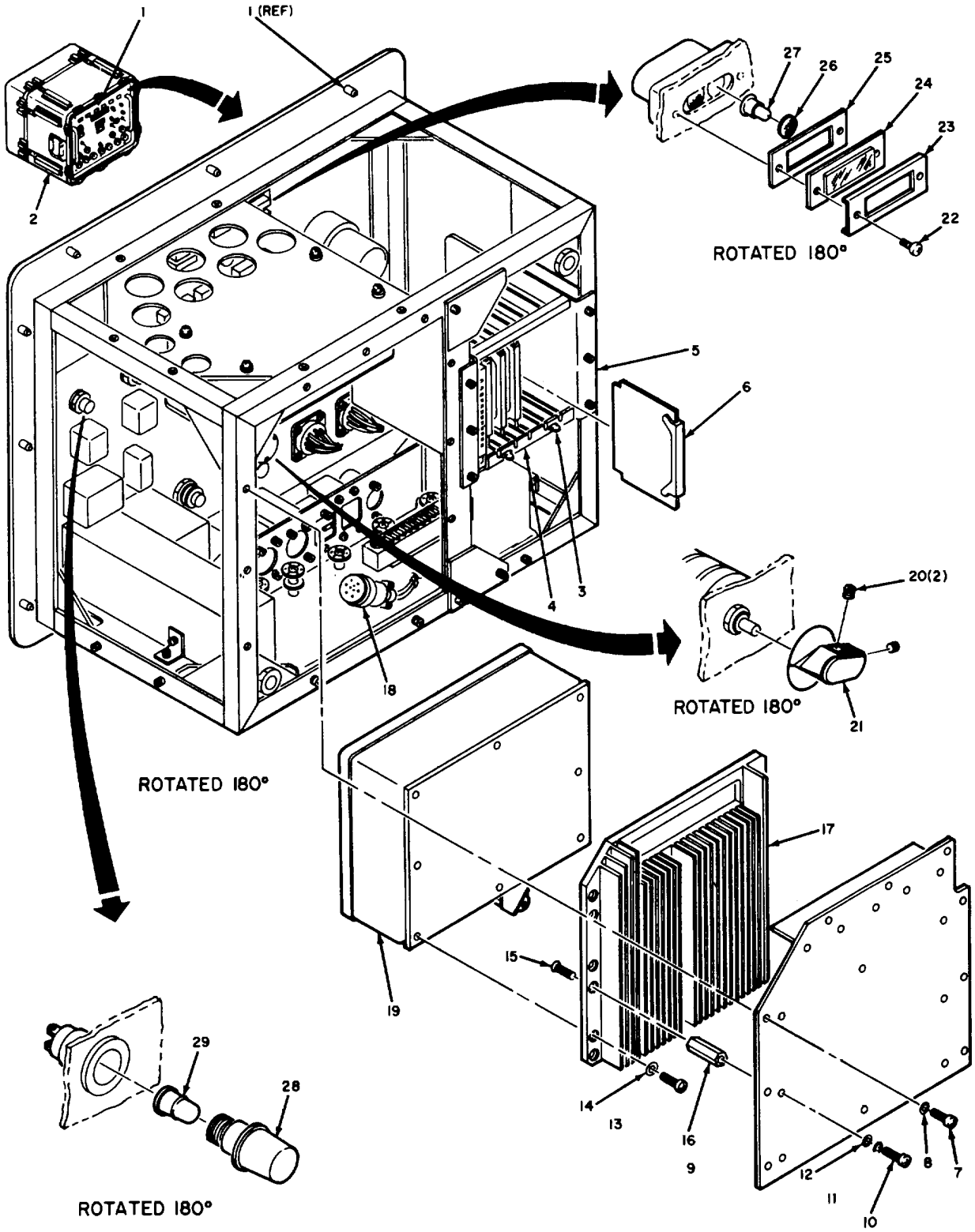

EL6625-2440-12-5

1. Stud nut(12)
2. Combination case 1MP1
3. Thumbscrew (2)
4. Retainer
5. Card cage
6. Card 1A1A4
7. Screw (9)
8 Washer (9)
9. Rear mounting plate
10. Screw (8)
11. Lockwasher (8)
12. Washer (8)
13. Screw (18)
14. Washer (8)
15. Screw (8)
16. Standoff (8)
17. Heat sink
18. Connector 1A1PS
I9. Power Supply 1A1PS1
20. Set Screw (2)
21. Knob
22. Screw (2)
23. Legend plateholder
24. Legend plate
25. Gasket
26. Filter (2)
27. Lamp (2)
28. Lens
29. Lamp

Figure 4-1. Control-display unit, exploded view.

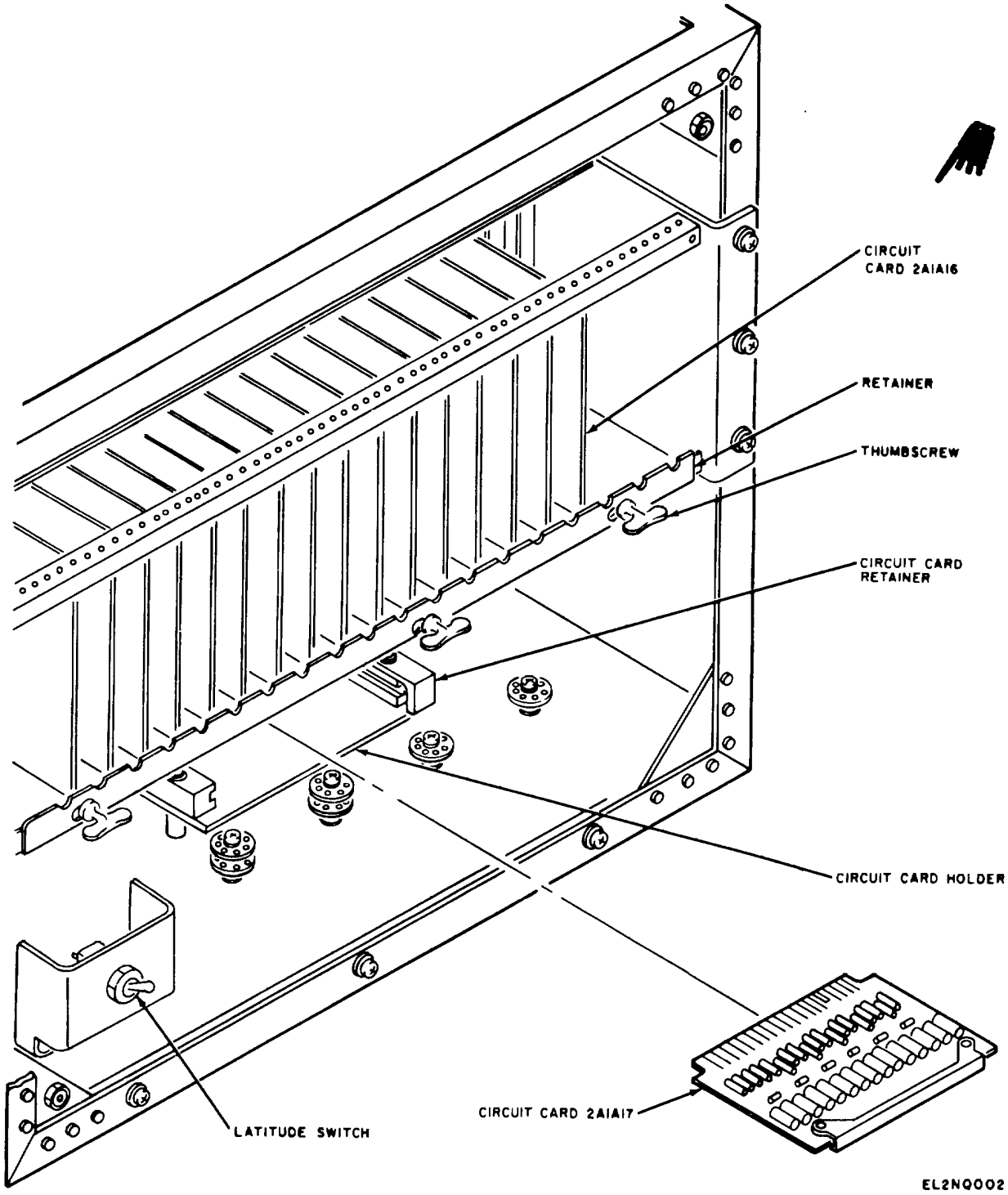

Figure 4-2. Electronics unit., exploded view.

remove filter (26) and pull defective lamp (27) from socket.

f. Dual-Lamp Type Indicator Lamp Replacement. Place lamp (27) in socket and install filter (26), gasket (25), legend plate (24), and legend plateholder (23) by replacing two screws (22).

4-21. Circuit Card 2A1A17, Removal and Replacement

(fig. 4-2)

a. Removal. Bend circuit card retainer upward and carefully pull circuit card 2AlA17 from circuit card holder.

b. Replacement. Bend circuit card retainer upward and carefully insert circuit card 2AlA17 into circuit card holder.

CHAPTER 5

SHIPMENT, LIMITED STORAGE, AND DEMOLITION TO PREVENT ENEMY USE

Section I. SHIPMENT AND LIMITED STORAGE

5-1. Disassembly of Equipment

Equipment disassembly is not required. Disconnect cables shown in figure 2-2.

5-2. Repackaging for Shipment or Limited Storage

The exact procedure for repackaging depends on the material available and the conditions under which the equipment is to be shipped or stored. Refer to information concerning packaging in para 2-2.

Section II. DEMOLITION TO PREVENT ENEMY USE

5-3. Authority for Demolition

The demolition procedures given in paragraph 5-4 should be used to prevent the enemy from using or salvaging equipment. Demolition of the equipment should be executed only upon the order of the commander.

5-4. Methods of Destruction

The tactical situation and time available determine the method used when destruction of equipment is ordered. In most cases, it is preferable to completely demolish some portions of the equipment rather than partially destroy all the equipment units.

WARNING

Make sure that all power is disconnected from the test set before committing any acts of destruction. Failure to comply could result in serious injury or death from electrical shock or burns.

a. Smash. Use sledges, axes, hammers, crow bars, or any other heavy tools available to smash the interior units of the test set.

(1) Use the heaviest tool available to smash the connectors, dials, knobs, and switches.

(2) Remove the covers from the unit and smash as many of the parts as possible.

b. Cut. Use axes, machetes, and similar tools to cut cabling, cording, and wiring. Cut all cords and cables in a number of places.

WARNING

Be extremely careful with explosives and incendiary devices. Use these items only when the need is urgent.

c. Burn. Burn technical manuals and diagrams first. Burn as much of the equipment as is flammable; use flamethrowers, gasoline, oil, or similar materials. Pour gasoline on the cut cables and internal wiring and ignite. Burn spare parts, or pour gasoline on the spares and ignite them.

d. Explode. Use explosives to complete demolition. Powder charges, fragmentation grenades, or incendiary grenades may be used. Incendiary grenades usually are most effective if destruction of small parts and wiring is desired.

(1) Use fragmentation grenades to destroy the interior of the test set. Unlatch the fasteners on the front cover of each unit. Open the front covers. Remove screws from the front panel of each unit. Pull the front panels forward and drop the grenades into the interior.

(2) For quick destruction of the test set, place an incendiary grenade on top of both units.

e. Dispose. Bury or scatter destroyed parts or throw into nearby waterways. This is particularly important if a number of parts have not been completely destroyed.

5-5. Priorities for Destruction

When lack of time prevents complete destruction of equipment, use the priority number in the following list to determine the priority of destruction of essential parts:

Item	Priority
Technical manuals	1
Power supply	2
Circuit cards	3
Cables	4
GFE	5

5-6. Spare Parts Destruction

Use list in paragraph 5-5 to determine the priority for spare parts destruction and then destroy equipment as specified in paragraph 5-4.

5-7. Report of Destruction

Report the destruction of equipment through command channels.

APPENDIX A

REFERENCES

The following publications contain information applicable to the operation and maintenance of Test Set, Gyro Stabilized Platform AN/ASM385.

DA Pam 310-4	Military Publications: Index of Technical Manuals, Technical Bulletins, Supply Manuals (Types 7, 8, and 9), Supply Bulletins, and Lubrication Orders
DA Pam 310-7	U.S. Army Equipment Index of Modification Work Orders
SB 38-100	Preservation, Packaging, Packing and Marketing Materials, Supplies and Equipment used by the Army
	TB SIG 291 Safety Measures to be Observed When Installing and Using Whip Antennas, Field Type Masts, Towers, Antennas, and Metal Poles That are Used With Communication, Radar, and Direction Finder Equipment
TB 746-10	Field Instructions for Painting and Preserving Electronics Command Equipment.
TM 11-6625-2440-20P	Organizational Maintenance Repair Parts and Special Tools List for Test Set, Gyro Stabilized Platform AN/ASM385.
TM 740-90-1	Administrative Storage of Equipment

APPENDIX B

MAINTENANCE ALLOCATION

Section I. INTRODUCTION

B-1. General

This appendix provides a summary of the maintenance operations covered in the equipment literature. It authorizes categories of maintenance for specific maintenance functions on repairable items and components and the tools and equipment required to perform each function. This appendix may be used as an aid in planning maintenance operations.

B-2. Maintenance Functions

Maintenance functions will be limited to and defined as follows:

a. Inspect. To determine serviceability of an item by comparing its physical, mechanical, and electrical characteristics with established standards.

b. Test. To verify serviceability and to detect incipient electrical or mechanical failure by use of special equipment such as gages, meters, etc. This is accomplished with external test equipment and does not include operation of the equipment and operator type tests using internal meters or indicating devices.

c. Service. To clean, to preserve, to charge, and to add fuel, lubricants, cooling agents, and air. If it is desired that elements, such as painting and lubricating, be defined separately, they may be so listed.

d. Adjust. To rectify to the extent necessary to bring into proper operating range.

e. Align. To adjust two or more components or assemblies of an electrical or mechanical system so that their functions are properly synchronized. This does not include setting the frequency control knob of radio receivers or transmitters to the desired frequency.

f. Calibrate. To determine the corrections to be made in the readings of instruments or test equipment used in precise measurement. Consists of the comparison of two instruments, one of which is a certified standard of known accuracy, to detect and adjust any discrepancy in the accuracy of the instrument being compared with the certified standard.

g. Install. To set up for use in an operational environment such as an encampment, site, or vehicle.

h. Replace. To replace unserviceable items with serviceable like items.

i. Repair. To restore an item to serviceable condition through correction of a specific failure of unserviceable condition. This function includes, but is not limited to welding, grinding, riveting, straightening, and replacement of parts other than the trial and error replacement of running spare type items such as fuses, lamps, or electron tubes.

j. Overhaul. Normally, the highest degree of maintenance performed by the Army in order to minimize time work in process is consistent with quality and economy of operation. It consists of that maintenance necessary to restore an item to completely serviceable condition as prescribed by maintenance standards in technical publications for each item of equipment. Overhaul normally does not return an item to like new, zero mileage, or zero hour condition.

k. Rebuild. The highest degree of materiel maintenance. It consists of restoring equipment as nearly as possible to new condition in accordance with original manufacturing standards. Rebuild is performed only when required by operational considerations or other paramount factors and then only at the depot maintenance category. Rebuild reduces to zero the hours or miles the equipment, or component thereof, has been in use.

1. Symbols. The uppercase letter placed in the appropriate column indicates the lowest level at

which that particular maintenance function is to be performed.

B-3. Explanation of Format

a. Column 1, Group Number. Column 1 lists arbitrary group numbers, the purpose of which is to identify components, assemblies, subassemblies, and modules with the next higher assembly.

b. Column 2, Functional Group. Column 2 lists the noun names of components, assemblies, subassemblies, and modules on which maintenance is authorized.

c. Column 3, Maintenance Functions. Column 3 lists the maintenance category at which performance of the specific maintenance function is authorized. Authorization to perform a function at any category also includes authorization to perform that function at higher categories. The codes used represent the various maintenance categories as follows:

Code	*Maintenance category*
C	Operator/crew
0	Organizational maintenance
F	Direct support maintenance
H	General support maintenance
D	Depot maintenance

d. Column 4, Tools and Test Equipment. Column 4 specifies, by code, those tools and test equipments required to perform the designated function. The numbers appearing in this column refer to specific tools and test equipment which are identified in table I.

e. Column 5, Remarks. Self-explanatory.

B-4. Explanation of Format of Table I, Tool and Test Equipment Requirements

The columns in table I are as follows:

a. Tools and Equipment. The numbers in this column coincide with the numbers used in the tools and equipment column of the applicable tool for the maintenance function.

b. Maintenance Category. The codes in this column indicate the maintenance category normally allocated the facility.

c. Nomenclature. This column lists tools, test, and maintenance equipment required to perform the maintenance functions.

d. Federal Stock Number. This column lists the Federal stock number of the specific tool or test equipment.

e. Tool Number. Not used.

SECTION II. MAINTENANCE ALLOCATION CHART

GROUP NUMBER	COMPONENT ASSEMBLY NOMENCLATURE	MAINTENANCE FUNCTIONS											TOOLS AND EQUIPMENT	REMARKS
		INSPECT	TEST	SERVICE	ADJUST	ALIGN	CALIBRATE	INSTALL	REPLACE	REPAIR	OVERHAUL	REBUILD		
1A	GYRO STABLIZED PLATFORM TEST SET AN/ASM-385	0												
			0										3 thru 6	Isolate circuit card level.
				0										
					H		H						3 thru 7	Perform adjustments and calibration to power supply and control and display unit.
									0					
										0			**1,2**	
											H		1 thru 20	
												D	1 thru 23	
1A1	ELECTRONIC SWITCHING UNIT, TEST	0												
			0										3 thru 6	Fault isolate to circuit and level.
				0										
									0					
										0			1,2	
											H		1 thru 20	
												D	1 thru 23	
	GYRO TORQUER	0												
	LOAD #2		0										3 thru 6	Test circuit cards as part of end item
	MODE													
	FOUR MIN COUNTER													
	DIVIDE x5													
	Z GAIN CHANGE													
	Y GAIN CHANGE													
	CLOCK GEN							0				1	2	Replace circuit cards and return failed card
	SELF TEST							to depot.						
	FILTER													
	OUTPUTS AND STROBE													
	COUNTER													

MAINTENANCE ALLOCATION CHART

GROUP NUMBER	COMPONENT ASSEMBLY NOMENCLATURE	MAINTENANCE FUNCTIONS											TOOLS AND EQUIPMENT	REMARKS
		INSPECT	TEST	SERVICE	ADJUST	ALIGN	CALIBRATE	INSTALL	REPLACE	REPAIR	OVERHAUL	REBUILD		
1A2	CONTROL-DISPLAY, TEST SET C-8316/ASM-385	0												
			0										3 thru 6	Fault isolate to circuit card level.
				0										
							H						3 thru 7	
									0					
										0			1,2	
											H		1 thru 20	
												D	1 thru 23	
	COMPONENT BOARD #1													
	LAMP DRIVER													
	MAG HEADING													
	TRUE HEADING	0												
			0										3 thru 6	Test circuit cards as part of end item
								0					1,2	Replace circuit cards and return failed card to depot.
1A2A1	POWER SUPPLY UNIT	0												
			0										3 thru 6	Test as part of end item
					H	H							3 thru 7	
									0				1,2	
										0			1,2	Repair by replacement of circuit cards
												D	1 thru 23	
	+5V SWITCHING REG	D												
	REGULATOR TYPE IV		D		D		D						3 thru 7, 21 - 23	
	REGULATOR III												21 THRU 23	
	COMPONENT ASSY								D				1,2,8	
	TRANSFORMER													
	MODULE NO.1													
	REG CONTROLLER													

TABLE I. TOOL AND TEST EQUIPMENT REQUIREMENTS

TOOLS EQUIPMENT	MAINTENANCE CATEGORY	NOMENCLATURE	FEDERAL STOCK NUMBER	TOOL NUMBER
1	O	TOOL KIT, ELECTRONIC EQUIPMENT TK-101/G	5180-064-5178	
2	O,H,D	TOOL KIT, ELECTRONIC EQUIPMENT TK-105/G	5180-610-8177	
3	O,H,D	VOLTMETER (FLUKE MODEL 887A)		
4	O,H,D	OSCILLOSCOPE AN/USM-281A	6625-179-8441	
5	O,H,D	COUNTER, ELECTRONIC DIGITAL READOUT AN/USM-207	6625-911-6368	
6	O,H,D	PHASE ANGLE VOLTMETER ME-223	6625-810-3917	
7	H,D	MULTIMETER AN/USM-223	6625-999-7465	
8	H,D	TOOL KIT, ELECTRONIC EQUIPMENT TK-100/G	5180-605-0079	
9	H,D	CONTACT LOCATOR (BENDIX P/N 11-8673-6)		
10	H,D	TERMI-POINT SERVICE TOOL (AMP INC P/N 69535)		
11	H,D	MANDREL (AMP INC P/N 69545-1)		
12	H,D	INSERTION TOOL (AMP INC P/N 69514)		
13	H,D	EXTRACTOR LOCATOR TOOL (AMP INC P/N 69357-5)		
14	H,D	INSERTION TOOL (HUGHES P/N TWO 22IT000)		
15	H,D	REMOVAL TOOL (HUGHES P/N TWO 22RT000)		
16	H,D	CRIMPING TOOL (AMP INC P/N 48698)		
17	H,D	REMOVAL TOOL (AMP INC P/N 380305-1)		
18	H,D	INSERTION TOOL (AMP INC P/N 380310-2)		
19	H,D	CRIMPING TOOL (DANIELS P/N MH 750-C HEAD)		
20	H,D	WIRE STRIPPER (GGG-S-793A)		
21	D	OSCILLATOR SG-621/U	6625-606-9727	

		TOOL AND TEST EQUIPMENT REQUIREMENTS		
TOOLS EQUIPMENT	MAINTENANCE CATEGORY	NOMENCLATURE	FEDERAL STOCK NUMBER	TOOL NUMBER
22	D	DUAL DC POWER SUPPLY (POWER DESIGN MODEL TW 5005)		
23	D	POWER SUPPLY TESTER (LITTON MODEL TESK 209319)		

By Order of the Secretary of the Army:

W. C. WESTMORELAND,
General, United States Army,
Chief of Staff.

Official:

VERNE L. BOWERS,
Major General, United States Army,
The Adjutant General.

Distribution:
To be distributed in accordance with DA Form 1231, direct and general support maintenance requirements for the OV-1D and U-21 aircraft.

. U.S. GOVERNMENT PRINTING OFFICE : 1985 0 - 461-202 (20388)

TEAR ALONG PERFORATED LINE

RECOMMENDED CHANGES TO EQUIPMENT TECHNICAL PUBLICATIONS

SOMETHING WRONG WITH THIS PUBLICATION?

FROM: (PRINT YOUR UNIT'S COMPLETE ADDRESS)

DATE SENT

PUBLICATION NUMBER	PUBLICATION DATE	PUBLICATION TITLE
TM 11-5825-270-10	23 Jul 81	Radio Frequency R-2176/FRN

BE EXACT. . .PIN-POINT WHERE IT IS

PAGE NO.	PARA-GRAPH	FIGURE NO	TABLE NO.	IN THIS SPACE TELL WHAT IS WRONG AND WHAT SHOULD BE DONE ABOUT IT:

PRINTED NAME, GRADE OR TITLE, AND TELEPHONE NUMBER

SIGN HERE:

DA FORM 1 JUL 79 2028-2

PREVIOUS EDITIONS ARE OBSOLETE.

P.S.—IF YOUR OUTFIT WANTS TO KNOW ABOUT YOUR RECOMMENDATION MAKE A CARBON COPY OF THIS AND GIVE IT TO YOUR HEADQUARTERS.

PIN NUMBER: 016237:

This fine document...

Was brought to you by me:

Liberated Manuals -- free army and government manuals

Why do I do it? I am tired of sleazy CD-ROM sellers, who take publicly available information, slap “watermarks” and other junk on it, and sell it. Those masters of search engine manipulation make sure that their sites that sell free information, come up first in search engines. They did not create it... They did not even scan it... Why should they get your money? Why are not letting you give those free manuals to your friends?

I am setting this document FREE. This document was made by the US Government and is NOT protected by Copyright. Feel free to share, republish, sell and so on.

I am not asking you for donations, fees or handouts. If you can, please provide a link to liberatedmanuals.com, so that free manuals come up first in search engines:

<A HREF=http://www.liberatedmanuals.com/>Free Military and Government Manuals</A>

- Sincerely
  Igor Chudov
  http://igor.chudov.com/
- Chicago Machinery Movers