TM 11-6625-1589-15-1

TECHNICAL MANUAL

OPERATOR'S, ORGANIZATIONAL, DIRECT SUPPORT GENERAL SUPPORT, AND DEPOT MAINTENANCE MANUAL

HEWLETT-PACKARD OSCILLATOR MODEL 204C

HEADQUARTERS, DEPARTMENT OF THE ARMY
NOVEMBER 1971

Information in this publication has been furnished under United States Government Contract No. DA28-043-AMC-01693 (E) and shall not be either released outside the government, or used, duplicated, or disclosed in whole or in part for manufacture or procurement without the written permission of the Hewlett-Packard Company.

*TM 11-6625-1589-15-1

TECHNICAL MANUAL

No. 11-6625-1589-15-1

HEADQUARTERS
DEPARTMENT OF THE ARMY
WASHINGTON , D.C., 3 November 1971

Operator's, Organizational, Direct Support, General Support,

and Depot Maintenance Manual

HEWLETT–PACKARD OSCILLATOR MODEL 204C

TABLE OF CONTENTS

Section I		Page
1-1.	Scope.	1-1
1-2.	Indexes.	1-1
1-3.	Forms and Records.	1-1
1-4.	Technical Characteristics.	1-2
1-5.	Description.	1-3
1-10.	Options Available.	1-3
1-12.	Items Comprising an Operable Equipment.	1-3

Section II		Page
	INSTALLATION	2-1
2-1.	Introduction	2-1
2-3.	Initial Inspection	2-1
2-5.	Power Requirements	2-1
2-8.	Grounding Requirements	2-1
2-11.	Installation	2-2
2-13.	Bench Mounting	2-2
2-15.	Rack Mounting	2-2
2-17.	Combination Mounting	2-2
2-19.	Repackaging for Shipment	2-2

*This technical manual is an authentication of the manufacturer's Commercial literature and does not conform with the format and content specified in AR 310-3, Military Publications. This technical manual does, however contain available information that is essential to the operation and maintenance of the equipment.

TABLE OF CONTENTS (CONT)

Section		Page
III	OPERATING INSTRUCTIONS.	3-1
3-1.	Introduction	3-1
3-3.	Instrument Description	3-1
3--5.	Turn-on Procedure	3-1
3-7.	Operating Considerations	3-1
3-8.	Floating Output	3-1
3-10.	Synchronization	3– 2
3-13.	Low Distortion	3– 5
3-15.	Battery Operation	3– 5
3-16.	Rechargeable Battery Operation	3– 5
3-22.	Recharging Nickel-Cadmium Batteries	3– 6
3-29.	Cycle-life of Nickel Cadmium Batteries	3– 7

Section		Page
IV	PRINCIPLES OF OPERATION.	4-1
4-1.	Introduction	4-1
4-3.	Block Diagram Description	4-1
4-4.	Bridge and Amplifier	4-1
4-10.	Peak Comparator	4-2
4-12.	AGE	4-2
4-14.	600 Ohm Attenuator	4-2

Section		Page
V	MAINTENANCE	5-1
5-1.	Introduction	.5-1
5-4.	Performance Checks	5-1
5-6.	Dial Accuracy Check	.5-1
5-7.	Flatness Check	5-2
5-8.	Distortion Check	.5-4
5-9.	Output Voltage and Impedance Check	5-5
5-10.	Output Control Check	.5-6
5-11.	Sync Output Check	.5-6
5-12.	Sync Input Check	.5-6
5-13.	Balance Check	5-7
5-14.	Hum and Noise Check	.5-7
5-15.	Adjustment and Calibration Procedures	5-9
5-16.	Introduction	.5-9
5-19.	Power Supply	.5-9
5-21.	Bias Adjustment	.5-9
5-22.	AGC Adjustment	.5-9
5-23.	AGC and Frequency Adjustment	5-9
5-24.	High Frequency Adjustment	5-10
5-25.	Distortion Adjustment	5-10
5-26.	Troubleshooting Procedure	.5-11

TABLE OF CONTENTS (CONT)

Section		Page
VI	CIRCUIT DIAGRAMS	6-1
6-1.	Introduction.	6-1
6-3.	Schematic Diagrams	6-1
6-5.	Component Location Diagrams	6-1

Appendix

A.	**REFERENCES.**	A-1
B.	**MAINTENANCE ALLOCATION.**	A–2

SECTION I

INTRODUCTION

1-1. SCOPE.

This manual describes the Hewlett-Packard Oscillator Model 204C and covers its operation, and organizational, direct and general support, and depot maintenance. It includes troubleshooting and replacement of parts available to organizational, DS, GS, and depot maintenance personnel.

1-2. INDEXES OF PUBLICATIONS.

a. Refer to the latest issue of PA Pam 310-4 to determine whether there are new editions, changes, or additional publications pertaining to this equipment.

b. Refer to the latest issue of 310-7 to determine if there are current, applicable modification work orders (MWO's) pertaining to this equipment.

1-3. FORMS AND RECORDS.

a. REPORT OF MAINTENANCE UNSATISFACTORY EQUIPMENT. Use equipment forms and records in accordance with instructions in TM 38-750.

b. REPORTS OF PACKAGING AND HANDLING DEFICIENCIES. Fill out and forward DD Form 6 (Report of Packaging and Handling Deficiencies) as prescribed in AR-700-58 (Army), NAVSUP Publication 378 (Navy), AFR 71-4 (Air Force) and MCO P4030.29 (Marine Corps).

c. DISCREPANCY IN SHIPMENT (DISREP) (SF361). Fill out and forward Discrepancy in Shipment Report DISREP) (SF361) as prescribed in AR 55-38 (Army), NAVSUP pub 459 (Navy), AFM 75-34 (Air Force) and MCO P4610.19 (Marine Corps).

d. REPORTING OF EQUIPMENT MANUAL IMPROVEMENTS. Report of errors, omissions, and recommendations for improving this manual by the individual user is encouraged. Reports should be submitted on DA Form 2028 (Recommended Changes to DA Publications) and forwarded direct to: Commanding General, U.S.Army Electronics Command, ATTN: AMSEL-ME-NMP-EM, Fort Monmouth, New Jersey 07703.

1-4. TECHNICAL CHARACTERISTICS

RANGES

Frequency: 5 Hz to 1.2 MHz in 6 overlapping ranges.

PERFORMANCE RATINGS

Dial Accuracy: ±3% of frequency setting.

Distortion: At maximum output into 600Ω load, 1 kHz reference.

Low Dist. Mode	±1%	±0.5%	±1%
Normal Mode	±1%	±0.5%	±1%

5 100 300k 1.2M (Hz)

Distortion:

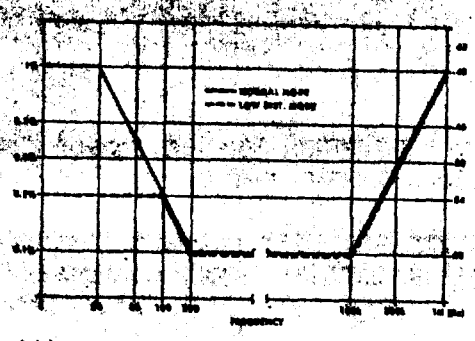

Hum and Noise: Less than 0.01% of output.

OUTPUT CHARACTERISTICS

Output Voltage: 2.5V rms (10mW) into 600Ω; 5V rms open circuit.

Output Impedance: 600Ω at any attenuator setting.

Output Control: >40 dB range; continuously adjustable.

Output Balance: >40 dB below 20 kHz. Can be floated up to ±500V peak between output and chassis ground.

SYNCHRONIZATION

Sync Output: Sine wave in phase with output; 1.7V rms open circuit; impedance 10 kΩ.

Sync Input: Oscillator can be synchronized to external signal. For 5 V rms input, sync frequency can be as much as ±7% away from set frequency (sync range). Sync range is a linear function of sync voltage.

GENERAL

Operating Temperature: Instrument will operate within specifications from 0°C to 55°C.

Storage Temperature: −40°C to +75°C.

Power: Standard: AC Line 115V or 230 V ±10%, 50 Hz to 400 Hz, <4W.

Opt 01: Mercury batteries 500 hours operation.

Opt 02: Line/Rechargeable batteries 115V or 230V, ±10%, 50 Hz to 400 Hz, <4W. 40 hours operation per recharge.

Dimensions: 6-3/32" high, 5-1/8" wide, 8" deep (155 x 130,1 x 203,2 mm).

Weight: Net 6 lbs (2,7 kg)
Shipping 8 lbs (3,6 kg)

1-5. DESCRIPTION.

1-6. The Model 204C is a stable signal source that produces sine wave frequencies between 5 Hz and 1.2 MHz in six ranges. The output level is variable from 0 to 5 volts rms from a constant 600 ohm source. When working into a 600 ohm load, the maximum output level is 2.5 volts rms.

1-7. A SYNC feature is included in the Model 204C. The SYNC jack on the front panel provides an output sync voltage of 1.7 V rms, or accepts an external signal to synchronize the oscillator. This feature permits several oscillators to be synchronized to the same frequency or harmonics thereof.

1-8. The output of the Model 204C may be isolated from the cabinet. This floating output is balanced to better than 40 dB below 200 kHz with an isolated, battery operated instrument, or better than 40 dB below 20 kHz with an instrument having an ac line connection.

1-9. The standard Model 204C contains an ac power supply that can be operated from 115/230 volts ac, 50 to 400 Hz. The instrument is also available with a mercury battery power supply as an Option 01, or with a rechargeable nickel cadmium battery power supply as an Option 02. The various power supplies can easily be interchanged by removing the instrument covers, unplugging one supply and plugging another in its place.

1-10. OPTIONS AVAILABLE.

1-11. The following power supplies are available in kit form for field installation:

-hp- 11107A AC Power Pack (standard)
-hp- 11108A Mercury Power Pack (Option 01)
-hp- 11109A Rechargeable Battery/AC Power Pack (Option 02)

1-12. ITEMS COMPRISING AN OPERABLE EQUIPMENT .

FSN	Item	Quantity	Height (in)	Depth (in)	Width (in)	Weight (lb)
5895-177-1400	Hewlett-Packard Oscillator Model 204C	1	6-3/32	8	5-1/8	6

SECTION II

INSTALLATION

2-1. INTRODUCTION.

2-2. This section contains information and instructions necessary for installing and shipping the Model 204C Oscillator. Included are initial inspection procedures, power and grounding requirements, installation information, and instructions for repackaging for shipment.

2-3. INITIAL INSPECTION.

2-4. This instrument was carefully inspected both mechanically and electrically before shipment. It should be physically free of mars or scratches and in perfect electrical order upon receipt. To confirm this, the instrument should be inspected. for physical damage that occurred in transit. If the instrument was damaged in transit, refer to paragraph 1-3. Check for supplied accessories, and test the electrical performance of the instrument using the procedure outlined in Paragraph 5-4.

2-5. POWER REQUIREMENTS.

2-6. The standard Model 204C will operate from any source of 115 or 230 volts (± 10%), at 50 to 400 Hz. With the instrument disconnected from the ac power source, move the voltage selector switch (located on the rear panel) so the designation appearing on the switch matches the nominal voltage of the power source to be used. Power dissipation is less than 5 watts.

2-7. Line voltage requirements for Option 02 (Rechargeable Nickel-Cadmium battery supply are identical to those given in Paragraph 2-6 for the standard Model 204C.

2-8. GROUNDING REQUIREMENTS.

2-9. To protect operating personnel, the National Electrical Manufacturer's Association (NEMA) recommends that the instrument cabinet be grounded. The standard Model 204C is equipped with a three-conductor power cable which, when plugged into an appropriate receptacle, grounds the instrument. The offset pin on the power cable three-prong connector is the ground wire.

2-10. To preserve the protection feature when operating the instrument from a two-contact outlet, use a three-prong to two-prong adapter and connect the green pigtail on the adapter to ground.

2-11. INSTALLATION.

2-12. The Model 204C is fully transistorized; therefore, no special cooling is required. However, the instrument should not be operated where the ambient temperature exceeds 55°C (131°F).

2-13. BENCH MOUNTING.

2-14. The Model 204C is shipped with plastic feet and tilt stand in place, ready for use as a bench instrument.

2-15. RACK MOUNTING.

2-16. The Model 204C may be rack mounted by using an adapter frame (-hp- Part No. 5060-0797). The adapter frame is a rack frame that accepts any combination of -hp- submodular units. It can be rack mounted only.

2-17. COMBINATION MOUNTING.

2-18. The Model 204C may be mounted in combination with other submodular units by using a Combining Case (-hp- Model 1051A or 1052A). The Combining Case is a full-module unit which accepts various combinations of submodular units. Being a full-module unit, it can be bench or rack mounted and is analogous to any full-module unit.

2-19. REPACKAGING FOR SHIPMENT.

2-20. The following paragraphs contain a general guide for repackaging of the instrument for shipment. Refer to Paragraph 2-21 if the original container is to be used; 2-22 if it is not.

2-21. If original container is to be used, proceed as follows:

a. Place instrument in original container if available.

b. Ensure that container is well sealed with strong tape or metal bands.

2-22. If original container is not to be used, proceed as follows:

a. Wrap instrument in heavy paper or plastic before placing in an inner container.

b. Place packing material around all sides of instrument and protect panel face with cardboard strips.

c. Place instrument and inner container in a heavy carton or wooden box and seal with strong tape or metal bands.

d. Mark shipping container with “DELICATE INSTRUMENT", “FRAGILE” etc.

SECTION III

OPERATING INSTRUCTIONS

3-1. INTRODUCTION.

3-2. This section contains the information necessary for operation of the Model 204C.

3-3. INSTRUMENT DESCRIPTION.

3-4. Each operating control, indicator, and connector on the front and rear panels is identified and described in Figure 3-1.

3-5. TURN ON PROCEDURE.

3-6. To turn on the standard Model 204C, proceed as follows:

a. Set the two-position voltage selector switch on the rear panel to the value of available line voltage.

b. Connect AC Power Receptacle to power line voltage.

c. Switch RANGE switch from OFF to desired frequency range.

d. Select desired frequency and voltage output with frequency dial and amplitude controls respectively.

3-7. OPERATING CONSIDERATIONS.

3-8. FLOATING OUTPUT.

3-9. The Model 204C chassis can be isolated from ground by disconnecting the grounding strap between the chassis and ground terminals on the rear panel. With the chassis isolated, the output may be connected to an instrument or a circuit without regard to dc potential difference (up to + 500 volts).

3-10. SYNCHRONIZATION.

3-11. To synchronize the Model 204C connect a signal to the SYNC terminal on the front panel. An input signal of 5 volts rms may vary as much as ± 7% in frequency and still synchronize the output at set frequency.

3-12. The SYNC terminal also provides an output sync voltage of 1.7 volts rms at the same frequency as the Model 204C output.

NOTE . THE MODEL 204C CAN BE SYNCHRONIZE TO ANY SIGNIFICANT HARMONIC OF AN EXTERNAL SIGNAL. HOWEVER, IF A NON-SINUSOIDAL WAVEFORM IS USED TO SYNCHRONIZE THE MODEL 204C, SOME PORTION OF THE EXTERNAL, SYNC SIGNAL WILL BE FED TO THE OUTPUT. THIS SMALL SIGNAL WILL APPEAR AS DISTORTION, THE AMOUNT OF THIS EXTERNAL DISTORTION Will BE DIRECTLY PROPORTIONAL TO THE AMP LITUDE OF THE SYNC SIGNAL. FOR A NON- SINUSOIDAL SYNC INPUT OF 2 VOLTS PEAK-TO-PEAK, THE DISTORTION WILL BE DOWN ABOUT -45 DB FOR FREQUENCIES WHICH ARE NORMALLY DOWN -60 DB.

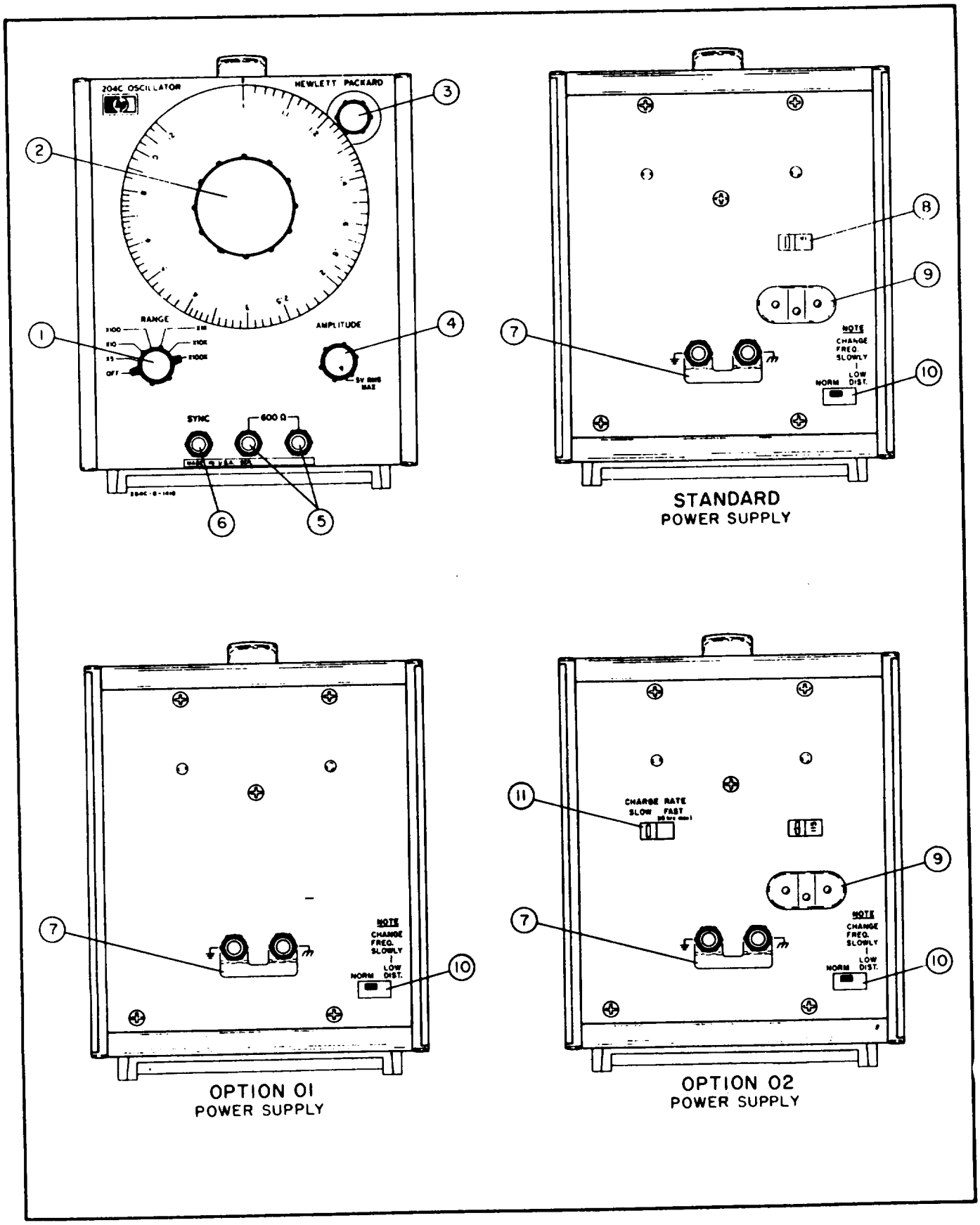

P/O Figure 3-1. Description of Controls, Indicators and Connectors

1. RANGE Switch: Selects frequency range. In OFF position the oscillator is inoperative.

2. Frequency Dial: Selects frequency within desired range. Dial calibration multiplied RANGE switch position indicates output frequency.

3. Frequency Vernier: Provides fine tuning of frequency dial.

4. AMPLITUDE Control: Selects desired output level from 0 to 5 volts rms. (2.5 volts rms into 600 ohms).

5. Output Terminals: Provides a 600 ohm output at a frequency and amplitude determined by control settings.

6. SYNC: 1. Provides an input for an external sync signal.
   2. Provides an output sync signal of 1.7 volts rms.

7. Ground Strap: Connects the floating circuit chassis to ground.

8. Voltage Selector Switch: Selects line voltage of 115 volts or 230 volts ac.

9. AC Power Receptacle: Mates with AC power cord supplied with this instrument for line voltage connection.

10. NORM/LOW DIST. Switch: Selects normal or low distortion on the X5 and X10 ranges (see Paragraph 3-14).

11. CHARGE RATE Switch: (Option 02 only) Selects SLOW or FAST rate of recharging the nickel-cadmium cells.

P/O Figure 3-1. Description of Controls, Indicators and Connectors

3-13. LOW DISTORTION.

3-14. At frequencies below 200 Hz, distortion can be reduced by switching the NORM/LOW DIST switch on the rear panel to LOW DIST. In the LOW/DIST mode the Model 204C will have a longer settling time when changing frequencies. To avoid this, set the desired frequency before switching to the LOWDIST mode.

NOTE

The Model 204C output may appear unstable, or drop to zero when turning the frequency dial rapidly or changing the RANGE switch while in the LOW/DIST mode.

3-15. BATTERY OPERATION.

3-16. RECHARGEABLE BATTERY OPERATION.

3-17. There is no change in the operating procedure for an instrument in which the rechargeable battery supply has been installed. However, this power supply permits either ac operation for 115/230 vac ± 10% (selected by switch on rear) 50 to 400 Hz power sources or battery operation for portable applications. Battery operation only (with charger power cord disconnected) is required at temperatures below 32° F (0°C) and is recommended at temperatures above 104°F (40°C).

3-18. When the RANGE switch is turned OFF, power is removed from the oscillator portion of the instrument and a resistor is connected across the output of the power supply . The charger will continue to operate as long as the power cord is connected to a power source. The resistor, placed across the output of the power supply, acts as a load in place of the oscillator section to maintain a constant charge rate through the batteries. A diode in the output circuit prevents battery discharge when the oscillator is not connected to a power source.

3-19. It is recommended that the power cord be connected to a power source whenever possible. This will prevent self-discharge of the battery cells and will assure a fully charged battery whenever portable operation is required. Turn the oscillator OFF when not in use, particularly when operating with the power cord disconnected.

3-20. When fully charged, the batteries will power the oscillator for approximately 35 hours of continuous or intermittent operation provided they are at a temperature of 81°F ± 10°. IF the batteries are operated at higher or lower temperatures their capacity is reduced as the temperature extremes are approached; approximately 28 hours at 122°F (50°C) or approximately 20 hours at -4°F (-20°C). At temperatures beyond these extremes the batteries are not capable of supplying their characteristic stable discharge voltage.

3-21. The +122°F to -4°F temperature range is adequate for most users, however, keep these limits in mind when operating under field conditions. Internal temperatures in excess Of 122°F are easily obtained if the instrument is left in the sun,

even with a moderate ambient temperature. Good practice would be to avoid storing, transporting, or operating in direct sunlight other than for a very short period. Also avoid placing the instrument in a location where surrounding equipment might excessively raise the internal temperature.

CAUTION

THE HERMETICALLY SEALED CELLS IN THESE BATTERIES MAY BE PERMANENTLY DAMAGED OR THEIR LIFE DRASTICALLY REDUCED IF EXPOSED TO EXTREMELY HIGH TEMPERATURES. THIS DANGER INCREASES UNDER PROLONGED CONDITIONS.

3-22. RECHARGING NICKEL-CADMIUM BATTERIES.

3-23. The batteries should be considered fully discharged when the voltages drop below ± 11V at the B+ and B- test points. The batteries will not operate much longer when this point is reached, and the oscillator may not meet specifications. Excessive discharge may shorten battery life.

3-24. A symptom of low battery voltage is clipping of the output waveform. If only one peak is clipped, however, check the BIAS voltage for proper setting. See Paragraph 5-21 for BIAS adjustment.

3-25. To recharge batteries, select either FAST or SLOW charge rate and 115V or 230V ac on rear panel and connect power cord to suitable power source. The oscillator can be used during recharging since the charge rate is the same whether the oscillator is off or operating.

3-26. The FAST charge rate should be used only when a quick charge is necessary. Repeated charging at a FAST rate will shorten battery life.

3-27. The batteries will be fully charged in approximately 60 hours at the 6 mA SLOW charge rate, and 15 hours at the 20 mA FAST rate if they were fully discharged initially.

3-28. The batteries can be charged at any temperature between + 32°F and + 104°F (0°C to + 40°C). However, to obtain optimum battery life, recharging should be done at a temperature of 80.6° F ± 10°F (27° C ±5. 6° C).

CAUTION

THE FOUR NICKEL-CADMIUM BATTERIES ARE HERMETICALLY SEALED AND CAN BE DAMAGED IF CHARGED AT A FAST RATE AT TEMPERATURES ABOVE 104° F (40° C).

DO NOT CHARGE AT THE FAST RATE FOR MORE THAN 15 HOURS.

3-29. CYCLE-LIFE OF NICKEL-CADMIUM BATTERIES.

3-30. As extremes in temperature are approached, the cycle-life (complete charge-discharge cycles) of the batteries is reduced. Storage at high temperatures will increase the self-discharge rate and also decrease the cycle-life. Permanent battery damage may result if the batteries are stored at a high temperature for a prolonged period.

3-31. Battery cycle-life can be extended by recharging before the batteries are completely discharged, by charging at the SLOW rate, and by not overcharging.

3-32. The cycle-life of the batteries is based, by the manufacturer, on an end point of 80% of the rated 225 milliampere-hour capacity. This is with a ten hour charge and discharge current of 22.5 milliamperes with discharge carried to the normal ten-hour end voltage (1. 10 volts/cell x 5 = 5.50 volts/battery) on every cycle. Under these conditions a cycle-life in excess of 100 cycles can be expected.

3-33. When used to power the Model 204C, the batteries are discharged at approximately a 35 hour rate. The batteries are not fully discharged if they are recharged as recommended in Paragraph 3-22.

3-34. Optimum battery life can be obtained by following these precautions:

a. Prevent complete battery discharge.

b. Keep FAST charges to a minimum.

c. Operate at moderate temperatures when possible.

d. Disconnect power cord after 60 hours of continuous charging with oscillator turned OFF (15 hours if charging batteries at a FAST rate).

SECTION IV

PRINCIPLES OF OPERATION

4-1. INTRODUCTION.

4-2. The Model 204C is Wien-bridge oscillator. A block diagram of the circuit is shown in Figure 4-1. This section includes a block diagram description that consists of a discussion of each section of the block diagram.

4-3. BLOCK DIAGRAM DESCRIPTION.

4-4. BRIDGE AND AMPLIFIER.

4-5. The oscillator bridge consists of two parts, the frequency selective network and the amplifier negative feedback network. The frequency selective network is CF, RF, CF', and RF'. The negative feedback divider is Rf, Rf', and the AGC block.

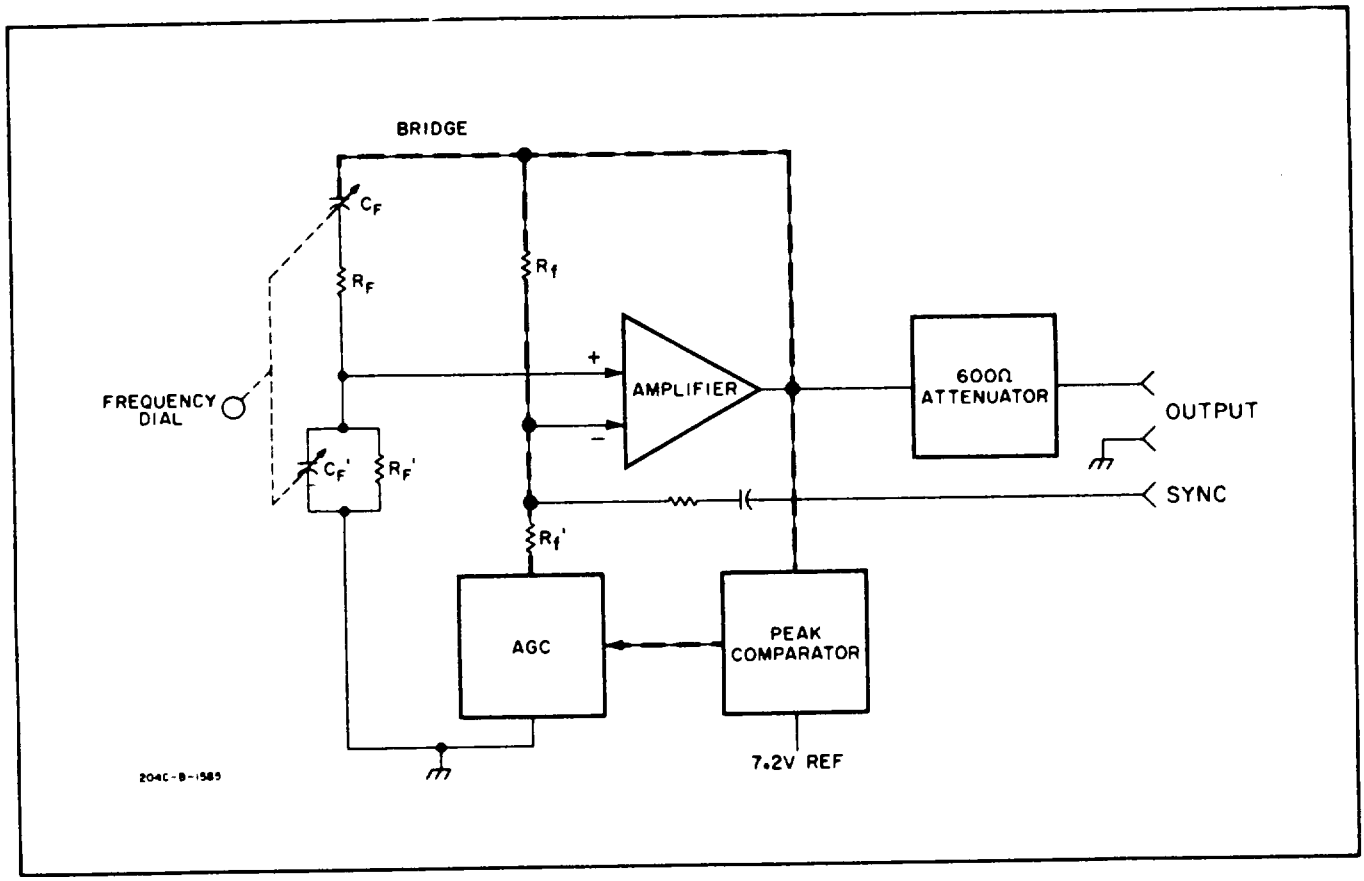

Figure 4-1. Model 204C Block Diagram

4-6. The characteristics of the RC frequency determining network are such that the operating frequency signal applied to the positive input of the AMPLIFIER is 1/3 the amplitude of the positive feedback signal. The phase shift at the operating frequency is 0°. At all other frequencies the amplitude is less than 1/3 and the phase shift is other than 0°

4-7. For the oscillator circuit to oscillate, however, it must have an overall loop gain of unity. Therefore, the gain around the rest of the loop must be 3 and the phase shift any multiple of 360°, to satisfy an overall loop gain of 1, or unity.

4-8. The Model 204C AMPLIFIER, with the negative feedback divider, Rf, Rf', and AGC, provide the necessary oscillator gain of 3.

4-9. The overall loop gain is the combination of the positive feedback and the oscillator gain. This is equal to unity at the set operating frequency.

4-10. PEAK COMPARATOR.

4-11. The PEAK COMPARATOR serves two functions. It sets and maintains the AMPLIFIER output at 7. 2V peak, or 5V rms. The output is set with the 7. 2V reference. The output is maintained by comparing the output to the 7.2V reference and feeding any difference voltage detected to the AGC circuit.

4-12. AGC.

4-13. The positive feedback to the input of the AMPLIFIER is not exactly one-third nor is the oscillator gain exactly three for all operating frequencies. Therefore, the purpose of tile AGC is to continuously control the oscillator gain to maintain unity loop gain. The resistance of the AGC block can be varied slightly to change the divider ratio of the negative feedback network. The variable resistance of the AGC block is a FET controlled by the error signal from the PEAK COMPARATOR. Thus any change of the output level causes the PEAK COMPARATOR error signal to change the resistance of the AGC block which adjusts the oscillator gain to correct for the output level variation.

4-14. 600 OHM ATTENUATOR.

4-15. The 600 OHM ATTENUATOR is a bridged-T connected in such a manner that the output impedance is 600 ohms regardless of AMPLITUDE setting.

Table 5-1. Required Test Equipment

INSTRUMENT	REQUIRED SPECIFICATIONS	RECOMMENDED MODEL
Frequency Counter	Accuracy: ± 1 count Range: 5 Hz to 1.2 MHz	-hp- Model 5532A
Ac Voltmeter	Range: 10 Hz to 1.2 MHz Sensitivity: 1 mV to 10V Accuracy: ± 2%	-hp- Model 400E
DC Null Voltmeter	Sensitivity: 10µ V to 20 V Accuracy: ± 2% of full scale	-hp- Model 419A
Distortion Analyzer	Range: 5 Hz to 300 kHz Fundamental Rejection: > 60 dB	-hp- Model 334A
Test Oscillator	Range: 10 Hz to 1 MHz Output: 5 V rms open circuit	-hp- Model 651B
Wave Analyzer	Frequency Range: 20 Hz to 600 kHz Dynamic Range: > 80 dB below 0dB reference level	-hp- Model 3590A/3594A
Thermal Converter	Accuracy: ± 0. 2% Frequency Range: 5 Hz to 1.2 MHz	-hp- Model H02-11049A
Bucking Supply	See Figure 5-2 for diagram a. R: fxd 6500 ±1% b. R: var 500Ω ±5% c. R: var 50Ω ±5% d. Battery: 1.34 V	 -hp- Part No. 0811-0392 -hp- Part No. 2100-0324 -hp- Part No. 2100-1481 Mallory RM-42R
1 MHz Notch Filter	See Figure 5-3 for diagram a. R: fxd 510Ω ±5% b. R: var 1 kΩ ±10% c. C: fxd 820 pF ±5% d. C: fxd 0. 0.002 µ F ±20% e. Inductor: fxd 51 µ H±5%	 -hp- Part No. 0683-5115 -hp- Part No. 2100-0889 -hp- Part No. 0160-2216 -hp- Part No. 0150-0122 -hp- Part No. 9100-1630
Balance Network	See Figure 5-5 for diagram a. R: fxd 300Ω ±0.1% b. R: fxd 150Ω ±1%	 -hp- Part No. 0811-0029 -hp- Part No. 0757-0715
Terminating Resistance	R: fxd 600Ω ±1%	-hp- Part No. 0757-1100

SECTION V

MAINTENANCE

5-1. INTRODUCTION.

5-2. This section contains information necessary for the maintenance of the Model 204C Oscillator. Included are Performance checks, adjustment and calibration procedures, and troubleshooting procedures.

5-3. The test equipment needed to properly maintain and service the Model 204C is listed in Table 5-1. If the recommended model is not available, other equipments may be substituted provided they meet the required specifications.

5-4. PERFORMANCE CHECKS.

5-5. The performance checks presented in this section are designed to compare the Model 204C with its published specifications. These checks can be used for incoming inspection, periodic maintenance checks, and to verify performance after adjustment or repair.

5-6. DIAL ACCURACY CHECK.

a. Connect the Model 204C and the Frequency Counter as shown in Figure 5-1. Set the counter to measure frequency and check the Model 204C at the frequencies listed in Table 5-2 for the tolerances indicated.

Table 5-2. Dial Accuracy Check

RANGE SWITCH	FREQUENCY DIAL	COUNTER INDICATION
X5	1	5 Hz ±0.15 Hz
X5	6	30 Hz ±0.9 Hz
X5	12	60 Hz ±1.8 Hz
X10	1	10 Hz ±0.3 Hz
X10	6	60 Hz ±1.8 Hz
X10	12	120 Hz ±3.6 Hz
X100	1	100 Hz ±3.0 HZ
X100	6	600 Hz ±18.0 Hz
X100	12	1.2kHz ±36 Hz
X100	1	1.0kHz ±30 Hz
X1K	6	6.0kHz ±180 Hz
X1K	12	12.0kHz ±360 Hz
X10K	1	10.0kHz ±300 Hz
X10K	6	60.0kHz ±1.8 kHz
X10K	12	120.0kHz ±3.6 kHz
X100K	1	100.0kHz ±3.0 kHz
X100K	6	600.0kHz ±18.0 kHz
X100K	12	1.2 MHz ±36.0 kHz

b. If the above dial accuracy checks fail to meet the required specifications, refer to Paragraph 5-15 for calibration procedures.

5-7. FLATNESS CHECK.

a. Connect the equipment as shown in Figure 5-2.

NOTE

The BUCKING SUPPLY should be constructed from the components listed in Table 5-1. The 500 ohm control should be used as a coarse adjust and the 50 ohm control should be used as a fine adjust.

b. Set the Model 204C RANGE switch to X1K and the frequency dial to 1. Set the AMPLITUDE control to maximum output.

c. Adjust the BUCKING SUPPLY 50 ohm fine control for minimum resistance, and record the THERMAL CONVERTER output as indicated on the DC NULL VOLTMETER.

d. Adjust the BUCKING SUPPLY coarse and fine controls for a 0V indication on the DC NULL VOLTMETER. Do not readjust the BUCKING SUPPLY controls for the remainder of this check.

e. Check the Model 204C flatness at the frequencies listed in Table 5-3 for the tolerances indicated.

NOTE

The THERMAL CONVERTER is considered a square-law device. Therefore, theoretically, the percent of change at the output of the THERMAL CONVERTER should be 2 times the percent of change at the input. Actually the value is not quite 2. The number is typically 1.7. Check the Calibration Report supplied with your THERMAL CONVERTER for the exact multiplier.

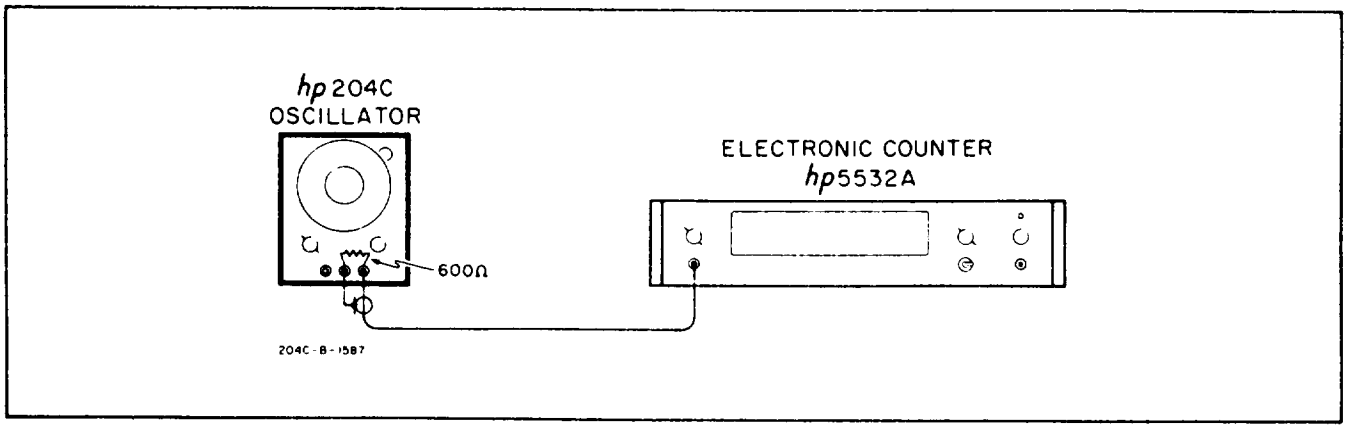

Figure 5-1. Dial Accuracy Check

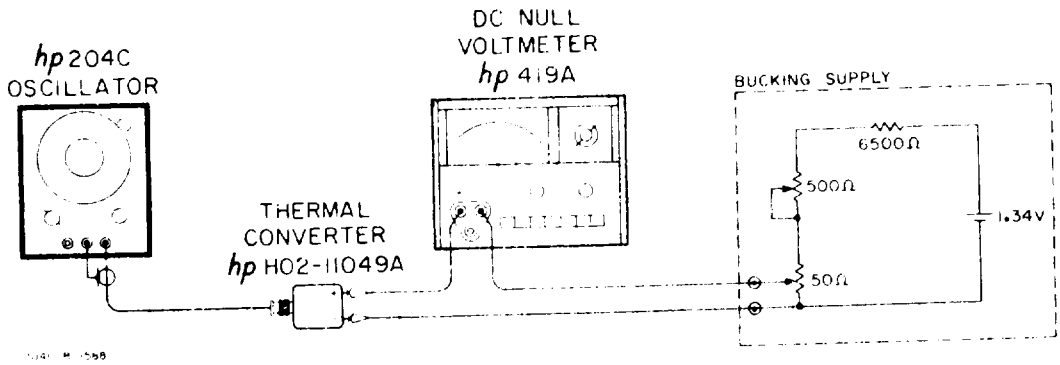

Figure 5-2. Flatness Check

f. Convert the reading on the DC NULL VOLTMETER to the percentages listed in Table 5-3 by the following procedure. Divide the DC NULL VOLTMETER indication by the THERMAL CONVERTER output voltage recorded in step c of this paragraph. Multiply this value by 100 to get percent of output change. Divide this percentage by the Calibration Report multiplier to obtain a percentage within the tolerances listed in Table 5-3.

Example:

Frequency	100 kHz
THERMAL CONVERTER output	5 m V
DC NULL VOLTMETER reading	25 µV
Calibration Report multiplier	1.7
Table 5-3 tolerance	± 0.5%

0.025 ÷ = 0.005

0.005 x 100 = 0.5% (output change)

0.5% 1.7 = 0.29% (input change)

Table 5-3. Flatness Check

Frequency		Tolerance	
Dial Setting	RANGE Setting	NORM	LOW DIST.
1	X5	+ 5% - 1%	± 1%
10	X5	+ 5% - 1%	± 1%
1	X10	+ 5% - 1%	± 1%
10	X10	± 0.5%	
1	X100	± 0.5%	
10	X100	± 0.5%	
1	X1K	SET	
10	X1K	± 0.5%	
1	X10K	± 0.5%	
10	X10K	± 0.5%	
1	X100K	± 0.5%	
3	X100K	± 0.5%	
12	X100K	± 1%	

5-8. DISTORTION CHECK.

a. Connect the Model 204C with a 600 ohm load to the Distortion Analyzer.

b. Set the Model 204C controls as follows:

Dial 1
RANGE X1K
AMPLITUDE . . . . . Full CW
NORM/LOW DIST. . . . . NORM

c. Set Distortion Analyzer controls as follows:

Dial 10
FREQUENCY RANGE X100
METER RANGE. 0DB
FUNCTION . . . . . SET LEVEL
SENSITIVITY . . . . . MIN
MODE . . . . . MANUAL

d. Increase the Distortion Analyzer SENSITIVITY to obtain a 0dB indication on the meter.

e. Switch Distortion Analyzer FUNCTION to DISTORTION, and adjust Distortion Analyzer dial and BALANCE controls for a null indication on the meter. (Downrange METER RANGE switch as necessary to maintain meter indication.)

f. When an approximate null has been obtained with the Distortion Analyzer dial and BALANCE controls, switch the MODE to AUTOMATIC for minimum meter indication.

g. Meter indication should be greater than 60 dB down from 0dB reference.

h. Repeat steps a through f of this paragraph for all frequencies listed in Table 5-4.

Table 5-4. Distortion Check

Frequency		Tolerance	
Dial Setting	RANGE Setting	NORM	LOW DIST
1	X5	-40 dB	-54 dB
4	X5	-40 dB	-54 dB
5	X10	-46 dB	-54 dB
10	X10	-54 dB	
2	X100	-60 dB	
10	X100	-60 dB	
1	X1K	-60 dB	
10	X1K	-60 dB	
1	X10K	-60 dB	
10	X10K	-60 dB	
1	X100K	-60 dB	
3	X100K	-50 dB	

i. Connect the equipment as shown in Figure 5-3.

j. Set the Model 204C frequency dial to 10 and the RANGE switch to X10K. Adjust the AMPLITUDE control for a 0dB indication on the AC Voltmeter.

k. Switch to the X100K RANGE, and adjust the frequency dial and notch filter control for a minimum indication on the AC Voltmeter.

l. The meter indication should be greater than 40 dB down from the 0dB reference.

5-9. OUTPUT VOLTAGE AND IMPEDANCE CHECK.

a. Connect the Model 204C without a 600 ohm load to the AC Voltmeter.

b. Set the AC Voltmeter to the 10V RANGE, and the Model 204C AMPLITUDE to maximum.

c. The meter should indicate at least 5V rms.

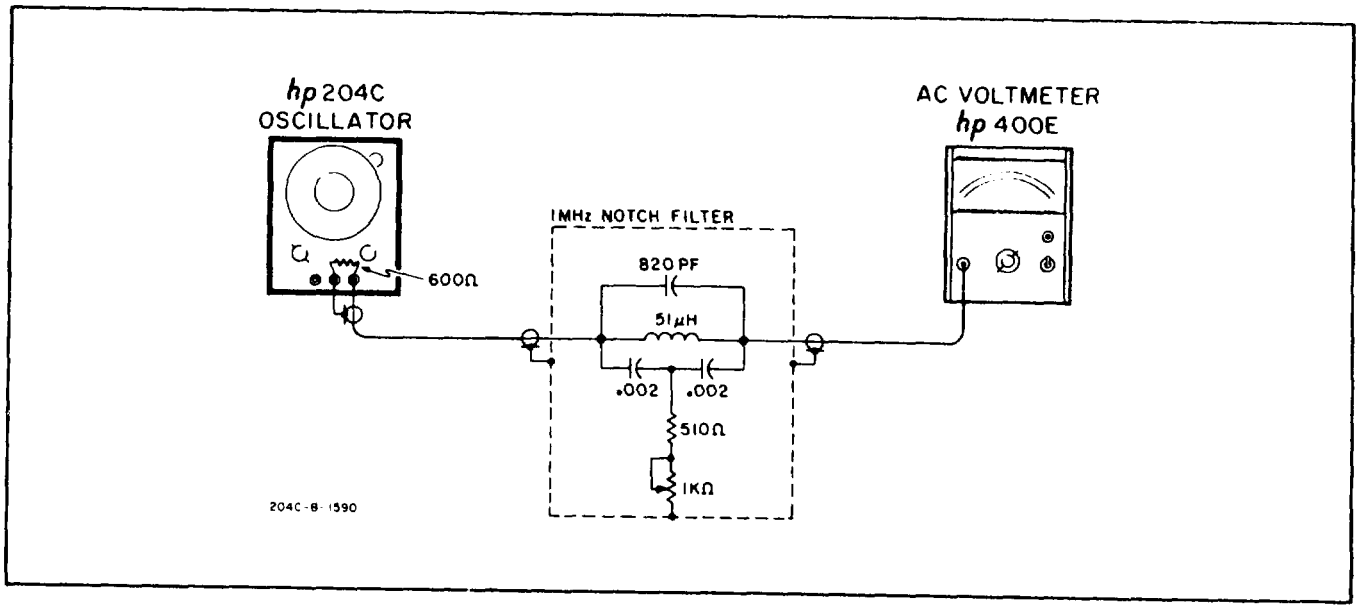

Figure 5-3. 1 MHz Distortion Check

d. Connect a 600 ohm load to the Model 204C.

e. The AC Voltmeter should indicate 2.5V rms, verifying the output voltage specification and an output impedance of 600 ohms.

5-10. OUTPUT CONTROL CHECK.

a. Connect the Model 204C without a 600 ohm load to the AC Voltmeter.

b. Adjust the Model 204C AMPLITUDE to minimum.

c. The meter indication should be less than 50 mV rms.

5-11. SYNC OUTPUT CHECK.

a. Connect the Model 204C SYNC output to the AC Voltmeter.

b. The AC Voltmeter should indicate 1. 7V rms.

5-12. SYNC INPUT CHECK.

a. Connect the Test Oscillator to the AC Voltmeter and adjust controls for 5V rms at 20 kHz.

b. Connect the Model 204C to the Electronic Counter and adjust controls for a frequency of 20 kHz.

c. Without changing the controls set in steps a and b, connect the equipment as shown in Figure 5-4.

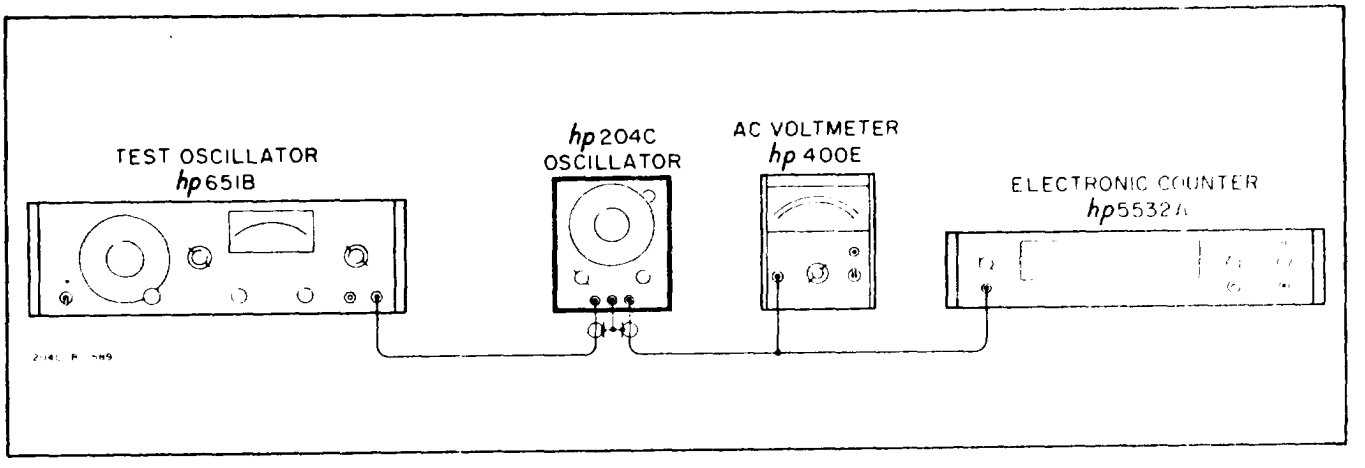

Figure 5-4. Sync Input Check

d. Rotate the Test Oscillator dial above and below 20 kHz while watching the indication on the AC Voltmeter. When the needle starts to dip (indicating loss of sync), note the frequency indication on the Frequency Counter.

e. The AC Voltmeter should dip at less than 18.6 kHz and greater than 21.4 kHz, indicating a sync range of ± 7% at 5V rms.

5-13. BALANCE CHECK.

a. Connect the Model 204C with a 600 ohm load to the AC Voltmeter.

b. Set controls as follows:

Model 204C:

Dial 2
RANGE X10K

AC Voltmeter:

RANGE 0DB

c. Adjust Model 204C AMPLITUDE for a meter indication of 0dB.

d. Remove the 600 ohm load and connect the equipment as shown in Figure 5-5.

e. Meter indication should be greater than 40 dB down from 0dB reference.

5-14. HUM AND NOISE CHECK.

a. Connect the Model 204C to the Wave Analyzer input and set the AMPLITUDE to maximum, and frequency to 100 kHz.

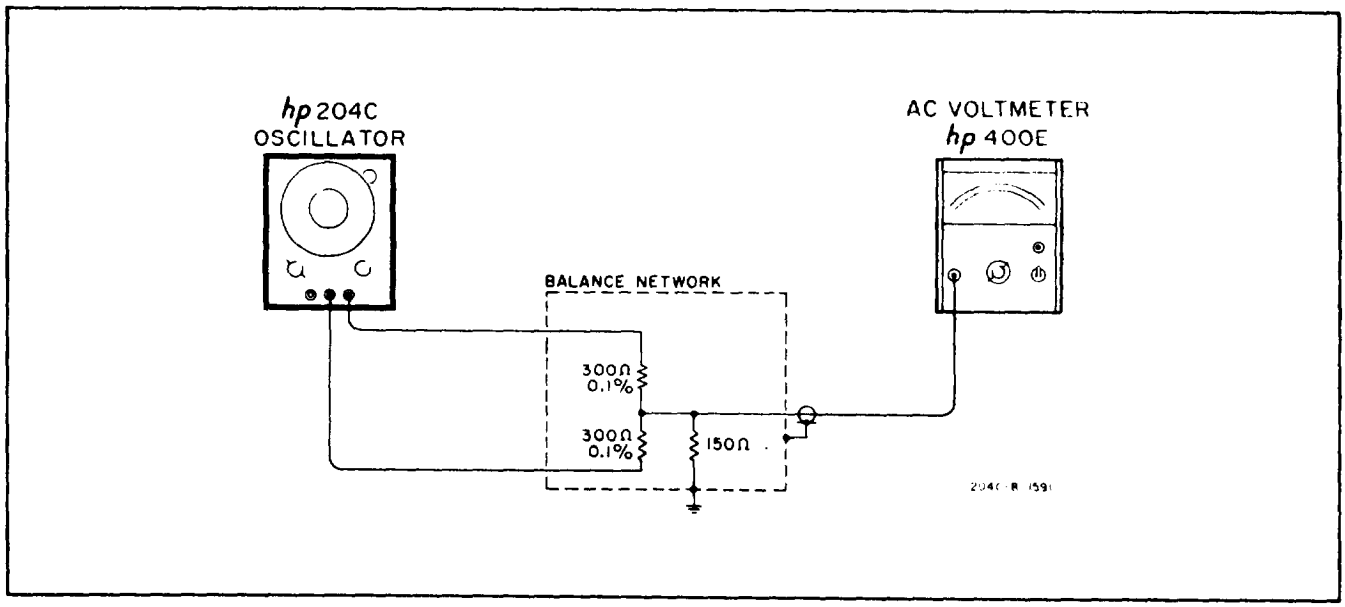

Figure 5-5. Balance Check

b. Set the Wave Analyzer controls as follows:

MAX. INPUT VOLTAGE	3
REF. ADJ. Switch	RELATIVE
METER	LIN dB
RANGE	AUTO
MODE	RESTORED
BANDWIDTH	3100
FREQUENCY	100kHz
FREQUENCY RANGE	620 kHZ
SWEEP	RESET
SWEEP RATE	1Hz

c. Adjust the Wave Analyzer COARSE for maximum meter indication, and adjust the REF ADJ for a 0dB meter indication.

d. Reset Wave Analyzer controls as follows:

BANDWIDTH	10Hz
FREQUENCY	25Hz

e. Set the Wave Analyzer SWEEP to START and observe the meter indication as the Wave Analyzer sweeps to 400 Hz.

f. Reset the SWEEP RATE and BANDWIDTH at the frequencies shown in Table 5-5.

g. The meter indication should be down greater than 80 dB across the full sweep range, except for the 100 kHz fundamental and its harmonics.

Table 5-5. Hum and Noise Check

FREQUENCY	SWEEP RATE	BANDWIDTH
25 Hz	1	10 Hz
400 Hz	100	100 Hz
10 kHz	1000	1000 Hz
50 kHz	3100	3100 Hz

5-15. ADJUSTMENT AND CALIBRATION PROCEDURE.

5-16. INTRODUCTION.

5-17. The following Adjustment and Calibration Procedures should be used only if it has been determined through the Performance Checks, Paragraph 5-4 through 5-14, that the Model 204C is not performing within its specifications.

5-18. If proper performance cannot be achieved with the Adjustment and Calibration Procedure, refer to the Troubleshooting Procedures, Paragraph 5-26.

5-19. POWER SUPPLY.

5-20. Before making any adjustments, check the power supply voltages at test points 2 and 3. They should indicate +13V and - 13V respectively. If the voltages have decreased to +11V and -11V the Model 204C may not meet distortion specifications.

5-21. BIAS ADJUSTMENT.

a. Connect the DC Voltmeter to TP4 (BIAS).

b. Adjust R20 (BIAS) for 0V indication on the meter.

5-22. AGC ADJUSTMENT.

a. Set the Model 204C RANGE switch to X1K and the Dial to 1.

b. Connect the DC Voltmeter to TP1 (AGC).

c. Adjust R24 (AGC) for -1.8 V at TP1.

5-23. AGC AND FREQUENCY ADJUSTMENT.

a. Leave the DC Voltmeter connected as in Paragraph 5-22, and connect the Model 204C output to the Frequency Counter.

b. Set the Model 204C RANGE to X1K and the Dial to 8.

c. Adjust C2 and C8 (AGC and FREQ CAL) for 8 kHz and -1.8 V.

NOTE

C2 and C8 are interacting controls. A little practice may be required to become proficient at making this adjustment.

d. Repeat Paragraphs 5-22 and 5-23 a through c if the voltage at 1 kHz has been changed from -1.8 V.

e. With the RANGE switch set on X1K, adjust the Dial for 10 kHz ± 10 Hz.

f. Without moving the Dial, check the frequency on ranges X5 through X10K and record the error in percent.

g. Calculate the average between the most positive and the most negative error.

h. Readjust C2 and C8 for the following readings:

Frequency . . . . . 10 kHz minus average found above ± 10 Hz
AGC . . . . . 1.8 ± 0.1V

Example:

X5	+5%	Most positive error	+5%
X10	+1%	Most negative error	-1%
X100	-1%	Average error (+5%)+(-1%) =	+2%
X1K	0	2	
X10K	+2%	Adjust frequency for 9,800 Hz ± 10 Hz.	

5-24. HIGH FREQUENCY ADJUSTMENT.

a. Set the Model 204C RANGE switch to X100K and set the Dial to exactly 10.

b. With the Model 204C connected to the Frequency Counter, adjust C4 (HIGH FREQ CAL) to indicate 1 MHz ± 1 kHz on the Frequency Counter.

5-25. DISTORTION ADJUSTMENT.

a. Connect the Model 204C to the Distortion Analyzer.

b. Set the Model 204C RANGE switch to X1K and the Dial to 10.

c. Set the Distortion Analyzer FUNCTION to SET LEVEL, MODE to MANUAL, and FREQUENCY RANGE to X1K.

d. Adjust the Model 204C AMPLITUDE and Distortion Analyzer SENSITIVITY for 0dB meter indication.

e. Set the Distortion Analyzer FUNCTION to DISTORTION and adjust the Distortion Analyzer Dial and Balance controls for minimum indication.

f. Set the Distortion Analyzer MODE to AUTOMATIC and adjust R30 (DIST) for a meter indication of greater than 60 dB down from 0dB reference.

5-26. TROUBLESHOOTING PROCEDURE.

5-27. The following paragraphs are provided as an aid to troubleshooting the Model 204C. These operations should be undertaken only after it has been determined that the difficulty cannot be eliminated by the Adjustment and Calibration Procedures, Paragraph 5-17. An investigation should also be made to ensure that the trouble is not a result of conditions external to the Model 204C.

5-28. Before troubleshooting the Model 204C, read Section IV, Principles of Operation, for familiarization with circuit operation.

5-29. Conduct a visual check of the Model 204C for possible burned or loose components, loose connections, or any other condition which might suggest a source of trouble.

5-30. Voltages have been provided on the schematic diagram as an aid to troubleshooting. In some cases the voltages are shown to the nearest tenth of a volt. This does not mean that the voltages should be the exact value shown, but rather they are meant to indicate the base to emitter voltage drop of the transistors.

-31. The inner cabinet provides the chassis ground path for C1. When the cabinet is removed for troubleshooting, connect a short jumper lead from the bottom of MP26 (see Figure 6-1) to the metal tab protruding just below. it. This will allow the oscillator to operate with the inner cabinet removed.

5-32. Some potential malfunction symptoms and the associated probable causes are listed in Table 5-5.

Table 5-6. Troubleshooting Guide

SYMPTOM	PROBABLE TROUBLE
Waveform Clipping	Check Power Supply and BIAS level.
Ineffective BIAS control	Check BIAS control at A1Q1 gate. If ineffective, check A1S1 and BIAS path. If good, check A1Q3, A1Q7, A1Q8.
Squegging or high frequency oscillations	Check in NORM Mode at 100 Hz on X100 RANGE. If oscillations are present, replace A1C9 with a higher value. (Perform High Frequency Adjustment Paragraph 5-24.)
Insufficient range of C4 (High Freq. Cal)	Change A1C9 to lower value. (Check for high frequency oscillations after change).
Crossover Distortion	Check A1CR4, A1CR5, A1R41, and A1R42.
Microphonics or discontinuities	Check C1 wiper contacts on both rotor sections.

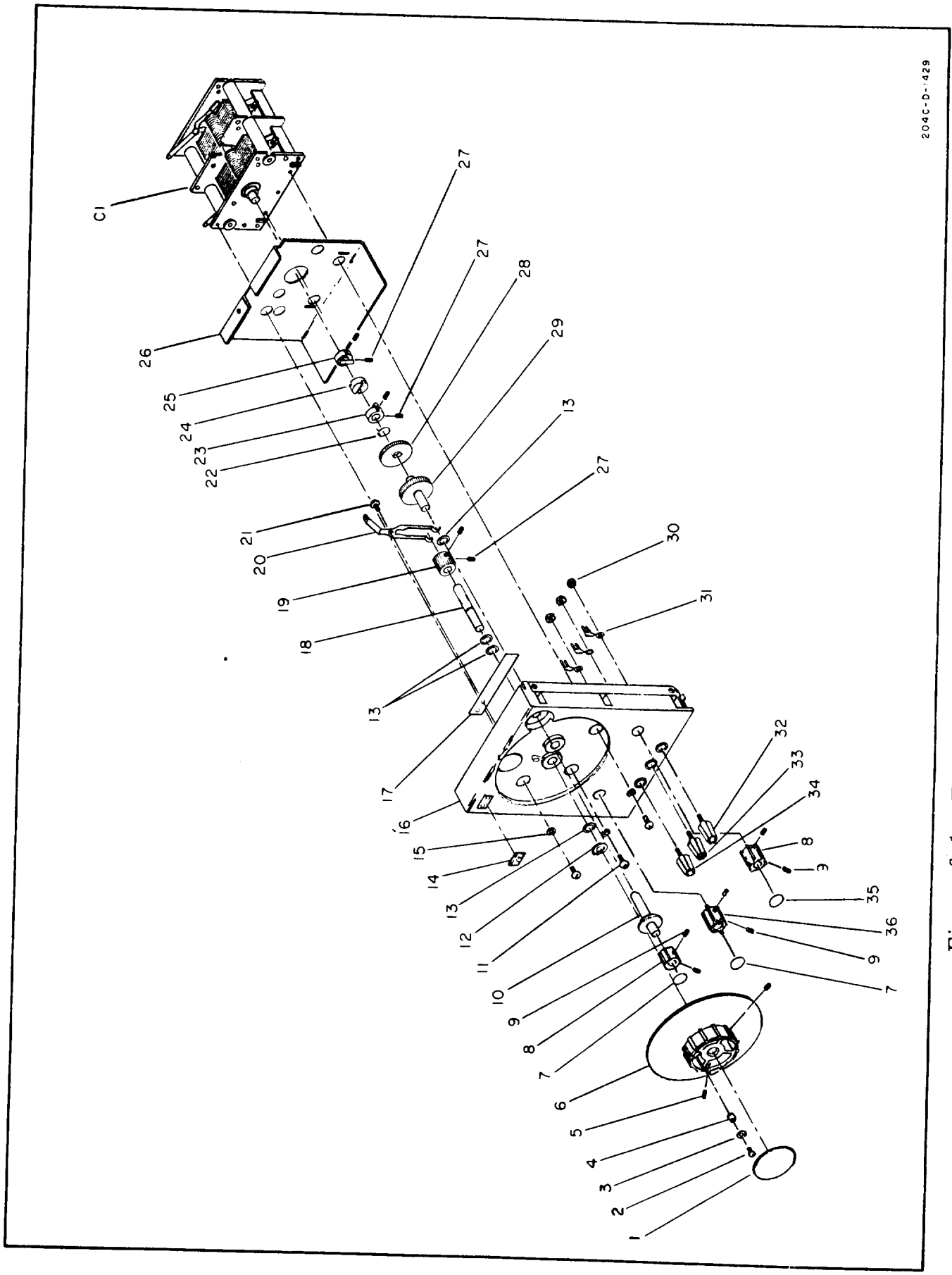

Figure 6-1. Front Panel ⌐ 'oded View

SECTION VI

CIRCUIT DIAGRAMS

6-1. INTRODUCTION.

6–2. This section contains the circuit diagrams necessary for the maintenance of the Model 204C Oscillator. Included are schematic diagrams and component location diagrams.

6–3. SCHEMATIC DIAGRAMS.

6–4. The circuits contained within each assembly are shown in the schematic diagrams. These diagrams car be used to develop an understanding of the principles of operation and as an aid to troubleshooting.

6–5. COMPONENT LOCATION DIAGRAMS.

6–6. The component location diagrams show the physical location of each part mounted on an assembly. Each part is identified by a reference designator.

GENERAL SCHEMATIC NOTES

1. PARTIAL REFERENCE DESIGNATIONS ARE SHOWN. PREFIX FIX WITH ASSEMBLY OR SUBASSEMBLY DESIGNATION(S) OR BOTH FOR COMPLETE DESIGNATION.

2. COMPONENT VALUES ARE SHOWN AS FOLLOWS UNLESS OTHERWISE NOTED.

   RESISTANCE IN OHMS

   CAPACITANCE IN MICROFARADS

3. ⊥ DENOTES POWER LINE GROUND.

4. ⏚ DENOTES CHASSIS GROUND.

5. DENOTES ASSEMBLY.

6. DENOTES MAIN SIGNAL PATH.

7. DENOTES FEEDBACK PATH.

8. DENOTES FRONT PANEL MARKING.

9. DENOTES REAR PANEL MARKING.

10. DENOTE SCREWDRIVER ADJUST.

11. DENOTES FRONT PANEL CONTROL.

12. DENOTES COMPONENTS NOT MOUNTED ON ASSEMBLY.

13. * OPTIMUM VALUE SELECTED AT FACTORY.

14. ‡ DENOTES FACTORY USE ONLY.

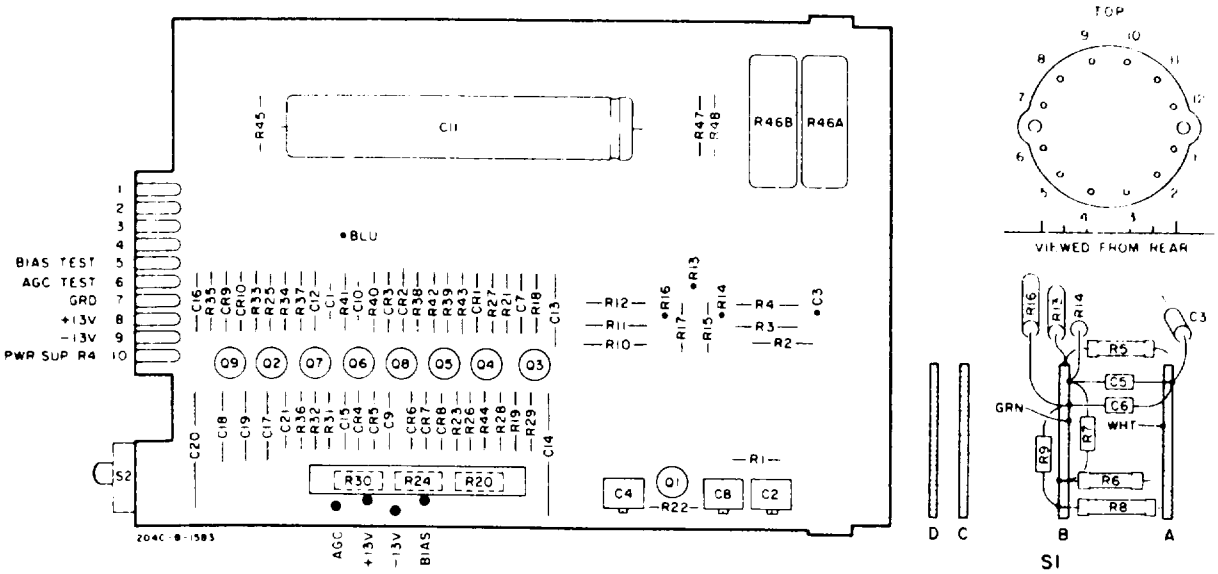

A1
hp Part No. 00204-66505

Figure 6–2. A1 Component Location Diagram

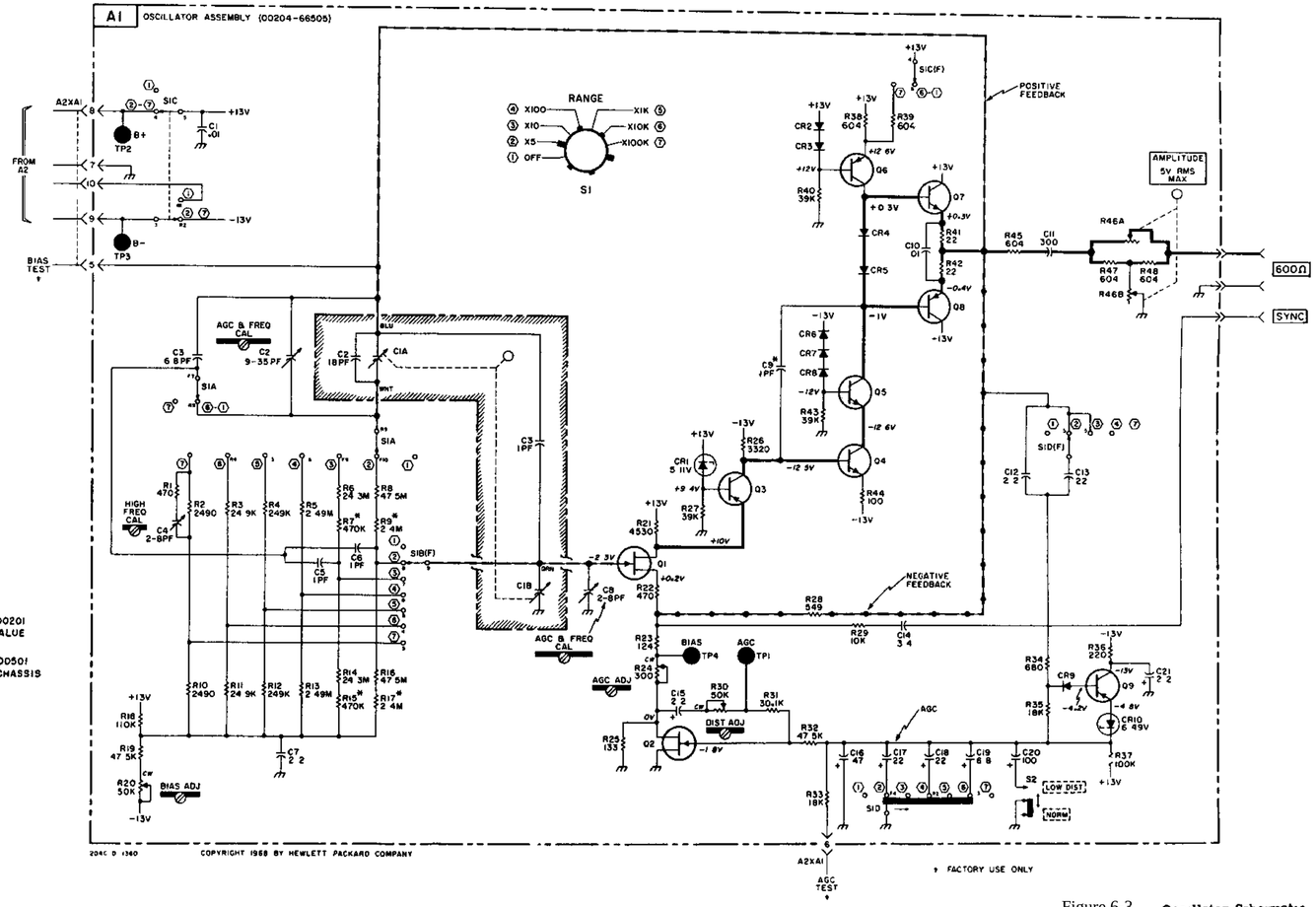

NOTES

1 FOR ALL INSTRUMENTS HAVING SERIAL NUMBERS 808-00201 AND ABOVE CHANGE VALUE OF A1C12 TO 6 8UF AND WALUE A1R25 TO 110 OHMS

2 FOR ALL INSTRUMENTS HAVING SERIAL NUMBERS 808-00501 AND ABOVE, ADD CAPACITOR A1C22 20PF BETWEEN CHASSIS GROUND AND THE JUNCTION OF A1R34 AND A1R35

Figure 6-3. Oscillator Schematic (A1)

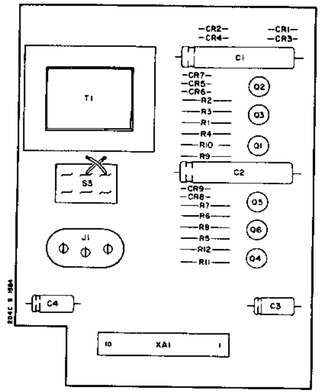

A2
STANDARD
hp Part No 00204-66506

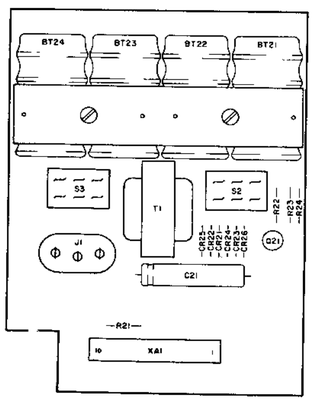

A2
OPTION 02
hp Part No. 00204-66508

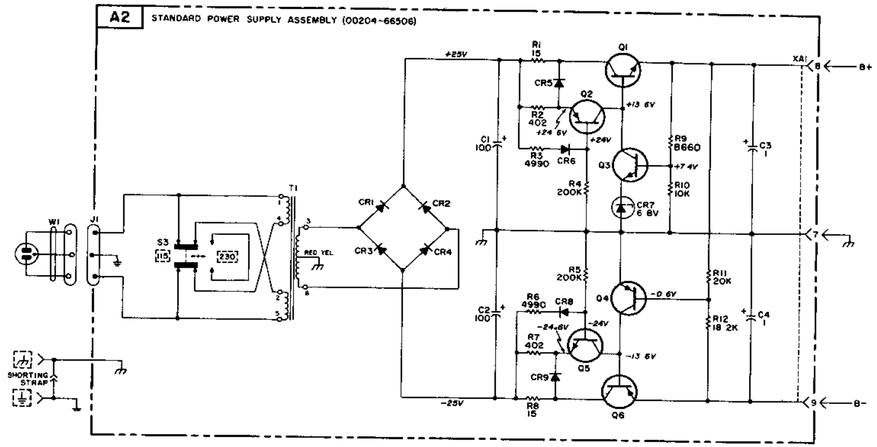

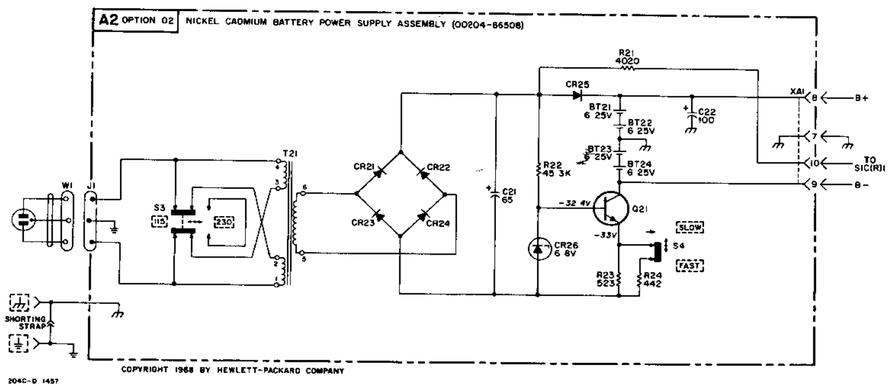

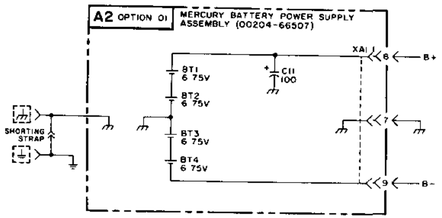

NOTE
FOR ALL INSTRUMENTS HAVING SERIAL NUMBERS 8-8-00501 AND ABOVE CHANGE VALUE OF CAPACITOR A2C3 TO 3.3UF

Figure 6-4. **Power Supply Schematic. (A2, A2 Opt 01, A2 Opt 02)**

APPENDIX A

REFERENCES

DA PAM 310–4	Index of Technical Manuals, Technical Bulletins, Supply Manuals, (types 7, 8, and 9), Supply Bulletins, and Lubrication Orders.
DA PAM 310–7	Index of U.S. Army Equipment Modification Work Orders.
TB 746–10	Field Instructions for Painting and Preserving Electronics Command Equipment.
TB SIG 355–1	Depot Inspection Standard for Repaired Signal Equipment.
TB SIG 355–2	Depot Inspection Standard for Refinishing Repaired Signal Equipment.
TB SIG 355–3	Depot Inspection Standard for Moisture and Fungus Resistant Treatment.
TM 38–750	The Army Maintenance Management Systems (TAMMS).

APPENDIX B

MAINTENANCE ALLOCATION

Section I. INTRODUCTION

B-1. General

This appendix provides a summary of the maintenance operations covered in the equipment literature. It authorizes categories of maintenance for specific maintenance functions on repairable items and components and the tools and equipment required to perform each function. This appendix may be used as an aid in planning maintenance operations.

B-2. Maintenance Functions

Maintenance functions will be limited to and defined as follows:

a. INSPECT. To determine serviceability of an item by comparing its physical, mechanical, and electrical characteristics with established standards.

b. TEST. To verify serviceability and to detect incipient electrical or mechanical failure by use of special equipment such as gages, meters, etc. This is accomplished with external test equipment and does not include operation of the equipment and operator type tests using internal meters or indicating devices.

c. SERVICE. To clean, to preserve, to charge, and to add fuel, lubricants, cooling agents, and air. If it is desired that elements, such as painting and lubricating, be defined separately, they may be so listed.

d. ADJUST. To rectify to the extent necessary to bring into proper operating range.

e. ALIGN. To adjust two or more components or assemblies of an electrical or mechanical system so that their functions are properly synchronized. This does not include setting the frequency control knob of radio receivers or transmitters to the desired frequency.

f. CALIBRATE. To determine the corrections to be made in the readings of instruments or test equipment used in precise measurement. Consists of the comparison of two instruments, one of which is a certified standard of known accuracy, to detect and adjust any discrepancy in the accuracy of the instrument being compared with the certified standard.

g. INSTALL. To set up for use in an operational environment such as an encampment, site, or vehicle.

h. REPLACE. To replace unserviceable items with serviceable like items.

i. REPAIR. To restore an item to serviceable condition through correction of a specific failure or unserviceable condition. This function includes, but is not limited to welding, grinding, riveting, straightening, and replacement of parts other than the trial and error replacement of running spare type items such as fuses, lamps, or electron tubes.

j. OVERHAUL. Normally, the highest degree of maintenance performed by the Army in order to minimize time work in process is consistent with quality and economy of operation. It consists of that maintenance necessary to restore an item to completely serviceable condition as prescribed by maintenance standards in technical publications for each item of equipment. Overhaul normally does not return an item to like new, zero mileage, or zero hour condition.

k. REBUILD. The highest degree of materiel maintenance. It consists of restoring equipment as nearly as possible to new condition in accordance with original manufacturing standards. Rebuild is performed only when required by operational considerations or other paramount factors and then only at the depot maintenance category. Rebuild reduces to zero the hours or miles the equipment, or component thereof, has been in use.

l. SYMBOLS. The uppercase letter placed in the appropriate column indicates the lowest level

at which that particular maintenance function is to be performed.

B-3. Explanation of Format

a. Column 1, group number. Column 1 lists group numbers, the purpose of which is to identify components, assemblies, subassemblies and modules with the next higher assembly.

b. Column 2, functional group. Column 2 lists the noun names of components, assemblies, subassemblies and modules on which maintenance is authorized.

c. Column 3, maintenance functions. Column 3 lists the maintenance category at which performance of the specific maintenance function is authorized. Authorization to perform a function at any category also includes authorization to perform that function at higher categories. The codes used represent the various maintenance categories as follows:

Code	Maintenance Category
C	Operator/Crew
O	Organizational Maintenance
F	Direct Support Maintenance
H	General Support Maintenance
D	Depot Maintenance

d. Column 4, tools and test equipment. Column 4 specifies, by code, those tools and test equipment required to perform the designated function. The numbers appearing in this column refer to specific tools and test equipment which are identified in table I.

e. Column 5, Remarks. Self-explanatory.

B-4. Explanation of Format of Table I, Tool and Test Equipment Requirements

The columns in Table I, Tool and Test Equipment Requirements are as follows:

a. Tools and Equipment. The numbers in this column coincide with the numbers used in the tools and equipment column of the Maintenance Allocation Chart. The numbers indicate the applicable tool for the maintenance function.

b. Maintenance Category. The codes in this column indicate the maintenance category normally allocated the facility.

c. Nomenclature. This column lists tools, test, and maintenance equipment required to perform the maintenance functions.

d. Federal Stock Number. This column lists the Federal stock number of the specific tool or test equipment.

e. Tool Number. Not used.

SECTION II. MAINTENANCE ALLOCATION CHART

GROUP NUMBER	COMPONENT ASSEMBLY NOMENCLATURE	MAINTENANCE FUNCTIONS											TOOLS AND EQUIPMENT	REMARKS
		INSPECT	TEST	SERVICE	ADJUST	ALIGN	CALIBRATE	INSTALL	REPLACE	REPAIR	OVERHAUL	REBUILD		
1	OSCILLATOR, HEWLETT PACKARD 204C	F												Visual
			H										1 thru 12	
					H								1 thru 12	
										F			12	Replace fuses and knobs
										H			1 thru 12	

TABLE I. **TOOL AND TEST EQUIPMENT REQUIREMENTS**

TOOLS AND EQUIPMENT	MAINTENANCE CATEGORY	NOMENCLATURE	FEDERAL STOCK NUMBER	TOOL NUMBER
1	H	FREQUENCY COUNTER, HEWLETT PACKARD, 5532A		
2	H	A.C. VOLTMETER, HEWLETT PACKARD, 400E		
3	H	D.C. NULL VOLTMETER, HEWLETT PACKARD, 419A		
4	H	DISTORTION ANALYZER, HEWLETT PACKARD, 334A		
5	H	TEST OSCILLATOR, HEWLETT PACKARD, 651B		
6	H	WAVE ANALYZER, HEWLETT PACKARD, 3590A/3594A		
7	H	THERMAL CONVERTER, HEWLETT PACKARD, H02-11049A		
8	H	BUCKING SUPPLY (SEE NOTE 1)		
9	H	1 MHZ NOTCH FILTER (SEE NOTE 2)		
10	H	BALANCE NETWORK (SEE NOTE 3)		
11	H	TERMINATING RESISTANCE, HEWLETT PACKARD, 0757-1100		
12	F,H	TOOL KIT, ELECTRONIC EQUIPMENT TK-100/G	5180-605-0079	
		NOTES: 1. BUCKING SUPPLY, CONSISTING OF: RESISTOR, FIXED 6500 OHMS ±1% RESISTOR, VARIABLE 500 OHMS ±5% RESISTOR, VARIABLE 50 OHMS ±5% BATTERY: 1.34 VOLTS 2. 1 MHZ NOTCH FILTER, CONSISTING OF: RESISTOR, FIXED 510 OHMS ±5% RESISTOR, VARIABLE 1K OHM ±10% CAPACITOR, FIXED 820 PFd. ±5% CAPACITOR, FIXED .002 MICROFARAD ±20% INDUCTOR, FIXED 51 MICROHENRY ±5% 3. BALANCE NETWORK, CONSISTING OF: RESISTOR, FIXED 300 OHMS ±0.1% RESISTOR, FIXED 150 OHMS ±1%		

By Order of the Secretary of the Army:

W. C. WESTMORELAND,
General, United States Army,
Chief of Staff.

Official:

VERNE L. BOWERS,
Major General, United States Army,
The Adjutant General.

Distribution:

Active Army
- CNGB (1)
- USASA (2)
- USAMB (10)
- ACSC-E (2)
- USACDCEC (5)
- USACDCCEA (1)
- USACDCCEA
  - Ft Huachuca (1)
- OS Maj Cored (2)
- USASTRATCOM (5)
- USASTRATCOM (PAC) (10)
- USASTRATCOM-SIG-GP-T (5)
- USASTRATCOM-CONUS (5)
- LOGCOMDS (S)
- Eighth USA (10)
- USARV (10)
- USASUOCOM-CRB (5)
- USASUPCOM-QN (5)
- USASUPCOM-SGN (5)
- USARYIS (5)
- ICC (3)
- 1st Sig Bde (10)
- Sig FLDMS (PAC) (1)
- SAAD (10)
- TOAD (10)
- LEAD (7)
- USACSA (2)
- USATECOM (2)
- USAESC (25)
- USA Ascom Depot (3)
- USA Cp Carroll Depot (3)
- USASTRATCOM Sig Gp, Japan (3)
- USASTRATCOM Comm Op Bn, Korea (2)
- USA Depot, Cam Rahn Bay (3)
- USA Depot, Long Binh (3)
- USA Depot, Qui Nhon (3)
- Units org under fol TOE:
  - (2cys each unit)
  - 11-15
  - 11-45
  - 11-97
  - 11-98
  - 11-158
  - 11-302
  - 11-303
  - 11-347
  - 11-357
  - 11-967
  - 11-368
  - 11-377
  - 11-500 (AA-AC)
  - 29-118
  - 29-134
  - 29-136
  - 29-137

NG: None

USAR: None

For explanation of abbreviations used, see AR 310-50.

*U.S. GOVERNMENT PRINTING OFFICE: 1995-388-421/1575

This fine document...

Was brought to you by me:

Liberated Manuals -- free army and government manuals

Why do I do it? I am tired of sleazy CD-ROM sellers, who take publicly available information, slap “watermarks” and other junk on it, and sell it. Those masters of search engine manipulation make sure that their sites that sell free information, come up first in search engines. They did not create it... They did not even scan it... Why should they get your money? Why are not letting you give those free manuals to your friends?

I am setting this document FREE. This document was made by the US Government and is NOT protected by Copyright. Feel free to share, republish, sell and so on.

I am not asking you for donations, fees or handouts. If you can, please provide a link to liberatedmanuals.com, so that free manuals come up first in search engines:

<A HREF=http://www.liberatedmanuals.com/>Free Military and Government Manuals</A>

- Sincerely
  Igor Chudov
  http://igor.chudov.com/
- Chicago Machinery Movers