DEPARTMENT OF THE ARMY TECHNICAL MANUAL

DIRECT SUPPORT AND GENERAL SUPPORT MAINTENANCE MANUAL

POWER SUPPLY PP-1104C/G
(NSN 6130-00-542-6385)

Headquarters, Department of the Army, Washington, DC
2 June 1965

WARNINGS

DANGEROUS VOLTAGES EXIST IN THIS EQUIPMENT

High voltages and currents exist in this equipment. Serious injury or *death* may result from contact with the input or output connections. Reenergize the equipment before connecting or disconnecting the load to be powered or before performing any maintenance.

The Power Supply PP-1104C/G weighs 152 pounds. Be careful when moving. Mechanical lift required.

DON'T TAKE CHANGES!

REPORTING ERRORS AND RECOMMENDING IMPROVEMENTS

You can help improve this manual. If you find any mistakes or if you know of a way to improve the the procedures, please let us know. Mail your letter or DA Form 2028 (Recommended Changes to Publications and Blank Forms) direct to: Commander, US Army Communications-Electronics Command and Fort Monmouth ATTN: DRSEL-ME-MQ, Fort Monmouth, NJ 07703. In either case, a reply will be furnished direct to you.

This copy is a reprint which includes current pages from Changes 1 through 3.

	Paragraph	Page
Chapter 1. FUNCTIONING OF EQUIPMENT		
Scope	1-1	3
Index of equipment publications	1-2	3
Block diagram	1-3	3
Input power	1-4	4
Reference circuit	1-5	4
Output circuit	1-6	4
Regulations	1-7	6
Monitor circuit	1-8	6
2. TROUBLESHOOTING		
General instructions	2-1	7
Organization of troubleshooting procedures	2-2	7
Test equipment required	2-3	7
Localizing troubles	2-4	7
Additional troubleshooting data	2-5	9
Filter capacitors test	2-6	11
3. REPAIRS AND ADJUSTMENT		
General parts replacement techniques	3-1	13
Adjustment of variable resistor R4	3-2	13
4. GENERAL SUPPORT TEST PROCEDURES		
General	4-1	15
Test equipment, tools, and materials	4-2	15
Physical tests and inspections	4-3	17
Fourteen-volt output, regulation and ripple test	4-4	19
Twenty-eight-volt output, regulation and ripple test	4-5	23
Two hundred and thirty-volt operation and insulation breakdown test	4-6	27
Test data summary	4-7	28
Appendix REFERENCES		31

CHANGE
NO. 3

HEADQUARTERS
DEPARTMENT OF THE ARMY
WASHINGTON, DC, 6 MAY 1982

Direct Support and General Support Maintenance Manual
POWER SUPPLY PP-1104C/G
(NSN 613040-542-6365)

TM 11-6130-246-35, 2 June 1965, is changed as follows:

1. New or changed material is indicated by a vertical bar in the margin of the page.
2. Remove and insert pages as indicated below:

Remove pages	*Insert*
None	Warning A/(B Blank)
1 and 2	1 and 2

3. File this change sheet in front of the publication for reference purpose.

By Order of the Secretary of the Army:

E. C. MEYER
General, United States Army
Chief of Staff

Official:

ROBERT M. JOYCE
Brigadier General, United States Army
The Adjutant General

Distribution:
To be distributed in accordance with Special List.

Change No. 2

HEADQUARTERS
DEPARTMENT OF THE ARMY
Washington, DC, *13 November 1979*

TM 11-6130-246-35
C2

Direct Support and General Support Maintenance Manual
POWER SUPPLY PP-1104C/G
(NSN 6130-00-542-6385)

TM 11-6130-246-35, 2 June 1965, is changed as follows:

1. The title is changed to read as shown above.
2. A vertical bar appears opposite new or changed material in the margin of the page.
3. Remove and insert pages as indicated in the page list below:

Remove	*Insert*
1	1 and 2
13 and 14	13 and 14

4. File this change sheet in front of the manual for reference purposes.

5 SAFETY STEPS TO FOLLOW IF SOMEONE IS THE VICTIM OF ELECTRICAL SHOCK

1. DO NOT TRY TO PULL OR GRAB THE INDIVIDUAL
2. IF POSSIBLE , TURN OFF THE ELECTRICAL POWER
3. IF YOU CANNOT TURN OFF THE ELECTRICAL POWER, PULL, PUSH, OR LIFT THE PERSON TO SAFETY USING A WOODEN POLE OR A ROPE OR SOME OTHER INSULATING MATERIAL
4. SEND FOR HELP AS SOON AS POSSIBLE
5. AFTER THE INJURED PERSON IS FREE OF CONTACT WITH THE SOURCE OF ELECTRICAL SHOCK, MOVE THE PERSON A SHORT DISTANCE AWAY AND IMMEDIATELY START ARTIFICIAL RESUSCITATION

CHAPTER 1
FUNCTIONING OF EQUIPMENT

1-1. Scope

a. This manual contains direct support, general support, and depot maintenance instructions for Power Supply PP-1104C/G. It includes instructions appropriate for troubleshooting, testing, and repairing the equipment. It also lists tools, materials, and test equipment required for maintenance. Functional analysis of the equipment is covered in this chapter.

b. The complete technical manual for this equipment includes TM 11-6130-246-12.

Note: For applicable forms and records, see paragraph 3, TM 11-6130-246-12.

1-2. Index of Equipment Publications

Refer to the latest issue of DA Pam 310-4 to determine whether there are new editions, changes, or additional publications pertaining to the equipment. Department of the Army Pamphlet No. 310-4 is an index of current technical manuals, technical bulletins, supply manuals, supply catalogs, supply bulletins, lubrication orders, and modification work orders that are available through publications supply channels. The index lists the individual parts (-10, -20, -35P, etc) and the latest changes to and revisions of each equipment publication.

1-3. Block Diagram
(fig. 1-1)

The input power is applied to the input circuit consisting of circuit breaker CB1, indicator lamp DS1, increase voltage switch S1, and power transformer T1. Units procured on Contract No. DAAB07-76-C-1363 also have interlock switches S2 and S3 in the input circuit. With circuit breaker switch CB1 at ON, input power is applied to the equipment and the indicator lamp lights. Fan motor B1 is connected across one primary winding of T1 for its operational power. Increase voltage switch S1 controls the input power voltage to power transformer T1 and transformer T3. The voltage from the secondary winding of transformer T3 is rectified by bridge rectifier CR3 to produce the reference voltage. The reference voltage is adjusted by variable resistor R4, filtered by filter choke L3, and applied to magnetic amplifier T2 saturation control windings. The reference voltage also maintains a constant voltage to the load. Power transformer T1 secondary voltage is applied through the saturable reactor windings of magnetic amplifier T2 to rectifiers CR1 and CR2. This rectified voltage is filtered by the network consisting of chokes L1 and L2 and capacitors Cl through C12. A difference in the regulation control voltage of the filtered power supply output and the reference voltage varies the control current applied to magnetic amplifier T2 saturation control windings. This change in control current will correspondingly change the impedance of magnetic amplifier T2 saturable reactor windings and return the power supply output voltage to the correct value. The power supply output current and voltage are monitored by D.C. AMPERES meter M1 and VOLTS D.C. meter M2.

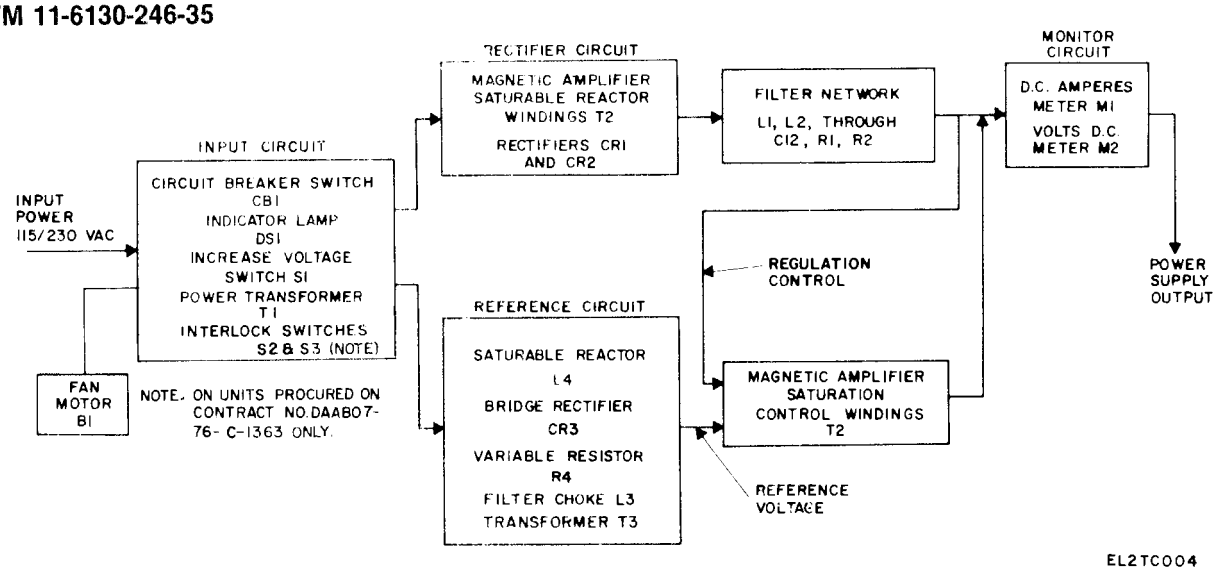

Figure 1-1. Power Supply PP-1104C/G, block diagram.

1-4. Input Power

(fig. 1-2)

When circuit breaker CB1 is at ON, and the power supply is arranged to operate with 115-volt alternating current (ac) input power, the two primary windings of power transformer T1 are parallel-connected across the power input at terminals 1 and 4 of TB1. When circuit breaker CB1 is at ON, and the power supply is arranged to operate with 230-volt ac input power, the two primary windings of power transformer T1 are series-connected across the power input at terminals 1 and 4 of TB1. Units procured on Contract No. DAAB07-76-C-1363, the terminal board plate (TM 11-6130-246-12) must be closed to allow interlock switches S2 and S3 to be activated and allow input power to be applied to terminal board TB1. The position of voltage increase switch S1 controls the voltage in the secondary windings of T1 by controlling the number of turns energized in the primary windings. (Energized turns decrease and secondary winding voltages increase in equal steps as S1 is moved from position 1 to position 8,) The voltage from T1 secondary windings is applied to magnetic amplifier T2 saturable reactor windings. The input circuit is protected by circuit breaker switch CB1. Indicator lamp DS1 lights when input power is applied.

1-5. Reference Circuit

(fig. 1-2)

The reference circuit maintains a constant voltage to the load as the load conditions vary. The reference circuit consists of reactor L4, transformer T3, bridge rectifier CR3, variable resistor R4, filter choke L3, and magnetic amplifier T2. The input ac voltage is applied to transformer T3. During each half-cycle of the ac voltage appearing across transformer T3 secondary, two diodes in bridge rectifier CR3 conduct in series and produce a direct current (dc) pulse in the output. During the second half-cycle of the ac voltage that appears across transformer T3 secondary, the two other diodes in bridge rectifier CR3 conduct in series, and produce another dc output pulse in the same direction. These dc pulses are then applied as reference voltage to the saturation control winding (terminals 5 and 6) of magnetic amplifier T2. Variable resistor R4 adjusts the output of bridge rectifier CR3.

1-6. Output Circuit

(fig. 1-2.)

The power supply includes two dc voltage output circuits. Each circuit provides a nominal 14 volts dc (dependent upon the position of the increase voltage switch). One output circuit consists of silicon power diode rectifier circuit CR1, filter network chokes L1 (terminals 3 and 4) and L2 (terminals 5 and 6), filter capacitors C1 through C6, and bleeder resistor R1. The other output circuit consists of silicon

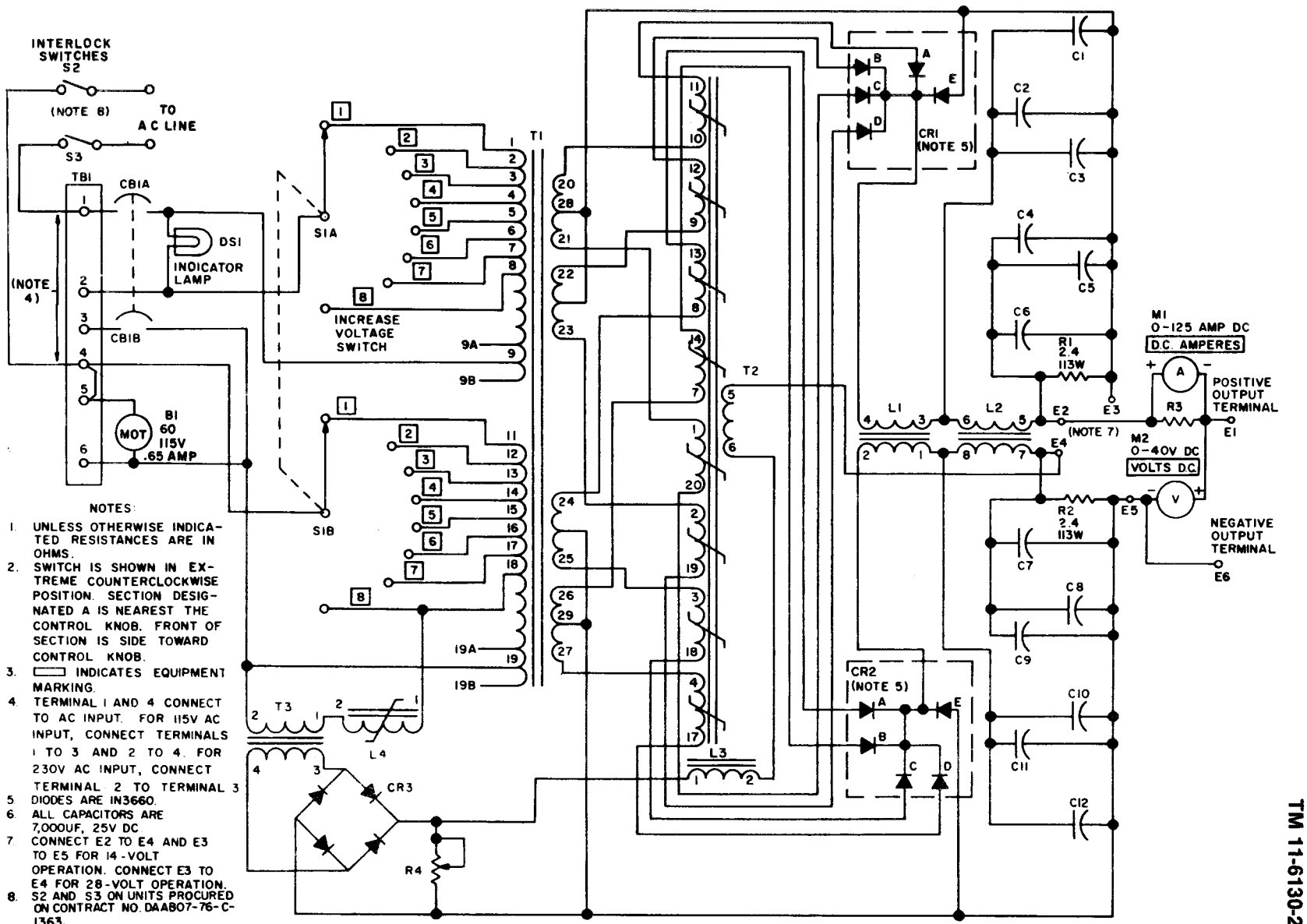

NOTES:

1. UNLESS OTHERWISE INDICATED RESISTANCES ARE IN OHMS.
2. SWITCH IS SHOWN IN EXTREME COUNTERCLOCKWISE POSITION. SECTION DESIGNATED A IS NEAREST THE CONTROL KNOB. FRONT OF SECTION IS SIDE TOWARD CONTROL KNOB.
3. ▭ INDICATES EQUIPMENT MARKING.
4. TERMINAL 1 AND 4 CONNECT TO AC INPUT. FOR 115V AC INPUT, CONNECT TERMINALS 1 TO 3 AND 2 TO 4. FOR 230V AC INPUT, CONNECT TERMINAL 2 TO TERMINAL 3
5. DIODES ARE IN3660.
6. ALL CAPACITORS ARE 7,000UF, 25V DC
7. CONNECT E2 TO E4 AND E3 TO E5 FOR 14-VOLT OPERATION. CONNECT E3 TO E4 FOR 28-VOLT OPERATION.
8. S2 AND S3 ON UNITS PROCURED ON CONTRACT NO. DAAB07-76-C-1363.

Figure 1-2. Power Supply PP-1104C/G, schematic diagram.

power diode rectifier circuit CR2, filter network chokes L1 (terminals 1 and 2) and L2 (terminals 7 and 8), filter capacitors C7 through C12, and bleeder resistor R2. The filtered output of rectifier CR1 is across terminals E2 and E3; the filtered output of rectifier CR2 is connected across terminall E4 and E5. When the output circuits are connected for 14-volt operation, the output circuits are parallel-connected by connecting terminals E2 to E4 and E3 to E5. When the output circuits are connected for 28-volt operation, the output circuits are series-connected by connecting E3 to E4. Transformer T1 secondary voltages are applied to rectifiers CR1 and CR2 through the saturable reactor windings of magnetic amplifier T2. During the half-cycle of the ac voltage that appears across each transformer T1 secondary, diodes A and B in rectifiers CR1 and CR2 conduct to produce a dc output pulse. During the other half of the cycle of the ac voltage that appears across each transformer T1 secondary, diodes C and D in rectifiers CR1 and CR2 conduct to produce a dc output pulse. Diode E of CR1 and CR2 is a clamping diode and conducts during that portion of the ac cycle which the magnetic amplifier blocks. The dc output pulses are applied to choke-capacitor filters consisting of chokes L1 and L2 and capacitors C1 through C12. The filter networks smooth the ripple and assist in power supply regulation. As a result, the output voltage approaches the average value of the input voltage from rectifiers CR1 and CR2. Bleeder resistors R1 and R2 prevent any sharp increase in output voltage and provide a discharge path for filter capacitors Cl through C12.

1-7. Regulation
(fig. 1-2)

The difference between the power supply output voltage and the reference voltage controls the degree of saturation of magnetic amplifier T2 to provide regulation of the power supp]y dc output voltage. Any deviation of the power supply output voltage results in a variation of the control current applied to the saturation control winding of magnetic amplifier T2. This action controls the degree of saturation of the magnetic amplifier core and changes the impedance of the saturable reactor windings. This impedance change is presented to the transformer T1 secondary winding voltages to control the voltage applied to rectifiers CR1 and CR2 and to return the power supply output voltage to the correct value.

1-8. Monitor Circuit
(fig. 1-2)

The D.C. AMPERES meter M1, series-connected with the output voltage line, monitors the output current. The VOLTS D.C. meter M2, connected to output terminals E1 and E6, monitors the output voltage.

CHAPTER 2

TROUBLESHOOTING

Warning: When servicing the power supply, be extremely careful of the high voltages.

2-1. General Instructions

Troubleshooting at the direct support, general support, and depot maintenance level includes. all the techniques outlined for organizational maintenance and any special or additional techniques required to isolate a defective part. Paragraph *2-4d* provides the troubleshooting chart to be used by the repairman.

2-2. Organization of Troubleshooting Procedures

a. General. The first step in servicing a defective power supply is to localize the fault, which means tracing the fault to a defective circuit responsible for the abnormal indication. The second step is to isolate the fault, which means locating defective part or parts. Some defective park, such as burned resistors and shorted transformers, can often be located by sight, smell, and hearing. Most defective parts, however, must be isolated by checking voltages and resistance.

b. Localization and Isolation. The first step in tracing trouble is to locate the circuit or part at fault by the following methods:

(1) *Visual inspection.* The purpose of visual inspection is to locate faults without testing or measuring circuits. All meter indications or other visual signs should be observed and an attempt made to localize the fault to a particular part.

(2) *Operation test.* Operational tests frequently indicate the general location of trouble. In many instances, the test. will help in determining the exact nature of the fault. The daily maintenance service and inspection chart (TM 11-6130-246-12) contains a good operational test.

(3) *Troubleshooting chart.* The troubleshooting chart (para *2-4d)* lists symptoms of common troubles and gives (or references) corrective measures. SUCh a chart obviously cannot include all trouble symptoms that may occur. The repairman should use this chart as a guide in analyzing symptoms that may not be listed.

((4) *Resistor and capacitor color code diagrams. Color* code diagrams for resistors and capacitors (fig. 5-1 and 5-2) provide pertinent resistance, voltage rating, and tolerance information.

2-3. Test Equipment Required

All test equipment required for troubleshooting is listed in the Maintenance Allocation Chart (MAC) in TM 11-6130-246-12.

2-4. Localizing Troubles

a. General. In the troubleshooting chart *(d* below), procedures are outlined for localizing troubles and for isolating troubles within the various circuits of the power supply. Refer to figures 2-1 and 2-2 for parts location. Refer to the schematic diagram (fig. 1-2) to identify circuit components and to the wiring diagram (fig. 5-3) for point-to-point circuit wiring and connections. Voltage and resistance

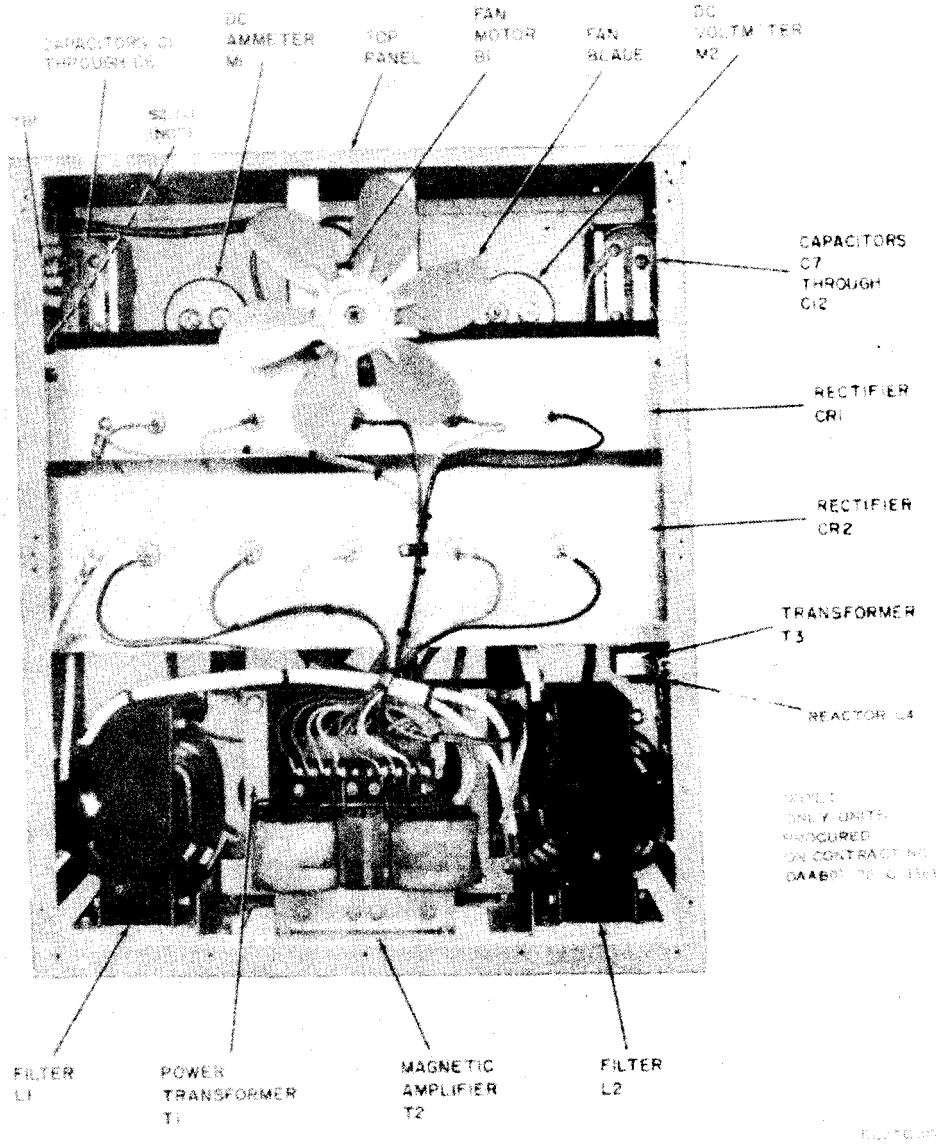

Figure 2-1. Power supply, rear panel removed.

measurements are given in paragraph 2-5, Depending on the nature of the operational symptoms, one or more of the localizing procedures will be necessary. When trouble has been localized to a particular circuit, use voltage and resistance measurements to isolate the trouble to a particular part.

b. Use of Chart. When an abnormal symptom has been observed in the equipment, look for a description of this symptom in the Symptom column and perform the corrective measure shown in the *Corrective measures* column. If no operational symptoms are known, begin with item 5 of the daily preventive maintenance checks and services chart (TM 11-6130-246-12) and proceed until a trouble symptom appears.

c. Conditions to Tests. All checks outlined in the troubleshooting chart are to be conducted with the power supply connected to a power source. (no load connected to output terminals)

d. Troubleshooting Chart.

Symptom	Probable trouble	Corrective measures
1. Indicator lamp DS1 does not light and fan motor B1 does not start when circuit breaker switch CB1 is at ON.	No ac power is applied to the power supply.	Check for input voltage.
	Defective circuit breaker switch CB1.	Check circuit breaker switch CB1; replace if defective.
	Interlock switch S2 or S3 not engaged or defective (Units procured on DAAB07-76-C-1 363).	Check for proper engagement. Replace if necessary.
2. Indicator lamp DS1 lights and fan motor B1 does not operate.	Defective fan motor B1 --------	Replace fan motor B1.
3. Indicator lamp DS1 lights but no output voltage is present regardless of position of increase voltage switch S1.	Open in output circuit ---------	Check for loose connections, broken lead, or faulty component.
	Defective power transformer T1.	Replace power transformer T1.
	Defective magnetic amplifier T2.	Replace magnetic amplifier T2.
4. Output voltage does not change when increase voltage switch S1 is turned from position 1 to position 8.	Defective increase voltage switch S1.	Replace increase voltage switch S1.
	Defective power transformer T1.	Replace power transformer T1.
5. Low output voltage ----------	Defective rectifier CR1, CR2, or CR3.	Replace defective rectifier.
	Defective transformer T3 --------	Replace transformer T3.
6. Indication on VOLTS D.C. meter M2 differs from voltage present at output terminals.	Defective VOLTS D.C. meter M2.	Replace VOLTS D.C. meter M2.
7. Indication on D.C. AMPERES meter M1 differs from current present at output terminals.	Defective shunt resistor R3 ------	Replace shunt resistor R3.
	Defective D.C. AMPERES meter M1.	Replace D.C. AMPERES meter M1.

2-5. Additional Troubleshooting Data

a. Voltage Outputs of Power Transformer T1 and* Transformer *T3. The voltage output data of power transformer T1 and transformer T3 is provided as an aid to troubleshooting. The T1 and T3 secondary winding voltages are listed below:

(1) ***115-volt ac input and 28-volt dc output operation.***

Transformer	Secondary winding terminals	Increase voltage switch position	Ac voltage indication (approx)
T1	20–21	1	34
	22–23		34
	24–25		34
	26–27		34
	20–21	2	36
	22–23		36
	24–25		36
	26–27		36
	20–21	3	38
	22–23		38
	24–25		38
	26–27		38
	20–21	4	39
	22–23		39
	24–25		39
	26–27		39
	20–21	5	41
	22–23		41
	24–25		41
	26–27		41
	20–21	6	43
	22–23		43
	24–25		43
	26–27		43
	20–21	7	45
	22–23		45
	24–25		45
	26–27		45
	20–21	8	47
	22–23		47
	24–25		47
	26–27		47
T3	3–4	1	13.5
		2	14
		3	15.2

Transformer	Secondary winding terminals	Increase voltage switch position	Ac voltage indication (approx)
		4	15.7
		5	16.5
		6	17.2
		7	18.3
		8	19.5

(2) *115-volt ac input and 14-volt dc output operation.*

Transformer	Secondary winding terminals	Increase voltage switch position	Ac voltage (approx)
T1	20–21	1	35
	22–23		35
	24–25		35
	26–27		35
	20–21	2	37.5
	22–23		37.5
	24–25		37.5
	26–27		37.5
	20–21	3	39.4
	22–23		39.4
	24–25		39.4
	26–27		39.4
	20–21	4	40
	22–23		40
	24–25		40
	26–27		40
	20–21	5	41
	22–23		41
	24–25		41
	26–27		41
	20–21	6	45
	22–23		45
	24–25		45
	26–27		45
	20–21	7	47
	22–23		47
	24–25		47
	26–27		47
	20–21	8	49
	22–23		49
	24–25		49
	26–27		49
T3	3–4	1	14.9
		2	15.5
		3	16.5
		4	17.5
		5	17.9
		6	18.9
		7	20
		8	21.2

(3) *230-volt ac input and 14-volt dc output operation.*

Transformer	Secondary winding terminals	Increase voltage switch position	Ac voltage indication (approx
T1	20–21	1	35
	22–23		35
	24–25		35
	26–27		35
	20–21	2	37
	22–23		37
	24–25		37
	26–27		37
	20–21	3	39
	22–23		39
	24–25		39
	26–27		39
	20–21	4	40
	22–23		40
	24–25		40
	26–27		40
	20–21	5	42
	22–23		42
	24–25		42
	25–27		42
	20–21	6	44
	22–23		44
	24–25		44
	26–27		44
	20–21	7	46.5
	22–23		46.5
	24–25		46.5
	26–27		46.5
	20–21	8	48
	22–23		48
	24–25		48
	26–27		48
T3	3–4	1	13.5
		2	15
		3	15.7
		4	16.3
		5	17
		6	18
		7	19
		8	20.3

(4) *230-volt ac input and 28-volt dc output operation.*

Transformer	Secondary winding terminals	Increase voltage switch position	Ac voltage indication (approx)
T1	20–21	1	33
	22–23		33
	24–25		33
	26–27		33

Transformer	Secondary winding terminals	Increase voltage switch position	Ac voltage indication (approx)
	20–21	2	35.5
	22–23		35.5
	24–25		35.5
	26–27		35.5
	20–21	3	37
	22–23		37
	24–25		37
	26–27		37
	20–21	4	38.5
	22–23		38.5
	24–25		38.5
	26–27		38.5
	20–21	5	40
	22–23		40
	24–25		40
	26–27		40
	20–21	6	42
	22–23		42
	24–25		42
	26–27		42
	20–21	7	44.2
	22–23		44.2
	24–25		44.3
	26–27		44.3
	20–21	8	47
	22–23		47
	24–25		47.1
	26–27		47
T3	3–4	1	13.5
		2	15
		3	15.7
		4	16.3
		5	17
		6	17.8
		7	19
		8	20.3

b. Dc Resistance of Transformers and Coils. The dc resistance data ***((3) below)*** is provided as an aid to troubleshooting. When using the data, observe the following:

Caution: Do **not measure resistance of the windings when input power is applied to the power supply and when the circuit breaker switch is at ON. Disconnect the input power plug and place the circuit breaker switch to OFF.**

(1) Before making resistance measurements of the windings, determine that faulty operation is probably caused sby a faulty transformed or coil. To do this, follow the troubleshooting procedures as outlined in paragraph 2-*4d.*

(2) Do not use the resistance measurements as the sole basis for discarding a transformer or coil as defective. Resistances may vary from one transformer or coil to another, because of broad winding tolerances during manufacture. The values given in the chart ((3) below) are typical average values.

(3) Dc resistances of transformers and coils are as follows:

Transformer	Terminals	Resistance (ohms)
T1	1–9	Less than 1
	11–19	Less than 1
	20–21	Less than 1
	22–23	Less than 1
	24–25	Less than 1
	26–27	Less than 1
T2	1–20	Less than 1
	2–19	Less than 1
	3–18	Less than 1
	4–17	Less than 1
	5–6	11
	7–14	Less than 1
	8–13	Less than 1
	9–12	Less than 1
	10–11	Less than 1
T3	1–2	33.5
	3–4	2.5
L1	1–2	Less than 1
	3–4	Less than 1
L2	5–6	Less than 1
	7–8	Less than 1
L3	1–2	9.5
L4	1–2	79

2-6. Filter Capacitors Test

Each filter capacitor, C1 through C12 (fig. 1-2 and 2-1), is a 25-volt, 7,000-microfarad (uf) electrolytic capacitor. Test each capacitor with Analyzer ZM-3/U as described in TM 11-5043-12. Refer to the wiring diagram (fig. 5-3) for connection of the capacitors.

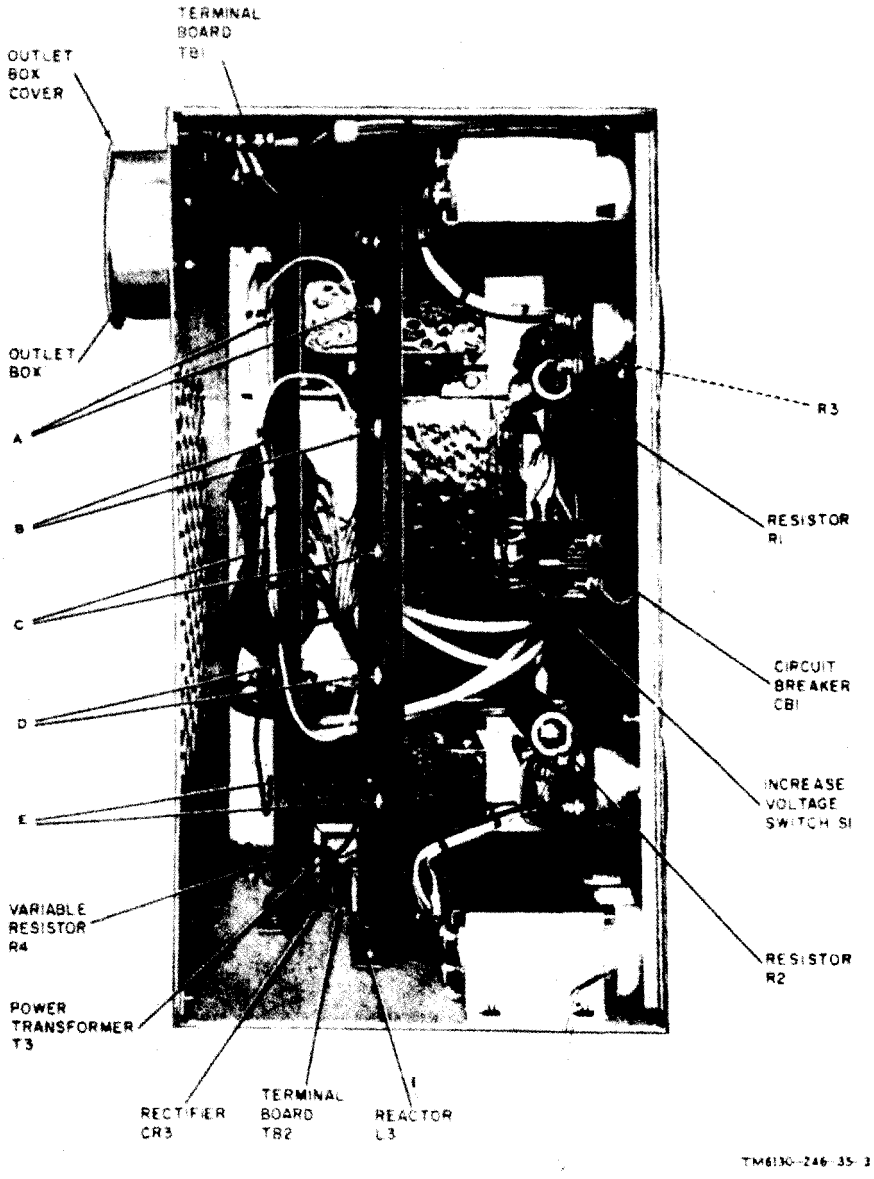

Figure 2–2. Power supply, top view with top panel removed.

CHAPTER 3

REPAIRS AND ADJUSTMENT

3-1. General Parts Replacement Techniques

The power supply parts can be reached and replaced easily without special procedures. Refer to figures 2-1 and 2-2 for the location of parts.

a. When soldering connections to the semiconductors in CR1, CR2, or CR3, solder quickly; use a heat sink (such as long-nosed pliers) between the soldered joint and the diode (semiconductor). Connect replaced items in accordance with the wiring diagram (fig. 5-3).

b. On units procured under Contract No. 20256-PP-62-C2-41, the semiconductors on CR1 and CR2 cannot be removed. If a semiconductor is found to be defective on either CR1 or CR2, proceed with steps (1) through (7) below for replacement.

(1) Disconnect the PP-1104C/G from its source of power by removing the power cable or opening the main power circuit breaker.

(2) Remove the back cover of the power supply. Viewing the defective semiconductor on the rear of CR1 or CR2, clip the electrical lead from it.

(3) Alongside the defective semiconductor, drill a 17/32-inch hole through the CR1 or CR2 assembly heatsink plate.

(4) Mount an IN1184 semiconductor in the drilled hole as a replacement for the defective semiconductor.

(5) Solder the lead, clipped in (2) above, to the replacement semiconductor.

(6) Replace the power supply back cover removed in (2) above, and restore power to the unit.

(7) Perform the tests listed in chapter 4.

c. On units procured under Contract No. DAAB07-76-C-1363, interlock switch S2 or S3 (fig. 3-1) can be removed by disconnecting the wires attached to the switch and loosening the screws. Make sure the replacement switch is positioned so that the switch is firmly pressed-in when the terminal board plate is closed. Secure the replacement switch with screws and attach the previously removed wires.

3-2. Adjustment of Variable Resistor R4

a. Connect the power supply for 14-volt operation.

b. Set circuit breaker switch CB1 to ON.

c. Set increase voltage switch S1 to 4.

d. Adjust variable resistor R4 (fig. 2-2) to obtain an indication of 14.3 volts on VOLTS D.C. meter M1.

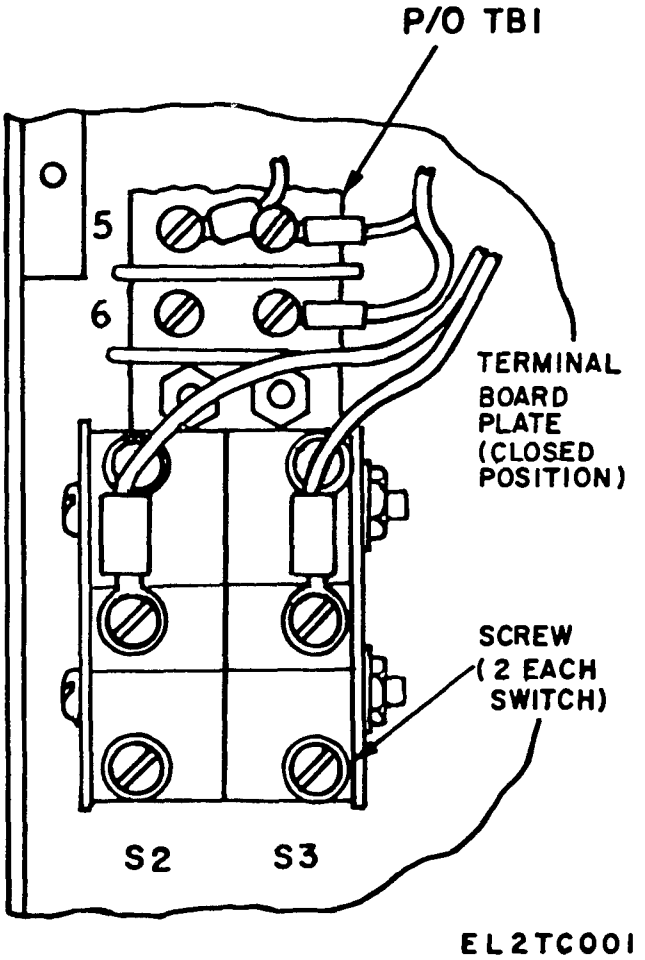

Figure 3-1. Rear view of interlock switches.

CHAPTER 4

GENERAL SUPPORT TEST PROCEDURES

4-1. General

a. Testing procedures are prepared for use by Signal Field Maintenance Shops and Signal Service Organizations responsible for general support maintenance of electronic equipment to determine the acceptability of repaired equipment. These procedures set forth specific requirements that repaired equipment *must* meet before it is returned to the using organization. These procedures may also be used as a guide for testing equipment that has been repaired at direct support level if the proper tools and test equipments are available. A summary of the performance standards is given in paragraph 4-7.

b. Comply with the instructions preceding each chart before proceeding to the chart, Perform each step in sequence. Do not vary the sequence. For each step, perform all the actions required in the *Control settings* columns; then perform each specific test procedure and verify it against its performance standard.

4-2. Test Equipment, Tools, and Materials

Note. Continue using the test equipment and tools listed below until new test equipment and tools, listed in the latest Mainteance Allocation Chart (MAC) (Appendix II) of TM 11-6130-246-12, become available.

All test equipment, tools, and materials required to perform the testing procedures given in this chapter are listed in *a, b,* and *c,* below and are authorized. under TA 11-17, Signal Field Maintenance Shops; and TA 11-100(11-17), Allowances of Signal Corps Expendable Supplies for Signal Field Maintenance Shop (Continental United States).

a. Test Equipment.

Nomenclature	Federal stock No.	Technical manual
Ammeter ME-65/U	6625-237-9312	TM 11-487H-1
Ohmmeter ZM-21A/U	6625-246-5880	TM 11-2050
Low Voltage Circuit Tester TV-100.	4910-092-9136	None
Voltmeter, Meter ME-30(*)/U.[a]	6625-669-0742	TM 11-6625-320-12
Transformer, Variable Power TF-171A/U.	5950-503-0632	None
Multimeter TS-352/U	6625-242-5023	TM 11-5527

[a] Indicates ME-30A/U, ME-30B/U, and ME-30C/U.

b. Tools. All the tools required are included in Tool Kit, Radar and Radio Repairman TK-87/U.

c. Materials.

Nomenclature	Federal stock No.
Wire, electrical, stranded; #10 AWG[a]	6145-160-5110
Connector, plug, electrical.	5935-283-7130

[a] 20 feet long. Divide into two 8-foot lengths for power cable. Any insulated copper wire of No. 10 AWG or larger may be used. Use remaining 4 feet as hookup wire.

4-3. Physical Tests and Inspections

a. Test Equipment and Materials. None required.

b. Test Connections and Conditions. No connections necessary. Remove power supply rear panel.

c. Procedure.

Step No.	Control settings: Test equipment	Control settings: Equipment under test	Test procedure	Performance standard
1	None.	Controls may be in any position.	*a.* Inspect case and chassis for damage, missing parts, and condition of paint. *Note:* Touchup painting is recommended in lieu of refinishing whenever practical; screwheads, binding posts, receptacles, and other plated parts will not be painted or polished with abrasives.	*a.* No damage evident or parts missing. External surfaces intended to be painted will not show bare metal. Panel lettering will be legible.
			b. Inspect all controls and mechanical assemblies for loose or missing screws, bolts, and nuts.	*b.* Screws, bolts, and nuts will be tight. None missing.
			c. Inspect socket and meter for looseness, damage, or missing parts.	*c.* No loose parts or damage. No missing parts.
2	None.	Controls may be in any position.	*a.* Rotate increase voltage switch throughout the limits of travel.	*a.* Switch will rotate freely without binding or excessive looseness.
			b. Operate circuit breaker switch CB1.	*b.* Circuit breaker switch CB1 will operate properly.

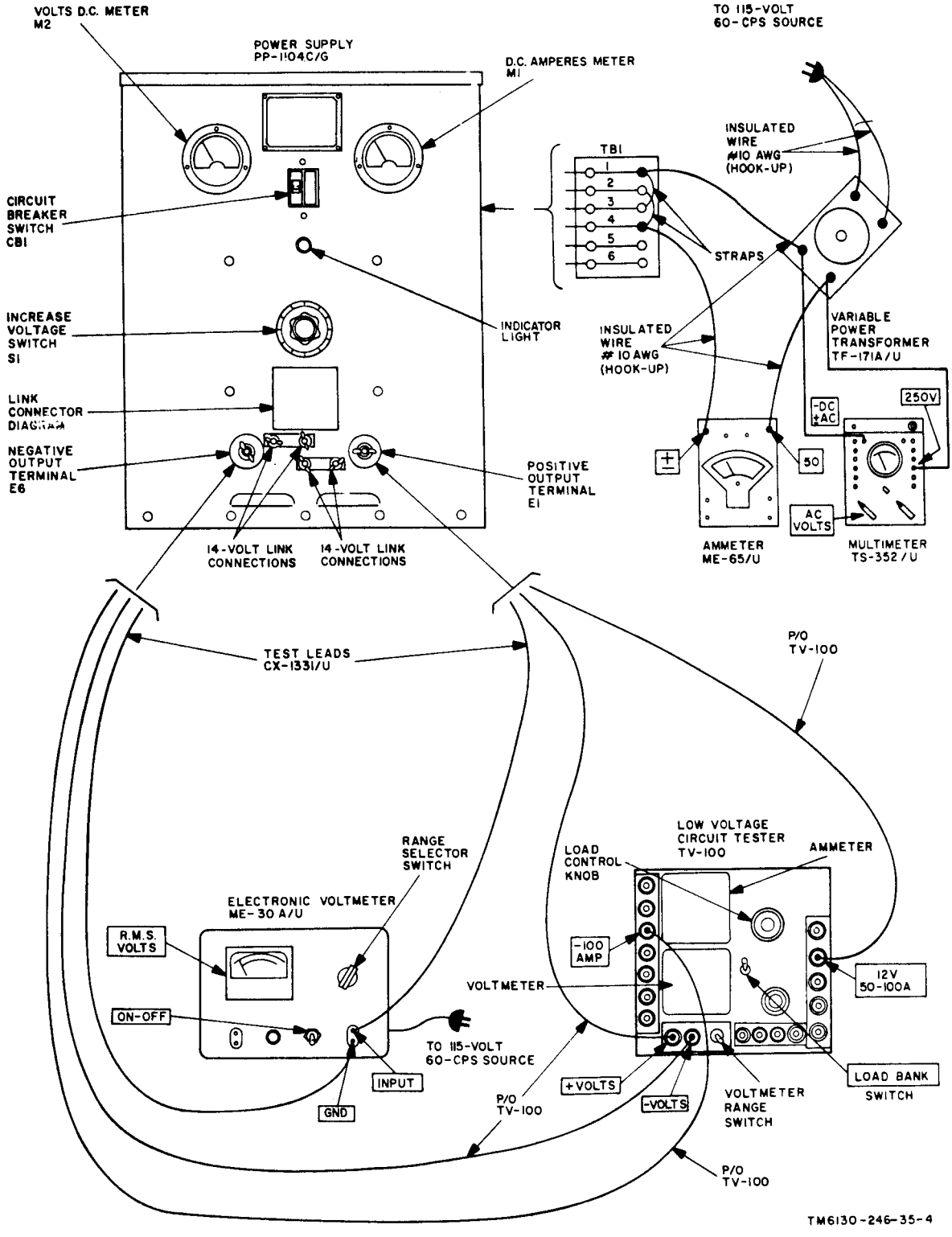

Figure 4-1. Fourteen-volt output, regulation, and ripple test connection diagram.

4-4. Fourteen-Volt Output, Regulation, and Ripple Test

a. Test Equipment and Materials.

Voltmeter, Meter ME-30A/U.
Multimeter TS-352/U.
Low Voltage Circuit Tester TV-1OO.
Ammeter ME-65/U.
Transformer, Variable Power TF-171A/U.
Power cable (as fabricated).

b. ***Test Connections and Conditions.*** Connect the equipment as shown in figure 4-1. This test is written for 115-volt ac operation.

c. ***Procedure.***

Step No.	Control settings: Test equipment	Control settings: Equipment under test	Test procedure	Performance standard
1	*TF-171A/U* Control: 115 *ME-65/U* Ammeter range: 50 *ME-30(*)/U* ON-OFF switch: ON Range selector switch: .3 *TS-352/U* Function: AC Volts *TV-100* LOAD BANK switch: OFF LOAD CONTROL: Turn control counterclockwise until control turns freely. Voltmeter range switch: 20	Circuit breaker switch: OFF Increase voltage switch: 1	*a.* Connect links on the front panel of PP-1104C/G for 14-volt operation.	*a.* None.
			b. Connect the PP-1104C/G to a 115-volt ac source.	*b.* None.
			c. Adjust the control on the TF-171A/U for 115-volt ac output.	*c.* None.
			d. Set the circuit breaker switch on the PP-1104C/G to ON. Observe indication on the 0 to 50 scale on ME-65/U.	*d.* Reading must not exceed 3.5 amperes.
			e. Rotate the increase voltage switch on the PP-1104C/G until an indication of 14 volts is observed on the TV-100 voltmeter.	*e.* Reading is 14 volts.
			f. Observe the indication on VOLTS D.C. meter on the PP-1104C/G.	*f.* Reading is 14 volts ±1.
			g. Turn the LOAD CONTROL on the TV-100 clockwise until the control torque increases slightly. ***Caution:*** **If the TV-100 is operated for more than 3 minutes after the LOAD BANK switch is set to ON, serious damage to the LOAD BANK will result. After 3 minutes of operation, set the LOAD BANK switch to OFF for a minimum of 27 minutes to prevent serious damage to the LOAD BANK.**	*g.* None.

Step No.	Control settings: Test equipment	Control settings: Equipment under test	Test procedure	erformance standard
			h. Set the LOAD BANK switch on the TV-100 to ON, and turn the LOAD CONTROL clockwise until 100 amperes is indicated on the TV-100 ammeter.	.. Reading is 100 amperes.
			i. Observe the indication on the D.C. AMPERES meter on the PP-1104C/G.	Reading is 100 amperes ±5.
			j. Observe indication on the 0 to .3 scale on ME-30(*)/U.	Reading must not exceed 0.126 volt.
			k. Observe indication on TV-100 voltmeter.	*c.* Reading must not be less than 13.2 volts.
			l. Observe indication on the 0 to 50 scale on ME-65/U.	Reading must not exceed 24 amperes.
			m. Rotate the increase voltage switch on PP-1104C/G from position 1 through 8 while observing the indication on TV-100 voltmeter. (Be sure to readjust TV-100 as necessary to insure that load current does not exceed 100 amperes.)	*n.* Reading for position 1 should be 11.5 volts ± 0.6, and should increase progressively to 17.5 volts ± 1 as the increase voltage switch is rotated to position 8.
			n. Adjust the control on the TF-171A/U for 105-volt ac output and rotate increase voltage switch on PP-1104C/G for an indication of 14 volts on TV-100 voltmeter.	*n.* Reading is 14 volts.
			o. Adjust the control on the TF-171A/U for 125-volt ac output and rotate increase voltage switch on PP-1104C/G for an indication of 14 volts on TV-100 voltmeter.	*o.* Reading is 14 volts.
			p. Adjust the control on TF-171A/U for 115-volt ac output, and rotate increase voltage switch on PP-1104C/G for an indication of 14 volts on TV-100 voltmeter.	*p.* Reading is 14 volts.
			q. Set LOAD BANK switch on TV-100 to OFF.	*q.* None.

815-695-3

Step No.	Control settings: Test equipment	Control settings: Equipment under test	Test procedure	Performance standard
			r. Turn LOAD CONTROL on TV-100 counter-clockwise until LOAD CONTROL turns freely.	*r.* None.
			s. Set circuit breaker switch on PP-1104C/G to OFF.	*s.* None.

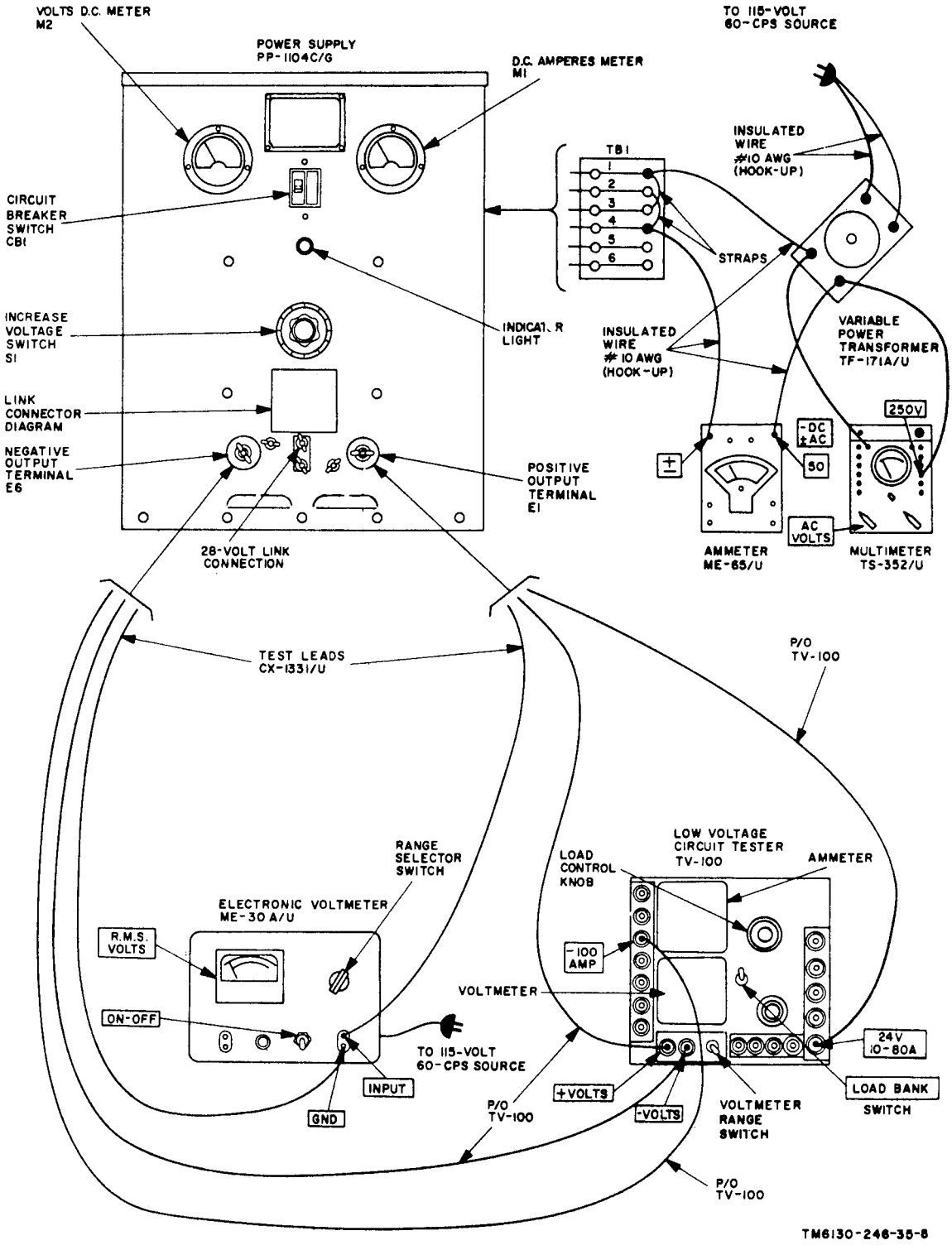

Figure 4-2. Twenty eight-volt output, regulation, and ripple test connection diagram.

4-5. Twenty-Eight-Volt Output, Regulation, and Ripple Test

a. Test Equipment and Materials.
Voltmeter, Meter ME-30A/U.
Multimeter Ts-352/U.
Low Voltage Circuit Tester TV-1OO.
Ammeter ME-65/U.
Transformer, Variable Power TF-171A/U.
Power cable (as fabricated).

b. ***Test Connection and Conditions.*** Connect the equipment as shown in figure 4-2. This test is written for 115-volt ac operation.

c. Procedure.

Step No.	Control settings: Test equipment	Control settings: Equipment under test	Test procedure	Performance standard
1	*TF-171A/U* Control: 115 *ME-65/U* Ammeter range: 50 *ME-30(*)/U* ON-OFF switch: ON Range selector switch: .3 *TS-352/U* FUNCTION: AC VOLTS *TV-100* LOAD BANK switch: OFF LOAD CONTROL Turn control counterclockwise until control turns freely. Voltmeter range switch: 50	ircuit breaker switch: OFF ncrease voltage switch: 1	*a.* Connect links on the front panel of PP-1104C/G for 28-volt operation.	None.
			b. Connect the PP-1104C/G to a 115-volt ac source.	None.
			c. Adjust the control on the TF-171A/U for 115 volts ac output.	None.
			d. Set the circuit breaker switch on the PP-1104C/G to ON. Observe indication on the 0 to 50 scale on ME-65/U.	Reading must not exceed 3.5 amperes.
			e. Rotate the increase voltage switch on the PP-1104C/G until an indication of 28 volts is observed on the TV-100 voltmeter.	Reading is 28 volts.
			f. Observe the indication on VOLTS D.C. meter on the PP-1104C/G.	Reading is 28 volts ±1.
			g. Turn the LOAD CONTROL on the TV-100 clockwise until the control torque increases slightly. ***Caution:*** **If the TV-100 is operated for more than 3 minutes after the LOAD BANK switch is set to ON, serious damage to the LOAl BANK will result. After 3 minutes of operation, set the LOAD BANK switch to OFF for a minimum of 27 minutes to prevent serious damage to the LOAl BANK.**	None.

Step No.	Control settings: Test equipment	Control settings: Equipment under test	Test procedure	Performance standard
			i. Set the LOAD BANK switch on the TV-100 to ON, and turn the LOAD CONTROL clockwise until 50 amperes is indicated on the TV-100 ammeter.	. Reading is 50 amperes.
			i. Observe the indication on the D.C. AMPERES meter on the PP-1104C/G.	Reading is 50 amperes ±2.5.
			j. Observe indication on the 0 to .3 scale on ME-30(*)/U.	. Reading must not exceed 0.252 volt.
			k. Observe indication on TV-100 voltmeter.	:. Reading must not be less than 26.9 volts.
			l. Observe indication on the 0 to 50 scale on ME-65/U.	Reading must not exceed 24 amperes.
			m. Rotate the increase voltage switch on PP-1104C/G from position 1 through 8 while observing the indication on TV-100 voltmeter. (Be sure to readjust TV-100 as necessary to insure that load current does not exceed 50 amperes.)	*n.* Reading for position 1 should be 23 volts ±1, and should increase progressively to 35 volts ± 1.5 as the increase voltage switch is rotated to position 8.
			n. Adjust the control on the TF-171A/U for 105-volt ac output and rotate increase voltage switch on PP-1104C/G for an indication of 28 volts on TV-100 voltmeter.	*i.* Reading is 28 volts.
			o. Adjust the control on the TF-171A/U for 125-volt ac output and rotate increase voltage switch on PP-1104C/G for an indication of 28 volts on TV-100 voltmeter.	). Reading is 28 volts.
			p. Adjust the control on TF-171A/U for 115-volt ac output, and rotate increase voltage switch on PP-1104C/G for an indication of 28 volts on TV-100 voltmeter.	ɔ. Reading is 28 volts.

Step No.	Control settings		Test procedure	Performance standard
	Test equipment	Equipment under test		
			q. Set LOAD BANK switch on TV-100 to OFF.	*q*. None.
			r., Turn LOAD CONTROL on TV-100 counter-clockwise until LOAD CONTROL turns freely.	*r*. None.
			s. Be sure the circuit breaker switch on PP-1104C/G is set to OFF.	*s*. None.

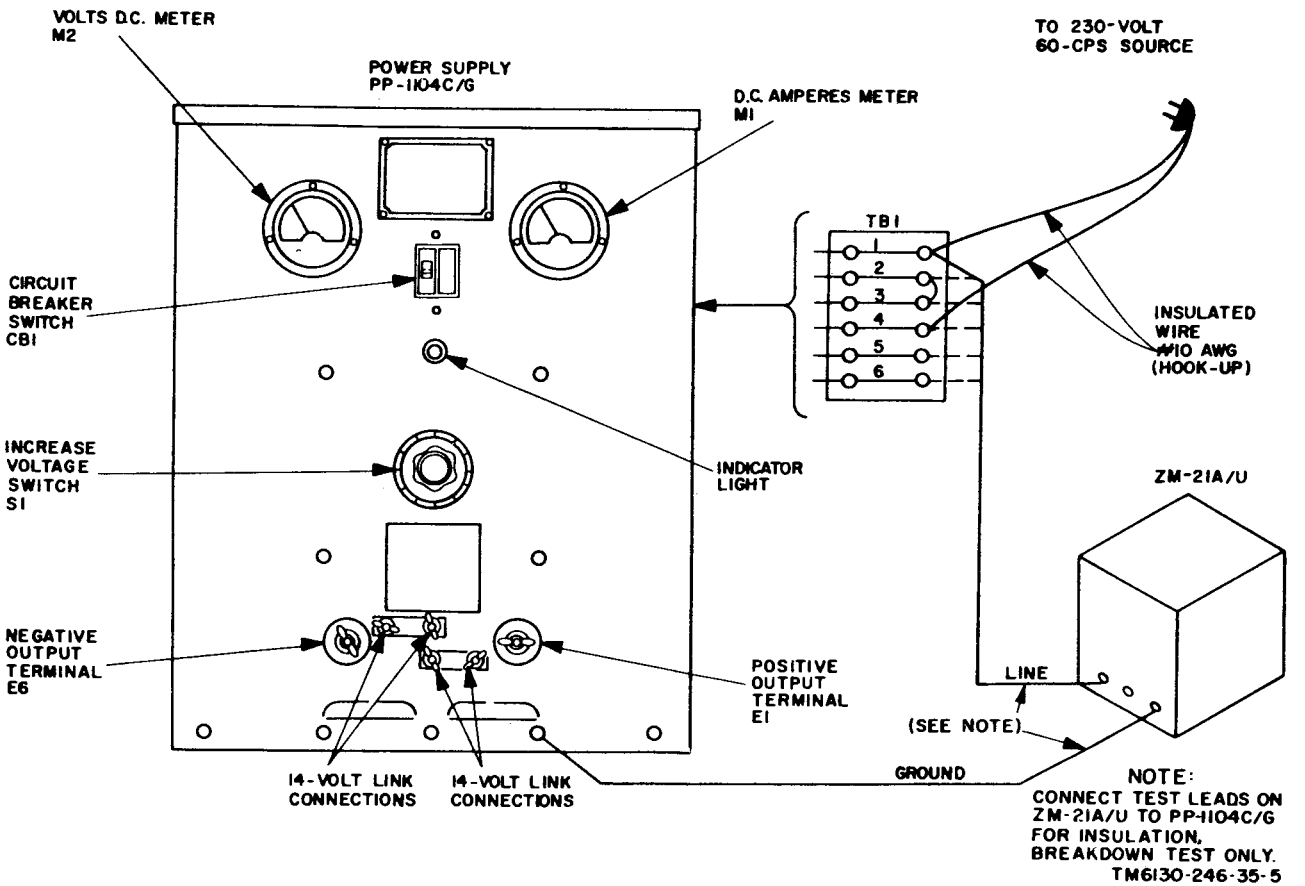

Figure 4-3. Two hundred and thirty-volt operation and insulation test connection diagram.

4-6. Two Hundred and Thirty-Volt Operation and insulation Breakdown Test

a. Test Equipment and Materials.
Ohmmeter ZM-21A/U.
Power cable (as fabricated).

b. Test Connections and *Conditions.* Connect the equipment as shown in figure 4-3. Do not connect the test leads on **ZM-21A/U to PP-1104C/G** until instructed to do so in step 2 of the procedures given in *c* below. This test is written for 230-volt ac operation.

c. *Procedure.*

Step No.	Control settings: Test equipment	Control settings: Equipment under test	Test procedure	Performance standard
1		Circuit breaker switch: OFF	*a.* Connect terminals on TB1 for 230-volt ac input.	*a.* None.
		Increase voltage switch: 1	*b.* Connect links on front panel of PP-1104C/G for 14-volt operation.	*b.* None.
			c. Connect PP-1104C/G to a 230-volt ac source.	*c.* None.
			d. Set the circuit breaker switch on PP-1104C/G to ON.	*d.* None.
			e. Rotate the increase voltage switch on PP-1104C/G until an indication of 14 volts is observed on DC VOLTS meter on PP-1104C/G.	*e.* Reading is 14 volts.
			f. Set the circuit breaker switch on PP-1104C/G to OFF.	*f.* None.
			g. Disconnect 230-volt ac source from PP-1104C/G.	*g.* None.
2		Same as step 1.	*a.* Same as step 1*a* above.	*a.* None.
			b. Same as step 1*b* above.	*b.* None.
			c. Connect the ground lead on ZM-21A/U to the case of PP-1104C/G.	*c.* None.
			d. Set the circuit breaker switch on the PP-1104C/G to ON.	*d.* None.
			e. Connect the line lead on ZM-21A/U to terminal 1 on TB1, operate ZM21A/U, and observe the indication on ZM-21A/U meter.	*e.* Meter reading is greater than 10 megohms.
			f. Set the circuit breaker switch on the PP-1104C/G to OFF and disconnect ZM-21A/U from PP-1104C/G.	*f.* None.

4-7. Test Data Summary

a. Input.

(1) Voltage	115 volts
(2) Frequency	60 cps
(3) Phase	Single
(4) Current (full load)	24 amperes maximum for 14-volt or 28-volt operation.

b. Output.

(1) Voltage (increase voltage switch S1 set to 4)	14 volts dc ± 0.75 for 14-volt operation 28 volts dc ± 1 for 28-volt operation 100 amperes ± 5 at 14 volts dc
(2) Current (maximum)	50 amperes ± 2.5 at 28 volts dc
(3) Ripple Voltage	0.126 volt at 14 volts dc (0.9 percent) 0.252 volt at 28 volts dc (0.9 percent)
(4) Voltage Regulation	6 percent maximum at 14 volts dc 4 percent maximum at 28 volts dc

c. Formulas Used.

$$\% \text{ Regulation} = \frac{E_{NL} - E_L}{E_L} \times 100.$$

$$\% \text{ Ripple} = \frac{E_{RMS}}{E_{DC}} \times 100.$$

where

E_{NL} is voltage measured under no-load conditions.
E_L is voltage measured under full-load conditions.
E_{RMS} is the measured ripple voltage.
E_{DC} is the measured dc output voltage.

CHAPTER 5
DEPOT INSPECTION STANDARDS

5-1. Applicability of Depot Inspection Standards

The tests outlined in this chapter are designed to measure the performance capability of a repaired equipment. Equipment that is to be returned to stock should meet the standards given in these tests.

5-2. Applicable References

*a. **Repair Standards.*** Applicable procedures of the depots performing this test and their general standards for repaired electronics equipment form a part of the test requirement.

*b. **Technical Publication.*** The technical publication applicable to the equipment to be tested is TM 11-6130–246-12.

*c. **Modification Work Orders.*** Perform all modification work orders applicable to this equipment before making the tests specified. DA Pam 310-4 lists all available MWO'S.

5-3. Test Facilities Required

The following items are required for depot testing:

Item	Technical manual	Common name
Ammeter ME–65/U	TM 11–487 H–1	Ammeter
Low Voltage Circuit Tester TV–100	None	Tester
Voltmeter, Meter ME–30A/U	TM 11–6625–320–12	Vtvm
Transformer, Variable Power TF–171A/U	None	Variable transformer
Ohmmeter ZM–21A/U	TM 11–2050	High-range ohmmeter
Multimeter TS–352/U	TM 11–5527	Multimeter

5-4. Tests

The depot inspection standards test procedures are the same as those for general support (para 4-4, 4-5, and 4-6). Equipment that meets the performance standards stated in these tests will furnish satisfactory operation equivalent to that of new equipment.

APPENDIX
REFERENCES

DA Pamphlet 310-4	Index of Technical Manuals, Technical Bulletins, Supply Manuals (Types 4, 6, 7, 8, and 9), Supply Catalogs (Type CL), Supply Bulletins, Lubrication Orders, and Modification Work Orders.
TA 11-17	Signal Field Maintenance Shops.
TA 11-100(11-17)	Allowance of Signal Corps Expendable Supplies for Signal Field Maintenance Shops.
TM 11-487H-1	Electronic Test Equipment
TM 11-2050	Test Set I-48-B and Ohmmeter ZM-21A/U.
TM 11-5043-12	Operator's and Organizational Maintenance Manual: Analyzers ZM-3/U and ZM-3A/U.
TM 11-5527	Multimeters TS-352/U, TS-352A/U, and TS-352B/U.
TM 11-6130-246-12	Operator and Organizational Maintenance Manual: Power Supply PP-1104C/G.
TM 11-6130-246-25P	Organizational, Direct Support and General Support and Depot Maintenance Repair Parts and Special Tools List: Power Supply PP-1104C/G.
TM 11-6625-320-12	Operator’s and Organizational Maintenance Manual: Voltmeter, Meter ME-30A/U and Voltmeters, Electronic ME-30B/U and ME-30C/U.

COLOR CODE MARKING FOR MILITARY STANDARD RESISTORS

COMPOSITION-TYPE RESISTORS

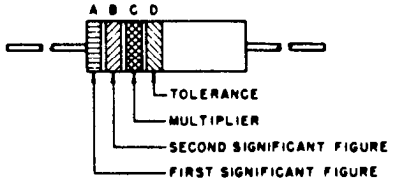

BAND A— Equal Width Band Signifies Composition-Type

WIREWOUND-TYPE RESISTORS

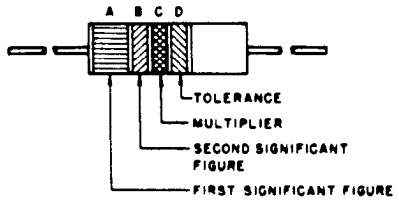

BAND A— Double Width Signifies Wire-wound Resistor

COLOR CODE TABLE

BAND A		BAND B		BAND C		BAND D*	
COLOR	FIRST SIGNIFICANT FIGURE	COLOR	SECOND SIGNIFICANT FIGURE	COLOR	MULTIPLIER	COLOR	RESISTANCE TOLERANCE (PERCENT)
BLACK	0	BLACK	0	BLACK	1		
BROWN	1	BROWN	1	BROWN	10		
RED	2	RED	2	RED	100		
ORANGE	3	ORANGE	3	ORANGE	1,000		
YELLOW	4	YELLOW	4	YELLOW	10,000	SILVER	± 10
GREEN	5	GREEN	5	GREEN	100,000	GOLD	± 5
BLUE	6	BLUE	6	BLUE	1,000,000		
PURPLE (VIOLET)	7	PURPLE (VIOLET)	7				
GRAY	8	GRAY	8	SILVER	0.01		
WHITE	9	WHITE	9	GOLD	0.1		

EXAMPLES OF COLOR CODING

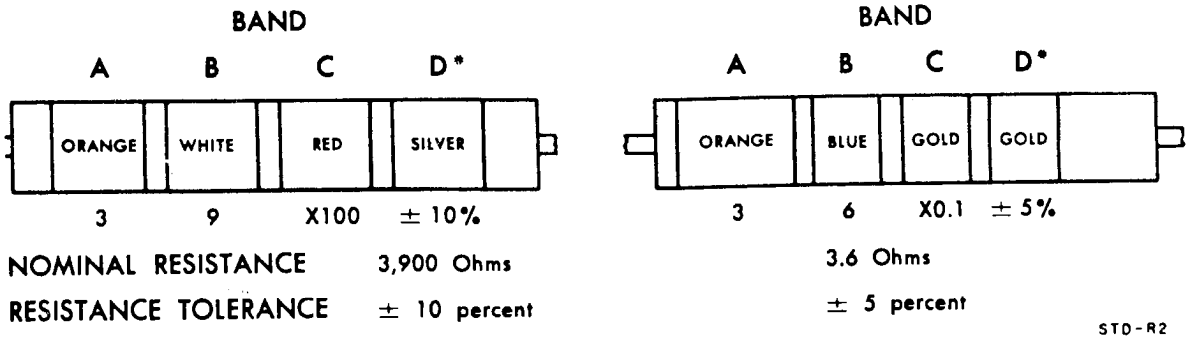

*If Band D is omitted, the resistor tolerance is ±20%, and the resistor is not Mil-Std.

Figure 5–1. Color code marking for MIL STD resistors.

COLOR CODE MARKING FOR MILITARY STANDARD CAPACITORS

GROUP I Capacitors, Fixed, Various-Dielectrics, Styles CM, CN, CY, and CB

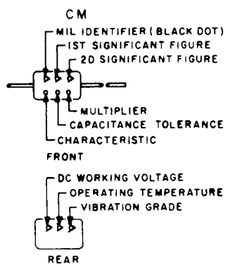

MICA-DIELECTRIC

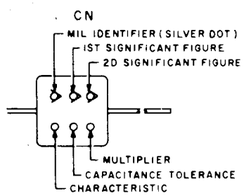

PAPER-DIELECTRIC

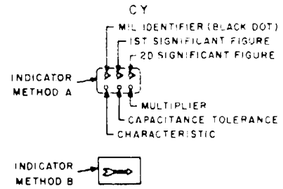

GLASS-DIELECTRIC, GLASS CASE

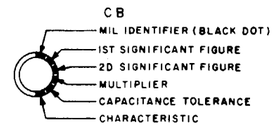

MICA, BUTTON TYPE

GROUP II Capacitors, Fixed Ceramic-Dielectric (General Purpose) Style CK

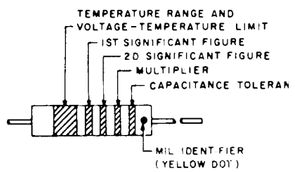

AXIAL LEAD

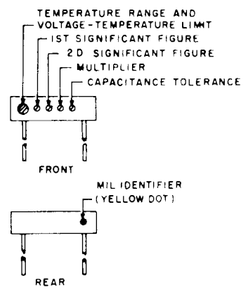

RADIAL LEAD

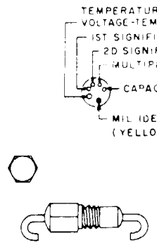

FEED-THROUGH

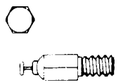

STAND-OFF

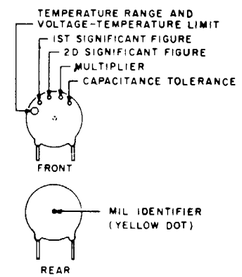

DISK-TYPE

GROUP III Capacitors, Fixed, Ceramic-Dielectric (Temperature Compensating) Style CC

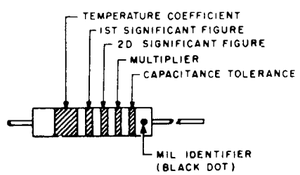

AXIAL LEAD

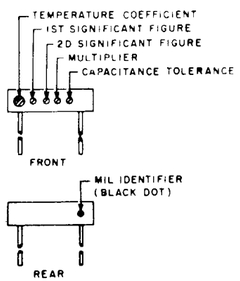

RADIAL LEAD

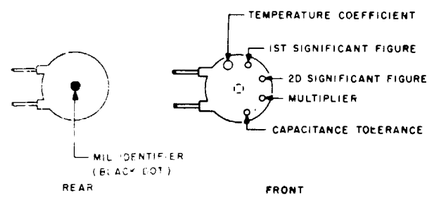

DISK-TYPE

COLOR CODE TABLES

TABLE I – For use with Group I, Styles CM, CN, CY and CB

COLOR	MIL ID	1st SIG FIG	2nd SIG FIG	MULTIPLIER[1]	CAPACITANCE TOLERANCE				CHARACTERISTIC[2]				DC WORKING VOLTAGE	OPERATING TEMP. RANGE	VIBRATION GRADE
					CM	CN	CY	CB	CM	CN	CY	CB	CM	CM	CM
BLACK	CM, CY CB	0	0	1			± 20%	± 20%		A				−55° to +70°C	10–55 cps
BROWN		1	1	10					B	E		B			
RED		2	2	100	± 2%		± 2%	± 2%	C		C			−55° to +85°C	
ORANGE		3	3	1,000		± 30%			D			D	300		
YELLOW		4	4	10,000					E					−55° to +125°C	10–2,000 cps
GREEN		5	5		± 5%				F				500		
BLUE		6	6											−55° to +150°C	
PURPLE (VIOLET)		7	7												
GREY		8	8												
WHITE		9	9												
GOLD				0.1			± 5%	± 5%							
SILVER	CN				± 10%	± 10%	± 10%	± 10%							

TABLE II – For use with Group II, General Purpose, Style CK

COLOR	TEMP. RANGE AND VOLTAGE – TEMP. LIMITS[3]	1st SIG FIG	2nd SIG FIG	MULTIPLIER[1]	CAPACITANCE TOLERANCE	MIL ID
BLACK		0	0	1	± 20%	
BROWN	AW	1	1	10	± 10%	
RED	AX	2	2	100		
ORANGE	BX	3	3	1,000		
YELLOW	AV	4	4	10,000		CK
GREEN	CZ	5	5			
BLUE	BV	6	6			
PURPLE (VIOLET)		7	7			
GREY		8	8			
WHITE		9	9			
GOLD						
SILVER						

TABLE III – For use with Group III, Temperature Compensating, Style CC

COLOR	TEMPERATURE COEFFICIENT[4]	1st SIG FIG	2nd SIG FIG	MULTIPLIER[1]	CAPACITANCE TOLERANCE		MIL ID
					Capacitances over 10uuf	Capacitances 10uuf or less	
BLACK	0	0	0	1		± 2.0uuf	CC
BROWN	−30	1	1	10	± 1%		
RED	−80	2	2	100	± 2%	± 0.25uuf	
ORANGE	−150	3	3	1,000			
YELLOW	−220	4	4				
GREEN	−330	5	5		± 5%	± 0.5uuf	
BLUE	−470	6	6				
PURPLE (VIOLET)	−750	7	7				
GREY		8	8	0.01			
WHITE		9	9	0.1	± 10%		
GOLD	+100					± 1.0uuf	
SILVER							

1. The multiplier is the number by which the two significant (SIG) figures are multiplied to obtain the capacitance in uuf.
2. Letters indicate the Characteristics designated in applicable specifications: MIL–C–5, MIL–C–91, MIL–C–11272, and MIL–C–10950 respectively.
3. Letters indicate the temperature range and voltage-temperature limits designated in MIL–C–11015.
4. Temperature coefficient in parts per million per degree centigrade.

Figure 5–2. Color code marking for MIL STD capacitors.

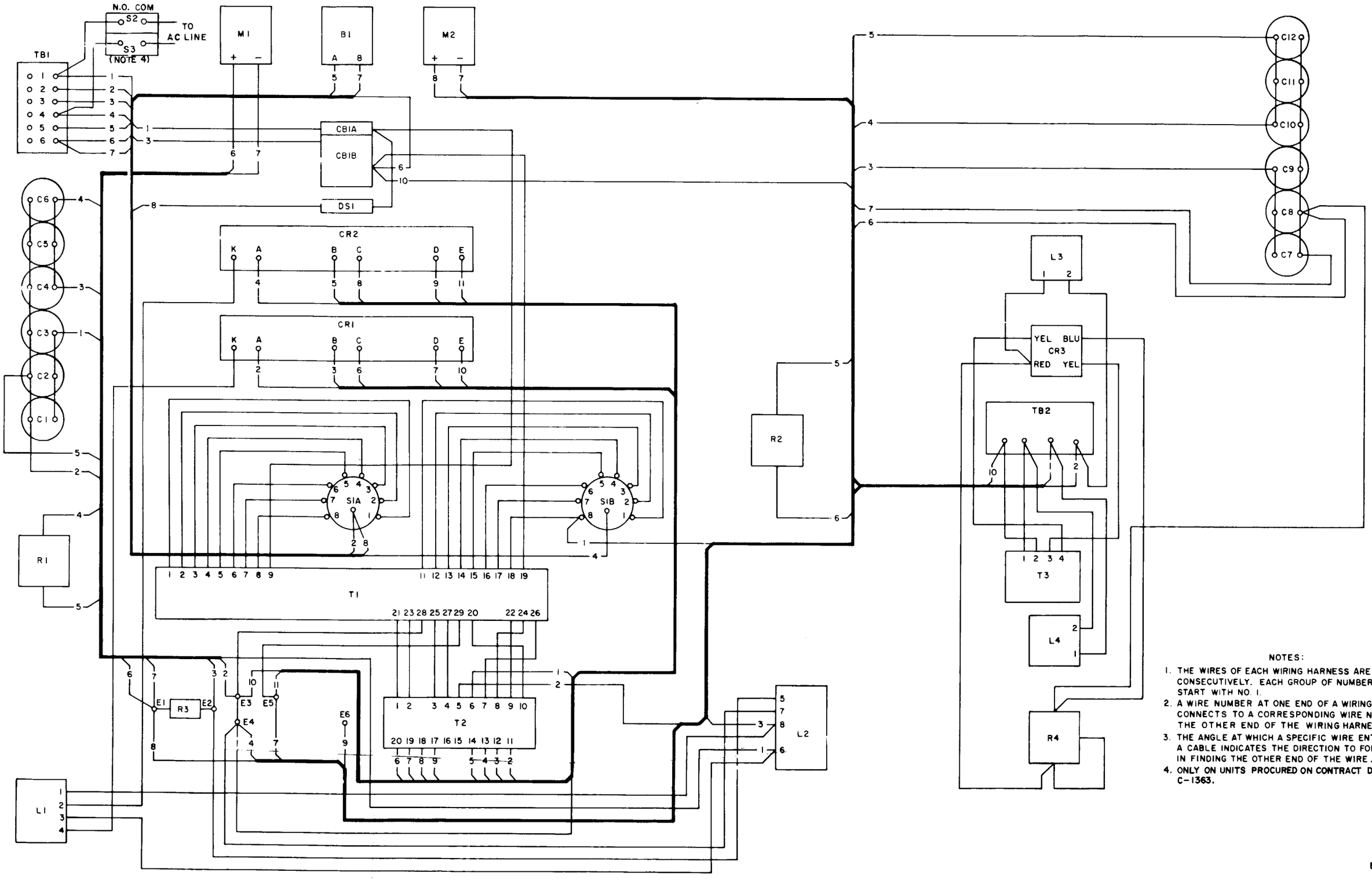

NOTES:

1. THE WIRES OF EACH WIRING HARNESS ARE NUMBERED CONSECUTIVELY. EACH GROUP OF NUMBERS START WITH NO. 1.
2. A WIRE NUMBER AT ONE END OF A WIRING HARNESS, CONNECTS TO A CORRESPONDING WIRE NUMBER AT THE OTHER END OF THE WIRING HARNESS.
3. THE ANGLE AT WHICH A SPECIFIC WIRE ENTERS A CABLE INDICATES THE DIRECTION TO FOLLOW IN FINDING THE OTHER END OF THE WIRE.
4. ONLY ON UNITS PROCURED ON CONTRACT DAAB07-76-C-1363.

EL2TC003

Figure 5-3. Power Supply PP-1104C/G, wiring diagram.

By Order of the Secretary of the Army:

HAROLD K. JOHNSON,
General, United States Army,
Chief of Staff.

Official:

J. C. LAMBERT,
Major General, United States Army
The Adjutant General.

Distribution:

Active Army:
USASA (2)
CNGB (1)
CC-E (7)
Dir of Trans (1)
CofEngrs (1)
TSG (1)
CofSptS (1)
USAAESWBD (5)
USCONARC (5)
USAMC (5)
ARADCOM (5)
ARADCOM Rgn (2)
OS Maj Comd (4)
LOGCOMD (2)
USAMICOM (4)
USASMC (2)
USACDCEA (1)
USACDCCBRA (1)
USACDCCEA (1)
USACDCCEA (Ft Huachuca Ofc) (1)
USACDCOA (1)
USACDCQMA (1)
USACDCTA (1)
USACDCADA (1)
USACDCARMA (1)
USACDCAVNA (1)
USACDCARTYA (1)
USACDCSWA (1)
MDW (1)
Armies (2) except
Seventh USA (5)
EUSA (5)
Corps (2)
USAC (3)
11th Air Aslt Div (3)
Instl (2) except
Ft Monmouth (70)
Ft Gordon (10)
Ft Huachuca (10)
USA Rsch Spt Gp (Ft Belvoir) (5)
Svc Colleges (2)
Br Svc Sch (2) except
USATSCH (5)
USASCS (20)
USASESCS (20)
USAADS (15)
USAARMS (10)
USATCFE (5)
USASCC (4)
USA Tml Comd (1)
Army Tml (1) except OART (5)
USAECOM (30)
USAECOM (Phila) (7)
AAF (CONUS) (5)
USATC AD (2)
USATC Armor (2)
USATC Engr (2)
USATC Inf (2)
USASTC (1)
WRAMC (1)
Army Pic Cen (2)
USAATC (5)
WSMR (5)
GENDEP (2)
Sig Sec, GENDEP (5)
Sig Dep (12)
Army Dep (2) except SAAD (30)
TOAD (14), FTWOAD (10), LEAD (5)
SHAD (3), NAAD (5), SVAD (5)
CHAD (3), ATAD (10)
Lexington-Blue Grass (14)
Sig Fld Maint Shops (2)
Ams (1)
USAERDAA (2)
USAERDAW (13)
JUSMMAT (5)
Units org under fol TOE: (2 copies each except as indicated)

11-5	11-97
11-6	11-98
11-16	11-117
11-35	11-155
11-36	11-157
11-37	11-337
11-55	11-500 (AA-AE) (4)
11-56	11-557
11-57	11-587
11-85	11-592
11-86	11-597
11-87	

NG: State AG (3); Units — Same as Active Army except allowance is one copy to each unit.
USAR: None.
For explanation of abbreviations used, see AR 320-50

☆U.S. GOVERNMENT PRINTING OFFICE: 1994 - 300-421/82596

RECOMMENDED CHANGES TO EQUIPMENT TECHNICAL PUBLICATIONS

SOMETHING WRONG WITH THIS PUBLICATION?

THEN . . . JOT DOWN THE DOPE ABOUT IT ON THIS FORM, FOLD IT, AND DROP IT IN THE MAIL!

FROM: (PRINT YOUR UNIT'S COMPLETE ADDRESS)

DATE SENT

PUBLICATION NUMBER	PUBLICATION DATE	PUBLICATION TITLE

BE EXACT . . . PIN-POINT WHERE IT IS

PAGE NO.	PARA-GRAPH	FIGURE NO.	TABLE NO.

IN THIS SPACE TELL WHAT IS WRONG AND WHAT SHOULD BE DONE ABOUT IT:

PRINTED NAME, GRADE OR TITLE, AND TELEPHONE NUMBER	SIGN HERE

DA FORM 1 JUL 79 **2028-2**

PREVIOUS EDITIONS ARE OBSOLETE

PS--IF YOUR OUTFIT WANTS TO KNOW ABOUT YOUR RECOMMENDATION MAKE A CARBON COPY OF THIS AND GIVE IT TO YOUR HEADQUARTERS

REVERSE OF DA FORM 2028-2

FILL IN YOUR
UNIT'S ADDRESS

FOLD BACK

DEPARTMENT OF THE ARMY

_____

_____

_____

Executive Director
USAMC Logistics Support Activity
ATTN: AMXLS-AP (CD-ROM)
Redstone Arsenal, AL 35898-7466

This fine document...

Was brought to you by me:

Liberated Manuals -- free army and government manuals

Why do I do it? I am tired of sleazy CD-ROM sellers, who take publicly available information, slap “watermarks” and other junk on it, and sell it. Those masters of search engine manipulation make sure that their sites that sell free information, come up first in search engines. They did not create it... They did not even scan it... Why should they get your money? Why are not letting you give those free manuals to your friends?

I am setting this document FREE. This document was made by the US Government and is NOT protected by Copyright. Feel free to share, republish, sell and so on.

I am not asking you for donations, fees or handouts. If you can, please provide a link to liberatedmanuals.com, so that free manuals come up first in search engines:

<A HREF=http://www.liberatedmanuals.com/>Free Military and Government Manuals</A>

- Sincerely
  Igor Chudov
  http://igor.chudov.com/
- Chicago Machinery Movers