This copy is a reprint which includes current pages from Changes 1 and 2

TM 11-5805-667-14 & P

TECHNICAL MANUAL

OPERATOR'S, ORGANIZATIONAL, DIRECT SUPPORT AND GENERAL SUPPORT MAINTENANCE MANUAL

(INCLUDING REPAIR PARTS AND SPECIAL TOOLS LISTS)

FOR

PLUG-IN UNIT, FREQUENCY SIGNALING TA-941/FTC

(STELMA SFSU-1600-U/B)

(NSN 6625-00-602-5128)

PLUG- IN UNIT, FREQUENCY SIGNALING TA-942/FTC

(STELMA SFSU-2600-U/B)

(NSN 6625-00-602 -5127)

PLUG - IN UNIT, FREQUENCY SIGNALING TA- 943/FTC

(STELMA SSU-3/1600)

(NSN 6625-00-602-5149)

PLUG-IN UNIT, FREQUENCY SIGNALING TA-944/FTC

(STELMA SSU-3/2600)

(NSN 6625-00-602-5148)

EXTENDER, PRINTED WIRING BOARD MX- 9664/FTC

(NSN 6625-00-602-5151)

AND

UNIVERSAL SHELF 90409000- 000

(LINE CONDITIONING EQUIPMENT)

HEADQUARTERS, DEPARTMENT OF THE AR MY

OCTOBER 1975

WARNING

DANGEROUS VOLTAGE

DEATH or SERIOUS INJURY may result from accidental contact with -48 volt dc power present in the equipments.

WARNING

The fumes of trichloroethane used for cleaning purposes are toxic. Provide thorough ventilation whenever used. Do not use near an open flame. Trichloroethane is not flammable, but exposure of the fumes to an open flame converts the fumes to highly toxic dangerous gases.

Change No. 2

HEADQUARTERS
DEPARTMENT OF THE ARMY
Washington, DC, *23 April 1982*

Operator's, Organizational, Direct Support and General Support Maintenance Manual
PLUG-IN UNITS, FREQUENCY SIGNALING TA-941/FTC
(STELMA SFSU.1600-U/B)
(NSN 6625-00-602-5128)
TA-942/FTC
(STELMA SFSU-2600-U/B)
(6625-00-602-5127)
TA-9431FTC
(STELMA SSU-311600)
(6625-00-602-5149)
TA-9441FTC
(STELMA SSU-312600)
(6625-00-602-5148) '
EXTENDER, PRINTED WIRING BOARD MX.96641FTC
(6625-00-602-5151)
AND
UNIVERSAL SHIELD 90409000-000
(LINE CONDITIONING EQUIPMENT)

TM 11-5805-667-14&P, 27 October 1975 is changed as follows:

1. New or changed material is indicated by a vertical bar in the margin of the page.

2. Remove and insert pages as indicated below:

Remove	*Insert*
Warning Page	a
1-1 and 1-2	1-1 and 1-2
5-13 through 5-18	5-13 and 5-18
A-1	A-1

3. File this change sheet in front of the publication for reference purposes.

By Order of the Secretary of the Army:

E. C. MEYER
General, United States Army
Chief of Staff

Official:

ROBERT M. JOYCE
Brigadier General, United States Army
The Adjutant General

Distribution:
To be distributed in accordance with Special List.

CHANGE

No. 1

HEADQUARTERS
DEPARTMENT OF THE ARMY
WASHINGTON, DC, *16 November 1978*

Operator's, Organizational, Direct Support
and General Support Maintenance Manual
PLUG-IN UNITS, FREQUENCY SIGNALING TA-941/FTC
(STELMA SFSU-1600-U/B)
(NSN 6625-00-602-5128)
TA-942/FTC
(STELMA SFSU-2600-U/B)
(6625-00-602-5127)
TA-943/FTC
(STELMA SSU-3/1600)
(6625-00-602-5149)
TA-944/FTC
(STELMA SSU-3/2600)
(6625-00-602-5148)
EXTENDER, PRINTED WIRING BOARD MX-9664/FTC
(6625-00-602-5151)
AND
UNIVERSAL SHELF 90409000-000
(LINE CONDITIONING EQUIPMENT)

TM 11-5805-667-14&P, 27 October 1975, is changed as follows:

1. The title is changed to read as shown above.
2. A vertical bar appears opposite changed material.
3. Remove and replace pages as indicated in the page list below:

Remove	*Insert*
	Warning page
1 through iv	i thru iv
1-1 and 1-2	1-1 and 1-2
5-1 and 5-2	5-1 and 5-2
B-1 through B-26 (B-26 blank)	None
C-1 through C-14	C-1 through C-5

4. File this change sheet in front of manual for reference purposes.

By Order of the Secretary of the Army:

BERNARD W. ROGERS
General, United States Army
Chief of Staff

Official:

J. C. PENNINGTON
Brigadier General, United States Army
The Adjutant General

Distribution

Active Army

HISA (Ft Monmouth) (26)
USAINSCOM (2)
COE (1)
TSG (1)
USAARENBD (1)
DARCOM (1)
TRADOC (2)
OS Maj Comd (4)
TECOM (2)
USACC (4)
MDW (1)
Armies (2)
Corps (2)
Svc Colleges (1)
USASIGS (5)
USAADS (2)
USAFAS (2)
USAARMS (2)
USAIS (2)
USAES (2)
USAICS (3)
MAAG (1)
USARMIS (1)
USAERDAA (1) :
USAERDAW (1)
Fort Gordon (10)
Fort Huachuca (10)
Fort Carson (5)
Army Dep (1) except
LBAD (14)
SAAD (30)
TOAD (14)
SHAD (3)
Fort Gillem (10)
USA Dep (1)
Sig Sec USA Dep (1)
Ft Richardson (CERCOM Ofc) (2)
Units org under fol TOE:
(2 copies each)
29207
29610

NG: State AG (0), Units - None
USAR: None
For explanation of abbreviations used, see AR 310-50

WARNING

Adequate ventilation should be provided while using TRICHLOROTRIFLUOROETHANE. Prolonged breathing of vapor should be avoided. The solvent should not be used near heat or open flame, the products of decomposition are toxic and irritating. Since TRICHLOROTRIFLUOROETHANE dissolves natural oils, prolonged contact with skin should be avoided. When necessary, use gloves which the solvent cannot penetrate. If the solvent is taken internally, consult a physician immediately.

TECHNICAL MANUAL
No. 11-5805-667-14&P

HEADQUARTERS
DEPARTMENT OF THE ARMY
WASHINGTON, DC, *27 October 1975*

OPERATOR'S, ORGANIZATIONAL, DIRECT SUPPORT AND GENERAL SUPPORT MAINTENANCE MANUAL

PLUG-IN UNITS, FREQUENCY SIGNALING TA-941/FTC
(STELMA SFSU-1600-U/B)
(NSN 6625-00-602-5128)
TA-942/FTC
(STELMA SFSU-2600-U/B)
(6625-00-602-5127)
TA-943/FTC
(STELMA SSU-3/1600)
(6625-00-602-5149)
TA-944/FTC
(STELMA SSU-3/2600)
(6625-00-602-5148)
EXTENDER, PRINTED WIRING BOARD MX-9664/FTC
(6625-00-602-5151)
AND
UNIVERSAL SHELF 90409000-000
(LINE CONDITIONING EQUIPMENT)

LIST OF ILLUSTRATIONS

LIST OF TABLES

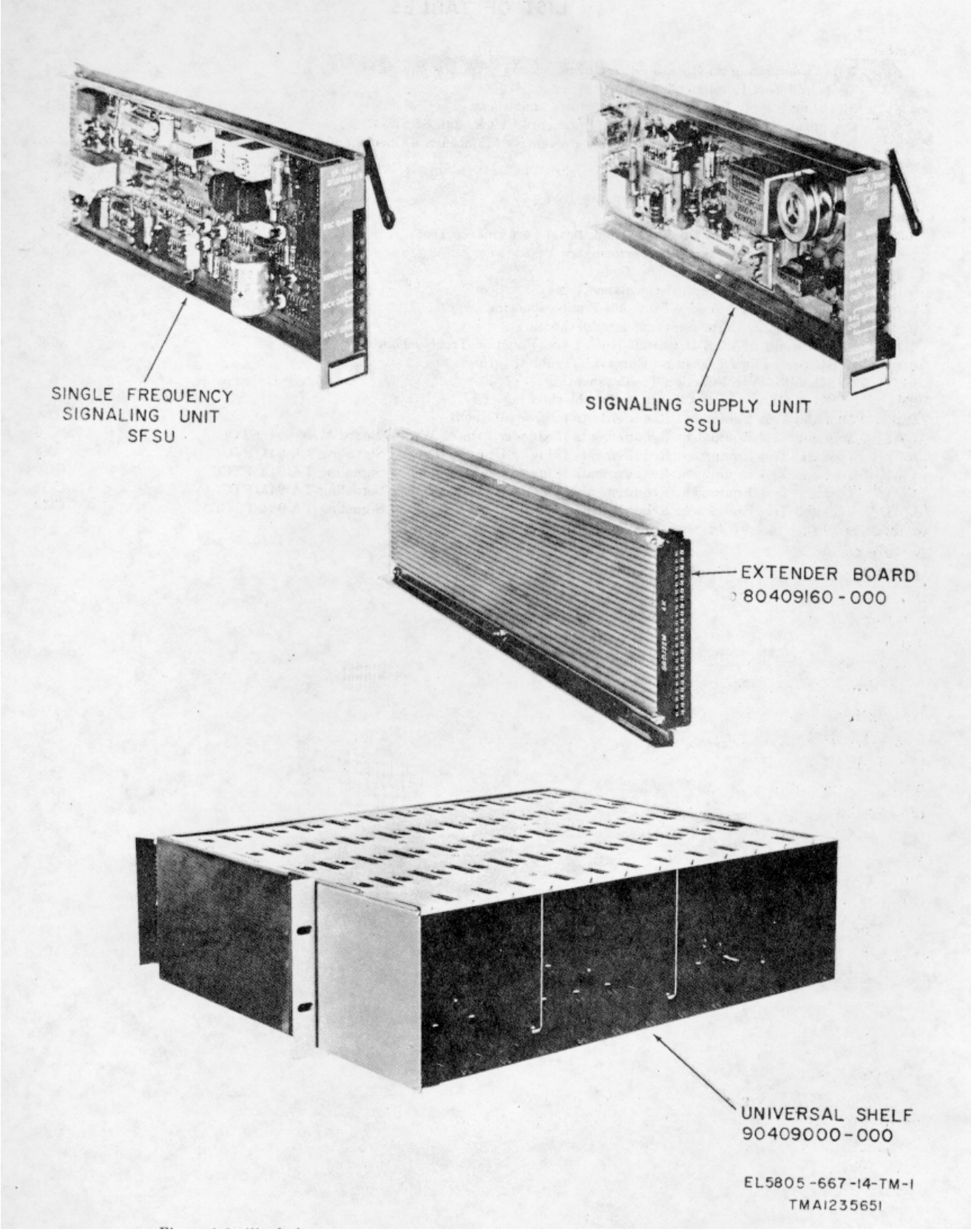

Figure 1-1. Single frequency signaling unit SFSU, signal supply unit SSU, extender board 80409160-000, and universal shelf 90409000-000

CHAPTER 1
INTRODUCTION

Section I. GENERAL

1-1. Scope
This manual contains information and instructions for installation, operation, and maintenance of Plug-in Units, Frequency Signaling TA-941/FTC and TA942/FTC (SFSU-1600-U/B and SFSU-2600-U/B respectively); Plug-in Units, Frequency Signaling TA943/FTC and TA-944/FTC (SSU-3/1600 and SSU-3/2600 respectively); Extender, Printed Wiring Board MX-9664/FTC; and Universal Shelf 90409000-000 (fig 1-1). The maintenance coverage includes on-site and off-site maintenance as authorized by the maintenance allocation chart (app C). The official nomenclature/item name, National Stock Number (NSN), and assigned common name of these units are given in paragraph 1-9 The official nomenclature does not appear anywhere on the units; therefore, for ease of use, the common name and manufacturer's designation is used throughout this manual .

1-2. Index of Technical Publications
Refer to the latest issue of DA Pam 310-4 to determine whether there are new editions, changes, additional publications, or modification work orders pertaining to the equipment.

1-3. Maintenance Forms, Records, and Reports
a. *Reports of Maintenance and Unsatisfactory Equipment.* Department of the Army forms and procedures used for equipment maintenance will be those prescribed by TM 38-750, The Army Maintenance Management System.

b. *Report of Packaging and Handling Deficiencies.* Fill out and forward SF 364 (Report of Discrepancy (ROD)) as prescribed in AR 735-11-2/DLAR 4140.55/ NAVMATINST 4355.73/AFR 400-54/MCO 4430.3E.

c. *Discrepancy in Shipment Report (DISREP) (SF 361).* Fill out and forward Discrepancy In Shipment Report (DISREP) (SF 361) as prescribed in AR 55-38/NAVSUPINST 4610.33B/AFR 75-18/MCO P4610.19C/DLAR 4500.15

1-4. Reporting Errors and Recommending Improvements You can help improve this manual. If you find any mistakes or if you know of a way to improve the procedures, please let us know. Mail your letter or DA Form 2028 (Recommended Changes to Publications and Blank Forms) direct to: Commander, US Army Communications-Electronics Command, ATTN DRSEL-ME-MQ, Fort Monmouth, NJ 07703 In either case, a reply will be furnished direct to you.

1-5. Reporting Equipment Improvement Recommendations (EIR)
If your equipment needs improvement, let us know Send us an EIR. You, the user, are the only one who can tell us what you don't like about your equipment Let us know why you don't like the design Tell us why a procedure is hard to perform. Put it on an SF 368 (Quality Deficiency Report). Mail it to Commander, US Army Communications-Electronics Command, ATTN: DRESEL-ME-MQ, Fort Monmouth, NJ 07703. We'll send you a reply.

1-6. Administrative Storage.
Before and after administrative storage (1 to 45 days), perform the procedures in paragraphs 2-6 and 3-4.

Section II. DESCRIPTION AND DATA

1-7. Purpose and Use
a. The SF-signaling equipment consists of transmit, receive, and fixed-frequency oscillator devices mounted in rack adapter shelves. The equipment serves in telephone dc-dial, trunk (inter-center) or ringdown applications that use (as the transmission facility) four-wire carrier systems requiring 1600 or 2600 Hz signaling tone and E & M signaling between stations Strapping and/or timing adjustments provide the various options.

b. The signaling unit transmit section converts dc dialing, supervisory, or ringdown signals present on the M-lead (derived from the output of trunk terminating circuits) into the amplitude-modulated (am) tone for transmission over voice frequency (vf) channels The signaling unit receive section converts received am tones into dc-dialing, supervisory, or ringdown signals for

application, through the E-lead, to the receiving lines of the associated trunk-terminating circuits A full universal shelf complement of signaling units can service twelve four-wire vf circuits.

c. Various timing adjustments enable the signaling unit to operate in access circuits where 8-12 pps dc-dialing pulses are encountered, or in trunk applications using supervisory type signaling By use of external 20 Hz ringdown converters and Internal strapping options, the signaling unit can also be used in ac ringdown circuits.

d. The signaling supply unit, (two required for primary/standby tandem operation) which comprises a fixed-frequency SF-oscillator, supplies an uninterrupted 1600 or 2600 Hz frequency source for the signaling units. Visual and audible fault alarms are contained In each signaling supply unit Connections to activate (on failure of either primary or standby or both SF oscillators) external alarms are provided on a terminal board mounted on the rear panel.

e. SF-signaling equipment is used on vf circuits between switching equipment and transmission media (carrier systems requiring 1600 or 2600 Hz E&M signaling) connecting two subscribers as shown on figure 1-2 Two signaling units are required for each four-wire vf circuit (one unit at each transmit-receive terminal) The signaling unit may be used In applications where dc-dial pulses (8-12 pps) and supervisory signals are transmitted over dial circuits, in intercenter (trunk) applications involving supervisory signaling, or in situations involving ringdown type operation.

f. The equipment may be used on circuits having relative line levels of +7, +4, 0, -2, -4, -8 or --16 dbm on either path of the four-wire circuit.

1-8. Technical Characteristics

a. Signaling Unit Characteristics.

Operating levels	
Transmit	Adjustable from -16 dbm0 to +7 dbm0.
Receive	Strappable at -16, -8, -4, -2, 0. +4, or +7 dbm0.
Input and output impedance	600 ohms, balanced
Insertion loss (off hook	0.5 db (maximum) from 300 to 3400 Hz.
Frequency response	300 to 340 Hz. ± 0.3 db (referenced to insertion loss at 1000 Hz. with band-stop filter removed).
Operating tone	1600 to 2600 Hz (depending on model used) at 1.0-volt rms.
Transmit-circuit split-time	
Trunk or dial	Within 5 ms after removal of tone, split prevails for period between 75 and 160 ms. Within 5 ms after application of tone, split exists for period between 350 and 750 ms.
Ringdown operation	Within 5 ms after application of tone, split is present for duration of tone.
High-level tone	
Trunk or dial	Persists for a period between 350 and 550 ms with M-lead returned to on-hook.
Ringdown operation	High-level tone persists for duration of ring signal (ground on M-lead).
Transmit tone levels	
Idle tone	-20 ± 1.5 dbm0.
dial pulses (high level)	-8 + 1.5 dbm0.
Busy (off-hook)	-75 dbm0 or less.
M-lead-to-tone output signal distortion	2 ms (maximum)
Dialing characteristics	8 to 12 pps, 42 to 72% break.
E-lead distortion	Less than 4 ms.
Pulse-correction (receive)	Adjustable, normally set for 60% break at 12 pps.

E&M signaling characteristics

Dc dialing and trunk

Ringdown

State	M-Lead	E-Lead	V-Lead	Signal Tone	PLR Operation
Idle on honk	Grd	Open	Grd	ON	Grd
Busy off honk	-48v	Grd	Open	OFF	Open
Idle (on honk) or traffic	-48V	Grd		OFF	
Sign aligning	Grid	Open		ON	

NOTE

Ringdown idle and traffic states are the same. Signaling is on only for duration of 20 Hz ringing.

Receive sensitivity	
Dial/trunk	-29 dbm0 minimum input tone required (with initial level 12 db higher).
Ringdown	-29 dbm0
Band-stop attenuation	40 db (minimum)

Filter insertion time ..... Less than 20 ms
Receiver response time
Dc-dial operation ..... Not less then 26 ms
Trunk operation ..... Not less than 40 ms
Return loss (all ports) ..... 26 db (minimum)
Longitudinal balance (all ports) ..... 40 db (minimum)
Signaling bandwidth ..... less than ± 100 Hz at -8 dbm0
Input power requirements ..... -48 volt dc at 100 ma (approximate)
Permissible voltage variations ..... -42 to -56 volts

b. Signaling Supply Unit Characteristics

Output ..... 1600 Hz or 26 Hz at a level of 1 volt rms
Adjustable between 0 5 and 1 5 volts rms
Drive capability ..... Up to 240 single frequency signaling units
Level stability ..... Output level stable within ± 1 5 db of nominal operating level over temperature range of +32°F to + 130°F. power supply variations from -42 to -56 vdc and, equipment aging over any 90 day period.
Frequency stability ..... Frequency tolerance ± 5 Hz (1600 Hz or 2600 Hz) over temperature (+32°F to +130°F); power -42 to -56 vdc and equipment aging over any 90 day period (Frequency adjustable over a range sufficient to compensate for frequency drift over life of unit.)
Harmonic distortion ..... Percent harmonic distortion less than 1 % over temperature and power variation range.
Switchover threshold ..... Adjustable threshold (ALM LVL) allows setting of switchover for a level degradation of 2 db or more of the nominal operating output level.
Control
Automatic ..... Controlled by threshold setting
Manual ..... By depressing IN-USE pushbutton (forced switchover)
Fault alarm ..... Occurs when oscillator falls or output is below threshold level settings.
Alarm indicator
Visual ..... Lamp lights to indicate failure
Audible ..... Sounds off to indicate failure
Remote ..... Normally open or normally closed contacts
Input power requirements ..... -48 volt dc at 65 ma (approximate)

c. Environment Conditions

Non-operating (storage)
Air temperature ..... Minus 40°F to + 158°F
Relative humidity (percent) ..... 95% RH mixture including condensation due to temperature changes.
Operating
Air temperature ..... +32°F to + 130°F
Relative humidity (percent) ..... 95%o RH mixture Including condensation due to temperature changes.

1-9. Items Comprising an Operable Equipment

The official nomenclature/item name, National Stock Number (NSN), and assigned common name of the equipment covered in this manual are listed in table 1-1 and illustrated in figure 1-1.

Table 1-1. Items Comprising an Operable Equipment

NSN	Nomenclature/item name	Common name	Dimensions (In)			Weight (oz.)	Volume (cu. In.)
			Height	Depth	Width		
	Universal Shelf	Universal shelf	5-1/4	16-1/2	19	15-1/2 lb	1645-7/8
6625-00-602-5151	Extender, Printed Wiring Board MX-9664/FTC	Extender board	4-5/8	15	7/8	11	60-3/4
6625-00-602-5128	Plug-in Unit, Frequency Signaling TA-941/FTC	Signaling unit SFSU-1600-U/B	4-5/8	15	7/8	11	60-3/4
6625-00-602-5127	Plug-in Unit, Frequency Signaling TA-942/FTC	Signaling unit. SFSU-2600 U/B	4-5/8	15	7/8	11	60-3/4
6625-00-602-5149	Plug-in Unit, Frequency Signaling TA-943/FTC	Signaling supply unit. SSU-3/1600	4-5/8	15	7/8	11	60-3/4
6625-00-602-5148	Plug-in Unit, Frequency Signaling TA-944/FTC	Signaling supply unit. SSU 3/2600	4-5/8	15	7/8	11	60-3/4

1-10. Description

a. Signaling Supply Unit. The signaling supply unit (SSU) consists of a PC-card fastened to a front panel to form a plug-in unit. All SSU operational controls, SF-oscillator visual and audible fault alarms, and some signal test jacks, are mounted on the front panel The SSU is designed for mounting in a 19-inch rack adapter shelf. Two SSUs are required for operation in a primary/backup mode.

b. Signaling Unit. A compact, solid-state, plug-in device, the signaling unit consists of a printed circuit (PC) card fastened to a front panel that contains a cutout providing access to two adjustment controls and eight test jacks. Three transformers, 26 transistors, 2 filters, and 3 relays constitute the major components of the signaling unit A reinforcing bracket is riveted along the upper and the lower edge of the PC card; fastened to the front of the PC-card is a pivoted extractor arm that facilitates removal of the signal unit from the universal shelf. Sixteen rear-mounted card-edge connector tabs mate with a connector in the rear of the universal shelf. The differences between the 1600 and 2600 Hz signaling unit lie in the type of band-stop filter and the values of two capacitors used.

c. Extender Board. The extender board enables electrical connection of the PC-card, and modules mounted thereon, to the universal shelf wiring, while exposing module component parts for maintenance purposes.

d. Universal Shelf. The universal shelf, which is front mounted in a standard 19-inch rack, can receive a maximum of 12 PC-cards. The top and bottom cover plates are equipped with PC-card guides to facilitate installation and removal of PC-cards Vent holes in the top and bottom cover plates permit the circulation of cooling air. Two stiffener plates, riveted between the top and bottom cover plates provide additional rigidity. Twelve 22-pin receptacles at the rear of the universal shelf provide electrical connection for the modules with which they mate. A cover plate, screw fastened to two brackets on the rear of the universal shelf protects the electrical receptacles.

1-11. Typical System Operation

a. SF-signaling equipment is used on vf circuits between switching equipment and transmission media (carrier systems requiring 1600 or 2600 Hz E & M signaling) connecting two subscribers as shown in figure 1-2. Two signaling units are required for each four-wire vf circuit (one unit at each transmit-receive terminal). The signaling unit may be used in applications where dc-dial pulses (8-12 pps) and supervisory signals are transmitted over dial circuits, in intercenter (trunk) applications involving supervisory signaling, or in situations involving ringdown type operation.

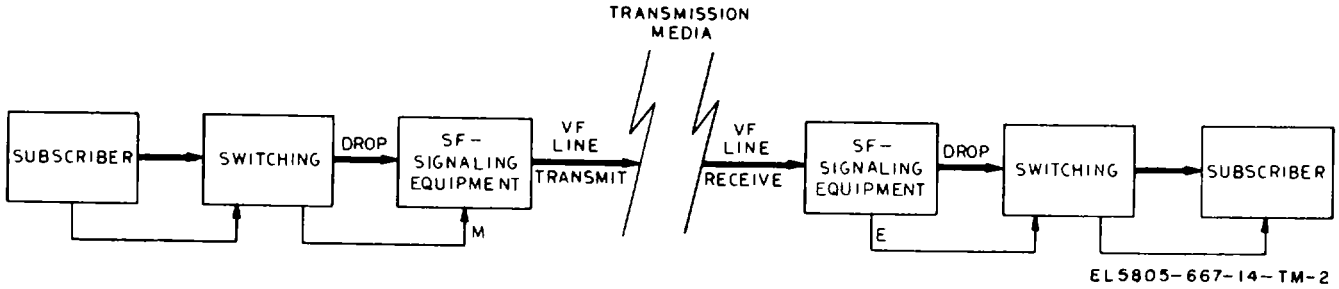

Figure 1-2. SF-signaling equipment, typical system operation (dc-dialing).

b. In dc-dial circuits, during idle (on-hook) conditions at both terminals, both M-leads are grounded, a continuous tone is transmitted from both terminals, and both E-leads are open. When a call is originated at one of the terminals, dc-dial pulses are placed on the M-lead and the transmit section of the signaling unit produces corresponding tone-bursts on the send line for transmission to the distant terminal The receive section of the signaling unit at the distant terminal converts the received tones Into open or ground E-lead conditions When dialing is completed, the M-lead at the calling terminal assumes a steady -48 volt level, which halts transmission of the tone (from the calling terminal) and causes the E-lead at the distant terminal to assume a steady-ground condition. When the distant terminal answers, the distant M-lead assumes a steady-48 volt level Also, transmission of the tone ceases, and the E-lead at the calling terminal assumes a steady-ground

condition. When the call is completed and both terminals are in the on-hook condition, ground is applied to the M-leads, the transmit sections transmit tones, and the E-leads are open.

c. In trunk applications, supervisory signals are transmitted from one terminal to the other through activation of the M-lead. Multiple frequency dial-tone pulses may also be used for signaling with the signaling unit in the line. Strapping in the receive section allows greater time-constants during trunk operation.

d. Ringdown operation is similar to dc-dialing operation described above except for E and M-lead conditions.

(1) In ringdown, during the on-hook or traffic conditions, the M-lead is at -48 volts, the E-lead is grounded, and tone is off. During signaling, the M-lead is grounded, the E-lead is open, and a tone is transmitted for the during of the 20 Hz ringdown.

(2) For ringdown operation, a two-to four-wire termination device must be used to interface the four-wire dropside of the signaling unit' and the two-wire ringdown circuit. In addition, a ringdown converter must be used to convert E & M signaling to 20 Hz (and vice versa) between the signaling unit and ringdown circuit.

CHAPTER 2

SERVICE UPON RECEIPT AND INSTALLATION

Section I. SYSTEMS PLANNING

2-1. General

The signaling equipment is used to convert to/from telephone signals to/from amplitude modulated tone in a voice-frequency (vf) communications circuit. The signaling equipment is installed m any one of 12 module locations (22-pin receptacles) in the universal shelf. Typical systems application of the SSU is illustrated in figure 2-1, typical systems application of the SFSU is illustrated in figure FO-2. The universal shelf mounting dimensions are shown in figure 2-2. Allow at least a 30-inch clearance of each signaling equipment. A similar clearance of 24 inches should be allowed at the rear of the universal shelf for ease of wiring connections and maintenance. If the universal shelf is to be mounted in Universal Rack 90409001-000, refer to TM 11-5805-666-14 & P for additional systems planning information. Input/output signal characteristics, power requirements and environmental conditions are listed in paragraph 1-8.

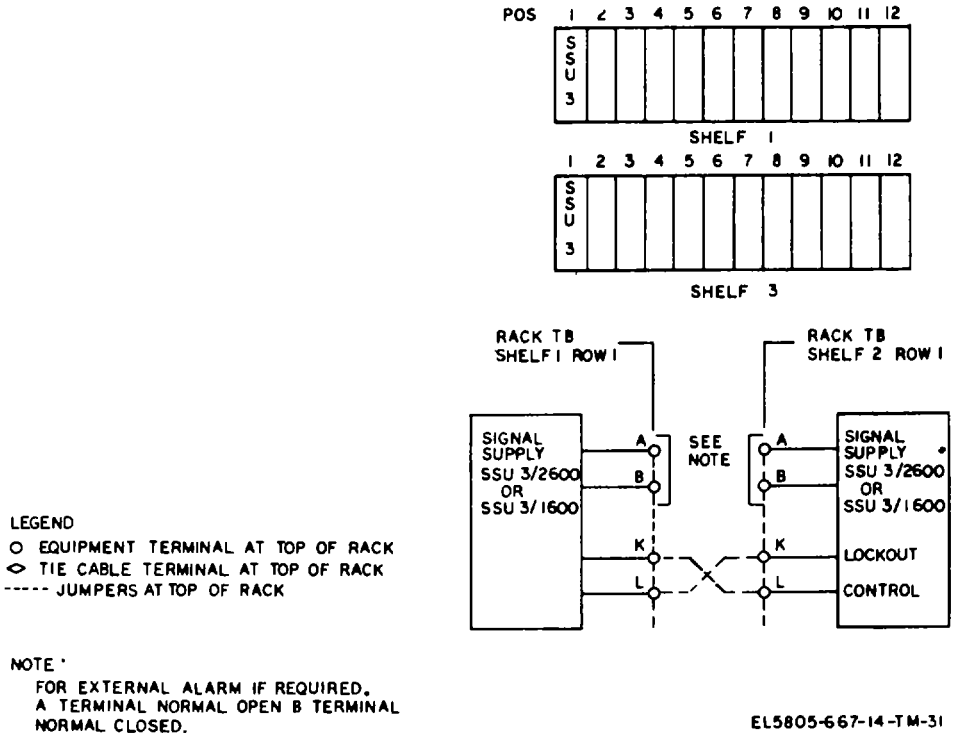

Figure 2-1. SSU typical system application.

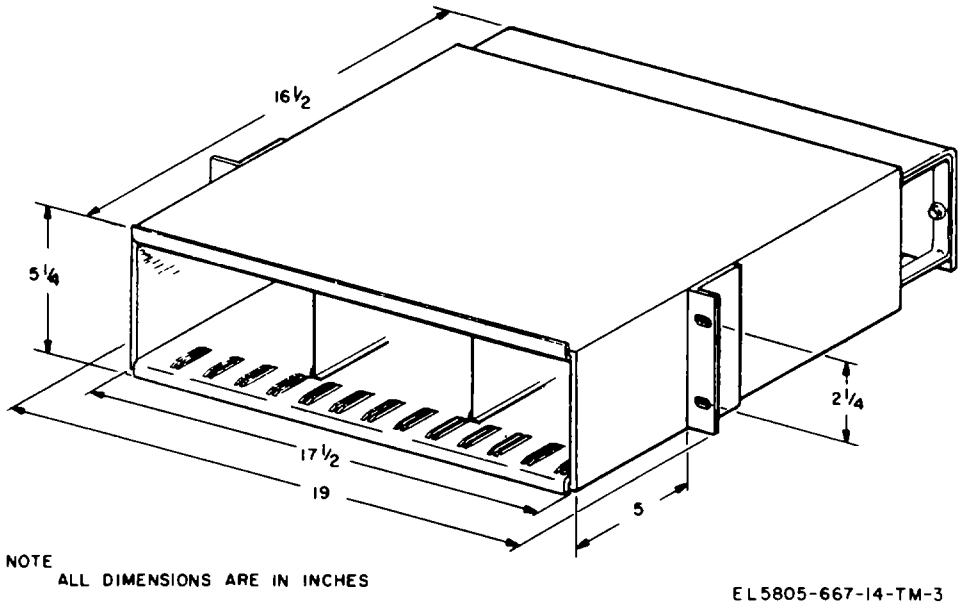

Figure 2-2. Universal shelf, mounting dimensions.

2-2. Site and Shelter Requirements

The SFSU, SSU, and universal shelf are to be installed in predetermined, fixed rack or cabinet locations; therefore, no detailed information is required for site and shelter considerations. However, all requirements stated under system planning (para 2-1) are also applicable to shelters.

Section II. SERVICE UPON RECEIPT OF MATERIEL

2-3. Unpacking

The SSU, SFSU, extender board and universal shelf are wrapped in greaseproof, waterproof covering, and shipped from the factory in fiberboard boxes, prepared with cellulosic, cushioning material. Other than exercising normal care in handling, no special precautions are required in unpacking the equipment. Similarly, no special preparations are required of the installation area to receive the equipment.

2-4. Checking Unpacked Equipment

a. Inspect the equipment for damage incurred during shipment. If the equipment has been damaged, report the damage on DD Form 6 (para 1-3 b).

b. Check equipment against the packing slip to see if the shipment is complete. If a packing slip is not available, check the equipment against the items comprising an operable equipment list (para 1-9). Report all discrepancies in accordance with paragraph 1-3c. The equipment should be placed in service even though a minor assembly or part, that does not affect proper functioning, is missing.

c. Check to see whether the equipment has been modified. (Equipment which has been modified will have the MWO number on the front panel, near the silk-screened nomenclature.) Also check to see whether all currently applicable MWO's have been applied (Current MWO's applicable to the equipment are listed in DA Pam 310-7.).

d. For dimensions, weight and volume of packaged items, see paragraph 1-9.

Section III. INSTALLATION

2-5. Tools, Test Equipment and Materials Required for Installation

No special tools or materials are required for installation of the signaling equipment and the universal shelf. The extender board is provided for use by direct support maintenance personnel in performing system/circuit

lineup procedures. Table 2-1 lists the test equipment required in the performance of strapping options, initial checks and system/circuit lineup, following installation.

Table 2-1. Tools and Test Equipment

Item	*Common name*	*Purpose*
Counter, Electronic Digital CP-772/U	Frequency counter.	System/circuit lineup.
Multimeter AN/USM-223	Multimeter.	Initial checks.
Generator, Signal AN/USM-264.	Signal Generator.	System/circuit lineup.
Oscilloscope AN/USM-281C	Oscilloscope.	System/circuit lineup.
Test Set, Telephone AN/TSM-86	Telephone test set.	System/circuit lineup.
Voltmeter, Electronic AN/USM-265	Ac voltmeter.	System/circuit lineup.
Tool Kit, Electronic Equipment TK-105/G	Tool kit.	Perform strap options.
Resistor, Fixed Film, 600 ohm, 1% 1/2 w	Terminating resistor.	System/circuit lineup.

2-6. Installation Procedures

WARNING

Be sure that 48-volt operating power is removed from the rack or cabinet.

a. Place universal shelf into the desired rack or cabinet mounting position.

b. Align mounting bracket slots (fig. 2-2) with rack or cabinet mounting holes, and secure universal shelf with mounting hardware.

c. Connect wires from universal shelf rear connector directly to a terminal block at the top of the rack or cabinet and then to the distribution frame. Perform the associated jumper connections at the terminal boards for the associated system modules and main distribution frame connections, as required. Figures 2-1 and FO-2 show typical signal wiring jumper connections. Figure 2-3 shows external wiring connections for a universal shelf connector that will receive a signaling supply unit. Figure 2-4 shows external wiring connections for a universal shelf connector that will receive a signaling unit.

NOTE

All required electrical connections for the signaling units are affected when the module is installed in the universal shelf and the rear universal shelf connector and the rear universal shelf connector wiring is completed.

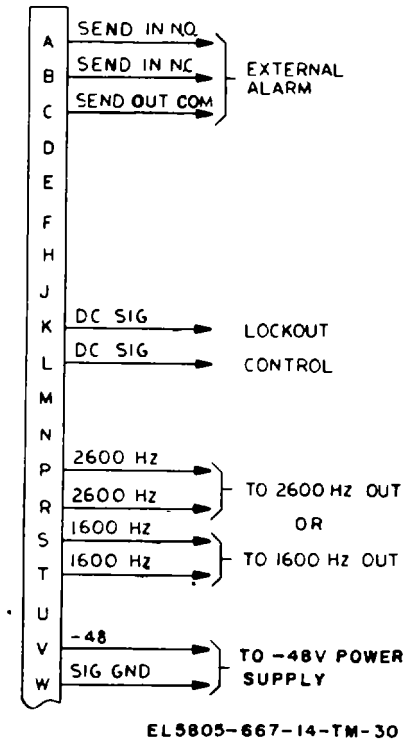

Figure 2-3. Signaling supply unit, external wiring connections.

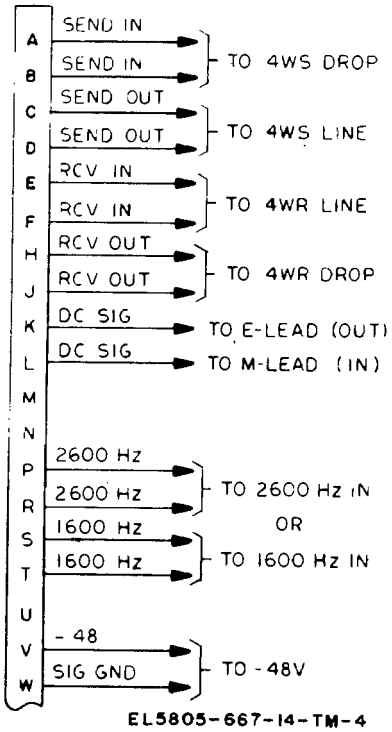

Figure 2-4. Signaling unit, external wiring connections.

d. Color coding of cable wire-pairs facilitates wire connections without the need for checking wire continuity. The color-coding permits installation personnel to Identify, in any cable, the first wire-pair through the last wire-pair. A mate-color, color-coding system is used to distinguish among the different groups, and pairs, within the groups. By means of the mate-wire, the various groups In a cable may be distinguished from one another For example, the mate-wire of every pair m a particular group will be the same color The color-wire distinguishes the pairs that make up each group.

e. Whenever possible, identify the line which the signaling unit services An insert Is provided on the front panel of the module for this purpose.

f. Strap the desired option for the unit as described in paragraph 2-7*a.*

g. Insert signaling unit and signaling supply unit modules into the universal shelf, and check that all module connectors are firmly seated in shelf receptacles

h. Perform initial checks of paragraph 2-7*b.*

Section IV. PRELIMINARY ADJUSTMENT OF EQUIPMENT

2-7. Preliminary Checks and Adjustments

a. Strapping Options. Five types of strap options must be made on the signaling unit prior to installation and operation: (1) signaling tone frequency, (2) receive level, (3) ringdown operation, (4) dc-dial or trunk operation and, (5) E-lead output state and E/N lead output levels Refer to the component location diagrams provided m figures B-3 and B-4 for strapping terminal locations. The performance of the required options and the initial checks that follow are the responsibility of direct support maintenance personnel.

NOTE

As shipped from the factory, all SFSU2600-U/B units are normally strapped for dc-dial operation while all SFSU-1600U/B units are normally strapped for ringdown operation. Level strapping is set for 0 dbm.

(1) *Signaling tone frequency.* Depending upon the signaling unit used, (SFSU-1600-U/B or SFSU-2600-U/B), make the following strap connections to set up the unit to operate with the correct signaling tone frequency.

SFSU-1600U/B	*SFS U-2600U/B*
E2-E3	E1-E3
E5-E6	E4-E6

(2) *Receive level.* Inputs to the signaling and guard-band amplifiers m the signaling unit receive section must both be set for the reference level used in the four-wire receive one. Both inputs must be strapped for the same level. Seven strappable levels, ranging between 16 dbm and +7 dbm, are available at the inputs to both amplifiers.

(a) To strap the signaling amplifier input, connect terminal SA to the appropriate one of the seven associated terminals (marked +7, +4, 0, -2, -4, -8, and -16).

(b) To strap the guard-band amplifiers input, connect terminal GA to the appropriate one of seven associated terminals, see (1), above.

(3) *Dc-dial or trunk*. To operate the signaling unit in a dc-dial or trunk (intercenter) mode, strap terminals E8-E9 and E25-E26. For trunk application only, also strap E30-E31 and E32-E33.

(4) *Ringdown operation.* To operate the signaling unit in a ringdown circuit, make the following strap connections:

E7 to E9
E10 to E11
E12 to E13
E26 to E27
E28 to E29
E30 to E31
E32 to E33
E21 to E22

(5) *E-lead output state*.

(a) To provide an open output for the onhook (tone-ON) condition and a ground output for the off-hook (tone-OFF) condition, connect E34E16.

(b) To provide a ground output for the onhook (tone-ON) condition and an open output for the off-hook (tone-OFF) condition, connect E14E16.

(c) To provide a ground output for tone-on and condition and --48 volts for tone-off condition (PLR option), connect E14-E16, E15-E34.

b. Initial Checks.

(1) Double-check that the signaling units and signaling supply units are firmly inserted in the universal shelf.

(2) Double-check all external connections at the universal shelf rear connector, rack or cabinet terminal block, and all cross connects at distribution frame. Make certain that all strap options, a above, are properly made.

(3) Using a multimeter, check for presence of 48 volts across terminals V(-) and W(+) on universal shelf rear connector.

2-8. System/ Circuit Lineup

a. General. All controls, except oscillator output level (para 2-8 c), are factory-adjusted and generally do not require readjustment unless an associated component part has been replaced. In some cases, a change in system operating parameters may necessitate a change in SF signaling equipment adjustment. This adjustment is the responsibility of direct support maintenance personnel. The signaling supply unit adjustments (b through d below) include frequency output level, and bias alarm, and should be performed in the order given. Receiver gain, pulse delay and retiming, and E-lead percent break output in the signaling unit are adjusted as outlined in *e* through *h* below, and should also be performed m the order given. Adjustments are performed with the units extended from appropriate shelves connector.

b. SF-Oscillator Frequency Adjustment.

(1) Connect frequency counter across BAL OUT test jacks (TP1-TP3).

(2) Frequency counter should indicate 1600 (or 2600 Hz) +1 Hz, as applicable.

(3) If necessary, adjust frequency control C1 (fig. B-4) until specified frequency is obtained.

(4) Disconnect test equipment.

c. SF-Oscillator Output level Adjustment. The following procedure assumes an output level of 1.0 volt ac. If another level is required, make appropriate level changes.

(1) Connect ac voltmeter across BAL OUT test jacks (TP1 and TP3).

NOTE

Ac voltmeter should not have a grounded input for these oscillator adjustment procedures.

(2) Check that voltmeter indicates 1.0 volt ac.

(3) If adjustment is necessary, set ALM LVL control R18 to extreme clockwise position and proceed to step (4). If adjustment is not required disconnect test equipment.

(4) Adjust OUT LVL control R12 until 1.0 volt ac is obtained on ac voltmeter.

d. SF-Oscillator Bias Alarm (Switchover Threshold) Adjustment.

(1) With ac voltmeter connected as in c, above, adjust ALM LVL control R18 counterclockwise until ac voltmeter indicates 0.

(2) Slowly adjust R18 clockwise until a 1.0 volt indication is again obtained. Turn R18 very slightly clockwise above point at which 1.0 volt indication is obtained.

(3) Check adjustment by rotating OUT LVL control R12 counterclockwise until a 0-volt ac indication is obtained on ac voltmeter. There should be only a slight change in the indication (nominally 0.2-volt change) before the reading drops to 0 volts. Adjust R12 clockwise until a 1.0volt indication is again obtained on ac voltmeter.

NOTE

The above adjustment is approximate and will suffice for most installations. If a more accurate adjustment is required, use a variable attenuator to load down the output until a 2 db drop in output level is obtained. Then adjust R18 counter-

clockwise to the exact point at which no output is present.

e. Signaling Unit Send Lines Level Adjustment

(1) Temporarily disconnect all equipment normally connected to the signaling unit, except the signaling supply unit, by removing modules, opening leads at the jackfield, or removing jumpers at terminal boards on top of the rack (fig FO-2) or main distribution frame.

(2) Strap E12 to E13 on module.

(3) Jumper module pin L to pin W (ground) for on-hook condition.

(4) Connect ac voltmeter, terminated with a 600-ohm resistor, across SEND LINE test jacks TP2-TP3.

(5) Adjust send level potentiometer R28 (fig. B-3 Sh5) for a reading of -8 + 0.5 dbm on the ac voltmeter.

(6) Remove strap at E12-E13 and check that ac voltmeter indicates-20 ± 1 dbm.

(7) Disconnect test equipment and jumper.

f. Signaling Unit Receiver Gain adjustment.

(1) Connect signal generator, set for 1000 Hz, to RCV LINE (TP7 and TP6) test jacks.

(2) Adjust signal generator output for normal receive line reference level.

(3) Connect module pin L to pin V (48 volts dc) for off-hook condition.

(4) Connect ac voltmeter, terminated with a 600-ohm resistor, to RCV DROP test jacks (TP5 and TP4).

(5) Adjust REC GAIN control R40 for ac voltmeter (db) indication equal to the level established in (2), above.

(6) Disconnect test equipment.

g. Signaling Unit, Pulse Delay and Retiming Adjustments Two potentiometers, R90 and R95, (fig B-3 Sh5) are involved in adjusting the signaling unit to prevent accidental talk-off. Pulse delay potentiometer R90 is adjusted to prevent response to input tone pulses of less than 30 ms for dial applications (or 45 ms for trunk applications) by delaying these pulses for a corresponding duration Pulse stretcher potentiometer R95 is adjusted to lengthen the pulse (exceeding 30 to 45 ms) back to its original duration in order to produce valid E-lead outputs.

(1) Jumper module test jacks TP2 to TP7 and TP3 to TP6.

(2) Connect telephone test set line jack (ring output) to module pin L and also to provide external trigger to oscilloscope.

NOTE

Input power for telephone test set is available at module pin V (-48 volts dc) and pin W (ground).

(3) Adjust telephone test set for 10 pps output with 30 percent break (for dc dial applications) or 45 percent break (for trunk applications).

NOTE

If signaling unit is being used in trunk applications, a strap should be connected between E30-E31 and between E32-E33.

(4) Connect oscilloscope to E test jack (shield connected to module pin W).

(5) Observe whether or not output waveform appears on oscilloscope.

(a) If waveform appears on oscilloscope, turn pulse delay potentiometer R90 counterclockwise until waveform disappears, and then clockwise until waveform just appears.

(b) If no E-lead signal is seen, turn R90 clockwise until waveform just appears.

(6) Adjust telephone test set for 60 percent break output, and observe that waveform Is present on oscilloscope.

(7) Adjust R95 pulse stretcher potentiometer so that pulse length on oscilloscope display is exactly equal to 60 ms.

(8) Disconnect test equipment.

h. Signaling Unit Automatic E-Lead Percent Break Output Adjustment.

(1) Repeat equipment setup of g (1), (2) and (4) above.

(2) Adjust telephone test set for 10 pps with 40 percent break.

(3) Adjust pulse corrector potentiometer R112 (fig. B-3 Sh5) so that length of negative pulse is 50 ms.

(4) Disconnect test equipment, remove module from extender board, and replace module in universal shelf. Reconnect equipment disconnected in e (1) above.

CHAPTER 3

OPERATING INSTRUCTIONS

3-1. Operating Control and Instructions

Once the equipment is installed, required connections made, and the initial checks performed, the SF-signaling equipment is ready for service. Operation is automatic, requiring no subsequent operator attention, except if an alarm occurs in the signaling supply unit. Information pertaining to the location, description, and function of controls and indicators on signaling units front panels is given in the following paragraph.

3-2. Controls, Indicators, and Jacks.

The function of operator controls indicators, and jacks, located on the front panel (fig. 3-1) of the signaling supply unit, is provided in table 3-1. Procedures for alarm condition operation are provided in the following paragraph.

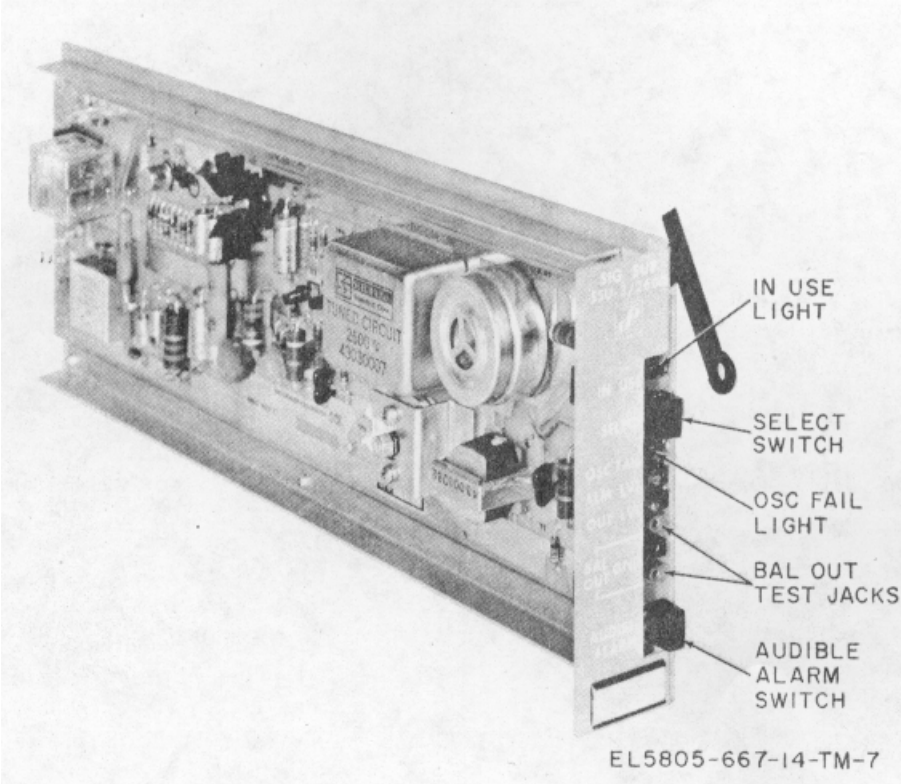

Figure 3-1. Signaling supply unit, front panel

Table 3-1. Signaling Supply Unit Controls. Indicators, and Jacks

Name	*Type*	*Function*
OSC FAIL	Light emitting diode (LED),red	Lights to indicate that output level from associated SF-oscillator has dropped below preset threshold
BAL OUT	Test jacks, red	Permit monitoring signaling frequency of output (used primarily for testing and maintenance)
IN USE	LED, red	Lights to indicate that associated SSU is furnishing primary oscillator power to system
SELECT	Pushbutton switch	When pressed, sets the associated SF-oscillator as the primary source of oscillator power.
AUDIBLE ALARM	Pushbutton switch	In the IN position, audible fault alarm is disabled, In OUT position, alarm is enabled.

3-3. Operation Under Unusual or Emergency Conditions

If a fault occurs in either or both signal supply units, the associated OSC FAIL, indicator lamp(s) will light and a high-pitched audible alarm will be activated (external alarms, if used, will also be activated) When these conditions exist, proceed as described below.

a. To silence the audible alarm, press AUDIBLE ALARM pushbutton to in position.

b. Observe the conditions of the OSC FAIL lamps. If an OSC FAIL lamp is lighted, remove the associated signal supply unit, and replace with one known to be good, troubleshoot defective signal supply unit as described in chapter 5.

c. Once the trouble is corrected, no OSC FAIL lamp should be lighted.

d. Press AUDIBLE DISABLE switch to the release (out) position.

e. If, for any reason, forced switchover to the replaced signal supply unit (in the standby condition) is required, and the standby SF oscillator is operating properly, press the associated SELECT pushbutton.

3-4. Preparation for Movement

The equipment is installed in a communication facility, and movement to a new location involves dismantling and where necessary repacking These functions are performed by direct support maintenance personnel, therefore, no operator instructions are involved.

CHAPTER 4

FUNCTIONING OF EQUIPMENT

4-1. Introduction

This chapter contains the theory of operation of the equipment.

a. The SF-signaling equipment consists essentially of a self-contained, in-line, transmit and receive device (signaling unit) and a separate 1600 or 2600 Hz SF-oscillator (signaling supply unit) The signaling unit provides E&M supervisory signaling (on-hook, off-hook) for a four-wire vf communications circuit where carrier equipment is used as the between-station transmission facility. The signaling unit may be configured for application in subscriber circuits where dc-dialing is used, or In trunk applications with multiple-frequency (and preemption signals) dialing. Because it does not respond to pulses under 40 ms, the signaling unit used in trunk circuits is less susceptible to accidental talk-off due to the 1600 or 2600 Hz component of voice signals, or to random noise prevalent on trunk circuits. When used with external two-to four-wire termination and ringdown converter devices, the signaling unit may also be configured for application in 20 Hz ringdown circuits.

b. Each signaling supply unit contains an SF oscillator (1600 or 2600 Hz) and an automatic switchover circuit which switches from the primary (load-connected) signal supply unit to the secondary signal supply unit in the event of a primary circuit degradation or failure The unit is equipped with visual and audible alarms that provide indications of circuit degradation or failure In the following discussion, unless otherwise specified, the signaling tone is assumed to be 2600 Hz. Operation is identical with a 1600 Hz signaling tone.

4-2. Simplified Block Diagram Description

a. General Two signaling units (and associated signaling supply units) are required to service each four-wire vf circuit, one at each transmit-receive terminal. Both units function identically, depending upon the state (on-hook, off-hook, etc) of the sending and/or receiving devices. The following discussion and related illustration (fig. 4-1) describe E&M operation in two signaling units servicing a four-wire vf circuit during on-hook, off-hook, and dialing (or ringdown) conditions.

b. Dc-Dialing and Trunk Operation.

(1) With both parties on-hook (idle), the M-lead of the associated signaling unit is grounded. This input enables a signaling circuit in the transmit section of the signaling unit to couple a continuous 2600 Hz idle-tone (from a signaling supply unit) to the send-line, at a level of -20 dbm0.

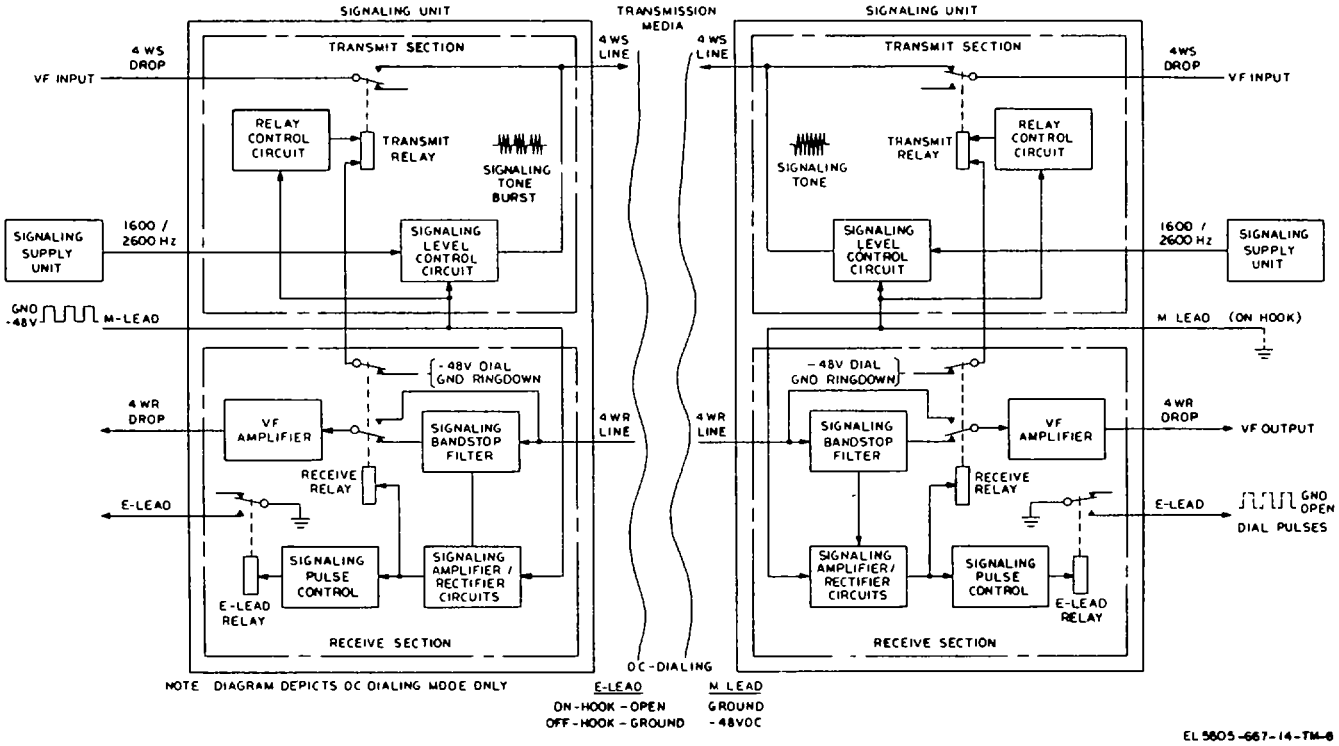

Figure 4-1. SF-Signaling equipment, simplified functional block diagram.

(a) If a tope is present in the receive section, the receive relay is energized, inserting a band-stop filter in the vf receive path, to provide over 40 db attenuation to the signaling tone frequency When the receive line relay is energized, the transmit relay is also energized, splitting the send drop and send line-sides while terminating both lines with 600 ohms.

(b) If a signaling tone is not present on the receive line, the receive relay is not energized and the send line is not split.

(2) When the M-lead goes off-hook, a -48 volt dc input is applied to the signaling circuit, causing it to remove the 2600 Hz idle-tone from the send line. With the Idle-tone absent, the circuits in the distant signaling unit receive section energize the E-lead control relay, grounding the E-lead output (The E-lead is normally opened by a deenergized relay when an idle-tone is present.) An off-hook condition pulses input lead, removing a 12 db pad from the 2600 Hz supply line. Subsequent dial pulses are provided at a 12 db higher level than the Idle-tone level.

(3) When the calling party dials a number, the originating switching terminal places dc-dial pulses (alternating between -48 volt dc and ground) on the M-lead of the signaling unit. The transmit section of the signaling unit responds by amplified functional block diagram producing 2600 Hz tone-bursts at -8 dbm0 on the send-line equal in duration to the dc-dial pulses on the M-lead.

(4) At the distant terminal, the tone-bursts are coupled through circuits in the receive section of the signaling unit to the E-lead control relay The relay is operated, so that E-lead output alternates between ground and open (duration of open E-lead equals duration of 2600 Hz toneburst, except where short tone-ON break period are lengthened by pulse-correcting circuits) When dialing ceases, the M-lead of the local signaling unit assumes a steady -48 volt dc (offhook, busy condition) which halts 2600 Hz tone transmission, causing the E-lead of the distant signaling unit to assume a steady-grounded condition.

(5) When dialing ceases and the remote subscriber goes off-hook, the M-lead of the distant signaling unit assumes a -48 volt dc level, stopping transmission of the distant-end 2600 Hz tone, so that the E-lead of the local signaling unit assumes a grounded condition Since no tone is transmitted m either direction, the receive line relays in both signaling units are deenergized, bypassing the band-stop filter In the vf path and applying unfiltered voice signals through a vf amplifier. At the same time, the transmit relay in the local signaling unit is also

deenergized, providing drop/line-side continuity.

(6) When a call is completed and both parties go on-hook:

(a) The M-leads of both signaling units are grounded,

(b) A high-level 2600 Hz tone is transmitted for about 600 ms, followed by a continuous -20 dbm0 2600 I-z idle-tone in both directions, and

(c) The E-leads of both signaling units are opened

c. Ringdown Operation. In ringdown applications, operation of the signaling unit differs from that described above for dialing. For on-hook (or traffic) conditions, the M-lead is at --48 volts and the E-lead is grounded; during ringdown signaling, the M-lead is grounded and the E-lead is open; signaling is on the full duration of the 20 Hz ringdown (converted to ground on the M-lead by the associated ringdown converter). During traffic, states of the E- and M-lead are the same as for off-hook.

4-3. Detailed Description of Signaling Unit (fig. FO-3)

a. Transmit Section (fig. 4-2). In dialing operation, the transmit section converts control signals received on the M-lead (on-hook, off-hook, or dial pulses) to a continuous 2600 Hz tone, no tone, or tone pulses, respectively. In trunk operation, supervisory and preemption on-hook and off-hook conditions are used. In ringdown operation, neither the on-hook, or off-hook conditions are used. In ringdown operation, neither the on-hook, or off-hook condition produces a tone; only during ringing is a tone produced. The transmit section consists of an input buffer in the M line input, 1 12 db pad in the signaling supply line, 12 db pad-control Q1, balanced modulator Q2/Q3, output control Q4, and send-line splitting relay K1.

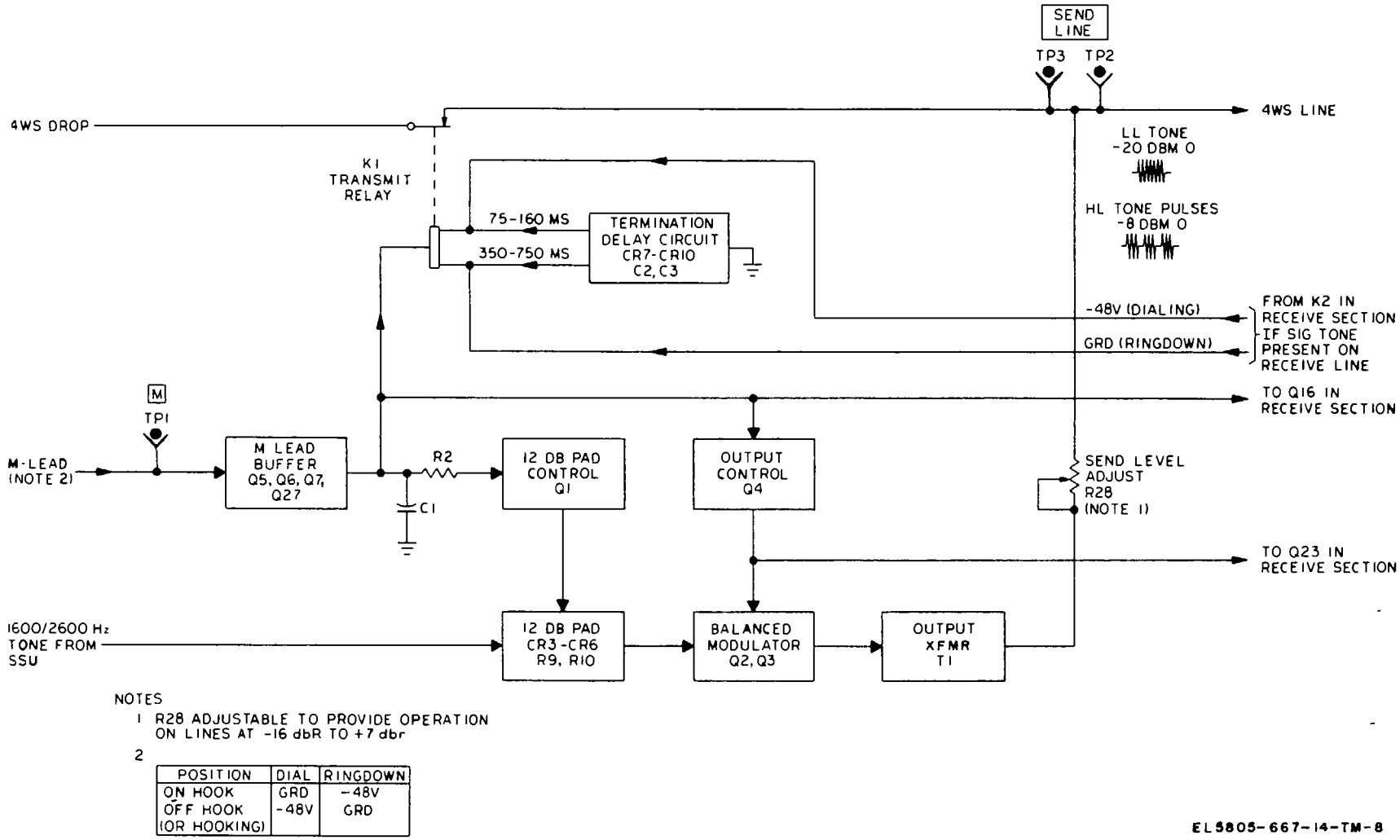

NOTES

1 R28 ADJUSTABLE TO PROVIDE OPERATION ON LINES AT -16 dbR TO +7 dbr

2

POSITION	DIAL	RINGDOWN
ON HOOK	GRD	-48V
OFF HOOK (OR HOOKING)	-48V	GRD

Figure 4-2. Signaling unit transmit section, functional block diagram.

(1) *On-hook condition.*

(a) In the on-hook (idle) condition during dial operation, a ground is applied to the M-lead, sequentially cutting off 12 db pad-control Q1 and enabling the 12 db pad (CR3-CR6, R9, and R10); simultaneously, the grounded M-lead causes output control Q4 to conduct, turning balanced modulator Q2/Q3 (a push-pull amplifier) on. Thus, the 2600 Hz signaling tone from the signaling supply unit is applied to the four-wire send line (via output transformer T1 and potentiometer R28). Potentiometer R28 may be adjusted to provide high-level outputs ranging from --1 dbm to --24 dbm.

(b) During ringdown operation, -48 volts is applied to the M-lead, causing output control Q4 to be cut off, so that balanced modulator Q2/Q3 no longer conducts. Thus, in the on-hook condition of ringdown, no signaling tone is applied to the four-wire send line.

NOTE

Whenever a signaling tone is detected In the receive section (distant unit on-hook) and the M-lead is on-hook, transmit relay K1 is energized by application of -48 volts (dialing) or ground (ringdown) via contacts of energized receive relay K2. Energized K1 splits the vf transmit path and terminates the drop and line-sides with 600 ohms.

(2) *Off-hook condition.* For dial operation, when in the off-hook (busy) condition -48 volts is applied to the M-lead. Output control Q4 is thus cut off, and balanced modulator Q2/Q3 is disabled, thereby removing signaling tone from the four-wire send line. On a transition to off-hook from on-hook, transmit relay K1 is energized within 5 ms, splitting and terminating the vf transmit path. K1 remains energized for a minimum of 75 ms (to a maximum of 160 ms) mainly because of the capacitor C2 discharge through the relay coil. Off-hook operation for ringdown is the same as described in (1) above.

(3) *Off-hook/on-hook transition.* Once this transition occurs, the high-level tone state persists for about 300 to 550 ms after the on-hook state starts. During this period, Q1 is still conducting due to the charge on C1 to keep the 12 db pad out of the circuit. When capacitor C1 discharges through the Q1 base (300 to 550 ms), Q1 is cut off, and the pad is energized to keep the idle-state level 12 db below the high-state level. During the off-hook state, capacitor C3, in the termination delay circuit, is charged to -48 volts. Return to on-hook causes the capacitor to discharge (through CR10, the relay coil, and CR7 to the grounded M-lead). Relay K1 is operated within 5 ms, to split the send line for a period between 350 and 750 ms.

(4) *Dialing condition*

(a) During dc-dialing (signaling), the M-lead alternates between ground and --48 volt dc. Consequently, output control Q4 and balanced modulator Q2/Q3 are alternately enabled and disabled, respectively-Thus, tone pulses are transmitted m proportion to the duration of alternate M-lead conditions (ground, tone transmitted; -48 volt dc, tone not transmitted). Due to C1 and R2 characteristics, the time-constant of 12 db pad-control Q1 (once disabled by the -48 volt off-hook input) is such that the M-lead must remain at ground for approximately 500 ms before Q1 is disabled and the 12 db pad is placed in the circuit Since the dial pulse frequency Is 8 to 12 pps during dialing, the M-lead does not remain at ground long enough for Q1 to become disabled, thus, the output level of the tone-bursts during dialing (-8 dbm0) is 12 dB higher than the continuous idle-tone level (-20 dbm0).

(b) During the dialing sequence, the termination delay circuit (CR7-CR10, C2, and C3) acts as a bridge rectifier, maintaining a dc level across transmit relay K1, so that K1 remains energized (vf transmit path split and terminated) for the duration of the dialing sequence. Upon removal of the last ground pulse, K1 remains energized for 75 to 160 ms, as described in (2), above.

(c) When the dialing and busy conditions are discontinued (calling party hangs up), the M-lead assumes a steady-ground (on-hook) condition. The -48 volt/ground transition occurring on the M-lead energizes K1 for approximately 350 to 750 ms; this timing is provided mainly through capacitor C3 (in the termination delay circuit) and the relay characteristics. With ground on the M-lead, the transmit section assumes the conditions described in (1), above. However, due to the characteristics of 12 db pad-control Q1, the 12 db pad is not reinserted (after the M-lead assumes a ground level) for approximately 500 ms, during which a continuous tone is transmitted, equal in level to the pulses (12 db greater than the normal idle-tone).

(d) In ringdown operation, detection of a 20 Hz ring by the external ringdown converter grounds the M-lead, causing output control Q4 and balanced modulator Q2/Q3 to conduct. As a result, a signaling tone is transmitted for the duration of the ring signal. Strapping options (not shown in fig. 4-2) in the circuits of K1 and the 12 db pad insure that the vf transmit path is

split and terminated for the full duration of the ring signal, and that the 12 db pad is disabled so that only a high-level (-8 dbm0) tone is transmitted during ringdown.

b. Receive Section (fig FO-4). In dc dialing operation, the receive section detects presence or absence of tone, or presence of pulsed 2600 Hz tone, converting them into E-lead output conditions (strap optional) of open (on hook), ground (off-hook), or alternations, respectively. In trunk operation, on-hook/off-hook supervisory and preemption conditions are used, and in ringdown operations, the idle or traffic states are the same (i.e., tone is off). Only during ringdown does presence of signaling tone operate the E-lead.

(1) *Four-wire vf receive circuit (fig. FO-4).* This circuit consists of Input and output transformers T2 and T3, buffer amplifier U1-7, filters using L1 and L2, output amplifier U1-1, and receive relay K2.

(a) During on-hook (idle), dc-dialing, or ringdown conditions (2600 Hz tone present m receive path), receive relay K2 is energized by conduction of relay driver Q17, see b (2), below. With K2 energized, signaling band-stop filter (L1, L2, C11, and C12) is inserted in the receive path. Tone inputs are coupled through input transformer T2 and operational amplifier U1-7 (which prevents the subsequent filter from reflecting impedance changes to T1, over the frequency range) to the band-stop filter. This filter, which provides over 40 dB of attenuation (with a sharp notch at the tone frequencies), presents little attenuation at frequencies 200 Hz above or below the 2600 Hz tones. The attenuated output of the band-stop filter is applied across contacts of energized relay K2 to operational amplifier U1-7. REC GAIN potentiometer R40 is adjusted to compensate for inherent losses in the receive channel by providing a 0 db channel gain. Outputs from Ul-1 are coupled to the 4-wire receive dropside, via transformer T3.

(b) During off-hook or non-ringdown conditions (no tone present in receive path), relay K2 is deenergized--and its normally closed contacts bypass the signaling band-stop filter, thus applying input signals directly from U1-7 to U1-1. Consequently, vf signals containing no attenuation are passed through the receive channel.

(2) Signaling amplifiers/rectifiers. This circuit consists of a signaling band channel (attenuator strapping network, signaling bandlimiting amplifier Q8-Q10, gain increase switch Q11, and a negative rectifier), a guard-band channel (attenuator strapping network, guardband limiting amplifier Q13-Q15, switch Q16, and a positive rectifier), timing switch Q12, relay driver Q17, and dc amplifier Q18/Q19. Primarily, this circuit detects presence or absence of 2600 Hz tones in the receive path, converting these conditions into required dc states or pulses; it also controls K2 operation which, as described above, inserts or removes the signaling band-stop filter m the four-wire vf receive path.

(a) As shown in figure FO-4, the bandstop filter m the four-wire vf receive circuit provides two outputs one in which the signaling tone frequency Is sharply rejected and frequencies above and below it are passed (guard-band; see (1) (a), above), and another, in which the tone signal is passed and frequencies above and below it are sharply rejected. The guard-band signal is applied to the guard-band channel, and the tone signal Is applied to the signaling band channel. Inputs to both channels are provided with attenuator strapping networks so that relative receive levels of +7, +4, 0, --2, --4, --8, or 16 dbm can be selected. Each channel also contains a 3-stage amplifier, with the guard-band amplifier (Q13-Q15) followed by a positive rectifier (CR16, CR17, C23, and C24)-and the signaling band amplifier (Q8-Q10) followed by a negative rectifier (CR13, CR14, C19, and C20) Output of each rectifier is connected across a summing network (R65, R66, and CR15) whose output is applied to dc amplifier Q18/Q19 (to operate, Q18/Q19 requires a negative input). The dc amplifier controls operation of relay K2 (in the four-wire vf receive circuit) via relay driver Q17, and operation of E-lead output relay K3 (via subsequent signaling-pulse control circuits; refer to (3), below).

(b) With a continuous 2600 Hz tone present in the vf receive path (idle-tone in dial; signaling in ringdown), the level through the signaling channel exceeds that m the guard-band channel. Thus, the summing junction input to dc amplifier Q18/Q19 is negative, so that (1) relay K2 is energized (via Q17) to insert the signaling band-stop filter, in the vf receive circuit, and (2) E-lead relay K3 is held deenergized. To insure the presence of a negative voltage at the summing junction when atone is being received, part of the dc amplifier output (via Q17) is applied to drive timing switch Q12 into conduction. With Q12 conducting:.

1 CR15 is back-biased, opening the output of the positive rectifier.

2 Gain-increase switch Q11 conducts, increasing the gain of the signaling band amplifier to accommodate low-level idle-state tone inputs.

(c) When 2600 Hz pulses (dialing) are received, the negative rectifier output alternates between 0 (tone off) and negative (tone on). This alternating input, coupled through dc amplifier Q18/Q19, alternately energizes and deenergizes K3 thereby producing open/ground alternations on the E-lead output. The regulating characteristic of amplifier Q8-Q10 assures that little dc pulse distortion occurs with normal tone level variations.

(d) During the off-hook condition (cessation of dialing or ringdown), tone signals are removed and the absence of signal produces no negative voltage to operate Q18/Q19. Relay K2 removes the filter from the receive path, and relay K3 provides a ground on the E-lead; thus, Q12 does not conduct, and the guard-channel output is applied through CR15 to the input of Q18. Under these conditions, Q11 is cut off so that signaling-amplifier sensitivity is reduced. If speech or data signals are applied to the receive path, the energy over the band becomes greater through the guard channel than through the signaling channel, so that the voltage at the summing-junction input to the dc amplifier becomes positive, inhibiting Q18/Q19 operations Consequently, K2 remains deenergized (bandstop filter out) while K3 continues to supply a ground to the E-lead. When the local terminal also goes off-hook (to answer the call), -48 volt dc is applied to the M-lead, driving gain-increase switch Q16 into conduction; this increases the gain the guard-band channel to protect against talk-off (false operation of the E-lead by voice signals).

(e) On completion of the call (both terminals return to on-hook), the 2600 Hz Idle-tone received from the distant terminal remains at a high-level for approximately 500 ms; see a (4) (c), above. This light-level period permits the delay circuit in the Q12 base to react, to turn Q12 on. An integrator (R67, C22) in the input to timing switch Q12 delays Q12 from going into conduction for approximately 400 ms; as a result, the increase in signaling band amplifier gain (Q11 turn-on) and the disabling of the guard-band output (CR15 back-biased) Is delayed by the same amount of time After 500 milliseconds, when the received idle-tone returns to the nominal low level of --20 dbm0, circuit operation is as described in (b), above.

(3) *Signaling-pulse control circuit.* This circuit consists of delay switch Q20, retiming switch Q21, shaper and trigger Q22/Q23, amplifier Q24, single-shot multivibrator Q25/Q26, and E-lead output relay K3. Essentially, the signaling-pulse control circuit prevents E-lead outputs in response to pulsed-tone inputs of less than 30 ms in dialing or 40 ms in trunk operation (accidental talk-off); and produces E-lead outputs that correspond exactly to the tone-on input duration (break) or that have automatically lengthened break-durations for pulses of short duration.

(a) When continuous signaling tone is present in the receive path, the following transistor conditions exist to hold E-lead output relay deenergized.

Q18	ON
Q19	OFF
Q20	ON
Q21	OFF
Q22	ON
Q23	OFF

However, when no tone is present, the transistor conditions are reversed, causing K3 to be energized.

(b) During dialing (or application of supervisory signals in trunk operation), transistors Q18-Q23 essentially alternate between the conditions described in (a), above (A, fig. 4-3) However, accidental talk-off is prevented and E-lead outputs of desired duration are produced as defined below.

1 A timing circuit (R89, R90, C29, and VR3)at the input to delay switch Q20 Is adjusted (by R90) so that Q20 does not respond to tone-on dial pulses of less than 30 ms duration (40 ms for trunk supervisory pulses) Any longer pulses that occur are shortened by approximately 30 ms (or 40 ms) at the output of Q20. (In trunk applications C29 is shunted by another capacitor to provide the additional delay.) The delay is produced by charging C29 toward --18 volts through R89 and R90 (after Q19 in the dc amplifier is cut off by a tone-on pulse) until VR3 is fired, conducting VR3 turns delay switch Q20 on.

2 Thus, any pulse over 30 ms (or 40 ms) operates Q20, and serves to produce a validly timed pulse to operate the E-lead relay. This action prevents accidental talk-off (deenergizing of E-lead relay) due to the 2600 Hz component of vf signals during off-hook conditions.

(c) Since delay switch Q20 shortens the pulse, retiming switch Q21 lengthens the pulse to its original width so that it is of the proper duration (same as that of the signaling tone pulse) at the E-lead output When Q20 conducts, C30 discharges rapidly through CR19 and Q20, making the Q21 collector rapidly negative. When Q20 ceases to conduct, Q21 remains cut off until C30 (charging toward 18 volts through R94 and

R95) causes VR4 to conduct. The pulse at the Q21 collector is thereby lengthened by the time-constant of C30, R94, R95 to the same extent that it was shortened by the time-constant of C29, R89, R90.

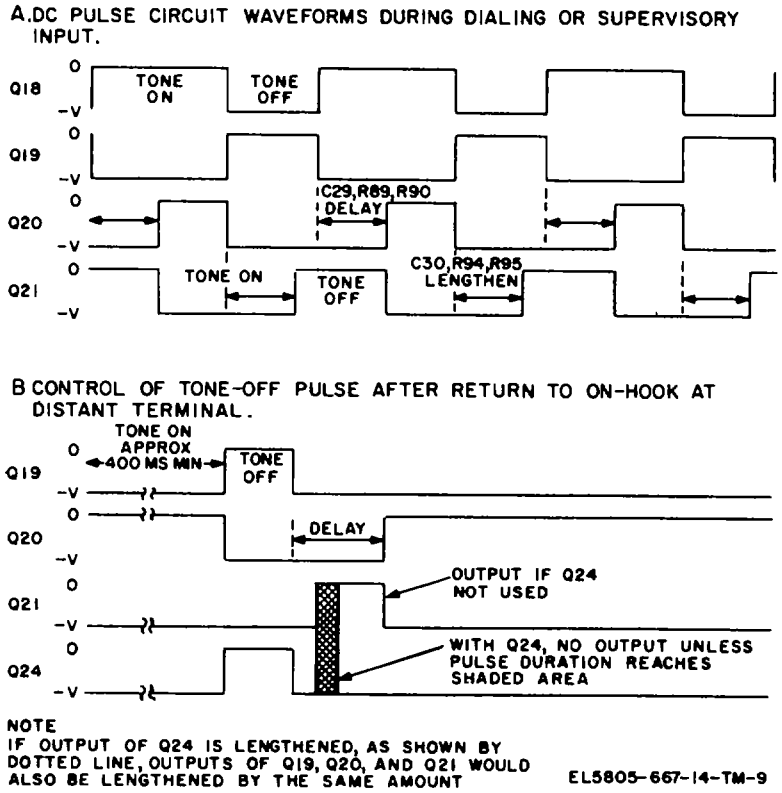

Figure 4-3. Signaling distortion control circuit, timing diagram.

(d) Output from retiming switch Q21 is applied simultaneously to trigger circuit Q22/Q23 via R99, and to single-shot multivibrator Q25/Q26 via C32. Output of the single-shot is also applied to trigger Q22/Q23 via R131-CR22 (fig. FO-3). Timing for the single-shot is controlled by pulse corrector potentiometer R112, normally set to produce a 50 ms break pulse (adjustable for other break timings).

1 Thus, if the break pulse applied from Q21 to the trigger circuit is less than 50 ms long, output from the single-shot insures 50 ms input to the trigger.

2 If Q21 output is longer than 50 ms it extends beyond the singleshot output, providing the longer pulse input to the trigger. As a result, the minimum tone-on pulse-length applied to Q22/Q23 is 50 ms.

(e) Trigger Q22/Q23 operation is such that. (1) with a negative tone-on pulse applied, Q22 conducts and Q23 is cut off, keeping E-lead output relay K3 deenergized, and, (2) during the positive tone-off interval, Q22 is cut off and Q23 conducts, energizing K3. Consequently, with a dial pulse input, K3 is alternately deenergized and control circuit, timing diagram energized, providing alternate outputs of open and ground to the E-lead.

(f) After periods when tone has been on, short-duration tone-off pulses are prevented from affecting E-lead relay K3, by amplifier Q24 Enabled by timing switch Q12 approximately 400 ms after tone has been on, Q24 operates m conjunction with Q21 to provide an AND gate input to trigger Q22/Q23 (via R99 and R107). This prevents tone-off pulses of less than 30 ms duration (dial) or 40 ms duration (trunk from being sensed at the E-lead output.

1 In tone-off periods, during which Q24 has no collector supply voltage (Q12 and CR20 not conducting)Q24 does not affect trigger Q22/Q23. The trigger circuit is thus driven by Q21 (or Q26) output After tone has been on for about 400 ms, Q12 conducts to supply a negative voltage to collector load resistor R106 via CR20 (fig FO-3). Effective inputs to Q22 are now provided from the collector of Q21 via R99, and from Q24 via R107.

2 With a steady tone being received, the outputs of Q21 and Q24 are both negative; Q22 is on, Q23 is off, and relay K3 is deenergized. The trigger

differential of Q22/Q23 is such that a positive (ground) output from both Q21 and Q24 Is required to turn Q22 off If either output is negative, Q22 remains conducting.

3 As shown in B of figure 4-3, when a tone-off pulse is applied from Q19, the Q21 and Q24 outputs both become positive. However, the output of Q21 is delayed a predetermined amount (30 ms in dc-dial, 40 ms in trunk) through the operation of Q20 and timing circuits C30, R94, R95, whereas the Q24 output is not delayed Thus, if the duration of the tone off pulse is shorter than the delay period, the Q21 and Q24 outputs are not grounded at the same time, so that the tone-off pulse has no effect on K3 Only when an input tone-off pulse exceeds the time-delay period is a simultaneous ground output supplied from Q21 and Q24, to overcome the differential switching point of Q22/Q23 to turn Q22 off and Q23 on. At the end of the sufficiently long tone-off pulse, the Q21 and Q24 collectors are both negative to operate Q22/Q23 and K3 again, thus producing a correctly timed E-lead tone-off pulse.

(g) Trigger Q23 input is strapped so that, when the local terminal M-lead is grounded to send an outgoing ring signal in ringdown operation, a negative voltage is applied from the Q24 collector in the transmit section to the Q23 base As a result, E-lead output relay K3 is held energized so that it cannot be accidentally deenergized by any transmitted ringdown vf signal coupled back to the local receive path via an external hybrid at the distant terminal.

4-4. Detailed Description of Signaling Supply Unit (fig. FO-5)

a. General Each signaling supply unit (SSU) contains a 1600 or 2600 Hz oscillator. Two SSUs are required for operation on a primary/standby configuration Either SSU may be selected as the primary while the other operates as a standby. When the primary oscillator output falls below a predetermined threshold, switchover to the standby SSU occurs. Output level and frequency are adjustable, as is the switchover-threshold point.

b. Fault Switchover (fig. FO-6). Both SSUs operate identically; the SF-oscillators of each are in continuous operation, and relay K1 of each unit is energized.

(1) Relay K2 of the selected primary SSU is energized by supplying -48 vdc through Kl-10 N/O point and R27 K2 of the standby SSU is inhibited by ground level from primary SSU K24, 3 lockout circuit line to standby SSU control circuit to K2-1 coil.

(2) When the primary SSU-SF oscillator signal level fails below the established threshold, K1 in the primary SSU Is deenergized.

(a) Primary SSU K2 deenergizes and lockout ground Is removed from standby SSU control, permitting standby SSU K2 to energize Standby SSU T1 output maintains the signal through K2 contacts.

(b) Battery is applied to primary SSU OSC FAIL lamp CR10 and audible alarm DS1.

(c) Relay-contact transfer is provided for external alarm (Minor Alarm).

(3) If SF-oscillator output signal levels drop below established threshold m both primary and standby SSU, K1 in each unit is deenergized, K2 m the primary unit is deenergized and K2 in the standby unit remains deenergized. Consequently, no signal is applied to the output terminals; battery is applied to OSC FAIL lamps in each SSU and relay contact transfers are provided for both external alarms (major alarm).

(4) SELECT switch S1, pressed on the SSU that is in standby condition, relay driver (Q6) output ground is applied through lockout circuit to primary SSU control circuit and K2-1, deenergizing K2, in turn removing inhibiting ground from standby SSU control circuit and K2. Standby K2 is energized and routes the signal through its contacts thus becoming the primary SSU while the alternate SSU becomes the standby Thus, manual switchover is completed.

(5) Failure of the standby SF-oscillator, and resulting deenergizing of K1 (in standby SSU), applies battery to OSC FAIL lamp CR10 and audible alarm DS1 and provides relay contact transfer for minor external alarm.

c. SSU (fig. 4-4) The SSU comprises oscillator circuit Q1/Q2, buffer Q3, output emitter-follower Q4, positive rectifier and filter circuit CR2/C7, comparator Q5, relay driver Q6, alarm and output control relay K1, and output transformer T1.

(1) The oscillator circuit's frequency determining LC network (Q1/Q2 emitter circuit) contains variable capacitor C1, which adjusts the oscillator's frequency; variations of ± 1 to ± 5 Hz can be obtained.

(2) The signal output from Q1/Q2 is applied through buffer Q3 to output emitter-follower Q4. Q3 isolates the oscillator circuit and provides proper signal transfer The input signal level to Q4 is adjustable by OUT LVL control R12, thus affecting the output signal level.

(3) Q4 output is applied to positive rectifier and filter CR2/C7 and, to T1. Signal input to CR2 is rectified and filtered, and the resultant positive dc level keeps comparator Q5 and relay driver Q6 in the on condition, energizing K1.

(4) ALM LVL control R18 adjusts the signal level applied to the rectifier, thus establishing the magnitude of the positive dc potential applied to Q4 With OUT LVL potentiometer (R12) set for a particular output level, and ALM LVL potentiometer (R18) set so that the positive dc potential just holds Q5 in the on condition, a small drop in signal level causes Q5 to turn off, turning off Q6 and deenergizing K1. The threshold at which Q5 turns off is set for a level nominally 2 db below the output level set by the OUT LVL potentiometer.

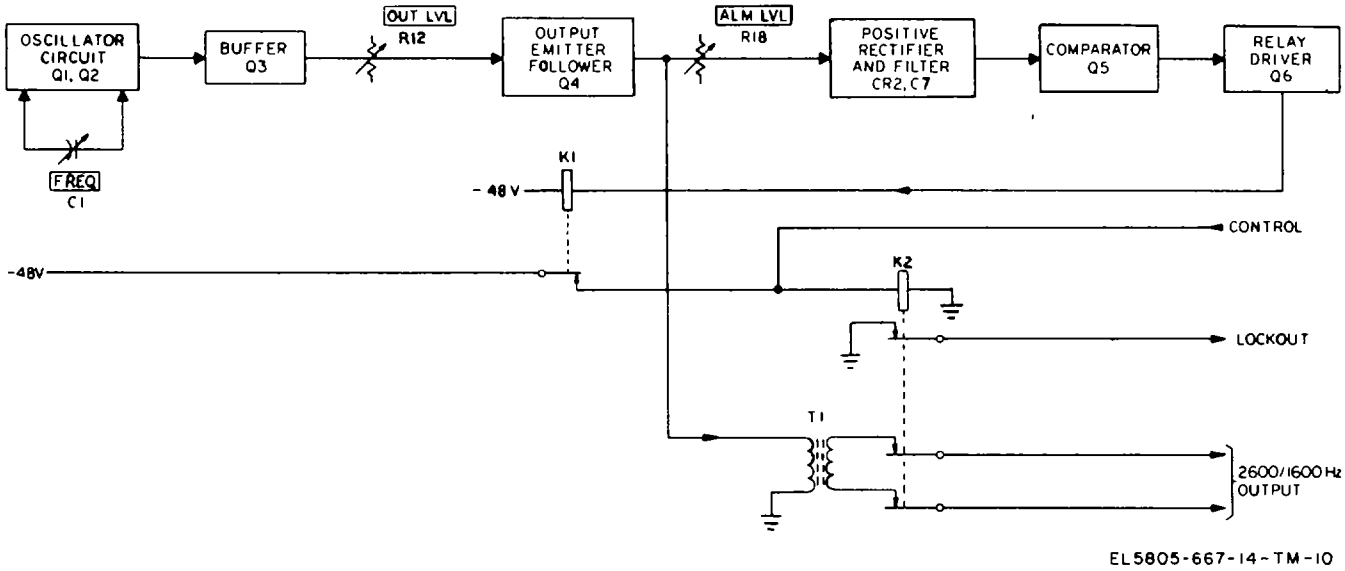

Figure 4-4. Signaling supply unit, functional block diagram.

CHAPTER 5
ON-SITE MAINTENANCE

Section I. GENERAL

WARNING

DANGEROUS VOLTAGE; DEATH or SERIOUS INJURY may result from accidental contact with --48 volt dc power present in the equipment.

5-1. Scope of On-Site Maintenance

This chapter contains instructions for performing on-site preventive and corrective maintenance procedures, and the associated testing procedures. Instructions are included for inspection, cleaning, refinishing, performance testing, and localizing a malfunction to a faulty signaling unit, signaling supply unit or universal shelf. If the performance of authorized corrective maintenance procedures does not result in a serviceable equipment, off-site maintenance is required. The responsibility and scope of maintenance is assigned by the maintenance allocation chart (MAC) (app C).

5-2. Tools, Test Equipment, and Materials Required

a. The tools and test equipment required for maintenance, including performance testing are listed in paragraphs 5-8 through 5-13.

b. The materials required for preventive maintenance are listed below.

(1) Cleaning cloth (NSN 8305-00-267-3015).
(2) Brush, paint, V2-inch width.
(3) Trichloroethane (NSN 6810-00-664-0273).

Section II. PREVENTIVE MAINTENANCE AND TROUBLESHOOTING

5-3. Preventive Maintenance

a. General. Preventive maintenance is the systematic care, inspection, and servicing of equipment to maintain it in serviceable condition, prevent breakdowns, and ensure maximum operational capability. Preventive maintenance includes the inspection, testing, and replacement of parts that inspection and tests indicate would probably fail before the next scheduled periodic service.

b. Preventive Maintenance Checks and Services Periods. Tables 5-1 and 5-2 list the preventive maintenance checks and services for the equipment. These checks and services must be performed during the specified periods. Records and reports of the preventive maintenance checks and services must be made in accordance with the requirements set forth in TM 38-750.

c. Cleaning.

(1) Remove accumulated dust and dirt from the equipment; use a vacuum cleaner with plastic hose nozzle and dust brush or a clean, dry, lint-free cloth.

WARNING

The fumes of TRICHLOROETHANE are toxic. Provide thorough ventilation whenever it is used; avoid prolonged or repeated breathing of vapor. Do not use near an open flame or hot surface. Trichloroethane is nonflammable but heat converts the fumes to a highly toxic phosgene gas the inhalation of which could result in serious injury or DEATH. Prolonged or repeated skin contact with trichloroethane can cause skin inflammation. When necessary, use gloves, sleeves and aprons which the solvent cannot penetrate.

(2) Remove smudges or stubborn dirty surface areas by wiping with a clean, lint-free cloth moistened with trichloroethane. Wipe dry with a clean, dry cloth.

d. Refinishing. Remove rust and corrosion from metal surfaces. Refer to the applicable cleaning and refinishing practices specified in TB 43-0118.

Table 5-1. Weekly Preventive Maintenance Checks and Services

Sequence No	*Item*	*Procedure*	*Reference*
1	Module front panel condition	Clean front panel exterior surface	Para 5-3*c.*
2	Cable assemblies	a. Clean cable Insulation b. See that cable insulation is not cut. cracked, or abraded. repair insulation cuts, cracks, and abrasions with electrical insulation tape as necessary c. Remove kinks and strains d. Tighten loose mechanical connections	Para 5-3*c.*
3	Equipment surfaces	Clean any build-up of dirt	Para 5-3*c.*

NOTE

If the equipment must be kept in continuous operation, check and service only those items that can be checked and serviced without disturbing operation. Make the complete checks and services when the equipment can be shut down.

Table 5-2. Organizational Monthly and Quarterly Preventive Maintenance Checks and Services

Sequence No	*Item*	*Procedure*	*Reference*
1	Refinishing	Examining module front panel and exterior surfaces for corrosion or need of refinishing	Para 5-3*d.*
2	Checking publications	See that all publications are complete and current.	App A.
3	SFSU, SSU extender board, and universal shelf	Check for evidence of overheating, burned parts, or breaks in printed circuit wiring	
4	Extender board	Perform continuity check using multimeter connected between A-A. B-B etc	Fig. B-2.
5	Modifications.	Check DA Pam 310-7 to determine if new, applicable MWO's have been published All URGENT MWO's must be applied Immediately. All NORMAL MWO's must be scheduled.	DA Pam 310-7 and TM 38-750.

5-4. Troubleshooting (fig. FO-3 and FO-5)

On-site maintenance troubleshooting includes isolating a communications line malfunction to an SSU or SFSU and replacing the faulty assembly. Refer to tables 5-3 and 5-4 for the detail troubleshooting procedure. If external equipment is not at fault, and if replacement of the SSU or SFSU does not correct the malfunction, perform continuity checks to isolate a continuity malfunction to printed-circuit wiring or a connector on the universal shelf. These continuity tests are performed using a multimeter (fig. 5-1) with the extender board inserted in the associated slot connector of the universal shelf. If the continuity test indicates an open circuit, replace the faulty connector on the universal shelf.

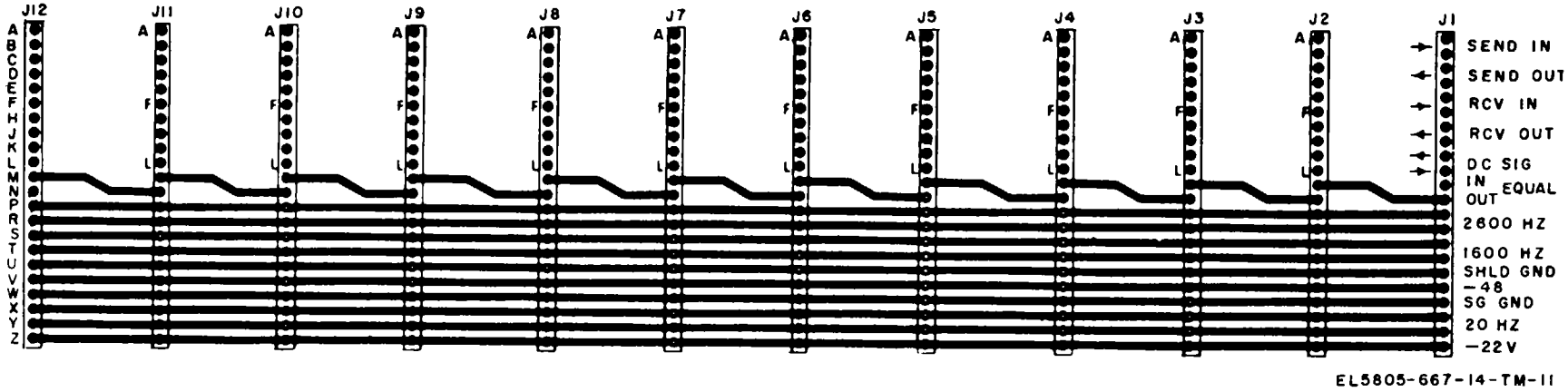

Figure 5-1. Universal shelf, receptacle bus bar wiring.

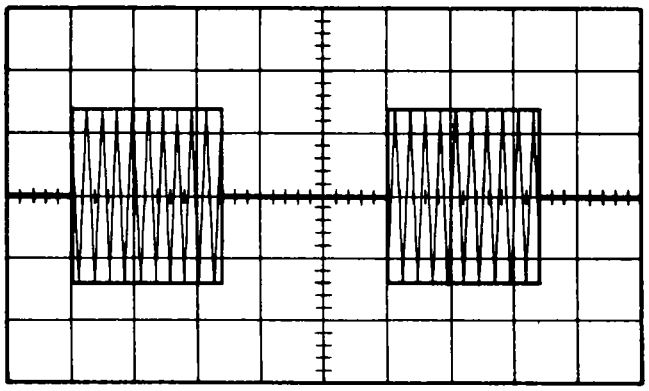

A

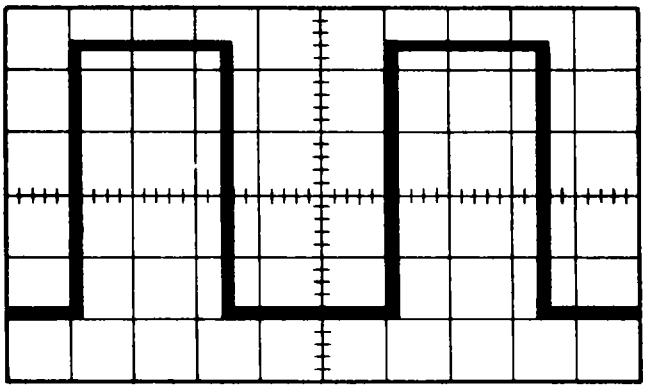

B

EL5805-667-14-TM-24

Figure 5-2. SFSU troubleshooting waveforms.

Table 5-3. Troubleshooting SSU

Test conditions	Meter connections	Performance standard	Corrective action
1. Check alarm circuits.			
a. Audible Alarm DS1 activated OSC FAIL extinguished.	*a.* N/A	*a.* Both alarms activated for alarm condition.	*a.* Replace OSC FAIL light emitting diode CR10.
b. OSC FAIL activated, audible alarm not	*b.* N/A..	*b.* Both alarms activated for alarm condition.	*b.* Replace SSU.
NOTE **For purposes of discussion, the SSU furnishing oscillator power just prior to the failure is arbitrarily considered the "Primar" SSU; other SSU unit is considered in "Standby" mode.**			
2. Check IN USE control circuits.			

	PRIMARY SSU		STANDBY SSU			PRIMARY SSU		STANDBY SSU		
	IN USE Indicator	**Alarm Indicator**	**IN USE Indicator**	**Alarm Indicator**		**IN USE Indicator**	**Alarm Indicator**	**IN USE Indicator**	**Alarm Indicator**	
a.	off	off	off	off	*a.* N/A.	on	off	off	off	(1) Check/replace IN USE diode CR9 in primary SSU. (2) Replaced SSU.
b.	off	on	off	off	*b.* N/A.	on	off	off	off	(1) Check/replace IN USE diode CR9 in standby SSU. (2) Replace standby SSU.
c.	off	on	on	off	*c.* N/A.	on	off	off	off	(1) Press SELECT pushbutton on primary SSU. (2) Replace primary SSU.
3. Check switch over for Primary SSU failure.										
	off	off	on	off	*a.* None. *b.* Multimeter connected between TP1 and TP3.	on *B.* 1.0 volt ac (adjustable from 0.7 volt to 1.2 volt.	off	off	off	*a.* N/A *b.* Adjust OUT LVL, potentiometer R12 in accordance with procedure of paragraph 2-8*c*. If proper adjustment cannot be obtained, replace SSU.
4. Check SSU output frequency.					Frequency counter connected between TP1 and TP3.	1600/2600 Hz ± 1 Hz.				Adjust output frequency in accordance with procedure of paragraph 2-8*b*. If proper adjustment cannot be obtained, replace SSU.

Table 5-4. Troubleshooting SFSU

Test conditions	Meter connections	Performance standard	Corrective action
1. Check M lead input			
a. On-hook condition In dial or trunk operation	*a.* Multimeter connected between TP1 and ground (pin W)	*a.* Ground	a. Fault Is external to SFSU. Check associated equipment (fig FO-2)
b. On hook condition in righdown operation	*b.* Same as *a* above.	*b.* -48 volt dc	*b.* Fault Is external to SFSU. Check associated equipment (fig FO-2)
c. Off-hook condition (dial, trunk, ' or ringdown operation).	*c* Same as *a* above.	*c* -48 volt dc	*c.* Fault is external to SFSU Check associated equipment (fig FO-2)
d. Dial operation	d. Oscilloscope connected between TP1 and ground (pin W)	*d.* Square-wave signal at 8 to 12 pps (alternating between ground and -48 volts) with a 42 to 72% break-characteristic	*d.* Fault is external to SFSU. Check associated equipment (fig FO-2)
e. Ringdown operation.	*e.* Same as *d* above.	*e.* Steady ground for duration of ring signal.	*e.* Fault Is external to SFSU check associated equipment (fig FO-2)
2. Check SEND LINE output			
a. On hook condition in dial or trunk operation	*a.* Ac voltmeter connected between TP2 and TP3	*a.* 1600 or 2600 Hz continuous sine-wave signal at -20 dbm0	*a.* Replace SFSU unit
b. On-hook condition, in ringdown operation	*b.* Same as *a* above	*b.* No output	*b.* Replace SFSU unit
3. Check SEND LINE output with M-lead input 10 pp), 50%, break.			
a. Ringdown operation	*a.* Oscilloscope connected between TP2 and TP3. CHANNEL A VOLT/DIV = 1 TIME/DIV = 20 ms/cm TRIGGER = EXT	*a.* Continuous am tone	Replace SFSU unit
b. Dialing operation	*b.* Same as *a* above	*b.* Waveform A of figure 5-2 Amplitude ranging from 140 mv peak-to-peak, to 2 v peak-to-peak, using send reference levels ranging from -16 dbm to +7 dmb, respectively.	*b.* Replace SFSU unit
4. Check SEND LINE output with normal vf traffic in off-hook condition	Same as step 3 *a* above	Normal vf traffic	Replace SFSU unit
5. Check RCV LINE input for on-hook condition			
a. Dial or trunk operation	*a.* Ac voltmeter (db) connected between TP7 and TP6	1600 or 2600 Hz continuous sinewave signal at -20 dbm ± 1 5 db	*a.* Fault is external to SFSU Check associated equipment (fig FO-2)
b. Ringdown operation	*b.* Same as *a* above	*b.* No input	*b.* Fault is external to SFSU Check associated equipment (fig FO-2)
c. Dialing condition	*c.* Oscilloscope connected across TP7 and TP6 CHANNEL A VOLT/DIV = 1 TIME/DIV = 20 MS/CM	*c.* Am pulses See A of figure 5-2	*c.* Fault is external to SFSU Check associated equipment (fig FO-2)
6. Check RCV LINE input for off-hook condition	Same as step 5*a*, above	Normal vf traffic	Fault is external to SFSU Check associated equipment (fig FO-2)

Table 5-4 Troubleshooting SFSU--continued

Test conditions	Meter connections	Performance standard	Corrective action
7. Check RCV Drop output for on-hook condition			
a. Dial or trunk operation	*a.* Ac voltmeter (db) connected between TP5 and TP4	*a.* 1600 or 2600 Hz continuous tone at -63 dbm0 (approximately)	*a.* Replace SFSU
b. Dialing condition	*b.* Oscilloscope connected across TP4 and TP5. CHANNEL A VOLT/DIV = 1 TIME/DIV = 20 ms/cm	*b.* Am pulses See A of fig. 5-2 during dialing 10 ms of tone may be seen depending on dial rate	*b.* Replace SFSU
8. Check RCV DROP output for off-hook condition	Oscilloscope connected is in step 7*b*, above	Normal vf traffic	Replace SFSU
9. Check E-lead output on-hook condition			
a. Dial or trunk operation	*a.* Multimeter connected between TP8 and ground (pin W)	*a.* - 48 vdc	*a.* Replace SFSU
b. Ringdown operation (on-hook or off-hook)	*b.* Same as *a* above	*b.* Ground	*b.* Replace SFSU
c. Dialing conditions (10 pps, 50% break input)	*c.* Oscilloscope connected between TP8 and ground (pin W). CHANNEL A VOLT/DIV = 10 TIME/DIV = 20 ms/cm TRIGGER = EXT	*c.* Waveform B of fig. 5-2 Amplitude 48 volts or less, depending upon type of unit E-lead is connected to	*c.* Replace SFSU

Section III. MAINTENANCE OF THE SSU, SFSU, EXTENDER BOARD AND UNIVERSAL SHELF

5-5. Removal and Installation

Removal and installation of the SSU, SFSU and the universal shelf is accomplished by performing the applicable portion of paragraph 2-6 in reverse. The extender board is installed m the universal shelf in the receptacle vacated by the SSU or SFSU The SSU or SFSU Is then inserted in the extender board receptacle Removal of the extender board Is accomplished in the reverse order of installation If an extender board is determined to be faulty, replace the extender board.

5-6. Disassembly of the Universal Shelf

Removal and replacement of a faulty receptacle from the universal shelf (fig B-1) Is accomplished as follows.

a. Unscrew two screws, lockwashers and nuts which secure receptacle to the PC card.

b. Unsolder receptacle pin connections from the PC card. Remove receptacle.

c. Assemble a replacement receptacle to the PC card by reversing the procedure given m a and b above.

5-7. Direct Support Performance Testing

Bench type test procedures which can be used to determine If a repaired assembly is capable of performing its assigned mission are given m the following paragraphs.

5-8. SSU-3/ 1600 or SSU-3/ 2600 Oscillator Frequency Performance Test

This test checks the oscillator portion of the SSU to ensure that it is operating at correct frequency.

a. Test Equipment.

(1) Connector, 22 pin
(2) Counter, Electronic Digital CP-772/U.
(3) Oscilloscope AN/USM-281C.
(4) Power Supply PP-6547/U.
(5) Resistor, 39 ohms +5 %, 1 w.
(6) Terminal board, 22 terminals.
(7) Tool Kit, Electronic Equipment TK105/G.
(8) Voltmeter, Electronic AN/USM-265

b. Test Connections and Conditions. Fabricate test connector layout, wired to a test terminal board as shown in figure 5-3 for SSU-3/2600, or figure 5-4 for SSU-3/1600. Connect bench test setup as shown m figure 5-5.

c. Procedure. Perform the oscillator frequency performance test of table 5-5 in the order given

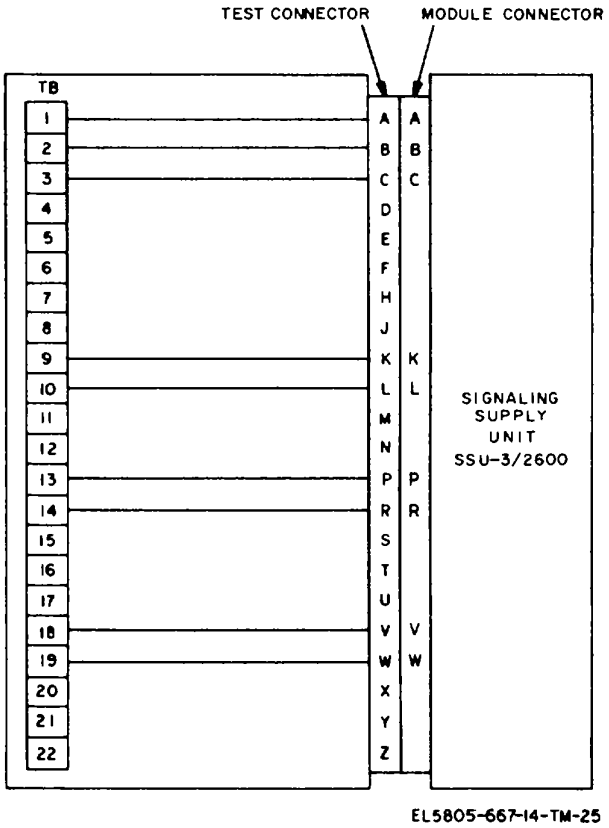

Figure 5-3. SSU-3/2600 test connector, wiring connections

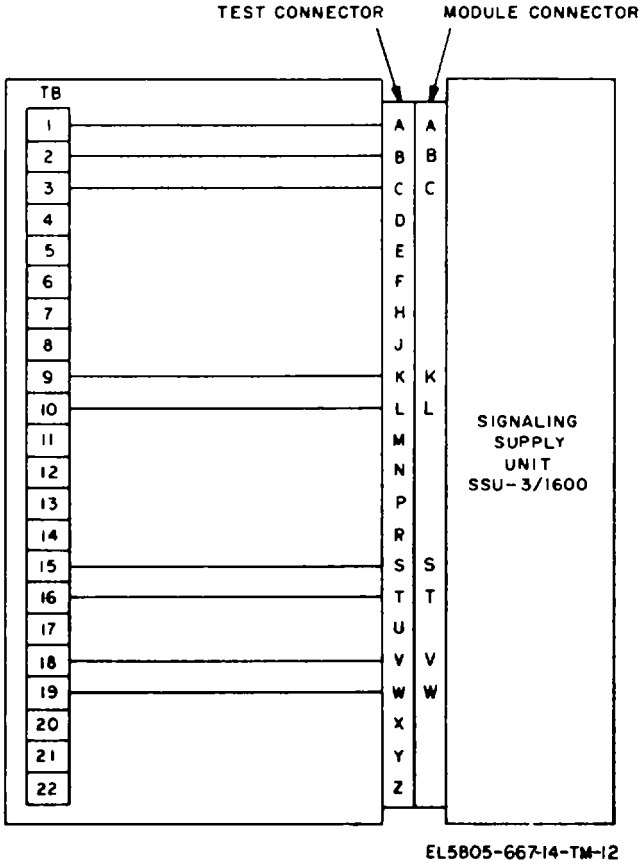

Figure 5-4. SSU-3/1600 test connector, wiring connections.

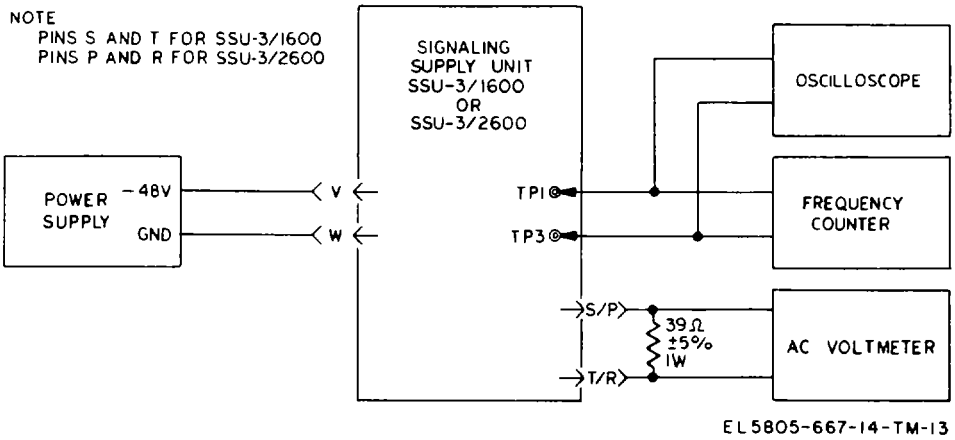

Figure 5-5. SSU oscillator frequency performance test, bench test setup.

Table 5-5. SSU Oscillator Frequency Performance Test

Test conditions	Meter connections	Performance standard
1. Check that module terminals are properly strapped: 1-3, 4-6 for SSU-3/1600 1-2, 4-5 for SSU-3/2600	N/A	None
2. Rotate module OUT LVL potentiometer R12 fully cw	N/A	IN USE indicator lights
3. Rotate module ALM LVL potentiometer R18 fully cw	Frequency counter and oscilloscope connected across TP1-TP3	1600 or 2600 ± 1 Hz. Waveform not clipped or distorted
4. Set power supply output voltage in succession for -42, -48 and -56 volt dc.	Ac voltmeter connected across the output	Ac voltmeter Indication is at least 1 5 v rms for each voltage input
5. Rotate module OUT LVL potentiometer R12 fully ccw	Ac voltmeter connected across the output	Ac voltmeter indication is equal to or less than 0 5 v rms for each input
Repeat step 4 Adjust power supply for -48 volt input to module, readjust R12 as follows		
a. SF Oscillator Output Level Adjustment. The following procedure assumes an output level of 1 0 volt ac If another level is required. make appropriate level changes. Adjust OUT LVL control R12 until 1 0 volt ac Is obtained	**NOTE** Ac voltmeter should not have a grounded input for these oscillator adjustment procedures Ac voltmeter connected TP1 and TP3	Ac voltmeter indicates 1 0 volt ac
b. SF Oscillator Bias Alarm (Switch-over Threshold Adjustment)		
(1) Adjust ALM LVL control R18 ccw until ac voltmeter indicates 0 volts ac	(1) Ac voltmeter connected across TP1 and TP3	(1) 0 volt ac
(2) Slowly adjust R18 cw until a 1 0 volt indication is again obtained, turn R18 very slightly cw above point at which 1 0 volt indication is obtained	(2) Ac voltmeter connected across TP1 and TP3	(2) 1 0 volt ac
(3) Check adjustment by rotating OUT LVL control R12 ccw until 0 volt ac is obtained on ac voltmeter There should be only a slight change in the indication (nominally 0 2 volt change) before it drops to 0 volts	(3) Ac voltmeter connected across TP1 and TP3	(3) 0 volt ac
(4) Adjust R12 cw until a 1 0 volt Indication is again obtained on ac voltmeter	(4) Ac voltmeter connected across TP1 and TP3	(4) 1 0 volt ac

5-9. SSU-3/1600 or SSU-3/2600 Oscillator Alarm Performance Test

This test checks the alarm portion of the SSU to insure that a proper alarm will give warning of a defective oscillator circuit

a. Test Equipment
   (1) Connector, 22 pin
   (2) Multimeter AN/USM-223
   (3) Power Supply PP-6547/U
   (4) Resistor, 39 ohms, ±5 %, 1 w.
   (5) Terminal board, 22 terminal
   (6) Tool Kit, Electronic Equipment TK-105/G.
   (7) Voltmeter Electronic AN/USM-265.

b. Test Connections and Conditions Fabricate test connector layout wired to a test terminal board as shown in figure 5-3 for SSU-3/2600, or figure 5-4 for SSU-3/1600. Connect bench test setup as shown in figure 5-6.

c. Procedure. Perform the oscillator alarm performance test of table 5-6 in the order given.

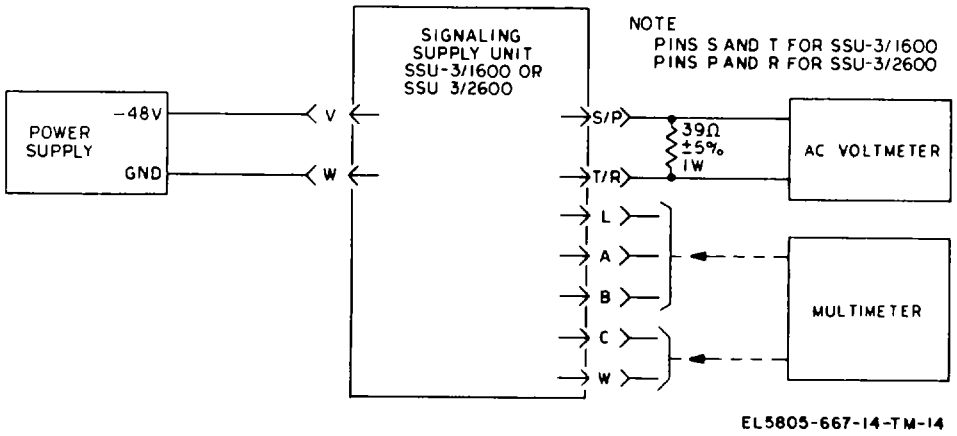

Figure 5-6. SSU oscillator alarm performance test, bench rest setup.

Table 5-6. Oscillator Alarm Performance Test

	Test conditions	***Meter connections***	***Performance standard***
1.	Check that terminals are properly strapped. 1-3. 4-6 for SSU-3/1600 1-2. 4-5 for SSU-3/2600	N/A	None
2.	Adjust module OUT LVL potentiometer R12 for 0 db output.	Ac voltmeter connected across output	0 db
3.	Adjust ALM LVL potentiometer R18 ccw until OSC FAIL indicator just lights.	Ac voltmeter connected across output	IN USE indicator extinguishes, OSC FAIL Illuminates and audible alarm sounds. Ac voltmeter indicates no output
4.	Press AUDIBLE ALARM switch.	N/A	Audible alarm ceases
5.	Check dc voltage at pin L.	Multimeter connected between pin L and ground (pin W)	Multimeter indicates 0 volt dc
6.	Check continuity between pins A-C and B-C.	Multimeter connected between pins A-C and pins B-C.	Multimeter indicates A-C closed and B-C open.
7.	Rotate OUT LVL potentiometer R12 cw until OSC FAIL indicator goes out.	N/A	IN-USE indicator lights.
8.	Check continuity between pins A-C and B-C	Multimeter connected between pins A-C and pins B-C	Multimeter indicates A-C open and B-C closed
9.	Check dc voltage at pm L	Multimeter connected between pm L ground (pm W)	Multimeter indicates approximately -24 volts dc
10.	Adjust OUT LVL potentiometer R12 for +2 db output	Ac voltmeter connected across output	Ac voltmeter indicates +2 db
11.	Slowly adjust OUT LVL potentiometer ccw until OSC FAIL indicator just lights.	Ac voltmeter connected across output	Ac voltmeter approximately 0 db at time of oscillator simulated failure

5-10. SFSU-1600-U/ B or SFSU-2600-U/ B Send Lines On-Hook/ OFF-Hook Level Performance Test

The following test check the send line circuits of the SFSU for on-hook and off-hook conditions.

a. Test Equipment.

(1) Connector, 22 pin.
(2) Generator, Signal AN/USM-264.
(3) Multimeter AN/USM-223.
(4) Power Supply, PP-6547/U.
(5) Resistor, 330 ohms, +2 %, 1/2 w (2 ea).
(6) Resistor, 600 ohms, 1 %, /2 w (2 ea).
(7) Switch, toggle SPDT.
(8) Terminal board, 22 terminals.
(9) Tool Kit, Electronic Equipment TK105/G.
(10) Voltmeter, Electronic AN/USM-265 (2 ea).

b. Test Connections and Conditions. Fabricate test connector layout wired to a test terminal board as shown in figure 5-7 for SFSU-2600-U/B or figure 5-8 for SFSU-1600-U/B. Connect bench test setup as shown m figure 5-9.

c. Procedure. Perform the SFSU send lines on-hook/off-hook level performance test of table 5-7 in the order given.

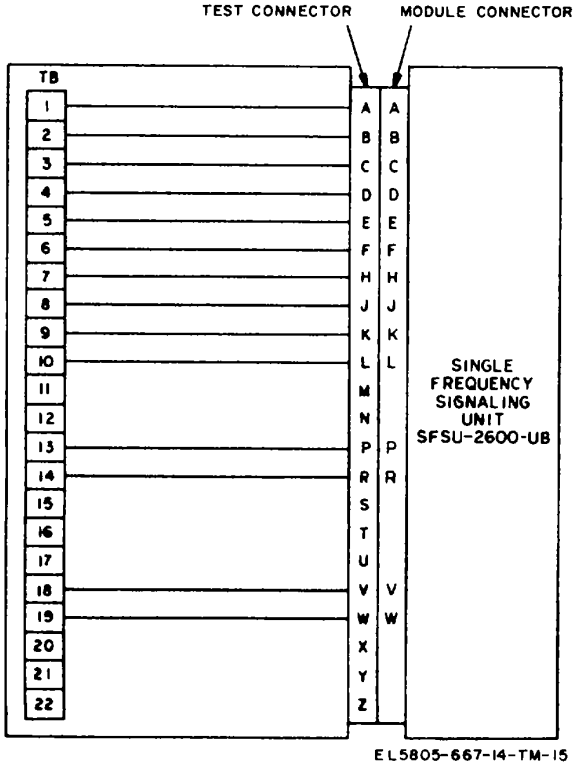

Figure 5-7. SFSU-2600-U/B test connector, wiring connections.

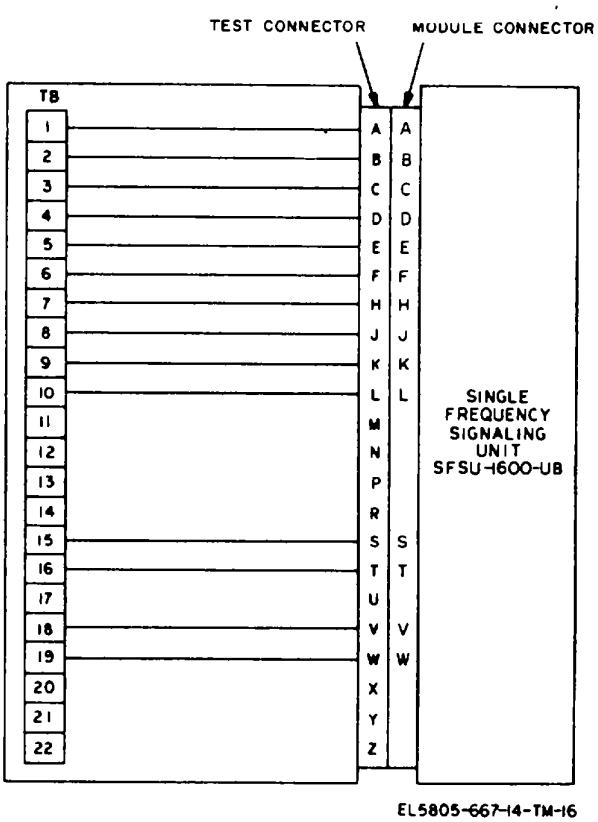

Figure 5-8. SFSU-1600-U/B test connector, wiring connections.

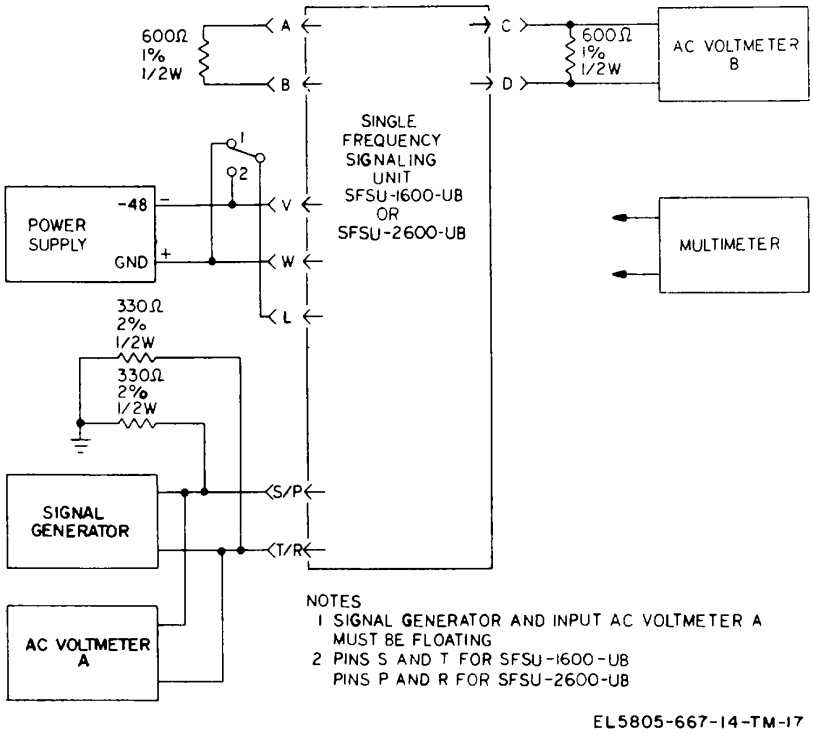

Figure 5-9. SFSU send lines on-hook/off-hook performance test, bench test setup.

Table 5-7. SFSU Send Lines On-Hook/Off-Hook Level Performance Test

Test conditions	***Meter connections***	***Performance standard***
1. On module, strap E12 to E13, (E1 to E3, E4 to E6 for SFSU-2600-U/B E2 to E3, E5 to E6 for SFSU-1600-U/B) and E34 to E16 **NOTE** If straps present on E17-E18, E16-E34 and E23-E-24, do not remove	N/A	None
2. Set signal generator for 1600 Hz or 2600 Hz tone output and adjust level for 1 volt rms on ac voltmeter	Ac voltmeter A connected across P and R for SFSU-2600-U/B or S and T for SFSU-1600-U/B	Ac voltmeter A indicates 1 volt rms
3. Adjust Send Level potentiometer R28 on SFSU for the following minimum dbm readings		
a. -24 (ccw)	*a.* Ac voltmeter B connected across pins C and D	*a.* -24 dbm or lower
b. -1 (cw)	*b.* Same as a above	*b.* -1 dbm or higher
c. -8, ± 0 5	*c.* Same as a above	*c.* -8 ± 0 5 dbm
4. Set test switch for -48 volt input (position 2)	Multimeter connected between emitter of Q7 and ground (pin W)	-46 5 ± 5 volt dc
5. Set test switch for ground input (position 1).	Same as step 4.	-0.8 ±0.1 volts dc
6. Remove module strap E12-E13	Ac voltmeter B connected across pins C and D	-20 ± 1 dbm

5-11. SFSU-1600-U/ B or SFSU-2600-U/ B Send Lines Transition Performance Test

The following tests check the send lines circuits of the SFSU during various transitions.

a. Test Equipment
   (1) Connector, 22 pin.
   (2) Generator, Signal AN/USM-264 (2 ea).
   (3) Oscilloscope AN/USM-281C.
   (4) Power Supply PP-6547/U
   (5) Resistor, 330 ohms, ± 2 %, 1/2w (2 ea)
   (6) Resistor, 600 ohms, ±-1 %, 1/2w (2 ea).
   (7) Switch, toggle SPDT.
   (8) Terminal board, 22 terminals.
   (9) Test Set, Telephone AN/TSM-86.
   (10) Tool Kit, Electronic Equipment TK105/G.
   (11) Voltmeter, Electronic AN/USM-265 (2 ea)

b. Test Connections and Conditions. Fabricate test connector layout wired to a test terminal board as shown in figure 5-7 for SFSU-2600-U/B or figure 5-8 for SFSU-1600-U/B. Connect bench test setup as shown in figure 5-10.

c. Procedure. Perform the SFSU send lines transition performance tests of table 5-8 in the order given.

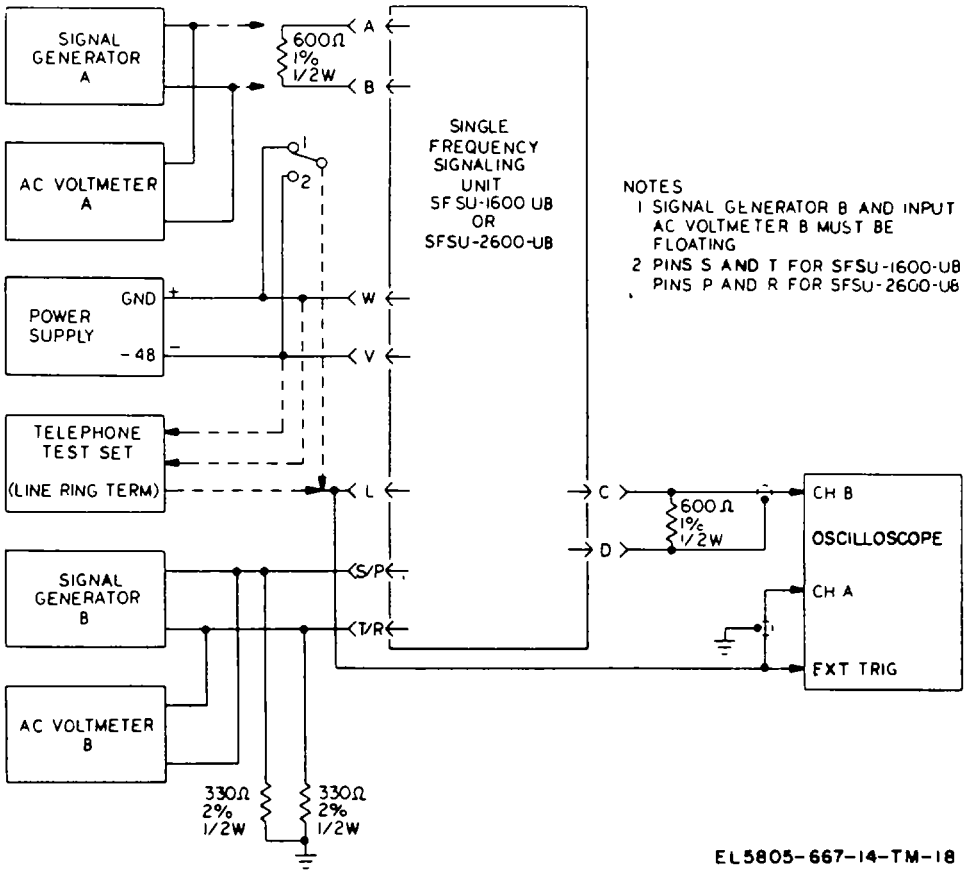

Figure 5-10. SFSU send lines transition performance test, bench test setup.

Table 5-8. SFSU Send Lines Transition Performance Test

	Test conditions	Meter connections	Performance standard
1.	On module, strap E12 to E13, (E1 to E3, E4 to E6 for SFSU-2600-U/B; 1.2 to E3. E5 to E6 for S-U 1600 U/B) and E34 to E16 **NOTE** If straps are present between E17 and E18 E16 and E34 and E23 and E24, do not remove.	N/A	None

Table 5-8. SFSU Send Lines Transmission Performance Test (Cont)

Test conditions	Meter connections	Performance standard
2. Set signal generator B for 1600 Hz or 2000 Hz tone output and adjust level for 1 volt rms on ac voltmeter	Ac voltmeter B connected across P and R for SFSU-2600-U/B or S and T for SFSU-1l00-U/B	Ac voltmeter B indicates 1 volt rms
3. Adjust telephone test set for 10 pps output with 50% break and connect test set output to module pin L as shown In figure 5-10	Oscilloscope connected as shown In fig 5-10 Oscilloscope controls as follows CHANNEL A VOLT/DIV - 20 CHANNEL B VOLT/DIV - 0 5 TIME/DIV - 10 ms/cm TRIGGER - EXT	*a.* Waveform A of figure 5-11 *b.* Amplitude shall be 1 ± 0 5 volt burst
4. Disconnect telephone test set and connect test switch to pin L. Adjust signal generator A (800-ohm termina-ation resistor removed) to provide a 3kHz 2 volt rms sinewave input to module. Alternately make and break test switch to position 2, observing oscilloscope on make for negative trigger	*a.* AC voltmeter A connected across pins A and B *b.* Oscilloscope connected as shown in figure 5-10 Oscilloscope controls set as follows: CHANNEL A VOLT/DIV -20 CHANNEL B VOLT/DIV - 2 TIME/DIV - 50 ms/cm TRIGGER - EXT, DC,-SLOPE	*a.* 2 volt rms *b.* Waveform B of figure 5-11
5. Alternately make and break test switch to position 1, observing oscilloscope on make, for positive trigger.	Oscilloscope connected as shown In figure 5-10 Oscilloscope controls set as follows CHANNEL A VOLT/DIV - 20 CHANNEL B VOLT/DIV - 2 TIME/DIV - 100 ms/cm TRIGGER - EXT, DC, + SLOPE	Waveform C of figure 5-11.
6. Disconnect signal generator A and ac voltmeter A, and replace 600 ohm termination resistor. Remove strap E12 to E13. Alternately make and break test switch to position 1, observing oscilloscope on make for positive trigger.	Oscilloscope connected as shown in figure 5-10 Oscilloscope controls set as follows CHANNEL A VOLT/DIV - 20 CHANNEL B VOLT/DIV-O 5 TIME/DIV -100 ms/cm TRIGGER - EXT, DC. + SLOPF	Waveform D of figure 5-11

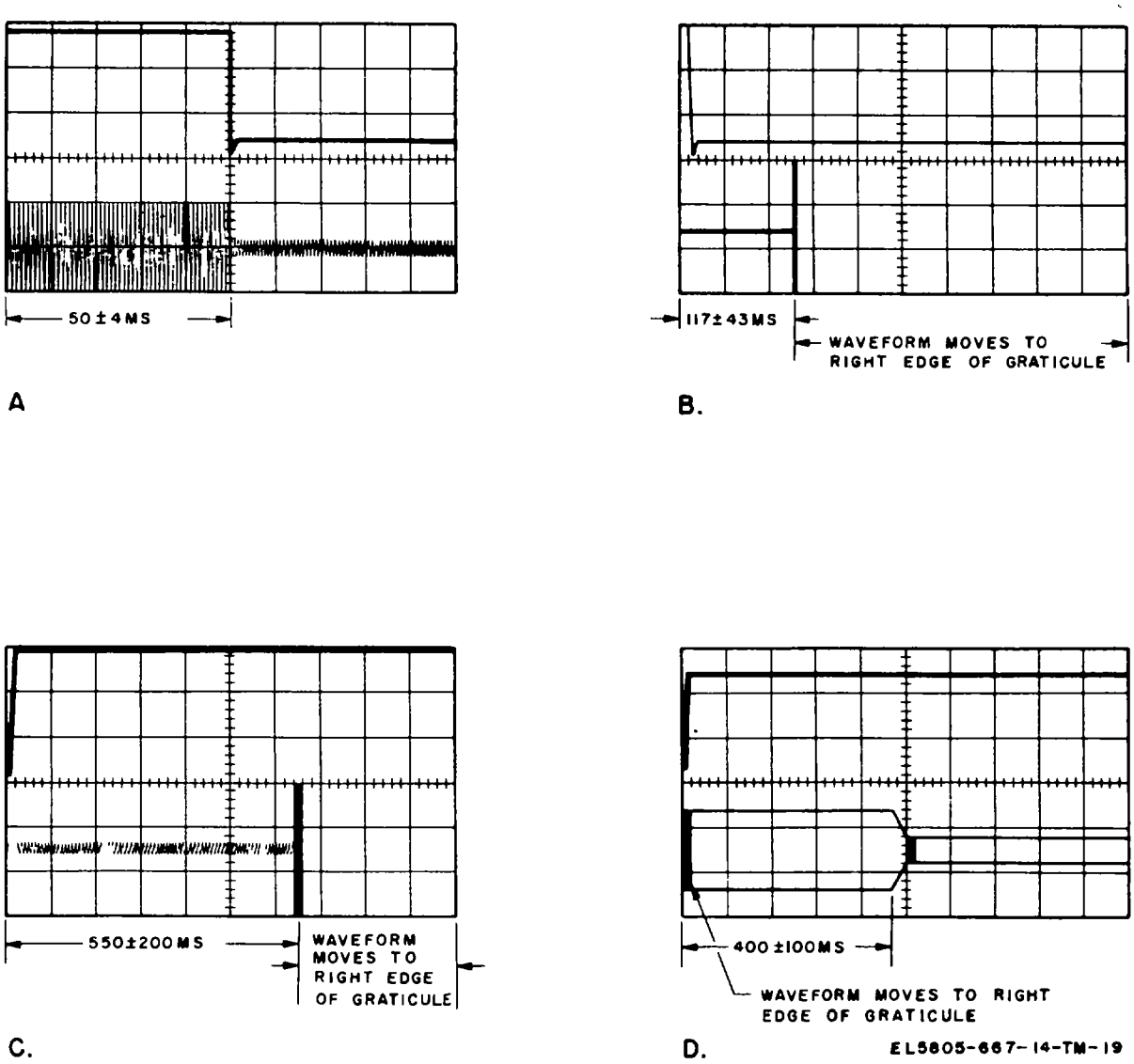

Figure 5-11. Send lines performance test waveforms.

5-12. SFSU-1600-U/ B or SFSU-2600-U/ B Voice Path Performance Test

The following test checks the performance of the voice patch circuits of the SFSU.

a. Test Equipment

(1) Attenuator, CN-1000/G.
(2) Connector, 22 pin.
(3) Counter Electronic, Digital CP-772/U.
(4) Generator, Signal AN/USM-264.
(5) Multimeter AN/USM-223.
(6) Power Supply PP-6547/U
(7) Resistor, 600 ohms, ± 1%, 1/2w.
(8) Terminal board, 22 terminals.
(9) Tool Kit, Electronic Equipment TK-105/G.
(10) Voltmeter, Electronic AN/USM-265 (2)
(11) Oscilloscope AN/USm-281C.

b. Test Connections and Conditions. Fabricate test connector layout wired to a test terminal board as shown in figure 5-7 for SFSU-2600-U/B or figure 5-8 for SFSU-1600-U/B. Connect bench test setup as shown in figure 5-12.

c. Procedure. Perform SFSU voice path performance test of Table 5-9 in the order given.

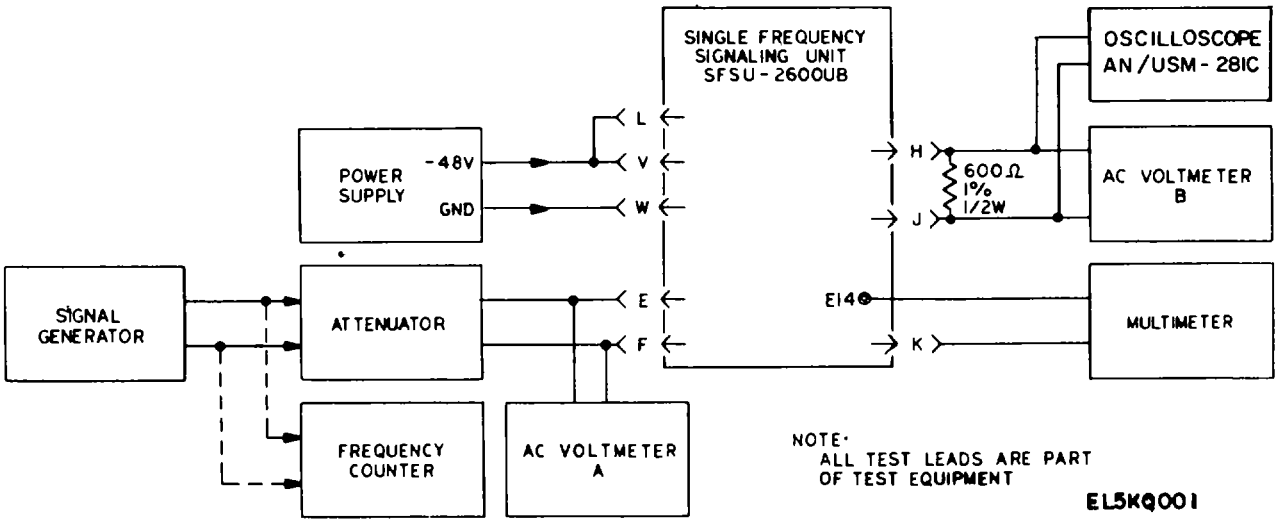

Figure 5-12. SFSU voice path performance test, bench test setup.

Table 5-9. SFSU Voice Path Performance Test

Test conditions	Meter connections	Performance standard
1. Strap E17 to E18, E23 to E24 and E34 to E16, on module	N/A	None
2. Adjust signal generator for 1000 Hz, 0 dbm output and attenuator for 0 db attenuation as indicated on ac voltmeter A	Ac voltmeter A connected across pins E and F.	0 dbm
3. Adjust REC GAIN potentiometer R40 on module for consecutive dbm reading on ac voltmeter B of:		
a. -2 dbm	*a.* Ac voltmeter B connected across pins H and J	*a.* -2 dbm
b. +2 dbm	*b.* Same as a above	*b.* +2 dbm
c. 0 dbm	*c.* Same as a above	*c.* 0 dbm
4. With signal generator maintained at 0 dbm, set to approximate frequencies below.		
a. 300 Hz	*a.* Ac voltmeter B connected across pins H and J	*a.* 0 ±0 3 dbm
b. 400 H/	*b.* Same as a above	*b.* 0 ± 0 15 dbm
c. 3000 Hz	*c.* Same as a above	*c.* 0 ± 0 15 dbm
5. On module, strap SA to 0 of its stage and GA to 0 of its stage With signal generator maintained at 0 dbm output, set to 1600 or 2600 Hz output. vary output frequency to get (null) indication on oscilloscope.	Ac voltmeter B and oscilloscope connected across pins H and J.	Signal level below -40 dbm
6. Cheek signal generator frequency with frequency counter Remove counter after measurement.	Frequency counter connected across output of signal generator.	1600 or 2600 ± 1 Hz
7. On module, strap SA and GA to respective - 16 terminals. Set attenuator for 60 db attenuation.	N/A	None

Test conditions	Meter connections	Performance standard
8. Slowly decrease attenuation until multimeter just indicates closed circuits	*a.* Multimeter connected between E14 and pin K (continuity measurement 1). *b.* Ac voltmeter B connected across pins H and J.	*a.* 0 ohms *b.* Signal level below -33 dbm
9. Slowly increase attenuation until multimeter just indicates open circuit.	*a.* Multimeter connected between E14 and pin K (continuity measurement 2). *b.* Ac voltmeter B connected across pins H and J	*a.* Infinity *b.* Signal level below-45 dbm
10. Repeat steps 8 and 9 for the strap connections listed below: *Module GA/SA Strap Connections* -8 -4 -2 0 +4 +7	Ac voltmeter B connected across pins H and J.	Ac voltmeter B indications listed below for continuity measurements 1 and 2. *Continuity Measurements/ Signal Level Below* *1* / *2* -25 dbm / -37 dbm -21 dbm / -33 dbm -19 dbm / -31 dbm -17 dbm / -29 dbm -13 dbm / -25 dbm -10 dbm / -22 dbm
11. On module, strap GA and SA to respective 0 Set attenuator for 0 attenuation. Decrease signal generator frequency until multimeter indicates an open circuit.	Multimeter connected between E14 and pin K.	Infinity
12. Increase signal generator frequency until multimeter just indicates closed circuit.	Multimeter.	0 ohms
13. Connect .frequency counter and check signal generator frequency. Disconnect counter following measurement.	Frequency counter connected across output of signal generator.	between 2525 Hz and 2600 Hz for 2600 unit. Between 1525 Hz and
14. Increase oscillator frequency until multimeter indicates open circuit.	Same as step 11.	Infinity.
15. Slowly decrease oscillator frequency until multimeter indicates a closed circuit.	Same as step 11.	0 ohms.
16. Connect frequency counter and check signal generator frequency. Disconnect counter following measurement.	Same as step 13.	Between 2600 Hz and 2675 Hz for 2600 unit. Between 1600 Hz and 1675 Hz for 1600 unit.

5-13. SFSU-1600-U/ B or SFSU-2600-U/ B Signaling Circuits Performance Test

The following test checks the performance of the signaling circuits of the SFSU.

a. Test Equipment.

(1) Connector, 22 pin.
(2) Generator, Signal AN/USM-264.
(3) Oscilloscope AN/USM-281C.
(4) Power Supply PP-6547/U.
(5) Resistor, 330 ohms, ±2 %, 1/2w (2 ea).
(6) Terminal board, 22 terminals.
(7) Test Set, Telephone AN/TSM-86.
(8) Tool Kit, Electronic Equipment TK-105/G.
(9) Voltmeter, Electronic AN/USM-265.

b. Test Connections and Conditions. Fabricate test connector layout wired to a test terminal board as shown in figure 5-7 for SFSU-2600-U/B or figure 5-8 for SFSU-1600-U/B. Connect bench test setup as shown in figure 5-13.

c. Procedure. Perform the SFSU signaling circuits performance test of table 5-10 in the order given.

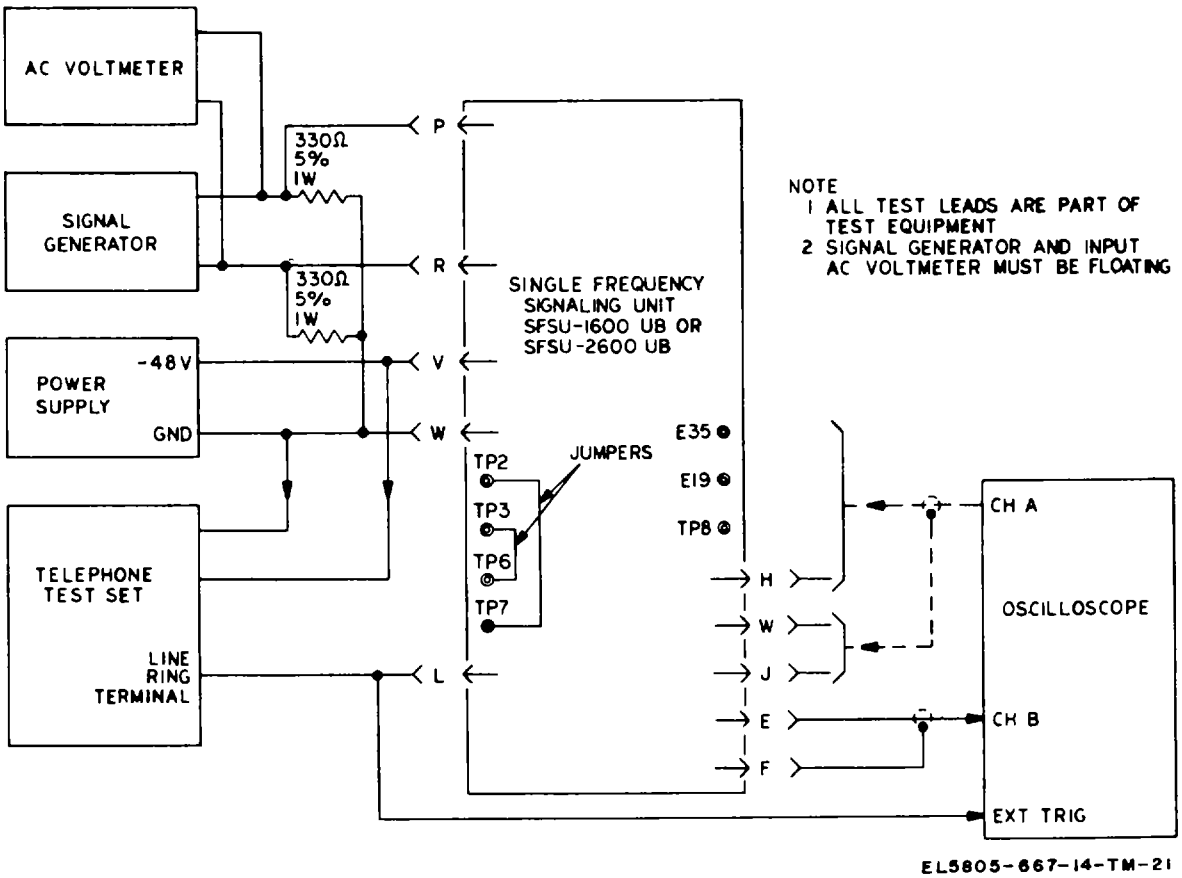

Figure 5-13. SFSU signaling circuits performance test, bench test setup.

Table 5-10. SFSU Signaling Circuits Performance Test

Test conditions	Meter connections	Performance standard
1. Adjust telephone test set for 9 pps to tone output with 45% break.	Test setup as shown in figure 5-13	N/A
2. Adjust signal generator for 1600 Hz or 2600 Hz, 1 volt rms on ac voltmeter.	Ac voltmeter connected across output of signal generator.	1 volt rms
3. Adjust module PULSE DELAY potentiometer R90 as shown on oscilloscope display (A, fig 5-14) and leave in final setting.	Connect oscilloscope channel A input to test point E35. Oscilloscope controls set as follows: CHANNEL A VOLT/DIV=20 CHANNEL B VOLT/DIV=O 5 TIME/DIV= 10 ms/cm TRIGGER=EXT, DC, +SLOPE	Waveform A of figure 5-14.
4. Adjust module PULSE STRETCH potentiometer R95 as shown on oscilloscope display (A, fig 5-14) and leave in final setting.	Same as step 3.	Waveform A of figure 5-14.
5. On module, connect jumper between E30 and E31	Same as step 3.	The 36 ms (R90) parameter of waveform A of figure 5-14 changes to 50 ± 5 ms
6. On module, remove jumper from E30 to E31, and connect jumper between E32 and E33.	Same as step 3.	The 86 ms parameter of waveform A of figure 5-14 changes to 100 ± 5 ms.

Test conditions	*Meter connections*	*Performance standard*
7. On module, remove jumper from E32 to E33.	N/A	None
8. Adjust telephone test set for 9 pps at 36% break. Adjust Pulse Corrector potentiometer R112 as shown on oscilloscope display (B, fig 5-14).	Connect oscilloscope channel A input to test point E19. Oscilloscope controls set as follows: CHANNEL A VOLT/DIV=5 CHANNEL B VOLT/DIV=0 5 TIME/DIV=20 ms/cm TRIGGER=EXT. DC +SLOPE	Waveform B of figure 5-14.
9. Adjust R112 for final value of 50 ms on oscilloscope display.	Connect oscilloscope channel A input to TP8 (E lead).	Waveform B of figure 5-14.
10. Check that tone burst (RCV DROP) is within limits shown on oscilloscope display.	Connect oscilloscope channel A across pins H and J. Oscilloscope controls set as follows: CHANNEL A VOLT/DIV=2 CHANNEL B VOLT/DIV=1 TIME/DIV=5 ms/cm TRIGGER=EXT. DC, +SLOPE.	Waveform C of figure 5-14.

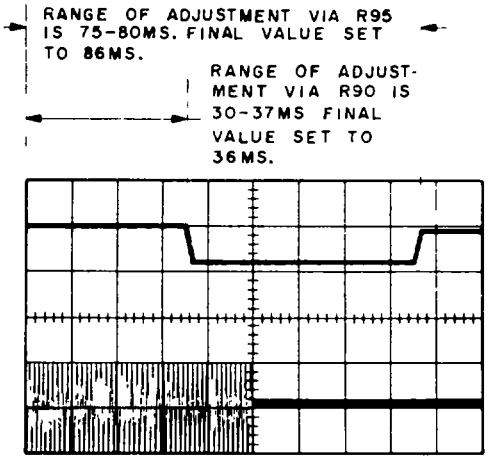

E.

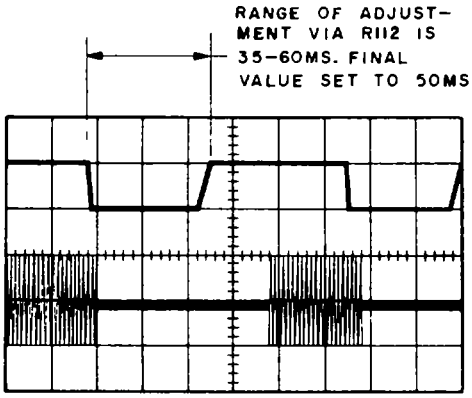

F.

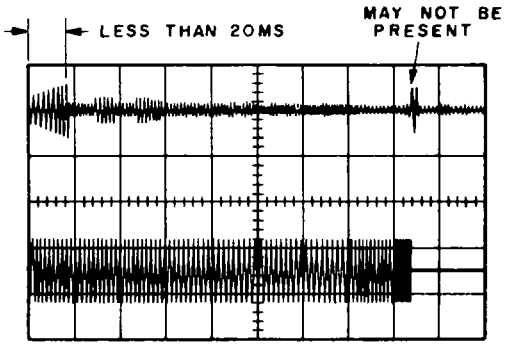

G.

EL5805-667-14-TM-22

Figure 5-14. SFSU signaling circuits, performance test, waveforms.

CHAPTER 6

OFF-SITE MAINTENANCE

6-1. Scope of Off-Site Maintenance

This chapter contains troubleshooting and maintenance procedures for fault isolation to a faulty part of the SSU or SFSU and repair of the PC-card. These procedures are performed by general support maintenance personnel as directed by the maintenance allocation chart (app C).

6-2. Tools and Equipment

Refer to the repair parts and special tools list (app B) for a list of the repair parts authorized for general support maintenance of the SSU or SFSU, and universal shelf. Tools and test equipment required for off-site maintenance are listed and identified in paragraphs 5-8 through 5-13 except that Tool Kit, Electronic Equipment TK-105/G is required for general support maintenance.

6-3. Troubleshooting

Off-site troubleshooting consists of isolating the malfunction on a SSU or SFSU to a replaceable part. This is accomplished by performing the performance tests of tables 5-5 through 5-10 and, if a performance standard is not achieved, continuing with the applicable troubleshooting tables 6-1 through 6-6. Once a faulty part is replaced, the performance test (tables 5-5 through 5-10) must again be performed to assure satisfactory performance of the assembly prior to being returned to stock.

Table 6-1. SSU Oscillator Frequency Function Troubleshooting

	Malfunction	*Probable cause*	*Fault isolation*	*Corrective action*
1.	Incorrect or missing (frequency) TP1 and TP3 output, signal clipped or distorted.	T1, Q1 through Q4	*a.* Check signal waveform across TP5 TP2 *b.* With oscilloscope signal trace Q4 through Q1, take voltage measurements of defective stage per chart on figure FO-5.	*a.* If proper level present, replace T1 *b.* Replace parts as required
2.	Weak signal output	T1, R2, Q1 through Q4	*a.* Check level of waveform across TP5 and TP2. *b.* Check adjustment of OUT LVL R12 *c.* Check voltages, per chart on figure FO-5 at Q1 and Q4	*a.* If proper level replace T1, if not, proceed to next step. *b.* Adjust R12. *c.* Replace parts as required.
3.	OUT LVL adjust.	Q3, R12.	Check Q3 and associated components via voltage measurements (fig FO-5).	Replace parts components as required.

Table 6-2. SSU Oscillator Alarm Function Troubleshooting

	Malfunction	*Probable cause*	*Fault isolation*	*Corrective action*
1.	IN USE indicator does not extinguish during alarm condition.	K2.	Check K2.	Replace K2 as required
2.	OSC FAIL indicator fails to light during alarm condition.	CR10.	N/A.	Replace CR10.
3.	Audible alarm falls to sound	S2, DS1.	Check voltage levels at S2, DS1.	Replace part as required.
4.	Both alarms fail during alarm condition.	K1.	N/A	Replace K1.
5.	AUDIBLE ALARM disable inoperative.	S2.	N/A	Replace S2.
6.	Pin L (control line) during alarm	K1.	Check K1 contacts (3-9) closure.	Replace K1 as required.
7.	External alarm contacts during alarm condition.	K1.	Check K1 contacts (6-7) closure.	Replace K1 as required.
8.	External alarm contacts in normal operation.	K1.	Check K1 contacts (5-6) closure.	Replace K1 as required.
9.	Pin L (control line) during normal condition.	K1.	Check K1 contacts (9-10) closure.	Replace K1 as required.

Table 6-3. SFSU Send Lines On-Hook/Off-Hook Level Function Troubleshooting

	Malfunction	*Probable cause*	*Fault isolation*	*Corrective action*
1.	Unit completely inoperative	Loss of internal dc power	Check C1-, C28, CR11, R51, R52, R64, VR1, and VR2 via voltage measurements (fig FO-3).	Replace parts as required.
2.	Distorted or incorrect output tone levels	T1, Q2, Q3, or adjustment of R28	Check adjustment of SEND LEVEL control R28 (table 5-7).	Replace parts as required.
3.	M-lead circuit.	Q5, Q6, Q7, and Q27	Check voltage measurements of chart on figure FO-3.	Replace parts as required.

	Malfunction	Probable cause	Fault isolation	Corrective action
4.	Improper ratio of idle-level to dial-level tone.	Q1 or defective 12 db pad.	Check voltage of Q1. With oscilloscope, check oscillator signals across CR3, CR4, CR5, and CR6 Check resistance of R9 and R10.	Replace parts as required.

Table 6-4. SFSU Send Lines Transition Function Troubleshooting

	Malfunction	Probable cause	Fault isolation	Corrective action
1.	No idle tone, ringdown tone, or tone pulses transmitted.	Q2-Q4, T1, or associated components.	Perform voltage measurements (fig FO-3) and signal trace each stage.	Replace parts as required.
2.	Vf send channel not split and terminated during on-hook to off-hook transition only.	C2, K1, CR8, or CR9	Check C2. K1, CR8, and CR9	Replace parts as required.
3.	Vf send channel not split and terminated during off-hook to on-hook transition only.	C3, K1, or CR7 through CR10	Check C3. K1, and CR7 through CR10	Replace parts as required.
4.	Vf send channel not split and terminated during dialing.	CR7 through CR10, C2, or C3	Check CR7 through CR10, C2 and C3	Replace parts as required.
5.	No high-level timing.	R1 C1, Q1.	Check R1, C1, and Q1.	Replace parts as required.

Table 6-5. SFSU Voice Path Function Troubleshooting

	Malfunction	Probable cause	Fault Isolation	Corrective action
1.	Improper (or no) voice-signal transfer from line- to drop-side of receive channel (off-hook, busy condition)	*a.* Defective REC GAIN control. *b.* Defective voice path components.	*a.* Check resistance of R40 *b* .With oscilloscope, signal trace from TP5 through T3, U1-1, K2, R35, U1-7. R36, and T2 to TP7.	*a.* Replace R40 If required *b.* Replace parts as required.
2.	Idle tone and tone pulses present at drop-side of receive channel but E-lead operates normally.	Defective K2, Q17	Check K2. If K2 not energized, measure voltage of Q17 (fig FO-3)	If K2 energized, proceed to step 3. Replace parts as required.
3.	No voice-signal transfer from line-to drop side of receive channel, with signaling tone input ,	Defective band-stop filter	Take resistance measurements of L1, L2. and associated components.	Replace parts as required.
4.	Idle tone and tone pulses present at drop-side of receive channel, but no output of E-lead.	Defective signaling band amplifier and associated circuit.	Signal trace from Q8 through Q10, and check Q11 and Q12. Take voltage checks per (fig FO-3) on suspected stage. Check negative rectifier (CR13, CR14, C19, and C20).	Replace parts as required.
5.	Attenuation strapping.	Defective attenuation strapping resistor(s).	Same as steps 4 and 5, and with VTVM, check resistance of R116 through R122.	Replace parts as required.
6.	Guard band channel limiting	Defective guard band amplifier and associated circuit.	Signal trace from Q13 through Q15 Check positive rectifier (CR16, CR17, C23, C24) Check Q16 and associated components.	Replace parts as required.

Table 6-6. SFSU Signaling Circuits Function Troubleshooting

	Malfunction	*Probable cause*	*Fault isolation*	*Corrective action*
1.	Incorrect pulse delay	Faulty pulse delay potentiometer R90 and/or dc amplifier circuits	Check resistance of R90. With oscilloscope, signal-trace from Q20 through Q18 Measure voltages at suspected stage (fig FO-3)	Replace parts as required.
2.	Incorrect pulse stretch adjustment	Faulty pulse stretch potentiometer R95.	Check resistance of R95. Check voltages of Q21 and Q22 as per chart (fig FO-3).	Replace parts as required.
3.	Pulse delay filter timing	Defective filter capacitor	Check C34, C29.	Replace parts as required.
4.	Pulse stretch filter timing	Defective filter capacitor	Check C30, C35.	Replace parts as required.
5.	Incorrect pulse correction adjustment.	Faulty pulse corrector potentiometer R112 and/or associated circuit	Check resistance of R112, and voltages of Q24 through Q26 (fig FO-3) and of associated components.	Replace parts as required.
6.	Incorrect E-lead output.	Faulty K3 and/or associated circuit	Check relay K3 closure and voltages at Q22, Q23 See chart on figure FO-3.	Replace parts as required.

6-4. Maintenance of the SSU and SFSU

Upon removal of the SSU or SFSU from the universal shelf, all parts are readily accessible (fig. B-3 and B-4). Replacement of parts determined faulty by troubleshooting are the responsibility of off-site maintenance. When a fault has been localized to a defective stage, perform voltage measurements as outlined in the voltage measurement chart provided on the schematic diagram (fig. FO-3 or FO-5) to isolate the fault to a detailed part. When replacing any detailed part, use standard precautionary procedures, such as low-voltage soldering iron, heat-sink, etc., as described in TB SIG 222 to avoid damage to the part or printed-circuit wiring.

6-5. Maintenance of the Universal Shelf

Continuity testing of the universal shelf is performed to isolate a faulty connector or printed circuit wiring. Once these items have been determined faulty, replacement of the faulty item or repair of the PC card is accomplished as described in paragraph 5-6 and TB SIG 222, respectively.

6-6. General Support Performance Testing

The performance tests given in paragraph 5-8 through 5-13 are also applicable to general support maintenance

APPENDIX A
REFERENCES

DA Pam 310-4	Index of Technical Publications.
SB 38-100	Preservation, Packaging, Packing and Marking Materials, Supplies and Equipment Used by the Army.
TB Sig 222	Solder and Soldering.
TB 43-0118	Field Instructions for Painting and Preserving Electronics Command Equipment Including Camouflage Pattern Painting of Electrical Equipment Shelters.
TM 11-5805-666-14&P	Operator's Organizational, Direct Support, and General Support Maintenance Manual (Including Repair Parts and Special Tools Lists) for Universal Rack 904090001-000, and Panel, Fuse SB-3800/FTC. (Stelma FP15/30) (NSN 5920-00-598-0469) (Line Conditioning Equipment).
TM 38-750	The Army Maintenance Management System (TAMMS).
TM 740-90-1	Administrative Storage of Equipment.
TM 750-244-2	Procedures for Destruction of Electronics Materiel to Prevent Enemy Use (Electronics Command).

PAGES MISSING IN ORIGINAL COPY

SENT TO US BY CUSTOMER

PAGES #B-1 through B-26(B-26 blank) removed in change 1

APPENDIX C
MAINTENANCE ALLOCATION

SECTION I. INTRODUCTION

C-1. General

This appendix provides a summary of the maintenance operations for TA-941/FTC, TA-942/FTC, TA-943/FTC, TA-944/FTC, and MX-9664/FTC. It authorizes categories of maintenance for specific maintenance functions on repairable items and components and the tools and equipment required to perform each function. This appendix may be used as an aid in planning maintenance operations.

C-2. Maintenance

Function Maintenance functions will be limited to and defined as follows:

a. Inspect. To determine the serviceability of an item by comparing its physical, mechanical, and/or electrical characteristics with established standards through examination.

b. Test. To verify serviceability and to detect incipient failure by measuring the mechanical or electrical characteristics of an item and comparing those characteristics with prescribed standards.

c. Service. Operations required periodically to keep an item in proper operating condition; i.e., to clean (decontaminate), to preserve, to drain, to paint, or to replenish fuel, lubricants, hydraulic fluids, or compressed air supplies.

d. Adjust. To maintain, within prescribed limits, by bringing into proper or exact position, or by setting the operating characteristics to the specified parameters.

e. Align. To adjust specified variable elements of an item to bring about optimum or desired performance.

f. Calibrate. To determine and cause corrections to be made or to be adjusted on instruments or test measuring and diagnostic equipments used in precision measurement. Consists of comparisons of two instruments, one of which is a certified standard of known accuracy, to detect and adjust any discrepancy in the accuracy of the instrument being compared.

g. Install. The act of emplacing, seating, or fixing into position an item, part, module (component or assembly) in a manner to allow the proper functioning of the equipment or system.

h. Replace. The act of substituting a serviceable like type part, subassembly, or module (component or assembly) for an unserviceable counterpart.

i. Repair. The application of maintenance services (inspect, test, service, adjust, align, calibrate, replace) or other maintenance actions (welding, grinding, riveting, straightening, facing, remachining, or resurfacing) to restore serviceability to an item by correcting specific damage, fault, malfunction, or failure in a part, subassembly, module (component or assembly), end item, or system.

j. Overhaul. That maintenance effort (service/action) necessary to restore an item to a completely serviceable/operational condition as prescribed by maintenance standards (i.e., DMWR) in appropriate technical publications. Overhaul Is normally the highest degree of maintenance performed by the Army. Overhaul does not normally return an item to like new condition.

k. Rebuild. Consists of those services/actions necessary for the restoration of unserviceable equipment to a like new condition in accordance with original manufacturing standards. Rebuild Is the highest degree of materiel maintenance applied to Army equipment. The rebuild operation includes the act of returning to zero those age measurements (hours, miles, etc.) considered in, classifying Army equipments/components.

C-3. Column Entries

a. Column 1, Group Number. Column 1 lists group numbers, the purpose of which is to identify components, assemblies, subassemblies, and modules with the next higher assembly.

b. Column 2, Component/Assembly. Column 2 contains the noun names of components, assemblies, subassemblies, and modules for which maintenance is authorized.

c. Column 3, Maintenance Functions. Column 3 lists the functions to be performed on the item listed in column 2. When items are listed without maintenance functions, it is solely for purpose of having the group numbers in the MAC and RPSTL coincide.

d. Column 4, Maintenance Category. Column 4 specifies, by the listing of a "work time" figure in the appropriate subcolumn(s), the lowest level of maintenance authorized to perform the function listed in column 3. This figure represents the active time required to perform that maintenance function at the indicated category of maintenance. If the number or complexity of the tasks within the listed maintenance function vary at

different maintenance categories, appropriate "work time" figures will be shown for each category. The number of task-hours specified by the "work time" figure represents the average time required to restore an item (assembly, subassembly, component, module, end Item or system) to a serviceable condition under typical field operating conditions. This time includes preparation time, troubleshooting time, and quality assurance/quality control time in addition to the time required to perform the specific tasks identified for the maintenance functions authorized in the maintenance allocation chart. Subcolumns of column 4 are as follows:

C - Operator/Crew
O - Organizational
F - Direct Support
H - General Support
D - Depot

e. Column 5, Tools and Equipment. Column 5 specifies by code, those common tool sets (not Individual tools) and special tools, test, and support equipment required to perform the designated function.

f. Column 6, Remarks. Column 6 contains an alphabetic code which leads to the remark in section IV, Remarks, which is pertinent to the item opposite the particular code.

C-4. Tool and Test Equipment Requirements (Sec III).

a. Tool or Test Equipment Reference Code. The numbers in this column coincide with the numbers used In the tools and equipment column of the MAC. The numbers Indicate the applicable tool or test equipment for the maintenance functions.

b. Maintenance Category. The codes In this column indicate the maintenance category allocated the tool or test equipment.

c. Nomenclature. This column lists the noun name and nomenclature of the tools and test equipment required to perform the maintenance functions.

d. National/NATO Stock Number. This column lists the National/NATO stock number of the specific tool or test equipment.

e. Tool Number. This column lists the manufacturer's part number of the tool followed by the Federal Supply Code for manufacturers (5-digit) in parentheses.

C-5. Remarks (Sec IV)

a. Reference Code. This code refers to the appropriate item in section II, column 6.

b. Remarks. This column provides the required explanatory information necessary to clarify items appearing in section II.

SECTION II. MAINTENANCE ALLOCATION CHART
FOR
UNIVERSAL SHELF. TA-941/FTC, TA-942/FTC, TA-943/FTC, TA-944/FTC & MX-9664/FTC

(1)	(2)	(3)	(4)					(5)	(6)
GROUP NUMBER	COMPONENT ASSEMBLY	MAINTENANCE FUNCTION	MAINTENANCE CATEGORY C	O	F	H	D	TOOLS AND EQUIPMENT	REMARKS
00	UNIVERSAL SHELF (90409000-000)	Replace			0.1			3	
		Inspect		0.2					
		Test		0.5				1	
		Service		0.2					
		Repair			0.8			1,3	A
		Repair				1.5		1,2	
00	PLUG-IN UNIT, FREQUENCY SIGNALING TA-941/FTC (SFSU-1600-UB)	Inspect		0.1					
		Test			2.0			1,3 thru 14,15	
		Adjust			1.7			1,3 thru 14,15	
		Replace			0.1				
		Overhaul				2.0		1,2, 4 thru 14,15	
00	PLUG-IN UNIT, FREQUENCY SIGNALING TA-942/FTC (SFSU-2600-UB)	Inspect		0.1					
		Test			2.0			1,3 thru 12, 15 thru 17	
		Adjust			1.7			1,3 thru 12,15 thru 17	
		Replace			0.1				
		Overhaul				2.0		1,2,4 thru 12, 15 thru 17	
00	PLUG-IN UNIT, FREQUENCY SIGNALING TA-943/FTC (SSU-3/1600)	Inspect		0.1					
		Test				1.0		1,3,5,6. 8,9,15, 16,18	
		Adjust				0.8		1,3,5,6, 8.9,15, 16,18	
		Replace				0.1			
		Overhaul					1.0	1,2,5,6, 8,9,15, 16.18	
00	PLUG-IN UNIT, FREQUENCY SIGNALING TA-944/FTC (SSU-3/2600)	Inspect		0.1					
		Test			1.0			1,3,5,6. 8,9,15, 16,19	
		Adjust			0.8			1,3,5,6, 8,9,15, 16.19	
		Replace			0.1				
		Overhaul				1.0		1.2,3,5, 6,8,9,15, 16,19	
00	EXTENDER, PRINTED WIRING BOARD NX-9664/FTC (80409160-000)	Inspect		0.1					
		Test		0.1				1	
		Replace			0.1				
		Repair				1.5		1,2	
	NOTE DIRECT SUPPORT (F) LEVEL MAINTENANCE OPERATIONS FOR FIXED PLANT EQUIPMENT LOCATED OCONUS, WILL BE PERFORMED BY OFF-SITE (AMSF) PERSONNEL.								

SECTION III. TOOL AND TEST EQUIPMENT REQUIREMENTS FOR UNIVERSAL SHELF, PLUG-IN UNITS FREQUENCY SIGNALING TA-941/FTC, -942/FTC, -943/FTC, -944/FTC, AND EXTENDER, PRINTED WIRING BOARD MX-9664/FTC

(1) TOOL OR TEST EQUIPMENT REF CODE	(2) MAINTENANCE LEVEL	(3) NOMENCLATURE	(4) NATIONAL/NATO STOCK NUMBER	(5) TOOL NUMBER
1	0. F, H	MULTIMETER AN/USM-223 (SIMPSON 260)	6625-00-999-7465	
2	H	TOOL KIT, ELECTRONIC EQUIPMENT TK100/G	5180-00-605-0079	
3	F	TOOL KIT, ELECTRONIC EQUIPMENT TK105/G	5180-00-610-8177	
4	F, H	ATTENUATOR, VARIABLE CN-1000/G (HP-350D)	6625-00-215-4931	
5	F, H	CONNECTOR, RECEPTACLE ELECTRICAL, 22 PIN, (WINCHESTER HBD22WO-4080)		
6	F, H	COUNTER, ELECTRONIC DIGITAL CP-772/U (HP-5245L)	6625-00-973-4837	
7	F, H	GENERATOR, SIGNAL AN/USM-264 (HP-652A) (2 EA)	6625-00-935-4214	
8	F, H	OSCILLOSCOPE AN/USM-281C (HP-180C)	6625-00-106-9622	
9	F, H	POWER SUPPLY, PP-6547U (HP-62068)	6625-00-823-5359	
10	F, H	RESISTOR, FXD COMPOSITION, 330 OHMS, +2%, RC226F331G, MIL-R-11/4 (2 EA)	5905-00-925-8771	
11	F, H	RESISTOR, FIXED FILM, 600 OHMS +11, 1/2W RN7036000F, MIL-R-10509 (2 EA)	5905-00-542-9532	
12	F, H	SWITCH, TOGGLE, SPOT, MS 25098-23	5930-00-655-1923	
13	F, H	TERMINAL BOARD, 22 TERMINALS	5940-00-433-0846	
14	F, H	TEST SET, TELEPHONE AN/TSM-86 (LENKURT 900-26600-00)	6625-00-973-9254	
15	F, H	VOLTMETER, ELECTRONIC AN/USM-265 (HP-40OEL02) (2 EA)	6625-00-935-4294	
16	F, H	TERMINAL BOARD, 22 TERMINALS (KULKA ELECTRIC JN113062-138)	5940-00-433-0846	
17	F, H	TEST SET, TELEPHONE AN/TSM-86	6625-00-973-9254	
18	F, H	RESISTOR, FIXED COMPOSITION 39 OHMS +5%, 1W, RC32GF390J, MIL-R-11A	5905-00-279-1688	
19	F, H	RESISTOR, FIXED COMPOSITION 39 OHMS +5%, 1W, RC32GF390J, MIL-R-11A	5905-00-279-1688	

SECTION IV. REMARKS

REFERENCE CODE	REMARKS
A	REPLACE CONNECTOR ON PC BOARD.

PAGES MISSING IN ORIGINAL COPY

SENT TO US BY CUSTOMER

PAGES #C-6 through C-14 removed in change 1

FRED C. WEYAND
General, United States Army,
Chief of Staff

Official:

PAUL T. SMITH
Major General, United States Army,
The Adjutant General.

DISTRIBUTION

Active Army

USASA (2)
Dir of Trans (1)
COE (1)
TSG (1)
USAARENBD (1)
AMC (1)
TRADOC (2)
ARADCOM (2)
ARADCOM Rgn (2)
OS Maj Comd (4)
LOGCOMDS (3)
MICOM (2)
TECOM (2)
USACC (4)
MDW 11)
Armies (2)
Corps (2)
HISA (Ft Monmouth) (43)
Svc Colleges (1)
USASESS (5)
USAADS (2)
USAFAS (2)
USAARMS (2)
USAIS (2)
USAES (2)
USAINTCS (3)
WRAMC (1)
ATS (1)
Ft Gordon (10)
Ft Huachuca (10)
WSMR (1)
Ft Garson (5)
Ft Richardson (ECOM Ofc) (2)
Army Dep (1) except
LBAD (14)
SAAD (30)
TOAD (14)
SHAD (3)
Ft Gillem (10)
USA Dep (2)
Sig Sec USA Dep (2)
Sig Dep (2)
Sig FLDMS (1)
USAERDAA (1)
USAERDAW (1)
MAAG (1)
USARMIS (1)
Units org under fol TOE
(1 copy each unit)
11-500(AA-AC)
29-134
29-136

NG: None

USAR: None

For explanation of abbreviations used, see AR 310-50

*U S. GOVERNMENT PRINTING OFFICE : 1991 - 295-043

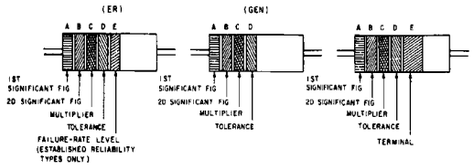

COLOR CODE MARKING FOR COMPOSITION TYPE RESISTORS

COLOR-CODE MARKING FOR FILM-TYPE RESISTORS

TABLE I
COLOR CODE FOR COMPOSITION TYPE AND FILM TYPE RESISTORS

BAND A		BAND B		BAND C		BAND D		BAND E		
COLOR	FIRST SIGNIFICANT FIGURE	COLOR	SECOND SIGNIFICANT FIGURE	COLOR	MULTIPLIER	COLOR	RESISTANCE TOLERANCE (PERCENT)	COLOR	FAILURE RATE LEVEL	TERM
BLACK	0	BLACK	0	BLACK	1			BROWN	M=1.0	
BROWN	1	BROWN	1	BROWN	10			RED	P=0.1	
RED	2	RED	2	RED	100			ORANGE	R=0.01	
ORANGE	3	ORANGE	3	ORANGE	1,000			YELLOW	S=0.001	
YELLOW	4	YELLOW	4	YELLOW	10,000	SILVER	±10 (COMP TYPE ONLY)	WHITE		SOLDERABLE
GREEN	5	GREEN	5	GREEN	100,000	GOLD	±5			
BLUE	6	BLUE	6	BLUE	1,000,000	RED	±2 (NOT APPLICABLE TO ESTABLISHED RELIABILITY)			
PURPLE (VIOLET)	7	PURPLE (VIOLET)	7							
GRAY	8	GRAY	8	SILVER	0.01					
WHITE	9	WHITE	9	GOLD	0.1					

BAND A — THE FIRST SIGNIFICANT FIGURE OF THE RESISTANCE VALUE (BANDS A THRU D SHALL BE OF EQUAL WIDTH)

BAND B — THE SECOND SIGNIFICANT FIGURE OF THE RESISTANCE VALUE

BAND C — THE MULTIPLIER (THE MULTIPLIER IS THE FACTOR BY WHICH THE TWO SIGNIFICANT FIGURES ARE MULTIPLIED TO YIELD THE NOMINAL RESISTANCE VALUE)

BAND D — THE RESISTANCE TOLERANCE

BAND E — WHEN USED ON COMPOSITION RESISTORS, BAND E INDICATES ESTABLISHED RELIABILITY FAILURE-RATE LEVEL (PERCENT FAILURE PER 1,000 HOURS) OR FILM RESISTORS, THIS BAND SHALL BE APPROXIMATELY 1-1/2 TIMES THE WIDTH OF OTHER BANDS AND INDICATES TYPE OF TERMINAL

RESISTANCES IDENTIFIED BY NUMBERS AND LETTERS (THESE ARE NOT COLOR CODED)

SOME RESISTORS ARE IDENTIFIED BY THREE OR FOUR DIGIT ALPHA NUMERIC DESIGNATORS. THE LETTER R IS USED IN PLACE OF A DECIMAL POINT WHEN FRACTIONAL VALUES OF AN OHM ARE EXPRESSED. FOR EXAMPLE

2R7 = 2.7 OHMS 10R0 = 10.0 OHMS

FOR WIRE-WOUND-TYPE RESISTORS COLOR CODING IS NOT USED, IDENTIFICATION MARKING IS SPECIFIED IN EACH OF THE APPLICABLE SPECIFICATIONS

EXAMPLES OF COLOR CODING

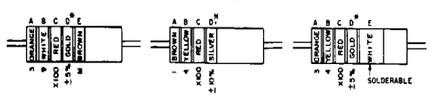

NOMINAL RESISTANCE 3,900 OHMS
RESISTANCE TOLERANCE ±5%
FAILURE RATE LEVEL M

NOMINAL RESISTANCE 1,400 OHMS
RESISTANCE TOLERANCE ±10%

NOMINAL RESISTANCE 3,400 OHMS
RESISTANCE TOLERANCE ±5%
TERMINAL SOLDERABLE

COMPOSITION-TYPE RESISTORS

FILM-TYPE RESISTORS

N IF BAND D IS OMITTED, THE RESISTOR TOLERANCE IS ±20% AND THE RESISTOR IS NOT MIL-STD

A COLOR CODE MARKING FOR MILITARY STANDARD RESISTORS

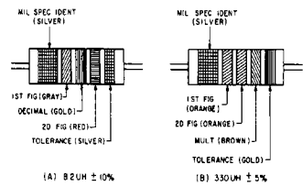

(A) 8.2UH ± 10%

(B) 330UH ± 5%

COLOR CODING FOR TUBULAR ENCAPSULATED R F CHOKES AT A, AN EXAMPLE OF OF THE CODING FOR AN 8.2UH CHOKE IS GIVEN AT B, THE COLOR BANDS FOR A 330 UH INDUCTOR ARE ILLUSTRATED

TABLE 2
COLOR CODING FOR TUBULAR ENCAPSULATED R F CHOKES

COLOR	SIGNIFICANT FIGURE	MULTIPLIER	INDUCTANCE TOLERANCE (PERCENT)
BLACK	0	1	
BROWN	1	10	1
RED	2	100	2
ORANGE	3	1,000	3
YELLOW	4		
GREEN	5		
BLUE	6		
VIOLET	7		
GRAY	8		
WHITE	9		
NONE			20
SILVER			10
GOLD	DECIMAL POINT		5

MULTIPLIER IS THE FACTOR BY WHICH THE TWO COLOR FIGURES ARE MULTIPLIED TO OBTAIN THE INDUCTANCE VALUE OF THE CHOKE COIL

B COLOR CODE MARKING FOR MILITARY STANDARD INDUCTORS

CAPACITORS, FIXED, VARIO S-DIELECTRICS, STYLES CM, CN, CY, AND CB

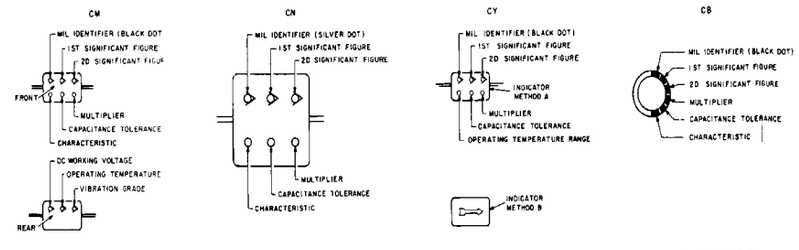

MICA-DIELECTRIC

PAPER-DIELECTRIC

GLASS-DIELECTRIC, GLASS CASE

MICA, BUTTON TYPE

TABLE 3 — FOR USE WITH STYLES CM, CN, CY AND CB

COLOR	MIL ID	1ST SIG FIG	2D SIG FIG	MULTIPLIER[1]	CAPACITANCE TOLERANCE				CHARACTERISTIC[2]				DC WORKING VOLTAGE	OPERATING TEMP RANGE	VIBRATION GRADE
					CM	CN	CY	CB	CM	CN	CN	CB	CM	CY, CM	CM
BLACK	CM CY CB	0	0	1			±20%	±20%	A					-55° TO +70°C	10-55 HZ
BROWN		1	1	10					B	E	B				
RED		2	2	100	±2%		±2%	±2%	C					-55° TO +85°C	
ORANGE		3	3	1,000		±30%			D		D	300			
YELLOW		4	4	10,000					E					-55° TO +125°C	10-2,000HZ
GREEN		5	5		±5%				F			500			
BLUE		6	6											-55° TO +150°C	
PURPLE (VIOLET)		7	7												
GRAY		8	8												
WHITE		9	9												
GOLD				0.1			±5%	±5%							
SILVER	CN			0.01	±10%	±10%	±10%	±10%							

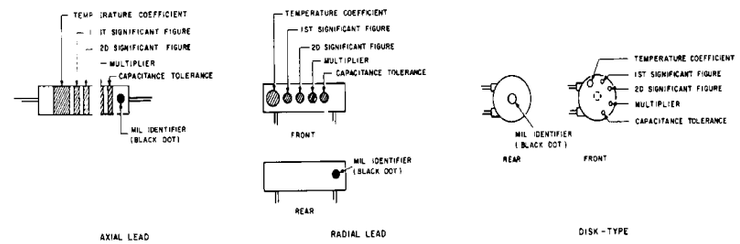

AXIAL LEAD

RADIAL LEAD

DISK-TYPE

TABLE 4 — TEMPERATURE COMPENSATING, STYLE CC

COLOR	TEMPERATURE COEFFICIENT[4]	1ST SIG FIG	2D SIG FIG	MULTIPLIER[1]	CAPACITANCE TOLERANCE		MIL ID
					CAPACITANCES OVER 10 UUF	CAPACITANCES 10 UUF OR LESS	
BLACK	0	0	0	1		±2.0 UUF	CC
BROWN	-30	1	1	10	±1%		
RED	-80	2	2	100	±2%	±0.25 UUF	
ORANGE	-150	3	3	1,000			
YELLOW	-220	4	4				
GREEN	-330	5	5		±5%	±0.5 UUF	
BLUE	-470	6	6				
PURPLE (VIOLET)	-750	7	7				
GRAY		8	8	0.01*			
WHITE		9	9	0.1*	±10%		
GOLD	+100			0.1		±1.0 UUF	
SILVER				0.01			

1 THE MULTIPLIER IS THE NUMBER BY WHICH THE TWO SIGNIFICANT (SIG) FIGURES ARE MULTIPLIED TO OBTAIN THE CAPACITANCE IN UUF

2 LETTERS INDICATE THE CHARACTERISTICS DESIGNATED IN APPLICABLE SPECIFICATIONS MIL-C-5, MIL-C-25D, MIL-C-11272B, AND MIL-C-10950C RESPECTIVELY

3 LETTERS INDICATE THE TEMPERATURE RANGE AND VOLTAGE-TEMPERATURE LIMITS DESIGNATED IN MIL-C-11015D

4 TEMPERATURE COEFFICIENT IN PARTS PER MILLION PER DEGREE CENTIGRADE

N OPTIONAL CODING WHERE METALLIC PIGMENTS ARE UNDESIRABLE

C COLOR CODE MARKING FOR MILITARY STANDARD CAPACITORS

ESC FM 913 73

FO-1. Color code markings for MIL-STD resistors, inductors and capacitors.

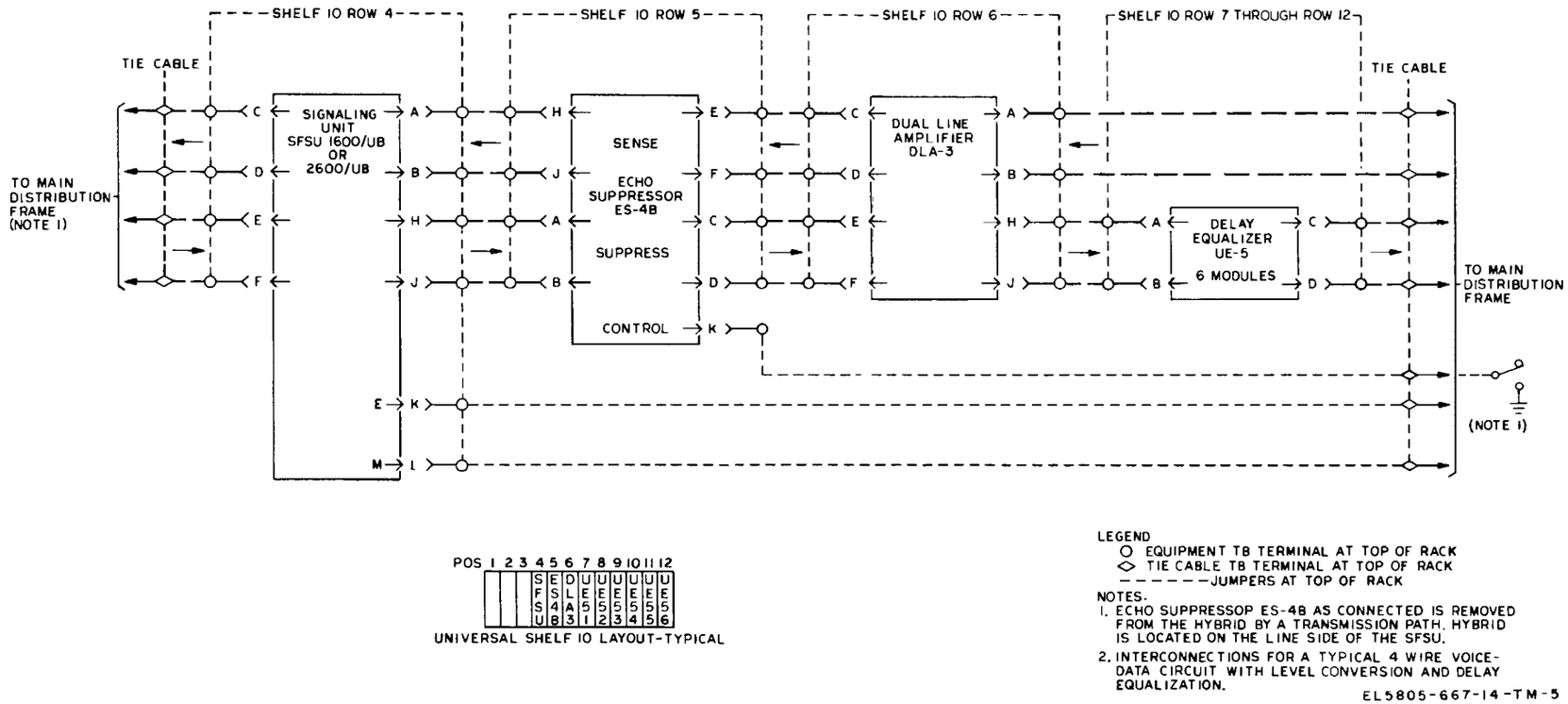

FO-2. SFSU typical system applications.

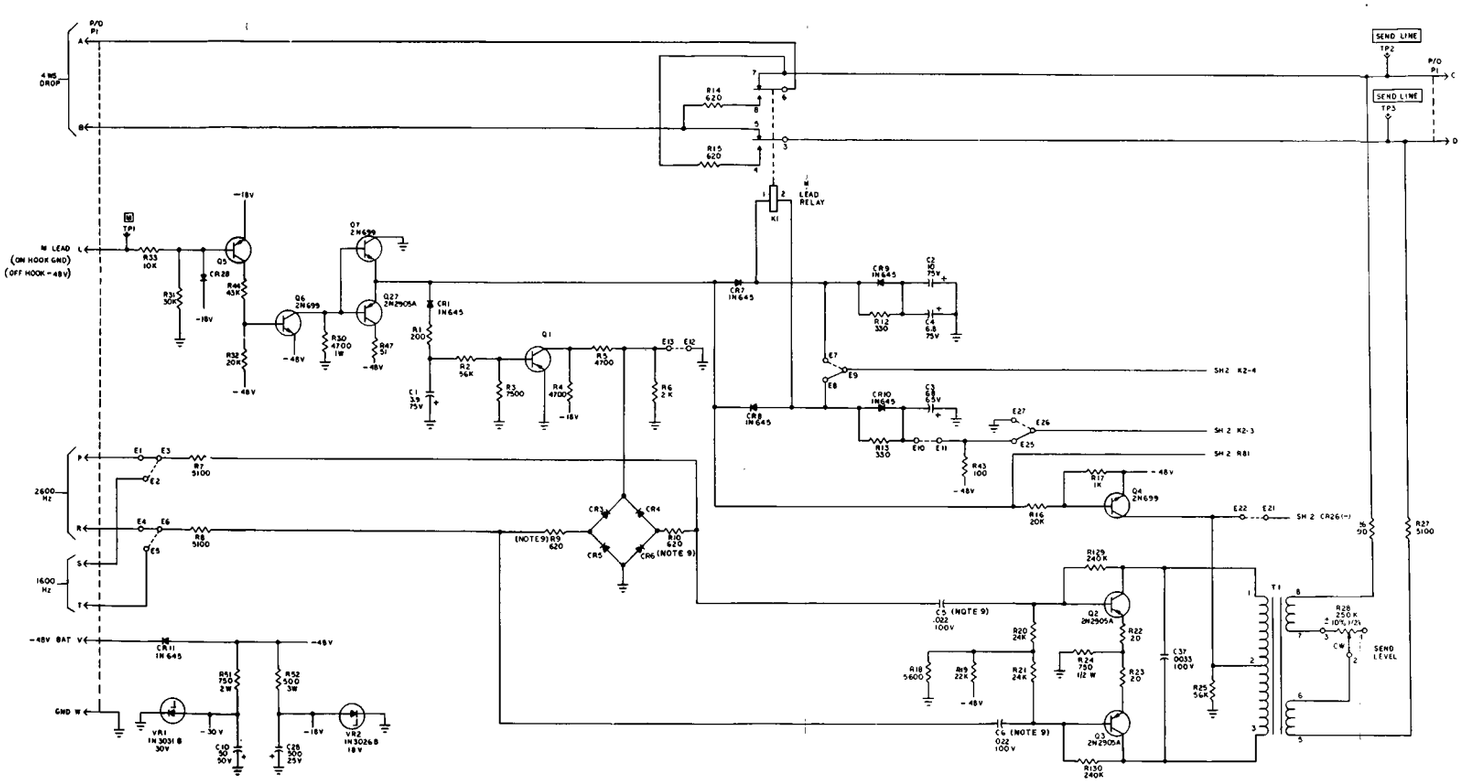

VOLTAGE CHART

IC	PINS							
	1	2	3	4	5	6	7	8
U1	18	18	18	31.5	18	18	18	0

TRANSISTOR	E	B	C	TRANSISTOR	E	B	C
Q1	0	0	9.5	Q15	0.3	0.7	8.2
Q2	12	12	45	Q16	0	0	0
Q3	12	12	45	Q17	0	0	47
Q4	47	46.5	47	Q18	0.3	0	16
Q5	18	17.5	44.5	Q19	0.3	0.7	0.4
Q6	47	46.5	0.3	Q20	0	0	18
Q7	0.8	0.3	0	Q21	0	0.6	0
Q8	0.3	0.8	8.3	Q22	2.2	0.5	42
Q9	8.1	8.3	17.5	Q23	2.2	3	2.4
Q10	18	17.5	11.5	Q24	0.3	0.6	0.3
Q11	0	0	0	Q25	0.4	0.7	18
Q12	18	27	0	Q26	1.4	2.2	1.4
Q13	18	17	11	Q27	0.8	0.3	47
Q14	7.9	8.2	17.5				

VOLTAGES MEASURED WITH 20K OHMS/VOLT DC VOLTMETER WITH RESPECT TO GROUND (PIN W), -48 VOLT POWER APPLIED, NO INPUT SIGNAL AND SIGNALING UNIT STRAPPED AS FOLLOWS SA TO O, GA TO O, E18 TO E34, E17 TO E18, E23 TO E24,
E1 TO E3, E4 TO E6 FOR 2600 Hz UNITS,
E2 TO E3, E5 TO E6 FOR 1600 Hz UNITS.
ALL VOLTAGES ARE NEGATIVE WITH RESPECT TO GROUND

STRAPPING CHART		
STRAP BETWEEN		FUNCTION
E1	E3	2600 HZ
E4	E6	
E2	E3	1600 HZ
E5	E6	
E7	E9	RING DOWN
E10	E11	
E12	E13	
E21	E22	
E26	E27	
E28	E29	
E30	E31	
E32	E33	
E8	E9	DC-DIAL
E25	E26	
E8	E9	TRUNK
E25	E26	
E30	E31	
E32	E33	
E17	E18	NOTCH IN
E23	E24	

STRAPPING CHART			
STRAP BETWEEN		FUNCTION	
E14	E16	PLR-LEAD OPTION	
E15	E34	ON HOOK (TONE ON)	0V (GND)
		OFF HOOK (TONE OFF)	-48V
		N-LEAD OPTION	
E14	E16	ON HOOK (TONE ON)	0V (GND)
		OFF HOOK (TONE OFF)	OPEN
		E-LEAD OPTION	
E34	E16	ON HOOK (TONE ON)	OPEN
		OFF HOOK (TONE OFF)	0V (GND)

NOTES
UNLESS OTHERWISE SPECIFIED
1 RESISTANCE VALUES ARE EXPRESSED IN OHMS AND ARE 1/4 WATT ±5%
2 CAPACITANCE VALUES ARE EXPRESSED IN (UF) MICROFARADS
3 DIODES ARE TYPE JAN IN 4148
4 TRANSISTORS ARE TYPE 2N2907.
5 ALL RELAYS ARE SHOWN IN DEENERGIZED POSITION
K1 ENERGIZED WHEN LINE SPLIT
K2 ENERGIZED ON RECEIPT OF TONE
K3 DE ENERGIZED ON RECEIPT OF TONE
6 NUMBER IN PARENTHESIS ARE FOR ALTERNATE RELAY
7 PARTIAL REFERENCE DESIGNATIONS ARE SHOWN PREFIX WITH REFERENCE DESIGNATION
8 ▭ DENOTES FRONT PANEL MARKING
9 SCHEMATIC DIAGRAM AS SHOWN IS FOR SFSU 2600 U/B WHEN USED FOR SFSU 1600 U/B, VALUES ARE AS FOLLOWS

C9 AND C6 = .047 ±10% 100V
C11 = .05732 UF ± 2% 100V
C12 = .009810 UF ± 2% 200V
R9 AND R10 = 510 Ω ± 5% 1/4 W
L1 = 43010076-001
L2 = 43010076-002

10. FOR ASSY DWG SEE B2350010-000 (SFU-1600)
B2350010-001 (SFU-2600)

EL5805-667-14-TM-28 ①

FO-3 (1). Signaling unit (SFSU), schematic diagram. (sheet 1 of 2).

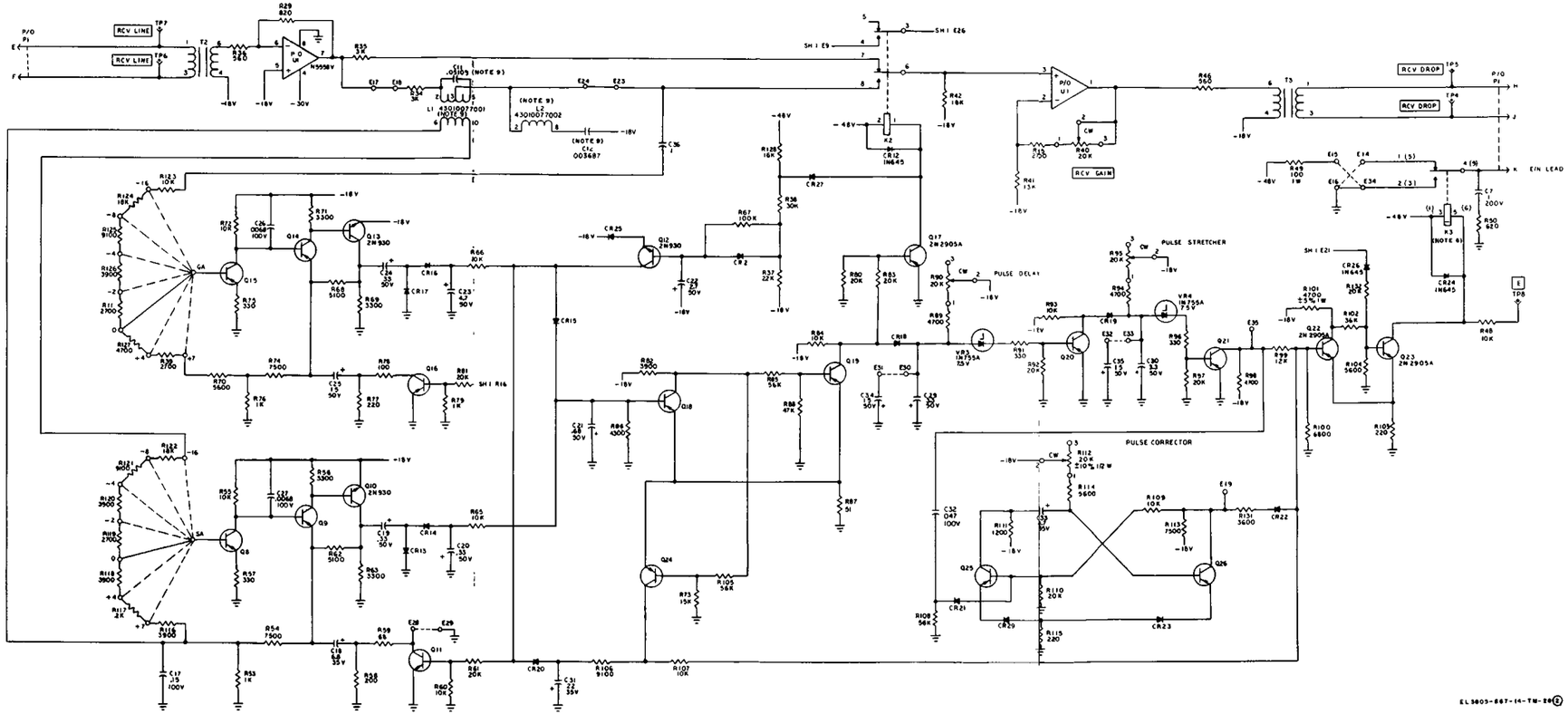

FO-3 (2). Signaling unit (SFSU), schematic diagram (sheet 2 of 2).

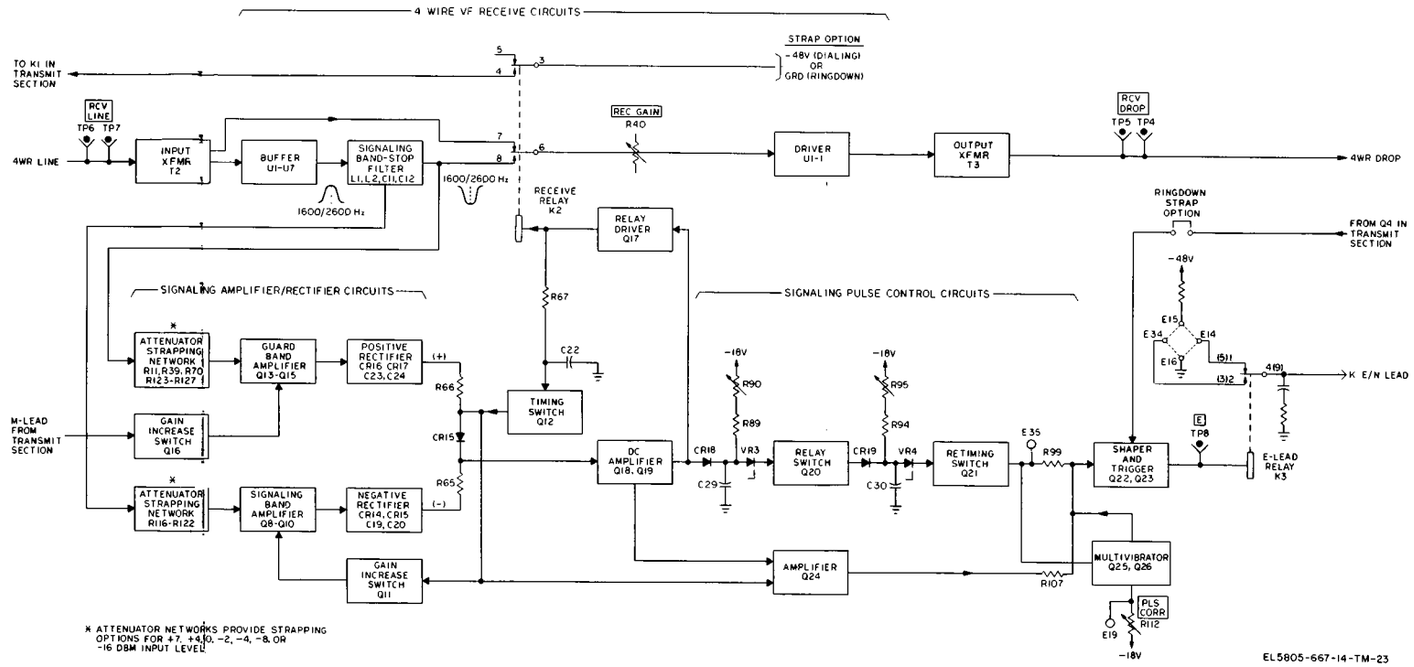

FO-4. Signaling unit receive section, functional block diagram.

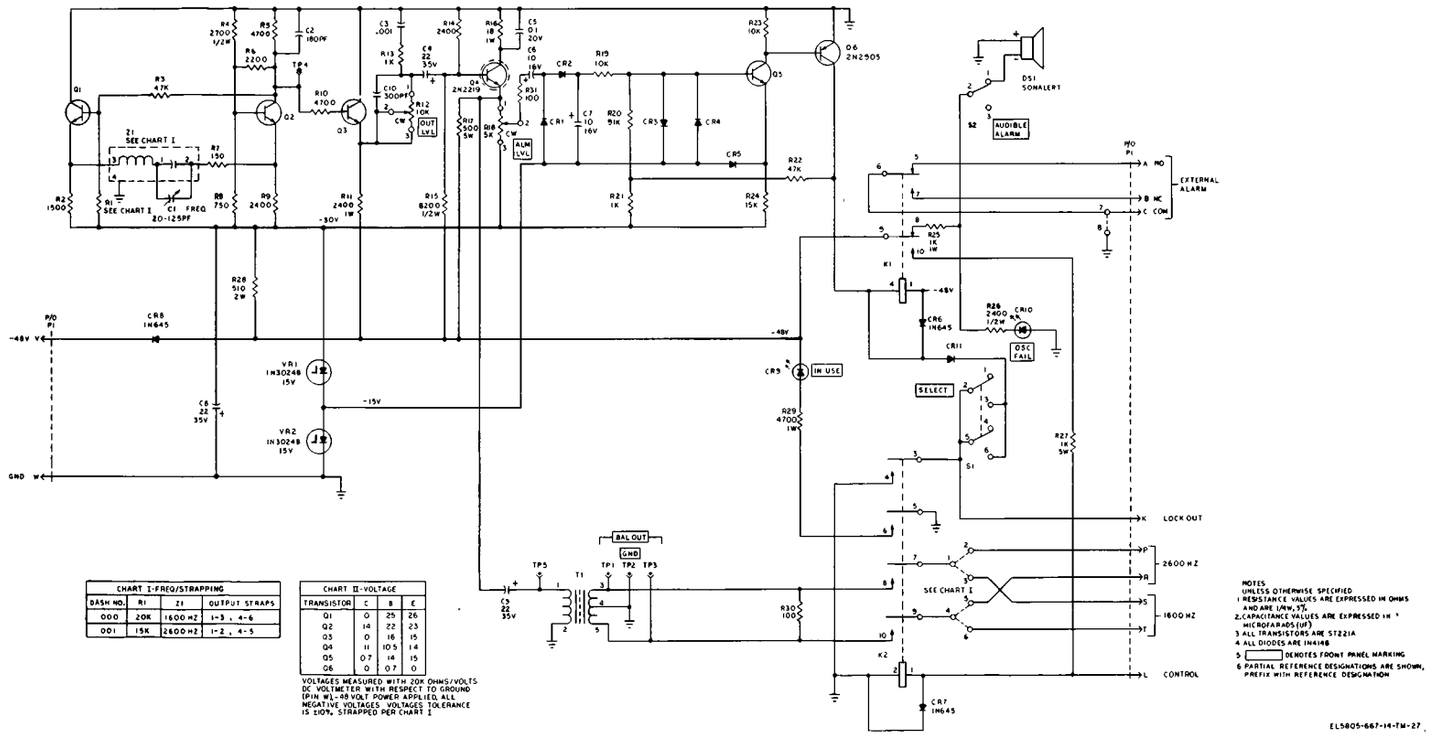

CHART I-FREQ/STRAPPING			
DASH NO.	R1	Z1	OUTPUT STRAPS
000	20K	1600 HZ	1-3 , 4-6
001	15K	2600 HZ	1-2 , 4-5

CHART II-VOLTAGE			
TRANSISTOR	C	B	E
Q1	0	25	26
Q2	14	22	23
Q3	0	16	15
Q4	11	10.5	14
Q5	0.7	14	15
Q6	0	0.7	0

VOLTAGES MEASURED WITH 20K OHMS/VOLTS DC VOLTMETER WITH RESPECT TO GROUND (PIN W), -48 VOLT POWER APPLIED, ALL NEGATIVE VOLTAGES. VOLTAGES TOLERANCE IS ±20%, STRAPPED PER CHART I

NOTES
UNLESS OTHERWISE SPECIFIED
1 RESISTANCE VALUES ARE EXPRESSED IN OHMS AND ARE 1/4W, 5%
2. CAPACITANCE VALUES ARE EXPRESSED IN MICROFARADS (UF)
3 ALL TRANSISTORS ARE ST221A
4 ALL DIODES ARE 1N4148
5 [ ] DENOTES FRONT PANEL MARKING
6 PARTIAL REFERENCE DESIGNATIONS ARE SHOWN, PREFIX WITH REFERENCE DESIGNATION

EL5805-667-14-TM-27

FO-5. Signaling supply unit (SSU), schematic diagram.

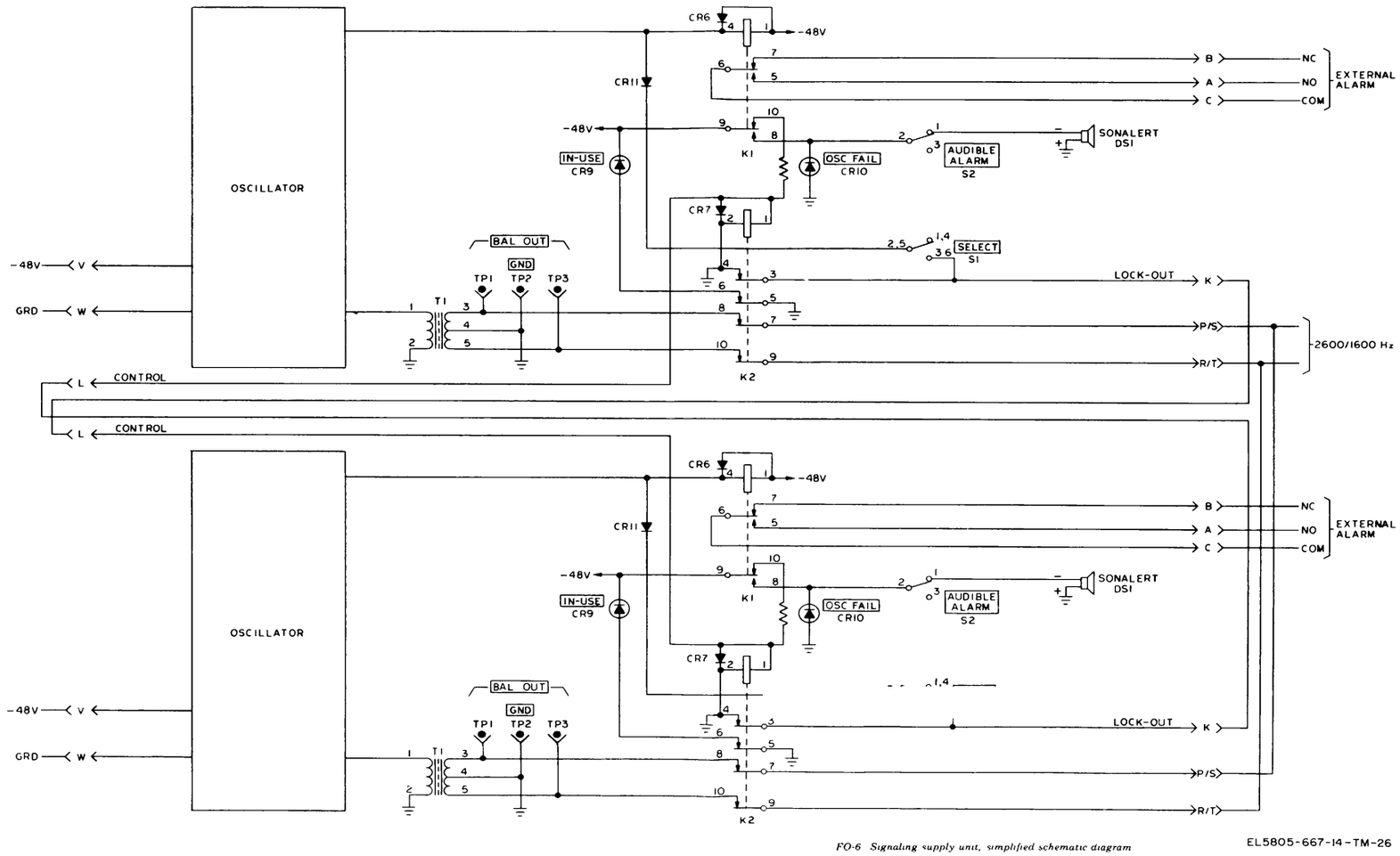

FO-6 Signaling supply unit, simplified schematic diagram

EL5805-667-14-TM-26

FO-6. Signaling supply unit, simplified schematic diagram.

TEAR ALONG PERFORATED LINE

RECOMMENDED CHANGES TO EQUIPMENT TECHNICAL PUBLICATIONS

SOMETHING WRONG WITH THIS PUBLICATION?

FROM: (PRINT YOUR UNIT'S COMPLETE ADDRESS)

DATE SENT

PUBLICATION NUMBER	PUBLICATION DATE	PUBLICATION TITLE

BE EXACT. . .PIN-POINT WHERE IT IS

PAGE NO.	PARA-GRAPH	FIGURE NO	TABLE NO.

IN THIS SPACE TELL WHAT IS WRONG AND WHAT SHOULD BE DONE ABOUT IT:

PRINTED NAME, GRADE OR TITLE, AND TELEPHONE NUMBER	SIGN HERE:

DA FORM 1 JUL 79 2028-2

PREVIOUS EDITIONS ARE OBSOLETE.

P.S.—IF YOUR OUTFIT WANTS TO KNOW ABOUT YOUR RECOMMENDATION MAKE A CARBON COPY OF THIS AND GIVE IT TO YOUR HEADQUARTERS.

This fine document...

Was brought to you by me:

Liberated Manuals -- free army and government manuals

Why do I do it? I am tired of sleazy CD-ROM sellers, who take publicly available information, slap “watermarks” and other junk on it, and sell it. Those masters of search engine manipulation make sure that their sites that sell free information, come up first in search engines. They did not create it... They did not even scan it... Why should they get your money? Why are not letting you give those free manuals to your friends?

I am setting this document FREE. This document was made by the US Government and is NOT protected by Copyright. Feel free to share, republish, sell and so on.

I am not asking you for donations, fees or handouts. If you can, please provide a link to liberatedmanuals.com, so that free manuals come up first in search engines:

<A HREF=http://www.liberatedmanuals.com/>Free Military and Government Manuals</A>

- Sincerely
  Igor Chudov
  http://igor.chudov.com/
- Chicago Machinery Movers