OPERATOR'S MANUAL

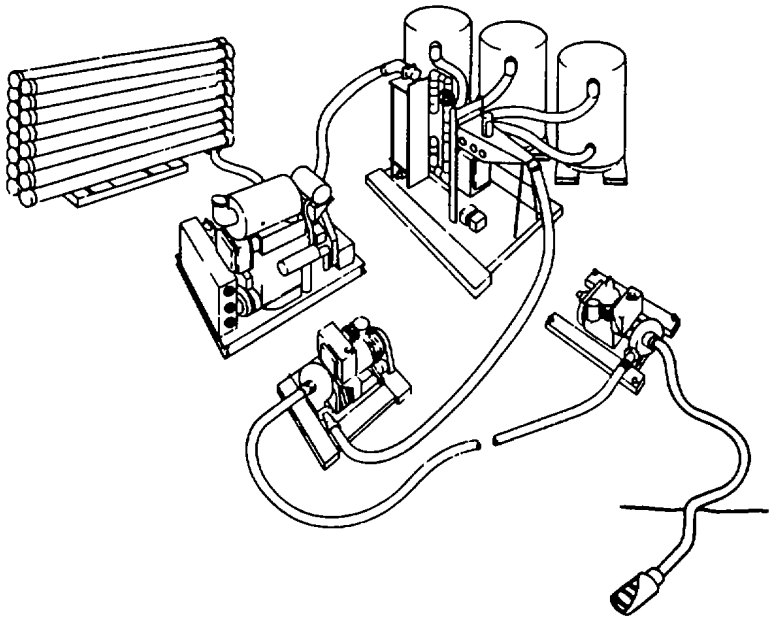

WATER PURIFICATION UNIT
REVERSE OSMOSIS

150,000 GPD, SKID-MOUNTED,
MODEL PD 81146
NSN 4610-01-121-0161

Approved for public release; distribution is unlimited.
***This manual supersedes TM 5-4610-229-10, 14 April 1986, including all changes.**

HEADQUARTERS, DEPARTMENT OF THE ARMY
5 APRIL 1991

WARNING

HEARING DAMAGE

Hearing loss can result from operating Reverse Osmosis Water Purification Unit without proper hearing protection. Always wear hearing protection when near running system.

WARNING

DANGEROUS CHEMICALS

- **Coagulant aid can cause injury if not handled properly. Heed all safety measures below.**
- **If coagulant aid comes into contact with skin or eyes, flush right away with water. Get medical help.**
- **Use coagulant aid only in accordance with directions.**

WARNING

DANGER OF EXPLOSION

Fumes from battery acid or diesel fuel may cause explosion. To prevent explosion, keep sparks and open flame away from battery acid and fuel.

WARNING

FIRE HAZARD

Diesel fuel is flammable. Keep sparks and open flame away from fuel.

FOR ARTIFICIAL RESPIRATION, REFER TO FM 21-11.

TECHNICAL MANUAL

NO. 10-4610-229-10

HEADQUARTERS
DEPARTMENT OF THE ARMY
WASHINGTON, D.C., 5 April1991

Operator's Manual

WATER PURIFICATION UNIT, REVERSE OSMOSIS

150,000 GPD, SKID-MOUNTED

MODEL PD 81146

NSN 4610-01-121-0161

REPORTING ERRORS AND RECOMMENDING IMPROVEMENTS

You can help improve this manual. If you find any mistakes or if you know of a way to improve the procedures, please let us know. Mail your letter, DA Form 2028 (Recommended Changes to Publications and Blank Forms), or DA Form 2028-2 located in the back of this manual direct to: Commander, U. S. Army Troop Support Command, ATTN: AMSTR-MMTS, 4300 Goodfellow Boulevard, St. Louis, MO 63120-1798. A reply will be furnished to you.

*This manual supersedes TM 5-4610-229-10, 14 April 1986, including all changes.

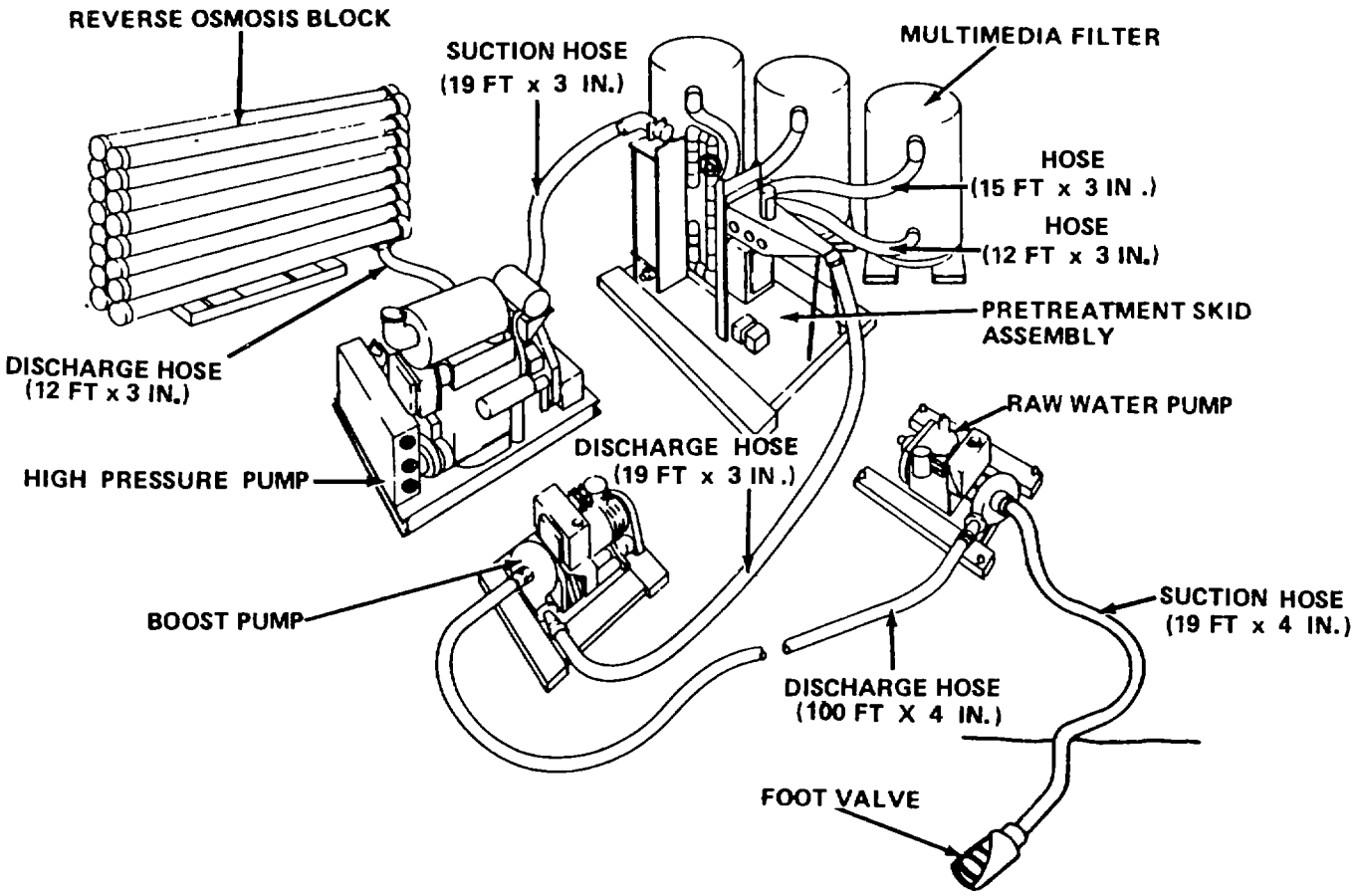
REVERSE OSMOSIS BLOCK
SUCTION HOSE
(19 FT x 3 IN.)
MULTIMEDIA FILTER
HOSE
(15 FT x 3 IN .)
HOSE
(12 FT x 3 IN.)
PRETREATMENT SKID
ASSEMBLY
DISCHARGE HOSE
(12 FT x 3 IN.)
RAW WATER PUMP
DISCHARGE HOSE
(19 FT x 3 IN .)
HIGH PRESSURE PUMP
SUCTION HOSE
(19 FT x 4 IN.)
BOOST PUMP
DISCHARGE HOSE
(100 FT X 4 IN.)
FOOT VALVE

CHAPTER 1

INTRODUCTION

Section I. GENERAL INFORMATION

1-1. SCOPE. This operator's manual contains instructions for the operation and operator's maintenance of the Skid-Mounted 150,000 GPD Reverse Osmosis Water Purification Unit (ROWPU), Model PD 81146. It produces drinking water from contaminated sources. ROWPU is not intended for use at temperatures below 32°F (0°C) or above 120°F (49°C).

1-2. MAINTENANCE FORMS AND RECORDS. Department of the Army forms and procedures used for equipment maintenance will be those prescribed by DA Pam 738-750, The Army Maintenance Management System (TAMMS).

1-3. REPORTING EQUIPMENT IMPROVEMENT RECOMMENDATIONS. If your ROWPU needs improvement, let us know. Send us an EIR. You, the user, are the only one who can tell us what you don't like about your equipment. Let us know why you don't like the design or performance. Put it on an SF 368 (Quality Deficiency Report). Mail it to us at: Commander, U. S. Army Troop Support Command, ATTN: AMSTR-MOF, 4300 Goodfellow Boulevard, St. Louis, MO 63120-1798. We'll send you a reply.

1-4. GLOSSARY

Brine	Waste product, containing salt or other particles, that is separated from drinking water during the reverse osmosis process
Cavitation	Collapse in hoseline caused by vacuum in liquid flowing through hoseline
Membrane	Barrier that allows brine to pass from drinking water and forms a wall between the two liquids
Multimedia	Filtering system made of sand, gravel, and other granulated substances

1-4. GLOSSARY (CONT)

Raw water	Contaminated water that is not suitable for drinking without treatment
Reverse osmosis	Purification process by which contaminated water is subjected to high pressure, separating salt or other particles through a membrane to produce drinking water

Section II. EQUIPMENT DESCRIPTION

1-5. EQUIPMENT CRARACTERISTICS, CAPABILITIES, AND FEATURES

a. Characteristics

(1) Consists of a series of diesel-engine-driven pumps, filters, and a reverse osmosis block assembly.

(2) Produces drinking water from contaminated sources.

b. Capabilities and Features

(1) Skid-mounted for ease of transport by land, sea, or air.

(2) Open-air design allows easy maintenance of equipment.

NOTE

Actual performance will vary with changes in environment, operating conditions, and the age of the reverse osmosis membranes.

(3) Delivers drinking water at the rate of 150,000 gpd.

c. Performance Characteristics

NOTE

Actual performance will vary with changes in environment, operating conditions, and the age of the reverse osmosis membranes.

Total feed water flow = 347 gpm
Total product water flow = 104 gpm
Total brine concentrate flow = 243 gpm

1-6. LOCATION AND DESCRIPTION OF MAJOR COMPONENTS

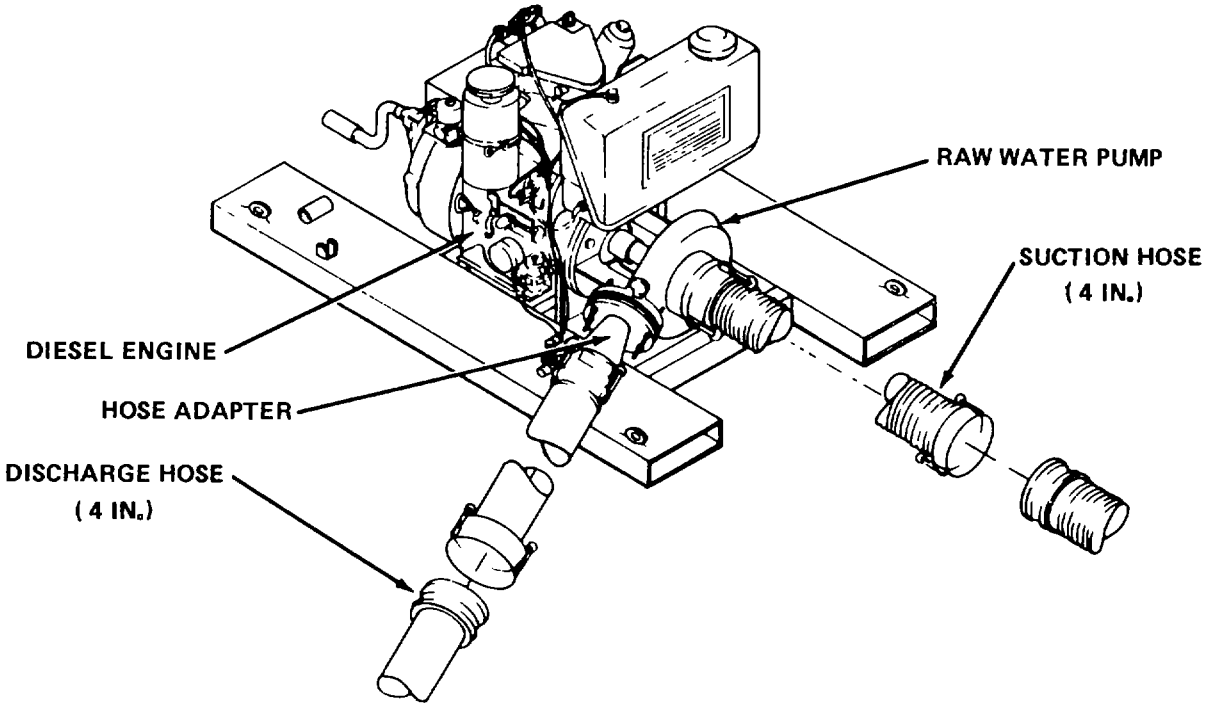

Raw Water Pump Assembly and Hoses

SUCTION HOSE ASSEMBLY. Consists of five rigid-walled (19 ft x 4 in.) hose sections, each with quick-disconnect fittings. Carries water from water source to raw water pump.

RAW WATER PUMP. Pumps water from water source to boost pump assembly.

RAW WATER PUMP DIESEL ENGINE. One-cylinder diesel engine which directly drives raw water pump.

HOSE ADAPTER. Four in. adapter. Enables coupling of discharge hose assembly with 4 in. quick-disconnect fitting.

DISCHARGE HOSE ASSEMBLY. Consists of five collapsible (100 ft x 4 in.) hose sections, each with quick-disconnect fittings. Carries water from raw water pump assembly to boost pump assembly.

1-6. LOCATION AND DESCRIPTION OF MAJOR COMPONENTS (CONT)

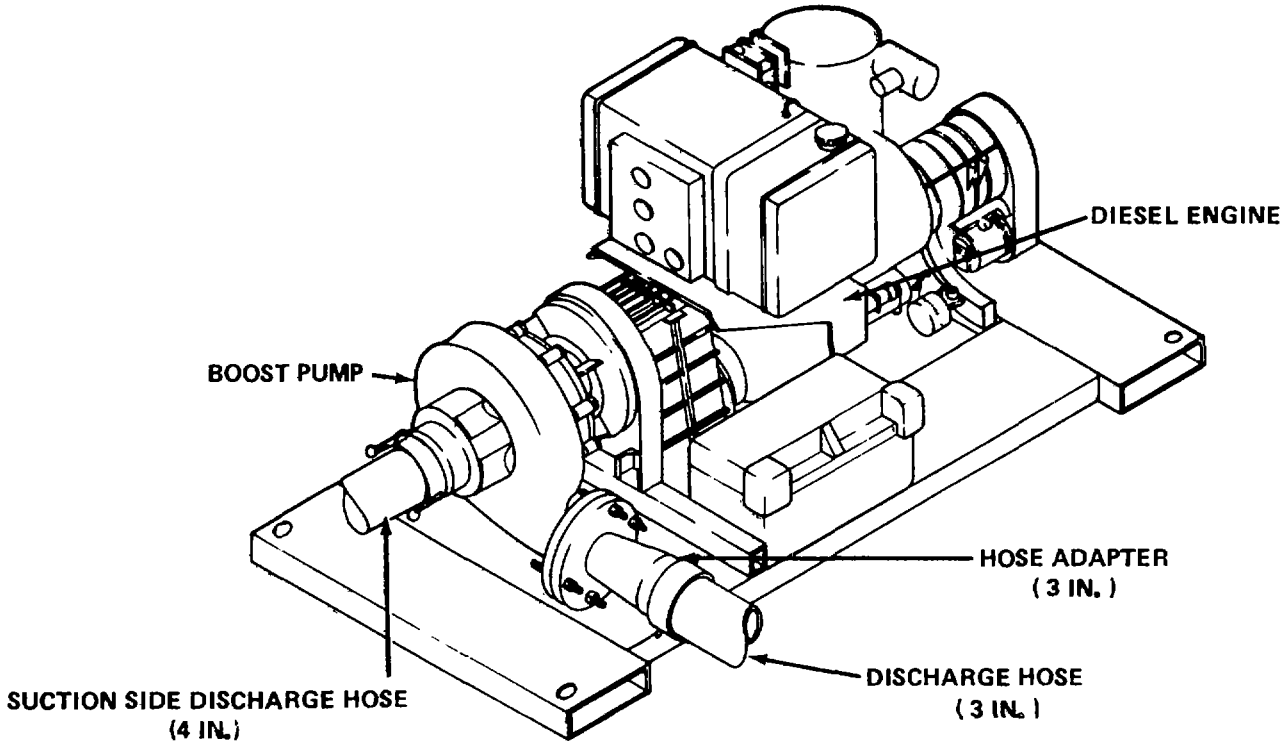

Boost Pump Assembly and Hose

BOOST PUMP. Pumps water to pretreatment assembly.

BOOST PUMP DIESEL ENGINE. Three-cylinder diesel engine which drives boost pump through a belt-driven speed increaser.

HOSE ADAPTER. Three in. threaded adapter, which enables coupling of discharge hose.

DISCHARGE HOSE. Collapsible, canvas (19 ft x 3 in.) hose which attaches to boost pump adapter and pretreatment assembly with threaded fitting.

1-6. LOCATION AND DESCRIPTION OF MAJOR COMPONENTS (CONT)

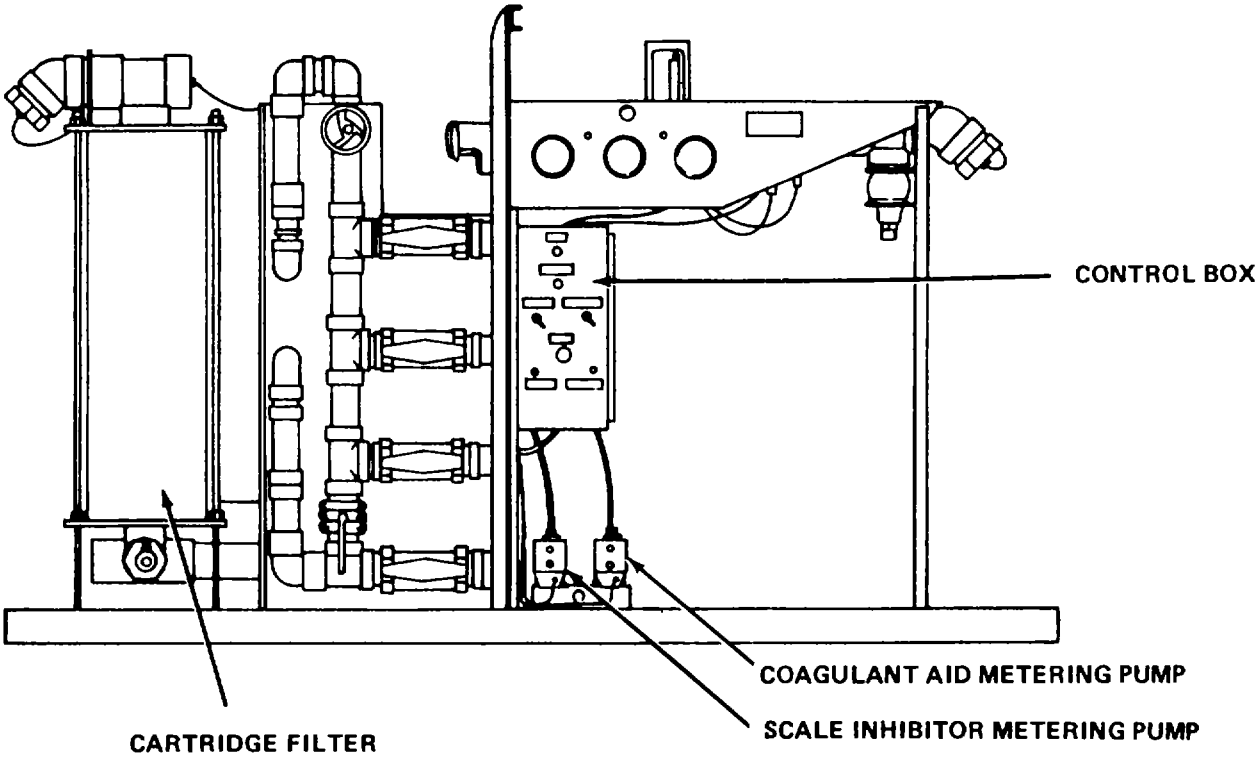

Pretreatment Assembly

CONTROL BOX. Contains 12-volt electrical circuitry for input power, controls, indicators, and chemical metering pumps.

COAGULANT AID METERING PUMP. Short-stroke, piston-diaphragm dosing pump. Provides adjustable amount of coagulant aid to feedwater stream.

SCALE INHIBITOR METERING PUMP. Same type as coagulant aid metering pump. Provides adjustable amount of scale inhibitor to feedwater stream.

CARTRIDGE FILTER. Contains 12 filter elements which remove matter that escapes multimedia filters.

1-6. LOCATION AND DESCRIPTION OF MAJOR COMPONENTS (CONT)

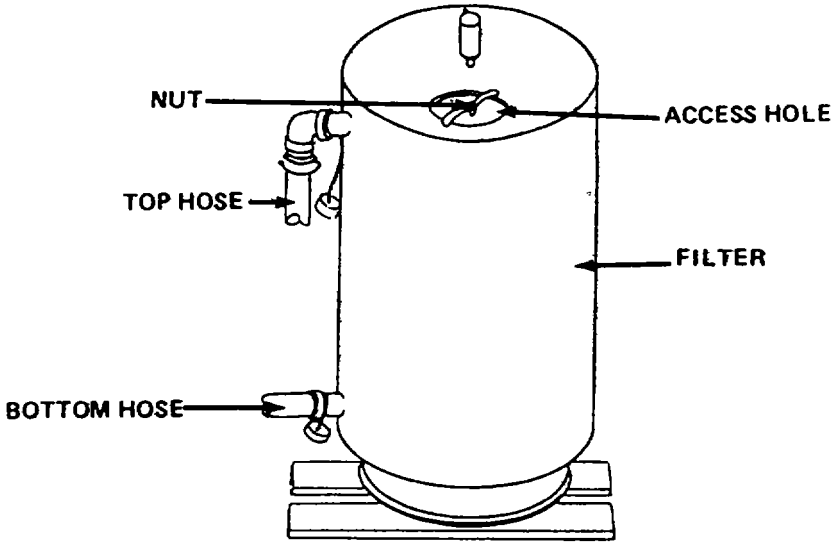

Multimedia Filter (3) and Hoses

TOP HOSES. Three collapsible, canvas (15 ft x 3 in.) hoses with threaded fittings. Each hose carries water from pretreatment assembly to one multimedia filter during normal operation.

MUILTIMEDIA FILTERS. Filters water and passes it back to pretreatment assembly. Filters are filled with granulated substances.

BOTTOM HOSES. Three collapsible, canvas (12 ft x 3 in.) hoses with threaded fittings. Each hose carries water from one multimedia filter to pretreatment assembly during normal operation.

VENT VALVE. Vents air from multimedia filter system.

ACCESS ROLE. Allows access for replacement of multimedia.

1-6. LOCATION AND DESCRIPTION OF MAJOR COMPONRTNS (CONT)

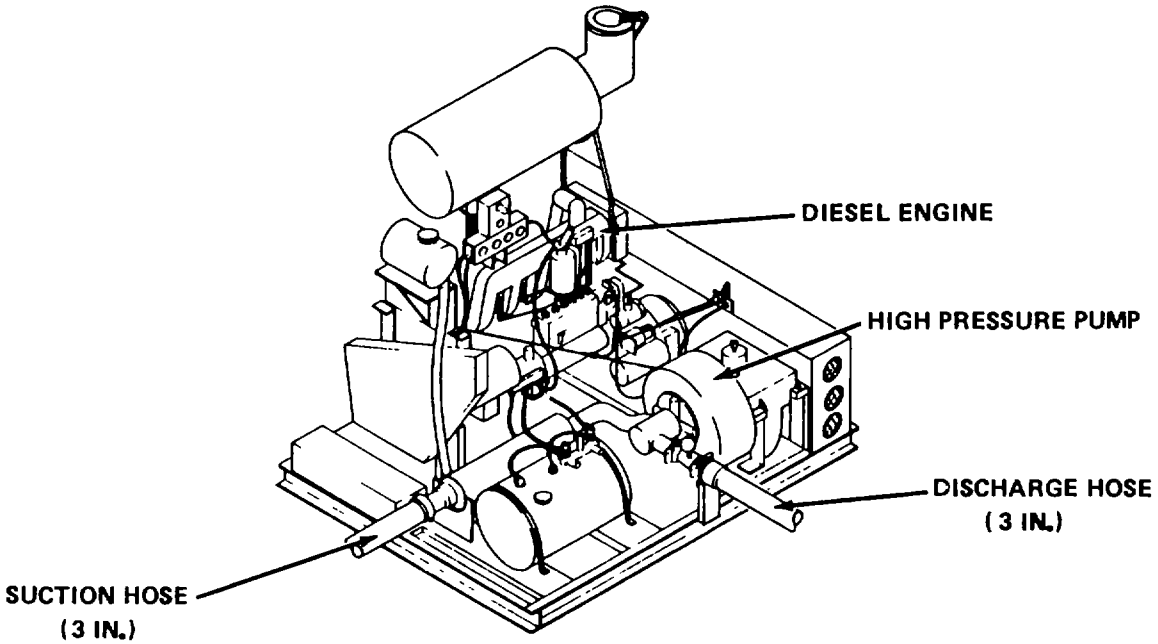

High Pressure Pump Assembly and Hoses

SUCTION HOSE. Collapsible, canvas (19 ft x 3 in.) hose with threaded fittings. Carries water from pretreatment assembly to high pressure pump assembly.

HIGH PRESSURE PUMP. Pumps water from pretreatment assembly to reverse osmosis assembly. Boosts water pressure to high level required for reverse osmosis.

HIGH PRESSURE PUMP DIESEL ENGINE. Six-cylinder diesel engine which drives high pressure pump through a matched set of 12 V-belts.

DISCHARGE HOSE. Rigid-walled, black rubber (12 ft x 3 in.) hose with grooved pipe coupling fittings. Carries water from high pressure pump assembly to reverse osmosis block assembly.

1-6. LOCATION AND DESCRIPTION OF MAJOR COMPONENTS (CONT)

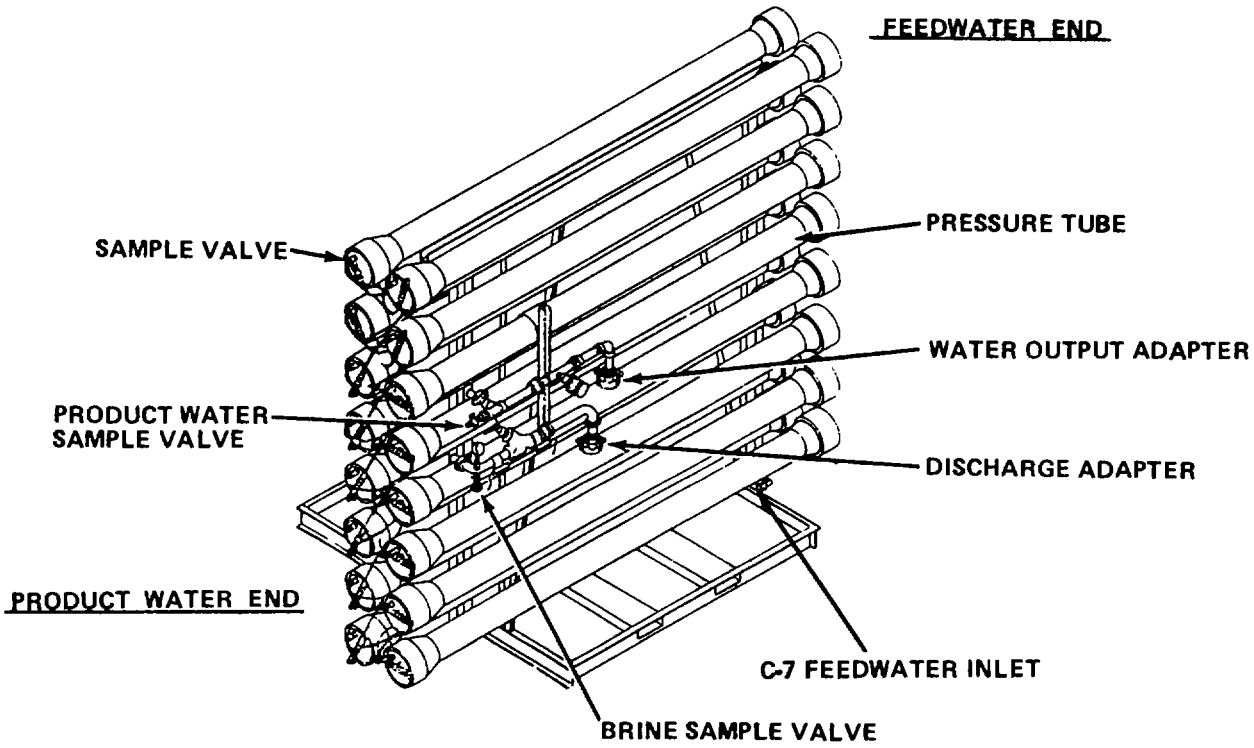

Reverse Osmosis Block Assembly

PRESSURE TUBES. Sixteen tubes. Each tube contains five reverse osmosis membrane elements. Filter water from high pressure pump through reverse osmosis process.

SAMPLE VALVES. Sixteen valves, one for each pressure tube. Used for checking water quality at each tube.

BRINE SAMPLE VALVE. Used to check brine concentrate.

PRODUCT WATER SAMPLE VALVE. Used to check total product water quality.

FEEDWATER INLET (C-7). Enables coupling of elbow and high pressure hose.

DISCHARGE ADAPTER. Four in. adapter for discharge of brine waste from reverse osmosis block assembly.

WATER OUTPUT ADAPTER. Four in. adapter for drinking water output.

1-7. EQUIPMENT DATA

WEIGHTS AND DIMENSIONS

Raw Water Pump Assembly

Dimensions:	49 x 33 x 29 in. (124 x 84 x 72 cm)
Weight:	687 lb (312 kg) dry
Fuel Tank Capacity:	2 gal. (8 L)
Oil Capacity:	2.3 qt (2.2 L)

Boost Pump Assembly

Dimensions:	69 x 40 x 37 in. (175 x 102 x 94 cm)
Weight:	1500 lb (681 kg) dry
Fuel Tank Capacity:	15 gal. (57 L)
Oil Capacity:	8.1 qt (7.7 L)

Pretreatment Assembly

Dimensions:	111 x 38 x 71 in. (282 x 97 x 180 cm)
Weight:	1518 lb (689 kg) dry

Multimedia Filter

Dimensions:	56 x 48 x 82 in. (142 x 122 x 208 cm)
Weight:	5052 lb (2294 kg) dry

High Pressure Pump Assembly

Dimensions:	101 x 75 x 82 in. (257 x 191 x 208 cm)
Weight:	5760 lb (2615 kg) dry
Fuel Tank Capacity:	25 gal. (94.6 L)
Coolant Capacity:	9 gal. (34 L)
Oil Capacity:	9 gal. (34 L)

Reverse Osmosis Block Assembly

Dimensions:	53 x 229 x 92 in. (135 x 582 x 208 cm)
Weight:	4000 lb (1814 kg) dry

PERFORMANCE

Raw Water Pump

Part Number:	2914250-1
Type:	Centrifugal, direct coupled to diesel engine
Output Rating:	350 gpm (1325 L/min) at 30 psi (207 kPa)
Power Rating:	9 bhp/2200 rpm

1-7. EQUIPMENT DATA (CONT)

Raw Water Pump Diesel Engine

Part Number:	291452-1
Type:	4-stroke, 1-cylinder diesel
Bore:	3.35 in. (8.51 cm)
Stroke:	3.62 in. (8.99 cm)
Displacement:	31.9 cu in. (522.8 cc)
Power Rating:	7.3 hp at 2000 rpm (intermittent) 6.7 hp at 2000 rpm (continuous)

Boost Pump

Part Number:	2914555-1
Type:	Centrifugal, coupled to diesel engine with a belt-driven speed increaser
Output Rating:	350 gpm (1325 L/min) at 115 psi (793 kPa)
Power Rating:	22.3 bhp/3550 rpm

Boost Pump Diesel Engine

Part Number:	2914552-1
Type:	4-stroke, 3-cylinder diesel
Bore:	3.94 in. (10.01 cm)
Stroke:	4.72 in. (11.99 cm)
Displacement:	115 cu in. (1885 cc)
Power Rating:	48 hp at 3000 rpm (continuous)

Chemical Metering Pumps

Part Number:	52054-1
Type:	Piston-diaphragm
Output Rating:	0.7 gph (2.7 L/hr) at 145 psi (1000 kPa)
Power Requirements:	117 vac, 1-phase, 60 Hz
Weight:	13.9 lb (6.3 kg)

High Pressure Pump

Part Number:	2914352-1
Type:	Roto-Jet, V-belt driven
Output Rating:	350 gpm (1325 L/min) at 805 psi (5550 kPa)
HP/RPM:	260 bhp/4380 rpm

1-7. EQUIPMENT DATA (CONT)

High Pressure Pump Diesel Engine

Part Number:	2914356-1
Type:	4-stroke, 6-cylinder diesel
Bore:	5.4 in. (11.9 cm)
Stroke:	6.5 in. (14.3 cm)
Displacement:	893 cu in. (14,634 cc)
Power Rating:	325 hp/2100 rpm (intermittent)
	250 hp/1800 rpm (continuous)

Section III. TECHNICAL PRINCIPLES OF OPERATION

1-8. GENERAL. The ROWPU consists of a series of diesel-engine-driven pumps, filters, and a reverse osmosis block assembly capable of converting 150,000 gpd of brackish or sea water to drinking water. The following paragraphs describe the operation of the individual functional groups which comprise the ROWPU and their relation to the overall system.

1-9. FUNCTIONAL GROUPS

a. Raw Water Pump Assembly Consists of a skid-mounted diesel engine/ centrifugal pump combination. The engine may be started by a hand-crank or with an electric starter. The pump takes water from a remote location up to 95 ft away and pumps it to the boost pump assembly up to 500 ft away.

b. Boost Pump Assembly. Consists of a skid-mounted diesel engine/ centrifugal pump combination. The engine is started with an electric starter and drives the pump through a belt. This pump provides the pressure to maintain feedwater flow to the pretreatment assembly, through the multimedia filters, back through the pretreatment assembly, and to the high pressure pump assembly.

c. Pretreatment Assembly. Consists of skid-mounted gage panel, two chemical metering pumps, interconnecting piping, valves, and cartridge filter. A manually adjustable chemical metering pump doses the feedwater with a coagulant aid as it enters the pretreatment assembly. This coagulant aid helps the multimedia filters to remove fine particles. The feedwater then goes to the multimedia filters where particles are removed. It returns to the pretreatment assembly where it is dosed with a scale inhibitor by a second manually adjustable chemical metering pump. The scale inhibitor prevents the formation of scales on the reverse osmosis membranes. The feedwater continues to the cartridge filter where any remaining fine particles are removed.

1-9. FUNCTIONAL GROUPS (CONT)

d. Multimedia Filters. Three identical skid-mounted filters with lifting eyes. Water is received from the pretreatment assembly at the top of the filter, flows downward through the multimedia, and returns from the bottom of the filter to the pretreatment assembly. Multimedia filters need backwashing when MEDIA FILTER OK light on pretreatment assembly control panel goes out.

e. High Pressure Pump Assembly. Consists of a skid-mounted diesel engine/jet pump combination. The pump is driven by the diesel engine through a series of matched V-belts. The feedwater from the pretreatment assembly is raised to the high pressure needed to perform the reverse osmosis process.

f. Reverse Osmosis (RO) Block Assembly. Consists of 16 skid-mounted RO tube assemblies, each of which holds 5 RO membrane elements. Water coming from the high pressure pump enters the tubes, where the membrane elements separate it into drinking water and brine concentrate.

CHAPTER 2

OPERATING INSTRUCTIONS

Section I. DESCRIPTION AND USE OF OPERATOR'S CONTROLS AND INDICATORS

2-1. OPERATOR'S CONTROLS AND INDICATORS

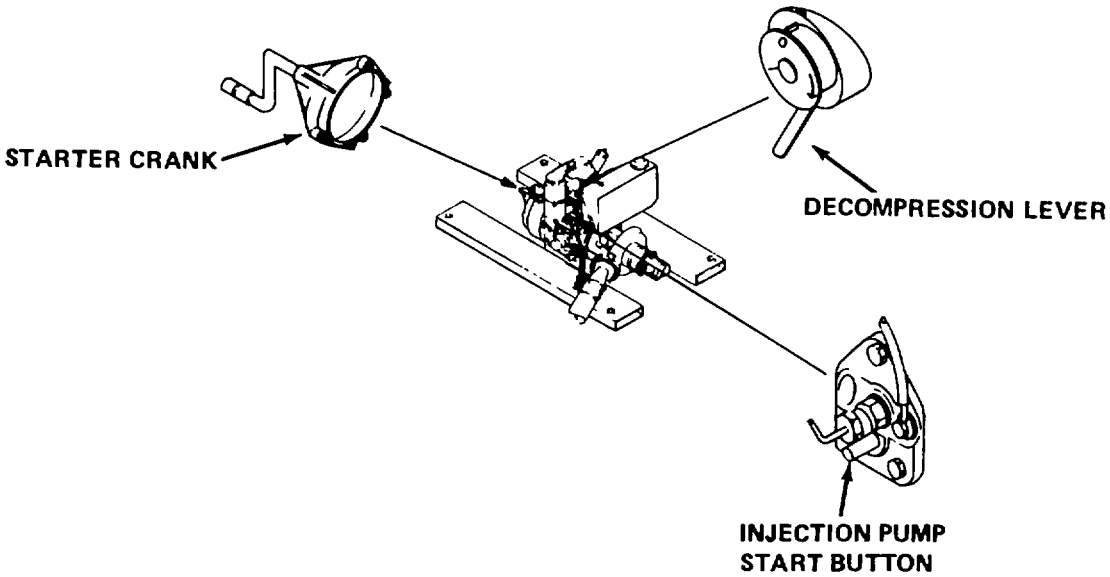

RAW WATER PUMP ASSEMBLY

Control or Indicator	Function
Starter Crank	Turn right to hand-start engine.
Decompression Lever	Used in engine starting and fuel venting. Marked settings are 0 and 1. Turns in a clockwise direction.
Injection Pump Start Button	Press to start fuel flow.

2-1. OPERATOR'S CONTROLS AND INDICATORS (CONT)

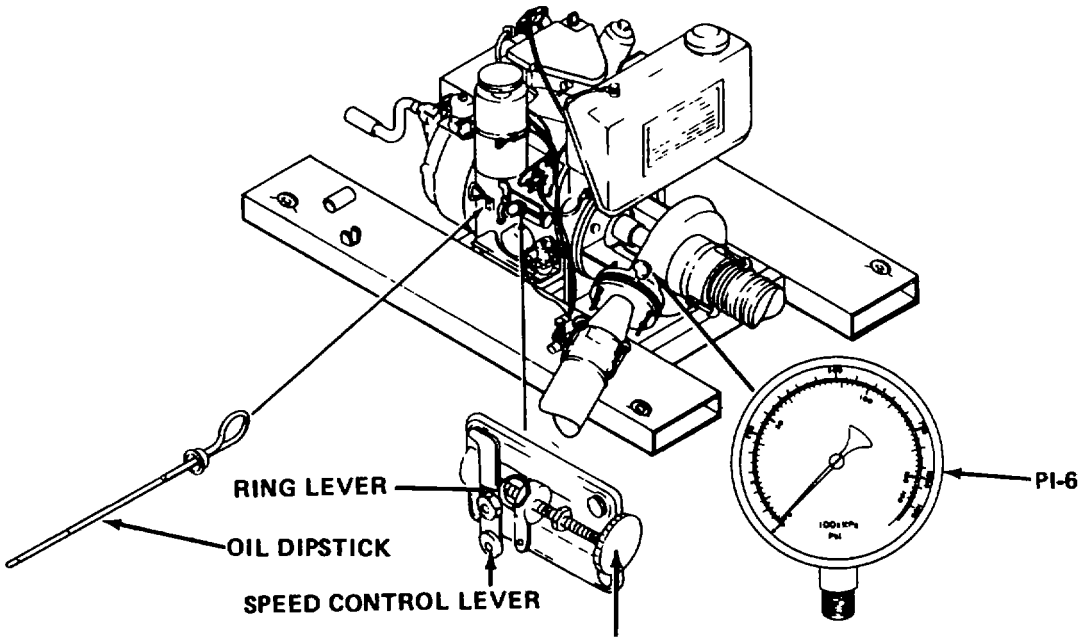

RAW WATER PUMP ASSEMBLY (CONT) SPEED CONTROL SCREW

Control or Indicator	Function
Oil Dipstick	Used to check oil level. Marked levels are MIN and MAX.
Pressure Indicator Gage: PI-6	Gage measures output water pressure from raw water pump. Range is 0 to 160 psi (0 to 1103 kPa).
Speed Control Lever	Self-locking lever controls engine speed. Lever in down position increases engine speed. Lever in up position decreases engine speed. Lever in fully upright position shuts engine down.
Speed Control Screw	Used to set engine speed. Turning screw to right increases engine speed. Turning screw to left decreases engine speed.
Ring Lever	Used for emergency shutdown. Pull out to stop engine.

2-1. OPERATOR'S CONTROLS AND INDICATORS (CONT)

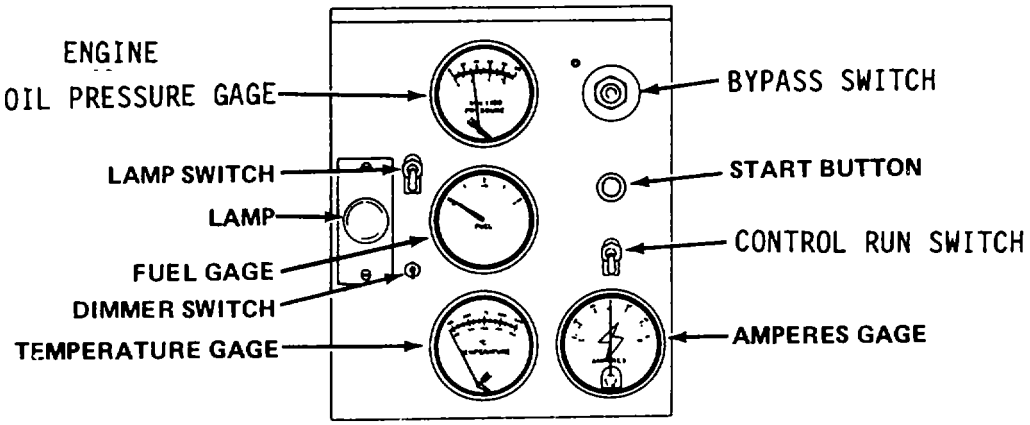

RAW WATER PUMP ASSEMBLY (CONT)

Control or Indicator	Function
Engine Oil PRESSURE Gage	Displays engine oil pressure. Range is 0 to 100 psi and 0 to 6 kPa x 100.
Bypass Switch	Pushbutton. Press and hold down during start.
Start Button	Pushbutton. Press to engage start mechanism.
Control Run Switch	Toggle switch. Push up before engaging start mechanism on engine. Push down to stop engine.
AMPERES Gage	Displays charge to and discharge from battery. Range is -60 to +60 amperes.
TEMPERATURE Gage	Displays engine temperature. Range is 160°to 325°F and 70° to 160°C.
Dimmer Switch	Used to control brightness of lamp. Turn right to brighten. Turn left to dim.
FUEL Gage	Displays fuel level. Range is E to F.
Lamp	Illuminates gages.
Lamp Switch	Toggle switch. Used to turn lamp on and off. Flip up for on. Flip down for off.

2-1. OPERATOR'S CONTROLS AND INDICATORS (CONT)

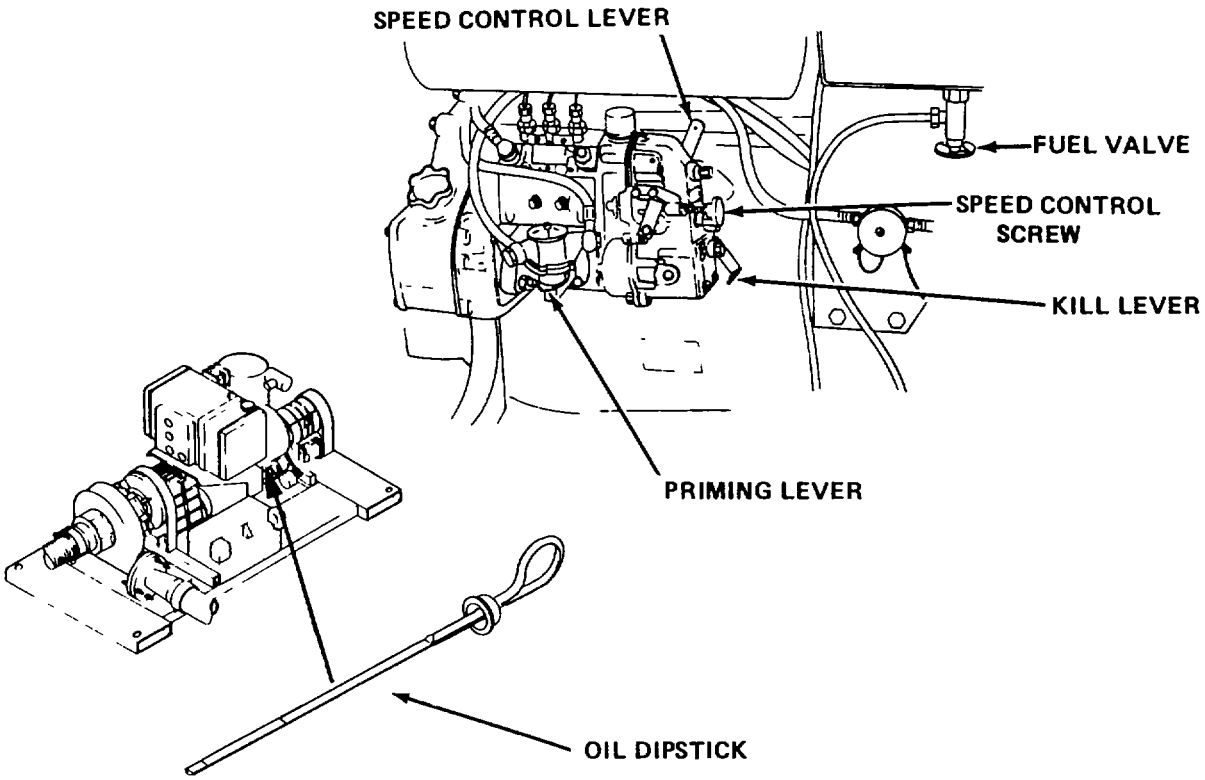

BOOST PUMP ASSEMBLY

Control or Indicator	Function
Speed Control Lever	Push up to increase engine speed. Pull down to decrease engine speed.
Speed Control Screw	Used to set (fine tune) fixed engine speed.. Turning screw to right increases engine speed. Turning screw to left decreases engine speed.
Fuel Valve	Controls fuel flow from fuel tank. Turn left to open. Turn right to close.
Kill Lever	Used for emergency shutdown. Push down to stop engine.
Priming Lever	Used to pump air from system.
Oil Dipstick	Used to check oil level. Marked ranges are MIN and MAX.

2-1. OPERATOR'S CONTROLS AND INDICATORS (CONT)

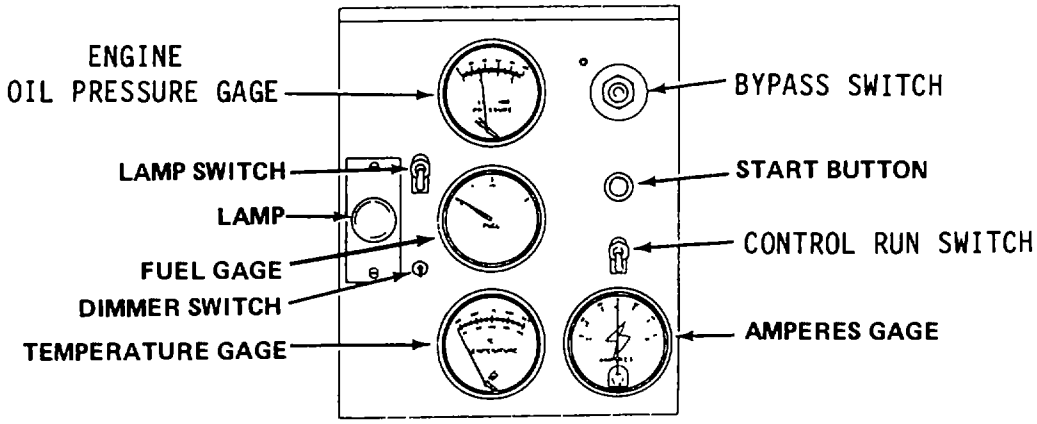

BOOST PUMP ASSEMBLY (CONT)

Control or Indicator	Function
Engine Oil PRESSURE Gage	Displays engine oil pressure. Range is 0 to 100 psi and 0 to 6 kPa x 100.
Bypass Switch	Pushbutton. Press and hold down during start.
Start Button	Pushbutton. Press to engage start mechanism.
Control Run Switch	Toggle switch. Push up before engaging start mechanism on engine. Push down to stop engine.
AMPERES Gage	Displays charge to and discharge from battery. Range is -60 to +60 amperes.
TEMPERATURE Gage	Displays engine temperature. Range is 160° to 325°F and 70° to 160°C.
Dimmer Switch	Used to control brightness of lamp. Turn right to brighten. Turn left to dim.
FUEL Gage	Displays fuel level. Range is E to F.
Lamp	Illuminates gages.
Lamp Switch	Toggle switch. Used to turn lamp on and off. Flip up for on. Flip down for off.

2-1. OPERATOR'S CONTROLS AND INDICATORS (CONT)

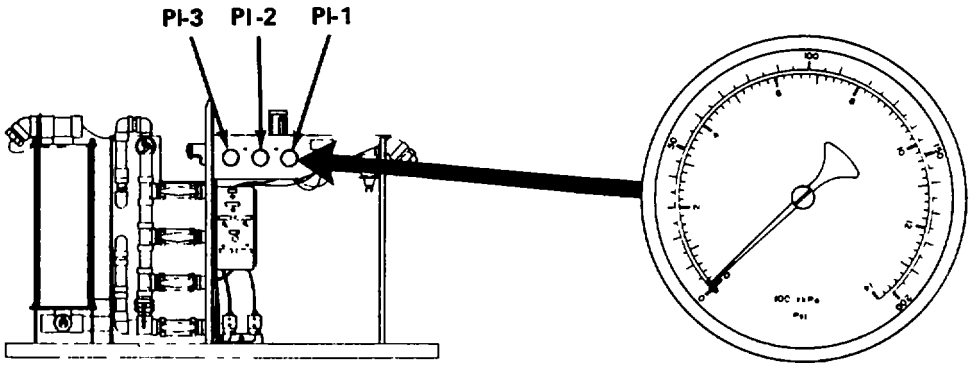

PRETREATMENT ASSEMBLY

Control or Indicator	Function
Pressure Indicator Gages: PI-1, PI-2, and PI-3	Gages PI-1, PI-2, and PI-3 look the same. They measure 0 to 200 psi and 0 to 14 kPa x 100. PI-1: Displays pressure of water coming from boost pump. PI-2: Displays pressure of discharge water from multimedia filters. PI-3: Displays pressure of discharge water from cartridge filter.

2-1. OPERATOR'S CONTROLS AND INDICATORS (CONT)

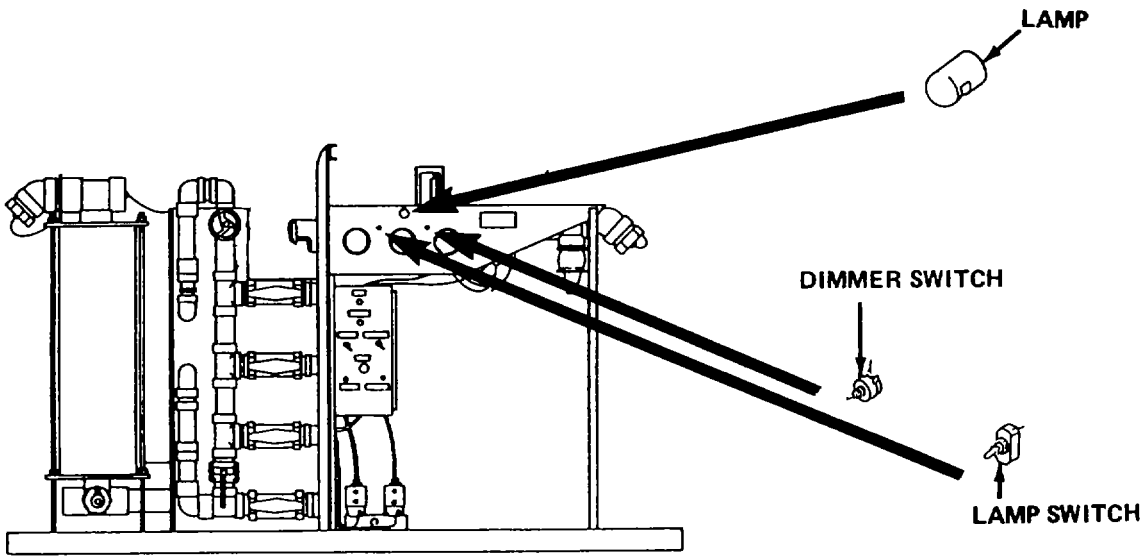

PRETREATMENT ASSEMBLY (CONT)

Control or Indicator	Function
Lamp	Illuminates gages.
Lamp Switch	Toggle switch. Used to turn lamp on and off. Flip up for on. Flip down for off.
Dimmer Switch	Used to control brightness of lamp. Turn right to brighten. Turn left to dim.

2-1. OPERATOR'S CONTROLS AND INDICATORS (CONT)

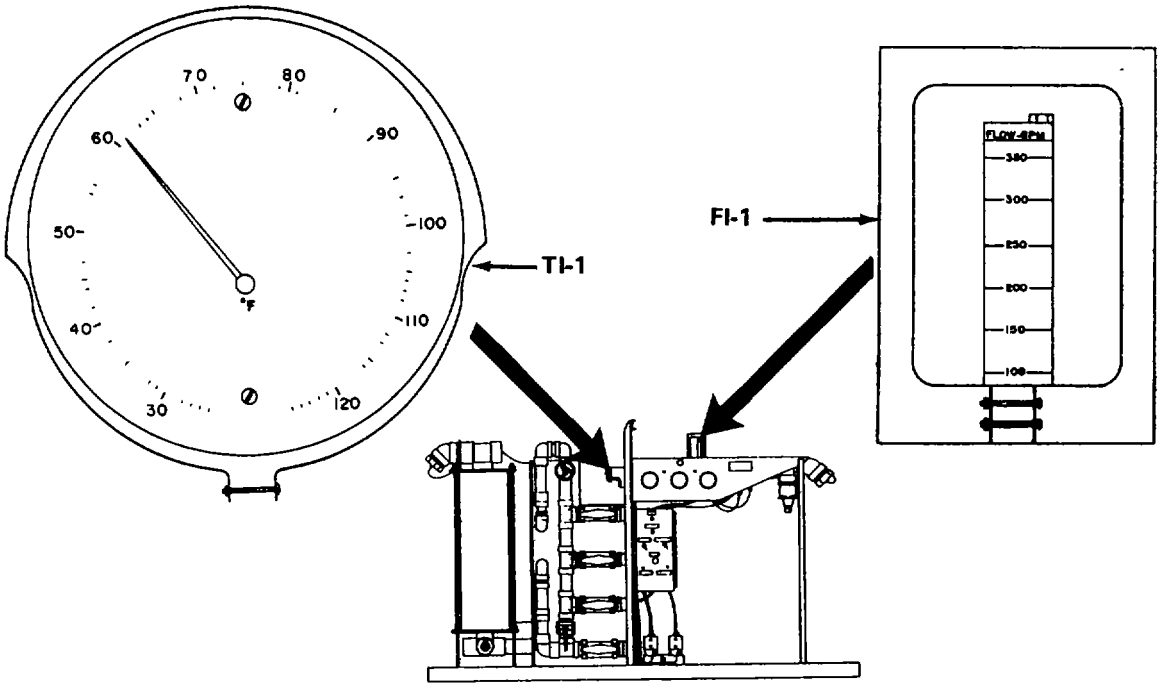

PRETREATMENT ASSEMBLY (CONT)

Control or Indicator	Function
Temperature Indicator: TI-1	Gage displays temperature of water from boost pump. Range is 30° to 120°F.
Flowmeter: FI-1	Flowmeter displays amount of water flow from boost pump. Displays amount of backwash flow during backwash operation. Range is 100 to 350 gpm.

2-1. OPERATOR'S CONTROLS AND INDICATORS (CONT)

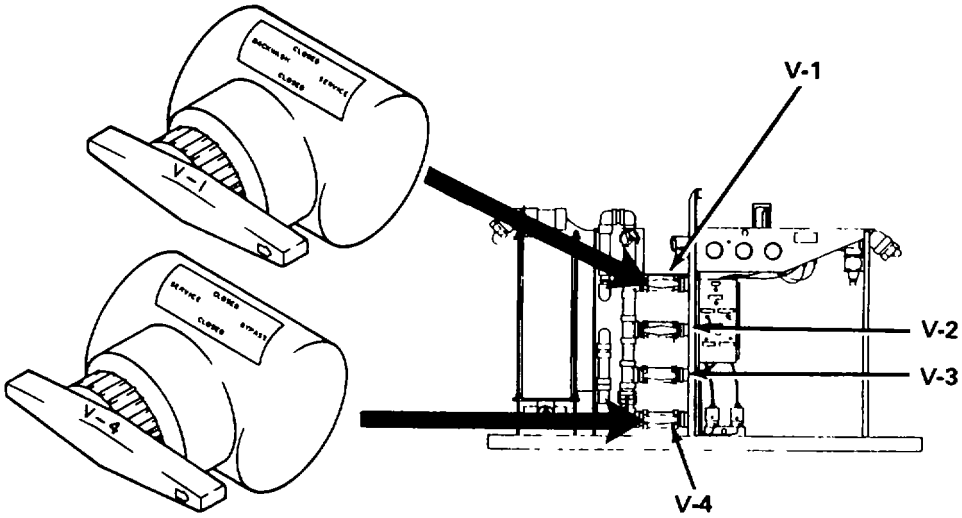

PRETREATMENT ASSEMBLY (CONT)

Control or Indicator	Function
Valves: V-2, and V-3	V-1, Valves V-1, V-2, and V-3 look the same. Each valve controls flow to and from one multimedia filter. Their settings are as follows: SERVICE: Directs water to multimedia filter. CLOSED: Cuts off water flow. BACKWASH: Directs water to waste during-backwash operations.
Valve: V-4	Same as V-1 through V-3 except for settings. Its settings are as follows: SERVICE: Directs water to cartridge filter. CLOSED: Cuts off water flow. BYPASS: Bypasses multimedia filters during reverse osmosis membrane cleaning procedure.

2-1. OPERATOR'S CONTROLS AND INDICATORS (CONT)

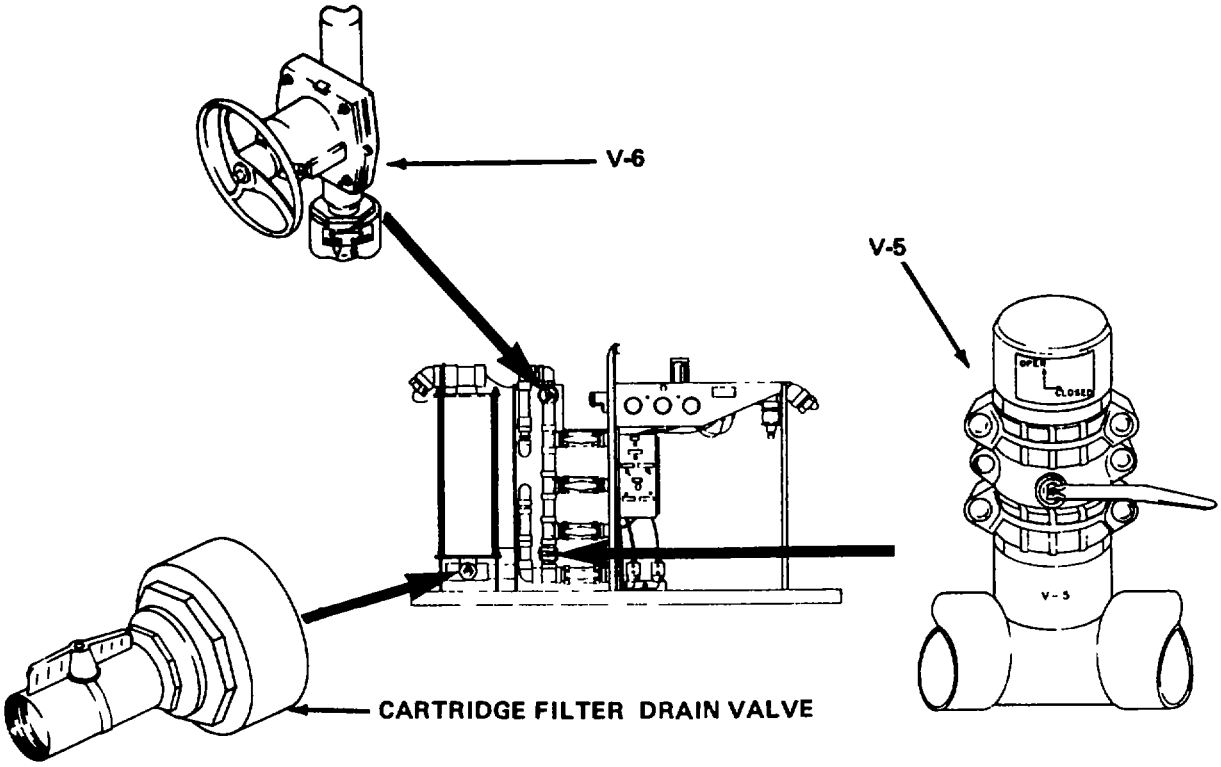

PRETREATMENT ASSEMBLY (CONT)

Control or Indicator	Function
Valve: V-6	Valve controls backwash flow rate. Turn left to increase flow. Valve has two settings: OPEN and CLOSED. Push lever down to OPEN. Opens to divert water flow from multimedia filters to waste during flushing mode.
Valve: V-5	Valve has two settings: OPEN and CLOSED. Push lever down to OPEN. Opens to divert water flow from multimedia filters to waste during flushing mode.
Cartridge Filter Drain Valve	Drains cartridge filter before changing filter elements. Turn left to open.

2-1. OPERATOR'S OONTROLS AND INDICATORS (CONT)

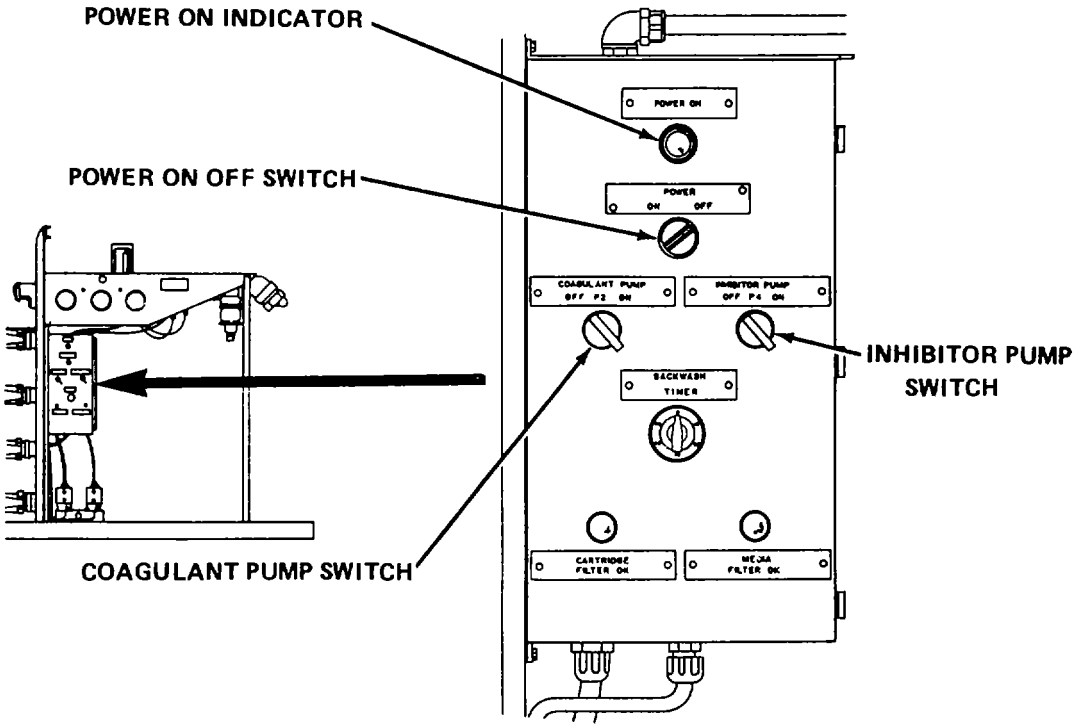

PRETREATMENT ASSEMBLY (CONT)

Control or Indicator	Function
POWER ON Indicator (Red)	When lit, shows that power is ON to controls and indicators.
POWER ON OFF Switch	Rotary switch turns power to controls and indicators OFF and ON.
INHIBITOR PUMP Switch	Rotary switch turns power to INHIBITOR PUMP (P4) OFF and ON.
COAGULANT PUMP Switch	Rotary switch turns power to COAGULANT PUMP (P2) OFF and ON.

2-1. OPERATOR'S CONTROLS AND INDICATORS (CONT)

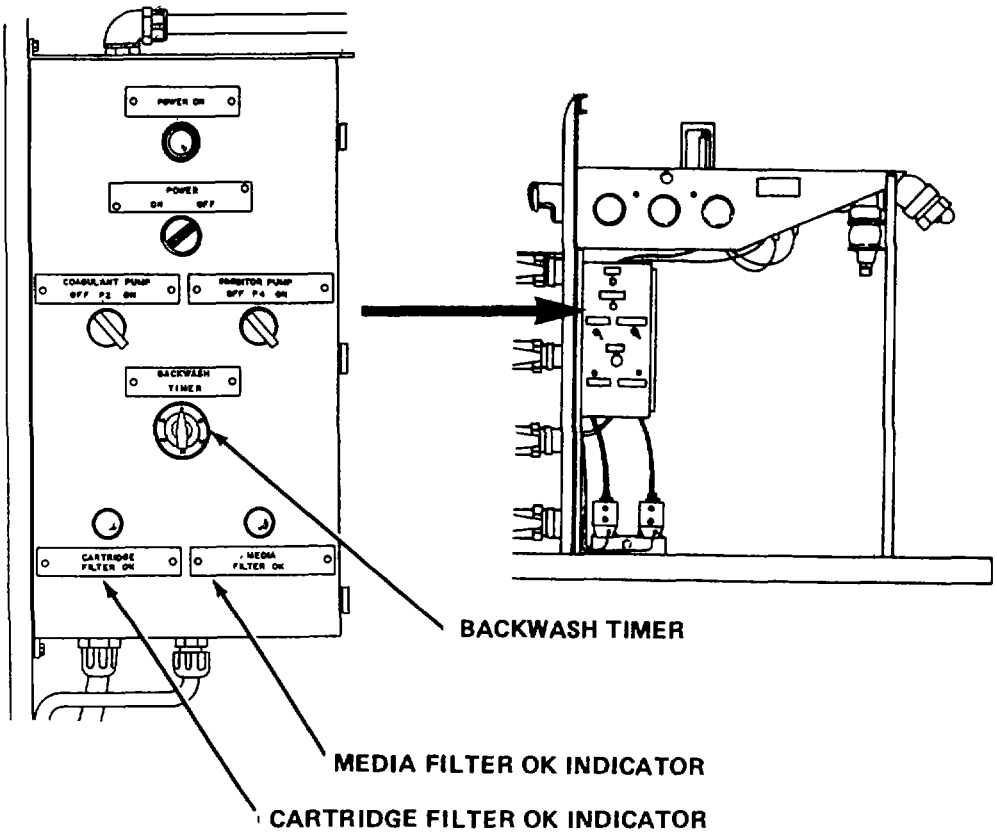

PRETREATMENT ASSEMBLY (CONT)

Control or Indicator	Function
BACKWASH TIMER	Rotary dial times backwash or flushing period. Can be set to any time between 1 and 60 minutes. Bell sounds when time is up.
MEDIA FILTER OK Indicator (Green)	When lit, shows that water pressure from media filters is high enough. When not lit, shows that filters need backwashing.
CARTRIDGE FILTER OK Indicator (Green)	When lit, shows that water pressure from cartridge filter is high enough. When not lit, shows that filter elements need to be changed.

2-1. OPERATOR'S CONTROLS AND INDICATORS (CONT)

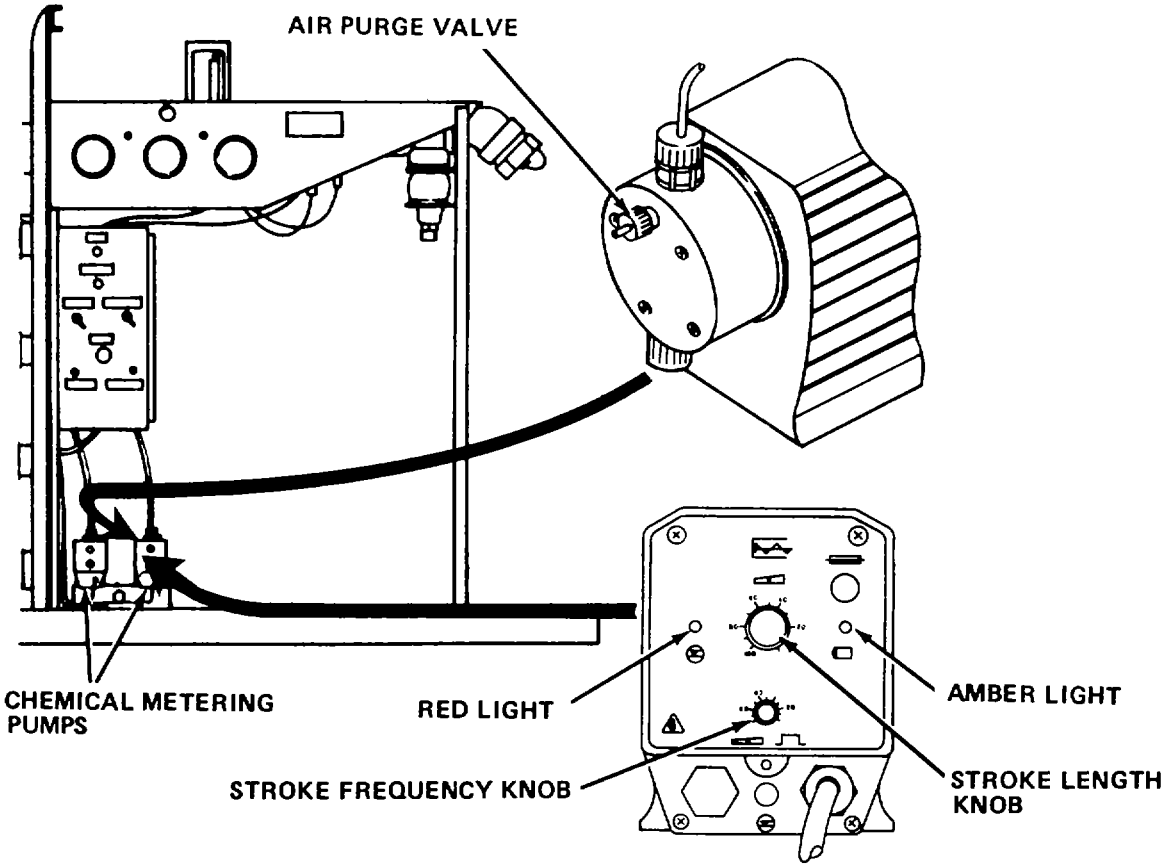

PRETREATMENT ASSEMBLY (CONT)

Control or Indicator	Function
Air Purge Valve	Releases air from fluid during pump priming.
Stroke Length Knob	Controls stroke length.
Amber Light	Pulsating light. Goes on and off with each pump stroke.
Stroke Frequency Knob	Controls stroke frequency.
Red Light	When lit, shows that chemical barrel is empty.

2-1. OPERATOR'S CONTROLS AND INDICATORS (CONT)

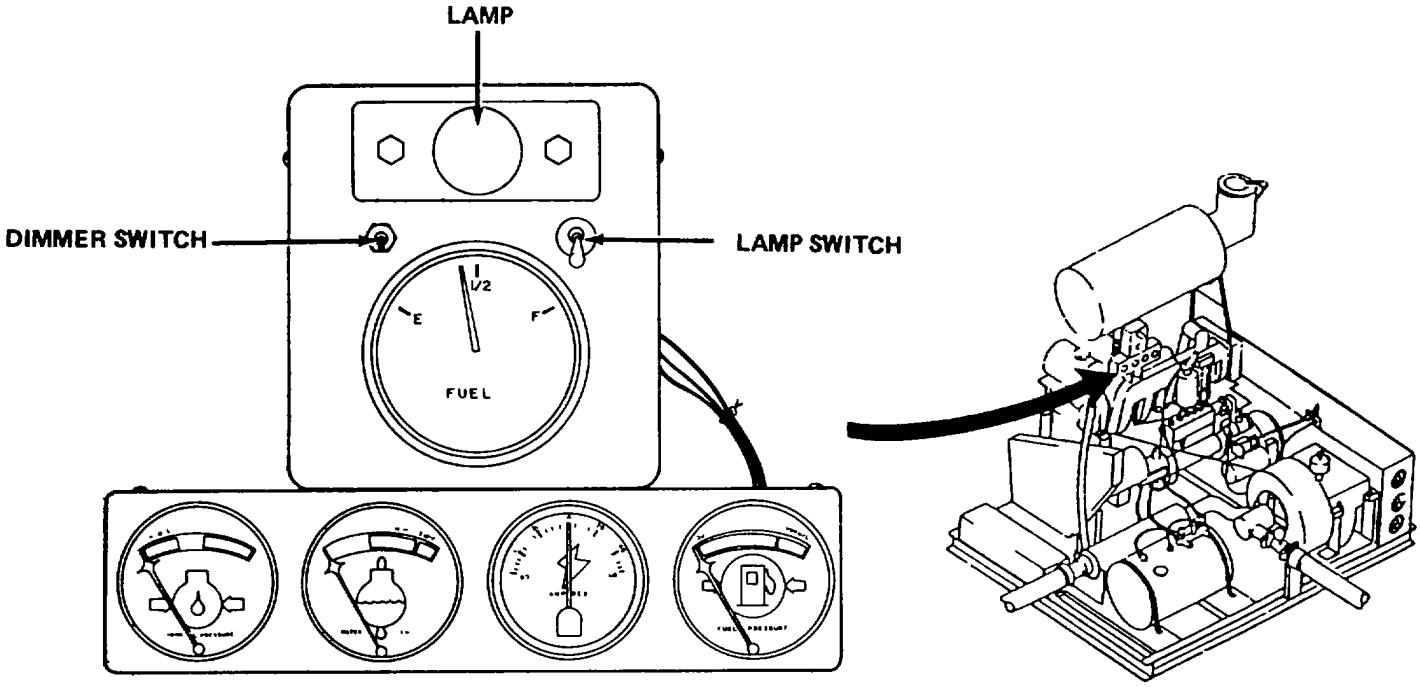

HIGH PRESSURE PUMP ASSEMBLY

Control or Indicator	Function
Lamp	Illuminates gages.
Lamp Switch	Toggle switch. Used to turn lamp on and off. Flip up for on. Flip down for off.
Dimmer Switch	Used to control brightness of lamp. Turn right to brighten. Turn left to dim.

2-1. OPERATOR'S CONTROLS AND INDICATORS (CONT)

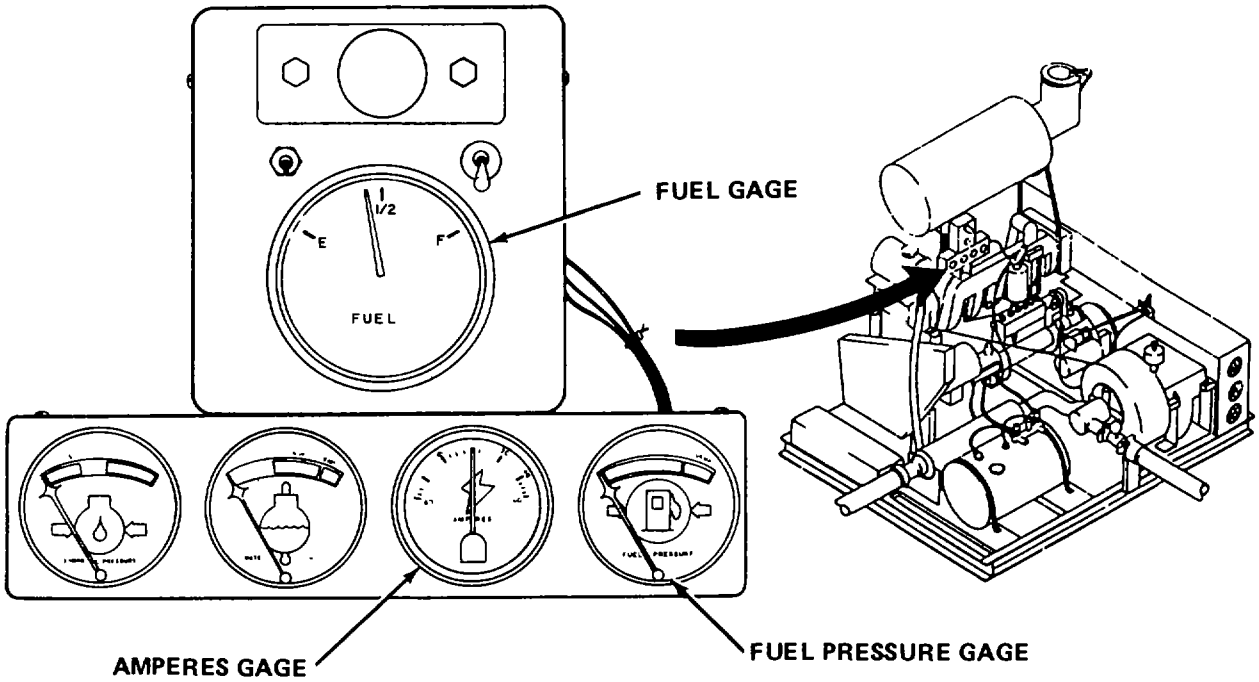

HIGH PRESSURE PUMP ASSEMBLY (CONT)

Control or Indicator	Function
FUEL Gage	Displays engine fuel level. Marked indications are E, 1/2, and F.
FUEL PRESSURE Gage	Displays engine fuel pressure. Marked indications are OUT (red) and NORMAL (green). OUT indication means that primary fuel filter needs cleaning and secondary fuel filter needs to be changed.
AMPERES Gage	Displays charge to and discharge from batteries. Range is -60 to +60 amperes.

2-1. OPERATOR'S CONTROLS AND INDICATORS (CONT)

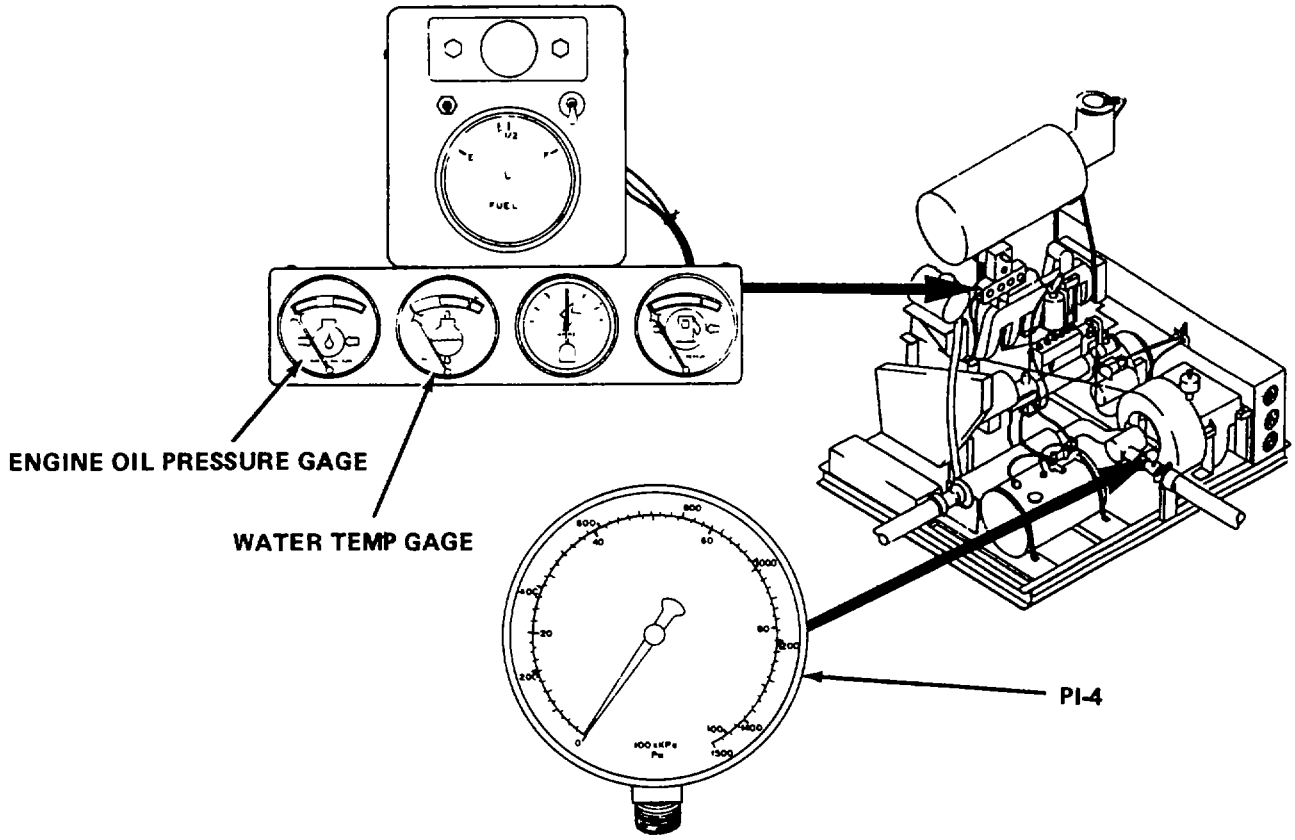

HIGH PRESSURE PUMP ASSEMBLY (CONT)

Control or Indicator	Function
ENGINE OIL PRESSURE Gage	Displays engine oil pressure. Marked indications are LOW (red), IDLE (white), and NORMAL (green). No pressure indicates that engine should be shut down immediately.
WATER TEMP Gage	Displays engine water temperature. Marked indications are COLD (white), NORMAL (green), and 210°F (red).
Pressure Gage: PI-4	Gage displays pressure of water going from high pressure pump to reverse osmosis block assembly. Measures 0 to 1500 psi and 0 to 100 kPa x 100.

2-1. OPERATOR'S CONTROLS AND INDICATORS (CONT)

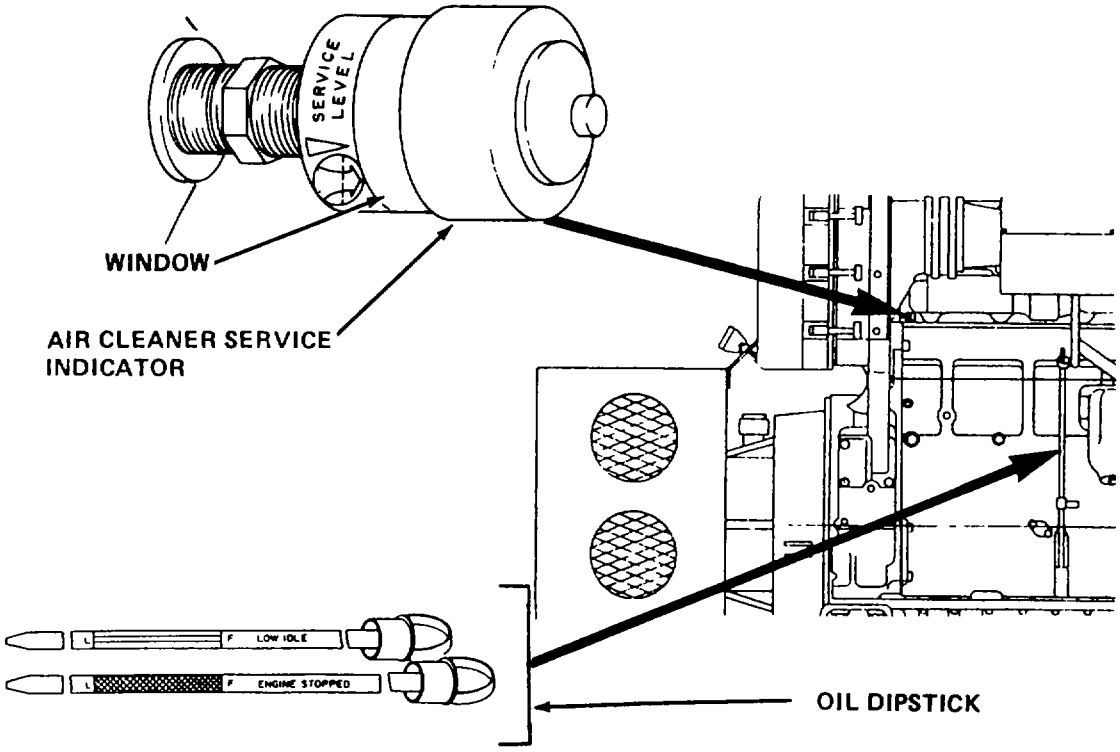

HIGH PRESSURE PUMP ASSEMBLY (CONT)

Control or Indicator	Function
Air Cleaner Service Indicator	Red piston appears in window when air cleaner needs servicing.
Oil Dipstick	Two-sided level indicator. Has LOW IDLE and ENGINE STOPPED sides. Each side has marked levels L and F.

2-1. OPERATOR'S CONTROLS AND IIDICATORS (CONT)

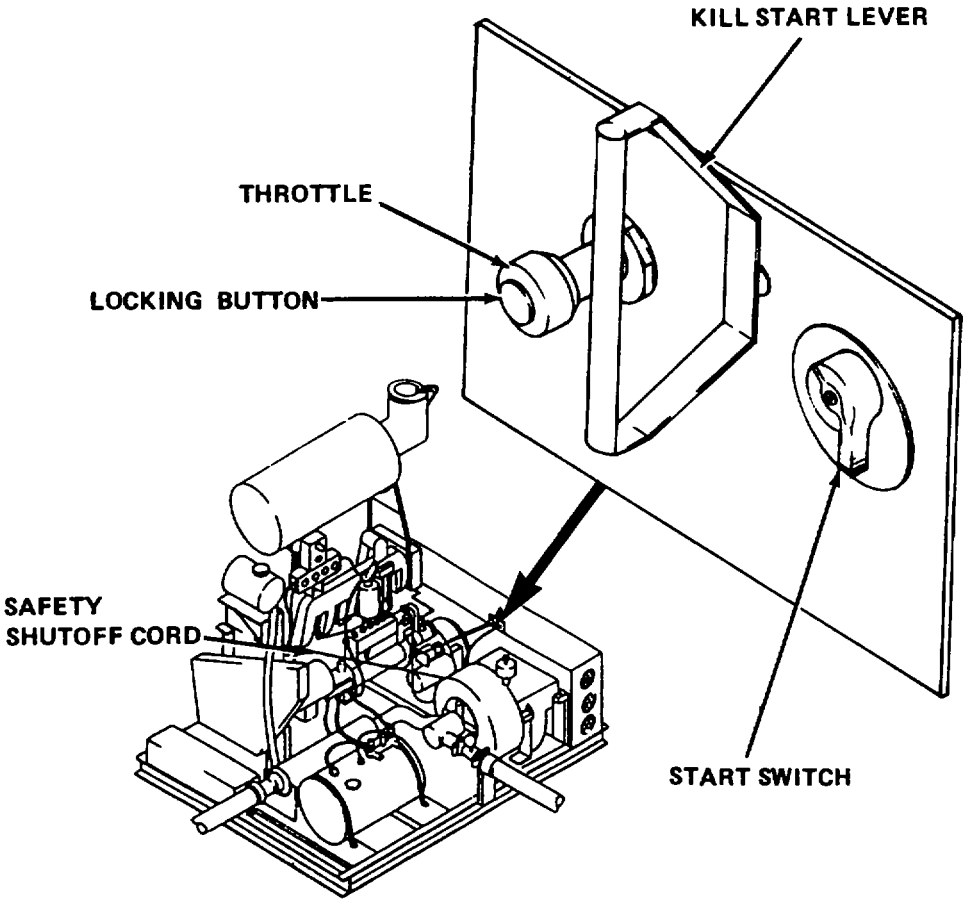

HIGH PRESSURE PUMP ASSEMBLY (CONT)

Control or Indicator	Function
Throttle	Pull out to increase engine speed. Push in to decrease engine speed. Press locking button down to move throttle. Let bottom up to set fixed engine speed.
KILL START Lever	Pull out (START) when starting engine. Push in (KILL) to shut down engine.
Start Switch	Push in and turn right to start engine.
Safety Shutoff Cord	Pull cord to shut down engine in emergency situation.

2-1. OPERATOR'S CONTROLS AND INDICATORS (CONT)

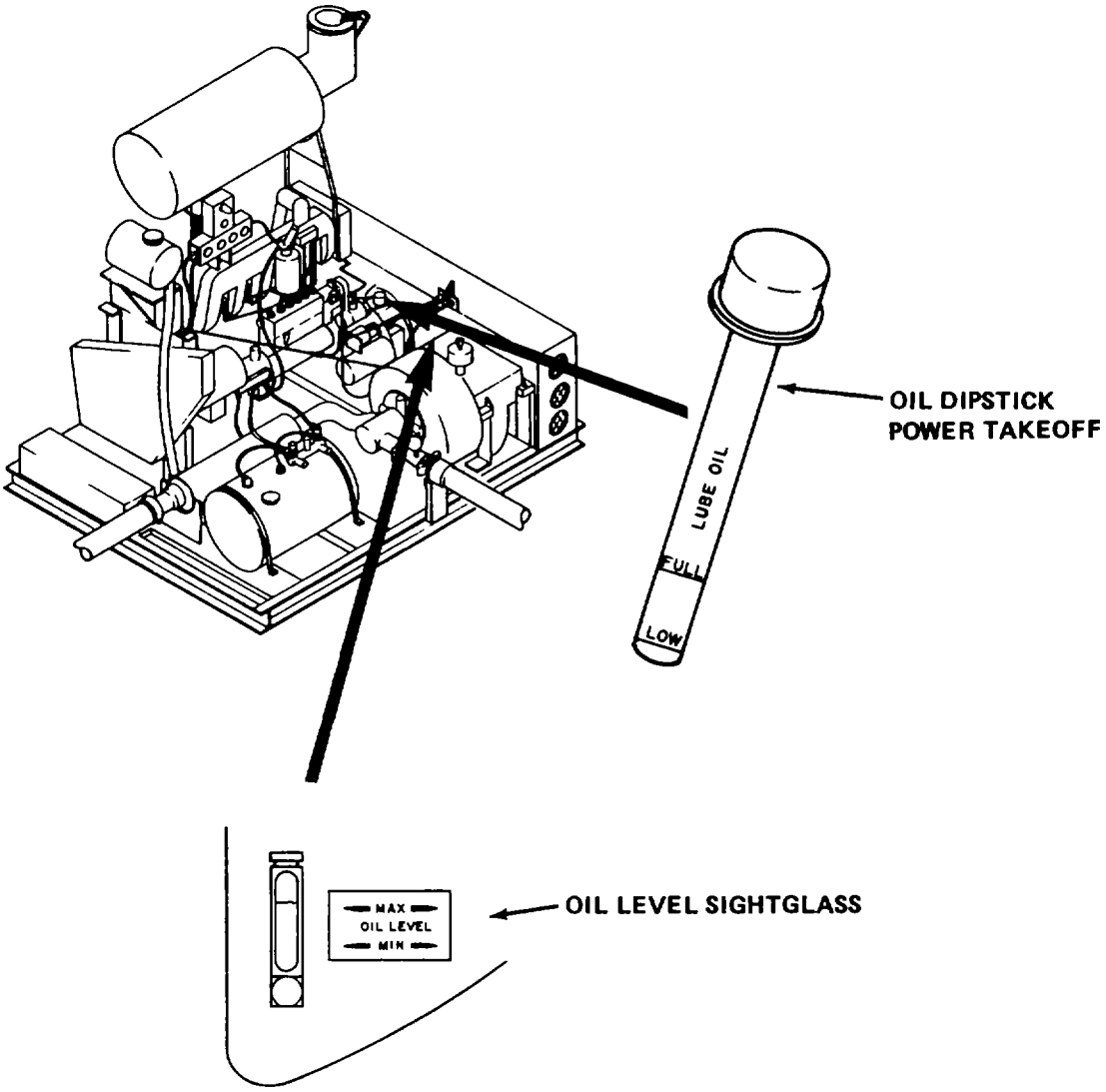

HIGH PRESSURE PUMP ASSEMBLY (CONT)

Control or Indicator	Function
Oil Dipstick, Power Takeoff	Used to check power takeoff oil level. Marked levels are LOW and FULL.
Oil Level Sightglass	Used to check oil level. Oil must be visible between MIN and MAX levels in sightglass.

2-1. OPERATOR'S CONTROLS AND INDICATORS (CONT)

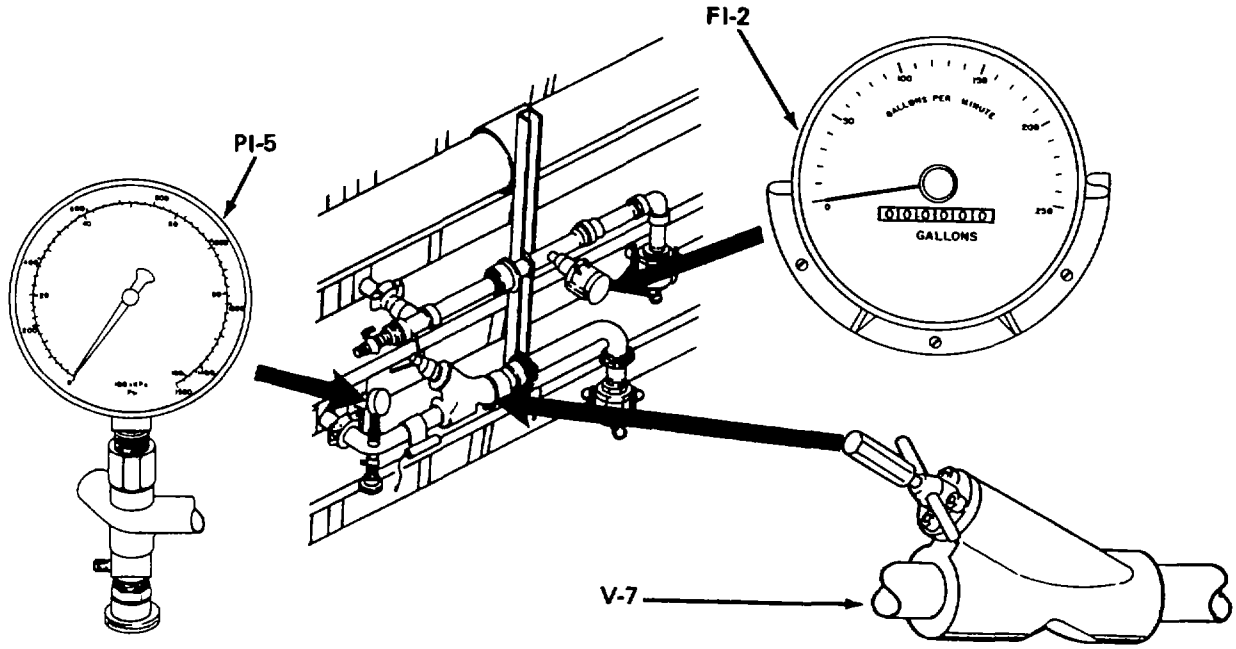

REVERSE OSMOSIS BLOCK ASSEMBLY

Control or Indicator	Function
Pressure Gage: PI-5	Gage displays pressure of brine concentrate from reverse osmosis block assembly. Measures 0 to 1500 psi and 0 to 100 kPa x 100.
Flowmeter: FI-2	Gage displays amount of product water flow. Measures 0 to 250 gpm. Displays total water flow to 999,999 gal.
Valve:	V-7 Valve controls brine concentrate flow from reverse osmosis block assembly. Turn left to increase flow.

2-1. OPERATOR'S CONTROLS AND INDICATORS (CONT)

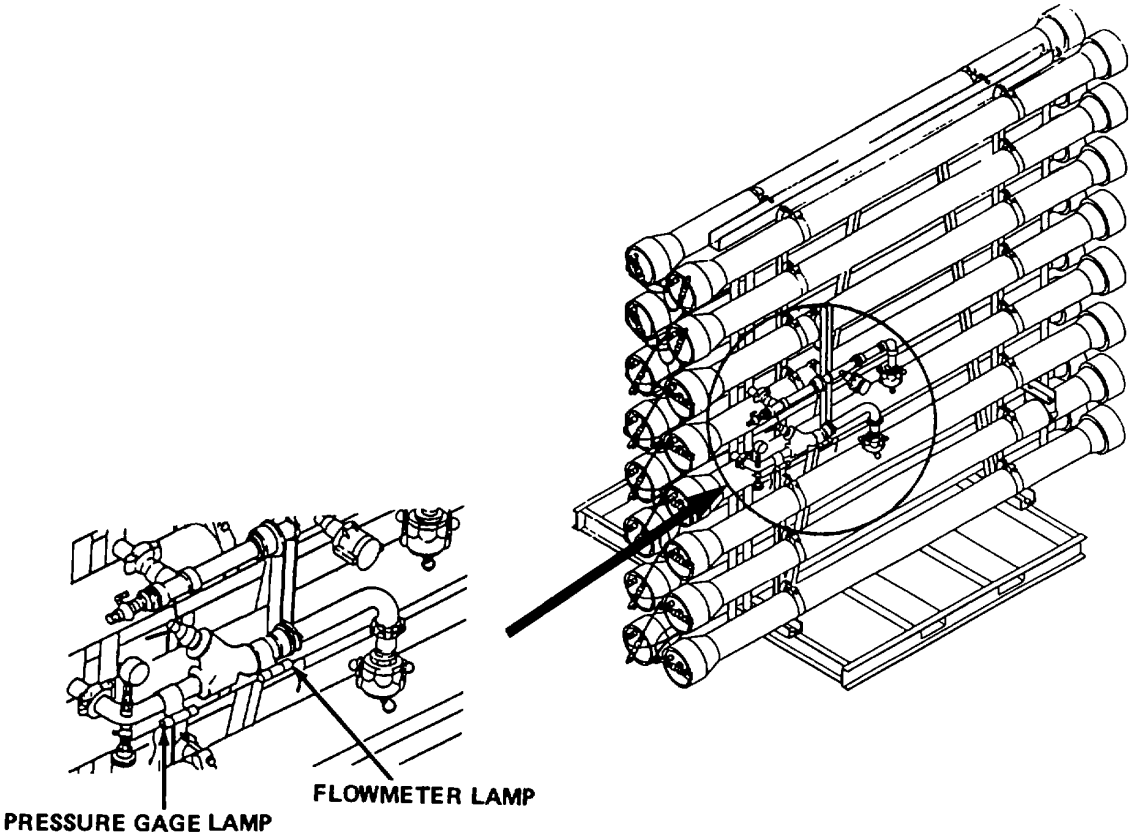

REVERSE OSMOSIS BLOCK ASSEMBLY (CONT)

Control or Indicator	Function
Flowmeter Lamp	Illuminates flowmeter. Turn top left for ON. Turn top right for OFF.
Pressure Gage Lamp	Illuminates pressure gage. Turn top left for ON. Turn top right for OFF.

2-1. OPERATOR'S CONTROLS AND INDICATORS (CONT)

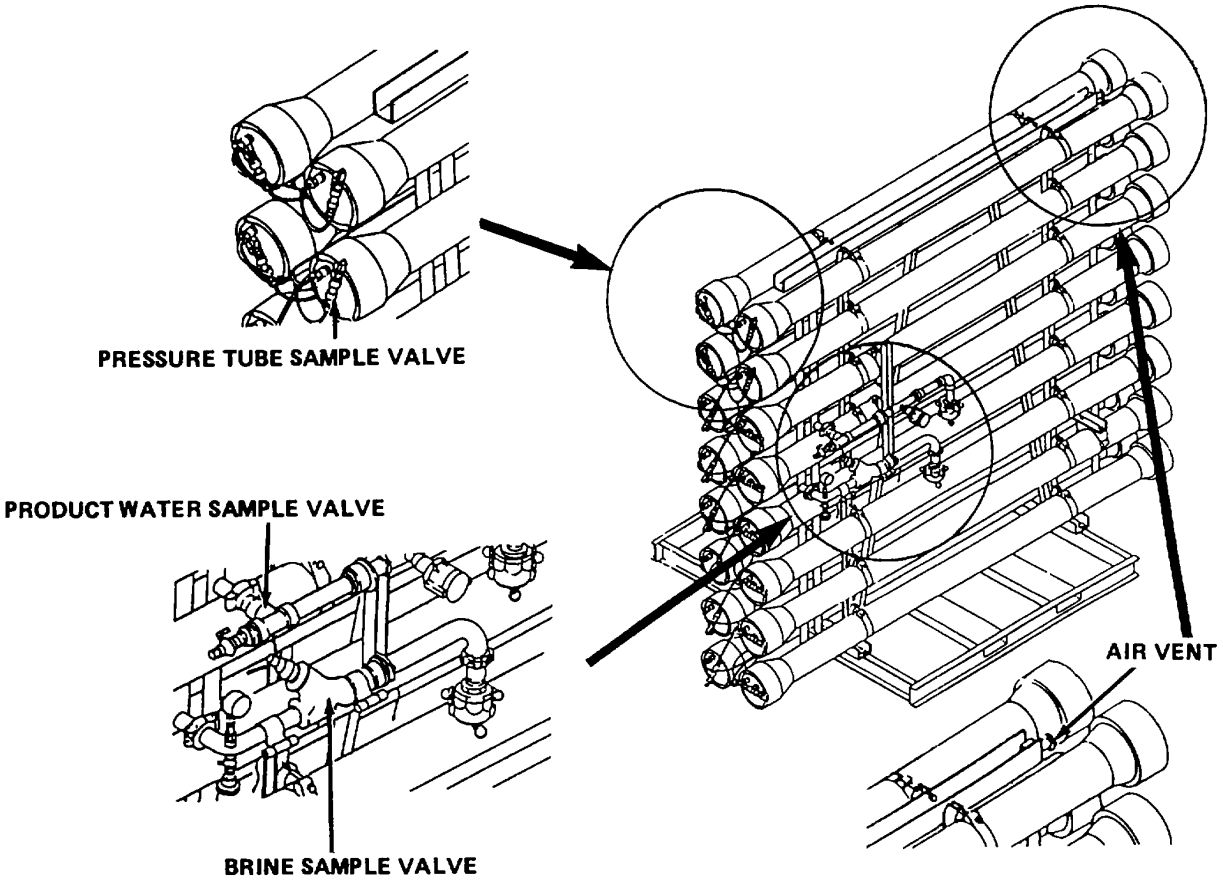

REVERSE OSMOSIS BLOCK ASSEMBLY (CONT)

Control or Indicator	Function
Pressure Tube Sample Valves	Sixteen valves. Used to check water quality at each pressure tube. Turn left to open.
Air Vent	Vents air during reverse osmosis membrane cleaning.
Brine Sample Valve	Used to check brine concentrate. Turn left to open.
Product Water Sample Valve	Used to check overall water quality from reverse osmosis block assembly. Turn left to open.

Section II. PREVENTIVE MAINTENANCE CHECKS AND SERVICES (PMCS)

2-2. GENERAL

a. Before You Operate. Always keep in mind the CAUTIONS and WARNINGS. Perform your before (B) PMCS.

b. While You Operate. Always keep in mind the CAUTIONS and WARNINGS. Perform your during (D) PMCS.

c. After You Operate. Be sure to perform your after (A) PMCS.

d. If Your Equipment Fails To Operate. Troubleshoot using proper equipment. Report any deficiencies using proper forms. Refer to DA Pam 738-750.

2-3. PMCS PROCEDURES

a. The PMCS table lists the inspections and care of your equipment required to keep it in good operating condition.

b. The Interval column of the PMCS table tells you when to do a certain check or service.

c. The Item to Be Inspected Procedure column of the PMCS table tells you what to inspect and how to do the required checks and services. Carefully follow these instructions.

d. If your equipment does not perform as required, notify organizational maintenance. Report any malfunctions or failures on DA Form 2404, or refer to DA Pam 738-750.

e. If the PMCS table requires removal of assemblies or equipment, refer to the maintenance paragraph listed.

f. The Equipment Is Not Ready/Available If column tells you when and why your equipment cannot be used.

NOTE

Both terms "ready/available" and "mission capable" indicate equipment is on hand and is able to perform its combat missions. (See DA Pam 738-750.)

Table 2-1. Operator Preventive Maintenance Checks and Services

CAUTION

- **Equipment operation is allowable with minor leakages (Class I or II). (See note below.) Of course, you must consider the fluid capacity in the item/system being checked/inspected. When in doubt, notify your supervisor.**
- **When operating with Class I or Class II leaks, continue to check fluid levels as required in your PMCS.**
- **Class III leaks should be reported to your supervisor or organizational maintenance.**

NOTE

- **Leakage for operator/crew PMCS shall be classified as follows:**

  Class I Seepage of fluid (as indicated by wetness or discoloration) not great enough to form drops.

  Class II Leakage of fluid great enough to form drops but not enough to cause drops to drip from item being checked/inspected.

  Class III Leakage of fluid great enough to form drops that fall from the item being checked/inspected.

NOTE

- **If the equipment must be kept in continuous operation, check and service only those items that can be checked and serviced without disturbing operation. Make the complete checks and services when the equipment can be shut down.**
- **Perform weekly as well as before operations PMCS if:**

  (1) You are the assigned operator and have not operated the item since last weekly PMCS.

  (2) You are operating the item for the first time.
- **The Item No. column is used as source of item numbers for the TM Number column on DA Form 2404, Equipment Inspection and Maintenance Worksheet, in recording results of PMCS.**

Table 2-1. Preventive Maintenance Checks and Services (Cont)

B - Before **D - During** **A - After** **M - Monthly**

Item No.	Interval B	Interval D	Interval A	Interval M	Item to be Inspected. Procedure	Equipment Is Not Ready/Available If:
					Raw Water Pump Assembly	
					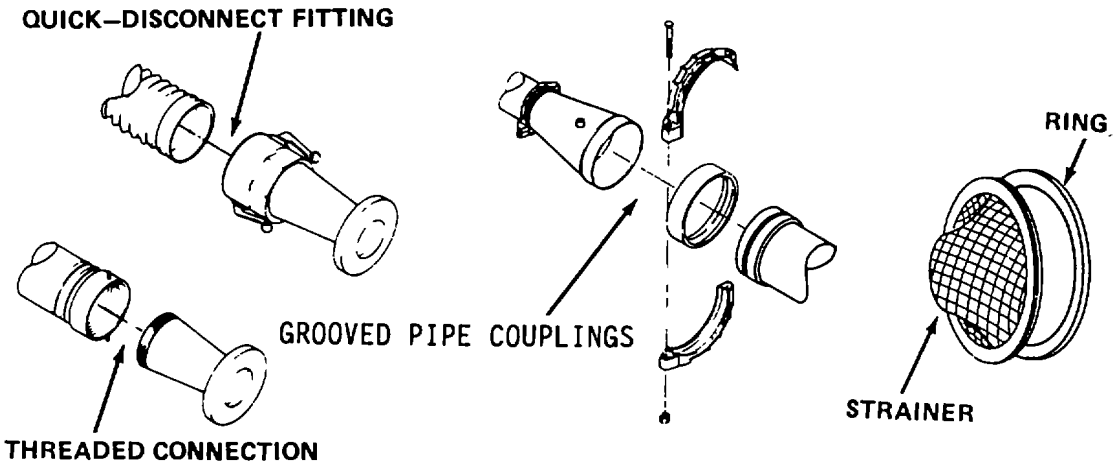	
1	•	•			**Hose Assemblies**. Check all hose connections. Tighten loose quick-disconnect, grooved pipe, couplings, and threaded connections. Check hoses for leaks. If hose leaks, notify your supervisor. Before operation, check strainer in raw water pump inlet for dirt and debris. If needed, remove ring and strainer and rinse strainer.	Hose connections loose or hose leaks.

Table 2-1. Preventive Maintenance Checks and Services (Cont)

B - Before D - During A - After M - Monthly

Item No.	Interval B	Interval D	Interval A	Interval M	Item to be Inspected. Procedure	Equipment Is Not Ready/Available If:
					Raw Water Pump Assembly (Cont)	
2	•				**Skid**. Wipe off any oil, grease, mud, or other foreign matter. Check for broken welds. If weld broken, notify your supervisor.	Weld broken.

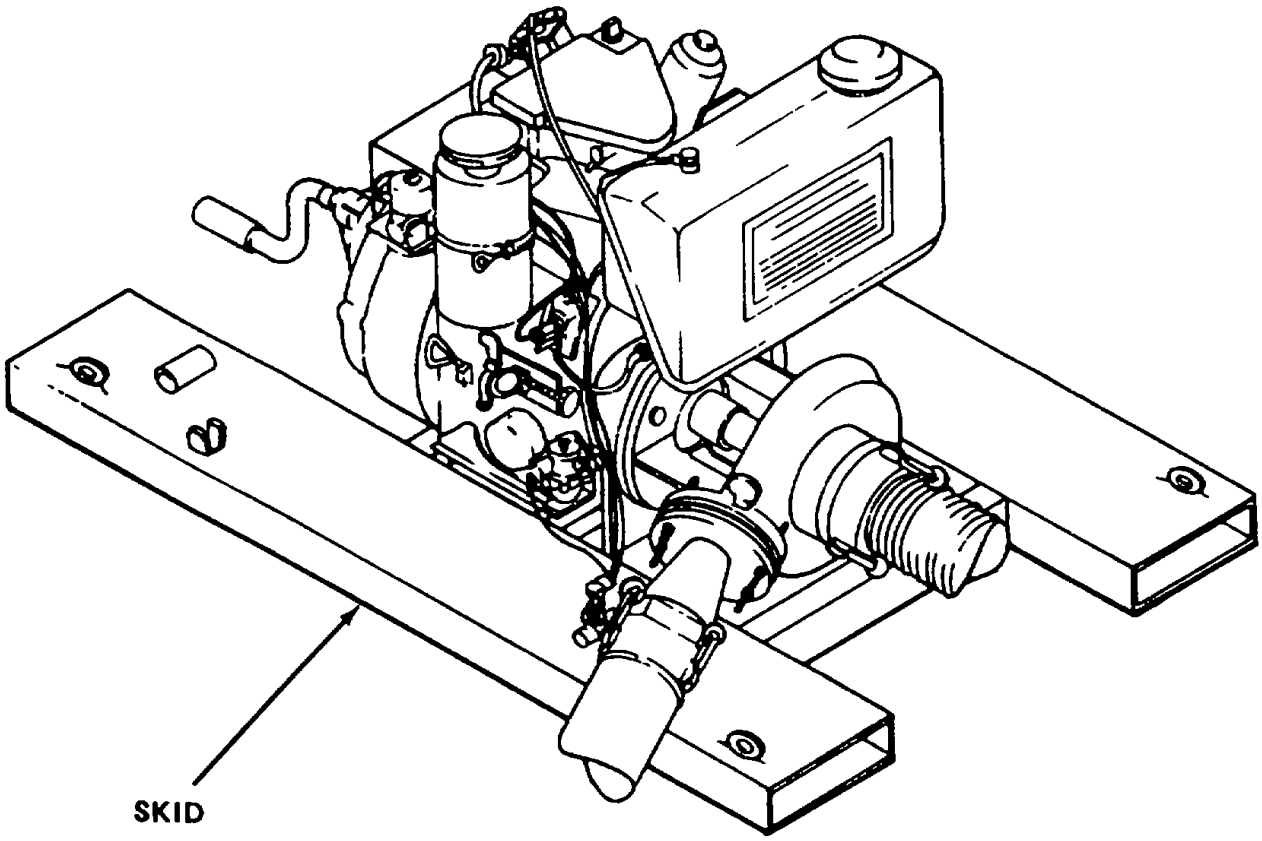

Table 2-1. Preventive Maintenance Checks and Services (Cont)

B - Before **D - During** **A - After** **M - Monthly**

Item No.	Interval B	Interval D	Interval A	Interval M	Item to be Inspected. Procedure	Equipment Is Not Ready/Available If:
					Raw Water Pump Assembly (Cont) 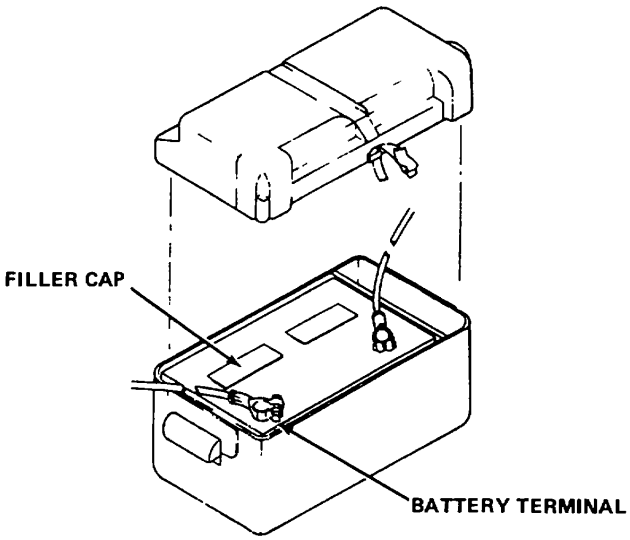 **WARNING**	
	EXPLOSIVE GASES. To prevent explosion, keep open flame, sparks, and cigarettes away from battery.					
3	•				**Battery**. Check battery terminals for cleanliness. If needed, clean terminals with wirebrush (appendix C). Remove cap to check fluid level. If fluid not visible in cell, notify your supervisor.	

Table 2-1. Preventive Maintenance Checks and Services (Cont)

B - Before **D - During** **A - After** **M - Monthly**

Item No.	Interval B	Interval D	Interval A	Interval M	Item to be Inspected. Procedure	Equipment Is Not Ready/Available If:
					Raw Water Pump Assembly (Cont) 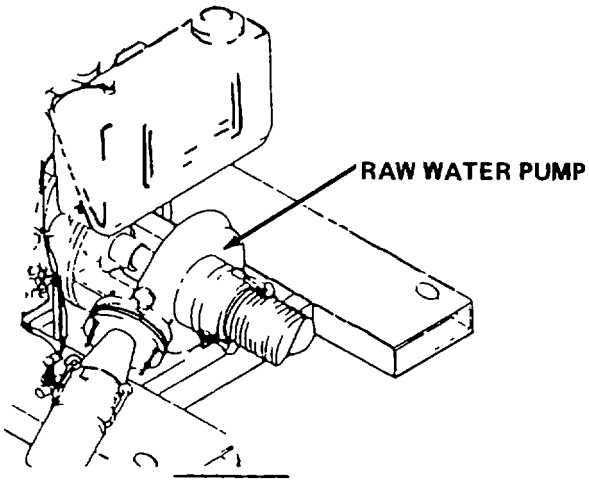	
					WARNING	
					Parts of engines become hot during operation. Be sure not to touch hot parts of engines.	
4	•	•			**Pump**. Wipe off any oil, grease, mud, or other foreign matter. Check for cracks, leaks, and loose or missing nuts and bolts. If pump is cracked or leaking, or if nuts or bolts are loose or missing, notify your supervisor.	Pump cracked or leaking. Nuts or bolts loose or missing.

Table 2-1. Preventive Maintenance Checks and Services (Cont)

B - Before **D - During** **A - After** **M - Monthly**

Item No.	Interval B	Interval D	Interval A	Interval M	Item to be Inspected. Procedure	Equipment Is Not Ready/Available If:
					Raw Water Pump Assembly (Cont) 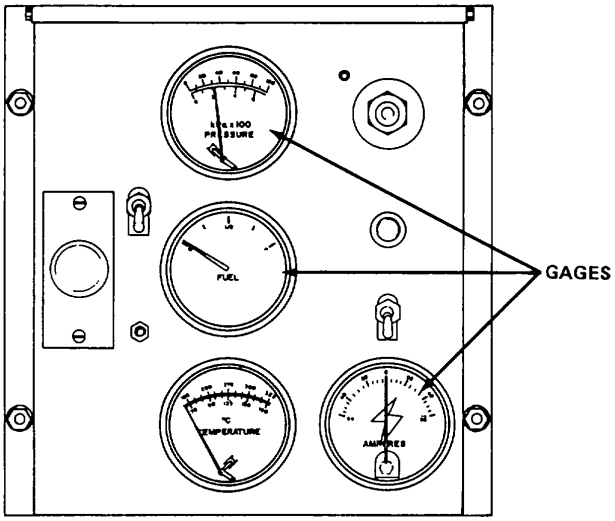	
5	•	•			**Gages**. Check for cracked or broken lenses and proper operation. If lenses cracked or broken or gage inoperable, notify your supervisor.	Lenses cracked or broken. Gage inoperable.

Table 2-1. Preventive Maintenance Checks and Services (Cont)

B - Before D - During A - After M - Monthly

Item No.	Interval B	D	A	M	Item to be Inspected. Procedure	Equipment Is Not Ready/Available If:
					Raw Water Pump Assembly (Cont) 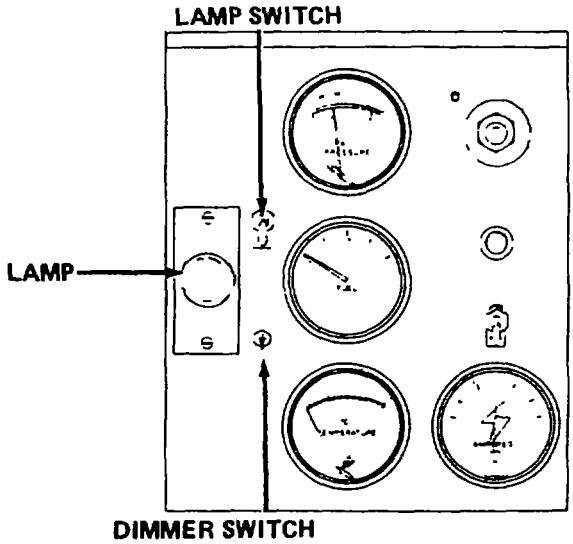	
6	•				**Instrument Panel Lamp**. Check lamp operation by flipping lamp switch. Check dimmer switch operation by turning left and right. If lamp does not light or dimmer switch does not work, notify your supervisor.	

Table 2-1. Preventive Maintenance Checks and Services (Cont)

B - Before **D - During** **A - After** **M - Monthly**

Item No.	Interval B	Interval D	Interval A	Interval M	Item to be Inspected. Procedure	Equipment Is Not Ready/Available If:
					Raw Water Pump Assembly (Cont) 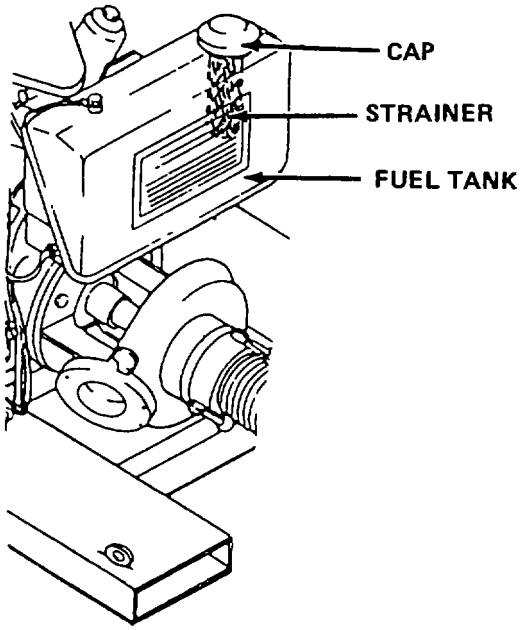	
					WARNING	
	FLAMMABLE FUEL. Keep open flame, sparks, and cigarettes away from fuel. DO NOT add fuel to brim; fuel may overflow when warm.					
					CAUTION	
	Fill with fuel after each operation period to prevent water buildup in tank.					
7			•		**Fuel**. Open cap and check strainer. If needed, remove dirt or debris from strainer before adding fuel. Add fuel (item 7, appendix D) to tank and close cap.	Fuel low.

Table 2-1. Preventive Maintenance Checks and Services (Cont)

B - Before **D - During** **A - After** **M - Monthly**

Item No.	Interval B	Interval D	Interval A	Interval M	Item to be Inspected. Procedure	Equipment Is Not Ready/Available If:
					Raw Water Pump Assembly (Cont)	
8	•				**Oil**. Check oil level on dipstick. Oil level should be between MIN and MAX lines. If needed, add oil (item 8, appendix D).	
9				•	**Air Cleaner Assembly**. Remove and service air cleaner assembly (para 3-3).	
10				•	**Raw Water Pump Shrouds**. Remove wing nut. Pull thru-bolt out of shroud. Remove screw. Remove front shroud. Loosen bolt. Move back shroud out of the way. Remove all debris and foreign materials from shroud.	

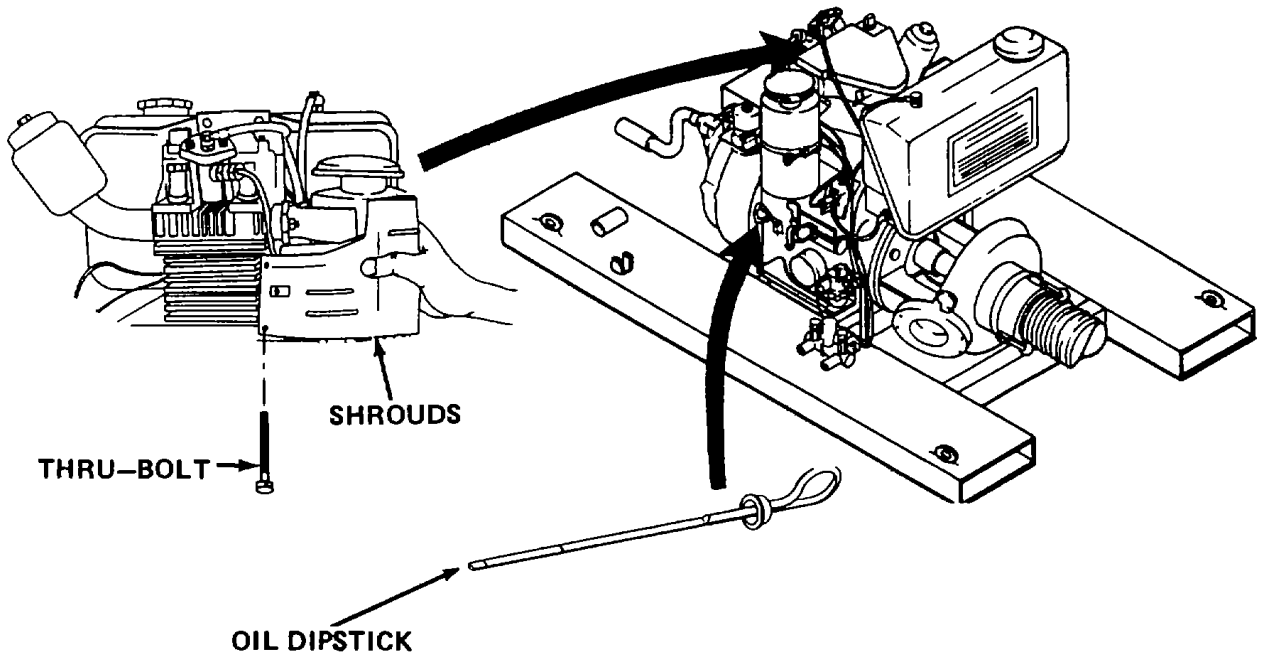

Table 2-1. Preventive Maintenance Checks and Services (Cont)

B - Before **D - During** **A - After** **M - Monthly**

Item No.	Interval B	Interval D	Interval A	Interval M	Item to be Inspected. Procedure	Equipment Is Not Ready/Available If:
					Boost Pump Assembly	
					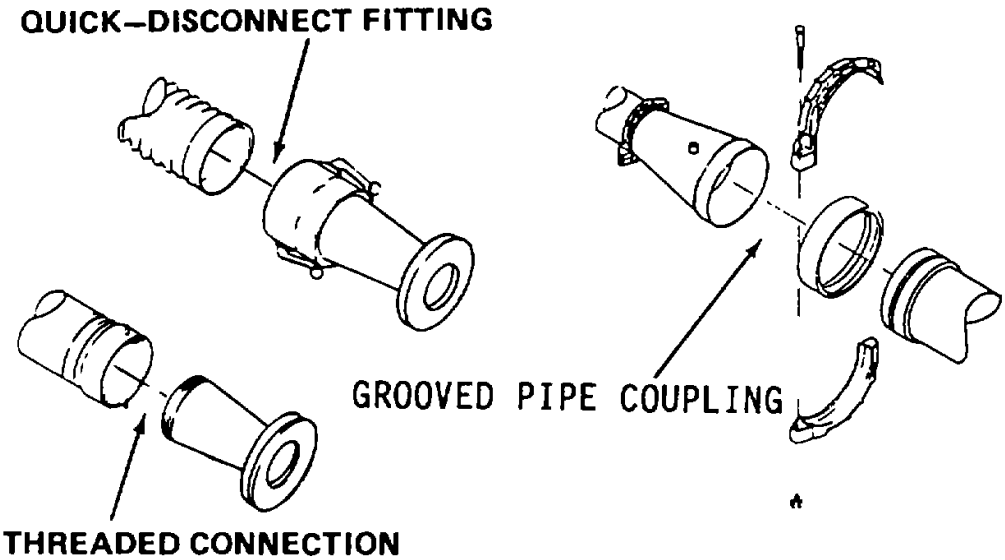	
11	•	•			**Hose Assemblies**. Check all hose connections. Tighten loose quick-disconnect, grooved pipe coupling, and threaded connections. Check hose for leaks. If hoses leak, notify your supervisor.	Hose connections loose or hose leaks.

Table 2-1. Preventive Maintenance Checks and Services (Cont)

B - Before **D - During** **A - After** **M - Monthly**

Item No.	Interval B	Interval D	Interval A	Interval M	Item to be Inspected. Procedure	Equipment Is Not Ready/Available If:
					Boost Pump Assembly (Cont)	
12	•				**Skid.** Wipe off any oil, grease, mud, or other foreign matter. Check for broken welds. If weld broken, notify your supervisor.	Weld broken.

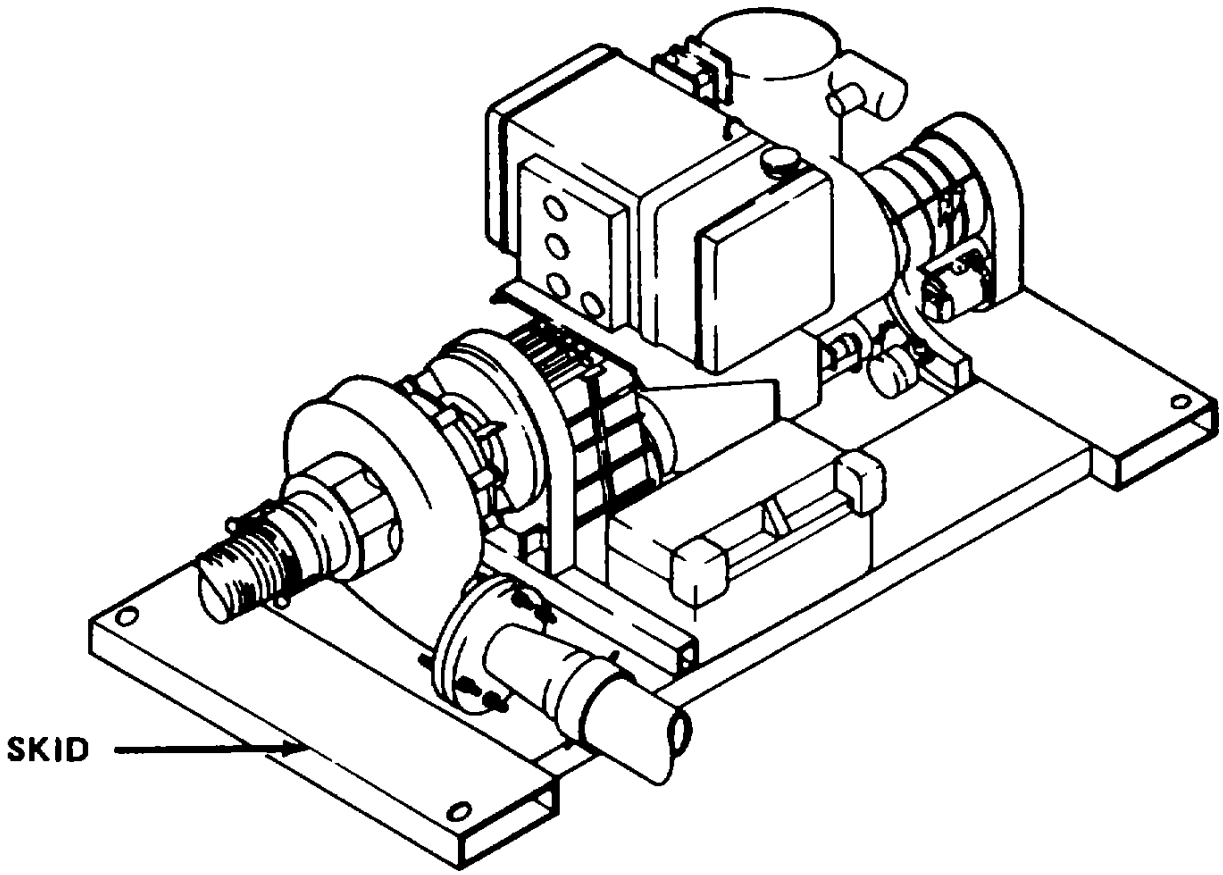

Table 2-1. Preventive Maintenance Checks and Services (Cont)

B - Before **D - During** **A - After** **M - Monthly**

Item No.	Interval B	Interval D	Interval A	Interval M	Item to be Inspected. Procedure	Equipment Is Not Ready/Available If:
					Boost Pump Assembly (Cont) 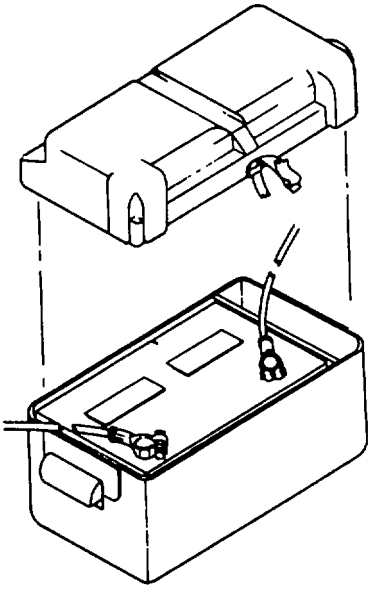 **WARNING**	
	EXPLOSIVE GASES. To prevent explosion, keep open flame, sparks, and cigarettes away from battery.					
12	•				**Battery**. Check battery terminals for cleanliness. If needed, clean terminals with wirebrush (appendix C). Remove cap to check fluid level. If fluid not visible in cell, notify your supervisor.	

Table 2-1. Preventive Maintenance Checks and Services (Cont)

B - Before **D - During** **A - After** **M - Monthly**

Item No.	Interval B	Interval D	Interval A	Interval M	Item to be Inspected. Procedure	Equipment Is Not Ready/Available If:
					Boost Pump Assembly (Cont) 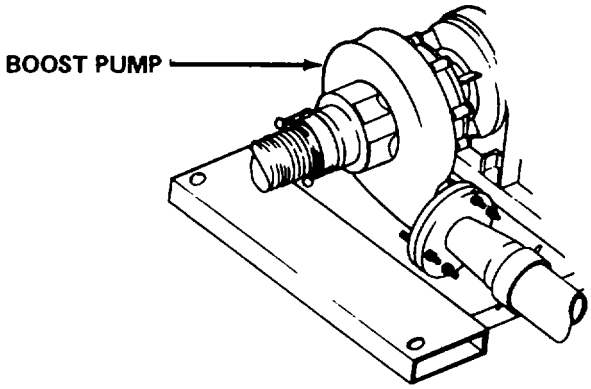	
					WARNING	
	Parts of engines become hot during operation. Be sure not to touch hot parts of engines.					
14	•	•			**Pump**. Wipe off any oil, grease, mud, or other foreign matter. Check for cracks, leaks, and loose or missing nuts and bolts. If pump cracked or leaking, or if nuts or bolts loose or missing, notify your supervisor.	Pump cracked or leaking nuts or bolts loose or missing.

Table 2-1. Preventive Maintenance Checks and Services (Cont)

B - Before **D - During** **A - After** **M - Monthly**

Item No.	Interval B	Interval D	Interval A	Interval M	Item to be Inspected. Procedure	Equipment Is Not Ready/Available If:
					Boost Pump Assembly (Cont)	
15	•	•			**Gages**. Check for cracked or broken lenses and proper operation. If lenses cracked or broken or gage inoperable, notify your supervisor.	Lenses cracked or broken. Gage inoperable.
16	•				**Instrument Panel Lamp**. Check lamp operation by flipping toggle switch. Check dimmer switch operation by turning left and right. If lamp does not light or dimmer switch does not work, notify your supervisor.	

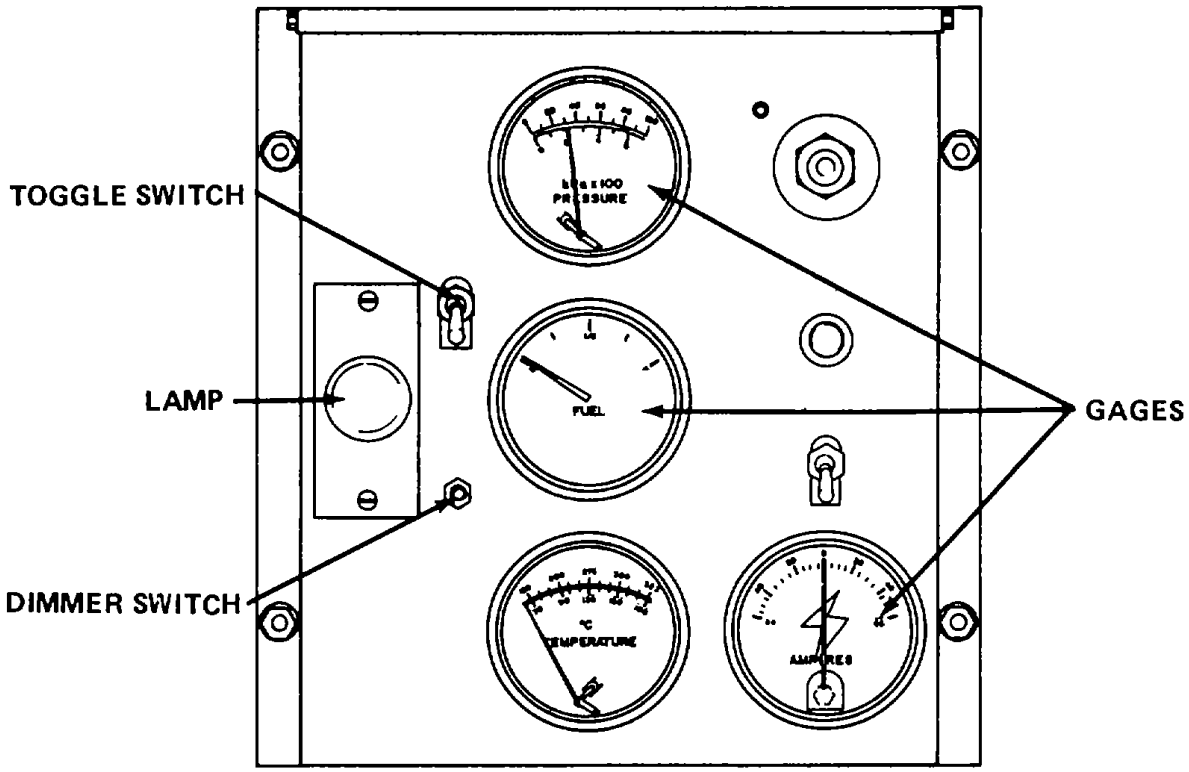

Table 2-1. Preventive Maintenance Checks and Services (Cont)

B - Before **D - During** **A - After** **M - Monthly**

Item No.	Interval B	Interval D	Interval A	Interval M	Item to be Inspected. Procedure	Equipment Is Not Ready/Available If:
					Boost Pump Assembly (Cont) 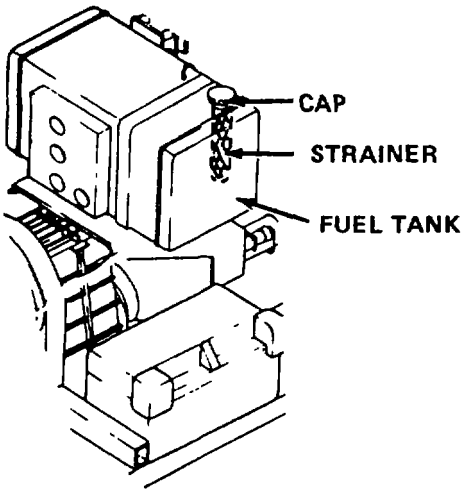	
					WARNING	
	FLAMMABLE FUEL. Keep open flame, and sparks away from fuel. DO NOT add fuel to brim; fuel may overflow when warm.					
					CAUTION	
	Fill with fuel after each operation period to prevent water buildup in tank.					
17			•		Fuel. Open cap and check strainer. If needed, remove dirt or debris from strainer before adding fuel. Add fuel (item 7, appendix D) to tank and close cap.	

Table 2-1. Preventive Maintenance Checks and Services (Cont)

B - Before **D - During** **A - After** **M - Monthly**

Item No.	Interval B	Interval D	Interval A	Interval M	Item to be Inspected. Procedure	Equipment Is Not Ready/Available If:
					Boost Pump Assembly (Cont) 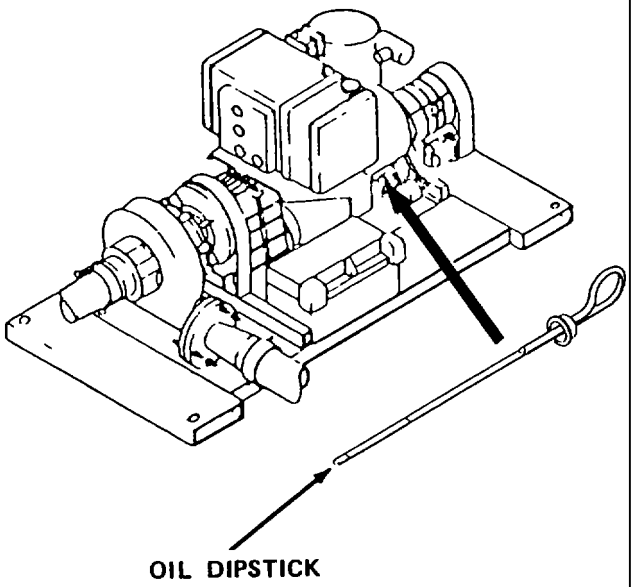	
18	•				**Oil.** Check oil level on dipstick. Oil level should be between MIN and MAX lines. If needed, add oil (item 8, appendix D).	
19			•		**Air Cleaner Assembly.** Remove and service air cleaner assemblies (para 3-4).	

Table 2-1. Preventive Maintenance Checks and Services (Cont)

B - Before D - During A - After M - Monthly

Item No.	Interval B	Interval D	Interval A	Interval M	Item to be Inspected. Procedure	Equipment Is Not Ready/Available If:
					Boost Pump Assembly (Cont)	
20				•	**Boost Pump Fan Housing**. Open latches and remove fan housing. Remove all debris and foreign materials from fan housing and cylinder assemblies.	

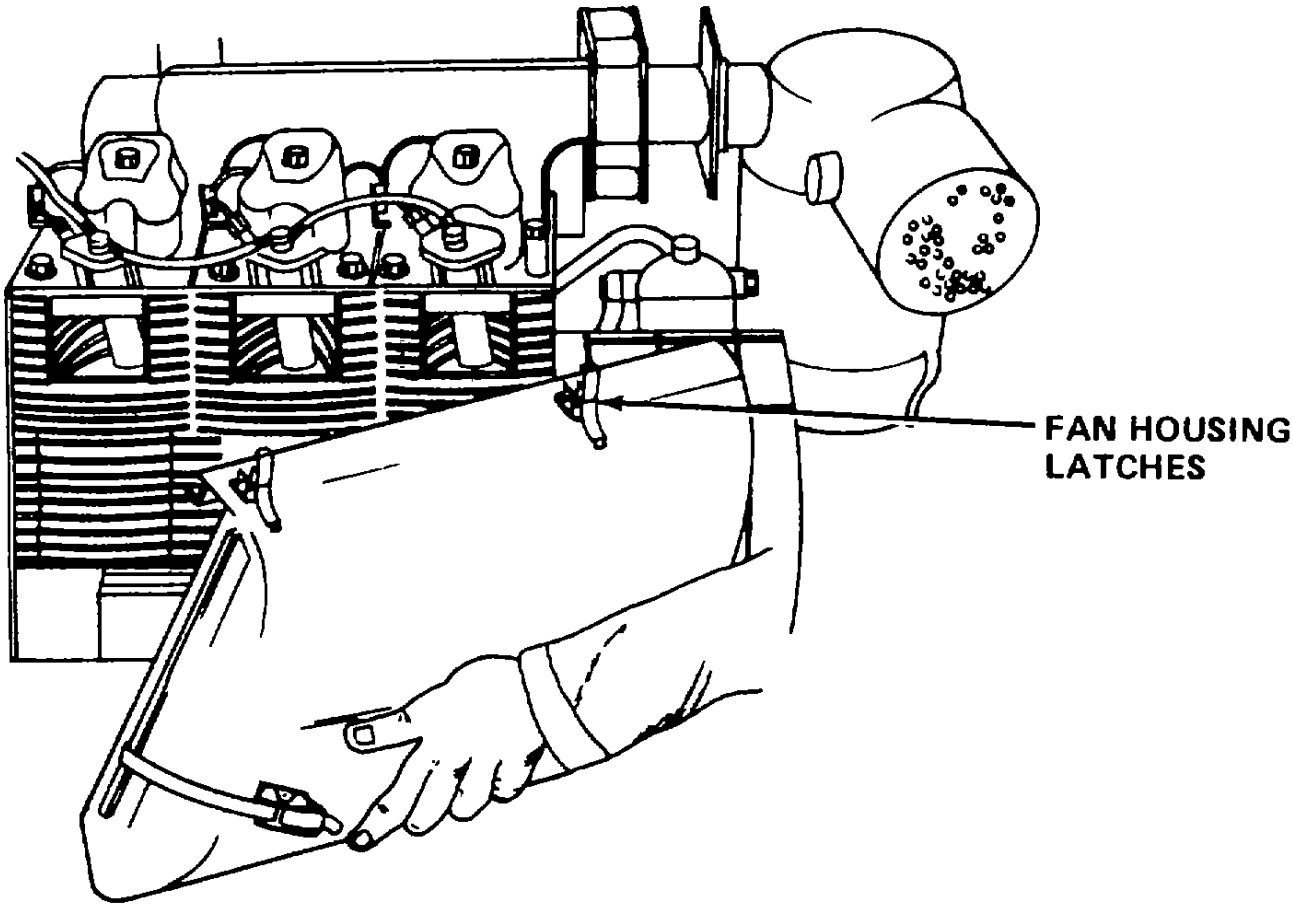

Table 2-1. Preventive Maintenance Checks and Services (Cont)

B - Before D - During A - After M - Monthly

Item No.	Interval B	Interval D	Interval A	Interval M	Item to be Inspected. Procedure	Equipment Is Not Ready/Available If:
					Pretreatment Assembly	
					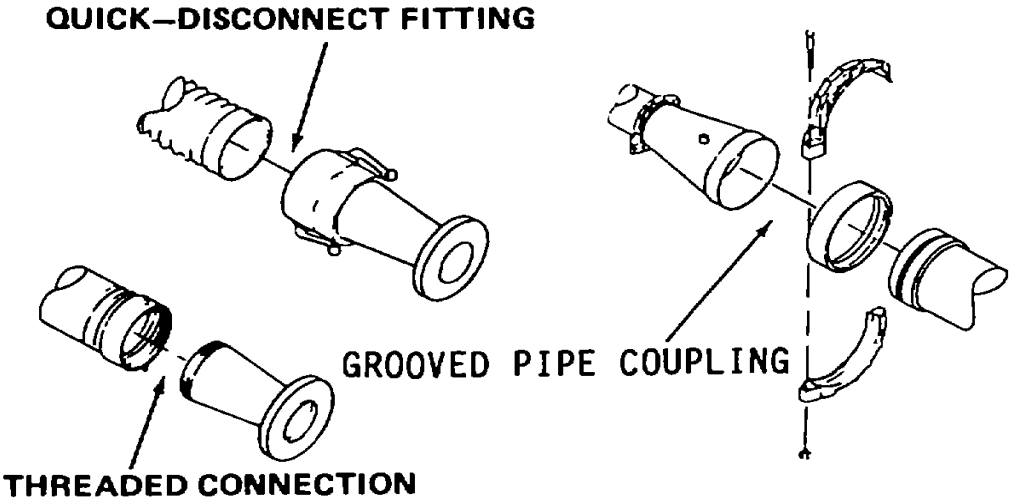	
21	•	•			**Hose Assemblies.** Check all hose connections. Tighten loose quick-disconnect, grooved pipe coupling, and threaded connections. Check hoses for leaks. If hoses leak, notify your supervisor.	Hose connections loose or hose leaks.

Table 2-1. Preventive Maintenance Checks and Services (Cont)

B - Before D - During A - After M - Monthly

Item No.	Interval B	Interval D	Interval A	Interval M	Item to be Inspected. Procedure	Equipment Is Not Ready/Available If:
					Pretreatment Assembly (Cont)	
					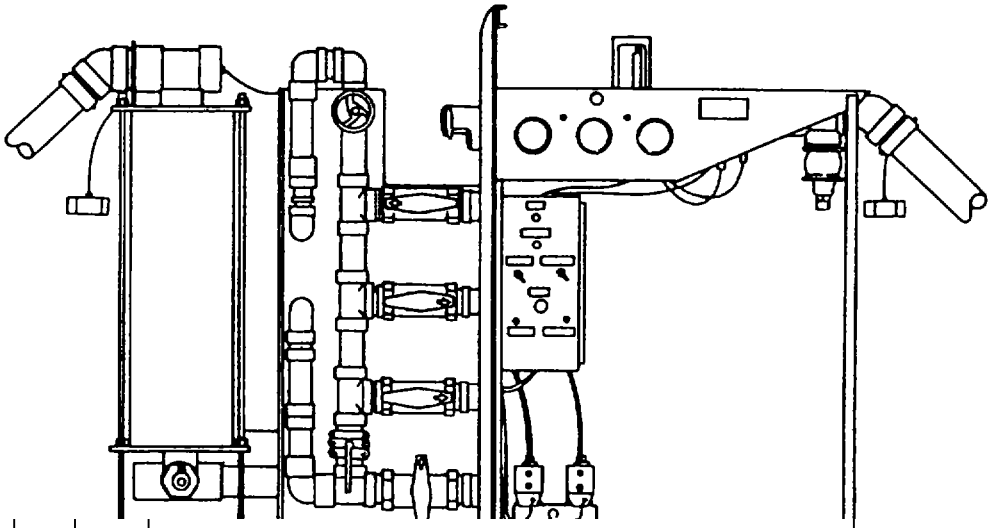	
22		•			**Skid.** Wipe off any oil, grease, mud, or other foreign matter. Check for broken welds. If weld broken, notify your supervisor.	Weld broken.

Table 2-1. Preventive Maintenance Checks and Services (Cont)

B - Before D - During A - After M - Monthly

Item No.	Interval B	Interval D	Interval A	Interval M	Item to be Inspected. Procedure	Equipment Is Not Ready/Available If:
					Pretreatment Assembly (Cont)	
					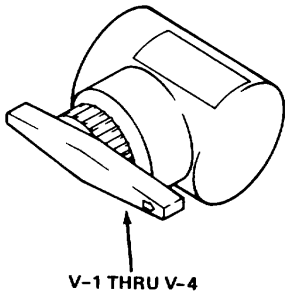 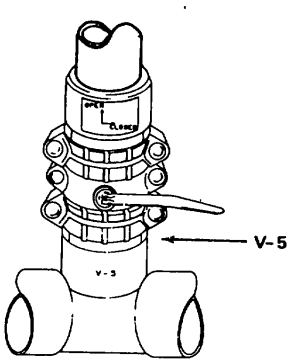 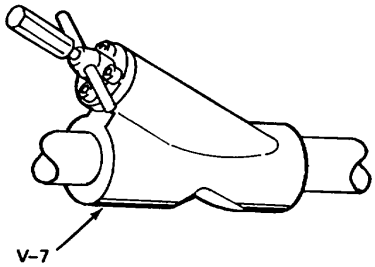 	
23		•			**Valves V-1 thru V-6**. Check valves for ease of operation by turning. If valves don't turn, notify your supervisor.	Valves don't turn.

Table 2-1. Preventive Maintenance Checks and Services (Cont)

B - Before D - During A - After M - Monthly

Item No.	Interval B	Interval D	Interval A	Interval M	Item to be Inspected. Procedure	Equipment Is Not Ready/Available If:
					Pretreatment Assembly (Cont)	
					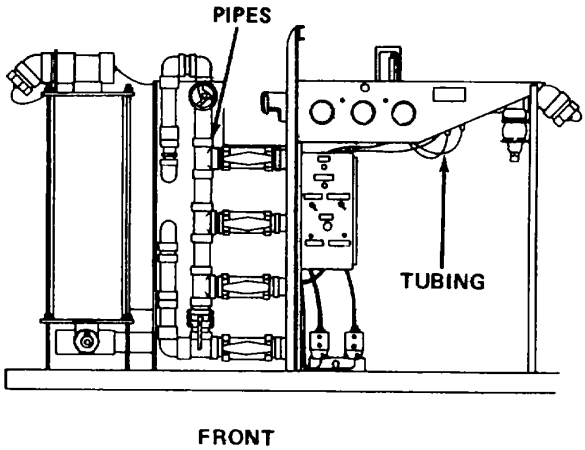 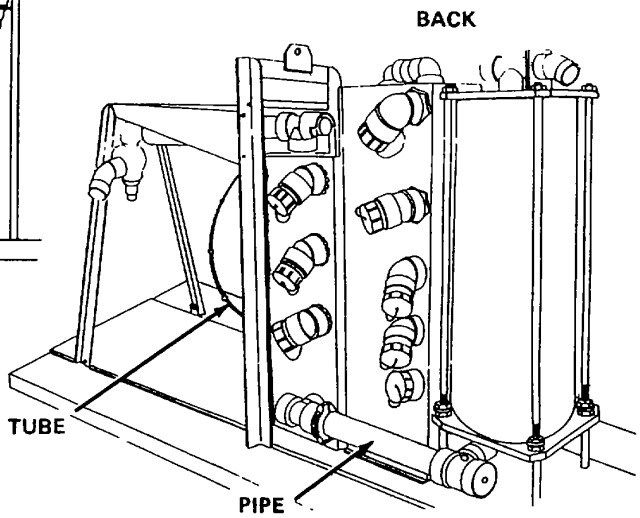	
24		•		•	**Pipes and Tubing**. Check pipes and tubing for cleanliness. Wipe off any oil, grease, mud, and other foreign matter. Check for leaks. If pipes or tubing leak, notify your supervisor.	Pipes or tubes leak.

Table 2-1. Preventive Maintenance Checks and Services (Cont)

B - Before D - During A - After M - Monthly

Item No.	Interval B	Interval D	Interval A	Interval M	Item to be Inspected. Procedure	Equipment Is Not Ready/Available If:
					Pretreatment Assembly (Cont)	
25	•	•	•		**Chemicals, Chemical Metering Pumps, and Tubing**. Check empty supply indicator on pump. If indicator is red, replenish coagulant aid or scale inhibitor (item 3 or item 11, appendix D) as required. Verify that pump is operating. (Amber light should pulsate.) Check for leaks or cracks in tubing and tube connections. If needed, tighten connections. If pump not operating or if tubing leaks, notify your supervisor.	Chemical drums low. Pump not operating. Pump leaking.

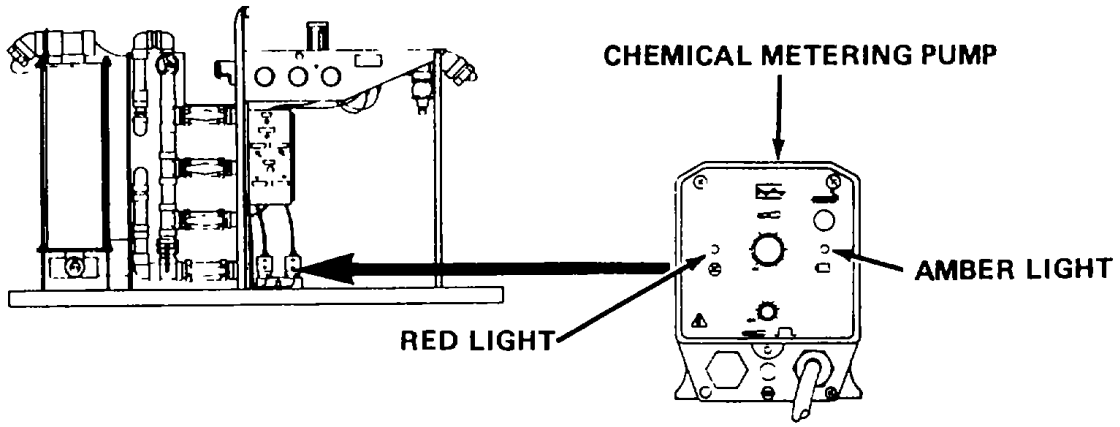

Table 2-1. Preventive Maintenance Checks and Services (Cont)

B - Before D - During A - After M - Monthly

Item No.	Interval B	Interval D	Interval A	Interval M	Item to be Inspected. Procedure	Equipment Is Not Ready/Available If:
					Pretreatment Assembly (Cont)	
					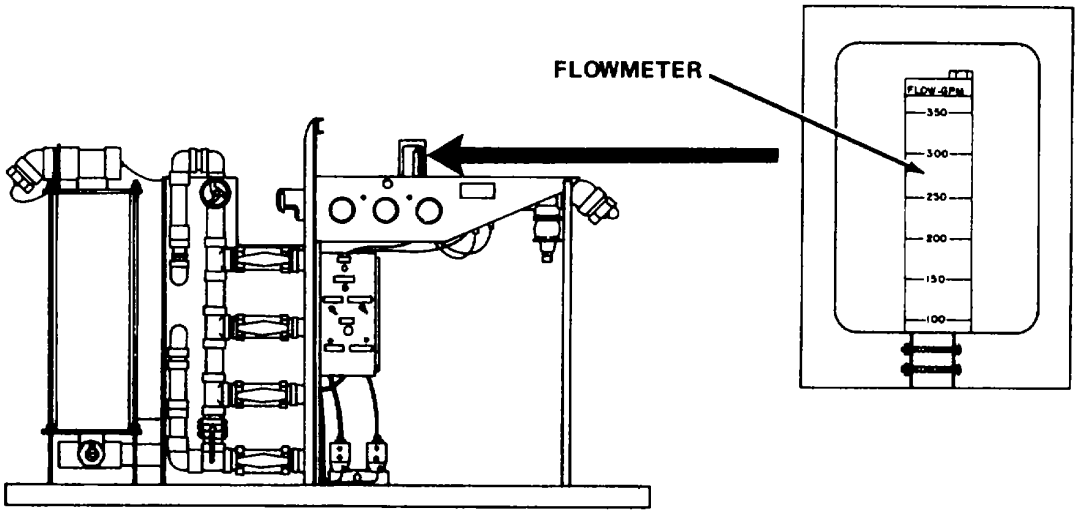	
26			•		**Flowneter (FI-1).** Check for cracks, leaks, and proper operation. If cracks or leaks present or meter inoperable, notify your supervisor.	Meter cracked, leaking, or inoperable.

Table 2-1. Preventive Maintenance Checks and Services (Cont)

B - Before D - During A - After M - Monthly

Item No.	Interval B	Interval D	Interval A	Interval M	Item to be Inspected. Procedure	Equipment Is Not Ready/Available If:
					Pretreatment Assembly (Cont)	
27	•	•			**Control Box Indicators.** Check indicator lights for cracked or broken lenses and burnt out bulbs. If lenses cracked or bulbs burnt out, notify your supervisor.	Lens cracked or broken. Bulbs burnt out.

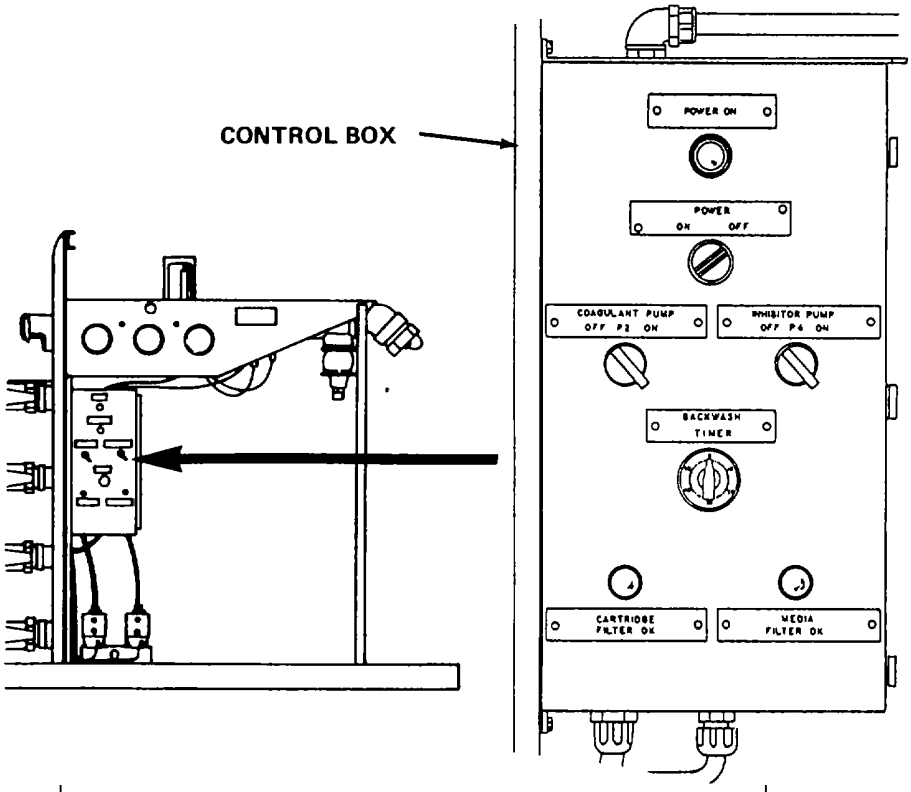

Table 2-1. Preventive Maintenance Checks and Services (Cont)

B - Before D - During A - After M - Monthly

Item No.	Interval B	Interval D	Interval A	Interval M	Item to be Inspected. Procedure	Equipment Is Not Ready/Available If:
					Pretreatment Assembly (Cont)	
					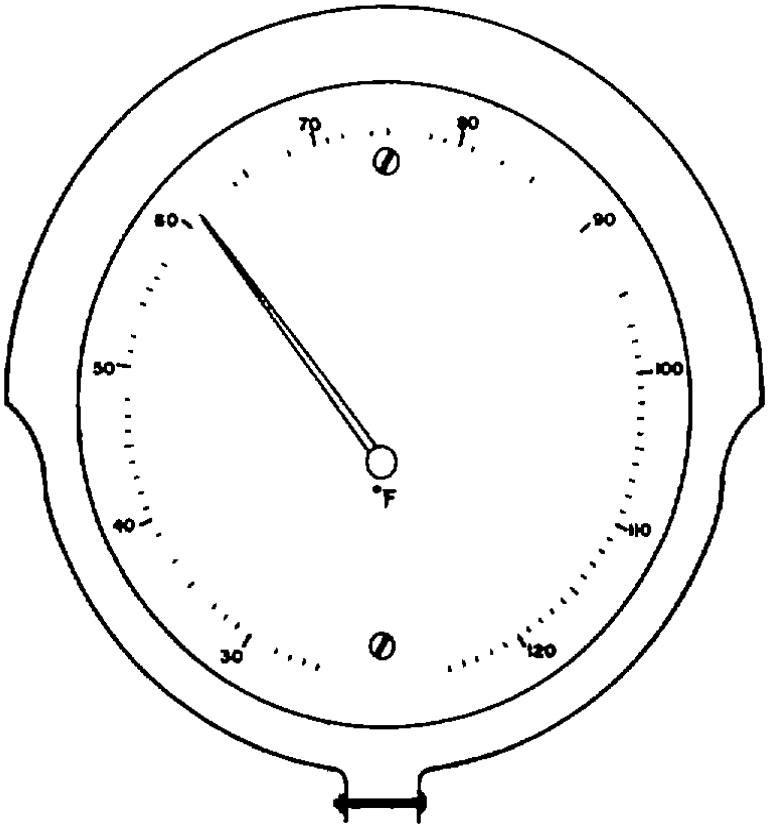	
28	•	•			**Gages**. Check for cracked or broken lenses and proper operation. If lenses cracked or broken or gage inoperable, notify your supervisor.	Lenses cracked or broken. Gage inoperable.

Table 2-1. Preventive Maintenance Checks and Services (Cont)

B - Before D - During A - After M - Monthly

Item No.	Interval B	Interval D	Interval A	Interval M	Item to be Inspected. Procedure	Equipment Is Not Ready/Available If:
					Pretreatment Assembly (Cont) 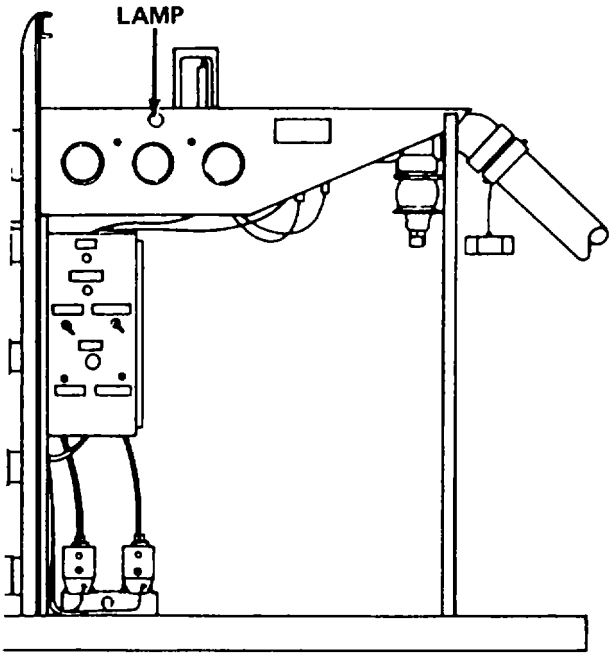	
29	•				**Instrument Panel Lamp**. Check lamp operation by flipping toggle switch. Check dimmer switch operation by turning switch left and right. If lamp does not light or dimmer switch does not work, notify your supervisor.	

Table 2-1. Preventive Maintenance Checks and Services (Cont)

B - Before D - During A - After M - Monthly

Item No.	Interval B	Interval D	Interval A	Interval M	Item to be Inspected. Procedure	Equipment Is Not Ready/Available If:
					Multimedia Filters	
					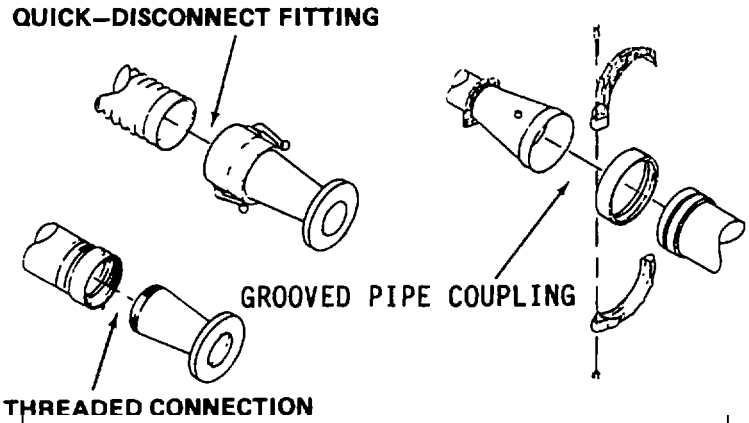	
30	•	•			**Hose Assemblies**. Check all hose connections. Tighten loose quick-disconnect, grooved pipe coupling, and threaded connections. Check hoses for leaks. If hoses leak, notify your supervisor.	Hose connections loose or hose leaks.

Table 2-1. Preventive Maintenance Checks and Services (Cont)

B - Before D - During A - After M - Monthly

Item No.	Interval B	Interval D	Interval A	Interval M	Item to be Inspected. Procedure	Equipment Is Not Ready/Available If:
					High Pressure Pump Assembly 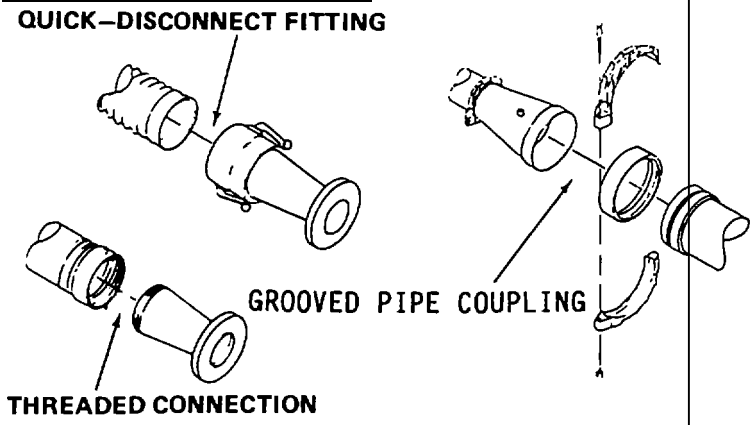	
31	•		•		**Hose Assemblies**. Check all hose connections. Tighten loose quick-disconnect, grooved pipe coupling and threaded connections. Check hoses for leaks. If hoses leak, notify your supervisor.	Hose connections loose or hose leaks.

Table 2-1. Preventive Maintenance Checks and Services (Cont)

B - Before D - During A - After M - Monthly

Item No.	Interval B	Interval D	Interval A	Interval M	Item to be Inspected. Procedure		Equipment Is Not Ready/Available If:
					High Pressure Pump Assembly (Cont)		
32		•			**Skid.** Wipe off any oil, grease, mud, and other foreign matter. Check for broken welds. If weld broken, notify your supervisor.	Weld broken.	

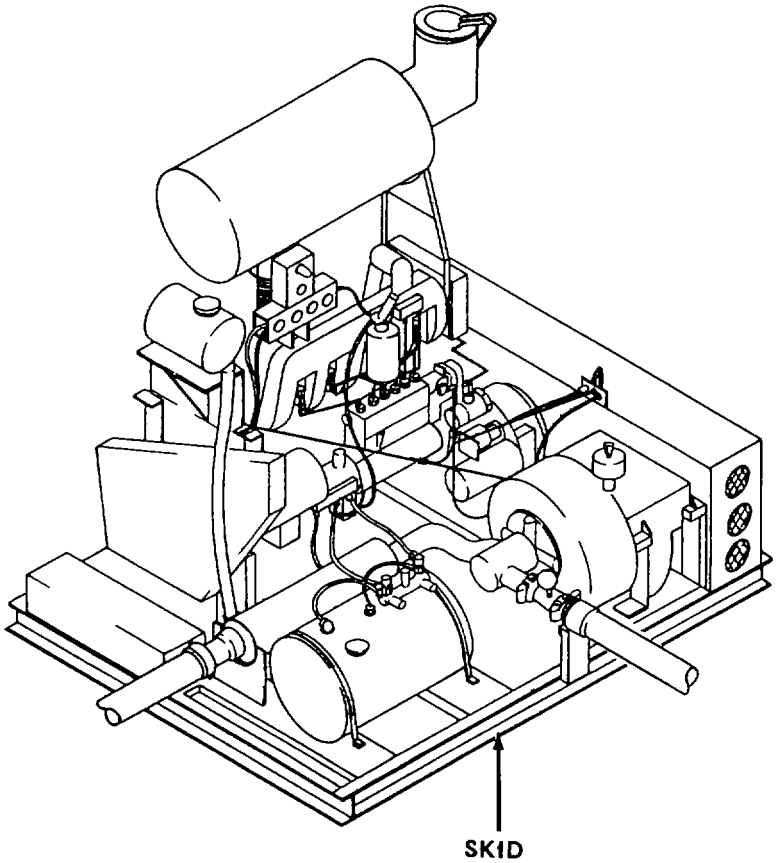

Table 2-1. Preventive Maintenance Checks and Services (Cont)

B - Before D - During A - After M - Monthly

Item No.	Interval B	Interval D	Interval A	Interval M	Item to be Inspected. Procedure	Equipment Is Not Ready/Available If:
					High Pressure Pump Assembly (Cont)	
					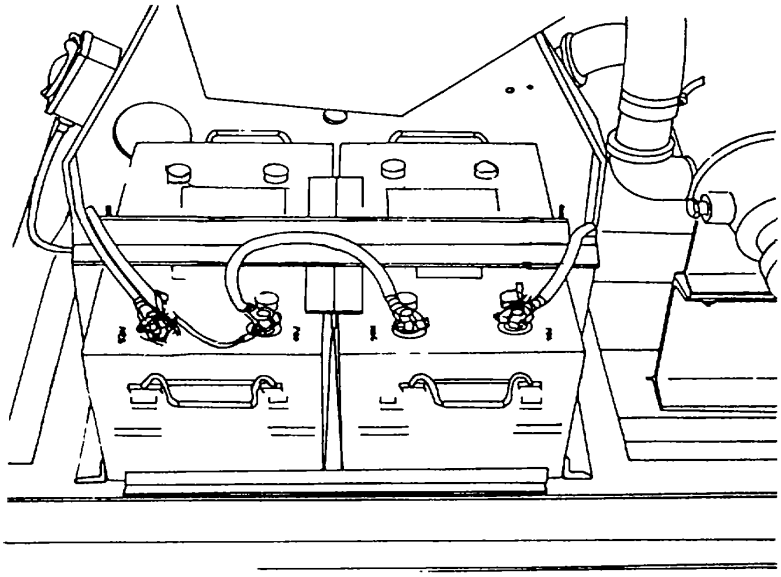	
					WARNING	
					EXPLOSIVE GASES. To prevent explosion, keep open flame and sparks away from battery.	
33 •					**Batteries.** Check battery terminals for cleanliness. If needed, clean terminals with wire brush (appendix C). Remove cap to check fluid level. If fluid not visible in cell, notify your supervisor. Check battery box for damage. If damaged notify your supervisor.	

Table 2-1. Preventive Maintenance Checks and Services (Cont)

B - Before D - During A - After M - Monthly

Item No.	Interval B	Interval D	Interval A	Interval M	Item to be Inspected. Procedure	Equipment Is Not Ready/Available If:
					High Pressure Pump Assembly (Cont)	
					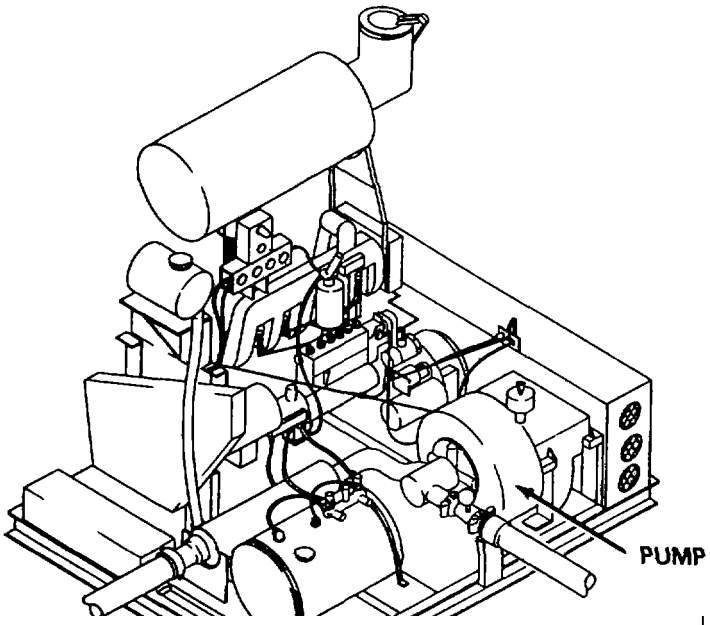	
					WARNING	
					Parts of engines become hot during operation. Be sure not to touch hot parts of engines.	
34	•			•	**Pump.** Wipe off any oil, grease, mud, and other foreign matter. Check for cracks, leaks, and loose or missing nuts and bolts. If pump cracked or leaking, or if nuts or bolts loose or missing, notify your supervisor.	Pump cracked or leaking. Nuts or bolts loose or missing.

Table 2-1. Preventive Maintenance Checks and Services (Cont)

B - Before D - During A - After M - Monthly

Item No.	Interval B	Interval D	Interval A	Interval M	Item to be Inspected. Procedure	Equipment Is Not Ready/Available If:
					High Pressure Pump Assembly (Cont)	
					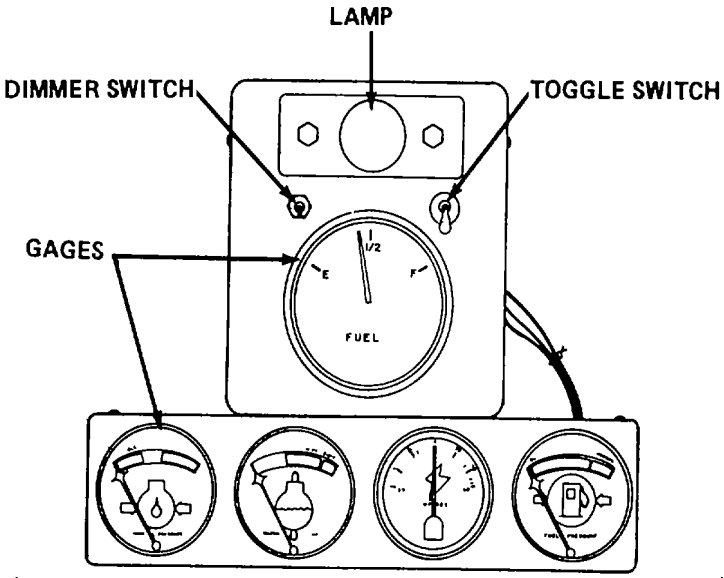	
35	•	•			**Gages**. Check for cracked or broken lenses and proper operation. If lenses cracked or broken or gage inoperable, notify your supervisor.	Lenses cracked or broken. Gage in-operable.
36		•			lamp operation by flipping toggle switch. Check dimmer switch operation by turning switch left and right. If lamp does not light or dimmer switch does not work, notify your supervisor. Check instrument panel. If damaged, notify your supervisor.	Instrument Panel Lamp. Check

Table 2-1. Preventive Maintenance Checks and Services (Cont)

B - Before D - During A - After M - Monthly

Item No.	Interval B	Interval D	Interval A	Interval M	Item to be Inspected. Procedure	Equipment Is Not Ready/Available If:
					High Pressure Pump Assembly (Cont) 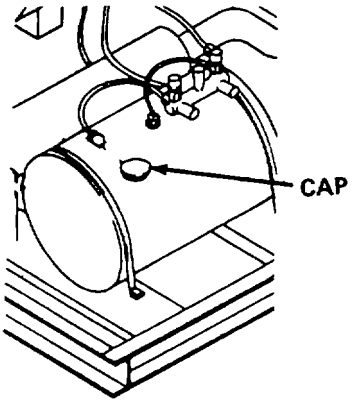	
					WARNING **FLAMMABLE FUEL. Keep open flame and sparks away from fuel. DO NOT add fuel to brim because fuel may overflow when warm.** **CAUTION** **Fill with fuel after each operation period to prevent water buildup in tank.**	
37				•	**Fuel**. Open cap. Add fuel, (item 7, appendix D) to tank and close cap. Fuel low.	

Table 2-1. Preventive Maintenance Checks and Services (Cont)

B - Before D - During A - After M - Monthly

Item No.	Interval B	Interval D	Interval A	Interval M	Item to be Inspected. Procedure	Equipment Is Not Ready/Available If:
					High Pressure Pump Assembly (Cont) 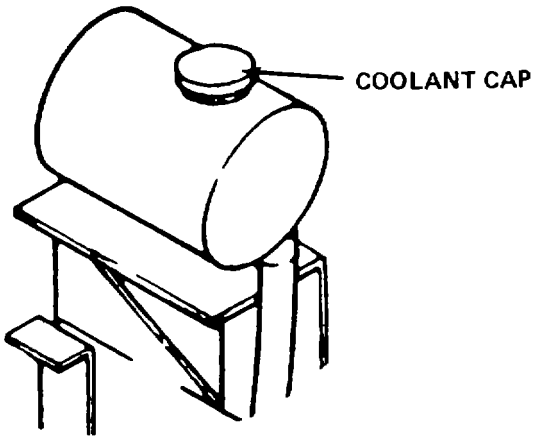	
38	•				**Coolant (High Pressure Pump Diesel Engine).** Open cap. Check coolant level. Replenish if needed (item 1, appendix D).	Coolant low.

Table 2-1. Preventive Maintenance Checks and Services (Cont)

B - Before D - During A - After M - Monthly

Item No.	Interval B	Interval D	Interval A	Interval M	Item to be Inspected. Procedure	Equipment Is Not Ready/Available If:
					High Pressure Pump Assembly (Cont)	
					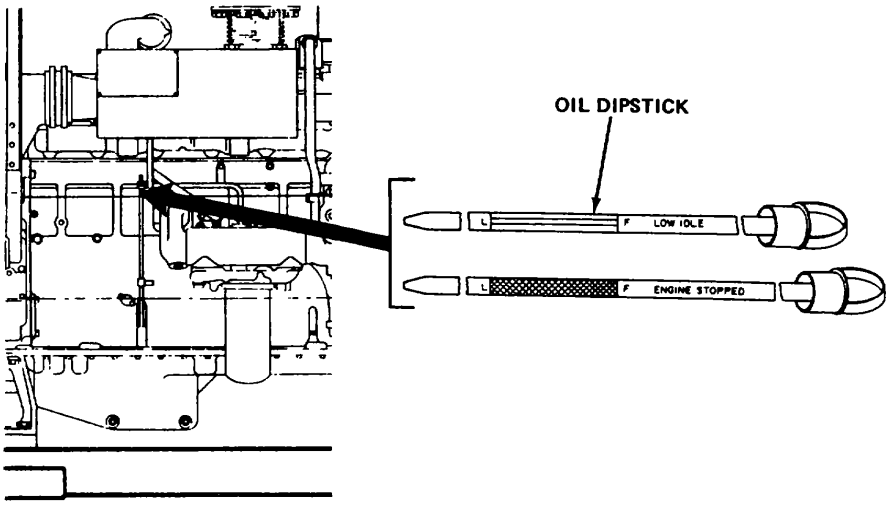	
39	•	•			**Oil (High Pressure Pump Diesel Engine).** Check oil level on dipstick. Oil level should be between L and F lines on ENGINE STOPPED side of dipstick. Run engine at idle and check oil level on dipstick. Oil level should be between L and F lines on LOW IDLE side of dipstick. If needed, add oil (item 8, appendix D).	Oil level low.

Table 2-1. Preventive Maintenance Checks and Services (Cont)

B - Before D - During A - After M - Monthly

Item No.	Interval B	Interval D	Interval A	Interval M	Item to be Inspected. Procedure	Equipment Is Not Ready/Available If:
					High Pressure Pump Assembly (Cont) 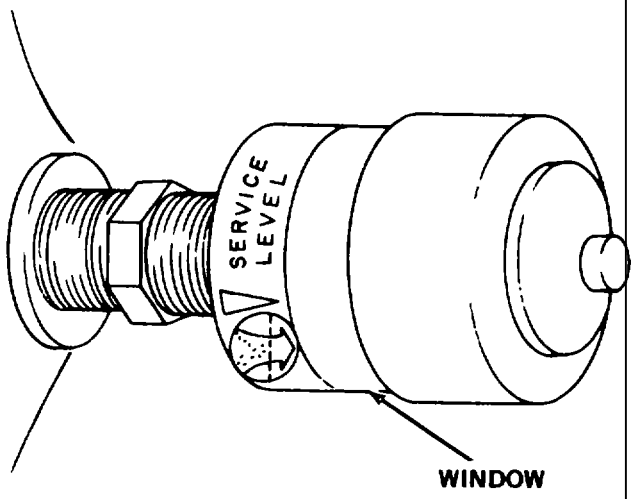	
40		•			**Air Cleaner Service Indicator (High Pressure Pump Diesel Engine).** Check window for red piston. If red piston is visible, service air filter (para 3-6).	Red piston visible.

Table 2-1. Preventive Maintenance Checks and Services (Cont)

B - Before D - During A - After M - Monthly

Item No.	Interval B	Interval D	Interval A	Interval M	Item to be Inspected. Procedure	Equipment Is Not Ready/Available If:
					High Pressure Pump Assembly (Cont)	
					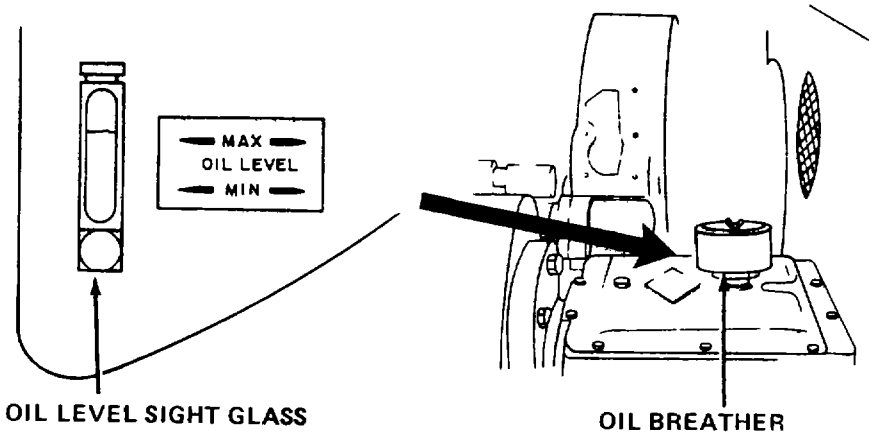	
41		•			Oil (High Pressure Pump). Check that oil appears in sight glass. If needed, unscrew high pressure pump oil breather and add oil (item 9, appendix D).	Oil level low.
42				•	Oil Breather (High Pressure Pump). Remove oil breather element and service (para 3-7).	Element dirty.

Table 2-1. Preventive Maintenance Checks and Services (Cont)

B - Before **D - During** **A - After** **M - Monthly**

Item No.	Interval B	Interval D	Interval A	Interval M	Item to be Inspected. Procedure	Equipment Is Not Ready/Available If:
					High Pressure Pump Assembly (Cont)	
43	●				**Oil (High Pressure Pump Power Takeoff).** Check oil level on dipstick. Oil level should read between LOW and FULL lines. If needed, add oil (item 9, appendix D).	Oil level low.

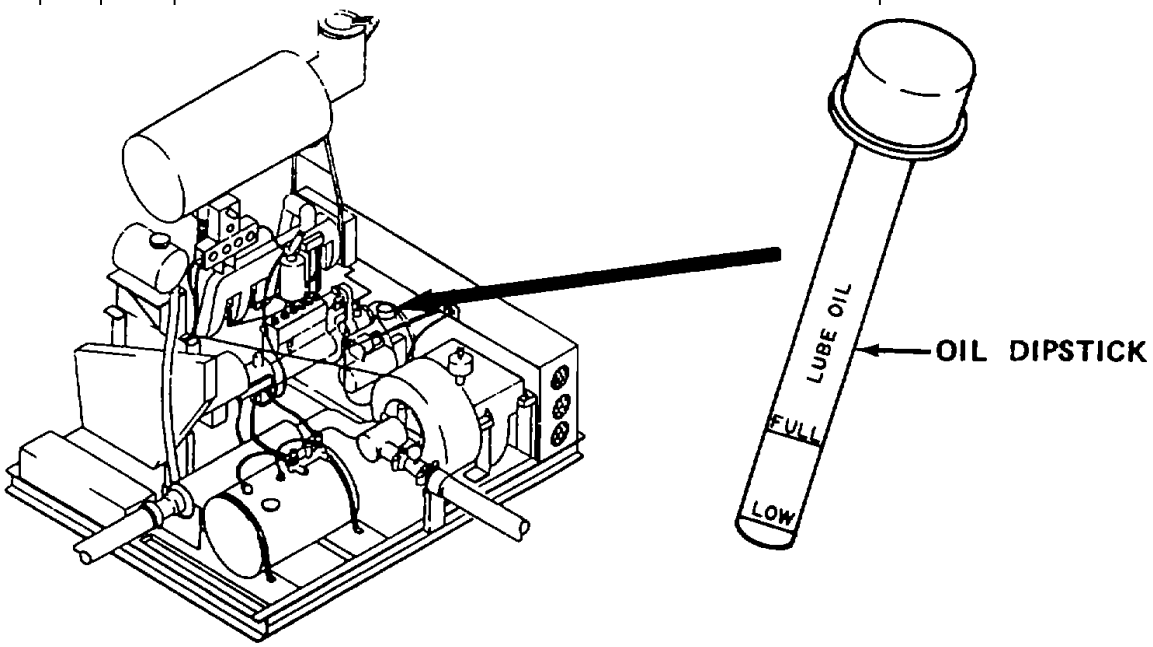

Table 2-1. Preventive Maintenance Checks and Services (Cont)

B - Before **D - During** **A - After** **M - Monthly**

Item No.	Interval B	Interval D	Interval A	Interval M	Item to be Inspected. Procedure	Equipment Is Not Ready/Available If:
					Reverse Osmosis Block Assembly	
					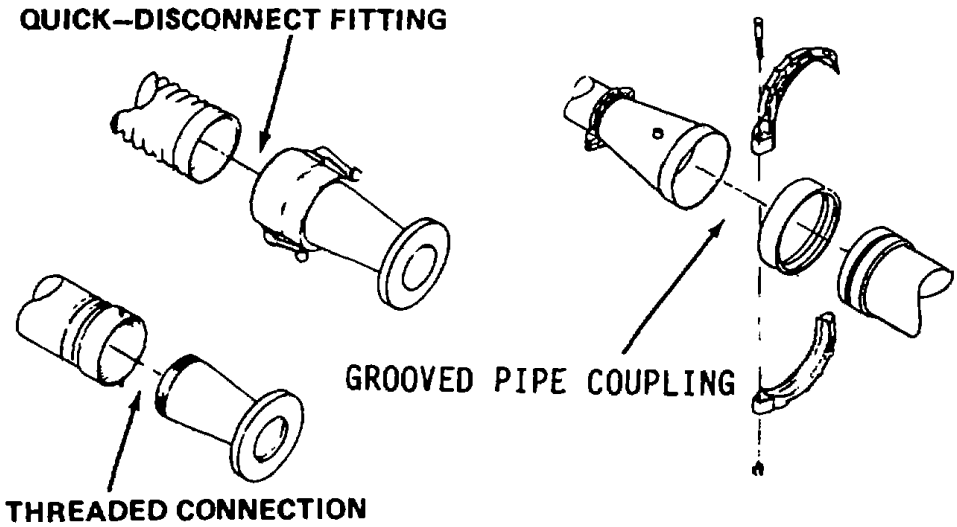	
44	●	●			**Hose Assemblies.** Check all hose connections. Tighten loose quick-disconnect, grooved pipe coupling, and threaded connections. Check hoses for leaks. Of hoses leak, notify your supervisor.	Hose connections loose or hose leaks.

Table 2-1. Preventive Maintenance Checks and Services (Cont)

B - Before **D - During** **A - After** **M - Monthly**

Item No.	Interval B	Interval D	Interval A	Interval M	Item to be Inspected. Procedure	Equipment Is Not Ready/Available If:
					Reverse Osmosis Block Assembly (Cont)	
45	●				**Skid**. Wipe off any oil, grease, mud, or other foreign matter. Check for broken welds. If weld broken, notify your supervisor.	Weld broken.

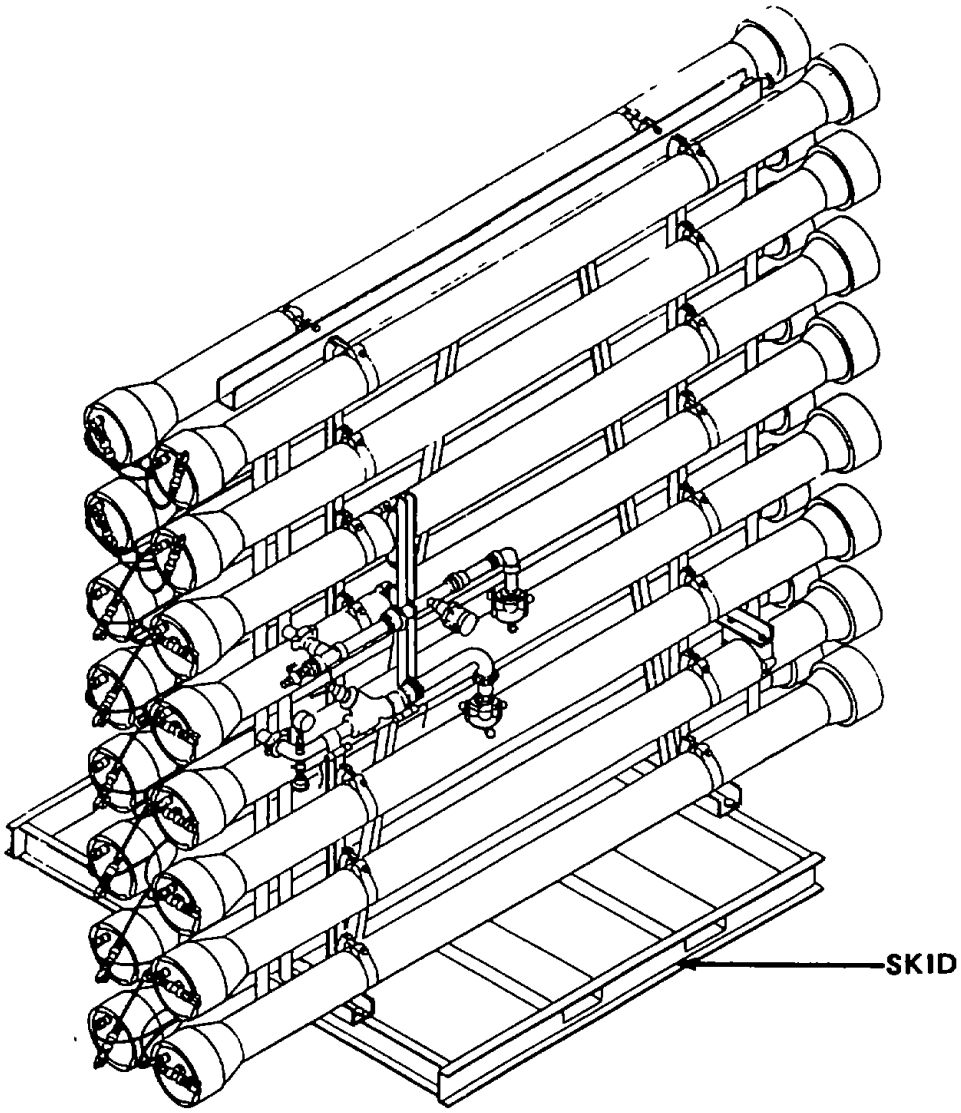

Table 2-1. Preventive Maintenance Checks and Services (Cont)

B - Before **D - During** **A - After** **M - Monthly**

Item No.	Interval B	Interval D	Interval A	Interval M	Item to be Inspected. Procedure	Equipment Is Not Ready/Available If:
					Reverse Osmosis Block Assembly (Cont) 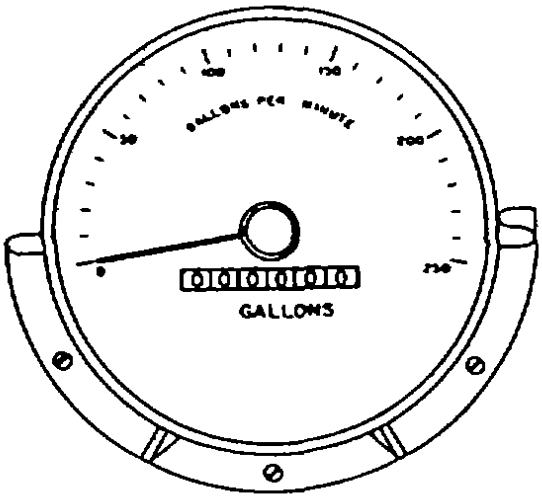	
46	●	●			**Gages**. Check for cracked or broken lenses and proper operation. If lenses cracked or broken or gage inoperable, notify your supervisor.	Lenses cracked or broken. Gage inoperable.

Table 2-1. Preventive Maintenance Checks and Services (Cont)

B - Before **D - During** **A - After** **M - Monthly**

Item No.	Interval B	Interval D	Interval A	Interval M	Item to be Inspected. Procedure	Equipment Is Not Ready/Available If:
					Reverse Osmosis Block Assembly (Cont)	
					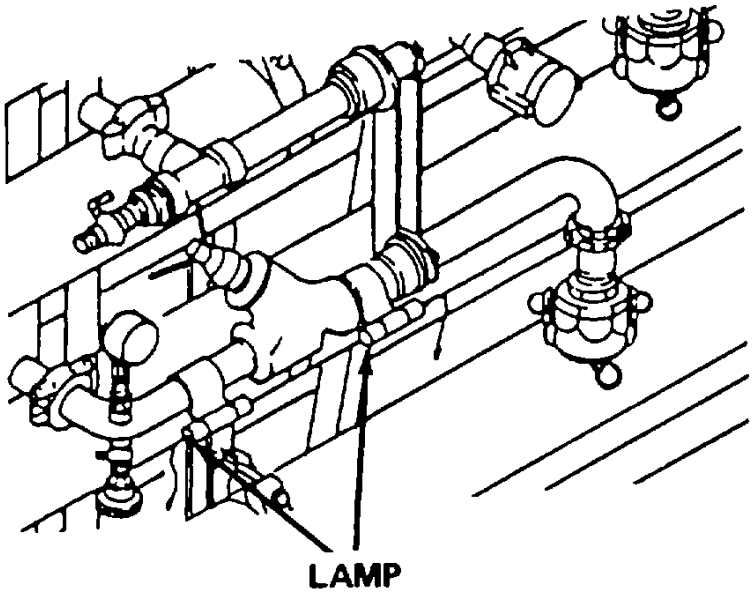	
47	●				**Lamps**. Check lamp operation by flipping toggle switch. If lamp does not light, notify your supervisor.	

Table 2-1. Preventive Maintenance Checks and Services (Cont)

B - Before **D - During** **A - After** **M - Monthly**

Item No.	Interval B	Interval D	Interval A	Interval M	Item to be Inspected. Procedure	Equipment Is Not Ready/Available If:
					Reverse Osmosis Block Assembly (Cont)	
48	●				**Valve V-7**. Check valve for ease of operation by turning. If valve doesn't turn, notify your supervisor.	Valve doesn't turn.

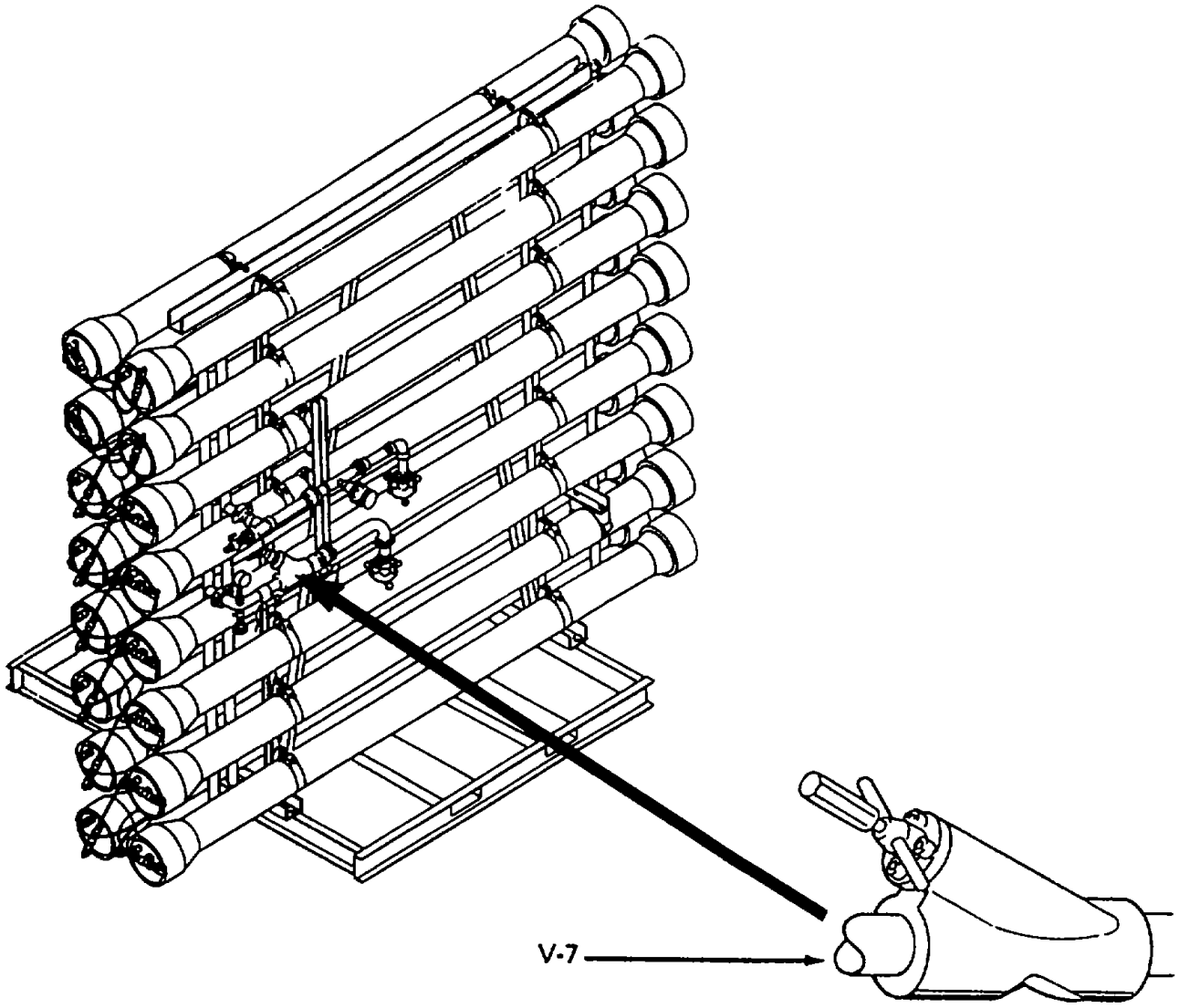

Table 2-1. Preventive Maintenance Checks and Services (Cont)

B - Before **D - During** **A - After** **M - Monthly**

Item No.	Interval B	Interval D	Interval A	Interval M	Item to be Inspected. Procedure	Equipment Is Not Ready/Available If:
					Reverse Osmosis Block Assembly (Cont)	
					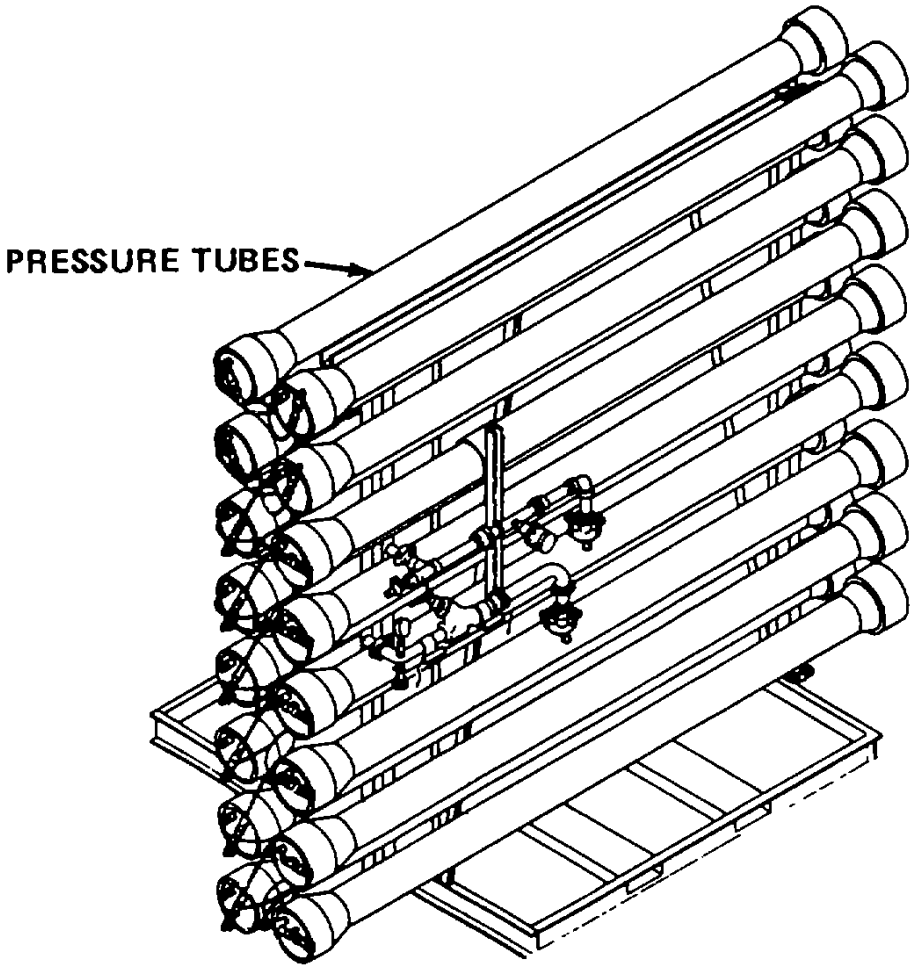	
49	●	●			**Pressure Tubes**. Check for damage, leaks, and loose attaching parts. If damage or leaks present or parts loose, notify your supervisor.	Damage or leaks present. Parts loose.

SECTION III. OPERATION UNDER USUAL CONDITIONS

2-4. ASSEMBLY AND PREPARATION FOR USE

a. Site Selection. Each of the assemblies must rest on a level, solid surface. The site must allow for easy drainage away from the assemblies.

b. Deployment. Arrange assemblies as shown below. Raw water pump assembly should be located near water source and within 500 ft of boost pump assembly.

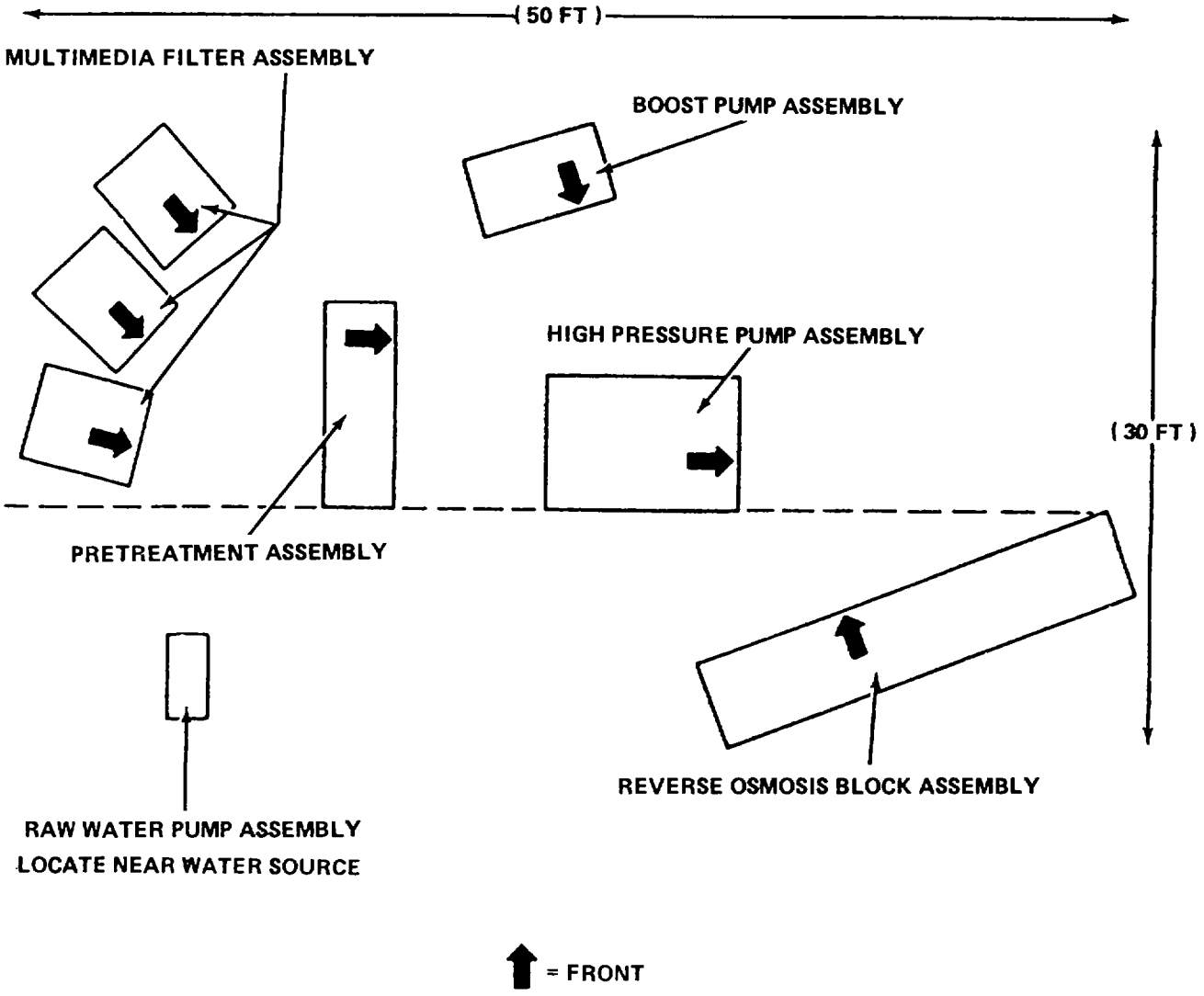

2-4. ASSEMBLY AND PREPARATION FOR USE (CONT)

c. Unpackaging

1 Remove crate bolts.

CAUTION

Remove sides of crate carefully to prevent damage which would prevent later use of crate.

2 Gently pry nailed sides of crate apart. When possible, tap gently on inside of crate to remove sides.

3 Follow lifting instructions on decals on skids and equipment. Using a suitable lifting device, lift equipment away from bottom of crate. Set crates aside for later use.

d. Tools Required for ROWPU Assembly. Tools that are required to assemble and install ROWPU are listed below. Before assembly operation begins, all tools should be located and inspected for damage. Report missing or damaged tools to your supervisor.

Tool	Use
Crowfoot wrench/extension (item 6, appendix B, Section III)	Install rigid tubes and flex tubes on reverse osmosis block assembly
Element removal tool (appendix C)	Install and remove osmosis elements
Prybar (appendix C)	Disassemble packing crates
Spanner wrench (item 8, appendix B, Section III)	Install hoses with threaded fittings
Wrench set (appendix C)	Remove bolts from crates; install grooved pipe couplings; and vent raw water pump and boost pump engines

2-4. ASSEMBLY AND PREPARATION FOR USE (CONT)

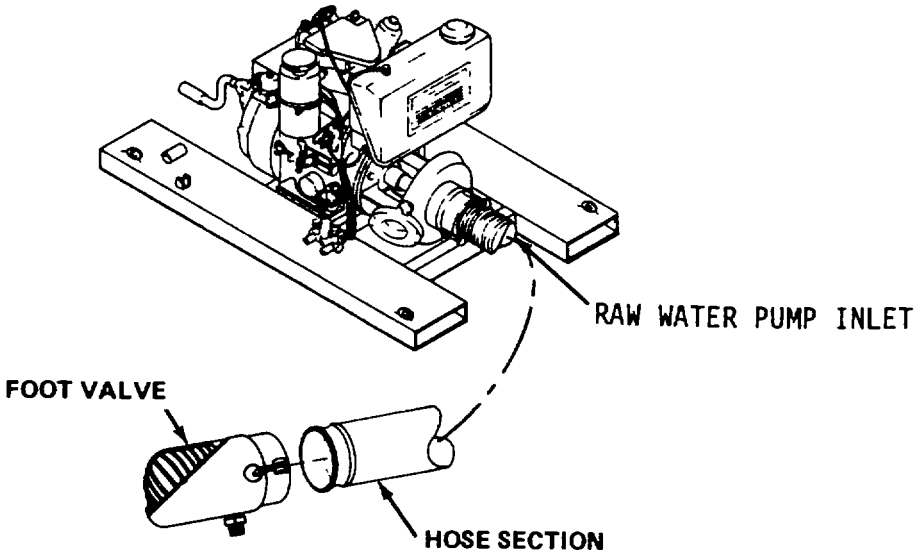

CAUTION

- To prevent leakage, close both cam arms at the same time.
- Do not strike cam arms with tools to close.

e. Assembly

1 Place 4 in. x 19 ft suction hose sections near raw water pump and assemble as required (up to five hoses for connections). Couple foot valve to one end of hose section. Close cam arms.

2 Couple hose sections together. Close cam arms.

3 Couple hose sections to raw water pump inlet. Close cam arms.

2-4. ASSEMBLY AND PREPARATION FOR USE (CONT)

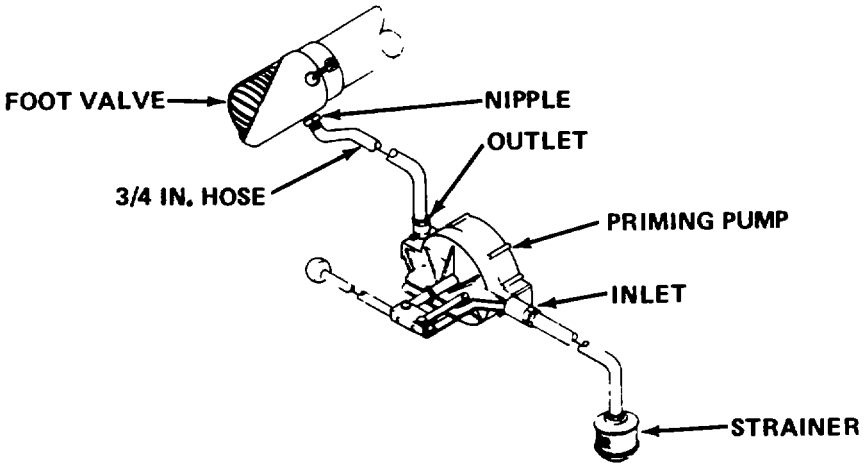

4 Attach 3/4 in. hose section to foot valve nipple. Attach other end of hose section to outlet of priming pump.

5 Attach 3/4 in. hose section to strainer. Attach other end of hose to inlet of priming pump.

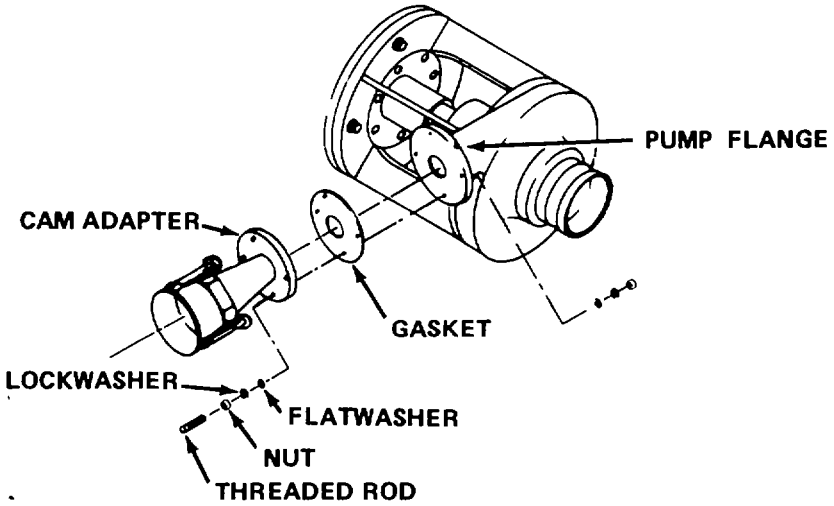

6 Install threaded rod through cam adapter, gasket, and pump flange. Place flatwasher, lockwasher, and nut on each end of rod. Hand-tighten nuts, leaving equal lengths of rod at both ends. Repeat for other three rods.

7 Tighten eight nuts alternately and equally.

2-4. ASSEMBLY AND PREPARATION FOR USE (CONT)

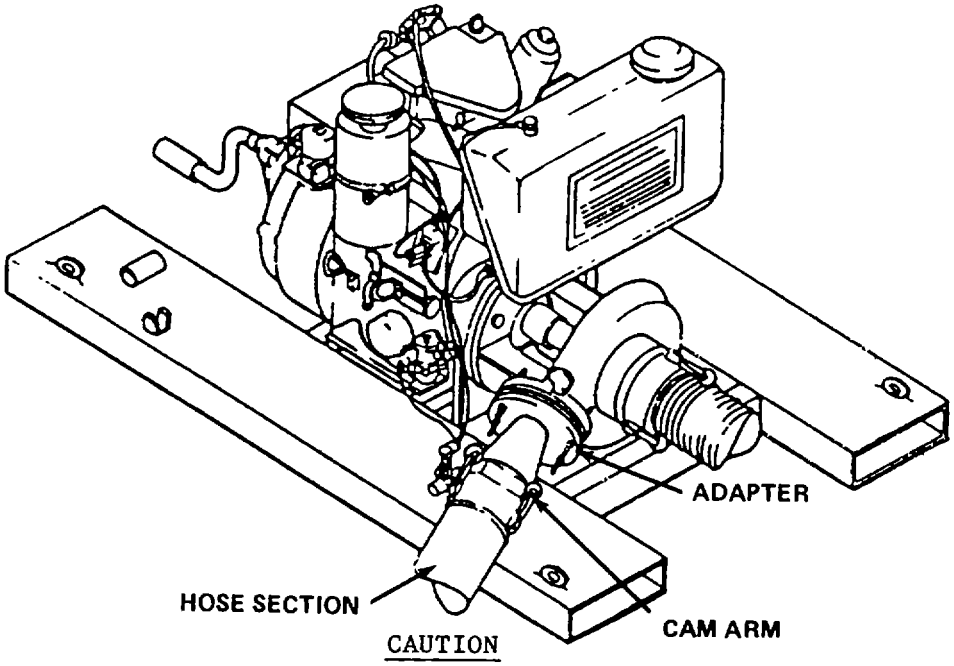

CAUTION

- To prevent leakage, close both cam arms at the same time.
- Do not strike cam arms with tools to close.

8 Couple one 4 in. x 100 ft collapsible hose section with brass fittings to adapter. Close cam arms.

9 Couple 4 in. x 100 ft discharge hose sections with brass fittings together as required (up to five hoses for connections). Close cam arms.

2-4. ASSEMBLY AND PREPARATION FOR USE (CONT)

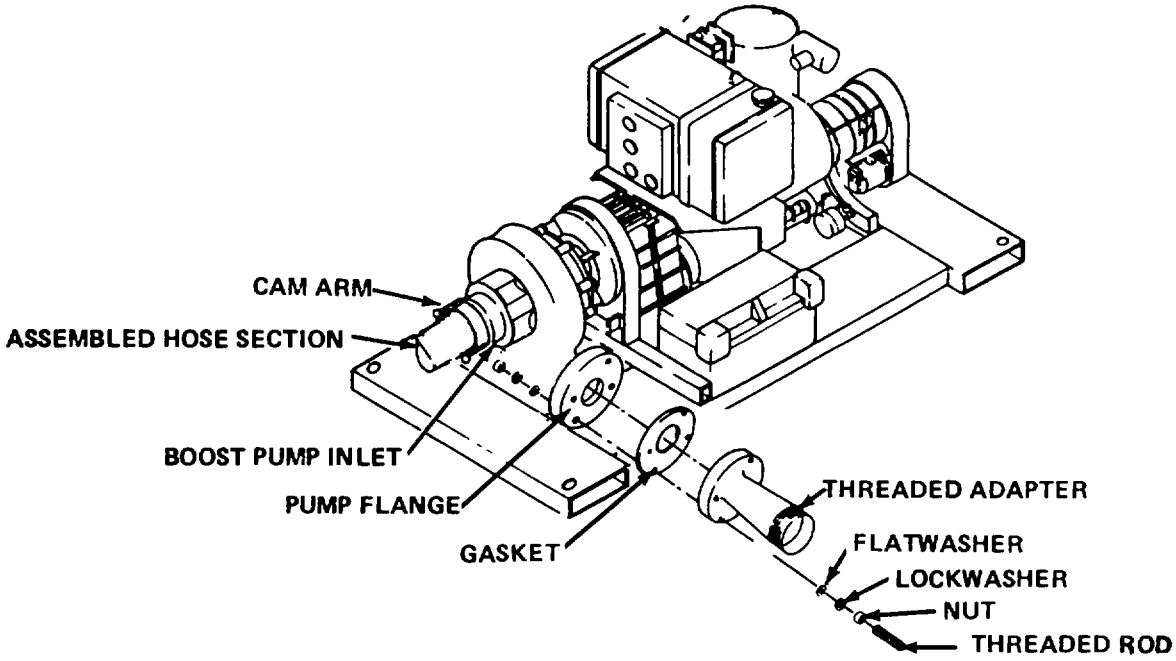

CAUTION

- To prevent leakage, close both cam arms at the same time.
- Do not strike cam arms with tools to close.

10 Couple end of assembled discharge hose sections to boost pump inlet. Close cam arms.

NOTE

Perform steps 11 and 12 if adapter is not already attached to boost pump.

11 Install threaded rod through threaded adapter gasket and pump flange. Place flatwasher, lockwasher, and nut on each end of rod. Hand-tighten nuts, leaving equal lengths of rod at both ends. Repeat for other three rods.

12 Tighten eight nuts alternately and equally.

13 Attach 3 in. x 20 ft canvas hose section to threaded adapter. Tighten with hose wrench.

14 Attach other end of canvas hose to pretreatment assembly inlet C-3. Tighten with hose wrench.

2-4. ASSEMBLY AND PREPARATION FOR USE (CONT)

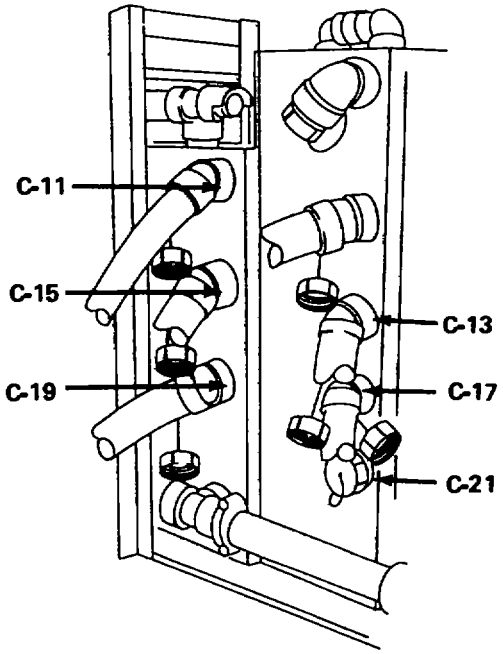

15 Attach 3 in. x 15 ft canvas hoses to connections C-ll, C-15, and C-19

16 Attach hose from C-11 to C-12 on multimedia filter. Repeat with hoses from C-15 to C-16 and C-19 to C-20.

17 Attach 3 in. x 12 ft canvas hoses to connections C-13, C-17, and C-21.

18 Attach hose from C-13 to C-14 on multimedia filter. Repeat with hoses from C-17 to C-18 and C-21 to C-22.

19 Remove petcock and adapter from top of each multimedia filter and set aside. Install vent valve in each multimedia filter.

2-4. ASSEMBLY AND PREPARATION FOR USE (CONT)

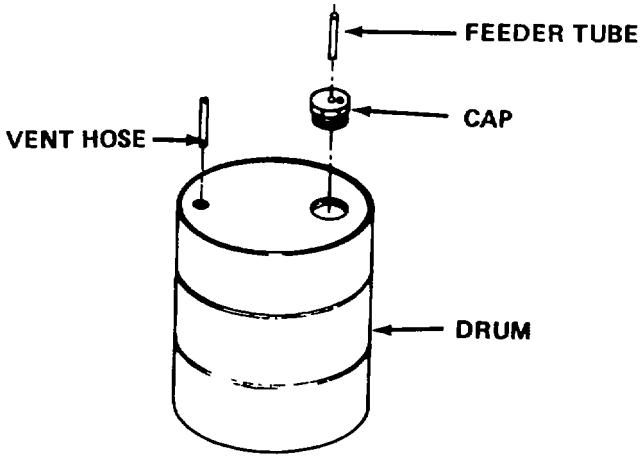

20 Place drum of coagulant aid near coagulant aid pump. Remove 2 in. cap from drum. Lower feeder tube into 2 in. hole in top of drum.

21 Insert feeder tube through filler cap.

22 Install filler cap in 2 in. hole in drum. Allow vent hose to trail over edge of drum.

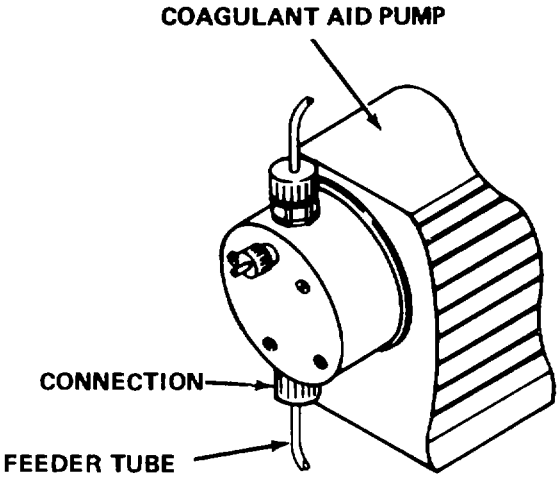

23 Remove connection on coagulant aid pump. Place feeder tube through connection. Install connection and tighten.

2-4. ASSEMBLY AND PREPARATION FOR USE (CONT)

24 Repeat steps 20 through 23 for scale inhibitor drum and scale inhibitor pump.

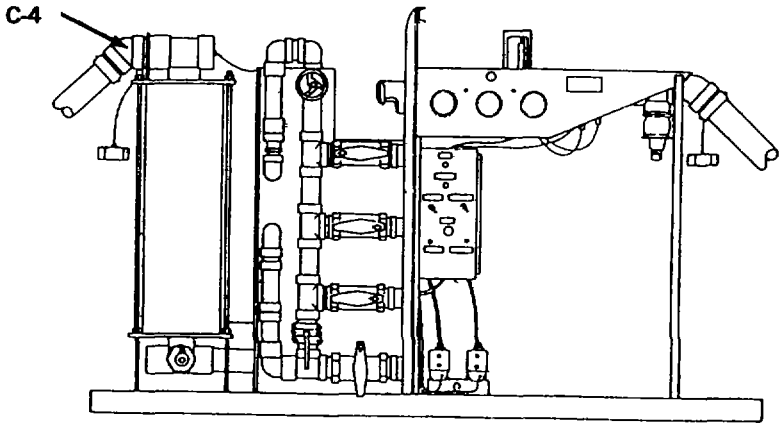

25 Attach 3 in. x 20 ft canvas hose to pretreatment outlet C-4.

26 Attach other end of canvas hose to high pressure pump inlet C-5.

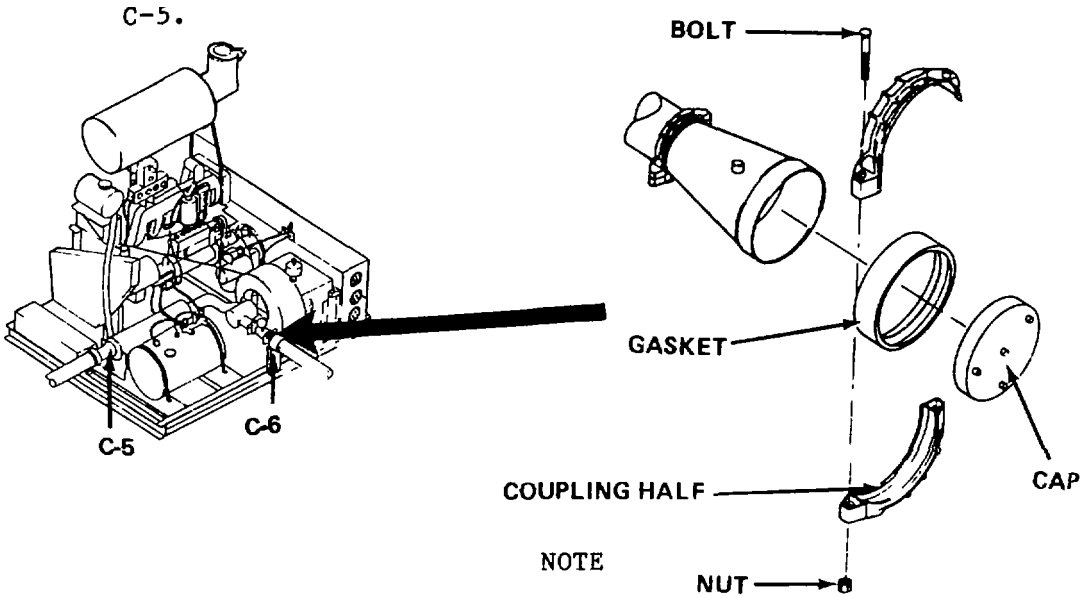

NOTE

It may be necessary to loosen 2 in. grooved pipe coupling to remove C-6 grooved pipe coupling.

27 Remove two nuts, two bolts, coupling halves, and gasket on C-6 grooved pipe coupling. Remove cap and set on skid.

2-4. ASSEMBLY AND PREPARATION FOR USE (CONT)

28 Check gasket for damage. If gasket damaged, replace with new gasket. Apply thin coat of silicone lubricant (item 5, appendix D) to gasket lips and outside of gasket.

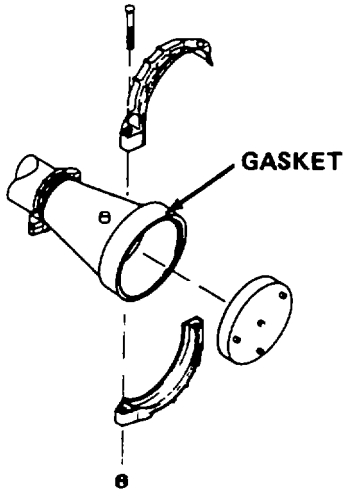

29 Place gasket over connection C-6, being sure it doesn't overhang end of connection.

30 Aline end (without coupling) of black rubber high pressure hose with connection. Slide gasket to center position between connection groove and hose groove. No portion of gasket should overhang grooves.

31 Place coupling halves over gasket. Make sure coupling half keys are in grooves on connection C-6 and hose.

32 Install two bolts. Place nuts on bolts and hand-tighten.

CAUTION

Overtightening nuts may cause gasket to pinch. Tighten nuts only until coupling halves are firmly together (metal-to-metal).

33 Tighten nuts alternately and equally until coupling halves are firmly together.

2-4. ASSEMBLY AND PREPARATION FOR USE (CONT)

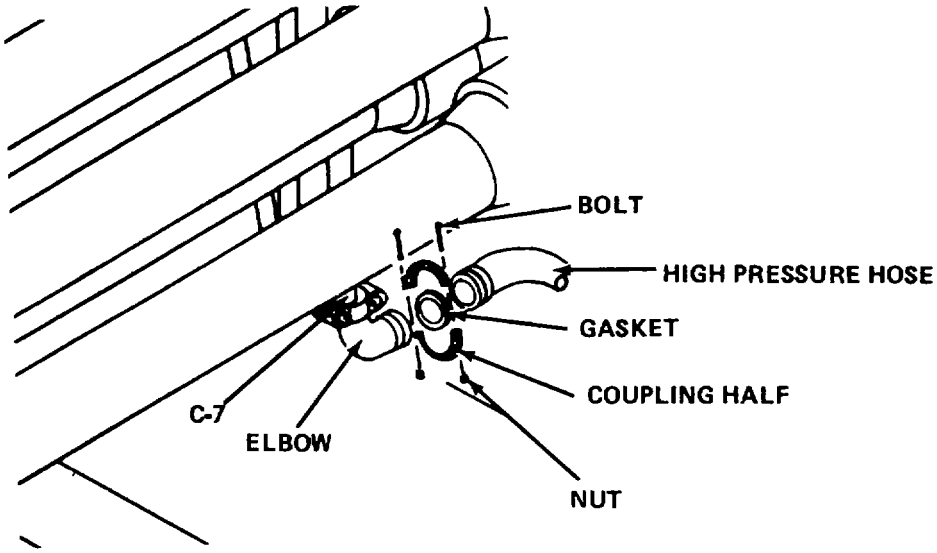

NOTE

- This procedure requires two persons.
- The following steps are for assembly of the C-7 connection elbow to the reverse osmosis block assembly and the assembly of the high pressure hose to elbow.

34 Remove two nuts, two bolts, coupling halves, and gasket on C-7 grooved pipe coupling. Remove cap and set on skid.

35 Check gasket for damage. If gasket damaged, replace with new gasket. Apply thin coat of silicone lubricant (item 5, appendix D) to gasket lips and outside of gasket.

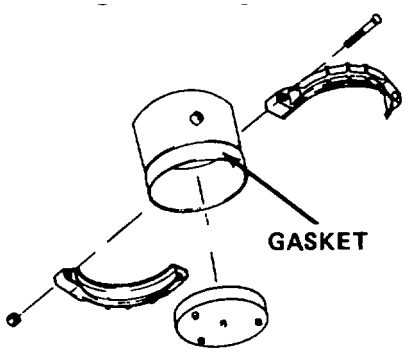

36 Place gasket over connection C-7, being sure it doesn't overhang end of connection.

2-4. ASSEMBLY AND PREPARATION FOR USE (CONT)

37 Aline end (without coupling) of black rubber high pressure hose with connection. Slide gasket to center position between connection groove and hose groove. No portion of gasket should overhang grooves.

38 Place grooved pipe coupling halves over gasket. Make sure grooved pipe coupling half keys are in grooves on connection C-7 and hose.

39 Install two bolts. Place nuts on bolts and hand-tighten.

CAUTION

Overtightening nuts may cause gasket to pinch. Tighten nuts only until coupling halves are firmly together (metal-to-metal).

40 Tighten nuts alternately and equally until grooved pipe coupling halves are firmly together. REVERSE OSMOSIS BLOCK ASSEMBLY

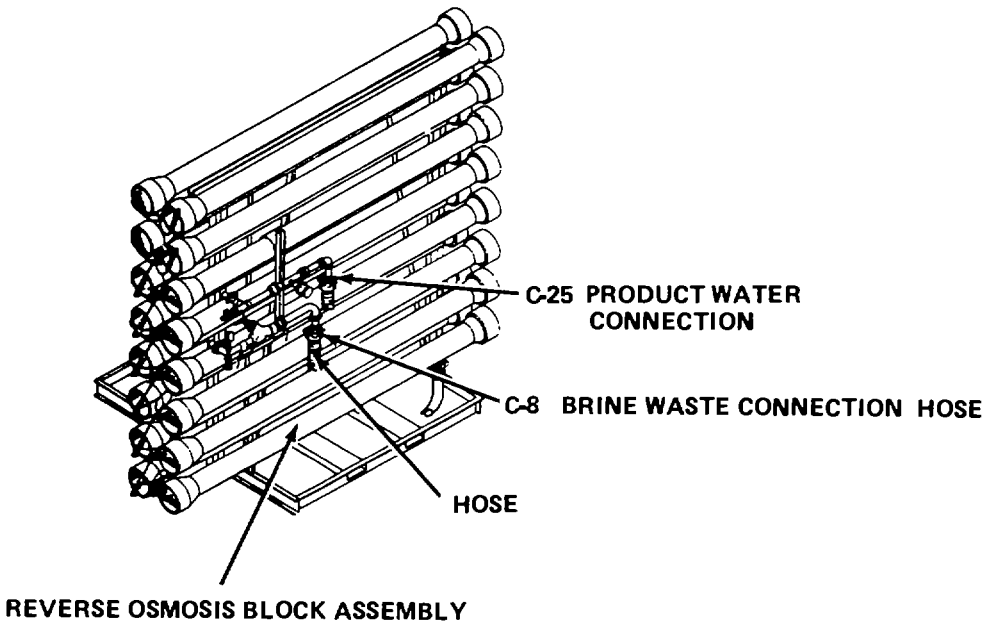

41 Attach 4 in. x 100 ft hose sections to product water connection C-25 and brine waste connection C-8 on reverse osmosis block assembly as required (up to five hoses for both connections).

2-4. ASSEMBLY AND PREPARATION FOR USE (CONT)

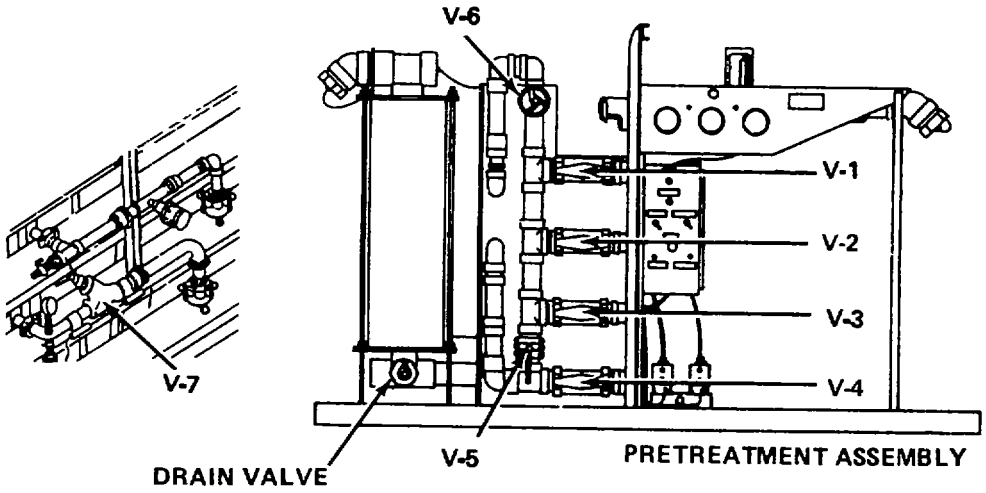

42 Place valves V-1 thru V-4 in the SERVICE position. Place valves V-5 and V-6 in CLOSED position. Turn cartridge filter drain valve right to close. Open valve V-7 three or four full turns.

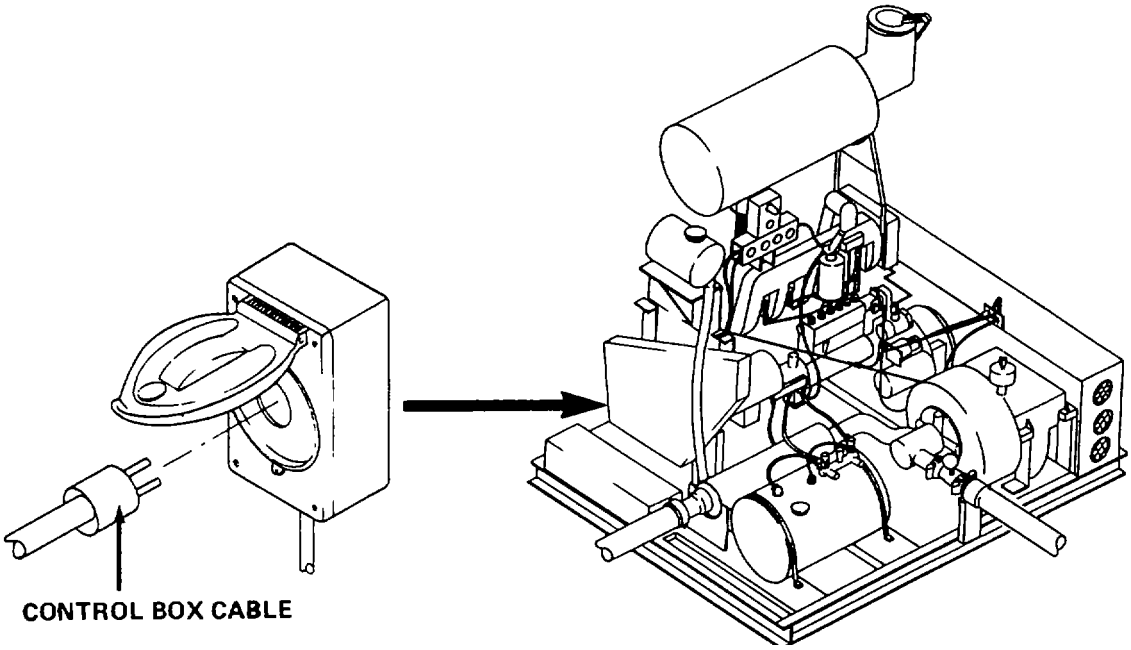

43 Insert control box cable in socket on high pressure pump assembly.

2-4. ASSEMBLY AND PREPARATION FOR USE (CONT)

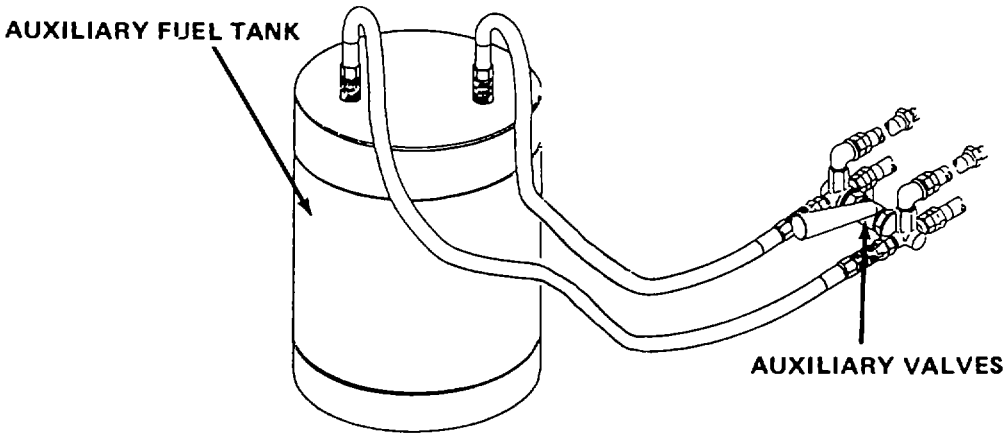

44 If auxiliary fuel tanks are being used, connect fuel and return lines to quick-disconnect fittings on fuel tanks and auxiliary fuel valves. Turn handles away from engine assembly (auxiliary position).

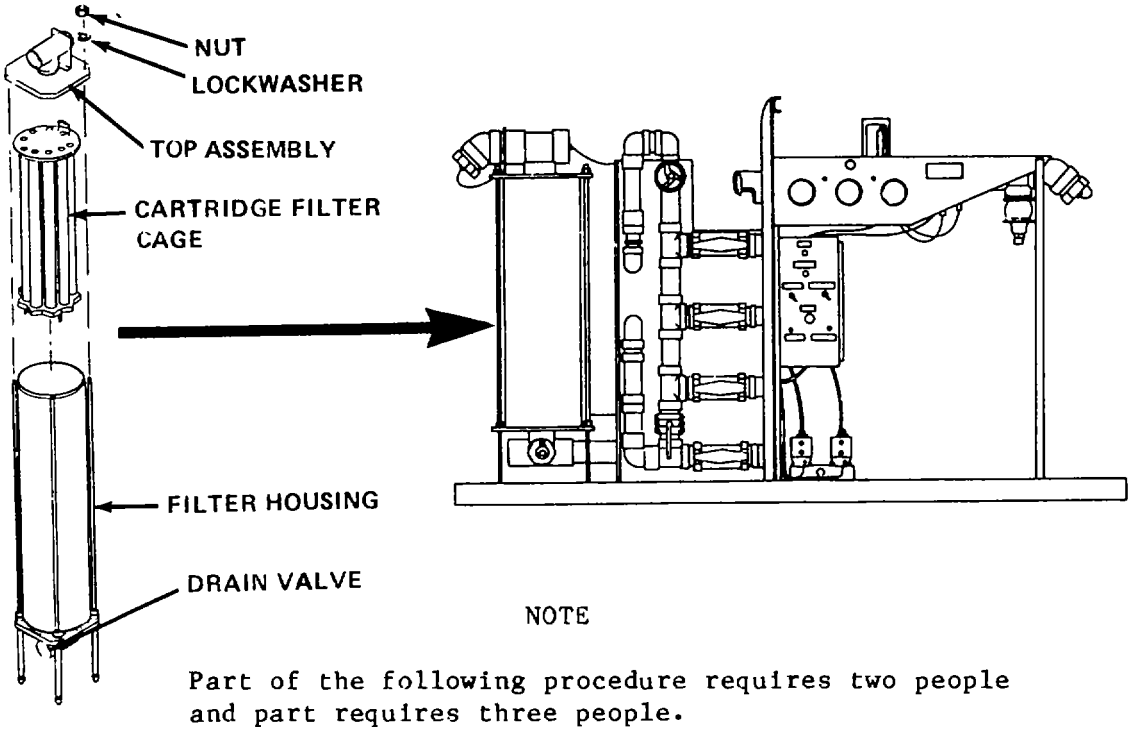

NOTE

Part of the following procedure requires two people and part requires three people.

f. Installation of Cartridge Filter Elements

1 Open cartridge filter drain valve. Remove four nuts and lockwashers at top of filter. Remove top assembly. Loosen line nut and remove tube.

2-4. ASSEMBLY AND PREPARATION FOR USE (CONT)

2 Using handles, lift cartridge filter cage assembly from filter housing. Place it upside down on a clean work surface.

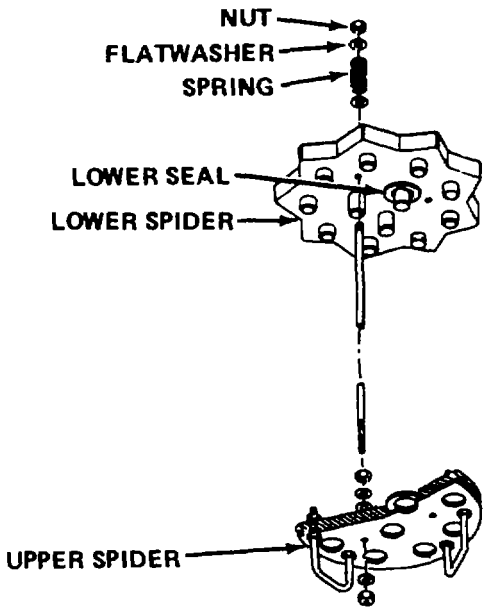

3 Remove three nuts, six flatwashers, and three springs. Lift and remove lower spider from tie rods.

CAUTION

DO NOT attempt to remove upper or lower seals. If seals come loose, be sure to install upper seals on upper spider and lower seals on lower spider. Failure to install seals correctly may result in water leakage.

4 Inspect upper and lower spiders for loose or damaged seals. Install loose seals. If seal is damaged or missing, notify your supervisor.

5 Clean internal parts and inside filter housing with water. Hose down with clean water.

2-4. ASSEMBLY AND PREPARATION FOR USE (CONT)

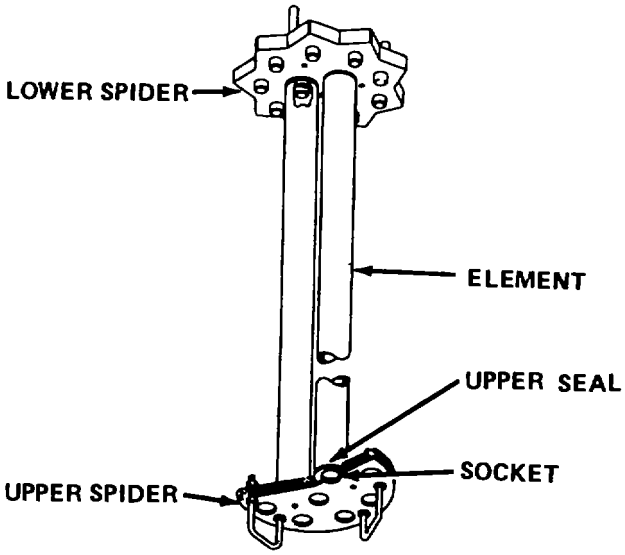

6 Making sure that seals stay in sockets, place three center elements in center sockets on upper spider.

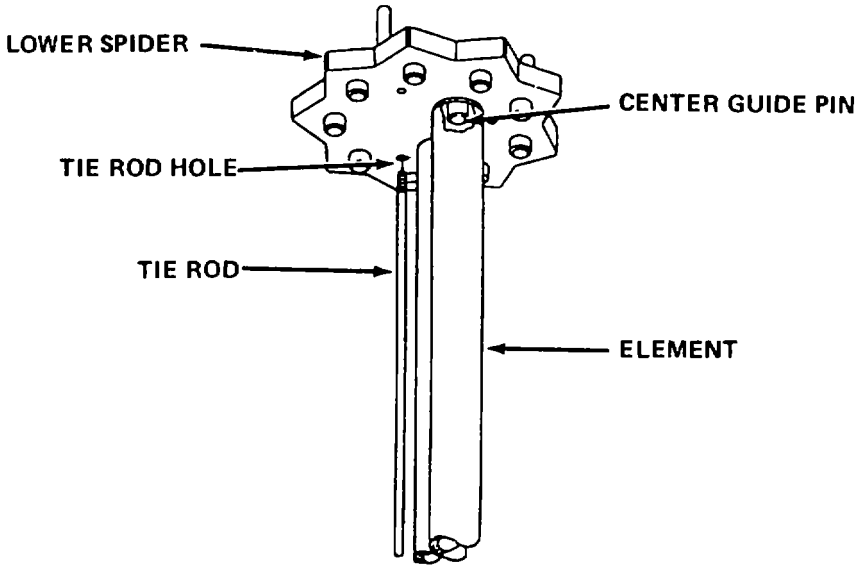

7 Place the lower spider in position so that tie rod holes on spider aline with tie rods, and center guide pins just engage filter element core tubes.

2-4. ASSEMBLY AND PREPARATION FOR USE (CONT)

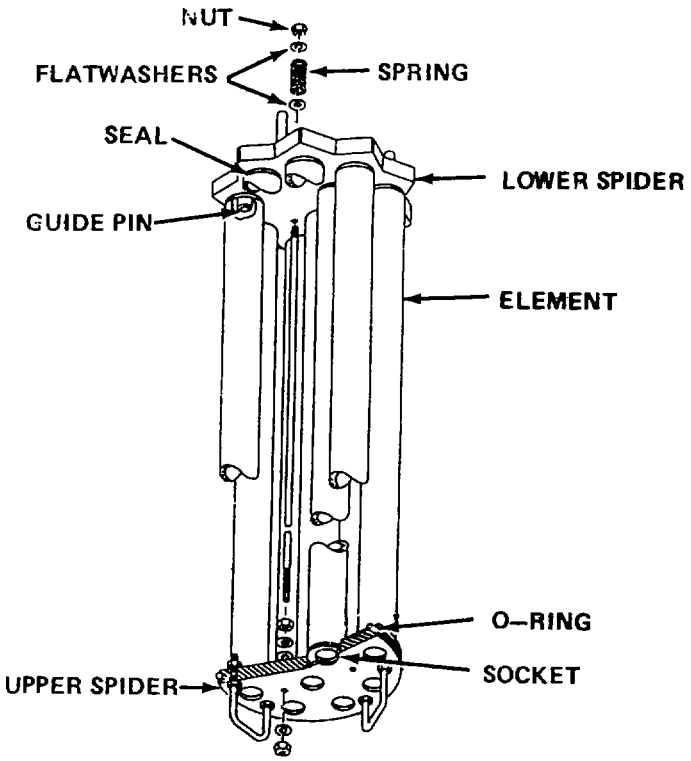

8 Making sure that seals stay in sockets, place nine outer elements in outer sockets on upper spider.

9 Slowly press lower spider down while alining outer filter elements with guide pins.

10 Install three nuts, six flatwashers, and three springs. Tighten nuts until they make contact with top flatwashers, then tighten about seven more turns.

11 Lightly lubricate O-ring at top of cartridge cage assembly with silicone lubricant (item 5, appendix D).

2-4. ASSEMBLY AND PREPARATION FOR USE (CONT)

WARNING

To prevent injury to personnel, two personnel are required to lower cartridge filter cage assembly into housing.

CAUTION

Be careful not to damage O-ring when installing cartridge filter cage assembly.

12 Turn cartridge filter cage assembly upright and lower into filter housing.

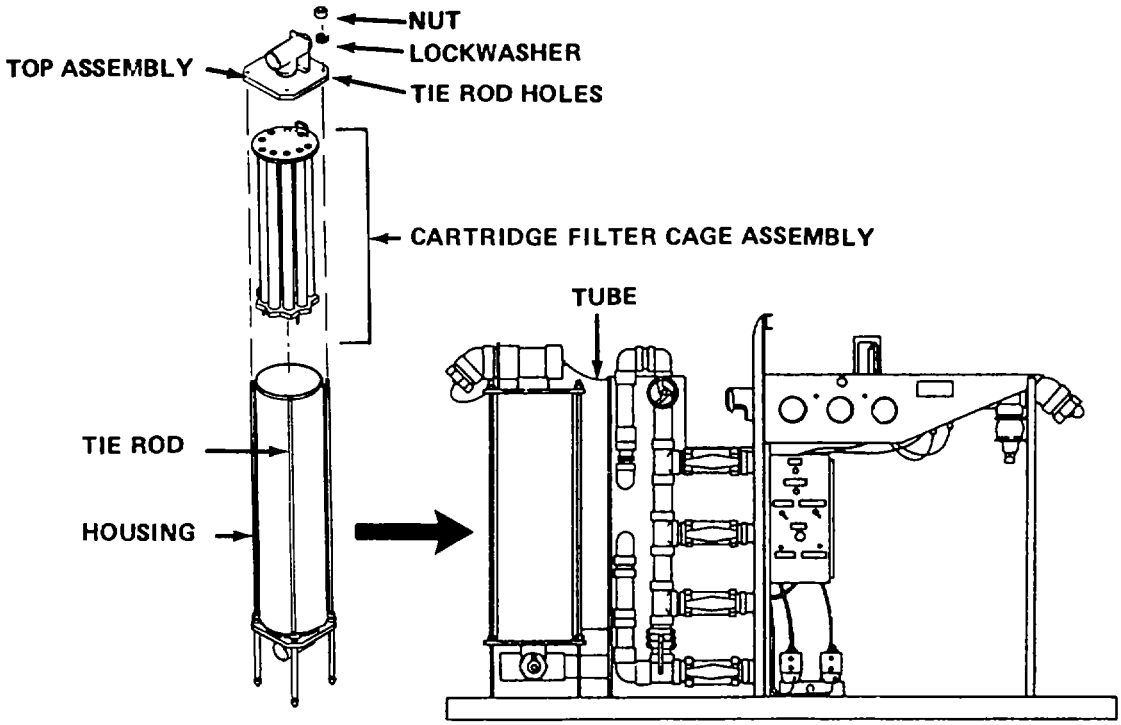

13 Place top assembly over housing with tie rods inserted in tie rod holes.

14 Install four nuts on tie rods and tighten.

15 Connect tube and close drain valve.

2-4. ASSEMBLY AND PREPARATION FOR USE (CONT)

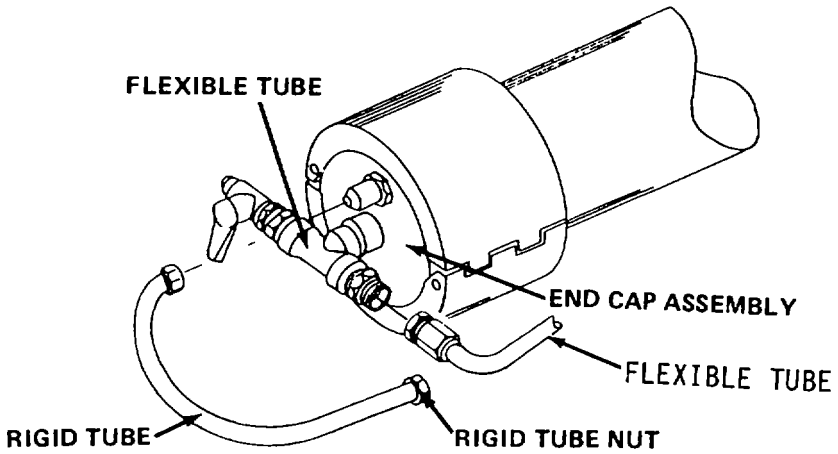

NOTE

- This procedure begins at product water end of reverse osmosis block assembly.
- Part of this procedure requires two personnel.

g. Installation of Reverse Osmosis Membrane Elements

1 Tag (item 13, appendix D) all rigid tube and flexible tubes for reinstallation.

2 Loosen rigid tube nut at manifold. DO NOT remove. Using ratchet handle, extension, and crowfoot wrench (section III, appendix B, items 2, 1, and 6), remove rigid tube nut from end cap assembly. Swing tube away from end cap assembly.

3 Loosen flexible tube nut. Remove flexible tube from end cap assembly.

2-4. ASSEMBLY AND PREPARATION FOR USE (CONT)

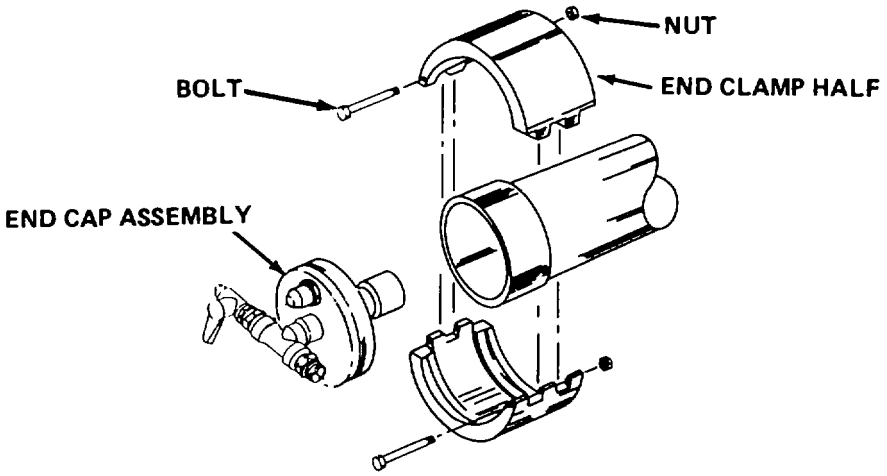

4 Remove two end clamp bolts, two nuts, and two end clamp halves. Set aside for installation.

5 Gently work end cap assembly back and forth to remove from pressure tube. Set aside in a clean place. Go to other (feedwater) end of pressure tube. 6 Loosen rigid tube nut at manifold. DO NOT remove. Remove rigid tube nut from end cap assembly. Swing tube away from end cap assembly.

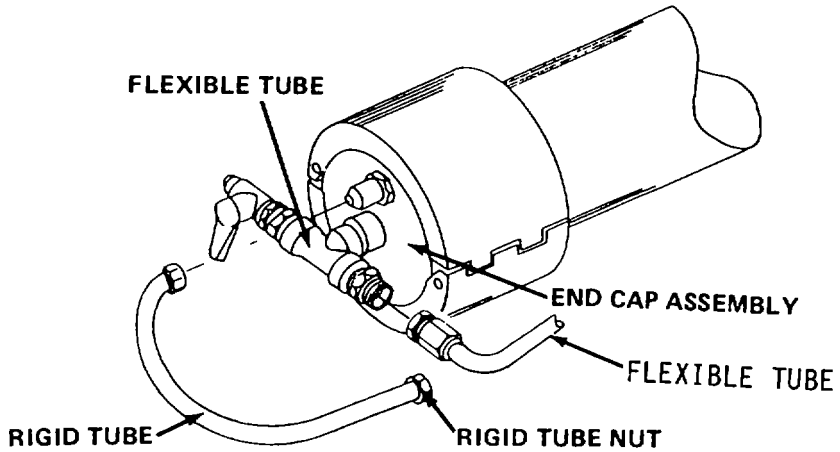

6 Loosen rigid tube nut at manifold. DO NOT remove. Remove rigid tube nut from end cap assembly. Swing tube away from end cap assembly.

2-4. ASSEMBLY AND PREPARATION FOR USE (CONT)

7 Remove two bolts, two nuts, and two end clamp halves. Set aside for installation.

8 Gently work end cap assembly back and forth to remove from pressure tube. Set aside in a clean place.

9 Using garden hose, rinse out inside of tubes.

10 Remove brine seal from reverse osmosis membrane element. Inspect seal for damage. If damaged, notify your supervisor. Lightly coat seal with silicone lubricant (item 5, appendix D). Install seal on element.

NOTE

Make sure that lip of brine seal faces other (product water) end of pressure tube.

11 Place lead end of element in feedwater end of pressure tube. Check to see that brine seal is properly in place.

2-4. ASSEMBLY AND PREPARATION FOR USE (CONT)

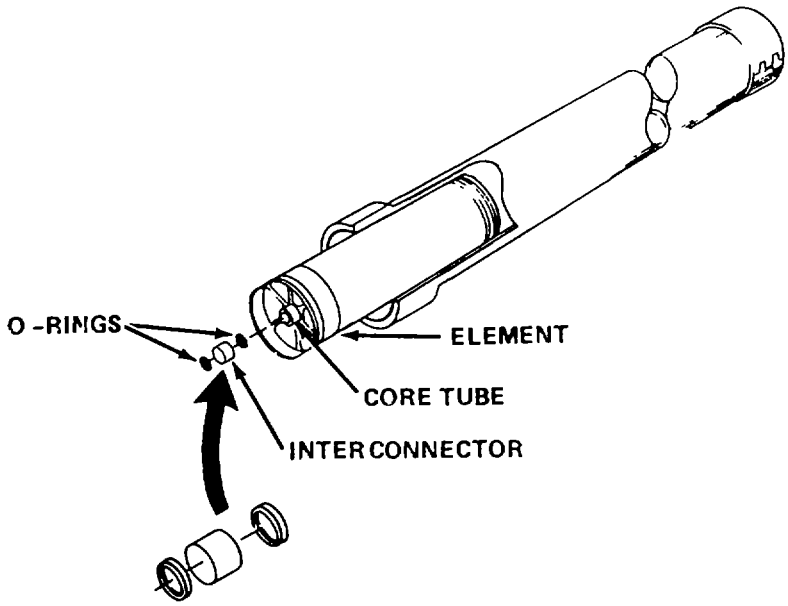

12 Remove two O-rings from interconnector. Lightly coat O-rings with silicone lubricant (item 5, appendix D). Install O-rings on interconnector.

13 Insert interconnector with O-rings on core tube of element.

14 Slide element about three-quarters of the way into tube. 15 Remove brine seal from next element. Inspect seal for damage. If damaged, notify your supervisor. Lightly coat seal with silicone lubricant (item 5, appendix D). Install seal on element.

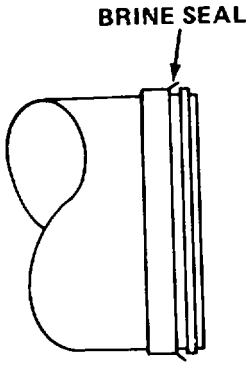

15 Remove brine seal from next element. Inspect seal for damage. If damaged, notify your supervisor. Lightly coat seal with silicone lubricant (item 5, appendix D). Install seal on element.

2-4. ASSEMBLY AND PREPARATION FOR USE (CONT)

CAUTION

DO NOT let weight of element rest on interconnector. It may cause damage to interconnector.

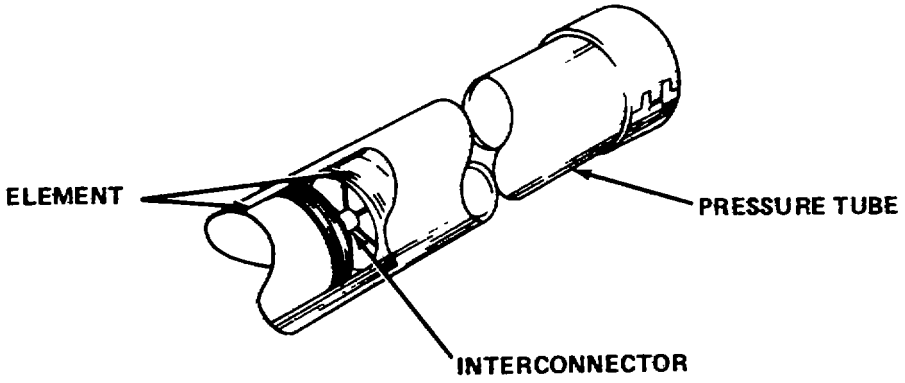

16 Have one person support weight of next element while the other installs it on interconnector. Slide element about three-quarters of the way into tube. Repeat steps 11 through 15 for other three interconnectors and elements.

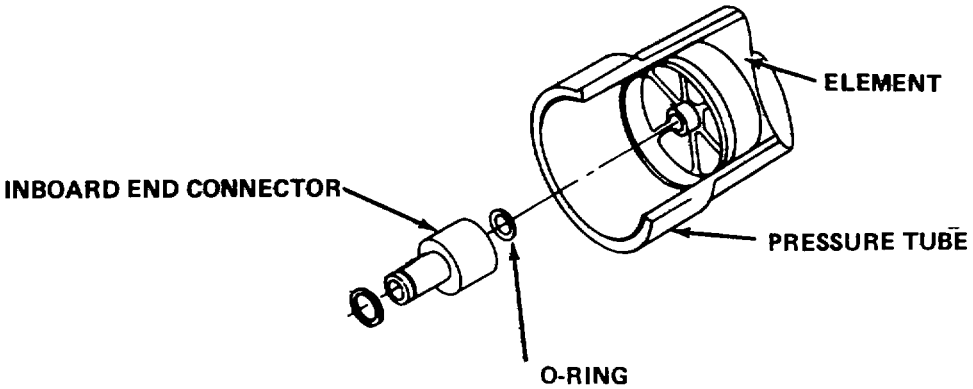

17 Lightly coat inboard end connector O-rings with silicone lubricant (item 5, appendix D). Insert O rings in grooves in connector.

2-4. ASSEMBLY AND PREPARATION FOR USE (CONT)

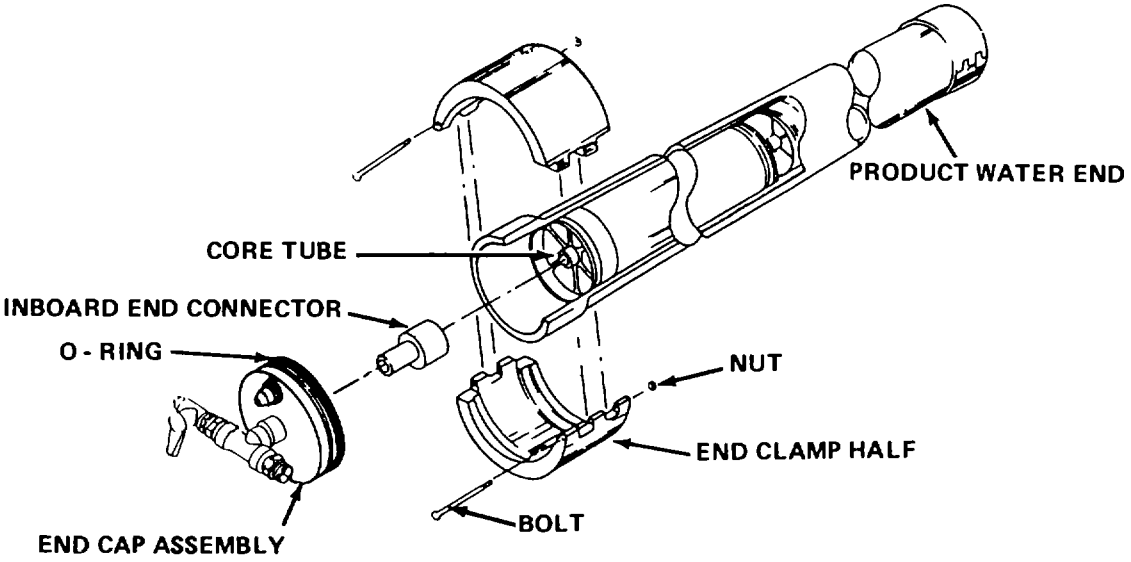

18 Insert inboard end connector with O-rings on core tube of element.

19 Using clean rag and water, wash end cap assembly.

20 Lightly coat outside of end cap assembly O-ring with silicone lubricant (item 5, appendix D). Aline end cap assembly with inboard end connector.

21 Rotate end cap assembly to aline with rigid tube. Gently push end cap assembly onto inboard end connector in pressure tube.

22 Swing rigid tube back over end cap assembly. Install tube on end cap assembly. Tighten tube nut.

23 Tighten rigid tube nut at manifold.

24 Install end clamp halves. Install two bolts and two nuts. Go to other (product water) end of pressure tube.

2-4. ASSEMBLY AND PREPARATION FOR USE (CONT)

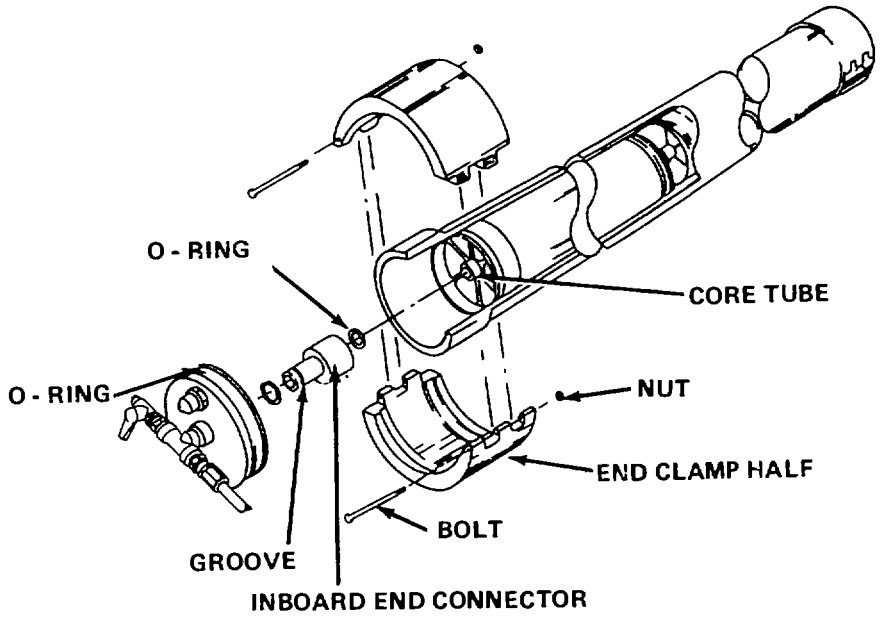

25 Lightly coat inboard end connector O-ring with silicone lubricant (item 5, appendix D). Insert O-rings in groove of inboard end connector.

26 Insert inboard end connector with O-ring on core tube of element.

27 Using clean rag and water, wash end cap assembly.

28 Lightly coat outside of end cap assembly O-rings with silicone lubricant (item 5, appendix D). Aline end cap assembly with inboard end connector.

29 Rotate end cap assembly to aline with rigid tube. Gently push end cap assembly onto inboard end connector in pressure tube.

30 Swing rigid tube back over end cap assembly. Install tube on end cap assembly. Tighten rigid tube nut and remove tag.

31 Tighten rigid tube nut at manifold.

32 Install flexible tube on end clamp assembly. Tighten flexible tube nut and remove tag.

33 Install end clamp halves. Install two bolts and two nuts.

34 Repeat steps 1 through 33 for other 15 pressure tubes.

2-5. STARTUP

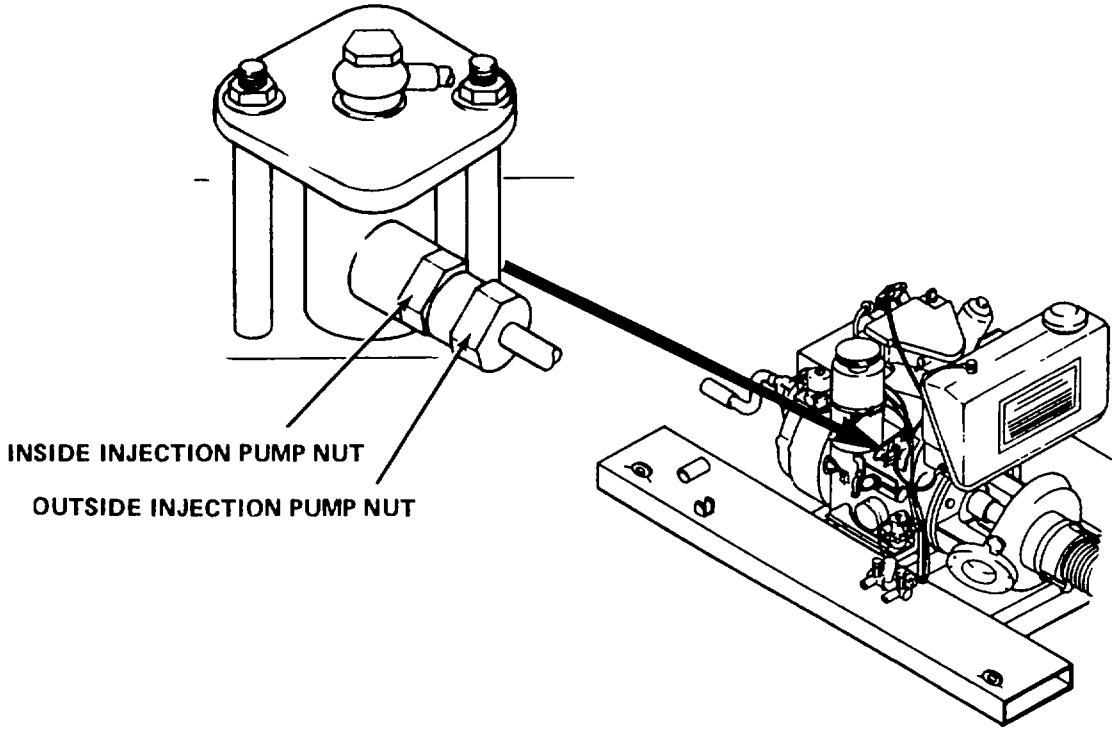

NOTE

Perform before (B) PMCS prior to startup.

a. Venting Raw Water Pump Diesel Engine Fuel System

1 Loosen outside injection pump nut one-half turn. Loosen inside injection pump nut one-half turn.

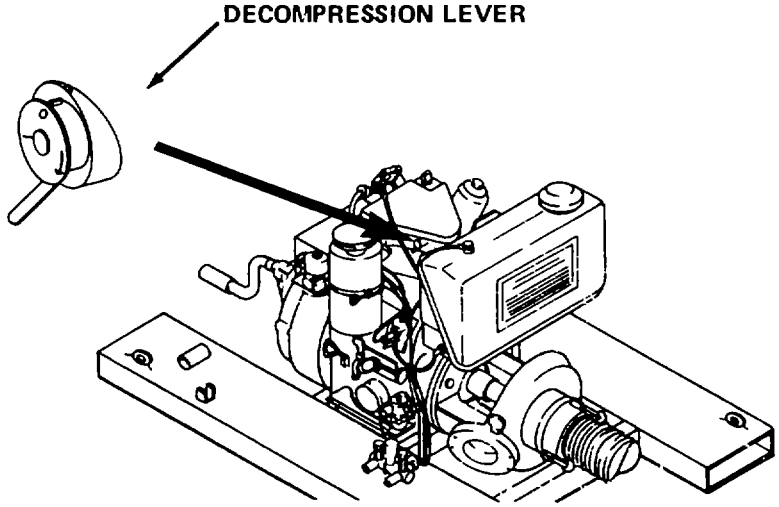

2 Set decompression lever to position 1.

2-5. STARTUP (CONT)

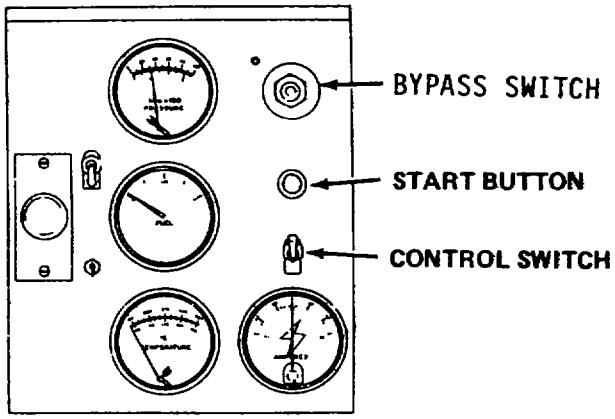

WARNING

To prevent fire or explosion, keep sparks and open flame away from fuel.

3 If battery operable, flip control switch up. Hold bypass switch down and push start button. Hold switch and start button down until bubble-free fuel comes out at nuts. If battery inoperable, insert crank and turn right until bubble-free fuel comes out at nuts. Set decompression lever to 0.

4 Tighten inside injection pump nut. Tighten outside injection pump nut.

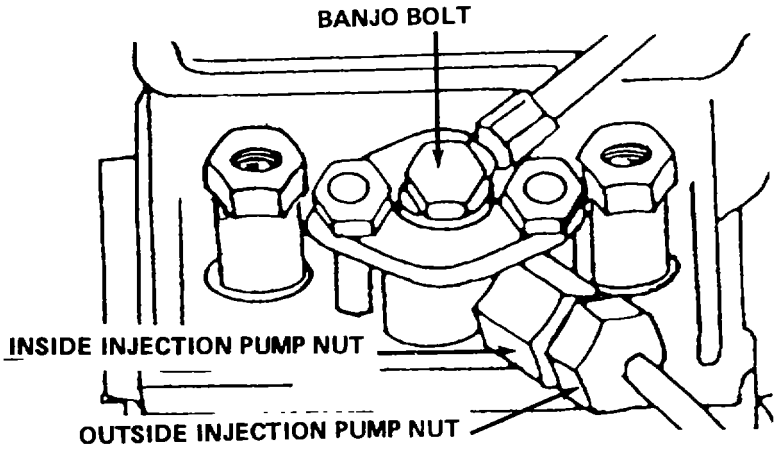

5 Loosen banjo bolt one-half turn.

2-5. STARTUP (CONT)

WARNING

To prevent fire or explosion, keep sparks and open flame away from fuel.

6 Set decompression lever to position 1.

7 If battery operable, flip control switch up. Hold bypass switch down and push start button. Hold switch and start button down until bubble-free fuel comes out at cap nut. If battery inoperable, insert crank and turn right until bubble-free fuel comes out at cap nut. Set decompression lever to 0.

8 Tighten banjo bolt.

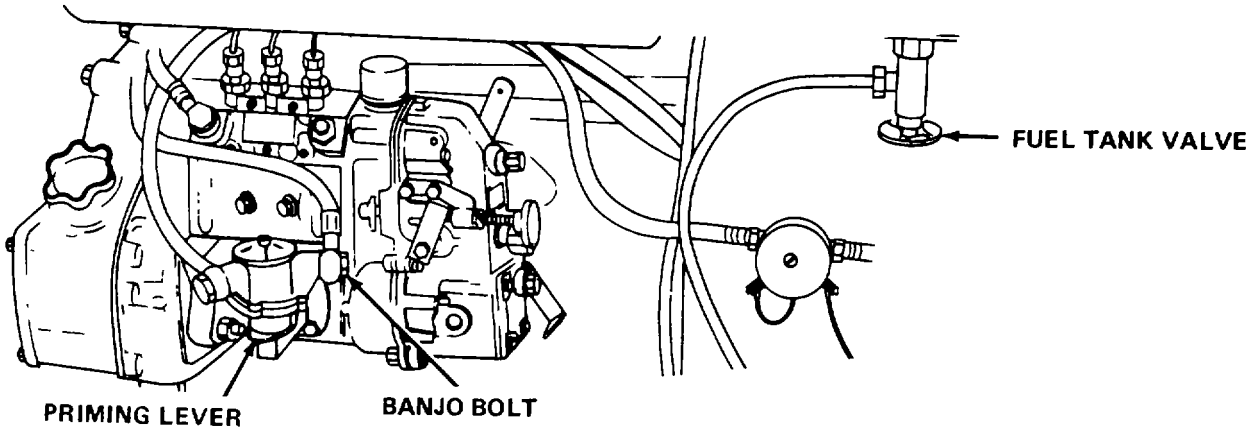

b. Venting Boost Pump Diesel Engine Fuel System

1 Open fuel tank valve. Loosen banjo bolt.

WARNING

To prevent fire or explosion, keep sparks and open flame away from fuel.

2 Pump priming lever on feed pump until fuel comes out at banjo bolt.

3 Tighten banjo bolt.

2-5. STARTUP (CONT)

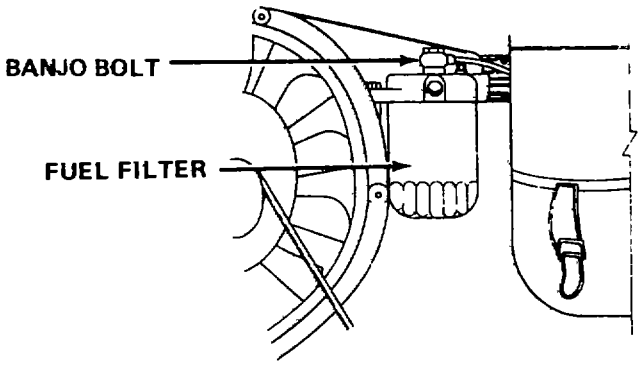

WARNING

To prevent fire or explosion, keep sparks and open flame away from fuel.

4 Loosen fuel filter banjo bolt.

5 Pump priming lever on feed pump until fuel comes out at banjo bolt.

6 Tighten banjo bolt.

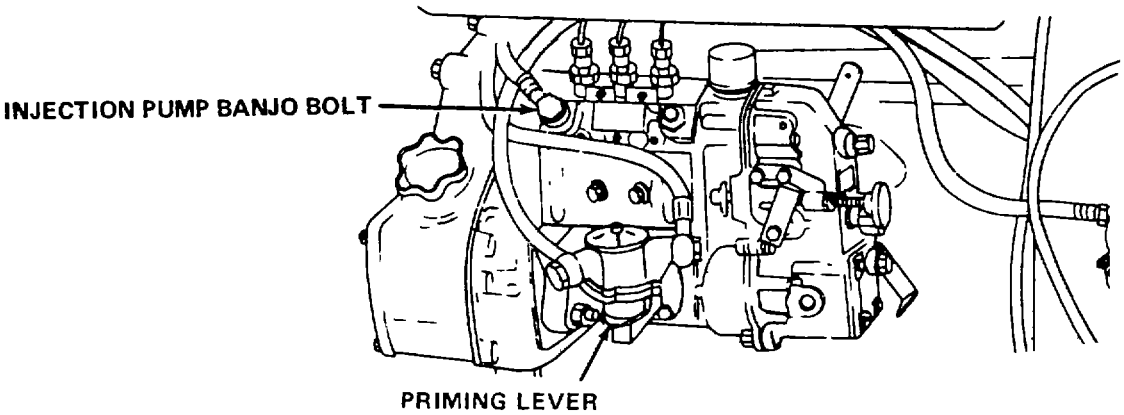

7 Loosen injection pump banjo bolt.

WARNING

To prevent fire or explosion, keep sparks and open flame away from fuel.

8 Pump priming lever on feed pump until fuel comes out at banjo bolt.

9 Tighten banjo bolt.

2-5. STARTUP (CONT)

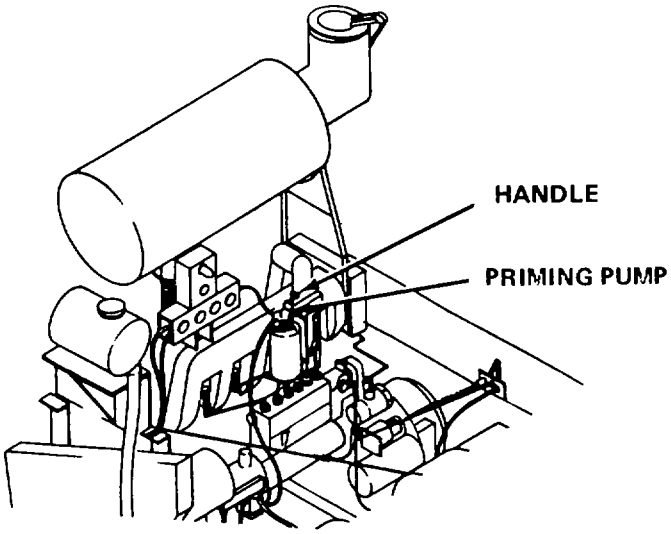

c. Venting High Pressure Pump Diesel Engine Fuel System

1 Turn handle left to unlock priming pump.

2 Pump priming pump until resistance is felt.

3 Turn handle right to lock fuel priming pump.

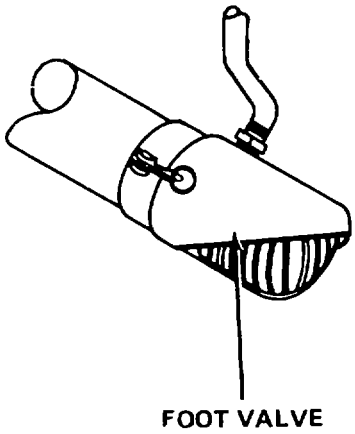

d. Raw Water Pump Priming

1 Make sure foot valve is closed. Place foot valve in raw water source.

2-5. STARTUP (CONT)

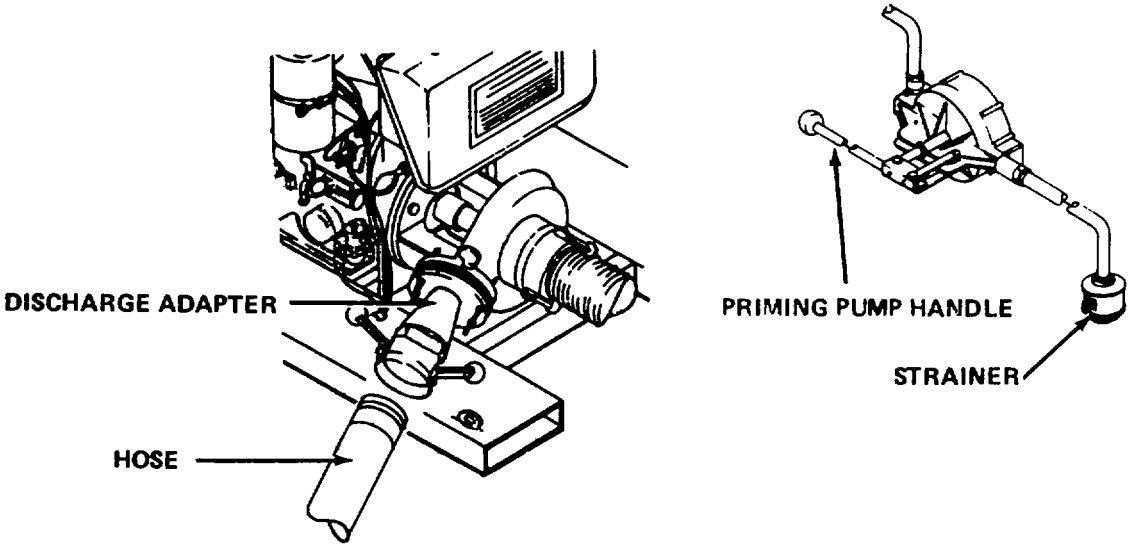

2 Remove hose from raw water pump discharge adapter.

3 Place hand priming pump strainer in raw water source. Pump priming pump handle until water can be seen coming from raw water pump discharge adapter.

4 Install hose on raw water pump discharge adapter.

e. Raw Water Pump Diesel Engine Startup

WARNING

Hearing loss may result from operating system without hearing protection.

CAUTION

To prevent damage to equipment, do not operate pump without water flow.

NOTE

Follow steps 2 thru 4 if battery is operable. Follow steps 5 thru 7 if battery is inoperable.

1 Turn decompression lever right to position 1.

2-5. STARTUP (CONT)

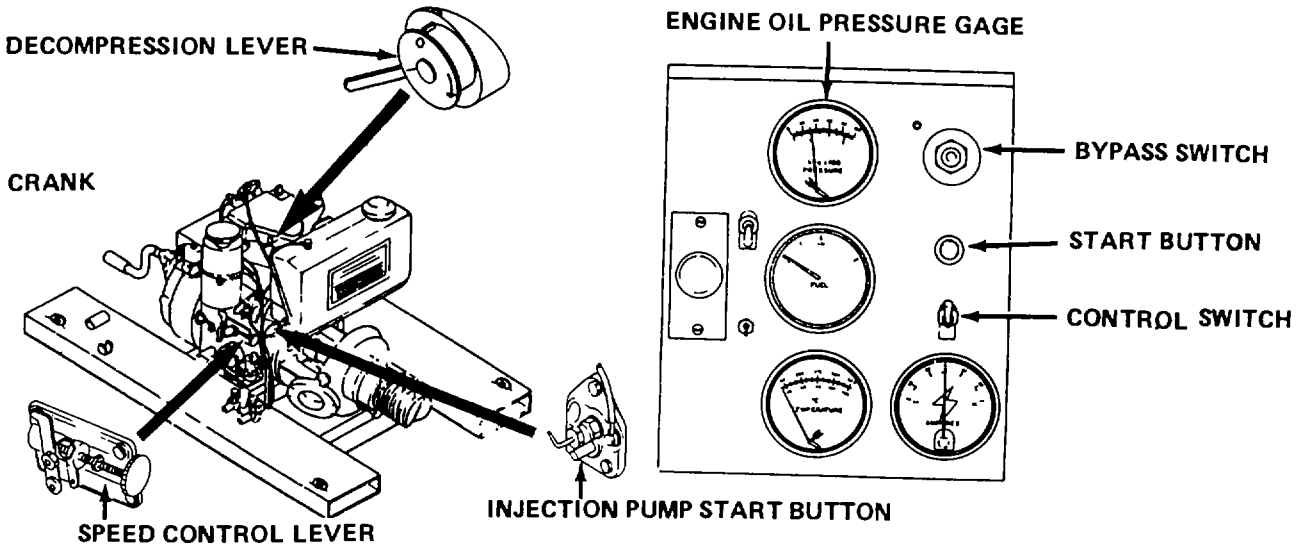

2 Press injection pump start button. At the same time, turn speed control screw to right to move speed control lever to center position.

3 Flip control switch up. Hold bypass switch down and press start button. When engine starts, let up start button. Hold down bypass switch until engine oil pressure gage shows 50 psi (3. 4 kPa x 100). Go to step 7.

4 Flip control switch up. Turn decompression lever right to position 1.

5 Press injection pump start button. At the same time, turn speed control screw right to move speed control lever to center position.

6 Hold bypass switch down and turn crank as fast as possible. Decompression lever will move to 0 position. Continue to turn crank rapidly until engine starts. Hold down bypass switch until engine oil pressure gage shows 50 psi (3.4 kPa x 100).

2-5. STARTUP (CONT)

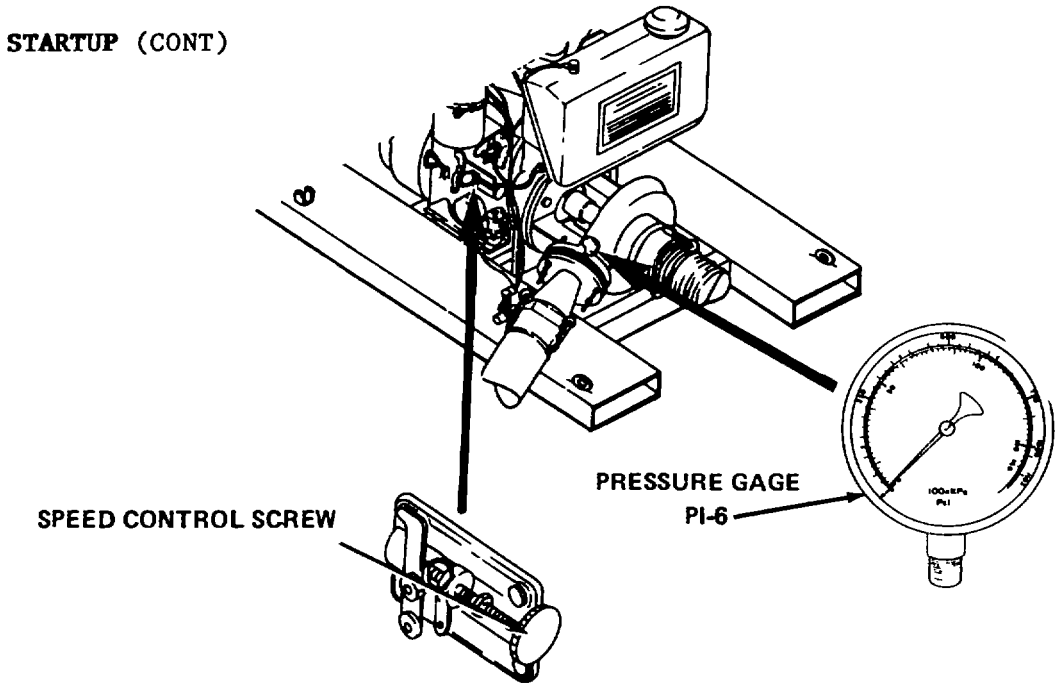

7 Set engine speed for reading of 50 psi (3.4 kPa x 100) at gage PI-6. Turn speed control screw right to increase speed. Turn left to decrease speed.

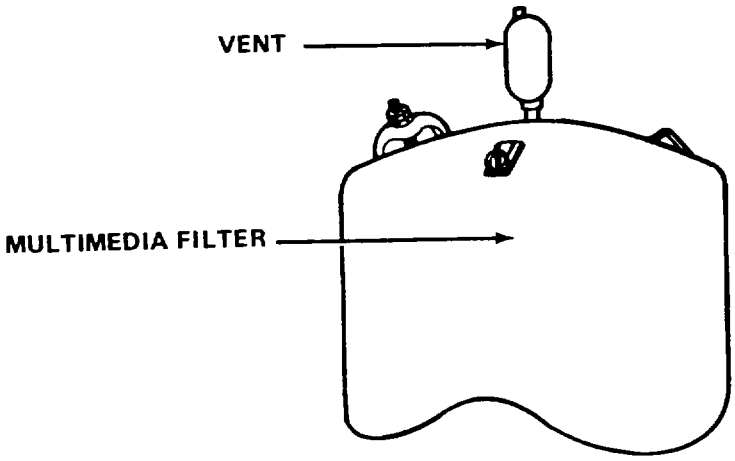

8 Look at vents at top of multimedia filters. Water should come out, then stop when vents close.

2-5. STARTUP (CONT)

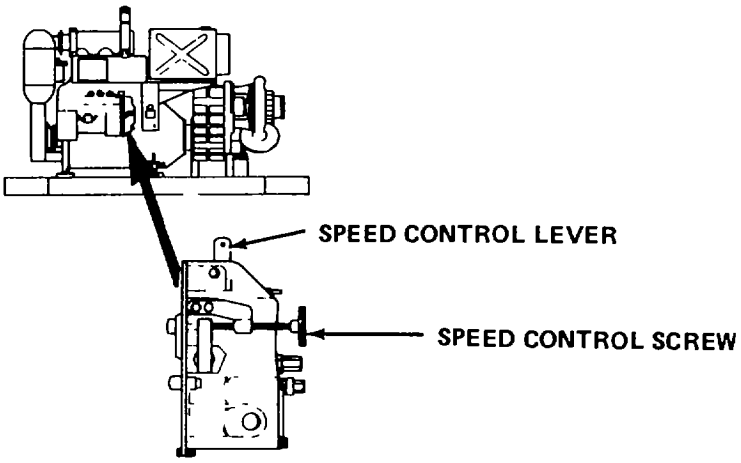

f. Boost Pump Diesel Engine Startup

WARNING

Hearing loss may result from operating system without hearing protection.

CAUTION

To avoid damage to equipment, do not operate pump without water flow.

1 Turn speed control screw right to move speed control lever to center position.

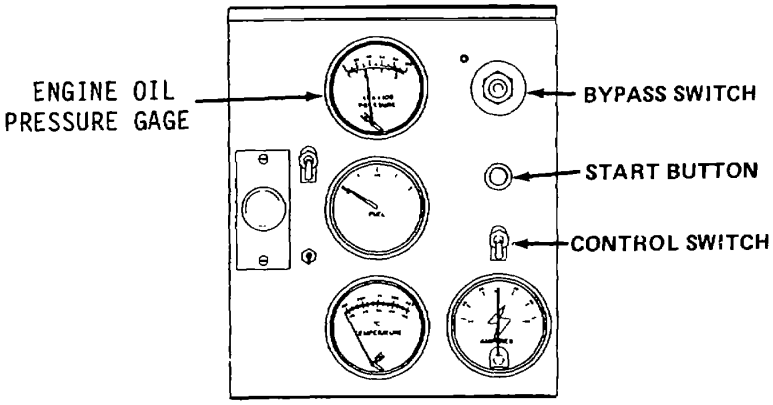

2 Flip control switch up. Hold bypass switch down and press start button. When engine starts, let up start button. Hold down bypass switch until engine oil pressure gauge shows 50 psi (3.4 kPa x 100).

2-5. STARTUP (CONT)

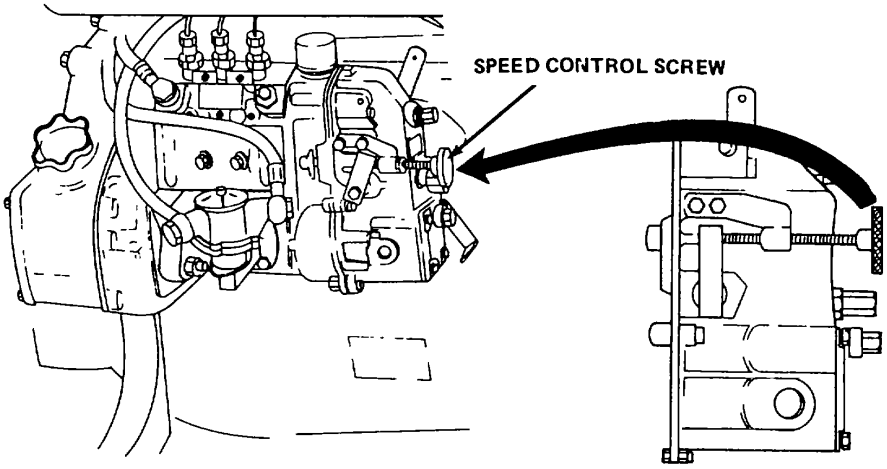

3 Adjust speed control screw on boost pump to give 50 psi (3. 4 kPa x 100) on gauge PI-1 on pretreatment assembly. Turn right to increase speed. Turn left to decrease speed.

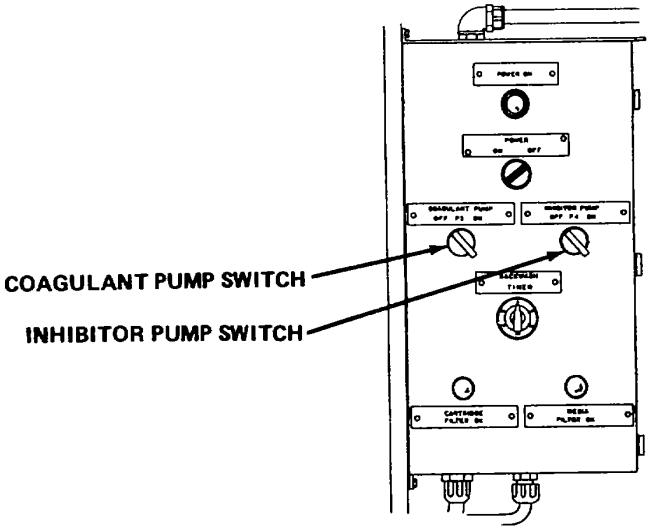

g. Pretreatment Assembly Startup

1 Turn COAGULANT PUMP and INHIBITOR PUMP switches to ON.

2-5. STARTUP (CONT)

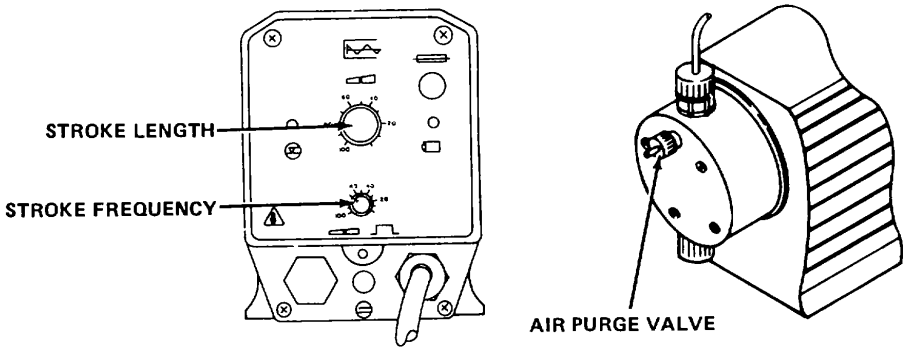

2 Set stroke length and stroke frequency settings on each pump to 100.

3 Open air purge valve on dosage head of each pump.

4 Close air purge valve when bubble-free liquid comes out.

5 Set controls of chemical metering pumps as follows:

	Stroke Length Setting	Stroke Frequency Setting
COAGULANT PUMP (P2)	50	35
INHIBITOR PUMP (P4)	100	46

2-5. STARTUP (CONT)

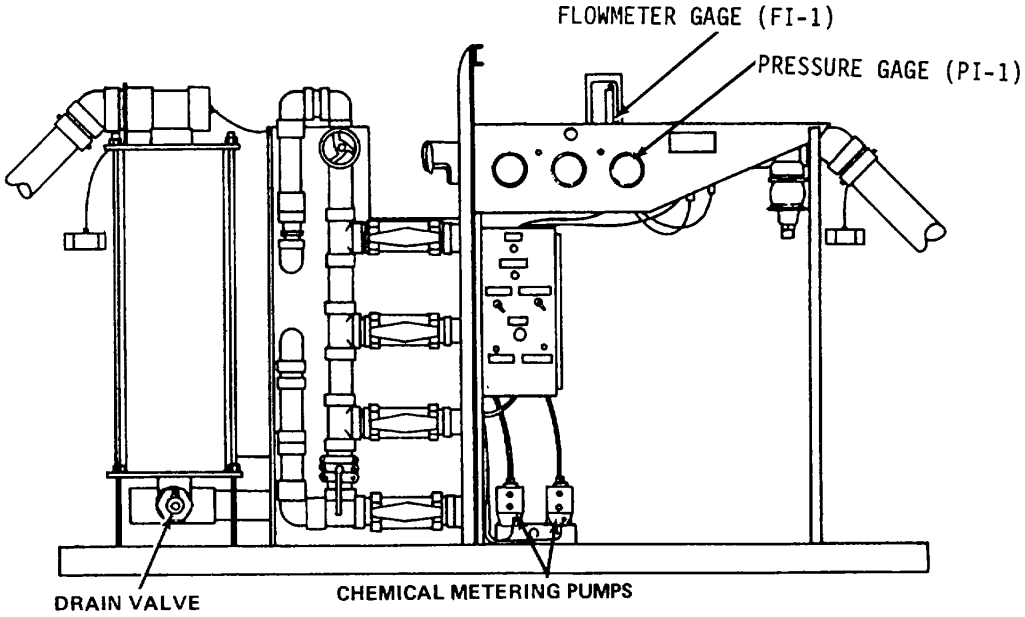

6 Open cartridge filter drain valve and check that water is clear. Close drain valve.

7 Check that flowmeter FI-1 shows less than 350 gpm.

8 Increase pressure at PI-1 to 100 psi (6.8 kPa x 100) by turning speed control screw on boost pump diesel engine right. Refer to para 2-5f.

2-5. STARTUP (CONT)

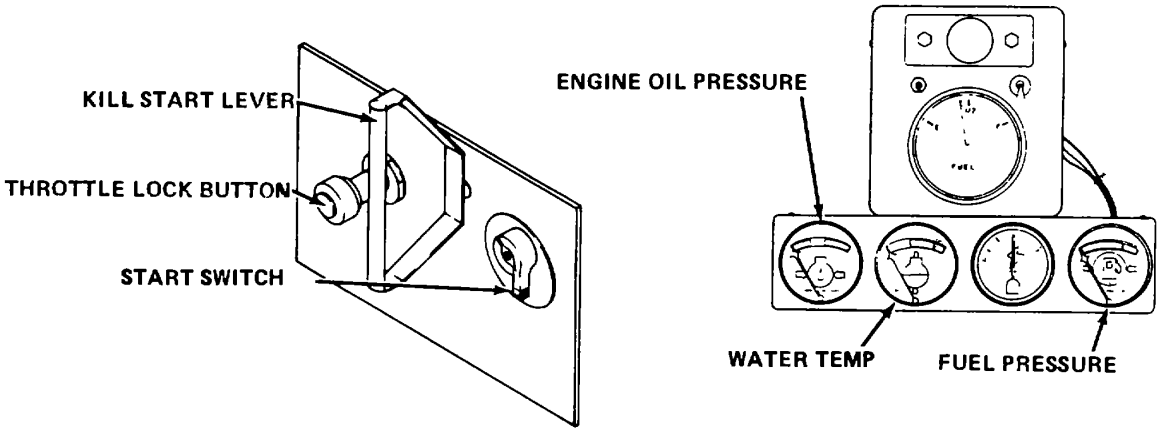

h. High Pressure Pump Diesel Engine Startup

WARNING

Hearing loss may result from operating system without hearing protection.

CAUTION

To avoid damage to equipment, do not operate pump without water flow.

NOTE

Hold kill start lever out until engine oil pressure increases enough to keep lever in out position.

1 Pull KILL START lever out.

CAUTION

To prevent overheating of starter motor, DO NOT run starter for more than 30 seconds and DO NOT try to restart engine for 2 minutes after failed start.

2 Depress start switch and turn right to start engine. If engine fails to start within 30 seconds, release start switch.

2-5. STARTUP (CONT)

3 Run engine at idle until ENGINE OIL PRESSURE, WATER TEMP, and FUEL PRESSURE rise to NORMAL. Run for at least 5 minutes at fast idle.

4 Push in throttle lock button and slowly pull throttle out to increase flow at flowmeter gauge FI-1, on pretreatment assembly, to 350 gpm.

i. System Settings

CAUTION

To keep boost pump suction hose assembly from collapsing, it may be necessary to increase raw water pump engine speed.

1 Using speed control screw, adjust boost pump speed (para 2-5f) to maintain pressure of 100 psi (6.8 kPa x 100) at pressure gauge PI-1 on pretreatment assembly.

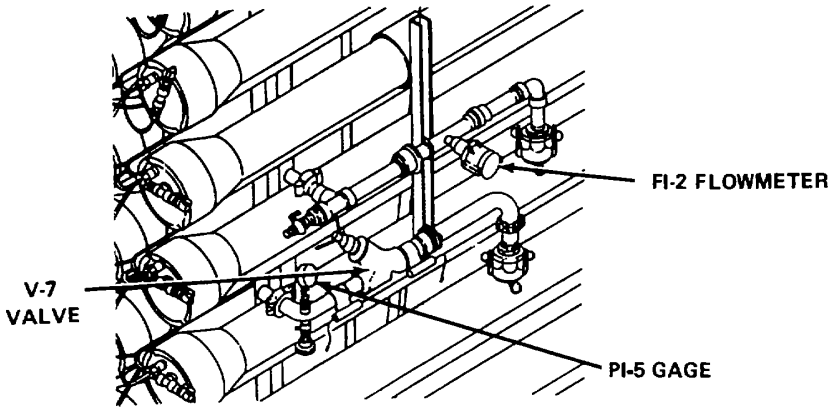

CAUTION

DO NOT let pressure at PI-5 go above 820 psi (56.5 kPa x 100).

NOTE

This step requires two people.

2 Push in throttle lock button on high pressure pump diesel engine. Slowly pull throttle out while closing valve V-7 to achieve flow rate (FI-2) of not more than 108 gpm.

2-6. MULTIMEDIA FILTER BACKWASH

NOTE

This procedure is performed when MEDIA FILTER OK light goes out during operation. Light goes out when pressure at PI-2, on pretreatment assembly, is at least 35 psi (2.4 kPa x 100) less than pressure shown at PI-1, on pretreatment assembly.

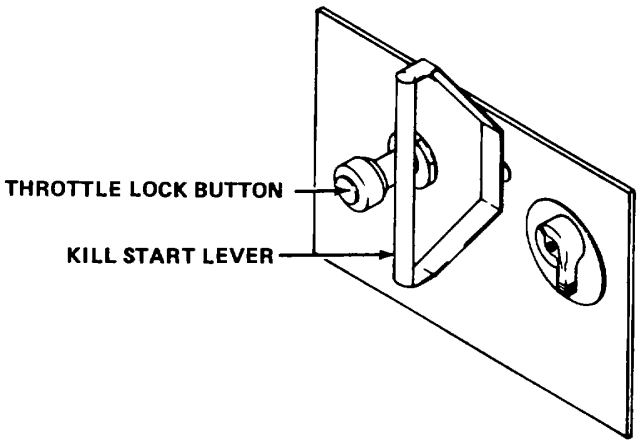

1 Push in high pressure pump engine throttle lock button. Slowly push in throttle until engine runs at low idle.

CAUTION

To prevent damage to turbocharger, let engine run for 5 minutes at low idle before shutdown.

2 Run engine at low idle for 5 minutes. Push in KILL START lever to shut down engine.

2-6. MULTIMEDIA FILTER BACKWASH (CONT)

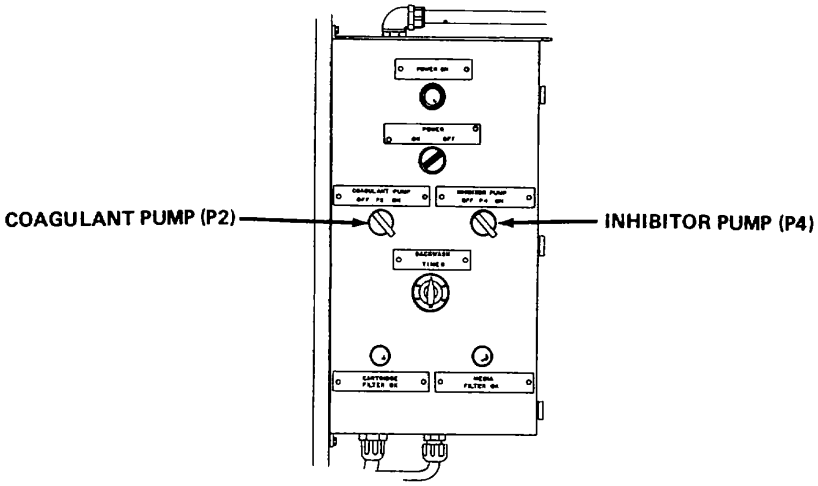

3 Turn OFF COAGULANT PUMP (P2) and INHIBITOR PUMP (P4).

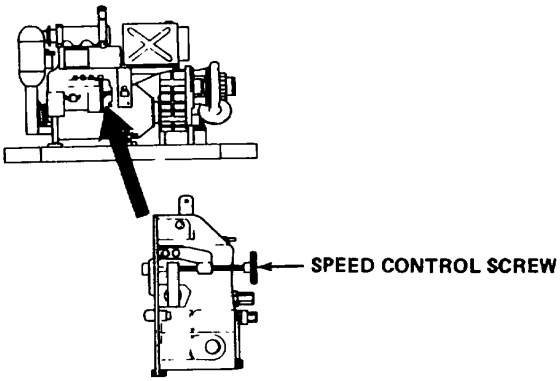

4 Turn boost pump engine speed control screw left to reduce engine speed to fast idle.

2-6. MULTIMEDIA FILTER BACKWASH (CONT)

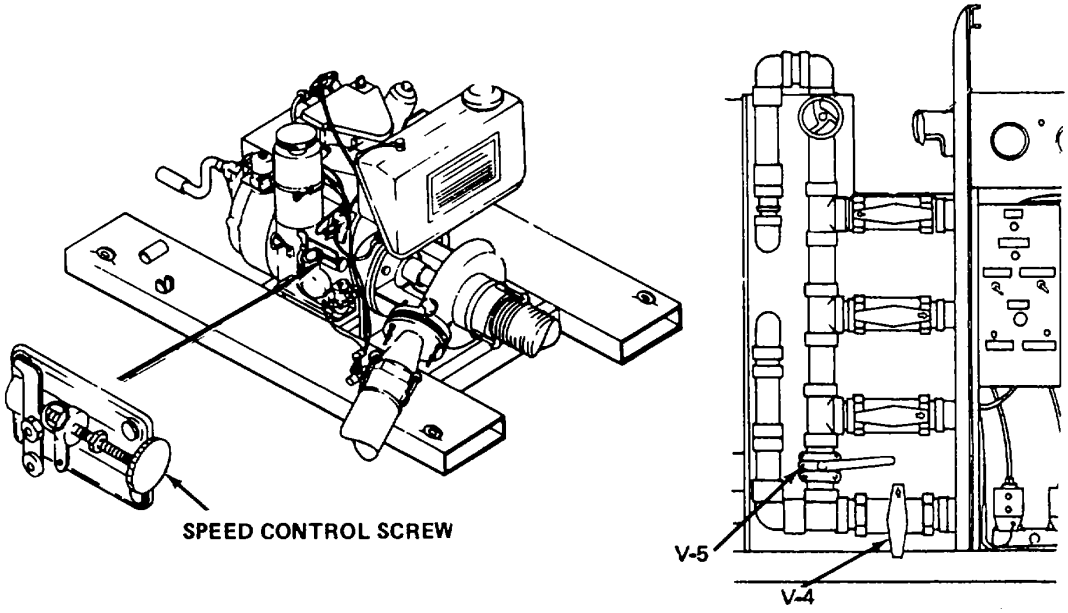

5 Turn raw water pump engine speed control screw left to reduce engine speed to fast idle. Pressure at PI-1, on pretreatment assembly, should be about 20 psi (1.4 kPa x 100).

6 Turn valve V-4 to CLOSED position.

7 Check that valve V-5 is closed.

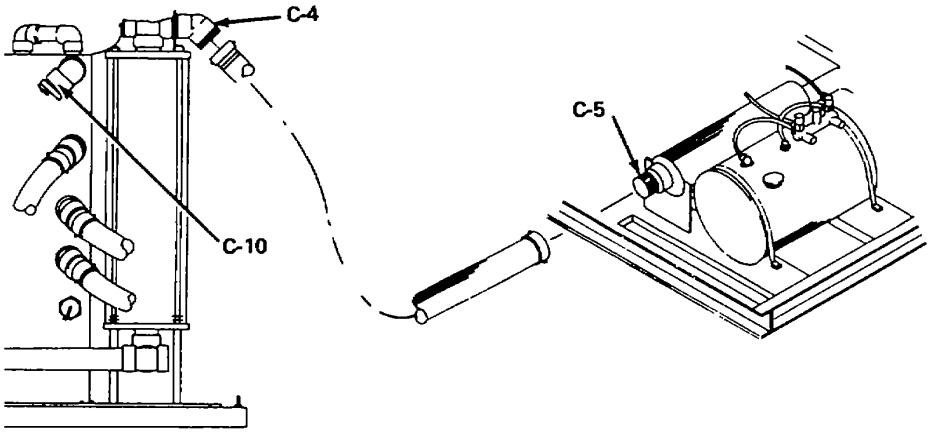

8 Disconnect hose from C-4 and C-5. Connect one end to C-10 and place other end in waste disposal area.

2-6. MULTIMEIDIA FILTER BACKWASH (CONT)

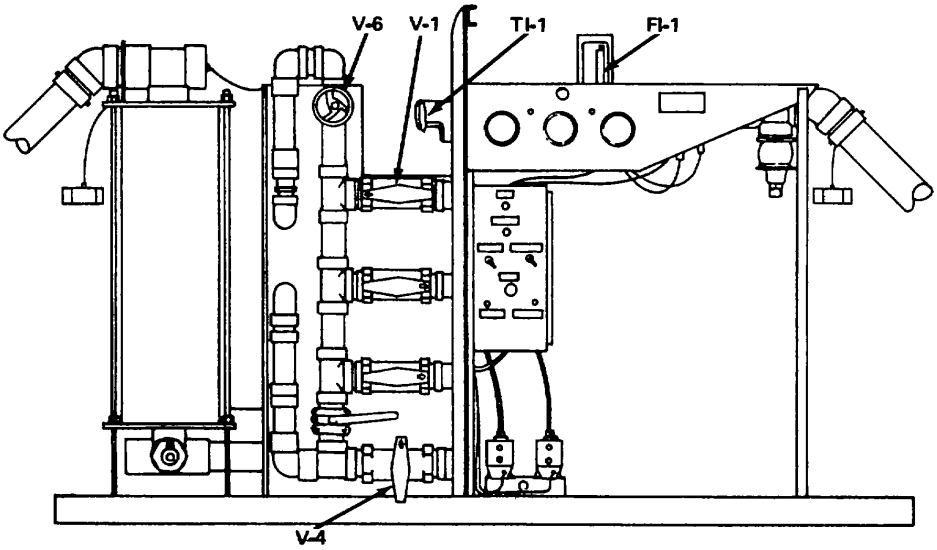

9 Turn valve V-1 to BACKWASH position.

10 Open valve V-6 slightly, to increase flow rate at FI-i.

11 Required flow rate at FI-1 depends on water temperature shown on TI-1. See table that follows for flow rates.

2-6. MULTIMEDIA FILTER BACKWASH (CONT)

BACKWASH FLOW RATES		
Temperature °F	Slow Backwash gpm	Fast Backwash gpm
55	115	180
60	125	200
65	135	220
70	144	240
75	153	255
80	162	270
85	170	285
90	177	300
95	184	315
100	191	325
105	198	334
110	204	342
115	210	350
120	216	355
125	222	360

12 Turn valve V-6 left or right to adjust flow rate to FI-1 to slow backwash rate listed in step 11. Increase raw water and boost pump engine speeds if necessary to maintain flow rate.

2-6. MULTIKEDIA FILTER BACKWASH (CONT)

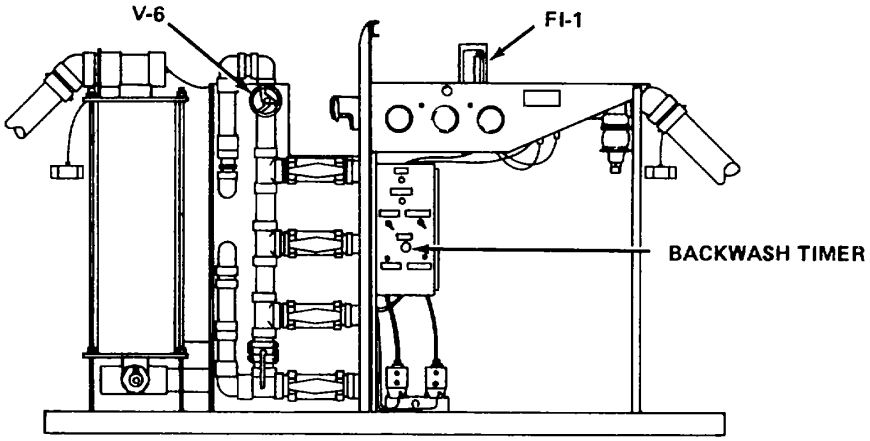

13 Look at waste water from hose connected to C-10. When water is clear, open valve V-6 to increase flow rate at FI-1 to fast backwash rate listed in step 11. Set BACKWASH TIMER to 2 minutes. (Turn past 10, then set to second mark right of 0.) When timer sounds, slowly close valve V-6 to reach slow backwash rate.

14 Turn valve V-1 to SERVICE position. Turn valve V-2 to BACKWASH position.

15 Repeat steps 10 thru 13.

16 Turn valve V-2 to SERVICE position. Turn valve V-3 to BACKWASH position.

17 Repeat steps 10 thru 13.

18 Backwashing is now completed.

19 Idle engines for a few minutes.

20 Flip boost pump control switch down. Engine will stop.

21 Flip raw water pump control switch down. Engine will stop. Shutdown is now completed.

22 Reconnect hose to C-4 and C-5.

23 Place system in normal operation mode by following startup procedure (para 2-5).

2-7. REVERSE OSMOSIS MEMBRANES CLEANING

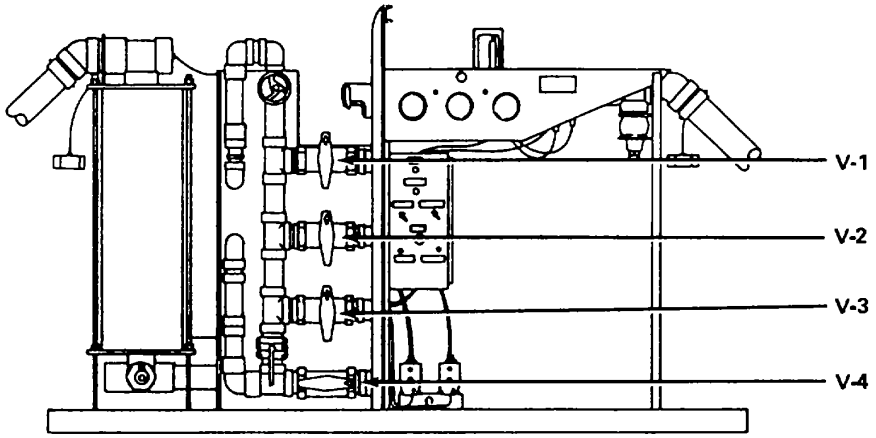

a. Preparation for Cleaning

1 Shut system down (para 2-8).

2 Turn valve V-4 to BYPASS position.

3 Turn valves V-1, V-2, and V-3 to CLOSED position.

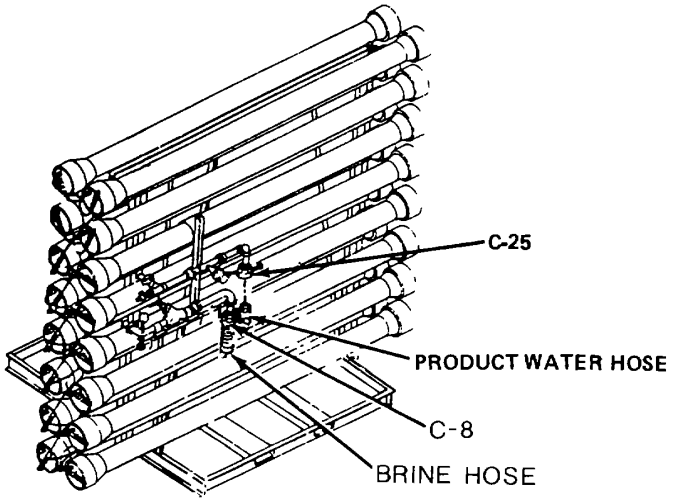

4 Disconnect product water hose from connection C-25 on reverse osmosis block assembly. Install quick-disconnect plug on connection C-25. Disconnect brine hose from connection C-8.

2-7. REVERSE OSNOSIS NIRIBMRAS CLEANING

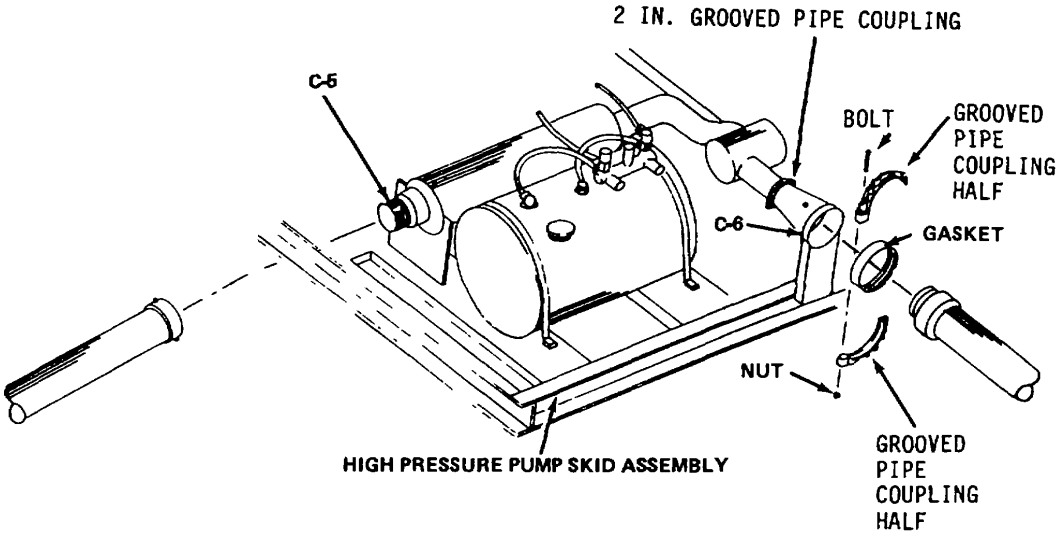

5 Disconnect hose from connection C-5 on high pressure pump assembly.

NOTE

It may be necessary to loosen 2 in. grooved pipe coupling to remove C-6 grooved pipe coupling.

6 Remove grooved pipe coupling from connection C-6. Remove two nuts, two bolts, and gasket.

2-7. REVERSE OSMOSIS MEMBRANES CLEANING (CONT)

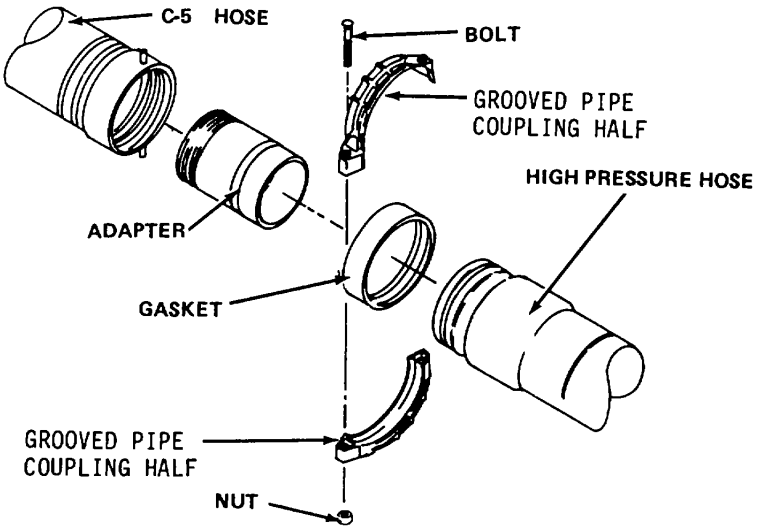

7 Connect hose (disconnected from C-5) to threaded end of adapter. Hand-tighten.

8 Check gasket removed from C-6 for damage. If gasket damaged, notify your supervisor. Apply thin coat of silicone lubricant (item 5, appendix D) to gasket lips and outside of gasket.

9 Place gasket over other end of adapter, being sure it doesn't overhang end of connection.

10 Align end of high pressure hose with adapter. Slide gasket to center position between adapter groove and hose groove. No portion of gasket should overhang grooves.

11 Place grooved pipe coupling halves over gasket. Make sure grooved pipe coupling half keys are in grooves on adapter and hose.

12 Install two bolts. Place nuts on bolts and hand-tighten.

CAUTION

Overtightening nuts may cause gasket to pinch. Tighten nuts only until grooved pipe coupling halves are firmly together (metal-to-metal).

13 Tighten nuts alternately and equally until grooved pipe coupling halves are firmly together.

2-7. REVERSE OSMOSIS MEMBRANES CLEANING (CONT)

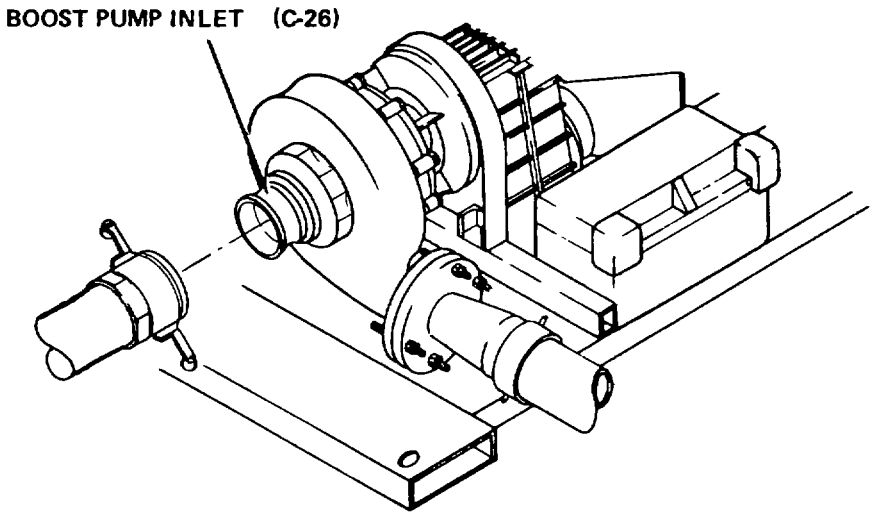

14 Remove quick-disconnect hose from boost pump inlet (C-26).

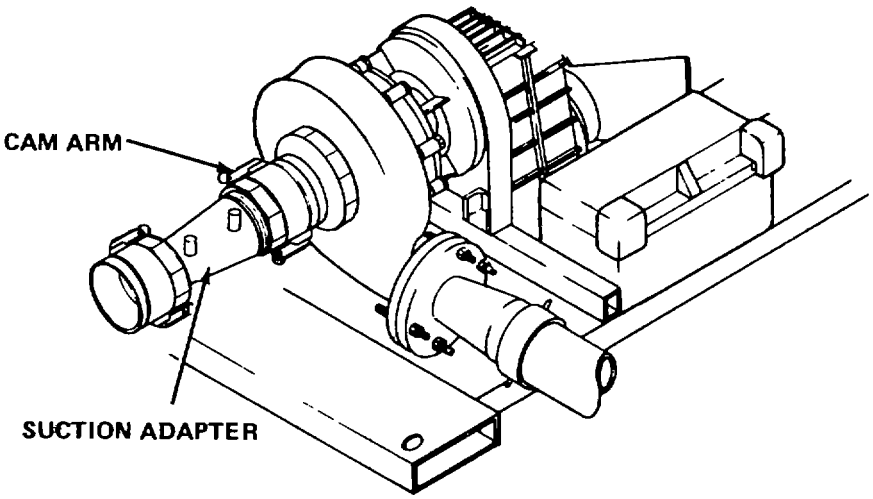

CAUTION

- To prevent leakage, close both cam arms at the same time.
- Do not strike cam arms with tools to close.

15 Attach suction adapter to boost pump inlet (C-26). Close cam arms.

2-7. REVERSE OSMOSIS MEMBRANES CLEANING (CONT)

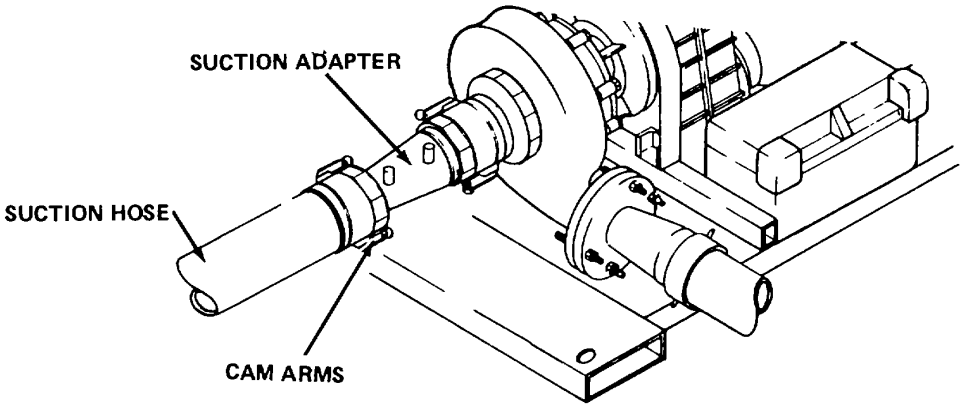

CAUTION

- To prevent leakage, close both cam arms at the same time.
- Do not strike cam arms with tools to close.

16 Attach suction hose to end of suction adapter. Close cam arms. Attach next section of suction hose to first section. Close cam arms. Two people required for next two steps.

17 Have one person support the brine discharge pipe. Remove hexhead screw and nut from hold-down clamp.

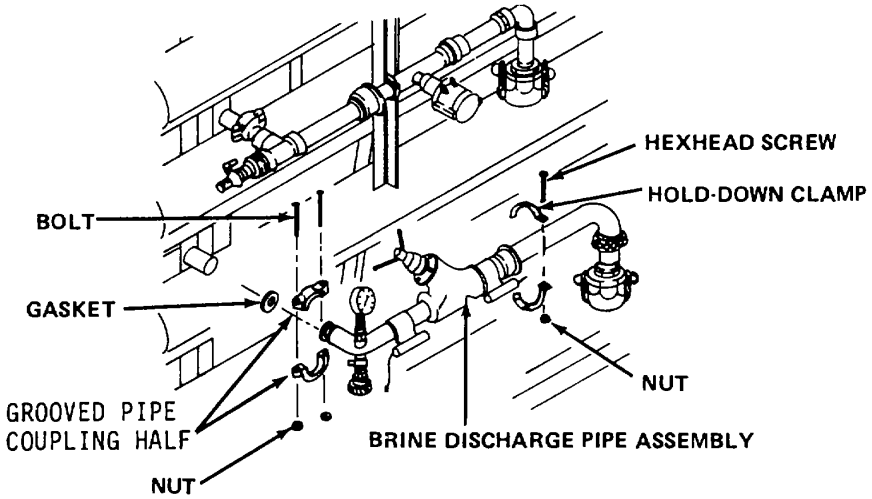

2-7. REVERSE OSMOSIS MEMBRANES CLEANING (CONT)

18 Remove brine discharge pipe grooved pipe coupling. Remove two nuts, two bolts, two grooved pipe coupling halves, and gasket. Remove brine discharge pipe assembly.

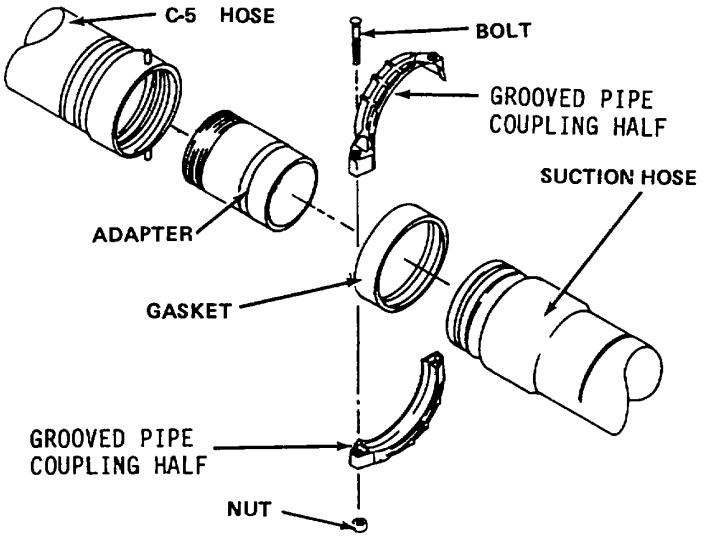

19 Apply thin coat of silicone lubricant (item 5, appendix D) to gasket lips and outside of gasket.

20 Place gasket over end of brine discharge connection, being sure it doesn't overhang end of connection.

21 Align end of suction hose coupling with brine discharge connection. Slide gasket to center position between brine discharge connection groove and suction hose coupling groove. No portion of gasket should overhang grooves.

22 Place grooved pipe coupling halves over gasket. Make sure grooved pipe coupling half keys are in grooves on brine discharge connection and suction hose coupling.

23 Install two bolts. Place nuts on bolts and hand-tighten.

2-7. REVERSE OSMOSIS MEMBRANES CLEANING (CONT)

CAUTION

- To prevent leakage, close both cam arms at the same time.
- Do not strike cam arms with tools to close.

24 Attach suction hose to suction hose coupling. Close cam arms.

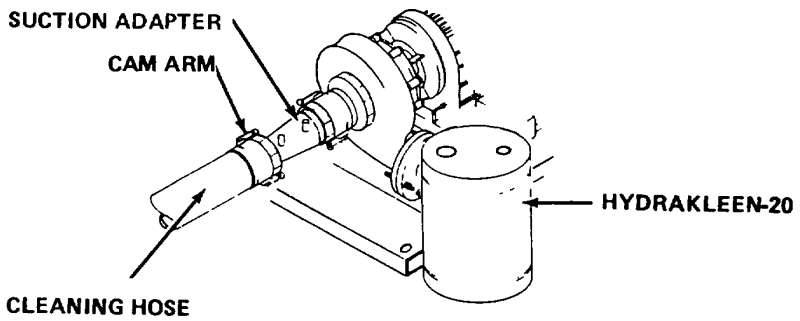

25 Set barrel of Hydrakleen-20 (item 6, appendix D) near suction adapter.

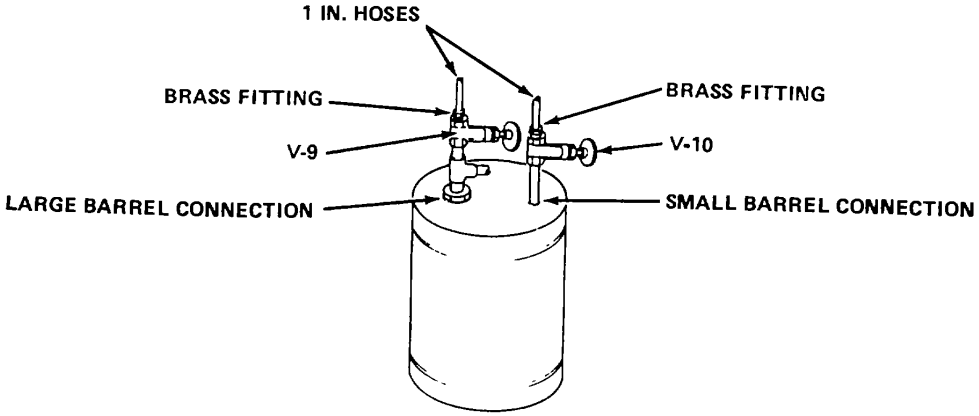

26 Insert valve V-9 threaded fitting into large barrel connection. Insert valve V-10 threaded fitting into small barrel connection.

27 Connect 1 in. hose to valve V-9 brass fitting. Connect 1 in. hose to valve V-10 brass fitting.

2-7. REVERSE OSMOSIS MEMBRANES CLEANING (CONT)

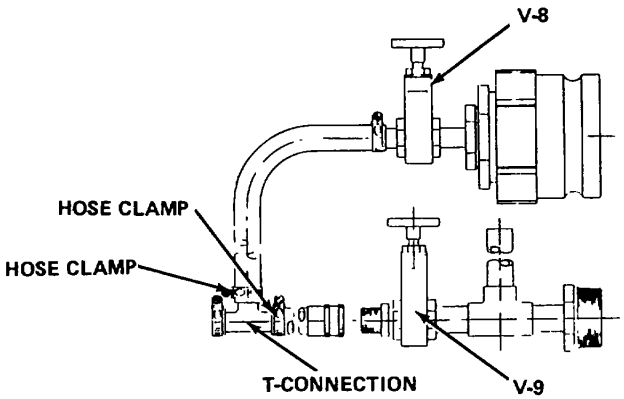

28 Loosen hose clamp on hose attached to valve V-9. Insert T-connection in end of hose. Tighten clamp.

29 Loosen hose clamp on hose attached to valve V-8. Insert bottom of T-connection in end of hose. Tighten clamp.

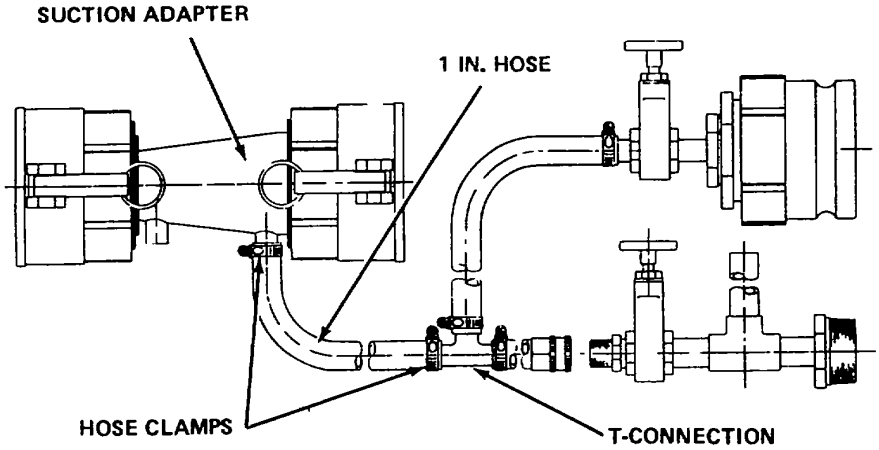

30 Loosen hose clamps on 1 in. hose. Insert T-connection in hose; tighten clamp. Attach other end of hose to connection on suction adapter nearest to boost pump. Tighten clamp.

2-7. REVERSE OSMOSIS MEMBRANES CLEANING (CONT)

31 Loosen hose clamp on hose attached to valve V-10. Attach hose to other connection on suction adapter. Tighten clamp.

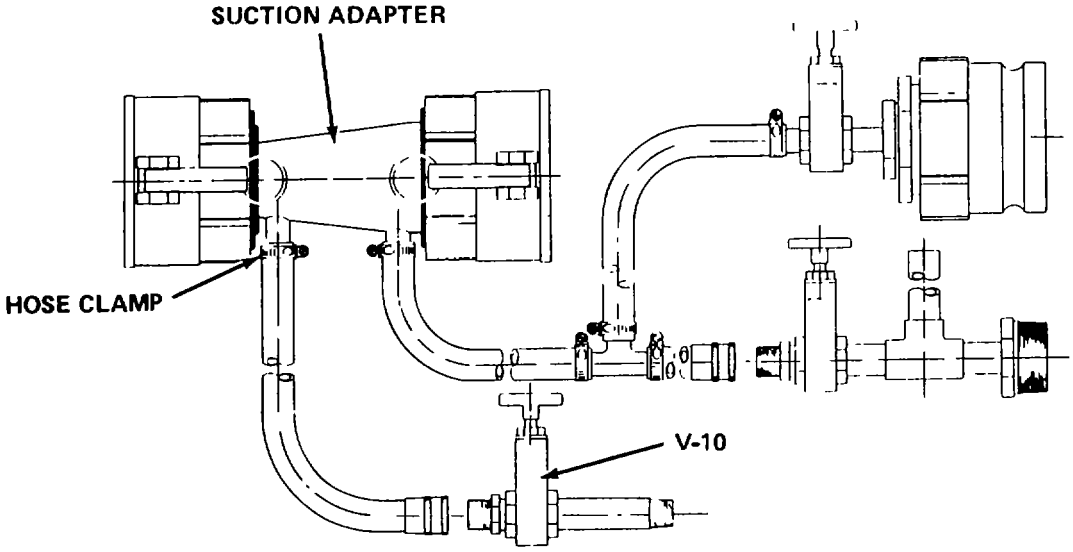

32 Fabricate barrel stand from available materials. Stand must be 20 to 30 in. high and strong enough to support weight of barrel. Place barrel of Hydrakleen-20 (item 6, appendix D) on barrel stand. Aline barrel with large connection at bottom, small connection at top, and vent pipe pointing up.

2-7. REVERSE OSMDSIS MEMBRANES CLEANING (CONT)

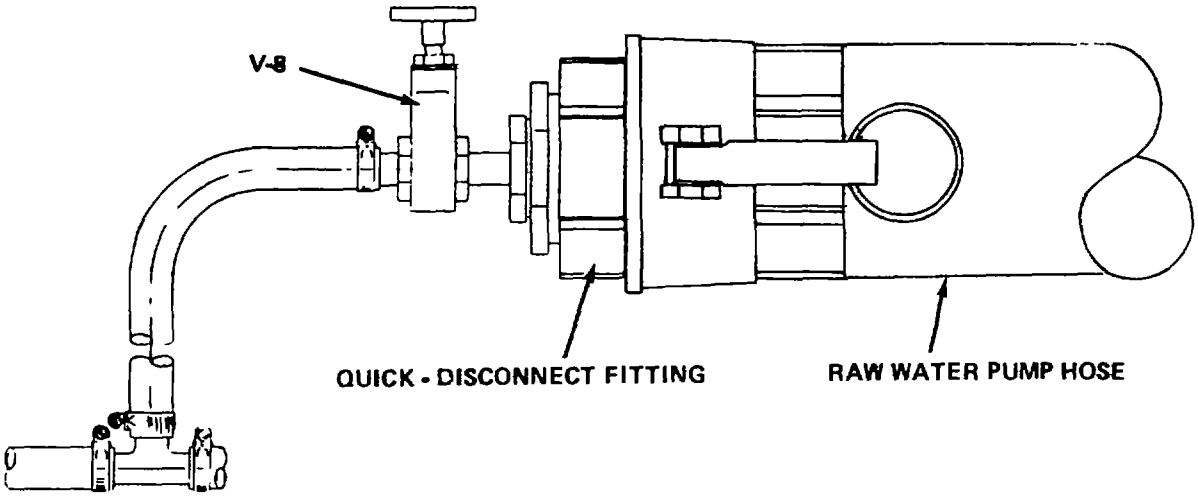

33 Connect hose from raw water pump to valve V-8 quick-disconnect fitting.

b. Cleaning Operation

1 Start up raw water pump engine (para 2-5d).

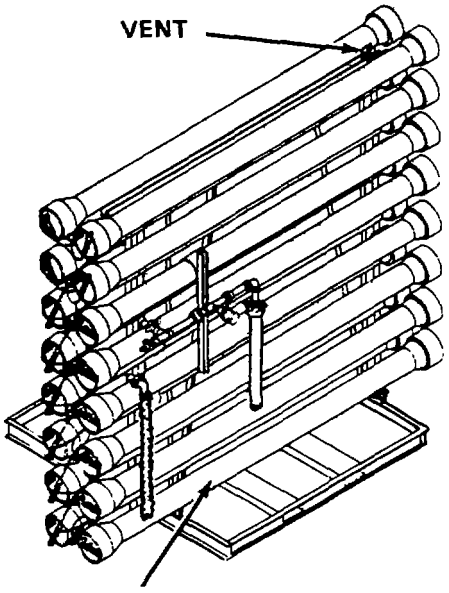

2 Open VENT at top of reverse osmosis block assembly. Close VENT when steady stream of water comes out.

2-7. REVERSE OSMOSIS MEMBRANES CLEANING (CONT)

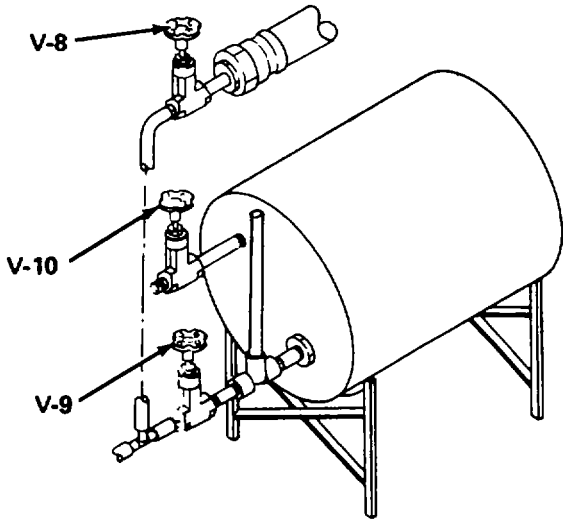

3 Close valve V-8. Open valves V-9 and V-10.

4 Shut down raw water pump (para 2-8).

5 Start boost pump (para 2-5e).

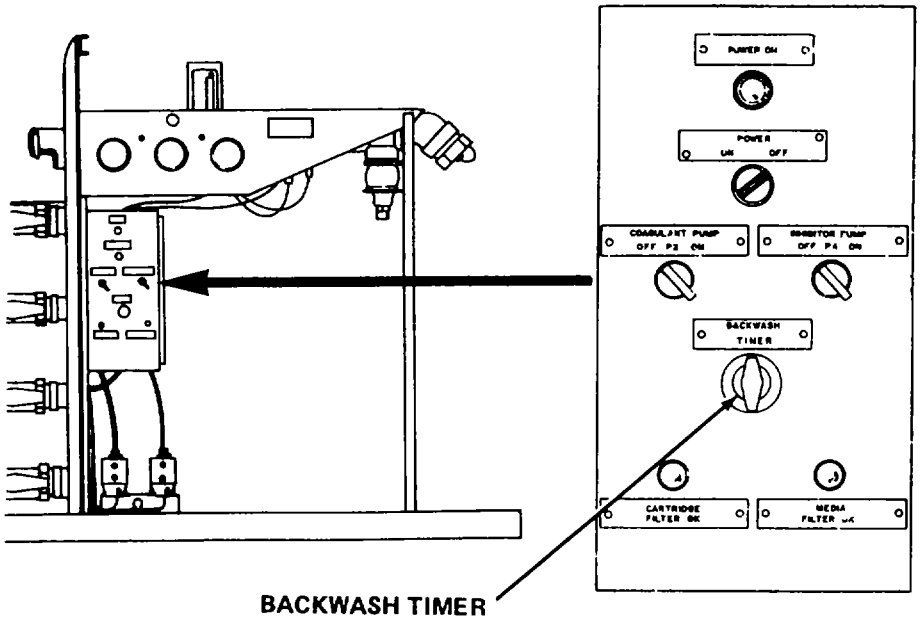

6 Set backwash timer for 15 minutes. When bell rings, go to next step.

2-7. REVERSE OSMOSIS MEMBRANES CLEANING (CONT)

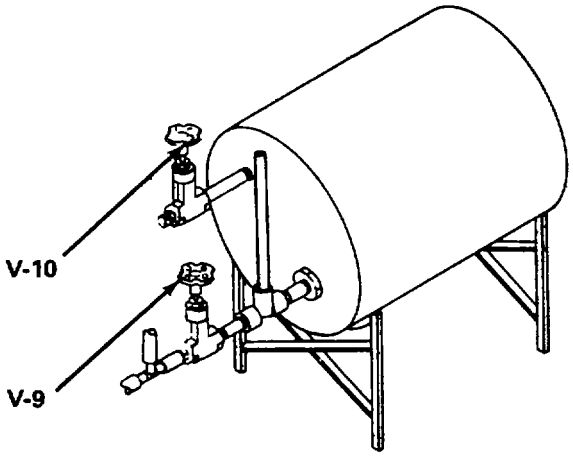

7 Close valves V-9 and V-10.

8 Shut down boost pump (para 2-8).

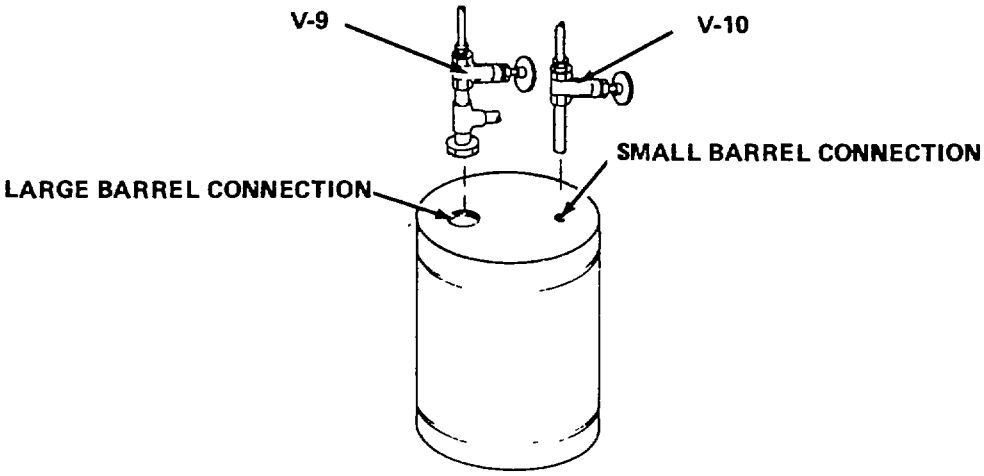

9 Stand barrel on end. Remove valves V-9 and V-10 from barrel connection.

10 Get new barrel of Hydrakleen-20 (item 6, appendix D). Insert valve V-9 threaded fitting into large barrel connection. Insert valve V-10 into small barrel connection.

2-7. REVERSE OSMOSIS MEMBRANES CLEANING (CONT)

11 Place barrel on barrel stand. Aline barrel with large connection at bottom, small connection at top, and vent pipe pointing up.

12 Repeat steps 1 thru 5.

13 Length of cleaning time depends on temperature of water at TI-1. Check table below for correct time period.

Temperature (TI-1)	Time Period	Temperature (TI-1)	Time Period
69°F (16°C)	2 hr 40 min	80°F (27°C)	1 hr 30 min
65°F (18°C)	2 hr 20 min	85°F (29°C)	1 hr 20 min
70°F (21°C)	2 hr	90°F (32°C)	1 hr 10 min
75°F (24°C)	1 hr 40 min		

NOTE

BACKWASH TIMER may be used to measure cleaning time period, but must be reset each hour.

14 shut down boost pump (para 2-8).

c. Return to Normal Operation

1 Remove valves V-9 and V-10 from barrel.

2-7. REVERSE OSMOSIS MIIBRANES CLEANING (CONT)

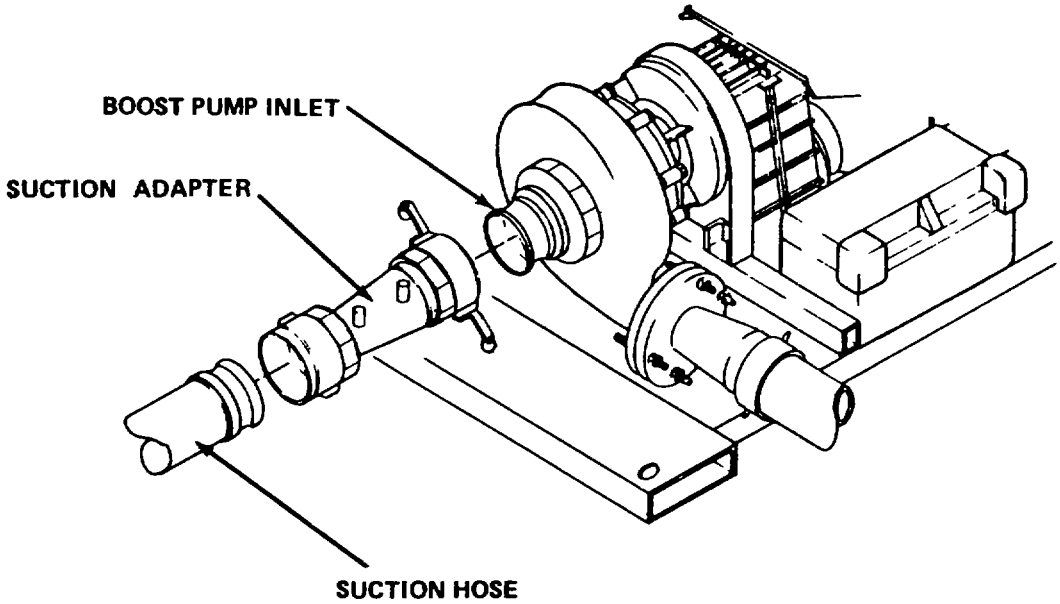

2 Remove suction adapter from boost pump inlet and suction hose.

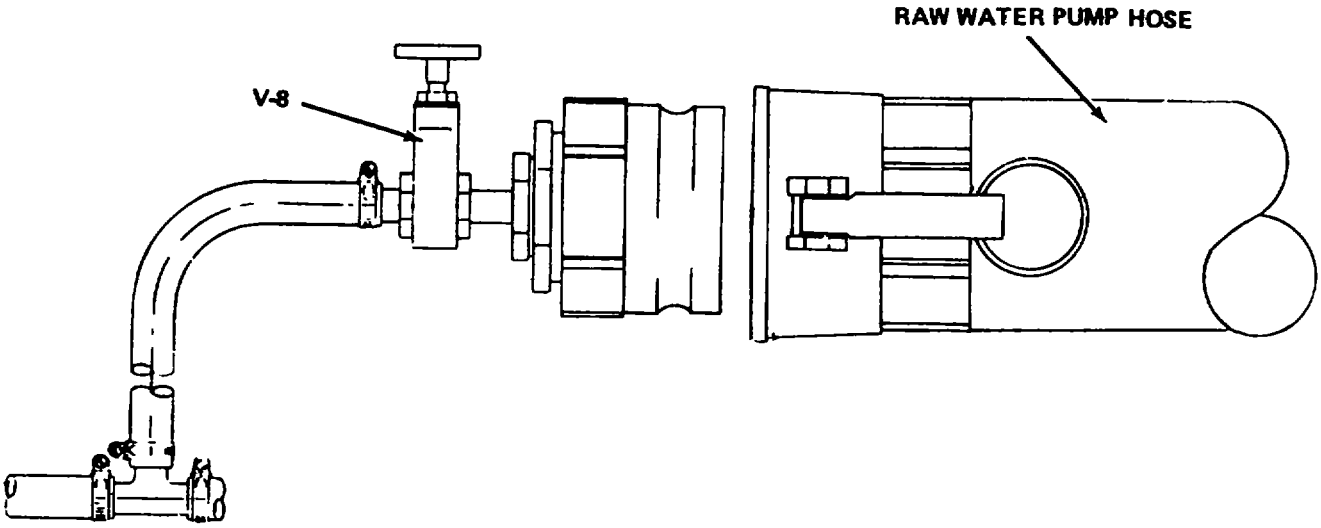

3 Remove valve V-8 fitting from raw water hose quick-disconnect fitting.

2-7. REVERSE OSMOSIS MEMBRANES CLEANING (CONT)

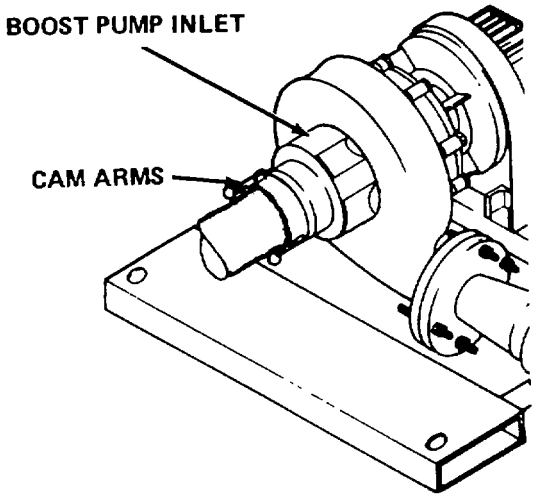

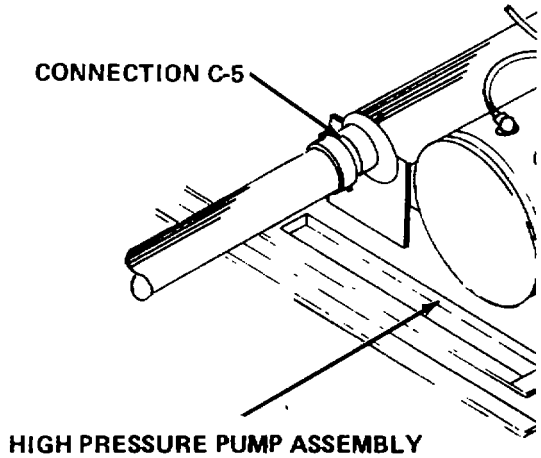

CAUTION

- **To prevent leakage, close both cam arms at the same time.**
- **Do not strike cam arms with tools to close.**

4 Connect discharge hose from raw water pump to boost pump inlet. Close cam arms.

5 Unscrew pretreatment assembly hose from adapter. Attach to connection C-5 on high pressure pump assembly.

2-7. REVERSE OSMOSIS MEMBRANES CLEANING (CONT)

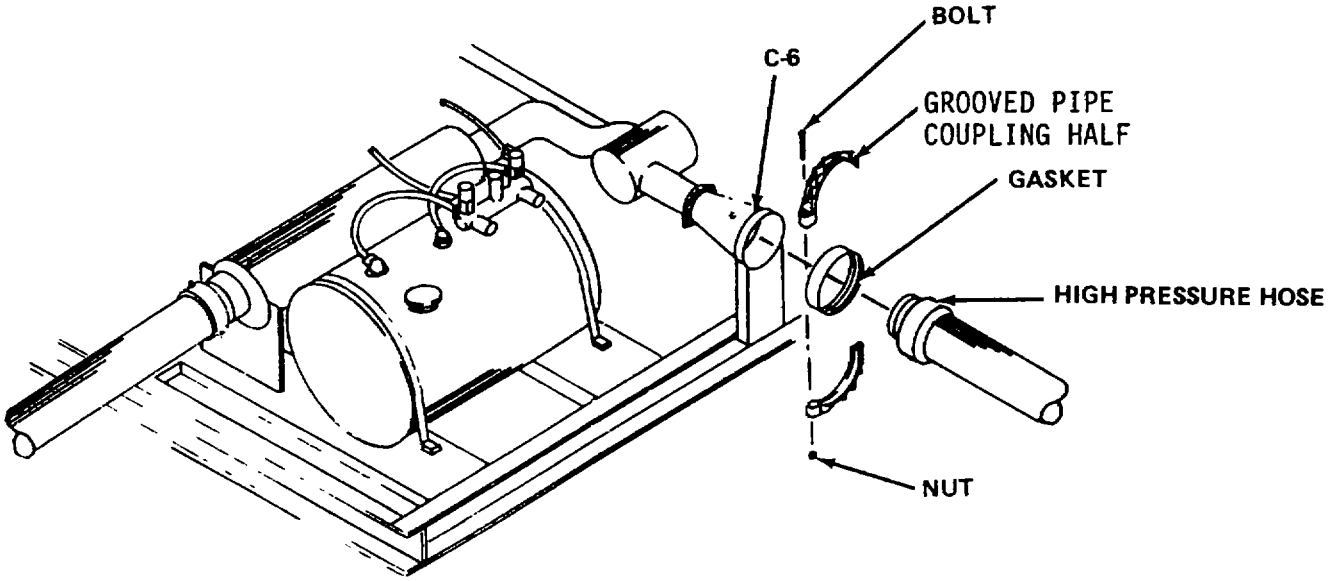

6 Remove two nuts, two bolts, two grooved pipe coupling halves, and gasket from adapter.

7 Place gasket over connection C-6, being sure it doesn't overhang end of connection.

8 Aline end of high pressure hose with connection C-6. Slide gasket to center position between C-6 groove and hose groove. No portion of gasket should overhang grooves.

9 Place grooved pipe coupling halves over gasket. Make sure grooved pipe coupling half keys are in grooves on connection C-6 and hose.

10 Install two bolts. Place two nuts on bolts and hand-tighten.

CAUTION

Overtightening nuts may cause gasket to pinch. Tighten nuts only until coupling halves are firmly together (metal-to-metal).

11 Tighten nuts alternately and equally until grooved pipe coupling halves are firmly together.

2-7. REVERSE OSMOSIS MEMBRANES CLEANING (CONT)

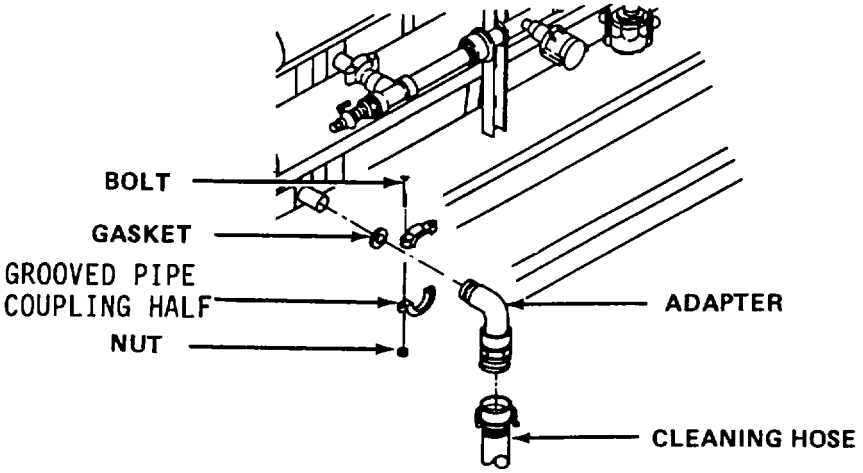

12 Remove cleaning hose from adapter.

13 Remove two nuts, two bolts, two grooved pipe coupling halves, and gasket. Remove adapter.

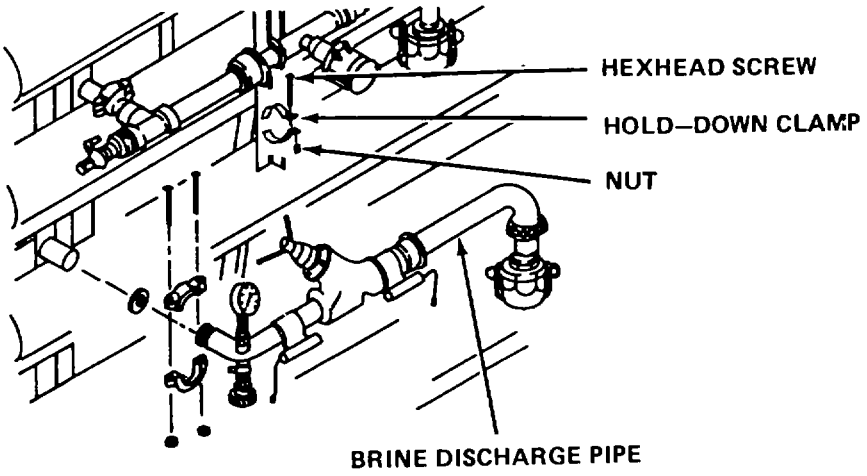

NOTE

- **Two people required for steps 14 and 15.**
- **DO NOT tighten hexhead screw all the way. Leave some play for alinement of coupling with C-8.**

14 Place brine discharge pipe in hold-down clamp. Install hexhead screw and nut on hold-down clamp. Hand-tighten.

2-7. REVERSE OSMOSIS MEMBRANES CLEANING (CONT)

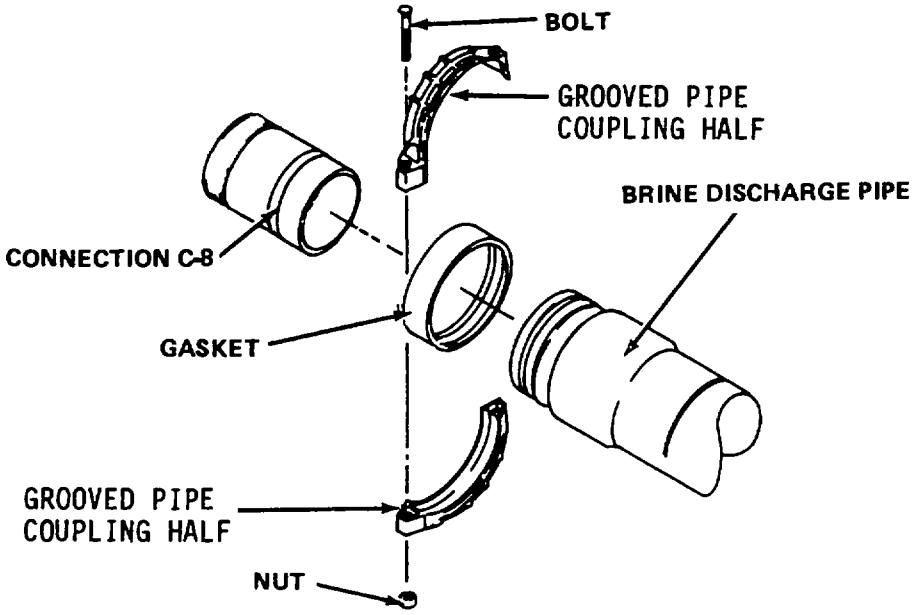

15 Apply thin coat of silicone lubricant (item 5, appendix D) to gasket lips and outside of gasket.

16 Place gasket over end of connection C-8, being sure it doesn't overhang end of connection.

17 Aline end of brine discharge pipe with connection C-8. Slide gasket to center position between connection C-8 groove and pipe groove. No portion of gasket should overhang grooves.

18 Place grooved pipe coupling halves over gasket. Make sure grooved pipe coupling half keys are in grooves on connection C-8 and pipe.

19 Install two bolts. Place nuts on bolts and hand-tighten.

2-8. SHUTDOWN

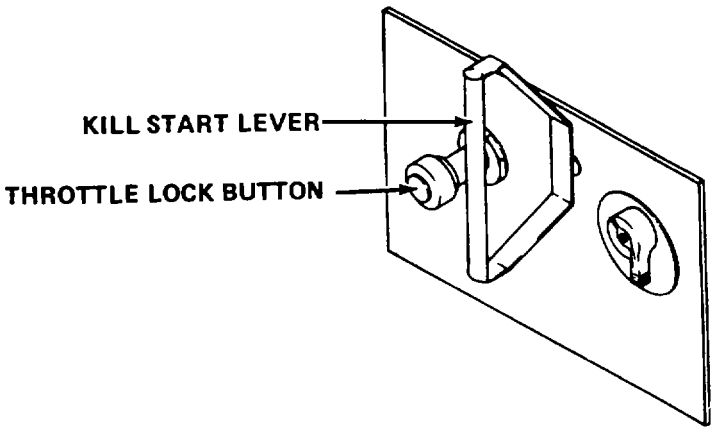

1 Push in high pressure pump engine throttle lock button. Slowly push in throttle until engine runs at low idle.

2-8. SHUTDOWN (CONT)

CAUTION

To prevent damage to turbocharger, let engine run for 5 minutes at low idle before shutdown.

2 Run engine at low idle for 5 minutes. Push in KILL START lever to shut down engine.

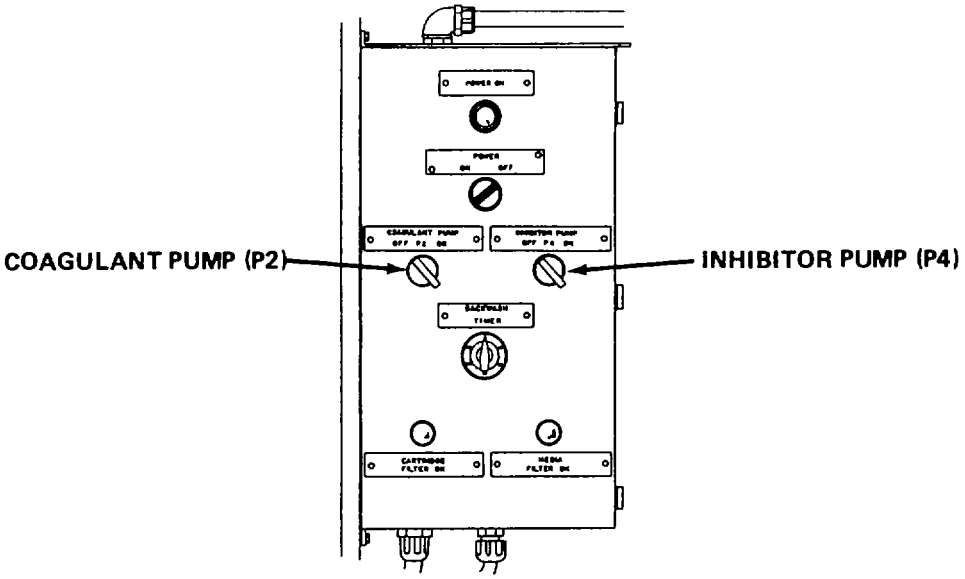

3 Turn OFF COAGULANT PUMP (P2) and INHIBITOR PUMP (P4).

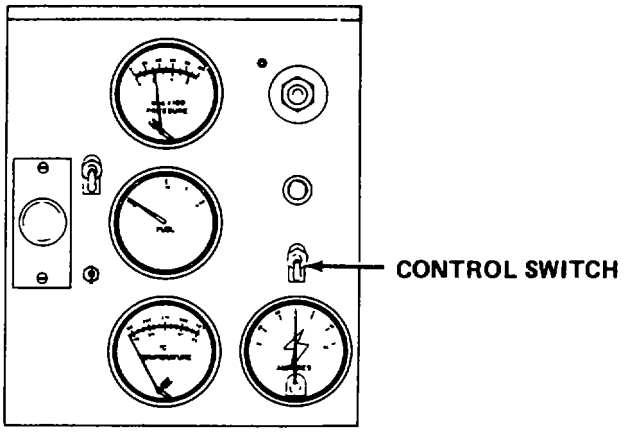

4 Idle engines for a few minutes.

2-8. SHUTDOWN (CONT)

5 Flip boost pump control switch down. Engine will stop.

6 Flip raw water pump control switch down. Engine will stop. Shutdown is now completed.

2-9. PREPARATION FOR MOVEMENT

1 Shut down system (para 2-8).

2 Remove control box cable from socket on high pressure pump. Store cable on pretreatment assembly.

3 Remove filler cap and feeder tube from each 55-gallon chemical drum. Store on pretreatment assembly.

4 Install cover caps on each 55-gallon chemical drum.

5 Disconnect any auxiliary fuel tanks.

6 Disconnect all hoses.

7 Remove cartridge filter elements (para 3-5) and discard.

CAUTION

Reverse osmosis membrane elements must be packed within a short time after removal to prevent damage from dehydration. Organizational maintenance is responsible for packing elements and must be notified before they are removed from pressure tubes.

8 Remove elements from pressure tubes (para 3-9).

9 To put back in operation, refer to para 2-4 and para 2-5.

2-10. OPERATING INSTRUCTIONS ON DECALS AND INSTRUCTION PLATES

RAW WATER PUMP ASSEMBLY

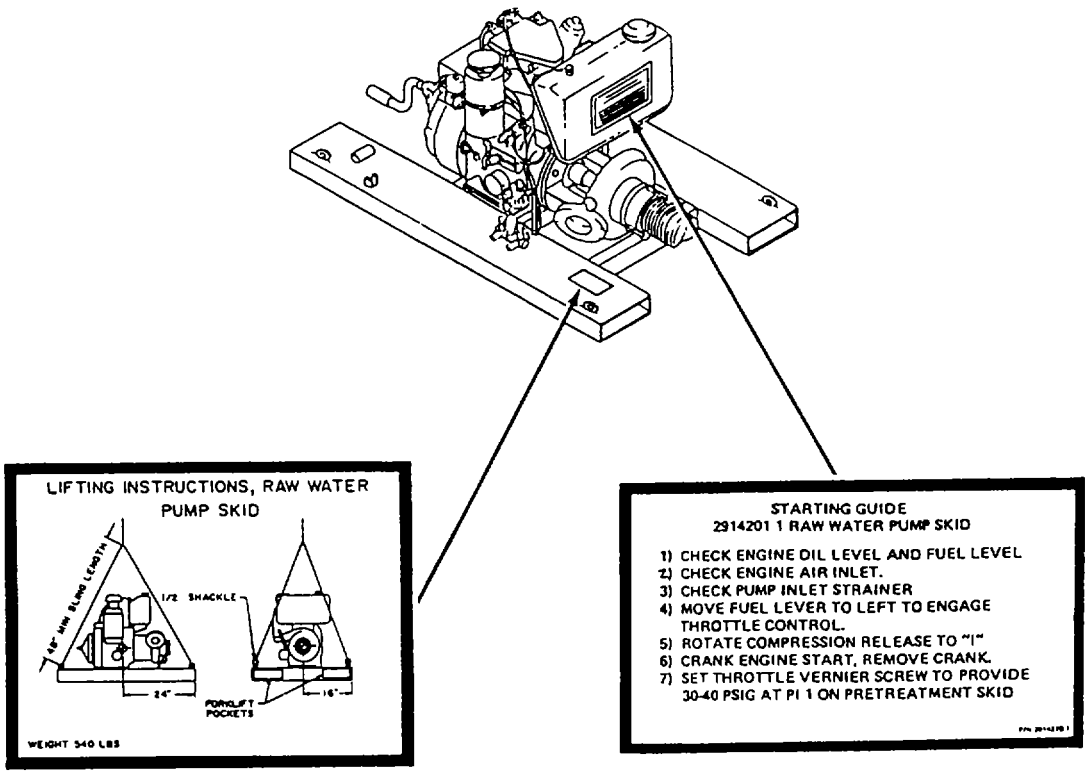

2-10. OPERATING INSTRUCTIONS ON DECALS AND INSTRUCTION PLATES (CONT)

RAW WATER PUMP ASSEMBLY (CONT)

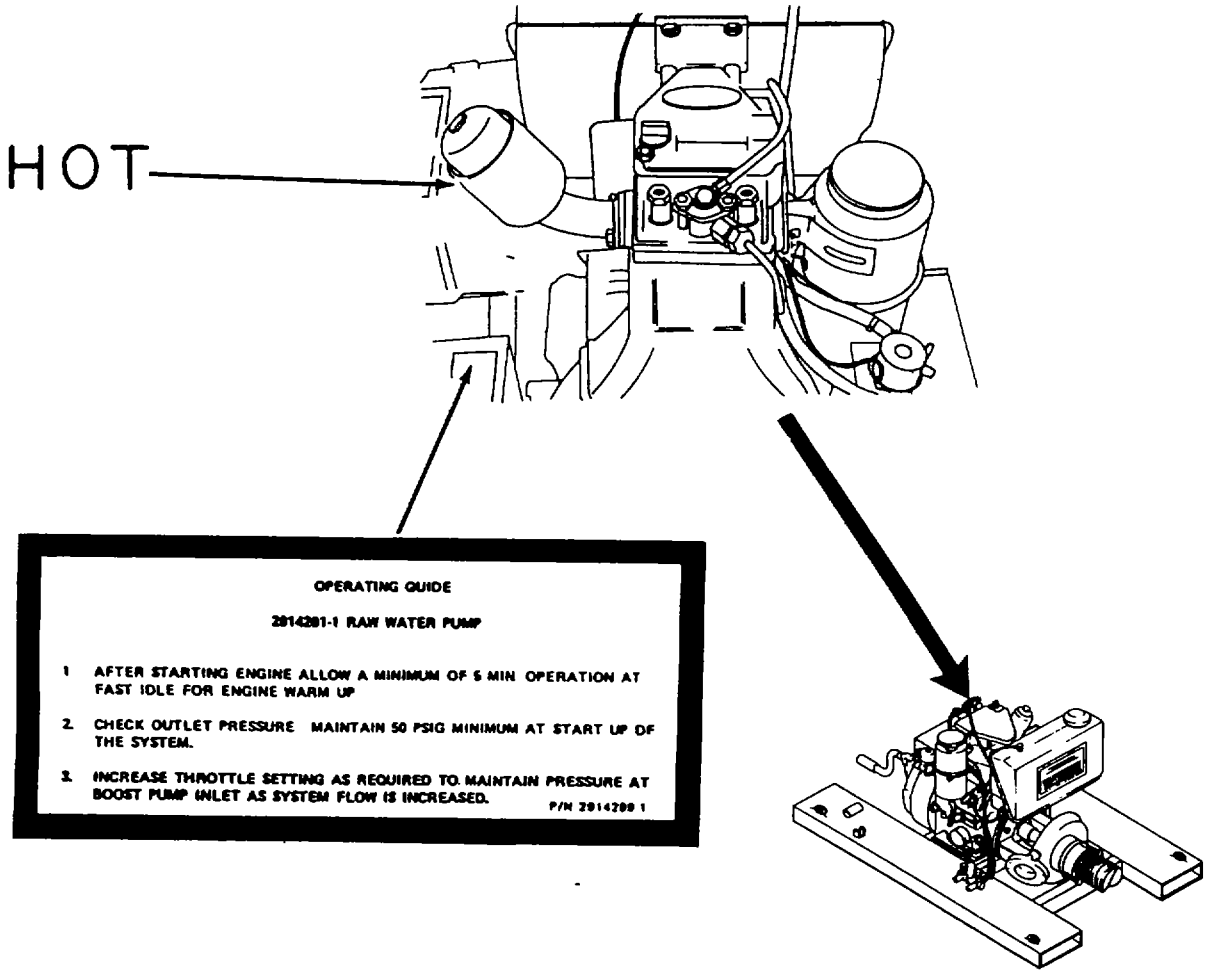

2-10. OPERATING INSTRUCTIONS ON DECALS AND INSTRUCTION PLATES (CONT)

BOOST PUMP ASSEMBLY

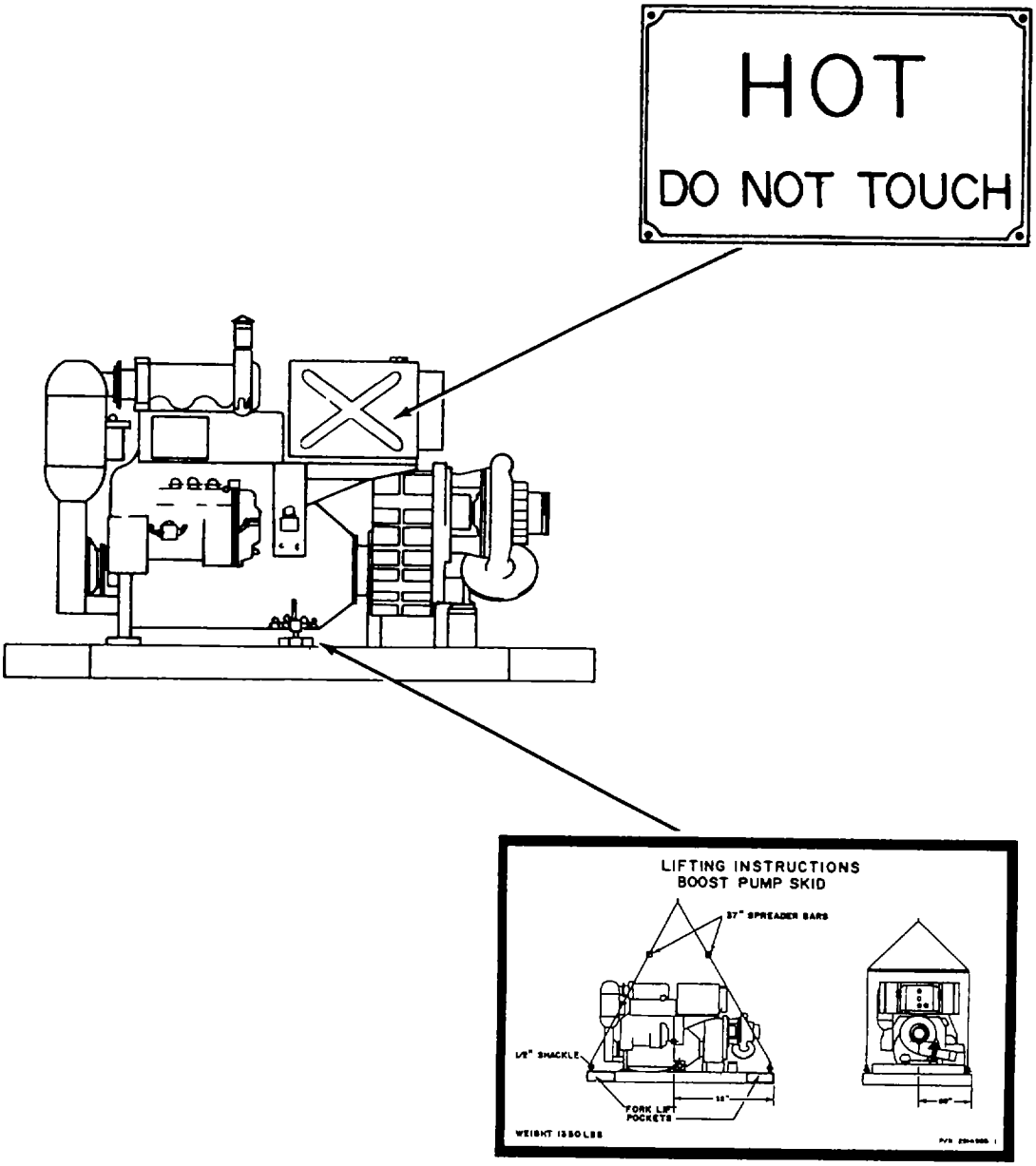

2-10. OPERATING INSTRUCTIONS ON DECALS AND INSTRUCTION PLATES (CONT)

BOOST PUMP ASSEMBLY (CONT)

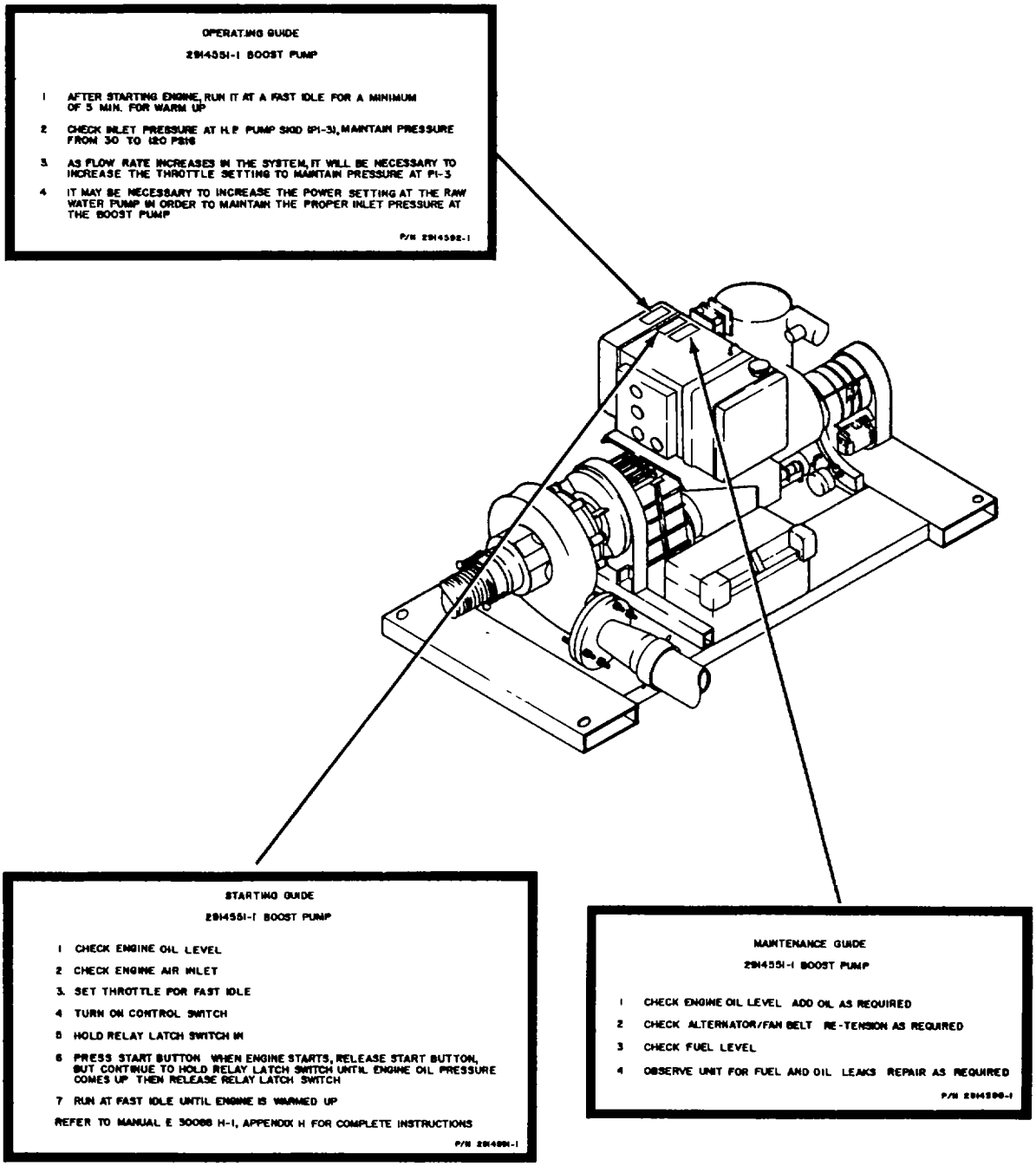

2-10. OPERATING INSTRUCTIONS ON DECALS AND INSTRUCTION PLATES (CONT)

HIGH PRESSURE PUMP ASSEMBLY

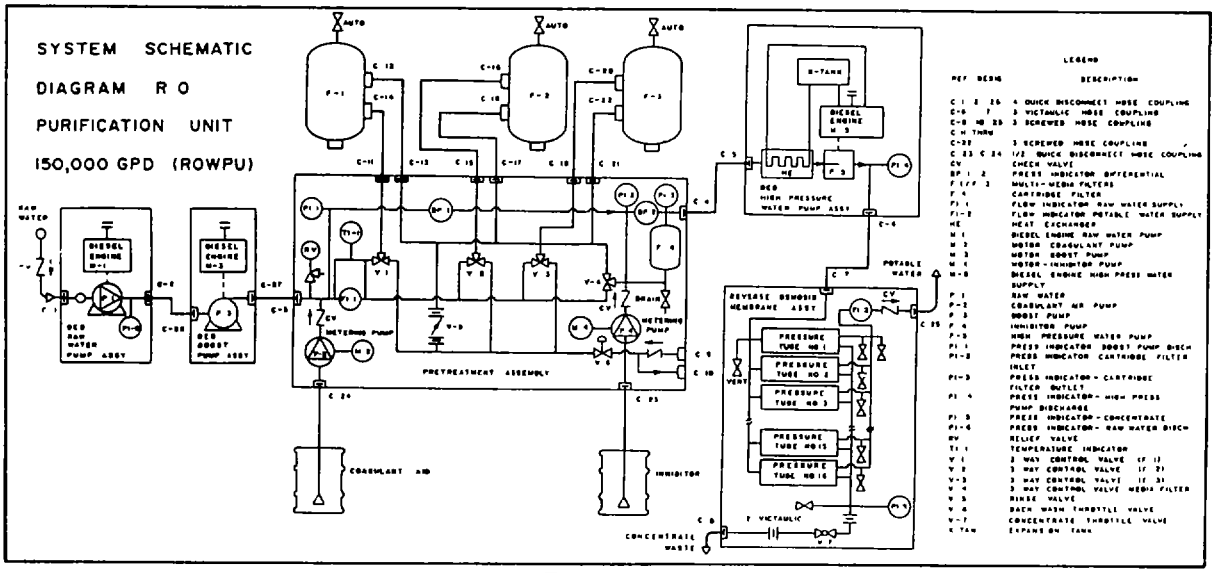

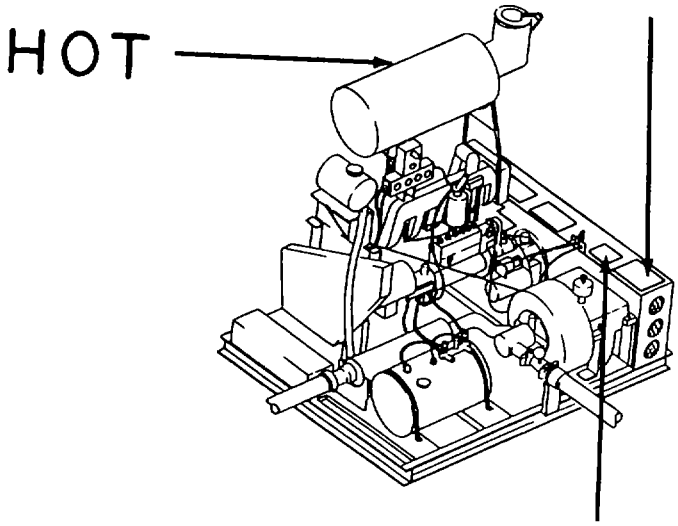

OPERATING GUIDE
2914301-1 H P PUMP SKID

1. AFTER STARTING ENGINE ALLOW A MINIMUM OF 5 MIN OPERATION AT FAST IDLE FOR WARMUP
2. CHECK THE INLET PRESSURE TO THE H P PUMP(PI-3) THE PRESSURE SHOULD BE ABOUT 80 PSIG AND NEVER LESS THAN 30 PSIG
3. INCREASE ENGINE SPEED (PULL THE THROTTLE OUT) SLOWLY TO RAISE PRESSURE ON PI-4 TO LEVEL REQUIRED TO PRODUCED 100 GPM PRODUCT FLOW(FI-2) AT 350 GPM
4. OBSERVE THE PRESSURE AT PI-3 TO SEE THAT IT DOES NOT FALL BELOW 30 PSI

NOTE IT MAY BE NECESSARY TO INCREASE THE SPEED OF THE BOOST PUMP OR THE RAW WATER PUMP OR BOTH, IN ORDER TO MAINTAIN THE PRESSURE REQUIRED AT PI-3

REFER TO MANUAL E 30068 H I FOR COMPLETE INSTRUCTIONS

2-10. OPERATING INSTRUCTIONS ON DECALS AND INSTRUCTION PLATES (CONT)

HIGH PRESSURE PUMP ASSEMBLY (CONT)

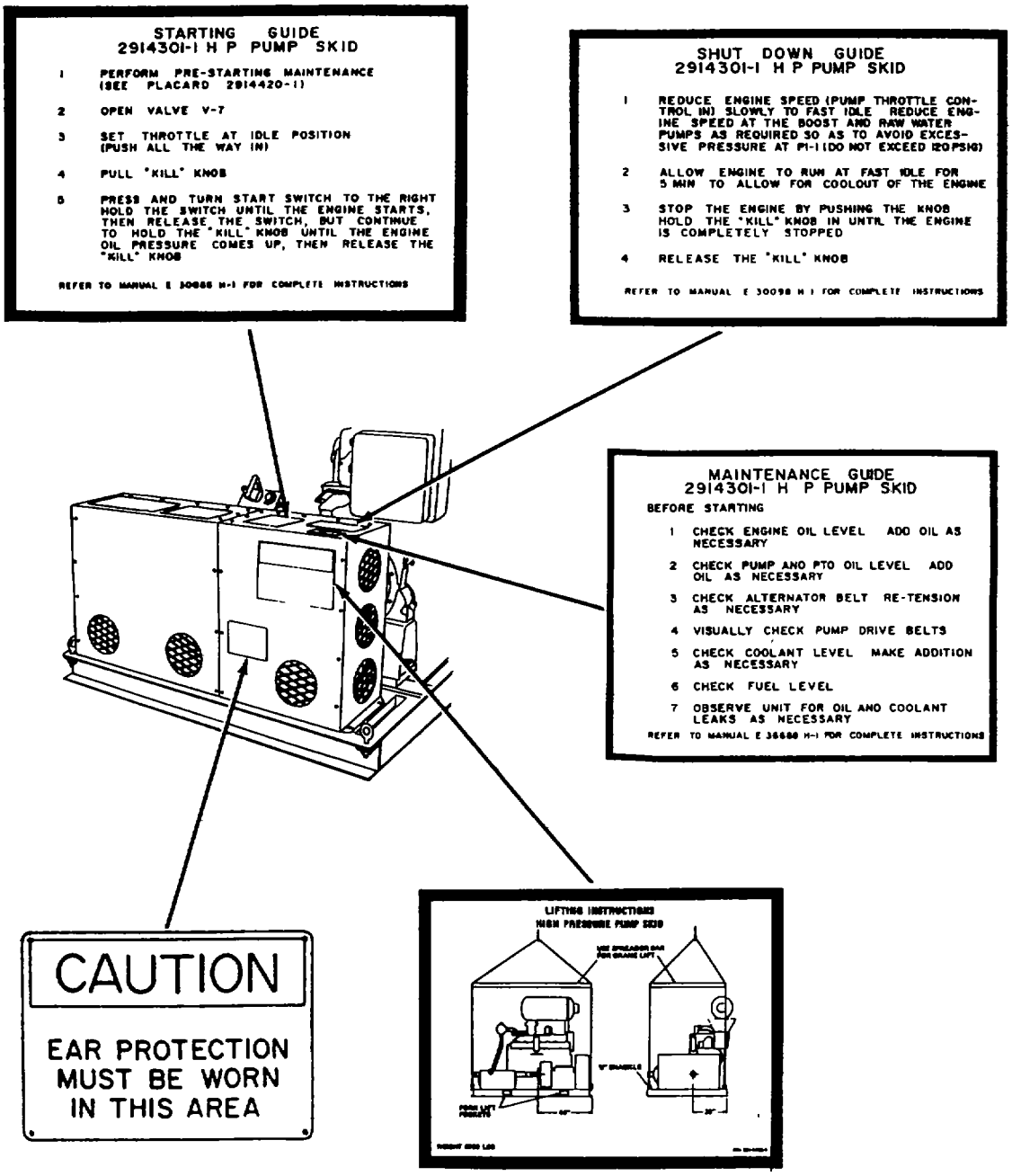

2-10. OPERATING INSTRUCTIONS ON DECALS AND INSTRUCTION PLATES (CONT)

REVERSE OSMOSIS BLOCK ASSEMBLY

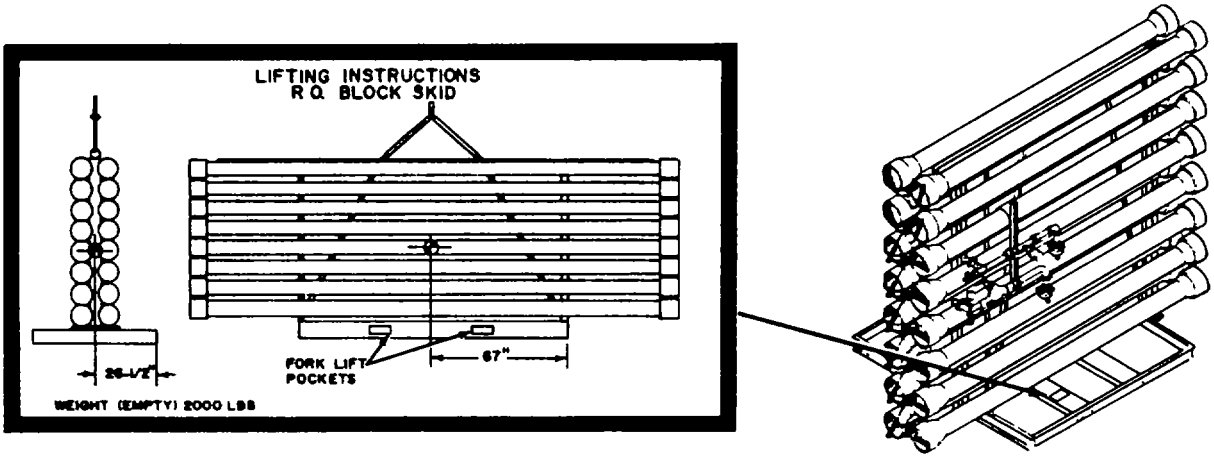

MULTIMEDIA FILTERS

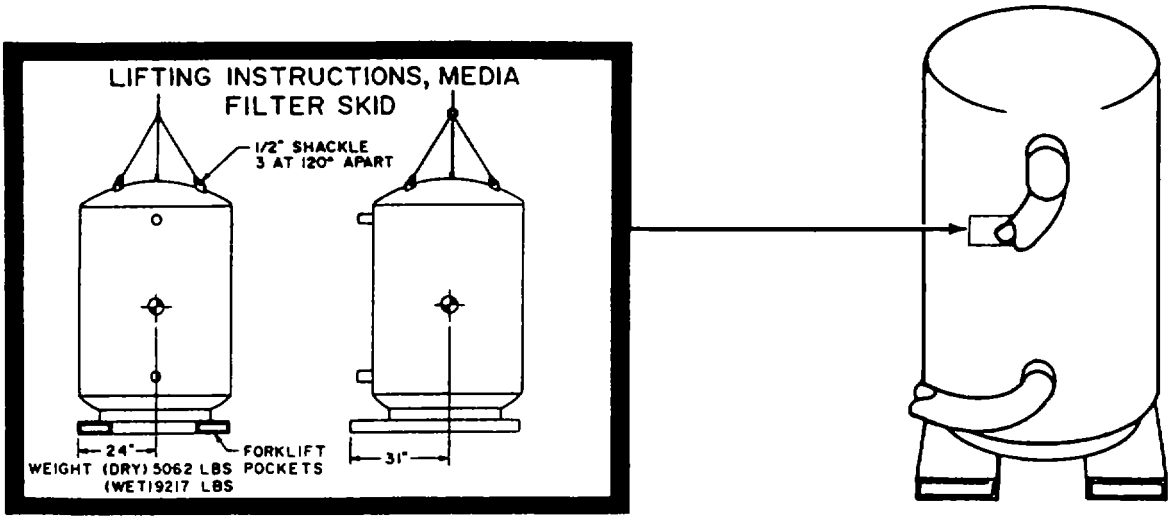

2-10. OPERATING INSTRUCTIONS ON DECALS AND INSTRUCTION PLATES (CONT)

PRETREATMENT ASSEMBLY

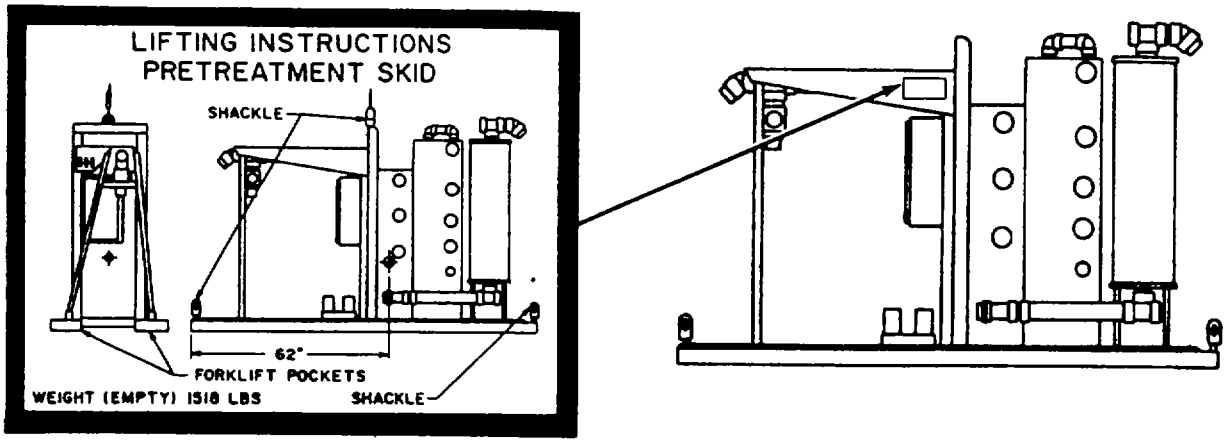

Section IV. OPERATION UNDER UNUSUAL CONDITIONS

2-11. OPERATION IN UNUSUAL WEATHER

a. Operation in Extreme Heat. Check oil levels twice daily (table 2-1, items 8, 18, 39, and 43). Notify organizational maintenance to change oil and filters every 10 days.

b. Operation in Dusty or Sandy Conditions. Service raw water and boost pump diesel engine air cleaner assemblies and high pressure pump oil breather weekly (para 3-3, 3-4, and 3-7). Check high pressure pump diesel engine air cleaner service indicator more often during operation (table 2-1, item 40). Service filter if needed (para 3-6).

2-12. EMERGENCY PROCEDURES. Failure or partial failure of any major component of the ROWPU is cause for the system to be shut down (para 2-8) for repairs.

CHAPTER 3

MAINTENANCE INSTRUCTIONS

Section I. Lubrication Instructions

3-1. INTRODUCTION. Refer to LO 10-4610-229-12 for lubrication instructions.

Section II. TROUBLESHOOTING PROCEDURES

3-1. INTRODUCTION

a. The table lists the common malfunctions which you may find during operation or maintenance of the ROWPU or its components. You should perform the tests/inspections and corrective actions in the order listed.

b. This manual cannot list all malfunctions that may occur, nor all tests or inspections and corrective actions. If a malfunction is not listed or is not corrected by listed corrective actions, notify your supervisor.

Table 3-1. Troubleshooting

MALFUNCTION	TEST OR INSPECTION	CORRECTIVE ACTION
1. LOW PRESSURE AT GAGE PI-1 LOCATED ON PRETREATMENT ASSEMBLY.		
	Step 1. Check pressure at PI-6.	
		If low, go to malfunction 6.
	Step 2. Check for leaks or damage in tubing and connections.	
		If tubing or connections leak, notify your supervisor.
	Step 3. Check valves V-5 and V-6 for correct setting.	
		If valve settings are incorrect, set correctly (para 2-4e).
	Step 4. Check boost pump engine speed setting.	
		If speed setting is incorrect, set correctly (para 2-5f).
	Step 5. Check raw water pump engine speed setting.	
		Set correctly (para 2-5e). If problem not corrected, shut down system (para 2-8) and notify your supervisor.

Table 3-1. Troubleshooting (Cont)

MALFUNCTION	TEST OR INSPECTION	CORRECTIVE ACTION
2. LOW PRESSURE AT GAGE PI-2 ON PRETRKATMENT ASSEMBLY.		
	Step 1. Check for leaks or damage in tubing and connections.	
		If tubing or connections leak, notify your supervisor.
	Step 2. Check MEDIA FILTER OK light.	
		If light not lit, perform backwash procedure (para 2-6). If backwash does not restore light operation, notify your supervisor.
	Step 3. Check valves V-1, V-2, and V-3 for correct setting.	
		If valve settings are incorrect, set correctly (para 2-4e).
	Step 4. Check boost pump engine speed setting.	
		If speed setting is incorrect, set correctly (para 2-5f).
	Step 5. Check raw water pump engine speed setting.	
		Set correctly (para 2-5e). If problem not corrected, shut down system (para 2-8) and notify your supervisor.
3. LOW PRESSURE AT GAGE PI-3 ON PRETREATMENT ASSEMBLY.		
	Step 1. Check for leaks or damage in tubing and connections.	
		If tubing or connections leak, notify your supervisor.
	Step 2. Check CARTRIDGE FILTER OK light.	
		If light not lit, replace cartridge filters (para 3-5). If cartridge filters do not restore light, notify your supervisor.
	Step 3. Check valves V-l, V-2, V-3, and V-4 for correct setting.	
		If valve settings are incorrect, set correctly (para 2-4e).

Table 3-1. Troubleshooting (Cont)

MALFUNCTION TEST OR INSPECTION	CORRECTIVE ACTION
3. LOW PRESSURE AT GAGE PI-3 ON PRETREATMENT ASSEMBLY (CONT)	
Step 4. Check boost pump engine speed setting.	If speed setting is incorrect, set correctly (para 2-5f).
Step 5. Check raw water pump engine speed setting.	Set correctly (para 2-5e). If problem not corrected, shut down system (para 2-8) and notify your supervisor.
4. LOW PRESSURE AT GAGE PI-4 ON HIGH PRESSURE PUMP.	
Step 1. Check high pressure pump engine speed setting.	If speed setting is incorrect, set correctly (para 2-5i),
Step 2. Check valves V-1, V-2, V-3, and V-4 for correct setting.	If valve settings are incorrect, set correctly (para 2-4e).
Step 3. Check boost pump engine speed setting.	If speed setting is incorrect, set correctly (para 2-5f).
Step 4. Check raw water pump engine speed setting.	Set correctly (para 2-5e). If problem not corrected, shut down system (para 2-8) and notify your supervisor.
5. LOW PRESSURE AT GAGE PI-5 ON REVERSE OSMOSIS BLOCK ASSEMBLY.	
Step 1. Check for open sample valves.	Close all open sample valves (para 2-1).

Table 3-1. Troubleshooting (Cont)

MALFUNCTION TEST OR INSPECTION	CORRECTIVE ACTION
5. LOW PRESSURE AT GAGE PI-5 ON REVERSE OSMOSIS BLOCK ASSEMBLY.	
Step 2. Check valve V-7 for correct setting.	If valve setting is incorrect, set correctly (para 2-4e).
Step 3. Check valves V-1, V-2, V-3, and V-4 for correct setting.	If valve settings are incorrect, set correctly (para 2-4e).
Step 4. Check boost pump engine speed setting.	If speed setting is incorrect, set correctly (para 2-5f).
Step 5. Check raw water pump engine speed setting.	Set correctly (para 2-5e). If problem not corrected, shut down system (para 2-8) and notify your supervisor.
6. LOW PRESSURE AT GAGE PI-6 ON RAW WATER PUMP OR CAVITATION AT RAW WATER PUMP.	
CAUTION If correcting engine speed does not correct problem, shut down engine at once to prevent damage to pump.	
Step 1. Check suction hose assembly for damage.	If suction hose assembly is damaged, notify your supervisor.
Step 2. Check raw water pump engine speed setting.	Set correctly (para 2-5e). If problem not corrected, shut down system (para 2-8) and notify your supervisor.

Table 3-1. Troubleshooting (Cont)

MALFUNCTION	TEST OR INSPECTION	CORRECTIVE ACTION
	Step 3. Check foot valve.	Clean foot valve.
	Step 4. Check inlet screen at pump inlet.	Clean screen (table 2-1, item I),
7. CAVITATION AT BOOST PUMP.		
		CAUTION
		If correcting engine speed does not correct problem, shut down engine at once to prevent damage to pump.
	Step 1. Check gage PI-6.	If low, go to malfunction 6.
	Step 2. Check discharge hose assemblies on raw water pump for damage.	If discharge hose assemblies are damaged, notify your supervisor.
	Step 3. Check engine speed setting.	Set correctly (para 2-5f). If problem is not corrected, shut down system (para 2-8) and notify your supervisor.
8. CAVITATION AT HIGH PRESSURE PUMP.		
		CAUTION
		If correcting engine speed does not correct problem, shut down engine at once to prevent damage to pump.
	Step 1. Check valves V-1, V-2, V-3, and V-4 for correct setting.	If valve settings are incorrect, set correctly (para 2-4e).

Table 3-1. Troubleshooting (Cont)

MALFUNCTION TEST OR INSPECTION	CORRECTIVE ACTION
Step 2. Check CARTRIDGE FILTER OK light.	If light not lit, replace cartridge filters (para 3-5). If cartridge filters do not restore light, notify your supervisor.
Step 3. Check engine speed setting.	Set correctly (para 2-5h). If problem not corrected, shut down system (para 2-8) and notify your supervisor.
9. HIGH PRESSURE AT GAGE PI-1 ON PRETREATMENT ASSEMBLY.	
Step 1. Check V-1, V-2, V-3, and V-4 for proper setting.	If valves settings are incorrect, set correctly (para 2-4e).
Step 2. Check valve V-5 for proper setting.	If valve setting is incorrect, set correctly (para 2-4e).
Step 3. Check valve V-6 for proper setting.	If valve setting is incorrect, set correctly (para 2-4e).
Step 4. Check valve V-7 for proper setting.	If valve setting is incorrect, set correctly (para 2-4e).
Step 5. Check boost pump engine speed setting.	Set correctly (para 2-5f). If problem not corrected, shut down system (para 2-8) and notify your supervisor.

Table 3-1. Troubleshooting (Cont)

MALFUNCTION TEST OR INSPECTION	CORRECTIVE ACTION
10. HIGH PRESSURE AT GAGE PI-2 LOCATED ON PRETREATMENT ASSEMBLY.	
Step 1. Check CARTRIDGE FILTER OK light.	If light not lit, replace cartridge filters (para 3-5). If cartridge filters do not restore light, notify your supervisor.
Step 2. Check V-l, V-2, V-3, and V-4 for proper setting.	If valve settings are incorrect, set correctly (para 2-4e)b
Step 3. Check valve V-5 for proper setting.	If valve setting is incorrect, set correctly (para 2-4e);
Step 4. Check valve V-6 for proper setting,	If valve setting is incorrect, set correctly (para 2-4e).
Step 5. Check valve V-7 for proper setting.	If valve setting is incorrect, set correctly (para 2-4e).
Step 6. Check boost pump engine speed setting.	Set correctly (para 2-5f). If problem not corrected, shut down system (para 2-8) and notify your supervisor.
11. HIGH PRESSURE AT GAGE PI-6 ON RAW WATER PUMP.	
Step 1. Check discharge hose assembly for kinks or twisting.	Straighten hose if necessary.
Step 2. Check raw water pump engine speed setting.	Set correctly (para 2-5e). If problem not corrected, shut down system (para 2-8) and notify your supervisor.

Table 3-1. Troubleshooting (Cont)

MALFUNCTION	TEST OR INSPECTION	CORRECTIVE ACTION
12. HIGH PRESSURE AT GAGE PI-4 ON HIGH PRESSURE PUMP.		
	Step 1. Check discharge hose assembly for kinks or twisting.	
		Straighten hose if necessary.
	Step 2. Check high pressure pump engine speed setting.	
		Set correctly (para 2-5h). If problem not corrected, shut down system (para 2-8) and notify your supervisor.
13. PRODUCT WATER CLOUDY OR SALTY.		
	Step 1. Check FI-1 for 350 gpm. Check FI-2 for 108 gpm.	
		Adjust high pressure pump throttle and valve V-7 to achieve proper flow at flow indicators (para 2-5i).
	Step 2. Check MEDIA FILTER OK light.	
		If light not lit, perform backwash procedure (para 2-6). If backwash does not restore light operation, notify your supervisor.
	Step 3. Check tubing and connections to and from chemical metering pumps.	
		Tighten loose tubes or connections (table 2-1, item 25).
	Step 4. Check reverse osmosis membranes.	
		Clean membranes (para 2-7).
14. BAW WATER PUMP ENGINE FAILS TO CRANK.		
	Step 1. Check for dead battery. (See TM 9-6140-200-14.)	
		If battery is dead, notify your supervisor.
	Step 2. Check battery cables for tightness and corrosion.	
		If battery cables are loose or corroded, notify your supervisor.

Table 3-1. Troubleshooting (Cont)

MALFUNCTION	TEST OR INSPECTION	CORRECTIVE ACTION
	Step 3. Check ignition switch.	
		If switch is defective, notify your supervisor.
15. RAW WATER PUMP ENGINE CRANKS BUT FAILS TO START.		
	Step 1. Check air filter for blockage.	
		Service air filter (para 3-3).
	Step 2. Check for fuel line leaks.	
		If there is fuel line leakage, notify your supervisor.
	Step 3. Check fuel filter for restriction.	
		If fuel filter is restricted, notify your supervisor.
16. RAW WATER PUMP ENGINE DOES NOT RUN SMOOTHLY OR MISFIRES.		
	Step 1. Check for fuel line leaks.	
		If there is fuel line leakage, notify your supervisor.
	Step 2. Check engine idle speed.	
		Set correctly (para 2-5e). If problem not corrected, shut down system (para 2-8) and notify your supervisor.
17. RAW WATER PUMP ENGINE DOES NOT DEVELOP FULL POWER.		
	Step 1. Check for fuel leaks.	
		If there is fuel line leakage, notify your supervisor.

Table 3-1. Troubleshooting (Cont)

MALFUNCTION	TEST OR INSPECTION	CORRECTIVE ACTION
17. RAW WATER PUMP ENGINE DOES NOT DEVELOP FULL POWER (CONT)		
	Step 2. Check fuel filter for restriction.	
		If fuel filter is restricted, notify your supervisor.
	Step 3. Check air filter for blockage.	
		Service air filter (para 3-3).
18. LOW OIL PRESSURE AT RAW WATER PUMP.		
	Step 1. Check engine oil level.	
		Add engine oil (table 2-1, item 8).
	Step 2. Check engine oil relief valve for leaks.	
		If there is leakage at relief valve, notify your supervisor.
19. RAW WATER PUMP ENGINE OVERBEATS.		
	Step 1. Check engine oil level.	
		Add engine oil (table 2-1, item 8).
	Step 2. Check cylinder cooling fins.	
		Clean fins (table 2-1, item 10).
20. RAW WATER PUMP ENGINE SMOKES EXCESSIVELY.		
	Check air filter for blockage.	
		Service air filter (para 3-3).
21. RAW WATER PUMP ENGINE STOPS SUDDENLY.		
	Check fuel supply.	
	If fuel level is correct, notify your supervisor.	

Table 3-1. Troubleshooting (Cont)

MALFUNCTION	TEST OR INSPECTION	CORRECTIVE ACTION
22. BOOST PUMP ENGINE FAILS TO CRANK.		
	Step 1. Check for dead battery. (See TM 9-6140-200-14.)	
		If battery is dead notify your supervisor.
	Step 2. Check battery cables for tightness and corrosion.	
		If battery cables are loose or corroded, notify your supervisor.
	Step 3. Check ignition switch.	
		If switch is defective, notify your supervisor.
	Step 4. Check starter motor.	
		If starter motor is defective, notify your supervisor,
23. BOOST PUMP ENGINE CRANKS BUT FAILS TO START.		
	Step 1. Check fuel shutoff valve for correct positioning.	
		If fuel shutoff valve is in incorrect position, notify your supervisor.
	Step 2. Check air filter for blockage.	
		Service air filter (para 3-4).
	Step 3. Check for fuel line leaks.	
		If there is fuel line leakage, notify your supervisor.
	Step 4. Check fuel filter for restriction.	
		If fuel filter is restricted notify your supervisor.

Table 3-1. Troubleshooting (Cont)

MALFUNCTION	TEST OR INSPECTION	CORRECTIVE ACTION
24. BOOST PUNP ENGINE DOES NOT RUN SMOOTHLY OR MISFIRES.		
	Step 1. Check for fuel line leaks.	
		If there is fuel line leakage, notify your supervisor.
	Step 2. Check engine idle speed.	
		Set correctly (para 2-5f). If problem not corrected, shut down system (para 2-8) and notify your supervisor.
25. BOOST PUMP ENGINE DOES NOT DEVELOP FULL POWER.		
	Step 1. Check for fuel leaks.	
		If there is fuel line leakage, notify your supervisor.
	Step 2. Check fuel filter for restriction.	
		If fuel filter is restricted notify your supervisor.
	Step 3. Check air filter for blockage.	
		Service air filter (para 3-4).
26. LOW OIL PRESSURE AT BOOST PUMP.		
	Step 1. Check engine oil level.	
		Add engine oil (table 2-1, item 18).
	Step 2. Check engine oil safety valve for leaks.	
		If there is leakage at safety valve, notify your supervisor.

Table 3-1. Troubleshooting (Cont)

MALFUNCTION	TEST OR INSPECTION	CORRECTIVE ACTION
27. BOOST PUMP ENGINE OVERHEATS.		
	Step 1. Check engine oil level.	
		Add engine oil (table 2-1, item 18).
	Step 2. Check cylinder cooling fins for obstruction.	
		Clean fins (table 2-1, item 20).
	Step 3. Check V-belt.	
		If V-belt is malfunctioning, notify your supervisor.
28. BOOST PUMP ENGINE SMOKES EXCESSIVELY.		
	Check air filter for blockage.	
		Service air filter (para 3-4).
29. BOOST PUMP ENGINE STOPS SUDDENLY.		
	Check fuel supply.	
		If fuel level is correct, notify your supervisor.
30. HIGH PRESSURE PUMP ENGINE FAILS TO CRANK.		
	Step 1. Check for dead battery. (See TM 9-6140-200-14.)	
		If battery is dead, notify your supervisor.
	Step 2. Check battery cables for tightness and corrosion.	
		If battery cables are loose or corroded, notify your supervisor.

Table 3-1. Troubleshooting (Cont)

MALFUNCTION	TEST OR INSPECTION	CORRECTIVE ACTION
30. HIGH PRESSURE PUMP ENGINE FAILS TO CRANK (CONT)		
	Step 3. Check start switch.	
		If switch is defective, notify your supervisor.
	Step 4. Check starter motor.	
		If starter motor is defective, notify your supervisor.
31. HIGH PRESSURE PUMP ENGINE CRANKS BUT FAILS TO START.		
	Step 1. Check air filter for blockage.	
		Service air filter (para 3-6).
	Step 2. Check for fuel line leaks.	
		If there is fuel line leakage, notify your supervisor.
	Step 3. Check fuel filter for restriction.	
		If fuel filter is restricted, notify your supervisor.
32. HIGH PRESSURE PUMP ENGINE DOES NOT RUN SNOOTHLY OR MISFIRES.		
	Step 1. Check for fuel line leaks.	
		If there is fuel line leakage, notify your supervisor.
	Step 2. Check engine idle speed.	
		Set correctly (para 2-5h). If problem not corrected, shut down system (para 2-8) and notify your supervisor.

Table 3-1. Troubleshooting (Cont)

MALFUNCTION	TEST OR INSPECTION	CORRECTIVE ACTION
33. HIGH PRESSURE PUMP ENGINE DOES NOT DEVELOP FULL POWER.		
	Step 1. Check throttle control linkage for correct adjustment.	
		If throttle is not correctly adjusted, notify your supervisor.
	Step 2. Check for fuel leaks.	
		If there is leakage at fuel lines, notify your supervisor.
	tep 3. Check fuel filter for restriction.	
		If fuel filter is restricted notify your supervisor.
	Step 4. Check air filter for blockage.	
		Service air filter (para 3-6).
34. LOW OIL PRESSURE AT HIGH PRESSURE PUMP.		
	Step 1. Check engine oil level.	
		Add engine oil (table 2-1, item 39).
	Step 2. Check engine oil lines for leaks.	
		If oil lines are leaking, notify your supervisor.
35. HIGH PRESSURE PUMP ENGINE OVERHEATS.		
	Step 1. Check engine oil level.	
		Add engine oil (table 2-1, item 39).

Table 3-1. Troubleshooting (Cont)

MALFUNCTION	TEST OR INSPECTION	CORRECTIVE ACTION
35. HIGH PRESSURE PUMP ENGINE OVERHEATS (CONT)		
	Step 2. Check engine coolant level.	
		Add coolant (table 2-1, item 38).
	Step 3. Check cooling system for leaks.	
		If there is cooling system leakage, notify your supervisor.
	Step 4. Flush cooling system. (See TB 750-651).	
		Fill with coolant (item 1, appendix D).
	Step 5. Check expansion tank cap for looseness.	
		If cap is loose or damaged, notify your supervisor.
	Step 6. Check water pump for looseness or damage.	
		If water pump is loose or damaged, notify your supervisor.
36. HIGH PRESSURE PUMP ENGINE SMOKES EXCESSIVELY.		
	Check air filter for blockage.	
		Service air filter (para 3-6).
37. HIGH PRESSURE PUMP ENGINE STOPS SUDDENLY.		
	Check fuel supply.	
		If fuel level is correct, notify your supervisor.

Table 3-1. Troubleshooting (Cont)

MALFUNCTION TEST OR INSPECTION	CORRECTIVE ACTION
38. DIFFERENTIAL PRESSURE ACROSS MULTIMEDIA FILTERS (PI-1) - (PI-2) EXCEEDS 35 PSIG.	
Step 1. Check MEDIA FILTER OK light.	Backwash multimedia filters (para 2-6).
Step 2. Check operation of gages.	If gages do not operate correctly, notify your supervisor.
Step 3. Check valve V-4 for proper position.	Open valve V-4 (para 2-6).

Section III. MAINTENANCE PROCEDURES

3-2. GENERAL. This section contains maintenance instructions authorized by the maintenance allocation chart (MAC) in TM 5-4610-229-24, and by the source, maintenance, and recoverability (SMR) coded items to support the ROWPU at the operator/crew maintenance level.

3-3. RAW WATER PUMP ENGINE AIR FILTER SERVICE

This task covers servicing only.

INITIAL SETUP

Supplies

Oil, item 9, appendix D
Rags, item 10, appendix D
Solvent, item 12, appendix D

Equipment Condition

Para	Condition Description
2-8	System shut down.

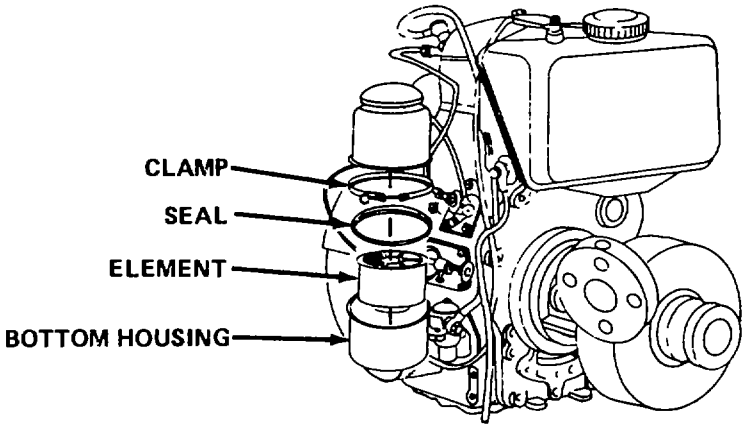

1 Hold air filter bottom housing. Loosen clamp. Remove bottom housing with clamp and seal.

2 Remove air filter element from bottom housing.

3-3. RAW WATER PUMP ENGINE AIR FILTER SERVICE (CONT)

3 Discard oil from bottom housing.

WARNING

- Solvent may cause toxic fumes. To prevent personal injury, work only in well ventilated area. DO NOT breathe fumes for a long time.
- Solvent is flammable. To prevent fire or explosion, DO NOT bring open flame or sparks near solvent.

4 Clean bottom housing and air filter element with solvent.

5 Wipe bottom housing dry with a clean rag.

6 Inspect seal. If seal damaged, notify your supervisor.

7 Dry air filter element thoroughly.

CAUTION

Too much oil in air filter will cause engine to smoke and possibly overspeed. DO NOT overfill.

8 Fill bottom housing with engine oil to line. Do not overfill.

9 Install air filter element in bottom housing.

10 Install bottom housing. Tighten clamp.

3-4. BOOST PUMP ENGINE AIR FILTER SERVICE

This task covers servicing only.

INITIAL SETUP

Supplies

Oil, item 9, appendix D
Rags, item 10, appendix D
Solvent, item 12, appendix D

Equipment Condition

Para	Condition Description
2-8	System shut down.

3-4. BOOST PUMP ENGINE AIR FILTER SERVICE (CONT)

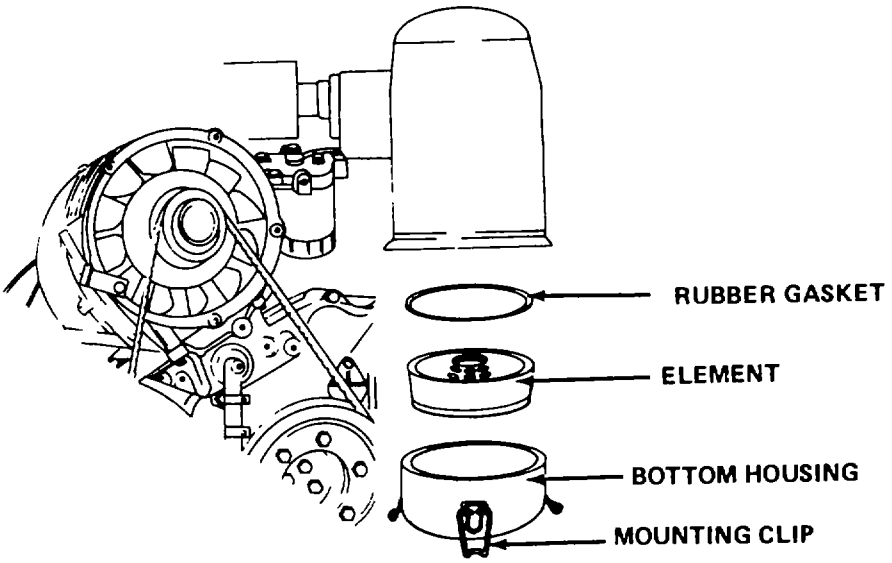

1 Release three mounting clips. Remove bottom housing.

2 Remove filter element from bottom housing.

3 Discard oil from bottom housing.

4 Remove rubber gasket from filter element.

WARNING

· Solvent may cause toxic fumes. To prevent personal injury, work only in well ventilated area. DO NOT breathe fumes for a long time.

· Solvent is flammable. To prevent fire or explosion, DO NOT bring open flame or sparks near solvent.

5 Clean bottom housing and filter element with solvent.

6 Wipe bottom housing dry with a clean rag..

7 Dry filter element thoroughly.

3-4. BOOST PUMP ENGINE AIR FILTER SERVICE (CONT)

CAUTION

Too much oil in air cleaner will cause engine to smoke and possibly overspeed. DO NOT overfill.

8 Fill bottom housing with engine oil to line. Do not overfill.

9 Install rubber gasket on air filter element.

10 Install air filter element in bottom housing.

11 Install bottom housing. Latch three mounting clips.

3-5. CARTRIDGE FILTER ELEMENTS REPLACKEMENT

This task covers:

a. Removal

b. Installation

INITIAL SETUP

Tools

Wrench set, appendix C

Supplies

Cartridge filter elements, item 2, appendix D

Personnel Required

Three

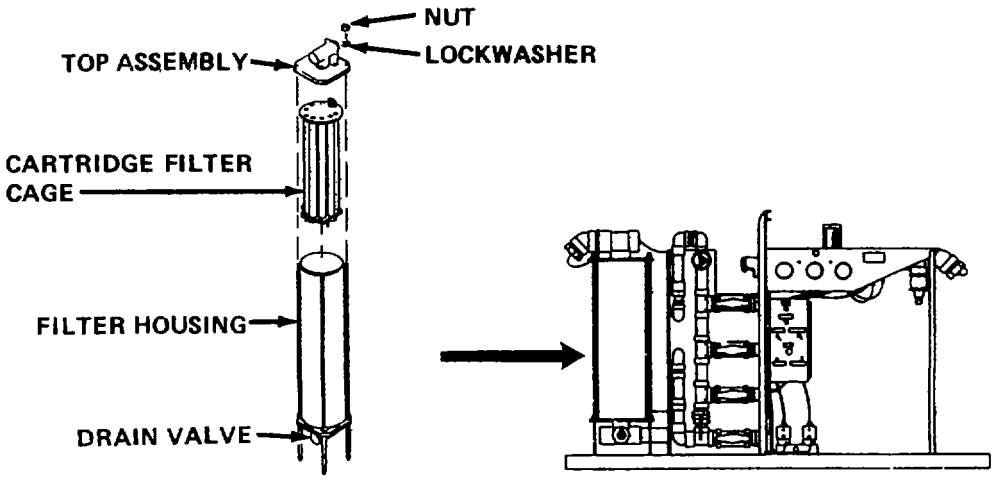

a. Removal

1 Open cartridge filter drain valve. Remove four nuts at top of filter. Remove top assembly.

3-5. CARTRIDGE FILTER ELEMENTS REPLACEMENT (CONT)

NOTE

Three personnel are required to lift cartridge filter cage assembly from housing.

2 Using handles, lift cartridge filter cage assembly from filter housing. Place it upside down on a clean work surface.

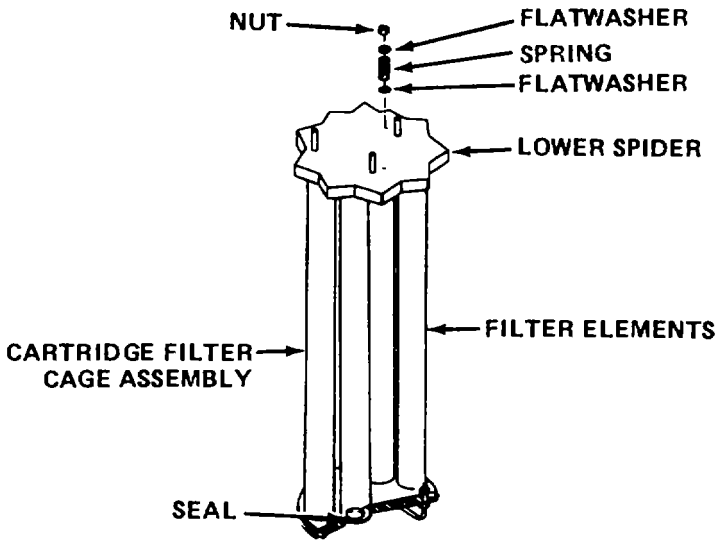

CAUTION

DO NOT attempt to remove upper or lower seals. If seals come loose, be sure to install upper seals on upper spider and lower seals on lower spider. Failure to install seals correctly may result in water leakage.

3 Remove three nuts, six flatwashers, and three springs. Lift and remove lower spider from tie rods.

3-5. CARTRIDGE FILTER ELEMENTS REPLACEMENT (CONT)

4 Remove and discard all filter elements. Inspect upper and lower spiders for loose or damaged seal. Install loose seals. If any seals are damaged, notify your supervisor.

b. Installation. For installation of filter elements, see paragraph 2-4f, steps 5 thru 14.

3-6. HIGH PRESSURE PUMP ENGINE AIR FILTER SEKVICE

This task covers servicing only.

INITIAL SETUP

Supplies

Rags, item 10, appendix D

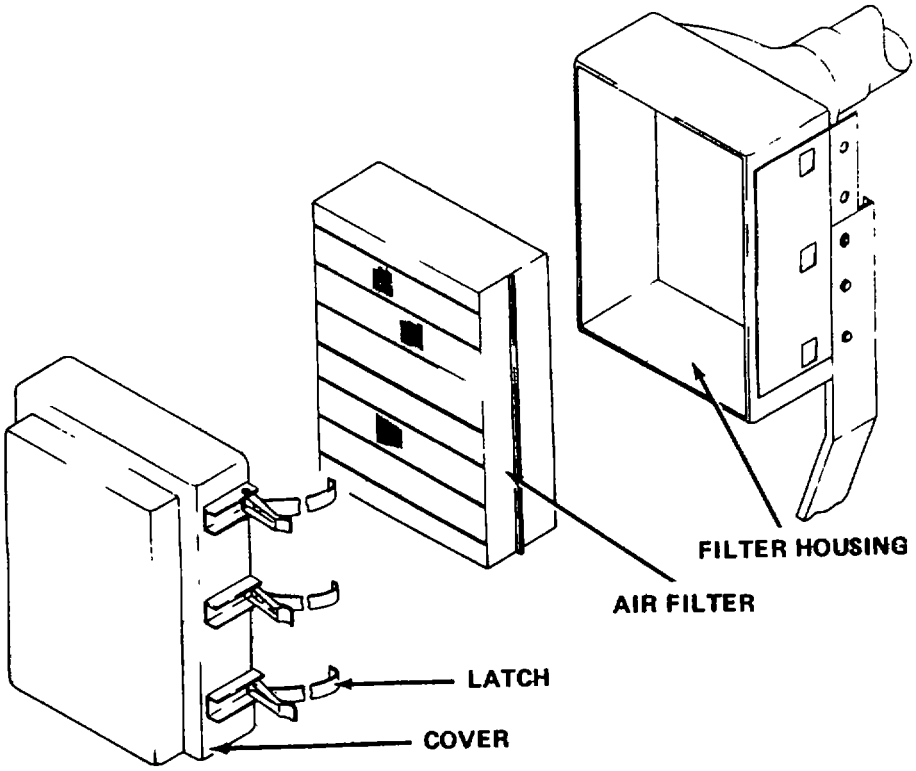

1 Open six latches. Remove cover. Remove air filter.

2 Wipe filter housing and cover clean.

3 Tap filter gently on hard surface to remove dirt and debris.

4 Install air filter. Install cover. Close six latches.

3-7. HIGH PRESSURE PUMP OIL BREATHER SERVICE

This task covers servicing only.

INITIAL SETUP

Supplies

Rags, item 10, appendix D
Solvent, item 12, appendix D

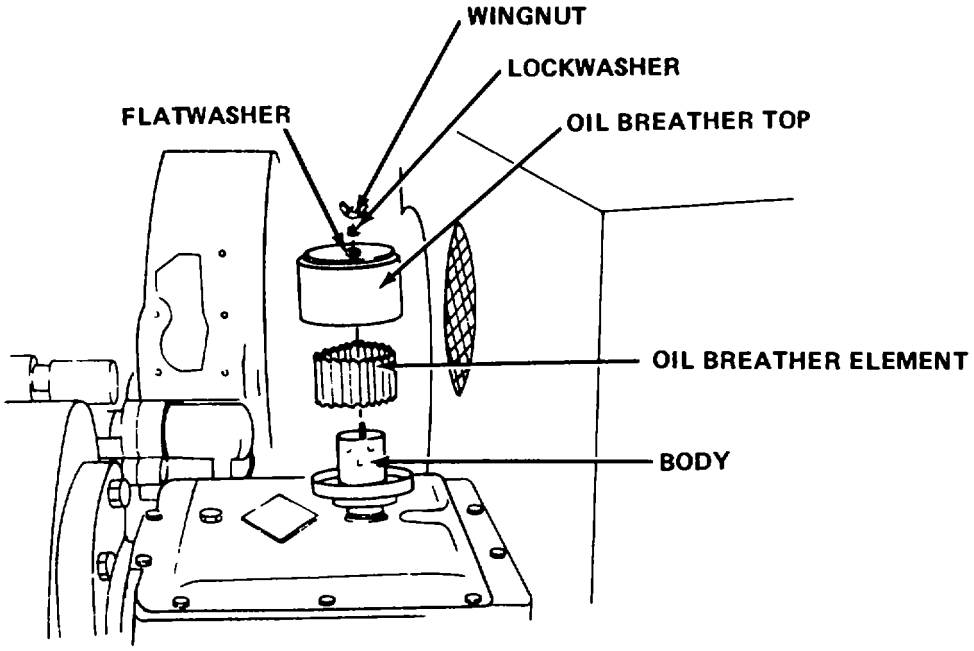

1 Remove wingnut, lockwasher, and flatwasher from top of oil breather. Remove oil breather top.

2 Remove oil breather element from oil breather.

3 Wipe all dirt and debris from oil breather top and body.

3-7. HIGH PRESSURE PUMP OIL BREATHER SERVICE (CONT)

WARNING

· Solvent may cause toxic fumes. To prevent personal injury, work only in well-ventilated area. DO NOT breathe fumes for a long time.

· Solvent is flammable. To prevent fire or explosion, DO NOT bring open flame or sparks near solvent.

4 Clean oil breather element with solvent. Dry thoroughly.

5 Install oil breather element on body.

6 Install oil breather top.

7 Install flatwasher, lockwasher, and wingnut.

3-8. REVERSE OSMOSIS HEMBRANES CLEANING

This task covers cleaning only.

INITIAL SETUP

Tools

Hose wrench, item 8, section III, appendix B
Wrench set, apppendix C

Equipment Condition

Para	Condition Description
2-8	System shut down.

Supplies

Silicone lubricant, item 5, appendix D
Hydrakleen-20, item 6, appendix D

See para 2-1, Reverse Osmosis Membranes Cleaning.

3-9. REVERSE OSMOSIS MEMBRANES REPLACEMENT

This task covers:

a. Removal

b. Installation

INITIAL SETUP

Tools

Crowfoot wrench, item 6, section III, appendix B
Element removal tool, item 5, section III, appendix B
Extension, item 1, section III appendix B

Supplies

Silicone lubricant, item 5, appendix D
Tags, item 13, appendix D

Personnel Required

Two

Equipment Condition

Para	Condition Description
2-8	System shut down.

a. Removal

NOTE

This procedure begins at product water end of reverse osmosis block assembly.

1 Tag all rigid and flexible tubes. Loosen rigid tube nut.

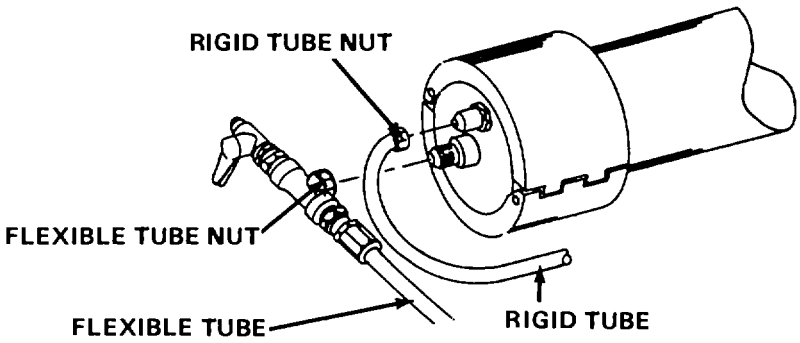

2 Loosen rigid tube nut at manifold. DO NOT remove. Swing tube away from end cap assembly.

3 Loosen flexible tube nut. Remove flexible tube from end cap.

3-9. REVERSE OSMOSIS MEMBRANES REPLACEMENT (CONT)

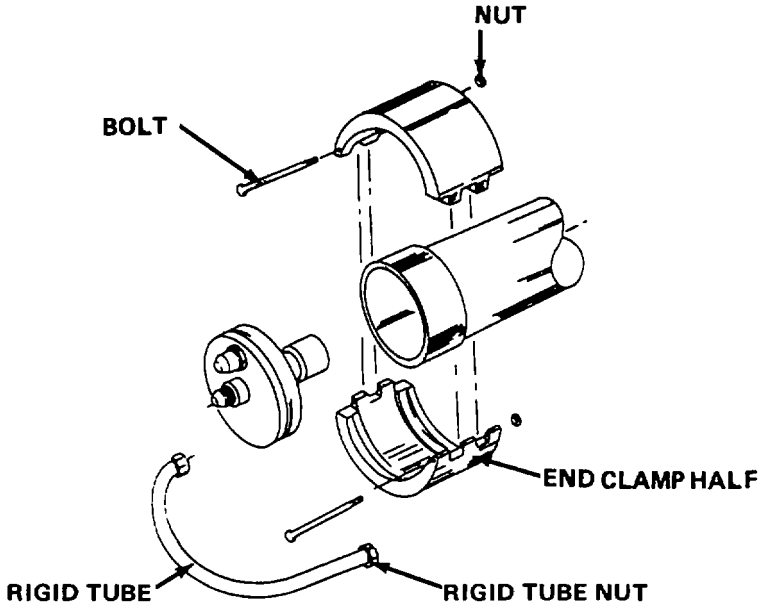

4 Remove two bolts, two nuts, and two end clamp halves.

5 Gently work end cap assembly back and forth to remove from pressure tube. Set aside in a clean place. Go to other (feedwater) end of pressure tube.

6 Remove rigid tube nut. Loosen rigid tube nut at manifold. DO NOT remove. Remove rigid tube from end cap assembly. Swing tube away from end cap assembly.

7 Remove two bolts, two nuts, and two end clamp halves.

8 Gently work end cap assembly back and forth to remove from pressure tube. Set aside in a clean place.

NOTE

This step requires two personnel.

9 Have one person at feedwater end of tube with removal tool. Have one person at product end of tube to support membrane element's weight as it comes out of tube. Insert removal tool and slowly push elements through tube. Repeat for other 15 tubes.

b. Installation. For installation of the reverse osmosis membrane elements, see paragraph 2-4g, steps 9 thru 31.

APPENDIX A

REFERENCES

A-1. SCOPE. This appendix lists all forms, field manuals, technical manuals, and miscellaneous publications referenced in this manual.

A-2. FORMS

Equipment Inspection and Maintenance Worksheet .....DA Form 2404

Quality Deficiency Report .....SF 368

Recommended Changes to Publications and Blank Forms .....DA Form 2028

Recommended Changes to Equipment Technical Publications ..... DA Form 2028-2

A-3. FIELD MANUALS

First Aid for Soldiers ..... FM 21-11

A-4. TECHNICAL MANUALS

Organizational, Direct Support, and General Support Maintenance
Manual for the Water Purification Unit, Reverse Osmosis,
150,000 GPD, Skid-Mounted, Model PD 81146 .....TM 10-4610-229-24

Organizational, Direct Support, and General Support Repair Parts
and Special Tools List for the Water Purification Unit, Reverse
Osmosis, 150,000 GPD, Skid-Mounted, Model PD 81146 ..... TM 10-4610-229-24P
Lubricating Order .....LO 10-4610-229-12

A-5. MISCELLANEOUS PUBLICATIONS

The Army Maintenance Management System (TAMMS) .....DA Pam 738-750

APPENDIX B

COMPONENTS OF END ITEM AND BASIC ISSUE ITEMS LISTS

Section I. INTRODUCTION

B-1. SCOPE. This appendix lists components of end item and basic issue items for the Reverse Osmosis Water Purification Unit to help you inventory items required for safe and efficient operation.

B-2. GENERAL. The Components of End Item and Basic Issue Items Lists are divided into the following sections:

a. Section II. Components of End Item. This listing is for informational purposes only, and is not authority to requisition replacements. These items are part of the end item, but are removed and separately packaged for transportation or shipment. As part of the end item, these items must be with the end item whenever it is issued or transferred between property accounts. Illustrations are furnished to assist you in identifying the items.

b. Section III. Basic Issue Items. These are the minimum essential items required to place the Reverse Osmosis Water Purification Unit in operation, to operate it, and to perform emergency repairs. Although separately packaged, basic issue items (BII) must be with the Reverse Osmosis Water Purification Unit during operation and whenever it is transferred between property accounts. The illustrations will assist you in hard-to-identify items. This manual is your authority to request/ requisition replacement BII, based on TOE/MTOE authorization of the end item.

B-3. EXPLANATION OF COLUMNS. The following provides an explanation of columns found in the tabular listings:

a. Column (1) Illustration Number (Illus Number). This column indicates the number of the illustration in which the item is shown.

b. Column (2) National Stock Number. Indicates the National stock number assigned to the item and will be used for requisitioning purposes.

c. Column (3) Description. Indicates the Federal item name and, if required, a minimum description to identify and locate the item. The last line for each item indicates FSCM (in parentheses) followed by part number.

d. Column (4) Unit of Measure (U/M). Indicates the measure used in performing the actual operational/maintenance function. This measure is expressed by a two-character alphabetical abbreviation (e.g. , ea, in., pr).

e. Column (5) Quantity required (Qty Rqr). Indicates quantity of item authorized to be used with/on the equipment.

Section II. COMPONENTS OF END ITEM

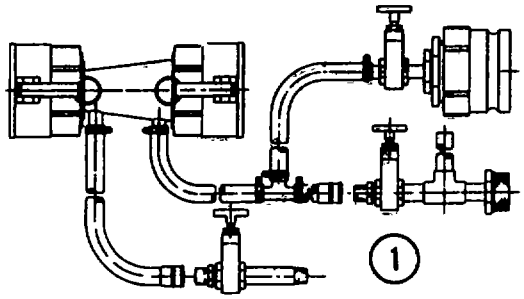

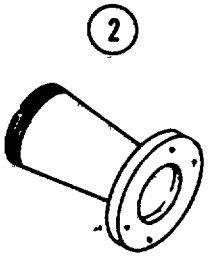

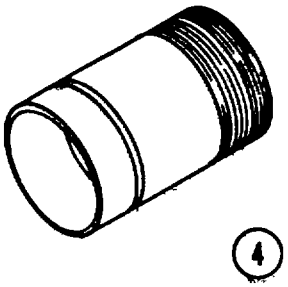

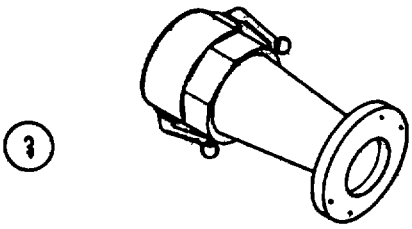

(1) Illus Number	(2) National Stock Number	(3) Description FSCM and Part Number	(4) U/M	(5) Qty Rqr
1		ADAPTER ASSEMBLY, SUCTION (11243) 2914160-1	EA	1
2		ADAPTER, DISCHARGE, BOOST PUMP (11243) 2914181	EA EA	1 1
3		ADAPTER, DISCHARGE, RAW WATER PUMP (11243) 2914256-1	EA	1
4		ADAPTER, DISCONNECT (11243) 2914162-1	EA	1

Section II. COMPONENTS OF END ITEM (CONT)

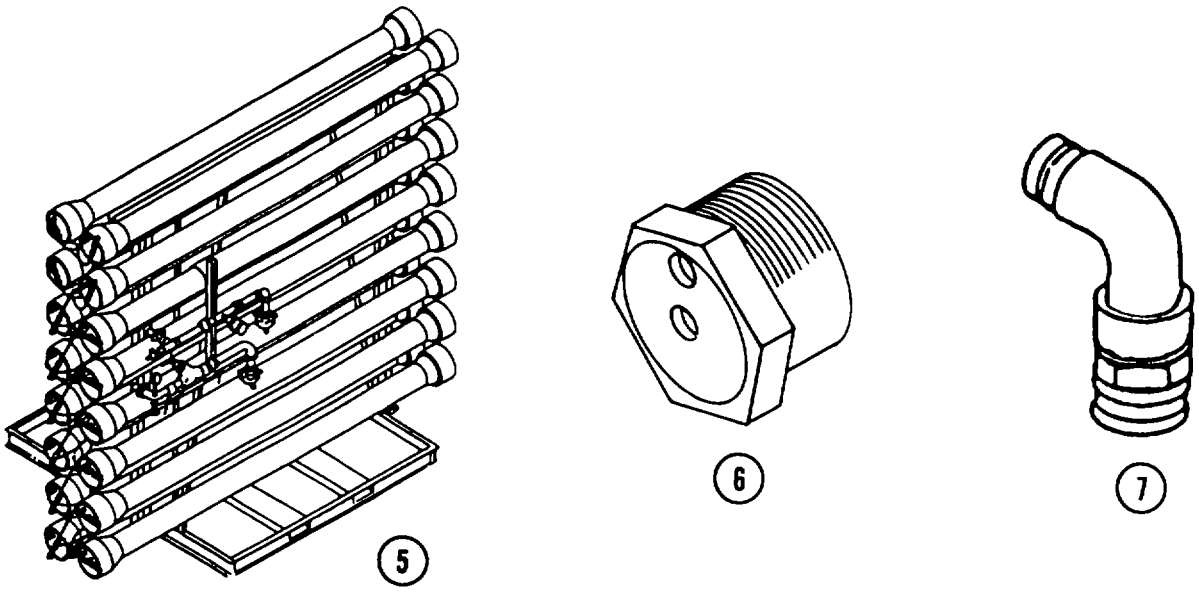

(1) Illus Number	(2) National Stock Number	(3) Description FSCM and Part Number	(4) U/M	(5) Qty Rqr
5		BLOCK ASSEMBLY, REVERSE OSMOSIS (52484) 52001	EA	1
6		CAP, FILLER, CHEMICAL DRUM (11243) 2914411-1	EA	2
7		COUPLING, HOSE, CLEANING (11243) 2914189-1	EA	1

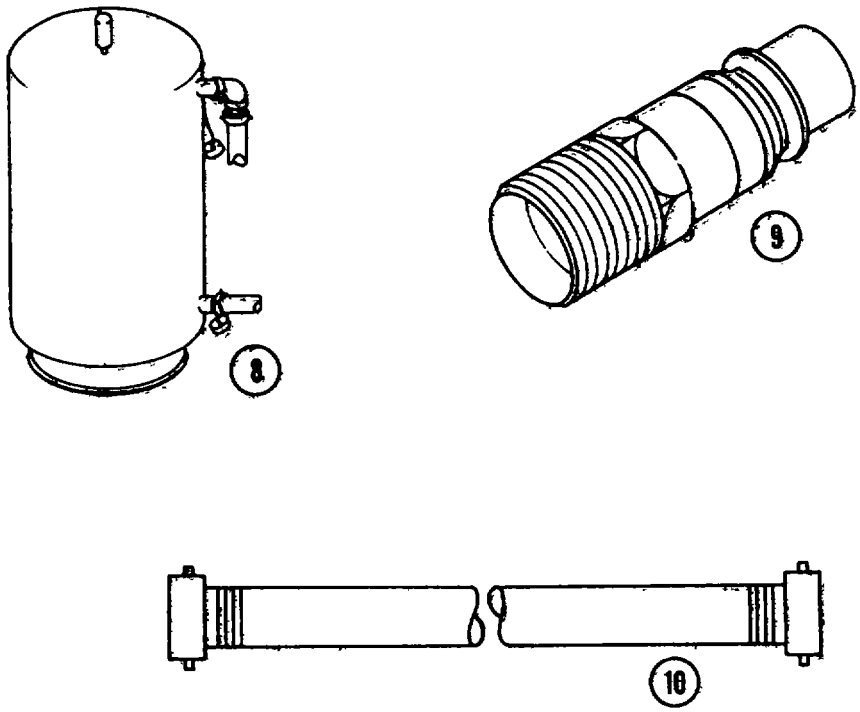

Section II. COMPONENTS OF END ITEM (CONT)

(1) Illus Number	(2) National Stock Number	(3) Description FSCM and Part Number	(4) U/M	(5) Qty Rqr
8		FILTER ASSEMBLY, MULTIMEDIA (52484) 52034	EA	3
9		FITTING, FUEL HOSE (11243) 2914164-1	EA	6
10		HOSE ASSEMBLY, CANVAS, 15 FT X 3 IN., THREADED (11243) 2914152-1	EA	3

Section II. COMPONENTS OF END ITEM (CONT)

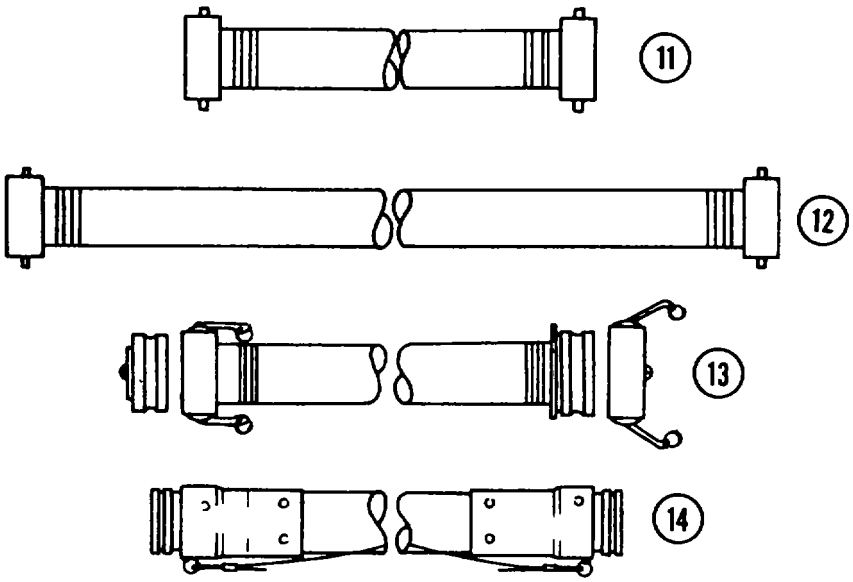

(1) Illus Number	(2) National Stock Number	(3) Description FSCM and Part Number	(4) U/M	(5) Qty Rqr
11		HOSE ASSEMBLY, CANVAS, 12 FT X 3 IN., THREADED (11243) 2914188-1	EA	3
12		HOSE ASSEMBLY, CANVAS, 20 FT X 3 IN., THREADED (11243) 2914166-1	EA	2
13		HOSE ASSEMBLY, RUBBER, DISCHARGE, 100 FT X 4 IN., QUICK-DISCONNECT (11243) 2914199-1	EA	5
14		HOSE ASSEMBLY, RUBBER, HIGH PRESSURE, 12 FT X 3 IN., VICTAULIC (11243) 2914165-1	EA	1

Section II. COMPONENTS OF END ITEM (CONT)

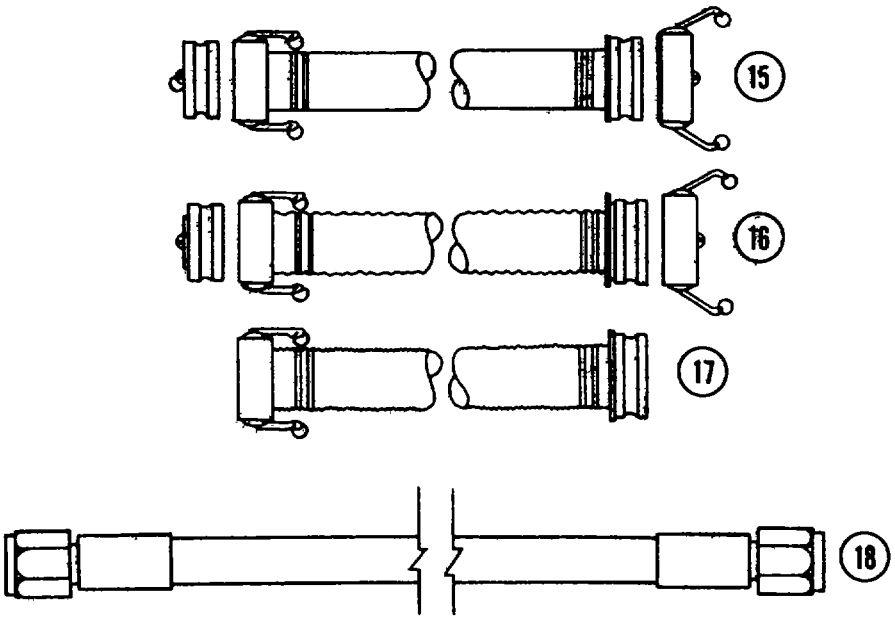

(1) Illus Number	(2) National Stock Number	(3) Description FSCM and Part Number	(4) U/M	(5) Qty Rqr
15		HOSE ASSEMBLY, VINYL, DISCHARGE, 100 FT X 4 IN., QUICK-DISCONNECT (11243) 2914253-1	EA	5
16		HOSE ASSEMBLY, VINYL, SUCTION, 19 FT X 4 IN., QUICK-DISCONNECT (11243) 2914198-1	EA	5
17		HOSE ASSEMBLY, VINYL, SUCTION, CLEANING, 19 FT X 4 IN., QUICK-DISCONNECT (11243) 2914254-1	EA	2
18		HOSE, AUXILIARY, FUEL (11243) 2914191-1	EA	6

Section II. COMPONENTS OF END ITEM (CONT)

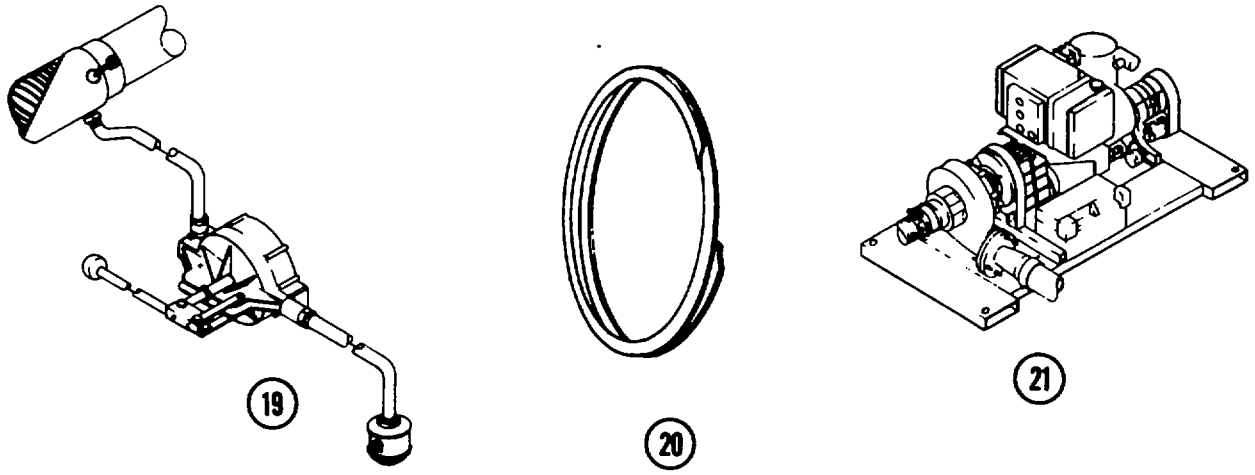

(1) Illus Number	(2) National Stock Number	(3) Description FSCM and Part Number	(4) U/M	(5) Qty Rqr
19		KIT, PUMP PRIMING (11243) 2914272-1	EA	1
20		RING, RETAINER (11243) 2914184-1	EA	1
21	4320-01-162-5039	SKID ASSEMBLY, BOOST PUMP (11243) 2914551-1	EA	1

Section II. COMPONENTS OF END ITEM (CONT)

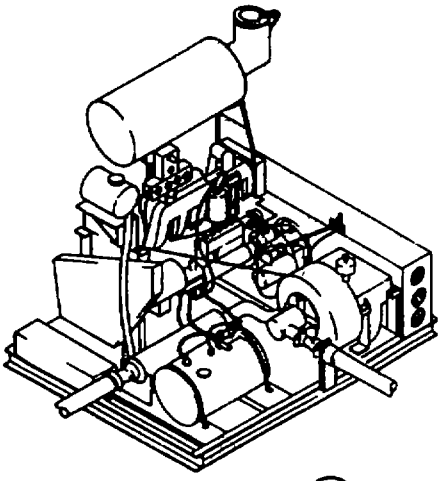

22

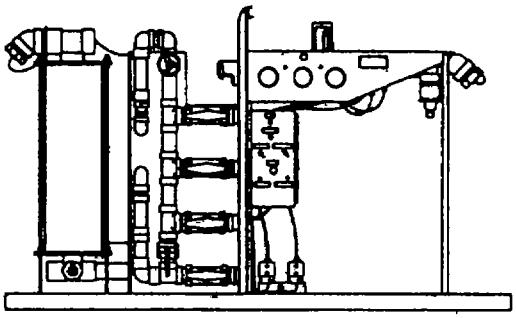

23

(1) Illus Number	(2) National Stock Number	(3) Description FSCM and Part Number	(4) U/M	(5) Qty Rqr
22	4320-01-211-9561	SKID ASSEMBLY, HIGH PRESSURE PUMP (11243) 2914301-1	EA	1
23		SKID ASSEMBLY, PRETREATMENT (52484) 52003	EA	1 -

Section II. COMPONENTS OF END ITEM (CONT)

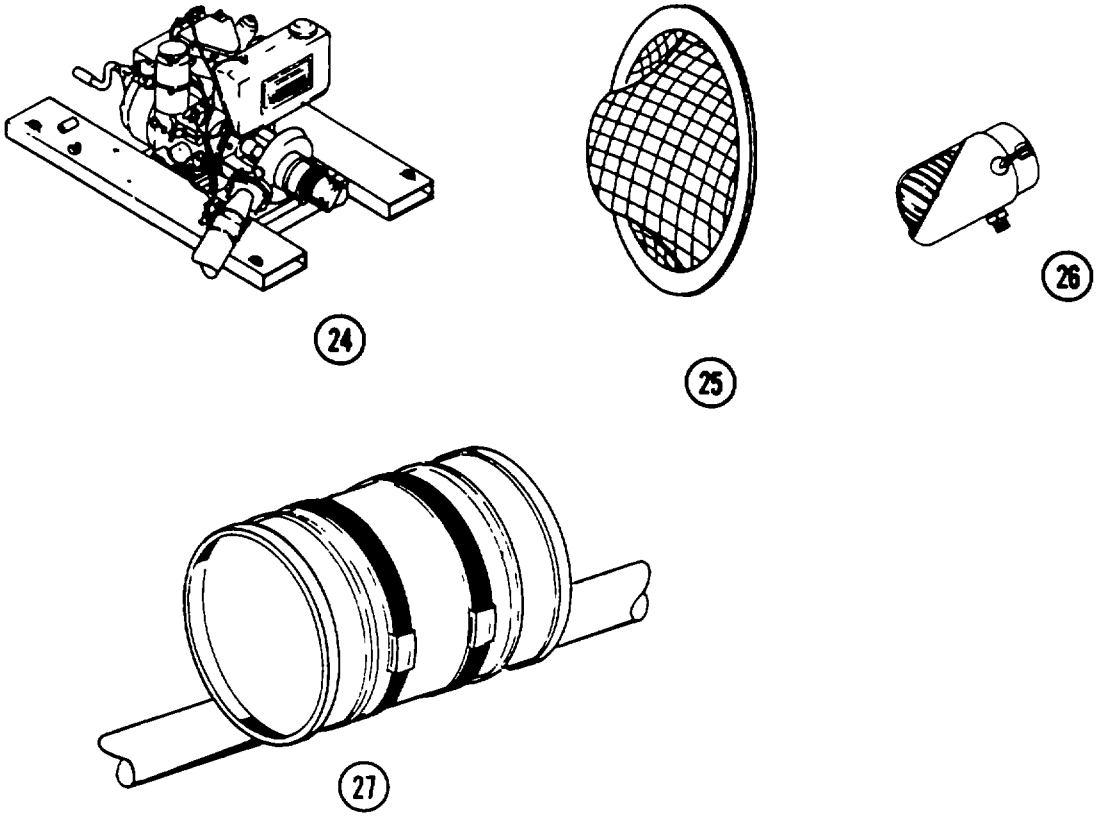

(1) Illus Number	(2) National Stock Number	(3) Description FSCM and Part Number	(4) U/M	(5) Qty Rqr
24	4320-01-162-5074	SKID ASSEMBLY, RAW WATER PUMP (11243) 2914201-1	EA	1
25		STRAINER (11243) 2914183-1	EA	1
26		VALVE ASSEMBLY, FOOT (11243) 2914273-1	EA	1
27		BUOY ASSEMBLY, DRUM (97403) 13221E 4914	EA	1

Section III. BASIC ISSUE ITEMS

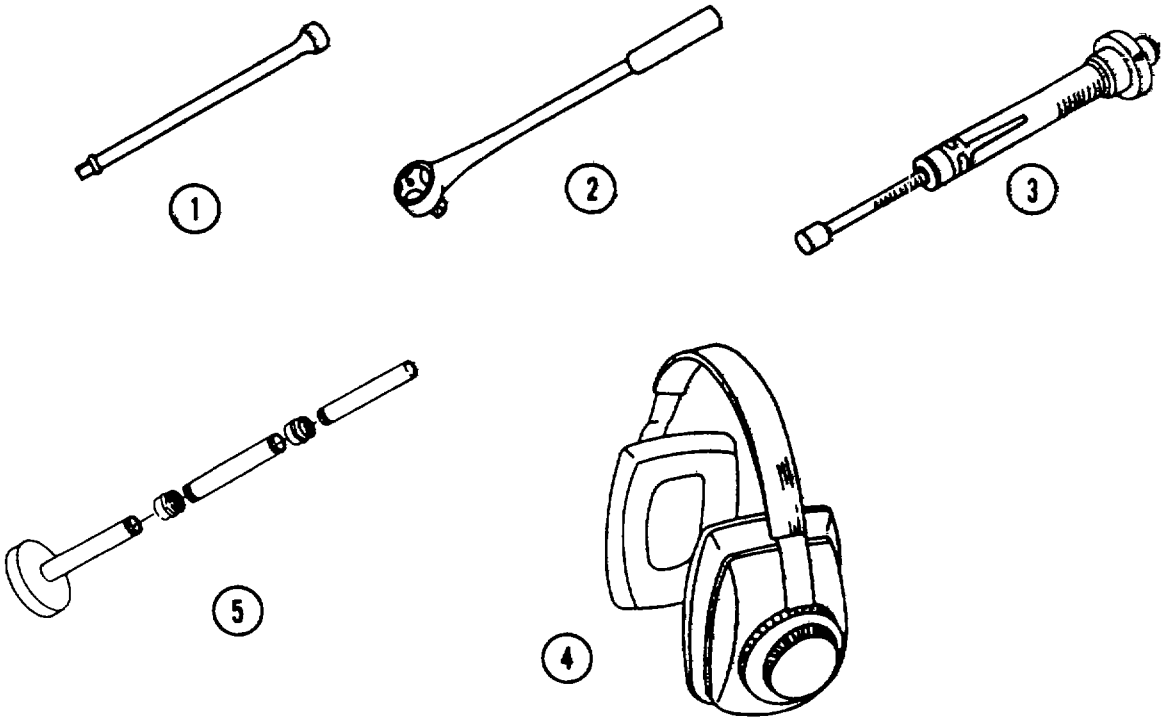

(1) Illus Number	(2) National Stock Number	(3) Description FSCM and Part Number	(4) U/M	(5) Qty Rqr
1		EXTENSION, 1/2 IN. DRIVE, 20 IN. LONG, (11243) 2914442-1	EA	2
2		HANDLE, RATCHET, 1/2 IN. DRIVE, (11243) 2914451-1	EA	1
3		METER, TENSION, DRIVE BELT, (11243) 2414154-1	EA	1
4		PROTECTOR, HEARING (52409) RBW-71	EA	6
5		TOOL, REMOVAL, REVERSE OSMOSIS MEMBRANE ELEMENT, (52484) 52100-1	EA	1

Section III. BASIC ISSUE ITEMS

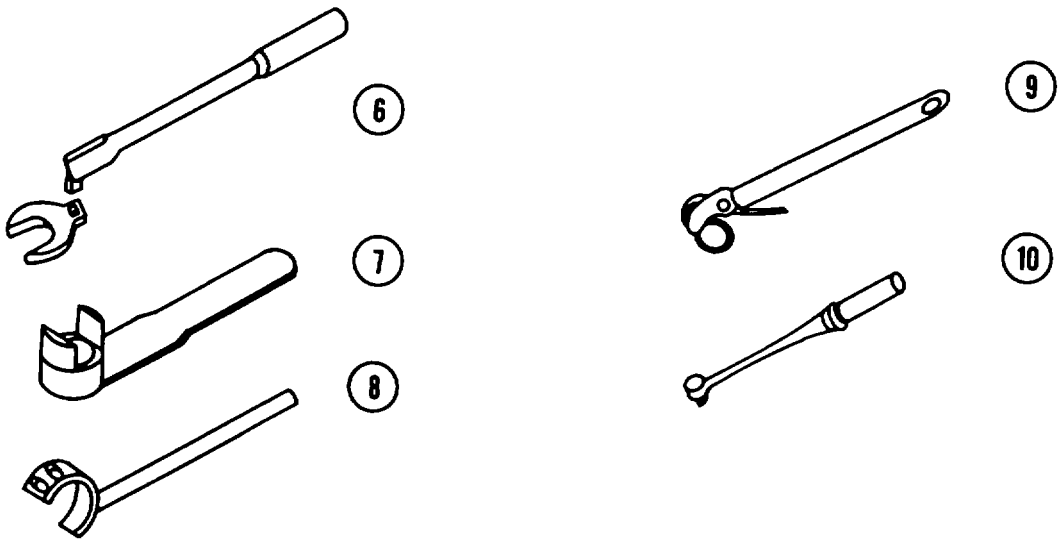

(1) Illus Number	(2) National Stock Number	(3) Description FSCM and Part Number	(4) U/M	(5) Qty Rqr
6		WRENCH, CROWFOOT, 1/2 IN. DRIVE, (11243) 2914441-1	EA	1
7		WRENCH, FLOWMETER, (52484) 51884-1	EA	1
8		WRENCH, SPANNER, FIRE HOSE FITTING, (11243) 2914410-1	EA	2
9		WRENCH, STRAP, 4 IN., (11243) 2914448-1	EA	2
10		WRENCH, TORQUE, 1/2 IN. DRIVE, 10-150 LB FT, (11243) 2914447-1	EA	1

APPENDIX C

ADDITIONAL AUTHORIZATION LIST

Section I. INTRODUCTION

C-1. SCOPE. This appendix lists additional items you are authorized for the support of the Reverse Osmosis Water Purification Unit.

C-2. GENERAL. This list identifies items that do not have to accompany the Reverse Osmosis Water Purification Unit and that do not have to be turned in with it. These items are all authorized to you by CTA, MTOE, TDA, or JTA.

C-3. EXPLANATION OF LISTING. National stock numbers, descriptions, and quantities are provided to help you identify and request the additional items you require to support this equipment. The items are listed in alphabetical sequence by item name under the type document (i.e., CTA, MTOE, TDA, or JTA) which authorizes the item to you.

Section II. ADDITIONAL AUTHORIZATION LIST

(1) National Stock Number	(2) Description FSCM and Part Number	(3) U/M	(4) Qty Rqr
	MTOE Authorized Items		
5120-00-224-1389	Bar, Pry (93389) 2126	ea	1
7920-00-291-5815	Brush, Wire (81348) HB178	ea	1
4610-01-105-2075	Element Assembly, Reverse Osmosis Membrane (59112) 23-0525-1	ea	80
5120-00-895-9566	Wrench Set, Combination Box- and Open-End	ea	1

APPENDIX D

EXPENDABLE/DURABLE SUPPLIES AND MATERIALS LIST

Section I. INTRODUCTION

D-1. SCOPE. This appendix lists expendable/durable supplies and materials you will need to operate and maintain the Reverse Osmosis Water Purification Unit. This listing is for informational purposes only and is not authority to requisition the listed items. These items are authorized to you by CTA 50-970, Expendable/Durable Items (Except Medical, Class V, Repair Parts, and Heraldic Items), or CTA 8-100, Army Medical Department Expendable/Durable Items.

D-2. EXPLANATION OF COLUMNS

a. Column (1) Item Number. This number is assigned to the entry in the listing and is referenced in the narrative instructions to identify the material (e.g., "Use cleaning compound, item 5, Appendix D.").

b. Column (2) Level. This column identifies the lowest level of maintenance that requires the listed item.

C Operator/crew
O Organizational maintenance
F Direct support maintenance
H General support maintenance

c. Column (3) National Stock Number. This is the National stock number assigned to the item; use it to request or requisition the item.

d. Column (4) Description. Indicates the Federal item name and, if required, a description to identify the item.

e. Column (5) Unit of Measure (U/M). Indicates the measure used in performing the actual maintenance function. This measure is expressed by a two-character alphabetical abbreviation (e.g., ea, in., pr). If the unit of measure differs from the unit of issue, requisition the lowest unit of issue that will satisfy your requirements.

SECTION II. EXPENDABLE / DURABLE SUPPLIES AND MATERIAL LIST

(1) ITEM NO.	(2) LEVEL	(3) NATIONAL STOCK NUMBER	(4) DESCRIPTION	(5) U/M
1	C	6850-00-181-7929	ANTIFREEZE, PERMANENT ETHYLENE GLYCOL (-65°F) INHIBITED (MIL-A-46153)	GL
2	C	4610-01-162-5043	ELEMENTS, CARTRIDGE FILTER, PN 52088	EA
3	C		COAGULANT AID (HYDRAPOL-50), PN 52053, 55 GAL DRUM	GL
4	C		GREASE, AUTOMOTIVE AND ARTILLERY, (MIL-G-10924)	
5	C	6850-00-880-7616	LUBRICANT, SILICONE (MIL-S-8660)	OZ
6	C		MEMBRANE CLEANING COMPOUND, HYDRAKLEEN-20, PN 70-11-126, 55 GAL DRUM	GL
7	C		OIL, FUEL, DIESEL, DF-2, REGULAR (VV-F-800)	GL
8	C		OIL, LUBRICATING, OE/HDO 15/40 (MIL-L-2104)	QT
9	C		OIL, LUBRICATING, OE/HD 30, API CC-CD-SE	
10	C	7920-00-205-1711	RAGS, WIPING, A-A-531	LB
11	C		SCALE INHIBITOR (HYDRAPOL-100) PN 52052, 55 GAL DRUM	GL
12	C	6850-00-281-1985	SOLVENT, DRYCLEANING, TYPE 2 A-A-711	GL
13	C		TAGS	BX

INDEX

INDEX (CONT)

D

INDEX

INDEX

INDEX (CONT)

INDEX (CONT)

Page

P

Q

INDEX (CONT)

INDEX (CONT)

INDEX (CONT)

By Order of the Secretary of the Army:

CARL E. VUONO
General, United States Army
Chief of Staff

Official:

THOMAS F. SIKORA
Brigadier General, United States Army
The Adjutant General

DISTRIBUTION:
To be distributed in accordance with DA Form 12-25E, (qty rqr blk no. 2479).

☆U S GOVERNMENT PRINTING OFFICE 1991 - 554-030/40034

RECOMMENDED CHANGES TO EQUIPMENT TECHNICAL PUBLICATIONS

THEN...JOT DOWN THE DOPE ABOUT IT ON THIS FORM. CAREFULLY TEAR IT OUT, FOLD IT AND DROP IT IN THE MAIL.

SOMETHING WRONG WITH PUBLICATION

FROM: (PRINT YOUR UNIT'S COMPLETE ADDRESS)

DATE SENT

PUBLICATION NUMBER	PUBLICATION DATE	PUBLICATION TITLE

BE EXACT PIN-POINT WHERE IT IS

PAGE NO.	PARA-GRAPH	FIGURE NO.	TABLE NO.

IN THIS SPACE, TELL WHAT IS WRONG AND WHAT SHOULD BE DONE ABOUT IT.

PRINTED NAME, GRADE OR TITLE AND TELEPHONE NUMBER	SIGN HERE

DA FORM 1 JUL 79 2028-2

PREVIOUS EDITIONS ARE OBSOLETE.

P.S.--IF YOUR OUTFIT WANTS TO KNOW ABOUT YOUR RECOMMENDATION MAKE A CARBON COPY OF THIS AND GIVE IT TO YOUR HEADQUARTERS.

The Metric System and Equivalents

Linear Measure

1 centimeter = 10 millimeters = .39 inches
1 decimeter = 10 centimeters = 3.94 inches
1 meter = 10 decimeters = 39.37 inches
1dekameter = 10 meters = 32.8 feet
1 hectometer = 10 dekameters = 328.08 feet
1 kilometer = 10 hectometers = 3,280.8 feet

Weights

1 centigram = 10 milligrams = .15 grain
1 decigram = 10 centigrams = 1.54 grains
1 gram = 10 decigram = .035 ounce
1 dekagram = 10 grams = .35 ounce
1 hectogram = 10 dekagrams = 3.52 ounces
1 kilogram = 10 hectograms = 2.2 pounds
1 quintal = 100 kilograms = 220.46 pounds
1 metric ton = 10 quintals = 1.1 short tons

Liquid Measure

1 centiliter = 10 milliliters = .34 fl. ounce
1 deciliter = 10 centiliters = 3.38 fl. ounces
1 liter = 10 deciliters = 33.81 fl. ounces
1 dekaliter = 10 liters = 2.64 gallons
1 hectoliter = 10 dekaliters = 26.42 gallons
1 kiloliter = 10 hectoliters = 264.18 gallons

Square Measure

1 sq. centimeter = 100 sq. millimeters = .155 sq. inch
1 sq. decimeter = 100 sq. centimeters = 15.5 sq. inches
1 sq. meter (centare) = 100 sq. decimeters = 10.76 sq. ft.
1 sq. dekameter (are) = 100 sq. meters = 1,076.4 sq. feet
1 sq. hectometer (hectare) = 100 sq. dekameters = 2.47 acres
1 sq. kilometer = 100 sq. hectometers = .386 sq. mile

Cubic Measure

1 cu. centimeter = 1000 cu. millimeters = .06 cu. Inch
1 cu. decimeter = 1000 cu. centimeters = 61.02 cu. inches
1 cu. meter = 1000 cu. decimeters = 35.31 cu. feet

Approximate Conversion Factors

To change	*To*	*Multiply by*	*To change*	*To*	*Multiply by*
inches	centimeters	2.540	ounce-inches	newton-meters	.007062
feet	meters	.305	centimeters	inches	.394
yards	meters	.914	meters	feet	3.280
miles	kilometers	1.609	meters	yards	1.094
square inches	square centimeters	6.451	kilometers	miles	.621
square feet	square meters	.093	square centimeters	square inches	.155
square yards	square meters	.836	square meters	square feet	10.764
square miles	square kilometers	2.590	square meters	square yards	1.196
acres	square hectometers	.405	square kilometers	square miles	.386
cubic feet	cubic meters	.028	square hectometers	acres	2.471
cubic yards	cubic meters	.765	cubic meters	cubic feet	35.315
fluid ounces	milliliters	29.573	cubic meters	cubic yards	1.308
pints	liters	.473	milliliters	fluid ounces	.034
quarts	liters	.946	liters	pints	2.113
gallons	liters	3.785	liters	quarts	1.057
ounces	grams	28.349	liters	gallons	.264
pounds	kilograms	.454	grams	ounces	.035
short tons	metric tons	.907	kilograms	pounds	2.205
pounds-feet	newton-meters	1.356	metric tons	short tons	1.102
pound-inches	newton-meters	.11296			

Temperature (Exact)

°F	Fahrenheit temperature	5/9 (after subtracting 32)	Celsius temperature	°C

PIN: 066014-000

This fine document...

Was brought to you by me:

Liberated Manuals -- free army and government manuals

Why do I do it? I am tired of sleazy CD-ROM sellers, who take publicly available information, slap “watermarks” and other junk on it, and sell it. Those masters of search engine manipulation make sure that their sites that sell free information, come up first in search engines. They did not create it... They did not even scan it... Why should they get your money? Why are not letting you give those free manuals to your friends?

I am setting this document FREE. This document was made by the US Government and is NOT protected by Copyright. Feel free to share, republish, sell and so on.

I am not asking you for donations, fees or handouts. If you can, please provide a link to liberatedmanuals.com, so that free manuals come up first in search engines:

<A HREF=http://www.liberatedmanuals.com/>Free Military and Government Manuals</A>

- Sincerely
  Igor Chudov
  http://igor.chudov.com/
- Chicago Machinery Movers