DEPARTMENT OF THE ARMY TECHNICAL MANUAL

TECHNICAL MANUAL

OPERATOR, ORGANIZATIONAL, DIRECT SUPPORT AND GENERAL SUPPORT MAINTENANCE MANUAL

HEATER, DUCT - TYPE; PORTABLE; GASOLINE; 250,000 BTU;

(BASTIAN-MORLEY MODEL PHDT-250)

FSN 4520-086-7676

(VOGT BROS MODEL VB 67-GFC3)

FSN 4520-937-6168

(KECO INDUSTRIES MODEL H250) FSN 4520-255-5051

(VOGT BROS MODEL VB-3077 CS-61 AND VOGT BROS MODEL VB-3077 CS-62)

FSN 4520-856-5983

This copy is a reprint which includes current pages from change 1.

HEADQUARTERS, DEPARTMENT OF THE ARMY
8 FEBRUARY 1972

WARNING

FIRE, HEALTH AND EXPLOSION HAZARD

DEATH

or severe injury in personnel or damage to property may result if personnel fail to observe safety precautions.

Open flames, electrical tools and apparatus, and other flame, or spark-generating equipment must be prohibited.

Gasoline spills must be avoided or cleaned up immediately when they occur.

Do not refuel or make any repairs or adjustment with the engine in operation.

Do not light burner while heater is warm; after extinguishing burner flame, run engine 3 minutes with burner door open to cool the system.

WARNING

GAS AND HEALTH HAZARD

DEATH

or severe injury may result if personnel fail to observe safety precautions.

Keep face away from burners access door when lighting burner; hot gases may escape through door.

Shut down heater and make repairs if there is any evidence of fumes coming through the ducts.

Do not operate the heater without having the exhaust extension stack set up properly to remove the deadly carbon monoxide fumes away from the air intake propeller fan.

Change No. 1

HEADQUARTERS
DEPARTMENT OF THE ARMY
Washington, D. C. *20 September 1973*

Operator, Organizational, Direct Support and General Support Maintenance Manual

HEATER, DUCT-TYPE PORTABLE; GASOLINE 250,000 BTU, (BASTIAN-MORLEY MODEL PHDT-250) FSN 4520-066-7676 (VOGT BROS. MODEL VB-67-GFC3) FSN 4520-937-6166 (KECO INDUSTRIES MODEL H250) FSN 4520-255-5051 (VOGT BROS. MODELS VB-3077 CS-61 and VB-3077-CS-62) FSN 4520-856-5983

TM 10-4520-201 -14, 8 February 1972, is changed as follows

Page 4-2. Paragraph 4-10, in line 5 "TM 5-2805-265-14" is changed to read "TM 5-2805-256-14".

Page 5-11. Paragraph 5-13 is rescinded.

Page 5-13. Figure 5-7 is superseded.

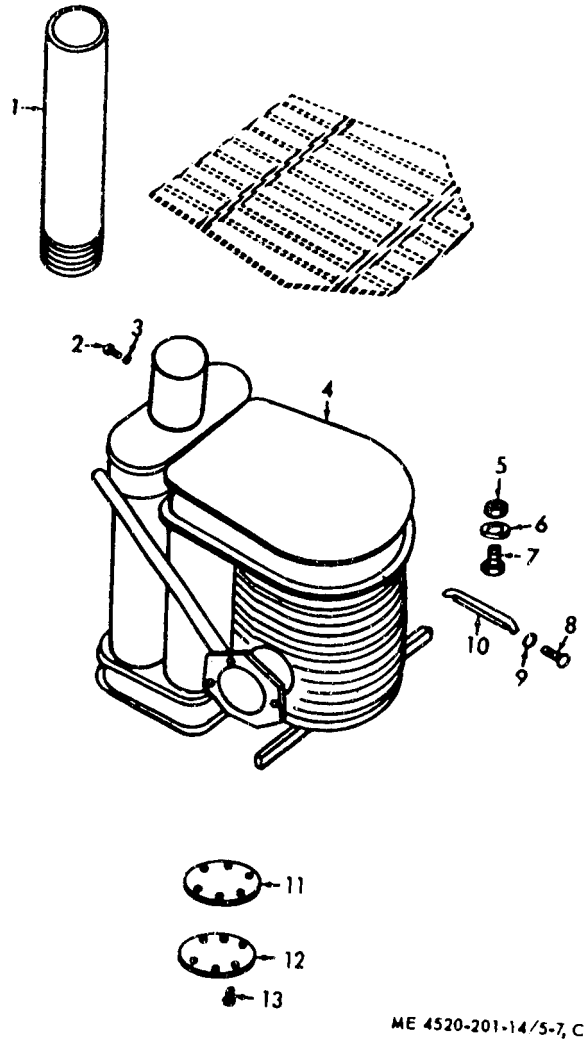

1 Stack with spark arrestor screen extention
2 Screws
3 Lockwashers
4 Combustion chamber assembly
5 Nut
6 Lockwasher
7 Bolt
8 Screw
9 Lockwasher
10 Combustion chamber channel support brace
11 Cleanout cover gasket
12 Cleanout covers
13 Screws

Figure 5-7. Combustion chamber assembly

By Order of the Secretary of the Army:

CREIGHTON W. ABRAMS
General, United States Army
Chief of Staff

Official:
VERNE L. BOWERS
Major General, United States Army
The Adjutant General

Distribution:
To be distributed in accordance with DA Form 12-25C (qty rqr block No. 597) operator maintenance requirements for Heaters, Space 250,000 BTU.

TECHNICAL MANUAL
NO. 10-4520-201-14

HEADQUARTERS,
DEPARTMENT OF THE ARMY
WASHINGTON, D. C., 8 February 1972

Operator, Organizational, Direct Support and General Support Maintenance Manual

HEATER, DUCT-TYPE; PORTABLE; GASOLINE; 250,000 BTU; (BASTIAN-MORLEY MODEL PHDT-250) FSN 4520-086-7676 (VOGT BROS MODEL VB 67-GFC3) FSN 4520-937-6168 (KECO INDUSTRIES MODEL H250) FSN 4520-255-5051 (VOGT BROS MODEL VB-3077 CS-61 AND VOGT BROS MODEL VB-3077 CS-62) FSN 4520-856-5983

* This publication supersedes TM 10-4520-201-10, 15 Jan 64 including all changes; TM 10-4520-201-20,21 Nov 63 including all changes; and TM 10-4520-201-35, 20 Nov 63 including all changes.

LIST OF ILLUSTRATIONS

CHAPTER 1

INTRODUCTION

Section I. GENERAL

1-1. Scope

This manual contains instructions on the operation and organizational, direct support and general support maintenance of the gasoline heaters as allocated by the Maintenance Allocation Chart. It provides information on the operation, lubrication, preventive maintenance checks and services and maintenance of the heaters, it accessories, components, and attachments.

1-2. Forms and Records

DA Forms and records used for equipment maintenance will be only those prescribed by TM 38-750.

1-3. Reporting of Errors

Report of errors, omissions. and recommendations for improving this publication by the individual user is encouraged. Reports should be submitted on DA Form 2028, (Recommended Changes to Publications) and forwarded direct to the Commanding General, U. S. Army Mobility Equipment Command, ATTN : AMSME-MPP, 4300 Goodfellow Boulevard, St. Louis, Mo. 63120.

1-4. Administrative Storage

Refer to TM 740-90-1 for administrative storage.

1-5. Destruction of Army Material to Prevent Enemy Use

Refer to TM 750-244-3 for destruction of the gasoline heaters.

Section II. DESCRIPTION AND TABULATED DATA

1-6. Description

The heater {fig. 1-1 and 1-2) is a compact, self-powered heating unit designed to produce and deliver a steady flow of heated air through a duct system (fig. 1-3). The heater consists of a vaporizing-type ventilating fan and the combustion chamber air blower. Although this heater may be used wherever a self-contained and self-powered heating unit is required, its primary functions are as follows:

a. To heat garages, protable hangars, large tents, or shelters, including semipermanent buildings; and as a temporary expedient to heat permanent buildings.

b. To provide heat to keep truck, tanks and light plane engines warm during prolonged idle periods; to preheat engines before starting; and to heat the operator's compartment for tactical readiness.

c. To heat boxcars during loading or unloading, but the heater itself will not be operated within the boxcar.

d. To heat and to ventilate tunnels sewers..

e. To ventilate without heating by closing the burner fuel line shutoff valve and by operating the engine-driven ventilating air fan. The air ducts would be used in the usual manner.

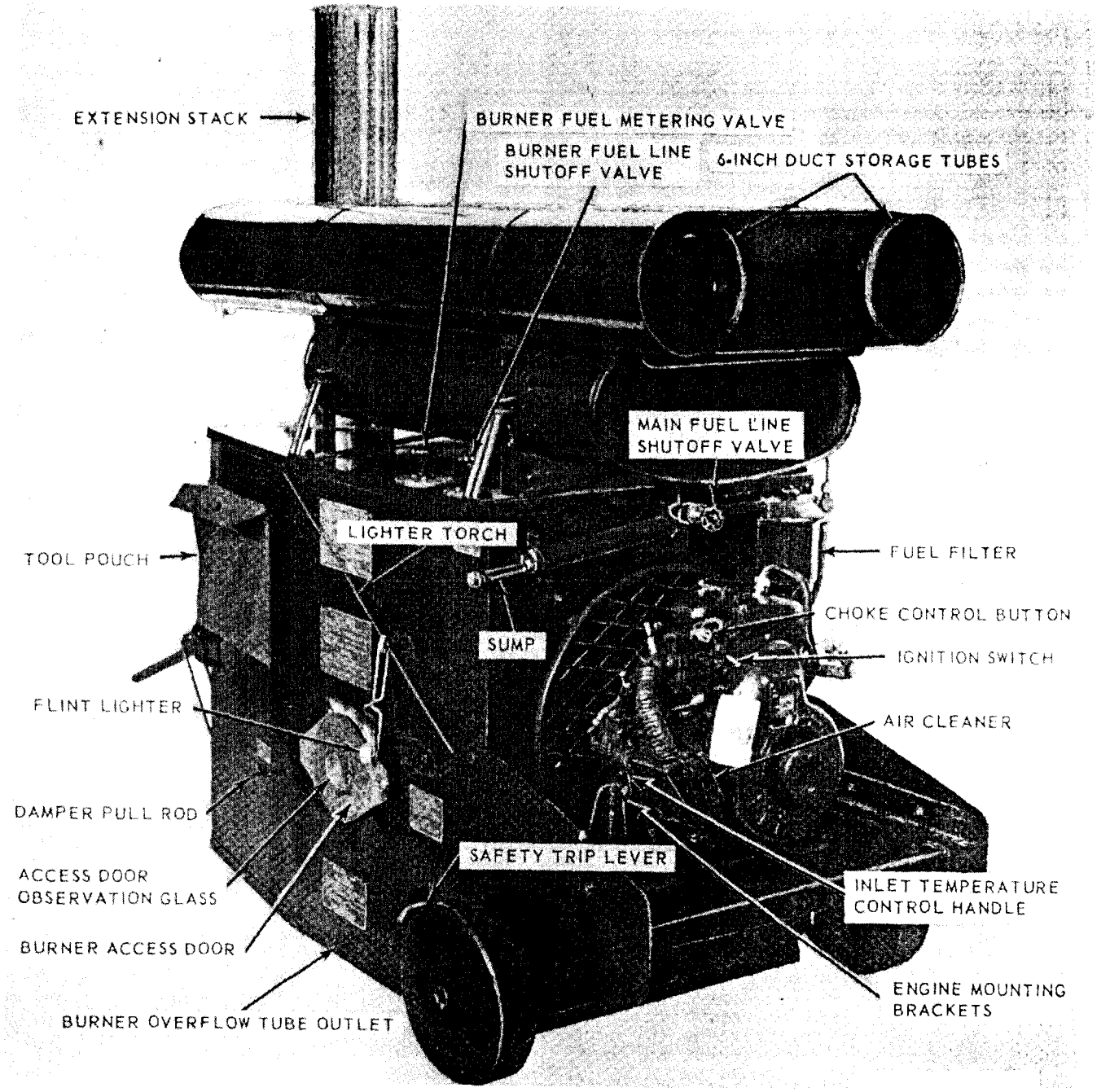

Figure 1-1. Heater, right rear view.

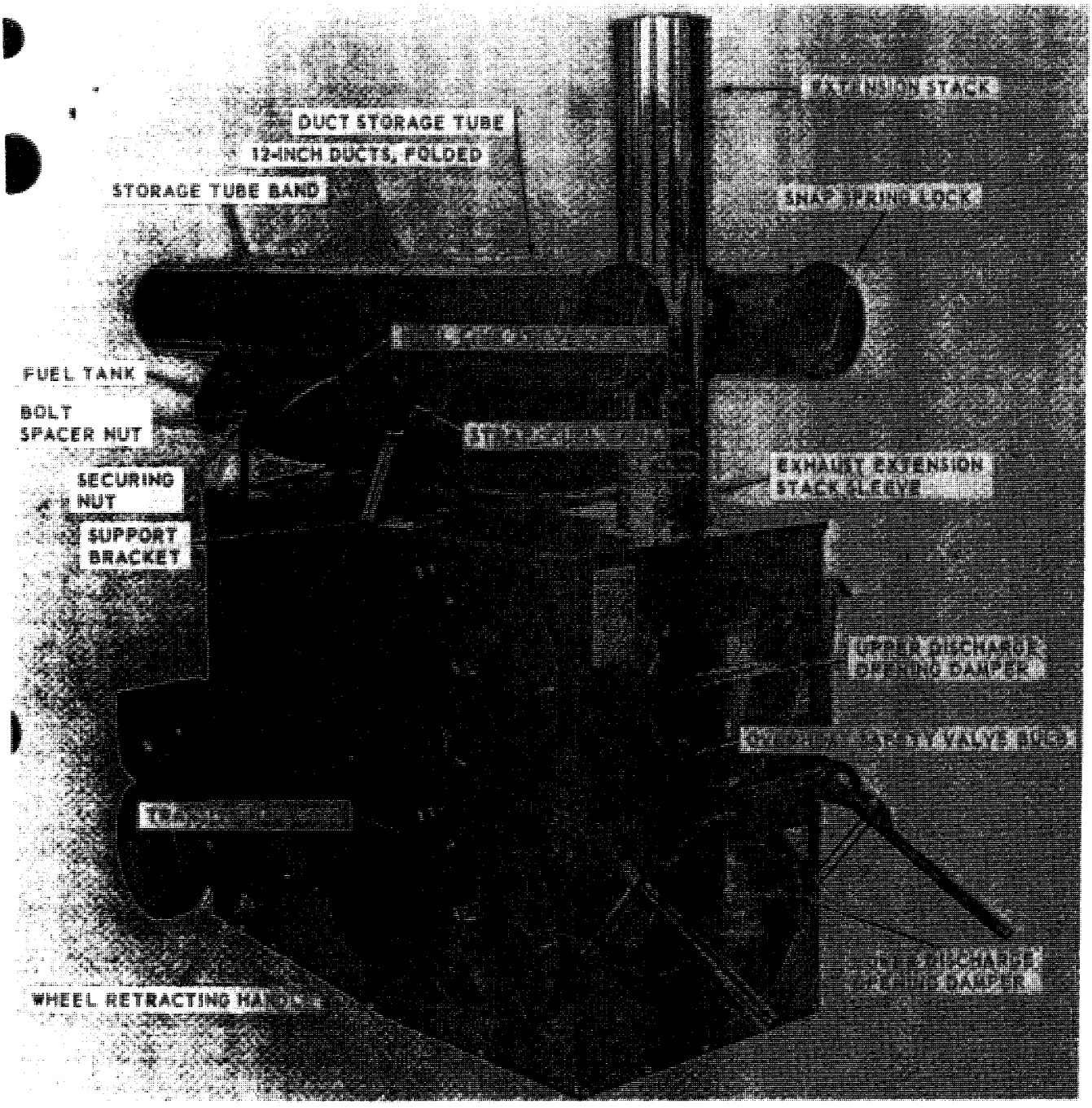

Figure 1-2. Heater, left front view.

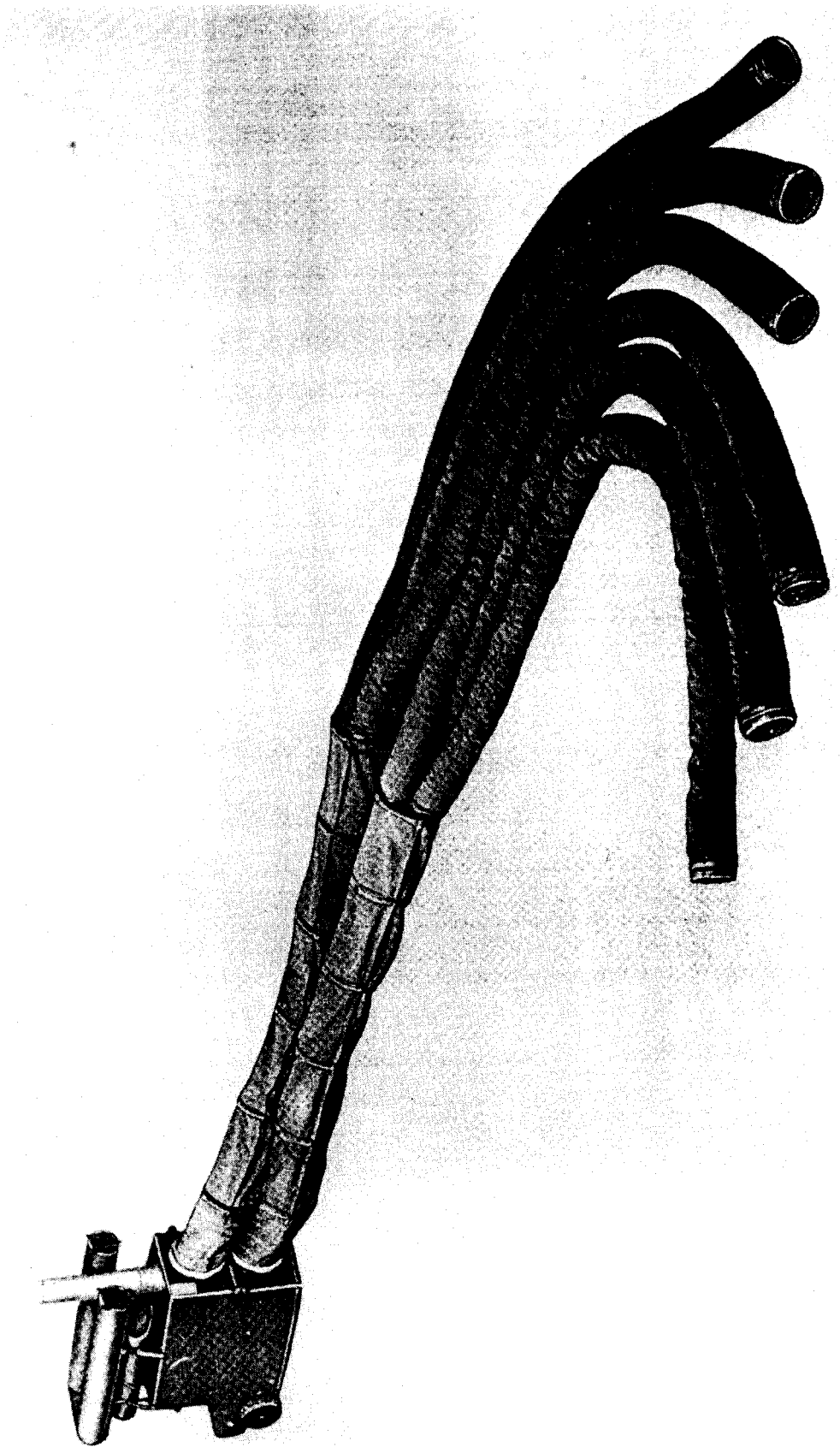

Figure 1-3. Heater, showing duct system.

1-7. Tabulated Data

a. Engine.

Make	Military Standard Engine
Model	IA08-3
Type	4-cycle, gasoline, overhead valve, air-cooled
Number of Cylinders	1
Bore	2.250 inch
Stroke	2 inch
Piston displacement	8 cubic inches
Compressor ratio	6:1
Horsepower at 3,600 rpm	1.5

b. Carburetor.

Make	Military design
Model	9786E27

c. Fuel Pump.

Make	Military design
Model	9786E18A-2
Type	Diaphragm

d. Air Cleaner.

Make	Military design
Model	13211E8448
Type	Dry

e. Spark Plug.

Make	Military standard
Model	MS51009-1
Type	Shielded

f. Governor.

Make	Military design
Model	13214E8217

g. Fuel filter.

Make	Military design
Model	MS51086-1

h. Adjustments. (engine)

Spark plug, gap	0.028 - 0.033 inch
Contact point gap	0.016 - 0.020 inch
Valve tappet clearance (intake and exhaust)	0.014 in (hot)

i. Capacities.

Crankcase (engine)	½ pint
Fuel tank (heater)	16 gallons

j. Weights and dimensions.

Length (engine)	17¾ inch
Width (engine)	17¾ inch
Height (engine)	14¼ inches
Weight (engine)	29 lbs.
Length (heater)	65½ inches
Width (heater)	32 inches
Height (heater with stacks)	57 inches
Weight (heater including engine)	345 lbs.

CHAPTER 2

OPERATING INSTRUCTIONS

Section I. SERVICE UPON RECEIPT OF MATERIEL

2-1. Inspection

a. Inspect the heater for missing parts and possible damage.

b. Inspect all wiring, plumbing, and mountings for loose connections.

2-2. Servicing

a. General. The services to be performed upon receipt of the heater are the responsibility of the using organization and will be performed by organizational maintenance personnel.

b. Operator Responsibilities. The operator will assist with services performed upon receipt of the heater when he is so directed by the Commanding officer.

c. Preventive Maintenance. Perform the necessary daily preventive maintenance services (para *3-4).*

Section II. CONTROLS AND INSTRUMENTS

2-3. General

This section furnishes the operator with illustrations and sufficient information pertaining to the location and use of the various controls for operating the heater properly.

2-4. Controls

a. Main Fuel Line Shutoff Valve. The main fuel line shutoff valve (fig. 1-1) is located under the fuel tanks on the engine end of the heater. It controls the fuel supply to the burner and the engine. Turn the valve hand wheel counterclockwise to open it. This allows fuel to flow to the burner and the engine. To stop the fuel flow close the valve by turning the handwheel clockwise.

b. Burner Fuel Line Shutoff Valve. The burner fuel line shutoff valve (fig. 1-1) is located on the top-right of the heater. It controls the fuel supply to the burner. Turn the handwheel counterclockwise to open the valve and start fuel flow to the burner. Turn it clockwise to close the valve and stop the fuel flow.

c. Burner Fuel Metering Valve, Heat Control. The burner fuel metering valve (fig. 1-1) is located to the left of the burner fuel line shutoff valve on top-right of the heater. It is used to regulate the flow of fuel from the fuel tank to the burner. It can only be used when the main fuel line shutoff valve and the burner fuel line shutoff valve are open. The valve's metering range is from 40 to 100% fuel flow. It has a 40% flow in the closed or low heat position and 100% flow in the open or high heat position. Adjust the valve between the low and high positions for the desired heat output.

d. Choke Button. The choke button is located on the carburetor air inlet. It is used to supply a rich mixture of fuel and air to the engine. Place the choke button in the vertical or closed position (fig. 1-1) during the starting and warming up operation. As the engine warms up, gradually push the lever back into the open position.

e. Damper Pull Rod. The damper pull rod (fig. 1-1) is located on the right side of the heater just to the front of the burner access door. Pull it out to stop the forced air blast from entering the burner during the lighting operation. As soon as the flame is established in the burner, release the rod gradually to its normal operating position.

f. Discharge Opening Damper Handles. The upper and lower discharge opening damper handles (fig. 2-1) are located on the right side of the upper and lower discharge opening dampers. Turn the handles toward each other to close the dampers and to restrict the flow of heated air from the unit, and turn them away from each other to open the dampers.

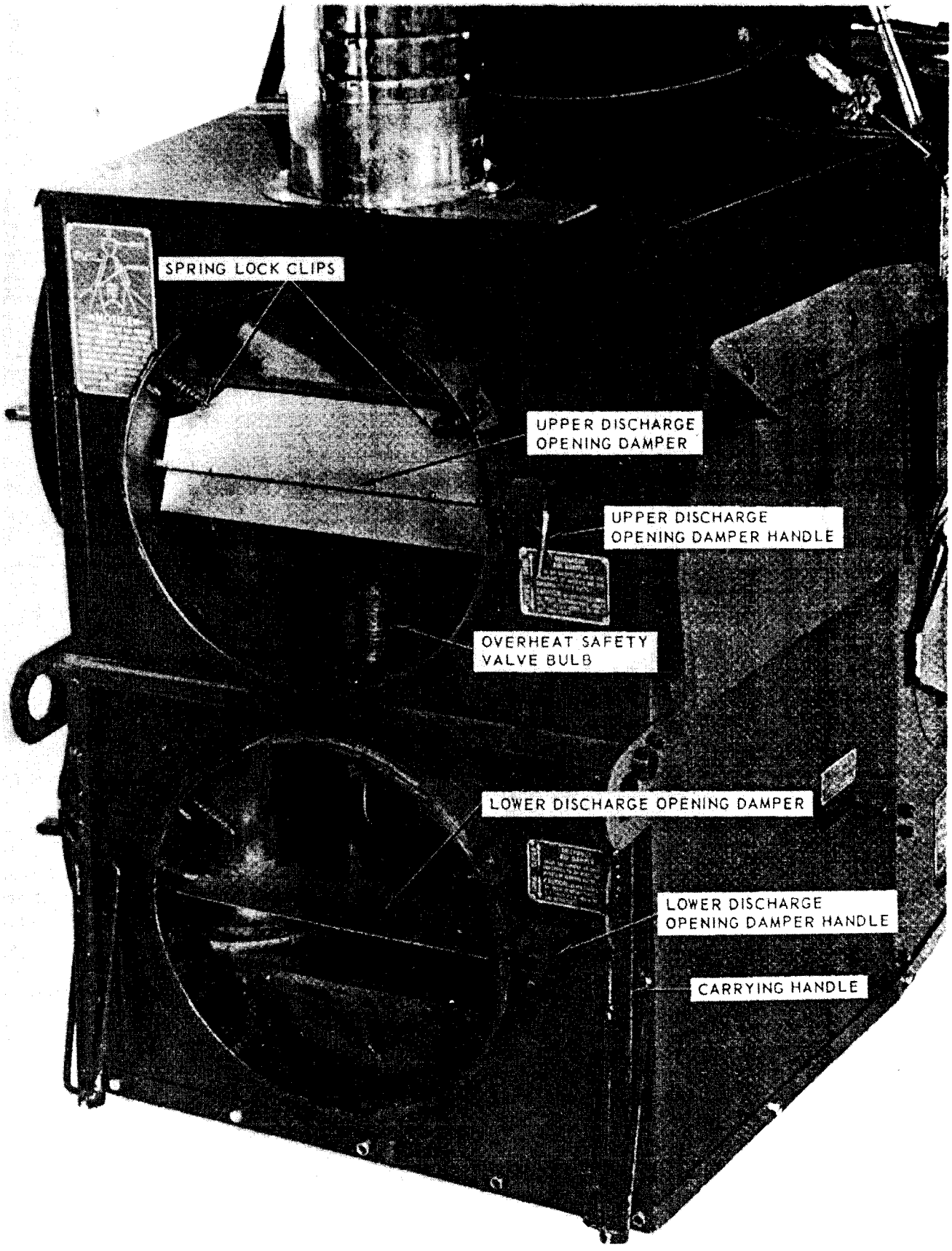

Figure 2-1. Discharge opening dampers.

g. Wheel Retracting Handle. The wheel retracting handle (fig. 1-2), located on the left and to the rear of the heater, is used for manually raising or lowering the wheels on the heater. The wheels may be lowered to move the heater easily on hard surfaces. The wheels should always be retracted during the operation of the heater to aid in wheeling the unit and to reduce vibration. Pull the handle rearward to raise the wheels. Release the handle slowly when retracting the wheels to avoid jarring the unit.

h. Safety Trip Valve. The safety trip valve, located at the bottom and on the inside of the safety trip lever (fig. 1-1 and 2-2), is a safety guard used to stop the flow of fuel to the burner when the air from the propeller fan slackens or stops. After the engine has been started, pull out manually on the safety trip lever (fig. 2-2) to open the valve and to allow fuel to reach the burner. The valve will remain open as long as the air flow to the ducts is constant. When the air flow slows or stops, the air safety trip door automatically opens because of lack of air pressure inside the heater causing the safety trip valve to shut off the fuel flow to the burner. The burner fire will be extinguished by the lack of fuel.

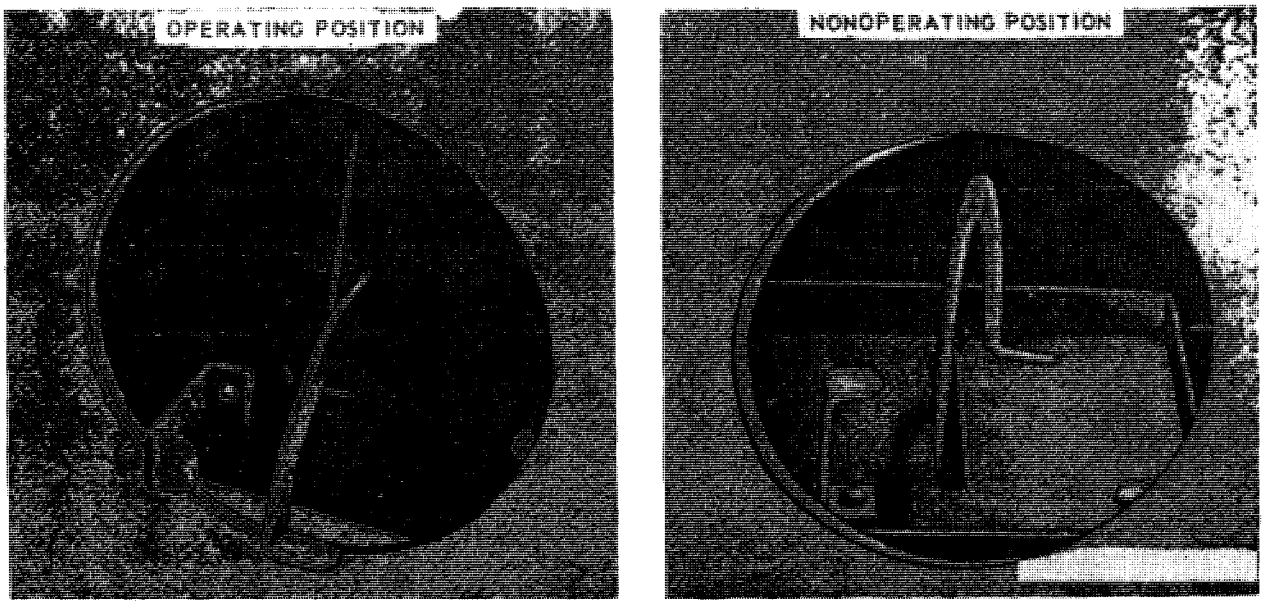

Figure 2-2. Safety trip lever.

i. Burner Overheat Safety Valve. The burner overheat safety valve is located inside and at the bottom left front side of the heater. It is a thermostat-type valve operated by a liquid-filled sensitive bulb (fig. 1-2). If the heated air from the unit exceeds a certain predetermined temperature, the valve will act to limit the fuel flow, reducing the heat output to a safe level. Whenever this occurs, close the burner fuel line shutoff valve and locate and correct the cause. After the burner has been permitted to cool, relight it.

j. Ignition Switch. The ignition switch (fig. 1-1), located on the top left side of the flywheel housing, is used to start and stop the engine. It is a toggle-type, on-off switch.

k. Inlet Temperature Control. The inlet temperature control handle (fig. 1-1) is located on the left side and at the rear of the au cleaner. It regulates the air supply to the engine and the control is set before operation by the operator. The setting is determined by the ambient temperature.

2-5. Instruments

The fuel level gage is tbe only instrument on the heater. it is located on the top of the fuel tank, and it indicates the amount of fuel in the tank.

Section III. OPERATION UNDER USUAL CONDITIONS

2-6. General

a. The instructions in this section are for the information and guidance of personnel responsible for operation of the gasoline heater.

b. This section contains instructions on setting up the heater, starting the engine, lighting the burner and the shutting down operation.

2-7. Setting Up the Heater.

In choosing a site for the heater, care should be taken to prevent fires. All safety precautions should be observed closely when setting up the heater for operation. Place the heater so the discharge openings will face the items or the areas to be heated. Allow for reasonable slack and sag in the canvas ducts (fig. 1-3). Retract the wheels to level the heater, maintaining a firm forward pull on the wheel retracting handle (para 2-3 *g), to* prevent the heater from settling with a jolt. Check the heater visually to see that it is level. It must be level so the fuel will flow evenly around the burner. Place the exhaust extension stack, with spark arrester screen downward, around the sleeve at the top front of the heater cabinet.

a. *Attaching 12-Inch Canvas Ducts. To* attach the four 12-inch canvas ducts, proceed as follows:

(1) Unroll a 12-inch duct and place it next to the discharge opening of the heater so the asbestos-lined end can be attached to the heater.

(2) Remove the nut, flatwasher, and lock-washer from each of the two duct band pins in the duct band of the lined end. Remove the two pins and store all these removed parts in the tool pouch.

(3) Pull out the two spring lock clips (fig. 2-1), built into the discharge opening collars, about an inch and turn the clips sideways to hold them out.

(4) Place duct band inside the discharge opening collar, fitting the duct anchoring pin into the hole at the bottom of the collar.

(5) Aline the spring lock clips with the holes in the duct band and then release the clips by turning them slightly.

(6) Round out the duct by pulling each of the six duct expanding cords out about 8 inches and by hooking the cords over the cord locks (fig. 2-3).

(7) Attach the second duct by repeating the procedures in (1) through (6) above.

CAUTION

***Be* sure to attach the asbestos-lined ends of the ducts to the heater.**

(8) Extend the 12-inch ducts for an additional 12 feet if desirable by taking one of the remaining ducts and placing its lined end at the free end of one of the ducts already attached.

(9) Release the duct expanding cord at the end of the attached duct to make its end more flexible.

(10) Exert a firm squeeze pressure and fit the lined end of the duct inside the band of the attached duct, forcing the two duct hand pins and one anchoring pin into the three holes in the band of the attached duct.

(11) Rehook the cord that was released in (9) above and pull out and hook the six-duct expanding cords of this duct.

(12) Attach the remaining 12-inch duct in the same manner as described in (8) through (11) above.

NOTE

It is generally not efficient to extend the 12-inch ducts further than two lengths (24 ft) even though the unit is designed to deliver heated air up to 36 feet. This can be accomplished, however, by attaching the 6-inch ducts at the ends of the second set of 12-inch ducts

b. Attaching 6-inch Canvas Ducts. Distribution of the heat may he subdivided to as many as six different areas by using the transition plates and 6-inch ducts as follows:

(1) Loosen the three thumbscrews and remove the two transition plates (fig. 1-2), mounted at the side of the heater. These plates are used to adapt the 6-inch ducts to the 12-inch ducts.

(2) Release the duct expanding cord at the end of the 12-inch duct; rotate the plate until the three thumbscrews aline with the three holes in the duct band. Tighten thumbscrews securely.

(3) Fit the transition plate (fig. 2-3), with the flat side out, inside the duct band at the end of the 12-inch duct; rotate the plate until the three thumbscrews aline with the three holes in the duct band. Tighten thumbscrews securely.

(4) Unfasten the duct storage tube snap spring locks (fig. 1-2) from the duct storage tubes, and remove the 6-inch ducts.

(5) Select the end of the 6-inch duct that has two anchoring pins opposite each other in its flexible band.

(6) Squeeze the ends of the duct together and insert the anchor pins into the pin anchors (fig. 2-3) on the transition plate so that the duct is flush and tight with the transition plate.

(7) Repeat (5) and (6) above to attach two more 6-inch ducts to this transition plate.

(8) Repeat (1) through (7) above to attach the other transition plate and the remaining ducts.

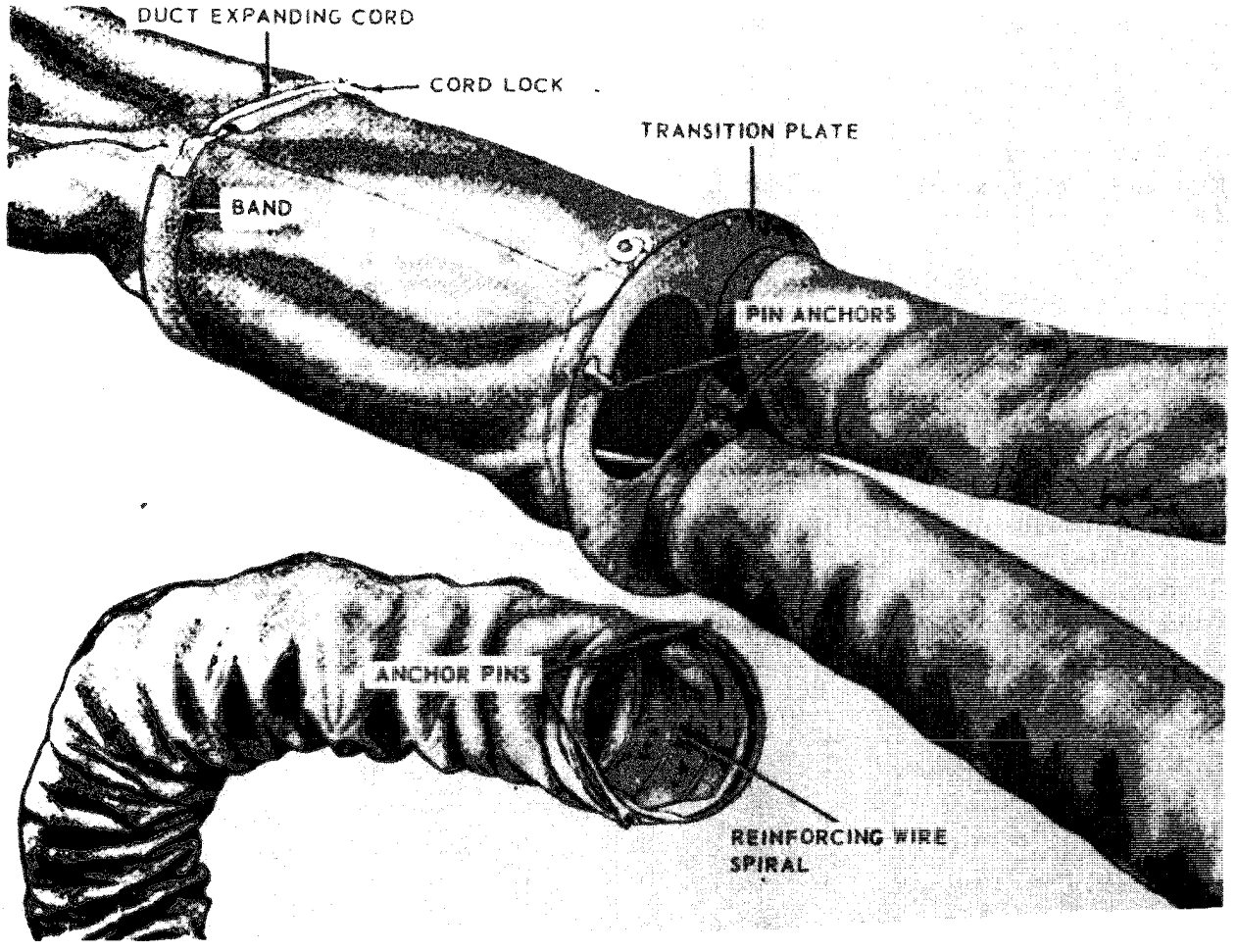

Figure 2-3. Transition plate attached to canvas ducts.

2-8. Starting the Engine

In all normal operations, start the engine and run it for several minutes before lighting the burner. Perform the applicable preventive maintenance services (para 3-4) and start the engine as follows:

a. Open the main fuel line shutoff valve (fig. 1-1), located below the fuel tank, by turning the valve handwheel counterclockwise.

b. Set the inlet temperature control.

(1) When the engine is to be operated in temperatures above 50°F, pull the inlet temperature control handle all the way out.

(2) When operating in temperatures between 25°F and 50°F place the handle in the center position.

(3) When operating in temperatures below 25°F push the handle all the way in.

c. Place the choke lever in the vertical position, completely closed.

d. Place the ignition switch in the "run" position.

e. Connect the starter rope to the flywheel flange, wrap the rope around the flange and pull the rope vigorously to start the engine.

2-9. Lighting the Burner

a. Set the safety trip valve by pulling out on the trigger lever which extends through the safety trip valve door (fig. 2-2), while lifting the door to a vertical position. With engine running, air pressure created inside the cabinet should hold the door in the vertical or operating position. When the engine stops, gravity should cause the door to fall back against the lever, closing the safety trip valve.

b. Open the burner access door (fig. 1-1).

c. Insert the wick of the torch lighter through the burner access door opening and into the groove in the bottom of the burner pot.

d. Turn the handwheel on the burner fuel line shutoff valve (fig. 1-1) counterclockwise to the open position, allowing the fuel to enter the bowl for about 15 to 30 seconds. Dip the wick of the torch lighter into the burner bowl every few seconds to

determine the amount of fuel in the bowl. When there is just enough fuel to wet the tip of the wick, close the burner fuel line shutoff valve by turning the handwheel clockwise.

e. Light the wick with the friction igniter or other suitable igniter.

f. Pull out the air duct damper pull rod (fig. 1-1 and 2-4) to close the burner air duct damper (which will shut off the forced air blast to the burner) and then hold it in that position (fig. 2-4). Immediately insert the lighted wick or torch into the burner pot until it contacts the bottom of the pot and ignites the fuel.

WARNING

Exercise care to keep the face away from the burner access door when lighting the burner.

g. Continue to hold the damper pull rod out and proceed as follows:

(1) Remove the torch lighter and extinguish it by holding the wick in or over the exhaust stack.

(2) Close the latch the burner access door.

(3) Turn the burner fuel line shutoff valve to the open position.

h. Move the burner air duct damper pull rod to the operating position by gradually releasing the pull rod until a stable fire with proper flame has been established.

NOTE

If the burner fails to Iight properly, relight it at once, unless 2 minutes or more has elapsed. In this case, fuel may be overflowing from the vaporizer tube, and the burner fuel line shutoff valve must be closed and no attempt must be made to relight the burner for at 5 minutes. During this 5 minutes, keep the engine running and the burner air duct damper open to aid in evaporating the excess fuel in the burner. After 5 minutes has elapsed, proceed to light the burner again, using the lighting instructions in a through h above; then move the burner air duct damper to operating position.

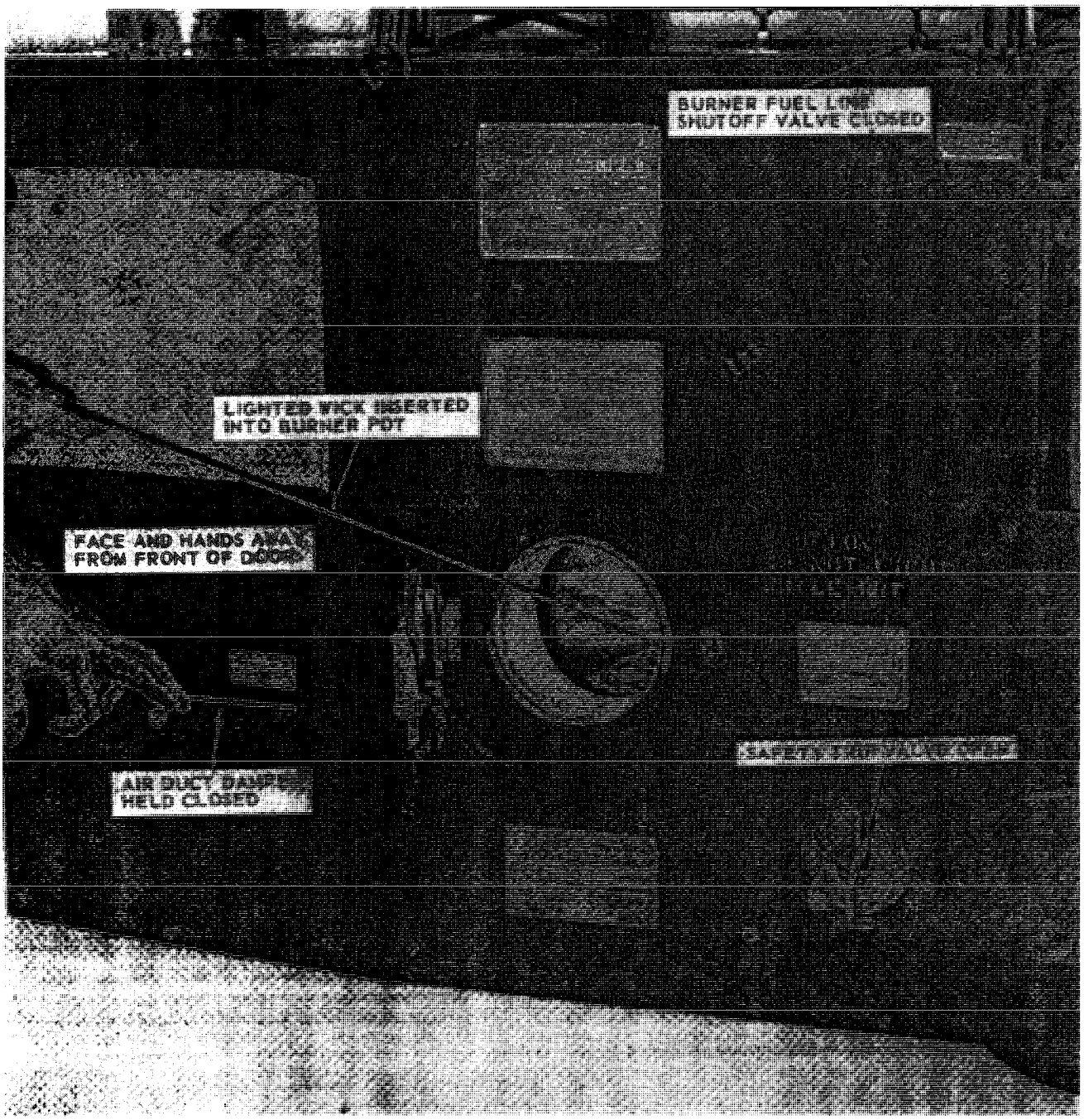

Figure 2-4. Lighting the burner.

2-10. Operating the Heater and Regulating the Heat Output

a. Check the air being delivered after the heater has been in operation at least 15 minutes. The air should be warm or hot.

b. Regulate the heat output. Heat output may be regulated, from maximum capacity to about 40% of the maximum capacity, by manual adjustment of the burner fuel metering valve (para 2-4c).

NOTE

The burner fuel metering valve is a heat control and not a fuel shutoff valve.

c. Regulate the flow of heated air by means of the discharge opening dampers (para 2-4f). Closing the dampers should not be necessary except in temperatures below 32° F.

CAUTION

Do not attempt to regulate the heat output and the flow of heated air except

by methods described in *b* and *c* above. **DO NOT ATTEMPT TO SLOW THE ENGINE SPEED.**

2-11. Shutting Down Operations

a. Close the burner fuel line shutoff valve (para 2-4 *b)* by turning valve handwheel clockwise.

b. Keep the engine running for several minutes after the burner flame is completely extinguished to cool the burner.

c. Place the ignition switch in the OFF position.

d. Be sure the safety trip valve operating mechanism falls back into the nonoperating position (fig. 2-2) as the engine slows down.

Section IV. OPERATION UNDER UNUSUAL CONDITIONS

2-12. General

The heater is designed to be used and will ordinarily be operated in cold weather conditions. This section, however, contains the necessary operating instructions in addition to those previously covered which are necessary for the proper functioning of the heater under unusual conditions such as moderately and extremely cold weather. The operator should maintain a closer check on the oil in the crankcase and should lubricate the heater as described in paragraph 3-2 during unusual weather conditions.

2-13. Moderately Cold Weather

In moderately cold weather (32° to 0° F), the engine might be difficult to start and will require additional choking through the warmup period.

2-14. Extremely Cold Weather

In temperatures below 0° F, the carburetor may require external heat to assure starting. For this reason, an intake manifold heater is installed on some engines to be used in extremely cold weather. The intake manifold heater consists of a small chamber with a hanged lid. The chamber is packed with an asbestos wick, surrounding the intake manifold. To operate the heater and to start the engine in extremely cold weather, proceed as follows:

a. Open the intake heater lid and make sure that the wick is in the bottom of the heater under the intake manifold.

b. Saturate the wick thoroughly with fuel.

c. lgnite the fuel and control the degree of heat by opening or closing the intake heater lid. The most heat is available when the lid is left open. Usually a minute or so after the heater is ignited the frost will melt from the carburetor and the engine is then ready to start.

d. Close the lid to extinguish the intake heater flame.

e. Pull the choke all the way out and slowly operate the starter through 6 or 7 revolutions of the engine.

f. Set the choke in half-open position and crank the engine vigorously.

g. Reduce the amount of choke slowly as the engine warms up.

h. Operate the heater first with the discharge opening dampers at half-closed position, and if this is insufficient then close the dampers fully (fig. 2-1).

NOTE

The MIL-STDmodel 1A08-3 engine is equipped with an air control valve, mounted in the lower air duct assembly of the engine. When the valve is open, it limits the amount of air drawn over the engine for cooling it. The air control valve should be openeed only when the outside temperature is-- 20° F., or lower.

CHAPTER 3

OPERATOR'S MAINTENANCE INSTRUCTIONS

Section I. LUBRICATION INSTRUCTIONS

3-1. General

This section contains lubrication instructions which are supplemental to and not specifically covered in the lubrication order. For all other lubrication instructions refer to LO 5-2805-256-12.

3-2. Lubrication

Lubricate as instructed in figure 3-1.

LUBRICATION CHART

HEATER, TENT, GASOLINE, 250,000-BTU

Intervals given are maximums for normal 8-hour day operation. For abnormal conditions or activities, intervals should be shortened to compensate. During inactive periods, intervals may be extended commensurate with adequate lubrication.

Clean parts with SD (Solvent, dry-cleaning).

Lubricate parts indicated by broken arrow shafts on both sides of the equipment.

LUBRICANT ● INTERVAL

INTERVAL ● LUBRICANT

For Engine Lubrication
See LO5-2805-256-12

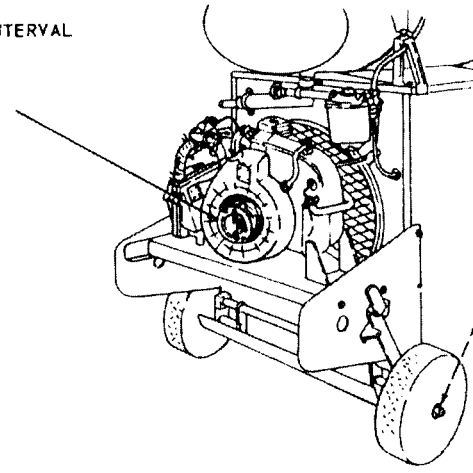

500 GAA Wheel Bearings

FOLD

FOLD

-KEY-

LUBRICANTS	CAPACITY	EXPECTED TEMPERATURES			INTERVALS
		Above +32° F	+40° F to -10° F	0° F to -65° F	
GAA-GREASE, Automotive and Artillery		GAA	GAA	G[illegible]	intervals given are in hours of normal operation

NOTES:
1. OIL CAN POINTS. Lubricate safety trip door hinge, foot pedal starter (on engine models N and NPS), damper adjusters, governor linkage, and other moving parts with PL.

Figure 3-1. Lubrication chart.

Section II. PREVENTIVE MAINTENANCE

3-3. General

Preventive maintenance services are the minimum inspections which are performed to insure that defects may be discovered and corrected before may result in serious damage to or failure of the equipment. When defects are discovered during operation of the equipment, they must be corrected as soon as operation has ceased. If continued operation would result in damage to the equipment, the defects must be corrected at once. All deficiencies and shortcomings that are discovered and all corrective actions that are taken will be recorded on DA Form 2404 (Equipment Inspection and Maintenance Worksheet) as soon as possible.

3-4. Operator's Daily Services

The preventive maintenance services listed in table 3-1 are the minimun daily inspections to be performed by the operator on the heater with the Military standard engine. The services will be performed in the sequence in which they are numbered. The preventive maintenance services which must be performed on the MIL-STD model 1A08-3 engine are in TM5-2805-256-12.

Section III. TROUBLESHOOTING

3-5. General

Troubleshooting is the process of locating and correcting malfunctions that may occur under normal operating conditions. This section provides information useful in locating and correcting any unsatisfactory operation or failure of the heater and its components. Any operational trouble that cannot be corrected by the operator must be reported to the proper authority.

3-6. Troubleshooting Procedures

The malfunctions and troubleshooting procedures are shown in table 3-2 for the heater. For engine malfunction and troubleshooting see TM5-2805-256-14.

Section IV. MAINTENANCE PROCEDURES

3-7. Engine Assembly

Refer to TM5-2805-256-14 to service the military engine Model 1A08-3.

Table 3-1. Preventive Maintenance Checks and Services

	Interval								
	Operator				Org.		B — Before Operation D — During Operation	A — After Operation W — Weekly	M — Monthly Q — Quarterly
Item number	Daily			W	M	Q	Item to be Inspected	Procedure	Reference
	B	D	A						
1	X						ENGINE	FUEL. Check the fuel level in the tank. The tank should be filled to the prescribed level or until the fuel gage registers full. Be sure there are no leaks around the fillercap and the burner compartment; look under the heater and engine for signs of fuel leaks (during and after operation).	
2	X							OIL. Check the level of the oil in engine crankcase. Check under the engine and the heater for oil leaks (during and after operation).	
3	X						WHEELS	WHEELS. Check to be sure the wheels are mounted properly and operate freely.	
4	X						DUCTS	DUCT CONNECTING TRANSITION PLATES. Check for distortions and for loose or missing mounting pins.	
5	X							12-INCH CANVAS DUCTS. Check for tears and distorted duct bands. Check for missing or torn asbestos pack at the heater end and for missing expanding cords and hooks.	
6	X							6-INCH CANVAS DUCTS. Check for tears, missing or bent anchor pins, and broken or damaged reinforcing wire.	
7	X						CONTROLS	CONTROLS. Check all controls for proper operation (during operation). They should operate without looseness or binding.	
8	X						INSTRUMENTS	INSTRUMENT. Check fuel level gage for correct indication of the fuel quantity in the tank.	
								Note 1: OPERATION During operation, listen for any unusual noises that would indicate damaged, worn, or loose engine or body components.	

Table 3-2. Troubleshooting

Malfunction	Probable Cause	Corrective Action
1. Burner fire is low.	*a.* Valve set too low. *b.* Insufficient fuel. *c.* Slump clogged. *d.* Dirty fuel filter.	*a.* Open fuel valve fully (para. 2-4*c*). *b.* Fill fuel tank (para 3-11). *c.* Clean slump. *d.* Replace filter element (17, fig 4-2).
2. Burner fire is high (Smokey).	*a.* Exhaust stack clogged. *b.* Sparks arrester screen dirty. *c.* Engine speed too low.	*a.* Clean exhaust stack. *b.* Clean the sparks arrester screen. *c.* Increase engine speed (TM 5-2805-256-14).
3. Burner has a excess of fuel.	Slow or incorrect lighting procedures.	Close burner fuel line shutoff valve and run blower until excess fuel is evaporated (para 2-4*b*).

3-8. Flexible Duct Assembly (12-InchDuct)

The instructions in this paragraph pertain to either one of the 12-inch flexible duct assemblies.

a. Removal. Lift the 12-inch duct assembly from between the 6-inch duct storage tubes and unroll or unfold the 12-inch duct assembly.

b. Inspection.

(1) Check the duct assembly for broken bands and for bent or missing duct band pins and anchor pins.

(2) Check for missing or torn asbestos lining on the attaching end of the duct assembly.

(3) Inspect for worn or missing duct expanding cords and for bent expanding cord hooks.

(4) Check for tears, ripped seams, and loose rivets on the attaching end of the duct assembly.

(5) Inspect for any distortion holes, torn seams, or deterioration of fibers, and if the duct assembly is defective, replace it with a serviceable one.

c. Installation. Reverse the procedure in *a* above.

3-9. Flexible Duct Assembly (6-Inch Duct)

The instructions in this paragraph pertain to any one of the 6-inch flexible duct assemblies.

a. Removal. Unfasten the duct storage tube snap spring locks (fig. 1-2) from the duct storage tubes, and remove the 6-inch flexible duct assembly.

b. Inspection.

(1) Check for bent or missing anchor pins, bent mounting flanges, and loose or missing rivets.

(1) Inspect for torn canvas and ripped seams and for deterioration of fibers.

(3) Check the duct spiral reinforcing wire for break or crushed coils. If the 6-inch flexible duct assembly is defective, replace it with a serviceable one.

c. *Installation.* Reverse the procedure in a above.

3-10. Duct Connecting Transition Plate

The instructions in this paragraph pertain to either one of the duct connecting transitions plates.

a. Removal. Unscrew the transition mounting plate screws and remove the transition plate (fig. 1-2) from the side of the heater.

b. Inspection. Inspect the mounting screws for bends and damaged or stripped threads; check the transition plate for breaks, cracks, and distortions; and check the anchor pin for bends and breaks. If the transition plate is defective, replace it with a serviceable one.

c. Installation. Reverse the procedure in *a.* above.

3-11. Fuel Tank Assembly

Inspect the fuel tank assembly (fig. 1-2) for secure mounting, dents, and signs of leaks. If the fuel tank assembly is unserviceable, notify the proper authority to clean, replace or repair it.

3-12. Fuel Tank Fillercap

a. Removal. Twist the fillercap a quarter turn counterclockwise and lift it up from the filler neck of the tank. Turn the crossbar, on the fillercap retaining chain, straight up and withdraw the fillercup and the retaining chain from the tank.

b. Inspection. Inspect the fillercap for bends, damaged gasket, broken retaining chain, and broken or missing crossbar. If the filler-cap is defective, replace it with a serviceable one.

c. Installation. Reverse the procedure in *a.* above.

CHAPTER 4

ORGANIZATIONAL MAINTENANCE INSTRUCTIONS

Section I. SERVICE UPON RECEIPT OF MATERIAL

4-1. General

When either a new or a used heater is received by an organization, it must be serviced as described in paragraphs 4-9 and 4-10 to prepare it for operation. These services will be performed by organizational maintenance personnel.

4-2. Removal of Preservatives

a. Remove tape, paper, or other packing. Use extreme care when unpacking and installing separately packed components.

b. Remove, with SD (solvent, drycleaning), the preservative compound which has been sprayed on all metal surfaces. Because this compound is not a lubricant, take special care to see that it is completely removed from all wearing surfaces.

c. If any component or system contains preservative oil, drain the oil. Fill with proper lubrirant as indicated on the lubrication order LO 3-2803-256-12 and figure 3-1.

4-3. Preventive Maintenance Services

The organization mechanic will perform the preventive maintenance services that are described in paragraph 4-10. The services performed at this time will begin the cycle of regularly scheduled preventive maintenance services.

Section II. MOVEMENT TO A NEW WORKSITE

4-4. Dismantling for Movement

a. Make sure the heater is clean and free from soot and dirt.

b. Drain fuel from tank, lines and burner.

c. Remove exhaust extension stack, 6-inch and 12-inch canvas ducts and stow.

d. If unit is being moved to a new site in the same area, it can be-hand wheeled. Extend wheels from the retracted position by adjusting the wheel retracting handle and place them in wheeling position.

4-5. Reinstallment after Movement

Reinstall the heater at the new site as directed in paragraph 2-7.

Section III. REPAIR PARTS, SPECIAL TOOLS AND EQUIPMENT

4-6. Tools and Equipment

No special tools and equipment are required by organizational maintenance personnel for performing maintenance on the heater.

4-7. Basic Issue Tools and Equipment

Authorized tools and equipment for the heater engine are listed in TM5-2805-256-14.

4-8. Organizational Maintenance Repair Parts

The organizational maintenance repair parts are listed and illustrated in TM5-2805-256-24P.

Section IV. LUBRICATION INSTRUCTIONS

For lubrication instructions refer to the lubrication chart in paragraph 3-2 and to LO 5-2805-256-12.

Section V. PREVENTIVE MAINTENANCE CHECKS AND SERVICES

4-9. General

Preventive maintenance services are the minimum inspections which are performed to insure that defects may be discovered and corrected before they result in serious damage to or failure of the equipment. When defects are discovered during operation of the equipment, they must be corrected as soon as operation has ceased. If continued operation would result in damage to the equipment, the defects must be corrected at once. All deficiencies that are discovered and all corrective actions that are taken will be recorded on DA Form 2404 (Equipment Inspection and Maintenance Worksheet) as soon as possible.

4-10. Preventive Maintenance Services

The maintenance services to be performed by organizational maintenance personnel on the heater are listed in table 4-1. Those that are to be performed on the MIL-STD model 1A08-3 engine are listed in TM5-2805-265-14.

Table 4-1. Preventive Maintenance Checks and Services

B — Before Operation; D — During Operation; A — After Operation; W — Weekly; M — Monthly; Q — Quarterly

Item number	Interval: Operator Daily B	Operator Daily D	Operator Daily A	Operator W	Org. M	Org. Q	Item to be Inspected	Procedure	Reference
1						X	DUCT STORAGE TUBES	Check for dents, breaks, and dirt, and be sure the storage tubes are mounted properly to the top of the heater.	
2						X	FUEL SYSTEM	Check the fuel tank for leaks, dents, and proper mounting. Drain the fuel tank if there is any evidence of contamination, and recheck for leaks. Check the fuel tank fillercap for corrosion, ease of operation, defective gasket, and clogged vent holes. Be sure the locking chain and crossbar are secured properly to the fillercap. Inspect the fuel filter for leaks, defective cap gasket, and secure mounting. Inspect the fuel lines for leaks, kinks, and damaged or stripped threads. Check for possible obstruction in the lines.	
3						X	EXHAUST STACK AND ARRESTER SCREEN	Check for breaks, bends, dirt, and corrosion. Be sure the exhaust stack is mounted securely to the heater and the screen is mounted securely in the exhaust stack.	
4						X	BURNER ACCESS DOOR	Check for dirt, bends, and proper operation. Be sure the door stud lock works properly. Check the gaskets for deterioration and breaks, and the observation glass for discoloration and cracks.	
5						X	BURNER ASSEMBLY	Inspect for corrosion, dents, holes, and leaks.	
6						X	SAFETY TRIP VALVE DOOR	Check the door for distortions and be sure the operating weight is mounted securely. The door should operate without binding.	
7						X	AIR INTAKE PROPELLER FAN AND GUARD	Inspect the propeller fan for dirt, bent or broken blades, and loose or missing rivets. Check the fan mounting bolt for damaged or stripped threads. Check the guard for dirt, breaks, and secure mounting. Check the guard mounting screws for damaged or stripped threads.	
8						X	BLOWER WHEEL AND HOUSING	Check the blower wheel for dirt and bent or broken blades. Check for damaged or stripped threads on the mounting setscrews. Inspect the blower wheel housing for dirt, dents, and breaks.	
9						X	WHEELS AND AXLE	Inspect the wheels for good condition and proper mounting; the axle for wear and proper alinement; and the retractable handle for positive locking and secure mounting.	
10						X	CONTROLS	Check all controls for proper operation, being sure they operate without looseness or binding (during operation).	
11						X	INSTRUMENT	Check the fuel level gage for damages—be sure it indicates the fuel quantity in the tank.	

NOTE 1: OPERATION. During operation observe any unusual noise or vibration and make all necessary adjustments.

Section VI. TROUBLESHOOTING

4-11. General

This section contains troubleshooting information in tabular form to help in locating and correcting some of the common troubles which may develop in the heater. This section cannot cover all of the troubles or malfunctions that may occur. If a specific malfunction or the troubleshooting instruction is not covered in these charts, isolate the system in which the trouble occurs and then locate the defective component. Do not overlook the importance of questioning the operator to get as many definite symptoms as possible.

4-12. Troubleshooting Procedures

Malfunctions and troubleshooting procedures for the engine assembly are shown in TM5-2805-256-14. Malfunctions and troubleshooting for the heater are listed in table 4-2.

Section VII. RADIO INTERFERENCE SUPPRESSION

Radio interference suppression components are described in TM5-2805-256-14.

Section VIII. MAINTENANCE OF THE ENGINE ASSEMBLY

4-13. Engine Assembly, Model 1A08-3

a. Removal.

(1) Close the main fuel line shutoff valve (fig. 1-1).

(2) Unscrew the flexible line coupling and remove the flexible fuel line at the engine fuel pump.

(3) Remove the two screws holding the flexible line housing clamp to the blower wheel housing.

Table 4-2. Troubleshooting

Malfunction	Probable Cause	Corrective Action
1. Burner fails to light.	*a.* Inadequate fuel supply.	*a.* Replace faulty main fuel line shutoff valve (para 4-22) and fuel hose (para 4-13).
	b. Inadequate air supply.	*b.* Adjust air damper. (2-13*h*).
2. Burner fire low.	Inadequate fuel supply.	Repair faulty main fuel valve (para 4-22) and fuel hose (para 4-13).
3. Burner fire too high.	*a.* Excess fuel in burner.	*a.* Repair or replace a faulty fuel valve (para 4-22).
	b. Faulty burner.	*b.* Clean burner (para 4-28).
	c. Improper air mixture.	*c.* Adjust air damper.
4. Low heat at discharge end of ducts.	*a.* Ducts have torn canvas or ripped seams.	*a.* Replace ducts (para 2-6).
	b. Discharge air clamper faulty.	*b.* Adjust the air damper.
	c. Faulty heater thermostat.	*c.* Replace the heater thermostat.
5. Heater loses fuel.	Leak in fuel tank or lines.	Replace or repair punctured fuel tank or lines.

(4) Remove the self-locking nuts (1, fig. 4-1) which hold the fan guard (6) to the heater.

(5) Remove the bolts which hold the engine mounting base to the left and right engine mounting brackets.

(6) Remove the nuts which are located on the blower wheel housing duct.

(7) Loosen the fan guard from the studs.

(8) Remove the engine and the mounting base by sliding off the track.

(9) Remove the nuts, bolts, flat washers, and lockwashers securing the engine to the engine mounting base, and remove the engine from the base.

b. Inspection. Check the engine assembly for cracks, breaks, distortions, and any other visible defects. If it is defective, replace it as authorized.

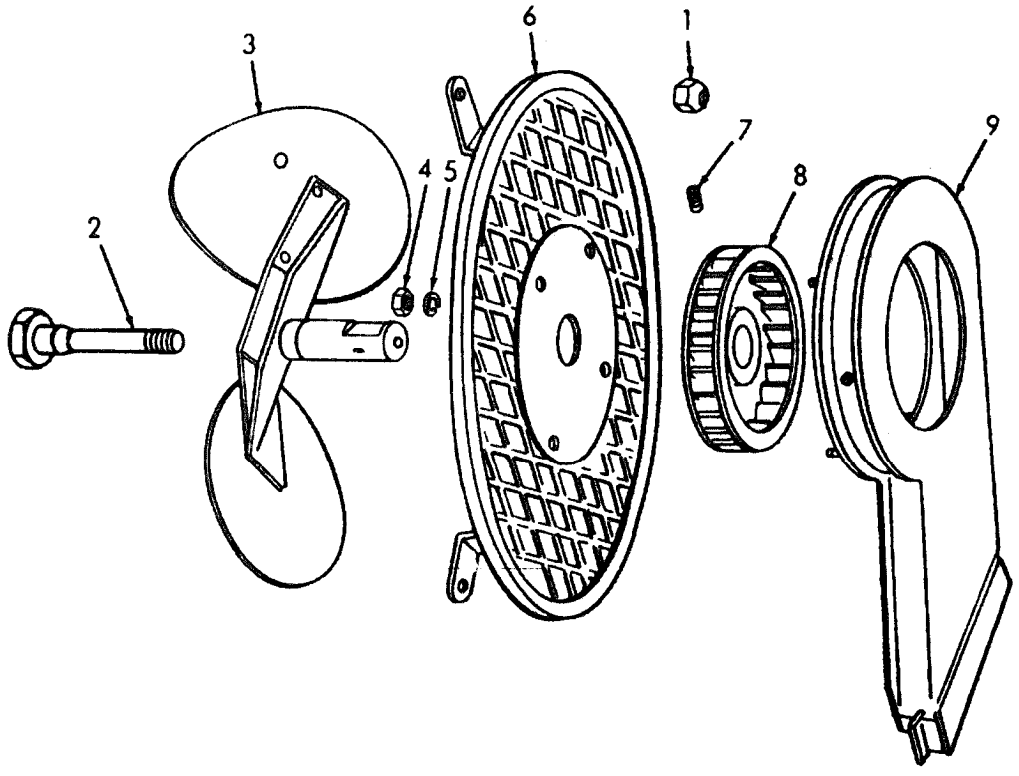

1 Nut, self-locking
2 Bolt, fan holddown
3 Fan, air intake propeller
4 Nut
5 Lockwasher
6 Guard, propeller fan
7 Setscrew
8 Wheel, blower
9 Housing, blower wheel

Figure 4-1. Air intake propeller fan, fan guard and blower wheel.

c. Installation. Reverse the procedure in *a.* above.

4-14. Engine Mounting Brackets

a. Removal

(1) Remove the capscrews and the washers holding the engine mounting brackets (fig. 1-1) to the engine.

(2) Remove the bolts, washers, and nuts holding the engine mounting brackets to the engine mounting base.

NOTE

When removing the right engine mounting bracket it will be necessary to remove the bolt, flatwasher, Iockwasher, and nut holding the grounding strap to the engine mounting base.

(3) Remove the engine mounting brackets and the rubber resilient mounts from the engine. Separate the rubber mounts from the mounting brackets.

b. Cleaning. Clean the mounting brackets with SD and dry them thoroughly.

c. Inspection. Check the mounting brackets for serviceability and if they are defective, install serviceable ones.

d. Installation. Reverse the procedure in *a.* above.

NOTE

See TM 5-2805-206-14 for all other engine maintenance (Group 01) for the MIL-STD model 1A08-3.

Section IX. MAINTENANCE OF THE HEATER ASSEMBLY

4-15. Propeller Air Intake Fan Assembly Used With MIL-STD Model 1A08-3 Engine

a. Removal.

(1) Remove the engine (para 4-13).

(2) Unscrew and remove the fan hold-down bolt (2, fig. 4-1).

(3) Use the special setscrew, which is located in the bottom of the tool pouch to remove the fan assembly (3), blower wheel (8), and the blower wheel housing assembly (9) from the crankshaft.

(4) Remove the nuts (4) and the washers (5) securing the fan guard to the blower wheel housing and separate the fan guard from the blower wheel housing.

(5) Loosen the setscrew (7) securing the blower wheel to the intake fan assembly and remove the blower wheel housing and the blower wheel from the intake fan assembly.

b. Inspection. Inspect the fan for broken or bent blades and for loose or missing rivets, and if the assembly is defective, install a serviceable one.

c. Installation. Reverse the procedure in *a.* above.

4-16. Fuel Metal Hose Assembly Used with MIL-STD Model 1A08-3 Engine

a. Removal.

(1) Close the main fuel line shutoff angle valve (52, fig. 4-2).

(2) Remove the screws securing the fuel line clamp to the fan guard.

(3) Unscrew the coupling nut on the hose assembly (78) at the fuel filter and at the fuel pump and remove the metal hose assembly from the heater.

b. Cleaning. Clean the hose in SD and blow through it with compressed air to remove any foreign matter.

c. Inspection. Inspect the hose for dents and possible breaks or holes and the coupling nuts for distortion and damaged or stripped threads. If the hose assembly is defective, install a serviceable one.

d. Installation. Reverse the procedure in *a.* above.

1 Wheel
2 Nut
3 Nut
4 Wheel
5 Nut
6 Pointer
7 Washer
8 Nut
9 Cover
10 Spacer
11 Shaft
12 Cap
13 Sump
14 Strap
15 Nut
16 Ring
17 Element
18 Nipple
19 Gasket
20 Gasket
21 Nut
22 Washer
23 Screw
24 Elbow
25 Line Assembly
26 Elbow
27 Elbow
28 Filter
29 Clamp
30 Nut
31 Line Assembly
32 Nut
33 Washer
34 Clamp
35 Screw
36 Orifice
37 Valve
38 Bushing
39 Nipple
40 Tee
41 Screw
42 Washer
43 Diaphragm Kit
44 Nipple
45 Valve
46 Ring
47 Plate
48 Nut
49 Washer
50 Screw
51 Clip
52 Valve
53 Screw
54 Washer
55 Clip
56 Tee
57 Plug
58 Valve Assembly
59 Nipple
60 Valve Assembly
61 Nipple
62 Ring
63 Plate
64 Washer
65 Nut
66 Line
67 Elbow
68 Nut
69 Pin
70 Bracket
71 Shaft
72 Nut
73 Spacer
74 Cover
75 Washer
76 Pointer
77 Nut
78 Hose Assembly

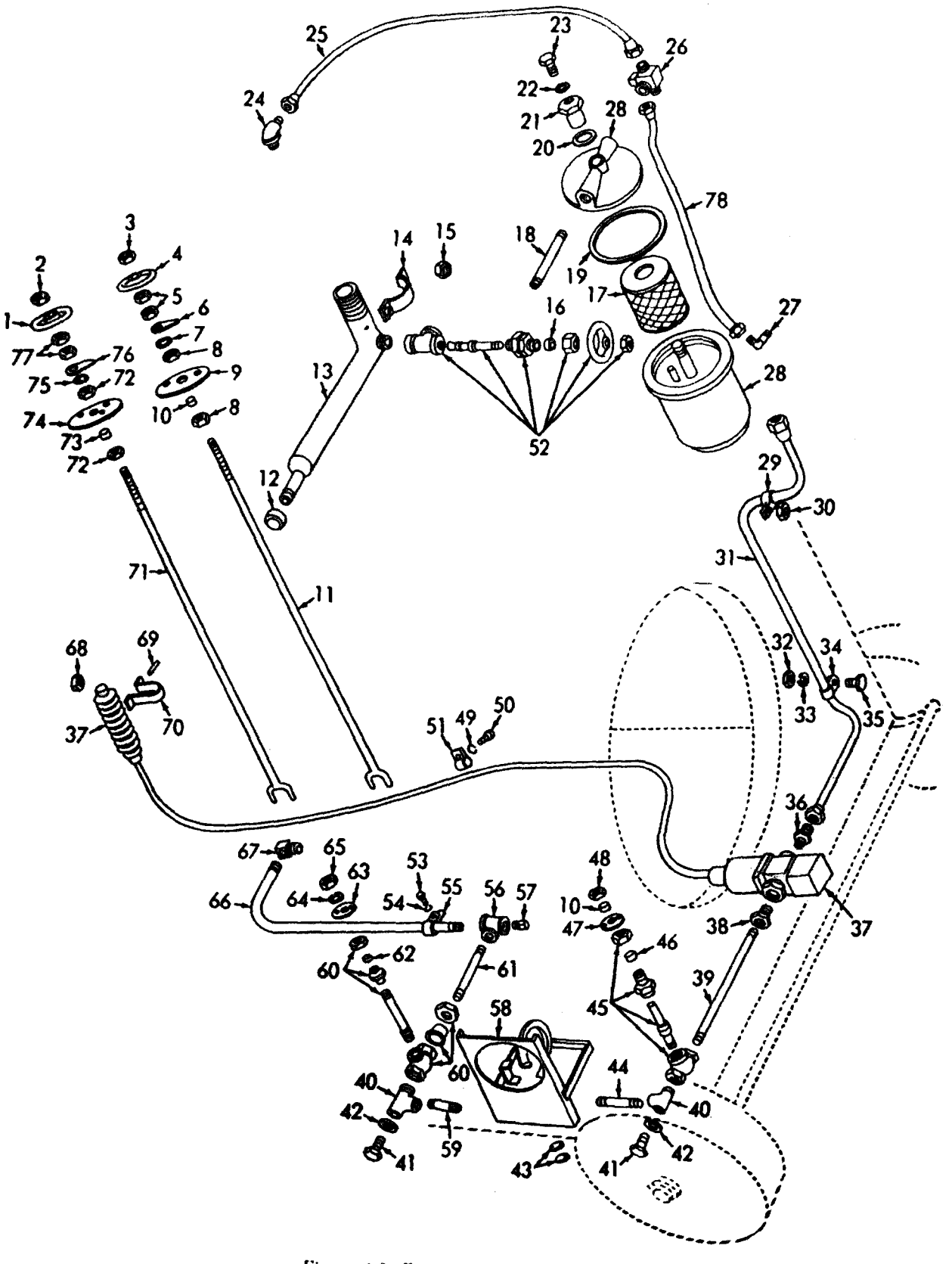

Figure 4-2. Fuel system assembly

4-17. Lighter Torch

a. Removal. Remove the lighter torch (fig. 1-1) from the clamp on the heater.

b. Inspection. Check the torch for damaged asbestos wick and for bent or broken stem; if the torch is defective, replace it with a serviceable one.

c. Installation. Reverse the procedure in *a.* above.

4-18. Friction Igniter Flint Tip

a. Removal. Unscrew and remove the flint tip from the flint lighter (fig. 1-1).

b. Inspection. Check the flint tip for damaged or stripped threads, and if it is defective, install a serviceable one.

c. Installation. Reverse the procedure in *a.* above.

4-19. Torch Rod Lighter Loop Clamp

a. Removal. Remove the capscrew and the lockwasher holding the clamp to the heater and take the clamp from the heater.

b. Inspection. Check the clamp for bends and breaks, and if it is defective install a serviceable one.

c. Installation. Reverse the procedure in *a.* above.

4-20. Burner Access Door Gasket

a. Removal. Open the burner access door (fig. 1-1) and remove the gasket by forcing it out with a slender screwdriver or other sharp instrument.

b. Installation. Position a new gasket and force it into place by starting at one edge of it and working around it being careful not to damage the gasket.

4-21. Burner Access Door Gasket Set and Observation Glass

a. Removal.

(1) Remove the screws around the edges of the access door cover assembly; the four screws are in the four scalloped edges of the door cover.

(2) Remove the cover, the 1/32 inch gasket, the observation glass (fig 1-1), and the 1/16 inch gasket.

b. Inspection. Inspect the glass for cracks and cloudiness and the screws for stripped or damaged threads. If the glass is defective, install a serviceable one.

c. Installation. Reverse the procedure in *a.* above using new gaskets.

4-22. Fuel Line Shutoff Valve and Metering Valve Handwheels

a. Removal.

(1) Unscrew and remove the nuts (2 and 3, fig. 4-2) securing the valve handwheels (1 and 4) to the extension shafts (11 and 71).

(2) Unscrew and remove the handwheels from the extension shafts.

b. Inspection. Check for broken handwheels and damaged or stripped threads, and if the handwheels are defective, install serviceable ones.

c. Installation. Reverse the procedure in *a.* above.

4-23. Tool Pouch and Mounting Strip

a. Removal.

(1) Unfasten and lift lip the tool pouch cover flap.

(2) Remove the capscrews holding the mounting strip and tool pouch (fig. 1-1) onto the heater, and take off the mounting strip and the tool pouch.

b. Cleaning. Clean the tool pouch and the mounting strip with SD and dry them thoroughly.

c. Inspection. Check the tool pouch for holes, torn or ripped seams, and damaged snap fasteners. Check the mounting strip for bends and breaks. If the tool pouch and the mounting strip are defective, install serviceable ones.

d. Installation. Reverse the procedure in *a.* above.

4-24. Exhaust Extension Stack With Spark Arrester Screen

a. Removal. Lift the exhaust extension stack (fig. 1-2) with the screen from the heater stack.

b. Cleaning. Use *a wire* brush to remove all soot and carbon deposits from the inside of the stack and from the spark arrester screen.

c. Inspection. Inspect the extension stack for corrosion, breaks, or dents, and inspect the spark arrester screen for tears, breaks, and secure mounting to the stack. If the stack with the arrester screen is defective, install serviceable one.

d. Installation. Place the extension stack with the screen over the heater stack and push down until firmly mounted.

4-25. Fuel Level Gage, Crystal, and Gaskets

a. Removal. To remove the fuel level gage. located on the top of the fuel tank, unscrew the fuel level gage cap (5, fig. 4-3); take off the leather gasket (4), the crystal (3) and the cork gasket (2); and then lift off the gage (1).

b. Inspection. Check the fuel level gage for legible markings and distortions, and the crystal for breaks, cracks, and cloudiness. Check the gaskets for deterioration and wear. If these parts are defective, install serviceable ones.

c. Installation. Reverse the procedure in *a.* above.

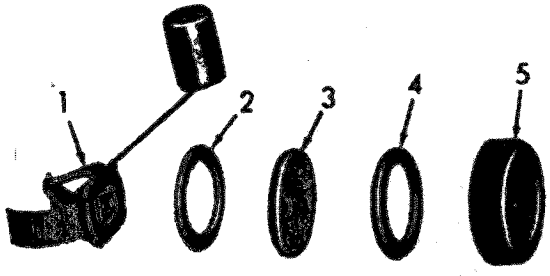

1 Gage, fuel level
2 Gasket, Cork
3 Crystal, gage
4 Gasket, leather
5 Cap

Figure 4-3. Fuel level gage.

4-26. Main Fuel Line Shutoff Angle Valve

a. Removal.

(1) Drain the fuel tank.

(2) Remove the burner fuel filter (para 4-28).

(3) Remove the filter-to-valve pipe nipple (18, fig. 4-2).

(4) Unscrew the valve (52) from the sump.

b. Cleaning. Wash the valve in SD and apply air pressure to blow out any foreign matter.

c. Inspection. Check the valve for any distortion and for stripped or damaged threads, and if the valve is defective, install a serviceable one.

d. Installation. Reverse the procedure in *a. above.*

4-27. Fuel Tank Air Vent Line Assembly

a. Removal. Disconnect the air vent line (25, fig. 4-2) at both ends.

b. Cleaning. Apply air pressure to the line to clean out any foreign matter.

c. Inspection. Inspect the vent line for breaks, kinks, and stripped coupling nut threads, and if the vent line is defective, install a serviceable one.

d. Installation. Reverse the procedure in *a.* above.

4-28. Burner Fuel Filter, Element, and Gasket

a. Removal and Disassembly.

(1) Close the main fuel line shutoff angle valve (52, fig. 4-21).

(2) Disconnect the burner fuel line (31) at the filter adapter.

(3) Disconnect the fuel tank vent line (25) at the filter elbow.

(14) Disconnect the engine fuel hose (78) at the filter elbow.

(5) Remove the filter cover nut (21) from the top of the filter (28), and the shell will then drop down.

(6) Empty the fuel from the shell and remove the shell gasket.

(7) Remove the element.

(8) Unscrew the filter cover from the shut-off valve-to-filter nipple.

(9) Remove the filter adapter from the filter cover.

b. Cleaning. Clean all parts thoroughly with SD.

c. Inspection. Inspect the shell for dents, distortions, leaks, and stripped or damaged threads, and check the element for dirt and damages. If these parts are defective, install serviceable ones.

d. Assembly and Installation. Reverse the procedure in *a.* above, using a new gasket.

4-29. Nondriving Vehicular Axle With Retractable Handle, Wheels, and Spacer Collar

a. Removal.

(1) Drain the fuel tank and engine crankcase and stand the heater on the engine end.

(2) Remove the axle mounting bolt from the right and left axle mounting brackets to free the axle.

(3) Pull the wheels (fig. 1-2) and the axle with retractable handle from the brackets.

(4) Remove the cotter pins, the washers, the wheels (fig. 1-2), and the spacer collars from the axle.

b. Inspection. Inspect the wheels for wear, distortions, cracks, or breaks; the axle for bends, wear, and damaged or broken handle; and the spacer collar for wear. If these items are defective, install serviceable ones.

c. Installation. Reverse the procedure in *a.* above.

4-30. Axle Mounting Brackets

a. Removal.

(1) Remove the wheels (para 4-29).

(2) Remove the bolts, the nuts, and the lock-washers securing the axle mounting brackets to the heater.

(3) Remove the brackets from the heater.

b. Inspection. Inspect the brackets for bends and wear and the mounting bolts and nuts for damaged or stripped threads. If the brackets are defective, install serviceable ones.

c. Installation. Reverse the procedure in *a.* above.

4-31. Duct Anchor Cord Assembly

a. Inspection. Check the duct anchor cord for bent fasteners and broken springs and for frays and worn spots.

b. Repair and Replacement. Repair the cord assembly by replacing defective cord and fasteners with serviceable ones.

4-32. Duct Expanding Cord Assembly With Pull Lock

a. Removal. Loosen and remove the lock on the end of the cord opposite the end with the loop, and pull out the defective cord.

b. Installation. insert serviceable cord through the grommets. Double the cord at the end and install the metal lock.

4-33. Duct Locating Spring Lock Clip Assembly

a. Removal.

(1) Remove the cotter pin from the end of the spring lock clip assembly (fig. 2-1).

(2) Remove the flatwasher, the grommet, the spring, and another grommet from the clip assembly.

(3) Remove the clip from the heater discharge opening collar.

b. Inspection. Inspect the clip for any distortion and the spring for loss of tension or broken coils. If any part of the assembly is defective, install a serviceaable one.

c. Inspection. Reverse the procedure in *a.* above inserting the clip from inside the collar.

4-34. 12-Inch Canvas Ducts

a. Removal. Pull out the two spring lock clips (fig. 2-1) on the damper collar, release the duct band and remove the 12-inch canvas duct.

b. Installation. Refer to paragraph 2-7 and install the 12-inch ducts.

4-35. 6-Inch Canvas Ducts

a. Removal. Select one end of the three 6-inch ducts attached to the transition plate, figure 2-3. Squeeze the end of the duct together, detact the anchor pins from the pin anchors and remove the duct. Use the same procedure to remove the other two 6-inch ducts.

b. Installation. Refer to paragraph 2-7 and install the 6-inch ducts.

CHAPTER 5

DIRECT SUPPORT AND GENERAL SUPPORT MAINTENANCE INSTRUCTIONS

Section I. REPAIR PARTS, SPECIAL TOOLS AND EQUIPMENT

5-1. Repair Parts

The repair parts that are authorized for use in the Direct Support and General Support Maintenance of the heaters with the MIL-STD model 1A08-3 engine are listed in TM 5-2805-256-241'.

5-2. Tools

There are no special tools authorized for use in the maintenance described in this chapter. The common tools, however, that are used in field maintenance and in depot maintenance of this equipment are authorized in the appropriate table of organization and equipment or table of allowances.

Section II. TROUBLESHOOTING

5-3. General

This section contains troubleshooting information in tabular form to help in locating and correcting some of the malfunctions that may develop in the heater.

5-4. Troubleshooting Procedures

Malfunctions and troubleshooting procedures for the engine assembly are shown in TM 5-2805-256-14. Malfunctions and troubleshooting for the heater are listed in table 5-1.

Table 5-1. Troubleshooting

Malfunction	Probable Cause	Corrective Action
1. Burner fire too high.	*a.* Faulty burner.	*a.* Repair or replace burner assembly (para 5-11).
	b. Improper air mixture.	*b.* Adjust engine speed.
2. Burner fails to light.	Inadequate air supply.	Replace or repair air damper (para 5-19).
3. Burner fire too high.	Faulty burner.	Replace or repair the burner assembly (para 5-11).
4. Little or no heat produced by heater.	Heat loss due to damaged air ducts.	Replace or repair torn or ripped ducts (para 5-14).

Section III. GENERAL MAINTENANCE

5-5. Heater Handle and Handle Bracket, Braces, and Brace Brackets

a. Removal.

(1) *Remove the screws (3,* fig. 5-1) and the lockwashers (4) from the right heater handle tiedown bracket (2) and take off the bracket. Remove the left heater handle tiedown bracket (9) in the same manner.

(2) Lift the handle (1) from the heater.

(3) Remove the screws (8) and the lockwashers (7) from the heater handle brace brackets (6). Remove the heater handle braces (5) and the brackets (6) from the heater.

b. Inspection. Check the components for dents, bends, breaks, and cracks.

c. *Repair.* Straighten bent handles, brackets, and braces and weld any cracks or breaks.

d. Installation. Reverse the procedure in *a.* above.

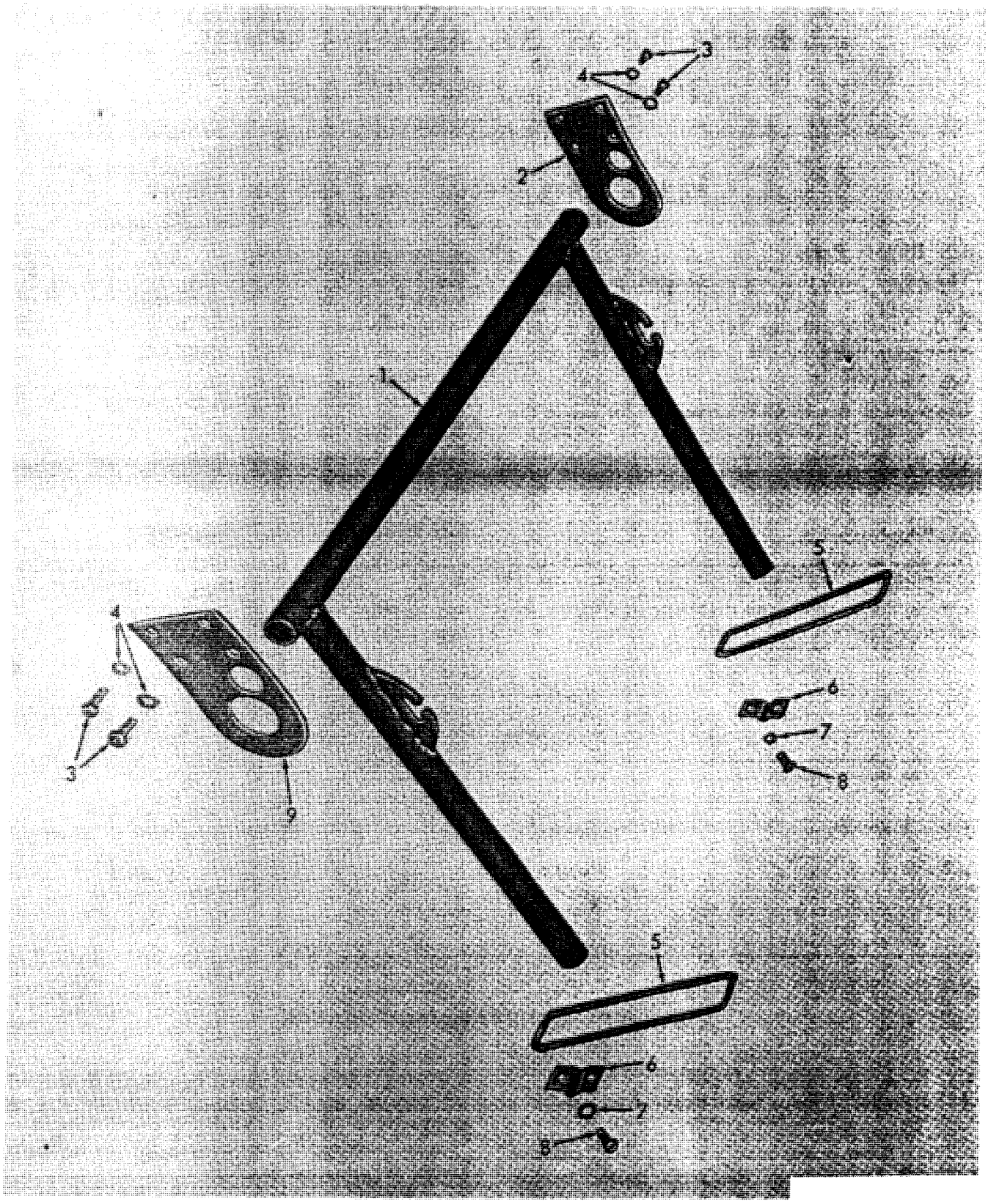

Figure 5-1. Heater handle and brackets.

1 Handle. heater
2 Bracket, right heater handle
3 Screws
4 Lockwashers
5 Brace, heater handle
6 Bracket, handle brace
7 Lockwasher
8 Screw
9 Bracket, left heater handle

5-6. Tool Pouch and Heat Shield and Spacers

a. Removal.

(1) Remove two screws from the tool pouch mounting strip.

(2) Remove the mounting strip and the tool pouch.

(3) Remove the nuts, the lockwashers. and the bolts holding the heater shield and the heat shield spacers to the heater.

b. Inspection. Check the tool pouch for holes and ripped seams, and the shield and the spacers for dents, breaks, or cracks.

c. Repair.

(1) Sew ripped seams and patch the holes in the pouch.

(2) Straighten any dents in the heater shield.

(3) Weld any breaks or cracks.

(4) Replace any damaged screws with serviceable ones.

d. Installation. Reverse the procedure in *a.* above.

5-7. Burner Access Door, Escutcheon Ring, and Wing Stud Assembly

a. Removal.

(1) Drain fuel tank and engine oil base.

(2) Remove the carburetor air cleaner assembly.

(3) Stand the heater on end as shown in figure 5-2.

(4) Remove the screws holding the skid base to the heater and take off the skid base.

(5) Open the burner access door

(6) Remove the nuts (3, fig. 5-3), flatwashers (2), lockwashers (1), and screws (13) holding the burner access door assembly hinge to the heater.

(7) Remove the burner access door assembly (7) from the heater.

(8) Remove the screws (5) from the cabinet cover escutcheon ring (4) and take off the ring.

(9) Remove the pin from the door operating wing stud assembly (8) and lift out the stud.

b. Inspection. Check the burner access door, the ring, and the wing stud assembly for breaks, cracks, and dents. Check the asbestos gasket for deterioration and breaks.

c. Repair. Remove dents and weld cracks or breaks.

d. lnstallation. Reverse thte procedure in *a.* above.

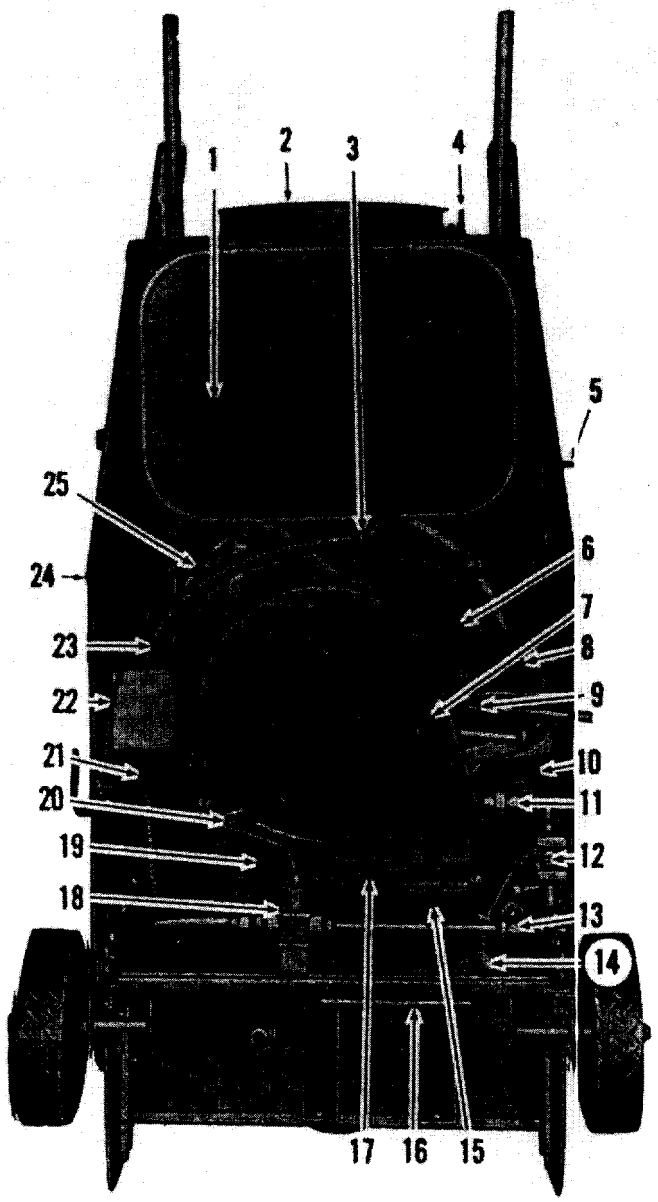

1 Cover, chamber cleanout
2 Opening, lower discharge
3 Elbow, exhaust tube
4 Handle. discharge opening damper
5 Rod, combustion air duct damper pull
6 Chamber assembly combustion
7 Chamber, burner air
8 Port, burner access
9 Union, burner overflow
10 Baffle, air
11 Valve, burner fuel metering
12 Valve, safety trip
13 Valve, burner fuel line shutoff
14 Spring, combustion air damper return
15 Duct, inner combustion air
16 Duct, outer combustion air
17 Channel, air duct supporting
18 Valve, overheat safety
19 Fan, air intake propeller
20 Hanger, burner triangle
21 Baffle, air
22 Capillary tube, overheat safety valve
23 Tube, flexible exhaust
24 Screw, chamber channel support
25 Bolt, chamber mounting

Figure 5-2. Heater, section view

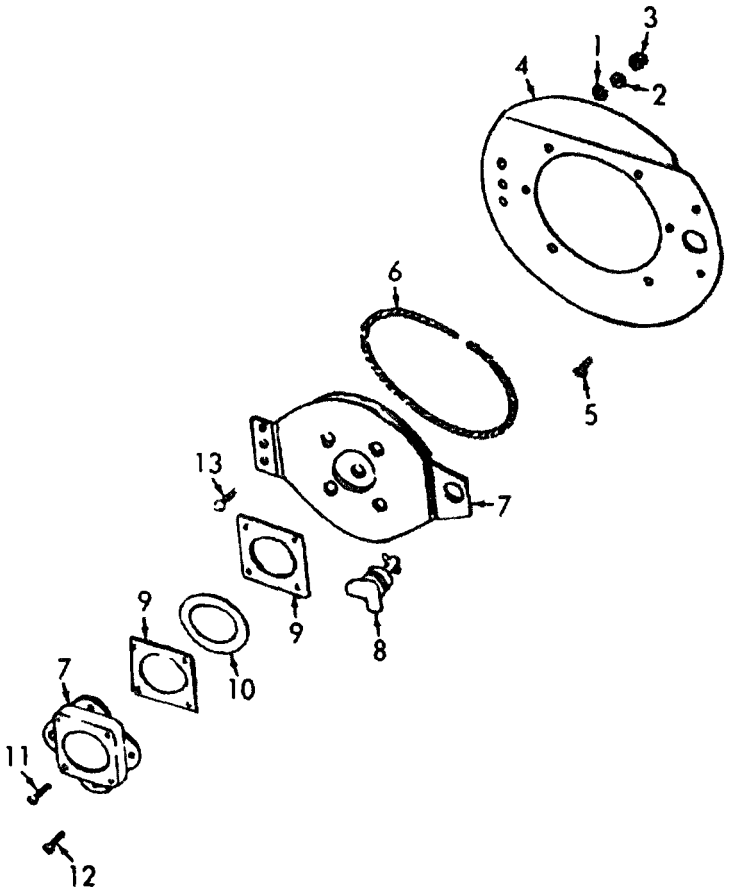

1 Lockwasher
2 Washers, flat
3 Nuts
4 Ring, stainless steel escutcheon
5 Screws
6 Gasket, asbestos cord
7 Door assembly, burner access
8 Stud assembly, wing
9 Gasket, set
10 Glass, observation
11 Screws
12 Screws
13 Screws

Figure 5-3. Burner access door, exploded view

5-8. Fuel Tank and Air Vent Line Assemblies, Straps, Supports, and Brackets

a. Removal.

(1) Remove the large ducts from their storage place on top of the heater.

(2) Release the snap spring locks holding the nch ducts in their storage tubes and take out the ducts.

(3) Drain the fuel tank.

(4) Remove the burner fuel filter (para 4-28).

(5) Remove the fuel tank sump mounting clamps.

(6) Remove the screws and the nut securing the storage tube support bands to the fuel tank straps and take off the support.

(7) Lift off the duct storage tube assembly (fig. 1-2) from the fuel tank supports.

(8) Loosen the spacer nut and remove the securing nut and bolt from each of the fuel tank supports.

(9) Lift off the front and the rear fuel tank straps from around the tank.

(10) Disconnect and remove the air vent line assembly.

(11) Remove the fuel tank (fig. 1-2) from the fuel tank support brackets.

(12) Remove the screw and the lockwasher securing each end of the fuel tank support bracket to the heater.

(13) *Remove* the support brackets.

(14) Lift the front and the rear fuel tank supports from the heater,

b. Cleaning.

(1) Observe the necessary precautions and steam clean the tank thoroughly to dissipate all fumes.

(2) Wash the supports, straps, brackets, and air vent line in SD and dry them thoroughly.

(3) Blow compressed air through the air vent line to remove any obstruction.

c. Inspection. Check all components for holes, tracks, and dents and for other signs of damage. Check the air vent line for any obstruction.

d. Repair.

(1) Weld any breaks or cracks and straighten any dents in the brackets, straps, and supports.

(2) Straighten any dents in the fuel tank.

(3) Solder a sheet metal patch over any cracks or holes in the fuel tank. Weld broken seams only as an emergency expedient.

e. Installation. Reverse the procedure in *a.* above.

5-9. Propeller Fan Guard

a. Removal, Inspection, and Installation. Refer to paragraph 4-15.

b. Inspection. Check the propeller fan guard for dents, cracks, and breaks.

c. Repair. Straighten any dents, and weld all cracks and breaks.

5-10. Nondriving Vehicular Axle With Retractable Handle, Wheels, and Spacer Collar

a. Removal, Inspection, and Installation. Refer to paragraph 4-29.

b. Inspection and Repair. Check for cracks, breaks, dents, and wear; weld all cracks and breaks and straighten dents.

5-11. Burner Assembly and Triangle Hanger

a. Removal.

(1) Drain the fuel tank and the engine oil base.

(2) Remove the carburetor air cleaner. (TM 5-2805-256-14.)

(3) Stand the heater on end and remove the skid base (fig. 5-2).

(4) Remove the nuts securing the air baffle (21) to the heater and take off the baffle.

(5) Remove the screw and the lockwasher holding the capillary tube (22) clamp to the burner assembly to free the clamp.

(6) Remove the nuts securing the air baffle (10) to the heater and take off the baffle.

(7) Disconnect the union (9) on the burner overflow line and remove the line.

(8) Disconnect the union at the burner fuel metering valve (11).

(9) Remove the nuts, the lockwashers, and the bolts holding the air duct supporting channel (11) to the inner combustion air duct (15) and remove the channel.

(10) Remove the screws and the lockwashers holding the end of the chamber lower mounting bracket to the side of the heater near the burner access door.

(1) Remove the nuts and the lockwashers holding the burner triangle hanger (20) to the heater. Carefully remove the burner assembly and the gasket from the heater.

b. Disassembly.

(1) Separate the gasket from the burner assembly.

(2) Remove the burner overflow nipple (16, fig. 5-4).

(3) Remove the union (11) and the nipple from the vaporizer line tee.

(4) Remove the nuts and the lockwashers holding the burner triangle hanger (8) to the burner air chamber (9) and take the hanger (8) with the burner from the air chamber.

(5) Lift the burner bowl vaporizer (6), the fuel vaporizer line (12), the central air distributor baffle (1), the flame spreader assembly (2), and the burner central air distributor assembly (21) from the burner air chamber (9).

(6) Remove the bolts (7, fig. 5-5) and nuts (9 and 10). Holding the burner bowl top retaining ring (6) to the burner, take off the ring.

(7) Lift out the burner howl perforated sleeve (8).

(8) Remove the nuts (13), the lockwasher (14), the anchor channel clip (12), and the anchor channel (1) from the burner central air distributor stud , which is attached to the flame spreader assembly (2).

(9) Begin at the top and lift off the flame spreader assembly (2) with the stud, and the central air burner distributor (5).

(10) Take the central air distributor ring (3) and the air distributor baffle (4) from the central air burner.

(11) Remove the burner fuel vaporizer line (12, fig. 5-4) from the fuel line-to-burner elbow (20)

(12) Remove the fuel line-to-burner elbow (20) from the burner bowl vaporizer (6).

c. Inspection, Cleaning, and Repair.

(1) Check the cast-metal parts for breaks and racks.

(2) Check the perforated sleeve for dirt and possible burns.

(3) Inspect all parts for carbon deposits and clean them thoroughly with a wire brush.

(4) Inspect the overflow tubes for any obstruction and clean them in solvent and blow through with compressed air.

(5) Straighten all dents and weld any breaks or cracks.

d. Assembly and Installation. Reverse the procedures in *a.* and *b.* above, using new gaskets.

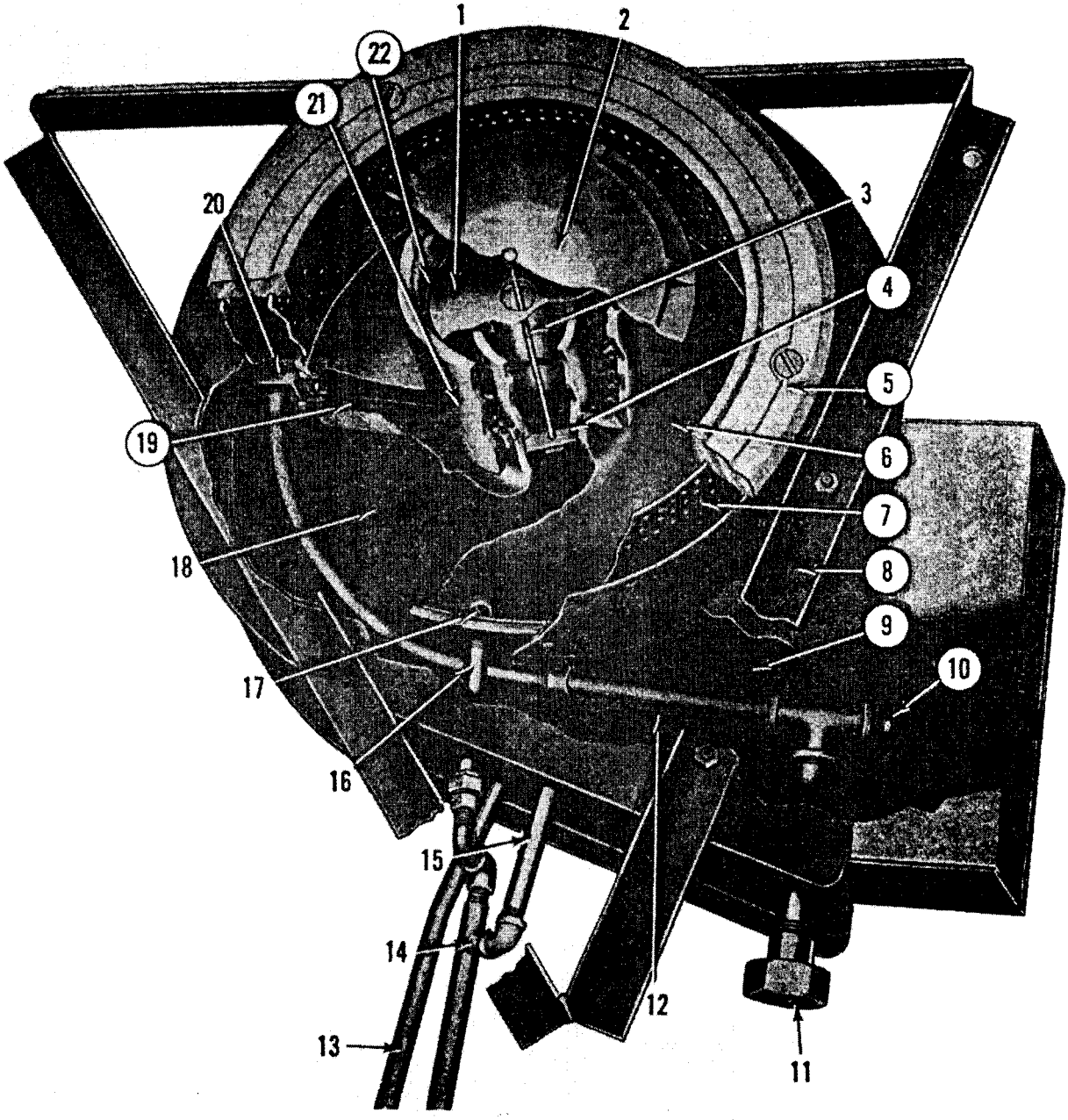

Figure 5-4. Burner, cutaway view.

1 Baffle, central air distributor
2 Spreader assembly, flame
3 Stud, spreader assembly
4 Channel, distributor
5 Ring, top burner bowl
6 Vaporizer, burner bowl
7 Sleeve, burner bowl perforated
8 Hanger, burner triangle
9 Chamber, burner air
10 Plug, pipe
11 Union, inlet fuel line
12 Line, burner fuel vaporizer
13 Tube, burner air chamber drain
14 Tee and extension, burner overflow
15 Nipple, equalizer
16 Nipple, burner overflow
17 Outlet, overflow
18 Interior, burner air chamber
19 Trough, vaporizer bowl
20 Elbow, fuel line-to-burner
21 Distributor assembly
22 Ring, central air distributor

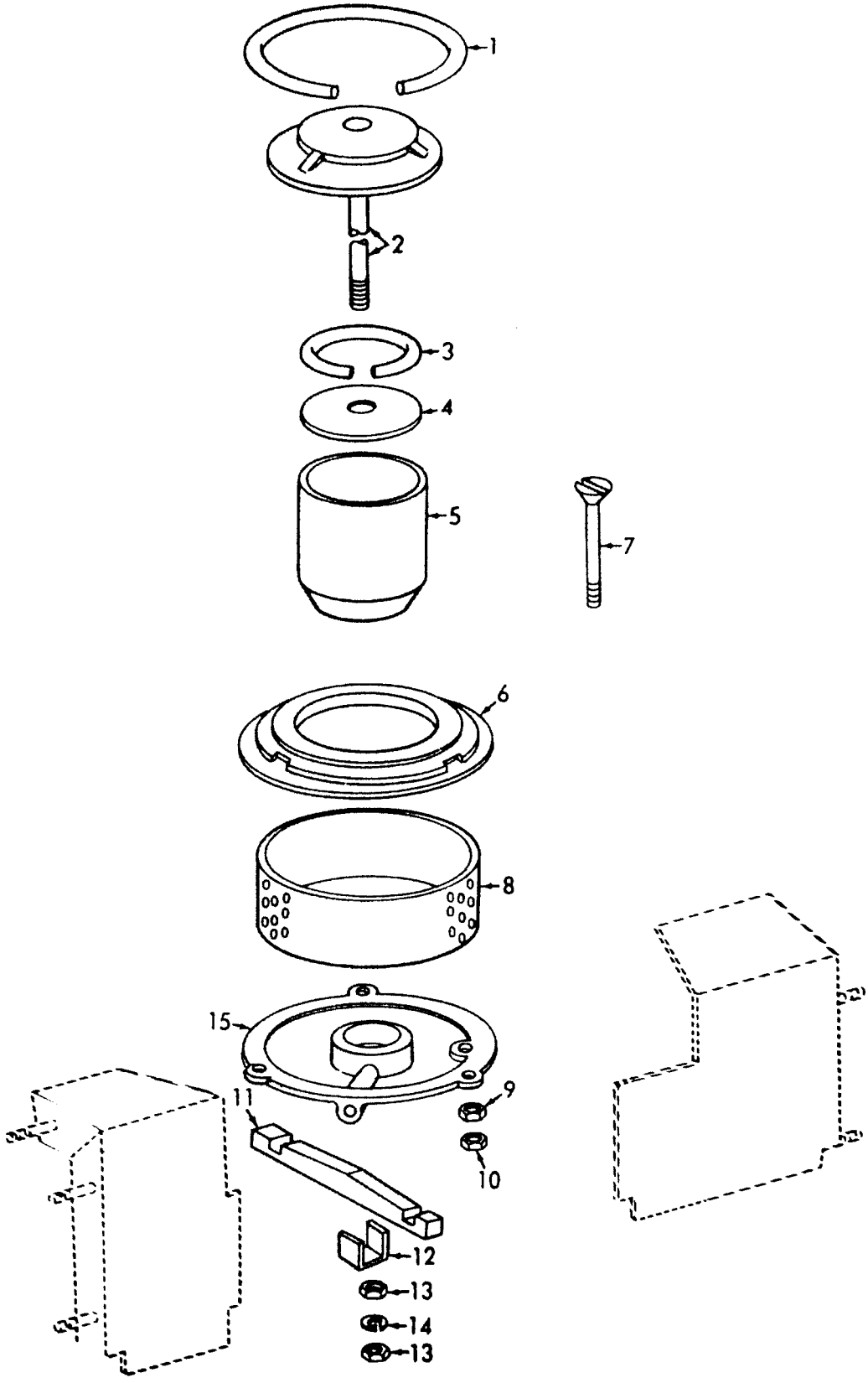

Figure 5-5. Burner assembly, exploded view.

1 Rope, combustion chamber asbestos
2 Spreader assembly, flame
3 Ring, central air snap spring
4 Baffle, central air distributor
5 Distributor, central air
6 Ring, top retaining
7 Bolts
8 Sleeve, bowl perforated
9 Nut
10 Nut
11 Channel, distributor and flame spreader anchor.
12 Clip, channel locating
13 Nut
14 Lockwasher
15 Vaporizer, bowl

5-12. Burner Fuel Vaporizer Line

a. Removal.

(1) Drain the fuel tank and the engine oil base.

(2) Remove the carburetor air cleaner (TM 5-2805-256-14).

(3) Remove the burner assembly (para 5-11).

b. Disassembly.

(1) Refer to paragraph 5-11.

(2) Remove the burner vaporizer line (12, fig. 5-4) from the fuel line-to-burner elbow (20).

(3) Remove the elbow (20) from the burner bowl vaporizer (6).

(4) Remove the tee from the vaporizer line (12).

c. Inspection. Inspect the vaporizer line and the fittings for breaks, cracks, or damaged threads.

d. Installation and Assembly. Reverse the procedure in *a.* and *b.* above.

5-13. Burner Air Chamber With Drain Tube

a. Removal.

(1) Drain the fuel tank and the engine oil base.

(2) Remove the carburetor air cleaner.

(3) Remove the burner assembly (para 5-11).

(4) Unscrew the burner overflow nipple (16, fig. 5-4) from the vaporizer.

(5) Unscrew the metering valve-to-tee nipple from the tee.

(6) Remove the nuts and the lockwashers and separate the burner air chamber (9), with the drain tube (13), from the triangle hanger (8).

b. Inspection and Repair.

(1) Inspect the *chamber* for serviceability and be sure the drain tube is unobstructed.

(2) Blow compressed air through the drain tube to remove any obstruction.

(3) Straighten any dents and weld rail cracks and breaks..

c. Installation. Reverse the procedure in *a.* above.

5-14. Outer Combustion Air Duct

a. Removal

(1) Remove the engine from the heater (para 4-13).

(2) Remove the screws and the lockwashers holding the outer combustion air duct (16, fig. 5-2) to the heater and remove the duct.

b. Inspection and Repair.

(1) Inspect the duct for breaks, dents, and proper mounting.

(2) Straighten any dents and weld oil breaks,

c. Installation. Reverse the procedure in *a.* above.

5-15. Inner Combustion Air Duct, Damper and Arm Assemblies, Rod, and Return Spring

a. Removal and Disassembly.

(1) Drain the fuel tank and the engine oil hose.

(2) Remove the carburetor air cleaner (TM 5-2805-256-14).

(3) Remove the burner assembly (para 5-11).

(4) Remove the bolts, the nuts, and the washer from each end of the air duct supporting channel (17, fig. 5-2) to free the channel.

(5) Disconnect the return spring (3, fig. 5-6) from the damper lever arm (4) and remove the spring.

(6) Remove the nuts, the lockwasher, and the bolt holding the damper pull rod (3) to the damper lever arm (4)

(7) Remove the rod by pulling it through from the outside of the heater.

(8) Remove the inner combustion air duct (1) from the heater.

(9) Take out the cotter pin holding the lever arm (4) to the damper (2) and remove the lever arm.

(10) Pull the hinge pin and the washer from the damper, and remove the damper from the duct.

b. Inspection and Repair.

(1) Inspect the components for cracks, breaks, and dents and check the spring for tension and broken coils.

(2) Straighten any dents and weld the cracks and breaks.

c. Installation. Reverse the procedure in *a.* above.

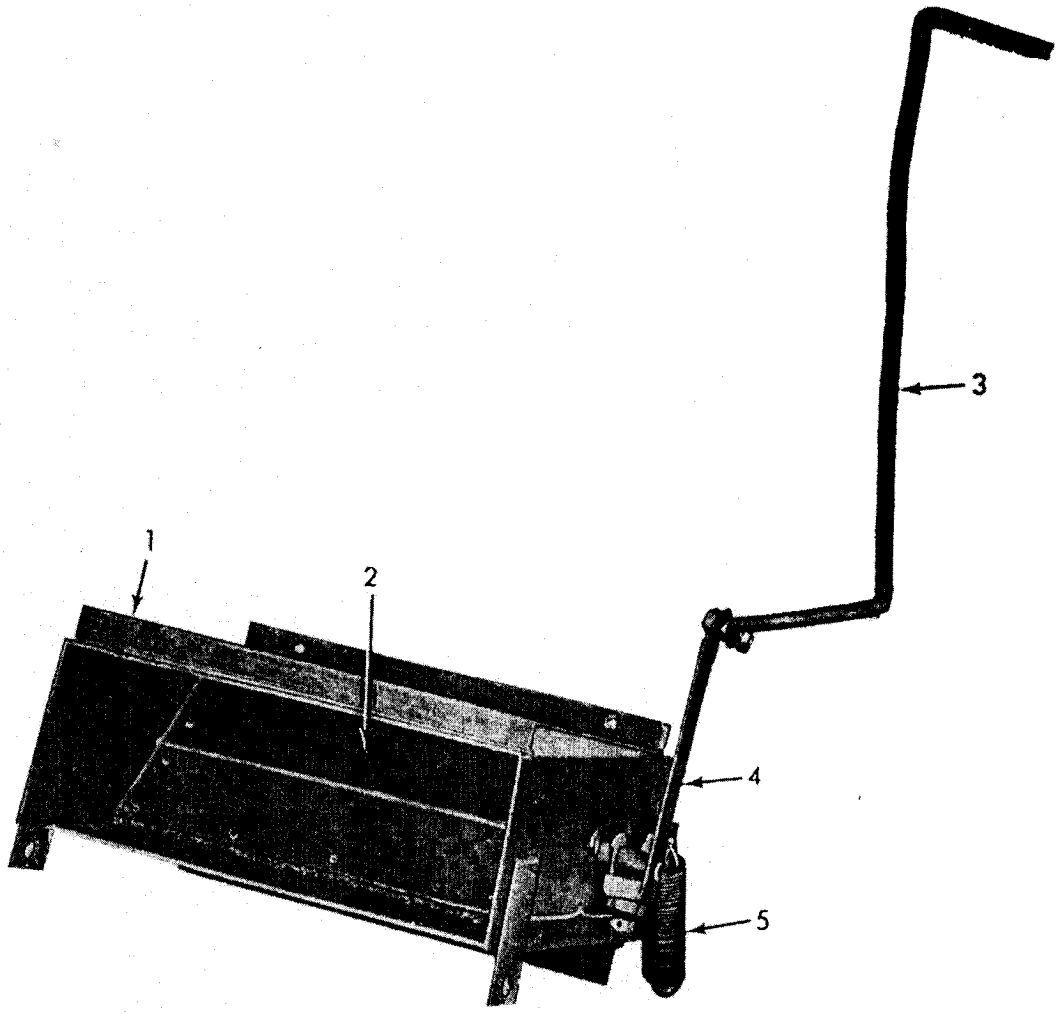

1 Duct, inner combustion air
2 Damper, burner air duct
3 Rod, damper pull
4 Arm, air duct damper lever
5 Spring damper return

Figure 5-6. Combustion burner air duct damper assembly

5-16. Flexible Exhaust Line Tube Assembly

a. Removal and Disassembly.

(1) Refer to the procedures in paragraph 5-11.

(2) Disconnect the flexible exhaust tube union (13, fig. 57) at the engine.

(3) Unscrew and remove the flexible exhaust line tube assembly (15) from the elbow (17) at the combustion chamber and then remove the flexible exhaust line tube assembly (15) from the heater.

(4) Remove the nipple (14) and the reducer elbow (16) from the flexible tube (15).

(5) Unscrew and remove the elbow (17) from the combustion chamber.

(6) Remove the screws holding the exhaust tube adapter (11) to the combustion chamber and take out the adapter.

b. Inspection. Inspect the exhaust tube and pipe fittings for any breaks, cracks, or damaged threads.

c. Installation. Reverse the procedure in *a.* above.

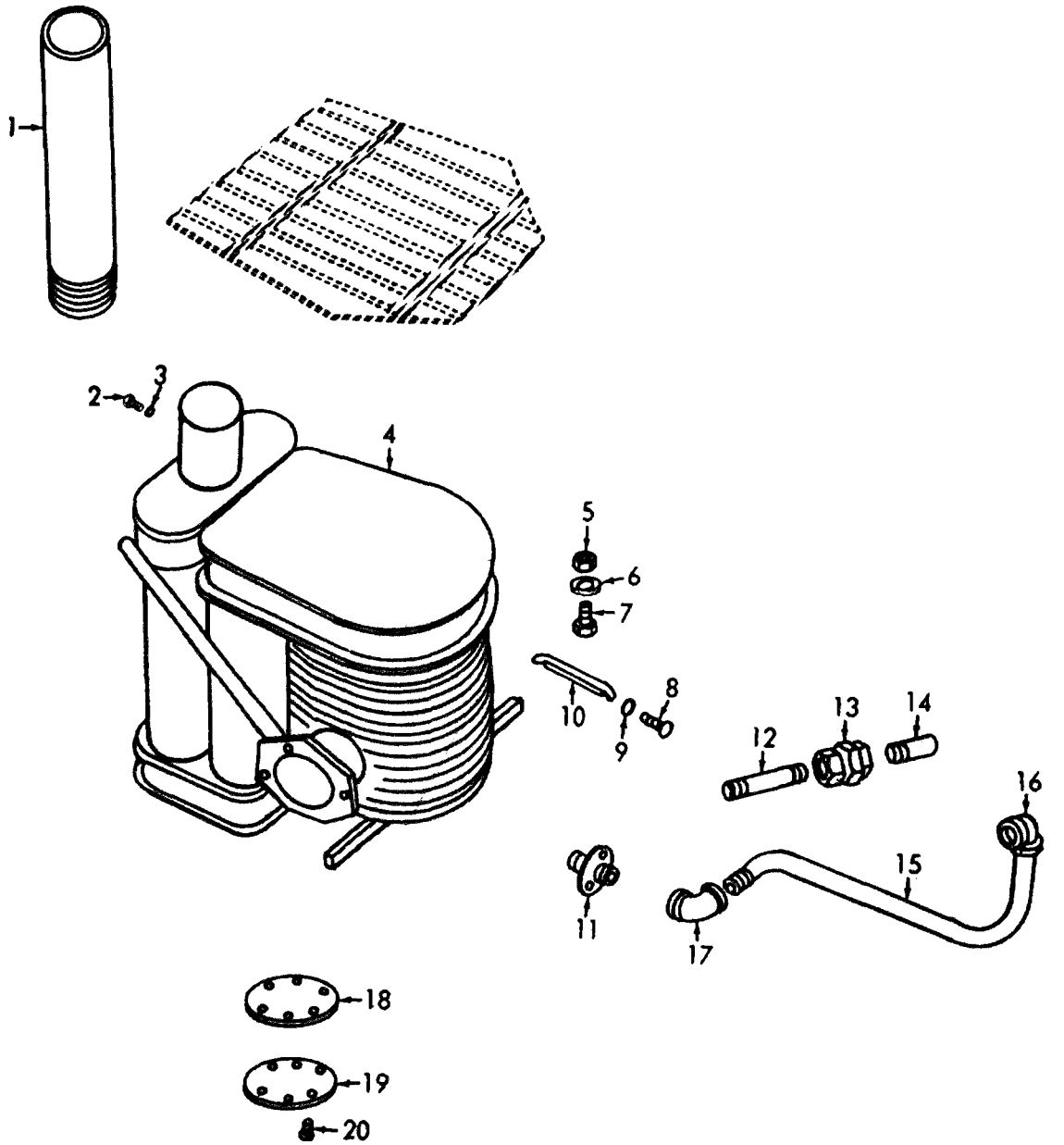

1 Stack with spark arrester screen extension
2 Screws
3 Lockwashers
4 Chamber assembly, combustion
5 Nut
6 Lockwasher
7 Bolt
8 Screw
9 Lockwasher
10 Brace, combustion chamber channel support
11 Adapter, engine exhaust tube
12 Nipple, engine base to union pipe
13 Union, engine exhaust tube nipple pipe
14 Nipple, exhaust tube elbow to union pipe
15 Tube assembly, exhaust line
16 Elbow, exhaust tube to nipple reducer pipe
17 Elbow, exhaust tube to adapter pipe
18 Gaskets, cleanout cover
20 Screws

Figure 5–7. Combustion chamber and exhaust line assembly.

5-17. Combustion Chamber Assembly

a. Removal.

(1) Position the heater suitable for working underneath it.

(2) Remove the skid base.

(3) Remove the burner assembly (para 5-11).

(4) Remove the safety trip valve assembly (para 5-22).

NOTE

New heater models have swivel nuts in the fuel line so that the overheat safety valve may be removed separately.

(5) Open the burner access door.

(6) Remove the nuts (3, fig. 5-3), the flat-washers (2), the lockwashers (1), and the screws (13) holding the burner access door assembly hinge to the heater.

(7) Remove the burner access door assembly (7) from the heater.

(8) Remove the screws (5) from the cabinet cover escutcheon ring (4) and take off the ring.

(9) Remove the bolts, the nuts, and the washer from each end of the air duct supporting channel (17, fig. 5-2) to free the channel.

(10) Disconnect the return spring (5, fig. 5-6) from the damper lever arm (4) and remove the spring.

(11) Remove the nuts, the lockwasher, and the bolt holding the damper pull rod (3) to the damper lever arm (4).

(12) Remove the rod by pulling it through from the outside of the heater.

(13) Remove the inner combustion air duct (1) from the heater.

(14) Disconnect the flexible exhaust tube union (13, fig. 5-7) at the engine.

(15) Remove the flexible exhaust tube from the elbow at the combustion chamber.

(16) Remove the chamber mounting bolts (25, fig. 5-2). lockwashers, and plain washers.

(17) Remove the screws (24) and the lock-washers holding the combustion chamber support channel braces to the heater to free the braces.

(18) Remove the screws holding the chamber diagonal brace to the combustion chamber support channel. There is a diagonal brace on each side of the chamber.

(19) Support the combustion chamber assembly to prevent it from dropping out of the cabinet.

(20) Remove the screws and the washers securing the chamber diagonal braces to the front of the heater.

(21) Remove the nuts holding the vertical baffles to each side of the combustion chamber exhaust ducts and remove the baffles.

(22) Remove the screws and lockwashers securing the combustion chamber support channels to the heater and remove the channels from the heater.

(23) Slide the combustion chamber assembly carefully from the heater.

(24) Remove the screws securing the chamber diagonal braces to the chamber and remove the diagonal braces.

b. Inspection. Check for corrosion, cracks, breaks, and wear.

c. Installation. Reverse the procedure in *a.* above.

5-18. Combustion Chamber Cleanout Covers and Gaskets

a. Removal.

(1) Refer to the procedures in paragraph 5-11 *a,* sub-paragraph 1, 2 and 3.

(2) Remove the screws from each of the two chamber cleanout covers (19, fig. 5-7), and take off the covers.

(3) Take out the two cover gaskets (18).

b. Inspection and Repair. Check for any dents, holes, breaks, and cracks. Straighten the dents and weld breaks and cracks.

c. Installation. Reverse the procedure in *a.* above, using new gaskets.

5-19. Discharge Opening Dampers, Shaft With Handle, and Springs

a. Removal (fig. 2-1).

(1) Remove the jamnut and the nut from each of the two screws on the handle end of the upper damper.

NOTE

As the damper opening shaft with handle is pulled out, a spacer washer and a coil spring will fall from the handle.

(2) Remove the upper damper from the opining.

(3) Remove the lower champer in the same manner.

b. Inspection and Repair.

(1) Inspect the dampers for proper operation.

(2) Check the springs for adequate tension and broken coils.

(3) Straighten any dents and weld all cracks and breaks.

c. Installation. Reverse the procedure in *a.* above.

5-20. Flexible 6-Inch and 12-Inch Duct Assemblies

a. Removal, Inspection, and Installation. Refer to paragraph 3-8 and 3-9.

b. Repair. Make minor repairs to the canvas ducts and hand sew patches over the damaged

areas. Use tent patching cement on the patches to help lessen the resistance to the flow of air through ducts.

5-21. Duct Connecting Transition Plate

The instructions in this paragraph pertain to either one of the duct connecting transition plates.

a. Removal, Inspection; and Installation. Refer paragraph 3-10.

b. Repair. Straighten all dents and weld any cracks or breaks.

5-22. Safety Trip Valve Assembly

a. Removal.

(1) Refer to the procedures in paragraph 5-11 *a*, Sub-paragraph 1, 2 and 3.

(2) Disconnect the pipe union on-the burner fuel metering valve (11, fig. 5-2).

(3) Disconnect the burner fuel line from the overheat safety valve (18).

(4) Remove the bolts holding the safety trip valve assembly (12) to the heater.

(5) Remove the cotter pin from the overheat safety valve bulb bracket to free the bulb.

(6) Take out the clips holding the capillary tube (22) to the heater.

(7) Remove the fuel metering valve (11), the safety trip valve (12) the burner fuel line shutoff valve (13), the overheat safety valve (18), with the capillary tube (22) and the bulb, and the burner fuel line. All these are connected.

(8) Remove the screws securing the safety trip valve to the safety trip valve door, and disconnect the linkage at the bottom of the valve to remove the valve.

b. Disassembly.

(1) Take the valve cap (1, fig. 5-8) from the top of the trip valve, and then remove the valve closing plunger (3) and the spring (2).

(2) Unscrew the valve plug (9) from the valve body (4).

(3) Remove the valve plunger (8), the valve seat (7), the thickol diaphragm (5), and the neoprene diaphragm (6) from the valve body (4).

c. Inspection. Check the components for breaks, cracks, wear, and damaged threads; inspect the diaphragms for wear and damages.

d. Assembly. Reverse the procedure in *b.* above, using new diaphragms.

e. Installation. Reverse the procedure in *a.* above. Once the safety trip valve has been properly installed, it seldom fails to operate. If it does become inoperative, however, proceed as follows:

(1) Level the unit-it must be level to operate satisfactorily.

(2) Clean and oil the safety trip valve door hinge.

(3) operate the heater and check the valve for proper operation as instructed in paragraph 2-4 *h*.

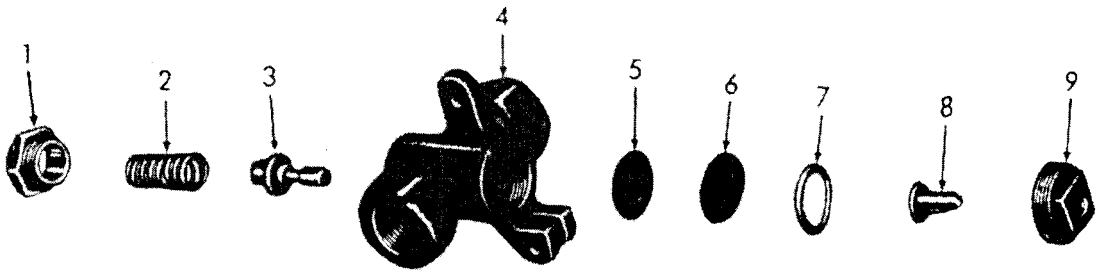

1 Cap, valve
2 Spring, plunger
3 Plunger, valve closing
4 Body, valve
5 Diaphragm, thickol
6 Diaphragm, neoprene
7 Seat, valve
8 Plunger, valve opening
9 Plug, valve

Figure 5-8. Safety trip valve, exploded view.

5-23. Main Fuel Line Shutoff Angle Valve

a. Removal, Cleaning, and Installation. Refer to paragraph 4-26.

b. Inspection and Repair. Check the valve for damages. Tighten the packing nut which is generally the only repair necessary to the valve (fig. 4-2). If a new packing ring (16) must be installed, proceed as follows:

(1) Remove the wheel from the end of the valve stem.

(2) Unscrew the packing nut and remove the nut over the end of the valve stem.

(3) Remove the old packing ring.

(4) Reverse the steps (1) through (3) above, installing a new packing ring (16).

5-24. Burner Fuel Metering Valve and Burner Fuel Shutoff Valve

a. Removal. Remove these valves (para 5-22).

b. Inspection and Repair. Inspect the valves for damages and repair the valves by following the procedure in paragraph 5-23. Install new packing rings (46 and 62, fig. 4-2) in valves.

c. Installation. Reverse the procedure in *a.* above.

5-25. Fuel Metering and Shutoff Valve Extension Shafts With Pointers and Plates

a. Removal.

(1) Remove the fuel metering and shutoff valves (para 5-22).

(2) Remove the nut (2, fig. 4-2) holding the handwheel (1) to the extension shaft (71) and take off the handwheel.

(3) Remove the nuts (77) from the extension shaft (71).

(4) Take off the pointer (76) and the lockwasher (75).

(5) Remove the nut (72).

(6) Slide the fuel metering valve extension shaft (71), with the spacer (73) and the nut (72) from the bottom of the heater cabinet.

(7) Remove the spacer (73) and the nut (72) from the extension shaft (71).

(8) Take off the nut (65) and the washer (64) holding the plate (63) to the valve stem.

(9) Remove the plate from the valve stem.

(10) Remove the fuel shutoff valve extension shaft with pointer and plate in the same manner as described above in *a.* (1) through (9).

b. Inspection. Check for bends, breaks, and damaged threads.

c. Installation. Reverse the procedure in *a.* above.

5-26. Overheat Safety Valve and Orifice

a. Removal. Remove the overheat safety valve (37, fig. 4-2) and orifice (36) (para 5-22).

b. Cleaning and Inspection.

(1) Clean the fuel passage in the safety valve orifice (36) being careful not to damage the soft metal.

(2) Inspect the sensing bulb, the capillary tube, and the valve body for visible defects.

CAUTION

Do not attempt to disassemble the overheat safety valve body.

(3) Inspect the valve for cracks and breaks.

c. Installation. Reverse the procedure in *a.* above.

. Burner Fuel Lines, Fittings, Hangers, and Clips

a. Removal.

(1) Observe all necessary safety measures and raise the heater to a suitable height for working underneath.

(2) Remove the skid base.

(3) Remove the hangers and clips securing the fuel lines and fittings to the heater.

(4) Unscrew and remove the fuel Iines and fillings.

CAUTION

When removing or installing fuel lines and fittings, exercise care to prevent damage to soft metals-do not allow lines to become kinked or flattened.

b. Cleaning. Wash the line and fittings in SD and blow out any obstruction with compressed air.

c. Inspection. Check the lines and fittings for Ieaks, dents, and damaged or stripped threads; check the hangers and clips for bends and other damages.

d. Installation. Reverse the procedure in *a.* above, ohserving the caution.

Section IV. REMOVAL AND INSTALLATION OF MAJOR COMPONENTS

5-28. Engine Assembly

For removal and installation instructions of the MIL-STD Model 1A08-3 engine see paragraph 4-13.

5-29. Fuel System

For removal and installation of the fuel system see TM 5-2805-256-14.

5-30. Exhaust System

For removal and installation of the exhaust system see TM 5-2805-256-14.

5-31. Cooling System

For removal and installation of the cooling system see TM 5-2805-256-14.

5-32. Electrical System

For removal and installation of the electrical system see TM 5-2805-256-14.

CHAPTER 6

REPAIR OF THE PORTABLE GASOLINE HEATER

Section I. REPAIR OF THE ENGINE ASSEMBLY

Refer to TM 5-2805-256-14 for engine repairs.

Section II. REPAIR OF THE HEATER ASSEMBLY

6-1. Burner Assembly

a. Removal. Refer to paragraph 5-11 and remove the burner assembly.

b. Disassembly. Refer to paragraph 5-11 and disassemble the burner assembly.

c. *Repair.*

(1) The spreader assembly (2, fig. 5-5) is made up of a cast steel spreader plate and a threaded stud. Weld a cracked or broken spreader plate and rethread stripped or damaged stud threads (TM 9-237).

(2) The distributor (5) is cast steel contruction. A cracked or broken central air **stributor** will be repaired by welding (TM 9-237).

(3) The retaining ring (6) which caps perforated bowl sleeve (8) is a stainless steel casting. The retaining ring will be repaired by welding if cracked or broken (TM 9-237).

(4) The perforated bowl sleeve (8) is constructed of sheet stainless steel. A dented or bent sleeve will be straightened and reshaped to its original configuration.

(5) The distributor channel (11) which secures the spreader assembly (2) is fastened to it by the spreader assembly stud and nut. The channel which is of steel construction will be repaired by welding when cracked or damaged (TM 9-237).

(6) The bowl vaporizer is a steel casting which supports the bowl sleeve. When damaged or broken it will be repaired by welding (TM 9-237).

d. Reassembly. Refer to paragraph 5-11 and **reassemble** the burner assembly.

e. Installation. Refer to paragraph 5-11 and install the burner assembly.

6-2. Burner Fuel Metering, Valve Assembly

a. Removal. Refer to paragraph 5-24 and remove the fuel metering valve assembly.

b. Disassembly. Disassemble the fuel metering valve assembly (60, fig. 4-2).

c. Repair. Replace ring (62) and rethread stripped or damaged threads on the valve parts.

d. Reassembly. Reassemble the fuel metering valve assembly (60).

e. Installation. Refer to paragraph 5-24 and install the valve.

6-3. Burner Air Chamber

a. Removal. Refer to paragraph 5-13 and remove the burner air chamber.

b. Repair.

(1) Rethread stripped or damaged stud threads.

(2) Repair dents by straightening with a mallet or clamp.

(3) Repair breaks or cracks by welding (TM 9-237).

c. Installation. Refer to paragraph 5-13 and install the burner air chamber.

6-4. Exhaust Tube Assembly

a. *Removal and Disassembly.* Refer to paragraph 5-16 and remove and disassemble the exhaust tube assembly.

b. Repair.

(1) Repair breaks and cracks in the exhaust tube assembly by welding (TM 9-237).

(2) Rethread stripped or damaged threads.

c. Reassembly and Installation. Refer to paragraph 5-16 and reassemble and install the exhaust tube assembly.

6-5. Combustion Chamber Assembly

a. Removal, Refer to paragraph 5-17 and remove the combustion chamber assembly.

b. Repair.

(1) Straighten any dents in the combustion chamber.

(2) Repair all breaks or cracks by welding (TM 9-237).

c. Installation. Refer to paragraph 5-17 and install the combustion chamber assembly.

CHAPTER 7

ADMINISTRATIVE STORAGE

Section I. PREPARATION OF EQUIPMENT

7-1. Preventive Maintenance Checks and Services

Inspect the heater thoroughly to be sure all parts are in serviceable condition. Perform the services that are listed in tables 3-1 and 4-1 to be sure the heater operates satisfactorily. Correct all deficiencies if facilities are available for such services. If repairs are beyond the scope of organizational maintenance, refer them to a higher echelon for correction.

7-2. Cleaning and Painting

Clean the heater and the engine thoroughly. Remove rust and corrosion and scrape any flaked or peeling paint; then dry all surfaces to be painted or coated with preservatives. Repaint the heater and the engine as required to protect them against deterioration. Apply PL Medium (lubricating oil, general purpose preservative) to surfaces susceptible to rust or corrosion and not otherwise protected.

7-3. Draining the Fuel Tank

Drain the fuel tank completely and coat the interior of the tank with preservative oil.

Section II. STORAGE INSTRUCTIONS

7-4. General

Provide access to the heater during storage. Be sure the heater is resting on dry dunnage. Cover the heater if it is to be stored outside. During storage, inspect and operate the heater at the intervals and in the manner described in paragraph 7-5 and 7-6 below and in TM 740-90-1.

7-5. 30-Days Storage Maintenance

While the heater is in storage, inspect and operate it (for a period of 15 to 20 minutes) one or more times each 30 days. Check the heater and the engine assembly for leaks and proper functioning of all components. Make any necessary adjustments, test, and repairs.

7-6. 180-Days Storage Maintenance

Perform the services in paragraph 7-5 above, and lubricate the heater thoroughly in accordance with instructions in figure 3-1 and in LO 10-4520-201-12. Correct deficiencies as directed in paragraph 7-1.

APPENDIX A

REFERENCES

l. Fire Protection	
TB 5-4200-200-10	Hand Portable Fire Extinguisher For Army Users.
A-2. Lubrication	
C91001L	Fuels, Lubricants, Oils and Waxes
LO 5-2805-256-12	Lubrication Order
A-3. Painting	
TM 9-213	Painting Instructions for Field Use
A-4. Radio Suppression	
TM 11-483	Radio Interference Suppression
A-5. Maintenance	
TM 10-4520-201-24P	Organizational, Direct and General Support Maintenance Repair Parts
TM 9-237	Welding, Theory and Application
TM 5-2805-256-14	Operator, Organizational, Direct Support and General Support Maintenance Manual, Engine, Gasoline 1½ HP, Military Standard Models
TM 5-2805-256-24P	Organizational, Direct and General Support Maintenance Repair Parts. Engine. Gasoline 1½ HP, Military Standard Models
TM 38-750	Army Equipment Record Proceclures
A-6. Shipment and Storage	
TB 740-97-2	Preservation of USAMECOM Mechanical Equipment for Shipment and Storage
TB 740-90-1	Administrative Storage of Equipment
TB 38-230	Preservation, Packaging, and Packing of Military Supplies and Equipment

APPENDIX B

MAINTENANCE ALLOCATION CHART

Section I. INTRODUCTION

B-1. General

a. This section provides a general explanation of all maintenance and repair functions authorized at various maintenance levels.

b. Section II designates overall responsibility for the performance of maintenance functions on the identified end item or component. The implementation of the maintenance functions upon the end item or component will be consistent with the assigned maintenance functions.

c. Section III lists the special tools and test equipment required for each maintenance function as referenced from section II.

d. Section IV contains supplemental instructions or explanatory notes required for a particular maintenance function.

B-2. Explanation of Columns in Section II

a. Group Number, Column (1). The assembly group number is a numerical group assigned to each assembly. The assembly groups are listed on the MAC in disassembly sequence beginning with the first assembly removed in a top down disassembly sequence.

b. Assembly Group. Column (2). This column contains a brief description of the components of each assembly group.

c. Maintenance Functions, Column (3). This column lists the various maintenance functions (A through K). The upper case letter placed in the appropriate column indicates the lowest maintenance level authorized to perform these functions. The symbol designations for the various maintenance levels are as follows:

C-Operator or crew
O-Organizational maintenance
F-Direct support maintenance
H-General support maintenance
D-Depot maintenance

The maintenance functions are defined as follows:

A-INSPECT: To determine serviceability of an item by comparing its physical, mechanical, and electrical characteristics with established standards.

B-TEST: To verify serviceability and to detect electrical or mechanical failure by use of test equipment.

C-SERVICE: To clean, to preserve, to charge, and to add fuel, lubricants, cooling agents, and air.

D-ADJUST: To rectify to the extent necessary to bring into proper operating range.

E-ALIGN: To adjust specified variable elements of an item to bring to optimum performance.

F-CALIBRATE: To determine the corrections to be made in the readings of instruments or test eqnipment used in precise measurement. Consists of the comparison of two instruments, one of which is a certified standard of known accuracy, to detect and adjust any discrepancy in the accuracy of the instrument being compared with the certified standard.

G-INSTALL: To set up for use in an operational environent such as an emplacement, site, or vehicle.

H-REPLACE: To replace unserviceable items with serviceable like items.

I-REPAIR: Those maintenance operations necessary to restore an item to serviceable condition through correction of material damage or a specific failure. Repair may be accomplished at each level of maintenance.

J-OVERHAUL: Normally, the highest degree of maintenance performed by the Army in order to minimize time work is in process consistent with quality and economy of operation. It consists of that maintenance necessary to restore an item to completely serviceable condition as prescribed by maintenance standards in technical publications for each item of equipment. Overhaul normally does not return an item to like new, zero mileage, or zero hour condition.

K-REBUILD: The highest degree of materiel maintenance. It consists of restoring equipment as nearly as possible to new condition in accordance with original manufacturing standards. Rebuild is performed only when required by operational considerations or other paramount factors and then only at the depot maintenance level. Rebuild reduces to zero the hours or miles the equipment, or component thereof, has been in use.

d. Tools and Equipment, Column (4). This column is provided for referencing by code the special tools and test equipment (sec. III), required to perform the maintenance functions (sec. II).

e. Remarks, Column (5). This column is provided for referencing by code the remarks (sec. IV) pertinent to the maintenance functions.

B-3. Explanation of Columns in Section III

a. Reference Code. This column consists of a number and a letter separated by a dash. The number references the T&TE requirements listed in section 11. The letter represents the specific maintenance function the item is to be used with in columns A through K of section II.

b. Maintenance Level. This column shows the lowest level of maintenance authorized to use the special tool or test equipment.

C. Nomenclature. This column lists the name or identification of the tool or test equipment.

d. Tool Number. This column lists the man ufa{.timer's code and part number, or Federal stock number of tool or test equipment.

B-4. Explanation of Columns in Section IV

a. Reference Code. This column consists of two letters separated by a dash (entered from col (5) of sec. II), The first letter references alpha sequence in column (5) and the second letter references a maintenance function, column 3, A through K.

b. Remarks. This column lists information pertinent to the maintenance function to be performed (as indicated in sec. II).

Section II. MAINTENANCE ALLOCATION CHART

(1) Group No.	(2) Assembly group	(3) Maintenance functions A Inspect	B Test	C Service	D Adjust	E Align	F Calibrate	G Install	H Replace	I Repair	J Overhaul	K Rebuild	(4) Tools and equipment	(5) Remarks
01	ENGINE													
0100	Engine assembly	O	O	O	.				O	O	H	.	. . . . .	A—B
03	FUEL SYSTEM													
0306	Lines, Fittings, Hose assembly, line assembly, fuel; tank, fuel	O		.	.				O			.	. .	.B—H
0309	Fuel Filters	O		O	.				O					
11	REAR AXLE													
1100	Rear Axle Assembly													
	Axle, vehicular	O			.				O	O				
	Bracket, axle	O			.				O					
13	WHEEL AND TRACKS													
1311	Wheel Assembly	.			.				O					
18	BODY, CAB, HOOD, HULL													
1808	Stowage Racks, Boxes, Straps Carrying Case, Cable Reels, Hose Reels, etc.													
	Pouch, tool stowage	O			.				O					
22	BODY CHASSIS OR HULL AND ACCESSORY ITEMS													
2202	Accessory Items:													
	Clamp, connector nozzle; cord assembly; Duct assembly	O			.		. .		O					
60	STEAM BOILERS, WATER HEATERS, HEATING UNITS, BURNERS													
6000	Heater, Air Duct Type	C	I	C	.		.		O	O	H	.	. . . . .	.C—H
6005	Burner Assembly	C		O	.				F	F				
	Fuel level, gage	C			.		. .		O					
6007	Fuel Tank:													
	Bracket tank support	C			.	.			F					
	Fuel level gage, vent line assembly	C			.	. .		. .	O					
	Fuel line assembly and tank support	C			.				O					
	Safety valve orifice, and safety valve	F			.				F					
	Tank mounting strap, fuel pump assembly	C		. .	.	. .		. .	O					
	Tank assembly, fuel	C		C	.	.			O					
	Valve, metering	F		. .	.	.		.	F	F				
6008	Blower Assembly:													
	Fan assembly, air	C		. .	.	.	. .	. .	O	. .	. .	. .	1—H	
	Fan, and blower housing guard	C			.	. .	. .	. .	O	O				
	Wheel, blower	O	. .	. .	.	. .	.	. .	O	O	. .	. .	2—H	
6009	Ventilating System:													
	Arm assembly, damper	F	.	. .	.	. .		. .	F					
	Chamber, air; duct air	F	. .	. .	.	. .	. .	.	F	F				
910	Exhaust System:													
	Adapter, exhaust tube	O			.	. .	.	. .	O					
	Tube assembly, exhaust	O	. .	. .	. .				F	F				
6011	Combustion Chamber:													
	Chamber, combustion	F		. .	. .			. .	F	F				
	Damper, control	F			. .		. .		F					

Section III. SPECIAL TOOL AND SPECIAL TEST EQUIPMENT REQUIREMENTS

Reference code	** Maintenance eVevel	Nomenclature	Tool number
1—H	O	Bolt Extractor FSN 5305-811-2907	
2—H	O	Wrench, Socket Head Screw, Hex Nomenal Long Arm Series, 5/32 in. Hex FSN 5120-198-5413.	

Section IV. REMARKS

Reference code	Remarks
A—B	Includes operation and compression.
B—H	Fuel tank is allocated in group 6007.
C—H	Includes bench test on stand.

INDEX

By Order of the Secretary of the Army:

W.C. WESTMORELAND,
General, United States Army,
Chief of Staff.

Official:

VERNE L. BOWERS,
Major ***General, United States Army,***
The Adjutant General.

Distribution:

TO **be distributed in accordance with DA Form 12-25C (qty rqr Block # 597), operator requirements for Heaters, Space, 250,000 BTU.**

☆U.S. GOVERNMENT PRINTING OFFICE: 1999 - 307-868/32329

RECOMMENDED CHANGES TO EQUIPMENT TECHNICAL PUBLICATIONS

SOMETHING WRONG WITH PUBLICATION

FROM: (PRINT YOUR UNIT'S COMPLETE ADDRESS)

DATE SENT

PUBLICATION NUMBER	PUBLICATION DATE	PUBLICATION TITLE

BE EXACT PIN-POINT WHERE IT IS

PAGE NO.	PARA-GRAPH	FIGURE NO.	TABLE NO.

IN THIS SPACE, TELL WHAT IS WRONG AND WHAT SHOULD BE DONE ABOUT IT.

PRINTED NAME, GRADE OR TITLE AND TELEPHONE NUMBER	SIGN HERE

TEAR ALONG PERFORATED LINE

DA FORM 1 JUL 79 2028-2

PREVIOUS EDITIONS ARE OBSOLETE.

P.S.--IF YOUR OUTFIT WANTS TO KNOW ABOUT YOUR RECOMMENDATION MAKE A CARBON COPY OF THIS AND GIVE IT TO YOUR HEADQUARTERS.

THE METRIC SYSTEM AND EQUIVALENTS

'NEAR MEASURE

. Centimeter = 10 Millimeters = 0.01 Meters = 0.3937 Inches
1 Meter = 100 Centimeters = 1000 Millimeters = 39.37 Inches
1 Kilometer = 1000 Meters = 0.621 Miles

'VEIGHTS

Gram = 0.001 Kilograms = 1000 Milligrams = 0.035 Ounces
1 Kilogram = 1000 Grams = 2.2 lb.
1 Metric Ton = 1000 Kilograms = 1 Megagram = 1.1 Short Tons

LIQUID MEASURE

1 Milliliter = 0.001 Liters = 0.0338 Fluid Ounces
1 Liter = 1000 Milliliters = 33.82 Fluid Ounces

SQUARE MEASURE

1 Sq. Centimeter = 100 Sq. Millimeters = 0.155 Sq. Inches
1 Sq. Meter = 10,000 Sq. Centimeters = 10.76 Sq. Feet
1 Sq. Kilometer = 1,000,000 Sq. Meters = 0.386 Sq. Miles

CUBIC MEASURE

1 Cu. Centimeter = 1000 Cu. Millimeters = 0.06 Cu. Inches
1 Cu. Meter = 1,000,000 Cu. Centimeters = 35.31 Cu. Feet

TEMPERATURE

5/9(°F - 32) = °C
212° Fahrenheit is evuivalent to 100° Celsius
90° Fahrenheit is equivalent to 32.2° Celsius
32° Fahrenheit is equivalent to 0° Celsius
9/5C° + 32 =°F

APPROXIMATE CONVERSION FACTORS

TO CHANGE	TO	MULTIPLY BY
Inches	Centimeters	2.540
Feet	Meters	0.305
Yards	Meters	0.914
Miles	Kilometers	1.609
Square Inches	Square Centimeters	6.451
Square Feet	Square Meters	0.093
Square Yards	Square Meters	0.836
Square Miles	Square Kilometers	2.590
Acres	Square Hectometers	0.405
Cubic Feet	Cubic Meters	0.028
Cubic Yards	Cubic Meters	0.765
Fluid Ounces	Milliliters	29.573
ıts	Liters	0.473
arts	Liters	0.946
allons	Liters	3.785
Ounces	Grams	28.349
Pounds	Kilograms	0.454
Short Tons	Metric Tons	0.907
Pound-Feet	Newton-Meters	1.356
Pounds per Square Inch	Kilopascals	6.895
Miles per Gallon	Kilometers per Liter	0.425
Miles per Hour	Kilometers per Hour	1.609

TO CHANGE	TO	MULTIPLY BY
Centimeters	Inches	0.394
Meters	Feet	3.280
Meters	Yards	1.094
Kilometers	Miles	0.621
Square Centimeters	Square Inches	0.155
Square Meters	Square Feet	10.764
Square Meters	Square Yards	1.196
Square Kilometers	Square Miles	0.386
Square Hectometers	Acres	2.471
Cubic Meters	Cubic Feet	35.315
Cubic Meters	Cubic Yards	1.308
Milliliters	Fluid Ounces	0.034
Liters	Pints	2.113
Liters	Quarts	1.057
'ers	Gallons	0.264
.ms	Ounces	0.035
.ograms	Pounds	2.205
Metric Tons	Short Tons	1.102
Newton-Meters	Pounds-Feet	0.738
Kilopascals	Pounds per Square Inch	0.145
'lometers per Liter	Miles per Gallon	2.354
›meters per Hour	Miles per Hour	0.621

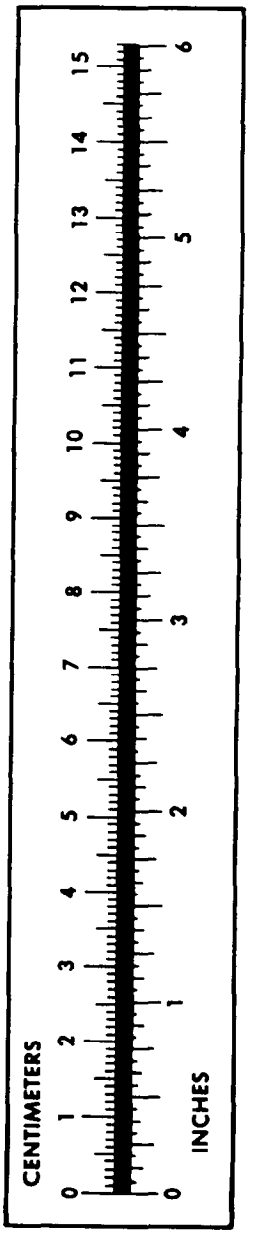

PIN: 028380-001

This fine document...

Was brought to you by me:

Liberated Manuals -- free army and government manuals

Why do I do it? I am tired of sleazy CD-ROM sellers, who take publicly available information, slap “watermarks” and other junk on it, and sell it. Those masters of search engine manipulation make sure that their sites that sell free information, come up first in search engines. They did not create it... They did not even scan it... Why should they get your money? Why are not letting you give those free manuals to your friends?

I am setting this document FREE. This document was made by the US Government and is NOT protected by Copyright. Feel free to share, republish, sell and so on.

I am not asking you for donations, fees or handouts. If you can, please provide a link to liberatedmanuals.com, so that free manuals come up first in search engines:

<A HREF=http://www.liberatedmanuals.com/>Free Military and Government Manuals</A>

- Sincerely
  Igor Chudov
  http://igor.chudov.com/
- Chicago Machinery Movers