*TM 10-4320-344-10

TECHNICAL MANUAL
OPERATOR'S MANUAL

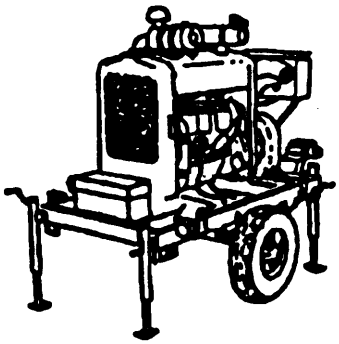

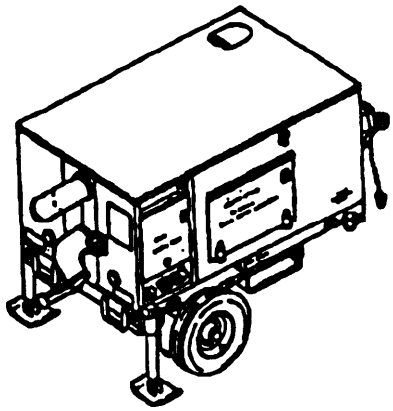

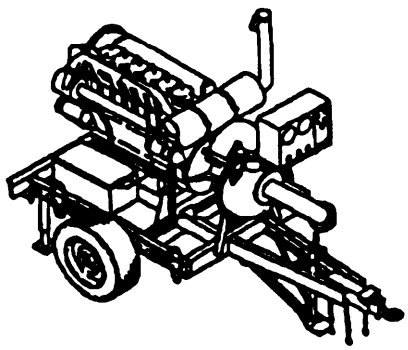

TABLE OF CONTENTS i

EQUIPMENT DESCRIPTION 1-5

OPERATING INSTRUCTIONS 2-1

PREVENTIVE MAINTENANCE CHECKS AND SERVICES 2-15

TROUBLESHOOTING 3-2

MAINTENANCE PROCEDURES 3-5

GLOSSARY GLOSSARY-1

INDEX INDEX-1

PUMPING ASSEMBLY, WATER, 600 GPM, MODEL 609-A (NSN 4320-01-184-7494)
PUMPING ASSEMBLY, WATER, 600 GPM, MODEL 609-C (NSN 4320-01-261-6470)
PUMPING ASSEMBLY, WATER, 600 GPM, MODEL US636HCCD-1 (NSN 4320-01-201-6937)

DISTRIBUTION STATEMENT A. Approved for public release; distribution IS unlimited.

(This manual, together with TM 10-4320-303-13, LO 10-4320-344-12 and TM 10-4320-344-24 supersedes TM 5-4320-303–10 dated 14 April 1986 and TM 5-4320-303-24, dated 13 June 1986)

HEADQUARTERS, DEPARTMENT OF THE ARMY

28 FEBRUARY 1994

WARNING

Fumes from battery acid may cause explosion, which could result in personal injury or death. Keep sparks and open flame away from battery.

Battery electrolyte contains sulfuric acid, which can cause severe burns. Handle batteries with care. If electrolyte should contact skin or clothing, rinse immediately with clean water.

To prevent fire or explosion and possible personal injury or death, keep open flame and sparks away from fuel tank.

Hot refueling of pumping assembly while it is operating poses a safety hazard and should not be attempted. Hot engine surfaces and sparks produced from the engine control circuitry are possible sources of ignition. Severe personal injury or death and/or damage to the equipment may result.

If pump fails to take suction, pump can overheat. Overheated pump can cause severe burns.

Hot engine surfaces can cause severe burns. Allow engine to cool before removing engine cowling.

Remove all jewelry prior to performing any preventive maintenance checks and services or maintenance procedures.

FOR FIRST AID, SEE FM 21-11.

TECHNICAL MANUAL

NO. 10-4320-344-10

HEADQUARTERS
DEPARTMENT OF THE ARMY
WASHINGTON D. C., 28 February 1994

OPERATOR'S MANUAL

FOR

PUMPING ASSEMBLY, MATER, 600 6PM, MODEL 609-A (NSN 4320-01-184-7494) PIMPING ASSEMBLY, WATER, 600 GPM, MODEL 609-C (NSN 4320-01-261-6470) PUMPING ASSEMBLY, WATER, 600 GPM, MODEL US636HCCD-1 (NSN 4320-01-201-6937)

REPORTING ERRORS AND RECOMMENDING IMPROVEMENTS

You can help improve this manual. If you find any mistakes, or if you know of a way to improve the procedures, please let us know. Mail your letter, DA Form 2028 (Recommended Changes to Publications and Blank Forms), or DA Form 2028-2 located in the back of this manual direct to: Commander, U.S. Army Troop and Aviation Command, ATTN: AMSAT-I-MP, 4300 Goodfellow Boulevard, St. Louis, MO 63120-1798. A reply will be furnished to you.

DISTRIBUTION STATEMENT A. Approved for public release; distribution is unlimited.

TABLE OF CONTENTS

		Page
	HOW TO USE THIS MANUAL	vi
CHAPTER 1	INTRODUCTION	1-1
Section I	General Information	1-1
Section II	Equipment Description	1-5
Section III	Principles of Operation	1-14
CHAPTER 2	OPERATING INSTRUCTIONS	2-1
Section I	Description and Use of Operator's Controls and Indicators	2-2
Section II	Preventive Maintenance Checks and Services (PMCS)	2-15
Section III	Operation Under Usual Conditions	2-83
Section IV	Operation Under Unusual Conditions	2-119
CHAPTER 3	OPERATOR MAINTENANCE INSTRUCTIONS	3-1
Section I	Lubrication Instructions	3-2

*This manual,together withTM 10-4320-303-13, LO 10-4320-344-12 and TM 10-4320-344-24 supersedes TM 5-4320-303-10 dated 14 April 1986 and TM 5-4320-303-24, dated 13 June 1986

TABLE OF CONTENTS - CONTINUED

		Page
Section II	Troubleshooting	3-2
Section III	Maintenance procedures	3-5
APPENDIX A	REFERENCES	A-1
APPENDIX B	COMPONENTS OF END ITEM (COEI) AND BASIC ISSUE ITEMS (BII) LISTS	B-1
Section I	Introduction	B-1
Section II	Components of End Item	B-2
Section III	Basic Issue Items	B-7
APPENDIX C	ADDITIONAL AUTHORIZATION LIST	C-1
APPENDIX D	EXPENDABLE AND DURABLE ITEMS LIST	D-1
Section I	Introduction	D-1
Section II	Expendable and Durable Items List	D-1
GLOSSARY		Glossary 1
SECTION I	Abbreviations	Glossary 1
SECTION II	Definition of Unusual Terms	Glossary 2
INDEX		Index 1

LIST OF ILLUSTRATIONS

Figure	Title	Page
1-1	Features of 600 GPM Pumping Assembly Model 609-A	1-2
1-2	Features of 600 GPM Pumping Assembly Model 609-C	1-3
1-3	Features of 600 GPM Pumping Assembly Model US636HCCD-1	1-4
1-4	Location of Major Components, Model 609-A	1-7
1-5	Location of Major Components, Model 609-C	1-9
1-6	Location of Major Components, Model US636HCCD-1	1-11
2-1	Model 609-A Control Panel	2-2
2-2	Model 609-A Engine and Trailer Controls and Indicators	2-4
2-3	Model 609-C Control Panel	2-5
2-4	Model 609-c Engine Controls and Indicators	2-7
2-5	Model 609-C Fuel System Controls and Indicators	2-8
2-6	Model 609-c Air System and Priming Tube Controls and Indicators	2-10
2-7	Model 609-c Trailer Controls	2-11
2-8	Model US636HCCD-1 Control Panel	2-12
2-9	Model US636HCCD-1 Engine and Trailer Controls and Indicators	2-14
2-10	Pumping Assembly Model 609-A PMCS Routing Diagram	2-17
2-11	Pumping Assembly Model 609-C PMCS Routing Diagram	2-39
2-12	Pumping Assembly US636HCCD-1 PMCS Routing Diagram	2-63
2-13	Disconnecting Pumping Assembly From Towing Vehicle	2-83
2-14	Double-posted Front Jack	2-84
2-15	Front Tripod	2-85
2-16	Rear Jacks	2-85
2-17	Priming Pumping Assemblies	2-87
2-18	Pump Discharge Elbow	2-88
2-19	Model 609-A Controls Used for Manual Operation	2-89
2-20	Unit 609-A Controls Used for Electric Manual and Electric Automatic Operation	2-92
2-21	Model 609-A Controls for Electric Automatic Operation	2-94
2-22	Unit 609-c Connections for External Fuel Supply	2-96
2-23	Model 609-C Setup for Startup	2-97
2-24	Model 609-C Controls Used for Manual Operations	2-98
2-25	Model 609-C Controls Used for Automatic Operation	2-101
2-26	Shutdown Requirements for Model 609-C	2-104
2-27	Model US636HCCD-1 Controls Used for Electric Manual Operation	2-105
2-28	Model US636HCCD-1 Controls Used for Electric Automatic Operation	2-107
2-29	Model 609-A Engine Operaing Instructions and Caution Data Plates	2-108
2-30	Operating Range Curves for Model 609-C	2-109
2-31	Operating Instructions for Model 609-C	2-110
2-32	Warning, Caution, and Data Plates for Model 609-C	2-111
2-33	Caution Plate and Stenciling on Model US636HCCD-1	2-112
2-34	Engine Operating Instructions, Data Plate, and Stenciling on Model US636HCCD-1	2-113
2-35	Pumping Assemblies Drain Plug Locations	2-114
2-36	Secure Rear Jacks for Movement	2-115
2-37	Connect Pumping Assembly, with Double-posted Front Jack, to Towing Vehicle	2-116
2-38	Connecting Pumping Assembly, with Front Tripod Jack, to Towing Vehicle	2-118
3-1	Park Brake Lever and Cable	3-5

LIST OF TABLES

Number	Title	Page
1-1	Nomenclature Cross-Reference List	1-5
1-2	Description of Major Components, Model 609-A	1-8
1-3	Description of Major Components, Model 609-C	1-10
1-4	Description of Major Components, Model US636HCCD-1	1-12
1-5	Differences Between Models	1-13
2-1	Description of Model 609-A Control Panel	2-2
2-2	Description of Model 609-A Engine and Trailer Controls and Indicators	2-4
2-3	Description of Model 609-C Control Panel	2-6
2-4	Description of Model 609-C Engine Controls and Indicators	2-7
2-5	Description of Model 609-C Fuel System Controls and Indicators	2-9
2-6	Description of Model 609-C Air System and Priming Tube Controls and Indicators	2-10
2-7	Description of Model 609-C Trailer Controls	2-12
2-8	Description of Model US636HCCD-1 Control Panel	2-13
2-9	Description of Model US636HCCD-1 Engine and Trailer Controls and Indicators	2-15
2-10	Preventive Maintenance Checks and Services for Pumping Assembly Model 609-A	2-19
2-11	Preventive Maintenance Checks and Services for Pumping Assembly Model 609-C	2-41
2-12	Preventive Maintenance Checks and Services for Pumping Assembly Model US636HCCD-1	2-65
3-1	Troubleshooting Table	3-2

HOW TO USE THIS MANUAL

DESCRIPTION OF THE MANUAL.

Manual Organization. This manual is designed to help you operate and maintain the 600 Gallons Per Minute (GPM) pumping assemblies. Read the warning pages located in the front of the manual before operating or doing maintenance on the equipment.

WARNING and CAUTION statements have been strategically placed throughout this manual prior to operating or maintenance procedures, practices, or conditions considered essential to the protection of personnel (WARNING) or equipment and property (CAUTION). A WARNING or CAUTION will apply each time the related step is repeated. Prior to starting any task, the WARNINGS or CAUTIONS included in the text for that task will be reviewed and understood.

The front cover of this manual provides an index that lists subjects that are commonly used. Each item indexed on the front cover has a black box at the edge of the cover. There is a corresponding black box on the first text page for each subject listed on the cover index.

The Table of Contents is provided for quick reference to the subjects covered by each chapter, section, and appendix. Chapters 2 and 3 also have a subject index that lists the major paragraphs in alphabetical order under the section title.

The major elements of this manual are its chapters and appendixes. The chapters and appendixes can be divided into one or more sections. This manual has three chapters and four appendixes.

A glossary follows the last appendix. The glossary lists and explains the special or unique abbreviations and the unusual terms used in this manual.

An alphabetical index follows the glossary. That index is for use in locating specific items of information.

Locating a Malfunction. Finding the cause of a malfunction, troubleshooting, is the first step in fixing the equipment and returning it to operation. Follow these simple steps to determine the root of the problem:

a. Turn to the Table of Contents in the manual.

b. Locate "Troubleshooting" under the chapter that covers your level of maintenance. Turn to the page indicated.

Preparing for a Task. Be sure that you understand the entire maintenance procedure before beginning any maintenance task. Make sure that all parts, materials, and tools are handy. Read all steps before beginning. Prepare to do the task as follows:

a. Carefully read the entire task before starting. It tells you what you will need and what you have to know to start the task.

b. Obtain all listed equipment, tools, and parts.

How to do the Task. Read the entire task. Be sure that you understand the entire procedure. Perform the task. Be sure to obey all *WARNINGS* and *CAUTIONS*.

CHAPTER 1

INTRODUCTION

SECTION I. GENERAL INFORMATION

1.1 SCOPE.

This operator's manual is for your use in operating and maintaining the 600 gallons per minute (GPM) pumping assembles Model 609-A (NSN 4320-01-184-7494) , Model 609-C (NSN 4320-01-261-6470), and Model US636HCCD-1 (NSN 4320-01-201-6937). The pumping assemblies are illustrated in Figures 1-1, 1-2, and 1-3. This manual covers general information needed by the operator, descriptions of the pumping assemblies, functional descriptions of how the pumping assemblies work, operating instructions, and operator maintenance instructions for the equipment. The pumping assemblies are used in the Tactical Water Distribution Equipment System (TWDS) Set 10-mile Segment. In the TWDS, the pumping assemblies are used as the lead pumping station and up to a maximum of five boost pumping stations. The pumping assemblies may also be used singly or in combinations in other applications requiring water pumping capability of up to 600 GPM at Up to 350 feet total discharge head (TDH) .

1.2 MAINTENANCE FORMS AND PROCEDURES.

Department of the Army forms and procedures used for equipment maintenance will be those prescribed by DA PAM 738-750 (The Army Maintenance Management System (T-S)) (Maintenance Management UPDATE).

1.3 CORROSION PREVENTION AND CONTROL (CPC).

Corrosion prevention and control (CPC) of Army materiel is a continuing concern. It is important that any corrosion problems with this item be reported so that the problem can be corrected and improvements can be made to prevent the problem in future items.

While corrosion is typically associated with rusting of metals, it can also include deterioration of other materials, such as rubber and plastic. Unusual cracking, softening, swelling, or breaking of these materials may be a corrosion problem. If a corrosion problem is identified, it can be reported using Standard Form 368, Product Quality Deficiency Report. Use of key words such as "corrosion, " "rust," "deterioration," or "cracking" will ensure that the information is identified as a corrosion problem. The form should be submitted to the address specified in DA PAM 738-750.

1.4 DESTRUCTION OF ARMY MATERIEL TO PREVENT ENEMY USE.

Destruction of Army materiel to prevent enemy use shall be in accordance with TM 750-244-3.

1.5 EQUIPMENT IMPROVEMENT RECOMMENDATION (EIR).

If your pumping assembly needs improvement, let us know. Send us an EIR. You, the user, are the only one who can tell us what you don't like about your equipment. Let us know why you don't like the design or performance. Put it on SF 368 (Product Quality Deficiency Report). Mail it to us at Commander, U.S. Army Aviation and Troop Command, ATTN: AMSAT-I-MDO, 4300 Goodfellow Boulevard, St. Louis, MO 63120-1798. We will send you a reply.

1.6 WARRANTY INFORMATION.

There is no warranty for the 600 GPM pumping assemblies.

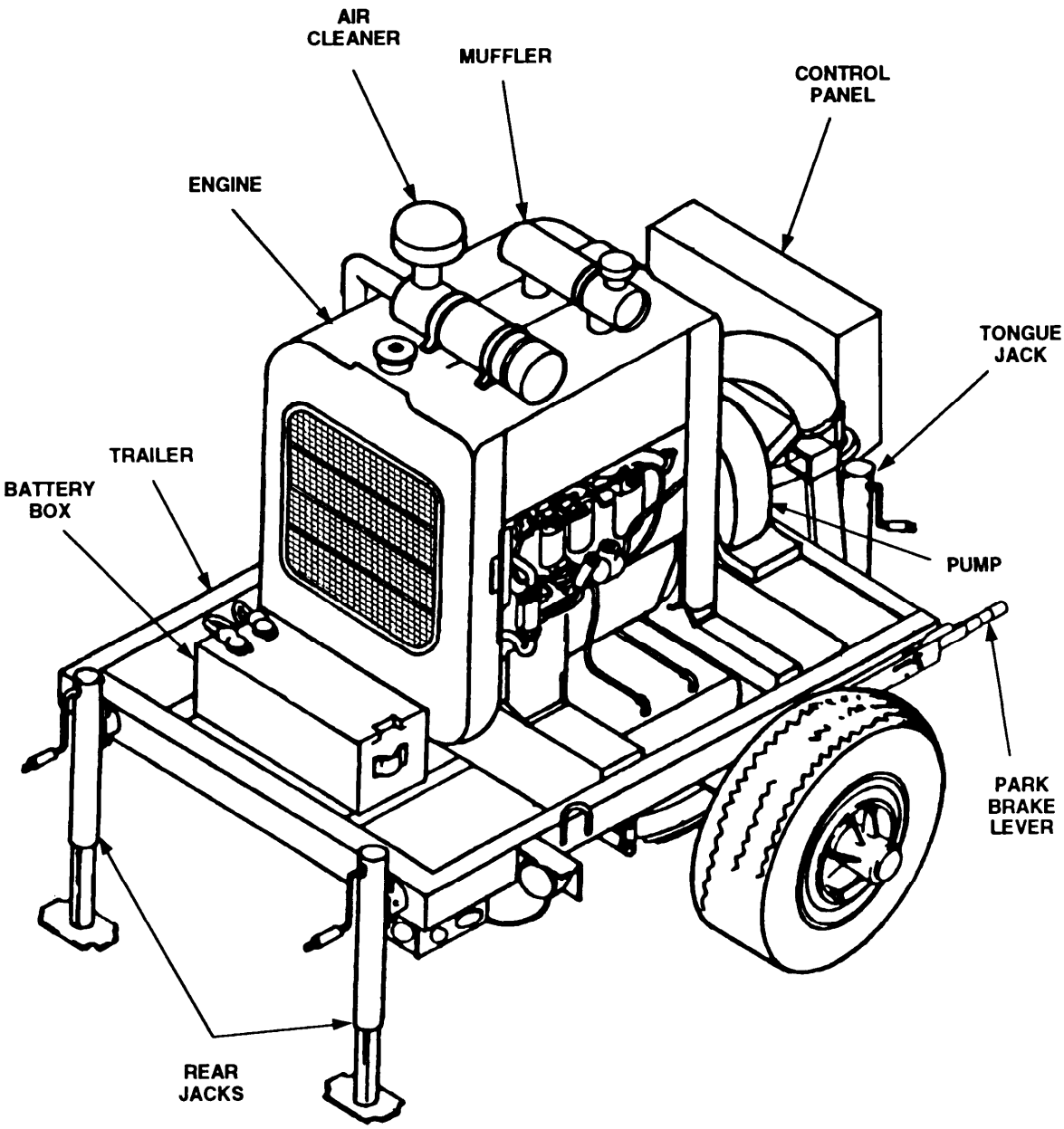

Figure 1-1. Features of 600 GPM Pumping Assemubly Model 609-A.

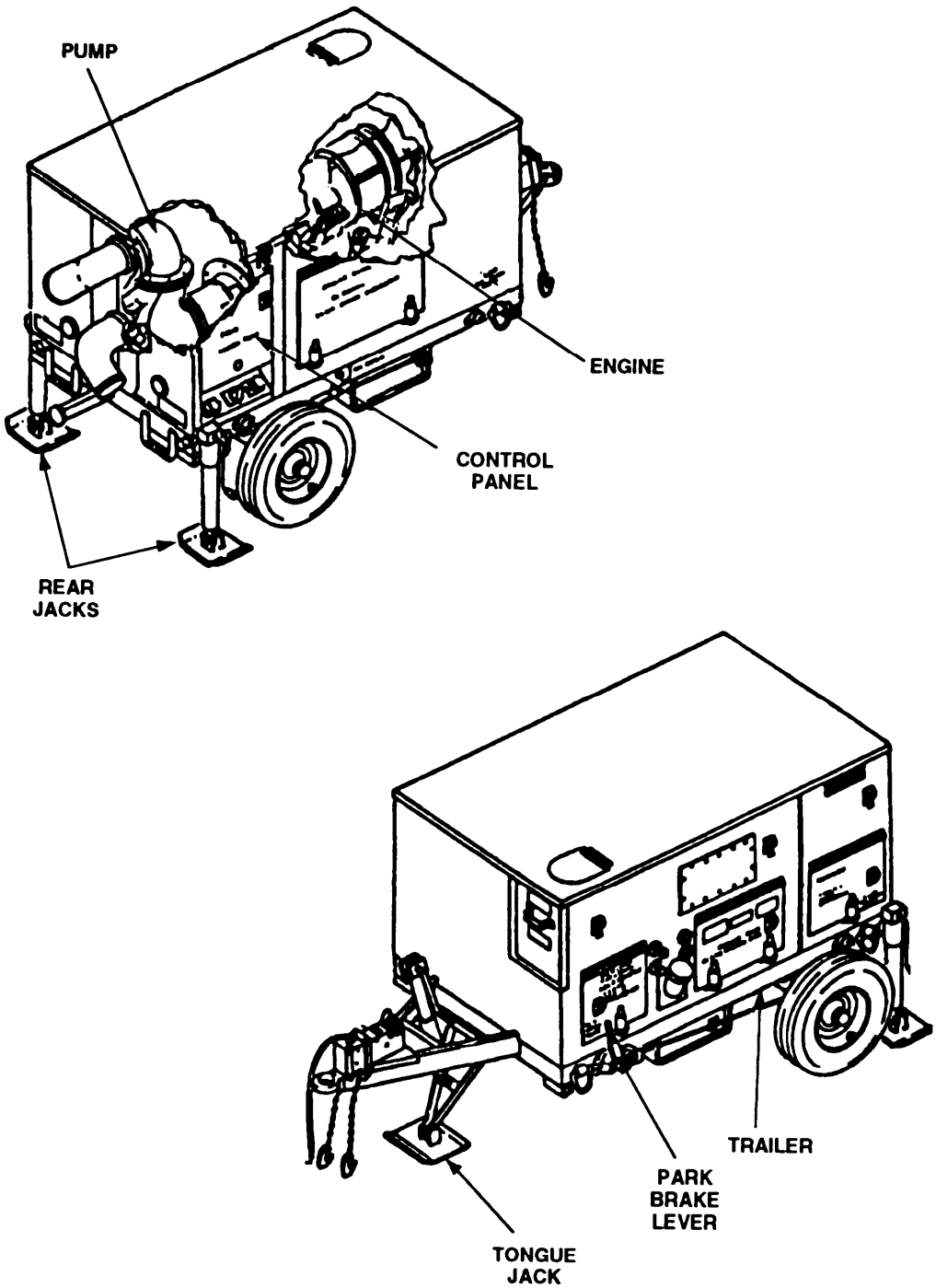

Figure 1-2. Features of 600 GPM Pumping Assembly Model 609-C.

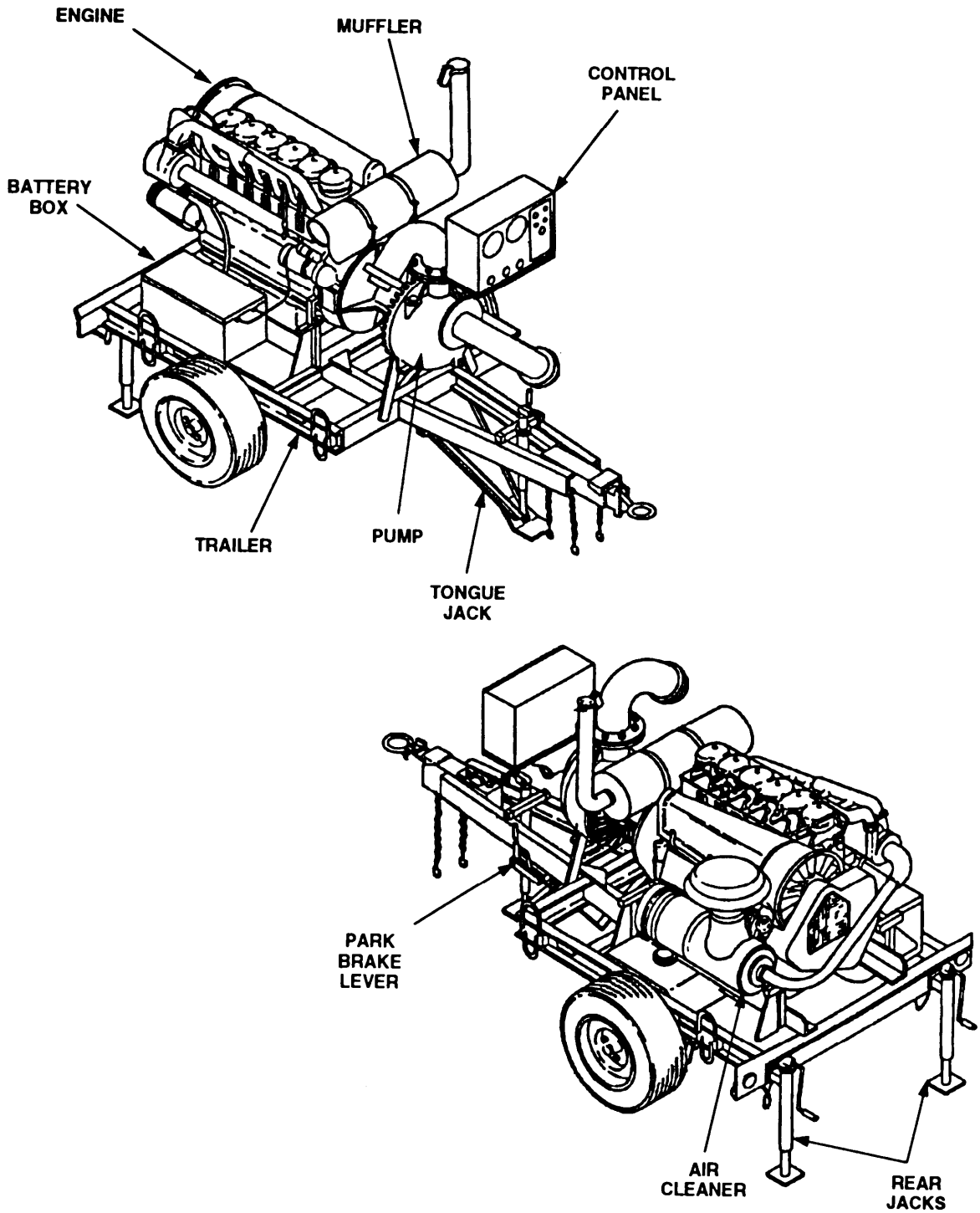

Figure 1-3. Features of 600 GPM Pumping Assembly Model US636HCCD-1.

1.7 NOMENCLATURE CROSS-REFERENCE LIST.

Table 1-1 provides a cross-reference listing of the common names to official nomenclature.

Table 1-1. Nomenclature Cross-reference List.

Common Name	Official Nomenclature
Pumping Assembly or Pumping Assemblies	Pumping Assembly, Water, 600 GPM, Model 609-A; Pumping Assembly, Water, 600 GPM, Model 609-C; and Pumping Assembly, Water, 600 GPM, Model US636HCCD-1

1.8 LIST OF ABBREVIATIONS/ACRONYMS.

All abbreviations, acronyms, signs, and symbols used in this technical manual are listed in the glossary located in the back of the manual.

1.9 GLOSSARY.

All terms used in this manual that are not defined in the text or listed in the Army Dictionary (AR 310-25) are defined in the glossary located in the back of the manual.

SECTION II. EQUIPMENT DESCRIPTION

1.10 EQUIPMENT CHARACTERISTICS, CAPABILITIES, AND FEATURES.

1.10.1 Pumping AssemblY, Model 609-A.

1.10.1.1 Characteristics. The Model 609-A Pumping Assembly is a diesel engine driven centrifugal pump mounted on a two wheel trailer. The trailer has two tail lights that are controlled by the towing vehicle. The trailer is equipped with an inertia-actuated hydraulic brake system. It also has a manually operated park brake for each wheel. Control of each park brake is independent of the other. The trailer has two jacks at the rear and a tongue jack at the front. The jacks prevent the trailer from tipping when disconnected from the towing vehicle.

1.10.1.2 Capabilities and Features.

- Output volume: 600 gpm at 350 ft tdh.
- Can be operated in manual or electric manual mode.
- Can be used as source pump or boost pump.

1.10.2 Pumping Assembly, Model 609-C.

1.10.2.1 Characteristics. The Model 609-C Pumping Assembly is a diesel engine driven centrifugal pump mounted on a two wheel trailer. The trailer has clearance lights and two tail lights that are controlled by the towing vehicle. The trailer is equipped with an inertia-actuated hydraulic brake system. It also has a manually operated park brakes. A single lever is used to control the park brakes on both wheels. The trailer has two jacks at the rear and a tongue jack at the front. The jacks prevent the trailer from tipping when disconnected from the towing vehicle.

1.10.2.2 Capabilities and Features.

- Output volume: 600 gpm at 350 ft tdh.
- Can be operated in manual or automatic mode.
- Can be used as source pump or boost pump.

1.10.3 Pumping Assembly, Model US636HCCD-1.

1.10.3.1 Characteristics. The model US636HCCD-1 Pumping Assembly is a diesel engine driven centrifugal pump mounted on a two wheel trailer. The trailer has two tail lights that are controlled by the towing vehicle. The trailer is equipped with an inertia-actuated hydraulic brake system. It also has a manually operated park brake for each wheel. A single lever is used to control the park brakes on both wheels. The trailer has two jacks at the rear and a tongue jack at the front. The jacks prevent the trailer from tipping when disconnected from the towing vehicle.

1.10.3.2 Capabilities and Features.

- Output volume: 600 gpm at 350 ft tdh.
- Can be operated in electric manual or electric automatic mode.
- Can be used as source pump or boost pump.

1.11 LOCATION AND DESCRIPTION OF MAJOR COMPONENTS.

Figures 1-4, 1-5, and 1-6 illustrate the major components of the pumping assemblies. Tables 1-2, 1-3, and 1-4 list the major components and provide a description of each major component.

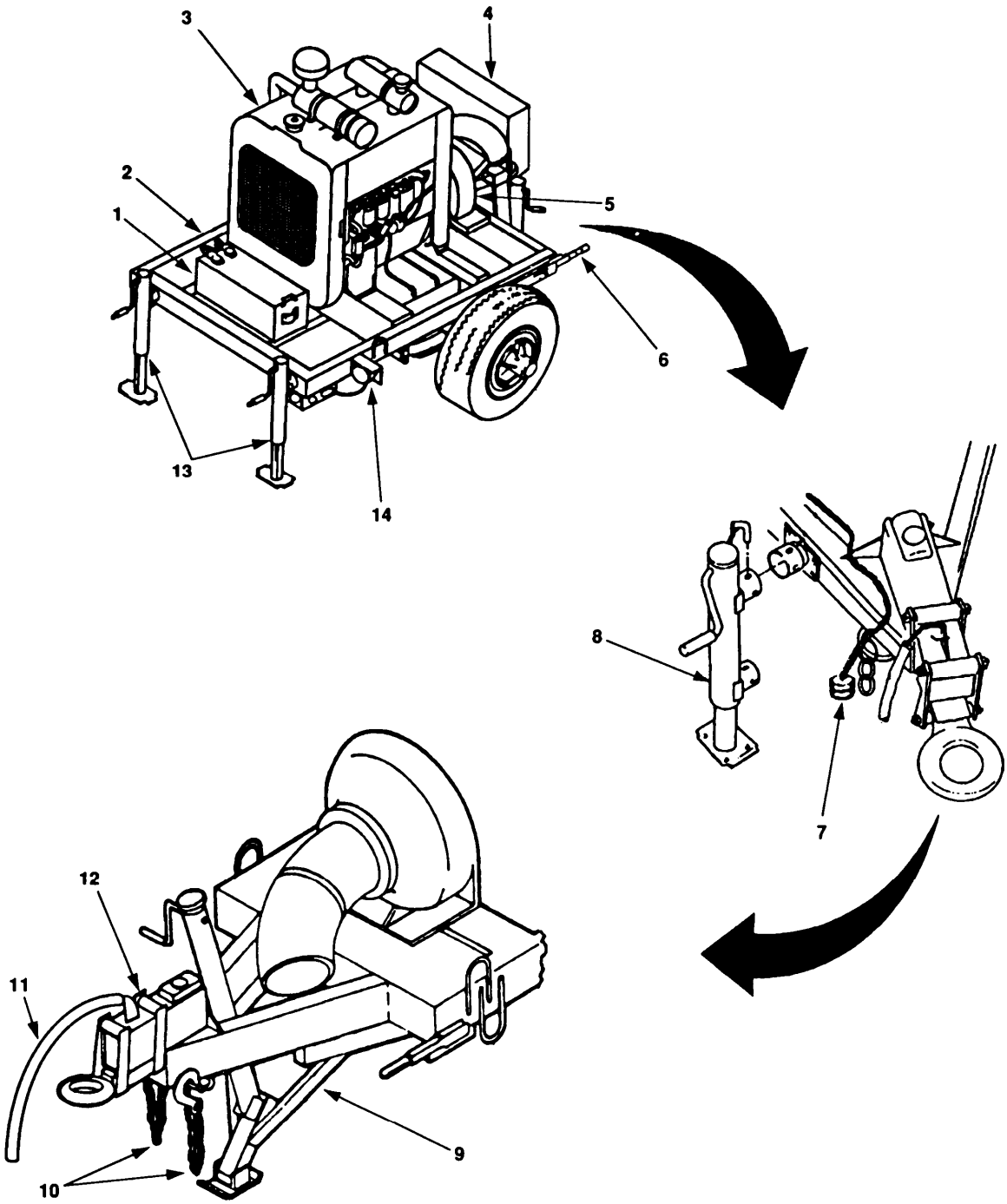

Figure 1-4. Location of Major Components, Model 609-A.

Table 1-2. Description of Major Components, Model 609-A.

Item No.	Item Name	Description and Purpose
1	BATTERY BOX	Provides weatherproof protection for battery.
2	TRAILER ASSEMBLY	Supports and transports pump unit.
3	DIESEL ENGINE	Drives pump. Engine operating mode is set on control panel. Can be operated in manual, electric manual, or electric automatic mode.
4	CONTROL PANEL	Controls pump and engine operations.
5	CENTRIFUGAL PUMP	Rated at 600 GPM at 350 ft tdh. Draws water from source or upline boost pump and discharges to outlet or feeds downline boost pump. Fitted with suction and discharge elbows suitable for connection to 6 inch grooved pipe couplings.
6	PARK BRAKE LEVER	One on each side of trailer. Used to lock wheels in place when trailer is not in transit.
7	INTERVEHICULAR CABLE ASSEMBLY	Used to connect trailer electrical system to towing vehicle electrical system.
8	TONGUE JACK	Used on some model 609-A pumping assemblies. Supports front of trailer when disconnected from towing vehicle.
9	TONGUE JACK (TRIPOD ASSEMBLY)	Used on some model 609-A pumping assemblies. Supports front of trailer when disconnected from towing vehicle.
10	SAFETY CHAINS	Hook to towing vehicle. Prevent trailer from running away if accidentally uncoupled from towing vehicle.
11	BREAKAWAY CHAIN	Applies hydraulic brakes if trailer accidentally uncouples from towing vehicle.
12	INERTIAL BRAKING SYSTEM	Activated by motion of towing vehicle. Releases hydraulic brakes when towing vehicle moves forward. Applies hydraulic brakes when towing vehicle slows or stops.
13	REAR JACKS	Used to level pumping assembly and prevent trailer from tipping when disconnected from towing vehicle.
14	RUNNING/BRAKE LIGHTS	One on each side of trailer. Provide visual indication while trailer is being towed.

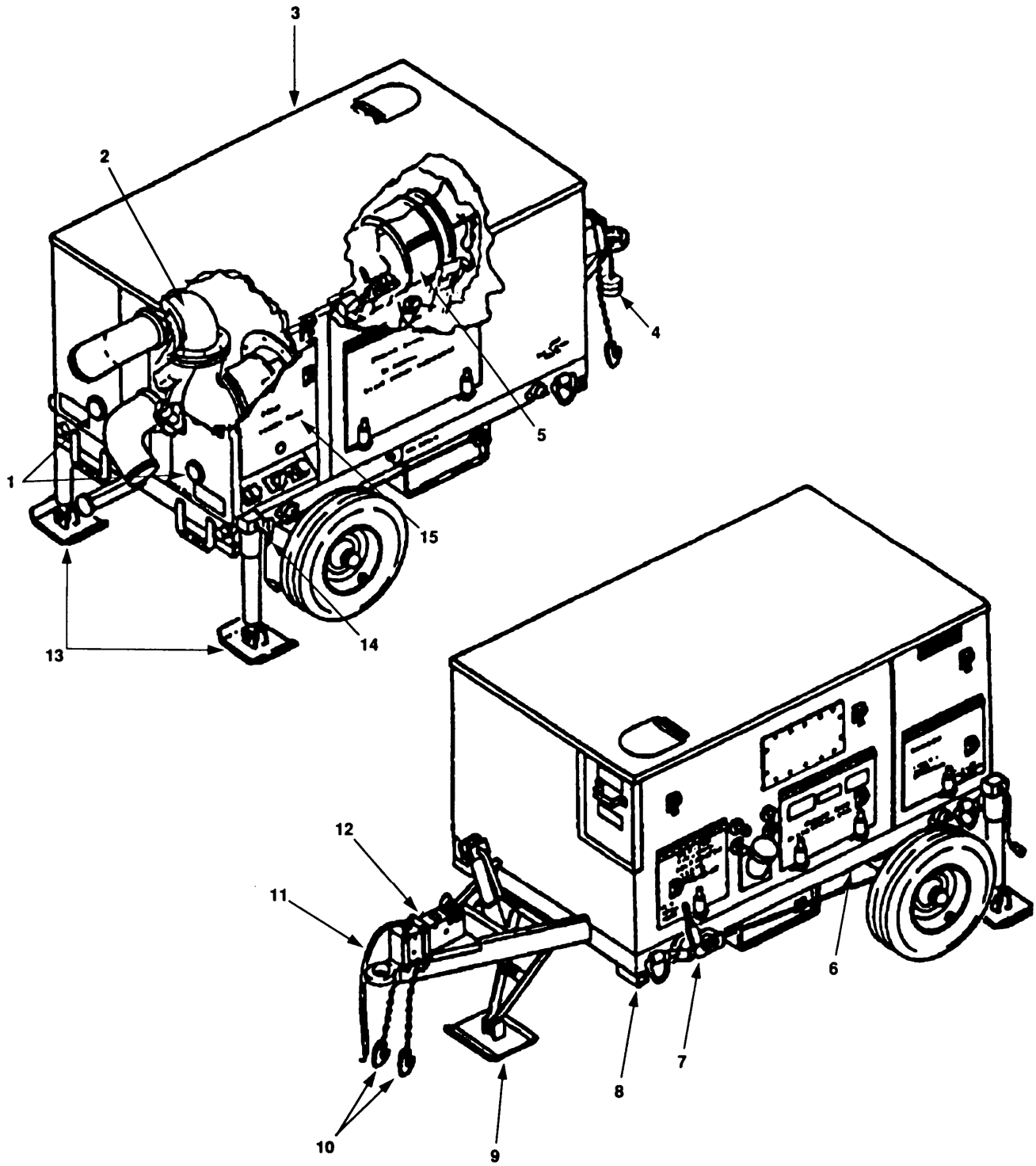

Figure 1-5. Location of Major Components, Model 609-C.

Table 1-3. Description of Major Components, Model 609-C.

Item No.	Item Name	Description and Purpose
1	RUNNING/BRAKE LIGHTS	Provide visual aid while trailer is being towed.
2	CENTRIFUGAL PUMP	Rated at 600 GPM at 350 ft tdh. Draws water from source or upline boost pump and discharges to outlet or feeds downline boost pump. Fitted with suction and discharge elbows suitable for connection to 6 inch grooved pipe couplings.
3	SOUND ENCLOSURE	Reduces sound of operating pumping assembly and provides weather protection for engine and pumping assembly.
4	INTERVEHICULAR CABLE ASSEMBLY	Used to connect trailer electrical system to towing vehicle electrical system.
5	DIESEL ENGINE	Drives pump. Engine operating mode is set on control panel. Can be operated in manual or automatic mode.
6	TRAILER ASSEMBLY	Supports and transports pump unit.
7	PARK BRAKE LEVER	Used to lock wheels in place when trailer is not in transit.
8	LEFT SIDE CLEARANCE LIGHTS	One near front corner of trailer and one near rear corner. Provide visual indication while trailer is being towed.
9	TONGUE JACK (TRIPOD ASSEMBLY)	Supports front of trailer when disconnected from towing vehicle.
10	SAFETY CHAINS	Hook to towing vehicle. Prevent trailer from running away if accidentally uncoupled from towing vehicle.
11	BREAKAWAY CHAIN	Applies hydraulic brakes if trailer accidentally recouples from towing vehicle.
12	INERTIAL BRAKING SYSTEM	Activated by motion of towing vehicle. Releases hydraulic brakes when towing vehicle moves forward. Applies hydraulic brakes when towing vehicle slows or stops.
13	REAR JACKS	Used to level pumping assembly when disconnected from towing vehicle.
14	RIGHT SIDE CLEARANCE LIGHTS	One near rear corner of trailer and one near front corner. Provide visual indication while trailer is being towed.
15	CONTROL PANEL	Controls pump and engine operations.

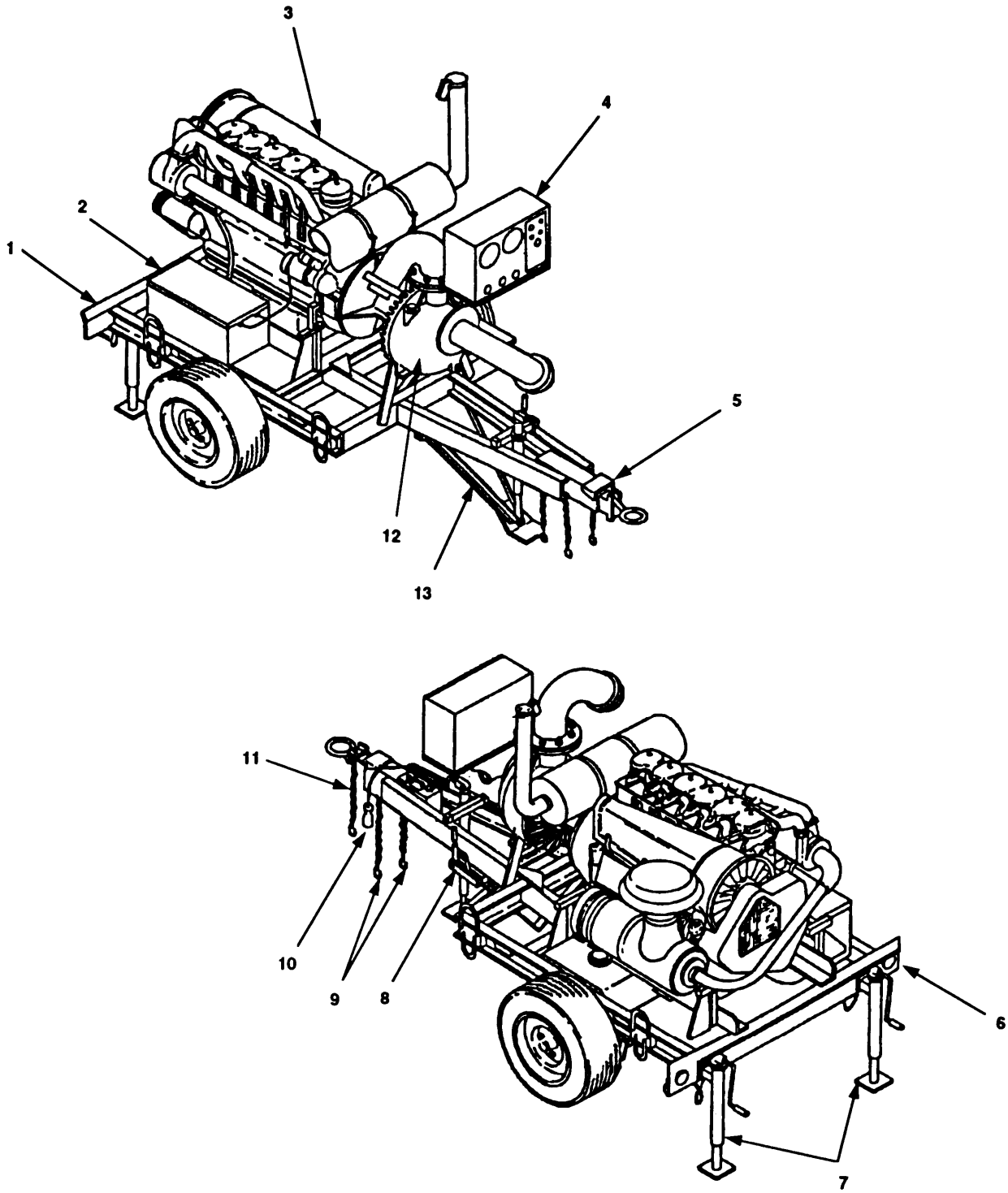

Figure 1-6 Location of Major Components, Model US636HCCD-1.

Table 1-4. Description of Major Components, Model US636HCCD-1.

Item No.	Item Name	Description and Purpose
1	TRAILER ASSEMBLY	Supports and transports pump unit.
2	BATTERY BOX	Provides weatherproof protection for battery.
3	DIESEL ENGINE	Drives pump. Engine operating mode is set on control panel. Can be operated in electric manual or electric automatic mode.
4	CONTROL PANEL	Controls pump and engine operations.
5	INERTIAL BRAKING SYSTEM	Activated by motion of towing vehicle. Releases hydraulic brakes when towing vehicle moves forward. Applies hydraulic brakes when towing vehicle slows or stops.
6	RUNNING/BRAKE LIGHTS	One near each rear corner of trailer. Provide visual aid while trailer is being towed.
7	REAR JACKS	Used to level pumping assembly and prevent trailer from tipping when disconnected from towing vehicle.
8	PARK BRAKE LEVER	Used to lock wheels in place when trailer is not in transit.
9	SAFETY CHAINS	Hook to towing vehicle. Prevent trailer from running away if accidentally uncoupled from towing vehicle.
10	INTERVEHICULAR CABLE ASSEMBLY	Used to connect trailer electrical system with towing vehicle electrical system.
11	BREAKAWAY CHAIN	Applies hydraulic brakes if trailer accidentally recouples from towing vehicle.
12	CENTRIFUGAL PUMP	Rated at 600 GPM at 350 ft tdh. Draws water from source or upline boost pump and discharges to outlet or feeds downline boost pump. Fitted with suction and discharge elbows suitable for connection to 6 inch grooved pipe couplings.
13	TONGUE JACK (TRIPOD ASSEMBLY)	Supports front of trailer when disconnected from towing vehicle.

1.12 DIFFERENCES BETWEEN MODELS.

Differences between the pumping assemblies are identified in Table 1-5. An X or a number (quantity) under the applicable column heading indicates that the characteristic applies to that item.

Table 1-5. Differences Between Models.

Equipment Characteristics	Model 609-A	Model 609-C	Model US636HCCD-1
Air cooled engine		X	X
Water cooled engine	X		
Engine, pump, and control panel enclosed		X	
Park brake control for each wheel	X		
Single lever controls park brakes for both wheels		X	X
Side clearance lights		X	
Fuel tank capacity, gallons	12	30	12

1.13 EQUIPMENT DATA.

1.13.1 Pumping Assembly. Model 609-A.

Weight (dry)	3,052 lb (1,384 kg)
Length	139 in. (353 cm)
Width	70 in. (178 cm)
Height	90 in. (229 cm)

Pump

Type	Self-priming, centrifugal, direct-coupled to diesel engine
Output volume	600 gpm at 350 ft tdh
Designed working pressure	150 ± 5 psi (1,034 ± 34 kPa)
Designed suction pressure	-30 to 200 psi (138 to 1,034 kPa)
Suction and discharge size	6 in. (15 cm)

Engine

Type	4-stroke, 6-cylinder, liquid-cooled, turbocharged diesel
Bore	4 in. (10 cm)
Stroke	4.5 in. (11 cm)
Piston displacement	339 cu in. (5,555 cu cm)
Compression ratio	16:1
Weight	1,050 lb (476 kg)
Power output	120 hp at 2,400 rpm
Speed (maximum)	2,500 rpm
Idle speed (minimum)	1,000 rpm
Fuel	diesel
Lubrication	forced lubrication
Valve clearance (cold)	0.015 in. (0.381 mm)
Crankcase capacity	6 qt (5.7 L)
Fuel tank capacity	12 gal (45.42 L)
Radiator capacity	7 gal (26.50 L)

1.13.2 Pumping Assenbly, Model 609-C.

Weight (dry)	4,600 lb (2,088 kg)
Length	158.19 in. (402 cm)
Width	84 in. (214 cm)
Height	72 in. (183 cm)

Pump

Type	Self-priming, centrifugal, direct-coupled to diesel engine
Output volume	600 gpm at 350 ft tdh
Designed working pressure	150 ± 5 psi (1,034 ± 34 kPa
Designed suction pressure	-30 to 200 psi (138 to 1,034 kPa)
Suction and discharge size	6 in. (15 cm)

Engine

Type	4-stroke, 6-cylinder, air-cooled, altitude compensated, turbocharged diesel
Bore	100 mm (3.937 in.)
Stroke	120 mm (4.724 in.)
Piston displacement	5,655 cu cm (345 cu in.)
Compression ratio	17:1
Weight	440 kg (970 lb)
Power output (maximum)	109 hp (80 kW) at 2,400 rpm
Speed (maximum)	3,000 rpm
Idle speed (minimum)	650 rpm
Fuel	diesel or JP-4
Lubrication	forced lubrication
Valve clearance (cold)	0.15 mm (0.006 in.)
Crankcase capacity	11.82 L (12.5 qt)
Fuel tank capacity	113.55 L (30 gal)

1.13.3 Pumping Assembly, Model US636HCCD-1.

Weight (dry)	2,400 lb (1,090 kg)
Length	135 in. (343 cm)
Width	70 in. (178 cm)
Height	69 in. (174 cm)

Pump

Type	Self-priming, centrifugal, direct-coupled to diesel engine
Output volume	600 gpm at 350 ft tdh
Designed working pressure	150 ± 5 psi (1,034± 34 kPa)
Designed suction pressure	-30 to 200 psi (138 to 1,034 kPa)
Suction and discharge size	6 in. (15 cm)

Engine

Type	4-stroke, 6-cylinder, air-cooled, turbocharged diesel
Bore	102 mm (4.015 in.)
Stroke	125 mm (4.922 in.)
Piston displacement (entire) (inch)	6,128 cu cm (374 cu in.)
Compression ratio	15.5:1
Weight	515 kg (1,133 lb)
Power output (maximum)	160 hp (118 kW) at 2,500-2,800 rpm
Speed (maximum)	2,500 rpm
Idle speed (minimum)	650 rpm
Fuel	diesel or JP-4
Lubrication	forced lubrication
Valve clearance (cold)	0.15 mm (0.006 in.)
Crankcase capacity	15.136 L (16 qt)
Fuel tank capacity	45.42 L (12 gal)

SECTION III. PRINCIPLES OF OPERATION

1.14 FUNCTIONAL DESCRIPTION

The pumping assembly has a centrifugal pump that is direct-connected to the diesel engine by means of a flexible coupling. The pump speed (revolutions per minute (rpm)) is determined by the engine speed. When the pump is primed (filled with water), pump rotation creates centrifugal force that causes water to flow outward to the discharge outlet. The outward flow of water causes suction so that water is drawn into the pump through the suction inlet. The volume of water flow and the

discharge pressure are related to the pump speed. Decreasing the engine speed, and thus the pump speed, will decrease the water discharge volume and pressure. If operating at less than maximum volume and pressure, increasing the engine speed will increase the pump output. The pumping assembly has controls that sense the suction and discharge pressures. When operated in an automatic mode, the controls adjust the engine speed as needed to regulate the pump output.

1.14.1 Source or Lead Pump. When operated as a source or lead pump, the pumping assembly draws water from a large source, such as a lake or stream or a storage facility that is supplied by wells, water purification units, or desalination operations. If operated singly as a source pump, the water is fed to another storage facility. If operated as a lead pump, the water is fed downline through a hoseline or pipeline to a boost pump.

1.14.2 Boost Pump. When operated as a boost pump, the pumping assembly draws water from a hoseline or pipeline and feeds it downline to the next boost pump or to a storage facility. Operated manually during startup and can then be switched to an automatic mode for sustained operation. In automatic mode, engine speed is regulated automatically.

1.14.3 Engine and Control Electrical System. The engine starter and engine controls are supplied with direct current (de) electric power by the pumping assembly battery or batteries and engine alternator.

1.14.4 Trailer Lights. The trailer lights are supplied with 24 volts dc through an electrical cable connected to the towing vehicle.

1.14.5 Trailer Hydraulic Brake System. The pumping assembly trailer is equipped with an inertial hydraulic brake system. The inertial hydraulic brake system automatically applies the brakes when the vehicle slows or stops or when the trailer accidentally uncouples from the towing vehicle. The brake system includes a drawbar ring or lunette, a hydraulic brake actuator, a master cylinder, a breakaway lever and chain, brake lines, wheel cylinders, brake shoes, and brake drums.

1.14.5.1 Lunette. The lunette attaches to the towing vehicle. It is connected to the hydraulic brake actuator, which controls the master cylinder. When the towing vehicle moves forward the lunette is pulled and the brakes are released. When the towing vehicle slows down, the trailer pushes the lunette against the towing vehicle, which causes the brakes to be applied.

1.14.5.2 Hydraulic Brake Actuator. The hydraulic brake actuator connects the drawbar ring/lunette to the master cylinder. It transmits mechanical motion from the drawbar ring/lunette to the master cylinder.

1.14.5.3 Master Cylinder. The master cylinder receives mechanical motion from the hydraulic brake actuator and from the breakaway lever. It changes the mechanical motion into hydraulic pressure. The hydraulic pressure is transmitted through the brake lines.

1.14.5.4 Breakaway Lever and Chain. The breakaway chain is attached to the breakaway lever and to the towing vehicle. It will pull the breakaway lever up if the trailer accidentally uncouples from the towing vehicle. When the breakaway lever is pulled up, it transmits mechanical motion to the master cylinder and applies brakes.

1.14.5.5 Brake Lines and Wheel Cylinders. The brake lines transmit hydraulic pressure from the master cylinder to the wheel cylinders. When pressurized, the wheel cylinders engage the brake shoes.

1.14.5.6 Brake Shoes and Drums. When wheel cylinder pressure causes the brake shoes to be engaged, the brake shoes press against the brake drums. This causes friction that slows and stops the trailer. The brake shoes disengage from contact with the brake drums when the pressure is released.

CHAPTER 2

OPERATING INSTRUCTIONS

Subject Index — Page

Section I Description and Use of Operator's Controls and Indicators . . . 2-2

2.1 Operator Controls and Indicators 2-2

Section II Operator Preventive Maintenance Checks and Services (PMCS) . . . 2-15

2.2 General 2-15

Section III Operation Under Usual Conditions 2-83

2.3 Assembly and Preparation for Use 2-83
2.4 Initial Adjustments, Checks, and Self Test 2-86
2.5 OperatingP rocedures 2-88
2.6 Decals and Instruction Plates 2-108
2.7 Preparation for Movement 2-114

Section IV Operation Under Unusual Conditions 2-119

2.8 Unusual Environmental/Weather 2-119
2.9 Fording 2-119
2.10 Emergency Procedures 2-119
2.11 Nuclear, Biological, and Chemical (NBC) Decontamination 2-119

SECTION I. DESCRIPTION AND USE OF OPERATOR'S CONTROLS AND INDICATORS

2.1 OPERATOR CONTROLS AND INDICATORS.

2.1.1 Pumping Assemby, Model 609-A.

2.1.1.1 Control Panel. Refer to Figure 2-1 and Table 2-1.

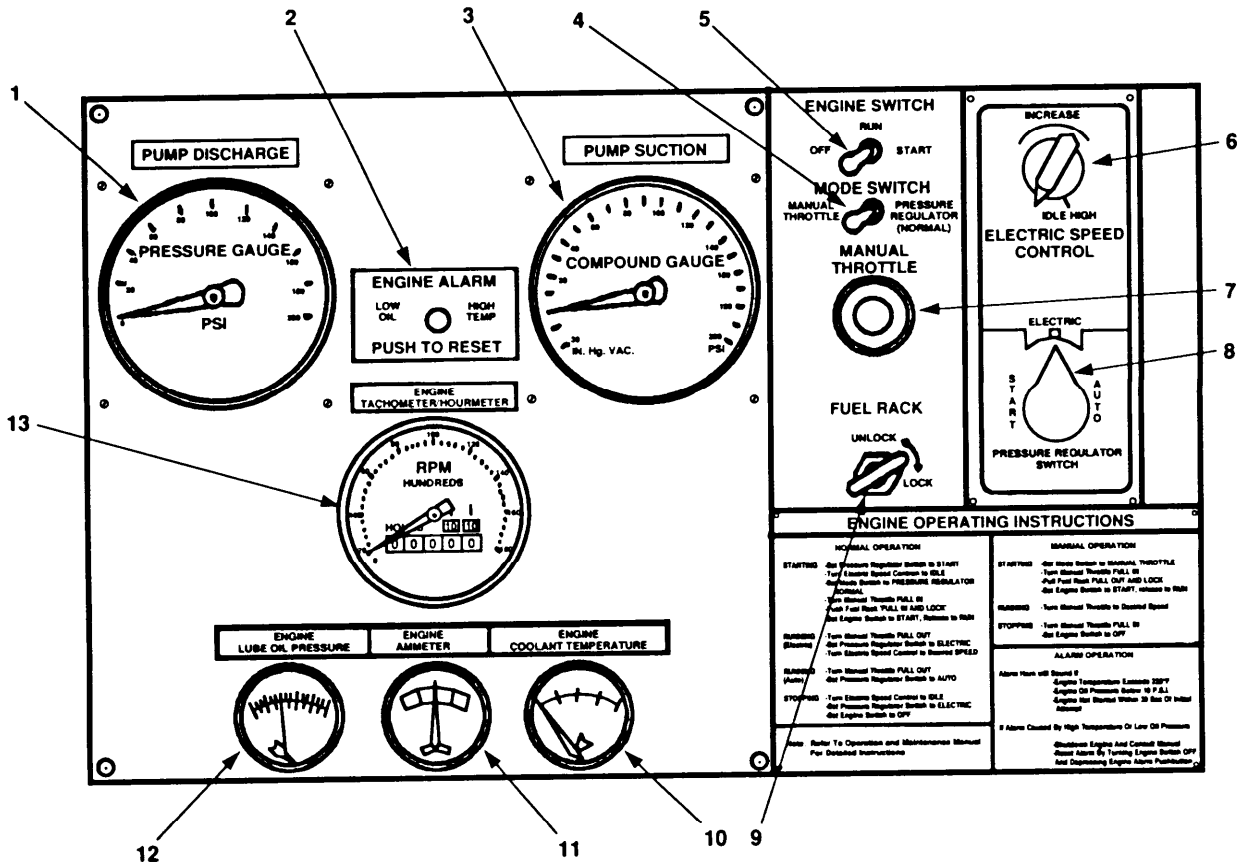

Figure 2-1. Model 609-A Control Panel.

Table 2-1. Description of Model 609-A Control Panel.

Item Number	Description	Function
1	PUMP DISCHARGE Gauge	Shows pump discharge pressure. Range is 0 to 200 pounds per square inch (psi) .
2	ENGINE ALARM Reset Button	PUSH TO RESET alarm. Alarm sounds when oil pressure is too low, engine temperature is too high, or engine does not start within 30 seconds.
3	PUMP SUCTION Gauge	Shows pump suction pressure. *Range is -30 to 200* psi.

Table 2-1. Description of Model 609-A Control Panel. (Continued)

Item Number	Description	Function
4	MODE SWITCH	Used to control engine operating mode. Set to MANUAL THROTTLE for manual mode. Set to PRESSURE REGULATOR (NORMAL) for other modes.
5	ENGINE SWITCH	Used to start engine. Set to START, RUN, or OFF positions.
6	ELECTRIC SPEED CONTROL	Used to control engine speed in electric manual mode. Range is IDLE to HIGH.
7	MANUAL THROTTLE	Used to control engine speed in manual mode.
8	PRESSURE REGULATOR SWITCH	Used to control electric speed governor. Regulates suction/discharge pressure and engine speed in electric automatic mode. Set at START, ELECTRIC (electric manual mode), or AUTOMATIC (electric automatic mode) .
9	FUEL RACK Handle	Used to control flow of fuel to governor in manual mode.
10	ENGINE COOLANT TEMPERATURE Gauge	Shows engine temperature. Range is 130° Fahrenheit (F) to 250° F and 40° Celsius (C) to 120° C.
11	ENGINE AMMETER	Shows rate of electric output by alternator. Range is -60 to +60 amperes (amp).
12	ENGINE LUBE OIL PRESSURE Gauge	Shows engine oil pressure. Range is 0 to 75 psi and 0 to 5 kilopascals (kPa) X 100.
13	ENGINE TACHOMETER/HOURMETER	Tachometer shows engine revolutions per minute (rpm) . Range is 0 to 40 (X 100) rpm. Hourmeter shows amount of time engine has been operated. Displays hours, tenths of an hour, and hundredths of an hour.

2.1.1.2 **Engine and Trailer.** Refer to Figure 2-2 and Table 2-2.

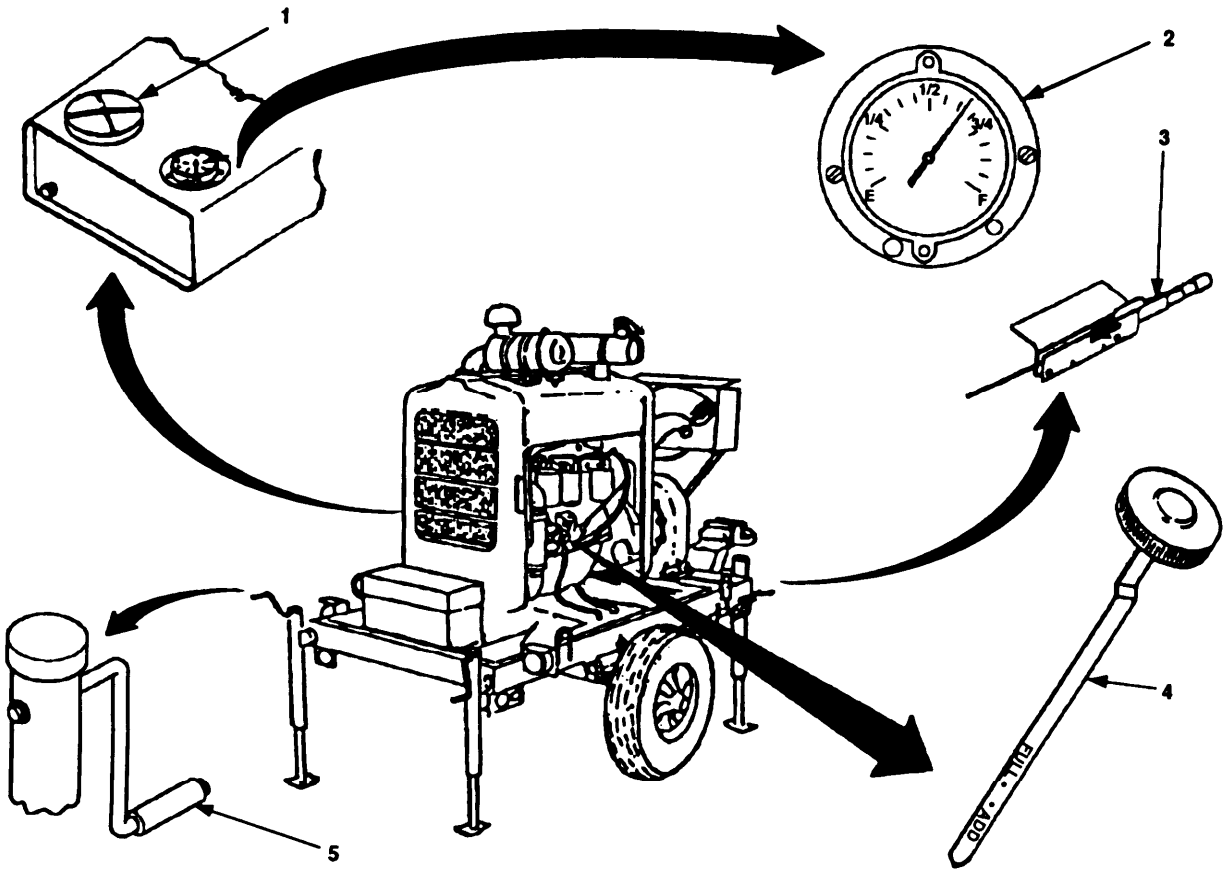

Figure 2-2. Model 609-A Engine and Trailer Controls and Indicators.

Table 2-2. Description of Model 609-A Engine and Trailer Controls and Indicators.

Item Number	Description	Function
1	Fuel Tank Cap	Prevents entry of foreign matter into tank. Remove to add fuel to tank.
2	Fuel Level Gauge	Indicates amount of fuel in tank. Registers from E (empty) to F (full).
3	Park Brake Levers	One on each side of trailer. Used to lock wheels when Model 609-A is disconnected from towing vehicle. Pull levers toward front of trailer to lock wheels. Turn lever end cap to adjust brake cable tension.
4	Oil Dipstick	Used to determine level of oil in crankcase. Dipstick is marked with dots labeled ADD and FULL.
5	Turncrank	Used to raise and lower jacks to level Model 609-A prior to operation.

2.1.2 Pumping Assembly, Model 609-C.

2.1.2.1 Control Panel. Refer to Figure 2-3 and Table 2-3.

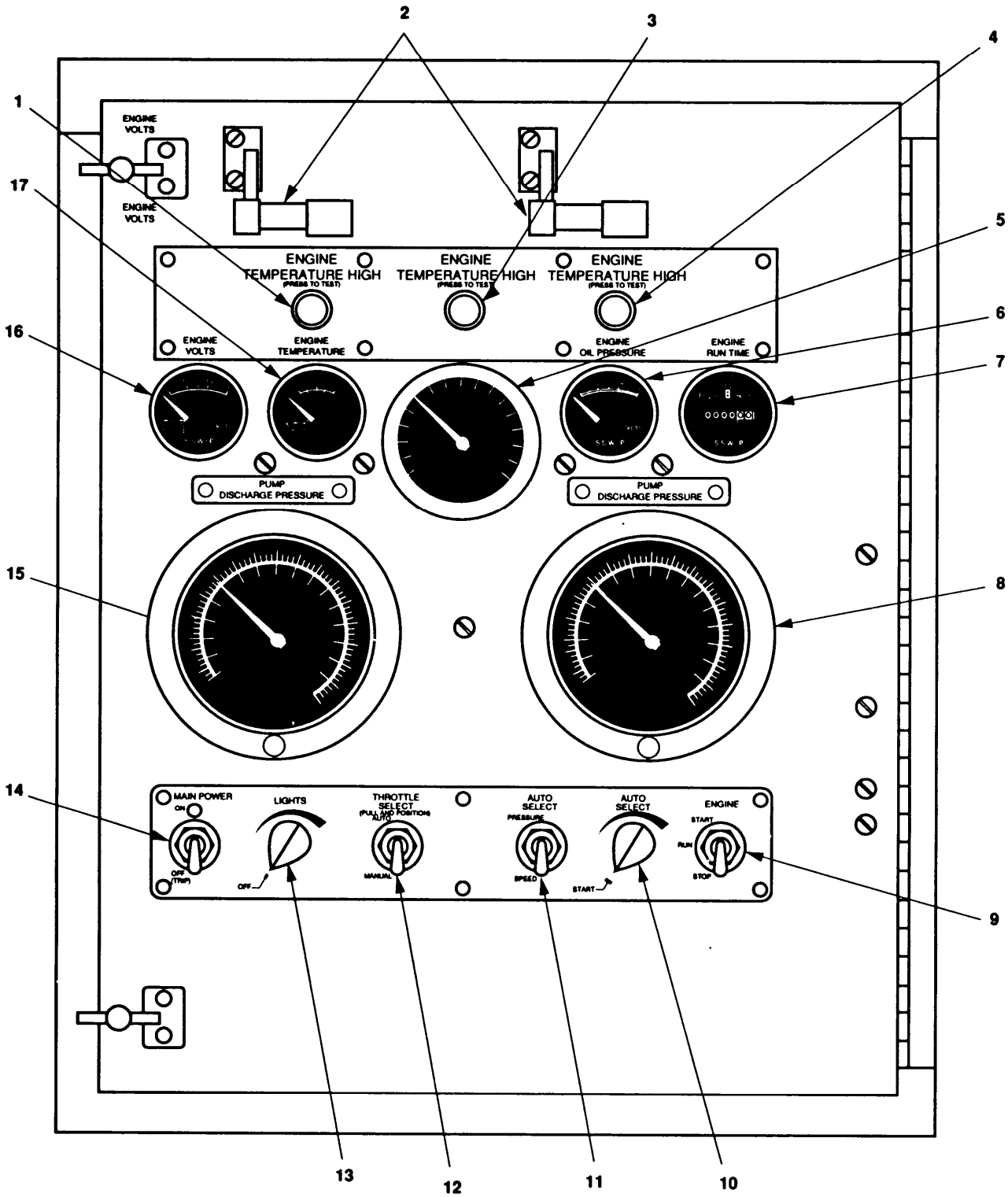

Figure 2-3 Model 609-C Control Panel.

Table 2-3. Description of Model 609-C Control Panel.

Item Number	Description	Function
1	ENGINE TEMPERATURE HIGH Indicator	Lights when engine overheats. Indicator has PRESS to TEST feature.
2	Panel Lights	Illuminate control panel.
3	ENGINE OVERSPEED Indicator	Lights when allowable engine rpm is exceeded. Indicator has PRESS to TEST feature.
4	ENGINE OIL LOW Indicator	Lights when engine oil pressure is low. Indicator has PRESS to TEST feature.
5	ENGINE SPEED Tachometer	Shows engine rpm.
6	ENGINE OIL PRESSURE Gauge	Indicates engine oil pressure in psi.
7	ENGINE RUN TIME Hourmeter	Indicates total accumulated operating hours of engine.
8	PUMP DISCHARGE PRESSURE Gauge	Indicates water pressure in psi at pump discharge port.
9	ENGINE Switch	Three-position toggle switch. Used to start, run, and stop engine. START position is spring loaded.
10	AUTO THROTTLE Rheostat	Used to set desired water output pressure or engine speed, in automatic mode of operation.
11	AUTO SELECT Switch	Used to select engine speed or pump pressure in automatic mode of operation. When SPEED is selected engine speed remains constant regardless of water pressure. When PRESSURE is selected water pressure remains constant and engine speed varies.
12	THROTTLE SELECT Switch	Used to select MANUAL or AUTO throttle. When set to AUTO throttle, engine speed is controlled by demands of system. Resulting speed is directly related to settings of AUTO SELECT Switch (11) and AUTO THROTTLE Rheostat (10).
13	LIGHTS Switch/Rheostat	Turns panel illumination lights on and off and controls brightness of illumination.
14	MAIN POWER Switch	Two-position toggle switch. Used to apply electrical power to system. Switch will shut off (trip) if an electrical overload condition occurs.
15	PUMP SUCTION PRESSURE Gauge	Indicates water pressure in psi on suction side of pump.
16	ENGINE VOLTS Voltmeter	Indicates battery charge.
17	ENGINE TEMPERATURE Gauge	Indicates engine temperature in degrees F and degrees C.

2.1.2.2 Engine. **Refer to Figure 2-4 and Table 2-4.**

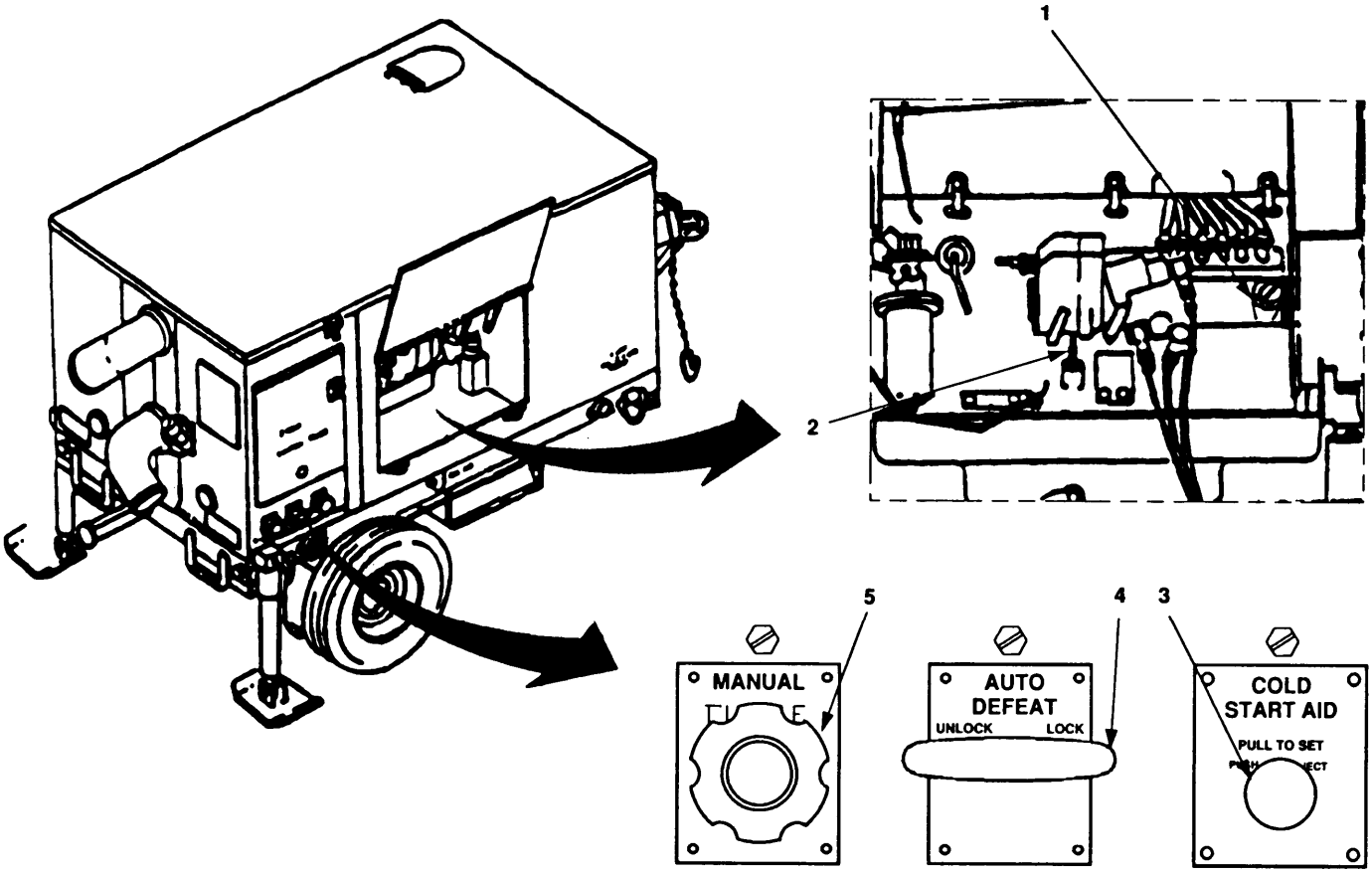

Figure 2-4. Model 609-C Engine Controls and Indicators.

Table 2-4. Description of Model 609-C Engine Controls and Indicators.

Item Number	Description	Function
1	Oil Filler Cap	Prevents entry of foreign matter into engine crankcase. Remove to add engine oil.
2	Dipstick	Used to check oil level. Dipstick has an add mark and a full mark. Add oil when engine oil level falls to or below the add mark. Do not fill above full mark.
3	COLD START AID	Used to start engine in cold temperatures. Is connected to a bottle of starting fluid (ETHER) stowed on the engine compartment. Handle is pulled to SET (load starting fluid into) the system. Once set, pushing the handle will inject the starting fluid (ETHER) into engine cylinders.
4	AUTO DEFEAT	Used to disable governor system when manual engine operation is desired.
5	MANUAL THROTTLE	Used to control engine speed when THROTTLE SELECT Switch (Figure 2-3, 12) is in MANUAL position.

2.1.2.3 **Fuel System.** Refer to Figure 2-5 and Table 2-5.

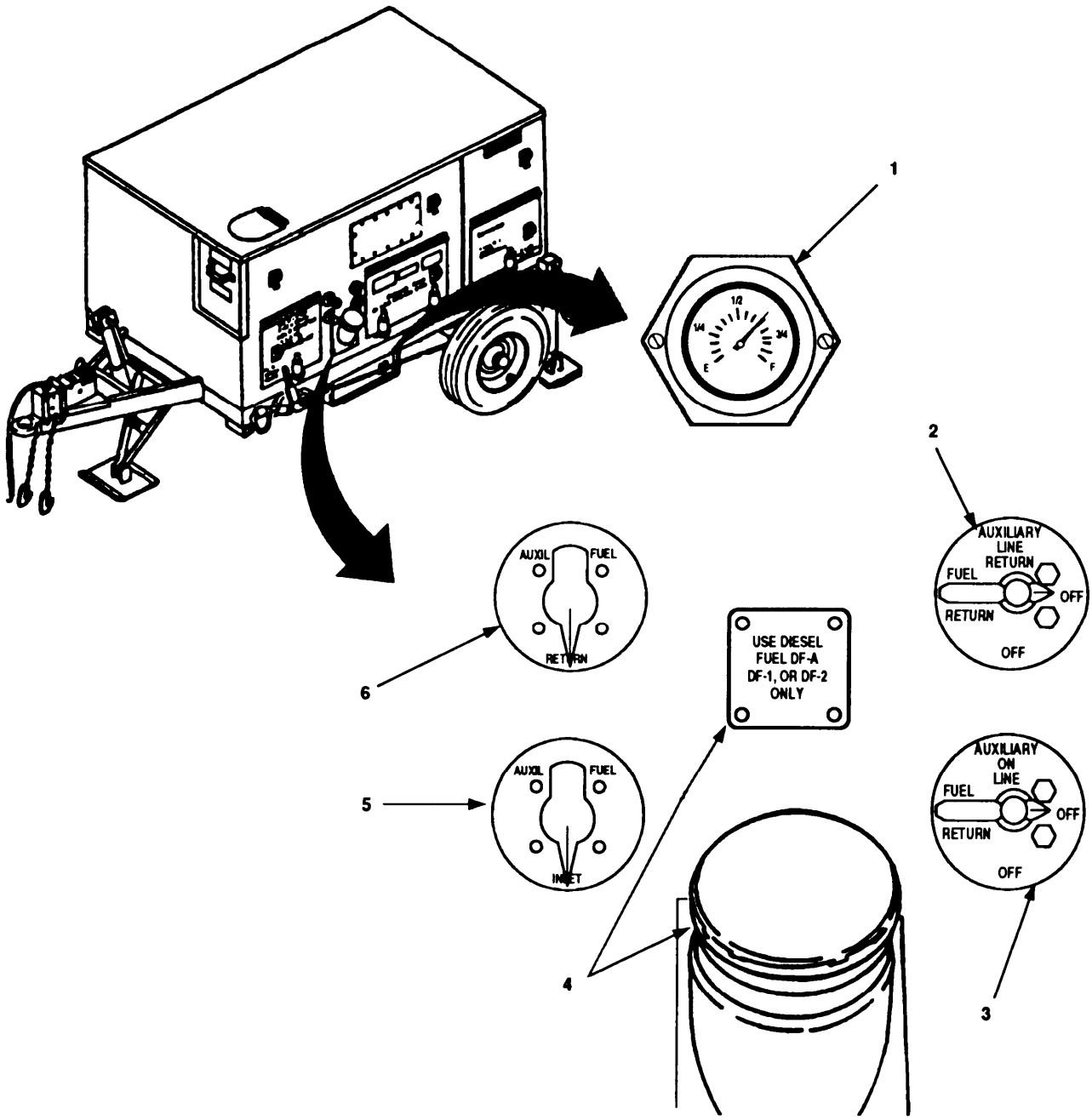

Figure 2-5. ***Model 609-C Fuel System Controls and Indicators.***

Table 2-5. Description of Model 609-C Fuel System Controls and Indicators.

Item Number	Description	Function
1	Fuel Level Gauge	Indicates amount of fuel in tank. Range is E (empty) to F (full).
2	Fuel Return Valve	Used to direct flow of unused fuel to either the trailer tank or auxiliary fuel supply container. When AUXILIARY LINE RETURN is selected, excess fuel is directed to auxiliary container. When FUEL TANK RETURN is selected, return flow is directed to trailer tank.
3	Fuel Selector Valve	Used to select fuel tank or auxiliary fuel supply. When AUXILIARY ON LINE is selected, fuel is supplied to engine from auxiliary fuel supply container. When FUEL ON is selected, fuel is supplied by trailer tank.
4	Fuel Tank Cap and Data Plate	Prevents entry of foreign matter into fuel tank. Remove to add fuel to tank.
5	AUXILIARY FUEL INLET Connector	Provides hookup for external fuel supply inlet hose.
6	AUXILIARY FUEL RETURN Connector	Provides hookup for external fuel supply return hose.

2.1.2.4 **Air System and Priming Tube**. Refer to Figure 2-6 and Table 2-6.

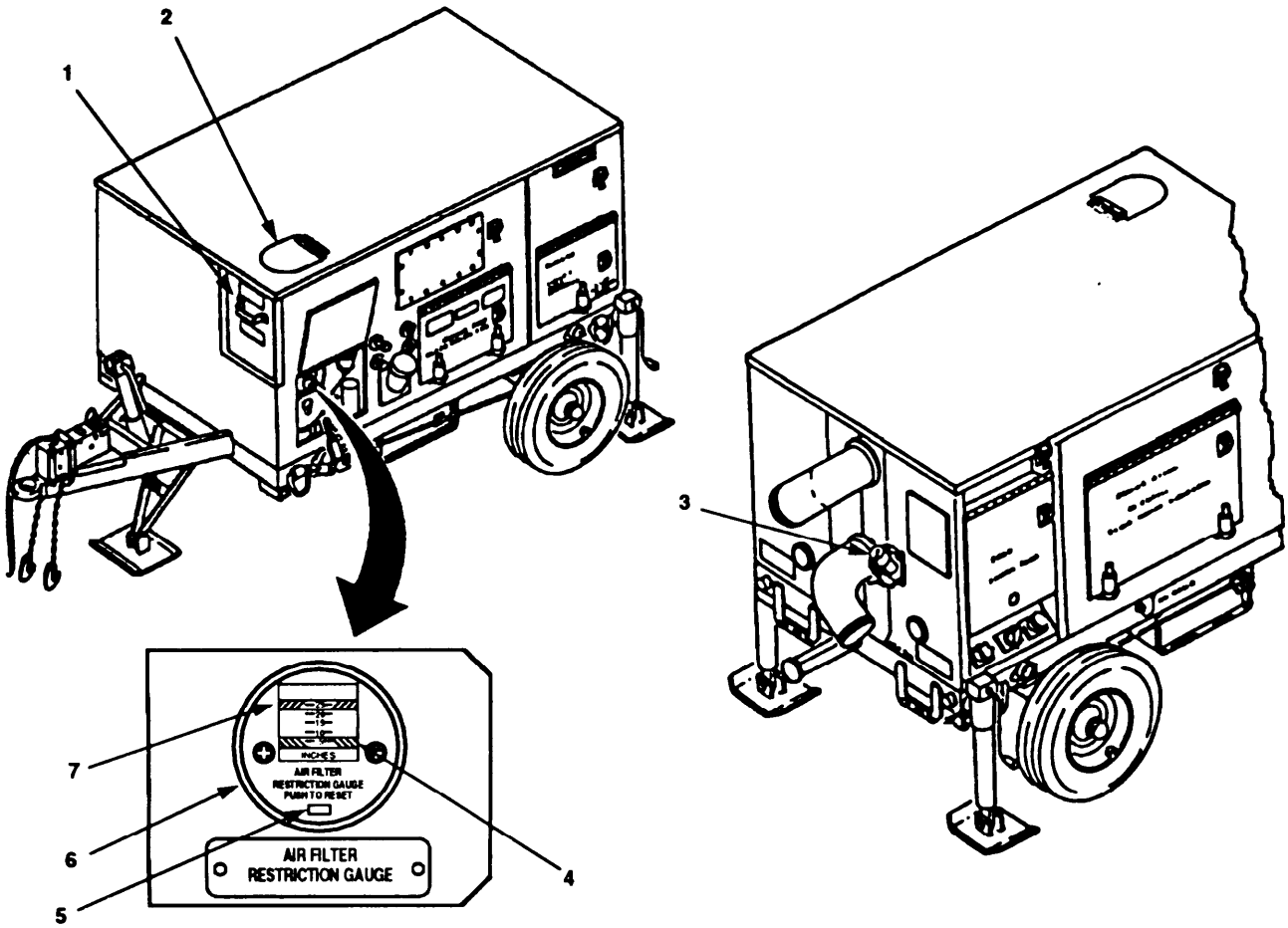

Figure 2-6. Model 609-C Air System and Priming Tube Controls and Indicators.

Table 2-6. Description of Model 609-C Air System and Priming Tube Controls and Indicators.

Item Number	Description	Function
1	Air Exhaust Door Handle	Used to open/close air exhaust door to vent engine cooling air. Air exhaust door is connected to engine exhaust door (2) .
2	Engine Exhaust Door	Covers engine exhaust outlet when closed. Opens/closes when air exhaust door is opened/closed.
3	Priming Tube Cap	Used to prime pump as required on initial system startup. To use, remove cap, fill with clean water, and install cap.
4	AIR FILTER RESTRICTION GAUGE	Indicates air filter restriction in centimeters (cm) .
5	Reset Button	Used to reset AIR FILTER RESTRICTION GAUGE (4) when indicated reading is questionable and after air cleaner has been serviced.

Table 2-6. Description of Model 609-C Air System and Priming Tube Controls and Indicators. (Continued)

Item Number	l)escription	Function
6	Blue Band	Indicates air filter has little or no restriction when AIR FILTER RESTRICTION GAUGE (4) reading is at or near this band.
7	Red Band	Indicates that air filter needs servicing when AIR FILTER RESTRICTION GAUGE (4) high reading is in or near this band.

2.1.2.5 Trailer. Refer to Figure 2-7 and Table 2-7.

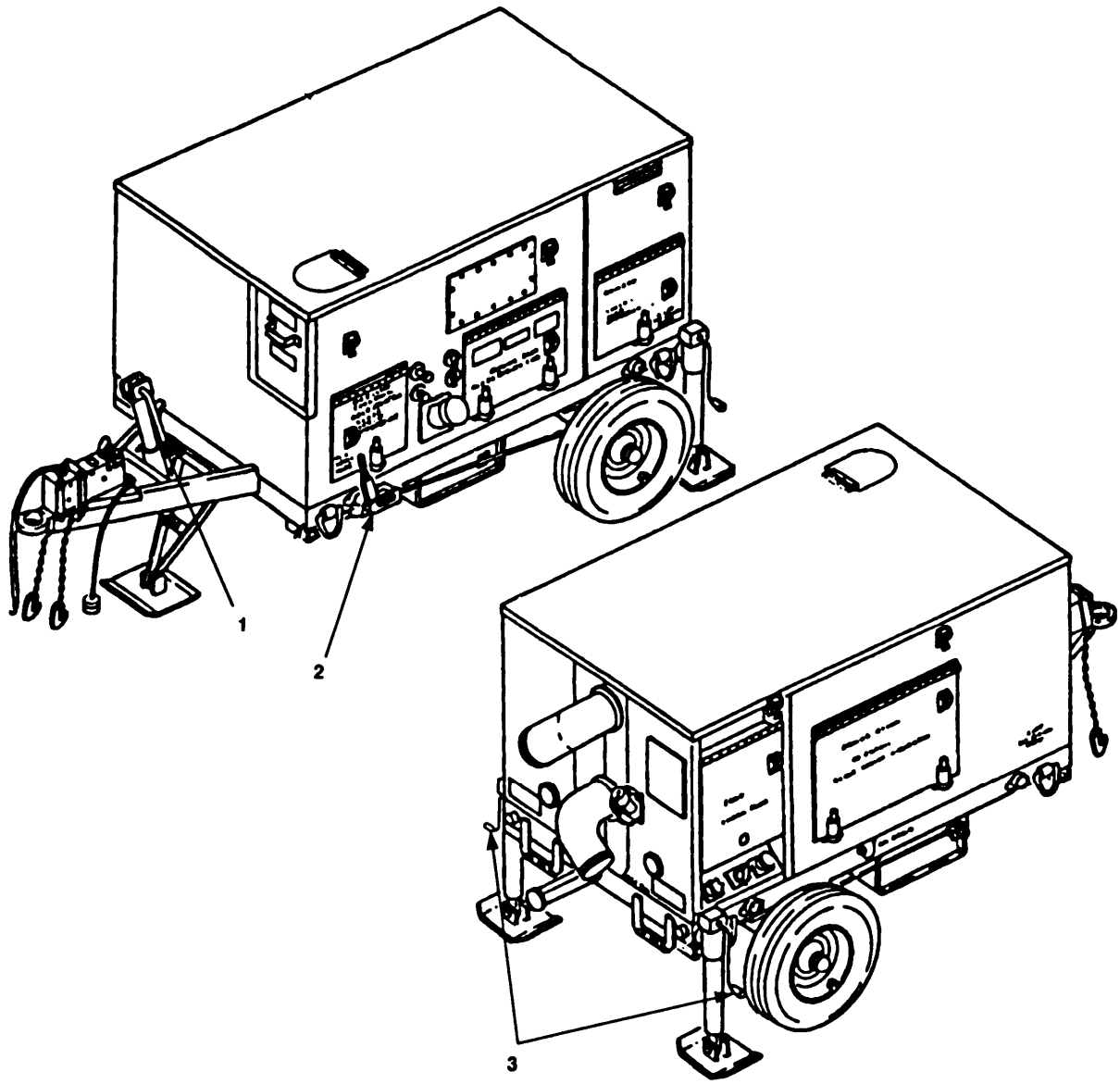

Figure2-7. Model 609-C Trailer Controls.

Table 2-7. Description of Model 609-C Trailer Controls.

Item Number	Description	Function
1	Tongue Jack Handle	Used to raise and lower tongue jack, to support trailer when disconnected from towing vehicle. Also used to level trailer for operation and to facilitate connecting/disconnecting trailer to/from towing vehicle.
2	Park Brake Handle	Used to lock trailer wheels when trailer is disconnected from towing vehicle. Pull handle toward front of trailer to lock wheels. Turn handle end cap to adjust brake cable tension.
3	Rear Jack Handles	Used to raise and lower rear jacks, to level trailer for operation when disconnected from towing vehicle.

2.1.3 Pumping Assembly. Model US636HCCD-1.

2.1.3.1 Control Panel. Refer to Figure 2-8 and Table 2-8.

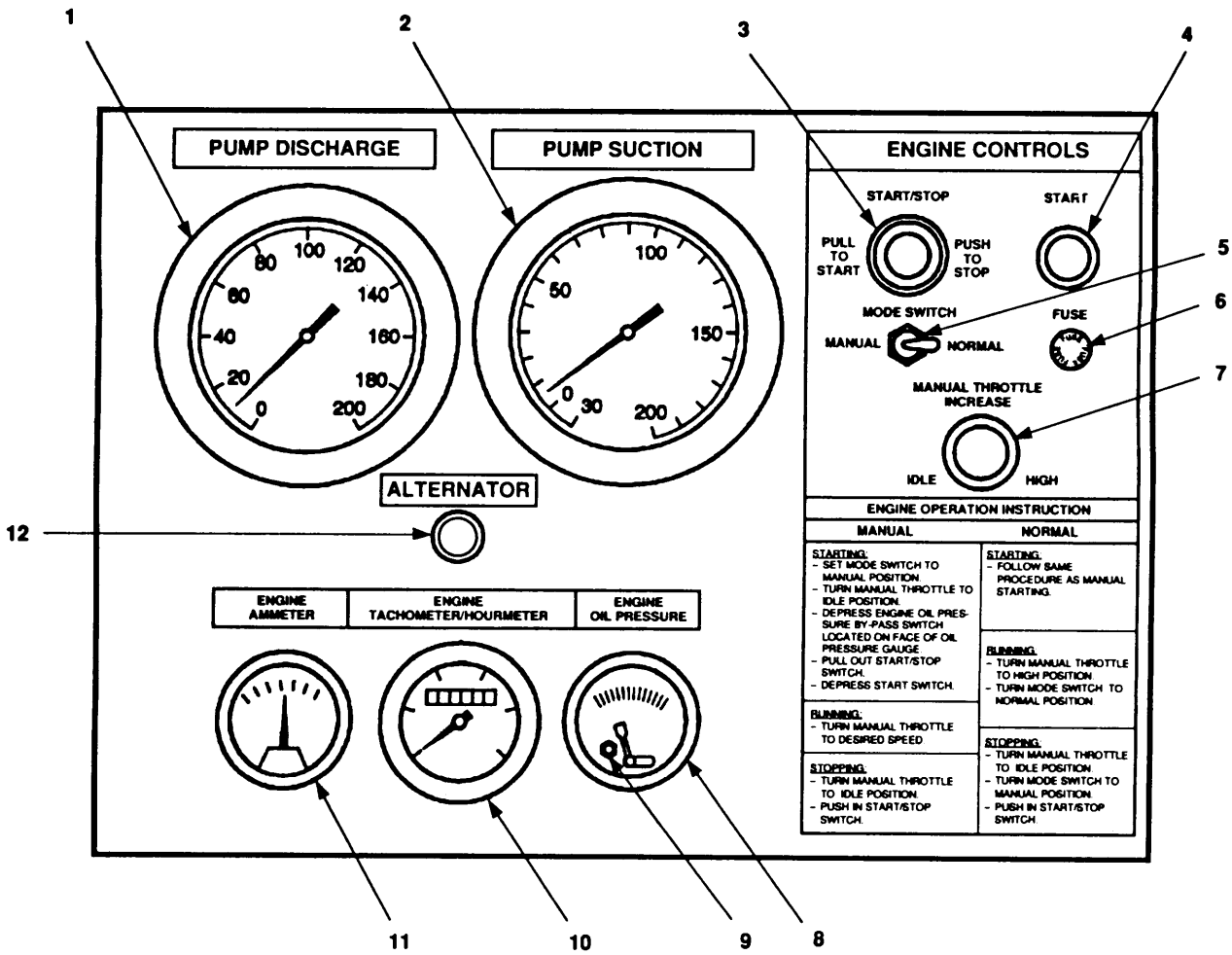

Figure 2-8. Model US636HCCD-1 Control Panel.

Table 2-8. Description of Model US636HCCD-1 Control Panel.

Item Number	Description	Function
1	PUMP DISCHARGE Gauge	Displays pump water pressure at discharge outlet. Range is 0 to 200 psi.
2	PUMP SUCTION Gauge	Displays pump water pressure at suction inlet. Range is -30 to 200 psi.
3	START/STOP Knob	Enables operation of START button (4) when in START position. Stops engine when in STOP position. PULL TO START and PUSH TO STOP positions.
4	START Button	Used to start engine. START/STOP knob (3) must be in START position, then push START button in to start engine.
5	MODE SWITCH	Two-position toggle switch. Used to select engine operating mode. Set to MANUAL for electric manual mode. Set to NORMAL for electric automatic mode.
6	Fuse	Provides electrical protection for process controller and controlling device.
7	MANUAL THROTTLE INCREASE Knob	Used to control engine speed in electric manual mode. Range is IDLE to HIGH.
8	ENGINE OIL PRESSURE Gauge	Displays engine oil pressure. Range is 0 to 150 psi.
9	Engine Oil Pressure Bypass Switch	Overrides oil pressure shutoff switch when starting engine. Push in at same time when pushing START button (4).
10	ENGINE TACHOMETER/HOURMETER	Tachometer shows engine rpm. Range is 4 to 30 (X 100) rpm. Hourmeter shows amount of time engine has operated. Displays hours and tenths of an hour.
11	ENGINE AMMETER	Indicates rate of electric output by alternator. Range is -60 to +60 amp.
12	Alternator Light	Illuminates when alternator is operating.

2.1.3.2 Engine and Trailer. Refer to Figure 2-9 and Table 2-9.

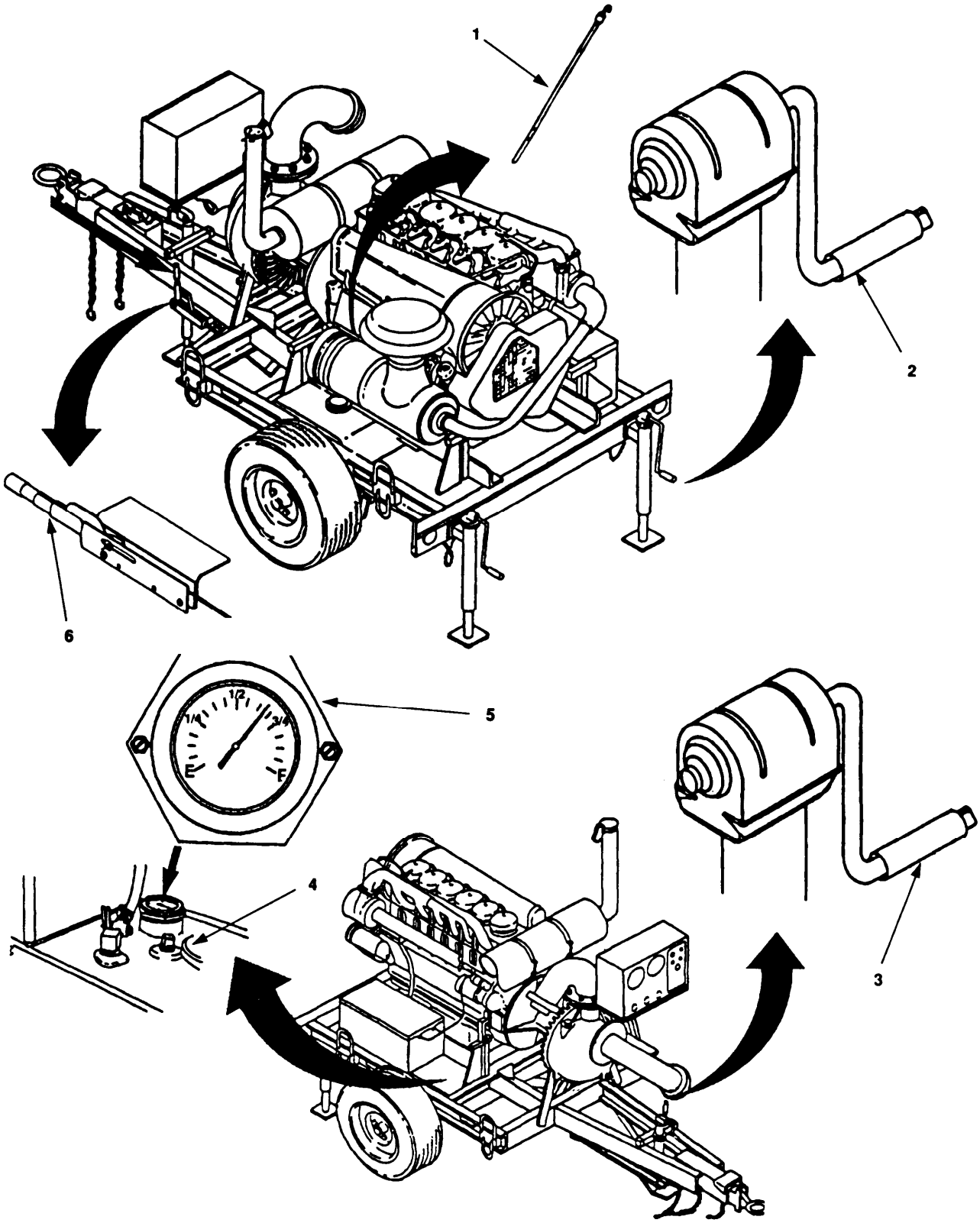

Figure 2-9. Model US636HCCD-1 Engine and Trailer Controls and Indicators.

Table 2-9.* Description *of Model US636HCCD-1 Engine and Trailer Controls and Indicators.

Item Number	Description	Function
1	Oil Dipstick	Used to determine oil level in crankcase. Dipstick is marked with two lines. The lower mark means add oil and the upper mark means full.
2	Rear Jack Turncrank	Used to raise and lower rear jacks and level trailer for operation when disconnected from towing vehicle.
3	Tongue Jack Turncrank	Used to raise and lower tongue and support trailer when disconnected from towing vehicle. Also used to level trailer for operation and to facilitate connecting/disconnecting trailer to/from towing vehicle.
4	Fuel Tank Cap	Prevents entry of foreign matter into fuel tank. Remove to add fuel to tank.
5	Fuel Level Gauge	Indicates amount of fuel in tank. Range is E (empty) to F (full).
6	Park Brake Lever	Used to lock wheels when trailer is disconnected from towing vehicle. pull lever toward front of trailer to lock wheels. Turn lever end cap to adjust brake cable tension.

SECTION II. PREVENTIVE MAINTENANCE CHECKS AND SERVICES (PMCS)

2.2 GENERAL.

Figures 2-10, 2-11, and 2-12, PMCS routing diagrams, and Tables 2-10, 2-11, and 2-12, PMCS tables, have been provided so you can keep your equipment in good operating condition and ready for its primary mission.

2.2.1 Warnings and Cautions. Remove all jewelry prior to performing PMCS. Always observe the *WARNINGS* and *CAUTIONS* appearing in your PMCS table. Warnings and cautions appear before applicable procedures. You must observe these *WARNINGS* and *CAUTIONS* to prevent serious injury to yourself and others or prevent your equipment from being damaged.

2.2.2 Explanation of Table Entries.

2.2.2.1 Item No. Column. Numbers in this column are for reference. When completing DA Form 2404 (Equipment Inspection and Maintenance Worksheet), include the item number for the check/service indicating a fault. Item numbers also appear in the order that you must do checks and services for the intervals listed.

2.2.2.2 Interval Column. This column tells you when you must do the procedure in the procedure column. *BEFORE* procedures must be done before you operate the equipment for its intended mission. *DURING* procedures must be done during the time you are operating the equipment for its intended mission. *AFTER* procedures must be done immediately after you have operated the equipment.

2.2.2.3 Location, Check/Service Column. This column provides the location and the item to be checked or serviced. The item location is underlined.

2.2.2.4 Procedure column. This column gives the procedure you must do to check or service the item listed in the Check/Service column to know if the equipment is ready or available for its intended mission or for operation. You must do the procedure at the time stated in the interval column.

2.2. Not Fully Mission Capable if: Column. Information in this column tells you what faults will keep your equipment from being capable of performing its primary mission. If you make checks or service procedures that show faults listed in this column, do not operate the equipment. Follow standard operating procedures for maintaining the equipment or reporting equipment failure.

2.2.3 Other Table Entries. Be sure to observe all special information and notes that appear in your table.

2.2.4 Special Instructions. When a check and service procedure is required for both weekly and before intervals, it is not necessary to do the procedure twice if the equipment is operated during the weekly period.

2.2.5 Leakage Classification and Definitions. Fluid leakage is classified and defined as indicated below.

CLASSIFICATION	DEFINITION
Class I	Seepage of fluid (indicated by wetness or discoloration) not great enough to form drops
Class II	Leakage of fluid great enough to form drops but not enough to cause drops to drip from item being checked
Class III	Leakage of fluid great enough to cause drops to drip from item being checked

NOTE

Fluid levels of items with Class I and Class II leaks must be checked often so proper levels can be kept.

Class III leaks must be reported to supervisors or to Unit Level Maintenance for corrective action.

2.2.6 Order inWhich PMCS Will be Done. Figures 2-10, 2-11, and 2-12 show the order in which you are to perform your PMCS. Figure 2-10 is for model 609-A, Figure 2-11 is for model 609-C, and Figure 2-12 is for model US636HCCD-1. The number callouts on Figures 2-10, 2-11, and 2-12 correspond to the numbers in the Item No. column of Tables 2-10, 2-11, and 2-12.

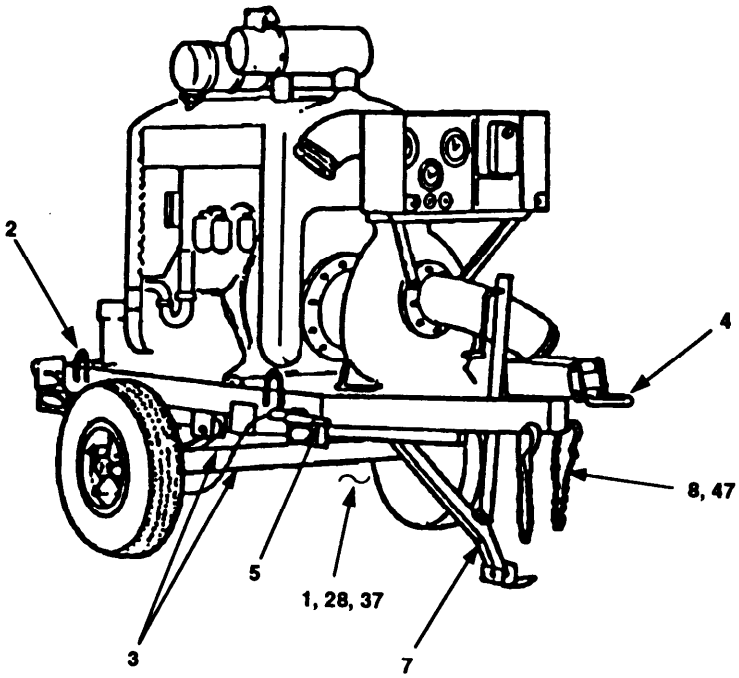

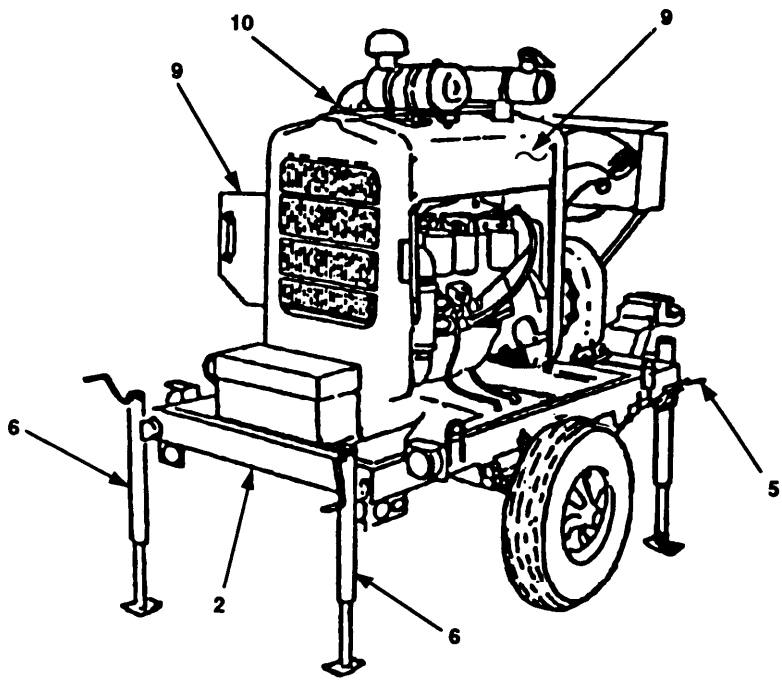

Figure 2-10. Pumping Assembly Model 609-A PMCS routing Diagram. (Sheet 1 of 2)

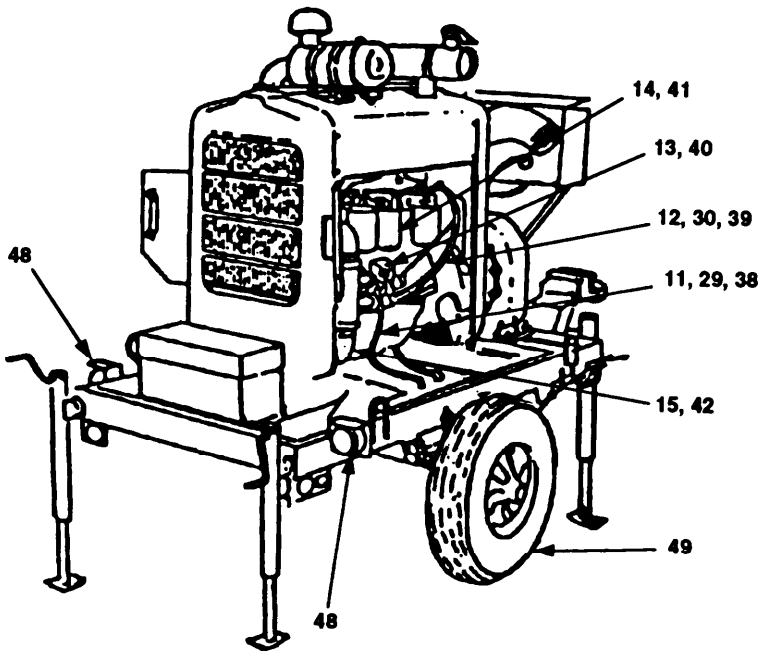

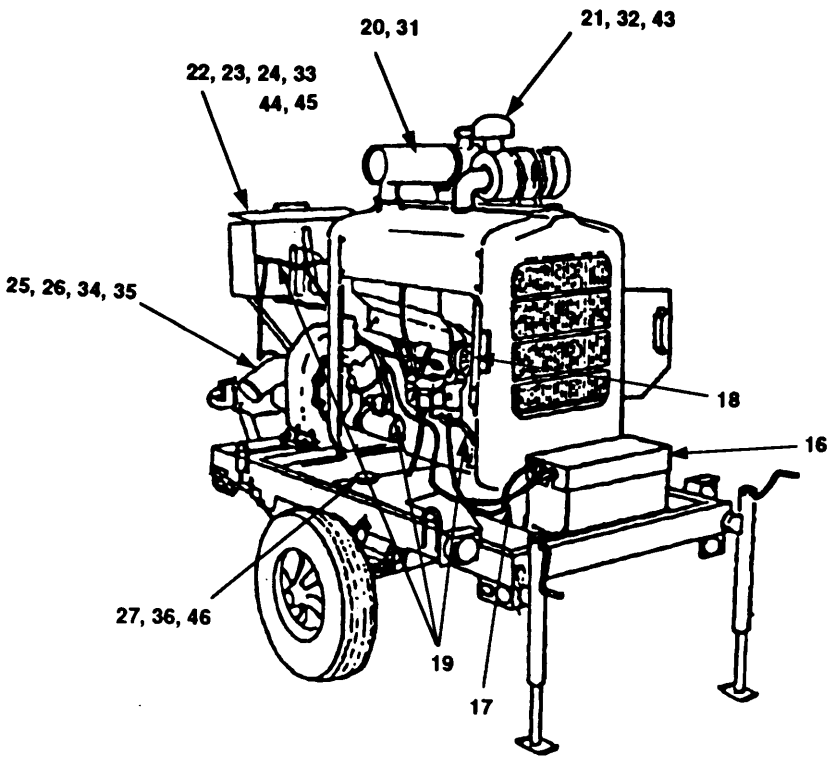

Figure 2-10. Pumping Assembly Model 609-A PMCS Routing Diagram. (Sheet 2 of 2)

Table 2-10. Preventive Maintenance Checks and Services for Pumping Assembly Model 609-A.

Item No.	Interval	Location: Item to Check/Service	Procedure	Not Fully Mission Capable if:
		EXTERIOR		
1	Before	Leaks	Inspect ground for evidence of leaks. If leaks are present, notify unit maintenance.	Any evidence of leaks.
		TRAILER CHASSIS		
2	Before	Frame	Inspect all frame seam welds for damage. If weld is damaged, notify unit maintenance.	Weld is damaged.

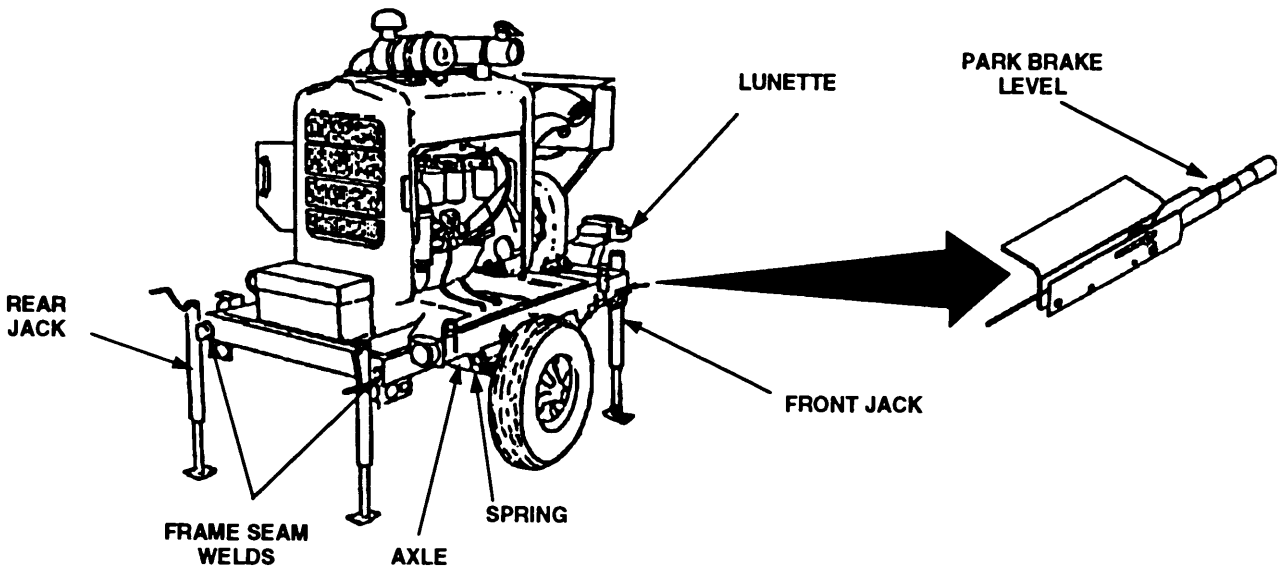

3	Before	Axle and Springs	Check for damage. If damaged, notify unit maintenance.	Axle or spring is damaged.
4	Before	Lunette	Check for damage. If damaged, notify unit maintenance.	Lunette is damaged.
5	Before	Park Brake Levers	Check that levers on both sides of trailer are locked. Check for proper adjustment. Adjust as needed.	Park brake(s) damaged or inoperable.
6	Before	Rear Jacks	Check rear jacks for damage. Check that rear jacks are secured and operable. If required, operate rear jacks to level trailer. If rear jack is damaged or not operable, notify unit maintenance.	Rear Jack is damaged or not operable.

Figure 2-10. Preventive Maintenance Checks and Services for Pumping Assembly Model 609-A. (Continued)

Item No.	Interval	Location Item to Check/Service	Procedure	Not Fully Mission Capable if
		TRAILER CHASSIS - CONT		

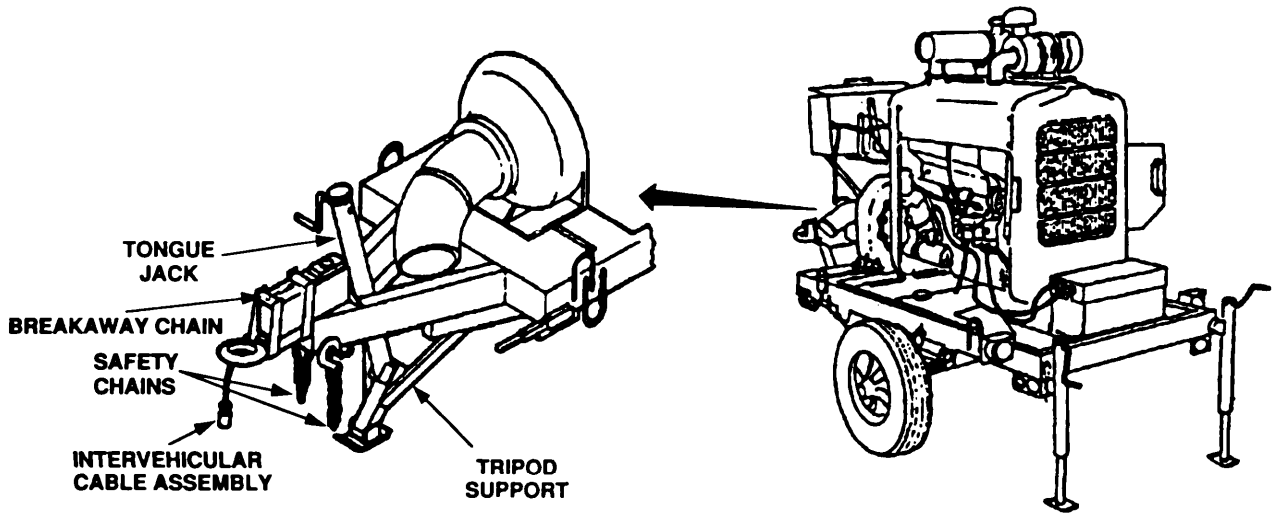

NOTE

Some pumping assemblies may be equipped a tongue jack different than shown, refer to figure 1-4.

7	Before	Tongue Jack	Check tongue jack, supports, and welds for damage. If damaged, notify unit maintenance. Check that jack is secured and jack is operable. If needed, operate tripod jack to level trailer. If not operable, notify unit maintenance.	Tongue jack is inoperable. Tripod is damaged.
8	Before	Safety/Breakaway Chains and Intervehicular Cable	Check for damaged/broken chains. Check intervehicular cable for damaged connector and broken pins. If chain is damaged or broken or intervehicular cable is damaged or has broken pin(s), notify unit maintenance.	Chain is damaged or broken. Intervehicular cable is damaged or has broken pin(s).

Table 2-10. Preventive Maintenance Checks and Services for Pumping Assembly Model 609-A. (Continued)

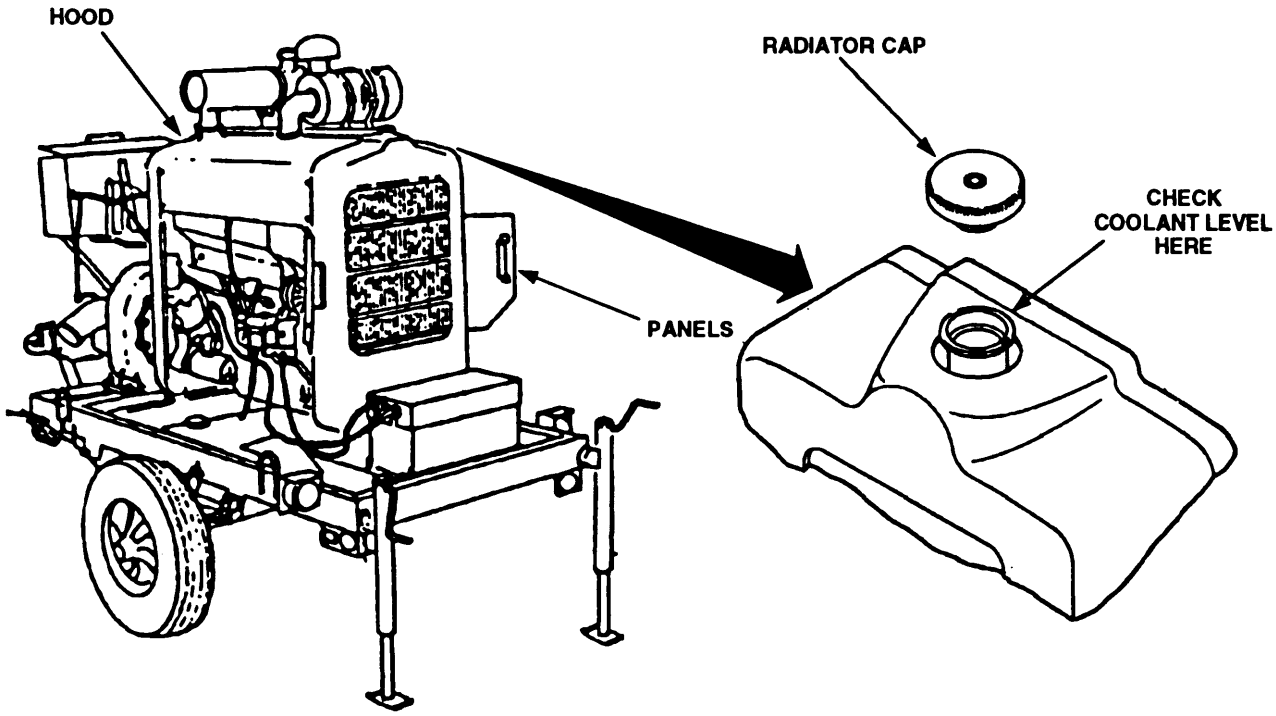

Item No.	Interval	Location: Item to Check/Service	Procedure	Not Fully Mis - sion Capable if:
		HOOD AND PANELS		
9	Before	Hood and Panels	Check that hood and panels are secure. Check hood and side panel hinges and fasteners for damage. If damaged, notify unit maintenance.	
		RADIATOR		
10	Before	Radiator	Remove radiator cap and check coolant level. Fluid should be visible in radiator reservoir. Add coolant as required to raise coolant level into radiator filler neck. Install radiator cap. Check radiator exterior for damaged and blocked passages. If radiator is damaged or air passages are blocked, notify unit maintenance.	Coolant level is low. Radiator is damaged. Air passages are blocked.

Table 2-10. Preventive Maintenance Checks and Services for Pumping Assembly Model 609-A. (Continued)

Item No.	Interval	Location: Item to Check/Service	Procedure	Not Fully Mission Capable if:
		ENGINE		
11	Before	Fuel Lines	Inspect lines for damage and leaks. If line is damaged or leaking, notify unit maintenance.	Class I, II, or III leak. Fuel line is damaged.
12	Before	Oil Lines	Inspect lines for damage and leaks. If line is damaged or leaking, notify unit maintenance.	Class III leak. Oil Line is damaged.
13	Before	Oil Dipstick	Check level. If oil is at or below ADD mark on dipstick, remove cap form oil filler neck. Add oil as required, to FULL mark on dipstick. Reference LO 10-4320-344-12. Install cap after adding oil.	Oil level is below ADD mark on dipstick. Dipstick is missing.

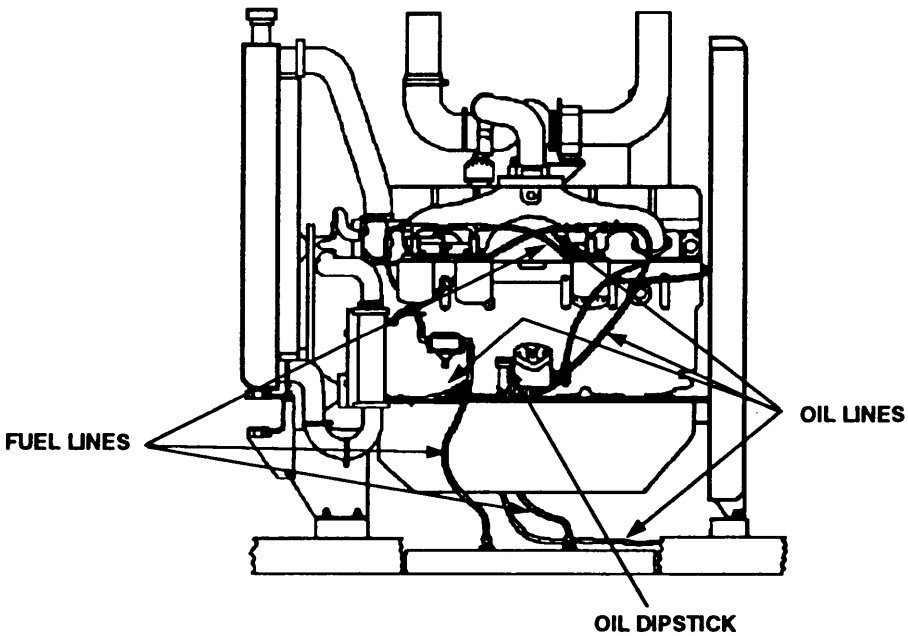

Table 2-10. Preventive Maintenance Checks and Services for Pumping Assembly Model 609-A. (Continued)

Item No.	Interval	Location: Item to Check/Service	Procedure	Not Fully Mission Capable if:
		ENGINE - CONT		
14	Before	Primary Fuel Filter	Open valve bottom and drain water and sediment. Close valve when fuel starts coming through outlet.	Class I, II, or III leak. Cracked or damaged filters.

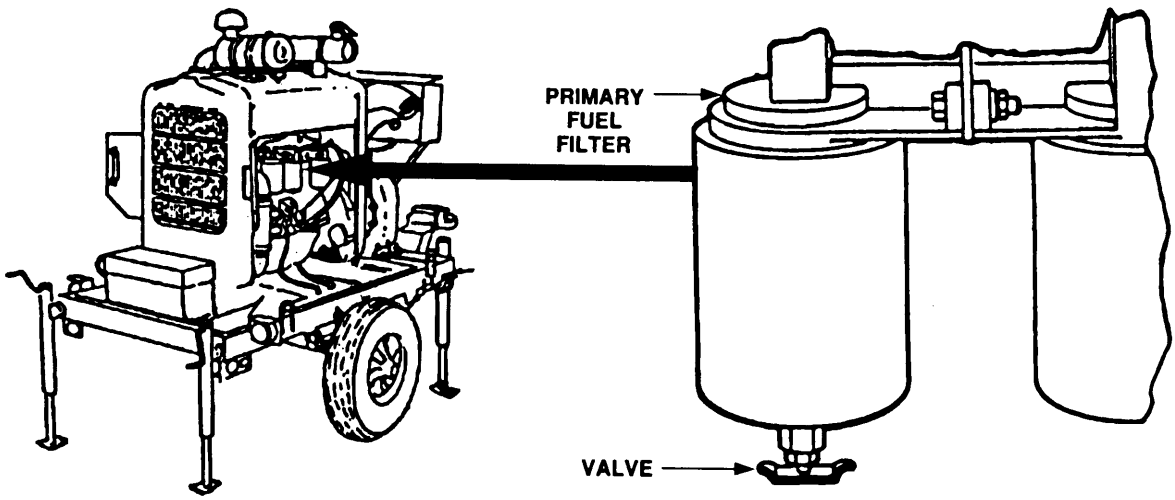

15	Before	Cooling System Hoses	Inspect for cracks, damage, and leaks. Check for loose hose clamps. If hose is cracked, damaged, or leaks or clamp is loose, notify unit maintenance.	Class III leak. Hose is cracked or damaged. Hose clamp is loose.

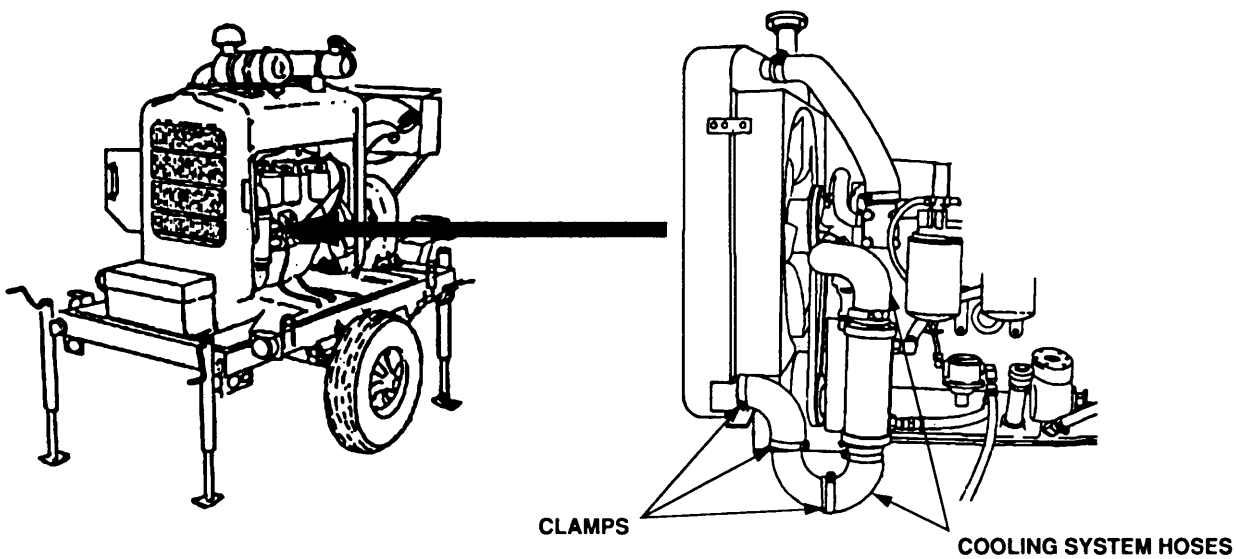

Table 2-10. Preventive Maintenance Checks and Services for Pumping Assembly Model 609-A. (Continued)

Item No.	Interval	Location: Item to Check/Service	Procedure	Not Fully Mis - sion Capable if:
		BATTERY BOX		

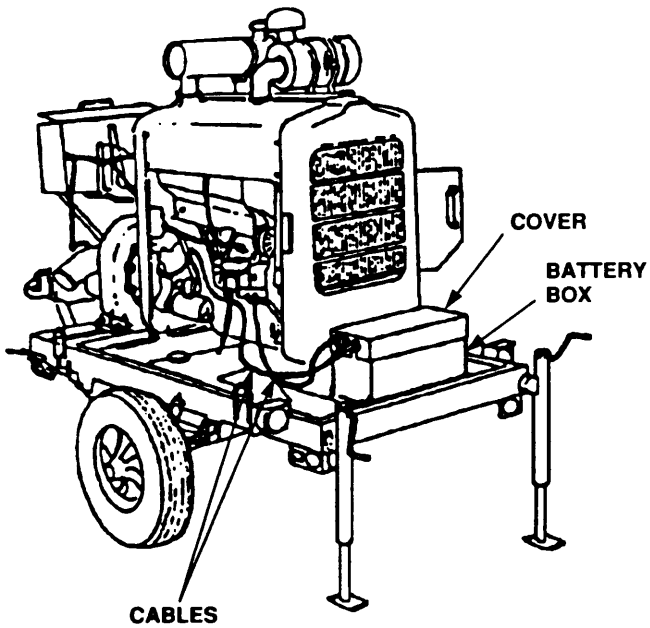

WARNING

- Fumes from battery acid may cause explosion, which could result in personal injury. Keep sparks and open flame away from battery.
- Battery electrolyte contains sulfuric acid, which can cause severe burns. Handle batteries with care. If electrolyte should contact skin or clothing, rinse immediately with clean water.

16	Before	Battery Box and Cover	Check for damage. If damaged, notify unit maintenance.	
17	Before	Battery and Cables	Remove cover. Check cables for corrosion, loose connections, and damage. Clean corrosion and tighten connections as required. Check battery for cracks. Remove battery caps and check fluid level. If fluid level is low, notify unit maintenance. Install battery caps and battery box cover.	Cracked battery. Low fluid level. Damaged battery cables.

Table 2-10. Preventive Maintenance Checks and Services for Pumping Assembly Model 609-A. (Continued)

Item No.	Interval	Location: Item to Check/Service	Procedure	Not Fully Mission Capable if:
		ENGINE - CONT		
18	Before	Fan Belt	Check belt for wear and damage. Check for 1/2 in. deflection at center of belt, between water pump and alternator. If belt is worn, damaged or not properly adjusted, notify unit maintenance.	Belt is worn, damaged or not properly adjusted.
19	Before	Wiring Harness	Check for loose or damaged connections. If connection is loose or damaged, notify unit maintenance.	Wiring damaged to extent pumping assembly does not operate.

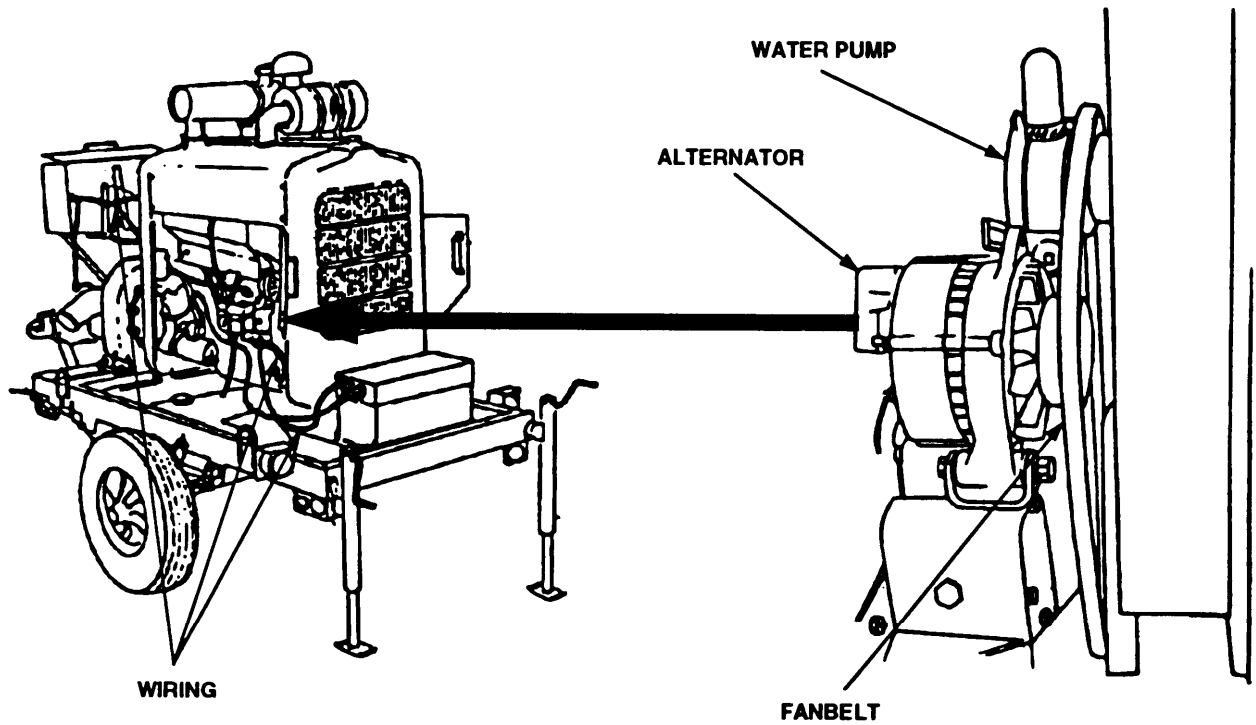

Table 2-10. Preventive Maintenance Checks and Services for Pumping Assembly Model 609-A. (Continued)

Item No.	Interval	Location: Item to Check/Service	Procedure	Not Fully Mission Capable if:
		ENGINE - CONT		
20	Before	Muffler	Check for damage and loose clamps. Tighten loose clamps. If muffler is damaged, notify unit maintenance.	Muffler is damaged.
21		Air Cleaner	Check for damage. Check for and tighten loose clamps. Check if service indicator is red. If air cleaner is damaged or if service indicator is red, notify unit maintenance.	Air cleaner is damaged. Service indicator is red.

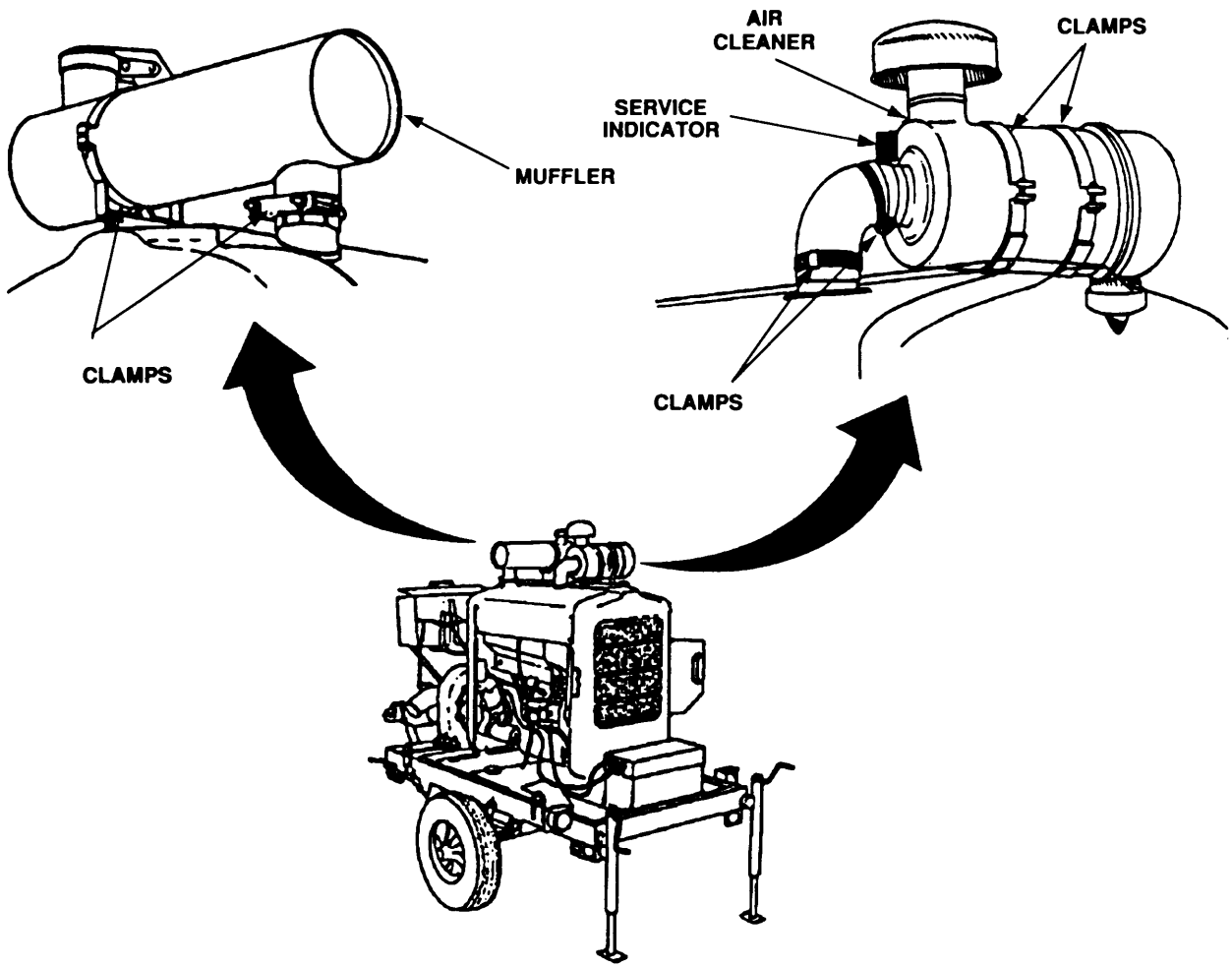

Table 2-10. Preventive Maintenance Checks and Services for Pumping Assembly Model 609-A. (Continued)

Item No.	Interval	Location: Item to Check/Service	Procedure	Not Fully Mission Capable if:
		CONTROL PANEL		
22	Before	Enclosure	Check control panel box and cover for damage. Check for damaged hinge or fastener. If box, cover, hinge, or fastener is damaged, notify unit maintenance.	
23	Before	Gauges and Meters	Check gauge and meter faces for cracked or broken glass. If glass is cracked or broken, notify unit maintenance.	Glass is cracked or broken.
24	Before	Controls	Check controls for free movement. If control binds, notify unit maintenance.	Control binds.

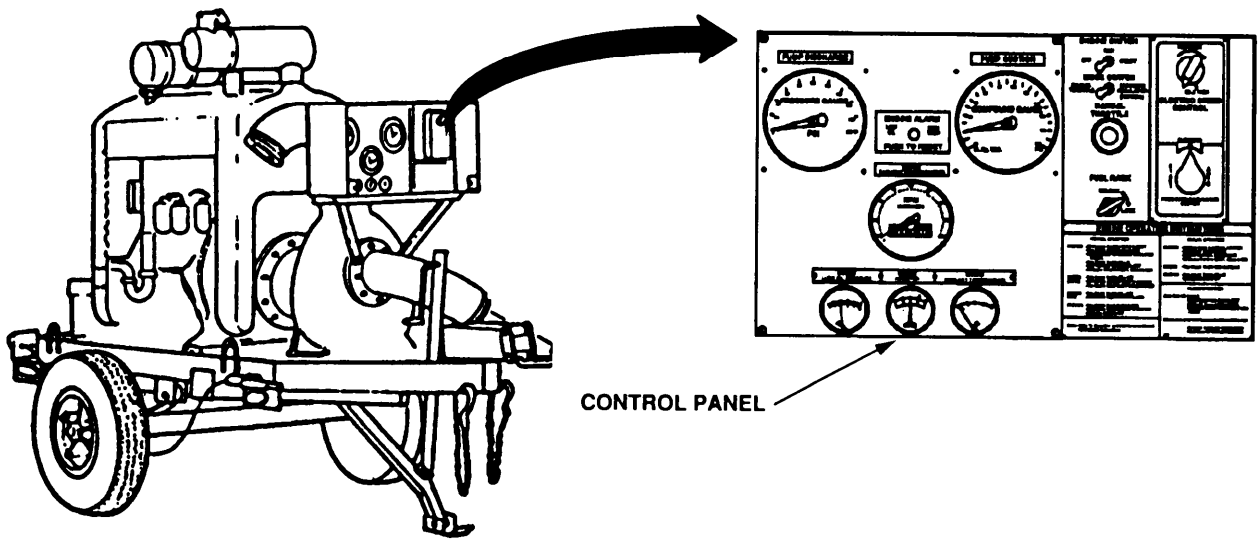

Table 2-10. Preventive Maintenance Checks and Services for Pumping Assembly Model 609-A. (Continued)

Item No.	Interval	Location: Item to Check/Service	Procedure	Not Fully Mission Capable if:
		PUMP ASSEMBLY		
25	Before	Pump Casing	Check for damage and leaks. If pump is damaged or leaking, notify unit maintenance.	Class III leak. Pump is damaged.
26	Before	Hoses and Fittings	Check hoses and fittings for damage and leaks. If hose or fitting is damaged or leaking, notify unit maintenance.	Class III leak. Hose or fitting is damaged.

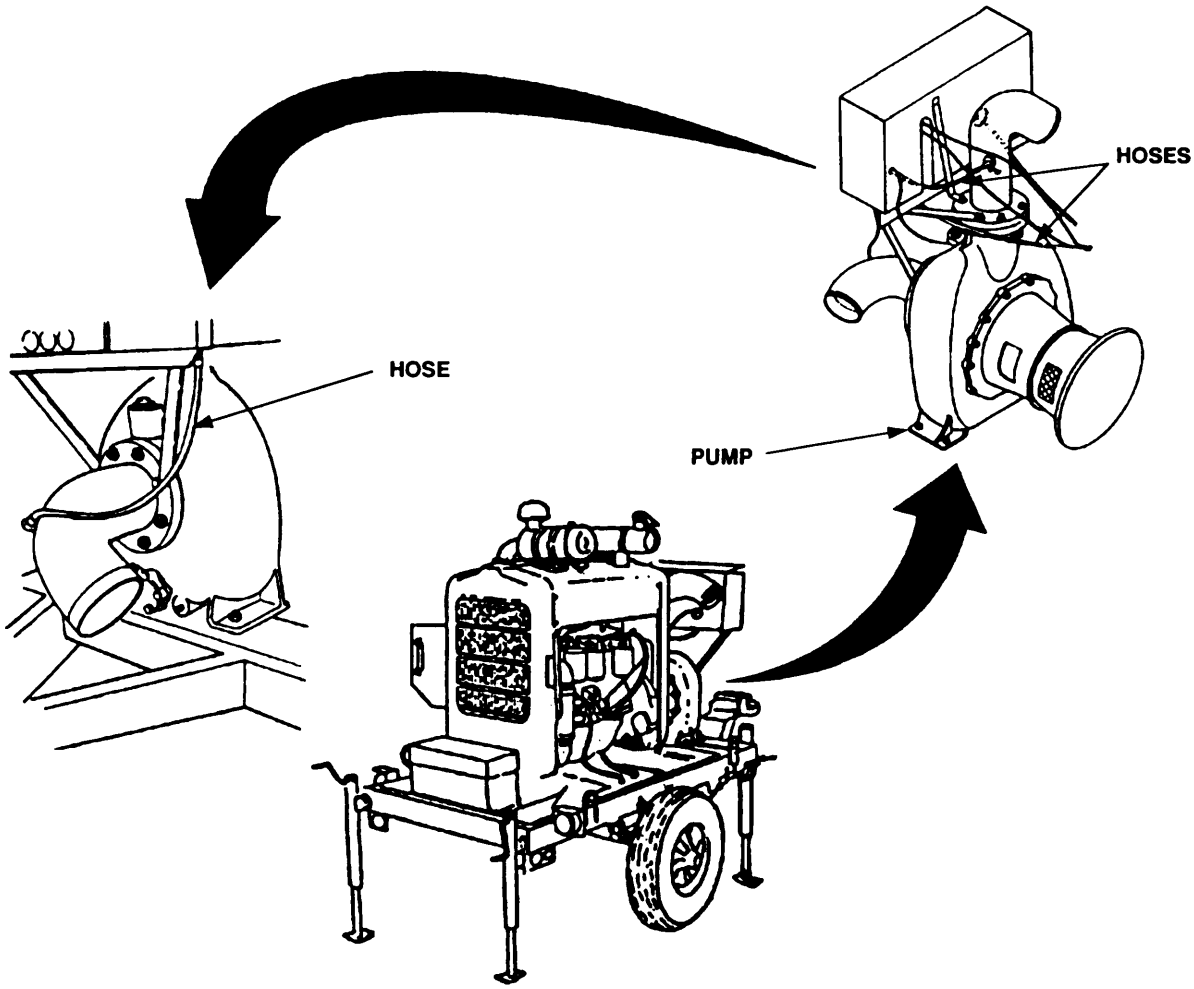

Table 2-10. Preventive Maintenance Checks and Services for Pumping Assembly Model 609-A. (Continued)

Item No.	Interval	Location Item to Check/Service	Procedure	Not Fully Mission Capable if:
		FUEL TANK		

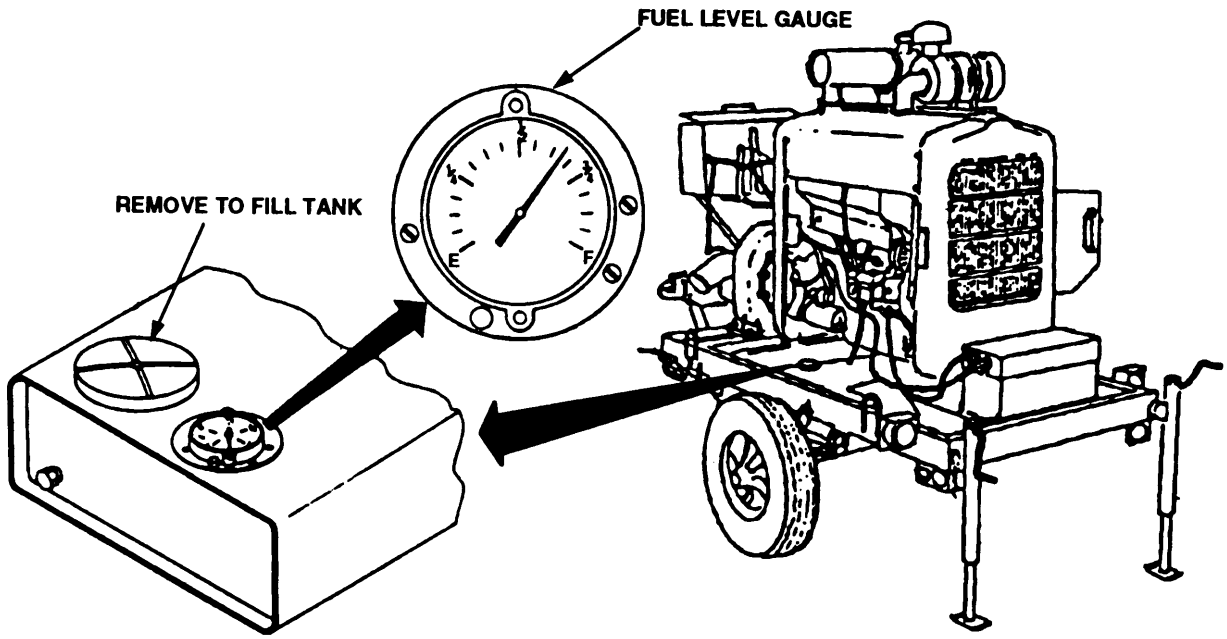

WARNING

To prevent fire or explosion and possible personal injury or death, keep open flame and sparks away from fuel tank.

27	Before	Fuel Tank and Gauge	Check fuel tank for cracks, damage, or leaks. Check fuel level indication on fuel gauge. If fuel is needed, remove fuel tank cap and add fuel. Install cap after adding fuel.	Class I, II, or III leak. Cracked or damaged fuel tank.

Table 2-10. Preventive Maintenance Checks and Services for Pumping Assembly Model 609-A. (Continued)

Item No.	Interval	Location: Item to Check/Service	Procedure	Not Fully Mission Capable if:
		EXTERIOR		
28	During	Leaks	Inspect ground for evidence of leaks. If leaks are present, notify unit maintenance.	Any evidence of leaks.
		ENGINE		
29	During	Fuel Lines	Inspect lines for damage and leaks. If line is damaged or leaking, notify unit maintenance.	Class I, II, or III leak. Fuel line is damaged.
30	During	Oil Lines	Inspect lines for damage and leaks. If line is damaged or leaking, notify unit maintenance.	Class III leak. Oil line is damaged.

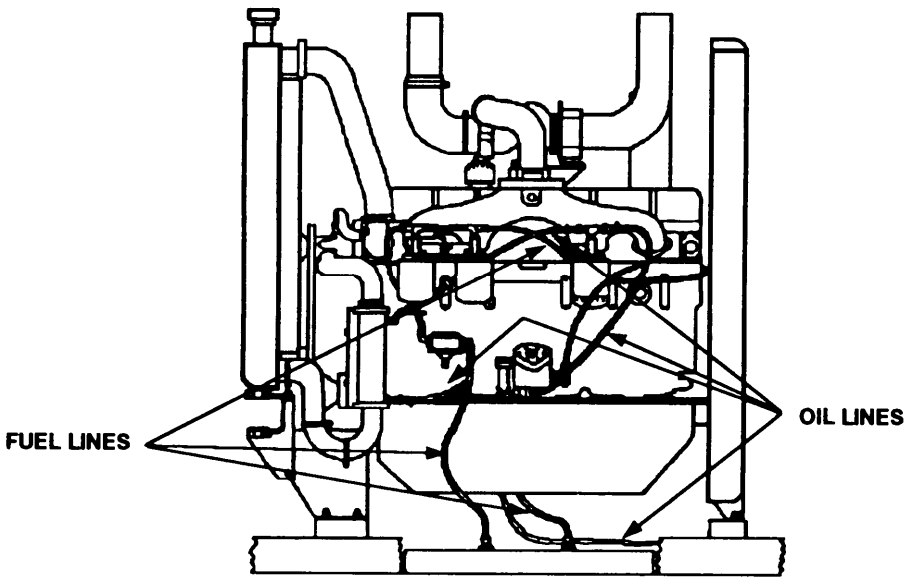

Table 2-10. Preventive Maintenance Checks and **Services for** *Pumping Assembly Model 609-A. (Continued)*

Item No.	Interval	Location: Item to Check/Service	Procedure	Not Fully Mission Capable if:
		ENGINE - CONT		
31	During	Muffler	Listen for excessive noise. If muffler makes excessive noise, notify unit maintenance.	
32	During	Air Cleaner	Check if service indicator is red. If red, notify unit maintenance.	Air cleaner service indicator is red.

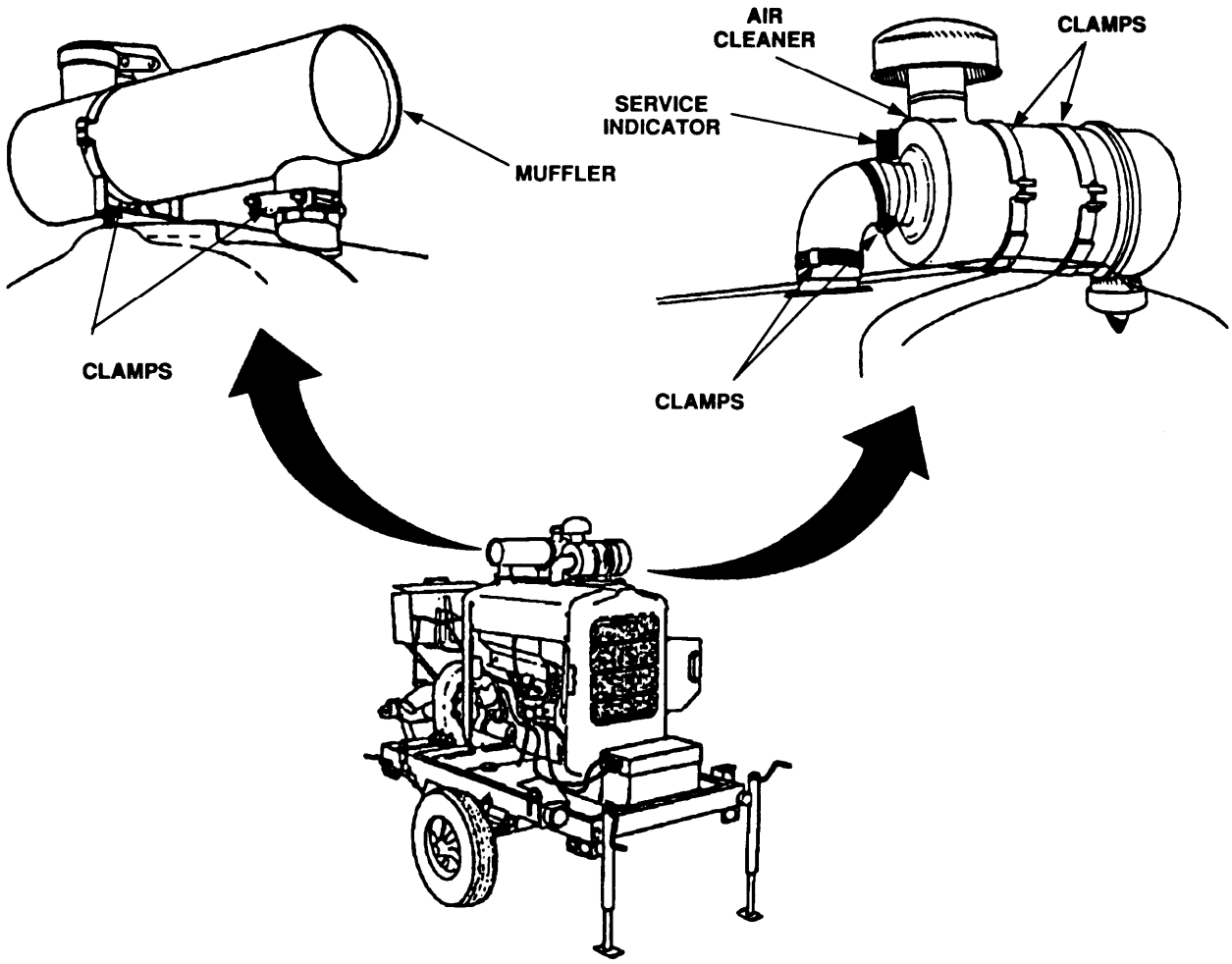

Table 2-10. Preventive Maintenance Checks and Services for Pumping Assembly Unit 609-A - Continued

Item No.	Interval	Location: Item to Check/Service	Procedure	Not Fully Mission Capable if:
		CONTROL PANEL		
33	During	Gauges and Meters	Check gauge and meter faces for cracked or broken glass. If glass is cracked or broken, notify unit maintenance.	Glass is cracked or broken.
		PUMP ASSEMBLY		
34	During	Pump Casing	Check for leaks. If pump is leaking, notify unit maintenance.	Class III leak.
35	During	Hoses and Fittings	Check hoses and fittings for leaks. If hose or fitting is leaking, notify unit maintenance.	Class III leak.

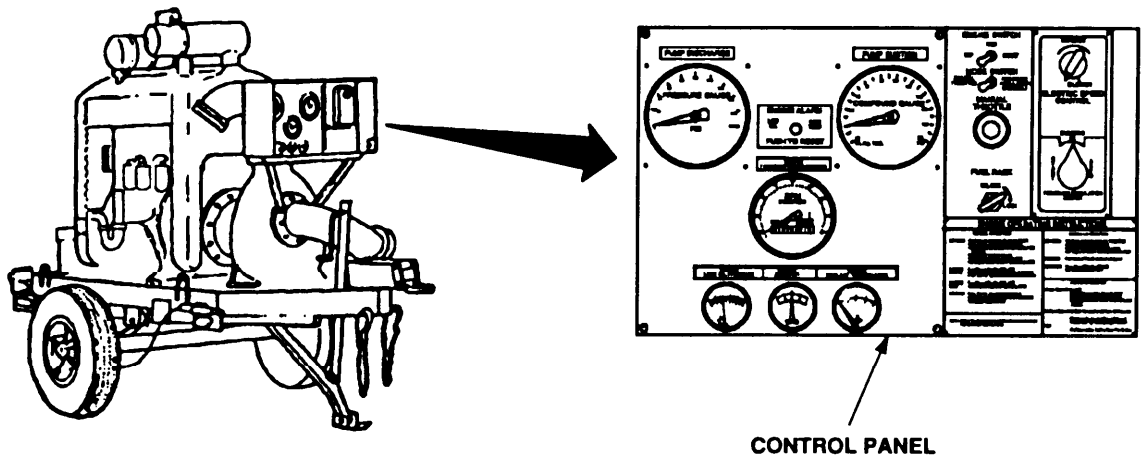

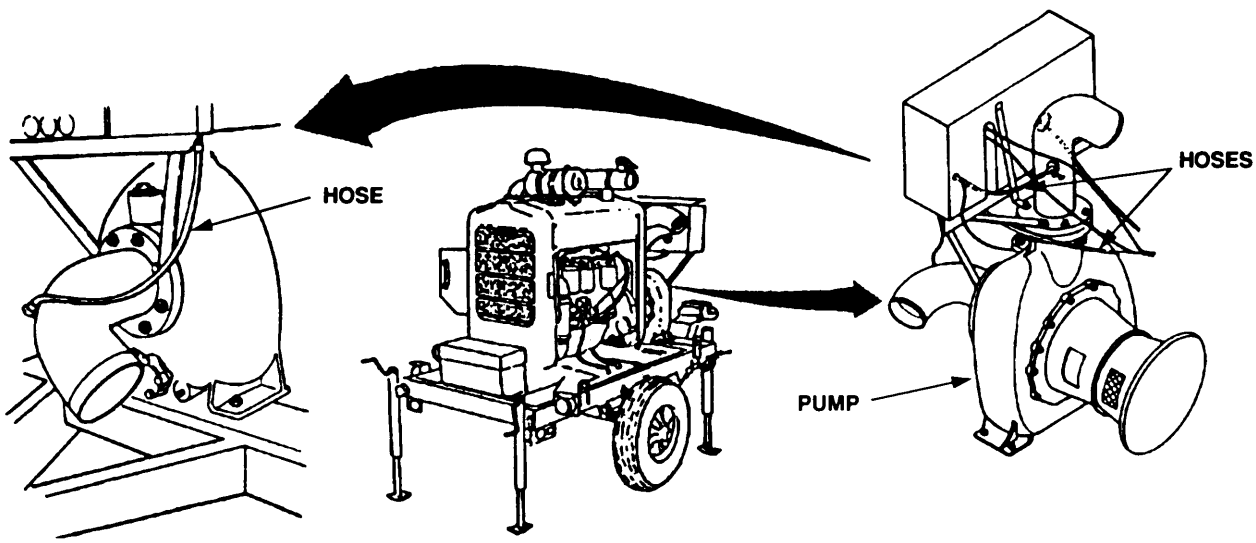

Table 2-10. Preventive Maintenance Checks and services **for** *Pumping Assembly Model* **609-A.** *(Continued)*

Item No.	Interval	Location: Item to Check/Service	Procedure	Not Fully Mission Capable if:
		FUEL TANK		

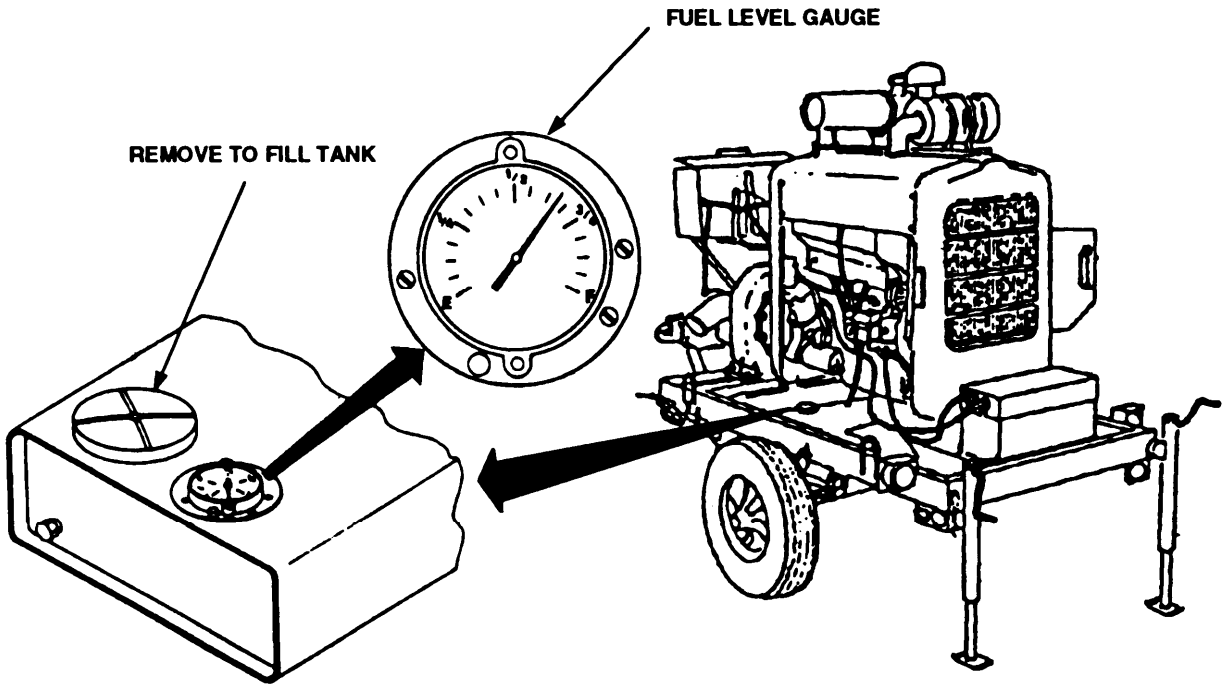

WARNING

Hot refueling of pumping assembly while it is operating poses a safety hazard and should not be attempted. Hot engine surfaces and sparks produced from the engine and control circuitry are possible sources of ignition. Severe personal injury or death and/or damage to the equipment may result.

36	During	Fuel Tank and Gauge	Check fuel tank for cracks, damage, or leaks. Check fuel level indication on fuel gauge. If fuel is required, stop engine and allow to cool. Then remove fuel tank cap and add fuel. Install cap after adding fuel.	Class I, II, or III leak. Cracked or damaged fuel tank.

Table 2-10. Preventive Maintenance Checks and Services for Pumping Assembly Model 609-A. (Continued)

Item No.	Interval	Location: Item to Check/Service	Procedure	Not Fully Mission Capable if:
		EXTERIOR		
37	After	Leaks	Inspect ground for evidence of leaks. If leaks are present, notify unit maintenance.	Any evidence of leaks on ground.

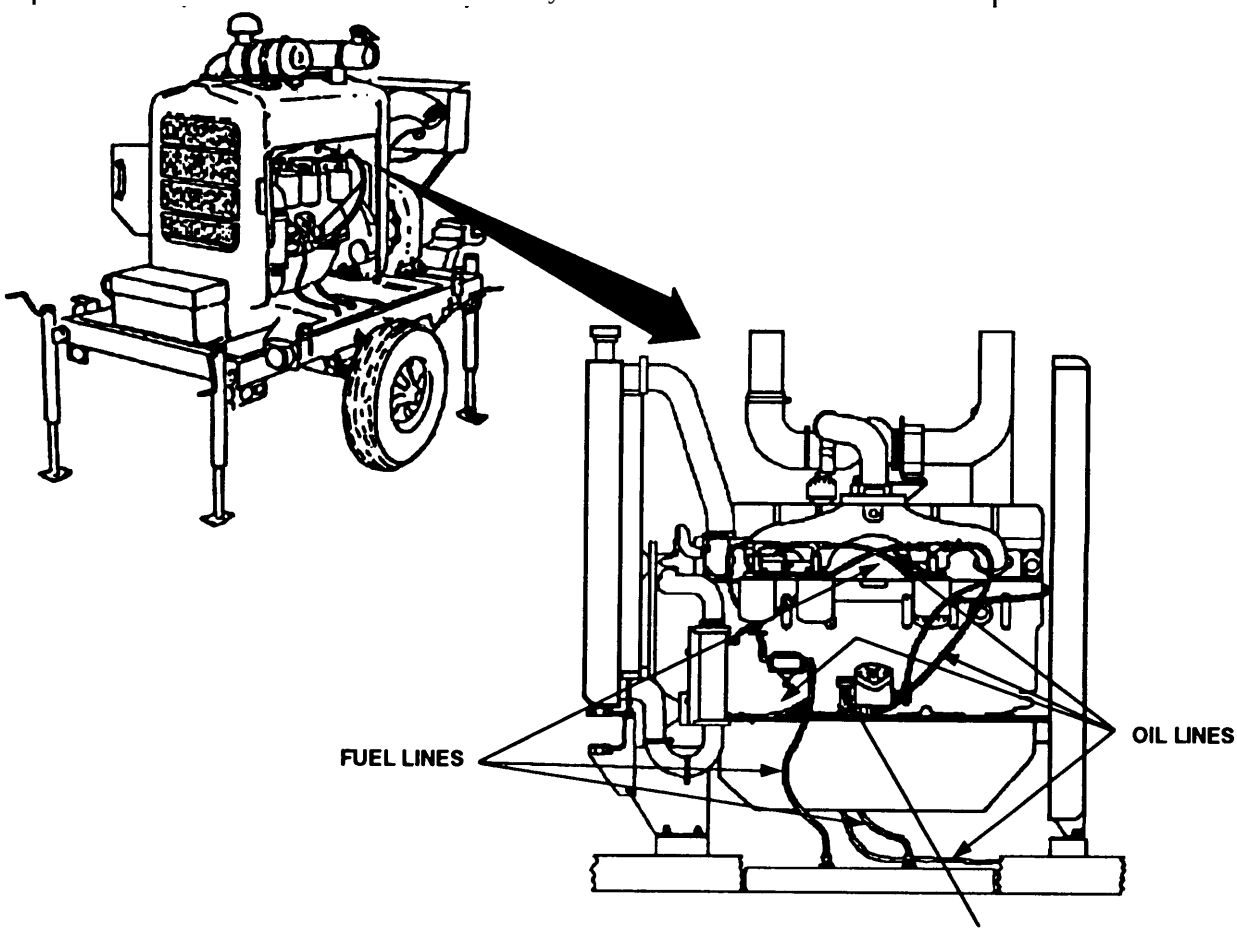

		ENGINE		
38	After	Fuel Lines	Inspect lines for leaks or damage. If line is leaking or damaged, notify unit maintenance.	Class I, II, or III leak. Fuel line is damaged.
39	After	Oil Lines	Inspect lines for leaks or damage. If line is leaking or damaged, notify unit maintenance.	Class III leak. Oil line is damaged.
40	After	Oil Dipstick	Check level. If oil is at or below ADD mark on dipstick, remove cap from oil filler neck. Add oil as required, to FULL mark on dipstick. Refer to LO 10-4320-344-12. Install cap after adding oil.	Oil level is at or below ADD mark on dipstick. Dipstick is missing.

Table 2-10. Preventive Maintenance Checks and Services for Pumping Assembly Model 609-A. (Continued)

Item No.	Interval	Location: Item to Check/Service	Procedure	Not Fully Mission Capable if:
		ENGINE - CONT		
41	After	Primary Fuel Filter	open valve bottom and drain water and sediment. Close valve when fuel starts coming through outlet.	Class I, II, or III leak. Cracked or damaged filters.

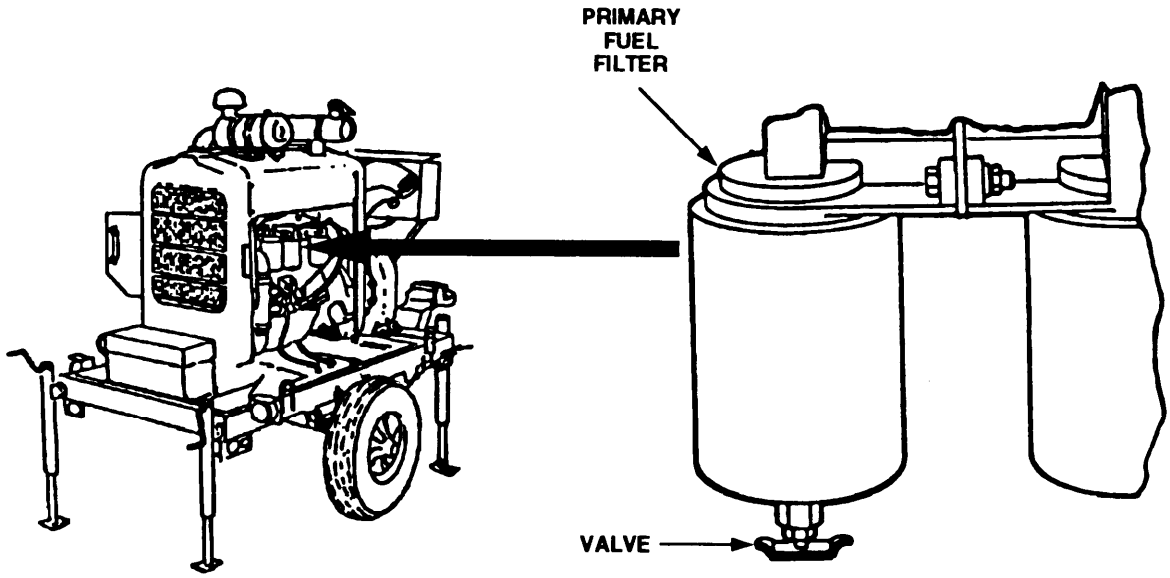

42	After	Cooling System Hoses	Inspect for leaks or damage. If hose leaks or is damaged, notify unit maintenance.	Class III leak. Hose is damaged.

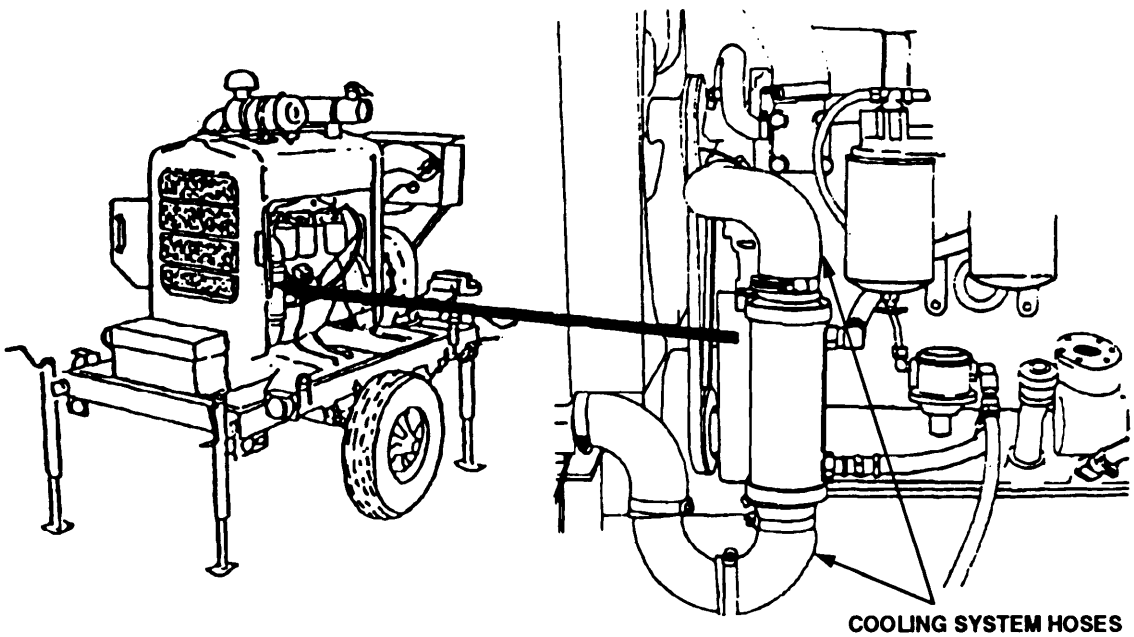

Table 2-10. Preventive Maintenance Checks and Services for Pumping Assembly Model 609-A. (Continued)

Item No.	Interval	Location: Item to Check/Service	Procedure	Not Fully Mission Capable if:
		ENGINE - CONT		
43	After	Air Cleaner	Check if service indicator is red. If red, notify unit maintenance.	Air cleaner service indicator is red.
		CONTROL PANEL		
44	After	Gauges and Meters	Check gauge and meter faces for cracked or broken glass. If glass is cracked or broken, notify unit maintenance.	Glass is cracked or broken.
45	After	Controls	Check controls for free movement. If control binds, notify unit maintenance.	Control binds.

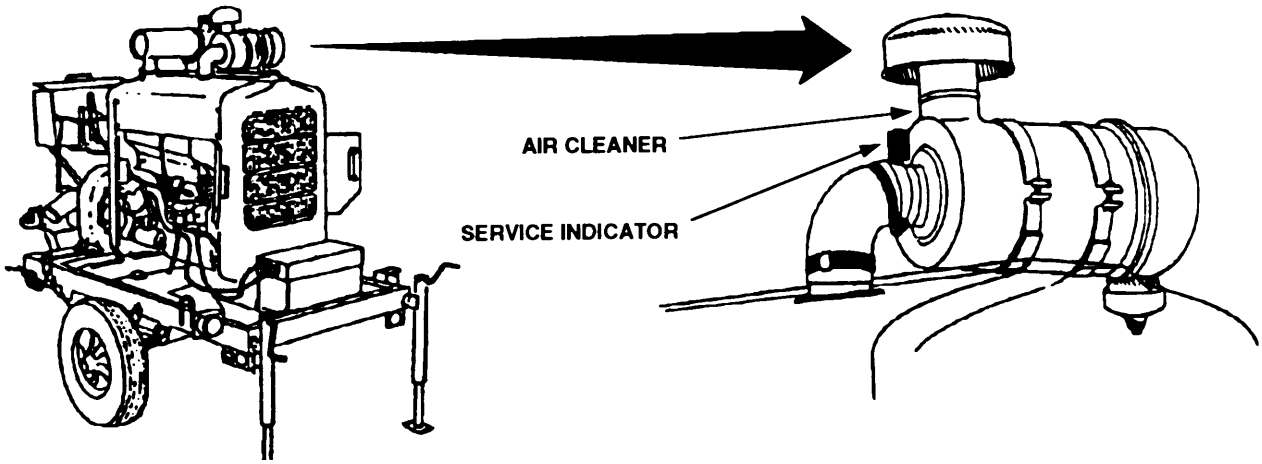

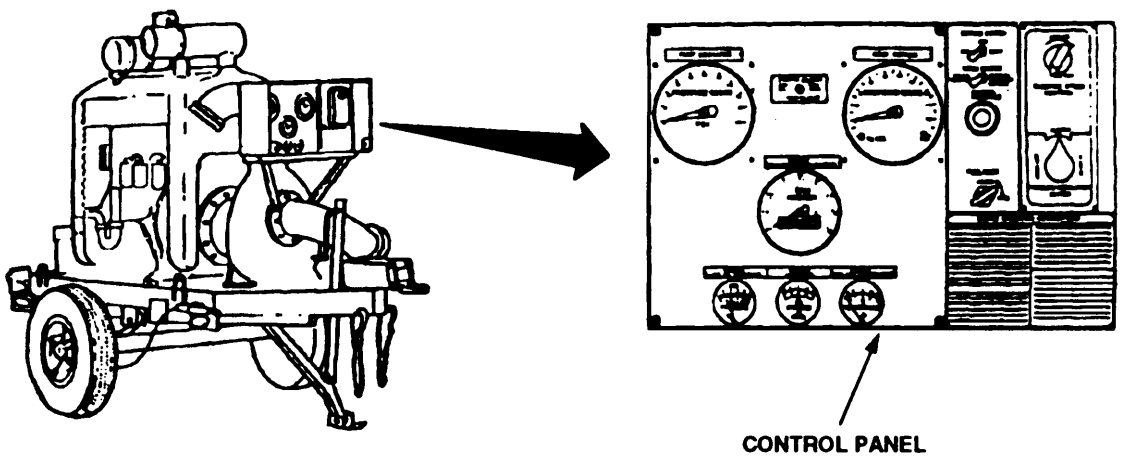

Table 2-10. Preventive Maintenance Checks and Services for Pumping Assembly Model 609-A. (Continued)

Item No.	Interval	Location: Item to Check/Service	Procedure	Not Fully Mission Capable if:
		FUEL TANK		

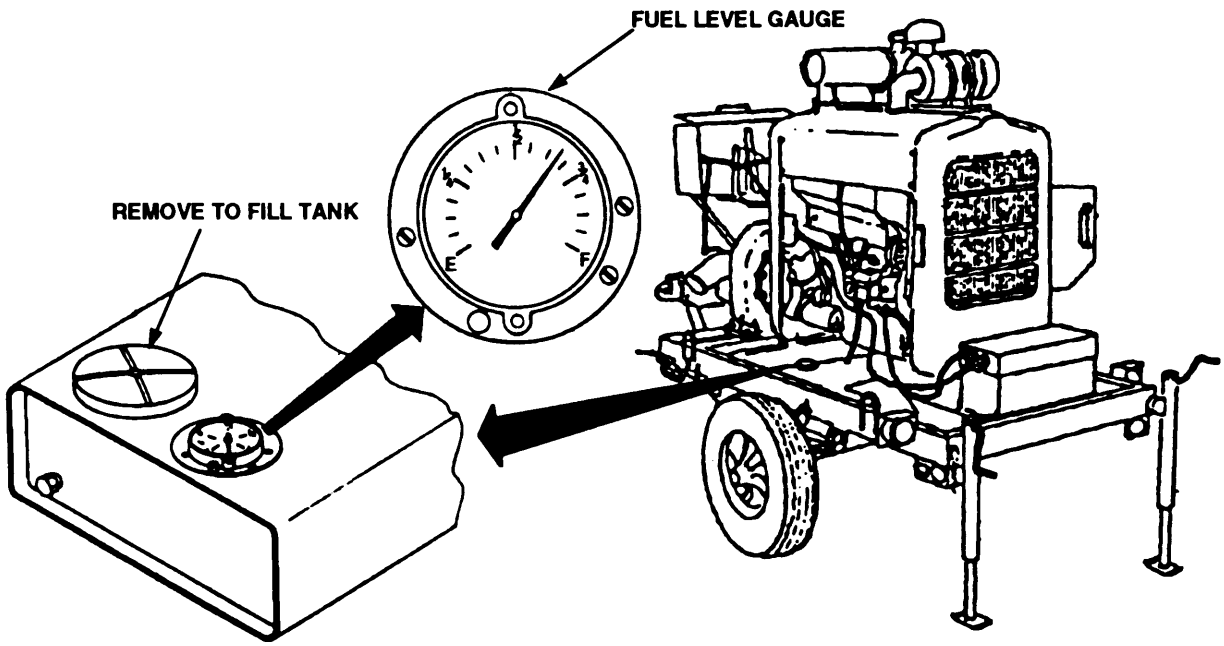

WARNING

To prevent fire or explosion and possible personal injury, keep open flame and sparks away from fuel- tank.

CAUTION

To prevent condensation, fill tank after operation.

46	After	Fuel Tank and Gauge	Check fuel tank for cracks, damage, and leaks. Check fuel level indication on fuel gauge. If fuel is required, remove fuel tank cap and add fuel. Install cap after adding fuel.	Class I, II, or III leak. Cracked or damaged fuel tank.

Table 2-10. Preventive Maintanance Checks and Services for Pumping Assembly Model 609-A. (Continued)

Item No.	Interval	Location: Item to Check/Service	Procedure	Not Fully Mission Capable if:
		TRAILER CHASSIS		
47	After	Safety/Breakaway Chains and Intervehicular Cable	Check for damaged/broken safety and breakaway chains. Check intervehicular cable for damaged connector and broken pins. If chain is damaged or broken or intervehicular cable connector is damaged or has broken pin(s), notify unit maintenance.	Chain is damaged or broken. Intervehicular cable connector is damaged or has broken pin(s).
48	Weekly	Lights	Check for cracked or broken lenses. If lens is cracked or broken, notify unit maintenance.	
49	Weekly	Tires and Rims	Check for damage to rims and tires. If rim or tire is damaged, notify unit maintenance.	Rim or tire is damaged.

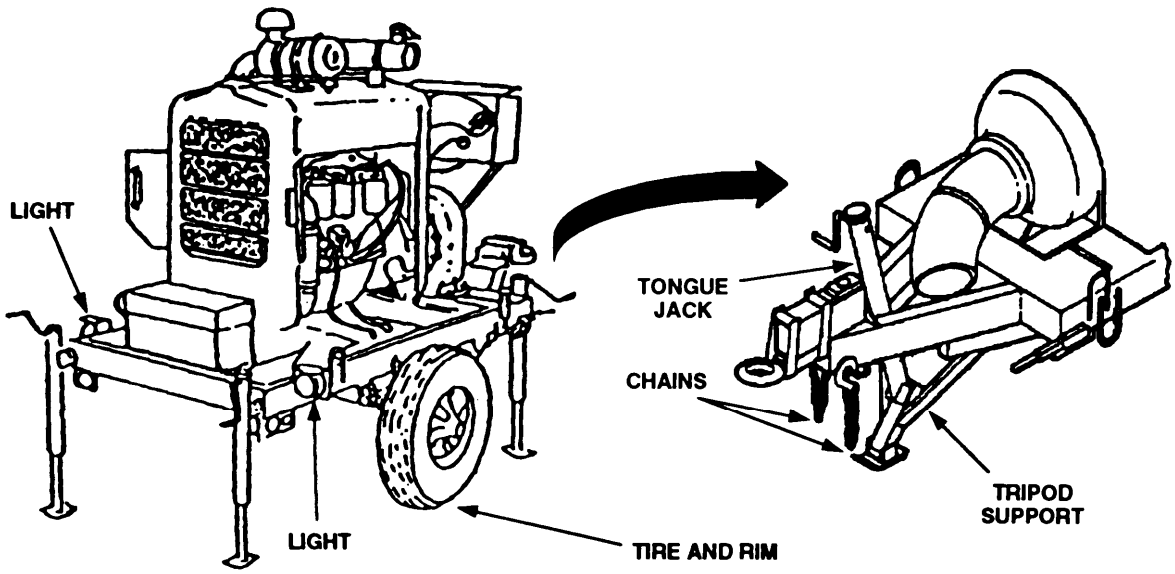

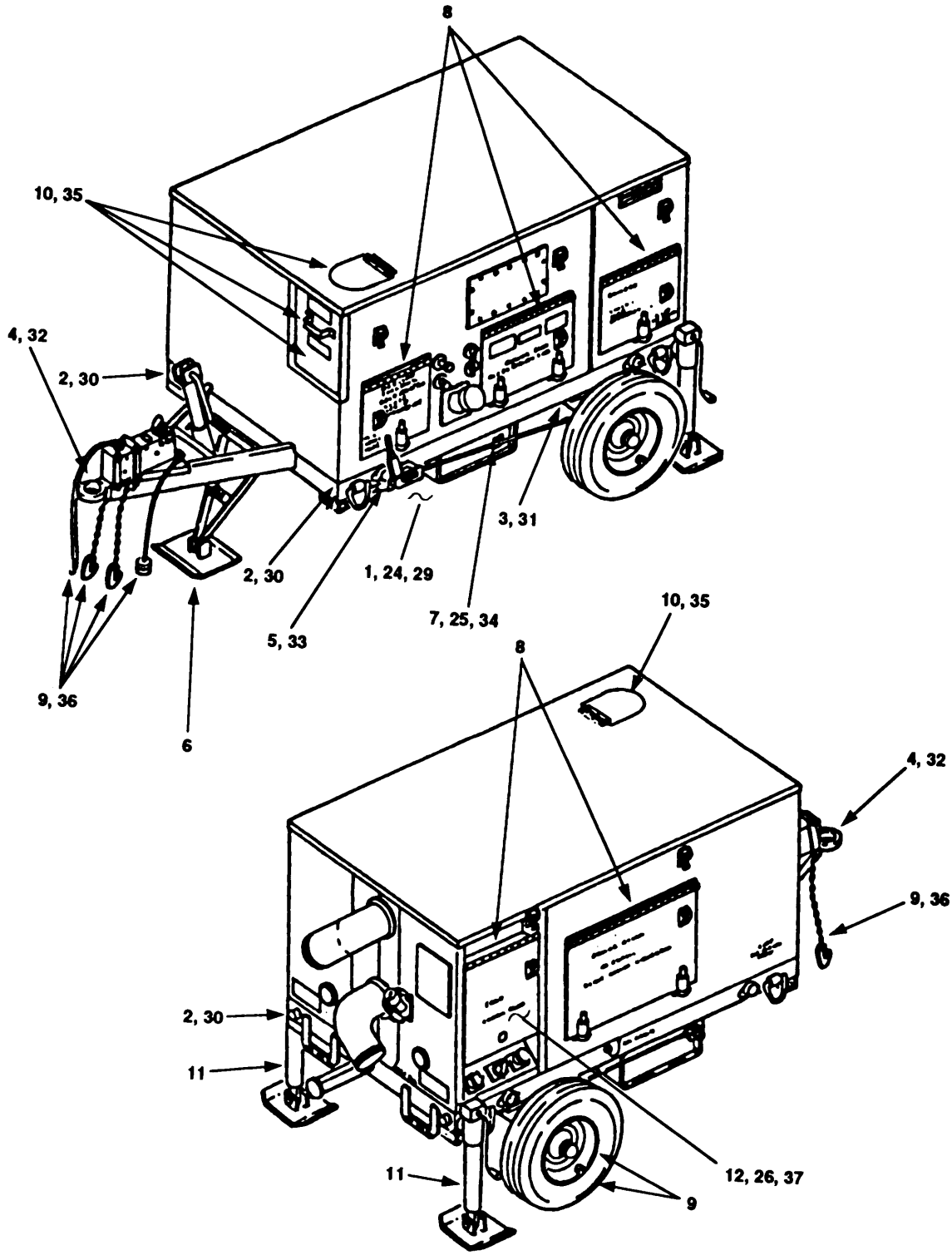

Figure 2-11. Pumping Assembly Model 609-C PMCS Routing Diagram (Sheet 1 of 2).

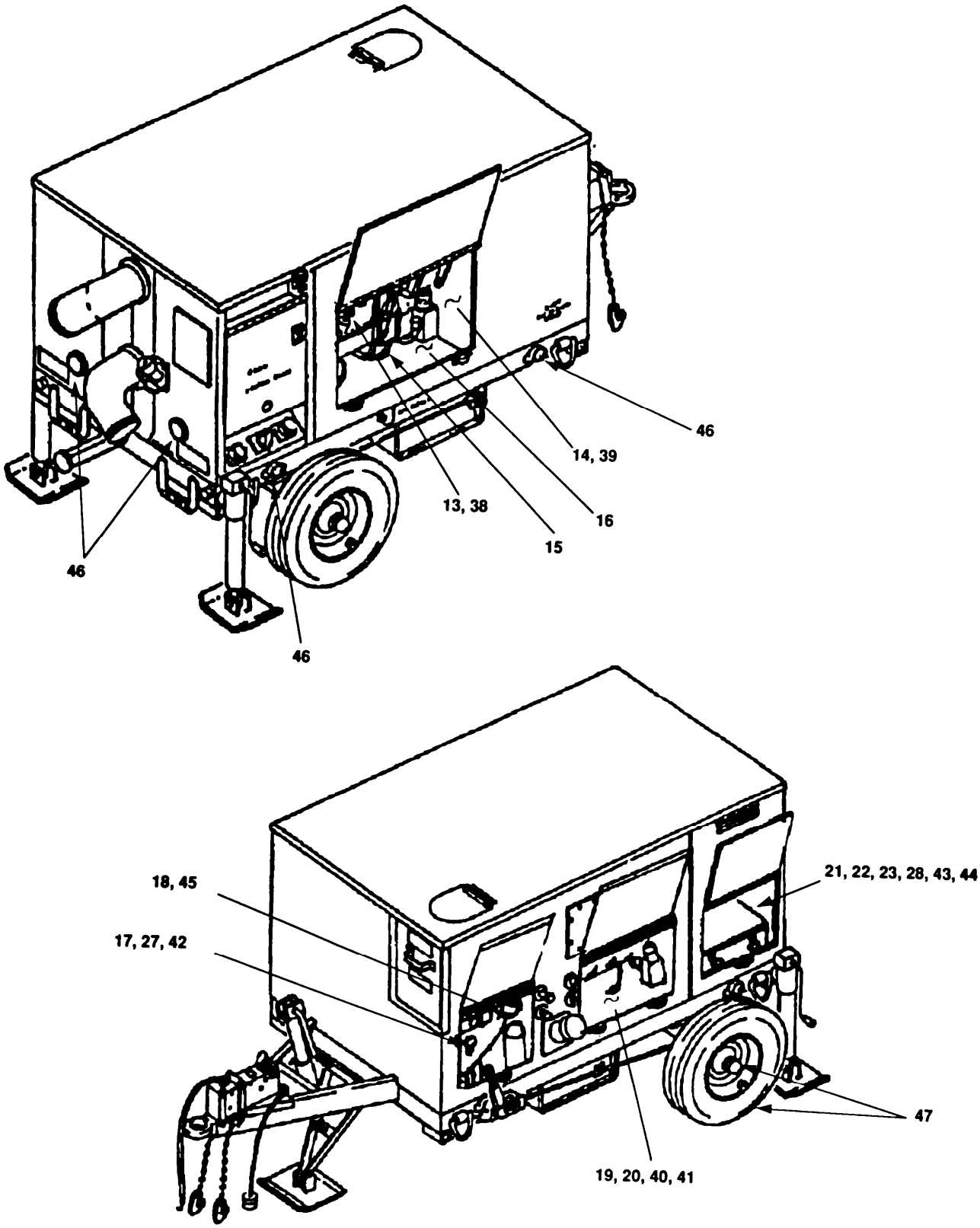

Figure 2-11. Pumping Assembly Model 609-C PMCS Routing Diagram (Sheet 2 of 2).

Table 2-11. Preventive Maintenance Checks and Services for Pumping Assembly Model 609-C.

Item No.	Interval	Location: Item to Check/Service	Procedure	Not Fully Mission Capable if:
		EXTERIOR		
1	Before	Leaks	Inspect ground under engine for evidence-of leaks. If leaks are present, notify unit maintenance.	Any evidence of leaks.
		TRAILER CHASSIS AND ENCLOSURE		
2	Before	Frame Seam Welds	Inspect all frame seam welds for damage. If damaged, notify unit maintenance.	Weld is damaged.
3	Before	Axle and Springs	Check for damage. If damaged, notify unit maintenance.	Axle or spring is damaged.
4	Before	Lunette	Check for damage. If damaged, notify unit maintenance.	Lunette is damaged.
5	Before	Park Brake Lever	Check that park brake lever will lock and unlock trailer wheels. Check for proper adjustment. Adjust as required.	Park brake lever will not lock or unlock trailer wheels.

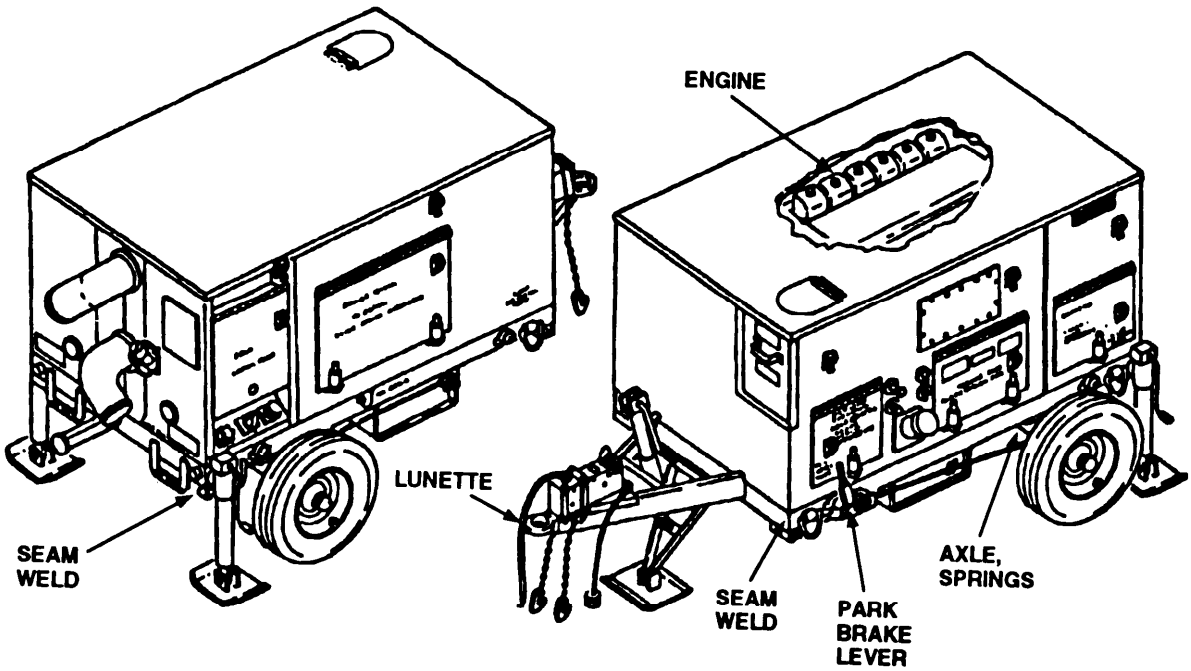

Table 2-11. Preventive Maintenance Checks and Services for Pumping Assembly Model 609-C. (Continued)

Item No.	Interval	Location: Item to Check/Services	Procedure	Not Fully Mission Capable if:
		TRAILER CHASSIS AND ENCL - CONT		

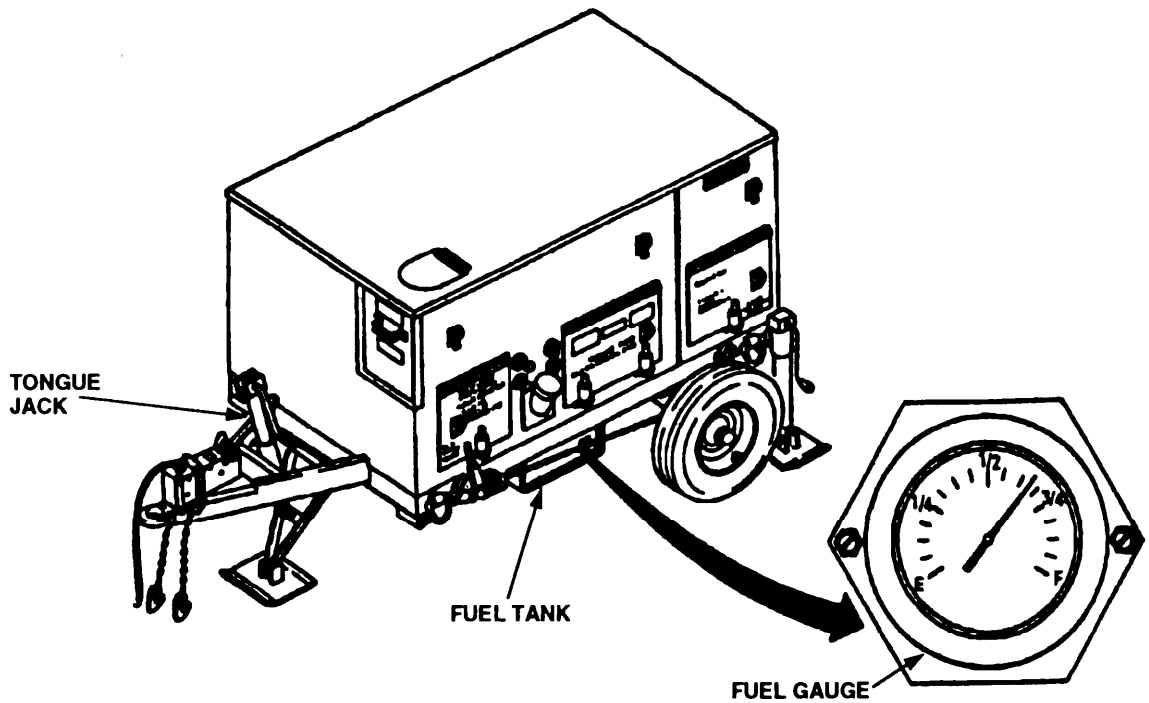

6	Before	Tongue Jack	Check tongue jack supports, welds, and tongue jack for damage. If damaged, notify unit maintenance. Check that tongue jack is secured and operable. If not operable, notify unit maintenance.	Tongue jack is damaged, not secured, or not operable.

WARNING

To prevent fire or explosion and possible personal injury, keep open flame and sparks away from fuel tank.

7	Before	Fuel Tank and Gauge	Check fuel tank for cracks, damage, and leaks. Check fuel level indication on fuel gauge. If fuel is required, remove fuel tank cap and add fuel. Install cap after adding fuel.	Class I, II, or III leak. Fuel tank is cracked or damaged.

Table 2-11. Preventive Maintenance Checks and services for Pumping Assembly Model 609-C. (continued)

Item No.	Interval	Location: Item to Check/Service	Procedure	Not Fully Mission Capable if:
		TRAILER CHASSIS AND ENCL - CONT		
8	Before	Access Doors	Check that doors can be opened and closed. Check for bent or cracked panels. Check for missing or damaged hinges, latches, and mounting hardware. If door is inoperable or damaged or parts are missing or damaged, notify unit maintenance.	

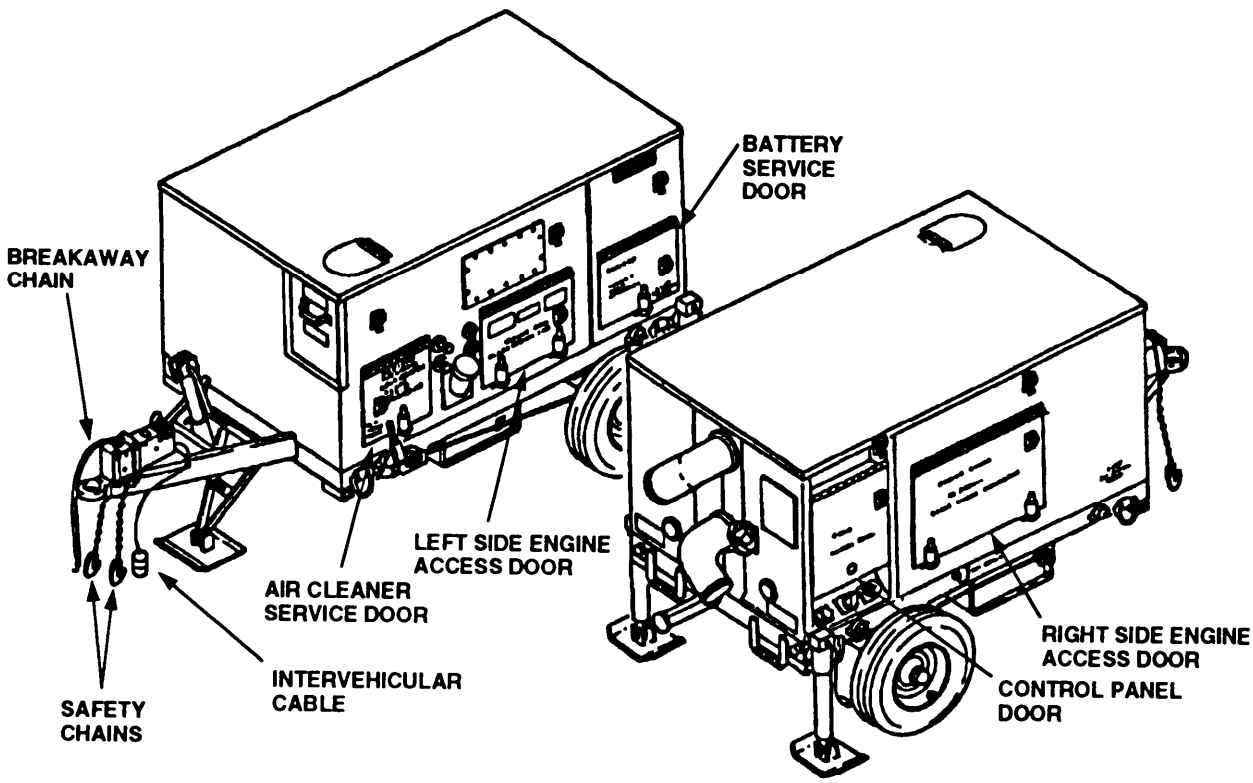

9	Before	Safety/Breakaway Chains and Intervehicular Cable	Check for damaged/broken safety and breakaway chains. Check intervehicular cable for damaged connector and broken pins. If chain is damaged or broken or intervehicular cable connector is damaged or has broken pin(s), notify unit maintenance.	Chain is damaged or broken. Intervehicular cable connector is damaged or has broken pin(s).

Table 2-11. Preventive Maintenance Checks and Services for Pumping Assembly Model 609-C. (Continued)

Item No.	Interval	Location: Item to Check/Service	Procedure	Not Fully Mission Capable if:
		TRAILER CHASSIS AND ENCL - CONT		
10	Before	Cooling Air/ Engine Exhaust	Pull air outlet scoop handle outward and check that cooling air outlet scoop and engine exhaust door open with moderate pull on handle. Check for deformation and missing hardware. Push handle inward and check that both exhaust door and outlet scoop close easily. If hardware is missing or scoop or door is loose, deformed, or hard to operate, notify unit maintenance.	Outlet scoop or exhaust door is inoperable.
11	Before	Rear Jacks	Check rear jacks for damage and proper operation. Check for damage and excessive wear of pins that secure rear jacks in stow and operational positions.	Rear jack is damaged or inoperable. Pin is missing, damaged, or excessively worn.

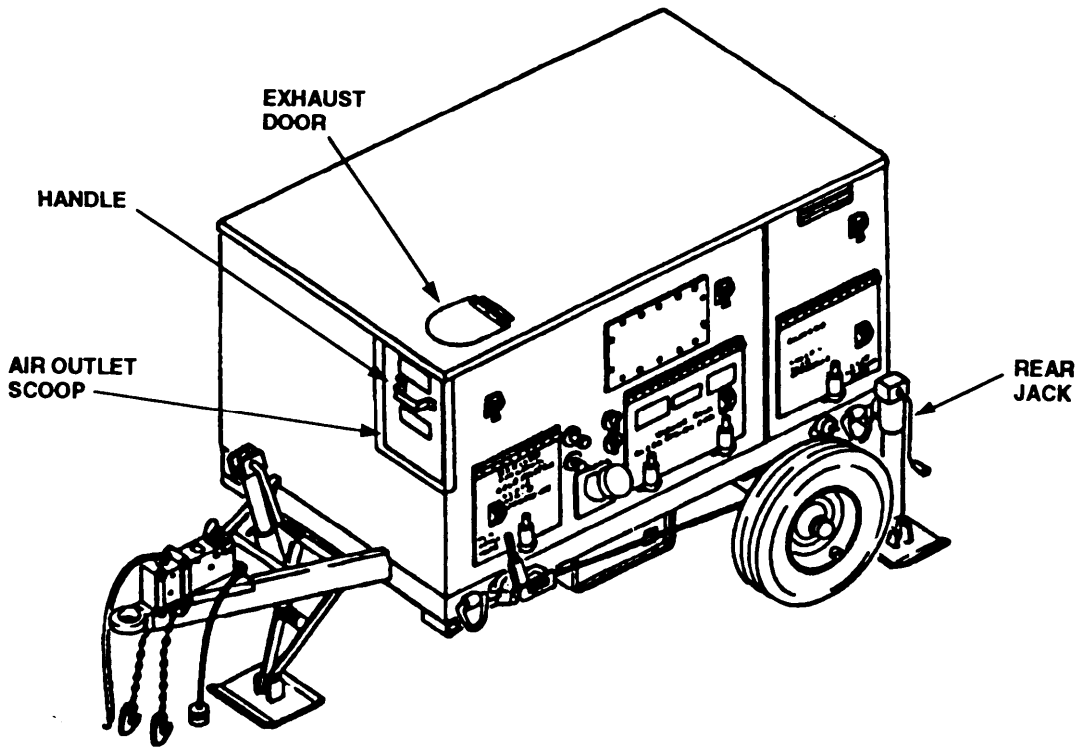

Table 2-11. Preventive Maintenance Checks and Services for Pumping Assembly Model 609-C. {Continued)

Item No.	Interval	Location: Item to Check/Service	Procedure	Not Fully Mission Capable if:
		CONTROL PANEL		
12	Before	Gauges, Meters, Switches, Controls, and Indicators	Open control panel access door. Check gauges, meters, and indicators for cracked or broken glass or damage. Check switches and controls for free movement. If any component is damaged or switch or control binds, notify unit maintenance.	Gauge or indicator is damaged. Switch or control is inoperable.

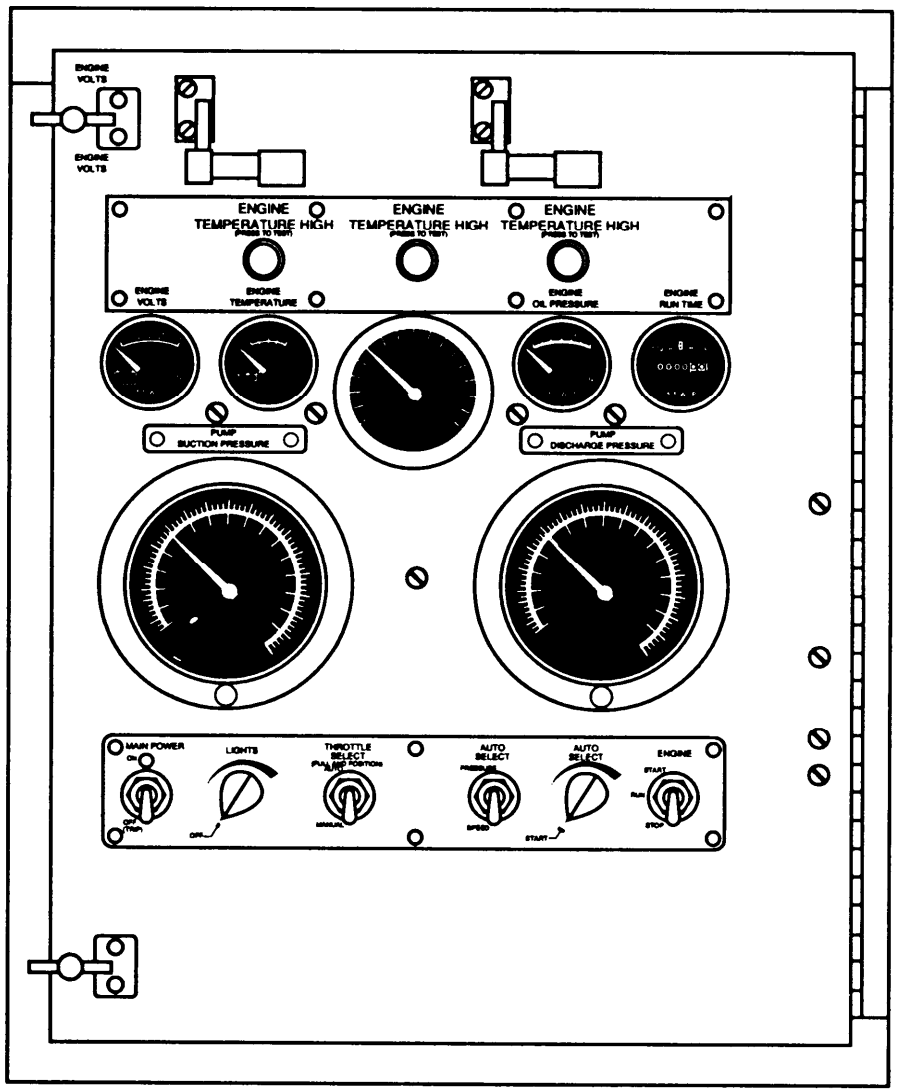

Table 2-11. Preventive Maintenance Checks and Services for Pumping Assembly Model 609-C. (Continued)

Item No.	Interval	Location: Item to Check/Service	Procedure	Not Fully Mission Capable if:
		ENGINE		
13	Before	Oil Dipstick	Check level. If oil is at or below ADD mark on dipstick, remove cap from oil filler neck. Add oil, as required, to FULL mark on dipstick. Refer to LO 10-4320-344-12. Install cap after adding oil.	Oil level is at dipstick. Dipstick is missing.
14	Before	Fan Belt	Check for missing or loose fan belt. If missing or loose, notify unit maintenance.	Fan belt is missing or loose.

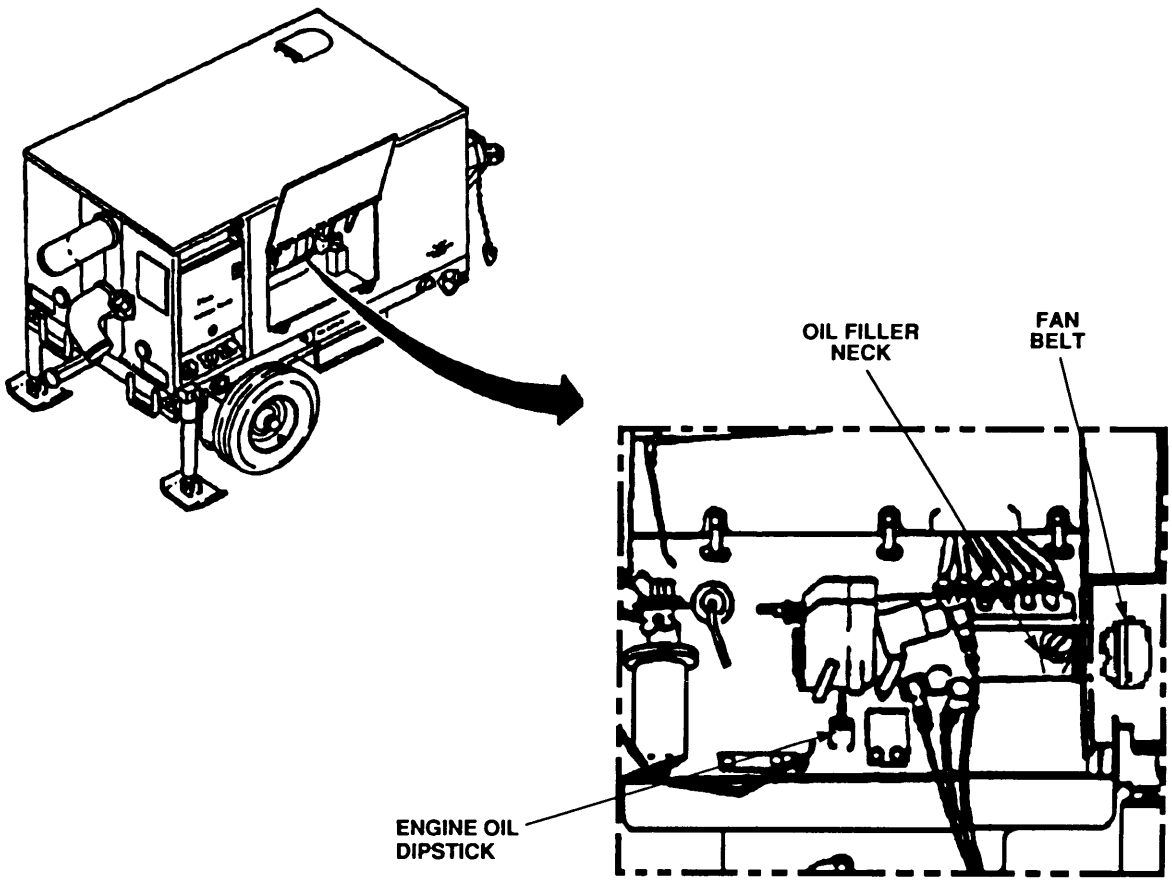

Table 2-11. Preventive Maintenance Checks and Services for Pumping Assembly Model 609-C. (Continued)

Item No.	Interval	Location: Item to Check/Service	Procedure	Not Fully Mission Capable if:
		ENGINE - CONT		
15	Before	Wiring Harness	Check for loose/disconnected wires and cable connectors to control panel, alternator, starter relay, fuel solenoid shutoff valve, magnetic pickup unit, governor actuator, and engine sensors.	Wiring damaged to extent pumping assembly does not operate.
16	Before	Cooling Fins and Oil Cooler	Remove air cowling and check for damaged fins and dirt accumulation on fins, air passages, and oil cooler. Clean as required. If cooling fins or oil cooler are damaged, notify unit maintenance.	Cooling fins or oil cooler are damaged.

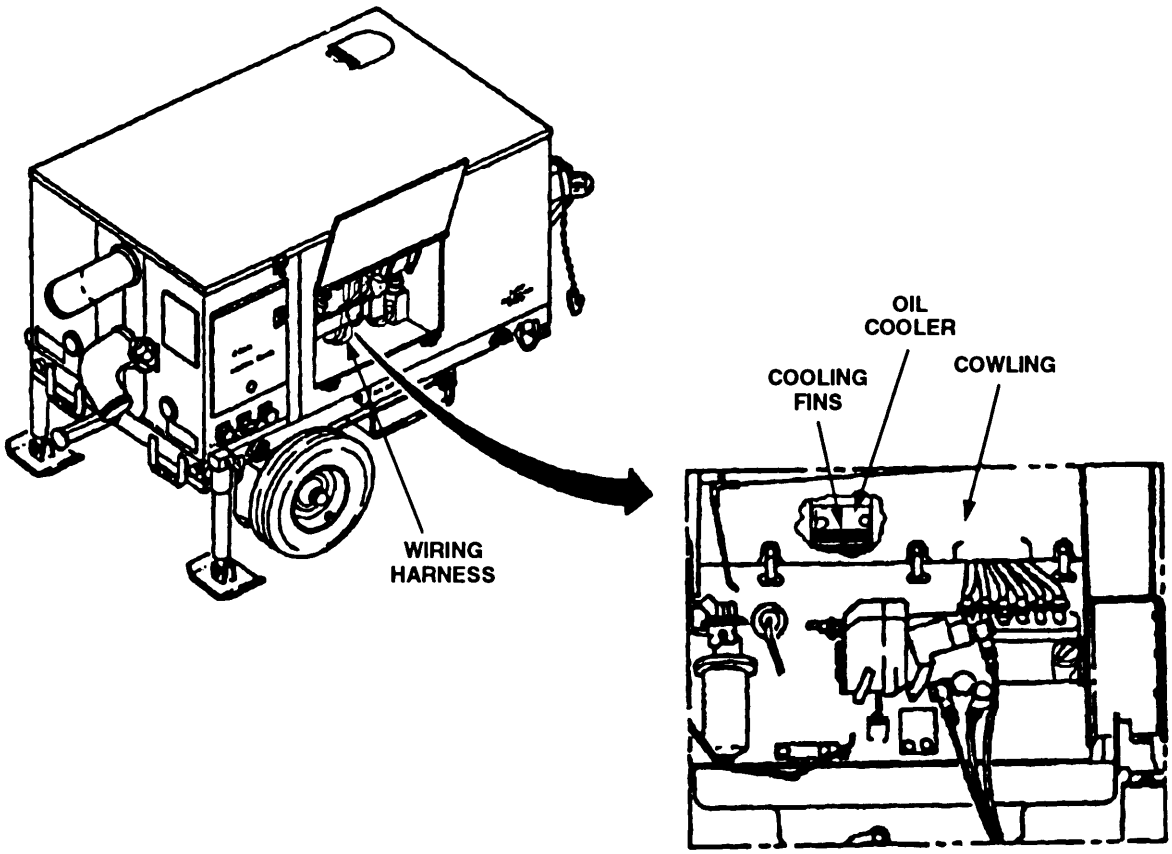

Table 2-11. Preventive Maintenance Checks and Services for Pumping Assembly Model 609-C. (continued)

Item No.	Interval	Location: Item to Check/Service	Procedure	Not Fully Mission Capable if:
		ENGINE - CONT		
17	Before	Air Cleaner	Check air filter restriction gauge indication. If indication is in or close to red band, notify unit maintenance.	Restriction gauge indication is in red band.
18	Before	Fuel Filters	Drain water from primary fuel filter by rotating knob on bottom of filter. When clear fuel is seen at drain hose outlet, turn knob in opposite direction to stop flow. Repeat for secondary fuel filter.	Class I, II, or III leak. Cracked or damaged filter.

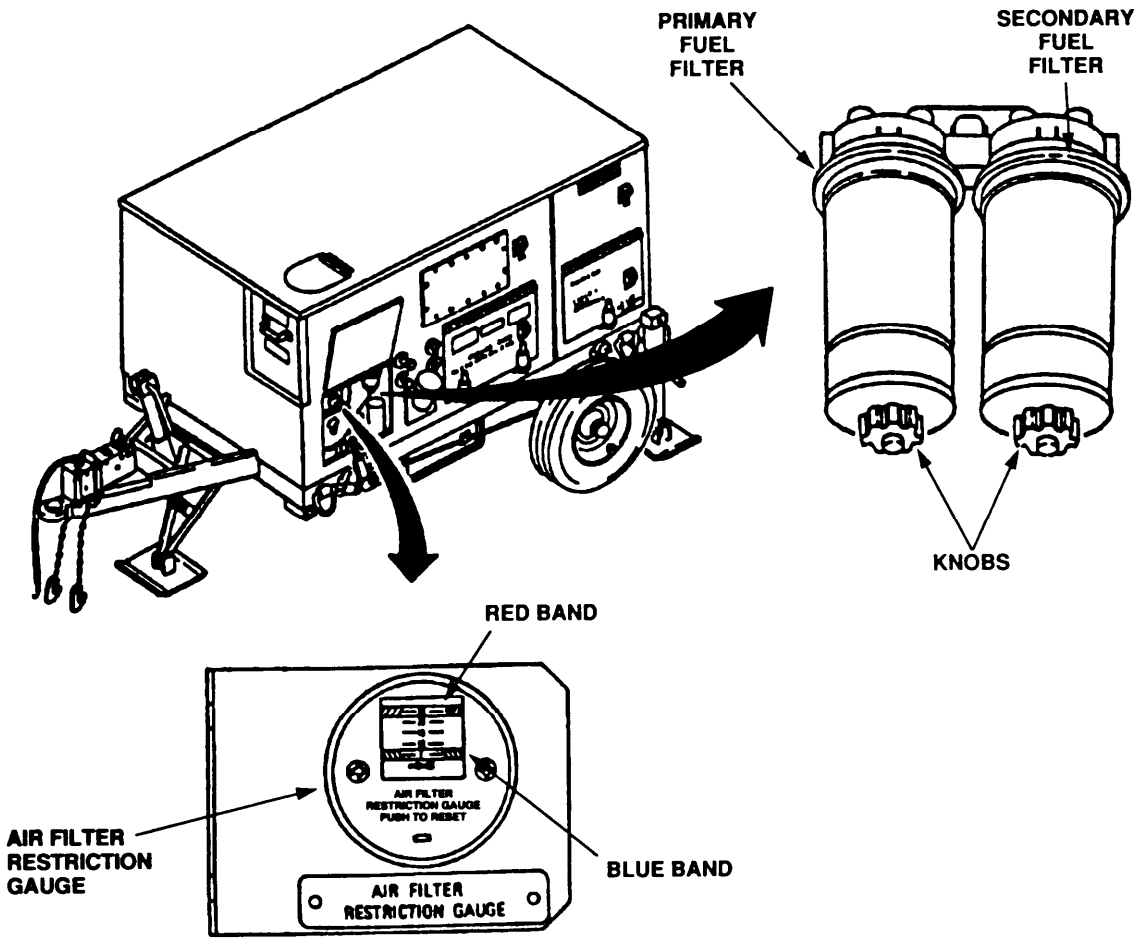

Table 2-11. Preventive Maintenance Checks and Services for Pumping Assembly Model 609-C. (Continued)

Item No.	Interval	Location: Item to Check/Service	Procedure	Not Fully Mission Capable if:
		ENGINE - CONT		
19	Before	Alternator Belt	Check for missing or loose alternator belt. If missing or loose, notify unit maintenance.	Alternator belt is missing or loose.
20	Before	Fuel Lines	Inspect lines for damage and leaks. If fuel line is damaged or leaking, notify unit maintenance.	Class I, II, or III leak. Fuel line is damaged.

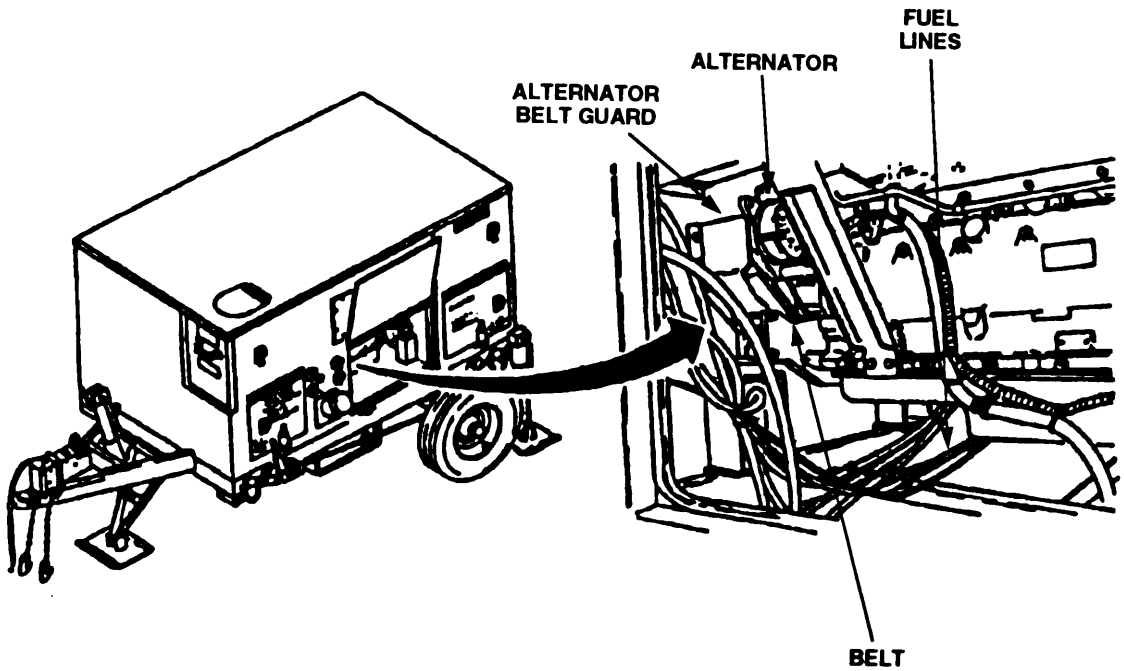

Table 2-11. Preventive Maintenance Checks and Services for Pumping Assembly Model 609-C. (Continued)

Item No.	Interval	Location: Item to Check/Service	Procedure	Not Fully Mission Capable if:
		BATTERY BOX		

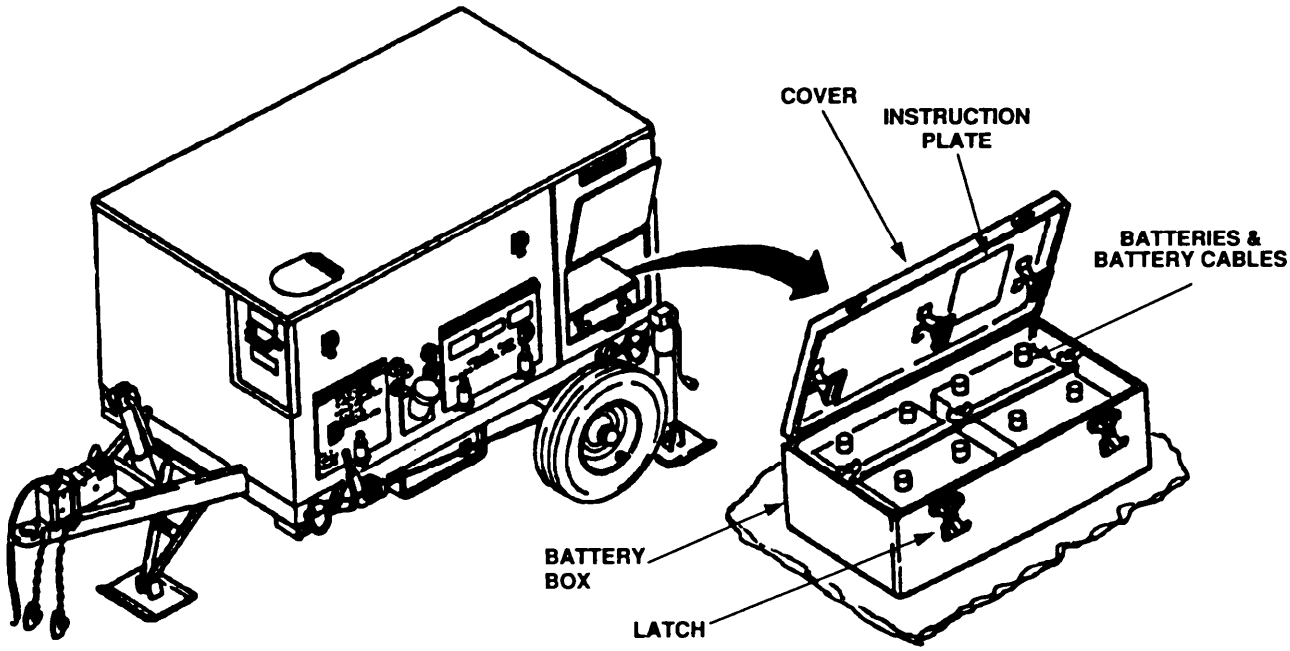

WARNING

- Fumes from battery acid may cause explosion, which could result in personal injury. Keep sparks and open flame away from battery.
- Battery electrolyte contains sulfuric acid, which can cause severe burns. Handle batteries with care. If electrolyte should contact skin or clothing, rinse immediately with clean water.

21	Before	Battery Box	Check for damage. If damaged, notify unit maintenance.	
22	Before	Batteries and Battery Cables	Unlatch and open battery box cover. Check cables for corrosion, loose connections, and damage. Clean corrosion and tighten connections as required. Check battery for cracks or damage. Remove battery caps and check fluid level. If fluid level is low, notify unit maintenance. Install battery caps. Close and latch battery box cover.	Cracked battery. Low fluid level. Damaged battery cable.

Table 2-11. Preventive Maintenance Checks and Services for Pumping Assembly Model 609-C. (Continued)

Item No.	Interval	Location: Item to Check/Service	Procedure	Not Fully Mission Capable if:
		PUMP ASSEMBLY		
23	Before	Pump Casing	Check for damage or leaks. If pump is damaged, notify unit maintenance	Class III leak. pump is damaged.
		EXTERIOR		
24	During	Leaks	Inspect ground under engine for evidence of leaks. If leaks are present, notify unit maintenance.	Any evidence of leaks.
		FUEL TANK		

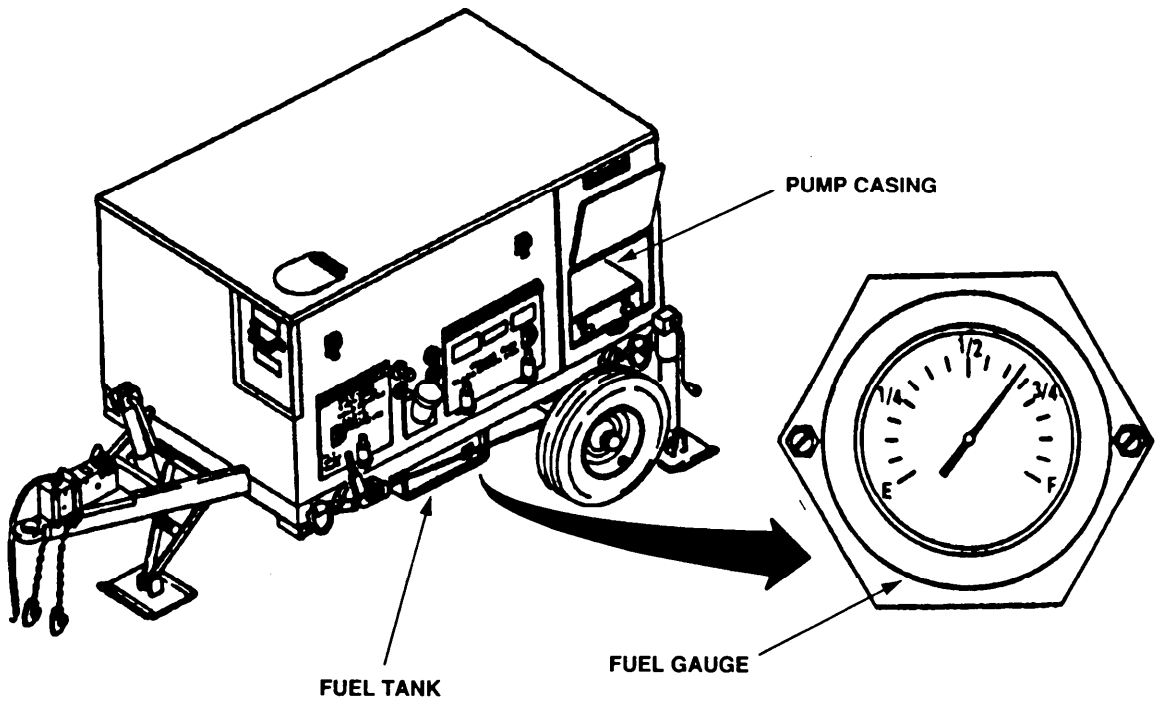

WARNING

Hot refueling of pumping assembly while it is operating poses a safety hazard and should not be attempted. Hot engine surfaces and sparks produced from the engine and control circuitry are possible sources of ignition. Severe personal injury or death and/or damage to the equipment may result.

25	During	Fuel Tank and Gauge	Check fuel tank for cracks, damage, or leaks. Check fuel level indication on fuel gauge. If fuel is required, stop engine and allow to cool. Then remove fuel tank cap and add fuel. Install cap after adding fuel.	Class I, II, or III leak. Cracked or damaged fuel tank.

Table 2-11. Preventive Maintenance Checks and Services for Pumping Assembly Model 609-C. (Continued)

Item No.	Interval	Location: Item to Check/Service	Procedure	Not Fully Mission Capable if:
		CONTROL PANEL		
26	During	Gauges, Meters, Controls, and Indicators	Observe gauges, meters, and indicators for malfunction or improper reading and cracked or broken glass. If malfunction, improper reading, or damage is seen, notify unit maintenance.	Gauge, meter, or indicator does not work, shows improper reading, or is damaged.

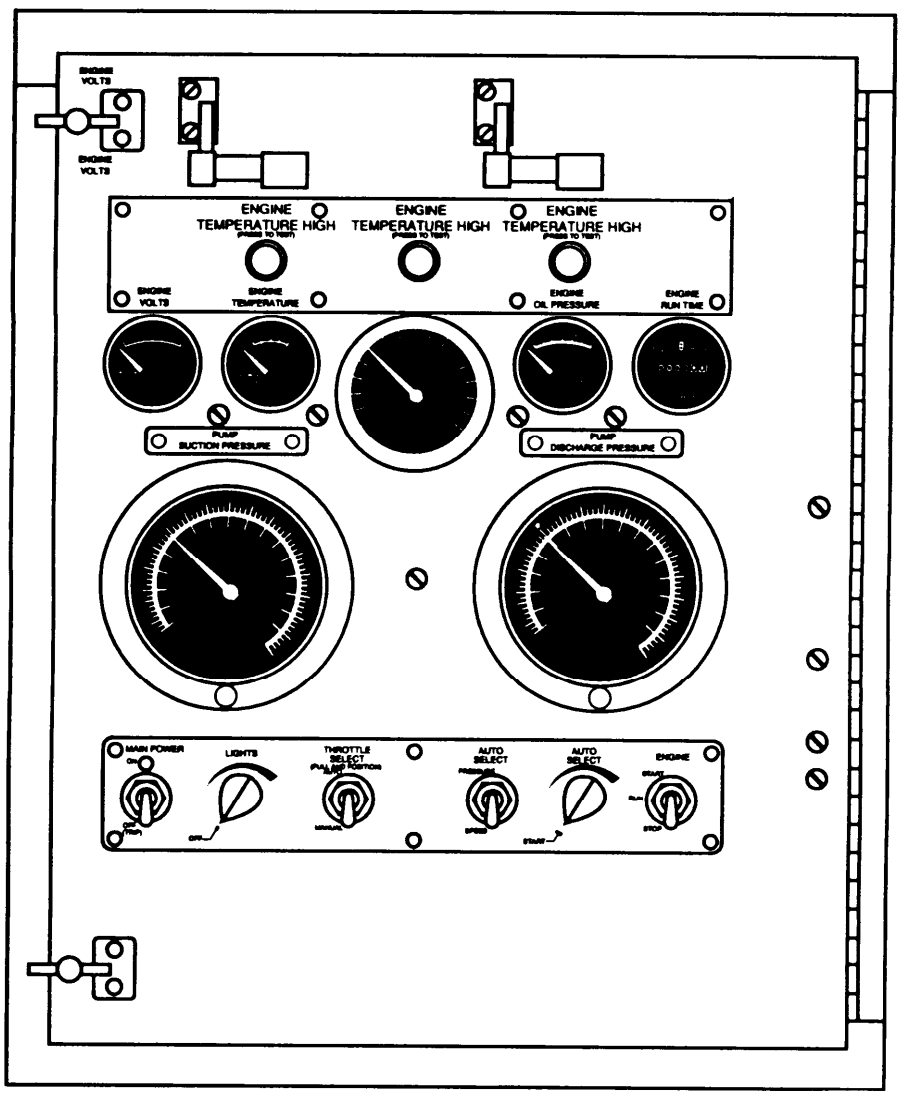

Table 2-11. Preventive Maintenance Checks and Services for Pumping Assembly Model 609-C. (Continued)

Item No.	Interval	Location: Item to Check/Service	Procedure	Not Fully Mission Capable if:
		ENGINE		
27	During	Air Cleaner	Check air filter restriction gauge indication. If indication is in or close to red band, notify unit maintenance.	Restriction gauge indication is in red band.
		PUMP ASSEMBLY		
28	During	Pump Casing	Check for leaks. If leaking notify unit maintenance.	Class III leak.
		EXTERIOR		
29	After	Leaks	Inspect ground under engine for evidence of leaks. If leaks are present, notify unit maintenance.	Any evidence of leaks.

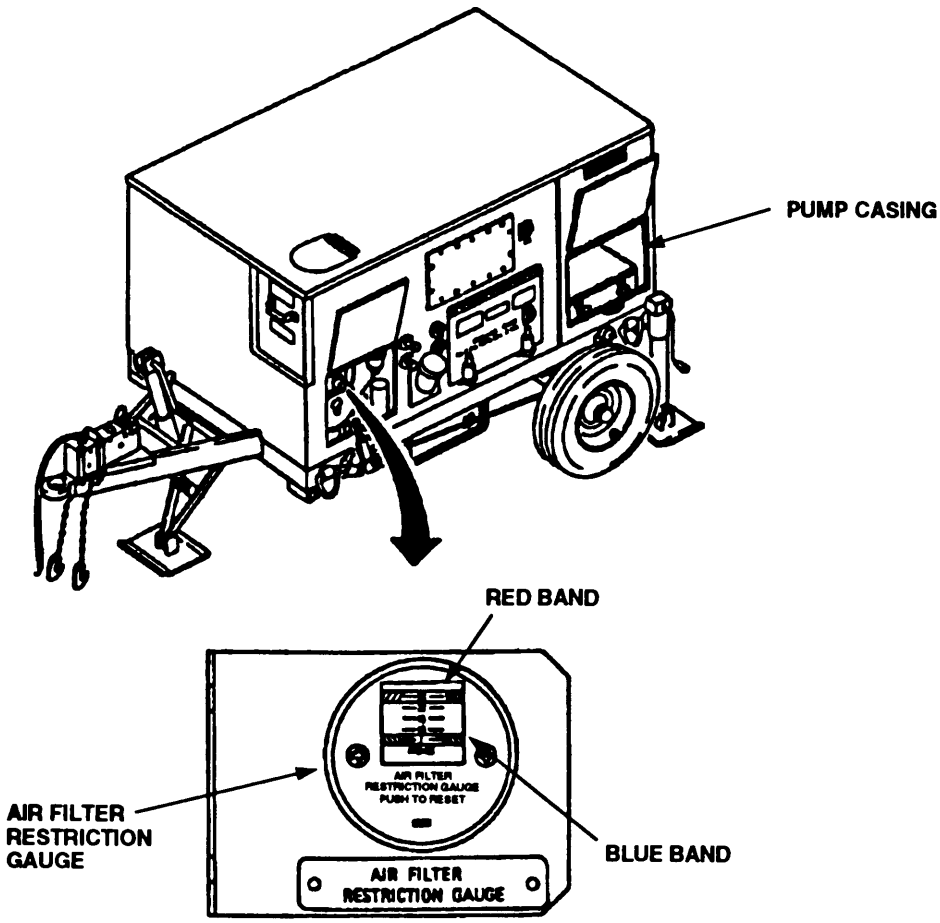

Table 2-11. Preventive Maintenance Checks and Services for Pumping Assembly Model 609-C. (continued)

Item No.	Interval	Location: Item to Check/Service	Procedure	Not Fully Mission Capable if:
		TRAILER CHASSIS AND ENCLOSURE		
30	After	Frame Seam Welds	Inspect all frame seam welds for damage. If damaged, notify unit maintenance.	Weld is damaged.
31	After	Axle and Springs	Check for damage. If damaged, notify unit maintenance.	Axle or spring is damaged.
32	After	Lunette	Check for damage. If damaged, notify unit maintenance.	Lunette is damaged.
33	After	Park Brake Lever	Check that park brake lever will lock and unlock trailer wheels. Check for proper adjustment. Adjust as required.	Park brake lever will not lock or unlock trailer wheels.

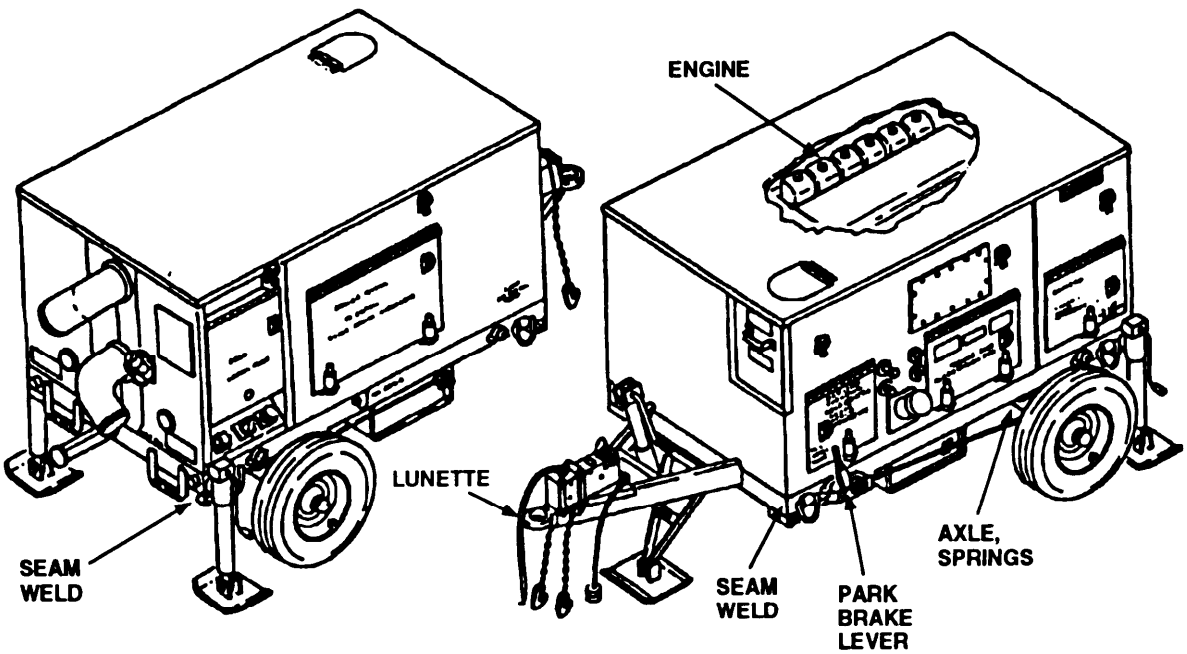

Table 2-11. Preventive Maintenance Checks and Services for Pumping Assembly Model 609-C. (Continued)

Item No.	Interval	Location: Item to Check/Service	Procedure	Not Fully Mission Capable if:
			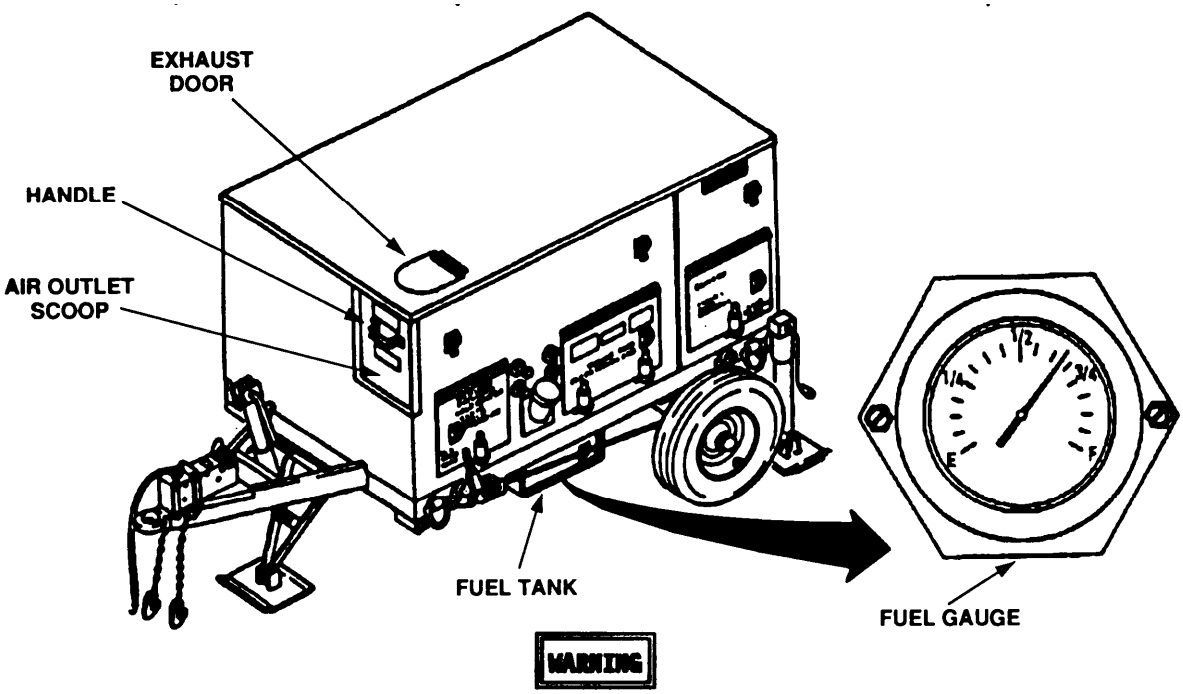	
			WARNING To prevent fire or explosion and possible personal injury, keep open flame and sparks away from fuel tank.	
			To prevent condensation, fill tank after operation.	
34	After	Fuel Tank and Gauge	Check fuel tank for cracks, damage, and leaks. Check fuel level indication on fuel gauge. If fuel is required, remove fuel tank cap and add fuel. Install cap after adding fuel.	Class I, II, or III leak. Cracked or damaged fuel tank.
35	After	Cooling Air/ Engine Exhaust	Pull air outlet scoop handle outward and check that cooling air outlet scoop and engine exhaust door open with moderate pull on handle. Check for deformation and missing hardware. Push handle inward and check that both exhaust door and outlet scoop close easily. If hardware is missing or scoop or door is loose, deformed, or hard to operate, notify unit maintenance.	Outlet scoop or exhaust door is loose, deformed, or inoperable. Hardware is missing.

Table 2-11. Preventive Maintenance Checks and Services for Pumping Assembly Model 609-C. (Continued)

Item No.	Interval	Location: Item to Check/Service	Procedure	Not Fully Mission Capable if:
		TRAILER CHASSIS AND ENCL - CONT		
36	After	Safety/Breakaway Chains and Inter Vehicular Cable	Check for damaged/broken safety and breakaway chains. Check intervehicular cable for damaged connector and broken pins. If chain is damaged or broken or intervehicular cable connector is damaged or has broken pin(s), notify unit maintenance.	Chain is damaged or broken. Intervehicular cable connector is damaged or has broken pin(s).

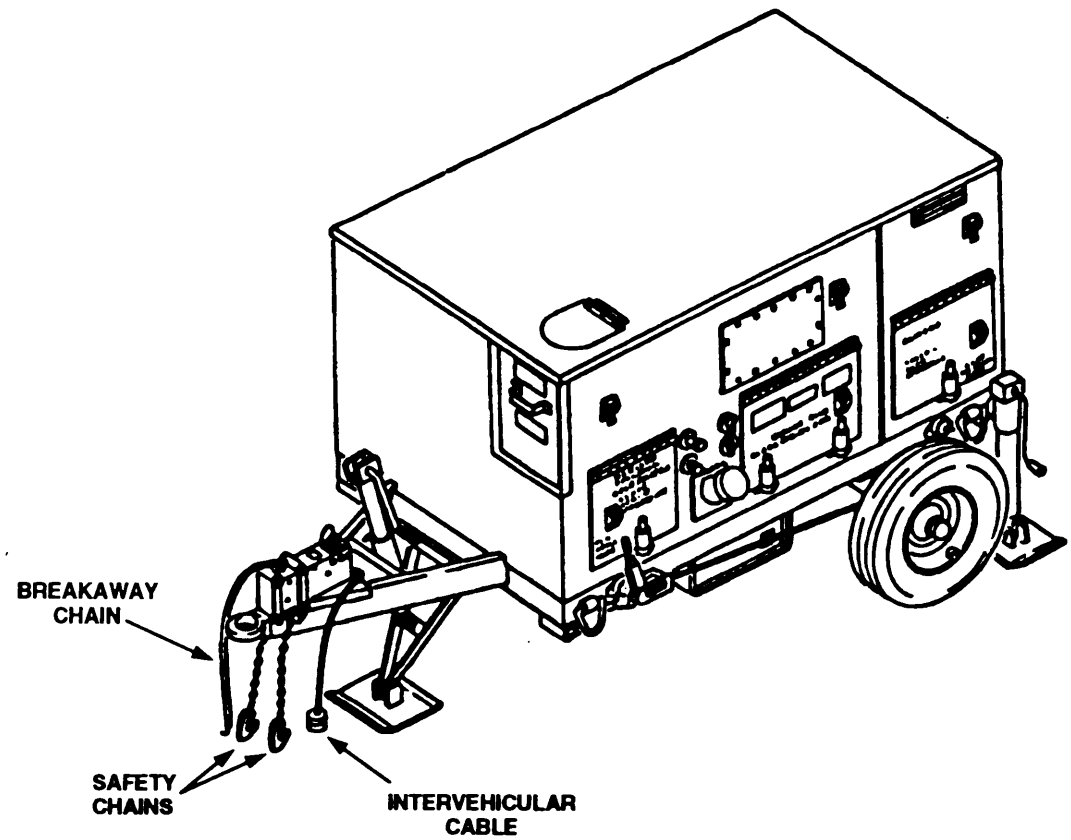

Table 2-11. Preventive Maintenance Checks and **Services** *for* **Pumping** *Assembly Model 609-C. (continued)*

Item No.	Interval	Location: Item to Check/Service	Procedure	Not Fully Mission Capable if:
		CONTROL PANEL		
37	After	Gauges, Meters, Switches, Controls, and Indicators	Open control panel access door. Check gauges, meters, and indicators for cracked or broken glass, or damage. Check switches and controls for free movement. If any component is damaged or switch or control binds, notify unit maintenance.	Gauge or indicator is damaged. Switch or control is inoperable.

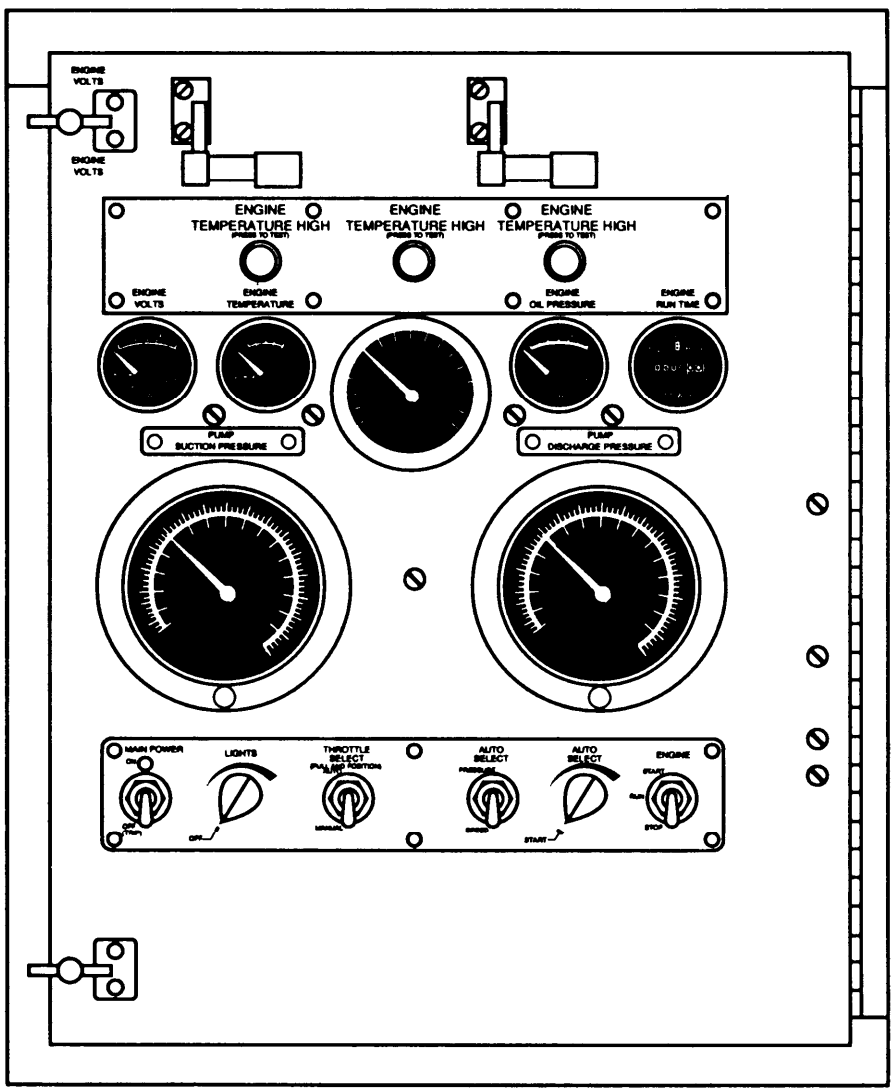

Table 2-11. Preventive Maintenance Checks and Services for Pumping Assembly Model 609-C. (Continued)

Item No.	Interval	Location: Item to Check/Service	Procedure	Not Fully Mission Capable if:
		ENGINE		
38	After	Oil Dipstick	Check level. If oil is at or below ADD mark on dipstick, remove cap from oil filler neck. Add oil, as required, to FULL mark on dipstick. Refer to LO 10-4320-344-12. Install cap after adding oil.	Oil level is at or below ADD mark on dipstick. Dipstick is missing.
39	After	Fan Belt	Check for missing or loose fan belt. If missing or loose, notify unit maintenance.	Fan belt is missing or loose.

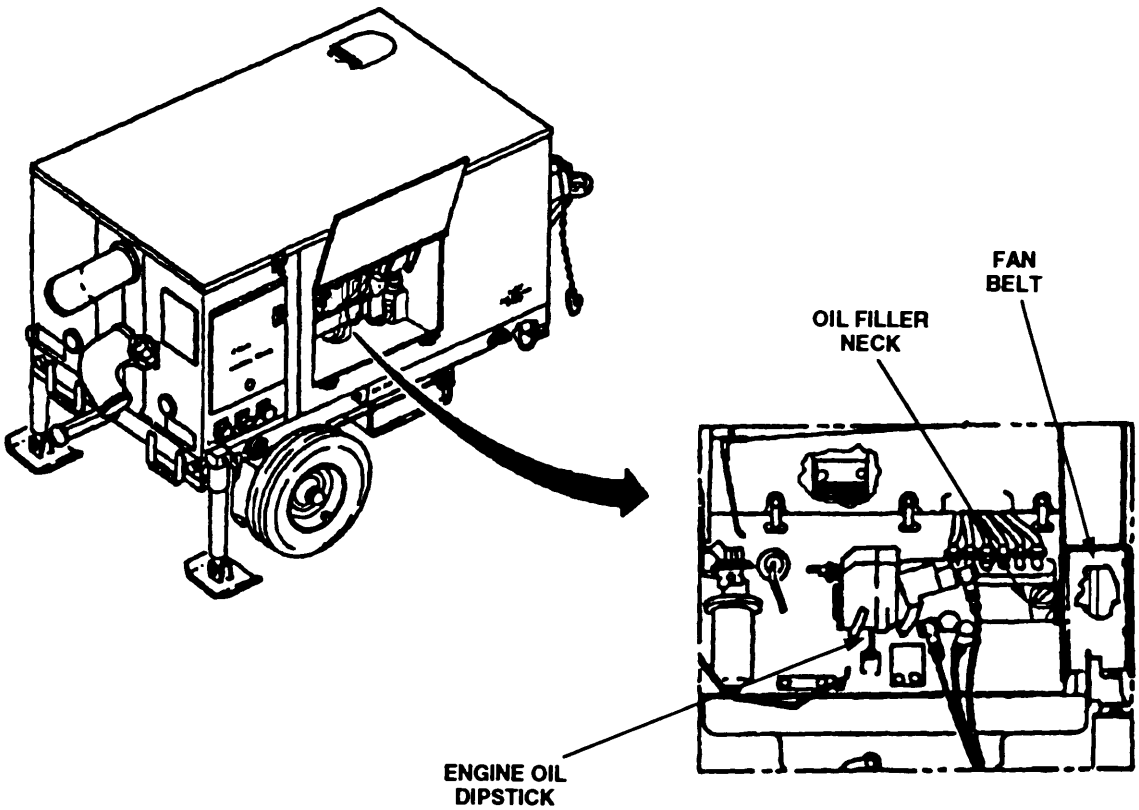

Table 2-11. Preventive Maintenance Checks and Services for Pumping Assembly Model 609-C. (Continued)

Item No.	Interval	Location: Item to Check/Service	Procedure	Not Fully Mission Capable if:
		ENGINE - CONT		
40	After	Alternator Belt	Check for missing or loose alternator belt. If missing or loose, notify unit maintenance.	Alternator belt is missing or loose.
41	After	Fuel Lines	Inspect lines for damage and leaks. If line is damaged or leaking, notify unit maintenance.	Class I, II, or III leak. Fuel line is damaged.
42	After	Air Cleaner	Check air filter restriction gauge indication. If indication is in or close to red band, notify unit maintenance.	Restriction gauge indication is in red band.

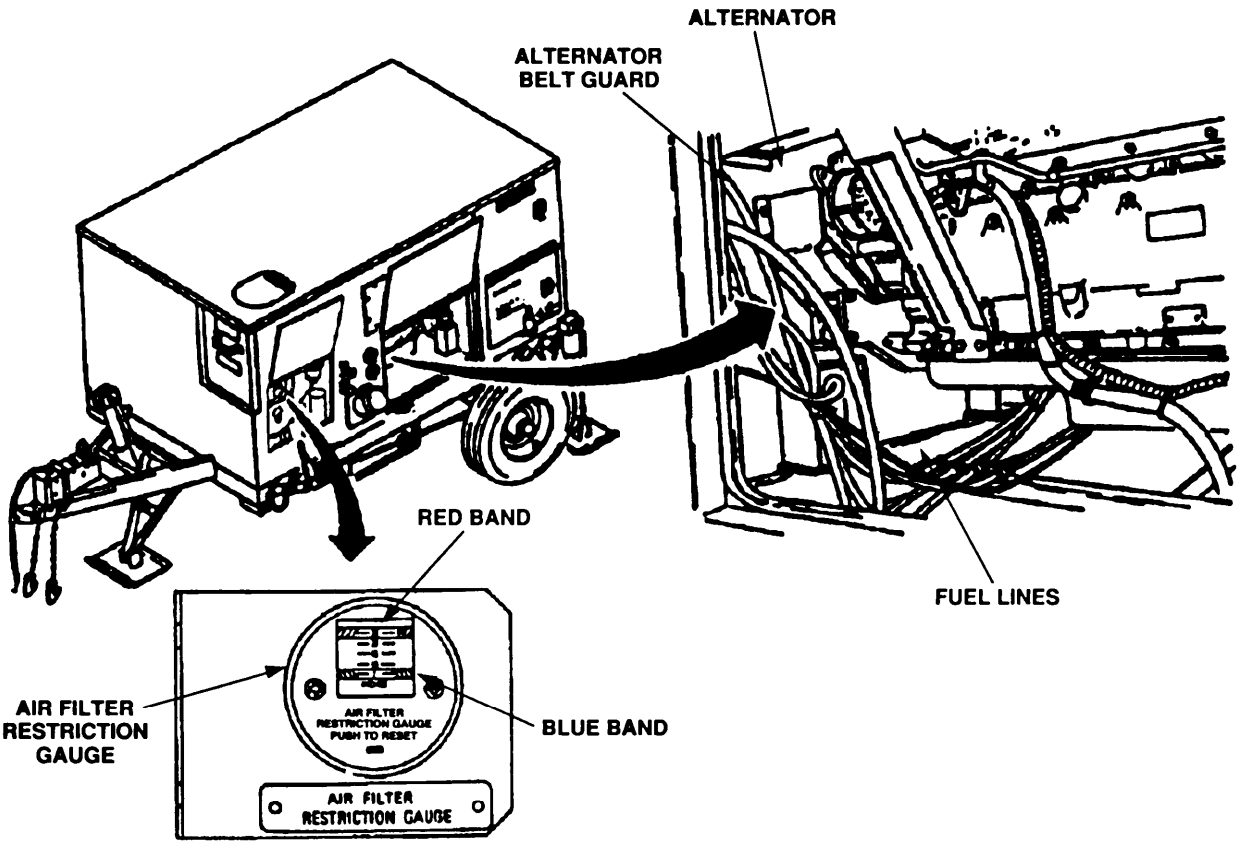

Table 2-11. Preventive Maintenance Checks and Services for Pumping Assembly Model 609-C. (Continued)

Item No.	Interval	Location: Item to Check/Service	Procedure	Not Fully Mission Capable if:
		BATTERY BOX		

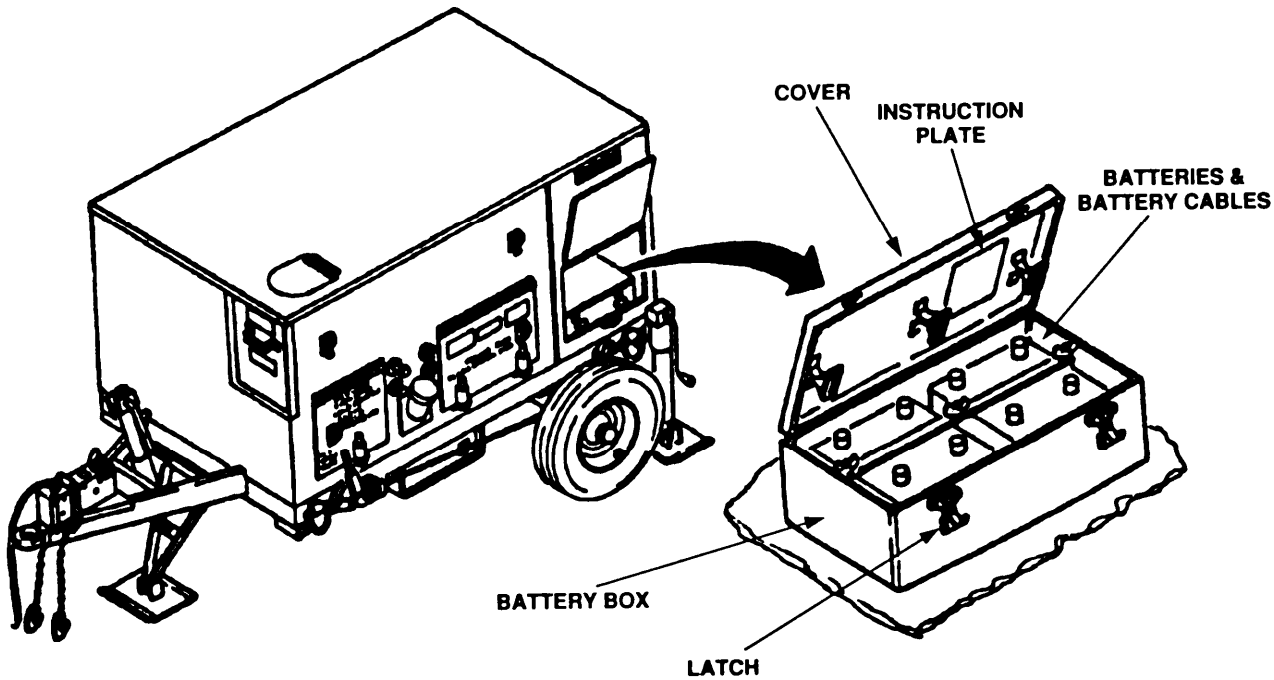

WARNING

- Fumes from battery acid may cause explosion, which could result in personal injury. Keep sparks and open flame away from battery.
- Battery electrolyte contains sulfuric acid, which can cause severe burns. If electrolyte should contact skin or clothing, rinse immediately with clean water.

43	After	Battery Box	Check for damage. If damaged, notify unit maintenance.	
44	After	Batteries and Battery Cables	Unlatch and open battery box cover. Check cables for corrosion, loose connections, and damage. Clean corrosion and tighten connections as required. Check battery for cracks or damage. Remove battery caps and check fluid level. If fluid level is low, notify unit maintenance. Install battery caps. Close and latch battery box cover.	Cracked battery. Low fluid level. Damaged battery cable.

Table 2-11. Preventive Maintenance Checks and Services for Pumping Assembly Model 609-C. (Continued)

Item No.	Interval	Location: Item to Check/Service	Procedure	Not Fully Mission Capable if:
		ENGINE		
45	After	Fuel Filters	Inspect fuel filters for cracks, damage, or leaks. Drain water from primary fuel filter by rotating knob on bottm of filter. When clear fuel is seen at drain hose outlet, turn knob in opposite direction to stop flow. Repeat for secondary fuel filter.	Class I, II, or III fuel leak. Cracked or damaged fuel filter.

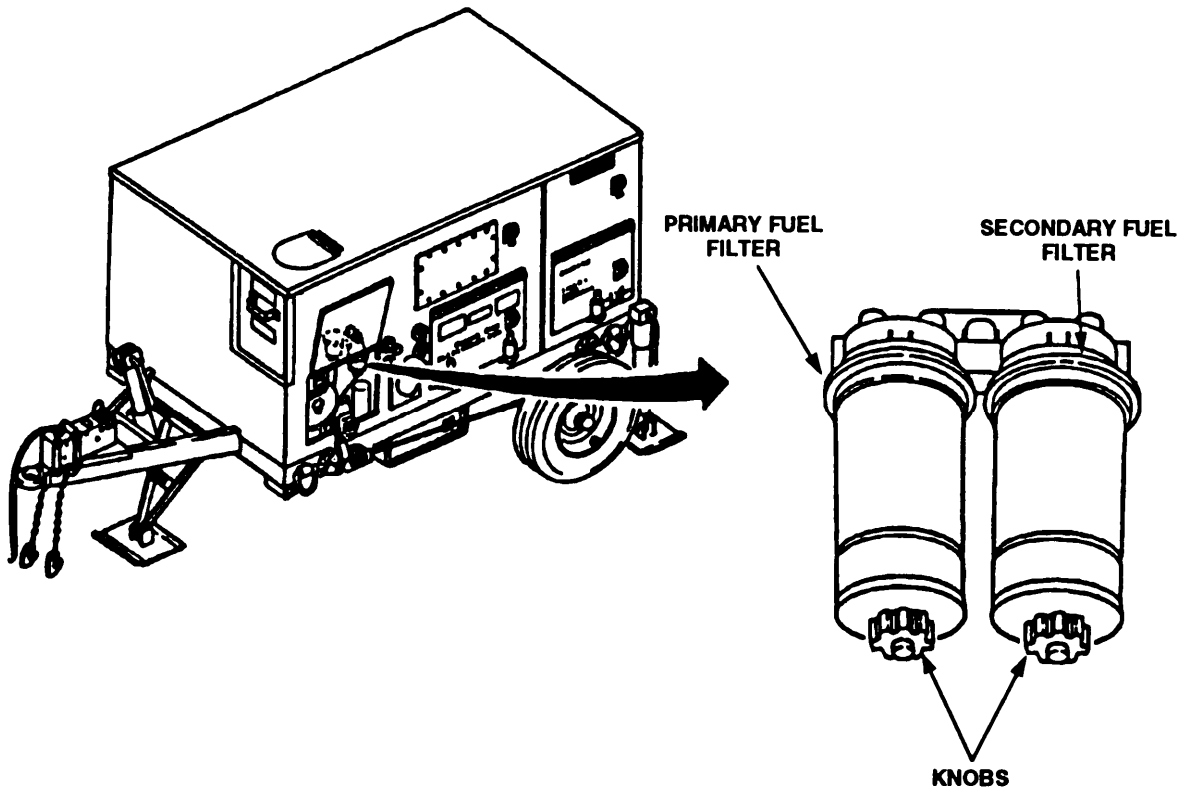

Table 2-11. Preventive Maintenance Checks and Services for Pumping Assembly Model 609-C. (Continued)

Item No.	Interval	Location Item to Check/Service	Procedure	Not Fully Mission Capable if:
		TRAILER CHASSIS AND ENCL - CONT		
46	Weekly	Lights	Check for cracked or broken lenses. If lenses are cracked or broken, notify unit maintenance.	Lens is cracked or broken.
47	Weekly	Tires and Rims	Check tires for wear and tires and rims for damage. If damage or excessive wear is seen, notify unit maintenance. Check tire pressure and add air as needed to bring to proper operating pressure.	Tire or rim is damaged. Tire is excessively worn or flat.

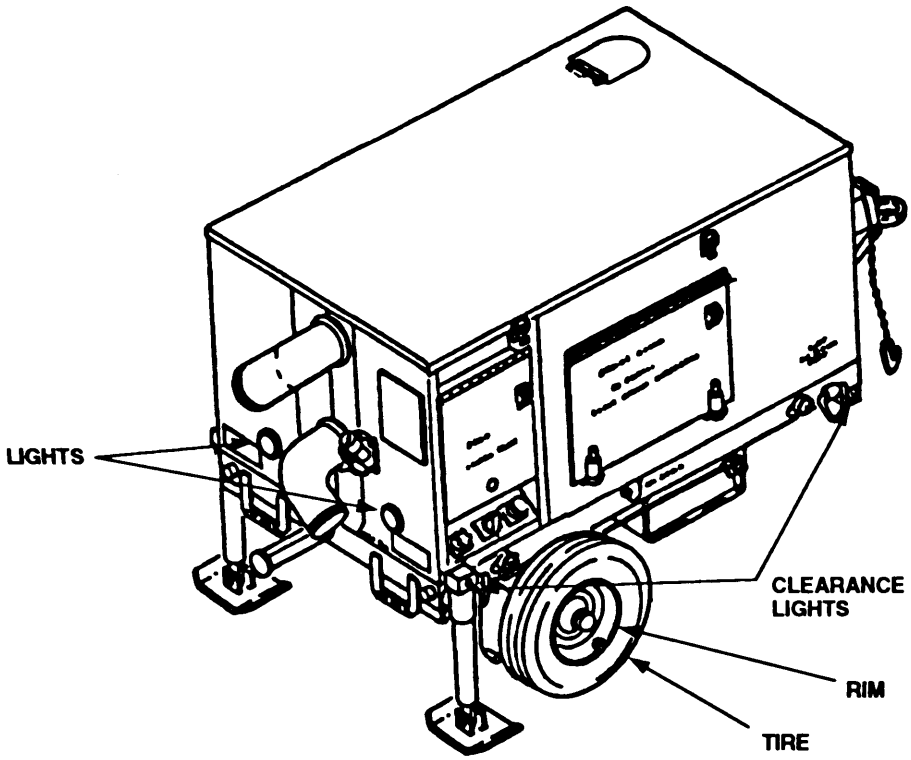

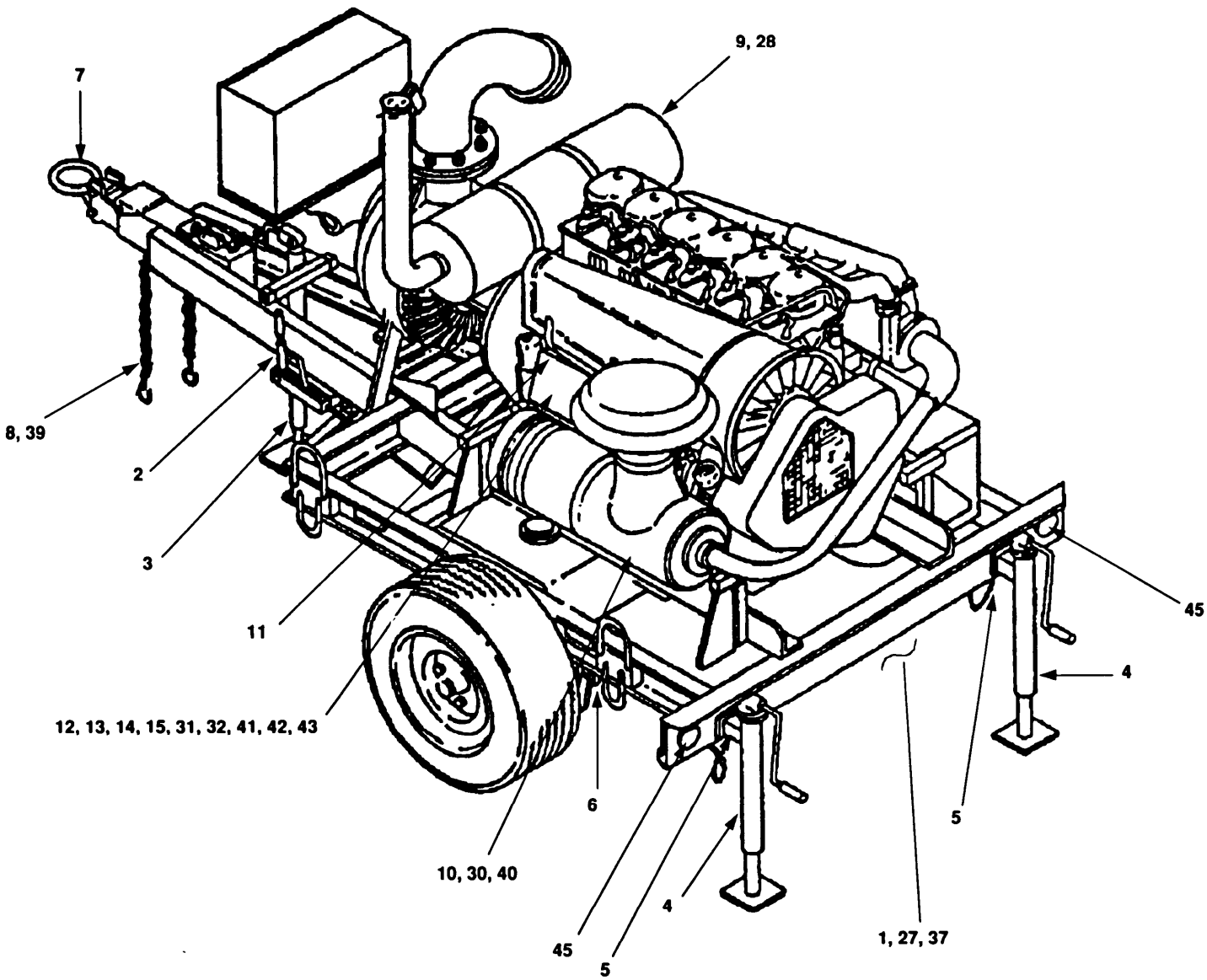

Figure 2-12. Pumping Assembly Model US636HCCD-1 PMCS Routing Diagram (Sheet 1 of 2).

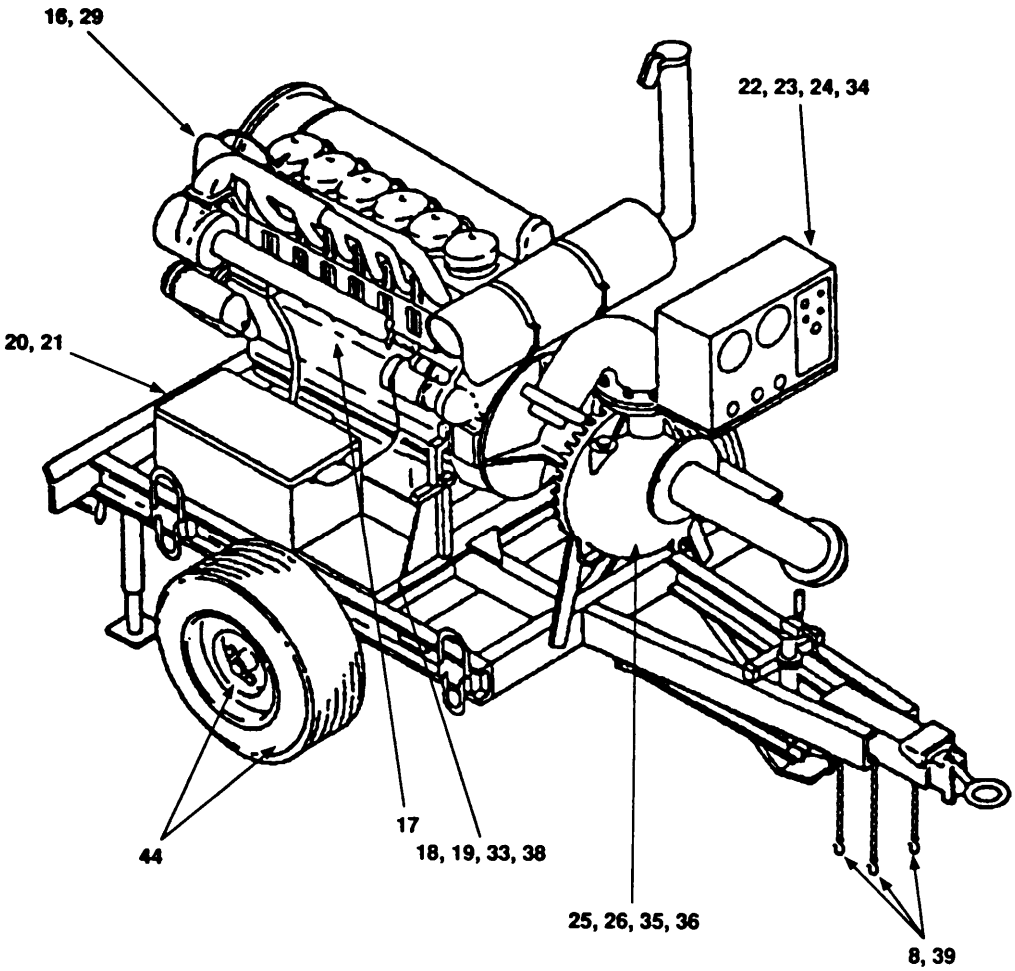

Figure 2-12. Pumping Assembly Model US636HCCD-1 PMCS Routing Diagram (Sheet 2 of 2).

Table 2-12. Preventive Maintenance Checks and Services for Pumping Assembly Model US636HCCD-1.

Item No.	Interval	Location Item to Check/Service	Procedure	Not Fully Mission Capable if:
		EXTERIOR		
1	Before	Leaks	Inspect ground under engine for-evidence of leaks. If leaks are present, notify unit maintenance.	Any evidence of leaks.
		TRAILER CHASSIS		
2	Before	Park Brake Lever	Check that park brake lever will lock and unlock tailer wheels. Check for proper adjustment. Adjust as required.	Park brake lever will not lock or unlock trailer wheels.
3	Before	Tongue Jack	Check tongue jack supports, welds, and tongue jack for damage. If damaged, notify unit maintenance. Check that tongue jack is secured and operable. If not operable, notify unit maintenance.	Tongue jack is damaged, not secured, or not operable.
4	Before	Rear Jacks	Check rear jacks for damage. Check that they are secured and operable. If damaged, not secure, or not operable, notify unit maintenance.	Rear jack is damaged, not secure, or not operable.

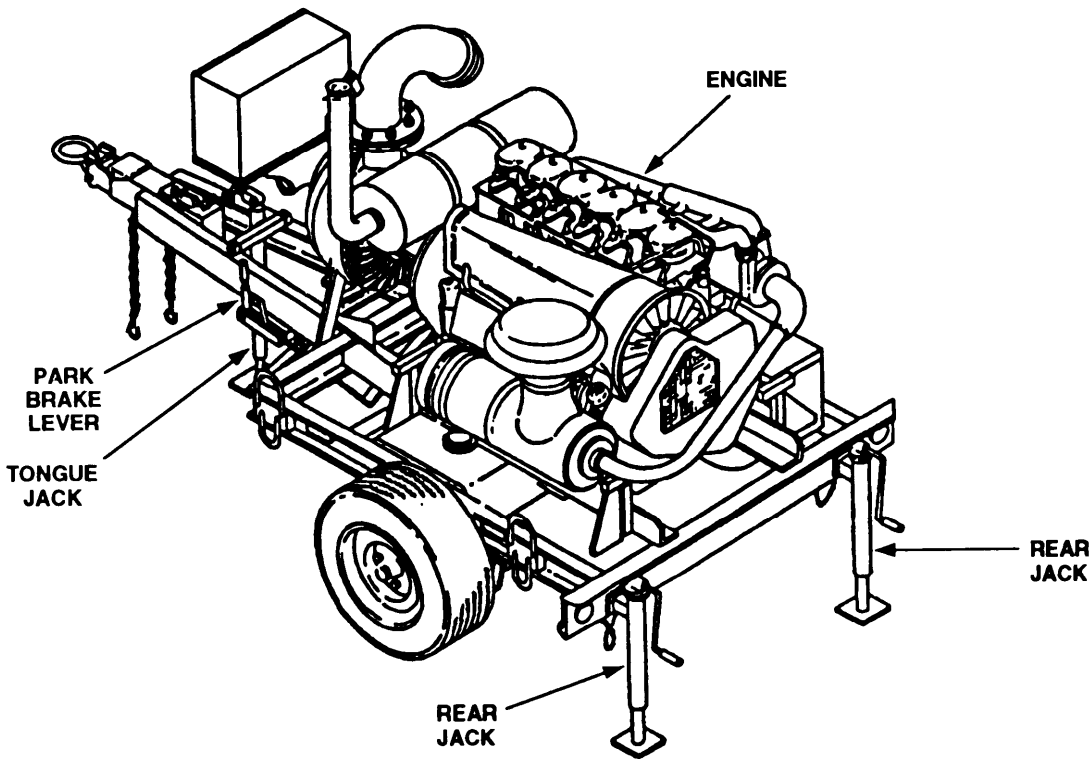

Table 2-12. Preventive Maintenance Checks and Services for Pumping Assembly Model US636HCCD-1. (Continued)

Item No.	Interval	Location: Item to Check/Service	Procedure	Not Fully Mission Capable if:
		TRAILER CHASSIS - CONT		
5	Before	Frame Seam Welds	Inspect all frame seam welds for damage. If damaged, notify unit maintenance.	Weld is damaged.
6	Before	Axle and Springs	Check for damage. If damaged, notify unit maintenance.	Axle or spring is damaged.
7	Before	Lunette	Check for damage. If damaged, notify unit maintenance.	Lunette is damaged.
8	Before	Safety/Breakaway Chains and Intervehicular Cable	Check for damaged/broken safety and breakaway chains. Check intervehicular cable for damaged connector and broken pins. If chain is damaged or broken or intervehicular cable connector is damaged or has broken pin(s), notify unit maintenance.	Chain is damaged or broken. Intervehicular cable connector is damaged or has broken pin(s).

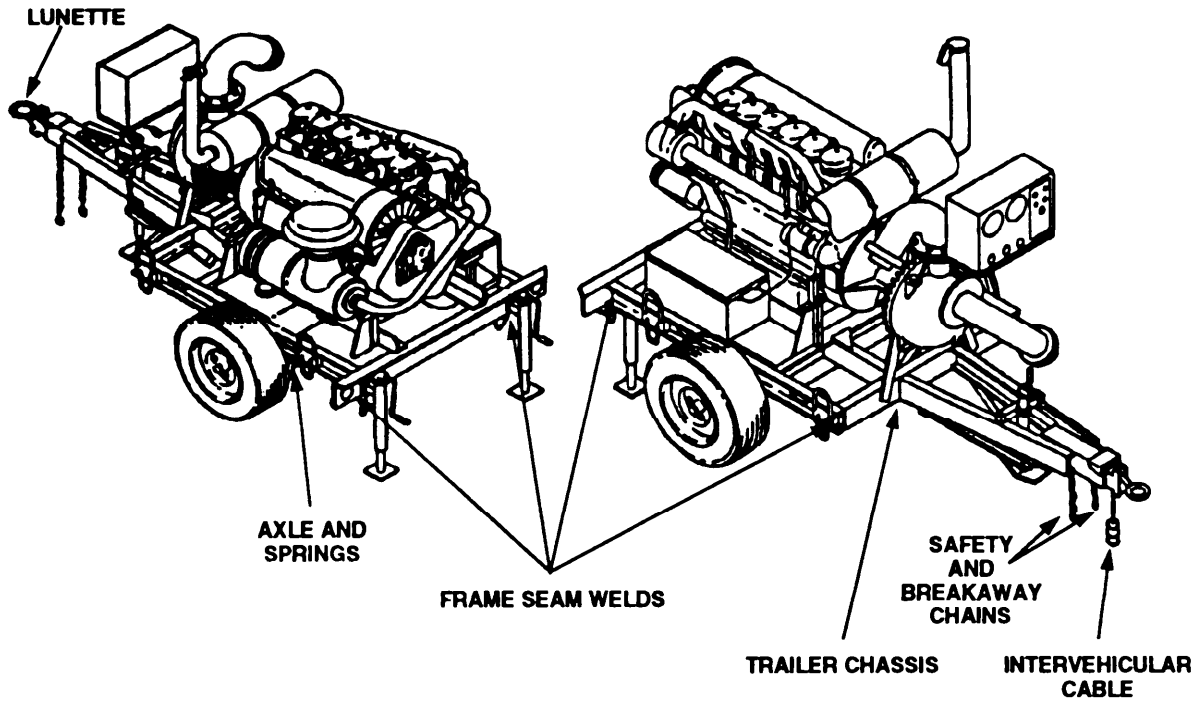

Table 2-12. Preventive Maintenance Checks and Services for Pumping Assembly ***Model US636HCCD-1. (Continued)***

Item No.	Interval	Location: Item to Check/Service	Procedure	Not Fully Mission Capable if:
		ENGINE		
9	Before	Muffler	Check for damage and loose clamps. Tighten loose clamps. If muffler is damaged, notify unit maintenance.	Muffler is damaged.
10	Before	Air Cleaner	Check for damage. Check for and tighten loose clamps. Check if service indicator is red. If air cleaner is damaged or if service indicator is red, notify unit maintenance.	Air cleaner is damaged. Service indicator is red.

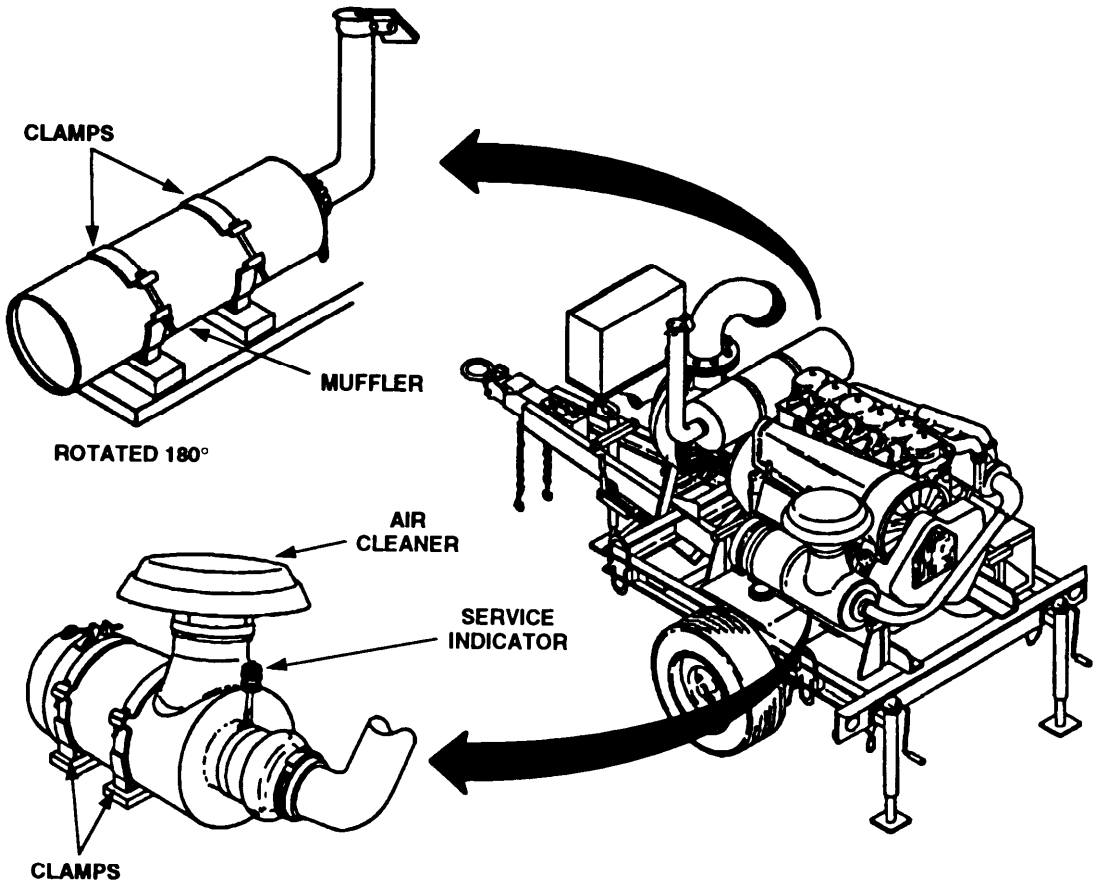

Table 2-12. Preventive Maintenance Checks and Services for Pumping Assembly Model US636HCCD-1. (Continued)

Item No.	Interval	Location: Item to Check/Service	Procedure	Not Fully Mission Capable if:
		ENGINE - CONT		
11	Before	Cooling Fins and Oil Cooler	Remove air cowling and check for damaged fins and dirt accumulation on cooling fins, air passages, and oil cooler. Clean as required. If cooling fins or oil cooler are damaged, notify unit maintenance.	Cooling fins or oil cooler are damaged.

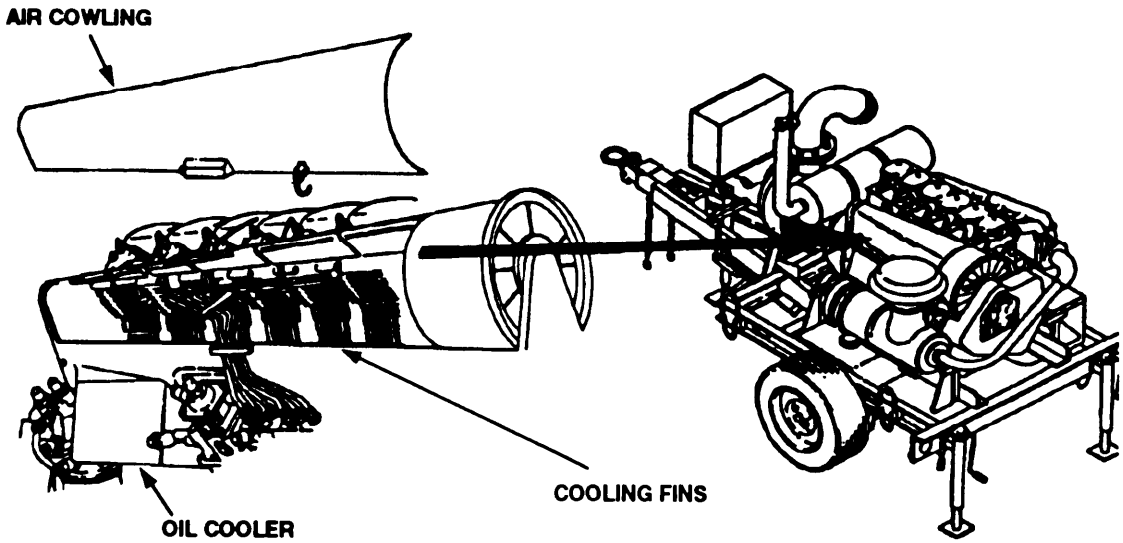

12	Before	Oil Lines	Check for damage and leaks. If damaged or leaking, notify unit maintenance.	Class III leak. Oil line is damaged.

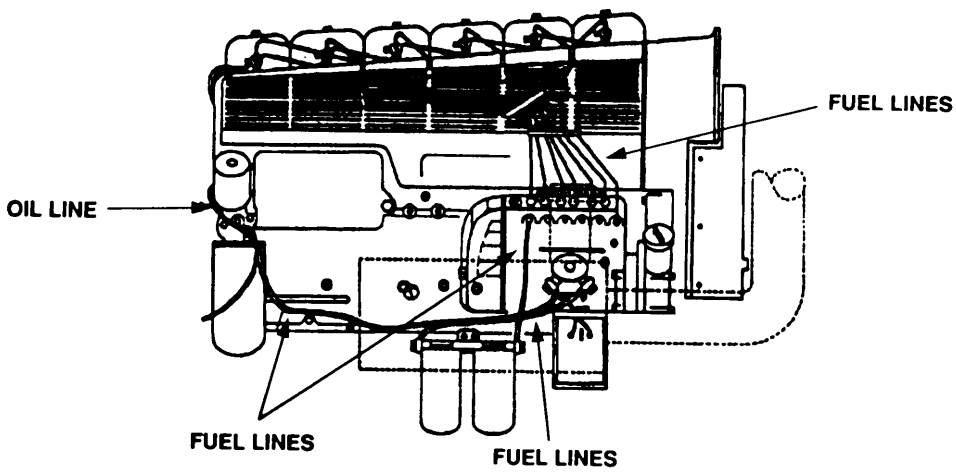

13	Before	Fuel Lines	Check for damage and leaks. If damaged or leaking, notify unit maintenance.	Class I, II, or III leak. Fuel line is damaged.

Table 2-12. Preventive Maintenance Checks and Services for Pumping Assembly Model US636HCCD-1. (Continued)

Item No.	Interval	Location: Item to Check/Service	Procedure	Not Fully Mission Capable if:
		ENGINE - CONT		
14	Before	Fuel Filters	Check the clear bowl on bottom of primary filter. If water is present in bowl, rotate knob on bottom and drain water. When fuel starts draining from outlet, close valve by turning knob in opposite direction. Rotate knob on bottom of secondary filter. Drain water and sediment. When clean fuel starts draining from outlet, close valve by turning knob in opposite direction.	Class I, II, or III leak. Cracked or damaged fuel filter.
15	Before	Oil Dipstick	Check level. If oil is at or below ADD mark on dipstick, remove cap from oil filler neck. Add oil, as required, to FULL mark on dipstick. Reference LO 10-4320-344-12. Install cap after adding oil.	Oil level is at or below ADD mark on dipstick. Missing dipstick.

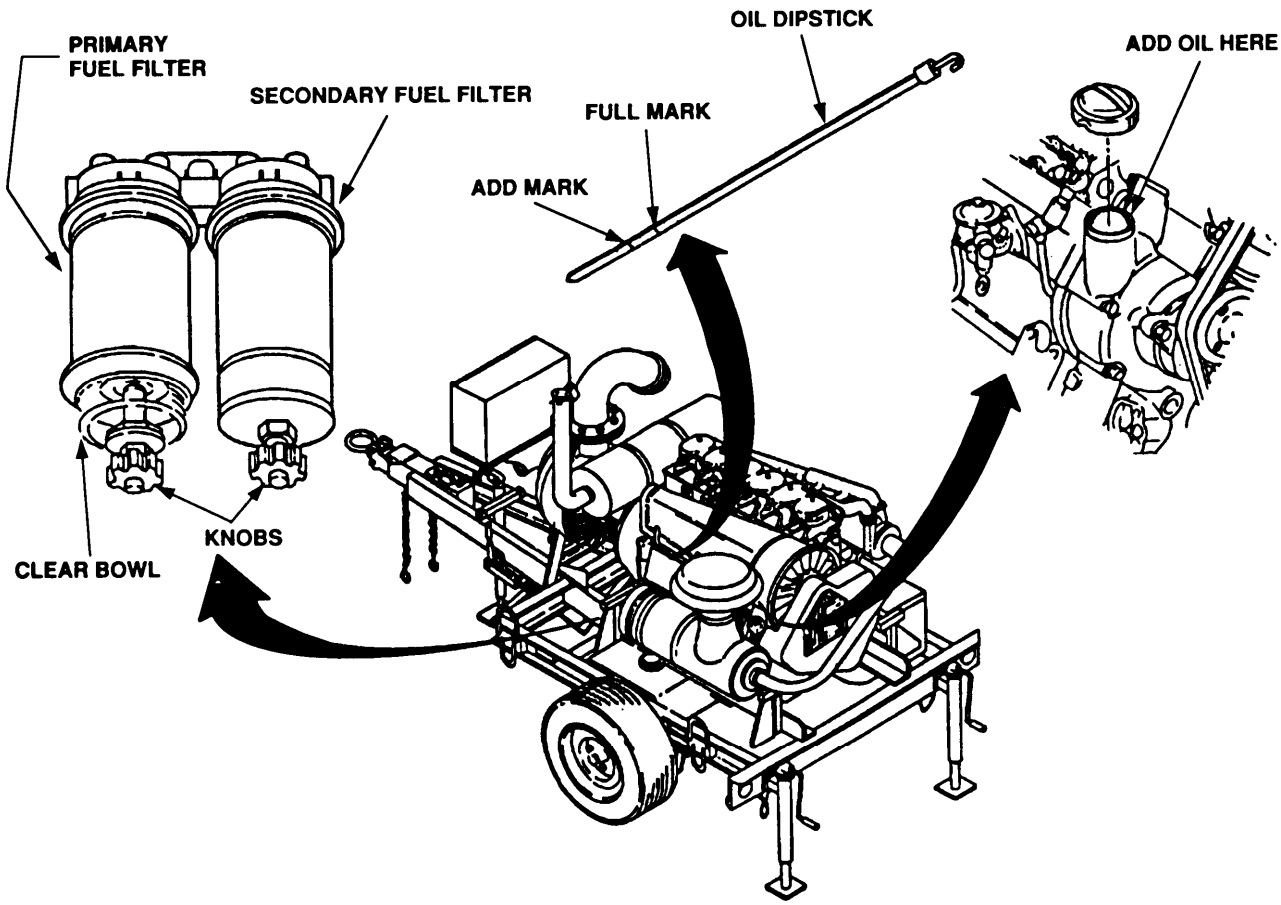

Table 2-12. Preventive **Maintenance** *Checks and Services for Pumping Assembly Model US636HCCD-1. (Continued)*

Item No.	Interval	Location: Item to Check/Service	Procedure	Not Fully Mission Capable if:
		ENGINE - CONT		
16	Before	Turbocharger	Check for damage. Check for exhaust leaks and loose attaching hardware. Check for oil leakage. If turbocharger is damaged, has exhaust or oil leak(s), or has loose attaching hardware, notify unit maintenance.	Class III leak. Turbocharger is damaged, has exhaust leak, or has loose attaching hardware.

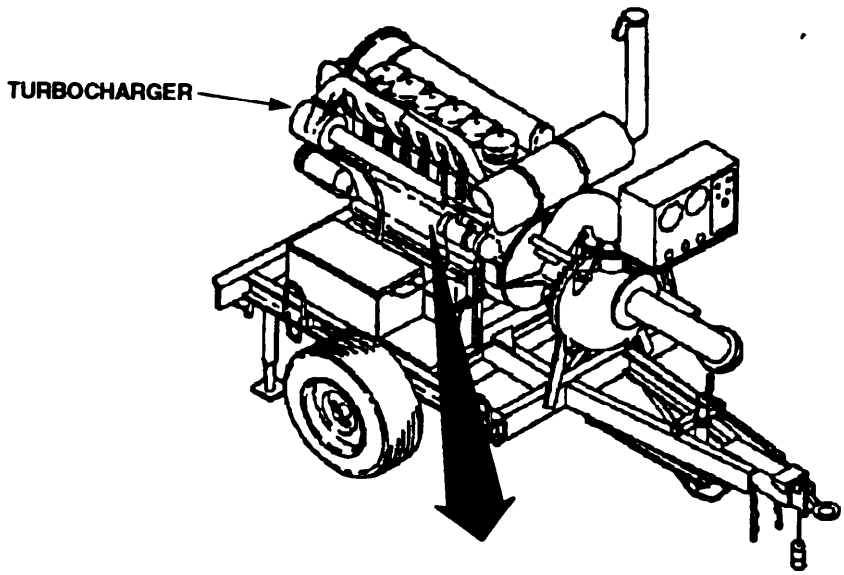

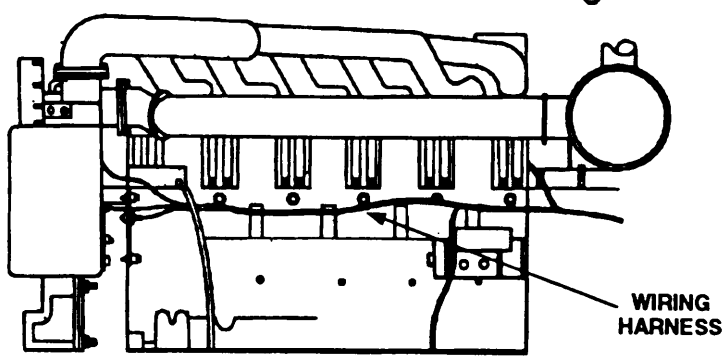

17	Before	Wiring Harness	Check wiring harness on both sides of engine and between engine and control panel. Check for damage and loose connections. If wiring or connection is damaged or connection is loose, notify unit maintenance.	Wiring damaged to extent pumping assembly will not operate.

Table 2-12. Preventive Maintenance Chocks and Services for Pumping Assembly Model US636HCCD-1. (continued)

Item No.	Interval	Location: Item to Check/Service	Procedure	Not Fully Mission Capable if:
		FUEL TANK		

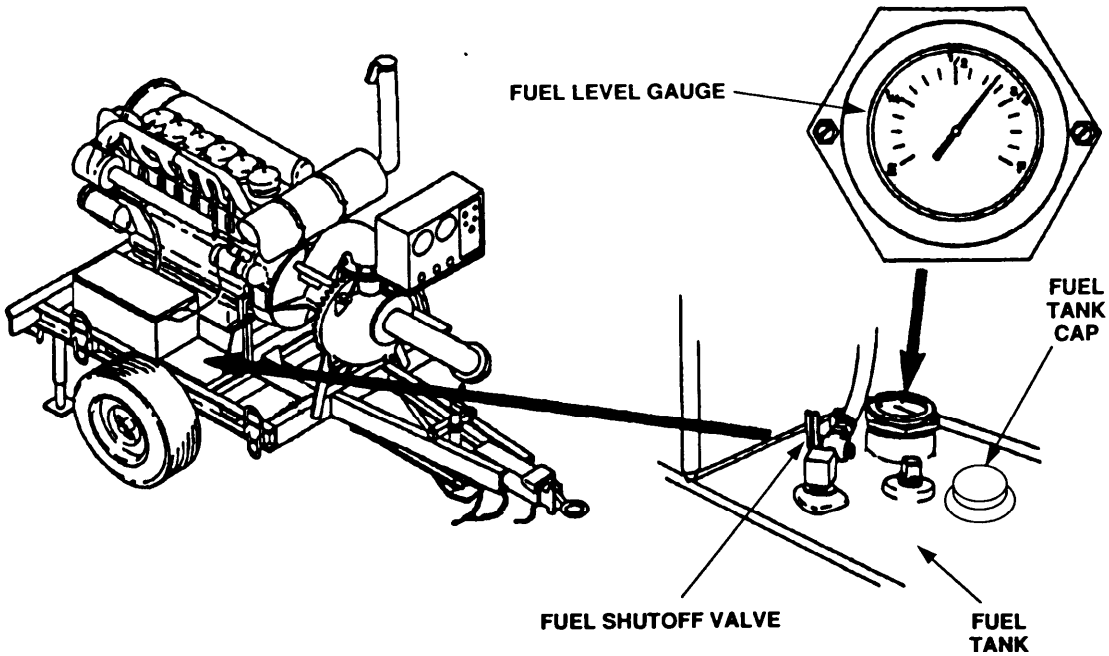

WARNING

To prevent fire or explosion and possible personal injury, keep open flame and sparks away from fuel tank.

18	Before	Fuel Tank and Gauge	Check fuel tank for cracks, damage, and leaks. Check fuel level indication on fuel gauge. If fuel is required, remove fuel tank cap and add fuel. Install cap after adding fuel.	Class I, II, or III leak. Cracked or damaged fuel tank.
19	Before	Fuel Shutoff Valve	Check that fuel shutoff valve is operable and in open position. If not operable, notify unit maintenance.	Fuel shutoff valve binds.

Table 2-12. Preventive Maintenance Checks and Services for Pumping Assembly Model US636HCCD-1. (Continued)

Item No.	Interval	Location: Item to Check/Service	Procedure	Not Fully Mission Capable if:
		BATTERY BOX		

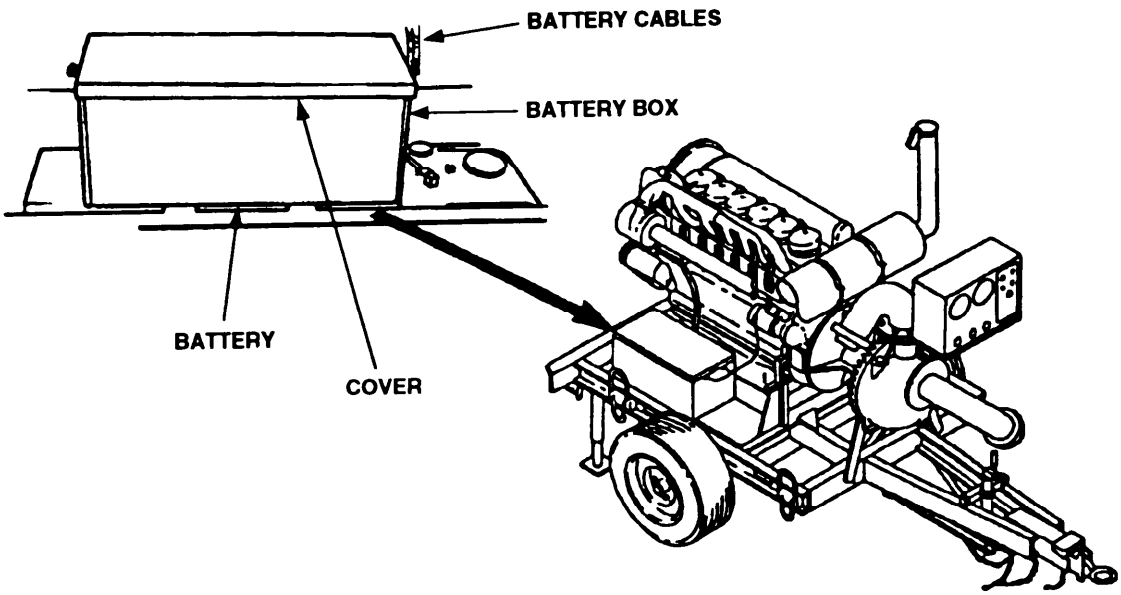

WARNING

- Fumes from battery acid may cause explosion, which could result in personal injury. Keep sparks and open flame away from battery.
- Battery electrolyte contains sulfuric acid, which can cause severe burns. Handle batteries with care. If electrolyte should contact skin or clothing, rinse immediately with clean water.

20	Before	Battery Box and Cover	Check for damage. If damaged, notify unit maintenance.	
21	Before	Battery and Battery Cables	Remove cover. Check cables for corrosion, loose connections, and damage. Clean corrosion and tighten connections as required. Check battery for cracks. Remove battery caps and check fluid level. Notify unit maintenance if fluid level is low. Install battery caps and battery box cover.	Cracked battery. Low fluid level. Damaged battery cables .

Table 2-12. Preventive Maintenance Checks and Services for Pumping Assembly Model US636HCCD-1. (Continued)

Item No.	Interval	Location: Item to Check/Service	Procedure	Not Fully Mission Capable if:
		CONTROL PANEL		
22	Before	Enclosure	Check control panel box and cover for damage. Check for damaged hinge or fastener. If box, cover, hinge, or fastener is damaged, notify unit maintenance.	
23	Before	Gauges and Meters	Check gauge and meter faces for cracked or broken glass. If glass is cracked or broken, notify unit maintenance.	Glass is cracked or broken.
24	Before	Controls	Check controls for free movement. If control binds, notify unit maintenance.	Control binds.

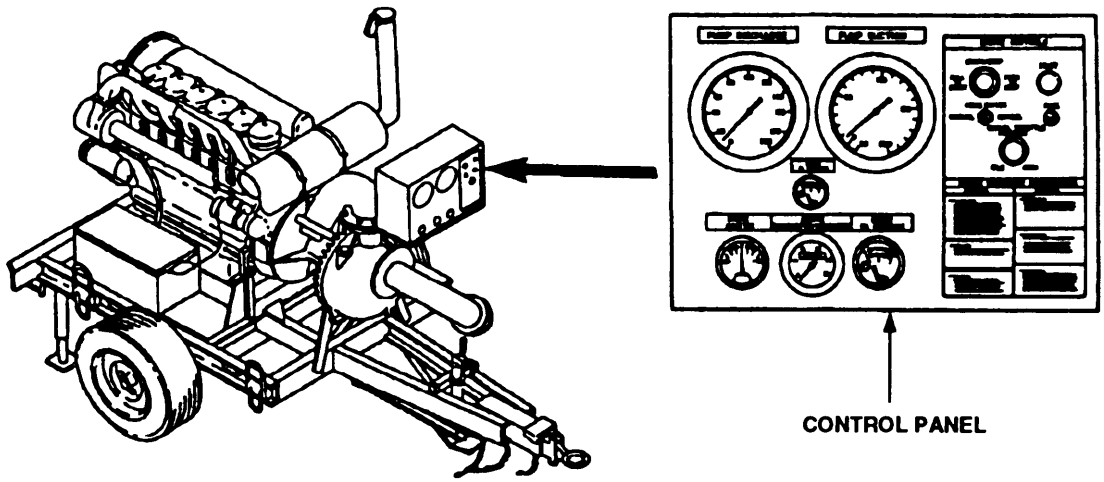

Table 2-12. Preventive Maintenance Checks and Services for Pumping Assembly Model US636HCCD-1. (continued)

Item No.	Interval	Location: Item to Check/Service	Procedure	Not Fully Mission Capable if:
		PUMP ASSEMBLY		
25	Before	Pump Casing	Check for damage and leaks. If pump is damaged or leaking, notify unit maintenance.	Class III leak. Pump is damaged.
26	Before	Hoses and Fittings	Check hoses and fittings for damage and leaks. If hose or fitting is damaged or leaking, notify unit maintenance.	Class III leak. Hose or fitting is damaged.

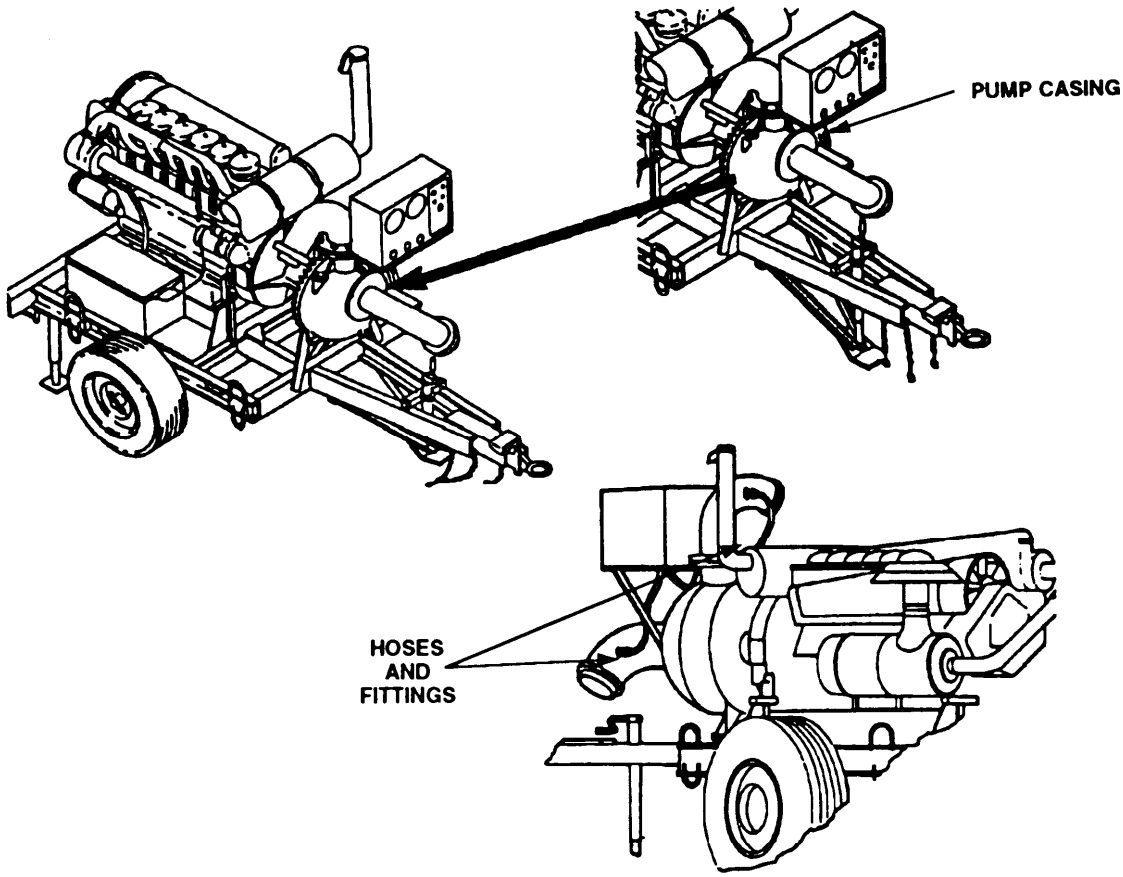

Table 2-12. Preventive Maintanance **Checks and Services for** *Pumping* **Assembly** *Model US636HCCD-1. (Continued)*

Item No.	Interval	Location: Item to Check/Service	Procedure	Not Fully Mission Capable if:
		EXTERIOR		
27	During	Leaks	Inspect ground under engine for evidence of leaks. If leaks are present, notify unit maintenance.	Any evidence of leaks.

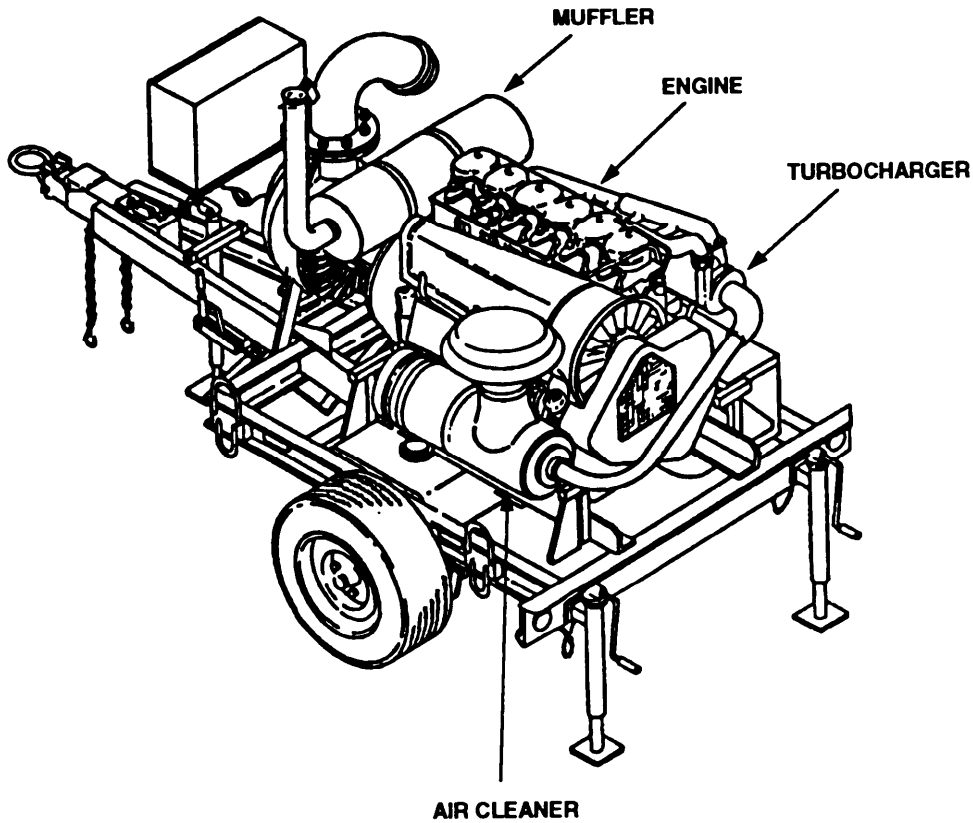

		ENGINE		
28	During	Muffler	Listen for excessive noise. If muffler makes excessive noise, notify unit maintenance.	
29	During	Turbocharger	Check for exhaust leaks and oil leaks. If exhaust leak or oil leak is present, notify unit maintenance.	Class III leak. Turbocharger is leaking exhaust fumes.
30	During	Air Cleaner	Check if service indicator is red. If red, notify unit maintenance.	Air cleaner service indicator is red.

Table 2-12. Preventive Maintenance **Checks and Services** *for Pumping Assembly Model US8636HCCD-1. (Continued)*

Item No.	Interval	Location Item to Check/Service	Procedure	Not Fully Mission Capable if:
		ENGINE - CONT		
31	During	oil lines	Check for leaks. If line is leaking, notify unit maintenance.	Class III leak.
32	During	Fuel Lines	Check for leaks. If line is leaking, notify unit maintenance.	Class III leak.

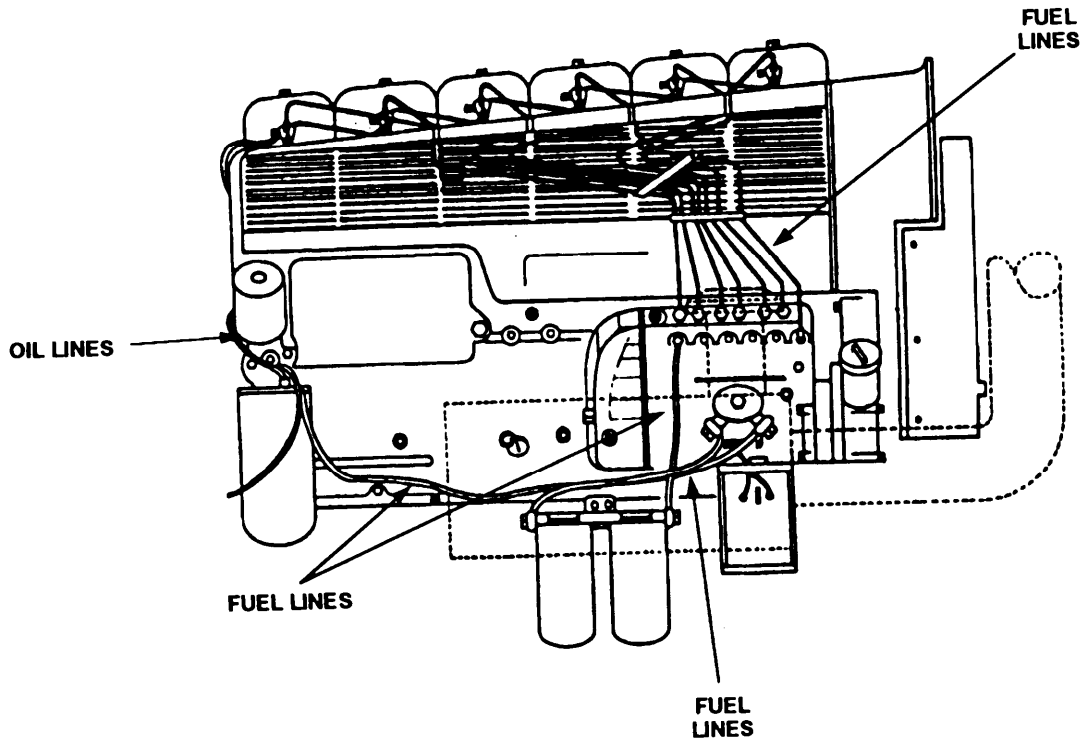

Table 2-12. Preventive Maintenance Checks and Services for Pumping Assembly Model US636HCCD-1. (Continued)

Item No.	Interval	Location: Item to Check/Service	Procedure	Not Fully Mission Capable if:
		FUEL TANK		
			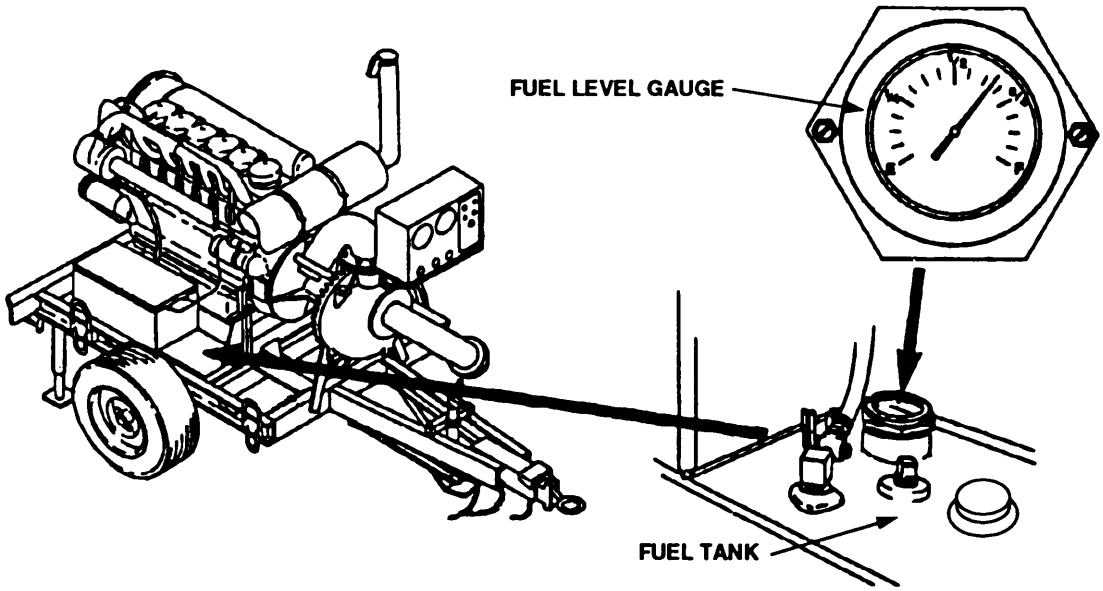	
			WARNING Hot refueling of pumping assembly while it is operating poses a safety hazard and should not be attempted. Hot engine surfaces and sparks produced from the engine and control circuitry are possible sources of ignition. Severe personal injury or death and/or damage to the equipment may result.	
33	During	Fuel Tank and Gauge	Check fuel tank for cracks, damage, or leaks. Check fuel level indication on fuel gauge. If fuel is required, remove fuel tank cap and add fuel. Install cap after adding fuel.	Class I, II, or III leak. Cracked or damaged fuel tank.

Table 2-12. Preventive Maintanance Checks and Services for Pumping Assembly Model US636HCCD-1. (continued)

Item No.	Interval	Location: Item to Check/Service	Procedure	Not Fully Mission Capable if:
		CONTROL PANEL		
34	During	Gauges and Meters	Observe gauges and meters for malfunction or improper reading. If malfunction or improper reading is seen, notify unit maintenance.	Gauge or meter does not work or shows improper reading.

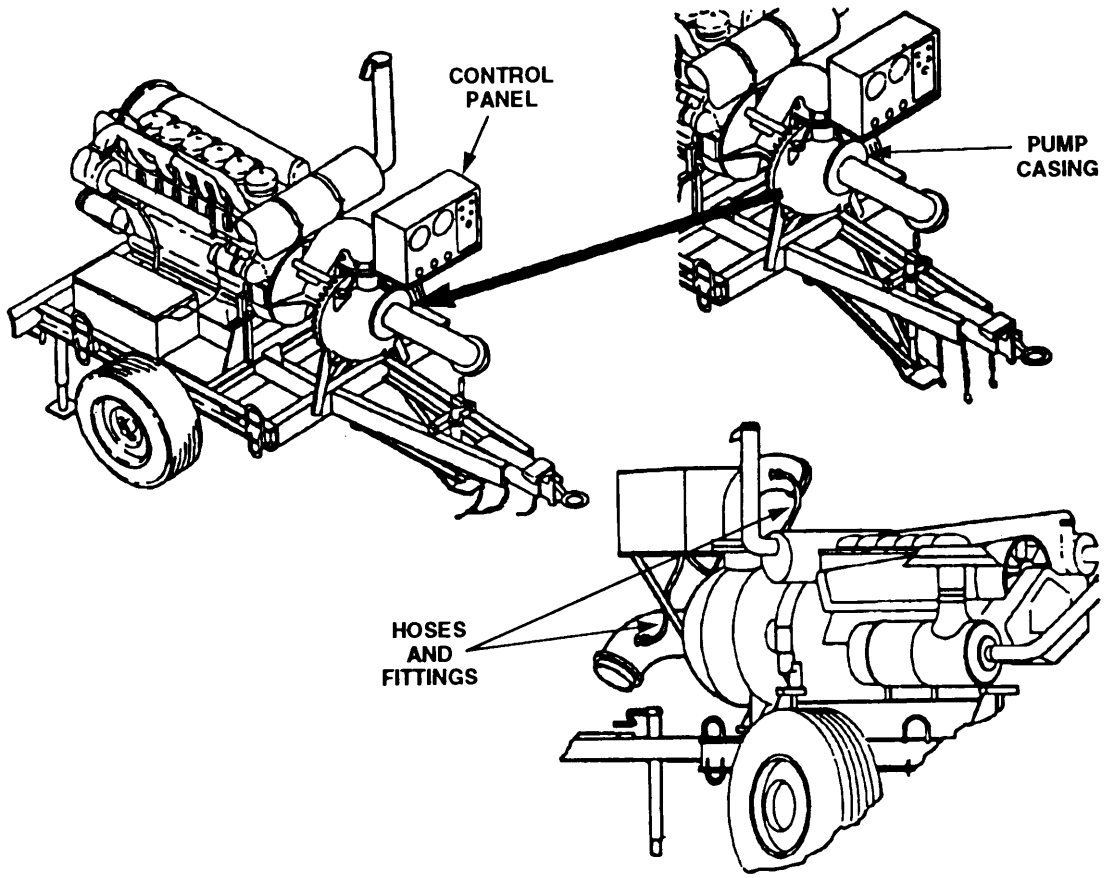

		PUMP ASSEMBLY		
35	During	Pump Casing	Check for leaks. If leak is seen, notify unit maintenance.	Class III leak.
36	During	Hoses and Fittings	Check for leaks. If leak is seen, notify unit maintenance.	Class III leak.

Table 2-12. Preventive Maintenance Checks and Services for Pumping Assembly Model US636HCCD-1. (Continued)

Item No.	Interval	Location: Item to Check/Service	Procedure	Not Fully Mission Capable if:
		EXTERIOR		
37	After	Leaks	Inspect ground under engine for leaks. If leaks are present, notify unit maintenance.	Any evidence of leaks.

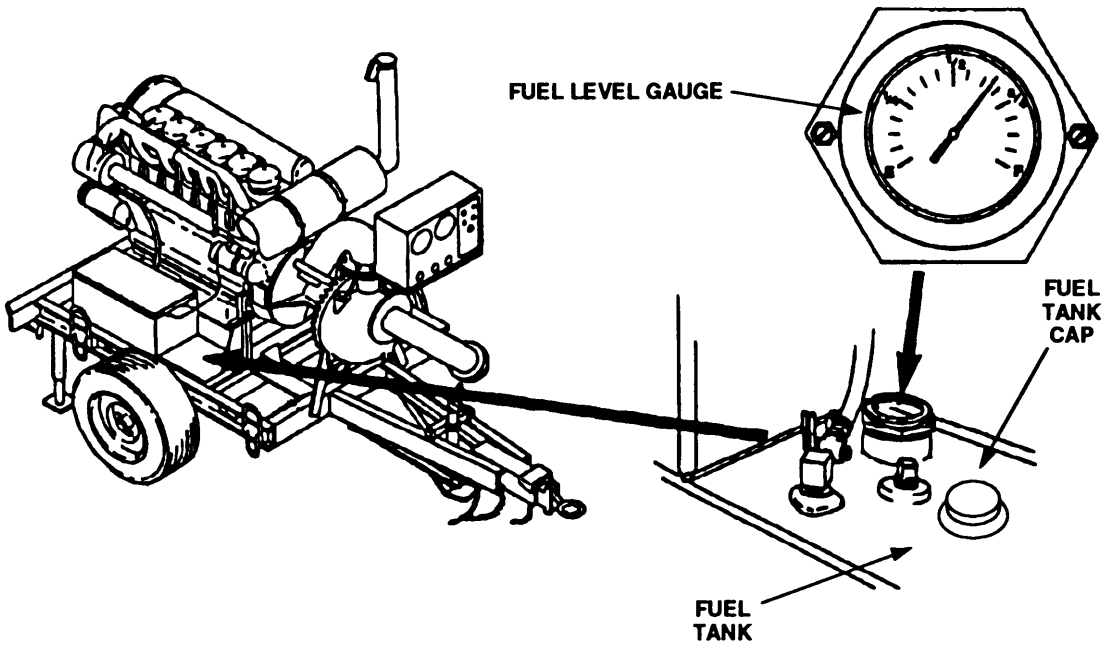

		FUEL TANK		

WARNING

To prevent fire or explosion and possible personal injury, keep open flame and sparks away from fuel tank.

CAUTION

To prevent condensation, fill tank after operation.

38	After	Fuel Tank and Gauge	Check fuel tank for cracks, damage, or leaks. Check fuel level indication on fuel gauge. If fuel is required, remove fuel tank cap and add fuel. Install cap after adding fuel.	Class I, II, or III leak. Cracked or damaged fuel tank.

Table 2-12. ***Preventive Maintenance* Checks and Services *for Pumping Assembly Model US636HCCD-1. (Continued)***

Item No.	Interval	Location: Item to check/Service	Procedure	Not Fully Mission Capable if:
		TRAILER CHASSIS		
39	After	Safety/Breakaway Chains and InterVehicular Cable	Check for damaged/broken safety and breakaway chains. Check intervehicular cable for damaged connectors or broken pins. If chain is damaged or broken or intervehicular cable connector is damaged or has broken pin(s), notify unit maintenance.	Chain is damaged or broken. Intervehicular cable connector has damaged or broken pin(s).

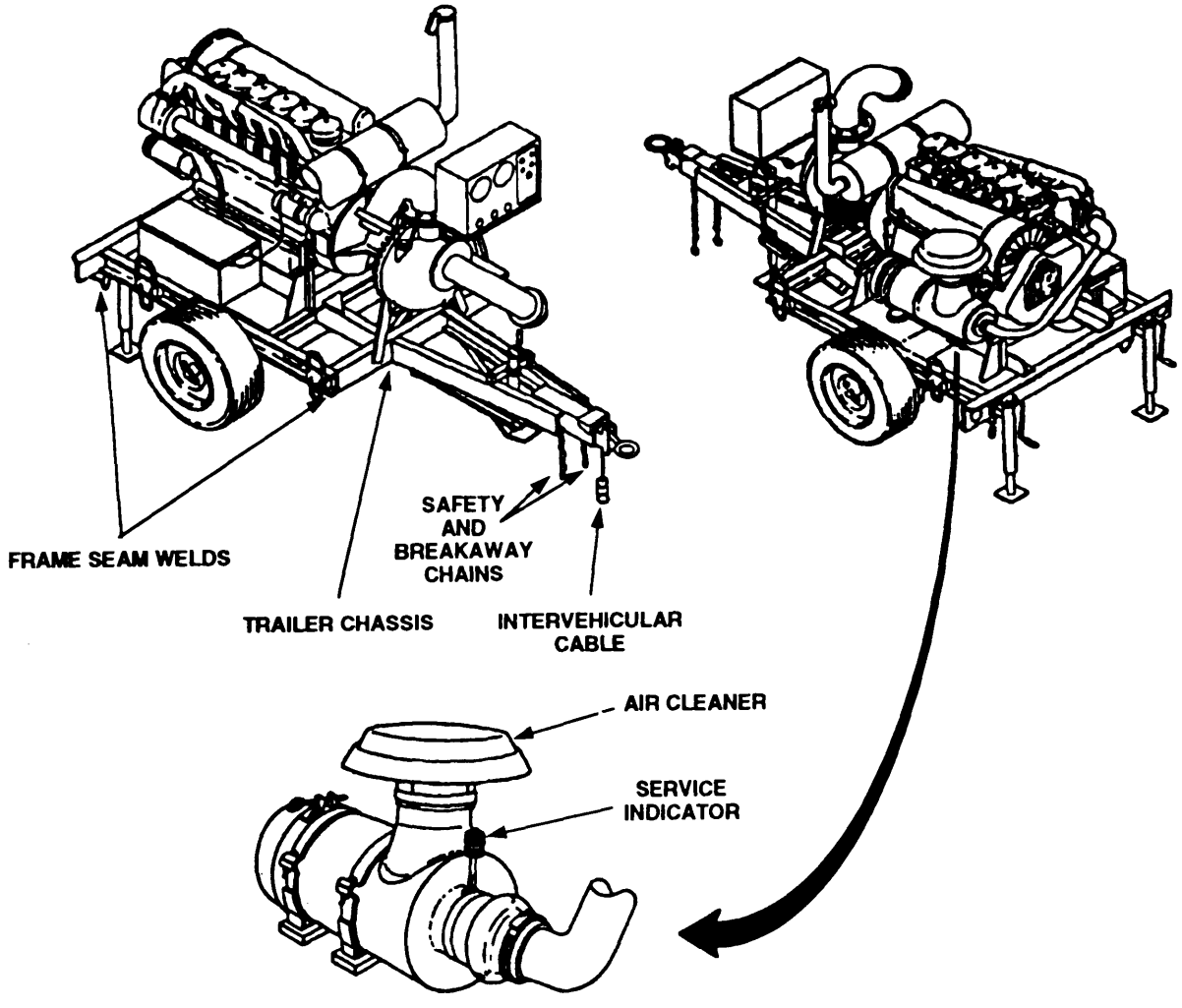

40	After	Air Cleaner	Check if service indicator is red. If red, notify unit maintenance.	Air cleaner service indicator is red.

Table 2-12. Preventive Maintenance Checks and Services for Pumping Assembly Model US636HCCD-1. (Continued)

Item No.	Interval	Location: Item to Check/Service	Procedure	Not Fully Mission Capable if:
		ENGINE - CONT		
41	After	Oil Lines	Check for leaks and damage. If line is leaking, notify unit maintenance.	Class III leak. Oil line is damaged.
42	After	Fuel Lines	Check for leaks and damage. If line is leaking, notify unit maintenance.	Class I, II, or III leak. Fuel line is damaged.
43	After	Oil Dipstick	Check level. If oil is at or below ADD mark on dipstick, remove cap from oil filler neck. Add oil, as required, to FULL mark on dipstick. Refer to LO 10-4320-344-12. Install cap after adding oil.	Oil level is at or below ADD mark on dipstick. Dipstick missing.

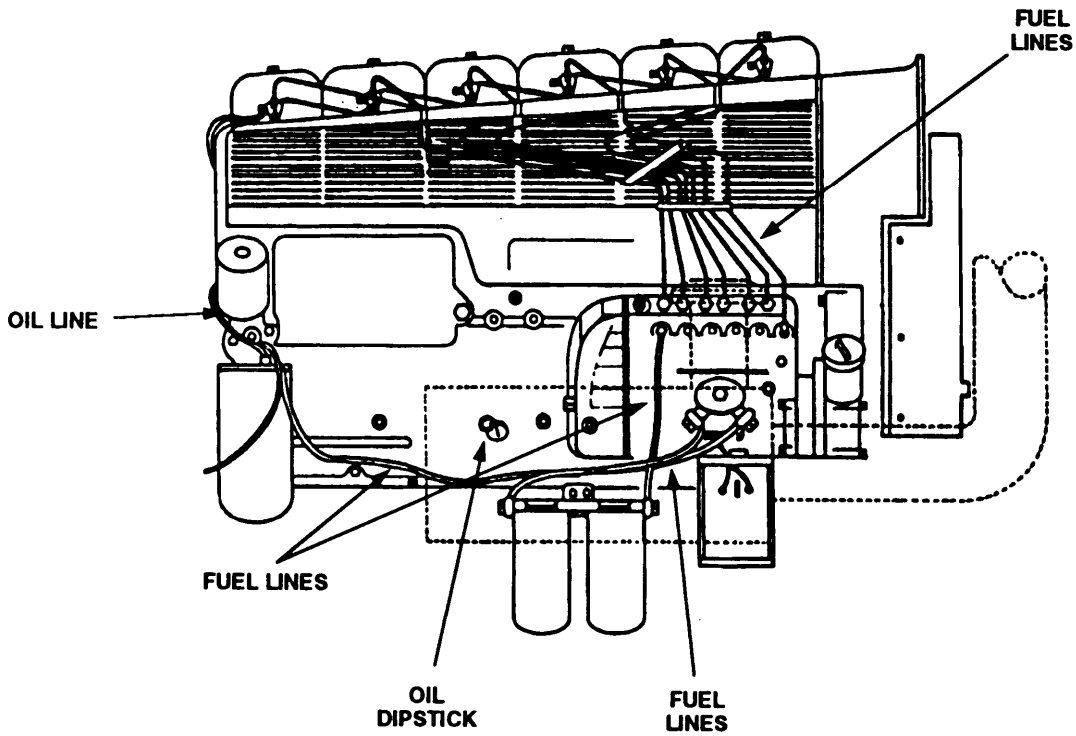

Table 2-12. Preventive Maintenance Checks and Services for Pumping Assembly Model US636HCCD-1. (Continued)

Item No.	Interval	Location: Item to Check/Service	Procedure	Not Fully Mission Capable if:
		TRAILER CHASSIS		
44	Weekly	Tires and Rims	Check tires for wear and tires and rims for damage. If damage or excessive wear is seen, notify unit maintenance.	Tire or rim is damaged. Tire is excessively worn or flat.
45	Weekly	Lights	Check for cracked or broken lenses. With trailer connected to towing vehicle, check operation of lights. If lens is cracked or broken or light is inoperable, notify unit maintenance.	Lens is cracked or broken. Light does not work.

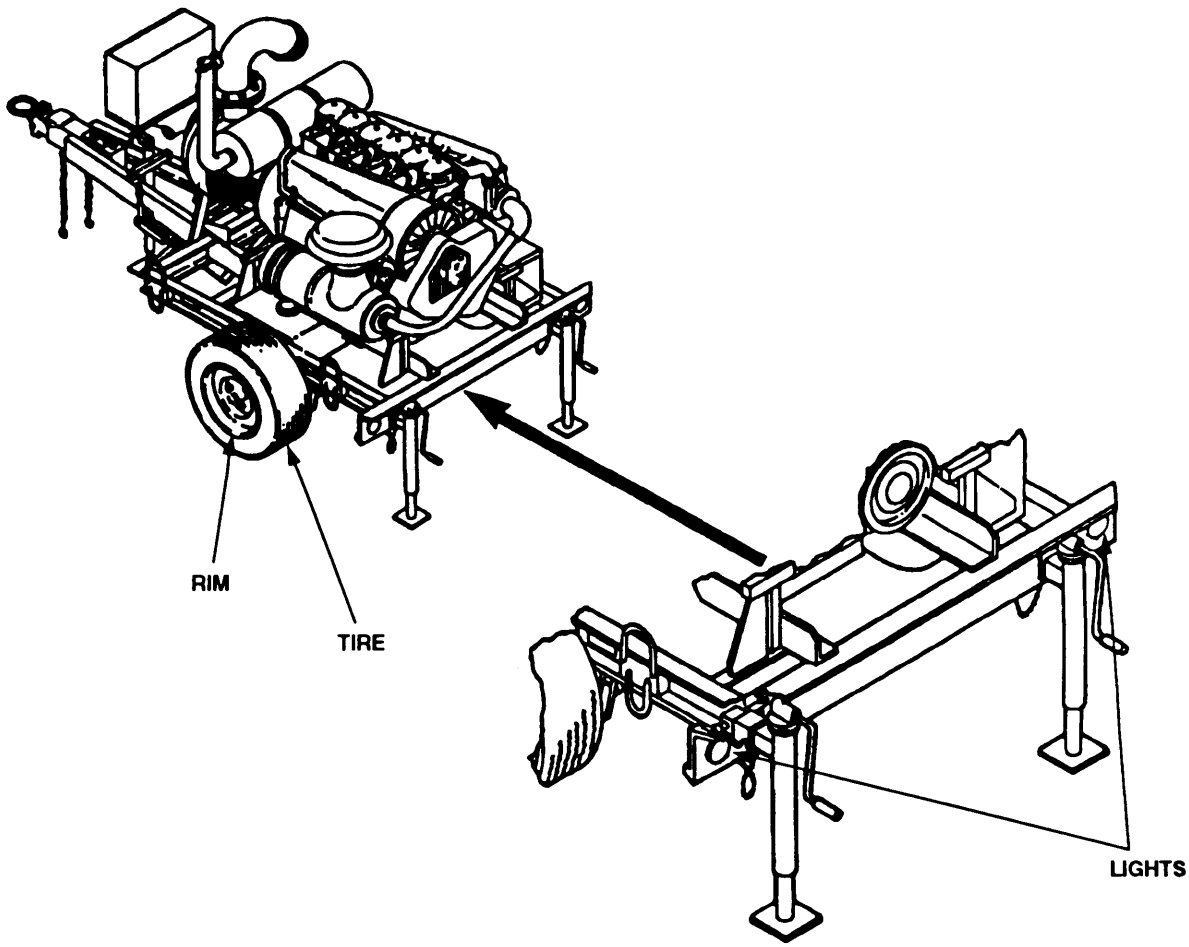

SECTION III. OPERATION UNDER USUAL CONDITIONS

2.3 ASSEMBLY AND PREPARATION FOR USE.

2.3.1 Site Location. Site requirements will be based on the needs of the system in which the pumping assembly is to be used. The pumping assemblies are components of a Tactical Water Distribution Equipment System (TWDS). Refer to applicable TWDS technical manual for site requirements. When used as a source pumping station, the site location will be determined by the location of the water source. When used as boost pumping station(s), the spacing and location(s) will be determined by the configuration of the line (hoseline or pipeline) to which the pumping assembly is connected. Requirements for the TWDS hoseline are defined in applicable TWDS technical manual. For all requirements, the site should be as level as possible and must be capable of being traversed by the vehicle used to tow the pumping assembly.

NOTE

The following procedure is applicable to all three models of the 600 GPM pumping assemblies. Procedures may vary slightly between models.

2.3.2 Assembly and Preparation of Pumping Assemblies. Use a suitable vehicle to tow pumping assembly to the installation site. Refer to Figure 2-13 and disconnect pumping assembly from the towing vehicle as follows:

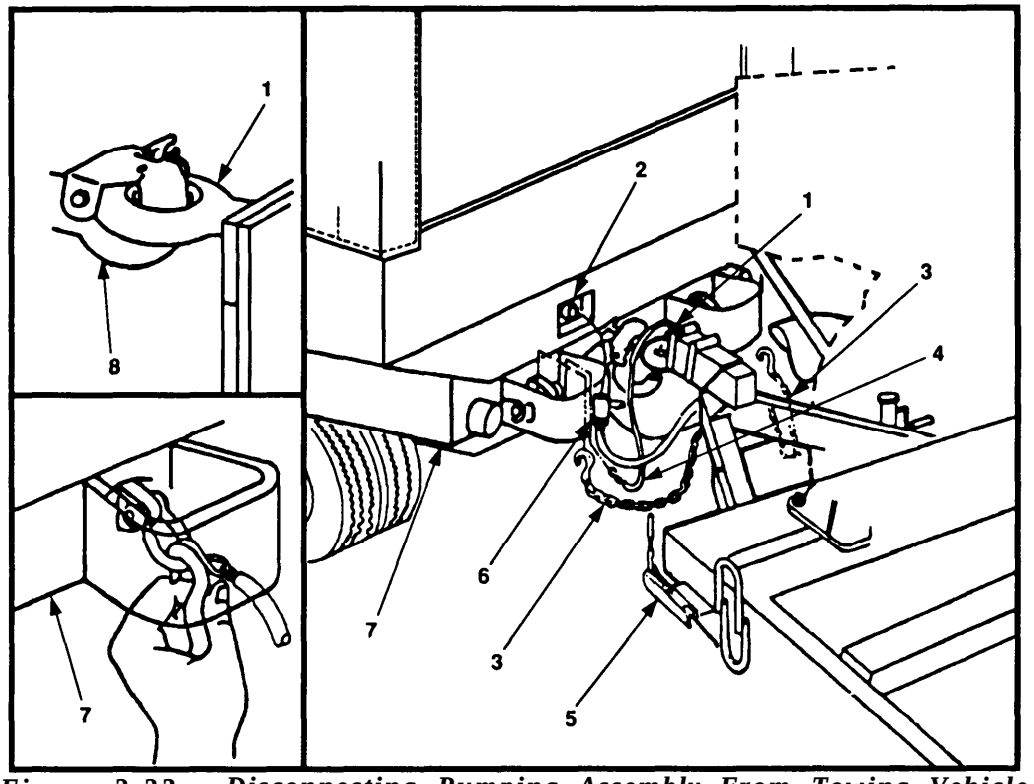

Figure 2-23. Disconnecting Pumping Assembly From Towing Vehicle.

a. Place park brake lever(s) (5) in lock position.

b. Disconnect intervehicular cable (6) from mating receptacle (2) on tow vehicle (7) .

NOTE

Tongue jack may be equipped with a double-posted front jack or a front tripod. If equipped with a front tripod, go to step d.

c. If equipped with a double-posted front jack, refer to Figure 2-14 and perform the following:

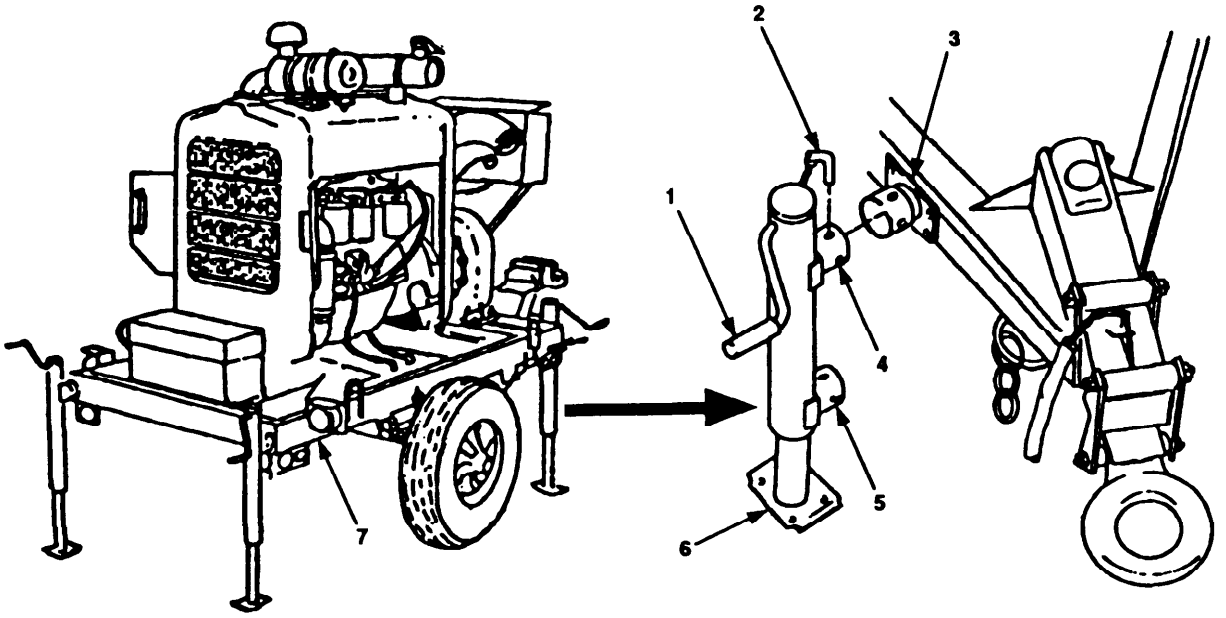

Figure 2-14. Double-posted Front Jack.

(1) Disconnect double-posted front jack (6) from travel position by removing pin (2) and sliding post (4 or 5) from sleeve (3).

(2) Slip upper post (4) over sleeve (3) on front right side of trailer (7).

(3) Turn double-posted front jack (6) to vertical position. Align holes in post (4) and sleeve (3). Insert pin (2) through holes.

(4) Use turncrank (1) to lower jack (6). Hack trailer (7) to position. where trailer lunette (Figure 2-13, 1) can be released from pintle hook (8) on tow vehicle (7).

d. If trailer is equipped with front tripod, refer to figure 2-15 and perform the following:

(1) Use turncrank (2) of tripod jack (1) to lower tripod (4).

(2) Raise trailer (Figure 2-15, 3) to position where lunette (5) can be released from pintle hook (Figure 2-13, 8) on tow vehicle (7).

e. Disconnect safety chains (3) and breakaway chain (4) from tow vehicle (7).

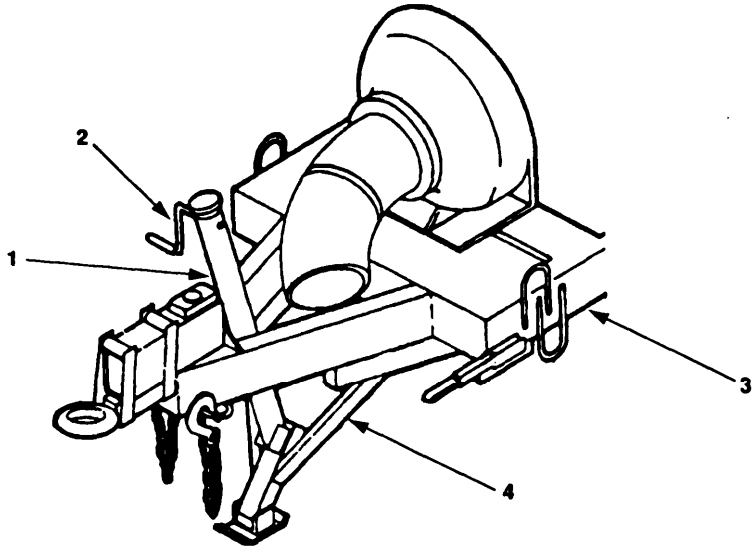

Figure 2-15. Front Trippod.

f. Refer to Figure 2-16 and reposition rear jacks from travel Position to operating position as follows:

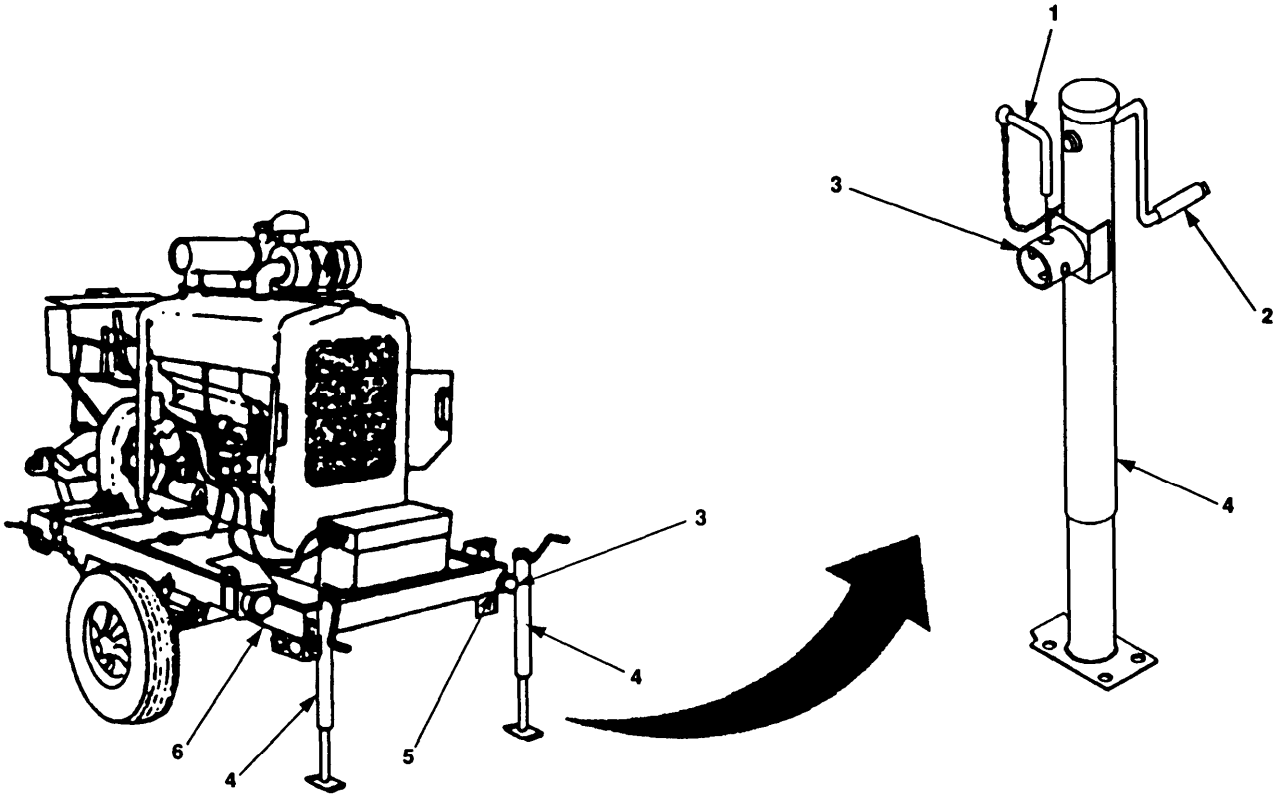

Figure 2-16. Rear Jacks.

(1) For each jack (4) remove pin (1) that secures jack (4) in travel position.

(2) Swing jack (4) down to vertical position. Align holes in post (3) and sleeve (5) . Insert pin (1) through holes.

g. Use turncranks (2) to lower jacks (4) until trailer (6) is secured in level position.

2.3.2.1 Unpacking. Models 609-A and US636HCCD-1 are shipped with a protective plywood cap. The protective plywood cap will have been removed by unit maintenance as part of the service upon receipt of materiel. If depreservation was needed, it will have been performed by unit maintenance.

2.3.2.2 Installation of Pumping Assemblies. The suction port and discharge ports have a groove for connection to a grooved pipe coupling. Before operation, the suction and discharge ports must be connected to a hoseline or pipeline. Pumping assembly installation instructions for the TWDS are contained in applicable TWDS technical manual.

2.4 INITIAL ADJUSTMEMTS, CHECKS, MD SELF TEST.

CAUTION

Do not operate pump unless casing is filled with water to level of suction port. Operating a dry pump will cause overheating and damage unit.

The pumping assembly must be primed before initial startup. Once primed, repriming is not needed unless the pump loses prime because of a leak, hoseline or pipeline break, or disconnection for maintenance. If the pumping assembly is to be operated as a standalone unit or source pump, manually prime the pump by filling with water through the pump fill plug or priming port cap. If the pumping assembly is to be operated as a boost pump, it will receive priming water from the upline pump; but trapped air must be released through the discharge elbow.

2.4.1 Priming of Lead Pump. Refer to Figure 2-17 and prime the pumping assembly as follows:

a. Remove fill plug (1) or priming port cap (2).

b. Fill pump casing (3) with water to bottom of fill plug hole.

c. Install fill plug (1) or priming port cap (2).

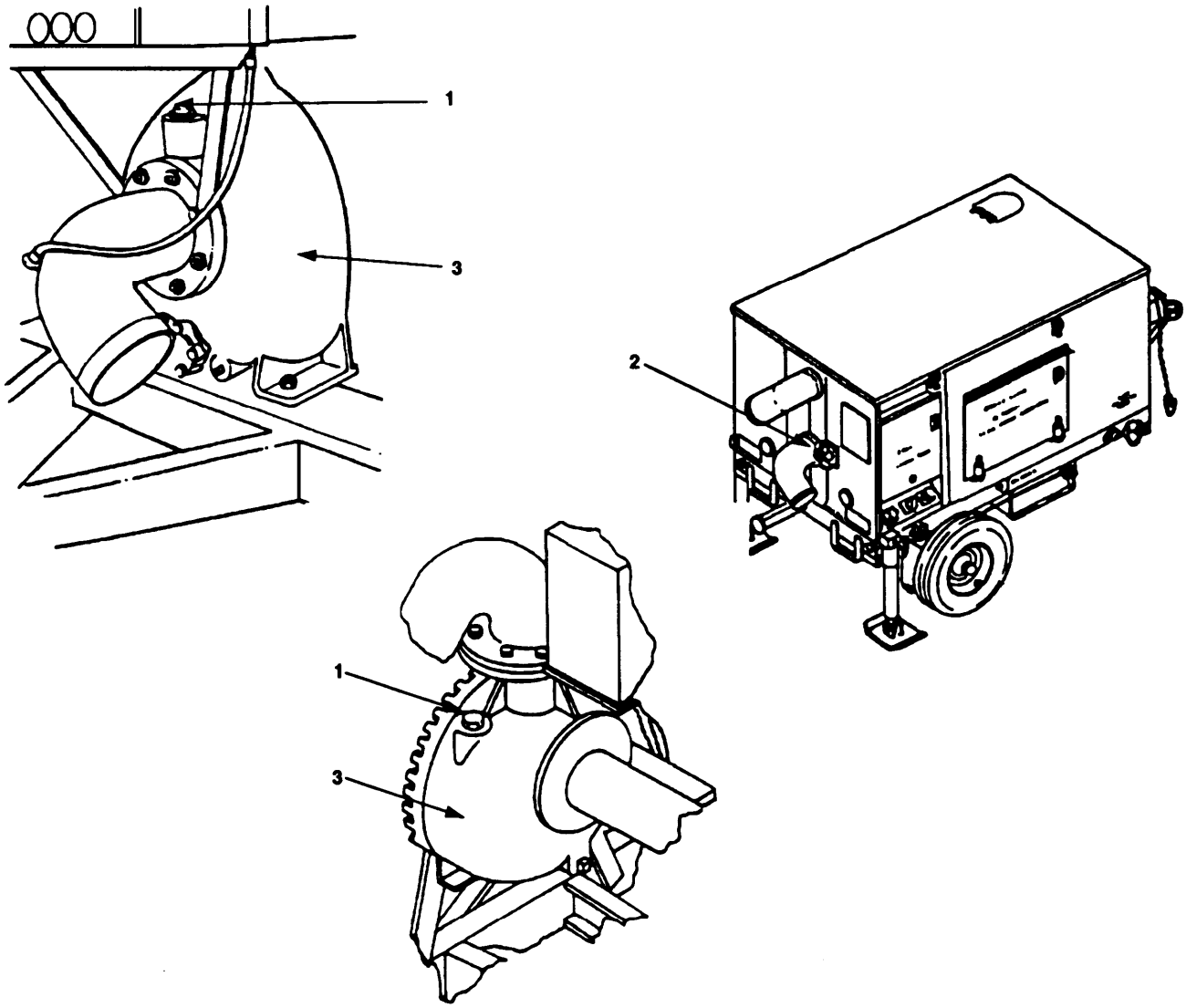

Figure 2-17. Priming Pumping Assemblies.

2.4.2 Priming of Boost Pump.

CAUTION

Trapped air can cause hoseline to collapse. Trapped air could cause pressure at downline pumping station(s) to fall below required suction pressure. To prevent damage to pump, vent air from hoseline/pipeline -

When the pumping assembly is to be operated as a boost pump, it will receive priming water from the upline pump; but trapped air must be released during initial startup. Refer to Figure 2-18 and vent the air from the hoseline/pipeline and pump as follows:

a. Turn petcock (2) on pump discharge elbow (1) until fully open.

b. Notify operator of upline pumping station to begin pump operation.

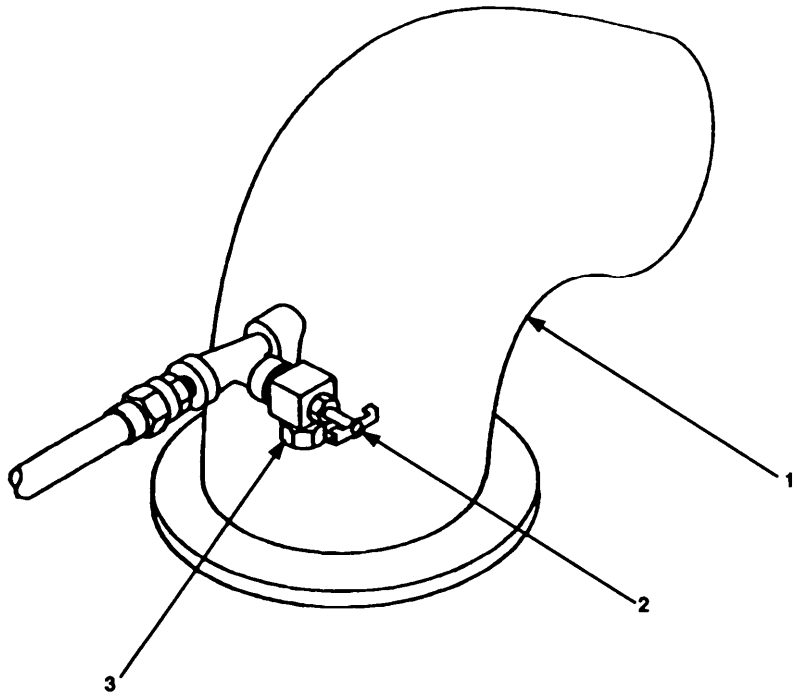

Figure 2-18 Pump Discharge Elbow.

c. Listen for air escaping from petcock (2).

d. Watch for start of water flow from petcock outlet (3). Close petcock (2) when water begins to flow from petcock outlet (3).

2.5 OPERATING PROCEDURES.

2.5.1 Operation of Model 609-A. The pumping assembly is capable of three modes of operation: manual, electric manual, and electric automatic. Use manual or electric manual mode for startup. Electric automatic mode may be used for sustained operation after startup.

2.5.1.1 Manual Mode. Before starting Model 609-A, make sure that the pump has been primed (paragraph 2.4.1 or 2.4.2). Refer to Figure 2-19 and start and operate Model 609-A as follows:

a. Perform "Before" PMCS (Table 2-10).

b. Pull out MODE SWITCH (4) to unlock and set to MANUAL THROTTLE position.

c. Turn MANUAL THROTTLE (6) clockwise until it is full in.

d. Turn FUEL RACK handle (7) counterclockwise to UNLOCK position. Pull handle fully out and turn clockwise to LOCK position.

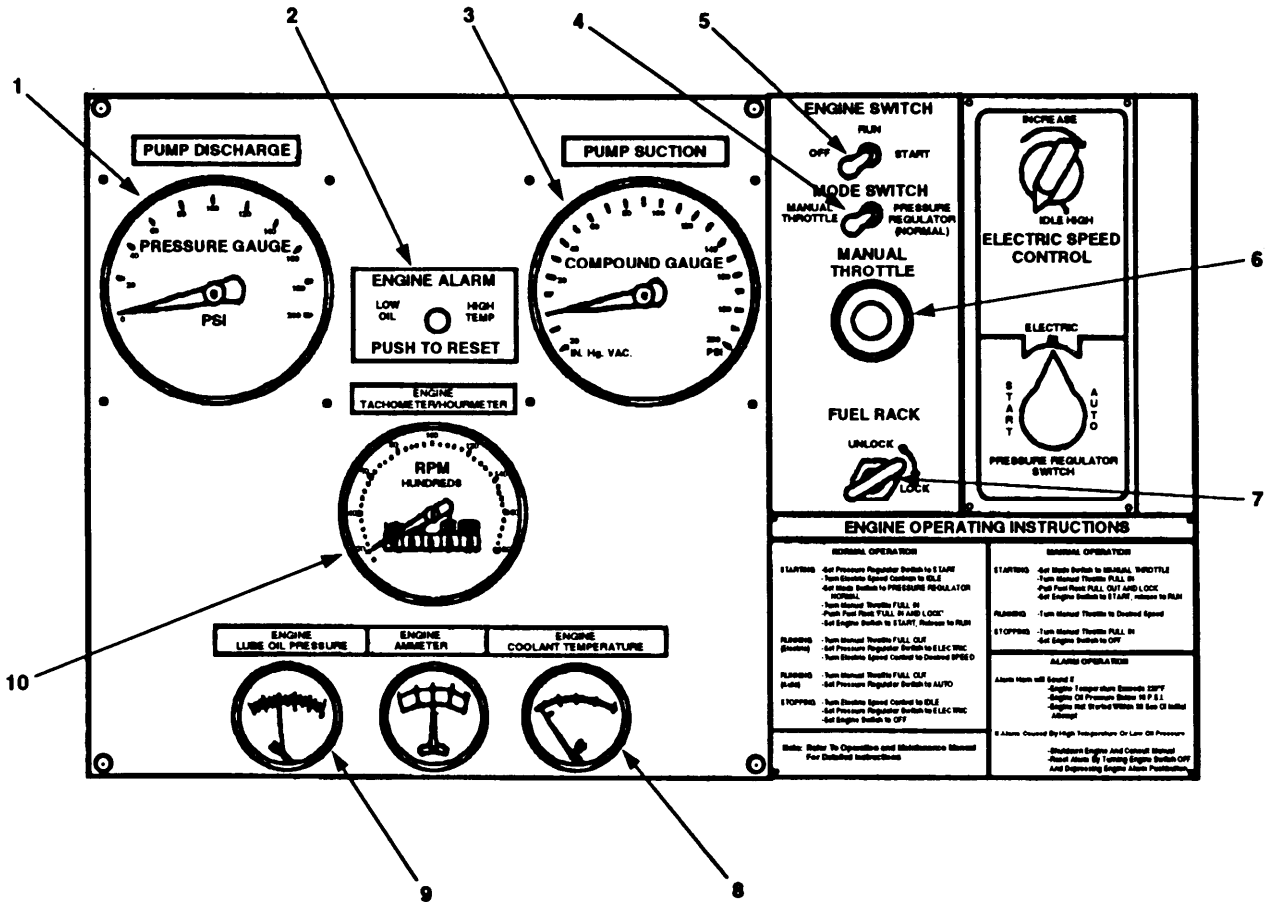

Figure 2-19. Model 609-A Controls Used for Manual Operation.

WARNING

To avoid hearing loss, hearing protection must be worn by personnel standing within 50 feet of operating pumping assembly.

CAUTION

To prevent damage to starter, allow 3 minutes between start attempts.

NOTE

Engine alarm will sound if engine does not start within 30 seconds after ENGINE SWITCH is set to START position.

e. Push ENGINE SWITCH (5) to START position and hold for no more than 30 seconds or until engine starts. When engine starts, release ENGINE SWITCH (5) . Engine will run at idle speed (1,000 revolutions per minute (rpm)). If engine alarm sounds:

(1) Set ENGINE SWITCH (5) to OFF position.

(2) Reset engine alarm by pushing ENGINE ALARM reset button (2) .

(3) Wait 3 minutes, then repeat step e.

2.5.1.1 Manual Mode. (Continued)

WARNING

If pump fails to take suction, pump can overheat. Overheated pump can cause severe burns.

f. Turn MANUAL THROTTLE (6) counterclockwise until pump takes suction, as indicated by pressure reading on PUMP SUCTION gauge (3) or decrease in engine speed as indicated on ENGINE TACHOMETER/HOURMETER (10). If pump fails to take suction after 3 minutes, shut down engine by setting ENGINE SWITCH (5) to off position. Notify unit maintenance.

CAUTION

Downline pumping assemblies can be damaged if suction pressure falls below 10 pounds per square inch (psi). Any pumping assemblies may be damaged if discharge pressure rises above 150 psi.

NOTE

Suction and discharge pressures will vary depending on operating conditions and engine speed.

g. Monitor suction pressure on PUMP SUCTION gauge (3). Also monitor discharge pressure on PUMP DISCHARGE gauge (1). If suction pressure falls below 10 psi on any downline pumping assemblies or discharge pressure rises above 150 psi on all pumping assemblies, reduce engine speed to regain proper pressure as follows:

(1) Turn MANUAL THROTTLE (6) clockwise to decrease engine speed. Decrease engine speed until reading on PUMP SUCTION gauge (3) and reading on PUMP DISCHARGE gauge (1) are within proper pressures.

(2) If required, reduce engine speed to idle (1,000 rpm on ENGINE TACHOMETER/HOURMETER (10)) until problem is corrected.

h. If required, use MANUAL THROTTLE (6) to control pump output by adjusting engine speed. Pump output is related to discharge pressure. Observe PUMP DISCHARGE gauge (1) and use MANUAL THROTTLE (6) to adjust engine speed. Turn MANUAL THROTTLE (6) counterclockwise to increase speed and discharge pressure. Turn it clockwise to decrease speed and discharge pressure.

i. Perform “During” PMCS (Table 2-10).

CAUTION

Engine can be damaged if engine operating temperature rises above 220° F (104° C) or oil pressure falls below 10 psi (69 kPa).

NOTE

Engine alarm will sound if engine operating temperature rises above 220° F (104° C) or oil pressure falls below 10 psi (69 kPa).

j. If engine alarm (2) sounds:

(1) Check ENGINE COOLANT TEMPERATURE gauge (8) and ENGINE LUBE OIL PRESSURE gauge (9) . If engine temperature or oil pressure is not within proper limits, shut down engine (step k below).

(2) Reset engine alarm by pushing ENGINE ALARM reset button (2).

(3) Notify unit maintenance.

CAUTION

To prevent damage to engine, **DO NOT** shut down engine suddenly from full-load running.

k. To stop engine, turn MANUAL THROTTLE (6) clockwise to fully in position. Let engine idle for 2 or 3 minutes. Push engine switch (5) left to OFF position. Engine will shut down.

l. Turn FUEL RACK handle (7) counterclockwise and release.

m. Perform "After" PMCS (Table 2-10).

2.5.1.2 Electric Manual Mode. Before starting pumping assembly 609-A, make sure that the pump has been primed (paragraph 2.4.1 or 2.4.2) . Refer to Figure 2-20 and start and operate Model 609-A as follows:

a. Perform "Before" PMCS (Table 2-10).

b. Turn PRESSURE REGULATOR SWITCH (8) counterclockwise to START position.

c. Turn ELECTRIC SPEED CONTROL (6) counterclockwise to IDLE position.

d. pull out MODE SWITCH (4) and set to PRESSURE REGULATOR (NORMAL) Position.

e. Turn MANUAL THROTTLE (7) clockwise until it is fully in.

f. Turn FUEL RACK handle (9) left to UNLOCK position. Push handle fully in and turn right to LOCK position.

WARNING

To avoid hearing loss, hearing protection must be worn by personnel standing within 50 feet of operating pumping assembly.

CAUTION

To prevent damage to starter, allow 3 minutes between start attempts.

NOTE

Engine alarm will sound if engine does not start within 30 seconds after ENGINE SWITCH is set to START position.

g. Push ENGINE SWITCH (5) right to START position and hold for no more than 30 seconds or until engine starts. When engine starts, release ENGINE SWITCH (5). Engine will run at idle speed (1,000 rpm). If engine alarm sounds:

2.5.1.2 Electric Manual Mode. (Continued)

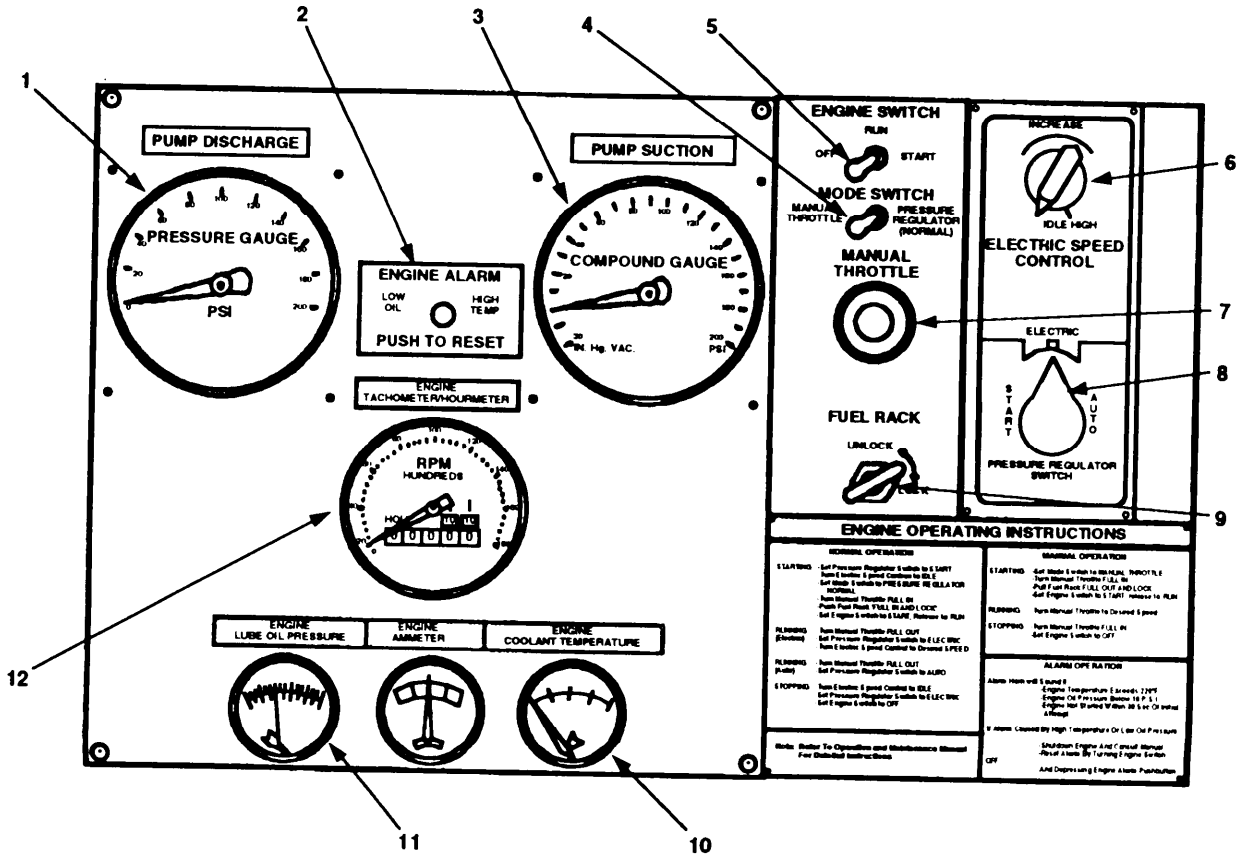

Figure 2-20. Model 609-A Control Used for Electric Manual and Electric Automatic Operation.

(1) Set ENGINE SWITCH (5) to OFF position.

(2) Reset engine alarm by pushing ENGINE ALARM reset button (2).

(3) Wait 3 minutes, then repeat step g.

h. Turn MANUAL THROTTLE (7) counterclockwise until it is fully out.

i. Set PRESSURE REGULATOR SWITCH (8) to ELECTRIC position.

WARNING

If pump fails to take suction, pump can overheat. Overheated pump can cause severe burns.

j. Turn ELECTRIC SPEED CONTROL (6) clockwise until pump takes suet ion, as indicated by pressure reading on PUMP SUCTION gauge (3) or decrease in engine speed as indicated on ENGINE TACHOMETER/HOURMETER (12). If pump fails to take suction after 3 minutes, shut down engine (step o). Notify unit maintenance.

CAUTION

Downline pumping assemblies can be damaged if suction pressure falls below 10 psi. Any pumping assembly may be damaged if discharge pressure rises above 150 psi.

NOTE

Suction and discharge pressures will vary depending on operating conditions and engine speed.

k. Monitor suction pressure on PUMP SUCTION gauge (3). Also monitor discharge pressure on PUMP DISCHARGE gauge (1). If suction pressure falls below 10 psi or discharge pressure rises above 150 psi, reduce engine speed to regain proper pressure as follows:

(1) Turn ELECTRIC SPEED CONTROL (6) counterclockwise to decrease engine speed. Decrease engine speed until reading on PUMP SUCTION gauge (3) or reading on PUMP DISCHARGE gauge (1) are within proper pressures.

(2) If required, reduce engine speed to idle (1,000 rpm on ENGINE TACHOMETER/HOURMETER (10)) until problem is corrected.

l. If required, use ELECTRIC SPEED CONTROL (6) to control pump output by adjusting engine speed. Pump output is related to discharge pressure. Observe PUMP DISCHARGE gauge (1) and use ELECTRIC SPEED CONTROL (6) to adjust engine speed. Turn ELECTRIC SPEED CONTROL (6) clockwise to increase speed and discharge pressure. Turn ELECTRIC SPEED CONTROL (6) counterclockwise to decrease speed and discharge pressure.

m. Perform "During" PMCS (Table 2-10).

CAUTION

Engine can be damaged if engine operating temperature rises above 220° F (104° C) or oil pressure falls below 10 psi (69 kPa).

NOTE

Engine alarm will sound if engine operating temperature rises above 220° F (104° C) or oil pressure falls below 10 psi (69 kPa).

n. If engine alarm (2) sounds:

(1) Check ENGINE COOLANT TEMPERATURE gauge (10) and ENGINE LUBE OIL PRESSURE gauge (11). If engine temperature or oil pressure is not within proper limits, shut down engine (step o below) .

(2) Reset engine alarm by pushing ENGINE ALARM reset button (2) .

(3) Notify unit maintenance.

2.5.1.2 Electric Manual Mode. (Continued)

CAUTION

To prevent damage to engine, **DO NOT** shut down engine suddenly from full-load running.

o. To stop engine, turn ELECTRIC SPEED CONTROL (6) counterclockwise to idle position. Let engine idle for 2 or 3 minutes. Push ENGINE SWITCH (5) to OFF position. Engine will shut down.

p. Turn FUEL RACK handle (7) counterclockwise and release.

q. Perform "After" PMCS (Table 2-10).

2.5.1.3 Electric Automatic Mode. Start and operate Model 609-A as follows:

CAUTION

During startup, all pumping assemblies should be operated in manual or electric manual modes.

a. Perform steps a through j of paragraph 2.5.1.2.

b. Turn PRESSURE REGULATOR SWITCH (Figure 2-21, 4) clockwise to AUTO position. Engine speed is now automatically controlled by the pressure regulator. The pressure regulator provides 150 psi discharge pressure at suction pressures of 20 to 120 psi.

c. Perform "During" PMCS (Table 2-10).

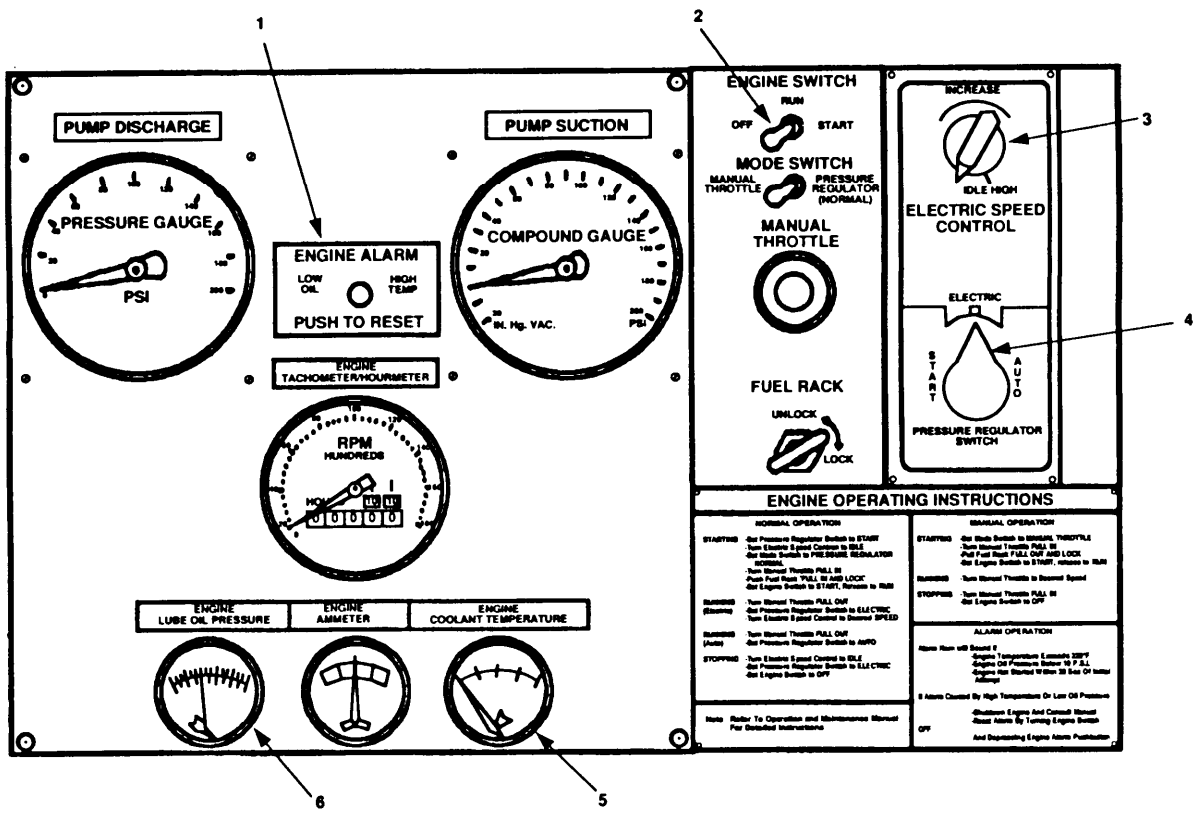

Figure 2-21. Model 609-A Controls for Electric Automatic Operation.

CAUTION

Engine can be damaged if engine operating temperature rises above 220° F (104° C) or oil pressure falls below 10 psi (69 kPa).

NOTE

Engine alarm will sound if engine operating temperature rises above 220° F (104° C) or oil pressure falls below 10 psi (69 kPa).

d. If engine alarm sounds:

(1) Check ENGINE COOLANT TEMPERATURE gauge (5) and ENGINE LUBE OIL PRESSURE gauge (6). If engine temperature or oil pressure is not within proper limits, shut down engine (step e).

(2) Reset engine alarm by pushing ENGINE ALARM reset button (1).

(3) Notify unit maintenance.

CAUTION

To prevent damage to engine, **DO NOT** shut down engine suddenly from full-load running.

e. To stop engine, turn ELECTRIC SPEED CONTROL (3) counterclockwise to idle position. Let engine idle for 2 or 3 minutes. Push ENGINE SWITCH (2) to OFF position. Engine will shut down.

f. Perform "After" PMCS (Table 2-10).

2.5.2 Operation of Model 609-C. The pumping assembly is capable of two modes of operation, manual and automatic. Use manual mode for startup. Automatic mode may be used for sustained operation after startup. Model 609-C can be operated using fuel from its self-contained fuel tank, or from an external fuel source. Refer to Figure 2-22 and perform the following:

a. To use fuel from the self-contained fuel tank, set valves as follows:

(1) Set fuel return valve (2) to FUEL TANK RETURN position.

(2) Set fuel selector valve (3) to FUEL TANK ON position.

b. To use fuel from an external fuel source, connect hoses and set valves as follows:

(1) Connect fuel supply hose from external fuel source to AUXILIARY FUEL INLET connector (4).

(2) Connect external fuel source fuel return hose to AUXILIARY FUEL RETURN connector (1).

(3) Set fuel selector valve (3) to AUXILIARY ON LINE position.

(4) Set fuel return valve (2) to AUXILIARY LINE RETURN position.

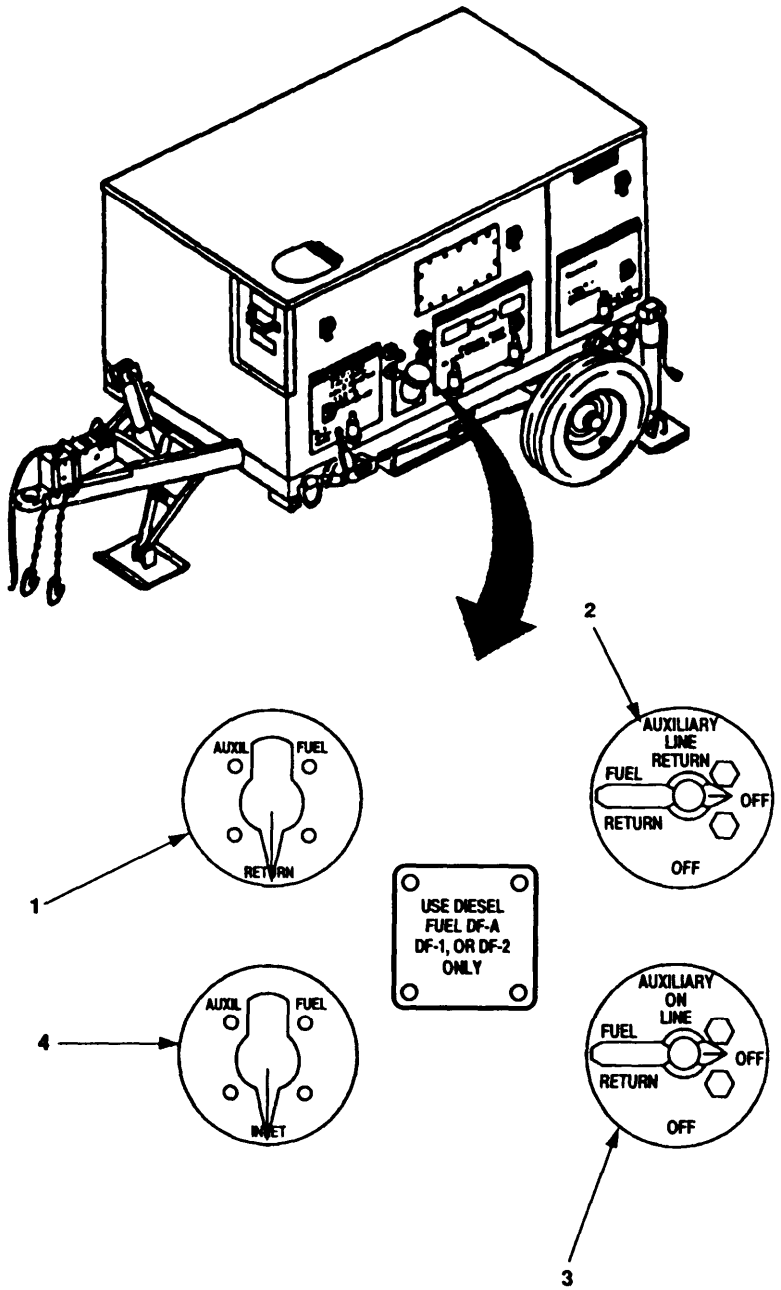

Figure 2-22. Model 609-C Connections for External Fuel Supply.

2.5.2.1 Manual Mode. Before starting pumping assembly, make sure that the pump has been primed (paragraph 2.4.1 or 2.4.2). Start and operate pumping assembly as follows:

a. Perform "Before" PMCS (Table 2-11).

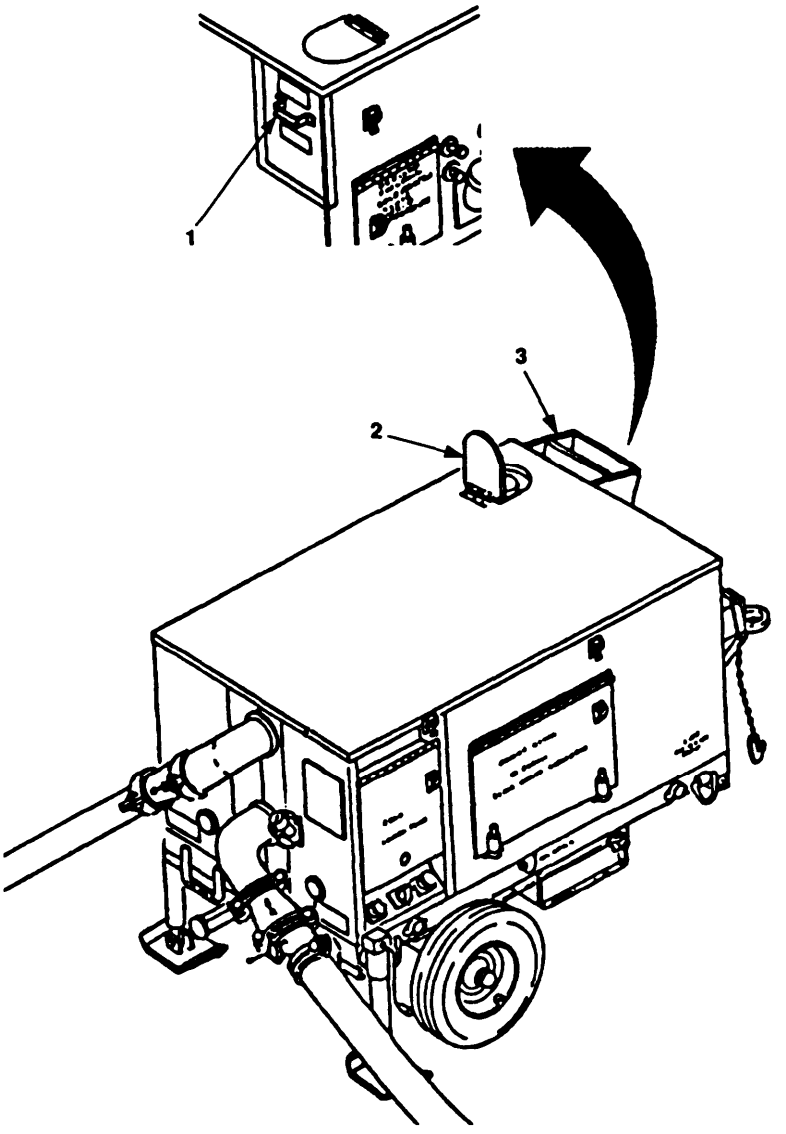

Figure 2-23. Model 609-C Setup for Startup.

b. Pull air exhaust door handle (Figure 2-23, 1) to open aior exhaust scoop (3) and engine exhaust door (2) .

c. Open control panel door and set MAIN POWER switch (Figure 2-24, 7) to ON position.

d. Set THROTTLE SELECT switch (4) to MANUAL position.

e. Unlock AUTO DEFEAT handle (5), pull out, and lock in place to prevent automatic operation.

2.5.2.1 Manual Mode. (Continued)

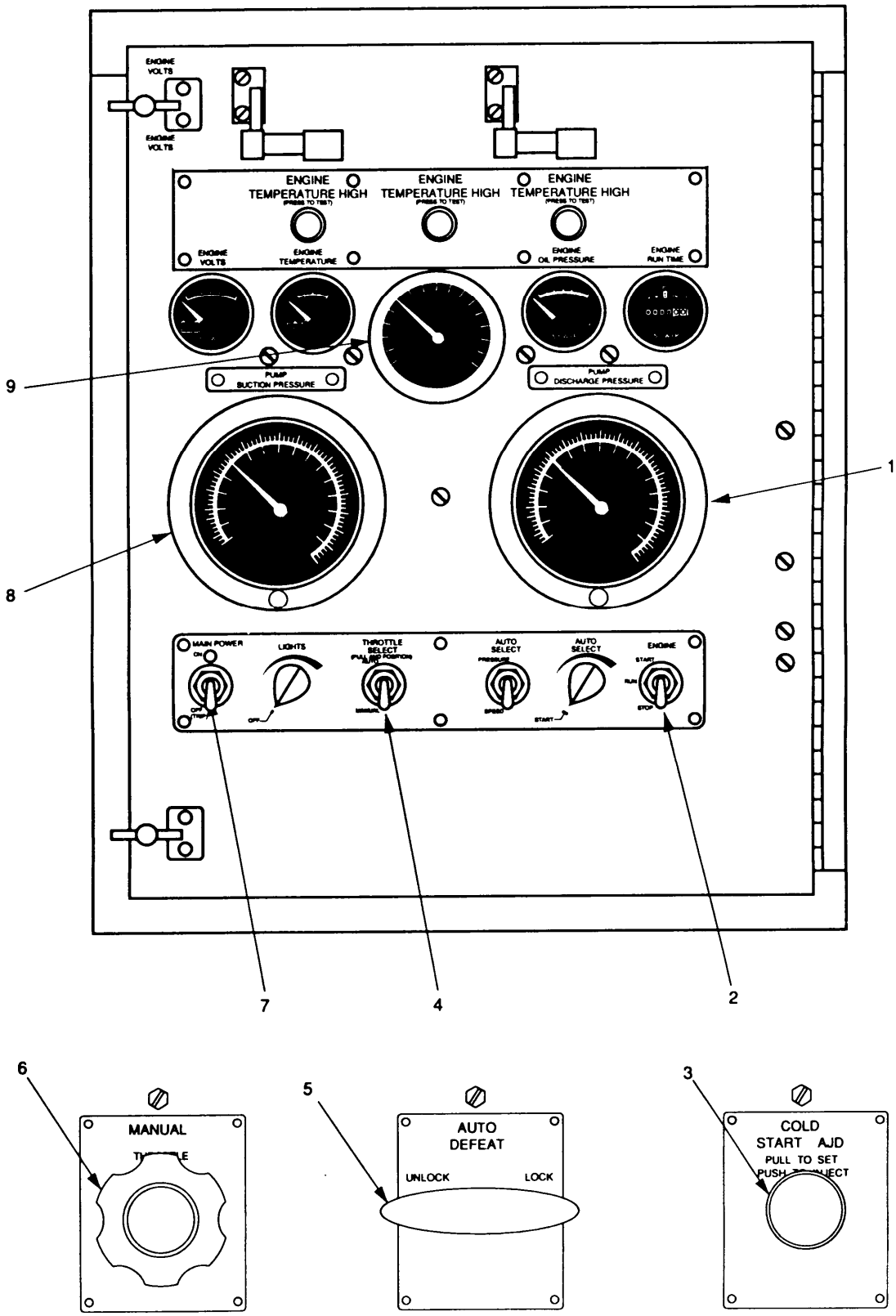

Figure 2-24. Model 609-C Controls Used for Manual Operations.

CAUTION

- Do not use cold starting aid at temperatures above 32° F (0° C).
- Do not use cold starting aid more than three times in a row.
- Wait at least three minutes between starting attempts when using cold start aid.
- Failure to obey this caution may result in damage to equipment.

f. If engine is cold, perform the following:

(1) Pull COLD START AID knob (3).

(2) Push COLD START AID knob (3) in and hold for no more than three seconds while cranking engine.

(3) Pull COLD START AID knob (3) out.

(4) If engine does not start, wait at least three minutes and repeat step f.

(5) If pumping assembly does not start after three attempts, using cold starting aid, notify unit maintenance.

WARNING

To prevent hearing loss, hearing protection must be worn by personnel standing within 50 feet of operating pumping assembly.

CAUTION

To prevent damage to starter, allow 3 minutes between start attempts.

g. Push ENGINE switch (2) to START position and hold for no more than 30 seconds or until engine starts. When engine starts, release ENGINE switch (2). Engine will run at idle speed (650 rpm as seen on ENGINE SPEED indicator (9)). If engine fails to start, wait 3 minutes between start attempts.

WARNING

If pump fails to take suction, pump can overheat. Overheated pump can cause severe burns.

h. Turn MANUAL THROTTLE (6) clockwise until pump takes suction, as indicated by pressure reading on PUMP SUCTION PRESSURE gauge (8). If pump fails to take suction after 3 minutes, shut down engine in accordance with step 1 below. Notify unit maintenance.

2.5.2.1 Manual Mode. (Continued)

CAUTION

Downline pumping assemblies can be damaged if suction pressure falls below 10 psi. Any pumping assembly can be damaged if discharge pressure rises above 150 psi.

NOTE

Suction and discharge pressures will vary depending on operating conditions and engine speed.

i. Monitor suction pressure on PUMP SUCTION PRESSURE gauge (8). Also monitor discharge pressure on PUMP DISCHARGE PRESSURE gauge (1). If suction pressure falls below 10 psi or discharge pressure rises above 150 psi, reduce engine speed to regain proper pressure as follows:

(1) Turn MANUAL THROTTLE (6) counterclockwise to decrease engine speed. Decrease engine speed until reading on PUMP SUCTION PRESSURE gauge (8) and reading on PUMP DISCHARGE PRESSURE gauge (1) are within proper pressures.

(2) If required, reduce engine speed to idle (650 rpm on ENGINE SPEED indicator (9)) until problem is corrected.

j. If required, use MANUAL THROTTLE (6) to control pump output by adjusting engine speed. Pump output is related to discharge pressure. Observe PUMP DISCHARGE PRESSURE gauge (1) and use MANUAL THROTTLE (6) to adjust engine speed. Turn MANUAL THROTTLE (6) clockwise to increase engine speed and discharge pressure. Turn it counterclockwise to decrease engine speed and discharge pressure.

k. Perform “During” PMCS (Table 2-11).

CAUTION

To prevent damage to engine, **DO NOT** shut down engine suddenly from full-load running.

l. Shut down Model 609-C as follows:

(1) To stop engine, turn MANUAL THROTTLE (6) fully counterclockwise. Let engine idle for 2 or 3 minutes. Set ENGINE switch (2) to STOP position. Engine will shut down.

(2) Unlock AUTO DEFEAT handle (5), push fully in, and lock in this position.

(3) Set MAIN POWER switch (7) to OFF position.

(4) Close control panel door.

m. Perform "After" PMCS (Table 2-11).

2.5.2.2 Automatic Mode. Refer to Figure 2-25 and start and operate pumping assembly as follows:

a. Perform “Before” PMCS (Table 2-11).

b. Turn MANUAL THROTTLE (8) fully clockwise.

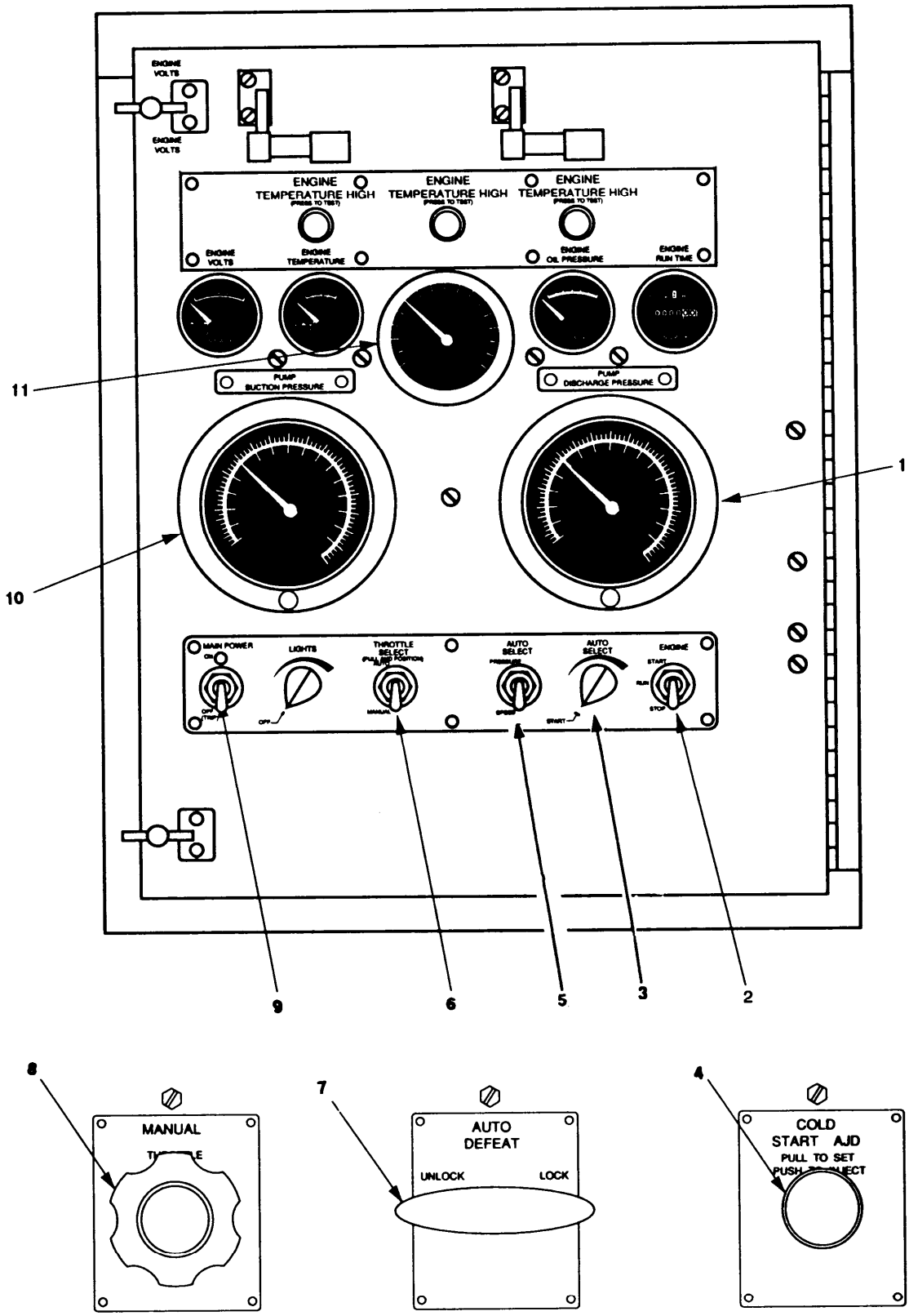

Flgure 2-25. Model 609-C Controls Used for Automatic Operation.

2.5.2.2 Automatic Mode. (Continued)

c. Unlock AUTO DEFEAT handle (7) and allow to fully retract. Lock in retracted position.

d. Set MAIN POWER switch (9) to ON.

e. Set THROTTLE SELECT switch (6) to AUTO.

f. If regulation of pressure is desired, set AUTO SELECT switch (5) to PRESSURE.

g. If regulation of engine speed is desired, set AUTO SELECT switch (5) to SPEED.

CAUTION

- Do not use cold starting aid at temperatures above 32° F (0° C).
- Do not use cold starting aid more than three times in a row.
- Wait at least three minutes between starting attempts when using cold start aid.
- Failure to obey this caution may result in damage to equipment.

h. If engine is cold, perform the following:

(1) Pull COLD START AID knob (4).

(2) Push COLD START AID knob (4) in and hold for no more than three seconds while cranking engine.

(3) Pull COLD START knob (4) out.

(4) If engine does not start, wait at least three minutes and repeat step f.

(5) If pumping assembly does not start after three attempts, using cold starting aid, notify unit maintenance.

WARNING

To prevent hearing loss, hearing protection must be worn by personnel standing within 50 feet of operating pumping assembly.

CAUTION

To prevent damage to starter, allow 3 minutes between start attempts.

i. Push ENGINE switch (2) to START position and hold for no more than 30 seconds or until engine starts. When engine starts, release ENGINE switch (2). Engine will run at idle speed (650 rpm as seen on ENGINE SPEED indicate; (11)). If engine fails to start, wait 3 minutes between start attempts.

j. When engine is running, turn AUTO THROTTLE rheostat (3) to desired engine speed, as indicated on ENGINE SPEED indicator (11), (if SPEED is selected). If PRESSURE is selected, turn AUTO THROTTLE rheostat (3) until desired water discharge pressure is indicated on PUMP DISCHARGE PRESSURE gauge (1).

CAUTION

Downline pumping assemblies can be damaged if suction pressure falls below 10 psi. All pumping assemblies can be damaged if discharge pressure rises above 150 psi.

NOTE

Suction and discharge pressures will vary depending on operating conditions and engine speed.

k. Monitor suction pressure on PUMP SUCTION PRESSURE gauge (10). Also monitor discharge pressure on PUMP DISCHARGE PRESSURE gauge (1). If suction pressure falls below 10 psi or discharge pressure rises above 150 psi, adjust AUTO THROTTLE rheostat (3) as required. Refer to step j above.

l. Perform “During” PMCS (Table 2-11).

CAUTION

To prevent damage to engine, **DO NOT** shut down engine suddenly from full-load running.

m. Shut down pumping assembly as follows:

(1) Turn AUTO THROTTLE rheostat (3) to START (idle position) . Let engine idle for 2 or 3 minutes.

(2) Set ENGINE switch (2) to STOP.

(3) Set MAIN POWER switch (9) to OFF.

(4) Close control panel door.

(5) Unlock AUTO DEFEAT handle (7) and pull out. Lock in extended position.

n. Perform "After" PMCS (Table 1-11).

o. Refer to Figure 2-26 and perform the following if extended shutdown is expected or move to a new location is required.

(1) Push air outlet scoop handle (3) to close air outlet scoop (1) and engine exhaust door (2) .

(2) Open pump drain plug (4) and allow pump to drain.

(3) After all water has drained from pump, install drain Plug (4).

2.5.2.2 Automatic Mode. (Continued)

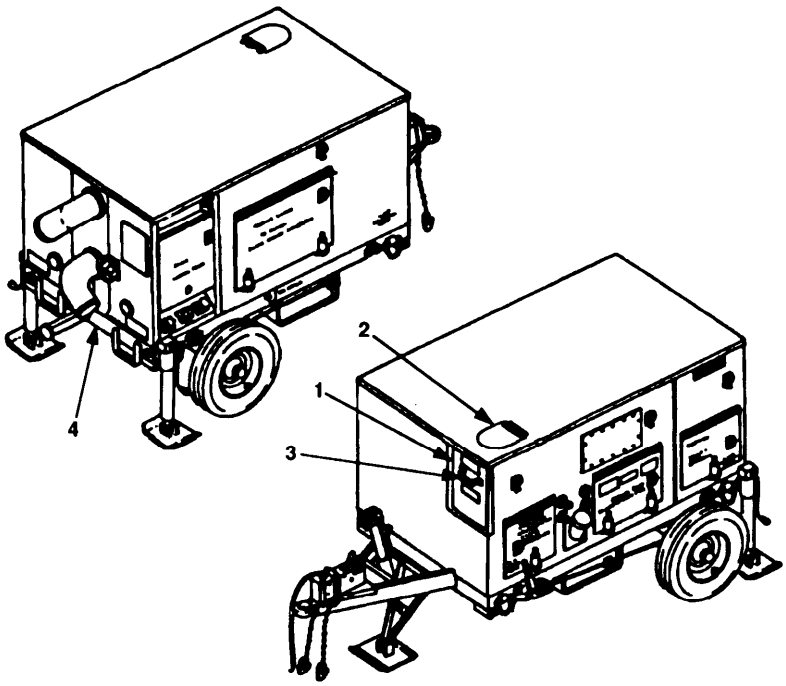

Figure 2-26. Shutdown Requirements for Model 609-C.

2.5.3 Operation of Model US636HCCD-1. The pumping assembly is capable of two modes of operation, electric manual and electric automatic. Use electric manual mode for startup. Electric automatic mode may be used for sustained operation after startup.

2.5.3.1 Electric Manual Mode. Before starting pumping assembly, make sure that the pump has been primed (paragraph 2.4.1 or 2.4.2). Refer to Figure 2-27 and start and operate pumping assembly as follows:

a. Perform "Before" PMCS (Table 2-12).

b. Turn MANUAL THROTTLE INCREASE knob (6) counterclockwise to IDLE position.

c. Set MODE SWITCH (5) to MANUAL position.

d. Pull out START/STOP knob (3).

WARNING

To avoid hearing loss, hearing protection must be worn by personnel standing within 50 feet of operating pumping assembly.

CAUTION

To prevent damage to starter, do not crank engine for more than 30 seconds and allow 3 minutes between start attempts.

e. Push in START button (4) and ENGINE OIL PRESSURE BYPASS switch (8) at same time for no more than 30 seconds. When engine starts, release START button (4). If engine fails to start, wait 3 minutes between start attempts.

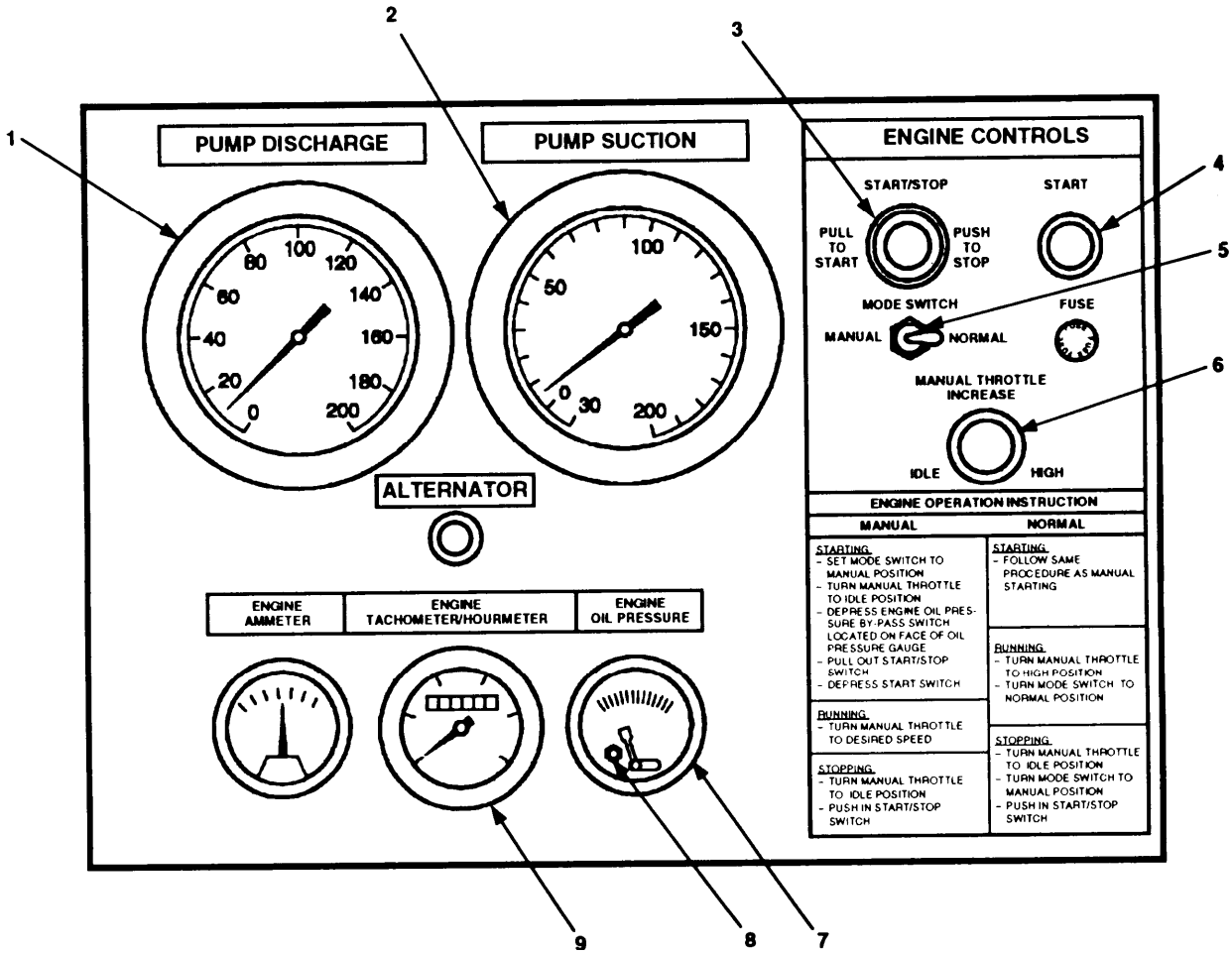

Figure 2-27. Model US636HCCD-1 Controls Used for Electric Manual Operation.

NOTE

Engine should shut down if engine oil pressure bypass switch is released and pressure is not up to 10 psi.

f. Check ENGINE OIL PRESSURE gauge (7). When oil pressure rises to 40 psi, release ENGINE OIL PRESSURE bypass switch (8).

WARNING

If pump fails to take suction, pump can overheat. Overheated pump can cause severe burns.

g. Turn MANUAL THROTTLE INCREASE knob (6) clockwise until pump takes suction, as indicated by pressure reading on PUMP SUCTION gauge (2) or decrease in engine speed as indicated on ENGINE TACHOMETER/HOURMETER (9). If pump fails to take suction after 3 minutes, shut down engine in accordance with step k and notify unit maintenance.

2.5.3.1 Electric Manual Mode. (Continued)

NOTE

Suction and discharge pressures will vary depending on operating conditions and engine speed.

h. Use MANUAL THROTTLE INCREASE knob (6) to adjust engine speed as required to obtain desired engine speed or pump discharge pressure. Turn MANUAL THROTTLE INCREASE knob (6) counterclockwise to decrease engine speed as indicated on ENGINE TACHOMETER/HOURMETER (9) and pump discharge pressure as indicated on PUMP DISCHARGE gauge (1). Turn MANUAL THROTTLE INCREASE knob (6) clockwise to increase engine speed and pump discharge pressure.

CAUTION

Downline pumping assemblies can be damaged if suction pressure falls below 10 psi. All pumping assemblies can be damaged if discharge pressure rises above 150 psi.

i. Monitor suction pressure on PUMP SUCTION gauge (2). Also monitor discharge pressure on PUMP DISCHARGE gauge (1). If suction pressure falls below 10 psi or discharge pressure rises above 150 psi, adjust MANUAL THROTTLE INCREASE knob (6) as required, step h above. If required, cut back to IDLE until problem is corrected.

j. Perform “During” PMCS (Table 2-12).

CAUTION

To prevent damage to engine, **DO NOT** shut down engine suddenly from full-load running.

k. Shut down pumping assembly as follows:

(1) Turn MANUAL THROTTLE INCREASE knob (6) counterclockwise to IDLE position. Let engine idle for 2 or 3 minutes.

(2) Push in START/STOP knob (3). Engine will shut down.

l. Perform "After" PMCS (Table 2-12).

2.5.3.2 Electric Automatic Mode. Start and operate pumping assembly as follows:

a. Perform steps a through i of paragraph 2.5.3.1.

b. Turn MANUAL THROTTLE INCREASE knob (Figure 2-28, 3) clockwise to HIGH position.

c. Push MODE SWITCH (2) to NORMAL position. Engine speed will adjust automatically to changes in pump pressure rates.

d. Perform “During” PMCS (Table 2-12).

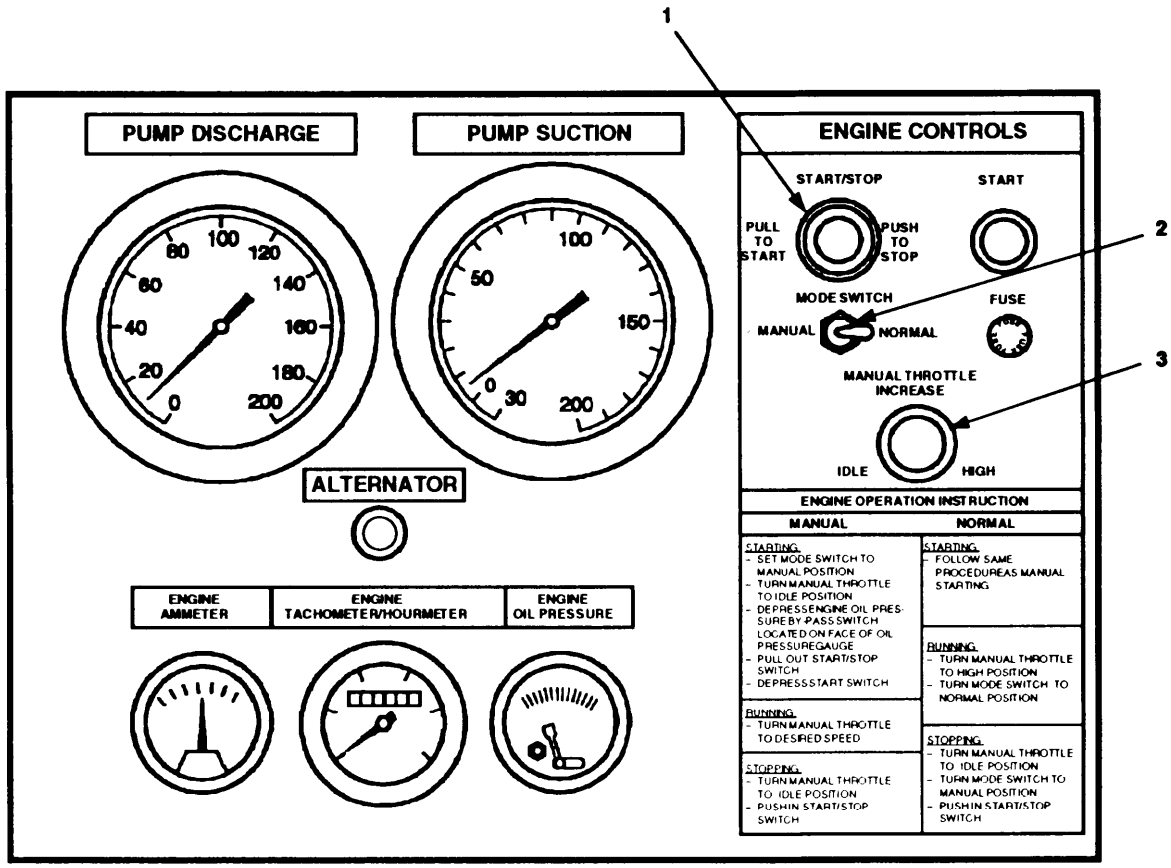

Figure 2-28. Model WS636HCCD-1 Controls Used for Electric Automatic Operation.

CAUTION

To prevent damage to engine, **DO NOT** shut down engine suddenly from full-load running.

e. Shut down pumping assembly as follows:

(1) Turn MANUAL THROTTLE INCREASE knob (3) counterclockwise to IDLE position. Let engine idle for 2 or 3 minutes.

(2) Push in START/STOP knob (1). Engine will shut down.

f. Perform "After" PMCS (Table 2-12) .

2.6 DECALS AND INSTRUCTION PLATES.

Refer to Figures 2-29 through 2-34.

ENGINE OPERATING INSTRUCTIONS

NORMAL OPERATION

STARTING
- Set Pressure Regulator Switch to START
- Turn Electric Speed Control to IDLE
- Set Mode Switch to PRESSURE REGULATOR (NORMAL)
- Turn Manual Throttle FULL IN
- Push Fuel Rack FULL IN AND LOCK
- Set Engine Switch to START, Release to RUN

RUNNING (Electric)
- Turn Manual Throttle FULL OUT
- Set Pressure Regulator Switch to ELECTRIC
- Turn Electric Speed Control to Desired SPEED

RUNNING (Auto)
- Turn Manual Throttle FULL OUT
- Set Pressure Regulator Switch to AUTO

STOPPING
- Turn Electric Speed Control to IDLE
- Set Pressure Regulator Switch to ELECTRIC
- Set Engine Switch to OFF

Note: Refer To Operation and Maintenance Manual For Detailed Instructions

MANUAL OPERATION

STARTING
- Set Mode Switch to MANUAL THROTTLE
- Turn Manual Throttle FULL IN
- Pull Fuel Rack FULL OUT AND LOCK
- Set Engine Switch to START, Release to RUN

RUNNING
- Turn Manual Throttle to Desired Speed

STOPPING
- Turn Manual Throttle FULL IN
- Set Engine Switch to OFF

ALARM OPERATION

Alarm Horn Will Sound If:
- Engine Temperature Exceeds 220° F
- Engine Oil Pressure Below 10 P.S.I.
- Engine Not Started Within 30 Sec Of Initial Attempt

If Alarm Caused By High Temperature Or Low Oil Pressure:

- Shutdown Engine And Consult Manual
  - Reset Alarm By Turning Engine Switch OFF And Depressing Engine Alarm Pushbutton

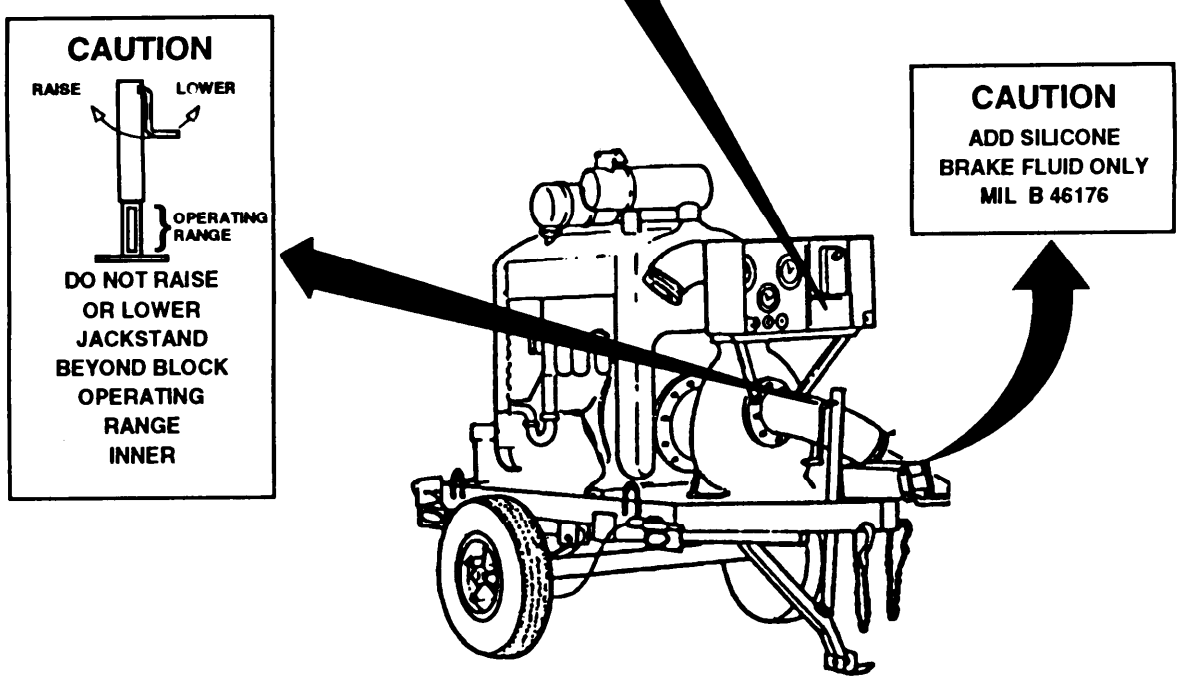

Figure 2-29. Model 609-A Engine Operating Instructions and Caution Data Plates.

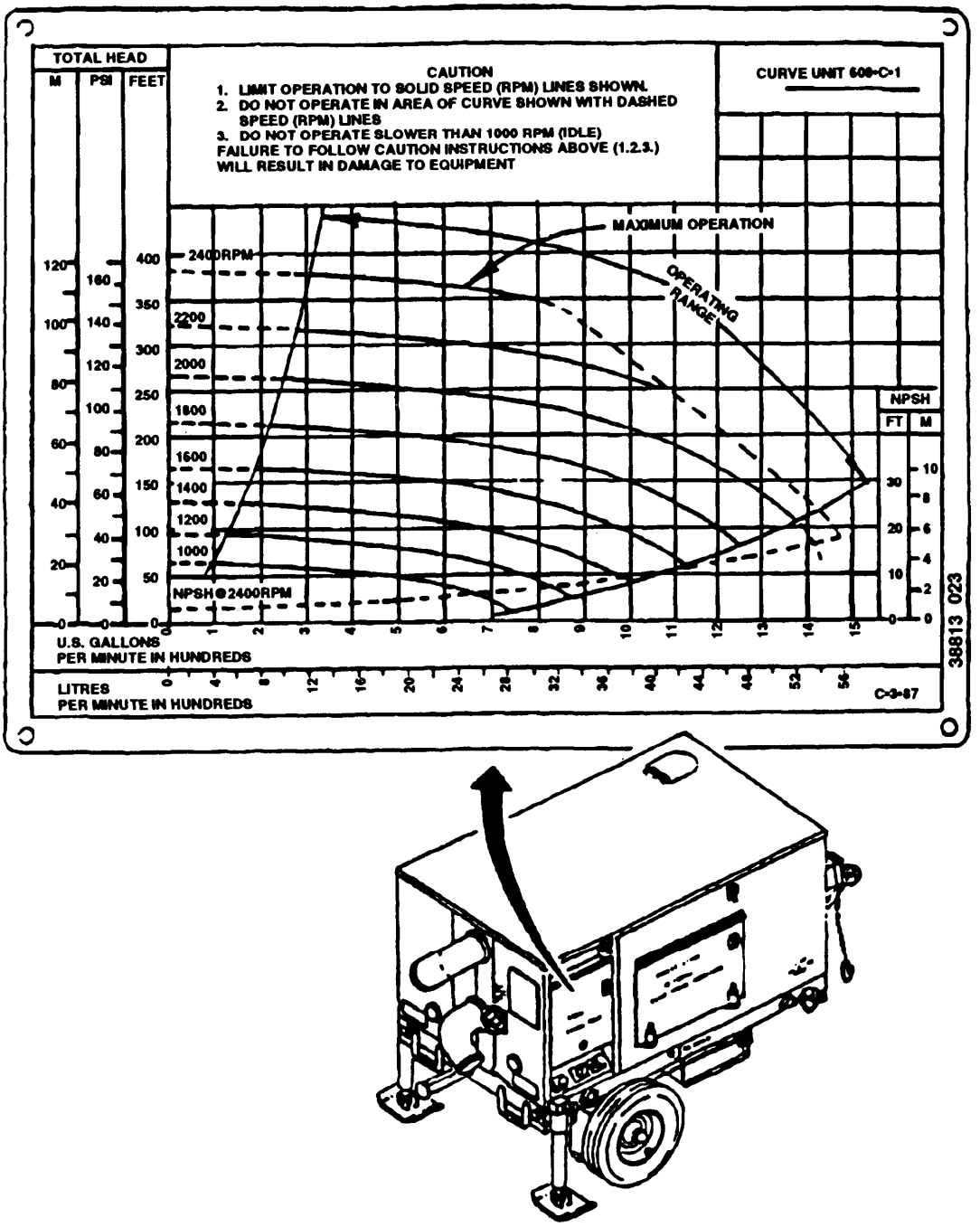

Figure 2-30. Operating Range Curves for Unit 609-C.

OPERATION

BEFORE STARTING

- CHECK ENGINE OIL LEVEL
- OPEN AIR DUCT
- SET CONTROL SUCTION AND DISCHARGE VALVES TO CLOSE
- PLUG PUMP DRAIN
- PRIME PUMP WITH CLEAN DRINKING WATER

AUTOMATIC OPERATION

DEFEAT MANUAL THROTTLE
- TURN MANUAL THROTTLE FULL OUT
- PUSH AUTO DEFEAT FULL IN AND LOCK

PUMP PRESSURE CONTROL

STARTING
- SET MAIN ON
- SET THROTTLE SELECT TO AUTO
- SET AUTO SELECT TO PRESSURE
- TURN AUTO THROTTLE TO START. RANGE
- SET ENGINE SWITCH TO START - RELEASE TO RUN
- TURN AUTO THROTTLE TO DESIRED PUMP DISCHARGE PRESSURE

STOPPING
- TURN AUTO THROTTLE TO IDLE
- SET ENGINE SWITCH TO STOP

PUMP SPEED CONTROL

STARTING
- SET MAIN ON
- SET THROTTLE SELECT TO AUTO
- SET AUTO SELECT TO SPEED
- TURN AUTO THROTTLE TO START RANGE
- SET ENGINE SWITCH TO START - RELEASE TO RUN
- TURN AUTO THROTTLE TO DESIRED PUMP SPEED

STOPPING
- TURN AUTO THROTTLE TO IDLE
- SET ENGINE SWITCH TO STOP

MANUAL OPERATION

STARTING
- SET MAIN ON
- SET THROTTLE SELECT TO MANUAL
- TURN MANUAL THROTTLE FULL IN
- PULL AUTO DEFEAT FULL OUT AND LOCK
- SET ENGINE SWITCH TO START - RELEASE TO RUN
- TURN MANUAL THROTTLE OUT TO DESIRED SPEED

STOPPING
- TURN MANUAL THROTTLE FULL IN TO IDLE
- SET ENGINE SWITCH TO STOP
- PUSH AUTO DEFEAT FULL IN AND LOCK

SAFETY SHUTDOWN

AUTO SHUTDOWN OCCURS IF:
- ENGINE OVERSPEED
- ENGINE TEMPERATURE HIGH
- ENGINE OIL PRESSURE LOW

NOTE: SEE OPERATOR'S MANUAL WHEN AN AUTO SHUTDOWN OCCURS

RESET
- SET MAIN TO OFF - WAIT 10 SECONDS
- SET MAIN TO ON

WHEN FINISHED PUMPING
- DRAIN PUMP
- SET CONTROL SUCTION AND DISCHARGE VALVES TO DRAIN
- CLOSE AIR DUCT

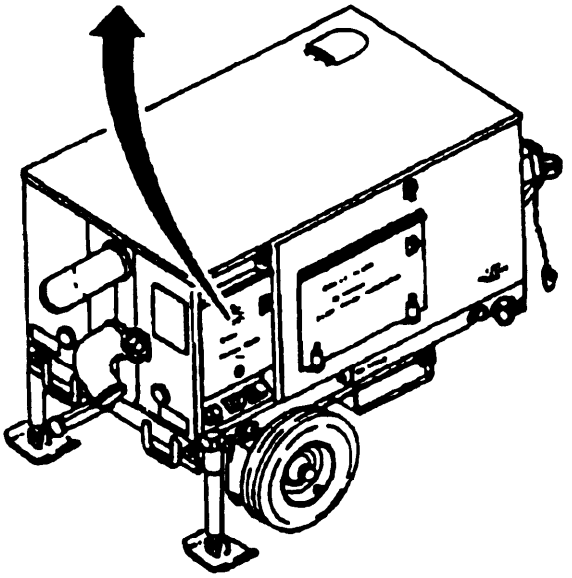

Figure 2-31. Operating Instructions for Unit 609-C.

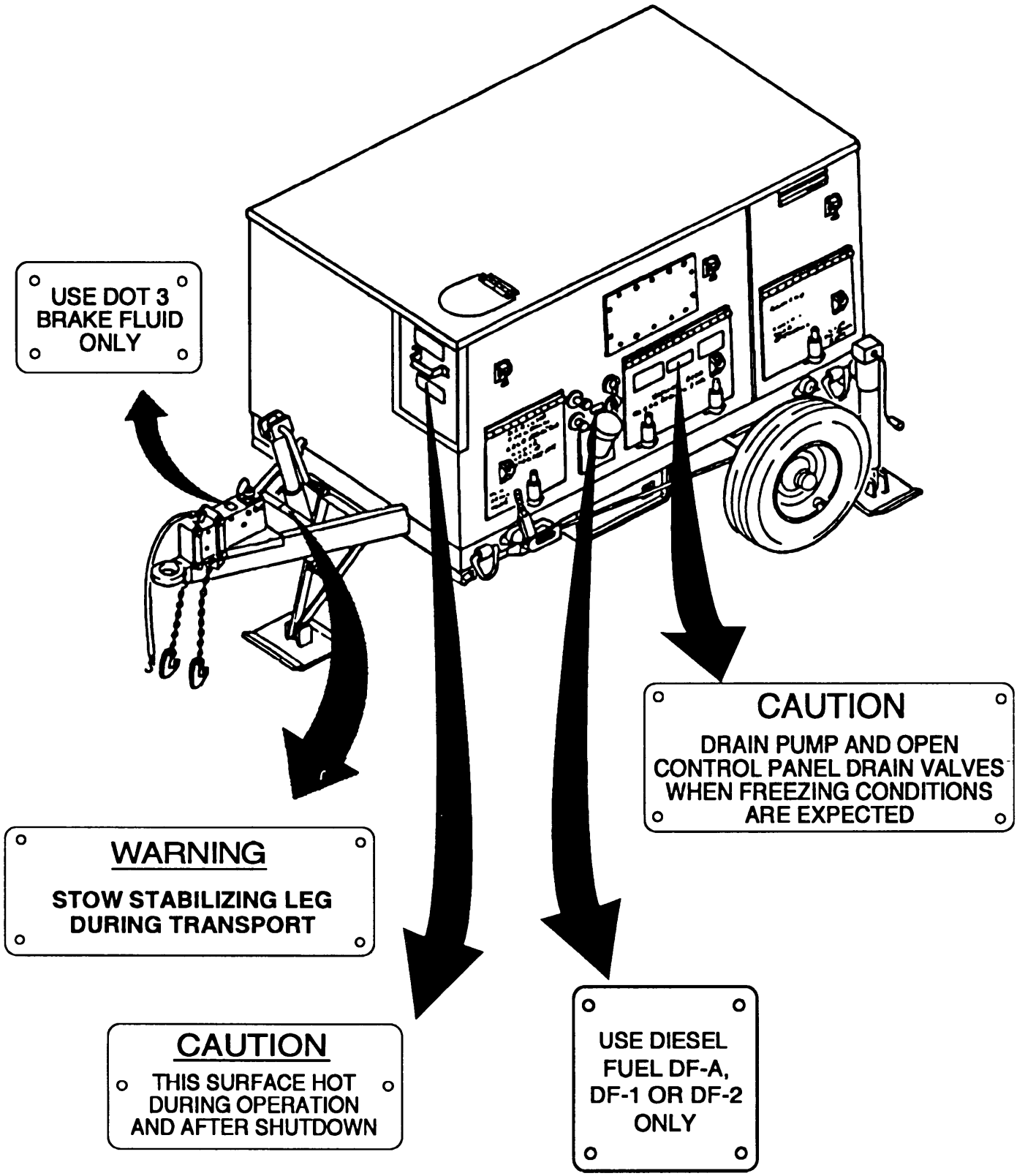

Figure 2-32. Warning, Caution, and Data Plates for Model 609-C.

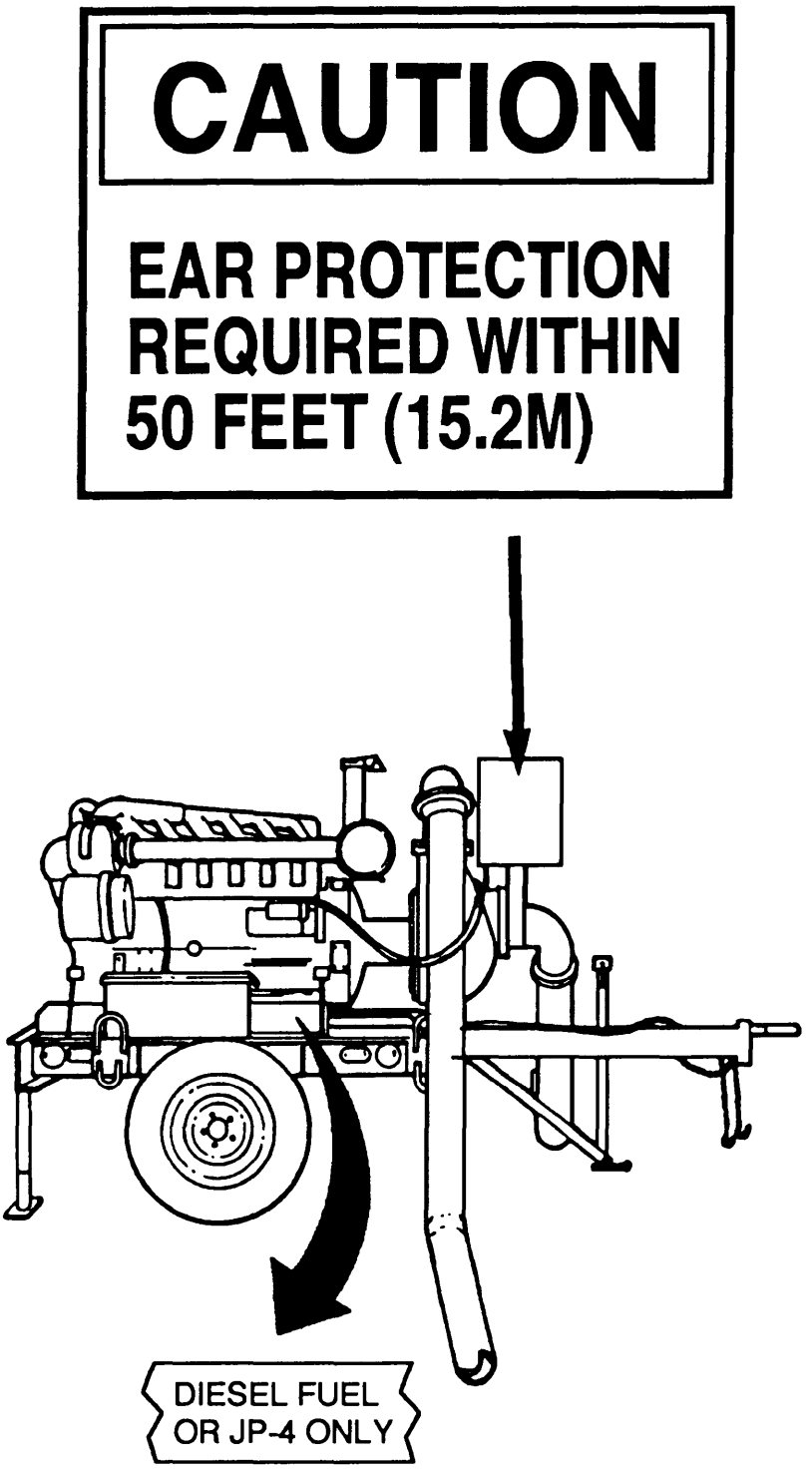

Figure 2-33. Caution Plate and Stenciling on Model US636HCCD-1.

ENGINE OPERATION INSTRUCTION	
MANUAL	**NORMAL**
STARING: — SET MODE SWITCH TO MANUAL POSITION. — TURN MANUAL THROTTLE TO IDLE POSITION. — DEPRESS ENGINE OIL PRESSURE BY-PASS SWITCH LOCATED ON FACE OF OIL PRESSURE GAUGE. — PULL OUT START/STOP SWITCH. — DEPRESS START SWITCH.	STARING: — FOLLOW SAME PROCEDURE AS MANUAL STARTING.
RUNNING: — TU RN MANUAL THROTTLE TO DESIRE SPEED.	RUNNING: — TURN MANUAL THROTTLE TO HIGH POSITION. — TURN MODE SWITCH TO NORMAL POSITION.
STOPPING: — TURN MANUAL THROTTLE TO IDLE POSITION. — PUSH IN START/STOP SWITCH.	STOPPING: — TURN MANUAL THROTTLE TO IDLE POSITION. — TURN MODE SWITCH TO MANUAL POSITION. — PUSH IN START/STOP SWITCH.

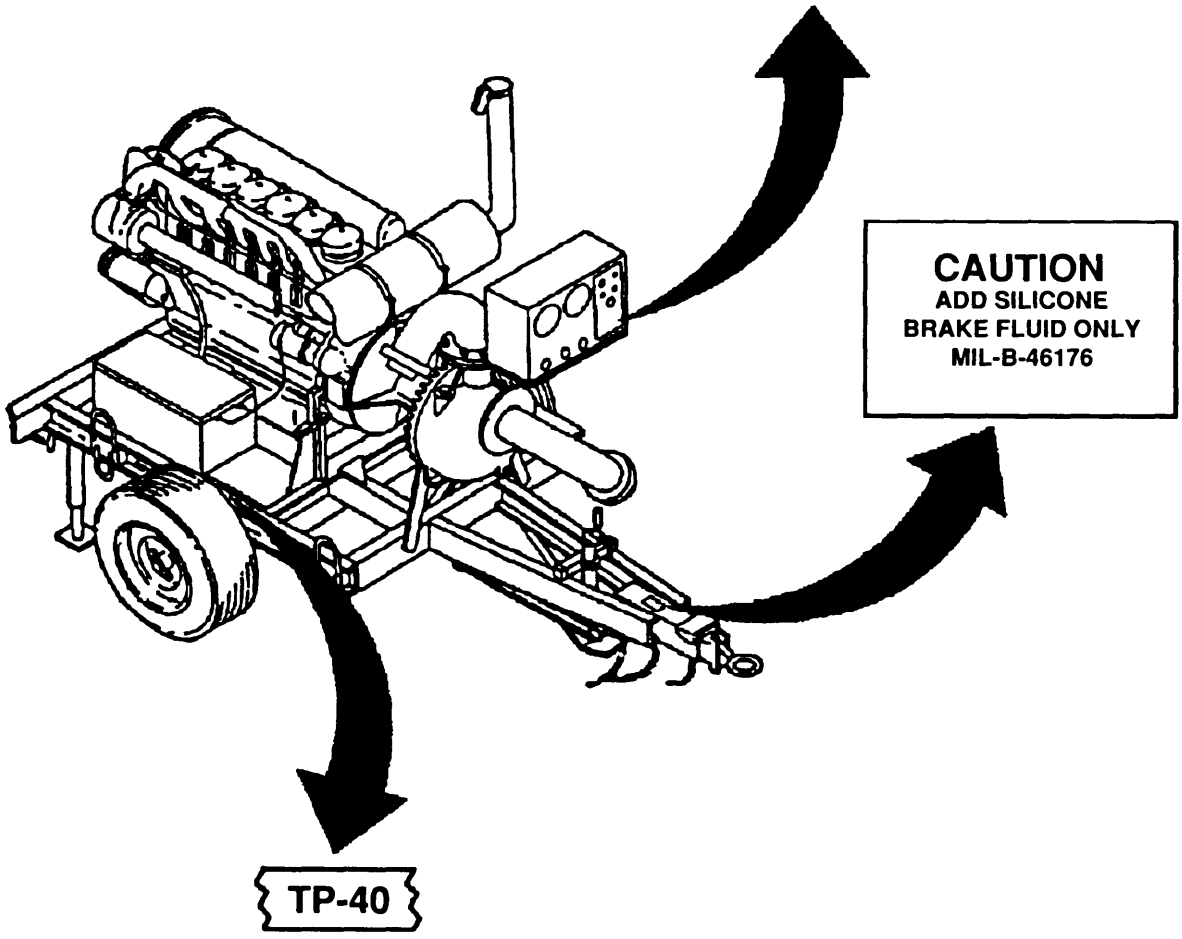

Figure 2-34. Engine Operating Instructions, Data Plate, and Stenciling on Model US636HCCD-1.

2.7 PREPARATION FOR MOVEMENT.

Before the pumping assembly can be moved, the hoseline(s) or pipeline(s) must be emptied and disconnected. Hoseline preparation and disconnection instructions for the TWDS are contained in applicable TWDS technical manual.

2.7.1 Draining and Preparation of Puming Assemblies. Refer to Figure 2-35 and drain pumping assembly for movement as follows:

a. Remove drain plug (2). Drain pump (1).

b. Install drain plug (2).

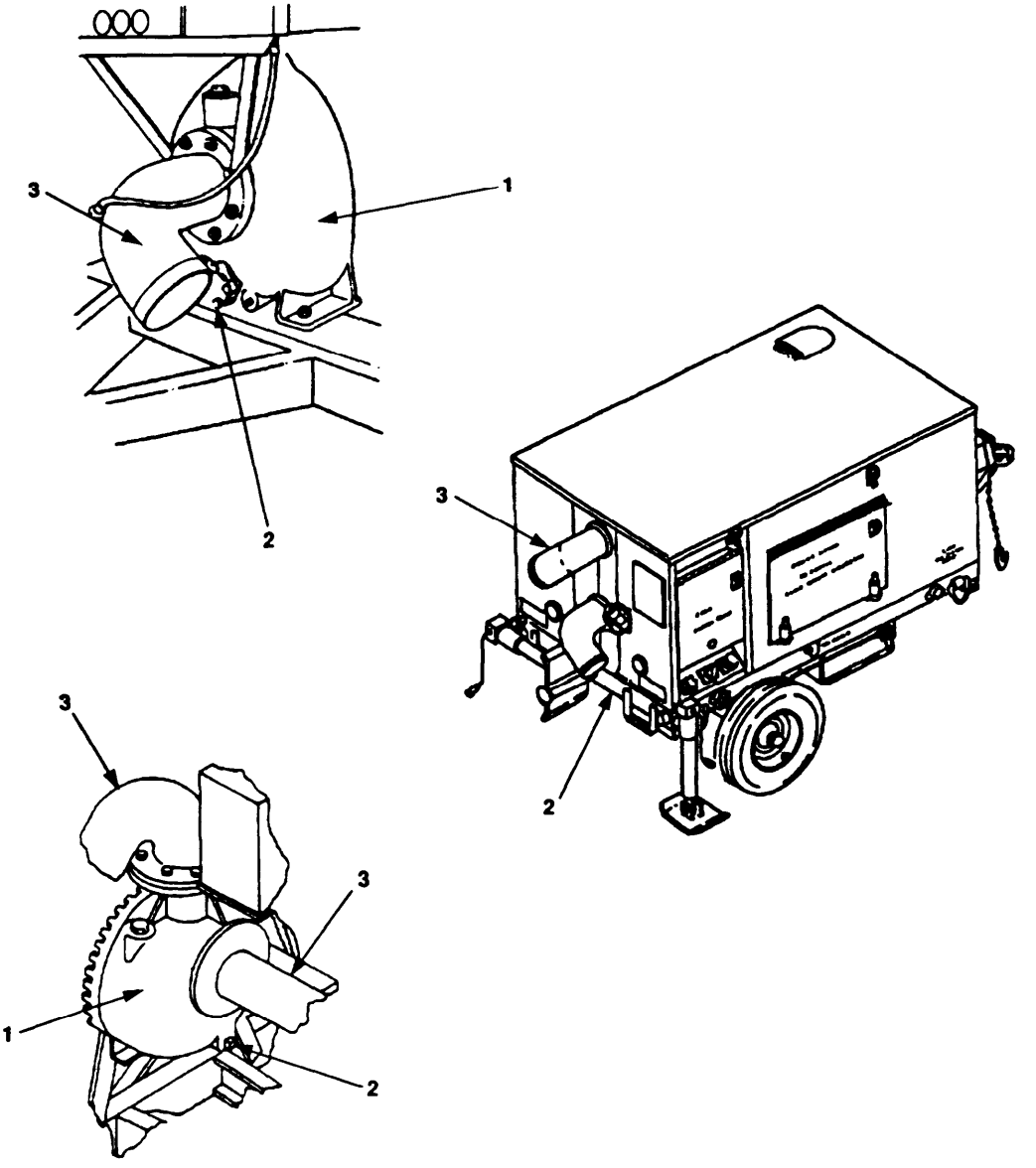

Figure 2-35. Pumping Assemblies Drain Plug Locations.

c. Install pipe caps on pump suction and discharge ports (3).

2.7.2 Preparation of Pumping Assemblies for Movement.

2.7.2.1 Securing Rear Jacks for Movement. Refer to Figure 2-36 and secure rear jacks for movement as follows:

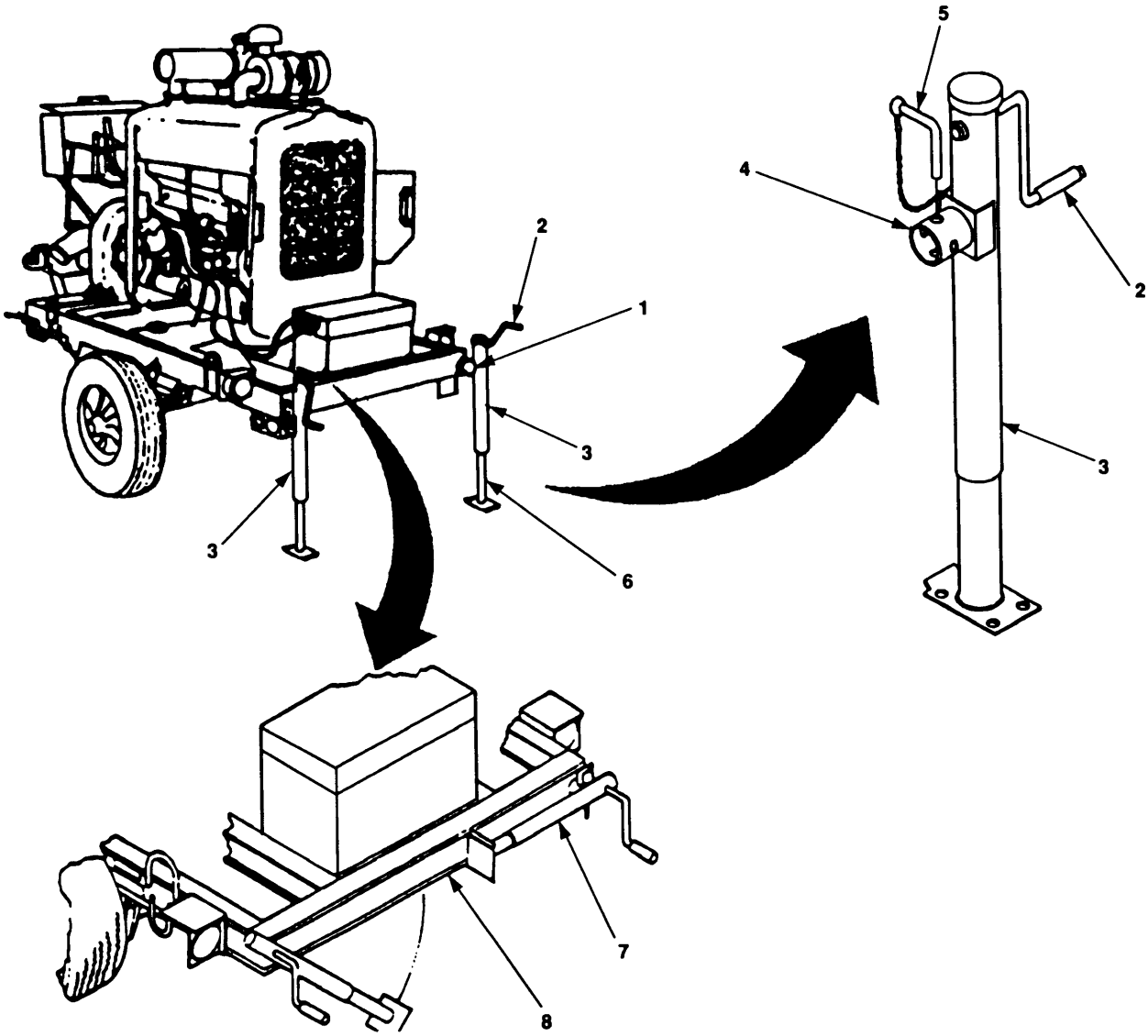

Figure 2-36. Secure Rear Jacks for Movement. (Model 609-A shown)

a. Use turncranks (2) to retract bottom legs (6) of both jacks (3).

b. For right side jack, remove pin (5) from mounting sleeve (1) on trailer (8) and mounting post (4) on jack (3).

c. Turn jack (3) to travel position (7). Align holes in mounting sleeve (1) and mounting post (4). Insert pin (5) to secure jack in travel position (7).

d. Repeat steps b and c for left side jack.

2.7.2.2 Securing Pumping Assemblies to Towing Vehicle. Refer to Figure 2-37 and secure pumping assembly to towing vehicle as follows:

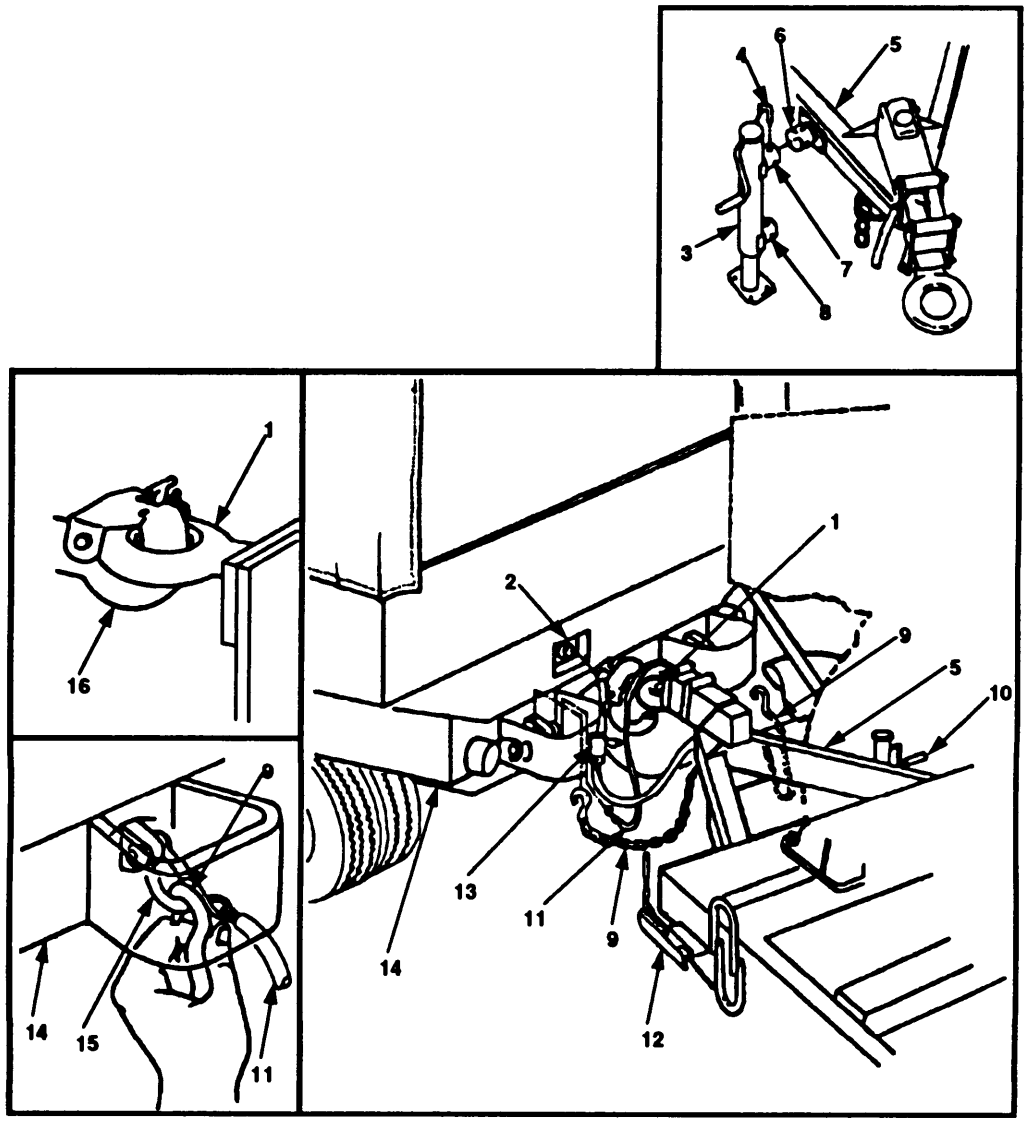

Figure 2-37. Connect Pumping Assembly, with Double-posted Front Jack, to Towing vehicle. (Model 609-A Shown)

CAUTION

Pumping assembly may be damaged if trailer is attached to towing vehicle without enough slack remaining in safety chains and breakaway chain.

a. Attach breakaway chain (11) to lifting/tiedown shackle (15) of towing vehicle (14).

b. Attach safety chains (9) to lifting/tiedown shackles (15), one on the roadside of towing vehicle (14) and the other on the curbside.

c. Check both handbrake levers (12) to make sure that wheels are locked.

d. Position towing vehicle (14) so that pintle hook (16) is slightly forward of trailer lunette (1). Open pintle hook (16).

NOTE

Tongue may be equipped with a double posted front jack or a front tripod. If pumping assembly is equipped with a front tripod go to step f.

e. If equipped with a double posted front jack connect pumping assembly it to a towing vehicle as follows:

(1) Use turncrank (10) to raise or lower trailer tongue (5) until lunette (1) can be lowered onto pintle hook (16). Slowly back the towing vehicle (14) until pintle hook (16) is under lunette (1).

(2) Using turncrank (10), lower trailer tongue (5) until lunette (1) engages pintle hook (16). Close pintle hook (16).

(3) Move both handbrake levers (12) to unlocked position.

(4) Remove pin (4) from mounting sleeve (6) on trailer tongue (5) and upper mounting post (7) on jack (3). Remove jack (3).

(5) Position jack (3) horizontally along trailer tongue (5) and insert lower mounting post (8) into mounting sleeve (6). Align holes in mounting sleeve (6) and lower mounting post (8). Insert pin (4).

f. If pumping assembly is equipped with a front tripod jack, refer to Figure 2-38 and connect it to a towing vehicle as follows:

(1) Check both handbrake levers (9) to make sure that wheels are locked.

(2) Position towing vehicle (10) so that pintle hook (12) is slightly forward of trailer lunette (1). Open pintle hook (12).

(3) Use turncrank (2) to raise or lower tripod (4) until lunette (1) can be lowered onto pintle hook (12). Slowly back the towing vehicle (10) until pintle hook (12) is under lunette (1).

(4) Using turncrank (2), lower tripod (4) until lunette (1) engages pintle hook (12). Close pintle hook (12).

(5) Using turncrank (2), fully retract tripod (4).

(6) Move both handbrake levers (9) to unlocked position.

g. Join intervehicular cable (5) to mating receptacle (6) on towing vehicle (10).

h. Check operation of running and brake lights. If not working properly, notify unit maintenance.

i. Using an assistant to observe breakaway chain and safety chains, slowly operate towing vehicle through one complete turn in each direction. Make sure that breakaway chain and safety chain have some slack remaining throughout each turn. If not, disconnect pumping assembly from towing vehicle and reconnect it to a smaller towing vehicle.

2.7.2.2 Securing Pumping Assemblies to Towing vehicle. (Continued)

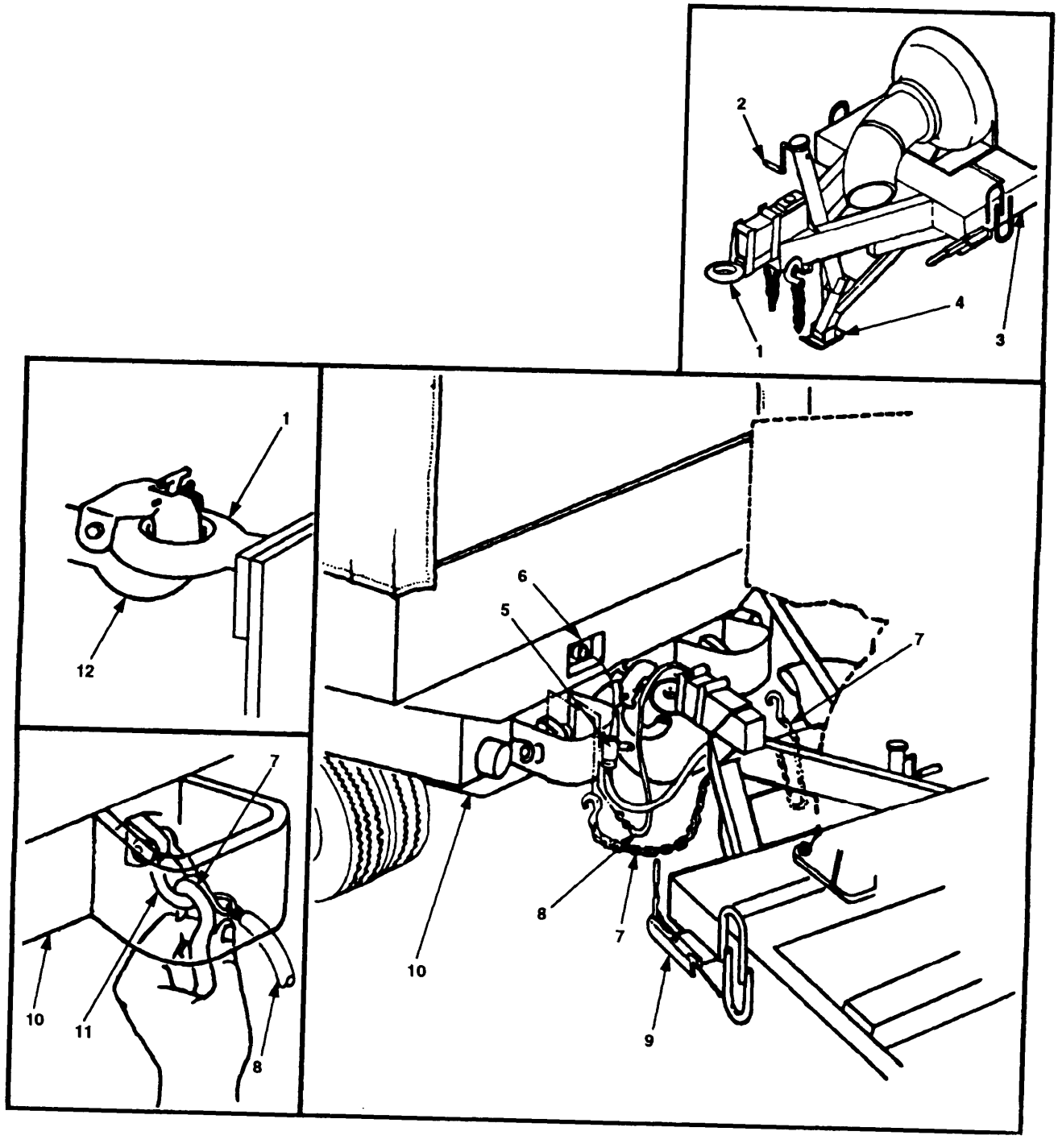

Figure 2-38. Connecting Pumping Assembly, With Front Tripod Jack, to Towing Vehicle . (Model 609-A Shown)

j. Pumping assembly is now ready for movement.

SECTION IV. OPERATION UNDER UNUSUAL CONDITIONS

2.8 UNUSUAL ENVIRONMENTAL/WEATHER.

2.8.1 Operation in Cold Weather. The pumping assemblies are not intended for use at temperatures below 32°F (0° C), but Pumping Assembly Model 609-C is equipped with a cold start aid for use in cold temperatures below freezing. The cold starting aid includes a handle that operates a device connected to a bottle of fluid that is stowed in the engine compartment. The device has an outlet that leads to the engine intake manifold. When the cold starting aid is operated, starting fluid (EITHER) is injected into the engine intake manifold. When required, operate the cold starting aid in accordance with paragraph 2.5.2.1 step f (Manual Mode) or paragraph 2.5.2.2 step h (Automatic Mode).

2.8.2 Operation in Extreme Heat.

2.8.2.1 Pumping Assembly Model 609-A. Make sure that coolant is at proper level. Make sure that engine receives adequate ventilation. Use correct lubricants for expected temperatures.

2.8.2.2 Pumping Assemblies Models 609-C and US636HCCD-1. Make sure that engine receives adequate ventilation. Make sure that all shrouding is installed and in good condition. Use correct lubricants for expected temperatures.

2.8.3 Operation in Dusty or Sandy Areas. Protect the Pumping Assembly from sand or dust as much as possible. Frequently check the air cleaner service indicator. Keep stores of oil and fuel tightly closed.

2.8.4 Operation in Salt Mater Areas. Check the Pumping Assembly weekly for rust formations and rinse with fresh water daily. Check all electrical contacts daily for evidence of corrosion. If rust or corrosion is present, notify unit maintenance.

2.9 FORDING.

Fording capabilities of the Pumping Assemblies are limited by the fording capabilities of the towing vehicle. Perform lubrication in accordance with LO 10-4320-344-12 as soon as possible after fording.

2.10 EMERGENCY PROCEDURES.

Emergency procedures for pumping assemblies are contained in the applicable TWDS technical manual.

2.11 NUCLEAR, BIOLOGICAL, AND CHEMICAL (NBC) DECONTAMINATION.

NOTE

Detailed decontamination (decon) procedures can be found in FM 3-3, FM 3-4, and FM 3-5.

2.11.1 General. The following emergency procedures can be performed until field NBC decon facilities are available. Pumping assembly operation will supervise, assign assistant(s) duties, and assist the supporting NBC unit. There is no decon equipment mounted on the pumping assemblies.

2.11.2 Emergency Procedures. If NBC attack is known or suspected, mask at once and continue mission. If in a shelter, do not leave shelter. If outside, follow decon procedures below to avoid taking contamination into the shelter. Do not unmask until told to do so.

2.11.2.1 Nuclear Decontamination. Brush fallout from skin, clothing, and equipment with available brushes, rags, and tree branches. Wash skin and have radiation check made as soon as tactical situation permits.

2.11.2.2 Biological Decontamination. The pumping assembly operator has no method to detect or decon biological agents. Remain masked and continue mission until told to unmask.

WARNING

Do not use decontamination spray on personnel. It could cause personal injury.

2.11.2.3 Chemical Detection and Decontamination. Use M8 paper from the M256 chemical agent detector kit or M9 to determine if liquid agent is present on the pumping assembly surface.

If exposure to liquid agent is known or suspected, clean exposed skin, clothing, and personal gear, in that order, using M258A1 kit. Use the buddy system. Wash exposed skin and thoroughly decontaminate as soon as tactical situation permits.

CAUTION

DO not use ABC-M11 on wiring, rubber parts, or pliable materials. Damage to equipment may result.

If the M8 or M9 paper indicates that liquid chemical agent is present on the pumping assembly surface, use the ABC-M11 decon apparatus for partial decon of pumping assembly. Spray only surfaces that will be touched to operate/shut down pumping assembly.

CHAPTER 3

OPERATOR MAINTENANCE INSTRUCTIONS

Subject Index — Page

Section I Lubrication Instructions 3-2
3.1 Lubrication 3-2
Section II Troubleshooting 3-2
3.2 Troubleshooting 3-2
Section III Maintenance Procedures 3-5
3.3 Adjust Park Brake Cable 3-5

SECTION I. LUBRICATION INSTRUCTIONS

3.1 LUBRICATION.

Lubrication instructions for the pumping assemblies are contained in LO 10-4320-344-12.

SECTION II. TROUBLESHOOTING

3.2 TROUBLESHOOTING.

The malfunction index lists malfunctions that may be observed by the operator. The malfunctions are listed in the same order and cross-referenced to Table 3-1. Use the malfunction index to locate faults listed in Table 3-1. After locating the listed malfunction, perform the test/inspections and corrective actions in the order listed in Table 3-1. The malfunction index and Table 3-1 cannot list all the malfunctions that may occur, all the tests and inspections needed to find the fault, or all the corrective actions needed to correct the fault. If the equipment malfunction is not listed or actions listed do not correct the fault, notify unit maintenance.

MALFUNCTION INDEX

	Troubleshooting Procedure
ENGINE WILL NOT START	1
ENGINE STOPS SUDDENLY	2
MODEL 609-A ENGINE TACHOMETER SHOWS LOW RPM.	3
MODEL 609-C ENGINE TACHOMETER SHOWS LOW RPM	4
MODEL US636HCCD-1 ENGINE TACHOMETER SHOWS LOW RPM.	5
ENGINE OIL PRESSURE GAUGE SHOWS LOW OIL PRESSURE	6
MODEL 609-A ENGINES OVERHEATING.	7
MODEL 609-C OR MODEL US636HCCD-1 ENGINE IS OVERHEATING	8
ENGINE AMMETER (MODELS 609-A OR US636HCCD-1) OR VOLTMETER (MODEL 609-C) INDICATES HIGH OR LOW RATE OF CHARGE	9
EXHAUST SMOKE EXCESSIVELY BLACK.	10
RUNNING AND BRAKE LIGHTS DO NOT WORK	11

Table 3-1. Troubleshooting Table.

MALFUNCTION
TEST OR INSPECTION
CORRECTIVE ACTION

1. ENGINE WILL NOT START.

Step 1. Check fuel level gauge to see if engine has enough fuel.

Add fuel.

Step 2. Check to see if primary fuel filter needs to be drained (Table 2-10, item 14; Table 2-11, item 18; or Table 2-12, item 14).

Drain filter.

Step 3. Check to see if air filter needs to be serviced (Table 2-10, item 21; Table 2-11, item 17; or Table 2-12, item 10).

Notify unit maintenance.

Table 3-1. Troubleshooting Table. (Continued)

MALFUNCTION TEST OR INSPECTION CORRECTIVE ACTION
2. ENGINE STOPS SUDDENLY.
Step 1. Check fuel level gauge to see if engine has enough fuel.
Add fuel.
Step 2. Check to see if primary fuel filter needs to be drained (Table 2-10, item 14; Table 2-11, item 18; or Table 2-12, item 14).
Drain filter.
3. MODEL 609-A ENGINE TACHOMETER SHOWS LOW RPM.
Step 1. Check to see if manual throttle or electric speed control is at correct setting (paragraph 2.5.1.1, step g; or paragraph 2.5.1.2, step k).
Adjust manual throttle or electric speed control.
4. MODEL 609-C ENGINE TACHOMETER SHOWS LOW RPM.
Step 1. Check to see if manual throttle (manual mode) or auto throttle rheostat (automatic mode) is at correct setting (manual mode -. paragraph 2.5.2.1, step i; automatic mode - paragraph 2.5.2.2, step k).
Adjust manual throttle of auto throttle rheostat.
5. MODEL US636HCCD-1 ENGINE TACHOMETER SHOWS LOW RPM.
Step 1. Check to see if manual throttle is at correct setting (electric manual mode - paragraph 2.5.3.1, step h; electric automatic mode - paragraph 2.5.3.2, step a).
Adjust throttle.
6. ENGINE OIL PRESSURE GAUGE SHOWS LOW OIL PRESSURE.
Step 1. Shutdown pumping assembly, paragraph 2.5.1, 2.5.2 or 2.5.3. Check oil dipstick to see if oil level is low (Table 2-10, item 13; Table 2-11, item 13; or Table 2-12, item 15).
Refer to LO 10-4320-344-12 and add oil as required.
Step 2. Check for oil leaks.
If leaks are found notify unit maintenance.

Table 3-1. Troubleshooting Table. (Continued)

MALFUNCTION TEST OR INSPECTION CORRECTIVE ACTION
7. MODEL *609-A* ENGINE IS OVERHEATING.
Step 1. Check to see if radiator fins are dirty or clogged, damaged, or leaking.
a. Stop engine (manual mode - paragraph 2.5.1.1, step k; electric. manual mode - paragraph 2.5.1.2, step o; electric automatic mode - paragraph 2.5.1.3, step e) and clean dirty or clogged fins.
Go to step 2.
b. Stop engine (manual mode - paragraph 2.5.1.1, step k; electric manual mode - paragraph 2.5.1.2, step o; electric automatic mode - paragraph 2.5.1.3, step e) and notify unit maintenance.
Step 2. Check engine coolant level.
Add engine coolant as required.
Step 3. Check to see if radiator hoses are damaged or leaking.
Stop engine (manual mode - paragraph 2.5.1.1, step k; electric manual mode - paragraph 2.5.1.2, step o; electric automatic mode - paragraph 2.5.1.3, step e) and notify unit maintenance.
8. MODEL 609-C OR MODEL US636HCCD-1 ENGINE IS OVERHEATING.
Step 1. Check to see if cylinder cooling fins and oil cooler are clogged (Table 2-11, item 16 or Table 2-12, item 11.
Remove obstructions and scrap cooling fins.
Step 2. Check to see if cooling air blower belt is loose, damaged, or broken.
Notify unit maintenance.
9. ENGINE AMMETER (MODELS 609-A OR US636HCCD-1) OR VOLTMETER (MODEL 609-C) INDICATES HIGH OR LOW RATE OF CHARGE.
Step 1. Check to see if battery is cracked or battery connections are loose or corroded.
Clean and tighten connections as required.
Step 2. Check fluid level in battery cells.
Notify unit maintenance.
10. EXHAUST SMOKE EXCESSIVELY BLACK.
Check to see if air filter needs to be serviced (Table 2-10, item 21; Table 2-11, item 17; or Table 2-12, item 10).
Notify unit maintenance.

Table 3-1. Troubleshooting Table - Continued

MALFUNCTION TEST OR INSPECTION CORRECTIVE ACTION
11. RUNNING AND BRAKE LIGHTS DO NOT WORK.
Check to see if intervehicular cable is securely connected to mating receptacle on towing vehicle.
a. Secure connection. b. Notify unit maintenance.

SECTION III. MAINTENANCE PROCEDURES

3.3 PARK BRAKE CABLE ADJUSTMENT.

Figure 3-1. Park Brake Lever and Cable.

WARNING

To prevent rolling or sliding, do not work on equipment that is not securely stabilized.

a. Raise park brake lever to unlocked position (Figure 3-1,2).

CAUTION

DO not over tighten cable. Do not force park brake lever into lock position. Over tightening of cable or forcing park brake lever into lock position could damage cable or connecting parts. If lever will not return to lock position without force, readjust cable tension.

b. Adjust cable tension as required. Turn end cap (1) clockwise to tighten cable (3), or counterclockwise to loosen it.

c. Push lever (2) down to locked position.

d. If cable cannot be adjusted, notify unit maintenance.

APPENDIX A

REFERENCES

A.1 SCOPE.

This appendix lists all forms, field manuals, technical manuals, and miscellaneous publications referenced in this manual.

A.2 FORMS.

Recommended Changes to Publications and Blank Forms	DA F'orm 2028
Recommended Changes to Equipment Technical Publications . . .	DA Form 2028-2
Equipment Inspection and Maintenance Worksheet	DA Form 2404
Product Quality Deficiency Report	SF 368

A.3 FIELD MANUALS.

NBC Contamination Avoidance	FM 3-3
NBC Protection	FM 3-4
NBC Decontamination	FM 3-5
First Aid for Soldiers	FM 21-11

A.4 TECHNICAL MANUALS.

Operator Maintenance Manual for Tactical Water Distribution Equipment System (TWDS) Set 10-Mile Segment	TM 5-4320-303-10
Operator, Unit, Direct Support, and General Support Maintenance Manual for Tactical Water Distribution System (TWDS)	TM 10-4320-303-14
Procedures for Destruction of Equipment to Prevent Enemy Use (Mobility Equipment Command)	TM 750-244-3

A.5 LUBRICATION ORDERS.

Lubrication Order: Pumping Assembly, Water, 600 GPM, Model 609-A; Pumping Assembly, Water, 600 GPM, Model 609-C Pumping Assembly, Water, 600 GPM, Model US636HCCD-l	LO 10-4320-344-12

A.6 MISCELLANEOUS PUBLICATIONS.

Dictionary of United States Army Terms	AR 310-25
The Army Maintenance Management System (TAMMS)	DA PAM 738-750

APPENDIX B
COMPONENTS OF END ITEM AND BASIC ISSUE ITEMS LISTS

SECTION 1. INTRODUCTION

6.1 SCOPE.

This appendix lists components of the end item and basic issue items for the pumping assembly to help you inventory the items for safe and efficient operation of the equipment.

B.2 GENERAL.

The Components of End Item (COEI) and Basic Issue Items (BII) Lists are divided into the following sections:

B.2.1 Section II, Components of End Item. This listing is for information purposes only, and is not authority to requisition replacements. These items are part of the 600 GPM pumping assembly, but they are removed and separately packaged for transportation or shipment. As part of the end item, these items must be with the end item whenever it is issued or transferred between property accounts. Illustrations are furnished to help you find and identify the items.

B.2.2 Section 111. Basic Issue Items. These essential items are required to place the 600 GPM pumping assembly in operation, operate it, and to do emergency repairs. Although shipped separately packaged, BII must be with the 600 GPM pumping assembly during operation and when it is transferred between property accounts. This list is your authority to request/requisition them for replacement based on authorization of the end item by the TOE/MTOE. Illustrations are furnished to help you find and identify the items.

B.3 EXPLANATION OF COLLUMNS.

B.3.1 Column (1). The first column, Illus Number, gives you the number of the item illustrated.

B.3.2 Column (2). The second column, National Stock Number, identifies the stock number of the item to be used for requisitioning purposes.

B.3.3 Column (3). The third column, Description and Usable On Code, identifies the Federal item name (in all capital letters) followed by a minimum description when needed. The last line below the description is the Commercial and Government Entity Code (CAGEC) (in parenthesis) and the part number. If the item you need is not the same for different models of the equipment, a Usable On Code will appear on the right side of the description column on the same line as the part number. These codes are identified below:

CODE	USED ON
FCV	Model 609-A
FCX	Model 609-C
FCW	Model US636HCCD-1

B.3.4 Colmn (4). The fourth column, U/I (unit of issue), indicates how the item is issued for the National Stock Number shown in column two.

B.3.5 Column (5). The fifth column, Qty Rqd, indicates the quantity required.

SECTION H. COMPONENTS OF END ITEM

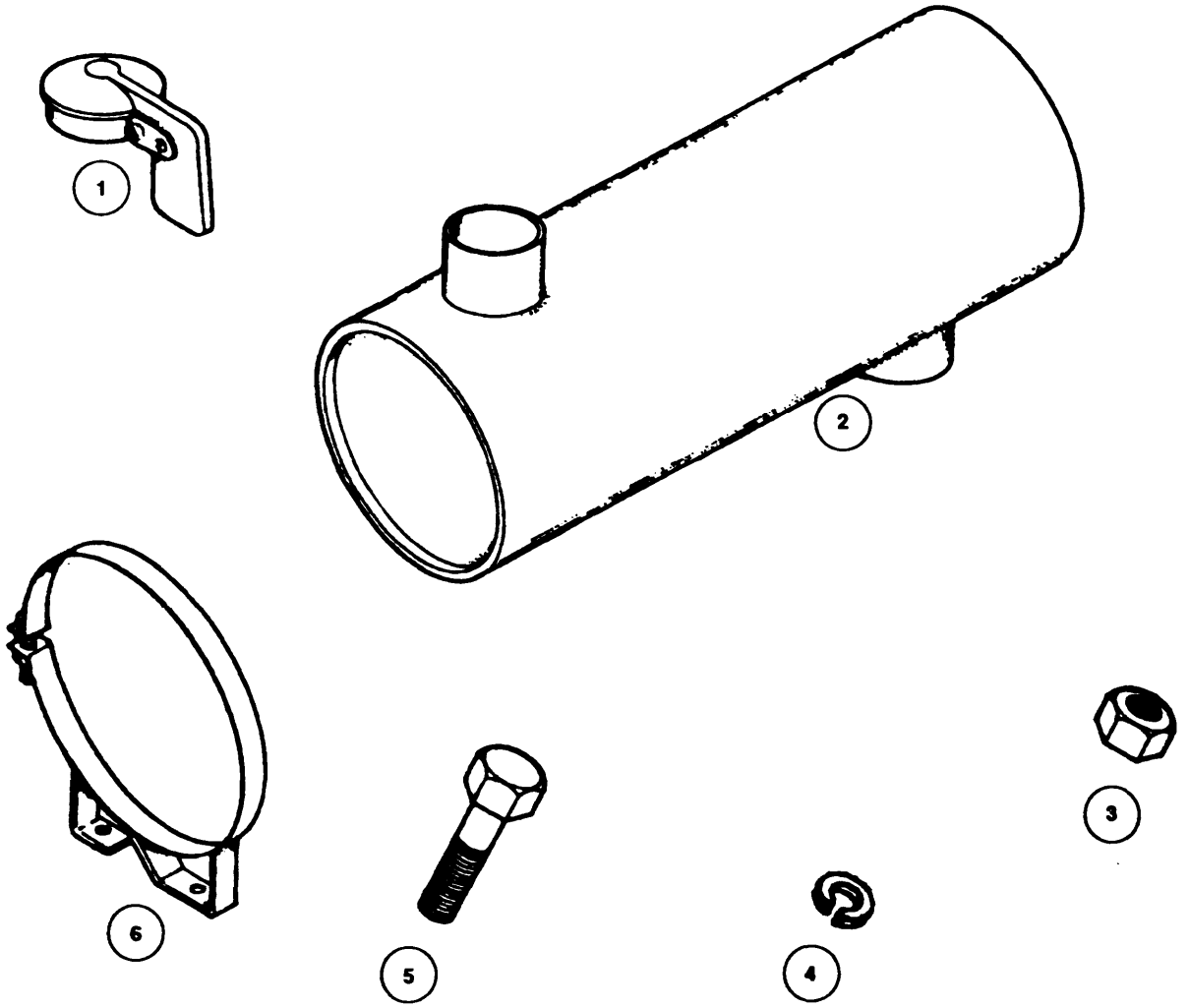

(1) Illus Number	(2) National Stock Number	(3) Description (CAGEC) and Part Number	Usable on Code	(4) U/I	(5) Qty Rqd
1	2990-01-252-6456	Cap Assembly, Protective (18265) P27-0538	FCV	EA	1
2	2990-01-200-9673	Muffler, Exhaust (18265) DIU06-0527	FCV	EA	1
3	5310-00-880-7744	Nut, Plain, Hexagon (96906) MS51967-5	FCV	EA	2
4	5310-00-407-9566	Washer, Lock (96906) MS35338-45	FCV	EA	2
5	5305-01-175-6547	Screw (28265) 1000-12078	FCV	EA	2
6	5340-01-191-6460	Clamp, Loop (18265) P00-4906	FCV	EA	1

SECTION II. COMPONENTS OF END ITEM (CONTINUED)

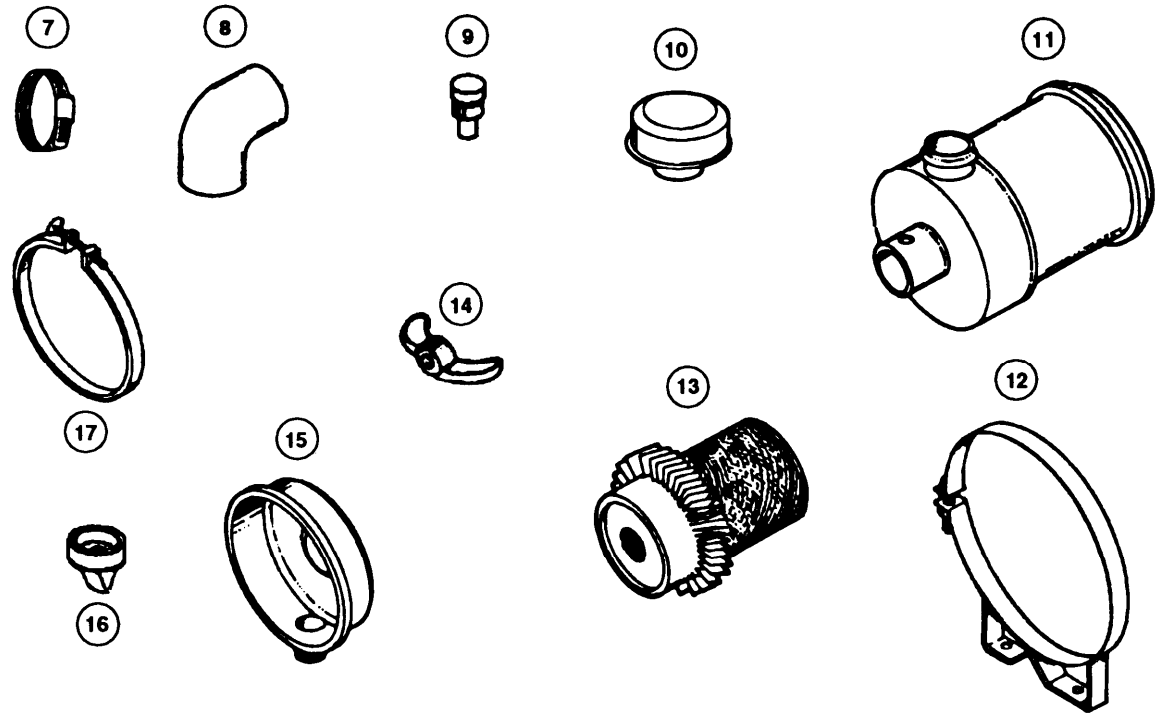

(1) Illus Number	(2) National Stock Number	(3) Description (CAGEC) and Part Number	Usable On Code	(4) U/I	(5) Qty Rqd
7	4730-01-252-6429	Clamp, Hose (28265) 3735-20048	FCV	EA	2
8	4720-01-252-6433	Hose, Preformed (28265) 40-0014406	FCV	EA	1
9	6685-01-160-8579	Indicator, Pressure, Air Cleaner (18265) RAX00-2350	FCV	EA	1
10		Cap, Air Cleaner (Bonnet) (18265) P1C-6043	FCV	EA	1
11	2940-01-203-1040	Air, Cleaner, Intake (18265) FWG08-0074	FCV	EA	1
12	5340-01-252-0580	Bracket, Mounting (28625) 17964	FCV	EA	2
13	2940-00-979-3806	Filter Element, Intake (18265) P18-1054	FCV	EA	1
14	5310-00-735-3544	Nut, Plain, Wing (18265) P10-1870	FCV	EA	2
15		Cup, Air Cleaner Assembly (18265) P10-3837	FCV	EA	1
16	2990-00-832-8729	Vacuum Diaphragm, Air Cleaner (18265) P10-3198	FCV	EA	1
17	5340-01-119-7111	Clamp, Air Cleaner (18265) P00-3951	FCV	EA	1

SECTION II. COMPONENTS OF END ITEM (CONTINUED)

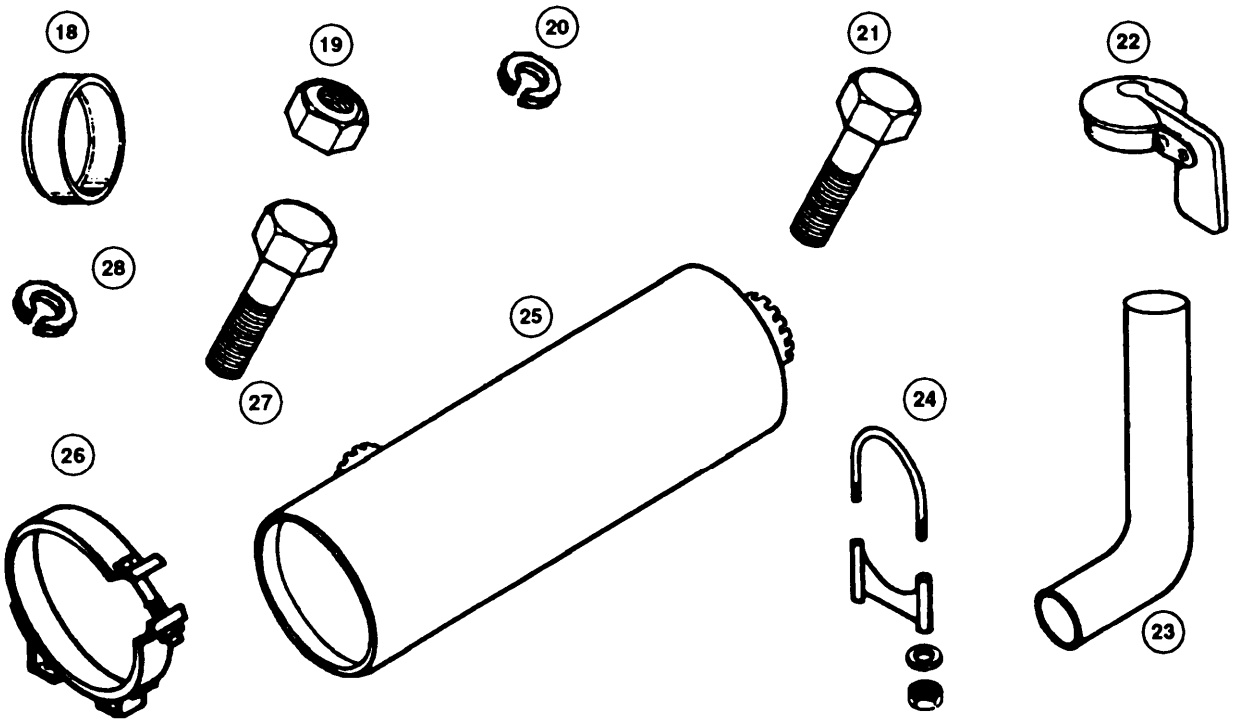

(1) Illus Number	(2) National Stock Number	(3) Description (CAGEC) and Part Number	Usable On Code	(4) U/I	(5) Qty Rqd
18	4310-00-405-1716	Baffle, Air Cleaner (18265) P10-2980	FCV	EA	1
19	5310-00-880-7744	Nut, Plain, Hexagon (96906) MS51967-5	FCV	EA	4
20	5310-00-407-9566	Washer, Lock (96906) MS35338-45	FCV	EA	4
21	5305-01-175-6574	Screw (28265) 1000-12078	FCV	EA	4
22	2990-01-273-7638	Cap, Assembly, Protective (05748) 76743	FCW	EA	1
23	4730-01-273-7440	Elbow, Pipe (05748) 76727	FCW	EA	1
24	5340-01-274-2094	Clamp, Loop (18265) P-6407	FCW	EA	2
25	2990-01-192-5664	Muffler, Exhaust (18265) MAM08-5090	FCW	EA	1
26	5340-01-276-0552	Clamp, Loop, Muffler Mounting (05748) 76250	FCW	EA	2
27	5306-00-226-4824	Bolt, Machine (96906) MS90728-31	FCW	EA	4
28	5310-00-407-9566	Washer, Lock (96906) MS35338-45	FCW	EA	4

SECTION II. COMPONENTS OF END ITEM (CONTINUED)

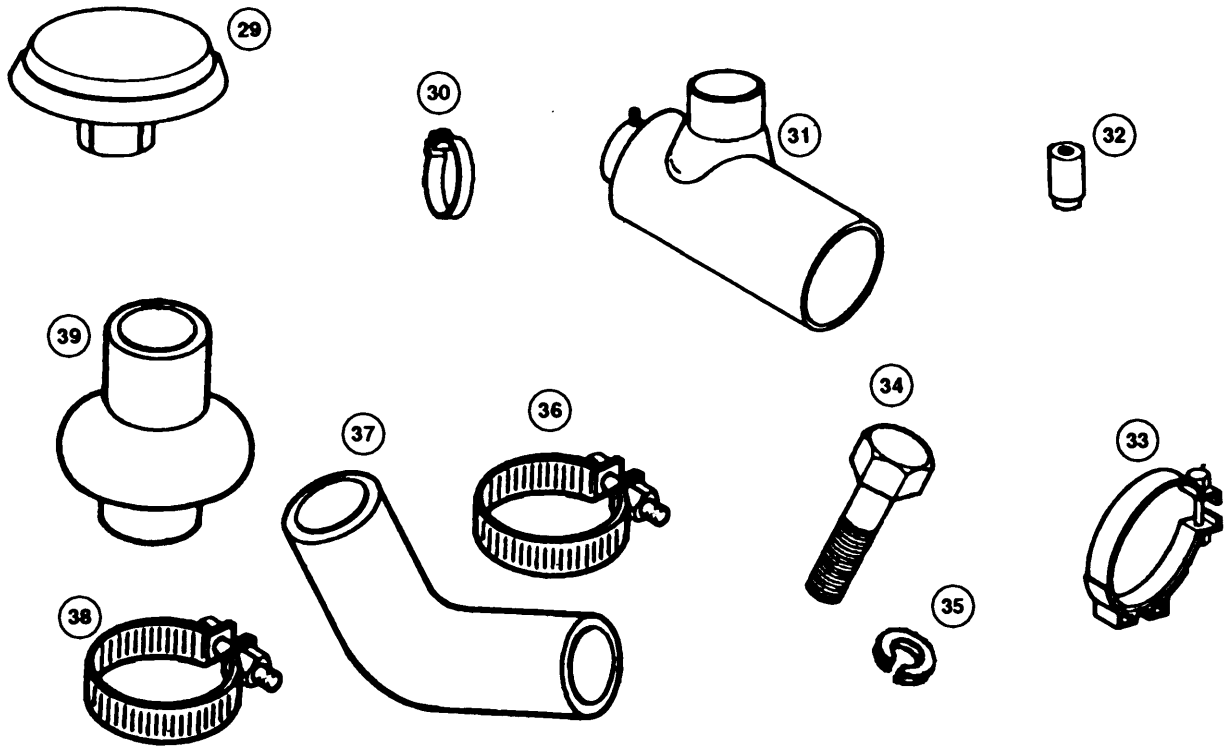

(1) Illus Number	(2) National Stock Number	(3) Description (CAGEC) and Part Number	Usable On Code	(4) U/I	(5) Qty Rqd
29	2940-00-901-1287	Cap, Air Cleaner, Intake (18265) GAH00-0468	FCW	EA	1
30	4730-01-273-7521	Clamp, Hose (05748) 76253	FCW	EA	1
31	2940-01-273-7618	Air Cleaner, Intake (18265) FHG09-0024	FCW	EA	1
32	5355-00-009-5281	Knob (18265) RBX00-2251	FCW	EA	1
33	4210-01-061-4424	Mounting Band (18265) P00-4073	FCW	EA	2
34	5306-00-050-1237	Bolt, Machine (96906) MS90727-31	FCW	EA	4
35	5310-00-407-9566	Washer, Lock (96906) MS35338-45	FCW	EA	4
36	4730-01-273-7520	Clamp, Hose (05748) 76252	FCW	EA	3
37	4720-01-204-3244	Hose, Preformed (05748) 76254	FCW	EA	1
38	4730-01-273-7521	Clamp, Hose (05748) 76253	FCW	EA	1
39	4720-00-725-4058	Hose, Preformed (18265) P10-1291	FCW	EA	1

SECTION II. COMPONENTS OF END ITEM (CONTINUED)

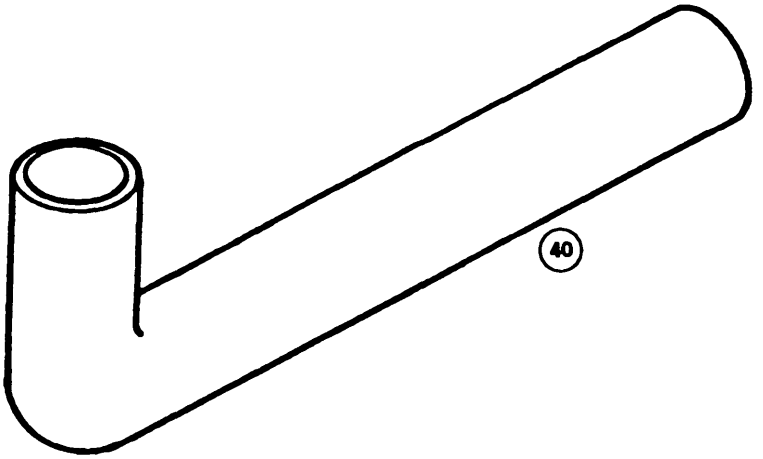

(1) Illus Number	(2) National Stock Number	(3) Description (CAGEC) and Part Number	Usable On Code	(4) U/I	(5) Qty Rqd
40	4730-01-273-7441	Elbow, Pipe (05748) 76072	FCW	EA	1

SECTION III. BASIC ISSUE ITEMS

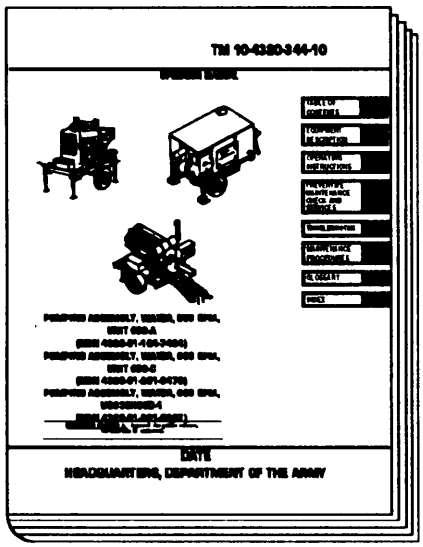

1

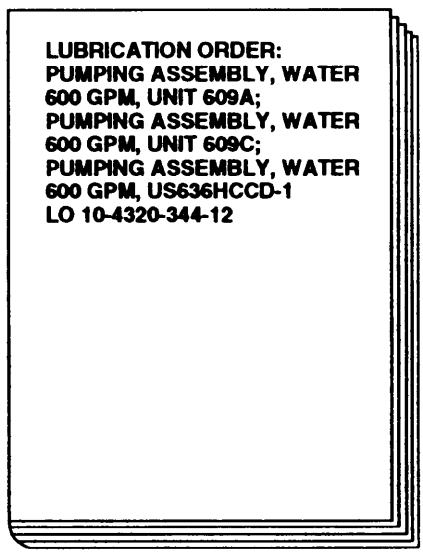

2

(1) Illus Number	(2) National Stock Number	(3) Description (CAGEC) and Part Number	Usable On Code	(4) U/I	(5) Qty Rqd
1		OPERATOR MANUAL: PUMPING ASSEMBLY, WATER, 600 GPM, MODEL 609-A; PUMPING ASSEMBLY, WATER, 600 GPM, MODEL 609-C; PUMPING ASSEMBLY, WATER, 600 GPM, MODEL US636HCCD-1 TM 10-4320-344-10		EA	1
2		LUBRICATION ORDER: PUMPING ASSEMBLY, WATER, 600 GPM, UNIT 609-A; PUMPING ASSEMBLY, WATER, 600 GPM, UNIT 609-C; PUMPING ASSEMBLY, WATER, 600 GPM, US636HCCD-1 LO 10-4320-344-12		EA	1

APPENDIX C
ADDITIONAL AUTHORIZATION LIST

SECTION I. INTRODUCTION

C.1 SCOPE.

This appendix lists additional items you are authorized for the support of the pumping assembly.

C.2 GENERAL.

This list identifies items that do not have to accompany the pumping assembly and that do not have to be turned in with it. These items are all authorized to you by CTA, MTOE, TDA, or JTA.

C.3 EXPLANATION OF LISTING.

National stock numbers, descriptions, and quantities are provided to help you identify and request the additional items you require to support this equipment. The items are listed in alphabetical sequence by item name. If the item you require differs between serial numbers of the same model, effective serial numbers are shown in the last line of the description. If item required differs for different models of this equipment, the model is shown under the "Usable On Code" heading in the description column. These codes are identified as:

Code	Used On
FCV	Model 609-A
FCX	Model 609-C
FCW	Model US636HCCD-1

SECTION 11. ADDITIONAL AUTHORIZED ITEMS LIST

(1) National Stock Number	(2) Description (CAGEC) & Part Number	Usable on Code	(3) U/I	(4) Qty Auth
5180-00-177-7033	Tool Kit, General Mechanic's		Kit	1

APPENDIX D
EXPENDABLE AND DURABLE ITEMS LIST

SECTION I. INTRODUCTION

D.1 SCOPE.

This appendix lists expendable and durable items that you will need to operate and maintain the 600 Gallons Per Minute (GPM) Pumping Assembly. This listing is for information only and is not authority to requisition the listed items. These items are authorized to you by CTA 50-790, expendable items (except medical, class V repair parts, and heraldic items) .

D.2 EXPIANATION OF COLUMNS.

D.2.1 Column (1) - Item Number. This number is assigned to the entry in the listing and is referenced in the narrative instructions to identify the item (e.g., "Use rags, item 3, Appendix D") .

D.2.2 Column (2) - Level. This column identifies the lowest level of maintenance that requires the listed item.

D.2.3 Column (3) - National Stock Nunber. This is the national stock number assigned to the item, which you can use to requisition it.

D.2.4 Column (4) - Description. Item name, description, Commercial and Government Entity Code (CAGEC), and part number. This provides the information you need to identify the item.

D.2.5 Column (5) - Unit of Measure (U/M). This code shows the physical measurement of count of the item, such as gallon, dozen, gross, etc.

SECTION II. EXPENDABLE AND DURABLE ITEMS LIST

(1) Item Number	(2) Level	(3) National Stock Number	(4) Item Name, Description (CAGEC), Part Number	(5) U/M
1	C	6850-00-181-7929	ANTIFREEZE, PERMANENT ETHYLENE GLYCOL, (-65° F) INHIBITED (81349) MIL-A-46153	GL
2	C	8020-00-297-6657	BRUSH, PAINT (96906) MS16866	EA
3	C	7920-01-010-7378	BRUSH, WIRE (93052) 947	EA
4	C	4730-01-274-7410	CAP, PIPE (96046) 76932	EA
5	C	9140-00-286-5295	OIL, FUEL, DIESEL, DF-2, REGULAR (81348) W-F-800	GL
6	C	9150-00-178-4726	OIL, LUBRICATING, OE/HDO-30 (81349) MIL-L-2104	QT
7	C	7920-00-205-1711	RAGS, WIPING (58536) A-A-531	EA
8	C	6640-01-022-6315	SCRAPER, PLASTIC	EA

GLOSSARY

SECTION I. ABBREVIATIONS

The following list includes the abbreviations, acronyms, signs, and symbols used in this technical manual.

amp	Amperes
ATTN	Attention
AR	Army Regulation
Auth	Authorized
BII	Basic Issue Item
C	Celsius
CAGEC	Commercial and Government Entity Code
cm	Centimeter
COEI	Components of End Item
CPC	Corrosion Prevention and Control
CTA	Common Table of Allowances
cu cm	Cubic Centimeter
cu in.	Cubic Inch
DA	Department of the Army
DA PAM	Department of the Army Pamphlet
dc	Direct Current
DECON	Decontamination
EA	Each
EIR	Equipment Improvement Recommendation
ENCL	Enclosure
F	Fahrenheit
FM	Field Manual
ft	Foot
gal	Gallon
GL	Gallon
GPM	Gallons Per Minute
hp	Horsepower
Illus	Illustration
in.	Inch
JTA	Joint Table of Allowances
kg	Kilogram
kPa	Kilopascal
kW	Kilowatt
L	Liter (or Litre)
lb	Pound
LO	Lubrication Order
mm	Millimeter
MTOE	Modified Table of Organization and Equipment
NBC	Nuclear, Biological,and Chemical
PAM	Pamphlet
PMCS	Preventive Maintenance Checks and Services
PSI	Pounds per Square Inch
qt	Quart
Qty	Quantity
rpm	Revolutions per Minute
Rqd	Required
SF	Standard Form
TAMMS	The Army Maintenance Management System
TDA	Table of Distribution and Allowances
tdh	Total Discharge Head
TOE	Table of Organization and Equipment
TM	Technical Manual
TWDS	Tactical Water Distribution Equipment System
U/I	Unit of Issue
U/M	Unit of Measure

SECTION II. DEFINITION OF UNUSUAL TERMS

The following definitions include the terms used in this manual that are not defined in the text or not listed in the Army Dictionary (AR 310-25).

Head - The pressure against which a pump forces liquid, expressed in feet. Each pound of pressure per square inch against which the liquid is forced is equivalent to lifting a column of water l-inch square and 2.31 feet high. The head includes the height to which the liquid must be raised plus the force required to overcome friction losses in the pipeline or hoseline.

Net positive suction head - The absolute pressure at the pump inlet expressed in feet of liquid, plus velocity head, minus the vapor pressure of the fluid at pumping temperature. If the inlet liquid is exposed to the atmosphere, it is also necessary to correct for the elevation at the entrance to the pump impeller.

Suction Pressure - As used on pump suction gauges, the negative or positive pressure at the pump suction inlet. It will be a negative pressure if the inlet liquid is exposed to the atmosphere below the suction inlet (such as a source pump taking water from a well, stream, or lake). It will be a positive pressure if the inlet liquid is from an elevated source (such as a storage tank) or an upline pump.

Total discharge head - The sum of the suction pressure and the discharge pressure, expressed in feet.

INDEX

A

Abbreviations/Acronyms, List of 1.8
Adjustment, Park Brake Cable 3.3
Army Materiel, Destruction of, to Prevent Enemy Use 1.4
Assembly and Preparation of Pumping Assemblies 2.3.2
Assembly and Preparation for Use 2.3

B

Boost Pump, Priming of 2.4.2

C

Characteristics, Capabilities, and Features, Equipment . . 1.10
Checks, Initial Adjustments and Self Test 2.4
Checks and Services, Preventive Maintenance . . . 2.2
Cold Weather, Operation in . . 2.8.1
Corrosion Prevention and Control 1.3
Control, Corrosion Prevention and 1.3
Controls and Indicators, Operator. 2.1

D

Data, Equipment 1.13
Decals and Instruction Plates 2.6
Decontamination, Nuclear, Biological, and Chemical (NBC) . . l 2.11
Destruction of Army Materiel to Prevent Enemy Use 1.4
Differences Between Models 1.12
Description, Functional 1.14
Draining of Pumping Assemblies 2.7.1
Dusty or Sandy Areas, Operation in 2.8.3

E

Emergency Procedures 2.10
Environment/Weather, Unusual 2.8
Equipment Characteristics, Capabilities, and Features 1.10

E (CONTINUED)

Equipment Data 1.13
Equipment Improvement Recommendation 1.5
Extreme Heat, Operation in . . . . . - . 2.8.2

F

Features, Equipment Characteristics, Capabilities, and . . . - 1.10
Fording . . . . . - . 2.9
Functional Description . . . 1.14

G

Glossary 1.9

I

Initial Adjustments, Checks, and Self Test 2.4
Installation of Pumping Assemblies 2.3.2.2
Instruction Plates, Decals and 2.6

L

Lead Pump, Priming of 2.4.1
List of Abbreviations/ Acronyms . . . . . l 1.8
List, Nomenclature Cross-Reference 1.7
Location and Description of Major Components . . . 1.11
Location, Site 2.3.1
Lubrication 3.1

M

Maintenance Forms and Procedures 1.2
Major Components, Location and Description of 1.11
Model 609-A, Operation of . . 2.5.1
Model 609-C, Operation of . . 2.5.2
Model US636HCCD-1, Operation of 2.5.3
Models, Differences Between 1.12
Movement, Preparation for 2.7
Movement, Preparation of Pumping Assemblies for . . 2.7.2

N

Nomenclature Cross-Reference List 1.7
Nuclear, Biological, and Chemical (NBC) Decontamination 2.11

O

Operating Procedures 2.5
Operation in Cold Weather 2.8.1
Operation in Dusty or Sandy Areas 2.8.3
Operation in Extreme Heat . . 2.8.2
Operation in Salt Water Areas 2.8.4
Operation of Model 609-A. 2.5.1
Operation of Model 609-C . . 2.5.2
Operation of Model US636HCCD-1 . . . . . 2.5.3
Operator Controls and Indicators 2-1

P

Park Brake Cable Adjustment 3.3
Preparation for Movement . . 2.7
Preparation for Use, Assembly and. 2.3
Preparation of Pumping Assemblies for Movement 2.7.2
Preparation of Pumping Assemblies, Assembly and 2.3.2
Preventive Maintenance Checks and Services . . . 2.2
Procedures, Maintenance Forms and 1.2
Procedures, Operating 2.5
Pumping Assemblies, Assembly and Preparation of . . . . . l . . . 2.3.2
Priming of Boost Pump 2.4.2
Priming of Lead Pump 2.4.1
Procedures, Emergency 2.10
Pumping Assemblies, Draining of 2.7.1
Pumping Assemblies, Installation of 2.3.2.2
Pumping Assemblies, Preparation of, for Movement 2.7.2
Pumping Assembly, Model 609-A, Equipment Characteristics, Capabilities, and Features 1.10.1
Pumping Assembly, Model 609-A, Equipment Data . . 1.13.1

P (CONTINUED)

Pumping Assembly, Model 609-A, Operator Controls and Indicators 2.1.1
Pumping Assembly, Model 609-C, Equipment Characteristics, Capabilities, and Features 1.10.2
Pumping Assembly, Model 609-C, Equipment Data 1.13.2
Pumping Assembly, Model 609-C, Operator Controls and Indicators 2.1.2
Pumping Assembly, US636HCCD-1, Equipment Characteristics, Capabilities, and Features 1.10.3
Pumping Assembly, Model US636HCCD-1, Equipment Data 1.13.3
Pumping Assembly, Model US636HCCD-1, Operator Controls and Indicators . 2.1.3

R

Recommendation, Equipment Improvement 1-5

S

Salt Water Areas, Operation in . . . . . - . 2.8.4
Sandy Areas, Dusty or, Operation in 2.8.3
Scope 1.1
Self Test, Initial Adjustments, Checks and . 2.4
Site Location 2.3.1

T

Troubleshooting 3.2

U

Unpacking 2.3.2.1
Unusual Environment/ Weather 2.8

W

Warranty Information 1-6

By Order of the Secretary of the Army:

GORDON R. SULLIVAN
General, United States Army
Chief of Staff

Official:

MILTON H. HAMILTON
Administrative Assistant to the
Secretary of the Army
06495

DISTRIBUTION :
To be distributed in accordance with DA Form 12-25-E, block no. 5942, requirements for TM 10-4320-344-10.

*U.S. GOVERNMENT PRINTING OFFICE: 1994-555-028/00202

RECOMMENDED CHANGES TO EQUIPMENT TECHNICAL PUBLICATIONS

SOMETHING WRONG WITH THIS PUBLICATION?

FROM: (PRINT YOUR UNIT'S COMPLETE ADDRESS)
PFC JOHN DOE
COA, 3d ENGINEER BN
FT. LEAVENWORTH, MO 63108

DATE SENT

PUBLICATION NUMBER	PUBLICATION DATE	PUBLICATION TITLE
TM 10-4320-344-10	31 Aug 1993	PUMPING ASSEMBLY, WATER, 600 GPM,

BE EXACT. . PIN-POINT WHERE IT IS

PAGE NO	PARA-GRAPH	FIGURE NO	TABLE NO	IN THIS SPACE TELL WHAT IS WRONG AND WHAT SHOULD BE DONE ABOUT IT:
6	2-1 a			In line 6 of paragraph 2-1a the manual states the engine has 6 Cylinders. The engine on my set only has 4 Cylinders. Change the manual to show 4 Cylinders.
B1		4-3		Callout 16 on figure 4-3 is pointing at a bolt. In key to figure 4-3, item 16 is called a shim - Please correct one or the other.
125	line	20		I ordered a gasket, item 19 on figure B-16 by NSN 2910-00-762-3001. I got a gasket but it doesn't fit. Supply says I got what I ordered, so the NSN is wrong. Please give me a good NSN

PRINTED NAME, GRADE OR TITLE, AND TELEPHONE NUMBER
JOHN DOE, PFC (268) 317-7111

SIGN HERE John Doe
JOHN DOE

TEAR ALONG PERFORATED LINE

DA FORM 1 JUL 79 2028-2

PREVIOUS EDITIONS ARE OBSOLETE.

DRSTS-M Overprint 1, 1 Nov 80

PS--IF YOUR OUTFIT WANTS TO KNOW ABOUT YOUR RECOMMENDATION MAKE A CARBON COPY OF THIS AND GIVE IT TO YOUR HEADQUARTERS

REVERSE OF DA FORM 2028-2 Reverse of DRSTS-M Overprint 2, 1 Nov 80

TEAR ALONG PERFORATED LINE

FILL IN YOUR UNITS ADDRESS

FOLD BACK

DEPARTMENT OF THE ARMY

OFFICIAL BUSINESS

COMMANDER
U.S. ARMY AVIATION AND TROOP COMMAND
ATTN: AMSAT-I-MP
4300 GOODFELLOW BOULEVARD
ST. LOUIS, MO 63120-1798

RECOMMENDED CHANGES TO EQUIPMENT TECHNICAL PUBLICATIONS

THEN... JOT DOWN THE DOPE ABOUT IT ON THIS FORM, CAREFULLY TEAR IT OUT, FOLD IT AND DROP IT IN THE MAIL!

SOMETHING WRONG WITH THIS PUBLICATION?

FROM (PRINT YOUR UNIT'S COMPLETE ADDRESS)

DATE SENT

PUBLICATION NUMBER	PUBLICATION DATE	PUBLICATION TITLE
TM 10-4320-344-10	31 Aug 1993	PUMPING ASSEMBLY, WATER, 600 GPM,

BE EXACT PIN-POINT WHERE IT IS

PAGE NO	PARA-GRAPH	FIGURE NO	TABLE NO

IN THIS SPACE TELL WHAT IS WRONG AND WHAT SHOULD BE DONE ABOUT IT:

PRINTED NAME, GRADE OR TITLE, AND TELEPHONE NUMBER

SIGN HERE

DA FORM 1 JUL 79 2028-2

PREVIOUS EDITIONS ARE OBSOLETE

P.S.--IF YOUR OUTFIT WANTS TO KNOW ABOUT YOUR RECOMMENDATION MAKE A CARBON COPY OF THIS AND GIVE IT TO YOUR HEADQUARTERS

REVERSE OF DA FORM 2028-2 Reverse of DRSTS-M Overprint 2,
1 Nov 80

TEAR ALONG PERFORATED LINE

FILL IN YOUR UNITS ADDRESS

FOLD BACK

DEPARTMENT OF THE ARMY

OFFICIAL BUSINESS

COMMANDER
U.S. ARMY AVIATION AND TROOP COMMAND
ATTN: AMSAT-I-MP
4300 GOODFELLOW BOULEVARD
ST. LOUIS, MO 63120-1798

RECOMMENDED CHANGES TO EQUIPMENT TECHNICAL PUBLICATIONS

THEN... JOT DOWN THE DOPE ABOUT IT ON THIS FORM, CAREFULLY TEAR IT OUT, FOLD IT AND DROP IT IN THE MAIL!

SOMETHING WRONG WITH THIS PUBLICATION?

FROM: (PRINT YOUR UNIT'S COMPLETE ADDRESS)

DATE SENT

PUBLICATION NUMBER	PUBLICATION DATE	PUBLICATION TITLE
TM 10-4320-344-10	31 Aug 1993	PUMPING ASSEMBLY, WATER, 600 GPM,

BE EXACT. PIN-POINT WHERE IT IS

PAGE NO	PARA-GRAPH	FIGURE NO	TABLE NO

IN THIS SPACE TELL WHAT IS WRONG AND WHAT SHOULD BE DONE ABOUT IT:

PRINTED NAME, GRADE OR TITLE, AND TELEPHONE NUMBER

SIGN HERE

DA FORM 1 JUL 79 2028-2

PREVIOUS EDITIONS ARE OBSOLETE

P.S.--IF YOUR OUTFIT WANTS TO KNOW ABOUT YOUR RECOMMENDATION MAKE A CARBON COPY OF THIS AND GIVE IT TO YOUR HEADQUARTERS

REVERSE OF DA FORM 2028-2 Reverse of DRSTS-M Overprint 2, 1 Nov 80

TEAR ALONG PERFORATED LINE

FILL IN YOUR UNITS ADDRESS

FOLD BACK

DEPARTMENT OF THE ARMY

OFFICIAL BUSINESS

COMMANDER
U.S. ARMY AVIATION AND TROOP COMMAND
ATTN: AMSAT-I-MP
4300 GOODFELLOW BOULEVARD
ST. LOUIS, MO 63120-1798

RECOMMENDED CHANGES TO EQUIPMENT TECHNICAL PUBLICATIONS

THEN... JOT DOWN THE DOPE ABOUT IT ON THIS FORM, CAREFULLY TEAR IT OUT, FOLD IT AND DROP IT IN THE MAIL!

SOMETHING WRONG WITH THIS PUBLICATION?

FROM: (PRINT YOUR UNIT'S COMPLETE ADDRESS)

DATE SENT

PUBLICATION NUMBER	PUBLICATION DATE	PUBLICATION TITLE
TM 10-4320-344-10	31 Aug 1993	PUMPING ASSEMBLY, WATER, 600 GPM,

BE EXACT PIN-POINT WHERE IT IS

PAGE NO	PARA-GRAPH	FIGURE NO	TABLE NO

IN THIS SPACE TELL WHAT IS WRONG AND WHAT SHOULD BE DONE ABOUT IT:

PRINTED NAME, GRADE OR TITLE, AND TELEPHONE NUMBER

SIGN HERE

DA FORM 1 JUL 79 2028-2

PREVIOUS EDITIONS ARE OBSOLETE

P.S.--IF YOUR OUTFIT WANTS TO KNOW ABOUT YOUR RECOMMENDATION MAKE A CARBON COPY OF THIS AND GIVE IT TO YOUR HEADQUARTERS.

REVERSE OF DA FORM 2028-2 Reverse of DRSTS-M Overprint 2,
1 Nov 80

TEAR ALONG PERFORATED LINE

FILL IN YOUR UNITS ADDRESS

FOLD BACK

DEPARTMENT OF THE ARMY

OFFICIAL BUSINESS

COMMANDER
U.S. ARMY AVIATION AND TROOP COMMAND
ATTN: AMSAT-I-MP
4300 GOODFELLOW BOULEVARD
ST. LOUIS, MO 63120-1798

The Metric System and Equivalents

Linear Measure

1 centimeter = 10 millimeters = .39 inch
1 decimeter = 10 centimeters = 3.94 inches
1 meter = 10 decimeters = 39.37 inches
1 dekameter = 10 meters = 32.8 feet
1 hectometer = 10 dekameters = 328.08 feet
1 kilometer = 10 hectometers = 3,280.8 feet

Weights

1 centigram = 10 milligrams = .15 grain
1 decigram = 10 centigrams = 1.54 grains
1 gram = 10 decigram = .035 ounce
1 dekagram = 10 grams = .35 ounce
1 hectogram = 10 dekagrams = 3.52 ounces
1 kilogram = 10 hectograms = 2.2 pounds
1 quintal = 100 kilograms = 220.46 pounds
1 metric ton = 10 quintals = 1.1 short tons

Liquid Measure

1 centiliter = 10 milliters = .34 fl. ounce
1 deciliter = 10 centiliters = 3.38 fl. ounces
1 liter = 10 deciliters = 33.81 fl. ounces
1 dekaliter = 10 liters = 2.64 gallons
1 hectoliter = 10 dekaliters = 26.42 gallons
1 kiloliter = 10 hectoliters = 264.18 gallons

Square Measure

1 sq. centimeter = 100 sq. millimeters = .155 sq. inch
1 sq. decimeter = 100 sq. centimeters = 15.5 sq. inches
1 sq. meter (centare) = 100 sq. decimeters = 10.76 sq. feet
1 sq. dekameter (are) = 100 sq. meters = 1,076.4 sq. feet
1 sq. hectometer (hectare) = 100 sq. dekameters = 2.47 acres
1 sq. kilometer = 100 sq. hectometers = .386 sq. mile

Cubic Measure

1 cu. centimeter = 1000 cu. millimeters = .06 cu. inch
1 cu. decimeter = 1000 cu. centimeters = 61.02 cu. inches
1 cu. meter = 1000 cu. decimeters = 35.31 cu. feet

Approximate Conversion Factors

To change	*To*	*Multiply by*	*To change*	*To*	*Multiply by*
inches	centimeters	2.540	ounce-inches	newton-meters	.007062
feet	meters	.305	centimeters	inches	.394
yards	meters	.914	meters	feet	3.280
miles	kilometers	1.609	meters	yards	1.094
square inches	square centimeters	6.451	kilometers	miles	.621
square feet	square meters	.093	square centimeters	square inches	.155
square yards	square meters	.836	square meters	square feet	10.764
square miles	square kilometers	2.590	square meters	square yards	1.196
acres	square hectometers	.405	square kilometers	square miles	.386
cubic feet	cubic meters	.028	square hectometers	acres	2.471
cubic yards	cubic meters	.765	cubic meters	cubic feet	35.315
fluid ounces	milliliters	29,573	cubic meters	cubic yards	1.308
pints	liters	.473	milliliters	fluid ounces	.034
quarts	liters	.946	liters	pints	2.113
gallons	liters	3.785	liters	quarts	1.057
ounces	grams	28.349	liters	gallons	.264
pounds	kilograms	.454	grams	ounces	.035
short tons	metric tons	.907	kilograms	pounds	2.205
pound-feet	newton-meters	1.356	metric tons	short tons	1.102
pound-inches	newton-meters	.11296			

Temperature (Exact)

°F	Fahrenheit temperature	5/9 (after subtracting 32)	Celsius temperature	°C

PIN: 072520-000

This fine document...

Was brought to you by me:

Liberated Manuals -- free army and government manuals

Why do I do it? I am tired of sleazy CD-ROM sellers, who take publicly available information, slap “watermarks” and other junk on it, and sell it. Those masters of search engine manipulation make sure that their sites that sell free information, come up first in search engines. They did not create it... They did not even scan it... Why should they get your money? Why are not letting you give those free manuals to your friends?

I am setting this document FREE. This document was made by the US Government and is NOT protected by Copyright. Feel free to share, republish, sell and so on.

I am not asking you for donations, fees or handouts. If you can, please provide a link to liberatedmanuals.com, so that free manuals come up first in search engines:

<A HREF=http://www.liberatedmanuals.com/>Free Military and Government Manuals</A>

- Sincerely
  Igor Chudov
  http://igor.chudov.com/
- Chicago Machinery Movers