TECHNICAL MANUAL

ORGANIZATIONAL MAINTENANCE MANUAL
(INCLUDING REPAIR PARTS AND SPECIAL TOOLS LIST)
FOR

THE TYPE V AIRDROP PLATFORM

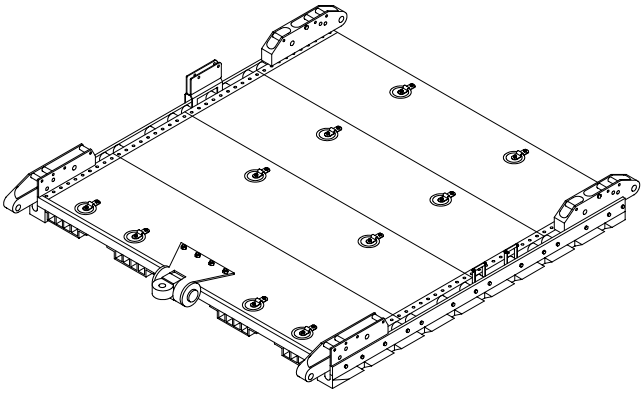

AND

THE DUAL ROW AIRDROP PLATFORM

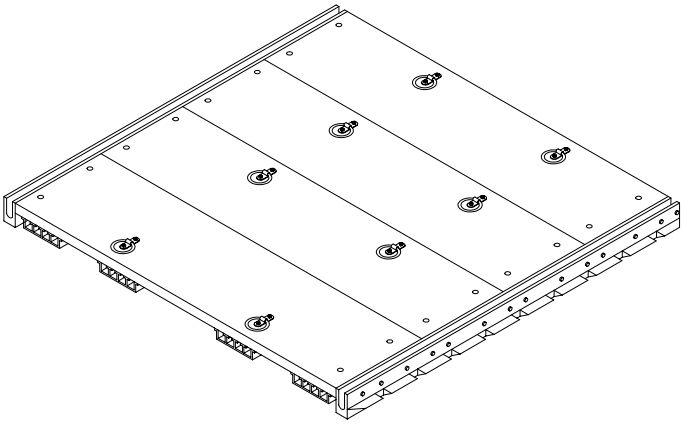

DISTRIBUTION STATEMENT A: Approved for public release; distribution is unlimited.
* This manual supercedes TM 10-1670-268-20&P, dated 1 June 1986

HEADQUARTERS, DEPARTMENT OF THE ARMY **15 SEPTEMBER 2002**

WARNING SUMMARY

This warning summary contains general safety warnings and hazardous material warnings that must be understood and applied during operation and maintenance of this equipment. Failure to observe these precautions could result in serious injury or death to personnel.

WARNING

DEATH could result if inspection are not performed as specified in this manual. Perform all inspections as specified.

WARNING

For First Aid treatment, refer to FM 4-25.11

WARNING

Personnel performing instruction involving operations, procedures, and practices that are included in this technical manual shall observe the following instructions. Disregard for these warnings can cause serious injury or death. Never walk or crawl beneath raised platforms. The type V platform weighs approximately 100-pounds per foot of length and the dual row platform weighs approximately 80- pounds per foot of length.

WARNING

Do not use fingers to align bolt-holes. Use a punch to align bolt-holes. Use of fingers can cause serious injury to personnel.

WARNING

When connecting platforms in tandem, do not use fingers for aligning the holes of the tandem link assemblies. Use a punch to align the holes. Use of fingers can cause serious injury to personnel.

WARNING

Exercise extreme care when using petroleum products to destroy equipment by fire as these materials are highly flammable.

CHANGE NO. 1

HEADQUARTERS, DEPARTMENT OF THE ARMY
WASHINGTON, D.C., 31 MARCH 2004

TECHNICAL MANUAL

ORGANIZATIONAL MAINTENANCE MANUAL
INCLUDING REPAIR PARTS AND SPECIAL TOOLS LIST
FOR
THE TYPE V AIRDROP PLATFORM AND THE
DUAL ROW AIRDROP PLATFORM

DISTRIBUTION STATEMENT A – Approved for public release; distribution is unlimited.

TM 10-1670-268-20&P, 15 September 2002, is updated as follows:

1. File this sheet in front of the manual for reference.
2. This change is a result of corrected National Stock Numbers (NSN)s and/or CAGEC codes and part numbers.
3. New or updated text is indicated by a vertical bar in the outer margin of the page.
4. Remove old pages and insert new pages as indicated below:

Remove Pages	Insert Pages
A/(B Blank)	A/(B Blank)
i/ii	i/ii
Sample 2028	Sample 2028/Reverse
2028	2028/Reverse

5. Replace the following work packages with their revised version:

Work Package Number	Work Package Number
WP 0001 00	WP 0028 00
WP 0004 00	WP 0029 00
WP 0020 00	WP 0030 00
WP 0023 00	WP 0031 00
WP 0024 00	WP 0032 00
WP 0025 00	WP 0034 00
WP 0027 00	WP 0035 00

TM 10-1670-268-20&P
C1

By Order of the Secretary of the Army:

PETER J. SCHOOMAKER
General, United States Army
Chief of Staff

Official:

JOEL B. HUDSON
Administrative Assistant to the
Secretary of the Army
0407105

Distribution: To be distributed in accordance with initial distribution number (IDN) 252492 requirements for TM 10-1670-268-20&P.

INSERT LATEST CHANGED PAGES / WORK PACKAGES. DESTROY SUPERSEDED DATA.

LIST OF EFFECTIVE PAGES / WORK PACKAGES

NOTE: The portion of text affected by the changes is indicated by a vertical line in the outer margins of the page. Changes to illustrations are indicated by miniature pointing hands. Changes to wiring diagrams are indicated by shaded areas.

Date of issue for original and changes pages / work packages are:

Original .. 0 .. 15 Sep 02

Change .. 1 .. 31 March 04

TOTAL NUMBER OF PAGES FOR FRONT AND REAR MATTER IS 16 AND TOTAL NUMBER OF WORK PACKAGES IS 36 CONSISTING OF THE FOLLOWING:

Page / WP No.	*Change No.	Page / WP No.	*Change No.
Title	0		
a-b	0		
A – B	1		
i/ii	1		
iii/iv	0		
WP 0001 00	1		
WP 0002 00 – 0003 00	0		
WP 0004 00	1		
WP 0005 00 – 0019 00	0		
WP 0020 00	1		
WP 0021 00 – 0022 00	0		
WP 0023 00 – 0025 00	1		
WP 0026 00	0		
WP 0027 00 – 0032 00	1		
WP 0033 00	0		
WP 0034 00 – 0035 00	1		
WP 0036 00	0		
Alphabetical Index	0		

***Zero in this column indicates an original page or work package**

HEADQUARTERS, DEPARTMENT OF
THE ARMY AND THE AIR FORCE
WASHINGTON, D.C., 15 SEPTEMBER 2002

TECHNICAL MANUAL

ORGANIZATIONAL MAINTENANCE MANUAL
INCLUDING REPAIR PARTS AND SPECIAL TOOLS LIST
FOR
TYPE V AIRDROP PLATFORM

AND

DUAL ROW AIRDROP PLATFORM

REPORTING ERRORS AND RECOMMENDING IMPROVEMENTS

ARMY

You can help improve this manual. If you find any mistakes or if you know of a way to improve the procedures, please let us know. Mail your letter, DA Form 2028 (Recommended Changes to Publications and Blank Forms), or DA Form 2028-2, located in the back of this manual directly to: Commander, US Army Tank-automotive & Armament Command, ATTN: AMSTA-LC-CECT, Kansas St., Natick, MA 01760. You may also submit your recommended changes by E-mail directly to: <amssbriml@natick.army.mil>. A reply will be furnished directly to you. Instructions for sending electronic 2028 may be found at the back of this manual immediately preceding the hard copy 2028.

AIR FORCE

Reports by U.S. Air Force units should be submitted on AFTO Form 22 (Technical Order Publication Improvement Report and Reply) and forwarded to the address prescribed above for the Army. An information copy of the prepared AFTO Form 22 shall be furnished to WP-ALC/TILTA, 420 2nd Street, Suite 100, Robins AFB, GA 31098-1640.

MARINE CORPS

Marine Corps personnel submit NAVMC 10772 to commander, ATTN: (Code 850), Marine Corps Logistics Bases, 814 Radford Blvd., Albany, GA 31704-1128.

NAVY

Submit NAVSEA From 4160/1 (REV 2-99) to Commander, NSDSA Code 5E30, NAVSURFCENDIV, 4363 Missile Way, Port Hueneme, CA 93043-4307. A Reply will be sent to you.

*This manual supercedes TM 10-1670-268-20&P, dated 01 June 1986

TABLE OF CONTENTS

HOW TO USE THIS MANUAL

In this manual, primary chapters appear in upper case/capital letters; work packages are presented in numeric sequence, e.g., 0001 00; paragraphs within a work package are not numbered and are presented in a titles format. For a first level paragraph, title all upper case/capital letters, e.g., INTRODUCTION, the next subordinate paragraph title will have the first letter of the first word of each principle word all upper case/capital letters, e.g., How to Use This Manual. The location of additional material that must be referenced is clearly marked. Figures supporting maintenance procedures/text are located as close as possible to their references.

FRONT MATTER. Front matter consists of front cover, warning summary, title block, table of contents, and how to use this manual page.

CHAPTER 1 - INTRODUCTION. Chapter 1 contains general information and equipment description.

CHAPTER 2 - OPERATOR INSTRUCTIONS. Chapter 2 contains maintenance instructions, provides preventive maintenance checks and services (PMCS), lubrication instructions, maintenance procedures authorized at operator level, references and expendable and durable items list.

REAR MATTER. Rear matter consists of alphabetical index, DA Form 2028, authentication page, and back cover.

Manual Organization and Page Numbering System. The Manual is divided into two major chapters that detail the topics mentioned above. Within each chapter are work packages covering a wide range of topics. Each work package is numbered sequentially starting at page 1. The work package has its own page-numbering scheme and is independent of the page numbering used by other work packages. Each page of a work package has a page number of the for XXXX YY-ZZ where XXXX is the work package number (e.g. 0010 is work package 10), YY is the revision number for that work package, and ZZ represents the number of the page within that work package. A page number such as 0010 00-1/2 blank means that page 1 contains information but page 2 of that work package has been intentionally left blank.

Finding Information. The Table of Contents permits the reader to find information in the manual quickly. The reader should start here first when looking for a specific topic. The Table of Contents lists the topics contained within each chapter and the Work Package Sequence Number where it can be found.

Example: If the reader were looking for instructions on "Replacing Roller Pad", which is a Unit Maintenance topic, the Table of Contents indicates that Unit Maintenance information can be found in Chapter 2. Scanning down the listings for Chapter 2, "Replacing Roller Pad " information can be found in WP 0013 00 (Work Package 13).

An Alphabetical Index can be found at the back of the Manual, and lists specific topics with the corresponding work package.

THIS PAGE INTENTIONALLY LEFT BLANK

CHAPTER 1

INTRODUCTORY INFORMATION FOR THE TYPE V AND DUAL ROW AIRDROP PLATFORM

TYPE V AND DUAL ROW AIRDROP PLATFORM GENERAL INFORMATION

SCOPE

This manual provides organizational maintenance instructions for the Type V Platform and Dual Row Platform. This manual also provides a Repair Parts and Special Tools List (RPSTL), located in WP 0021 00 through WP 0032 00.

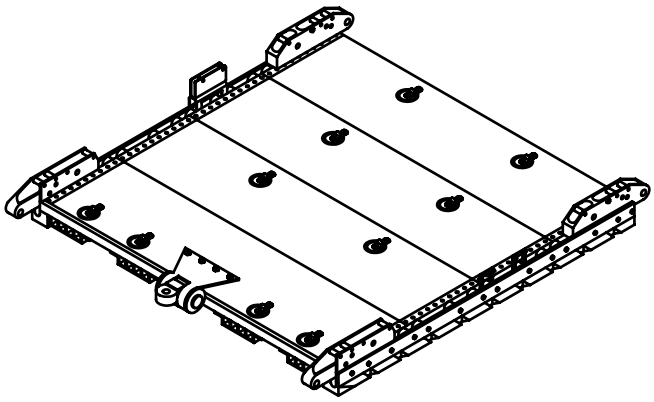

Type V Platform

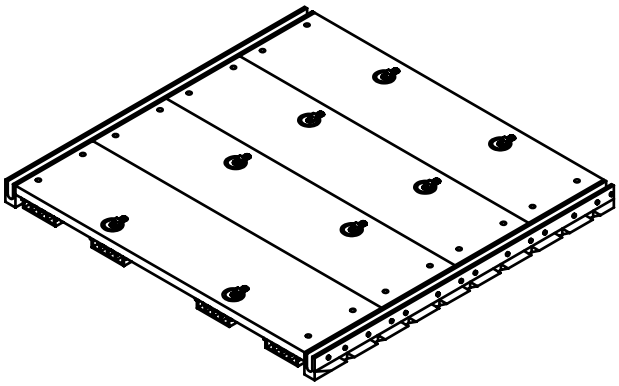

Dual Row Platform

Model and Equipment Name. Platform, Airdrop, Type V and Platform, Airdrop, Dual Row.

Purpose of Equipment. Used to airdrop equipment and supplies from Air Force cargo aircraft.

MAINTENANCE FORMS, RECORDS, AND REPORTS

Department of the Army forms and procedures used for equipment maintenance will be those prescribed by DA PAM 738-750, The Army Maintenance Management System (TAMMS), as contained in Maintenance Management Update. Air Force personnel will use AFR 66-1 for maintenance reporting and T.O. 00-35D54 for unsatisfactory equipment reporting.

Reporting of Item and Packaging Discrepancies. Fill out and forward SF 364 (Report of Discrepancy (ROD)) as prescribed in AR 735-11-2/DLAR 414.55/SECNAVINST 4355.18/AFR 400-54/MCO 4430.3J.

Transportation Discrepancy Report (TDR) (SF 361). Fill out and forward Transportation Discrepancy Report (TDR) (SF 361) as prescribed in Reporting of Transportation Discrepancies in Shipments AR 55-38/NAVUSPINST 4610.33C/AFR 75-18/MCO P4610.19D/DLAR 4500.15.

REPORTING EQUIPMENT IMPROVEMENT RECOMMENDATIONS (EIR)

If your type V or dual row airdrop platform needs improvement, let us know. Send us an EIR. You, the user, are the only one who can tell us what you don't like about your equipment. Let us know why you don't like the design or performance. Put it on an SF 368 (Product Quality Deficiency Report). Mail it to: Commander U.S. Army Tank-automotive and Armament Command, ATTN: AMSTA-LC-R, Kansas Street, Natick, MA 01760-5052. A reply will be furnished to you.

CORROSION PREVENTION AND CONTROL (CPC)

Corrosion Prevention and Control (CPC) of Army materiel is a continuing concern. It is important that any corrosion problems with this item be reported so that the problem can be corrected and improvements can be made to prevent the problem in future items.

While corrosion is typically associated with rusting of metals, it can also include deterioration of other materials, such as rubber and plastic. Unusual cracking, softening, swelling, or breaking of these materials may be a corrosion problem.

If a corrosion problem is identified, it can be reported using Standard Form SF 368, Product Quality Deficiency Report. Use of keywords such as "corrosion," "rust," "deterioration," or "cracking" will ensure that the information is identified as a CPC problem. The form should be submitted to the address specified in DA PAM 738-750, Functional Users Manual for the Army Maintenance Management System (TAMMS).

OZONE DEPLETING SUBSTANCES (ODS)

Not applicable.

DESTRUCTION OF ARMY MATERIEL TO PREVENT ENEMY USE

GENERAL INFORMATION:

Objective. Methods of destruction used to inflict damage on airborne platforms should make it impossible to restore the damaged equipment to a usable condition in a zone by either repair or cannibalization.

Authority. Destruction of air delivery equipment that is in imminent danger of capture by an enemy is a command decision that must be made by a battalion commander or higher or the equivalent.

Training. All personnel who use or perform such functions as rigging, packing, maintenance, or storage of air delivery equipment should receive thorough training on air delivery equipment destruction procedures and methods. The destruction methods demonstrated during training should be simulated. Upon completion of training, all applicable personnel should be thoroughly familiar with air delivery equipment destruction methods and be capable of performing destruction without immediate reference to any publication.

SPECIFIC METHODS:

Specific methods of destroying Army materiel to prevent enemy use shall be by mechanical means, fire, or by use of natural surroundings.

Destruction by Mechanical Means. Air delivery equipment metal assemblies, parts, and packing aids shall be destroyed using hammers, bolt cutters, files, hacksaws, drills, screwdrivers, crowbars, or other similar devices used to smash, break, bend or cut.

WARNING

Exercise extreme care when using petroleum products to destroy equipment by fire, as these materials are highly flammable. Improper handling may cause injury to personnel.

Destruction by Fire. Items that can be destroyed by fire shall be burned. The destruction of equipment by use of fire is and effective method of destroying low melting point metal items (e.g., side rails, threaded portions of nuts and bolts, and platforms). However, mechanical destruction should be completed first, whenever possible, before initiating destruction by fire. When items to be destroyed are made of metal or textile materials (or some comparable low combustible material), they should be packed under and around the items, then soaked with a flammable petroleum product and ignited. Proper concentration of equipment that is suitable for burning will provide a hotter and more destructive fire.

Destruction by Use of Natural Surroundings. Small vital parts of assemblies, that are easily accessible, may be disposed of as follows: Disposal or denial of equipment to an enemy may be accomplished through use of natural surroundings. Accessible vital parts of assemblies may be removed and scattered through dense foliage, buried in dirt or sand, or thrown into a lake, stream, or other body of water. Total submersion of equipment in a body of water will provide water damage as well as concealment. Salt water will inflict extensive damage to air delivery equipment.

PREPARATION FOR STORAGE OR SHIPMENT

For storage, refer to TM 10-1670-201-23/T.O. 13C-1-41/NAVAIR 13-1-17, and WP 0017 00 of this manual; for shipment, refer to WP 0018 00 of this manual.

WARRANTY INFORMATION

The Type V and Dual Row Airdrop Platform do not contain warranty provisions.

NOMENCLATURE CROSS-REFERENCE LIST

Common Name	Official Nomenclature
Rail	Side Rail
Clevis	Tiedown Clevis
Tandem Link	Tandem Link Assembly
Multipurpose Link	Suspension Bracket Assembly
EFTA	Extraction Force Transfer Actuator
EFTC	Extraction Force Transfer Coupling
Roller Pad	Roller Pad Assembly
Outrigger	Outrigger Assembly
Panel	Main Panel
End Panel	Rear Panel

LIST OF ACRONYMS AND ABBREVIATIONS

BOI	Basis of Issue
C/W	Complied With
CAGEC	Commercial and Government Entity Code
CM	Centimeter

LIST OF ACRONYMS AND ABBREVIATIONS - Continued

CPC	Corrosion Prevention and Control
DA	Department of the Army
DS	Direct Support
Dtd	Dated
EA	Each
EDS	Electrostatic Discharge Sensitive
EFTA	Extraction Force Transfer Actuator
EIR	Equipment Improvement Recommendation
F	Fahrenheit
FSC	Federal Supply Classification
FT	Foot/Feet
IAW	In Accordance With
IN.	Inch/Inches
IP	In-Process Inspector
LBS	Pounds
LG	Long
Ltrs	Liters
MAC	Maintenance Allocation Chart
MDCS	Maintenance Data Collection Subsystem
MTG	Mounting
MTOE	Modified Table of Organization and Equipment
MWO	Modification Work Order
NF	National Fine (Thread)
NIIN	National Identification Number
NMP	National Maintenance Point
NO.	Number
NSN	National Stock Number
OD	Olive Drab
OG	Olive Green
OZ.	Ounces
PAM	Pamphlet
PFA	Platform Fitting Assembly
PMCS	Preventive Maintenance Checks and Services
PQDR	Product Quality Deficiency Report
Psi	Pounds per square inch
ROD	Report of Discrepancy
RPSTL	Repair Parts and Special Tools List
SF	Standard Form
SMR	Source, Maintenance and Recoverability
TAMMS	The Army Maintenance Management System

LIST OF ACRONYMS AND ABBREVIATIONS - Continued

TB	Technical Bulletin
TDR	Transportation Discrepancy Report
TMDE	Test, Measurement and Diagnostic Equipment
UOC	Usable on Code
WP	Work Package

SAFETY, CARE AND HANDLING

The following subparagraphs summarize the safety, care and handling requirements for the type V and dual row platform assembly.

The type V platform weighs approximately 100-pounds per foot of length. Use extreme caution in lifting and handling.

The dual row platform weighs approximately 89-pounds per foot of length. Use extreme caution in lifting and handling.

Safety. Use care in handling platforms as exposed metal parts could cause painful injuries. Never walk near or crawl beneath raised platforms. Do not use fingers to align bolt holes. Steel toe boots are highly recommended when working with the type V and dual row platforms and component parts.

Care and Handling. Every effort shall be made to protect the platforms from weather elements, dust, dirt, oil, grease, and acid. When available, a building should be used to store platforms. Platforms will be stacked, utilizing dunnage, in a dry, well-ventilated location and protected from pilferage, dampness, fire and dirt. Be careful not to damage side rails.

COMMON TOOLS AND EQUIPMENT

For authorized common tools and equipment, refer to the Modified Table of Organization and Equipment (MTOE) applicable to your unit.

SPECIAL TOOLS, TEST MEASUREMENT AND DIAGNOSTIC EQUIPMENT (TMDE), AND SUPPORT EQUIPMENT

Special tools, TMDE and support equipment are not required.

REPAIR PARTS AND SPECIAL TOOLS LIST (RPSTL)

Repair parts are listed and illustrated in WP 0021 00 – WP 0032 00 of this manual.

END OF WORK PACKAGE

TYPE V AND DUAL ROW AIRDROP PLATFORM EQUIPMENT DESCRIPTION AND DATA

EQUIPMENT CHARACTERISTICS, CAPABILITIES, AND FEATURES

A summary of the characteristics, capabilities and features of the equipment is contained in the following subparagraphs:

CHARACTERISTICS OF THE TYPE V AIRDROP PLATFORM

1. Can be assembled into seven lengths in 4-foot increments from 8-feet to 32-feet.
2. Insures efficient use of the airdrop system and aircraft cargo space.
3. Provides a low platform height.
4. Permits assembly and disassembly by appropriate personnel without special training or special tools.
5. Requires limited maintenance support.

CAPABILITIES OF THE TYPE V AIRDROP PLATFORM

1. Airdrop of supplies and equipment for which there is a requirement.
2. Can be used as the point of attachment for the extraction system.
3. Capable of keeping damages resulting from roller conveyor system and airdrop to a reasonably low level.
4. Roller pads match the roller system in Air Force cargo aircraft such as the C-130, C-141, C-5, and the C-17; associates with Materials Handling Equipment (MHE).
5. Maximum load restraint.
6. Can be used in low-velocity parachute recovery systems.
7. Can be used on terrain of various conditions suitable for airdrop.

FEATURES OF THE TYPE V AIRDROP PLATFORM

1. A single, universal platform, suitable for entire weight range of 2,500 to 42,000-pounds.
2. High reuse rate for the life of the platform.
3. Smooth, continuous surface interface with cargo aircraft roller systems.
4. High strength tie-down rings for improved restraint of cargo.
5. High strength, side rail tie down clevis.
6. Direct platform extraction.
7. Platform suspension

CHARACTERISTICS OF THE DUAL ROW AIRDROP PLATFORM

1. Can be assembled into one 18-foot length.
2. Insures efficient use of the C-17 logistic rail system and aircraft cargo space.
3. Provides a low platform height.
4. Permits assembly and disassembly by appropriate personnel without special training or special tools.
5. Requires limited maintenance support.

CAPABILITIES OF THE DUAL ROW AIRDROP PLATFORM

1. Airdrop of supplies and equipment for which there is a requirement.
2. Capable of preventing roll overs due to the use of outriggers.
3. Capable of keeping damages resulting from roller conveyor system and airdrop to a reasonably low level.
4. Roller pads match the logistic roller system in the C-17 Air Force cargo aircraft and associates with Materials Handling Equipment (MHE).
5. Maximum load restraint.
6. Can be used in low-velocity parachute recovery systems.
7. Can be used on terrain of various conditions suitable for airdrop.
8. Capable of gravity extraction versus parachute extraction.

FEATURES OF THE DUAL ROW AIRDROP PLATFORM

1. A single, universal platform, suitable for a weight range of 7,500 to 14,500-pounds.
2. High reuse rate for the life of the platform.
3. Smooth, continuous surface interfaces with the C-17 cargo aircraft logistic roller systems.
4. High strength tie down rings for restraint of cargo.
5. High strength, side rail tie down clevis.
6. Gravity platform extraction.
7. Platform suspension.

FEATURES OF THE TYPE V AIRDROP PLATFORM

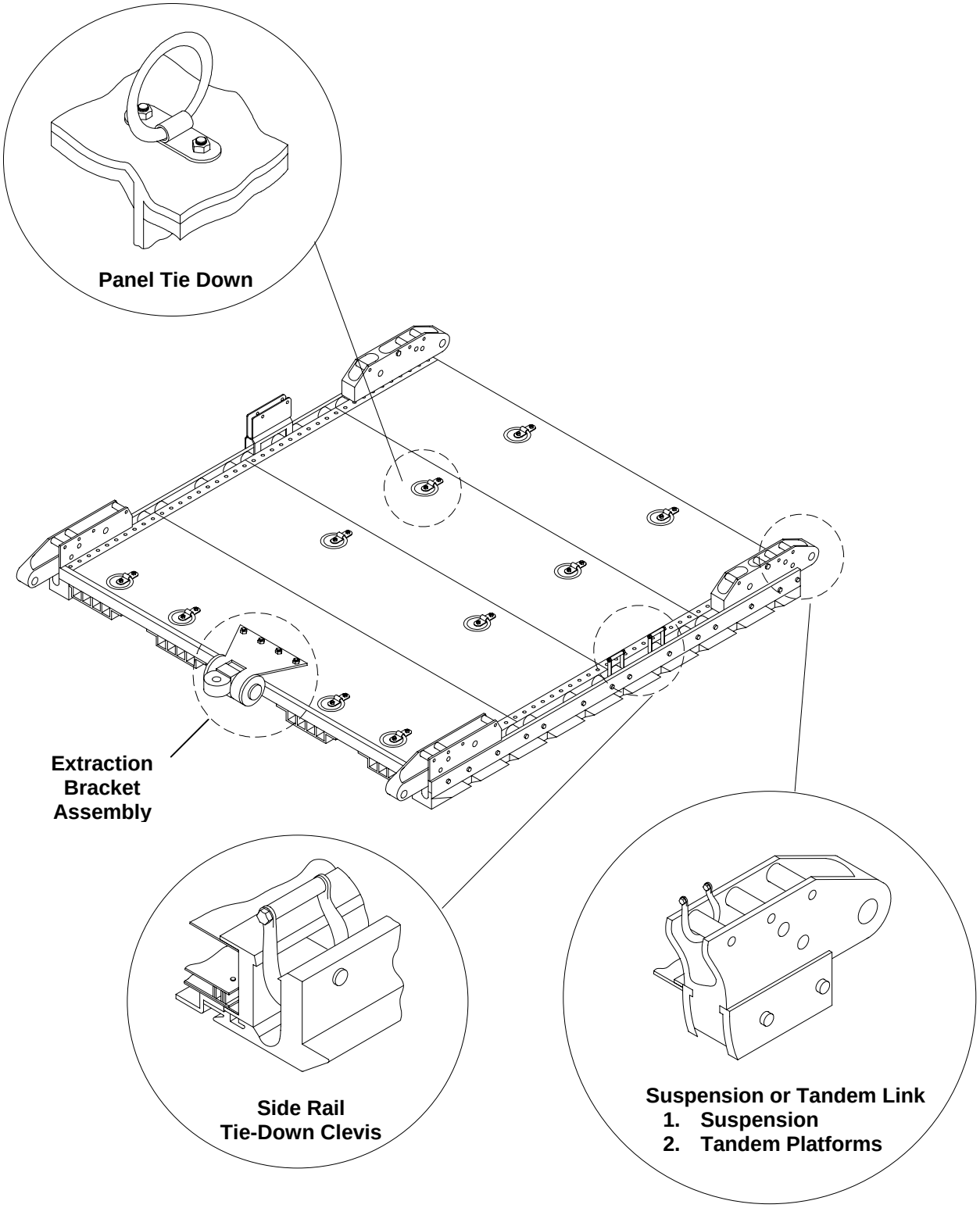

LOCATION AND DESCRIPTION OF MAJOR COMPONENTS OF THE TYPE V AIRDROP PLATFORM

Side Rail (1). The side rails are bolted to the side of the connected Type V panels to assemble the platform. The side rail is L-shaped which wraps around the bottom edge of the panels so that the lower portion of the rail becomes a narrow section of roller pad. The side rail is issued in 8-foot to 32-foot lengths in 4-foot increments.

Rear Panel Assembly (2). The rear panel has four tiedown ring assemblies on the top instead of two. It has four holes at the rear edge spaced one inch apart for attaching the extraction bracket.

Roller Pad (3). The roller pads are bolted to the bottom of the panel assemblies to ride on the aircraft roller system. The roller pad is issued in 8-foot to 32-foot lengths in 4-foot increments.

Main Panel Assembly (4). A main panel assembly has interlocking grooves along the entire width of each panel. Floating nut assembles are riveted on both ends of the panel that align with matching holes in the side rail. Front and rear edges of the panels have eight holes with floating nuts, which are used to connect the four roller pads. The main panel has two tie down rings.

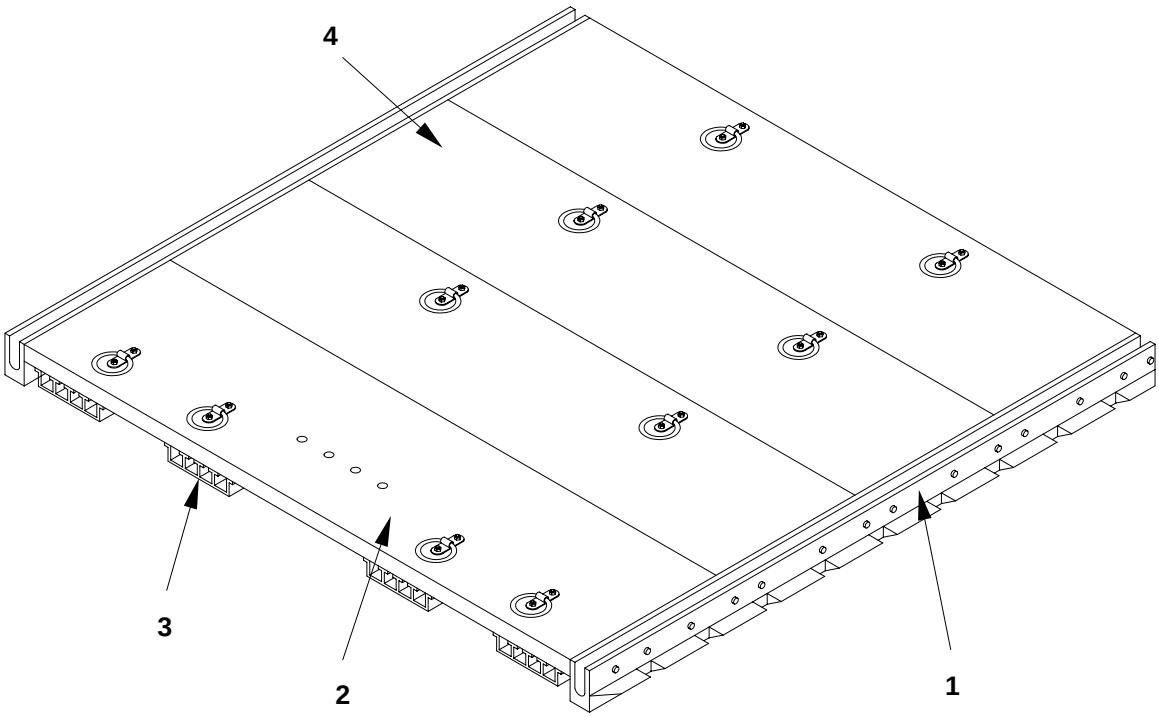

LOCATION AND DESCRIPTION OF MINOR COMPONENTS OF THE TYPE V AIRDROP PLATFORM
These minor components are installed on the platform to accommodate specific modes of airdrop. (Refer to the details below and the illustration on the following page.)

NOTE

The tandem link and suspension bracket are shown here to illustrate standard location when installed. Refer to FM 4-20.102 (FM 10-500-2) for actual location of suspension bracket.

Clevis Assembly. The clevis assembly is a round rod that is curved to fit over side rail bushing. It becomes a closed ring in shape when the spacer, bolt, washer and nut are installed across the open end of the clevis.

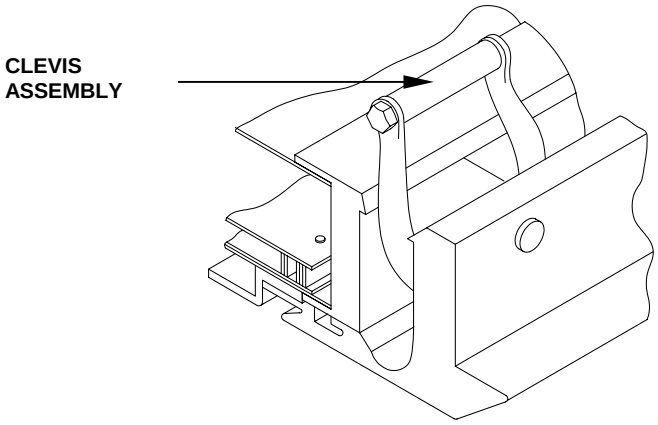

Extraction Bracket Assembly. The extraction bracket assembly is used to attach the extraction system to the platform. The extraction bracket assembly consists of the frame, lug, bushings, bolts and washers. The assembly fits over and is bolted to the rear panel assembly.

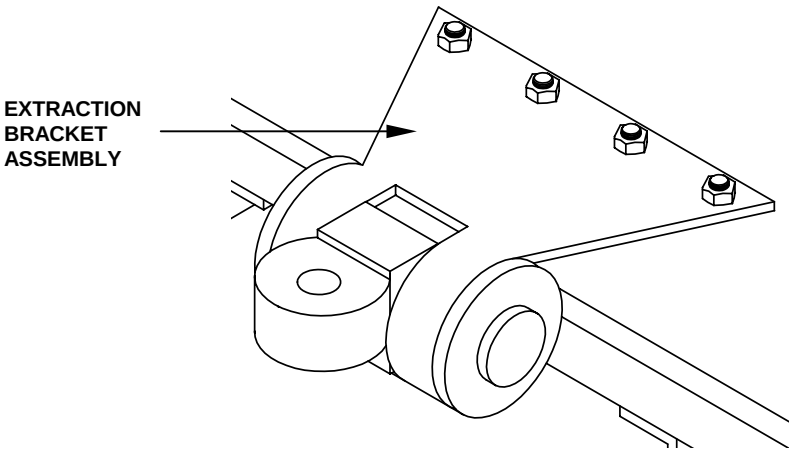

Inside/Outside EFTA Brackets. These brackets are used to attach the extraction force transfer actuator to the left side rail. The outside bracket is marked with an arrow and the word FORWARD.

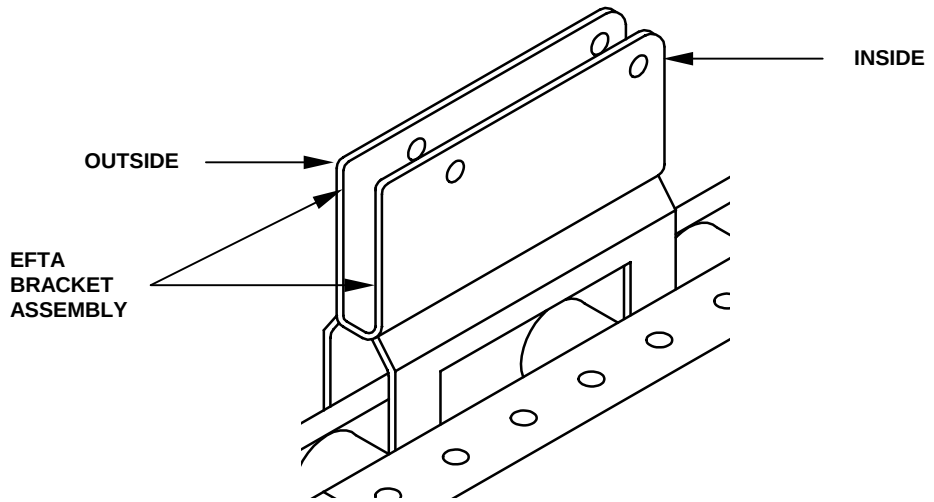

Tandem Link Assembly. The tandem link has a hole provided for attachment of a large suspension clevis, three groups of holes for attachment to the side rail, four holes provided for attachment of clevis assemblies and two aft restraint holes. The tandem link assembly is used as follows:

1. To connect suspension slings to the platform using a large suspension clevis.

2. To provide emergency aft restraint provisions.

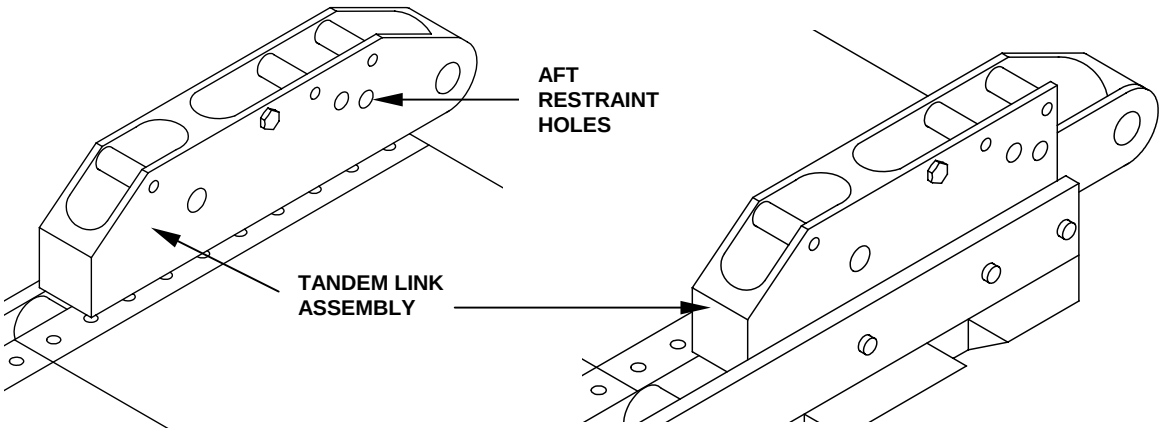

Suspension Bracket Assembly. The suspension bracket assembly may be located at any point along the side rail and is used as follows:

1. To connect suspension slings to the platform using a large suspension clevis.

2. For a six point suspension.

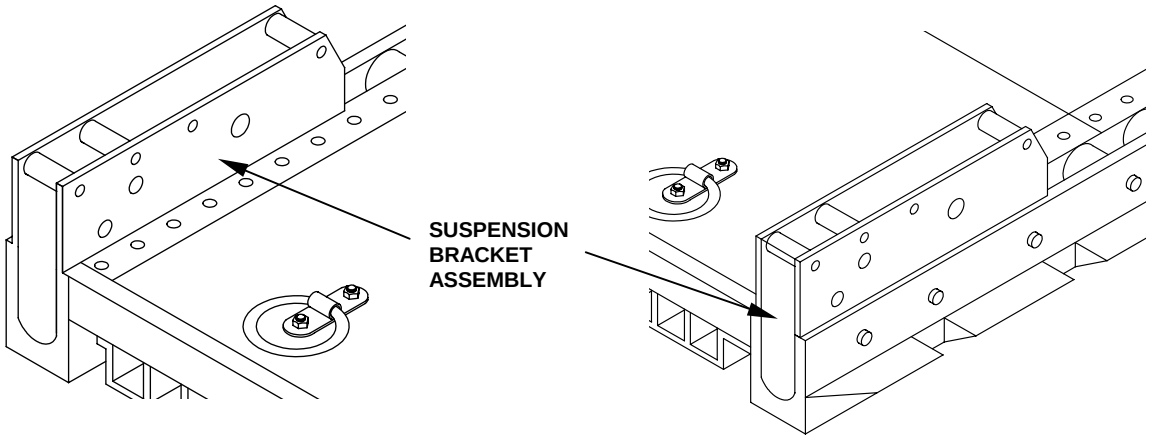

Location of Major Components

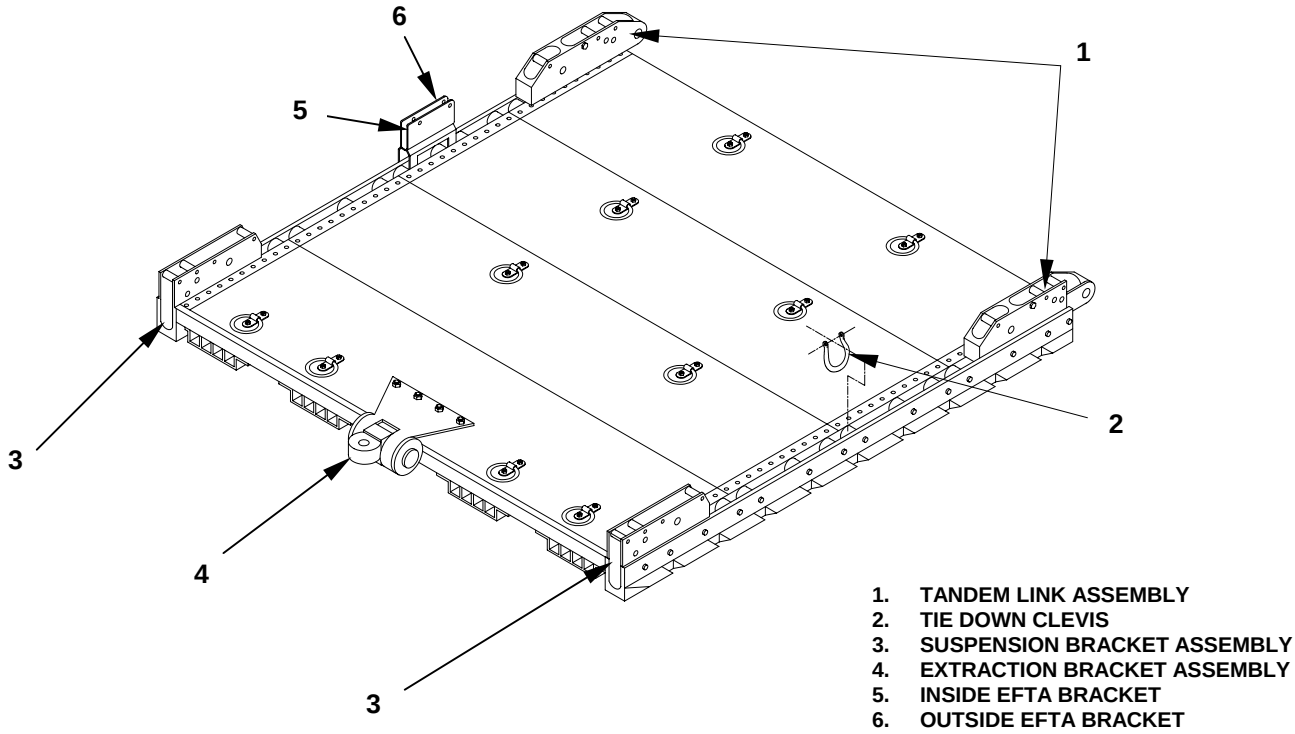

FEATURES OF THE DUAL ROW AIRDROP PLATFORM

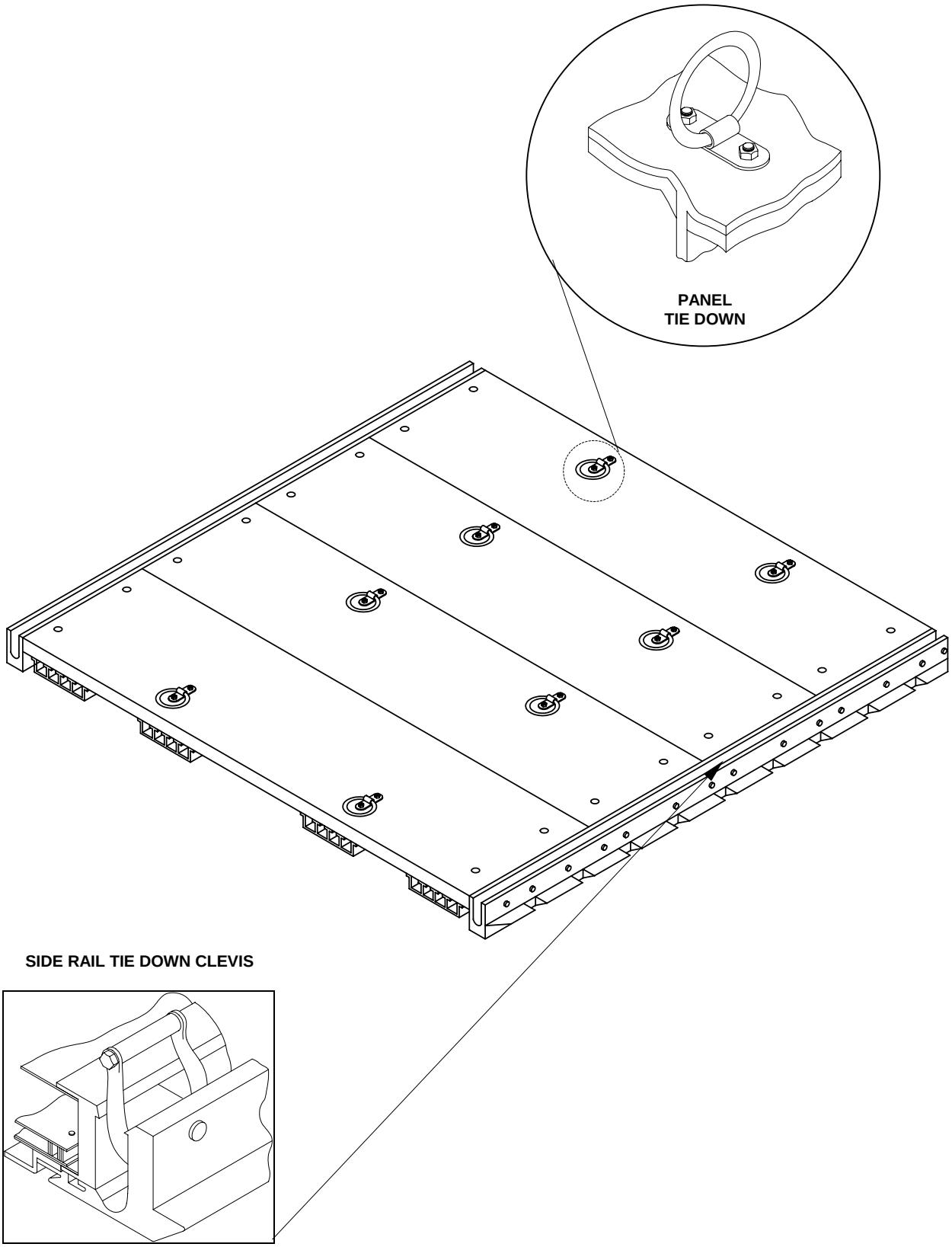

LOCATION AND DESCRIPTION OF MAJOR COMPONENTS OF THE DUAL ROW AIRDROP PLATFORM

Panel Assembly (1). A panel assembly has interlocking grooves along the entire width of each panel. Floating nut assembles are riveted on both ends of the panel that align with matching holes in the side rail. Front and rear edges of the panel have eight holes with floating nuts, which are used to connect the four roller pads. Each panel assembly has two tie down rings and pre-drilled holes for mounting the outrigger assemblies.

Side Rail (2). The side rails are bolted to the side of the connected dual row panels to assemble the platform. The side rail is L-shaped which wraps around the bottom edge of the panels so that the lower portion of the rail becomes a narrow section of roller pad. The side rails are issued in 18-ft. lengths.

Roller Pad (3). The roller pads are bolted to the bottom of the panel assemblies to ride on the aircraft roller system. The roller pads are issued in 18-ft. lengths.

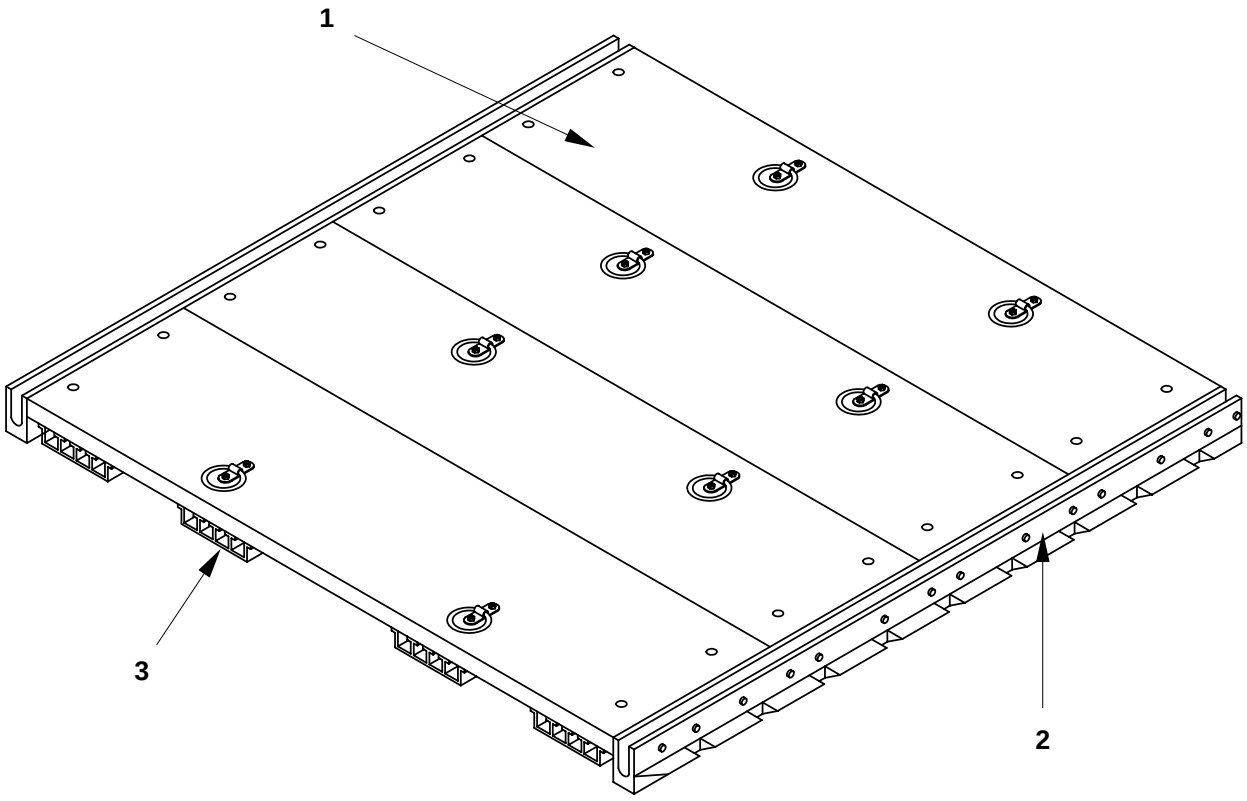

LOCATION AND DESCRIPTION OF MINOR COMPONENTS OF THE DUAL ROW AIRDROP PLATFORM

These minor components are installed on the platform to accommodate specific modes of airdrop.

Clevis Assembly. The clevis assembly is a round rod that is curved to fit over side rail bushing. It becomes a closed ring in shape when the spacer, bolt, washer and nut are installed across the open end of the clevis.

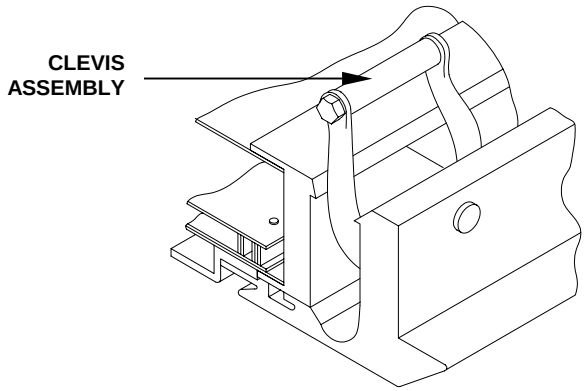

LOCATION AND DESCRIPTION OF MAJOR COMPONENTS OF THE OUTRIGGER ASSEMBLY

Outrigger Assembly. The mast weighs approximately 80-lbs and is comprised of two components: **(1)** the outrigger mast assembly, and **(2)** the outrigger foot assembly. The outrigger mast and foot are pinned together by means of a removable pivot pin, and together make up the mast assembly. This assembly can be used on either side of the platform. The mast and the foot need to be disassembled for a two-person lift. The handle on the mast is at the center of balance and is designed to hold two hands. A second handling location is the end of the mast at the pivot pin end. The mast assembly is pinned to the Platform Fitting Assembly (PFA) by means of a removable pivot pin identical to that used to pin the foot to the mast. The outrigger hardware has been designed so that all hardware items can be used at either the right or left side of the platform. This hardware can also be installed on the Type V platform system, when modified to accept the PFA.

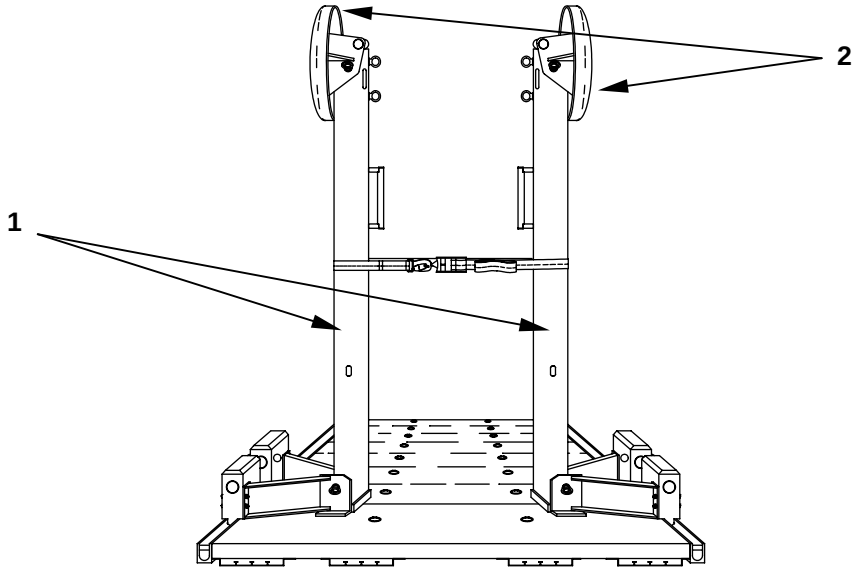

Outrigger Foot Assembly. The foot assembly weighs approximately 20-lbs and is pinned to the mast by means of a removable pivot pin, and together makes up the mast assembly. The foot provides the base on the mast assembly needed to prevent platform rollover.

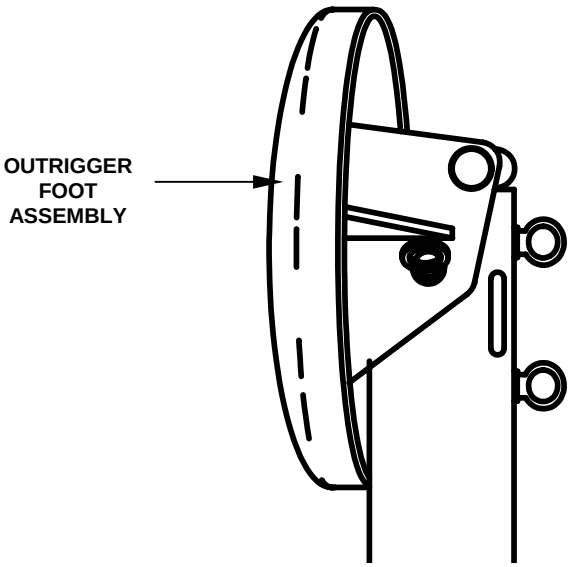

Platform Fitting Assembly (PFA). The PFA weighs approximately 56-lbs and is comprised of two components: **(1)** the Link, and **(2)** the Weldment.

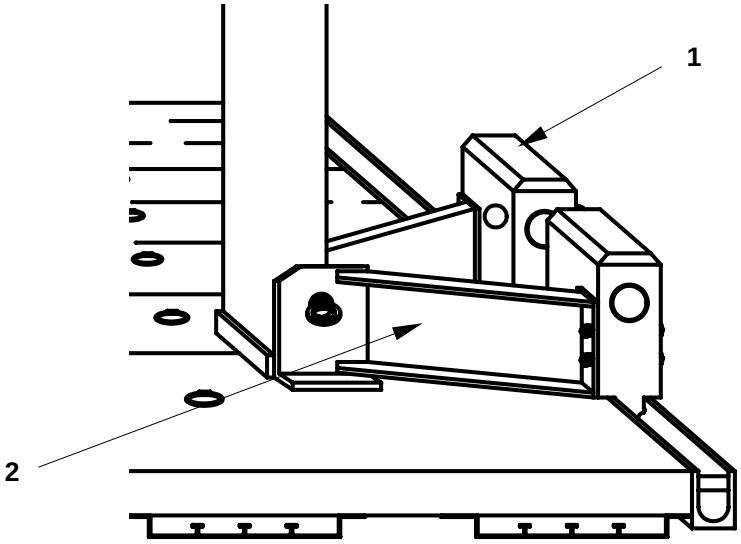

LOCATION AND DESCRIPTION OF MINOR COMPONENTS OF THE OUTRIGGER ASSEMBLY

Link. The link has two spring-loaded latch pins that are forced back by the mast assembly as it enters the link, and then engages into slots in the mast to lock it in place. The latch pins are manually retracted by pulling back on a set of knob handles to unlock the mast assembly from the link. With both latch pins retracted, the mast assembly can be rotated up out of the link.

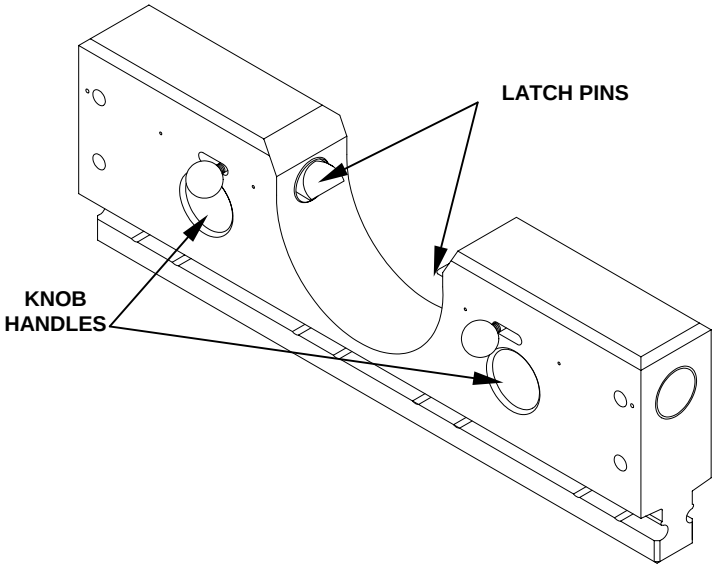

Weldment. The weldment provides the pivot point for the mast assembly.

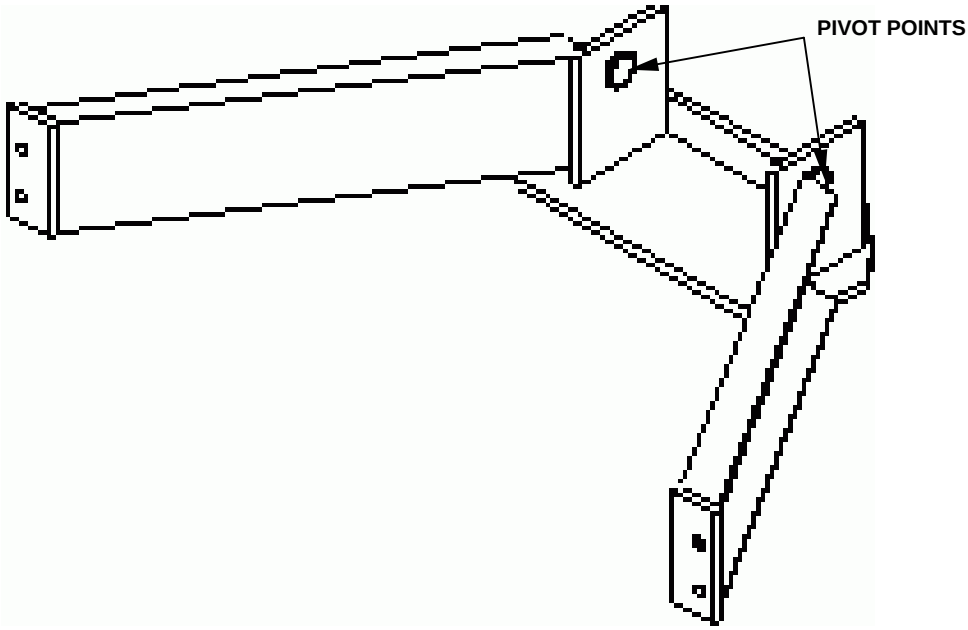

EQUIPMENT DATA

The equipment data summarizes specific capabilities, limitations, and other critical data needed by personnel responsible for organizational maintenance of the type V and dual row airdrop platform.

NOTE

Weights listed below for the type V airdrop platform include the platform assembled with four each tandem links and one extraction bracket assembly. No side rail clevises were included.

TOTAL TYPE V AIRDROP PLATFORM ASSEMBLY

Load capability:	2,500 to 42,000-Lbs
DIMENSIONS:	
Length	8, 12, 16, 20, 24, 28, and 32-feet
Width	108-inches
Height	5 ½-inches

WEIGHT:

Platform Length	**Approx. Weight (Lbs.)**
8-Ft.	798
12-Ft	1192
16-Ft.	1562
20-Ft.	1922
24-Ft.	2252
28-Ft.	2792
32-Ft.	3028

TYPE V AIRDROP PLATFORM DIMENSIONAL DATA

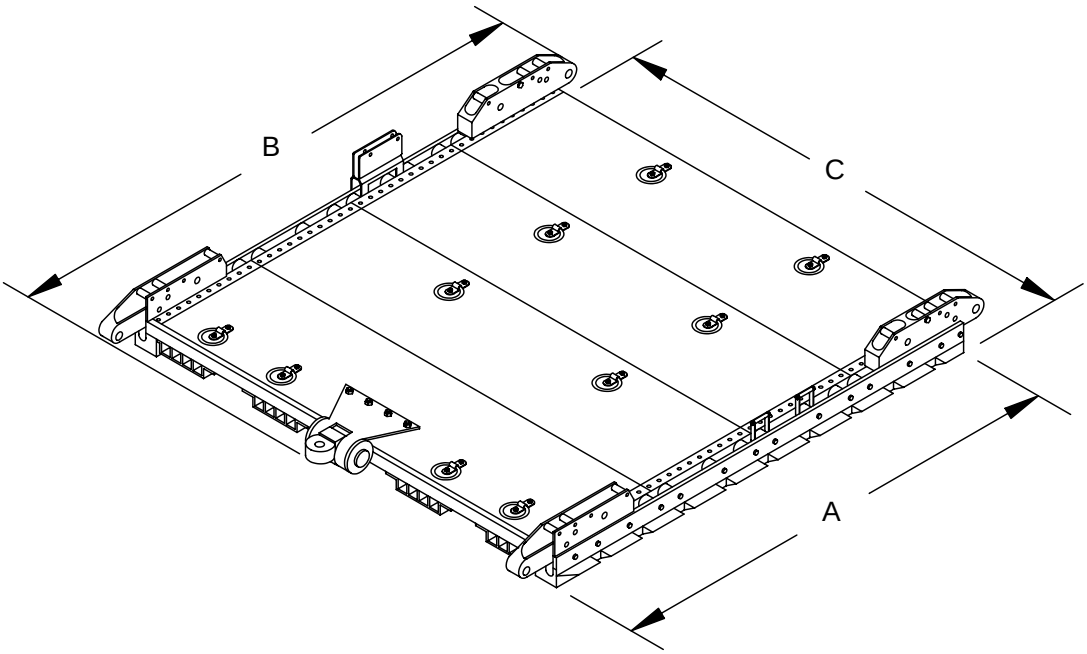

A - Outer Edge of Rear Panel Assembly to Outer Edge of Last Main Panel Assembly
B - Outer Tip of Extraction Bracket Assembly to Outer Tip of Front Tandem Link Assembly
C - Width of Assembled Platform

PLATFORM LENGTH	Dimensions (In Inches)		
	UNIQUE	COMMON	
	A	B	C
8-Feet	91	101 ½	108
12-Feet	139	149 ½	108
16-Feet	187	197 ½	108
20-Feet	235	245 ¾	108
24-Feet	283	293 ½	108
28-Feet	331	341 ½	108
32-Feet	379	389 ½	108

MAJOR COMPONENTS DATA-MATERIAL, DIMENSIONS AND WEIGHT

The following is a detailed listing of the major components of the Type V airdrop platform including materials, dimensions and weights.

ITEMS	PARTICULARS
SIDE RAIL	
Materials:	Extruded Aluminum
Dimensions:	
Width	6 $^{3}/_{8}$-inches
Length	8, 12, 16, 20, 24, 28, and 32-feet
Height :	3 $^{11}/_{16}$-inches
Weight:	
8-foot	51-pounds
12-foot	78-pounds
16-foot	103-pounds
20-foot	129-pounds
24-foot	156-pounds
28-foot	181-pounds
32-foot	208-pounds
SIDE RAIL BUSHING	
Material:	Aluminum
Dimensions:	
Width	1 ¼-inches
Length	1 $^{5}/_{8}$-inches
Weight	6-ounces
ROLLER PAD	
Material:	Extruded Aluminum
Dimensions:	
Width	13 $^{7}/_{16}$-inches
Length	8, 12, 16, 20, 24, 28, and 32-feet
Height	1-inch

ITEMS	PARTICULARS
Weight:	
8-foot	42-pounds
12-foot	63-pounds
16-foot	84-pounds
20-foot	105-pounds
24-foot	126-pounds
28-foot	147-pounds
32-foot	168-pounds
REAR PANEL ASSEMBLY	
Material:	Extruded Aluminum
Dimensions:	
Width	101-inches
Length	24-inches
Height	2 ½-inches
Weight	125.5-pounds
MAIN PANEL ASSEMBLY	
Material:	Extruded Aluminum
Dimensions:	
Width	101 -inches
Length	24-inches
Height	2 ½-inches
Weight	112-pounds

MINOR COMPONENTS DATA-MATERIAL, DIMENSIONS AND WEIGHT

The following is a detailed listing of the auxiliary components of the Type V airdrop platform covering materials, dimensions and weight for the listed components.

ITEMS	PARTICULARS
CLEVIS ASSEMBLY	
Material:	Forged, Heat-treated steel
Dimensions:	
Length	3 $^{1}/_{8}$-inches
Width	1 $^{1}/_{16}$-inches
Height	4 $^{1}/_{8}$-inches
Weight	12-ounces
EXTRACTION BRACKET ASSEMBLY	
Material:	Aluminum and Steel plate
Dimensions:	
Length	12-inches
Width	10-inches
Height	3 $^{3}/_{8}$-inches
Weight	19-pounds
INSIDE AND OUTSIDE EFTA BRACKETS	
Material:	Steel plate
Dimensions:	
Length	8 ¾-inches
Width	$^{5}/_{8}$-inches
Height	4 $^{3}/_{8}$-inches
Weight	1.25-pounds
TANDEM LINK ASSEMBLY	
Material:	Aluminum
Dimensions:	
Length	23 $^{7}/_{8}$-inches
Width	2-inches
Height	5 ½-inches
Weight	17-pounds

ITEMS	PARTICULARS
SUSPENSION BRACKET ASSEMBLY	
Material:	Aluminum
Dimensions:	
Length	20 $^{3}/_{8}$-inches
Width	2-inches
Height	5 ½-inches
Weight	16-pounds

LOCATION AND CONTENTS OF APPROPRIATE IDENTIFICATION, MODIFICATION INSTRUCTIONS AND WARRANTY PLATES OR STENCILS.
Not applicable.

EQUIPMENT CONFIGURATION
The different platform configuration to accommodate specific modes of planned airdrop are:

Platform suspension. Refer to WP 0004 00, low velocity.

Platform extraction. Refer to WP 0004 00, cargo extraction systems.

NOTE

Weights listed below for the dual row airdrop platform include the platform assembled. No side rail clevises were included.

TOTAL DUAL ROW AIRDROP PLATFORM ASSEMBLY

Load capability.	7,500 to 14,500-Lbs
Dimensions:	
Length	18-feet
Width	88-inches
Height	5 ½-inches

Platform Length	**Approx. Weight (Lbs.)**
18-feet	1605

DUAL ROW AIRDROP PLATFORM DIMENSIONS

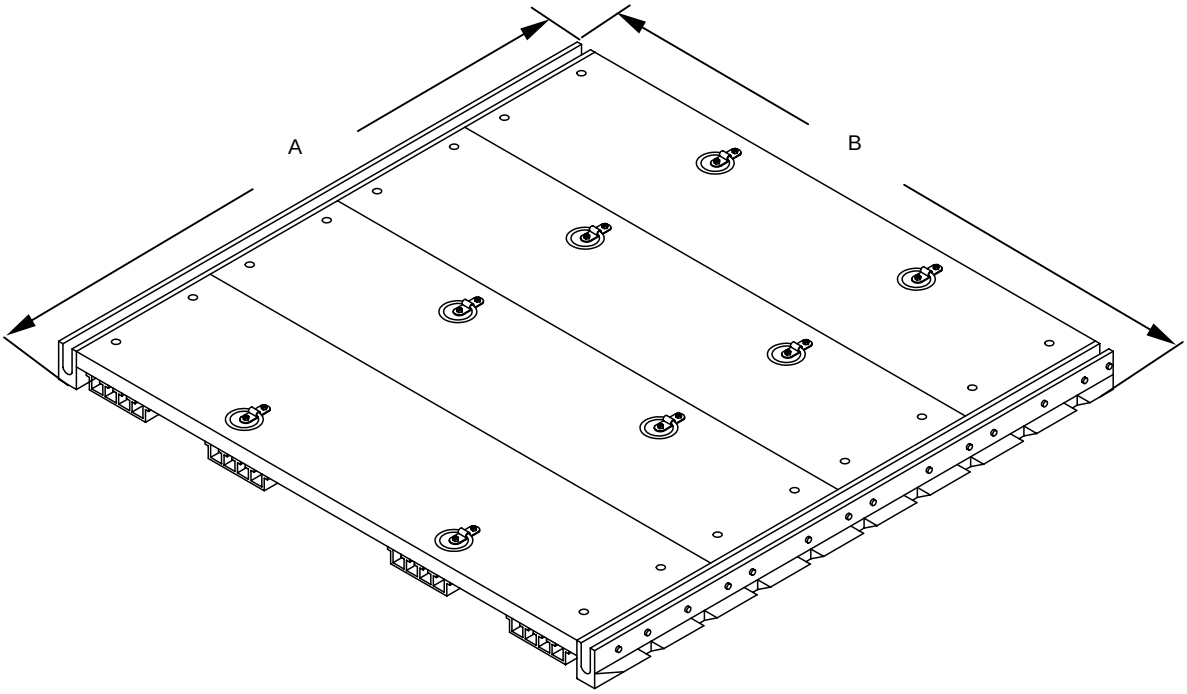

A - Outer Edge of First Panel Assembly to Outer Edge of Last Panel Assembly
B - Width of Assembled Platform

PLATFORM LENGTH	Dimensions (In Inches)	
	UNIQUE	COMMON
	A	B
18-feet	216	88

MAJOR COMPONENTS DATA-MATERIAL, DIMENSIONS AND WEIGHT

The following is a detailed listing of the major components of the dual row airdrop platform including materials, dimensions and weights.

ITEMS	PARTICULARS
SIDE RAIL	
Materials:	Extruded Aluminum
Dimensions:	
Width	7-inches
Length	18-Feet
Height	3 $^{11}/_{16}$-inches
Weight	136-pounds
SIDE RAIL BUSHING	
Material:	Aluminum
Dimensions:	
Width	1 ¼-inches
Length	1 $^{5}/_{8}$-inches
Weight	6-ounces
ROLLER PAD	
Material:	Extruded Aluminum
Dimensions:	
Width	13 $^{7}/_{16}$-inches
Length	18-Feet
Height	1-inch
Weight	103-pounds
PANEL ASSEMBLY	
Material:	Extruded Aluminum
Dimensions:	
Width	79 ½-inches
Length	24-inches
Height	2 ½-inches
Weight	100-pounds

MINOR COMPONENTS DATA-MATERIAL, DIMENSIONS AND WEIGHT

The following is a detailed listing of the auxiliary components of the dual row airdrop platform covering materials, dimensions and weight for the listed components.

ITEM	PARTICULARS
CLEVIS ASSEMBLY	
Material:	Forged, Heat-treated steel
Dimensions:	
Length	3 $^{1}/_{8}$-inches
Width	1 $^{1}/_{16}$-inches
Height	4 $^{1}/_{8}$-inches
Weight	12-ounces
PLATFORM FITTING ASSEMBLY LINK	
Material:	Aluminum
Dimensions:	
Length	24-inches
Width	3-inches
Height	7 ¾-inches
PLATFORM FITTING ASSEMBLY WELDMENT	
Material:	Aluminum
Dimensions:	
Length	24-inches
Width	20 $^{15/}_{32}$-inches
Height	6 $^{3}/_{16}$-inches
OUTRIGGER MAST ASSEMBLY	
Material:	Aluminum
Dimensions:	
Length	81-inches
Diameter	7-inches
Weight	80-pounds
OUTRIGGER FOOT ASSEMBLY	
Material:	Aluminum
Dimensions:	
Diameter	24-inches
Height	10 $^{1}/_{8}$-inches
Weight	20-pounds

END OF WORK PACKAGE

CHAPTER 2

DESCRIPTION AND THEORY OF OPERATION FOR THE TYPE V AND DUAL ROW AIRDROP PLATFORM

TYPE V AND DUAL ROW AIRDROP PLATFORM
SERVICE UPON RECEIPT

THIS TASK COVERS:
- Overview
- Initial Receipt
- Common Tools and Equipment
- Special Tools and Equipment
- Repair Parts

INITIAL SETUP:

Personnel Required	Equipment Condition
92R (10) Parachute Rigger	All equipment shall be serviceable and ready for use.

OVERVIEW
This chapter contains information necessary to maintain the type V and dual row airdrop platform on the unit maintenance levels, in accordance with the Maintenance Allocation Chart (MAC) for the equipment. It includes the following:

1. Procedures for processing new or used platform assemblies upon receipt.

2. Assembly of components prior to rigging.

3. Preventive maintenance procedures to ensure continued serviceability of all components.

4. As required inspections and maintenance procedures performed prior to assembly/rigging.

5. Detailed assembly procedures.

6. Repair methods and repair, or replacement, procedures for all components of the platform assembly are listed and illustrated in WP 0020 00 of this manual.

INITIAL RECEIPT
Both the type V and dual row airdrop platform is received disassembled with components packed separately.

General Procedures for Air Delivery Equipment. When air delivery equipment is initially procured from a supply source and issued to a using unit, the item(s) will be unpacked from the shipping container(s) and inspected by a qualified parachute rigger (MOS 92R). The inspection performed will be a technical/ rigger-type inspection and will be conducted as outlined in the Preventive Maintenance Checks and Services (PMCS) procedures. Upon completion of the inspection, the item(s) will be tagged as prescribed in DA PAM 738-751. Serviceable equipment may then be entered either into storage or into use in airdrop operations, as applicable. An unserviceable item will be held and reported, in accordance with DA PAM 738-750.

Inspection Personnel. Personnel other than parachute rigger personnel may assist in the unpacking process of initially received components, as directed by the local air delivery equipment maintenance officer. However, the maintenance officer will ensure the entire unpacking effort is conducted under the direct supervision of a qualified parachute rigger (MOS 92R).

Unpacking. Position all components as near as practical to the location where the platform is to be assembled. Removed and discard packing from the components.

Checking Unpacked Equipment. When type V or dual row components are received from a designed supply source, parts shall be given an inspection (WP 0006 00) by the using unit prior to being placed into service.

1. Inspect the type V and dual row platform components for damage incurred during shipment. Report the damage on a DD Form 6, Packing improvement Report. Remove all assembly components from the containers and ensure that all items are accounted for and free of defects. Report damage or defects in accordance with DA PAM 738-750.

2. After the inspection is completed, the platform components can be stored or assembled for airdrop operations.

COMMON TOOLS AND EQUIPMENT

For authorized common tools and equipment, refer to the Modified Table of Organization and Equipment (MTOE) and the Table of Distribution and Allowances (TDA) applicable to your unit. The common hand tools required for assembly and repair of the type V and dual row platform are listed in WP 0020 00 of this manual.

SPECIAL TOOLS AND EQUIPMENT

No special tools or equipment are needed by organizational maintenance personnel to maintain the type V or dual row airdrop platform. Common tools are listed in WP 0020 00, table 2., of this manual.

REPAIR PARTS

Repair parts are listed in WPs 0021 00 through 0032 00 of this manual.

END OF WORK PACKAGE

TYPE V AND DUAL ROW AIRDROP PLATFORM
ASSEMBLING THE TYPE V AND DUAL ROW AIRDROP PLATFORM

THIS TASK COVERS:
- Assembly
- Disassembly

INITIAL SETUP:

Tools
Bar, Pry, Crow or Wrecking (Item 1, WP 0020 00)
Bit, Drill, 13/32-IN (Item 31, WP 0020 00)
Cord, Extension (Item 3, WP 0020 00)
Drill, ½-IN Drive (Item 32, WP 0020 00)
File, Mill (Item 7/8, WP 0020 00)
File, Round (Item 9, WP 0020 00)
Hammer, Ball Peen (Item 10, WP 0020 00)
Handle, File (Item 11, WP 0020 00)
Knife, Rigger (Item 13, WP 0020 00)
Punch, Aligning (Item 15, WP 0020 00)
Socket, ¾ -IN. (Item 17, WP 0020 00)
Socket, $^{9}/_{16}$-IN. (Item 19, WP 0020 00)
Tape, Measuring (Item 20, WP 0020 00)
Wrench, Box and Open, ¾ - IN. (Item 23, WP 0020 00)
Wrench, Box and Open, $^{11}/_{16}$ - IN. (Item 25, WP 0020 00)
Wrench, Box and Open, $^{15}/_{16}$-IN. (Item 26, WP 0020 00)
Wrench, Box and Open, $^{5}/_{8}$-IN. (Item 27, WP 0020 00)
Wrench, Box and Open, $^{9}/_{16}$-IN. (Item 28, WP 0020 00)
Wrench, Impact, Pneumatic ½ -IN. (Item 30, WP 0020 00)

Personnel Required
Two, 92R (10) Parachute Rigger

Material/Parts
Tape, Adhesive, 2-IN. (Item 6, WP 0036 00)
Thread, Cotton, 8/7 (Item 7, WP 0036 00)
Webbing, Tiedown, CGU-1B (Item 8, WP 0036 00)

Additional Equipment
Forklift
3-foot Suspension Sling

ASSEMBLY

Assembling the major components. The basic assembly of the type V and dual row airdrop platform is achieved by systematically bolting the major components together. The major components of the type V airdrop platform consist of main panel assemblies, a rear panel assembly, roller pads and side rails. The major components of the dual row airdrop platform consist of panel assemblies, roller pads and side rails.

NOTE

Inspect all components for damage or wear. Burrs and sharp edges should be removed with a file. Damaged or bent parts should be removed and replaced.

1. Assemble the Type V Airdrop Platform as follows:

a. Position all components as near as practical to the location where the platform is to be assembled.

b. Start the screws two or three turns by hand.

CAUTION

The platform weighs approximately 100-pounds per foot of length. To avoid injury to personnel or damage to surrounding equipment, use extreme caution when lifting and handling. Never walk near or crawl beneath the assembled raised platform. Be careful not to damage the side rail notches when turning-the platform over. Short pieces of plywood should be used to prevent the edges of the rail from contacting a concrete floor or other hard surface.

NOTE

Do not hammer screws or bolts through holes of roller pads or side rails due to probable damage to internal fixed components ex., nut bars and encapsulated nuts.

c. The steps required for the assembly of the major components of the type V airdrop platform are as follows:

(1) Construct a flat structure of sufficient mass and strength to support the weight of the platform at a safe, convenient work height. Ensure that the surface design allows for the clearance of the tie down rings. Ensure the structure is long enough and wide enough to accommodate the size of the platform being constructed. This allows each panel surface to lay flat and helps to keep the assembled platform flat.

NOTE

The type V airdrop platform must be assembled upside down. Roller pad bolts are installed through the roller pad and side rails into the bottom of the main and rear panels. Riveted-nut plate bars are located inside the panels.

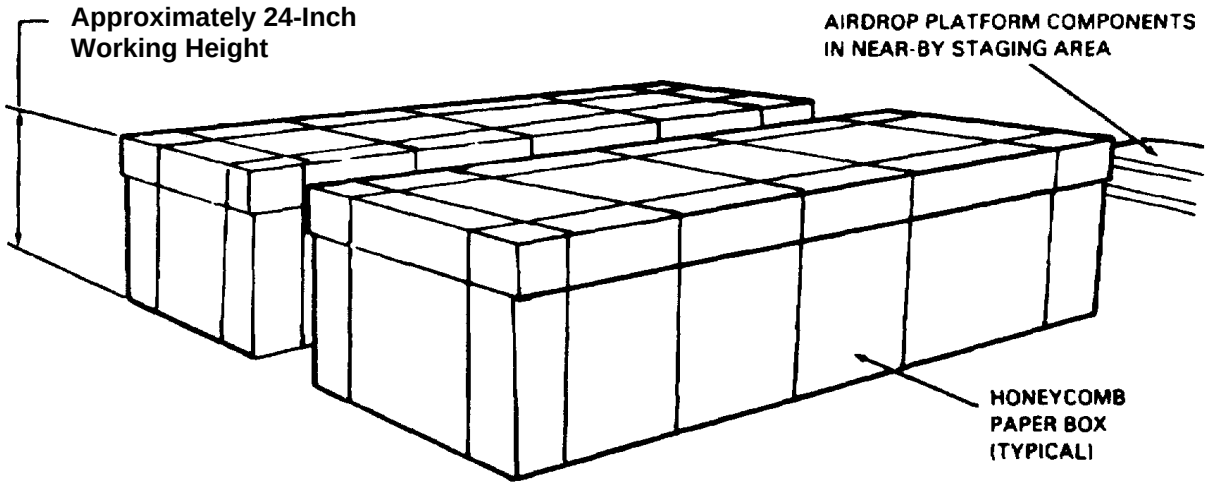

(2) Because of the tongue-and-groove interlock **(1)** the platform must be assembled from front to rear.

NOTE

The main panel assembly can be identified by the two-tie down rings.

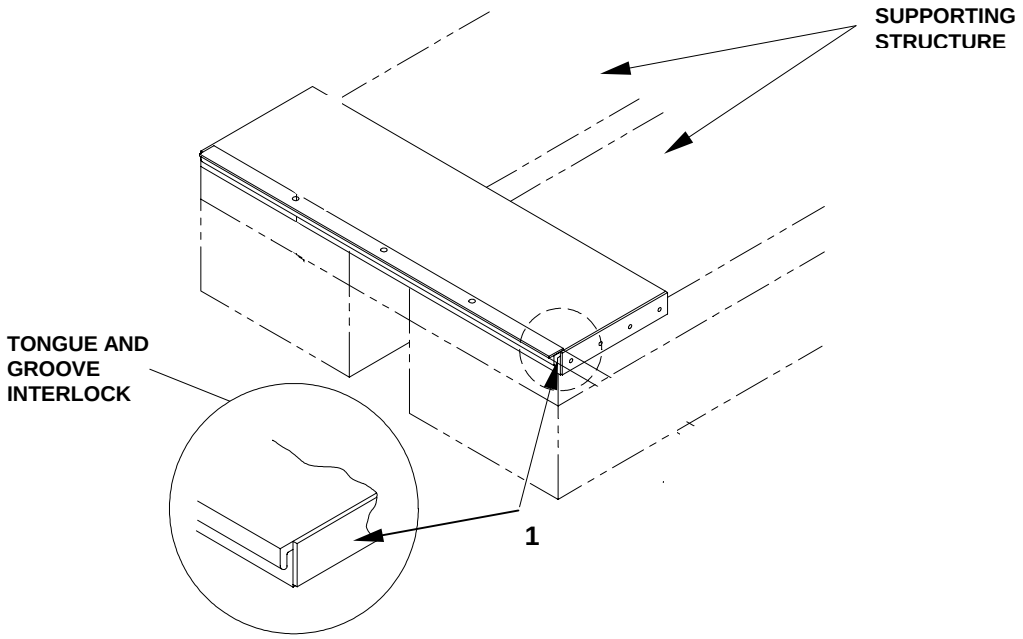

(3) Examine the tongue-and groove **(1)** of the panel to determine which edge of the panel is the leading edge. Its protruding tongue and three holes close to the leading edge distinguish the leading edge.

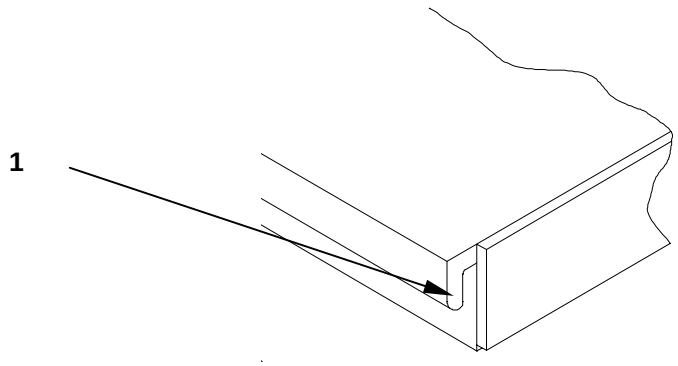

(4) Place the next panel on the supporting structure with tie down rings facing downward and the leading edge of the second panel next to the trailing edge of the first main panel, and interlock the mating tongue-and-groove of the first and second panels. Slightly raise the second panel above the first to enable the tongue to drop into place within the groove.

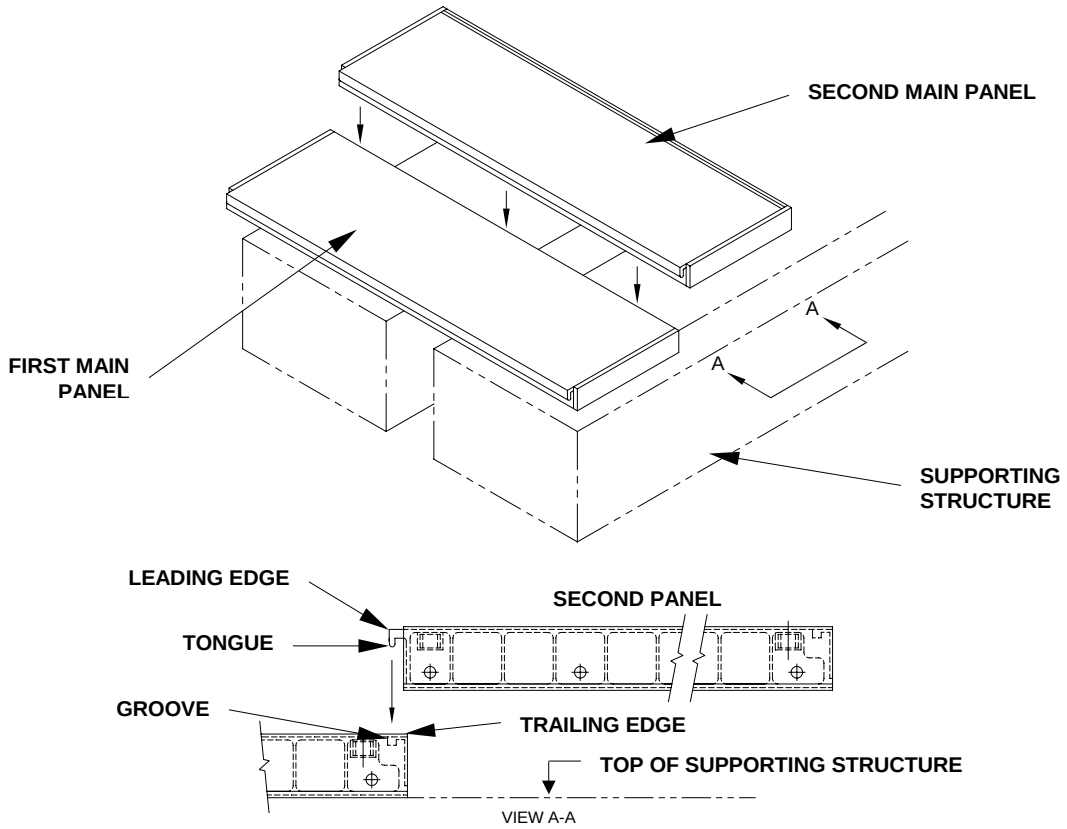

(5) Add panels as required. Insure that the outside edges of the panels are properly aligned. The last panel installed must be a rear panel.

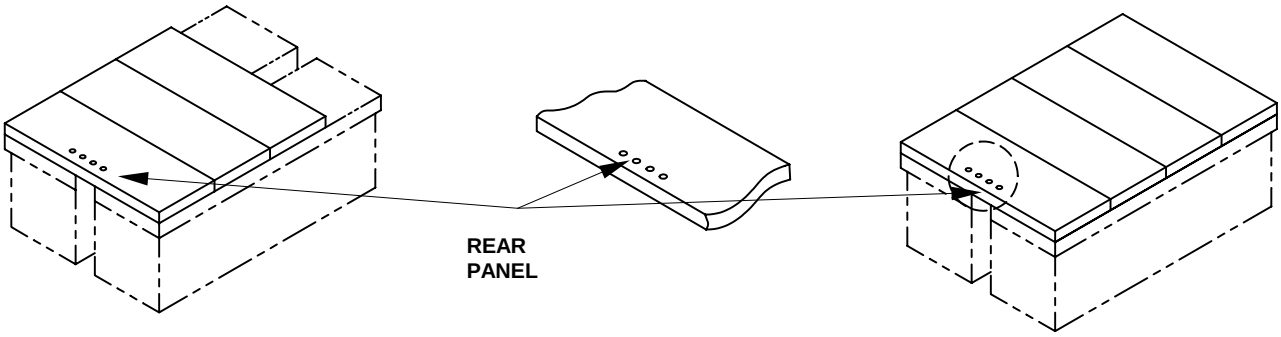

CAUTION

Do not hammer aligning tool into holes. Damage to the captive nuts will occur.

(6) Select roller pads of the same length as the assembled panels and position along either edge, angled end forward ensuring angled end of roller pad is flush with the leading edge of panel. Align the holes in the roller pad with the holes along the leading edge of the first main panel and the trailing edge of the rear panel. A punch or comparable aligning tool may be used to align the holes.

(7) Begin the fastening operations for the roller pads by installing $^{3}/_{8}$-inch x 1¼-inch roller pad bolts with $^{3}/_{8}$-inch flat washers on the inboard side only of the outboard roller pads, tightening two or three turns by hand. These roller pads will be classified as outboard roller pads.

(8) Install $^{3}/_{8}$-inch x 1¼-inch roller pad bolts with $^{3}/_{8}$-inch flat washers on the additional two roller pads (inboard) tightening two or three turns by hand. These additional two roller pads will be referred to as the inboard roller pads. Use a punch to align the holes of the roller pads with the panel assemblies. Install all bolts and washers; tightening the hex head bolts two or three turns by hand.

NOTE

Do NOT install bolts in the outboard edge of the roller pads at this time.

NOTE

Washers must be used under all bold heads, and tighten two or three turns by hand before using an impact wrench.

(1) PARTIALLY INSTALL FIRST OUTBOARD ROLLER PAD (INBOUND SIDE ONLY)

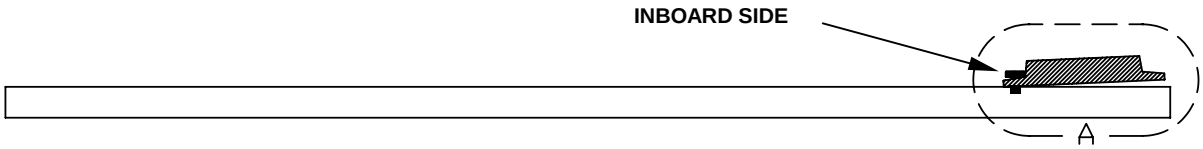

(2) PARTIALLY INSTALL SECOND OUTBOARD ROLLER PAD

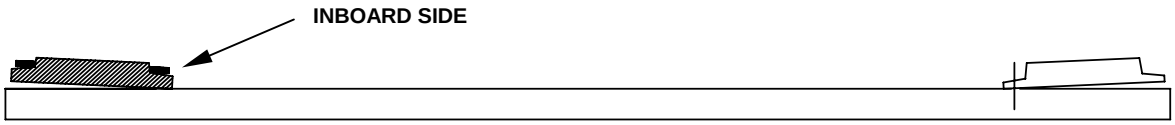

(3) ALIGN & INSTALL INBOARD ROLLER PADS (BOTH SIDES OF EACH PAD)

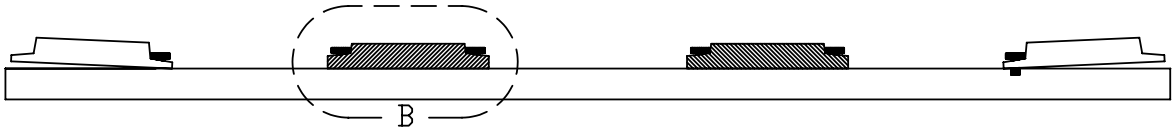

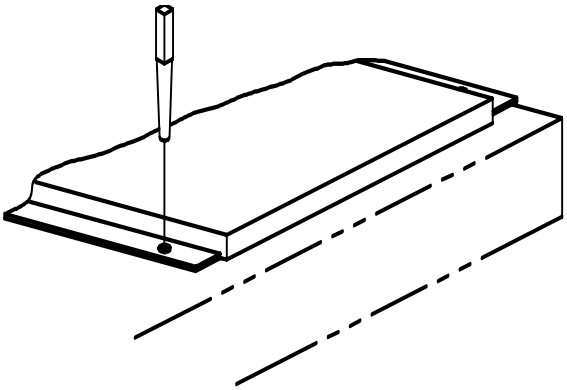

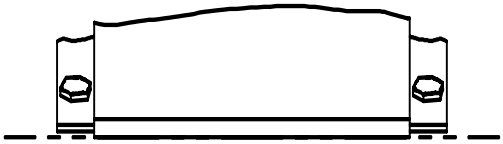

CAUTION

Do not hammer aligning tool into holes. Damage to the captive nuts will occur.

CAUTION

Do not hammer bolts through holes of side rails.

NOTE

If for any reason it is not possible to install some of the roller pad bolts, it is permissible to omit only one roller pad bolt per panel. However, two missing roller pad bolts must not be adjacent to a panel joint.

NOTE

Before installing side rail bolts, ensure the suspension bracket and outrigger link assembly, if required, is positioned at the proper side rail holes. Refer to applicable FM for the item being rigged.

(9) Select a side rail **(1)** of the same length as the assembled panels and position it along one side of the platform, over lapping the outboard roller pad. Use a punch to align the bolt-holes. Install $^{3}/_{8}$-inch x 1¼-inch hex head bolts **(2)** with $^{3}/_{8}$-inch flat washers **(3)** through the side rail and the roller pad into the captive nuts **(4)**. Start the bolts two or three turns by hand.

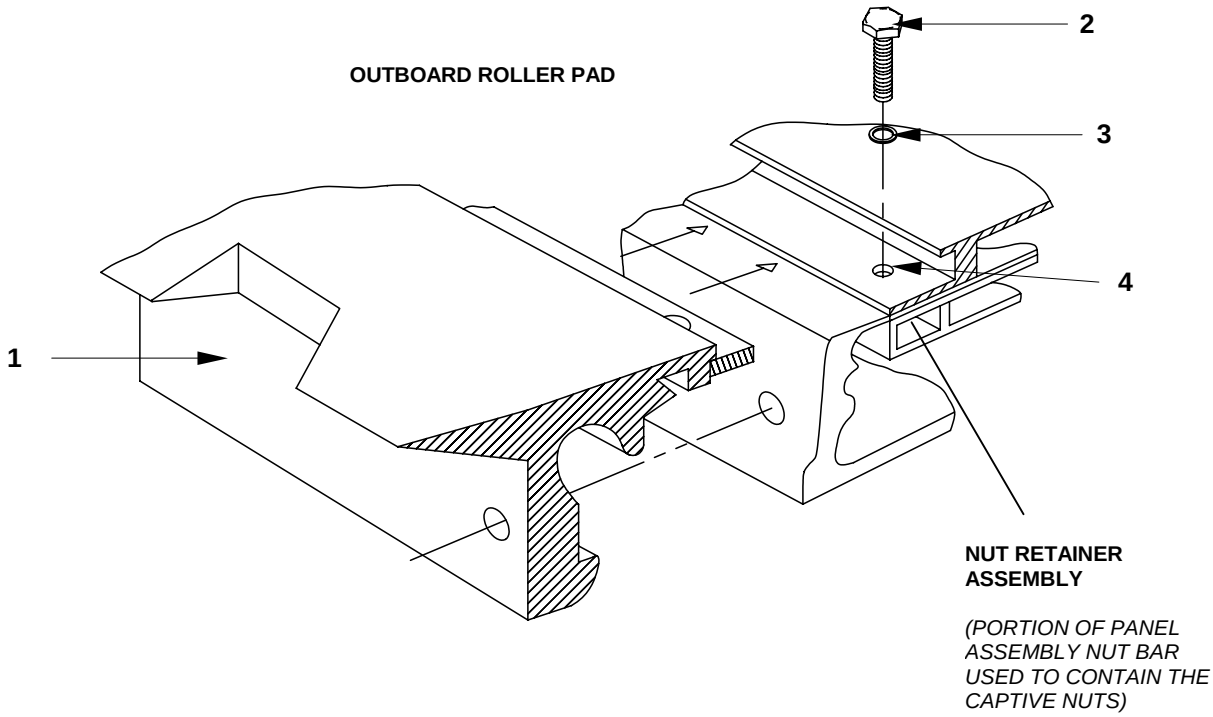

(10) Repeat step (9), above, with another side rail of equal length on the opposite side of the platform.

NOTE

No bolts can be missing from the extreme forward and rear platform panel edges.

(11) Using an impact wrench with a $^{9}/_{16}$-inch socket, tighten all roller pad bolts **(1)** installed in the two in board roller pads (as shown in the illustration on the following page).

(12) Using an impact wrench with a $^{9}/_{16}$-inch socket, tighten the roller pad bolts **(2)** and **(3)** to within one-quarter inch of the top of the flat washer. This will ensure that the side rails are securely attached. DO NOT fully tighten these bolts at this time. Refer to the illustration on the following page for bolt locations.

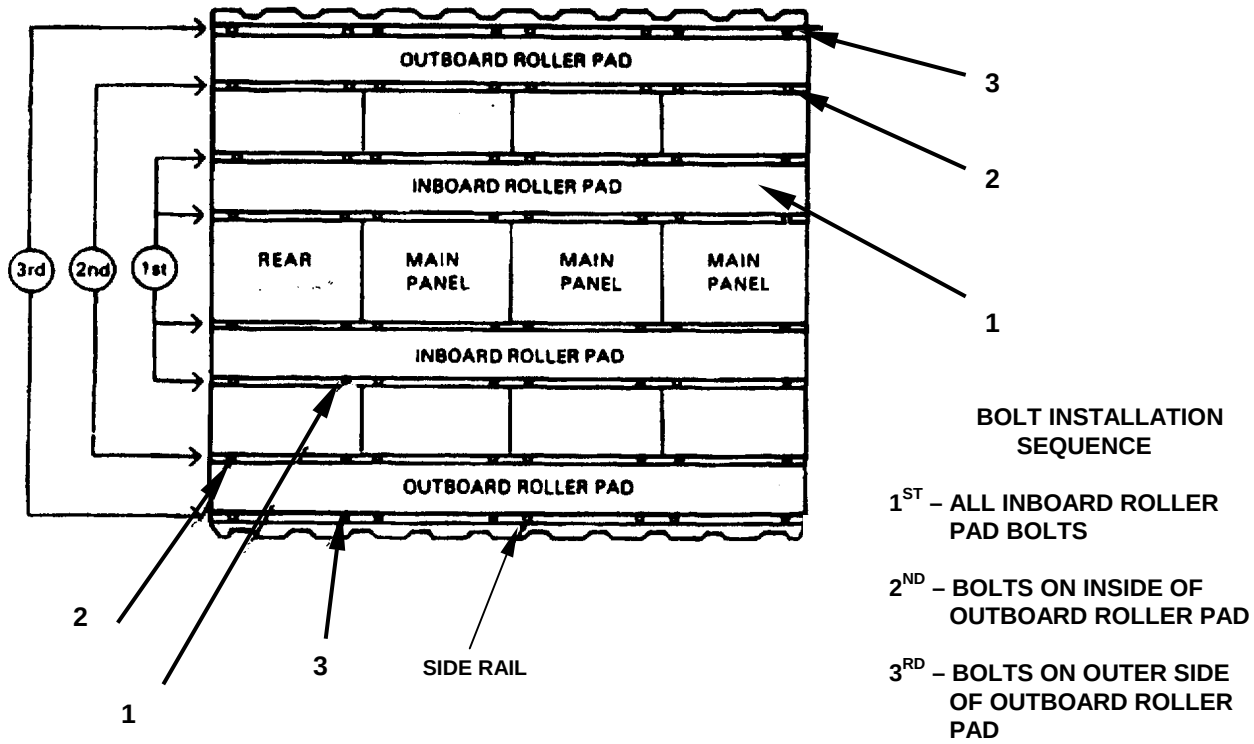

ROLLER PAD INSTALLATION SEQUENCE

NOTE

Before installing side rail bushing, insure that the suspension bracket and outrigger link assembly (if applicable) is positioned at the proper side rail holes.

(13) Install side rail bushing **(1)** and ½-inch x 3 $^{7}/_{32}$-inch side rail bolts **(2)** with ½-inch flat washers **(3)** for all the holes in the side rail. The bushings fit between the side rails and panel end members with the flat portion against the lip of the side rail and the end member. The bushing can be positioned by inserting them at the end of each side rail and sliding them to each hole location, pulling upward slightly on the side rail to make positioning of the bushing easier. Bolts should be left finger tight until all bushings and bolts are in place.

(14) Install a tandem link assembly at each end of the side rail by sliding them within the side rail aligning the bolt holes on the tandem link with the last three holes at the end of each the side rail. Install ½-inch X 3 $^{7}/_{32}$-inch side rail bolts **(2)** with ½-inch flat washers **(3)**. Bolts should be left finger tight.

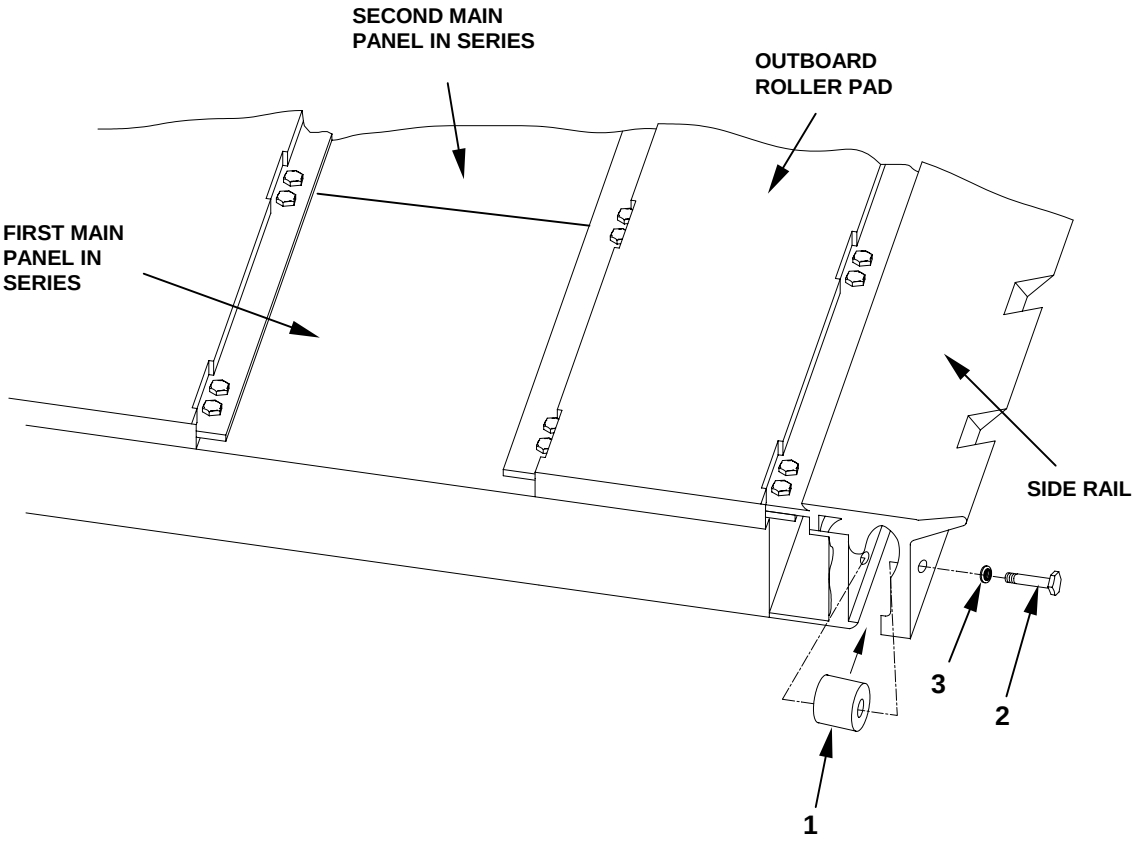

NOTE

Ensure all side rail bolts, washers, and bushings are installed.

(15) Draw the side rail into proper alignment by fully tightening the forth bolt from each end of both side rails, using a ¾-inch socket or wrench. All other side rail bolts may then be tightened, working from the center toward each end of the platform. Refer to the figure below for details.

(16) Using a $^{9}/_{16}$-inch socket or wrench, fully tighten the roller pad bolts **(2)** and **(3)** initially installed in step (9) above. This completes the assembly of the major components of the type V airdrop platform.

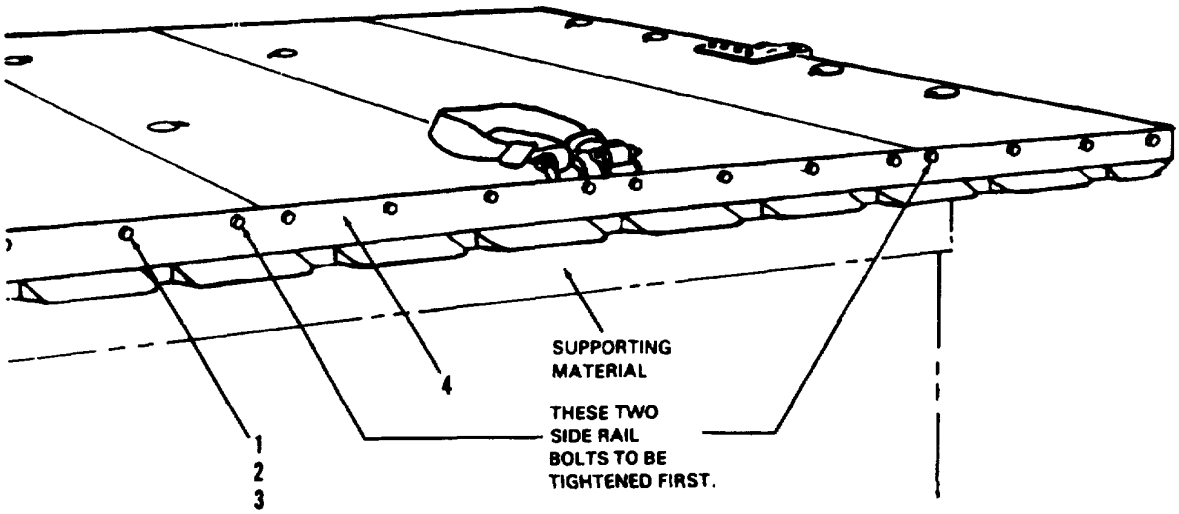

WARNING

The platform weighs approximately 100-pounds per foot of length. To avoid injury to personnel or damage to surrounding equipment, use extreme caution in lifting and handling. Never walk near or crawl beneath raised platform. If control of platform is lost, immediately alert other personnel. Failure to do so may cause serious injury to personnel.

CAUTION

In turning the platform over, be careful not to damage the side rails. Short pieces of lumber (e.g., two-by-fours or plywood) should be used to prevent the rail edges from contacting a concrete floor or other hard surface while the platform is being turned over.

d. Turning the platform assembly.

(1) To turn the platform upright, use two clevises **(1)** to attach a 3-foot suspension sling **(2)** to two adjacent bushings **(3)** near the center of one of the side rails.

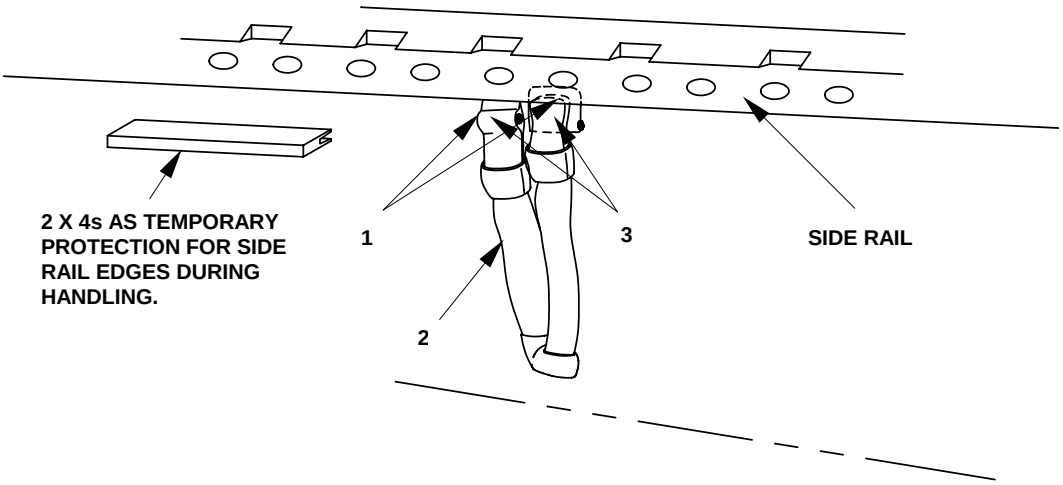

(2) With the suspension sling attached, the platform may be lifted and turned over. Two straps should be attached to the opposite two corners of the platform to guide the platform as it is being raised.

(3) Once the platform is turned upright, it should be placed on the supporting materials, allowing access to the bolts in the outboard side of the outboard roller pad.

e. The tandem link or suspension bracket assemblies are also used as suspension brackets when the type V platform is used for platform suspended, low-velocity airdrop. The typical configuration is illustrated below.

2. The assembly for a platform suspension configuration is as follows:

a. Low Velocity. Install a large clevis **(1)** in the 1-inch hole provided on the tandem link/suspension bracket assembly **(2)** as required.

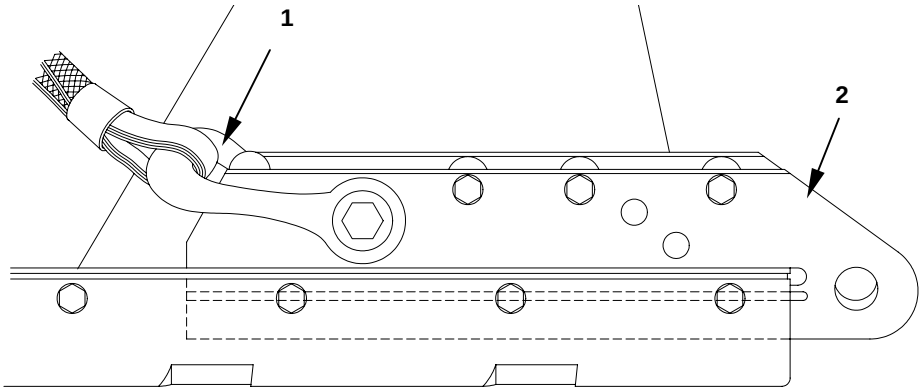

b. Cargo extraction system. The extraction bracket assembly and the outside and inside EFTA brackets must be installed on the platform. The following minor components must be installed on the platform, as illustrated below:

NOTE

The extraction bracket assembly must be installed so that the moveable lug will fold upward when the platform is right side up. The upper part of the extraction bracket is stenciled TOP.

(1) Extraction bracket assembly. Attach an extraction bracket assembly **(1)** on the center of the rear panel, using a punch to align the four bolt-holes. Using a $^{15}/_{16}$-inch wrench, install the four $^{5}/_{8}$-inch x 3 $^{57}/_{64}$-inch hex head bolts **(2)** with four $^{5}/_{8}$-inch flat washers **(3)** and the four $^{5}/_{8}$-inch nuts **(4)** also with four $^{5}/_{8}$-inch flat washers. These bolts must be installed from the bottom.

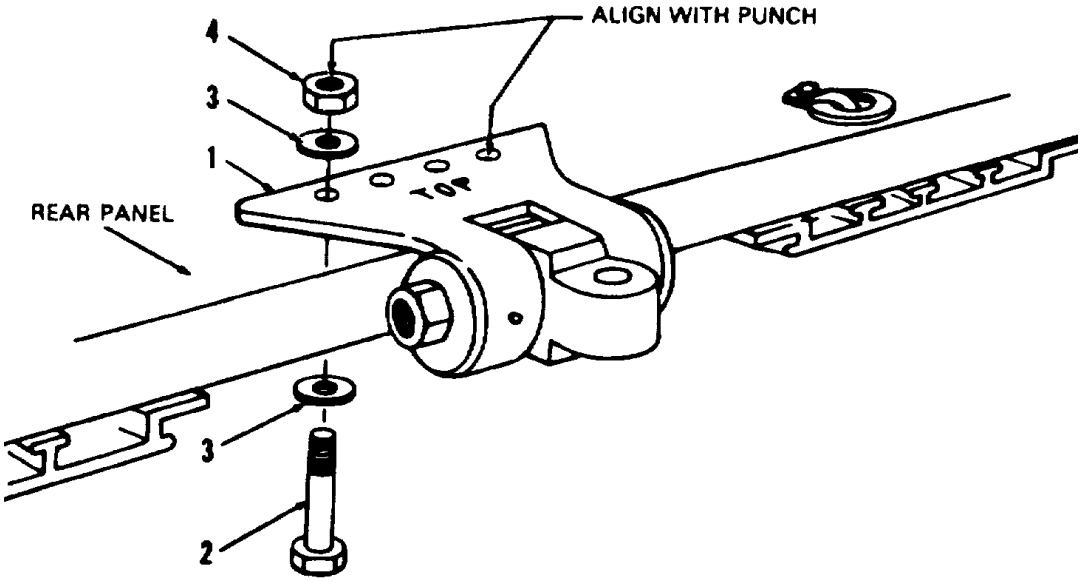

NOTE

See the appropriate Field Manual (FM) that applies to the load being dropped to determine the exact location on the side rail to attach the EFTA brackets. See the appropriate FM for attaching the EFTA to the brackets.

(2) Inside and outside Extraction Force Transfer Actuator (EFTA) brackets. The inside and outside EFTA brackets **(1)** and **(2)**, are used to attach the EFTA to the left side rail. Two holes are provided in the side rail for attaching the brackets. Using a $^{9}/_{16}$-inch wrench, install; two $^{3}/_{8}$-inch x $^{9}/_{16}$-inch hex head bolts **(3)** with two $^{3}/_{8}$-inch flat washers **(4)** and two $^{3}/_{8}$-inch hex lock nuts **(5)** with two $^{3}/_{8}$-inch flat washers. As an illustrated aid, there is an arrow on the outside brackets that will point forward when the bracket has been properly installed.

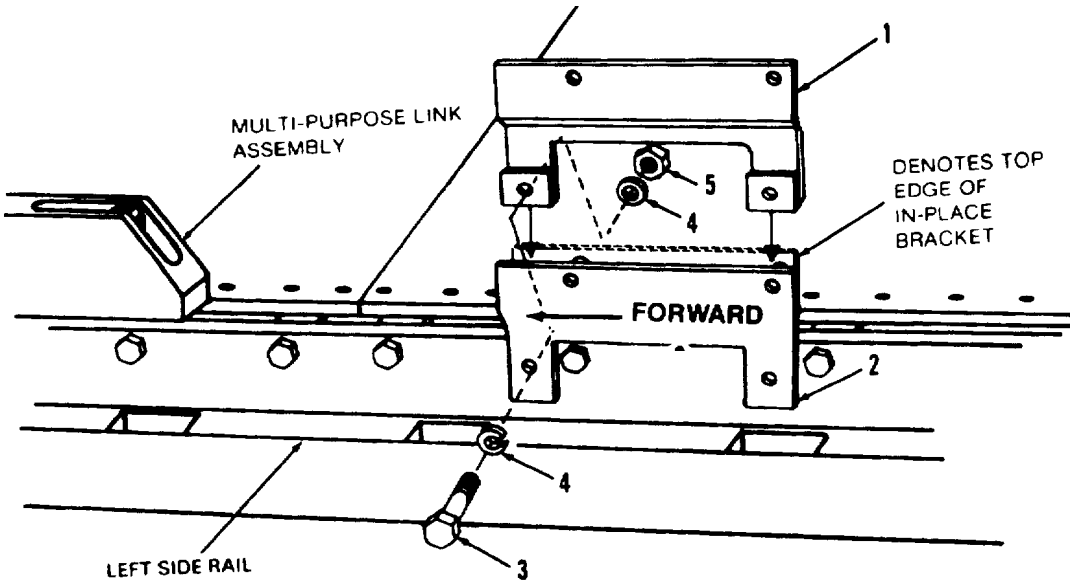

(3) Outrigger weldment assembly. Install the weldment assembly as follows:

(a) Position weldment so that the 2 bolt-holes at each end match up with bolt-holes on the outrigger link.

(b) Install ½-inch diameter x 4½-inch bolts, inserting bolts from the outside of the link. Use a flat washer under bolt head and nut. Fully tighten the bolts.

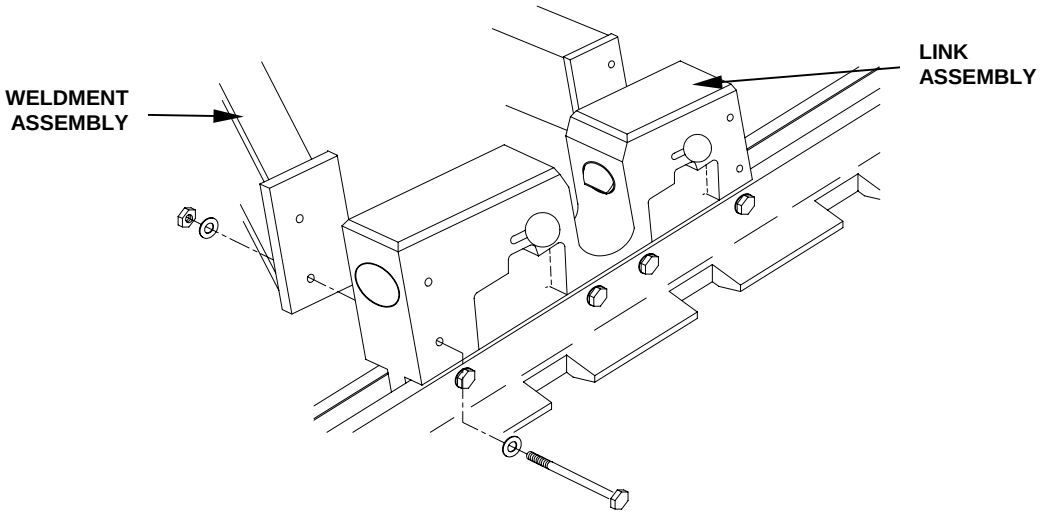

NOTE

Once the weldment is secured to the outrigger link, it may have a tendency to rise from the surface of the platform panel. Prior to drilling, place a weight or stand on the weldment and ensure it sits flat on the surface of the platform panel.

(c) Using the weldment bolt hole as a guide, drill a 13/32-inch hole directly through the panel assembly being cautious not to exit the bottom skin of the panel at an angle.

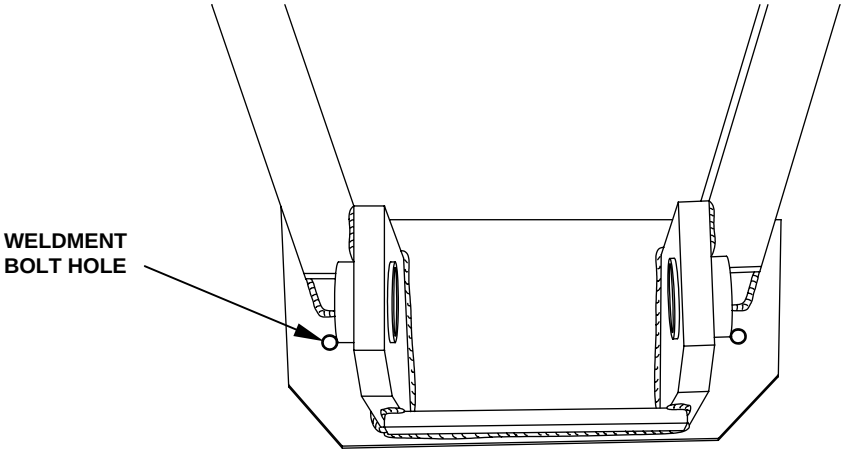

(d) Install a $^{3}/_{8}$-inch diameter by 4-inch bolt through a 2-inch diameter by ¼-inch thick jumbo washer from the underside of the platform. Thread a $^{3}/_{8}$-inch nut onto bolt by hand.

(e) Using a $^{9}/_{16}$-inch socket or wrench, tighten the weldment to the platform panel.

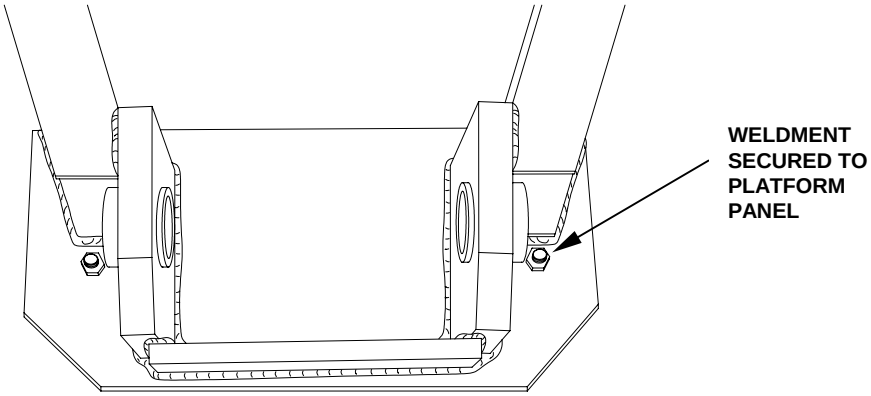

(f) Repeat steps (a) thru (e) for opposite side.

NOTE

Once the outrigger weldment and link assemblies are secured to the Type V platform. It is recommended that this platform remain dedicated to the type of load it was prepared for.

(4) Outrigger mast assembly. Install the outrigger mast assembly IAW paragraph 5, Installation of Outrigger Masts, located in the following pages of this WP.

3. Assemble the Dual Row Airdrop Platform as follows:

a. Position all components as near as practical to the location where the platform is to be assembled.

b. Start the screws two or three turns by hand.

CAUTION

Because the Dual Row platform is gravity extracted, platform bowing cannot exceed a ¼-inch tolerance. Therefore, a flat, clean, dedicated assembly area is critical to the proper assembly of the Dual Row platform. In addition, an assembly structure must be built to allow for the placement of the outrigger assemblies from the underside of the assembly structure. Failure to do so could cause improper assembly causing the load to jam during extraction.

NOTE

Do not hammer screws or bolts through holes of roller pads or side rails due to probable damage to internal fixed components (ex., nut bars and encapsulated nuts).

CAUTION

The platform weighs approximately 89-pounds per foot of length. To avoid injury to personnel or damage to surrounding equipment, use extreme caution when lifting and handling. Never walk near or crawl beneath the assembled raised platform. Be careful not to damage the side rail notches when turning-the platform over. Short pieces of plywood should be used to prevent the edges of the rail from contacting a concrete floor or other hard surface.

c. The steps required for the assembly of the major components of the dual row airdrop platform are as follows:

(1) Construct a flat structure of sufficient mass and strength to support the weight of the platform at a safe, convenient work height. Ensure that the surface design allows for the clearance of the tie down rings. Ensure that the structure is a minimum 18-feet long and 72 to 75-inches wide. This size allows each panel surface to lay flat and helps to keep the assembled platform flat.

NOTE

The dual row airdrop platform must be assembled upside down. Roller pad bolts are installed through the roller pad and side rails into the bottom of the panels. Riveted-nut plate bars are located inside the panels.

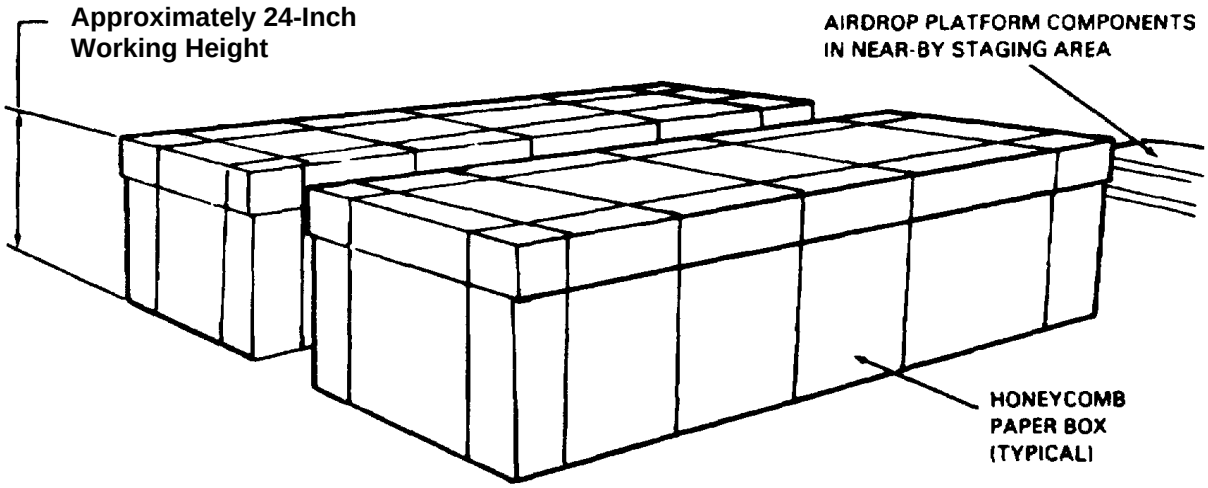

(2) Because of the tongue-and-groove interlock **(1)** the platform must be assembled from front to rear.

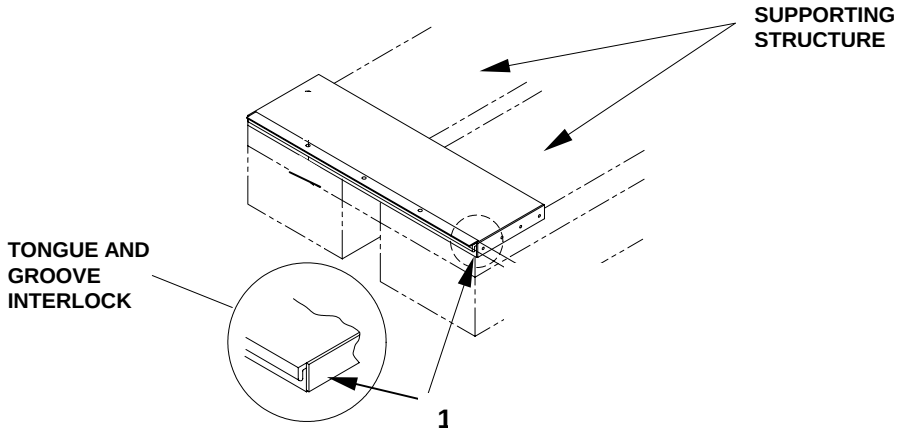

(3) Examine the tongue-and groove **(1)** of the panel to determine which edge of the panel is the leading edge. Its protruding tongue and three holes close to the leading edge distinguish the leading edge.

(4) Place the next panel on the supporting structure with tie down rings facing downward and the leading edge of the second panel next to the trailing edge of the first panel, and interlock the mating tongue-and-groove of the first and second panels. Slightly raise the second panel above the first to enable the tongue to drop into place within the groove.

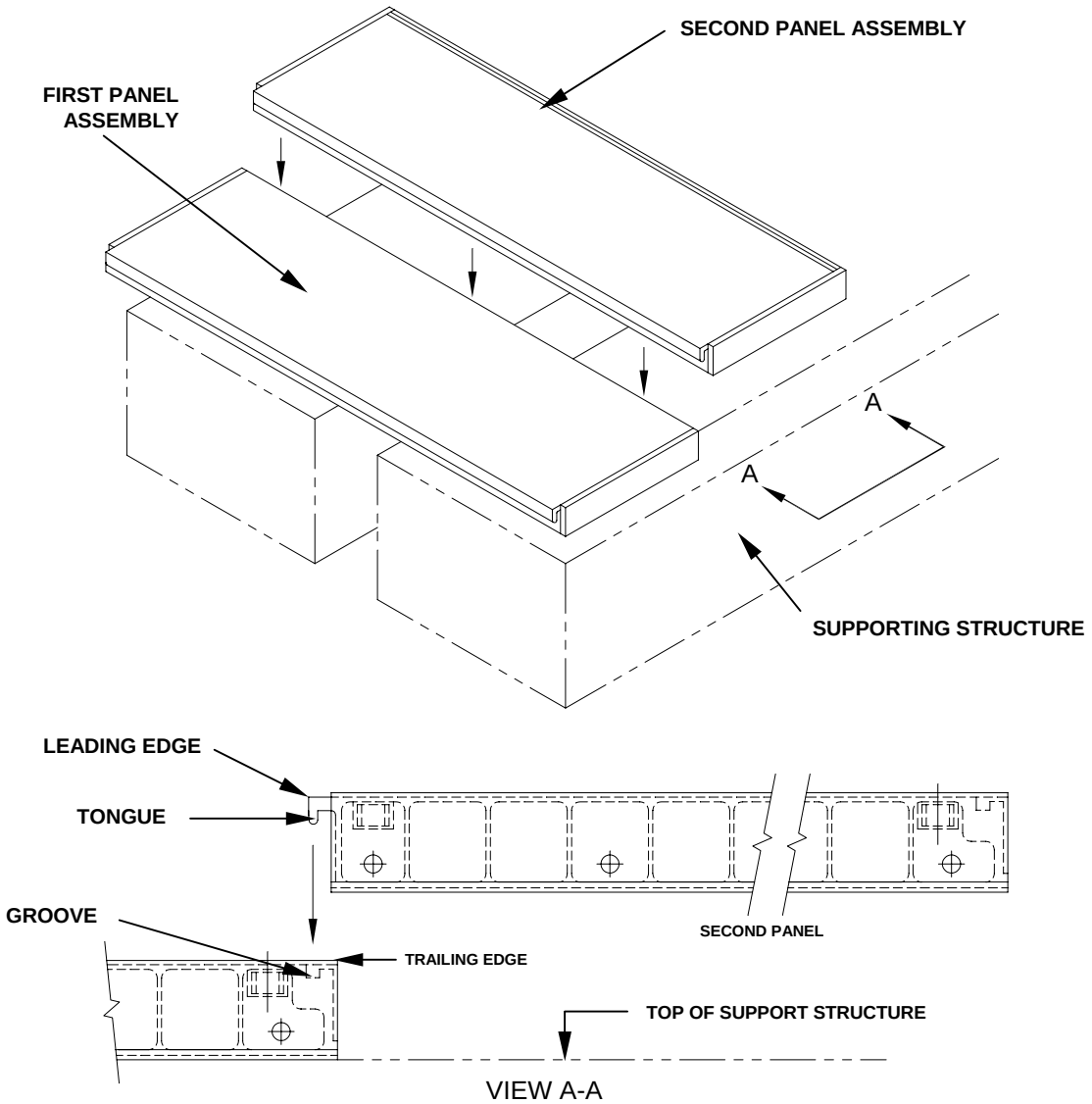

(5) Continue to place nine panels in this fashion. Ensure the outside edges of each panel are properly aligned.

CAUTION

Do not hammer aligning tool into holes. Damage to the captive nuts will occur.

(6) Position roller pads along either edge, angled end forward ensuring angled end of roller pad is flush with the leading edge of panel. Align the holes in the roller pad with the holes along the leading edge of the first panel and the trailing edge of the last panel. A punch or comparable aligning tool may be used to align the holes.

(7) Begin the fastening operations for the roller pads by installing $^{3}/_{8}$-inch x 1¼-inch roller pad bolts with $^{3}/_{8}$-inch flat washers on the inboard side only of the outboard roller pads, tightening two or three turns by hand. These roller pads will be classified as outboard roller pads.

(8) Install $^{3}/_{8}$-inch x 1¼-inch roller pad bolts with $^{3}/_{8}$-inch flat washers on the additional two roller pads (inboard) tightening two or three turns by hand. These additional two roller pads will be referred to as the inboard roller pads. Use a punch to align the holes of the roller pads with the panel assemblies. Install all bolts and washers; tightening the hex head bolts two or three turns by hand.

NOTE

Do NOT install bolts in the outboard edge of the outboard roller pads at this time.

NOTE

Washers must be used under all bold heads, and tighten two or three turns by hand before using an impact wrench.

(1) PARTIALLY INSTALL FIRST OUTBOARD ROLLER PAD (INBOUND SIDE ONLY)

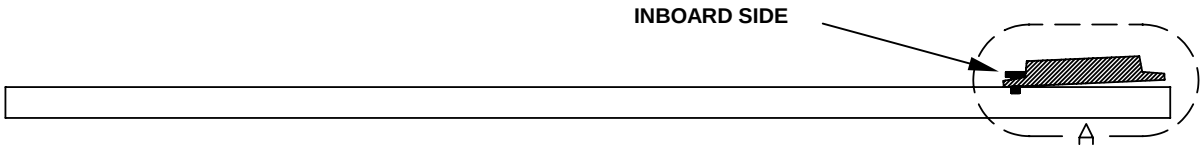

(2) PARTIALLY INSTALL SECOND OUTBOARD ROLLER PAD

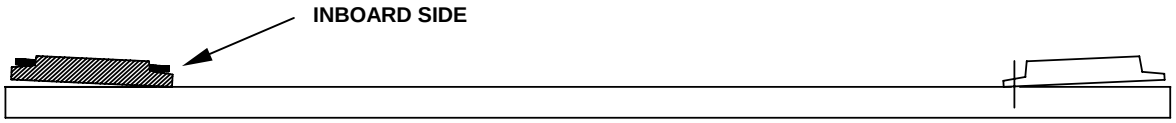

(3) ALIGN & INSTALL INBOARD ROLLER PADS (BOTH SIDES OF EACH PAD)

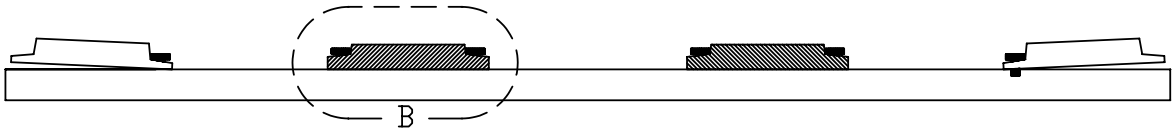

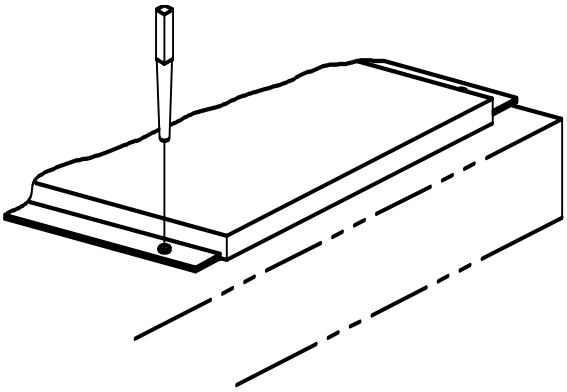

CAUTION

Do not hammer aligning tool into holes. Damage to the captive nuts will occur.

CAUTION

Do not hammer bolts through holes of side rails.

NOTE

If for any reason it is not possible to install some of the roller pad bolts, it is permissible to omit only one roller pad bolt per panel. However, two missing roller pad bolts must not be adjacent to a panel joint.

(9) Position a side rail **(1)** along each edge of the platform overlapping the outboard roller pad. Use a punch to align the bolt-holes. Install $^{3}/_{8}$-inch x 1¼-inch hex head bolts **(2)** with $^{3}/_{8}$-inch flat washers **(3)** through the side rail and the roller pad into the captive nuts **(4)**. Start the bolts two or three turns by hand.

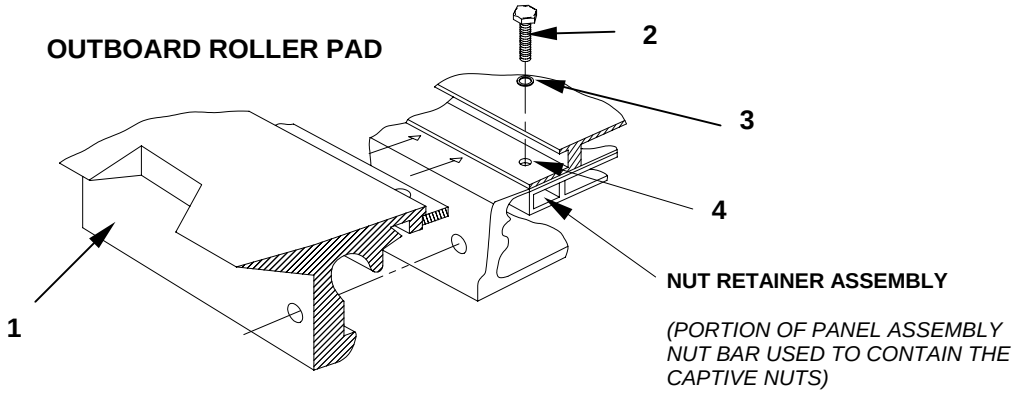

(10) Repeat step (9) above with another side rail of equal length on the opposite side of the platform.

NOTE

No bolts can be missing from the extreme forward and rear platform panel edges.

(11) Using an impact wrench with a $^{9}/_{16}$-inch socket, tighten all roller pad bolts **(1)** installed in the two in board roller pads (as shown in the diagram below).

(12) Using an impact wrench with a $^{9}/_{16}$-inch socket, tighten the roller pad bolts **(2)** and **(3)** to within one-quarter inch of the top of the flat washer. This will ensure that the side rails are securely attached. DO NOT fully tighten these bolts at this time. Refer to the illustration below for bolt locations.

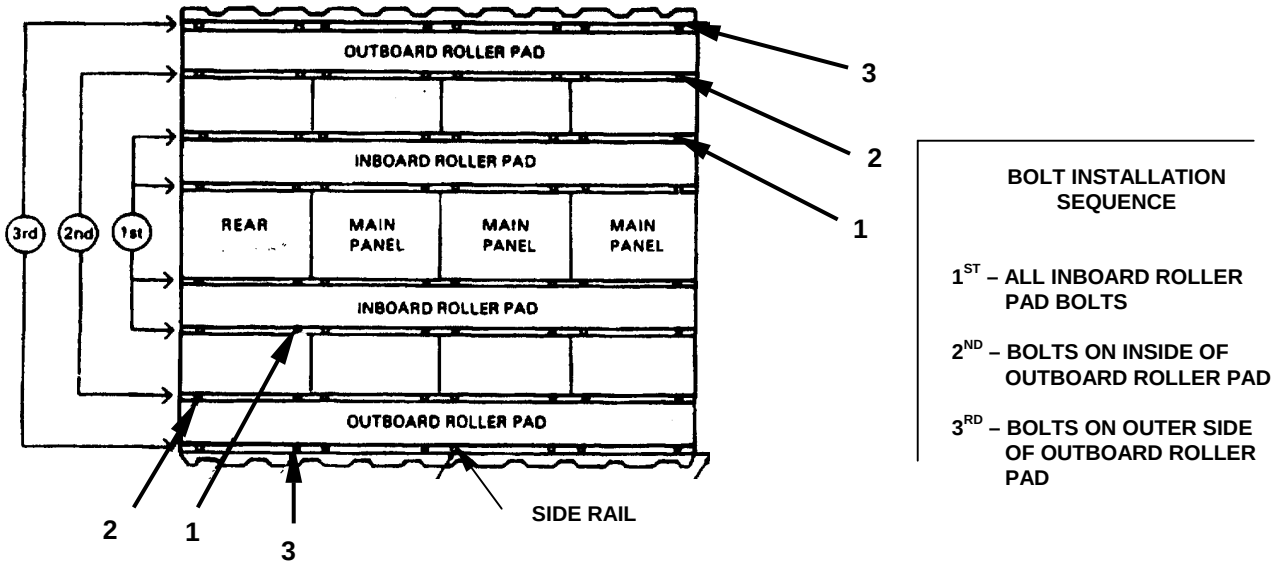

ROLLER PAD INSTALLATION SEQUENCE

(13) Using the holes in the left and right side rail identified as 1-30, counting from the platform forward end, install the side rail bushings **(1)**, ½-inch x $3^{7}/_{32}$-inch side rail bolts **(2)**, and ½-inch flat washers **(3)**, on each side of the platform. The bushings fit between the side rails and panel end members with the flat portion against the lip of the side rail and end member. The bushings are positioned by inserting them at each end of the rail and sliding them to each hole location. Pull outward slightly on the side rail to facilitate positioning of the bushings. Bolts should be left finger tight until all bushings, bolts and washers are in place.

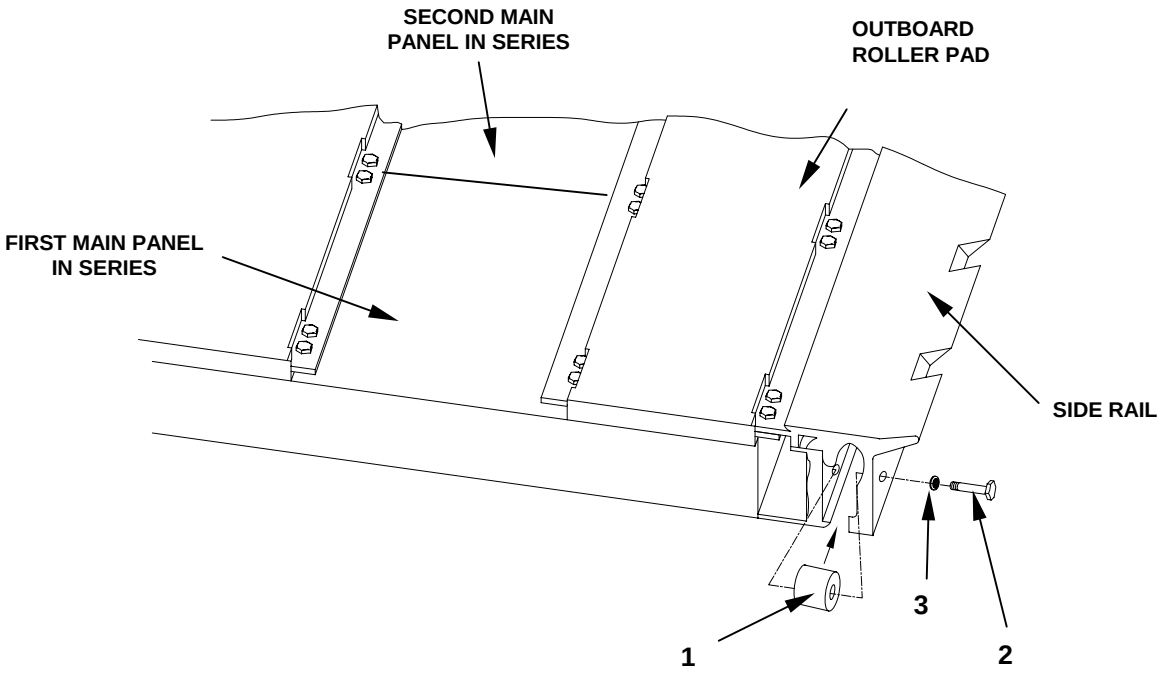

d. Assembly of Minor Components.

(1) Installation of the Outrigger Link Assembly. Two personnel are required for this task. Install an Outrigger Link Assembly on each side of the aft end of the platform as follows:

(a) Remove (pry out) the two black plastic hole plugs in the rear most panel, closest to the panel joint line, and the two black hole plugs in the adjacent panel, closest to the panel joint line. Push out, through these holes, the four black plastic plugs on the opposite surface. Save these plugs for use in remaining panels as required.

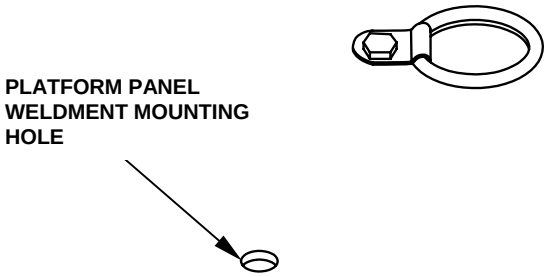

CAUTION

Use of a pry-bar should not be necessary during the initial assembly of the Dual Row platform. If using a pry bar to install the link on an assembled platform, exercise extreme caution to avoid bowing or bending the side rail.

(b) Each link slides into the groove between the platform rail and the platform panel end. Use a pry-bar if necessary to open the groove as the link is inserted.

(c) Slide link forward until its bolt-holes are matched up with platform clevis bolt-holes 31 through 34.

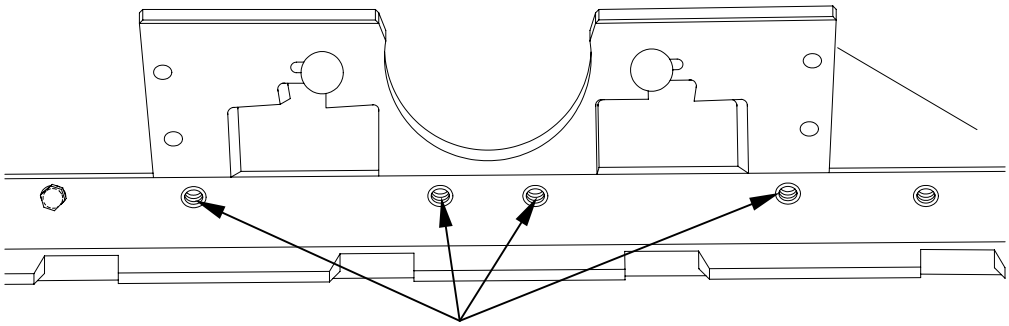

BOLT HOLES 31-34

(d) Install four ½-inch X 3 $^{7}/_{32}$-inch side rail bolts, and ½-inch flat washers, on each side of the platform into clevis bolt-holes 31 through 34 and corresponding holes in the fitting. Install the two remaining side rail bolts (35 and 36), washers and bushings. Tighten the hex head bolts two or three turns by hand.

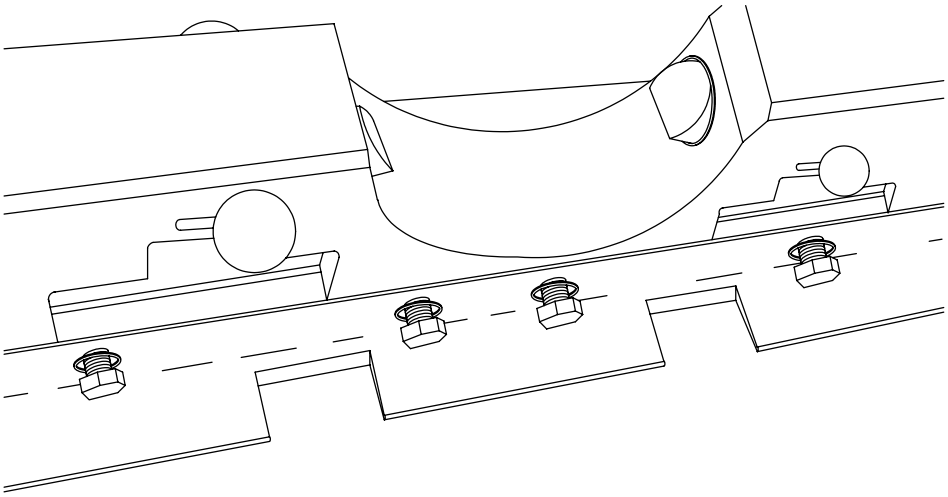

NOTE

Ensure all side rail bolts, washers, and bushings are installed.

(e) Draw the side rail into proper alignment by fully tightening the forth bolt from each end of both side rails, using a ¾-inch socket or wrench. All other side rail bolts may then be tightened, working from the center toward each end of the platform.

(f) Using a $^{9}/_{16}$-inch socket or wrench, fully tighten the roller pad bolts **(2)** and **(3)** initially installed in step (9) above. This completes the major assembly of the dual row airdrop platform.

e. Turning the Platform Assembly.

WARNING

The platform weighs approximately 89-pounds per foot of length. To avoid injury to personnel or damage to surrounding equipment, use extreme caution in lifting and handling. Never walk near or crawl beneath raised platform. If control of platform is lost, immediately alert other personnel.

CAUTION

In turning the platform over, be careful not to damage the side rails. Short pieces of lumber (e.g., two-by-fours or plywood) should be used to prevent the rail edges from contacting a concrete floor or other hard surface while the platform is being turned over.

(1) To turn the platform upright, use two clevises **(1)** to attach a 3-foot suspension sling **(2)** to two adjacent bushings **(3)** near the center of one of the side rails.

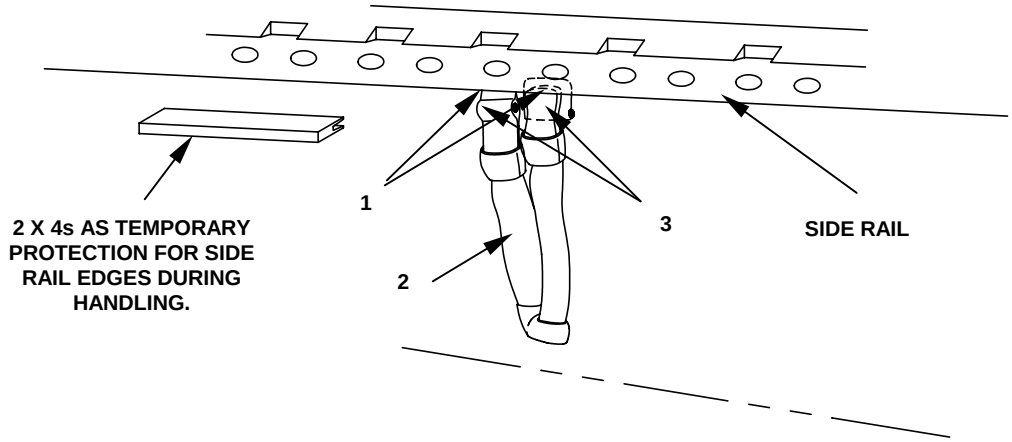

(2) With the suspension sling attached, the platform may be lifted and turned over. Two straps should be attached to the opposite two corners of the platform to guide the platform as it is being raised.

(3) Once the platform is turned upright, it should be placed on the supporting structure, allowing access to the bolts in the outboard side of the outboard roller pad.

f. Installation of Outrigger Weldment Assembly. Two personnel are required for this task. Install a Outrigger Weldment Assembly on the platform as follows:

(1) Position weldment so that the 2 bolt-holes at each end match up with bolt-holes on the link.

(2) Install ½-inch diameter x 4½-inch bolts, inserting bolts from the outside of the link. Use a flat washer under bolt head and nut. Tighten the bolts two or three turns by hand.

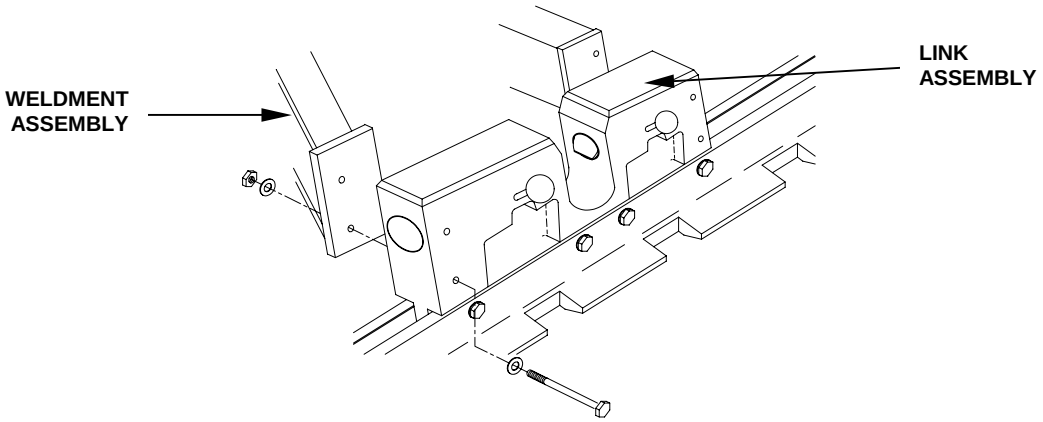

(3) Pass a $^{3}/_{8}$-inch diameter by 4-inch bolt through 2-inch diameter by ¼-inch thick jumbo washer. Perform alignment check by passing bolt through weldment bolt-hole and corresponding platform panel bolt-hole from top to bottom.

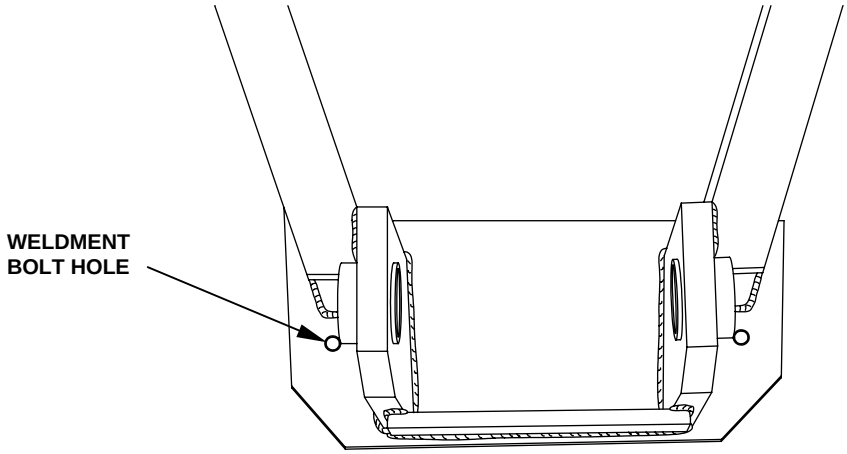

(4) Reposition weldment if necessary. Install bolt and washer from the underside of the platform. Thread a $^{3}/_{8}$-inch nut onto bolt by hand. Repeat for remaining bolt-holes on weldment.

g. Completing Assembly Procedure.

(a) Using a ¾-inch socket or wrench, tighten the weldment to the link.

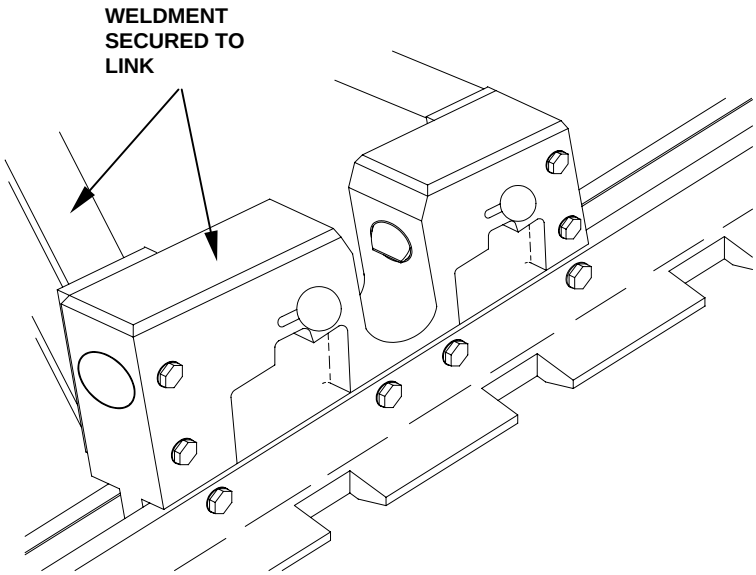

(b) Using a $^{9}/_{16}$-inch socket or wrench, tighten the weldment to the platform panel.

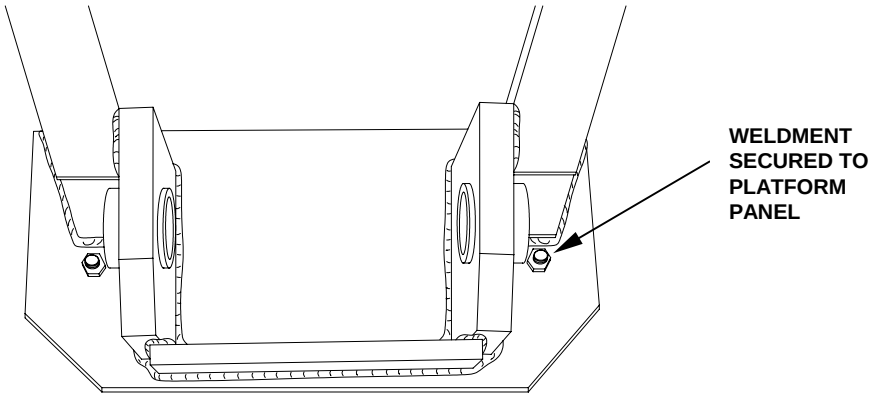

4. Procedures to Check for Platform Bowing (2 options).

NOTE

Identify a flat, smooth, clean area. Each 18-foot dual row platform should be checked for signs of bowing just before the load is rigged on it. The following two tests must be performed on a level floor space large enough to accommodate the Dual Row, 18-foot platform. There are two ways to check the platform for bowing using either one or three personnel. Check both sides of platform.

a. Three personnel are required for this task (option 1). Check platform for bowing as follows:

(1) First person stands beside the platform at one end and holds an end of an 18-foot length of 8/7 cotton thread to the top corner of the outer edge of the side rail.

(2) Second person stands beside the platform at the opposite end, and holds the cotton thread so that it is stretched taut between the two top corners of the outer edge of the side rail.

(3) Using measuring tape, third person measures the widest distance between the cotton thread and the top of side rail.

(4) Platform is considered usable if the distance is ¼-inch or less.

b. One person is required for this task (option 2). Check platform for bowing as follows:

(1) Using measuring tape, measure greatest distance between surface of level floor space and lower edge of rail, at each end of platform and in the center.

(2) Platform is considered usable if the distance is a ¼-in or less.

5. Installation of Outrigger Masts. Two personnel are required for this task.

a. Install the outrigger mast onto the previously assembled weldment/link in a horizontal position. Each mast can be installed to either side of the platform. Position mast so that handle is up and farthest away from platform.

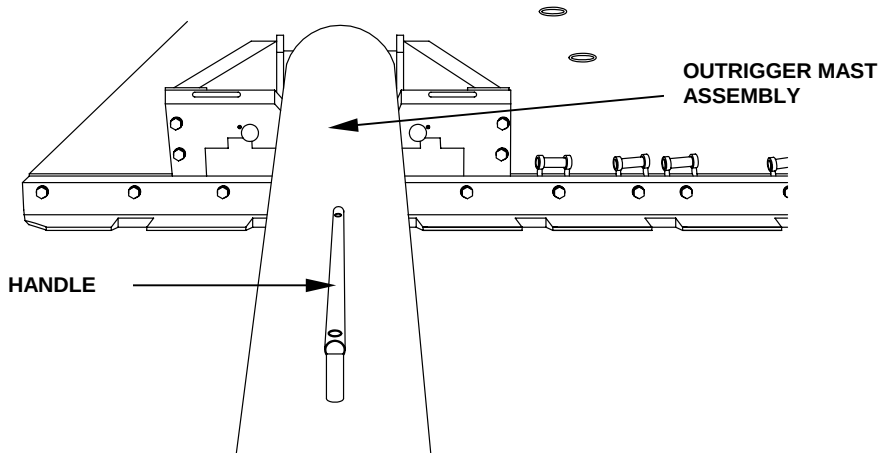

CAUTION

Keep hands and feet away from the link area as the mast is lowered.

b. Lower pivot end of mast (close to rectangular latch holes), using handle provided, into the pivot end of the weldment, until it comes to rest in the link cradle area. The latch pins in the link will slide into place, locking the mast in place.

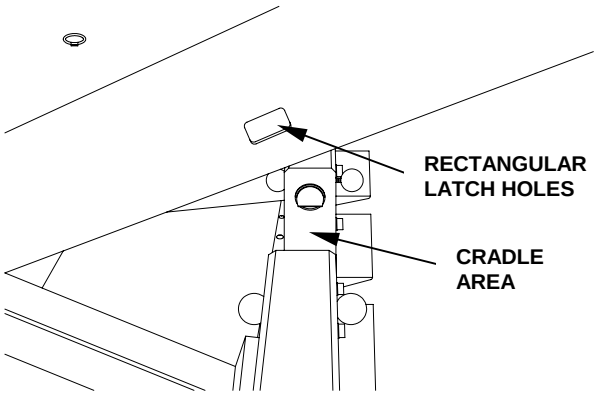

Dual Row Mast Lowered

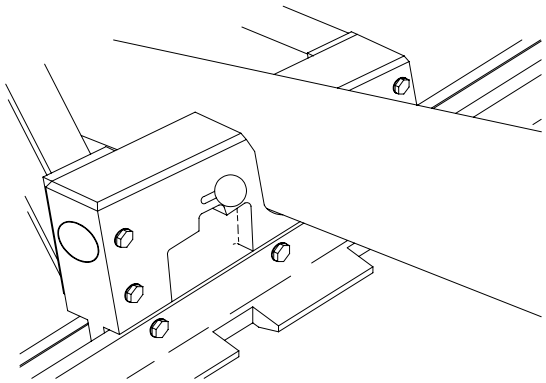

Dual Row Mast Seated

c. Install bracket, eye, non-rotating shaft through both assemblies. Install quick release pin attached by lanyard at end of mast to secure shaft in place. Ensure lanyard is inside mast tube.

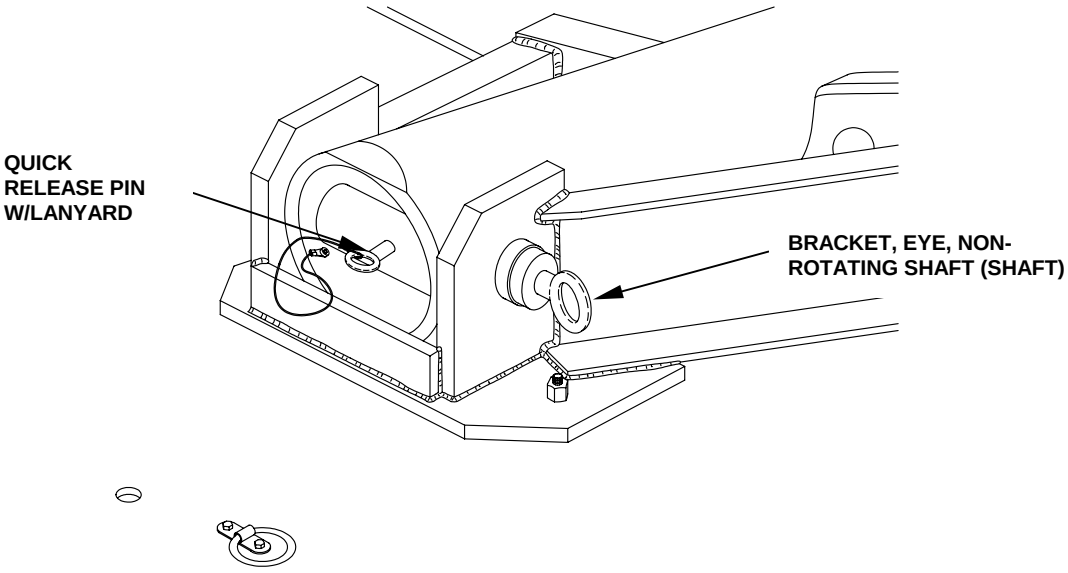

d. Repeat step 5 for opposite outrigger mast.

6. Installation of Outrigger Foot. Two personnel are required for this task.

a. Position foot so handle is facing up and at far end of foot.

b. Align holes of mast and foot, install shaft through both holes.

c. Install quick release pin in the end of mast to secure shaft in place.

d. Ensure lanyard is inside mast tube.

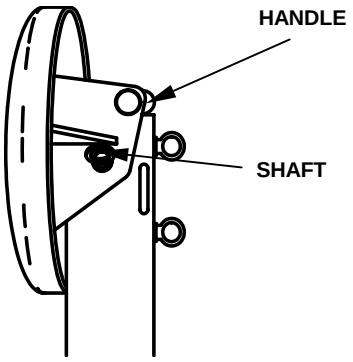

7. Temporarily securing Outrigger Masts in Place for Airdrop. Three personnel are required for this task.

CAUTION

Outrigger Masts cannot stand on their own. All personnel must stand clear of the path of the fall of the mast assemblies while securing outrigger masts. Failure to do so could cause personal injury.

a. Two persons retract knob handles on link and rotate one mast assembly to its vertical position. (To unlock the mast assemblies, pull back on the knob handles on link and raise the mast assembly).

b. One-person holds mast upright while two persons repeat above procedure with opposite mast.

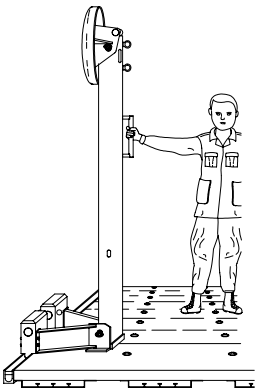

CAUTION

CGU-1B tie down strap must be tightened before masts can be released. Failure to do so could cause personal injury.

c. Install CGU-1B cargo tie-down strap around both outriggers. Do not over tighten.

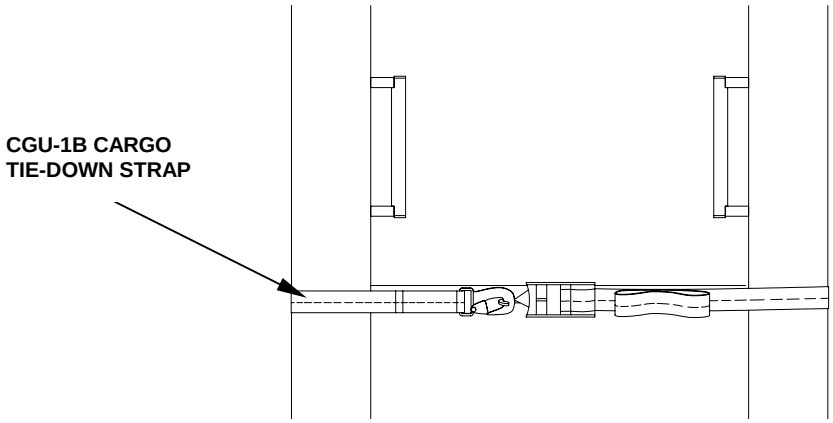

d. Two sets of eyebolts are provided at the foot end of each mast assembly. Inspect for burrs, and remove any burrs with file. Apply 2-inch adhesive tape to the edges of the eyebolts to prevent sharp edges from cutting the tie line.

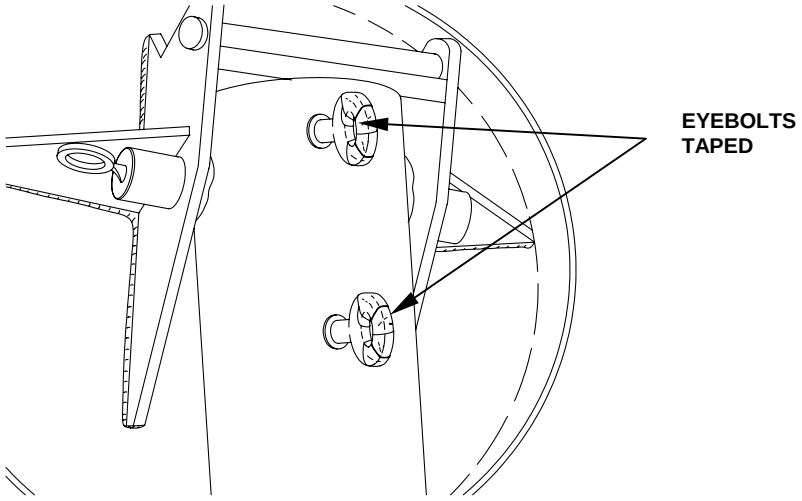

8. Assembling the Clevis Assembly. The clevis assembly is a component of the type V and dual row airdrop platform used in all modes of airdrop. The clevis assembly consists of a clevis **(1)**, one $^{7}/_{16}$-inch x 2 $^{31}/_{32}$-inch hex head bolt **(2)**, spacer **(3)**, one $^{7}/_{16}$-inch flat washer **(4)** and a $^{7}/_{16}$-inch hex lock nut **(5)**.

   a. The clevis assembly is secured around a side rail bushing **(6)** and may be used in pairs on a side rail bushing. It is also secured around a spacer installed within a tandem link assembly. Both applications of the clevis assembly are illustrated below.

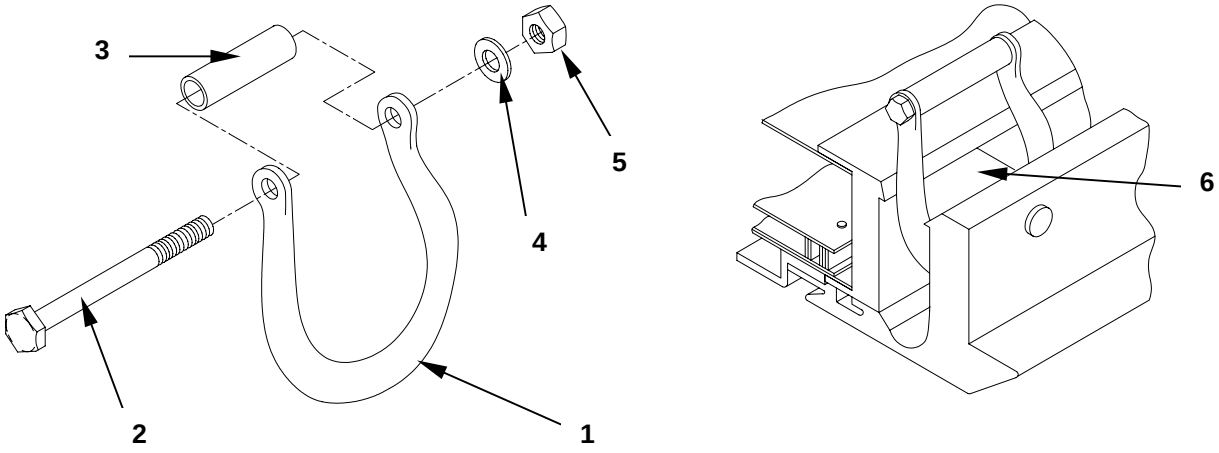

NOTE

If a load binder hook is attached directly to the clevis, do not replace the spacer.

NOTE

Each tandem link assembly has space for four clevis assemblies.

   b. Install the clevis assembly. Using a $^{5}/_{8}$-inch and an $^{11}/_{16}$-inch socket or wrench, remove the clevis hex lock nut, washer, hex head bolt, and spacer and hook the clevis around a bushing bolted to the side rail.

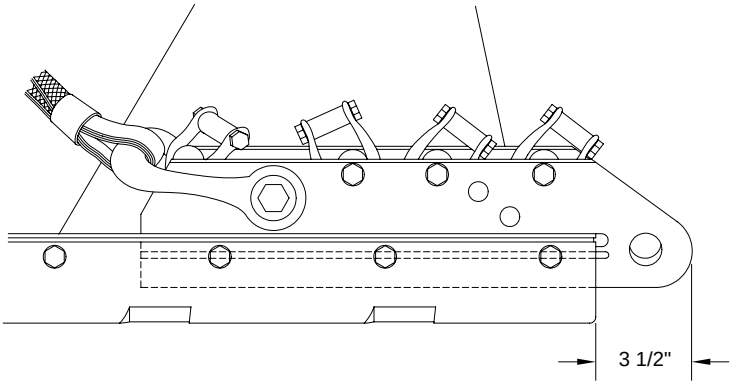

DISASSEMBLY

Disassembling the major components. The basic disassembly of the type V and dual row airdrop platform is achieved by reversing the procedures used for assembly. However, due to the unique minor components of the dual row airdrop platform, specific disassembly procedures are provided.

1. Disassemble the Dual Row Airdrop Platform as follows:

   a. Platform Preparation. Place the platform on the dedicated assembly area so that the installation holes on the two panels with outriggers installed are accessible from the bottom of the platform.

CAUTION

Outrigger mast assemblies cannot stand on their own. All personnel must stand clear of the path of the fall of the mast assemblies during disassembly of outrigger masts.

   b. Releasing Outrigger Masts. Three personnel are required for this task.

      (1) One person stands between the upright outrigger mast assemblies and holds them in place by the handles. A second person releases the CGU-1B cargo tie down strap holding the mast assemblies together.

      (2) While one-person holds one mast assembly upright, two people lower the other mast assembly into the mast cradle on the link, retracting the knob handles.

      (3) Two persons then lower the second mast assembly into the second mast cradle.

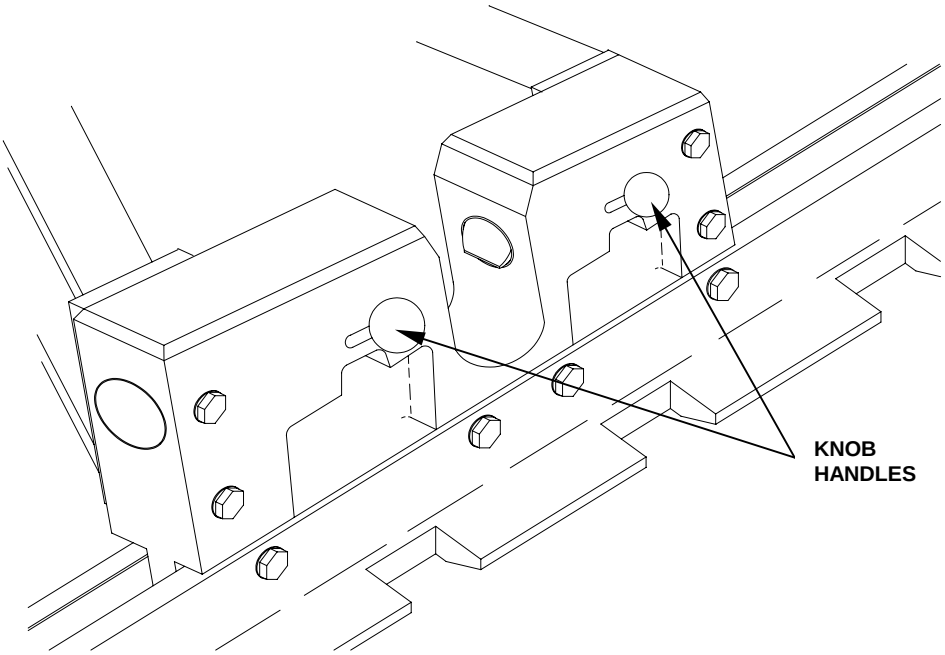

c. Disassembly of Outrigger Foot. Two personnel are required for this task.

(1) Remove quick release pin at end of mast.

(2) Remove shaft (bracket, eye, non-rotating shaft) to release foot.

d. Disassembly of Outrigger Mast. Two personnel are required for this task.

(1) Remove quick release pin at pivot end of mast.

(2) Remove shaft pivot pin.

(3) Retract knob handles to release latch pins and remove mast from link, using handle provided.

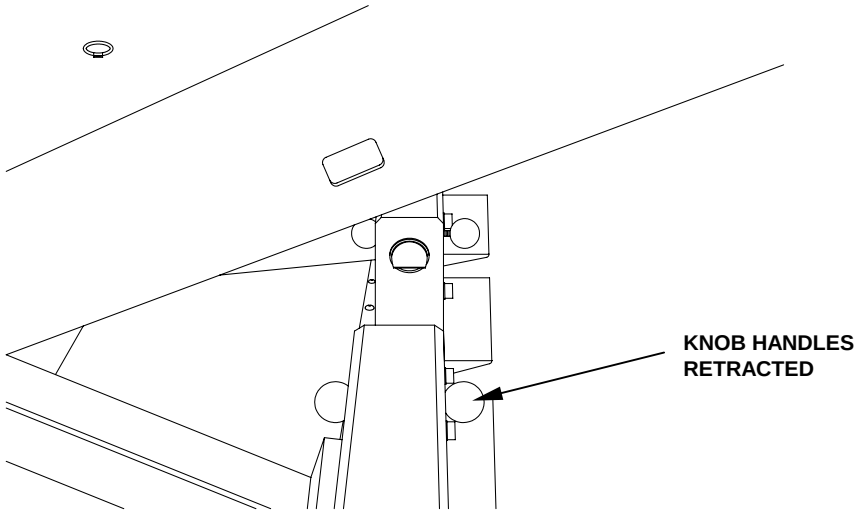

e. Disassembly of Weldment. Two personnel are required for this task.

(1) Using a ¾-inch socket or wrench, loosen side rail bolts (numbers 27-36).

(2) Using a ¾-inch socket or wrench, loosen the four ½-inch diameter x 4 ½-inch cap bolts fastening link to weldment.

(3) Using a $^{9}/_{16}$-inch socket or wrench, remove the $^{3}/_{8}$-inch diameter x 4-inch bolts fastening weldment to platform.

(4) Remove ½-inch diameter x 4 ½-inch cap bolts fasting link to weldment. Remove weldment.

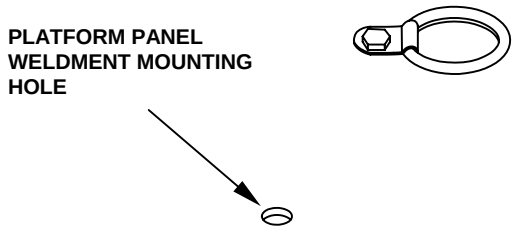

f. Disassembly of Link. Two personnel are required for this task.

(1) Remove side rail bolts (numbers 31-36) and spacers.

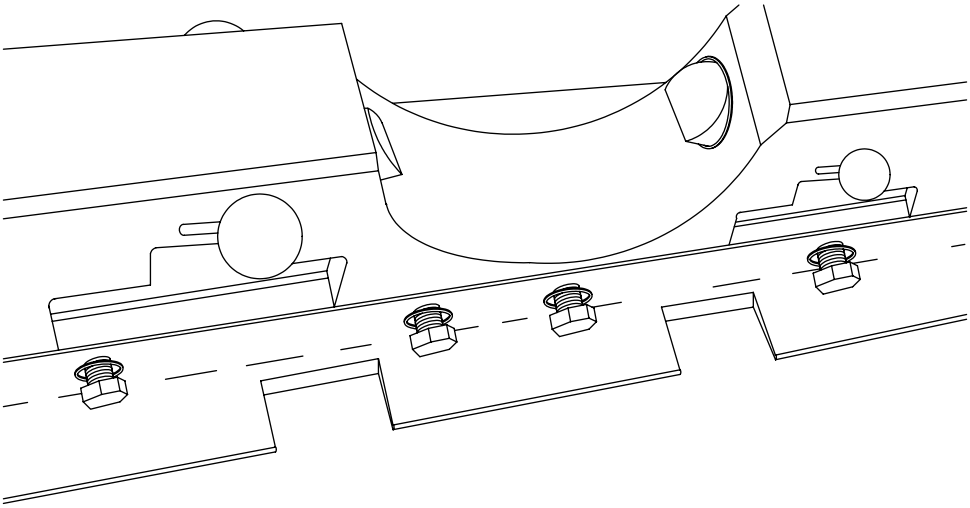

(2) Slide link from platform end, using a pry-bar if necessary to open the groove between the platform rail and platform panel end fitting.

(3) Replace side rail bolts and spacers.

(4) Using a ¾-inch socket or wrench, re-tighten side rail bolts (numbers 27-36).

(5) Repeat steps 1a. through 1f. for opposite outrigger mast.

END OF WORK PACKAGE

TYPE V AND DUAL ROW AIRDROP PLATFORM
PREVENTIVE MAINTENANCE CHECKS AND SERVICES (PMCS), INTRODUCTION

GENERAL
The following describe PMCS procedures on the unit support levels. The PMCS table has been provided to ensure both the type V and dual row platforms are in proper operating condition, and ready for its primary mission.

SCOPE
The following work packages (WP 0008 through WP 0016 00) contain maintenance procedures that are the responsibility of the specified technician, as authorized by the Maintenance Allocation Chart (MAC), and the Source, Maintenance, and Recoverability (SMR) coded items that are identified in the Repair Parts and Special Tools List (RPSTL).

MAINTENANCE FUNCTIONS/PROCEDURES
Each of the mentioned work packages above identifies a maintenance function specified in the MAC. All maintenance procedures required to complete a maintenance function are identified under “This Task Covers:” in the order in which the work is most logically accomplished.

LUBRICATION INTERVAL
Not applicable.

CORROSION PREVENTION AND CONTROL (CPC)
Corrosion Prevention and Control (CPC) of Army materiel is a continuing concern. It is important that any corrosion problems with this item be reported so that the problem can be corrected and improvements can be made to prevent the problem in future items.

While corrosion is typically associated with rusting of metals, it can also include deterioration of other materials, such as rubber and plastic. Unusual cracking, softening, swelling, or breaking of these materials may be a corrosion problem.

If a corrosion problem is identified, it can be reported using Standard Form SF 368, Product Quality Deficiency Report. Use of keywords such as "corrosion,” "rust," "deterioration," or "cracking" will ensure that the information is identified as a CPC problem. The form should be submitted to the address specified in DA PAM 738-750, Functional Users Manual for the Army Maintenance Management System (TAMMS).

END OF WORK PACKAGE

TYPE V AND DUAL ROW AIRDROP PLATFORM PREVENTIVE MAINTENANCE CHECKS AND SERVICES (PMCS)

GENERAL

The following describe PMCS procedures on the unit support levels. The PMCS table has been provided to ensure both the type V and dual row platforms are in proper operating condition, and ready for its primary mission.

Frequency of Performing PMCS. PMCS will be performed before equipment is rigged for use, during modification and repair, after use, or at any time deemed necessary by the air delivery equipment maintenance officer.

PMCS Columnar Entries Table 1. Enter data in columns as follows:

Item Number. The item number column shall be used as a source of the item number required for the TM Number column on DA Form 2404 (Equipment Inspection and Maintenance Worksheet), when recording the results of the PMCS.

Interval. This column identifies the required PMCS interval.

Item to be Inspected. Contains the common name of the item to be inspected.

Procedures. Provides a brief description of the procedures by which the checks are to be performed.

The items are listed consecutively and the numbers indicate the sequence of minimum inspection requirements. The types and intervals of inspection required for the platform are as follows:

Routine inspection: Before and after operation.

Technical/Rigger-type Inspection: Before rigging, and before and after maintenance.

Item Number. Item numbers (ITEM No.) shall be assigned to the PMCS procedures. The PMCS procedures shall be arranged in a logical sequence requiring minimum time and motion on the part of the person(s) performing them and shall be so arranged that there will be minimum interference between persons performing the checks simultaneously on the same end item.

Intervals. The designated interval (INTERVAL) (i.e., before, during, after, weekly, etc.) when each check is to be performed shall be included. Procedures done first or most frequently (i.e., “before” checks and services) shall appear prior to “during” and “after” checks and services. When more advantageous to the user intervals shall be sub-grouped by crewmembers(s).

Item to be Checked or Serviced. The items listed (ITEM TO BE CHECKED OR SERVICED) shall be identified in as few words as possible to clearly identify the item. Usually the common name (e.g. platform, tandem link, clevis, etc.) will be enough.

Procedures. The procedure (PROCEDURE) by which each check is to be performed, as well as any information required to accomplish each check or service, including lubrication, appropriate tolerances, adjustment limits, and instrument gage readings shall be provided. Whenever replacement or repair is recommended, the maintenance task shall be included or the applicable maintenance instruction work package may be referenced.

Equipment Not Ready/Available If. A brief statement of the condition (EQUIPMENT NOT READY/AVAILABLE IF) (e.g., malfunction, shortage) that would cause the equipment to be less than fully ready to perform its assigned mission shall be provided.

Recording Defects. All defects discovered during the inspection will be recorded using the applicable specifics in DA Pamphlet 738-750.

Inspection Function Requirement. Normally, air delivery equipment maintenance personnel at a rigging activity will perform a technical/rigger-type inspection. The inspection of initial receipt items will be performed as a separate function from the rigging activity; the item to be inspected will be placed in a suitable sized floor area. Should defect or damage be discovered at any point during the inspection, the inspection will be terminated and the applicable item will be repaired.

Should defect or damage be discovered at any point during the inspection, the inspection will be terminated and the applicable item will be processed and forwarded to repair activity. The repair activity, in turn, will conduct a technical/rigger-type inspection that will be performed by only those parachute rigger personnel cited in AR 750-32.

CHECK AND SERVICES

Table 1 contains a tabulated listing of organizational preventive maintenance checks and services, which must be performed by a qualified rigger.

WARNING

Never walk or crawl beneath raised platforms. Failure to heed this warning may cause serious injury to personnel.

WARNING

Use extreme care when lifting or handling platforms. The type V platform weighs approximately 100-pounds per foot of length and the dual row platform weighs approximately 89-pounds per foot of length. Failure to heed this warning may cause serious injury to personnel.

WARNING

Use proper equipment for lifting and supporting platforms. Failure to do so may cause serious injury or death to personnel.

CAUTION

Use care not to damage the side rail notches when turning the platform over.

Cleaning. Clean the platform before performing the organizational preventive checks and services, as follows:

1. Remove debris with a dry stiff bristle brush.

2. Remove dirt and grease with a soap solution composed of one-half cup of dishwashing detergent per gallon of water. Rinse with clean water. Wipe dry with a clean cloth.

3. Remove rivet head corrosion with a stainless steel wire brush and apply a light coating of clear enamel.

Table 1. Preventive Maintenance Checks and Services

B – Before **D – During** **A – After**

ITEM NO.	INTERVAL			ITEM TO BE CHECKED OR SERVICED	EQUIPMENT NOT READY/ AVAILABLE IF:
	B	D	A		
1	•		•	Clevis Assembly. Bends, Cracks, Burrs, corrosion, foreign material, grease, dirt, defective or missing bolt, stripped threads, missing spacers, missing nuts. Refer to WP 0008 00 for corrective Actions. 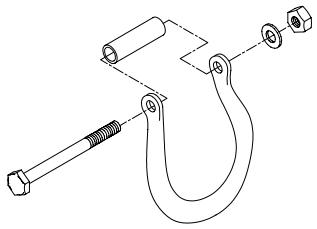	Defective clevis, bolt, spacer or nut. Missing bolt, spacer or nut.

ITEM NO.	INTERVAL			ITEM TO BE CHECKED OR SERVICED	EQUIPMENT NOT READY/ AVAILABLE IF:
	B	D	A		
2	•		•	Extraction Bracket Assembly. Check to see that lug is present and moves freely. Check that bolts are tight and that bolts, washers, and nuts are present. Ensure 1-inch lug bolt is securely fastened and rotates freely within assembly. Check that the lug has the required raised edge at the base of the lug. Check for cracks. Refer to WP 0009 00 for corrective actions. 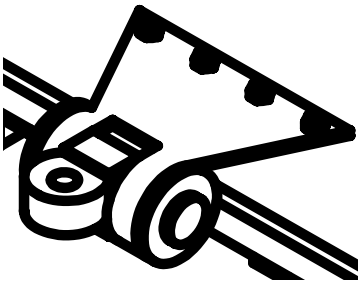	Lug is defective or missing. Bolts, washers or nuts are missing. Bracket is cracked or has cracks (painted surface will appear cracked).
3	•		•	EFTA Brackets, Inside and Outside. Bent, broken, or cracked. Check for rust. See that bolts are tight and threads are not stripped, broken or bent. Refer to WP 00010 00 for corrective action. 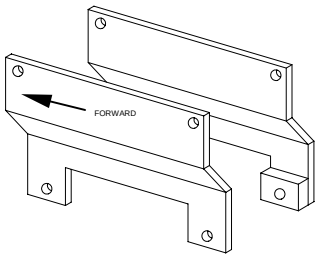	Missing or defective nuts, bolts and washers. Bent or cracked.

ITEM NO.	INTERVAL			ITEM TO BE CHECKED OR SERVICED	EQUIPMENT NOT READY/ AVAILABLE IF:
	B	D	A		
4	•		•	Tandem Link and Suspension Bracket Assembly. Check that bolts are tight and are not stripped, bent, burred, cracked or corroded. Check that all spacers are present. Refer to WP 0011 00 for corrective action. 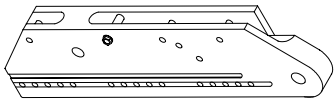 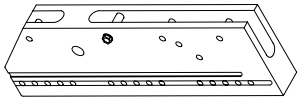	Stripped threads on bolts or nuts. Missing bolts, spacers, washers and nuts. Cracks in brackets, bolts spacers and nuts.
5	•		•	Side Rail. Check for bent, broken, cracked, burred, or corroded side rail. Inspect for a bent or broken flange. Check to see that bolts are tight and are not stripped, bent, burred, cracked or corroded and that no more than one bolt per panel is missing. No two adjacent bolts are missing. No missing bolts on rear panel and forward most panel. Refer to WP 0012 00 for corrective action. 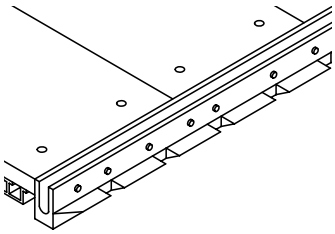	Side rail is bent or bowed. Missing bolts adjacent to one another. Missing bolts on rear or forward most panel.

ITEM NO.	INTERVAL			ITEM TO BE CHECKED OR SERVICED	EQUIPMENT NOT READY/ AVAILABLE IF:
	B	D	A		
6	•		•	Roller Pad. Inspect for broken, cracked or corroded roller pads. Check that each pad is correctly fastened (one bolt per panel may be missing) with no torn edges protruding downward and is not bowed to the extent of forcing the airdrop platform to bow or twist. Make certain that there are no punctures or torn areas larger than 2-inches in diameter. No two adjacent bolts are missing. No missing bolts on rear panel and forward most panel. Refer to WP 0013 00 for corrective action. 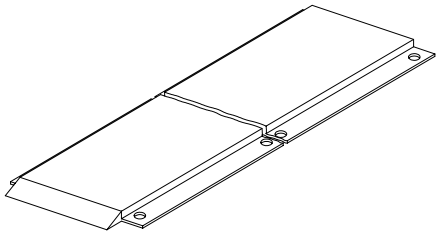	Has puncture(s) or torn area(s) larger than 2-inches in diameter. Missing bolts adjacent to one another. Missing bolts on rear or forward most panel.

ITEM NO.	INTERVAL			ITEM TO BE CHECKED OR SERVICED	EQUIPMENT NOT READY/ AVAILABLE IF:
	B	D	A		
7	•		•	Rear Panel Assembly, Type V. Inspect for bent, burred or corroded tie down rings. Make certain the panel is not bowed more than ¼-inch along the 101-inch line nor more than $^{1}/_{16}$-inch along the 24-inch line. Make certain the panel does not have punctured or torn areas larger than 6-inches in diameter. Check for damaged or missing floating nuts. Refer to WP 0014 00 for corrective action. 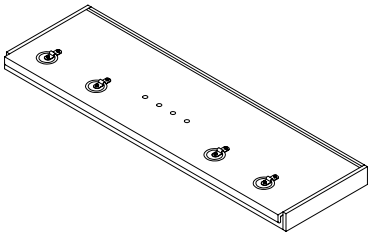	Panel is bowed more than ¼-inch along the 101-inch line or more than $^{1}/_{16}$-inch along the 24-inch line. Panel has puncture(s) or torn area(s) larger than 6-inches in diameter.

ITEM NO.	INTERVAL			ITEM TO BE CHECKED OR SERVICED	EQUIPMENT NOT READY/ AVAILABLE IF:
	B	D	A		
8	•		•	Main Panel Assembly, Type V. Inspect for bent, burred or corroded tie down rings. Make certain the panel is not bowed more than ¼-inch along the 101-inch line nor more than $^{1}/_{16}$-inch along the 24-inch line. Make certain the panel does not have punctured or torn areas larger than 6-inches in diameter. Check for damaged or missing floating nuts. Refer to WP 0015 00 for corrective action. 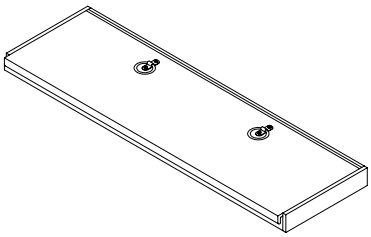	Panel is bowed more than ¼-inch along the 101-inch line or more than $^{1}/_{16}$-inch along the 24-inch line. Panel has puncture(s) or torn area(s) larger than 6-inches in diameter.
9	•		•	Panel Assembly, Dual Row. Inspect for bent, burred or corroded tie down rings. Make certain the panel is not bowed more than $^{1}/_{8}$-inch along the 80-inch line nor more than $^{1}/_{16}$-inch along the 24-inch line. Make certain the panel does not have punctured or torn areas larger than 6-inches in diameter. Check for damaged or missing floating nuts. Refer to WP 0015 00 for corrective action. 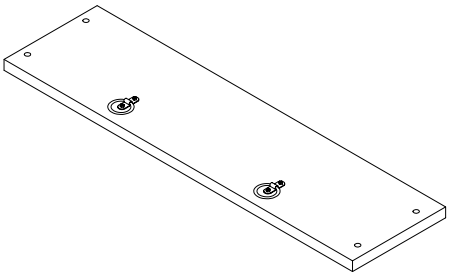	Panel is bowed more than $^{1}/_{8}$-inch inch along the 80-inch line or more than $^{1}/_{16}$-inch along the 24-inch line. Panel has puncture(s) or torn area(s) larger than 6-inches in diameter.

ITEM NO.	INTERVAL			ITEM TO BE CHECKED OR SERVICED	EQUIPMENT NOT READY/ AVAILABLE IF:
	B	D	A		
10	•		•	Link/Weldment. Inspect for bent, burred or cracked parts. Inspect to see that bolts are tight and are not stripped, bent, burred, or cracked. Check lock mechanism to determine if it is operational. Refer to WP 0016 00 for corrective action. **LINK** 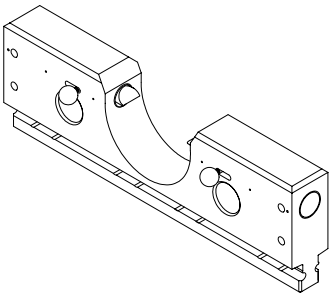 **WELDMENT** 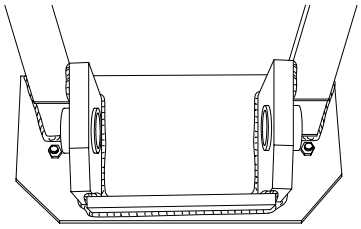	Link is defective or locking mechanism does not engage. Weldment is cracked or bent.

ITEM NO.	INTERVAL			ITEM TO BE CHECKED OR SERVICED	EQUIPMENT NOT READY/ AVAILABLE IF:
	B	D	A		
11	•		•	Outrigger mast. Check for broken, cracked, or burred parts. Inspect to see that bolts are tight and are not stripped, bent, burred, cracked, to include the handles. Refer to WP 0016 00 for corrective action. 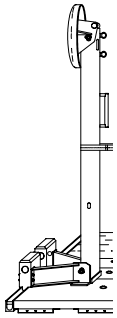	Defective outrigger arm. Missing bolts, washers, or nuts. Outrigger mast is cracked.
12	•		•	Foot Assembly. Check for broken, cracked, or burred parts. Inspect to see that handle is not bent, burred, cracked. Refer to WP 0016 00 for corrective action. 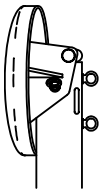	Defective foot assembly. Foot is cracked in any way.
13	•		•	Component Items. Bushings, nuts, bolts and washers. Check to see that all bolts are not stripped, bent, broken, corroded or missing. Replace defective or missing items.	There are missing or defective nuts, bolts and washers.

AFTER USE RECEIPT
Used type V and dual row airdrop equipment will be processed as prescribed in this WP.

LUBRICATION SERVICE INTERVALS
The Type V and dual row airdrop platform does not require lubrication services.

END OF WORK PACKAGE

CHAPTER 3

OPERATOR MAINTENANCE INSTRUCTIONS FOR THE TYPE V AND DUAL ROW AIRDROP PLATFORM

GENERAL INFORMATION

This section contains maintenance procedures that are the responsibility of the organizational technician as authorized by the Maintenance Allocation Chart (MAC) and the Source, Maintenance, and Recoverability (SMR) coded items that are identified in the Repair Parts and Special Tools List (RPSTL).

While performing maintenance on the platform, it should be supported at a proper height, or placed on a flat level surface.

GENERAL SAFETY PROCEDURES

For all maintenance procedures, extreme caution must be used in lifting or handling the type v and dual row airdrop platform. Adherence to the following safety procedures applies:

1. Never walk or crawl beneath raised platforms.
2. Use proper equipment for lifting platform.
3. Use proper supporting material to have platforms at proper height.
4. Do not use fingers to align bolt-holes.
5. When lifting platforms, attach safety strap to each lower corner to use in guiding the platforms.
6. Use of steel toe boots are highly recommended.

END OF WORK PACKAGE

UNIT MAINTENANCE
TYPE V AND DUAL ROW AIRDROP PLATFORM
CLEVIS ASSEMBLY

THIS WORK PACKAGE COVERS:
- Disassemble
- Clean
- Replace
- Inspect
- Assemble

INITIAL SETUP:

Tools:
Brush, Wire (Item 2, WP 0020 00)
Wrench, Box and Open, $^{11}/_{16}$–IN. (Item 25, WP 0020 00)
Wrench, Box and Open, $^{5}/_{8}$-IN. (Item 27, WP 0020 00)

Materials/Parts:
Dishwashing Compound (Item 3, WP 0036 00)
Rag, Wiping (Item 5, WP 0036 00)
Replacement parts from stock, as required.

Applicable Configurations:
All

Personnel Required:
92R (10), Parachute Rigger

General Safety Instructions:
Observe all Warnings and Cautions.

DISASSEMBLE

1. Remove individual clevis assembly **(1)**.

2. Using an $^{11}/_{16}$-inch and a $^{5}/_{8}$-inch box wrench, remove the self-locking nut **(2)**, bolt **(4)** and flat washer **(3)**.

3. Remove the spacer **(5)** and clevis body **(6)**.

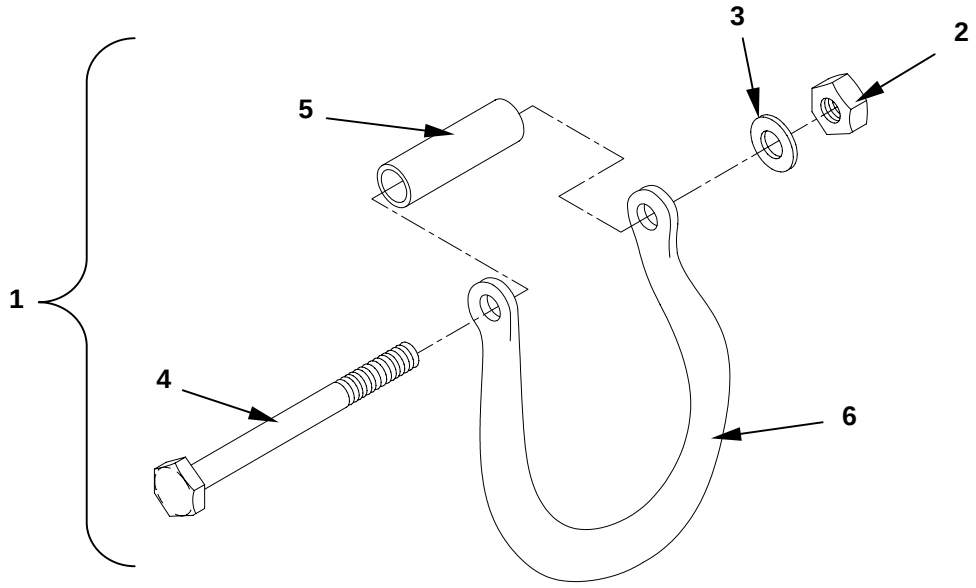

CLEAN

1. Remove dirt, grease, and foreign material, using clean, warm water or a solution of dishwashing compound and warm water. Rinse with clean water.

2. Wipe dry with clean cloth.

3. Remove burrs by filing.

4. Remove corrosion with wire brush.

INSPECT

Inspect for wear, cracks, excessive corrosion, and deformation.

REPLACE

1. Replace parts that show any of the defects identified in INSPECTION above.

2. Replace clevis assembly **(1)** if clevis body **(6)** is unserviceable.

ASSEMBLE

1. Position spacer **(5)** between sides of clevis body **(6)**.

2. Install in descending numerical order, bolt **(4)**, washer **(3)**, and nut **(2)**.

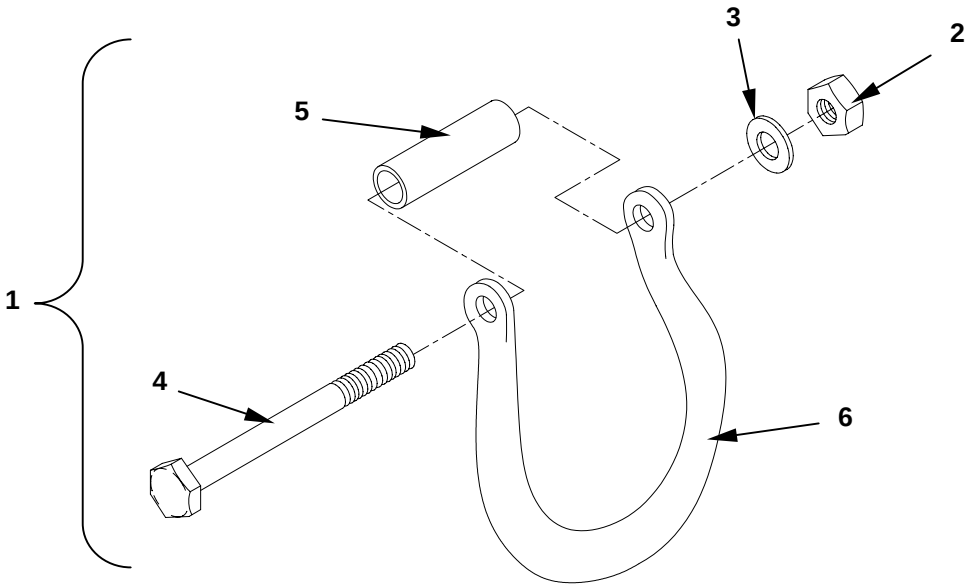

END OF WORK PACKAGE

UNIT MAINTENANCE
TYPE V AND DUAL ROW AIRDROP PLATFORM
EXTRACTION BRACKET ASSEMBLY

THIS WORK PACKAGE COVERS:
- Disassemble
- Clean
- Inspect
- Assemble

INITIAL SETUP:

Tools:
Brush, Wire (Item 2, WP 0020 00)
File, Mill (Item 7/8, WP 0020 00)
Handle, File (Item 11, WP 0020 00)
Punch, Aligning (Item 15, WP 0020 00)
Wrench, Box and Open, 1 ½-IN. (Item 24, WP 0020 00)
Wrench, Box and Open, $^{15}/_{16}$–IN. (Item 26, WP 0020 00)

Materials/Parts:
Dishwashing Compound (Item 3, WP 0036 00)
Replacement parts from stock, as required.

Applicable Configurations:
All

Personnel Required:
Two - Three, 92R (10), Parachute Rigger

General Safety Instructions:
Observe all Warnings and Cautions.

DISASSEMBLY

1. Remove individual extraction bracket assembly **(1)**.

2. Remove extraction bracket assembly components:
   a. Lug **(2)**
   b. 4 Self-lock nuts **(3)**
   c. Frame **(4)**
   d. 2-Bushings **(5)**
   e. Bolt **(6)**
   f. 2-Flat washers **(7)**
   g. 8 Flat washers **(8)**
   h. 4 Bolts **(9)** securing extraction bracket assembly **(1)** to platform
   i. Self-locking nut **(10)**

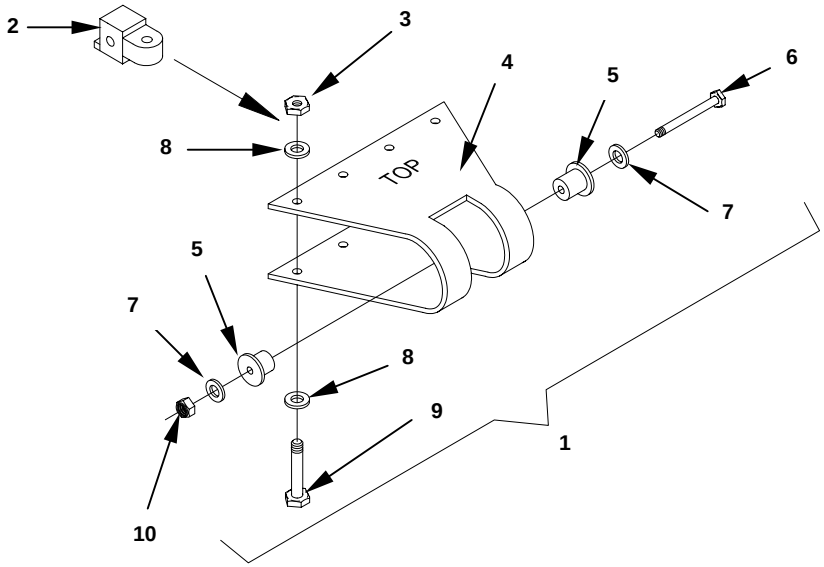

CLEAN

1. Remove dirt, grease, and foreign material, using plain water or a solution of detergent and water. Rinse with clean water.

2. Wipe dry with clean cloth.

3. Remove burrs by filing.

4. Remove corrosion with wire brush.

INSPECT

Inspect for wear, cracks, excessive corrosion, and deformation.

REPLACE

1. Replace parts that show any of the defects identified in INSPECTION above.

2. Replace extraction bracket assembly **(1)** if lug **(2)** does not move freely.

ASSEMBLE

1. Position lug **(2)** in frame **(4)**.

2. Install the following parts in frame **(4)**:
   a. 2 bushings **(5)**
   b. Bolt **(6)**
   c. 2 flat washers **(7)**
   d. Self-locking nut **(10)**

3. Using two 1½-inch wrenches, tighten self-locking nut **(10)** and bolt **(6)** and bottom out, then back off self-locking nut **(10)** ½ turn. Ensure bolt **(6)** rotates freely within bushing **(9)**.

4. Secure extraction bracket assembly **(1)** to platform using the following parts:

   a. 4 self-locking nuts **(3)**
   b. 8 flat washers **(8)**
   c. 4 bolts **(9)**

5. Use punch to align bolt-holes in bracket with matching holes in platform panel.

6. Start bolts two or three turns by hand before using wrenches to fully tighten.

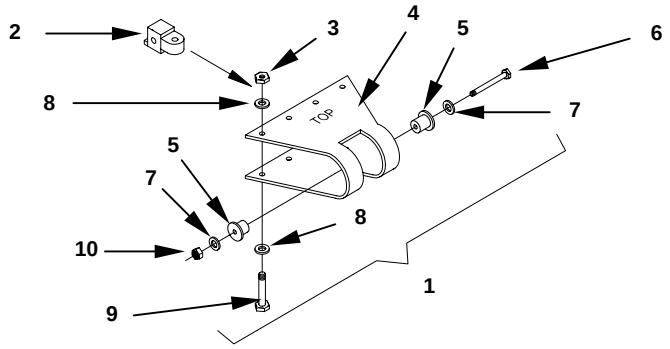

END OF WORK PACKAGE

UNIT MAINTENANCE
TYPE V AND DUAL ROW AIRDROP PLATFORM
INSIDE AND OUTSIDE EXTRACTION FORCE TRANSFER ACTUATOR (EFTA) BRACKETS

THIS WORK PACKAGE COVERS:
- Disassemble
- Clean
- Inspect
- Replace
- Assemble

INITIAL SETUP:

Tools:
Brush, Wire (Item 2, WP 0020 00)
File, Mill (Item 7/8, WP 0020 00)
Punch, Aligning (Item 15, WP 0020 00)
Wrench, Box and Open, $^{9}/_{16}$–IN. (Item 28, WP 0020 00)

Materials/Parts:
Brush, Scrub (Item 1, WP 0036 00)
Dishwashing Compound (Item 3, WP 0036 00)
Rag, Wiping (Item 5, WP 0036 00)
Replacement parts from stock, as required.

Applicable Configurations:
All

Personnel Required:
92R (10) Parachute Rigger

General Safety Instructions:
Observe all Warnings and Cautions.

DISASSEMBLE
Remove inside EFTA **(1)** and outside EFTA bracket **(2)** as follows:

Using two $^{9}/_{16}$-inch wrenches, remove the 2-self-locking nuts **(3)**, 4-flat washers **(4)**, and 2-hex head bolts **(5)** securing the inside EFTA bracket **(1)** and outside EFTA bracket **(2)** to platform.

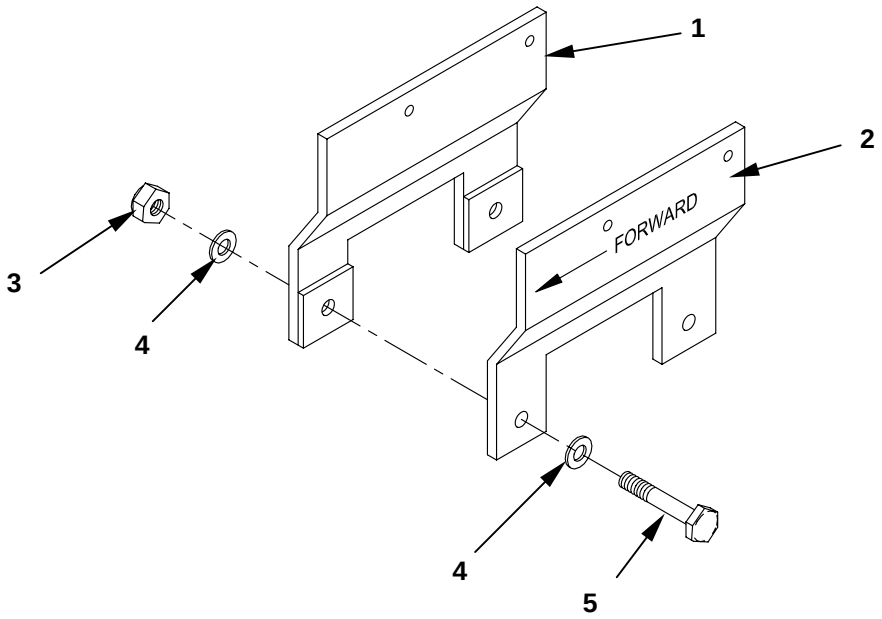

CLEAN

1. Remove dirt, grease, and foreign material, using clean, warm water or a solution of dishwashing compound and warm water. Rinse with clean water.

2. Wipe dry with clean cloth.

3. Remove burrs by filing.

4. Remove corrosion with wire brush.

INSPECT

Inspect for wear, cracks, excessive corrosion, bends and deformation.

REPLACE

Replace parts that show any of the defects identified in INSPECTION above.

ASSEMBLE

(Refer to illustration on the following page.)

NOTE

Outside bracket **(2)** can be identified by an arrow pointing forward stenciled on outer side.

NOTE

Brackets **(1)** and **(2)** must be installed on the left side rail only.

1. Positions inside bracket **(1)** and outside bracket **(2)** on the platform. Use a punch to align bracket bolt-holes with the matching side rail platform holes.

2. Secure inside bracket **(1)** and outside bracket **(2)** to platform utilizing 2-hex head bolts **(5)**, 4-flat washers **(4)**, and 2-self-locking nuts **(3)** from outside to inside.

3. Start bolts two or three turns by hand.

4. Using two $^{9}/_{16}$-inch wrenches, fully tighten EFTA brackets to side rail.

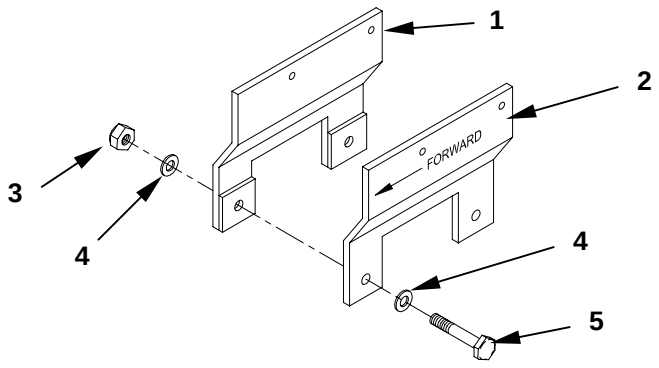

END OF WORK PACKAGE

UNIT MAINTENANCE
TYPE V AND DUAL ROW AIRDROP PLATFORM
TANDEM LINK / SUSPENSION BRACKET ASSEMBLY

THIS WORK PACKAGE COVERS:
- Disassemble
- Clean
- Inspect
- Assemble

INITIAL SETUP:

Applicable Configurations:
All

Tools:
Brush, Wire (Item 2, WP 0020 00)
Cord, Extension (Item 3, WP 0020 00)
File, Mill (Item 7/8, WP 0020 00)
Punch, Aligning (Item 15, WP 0020 00)
Socket, ¾–IN. (Item 17, WP 0020 00)
Socket, $^{9}/_{16}$–IN. (Item 19, WP 0020 00)
Wrench, Box and Open, ¾–IN. (Item 23, WP 0020 00)
Wrench, Box and Open, $^{11}/_{16}$–IN. (Item 25, WP 0020 00)
Wrench, Box and Open, $^{5}/_{8}$–IN. (Item 27, WP 0020 00)
Wrench, Box and Open, $^{9}/_{16}$–IN. (Item 28, WP 0020 00)
Wrench, Impact, ½–IN. (Item 30, WP 0020 00)

Materials/Parts:
Brush, Scrub (Item 1, WP 0036 00)
Dishwashing Compound (Item 3, WP 0036 00)
Rag, Wiping (Item 5, WP 0036 00)
Replacement parts from stock, as required.

Personnel Required:
Two – Three 92R (10) Parachute Rigger

General Safety Instructions:
Observe all Warnings and Cautions.

DISASSEMBLE

1. Remove tandem link and/or suspension bracket assembly **(1)** from the platform as follows:

   a. Using a ¾-inch wrench or socket, remove 3-hex head bolts and 3-flat washers from the side rail to remove the tandem link/suspension bracket assembly **(1)**.

   b. Using a ¾-inch wrench or socket, loosen at a minimum, five additional side rail bolts to assist in the removal of the tandem link/suspension bracket.

   c. Using a $^{9}/_{16}$-inch wrench or socket, loosen four of the outer edge roller pad bolts, two to three turns immediately below the tandem link/suspension bracket.

2. Using a $^{5}/_{8}$-inch and $^{11}/_{16}$-inch wrench, disassemble tandem link and/or suspension bracket assembly **(1)** by removing the 4 self-locking nuts **(2)**, 8 flat washers **(3)**, 4 hex head bolts **(4)**, and bushings **(5)**.

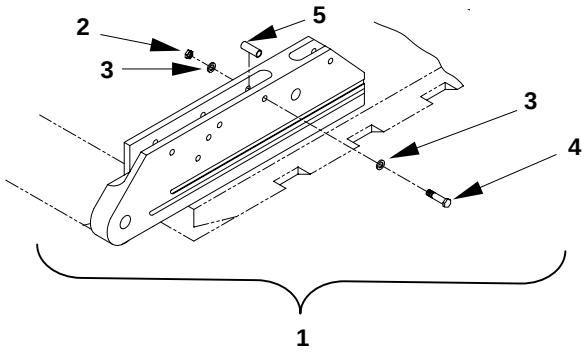

FRONT OF PLATFORM

REAR OF PLATFORM

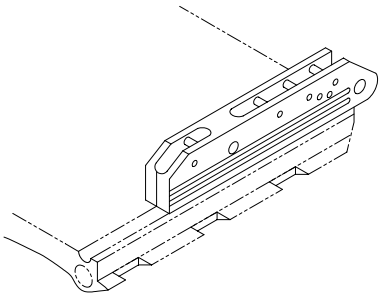

CLEANING

1. Remove dirt, grease, and foreign material, using clean, warm water or a solution of dishwashing compound and water. Rinse with clean water.

2. Wipe dry with clean cloth.

3. Remove burrs by filing.

4. Remove corrosion with a wire brush.

INSPECT

Inspect for wear, cracks, excessive corrosion, and deformation.

REPLACE

Replace parts that show any of the defects identified in INSPECTION above.

ASSEMBLE

(Refer to illustration on following page.)

1. Reassemble tandem link and/or suspension bracket assembly **(1)** as follows:

   a. Install 4-bushings **(5)**, 4-hex head bolts **(4)**, 8-flat washers **(3)**, and 4-self-locking nuts **(2)** into the direction shown.

   b. Start the bolts two or three turns by hand before tightening with wrenches.

   c. Using a $^{5}/_{8}$-inch wrench, tighten the 4-hex head bolts **(4)** and self-locking nuts **(2)**.

2. Install tandem link and/or suspension bracket assembly **(1)** on the platform as follows:

NOTE

Refer to the applicable FM for placement of the suspension bracket assembly.

   a. Position tandem link and/or suspension bracket assembly **(1)** in place on platform. Use punch to align assembly **(1)** with matching holes in platform side rail and secure with 3-hex head bolts and 3-flat washers.

   b. Start the bolts two or three turns by hand before tightening with wrenches.

   c. Using a ¾-inch wrench or socket, fully tighten the side rail bolts working toward the end of the platform.

d. Using a $^{9}/_{16}$-inch wrench, re-tighten those roller pad bolts previously loosened from inside to outside.

FRONT OF PLATFORM

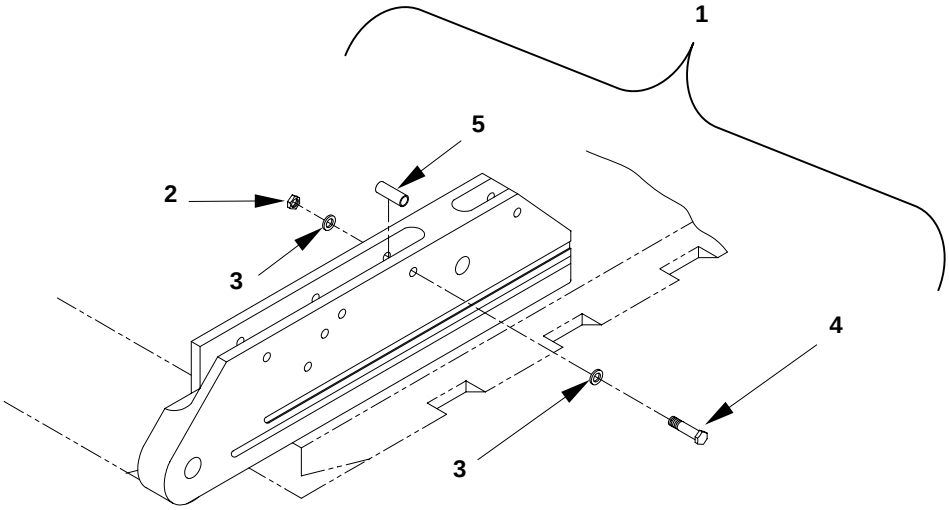

REAR OF PLATFORM

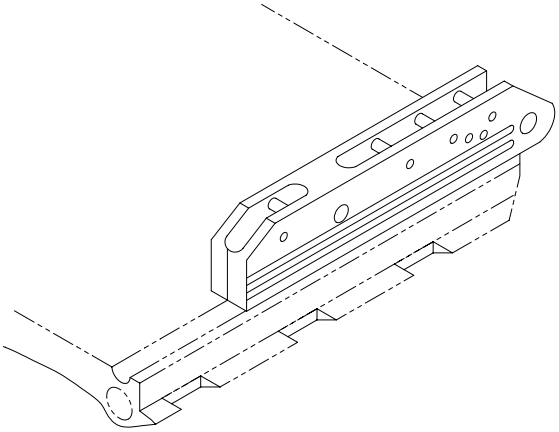

END OF WORK PACKAGE

UNIT MAINTENANCE
TYPE V AND DUAL ROW AIRDROP PLATFORM
SIDE RAIL

THIS WORK PACKAGE COVERS:
- Remove
- Clean
- Inspect
- Install

INITIAL SETUP:

Tools:
Brush, Wire (Item 2, WP 0020 00)
Cord, Extension (Item 3, WP 0020 00)
File, Mill (Item 7/8 WP 0020 00)
Punch, Aligning (Item 15, WP 0020 00)
Socket, $^{3}/_{4}$–IN. (Item 17, WP 0020 00)
Socket, $^{9}/_{16}$–IN. (Item 19, WP 0020 00)
Wrench, Box and Open, ¾-IN. (Item 23, WP 0020 00)
Wrench, Box and Open, $^{9}/_{16}$-IN. (Item 28, WP 0020 00)
Wrench, Impact, ½-IN. Drive (Item 30, WP 0020 00)

Materials/Parts:
Brush, Scrub (Item 1, WP 0036 00)
Dishwashing Compound (Item 3, WP 0036 00)
Rag, Wiping (Item 5, WP 0036 00)
Replacement parts from stock, as required.

Applicable Configurations:
All

Personnel Required:
Two – Three 92R (10) Parachute Rigger

General Safety Instructions:
Observe all Warnings and Cautions.

Special Tools:
Forklift
3–Foot Suspension Sling

REMOVE

NOTE

The platform will be positioned bottom side up on the supporting materials.

Remove side rails as follows:
(Refer to illustration at the end of the REMOVE procedure.)

1. If applicable, remove platform clevises, tandem links, suspension brackets, EFTA brackets and outrigger assemblies IAW each applicable work package.

NOTE

The number of side rail (hex head) bolts **(2)**, flat washers **(3)**, and side rail bushings **(6)** will vary depending on the length of the platform. Refer to Table 1 at the end of this work package for required quantities.

2. Using either a ¾-inch wrench or socket, remove each side rail bolt **(2)** and flat washer **(3)**.

3. Remove bushing **(6)** by sliding to either end of side rail **(1)** and pulling out.

4. Using some mechanism of support for the side rail, be it personnel or equipment; remove side rail/outboard roller pad bolts **(4)** and flat washers **(5)** securing each side rail **(1)** to platform using a $^{9}/_{16}$-inch wrench or socket.

5. Remove side rail.

WARNING

The type V and dual row airdrop platform weight will vary. Refer to WP 0002 00. To avoid injury to personnel, use extreme caution in lifting and handling. Never walk near or crawl beneath raised platforms.

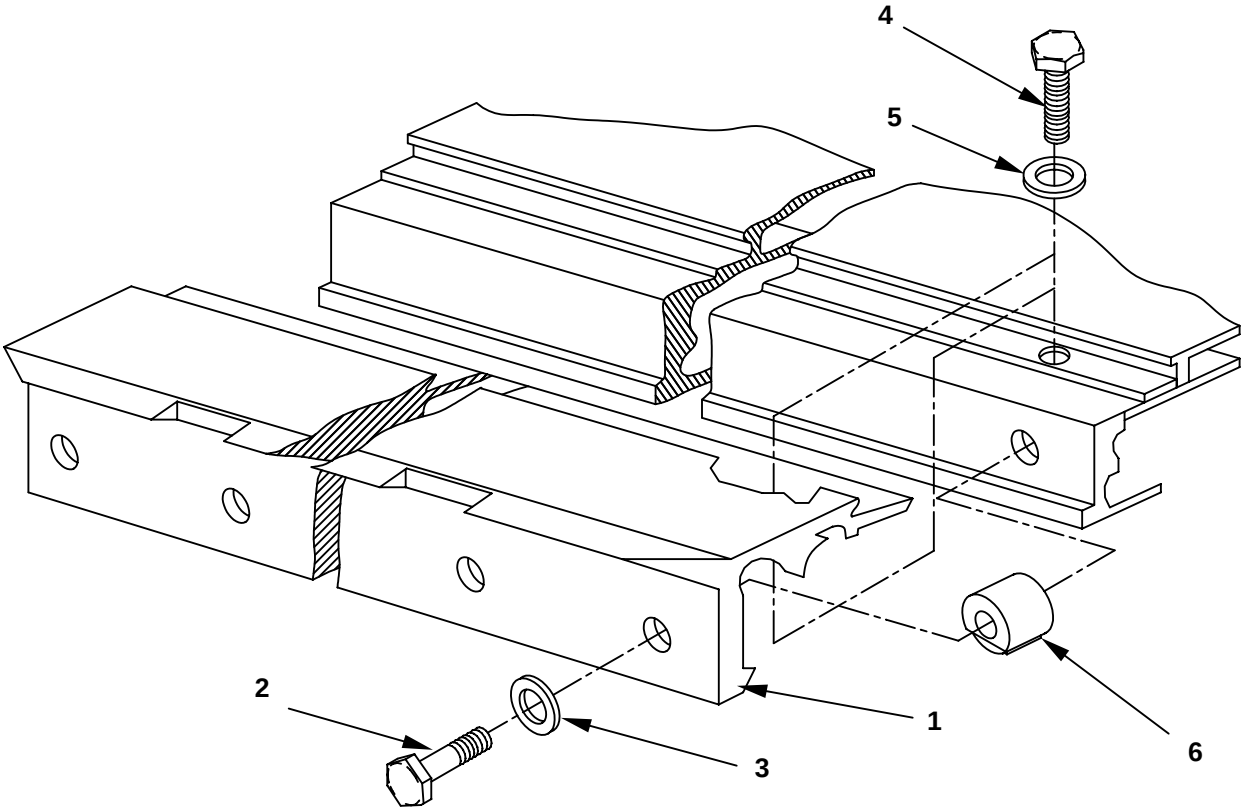

CLEANING

1. Remove dirt, grease, and foreign material, using plain water or a solution of detergent and water. Rinse with clean water.

2. Wipe dry with clean cloth.

3. Remove burrs by filing.

4. Remove corrosion with a wire brush.

INSPECTION

Inspect for wear, cracks, excessive corrosion, bends and bows.

REPLACEMENT

Replace parts that show any of the defects identified in INSPECTION above.

INSTALLATION

Install side rail as follows:
(Refer to illustration on following page.)

1. Select side rail **(1)** the same length as the platform.

2. Position side rail **(1)** along side of platform, overlapping roller pad.

NOTE

Do not hammer bolts to start them when attaching the side rail.

3. Install the side rail/out board roller pad bolts **(2)** and flat washers **(3)**. Start each bolt two or three turns by hand, and then using either a $^{9}/_{16}$-inch wrench or socket tighten to within one-quarter inch.

NOTE

When replacing the side rail for the type V platform, refer to the specific rigging manual for the placement of the suspension bracket assembly. For tandem link assemblies, omit the last three side rail bushings on each end of side rail.

NOTE

When replacing the side rail for the dual row platform, install side rail bolts, washers and bushings in holes 1-30 ONLY at this time. This allows for the installation of the outrigger link at a later time.

4. Replace bushings **(6)** by sliding in either end of side rail **(1)** and aligning with a side rail bolt-hole.

NOTE

Ensure all side rail bushings are present representative of the length of the platform IAW Table 1, WP 0012 05.

5. Install side rail bolts **(2)** and flat washers **(3)**. Start each bolt two or three turns by hand.

6. For the dual row platform, install the link IAW WP 0004 00.

7. For the type V platform, install the tandem link assembly to include side rail bolts **(2)** and flat washers **(3)** IAW WP 0004 00.

8. Fully tighten side rail bolts **(2)** and flat washers **(3)**, working from the center toward each end of platform.

9. Fully tighten side rail/outboard roller pad bolts **(4)** working from the center toward each end of platform.

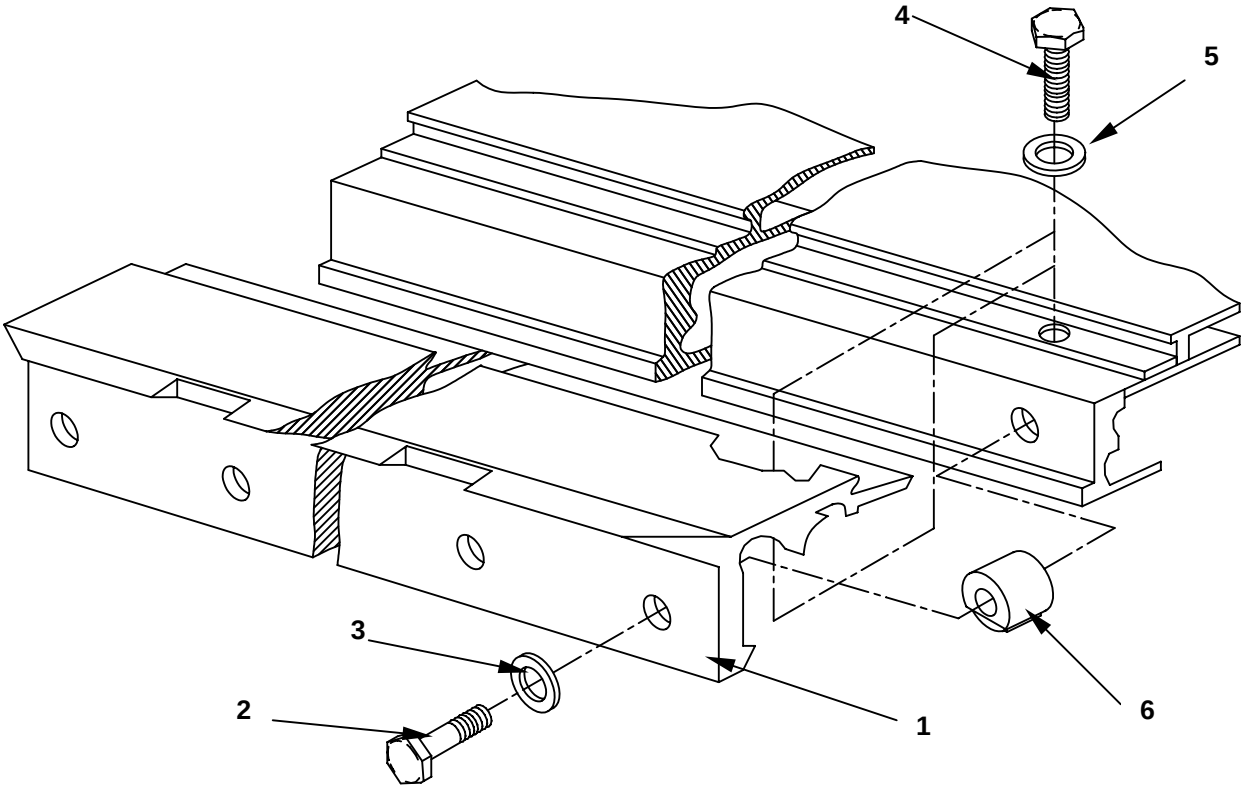

NOTE

Each suspension bracket assembly, when installed on the platform replaces 3 side rail bushings.

Table 1. Bolts, Washers, and Bushings Used on a Platform

Length of Platform								Component
8-Ft.	12-Ft.	16-Ft.	18-Ft.	20-Ft.	24-Ft.	28-Ft.	32-Ft.	
32	48	64	72	80	96	112	128	Side rail bolts
64	96	128	144	160	192	224	256	Roller pad bolts
32	48	64	72	80	96	112	128	Flat washers, side rail, ½-inch
64	96	128	144	160	192	224	256	Flat washers, Roller pad, $^{3}/_{8}$-inch
20	36	52	64	68	84	100	116	Side rail bushings

END OF WORK PACKAGE

UNIT MAINTENANCE
TYPE V AND DUAL ROW AIRDROP PLATFORM
ROLLER PAD

THIS WORK PACKAGE COVERS:

- Remove
- Clean
- Inspect
- Install

INITIAL SETUP:

Tools:
Brush, Wire (Item 2, WP 0020 00)
File, Mill (Item 7/8, WP 0020 00)
Punch, Aligning (Item 15, WP 0020 00)
Socket, ¾–IN. (Item 17, WP 0020 00)
Socket, $^{9}/_{16}$–IN. (Item 19, WP 0020 00)
Wrench, Box and Open, ¾–IN. (Item 23, WP 0020 00)
Wrench, Box and Open, $^{9}/_{16}$–IN. (Item 28, WP 0020 00)
Wrench, Impact, ½-IN. Drive (Item 30, WP 0020 00)

Materials/Parts:
Brush, Scrub (Item 1, WP 0036 00)
Dishwashing Compound (Item 3, WP 0036 00)
Rag, Wiping (Item 5, WP 0036 00)
Replacement parts from stock, as required.

Applicable Configurations:
All

Personnel Required:
Two – Three 92R (10) Parachute Rigger

General Safety Instructions:
Observe all Warnings and Cautions.

REMOVE
Remove roller pad as follows:

NOTE

To remove the outboard roller pads, the side rail must be loosened and retightened IAW WP 0012 00.

1. If removing an outboard roller pad, loosen side rail bolts ¼-inch using a ¾-inch wrench or socket.

2. Using either a $^{9}/_{16}$-inch wrench or socket, remove bolts **(1)** and flat washers **(2)** securing the roller pad **(3)** to platform.

NOTE

The number of bolts and washers will vary depending on the size of the platform.

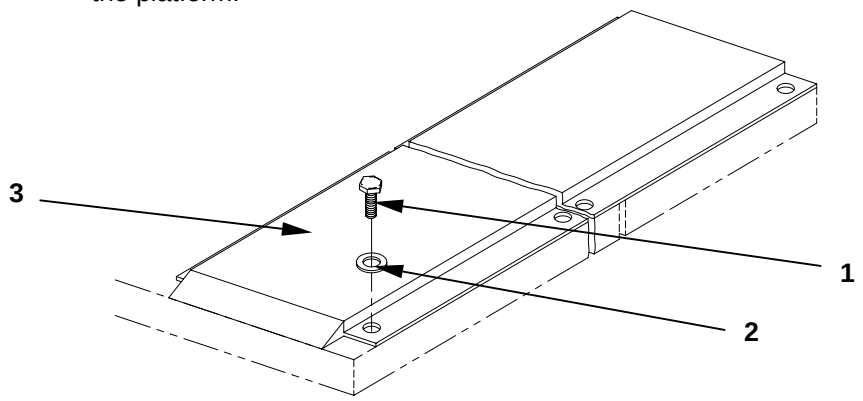

CLEANING

1. Remove dirt, grease, and foreign material, using clean, warm water or a solution of dishwashing compound and water.

2. Rinse with clean water.

3. Wipe dry with clean cloth.

4. Remove burrs by filing.

5. Remove corrosion with a wire brush.

INSPECTION

Inspect for wear, cracks, excessive corrosion, bends and bows.

REPLACEMENT

1. Replace parts that show any of the defects identified in INSPECTION above.

2. Replace roller pad if punctures or torn areas exceed 2-inches in diameter.

3. Replace roller pad if any torn areas protrude downward.

INSTALLATION

Install roller pad as follows:

1. Position the roller pad **(3)** on platform with angled end (nose skid) forward.

2. Install bolts **(1)** and flat washers **(2)**.

3. Use a punch to align bolt-holes in roller pad with floating nuts along edges of panels.

4. Start bolts two or three turns by hand. Using either a $^{9}/_{16}$-inch wrench or socket, tighten to within ¼-inch.

5. For inboard roller pads, fully tighten all bolts.

6. For outboard roller pads, fully tighten the inboard edge of the outboard roller pad.

7. To complete the installation of the outboard roller pad and retightening of the side rail, refer to WP 0012 00.

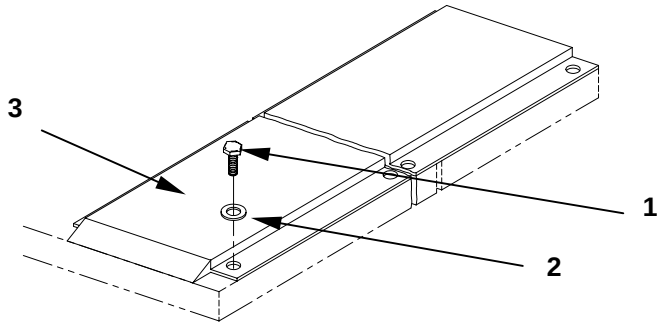

Table 1. Number of bolts and Washers Used in Roller Pads

Roller Pad	Length of Platform								Component
	8-Ft.	12-Ft.	16-Ft.	18-Ft.	20-Ft.	24-Ft.	28-Ft.	32-Ft.	
	64	96	128	144	160	192	244	256	Roller pad bolts
	64	96	128	144	160	192	244	256	Flat washers

END OF WORK PACKAGE

UNIT MAINTENANCE
TYPE V PLATFORM
REAR PANEL ASSEMBLY

THIS WORK PACKAGE COVERS:

- Remove
- Clean
- Inspect
- Install

INITIAL SETUP:

Tools:
Brush, Wire (Item 2, WP 0020 00)
File, Mill (Item 7/8, WP 0020 00)
Punch, Aligning (Item 15, WP 0020 00)
Socket, $^{3}/_{4}$–IN. (Item 17, WP 0020 00)
Socket, $^{5}/_{8}$–IN. (Item 18, WP 0020 00)
Socket, $^{9}/_{16}$–IN. (Item 19, WP 0020 00)
Wrench, Box and Open, ¾-IN. (Item 23, WP 0020 00)
Wrench, Box and Open, $^{5}/_{8}$–IN. (Item 27, WP 0020 00)
Wrench, Box and Open, $^{9}/_{16}$–IN. (Item 28, WP 0020 00)
Wrench, Impact, ½-IN. Drive (Item 30, WP 0020 00)

Materials/Parts:
Brush, Scrub (Item 1, WP 0036 00)
Dishwashing Compound (Item 3, WP 0036 00)
Rag, Wiping (Item 5, WP 0036 00)
Replacement parts from stock, as required.

Applicable Configurations:
Type V only.

Personnel Required:
Two – Three 92R (10) Parachute Rigger

General Safety Instructions:
Observe all Warnings and Cautions.

REMOVE
Remove rear panel assembly as follows:

NOTE

Removing all main panels is recommended. It is very difficult to remove the rear panel without removing all panels.

1. Position the platform upside down and remove side rails and rollers pads IAW WP 0012 00 and 0013 00.

2. Remove rear panel assembly **(1)** by slightly raising the panel to make disengaging easier.

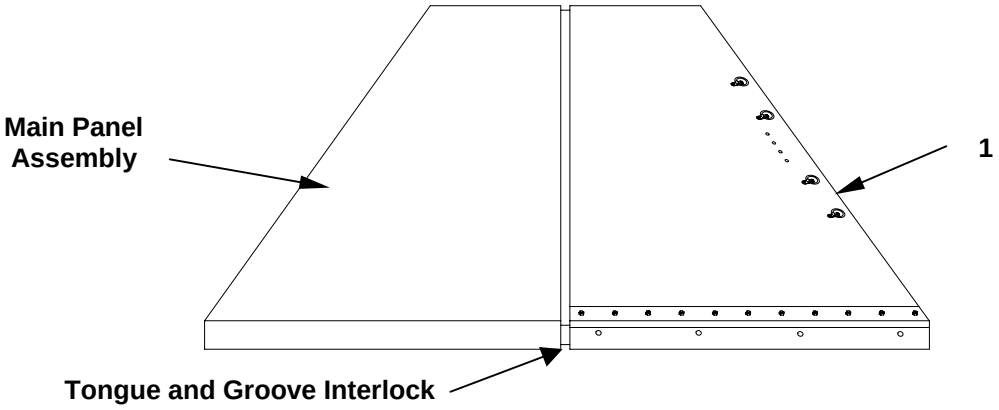

CLEAN

1. Remove dirt, grease, and foreign material, using plain water or a solution of detergent and water.
2. Rinse with clean water.
3. Wipe dry with clean cloth.
4. Remove burrs by filing.
5. Remove corrosion with a wire brush.
6. If applicable, remove rivet head corrosion with a wire brush.

INSPECT

1. Inspect for wear, cracks, excessive corrosion, bends, deformation and bows.
2. Inspect for punctures or torn areas exceeding 6-inches in diameter.
3. Inspect for damaged or missing tie down rings, floating nuts, or rivets.

REPLACE

1. Replace rear panel assembly **(1)** if it shows any of the defects identified INSPECTION above.
2. Replace rear panel **(1)** if interlocking tongue and groove is bent or twisted.
3. Replace rear panel assembly **(1)** if it is bowed more than $^{1}/_{16}$-inch along the 24-inch line or bowed more than ¼-inch along the 101-inch line.

INSTALL

Install rear panel assembly as follows:

1. Position rear panel assembly **(1)**, tie down rings down, and the leading edge of the panel next to rear edge of main panel assembly (trailing edge of rear panel assembly is identified by four holes in center).
2. Install by engaging tongue-and-groove interlock. Rise slightly to engage interlock.

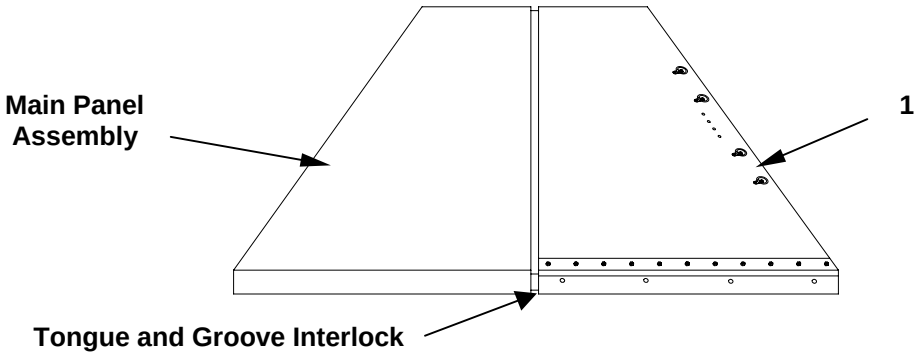

3. Reinstall roller pads and side rails IAW with WP 0012 00 and WP 0013 00.

END OF WORK PACKAGE

UNIT MAINTENANCE
TYPE V AND DUAL ROW AIRDROP PLATFORM
MAIN PANEL ASSEMBLY (TYPE V)/PANEL ASSEMBLY (DUAL ROW)

THIS WORK PACKAGE COVERS:
- Remove
- Clean
- Inspect
- Install

INITIAL SETUP:

Tools:
Brush, Wire (Item 2, WP 0020 00)
File, Mill (Item 7/8, WP 0020 00)
Punch, Aligning (Item 15, WP 0020 00)
Socket, $^{3}/_{4}$–IN. (Item 17, WP 0020 00)
Socket, $^{5}/_{8}$–IN. (Item 18, WP 0020 00)
Socket, $^{9}/_{16}$–IN. (Item 19, WP 0020 00)
Wrench, Box and Open, ¾-IN. (Item 23, WP 0020 00)
Wrench, Box and Open, $^{5}/_{8}$–IN. (Item 27, WP 0020 00)
Wrench, Box and Open, $^{9}/_{16}$–IN. (Item 28, WP 0020 00)
Wrench, Impact, ½-IN. Drive (Item 30, WP 0020 00)

Materials/Parts:
Brush, Scrub (Item 1, WP 0036 00)
Dishwashing Compound (Item 3, WP 0036 00)
Rag, Wiping (Item 5, WP 0036 00)
Replacement parts from stock, as required.

Applicable Configurations:
All

Personnel Required:
Two – Three 92R (10) Parachute Rigger

General Safety Instructions:
Observe all warnings and cautions.

REMOVE
Remove panel assembly as follows:
(Refer to illustration on following page.)

1. Position the platform upside down and remove outrigger assembly (if applicable), side rails and rollers pads IAW in WP 0012 00 and WP 0013 00.

2. Begin with the panel assembly at rear of platform and remove as many panels as necessary to replace the defective panel.

3. Remove panel assembly by slightly raising the panel to make disengaging easier.

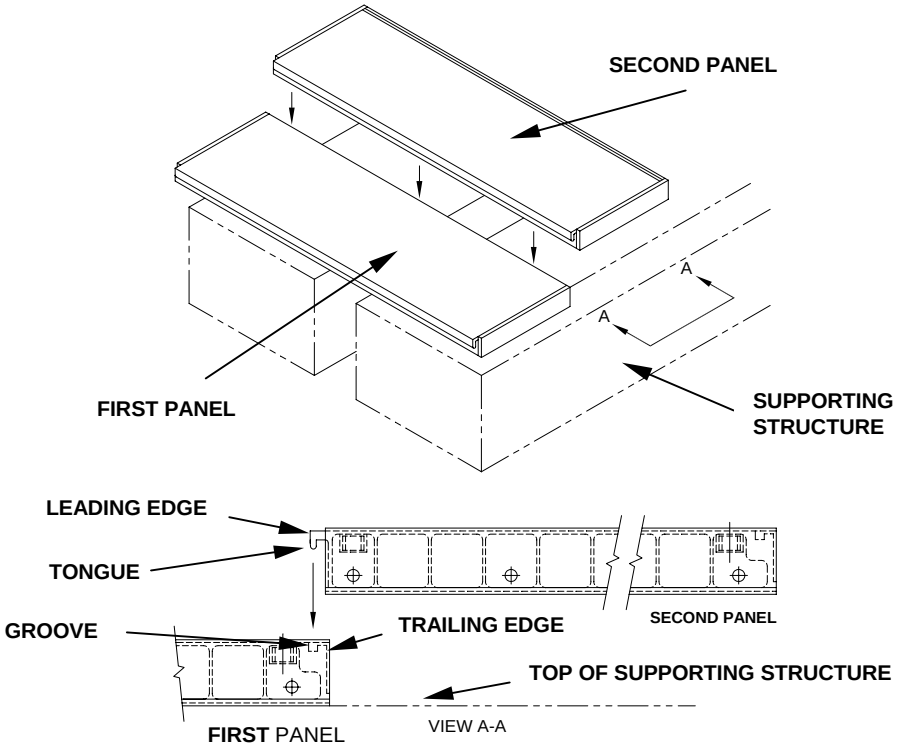

CLEAN

1. Remove dirt, grease, and foreign material, using plain water or a solution of detergent and water.
2. Rinse with clean water.
3. Wipe dry with clean cloth.
4. Remove burrs by filing.
5. Remove corrosion with a wire brush.

INSPECT

1. Inspect for wear, cracks, excessive corrosion, bends, deformation and bows.
2. Inspect for punctures or torn areas exceeding 6-inches in length or diameter. Inward punctures are acceptable but outward punctures are not.
3. Inspect for damaged or missing tie down rings, floating nuts, or rivets.

REPLACE

1. Replace parts that show any of the defects identified in INSPECTION above.
2. Replace panel assembly if interlock in tongue and groove is bent or twisted.

INSTALL
Install panel as follows:

1. Position panel assembly or assemblies in place.

2. Engage the tongue-and-groove Interlock of each panel with the next panel assembly until all of the panel assemblies have been installed.

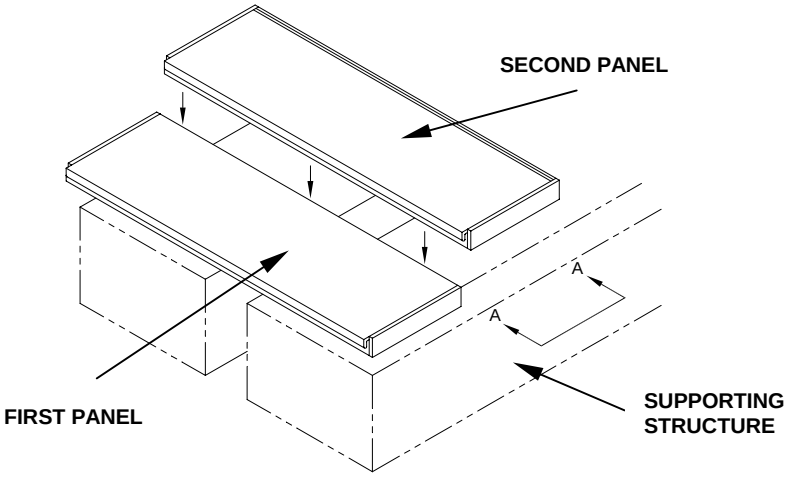

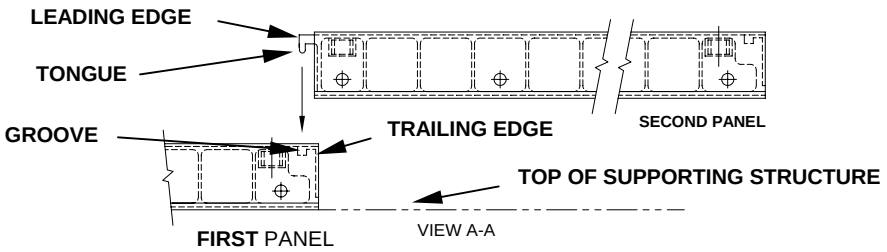

3. Reinstall roller pads, side rails and outrigger assembly (if applicable) IAW WP 0012 00, WP 0013 00, and WP 0016 00.

END OF WORK PACKAGE

UNIT MAINTENANCE
TYPE V AND DUAL ROW AIRDROP PLATFORM
OUTRIGGER ASSEMBLY

THIS WORK PACKAGE COVERS:
- Remove
- Clean
- Inspect
- Replace
- Install

INITIAL SETUP:
Tools:
Bar, Pry (Item 1, WP 0020 00)
Brush, Wire (Item 2, WP 0020 00)
File, Mill (Item 7/8, WP 0020 00)
Socket, ¾-IN. (Item 17, WP 0020 00)
Socket, $^{9}/_{16}$-IN. (Item 19, WP 0020 00)
Wrench, Box and Open, ¾-IN. (Item 23, WP 0020 00)
Wrench, Box and Open, $^{9}/_{16}$-IN. (Item 28, WP 0020 00)
Wrench, Impact (Item 30, WP 0020 00)

Materials/Parts:
Brush, Scrub (Item 1, WP 0036 00)
Dishwashing Compound (Item 3, WP 0036 00)
Locktite, Thread, Blue (Item 4, WP 0036 00)
Rag, Wiping (Item 5, WP 0036 00)
Tape, Adhesive, 2-IN. (Item 6, WP 0036 00)
Webbing, Tiedown, CGU-1B (Item 8, WP 0036 00)

Applicable Configurations:
All

Personnel Required:
Two/Three, 92R (10) Parachute Rigger

General Safety Instructions:
Observe all warnings and cautions.

REMOVE
1. Remove outrigger assembly as follows:

   a. Place the platform on the dedicated assembly area so that the installation holes on the two panels with outriggers installed are accessible from the bottom of the platform.

CAUTION

Outrigger mast assemblies cannot stand on their own. All personnel must stand clear of the path of the fall of the mast assemblies during disassembly of outrigger masts.

   b. One person stands between the upright outrigger mast assemblies and holds them in place by the handles. A second person releases the CGU-1B cargo tie down strap holding the mast assemblies together.

   c. While one-person holds one mast assembly upright, two people lower the other mast assembly into the mast link cradle area on the link, retracting the knob handles. Two persons then lower the second mast assembly into the second mast link.

2. Remove the outrigger foot as follows:

   a. Remove the quick release pin at the end of mast.

   b. Remove shaft (bracket, eye, non-rotating shaft) to release foot.

3. Remove the outrigger mast as follows:

   a. Remove quick release pin at pivot end of mast.

   b. Remove shaft pivot pin.

   c. Retract knob handles to release latch pins and remove mast from link, using handle provided.

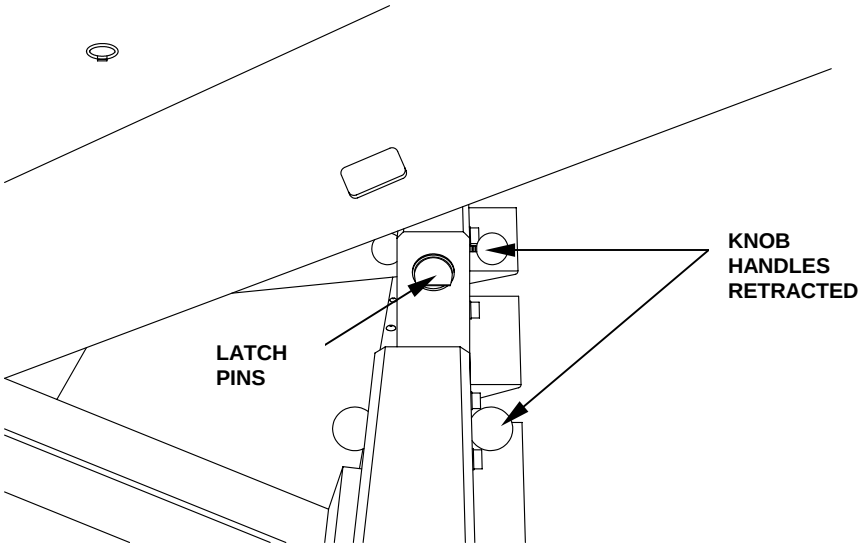

4. Remove Weldment as follows:

   a. Using either a ¾-inch wrench or socket, loosen side rail bolts (numbers 27-36).

   b. Using a ¾-inch wrench or socket, loosen the four ½-inch diameter x 4 ½-inch cap bolts fastening link to weldment.

   c. Using a $^{9}/_{16}$-inch wrench or socket, remove the $^{3}/_{8}$-inch diameter x 4-inch bolts fastening weldment to platform.

   d. Remove ½-inch diameter x 4½-inch cap bolts fastening link to weldment. Remove weldment.

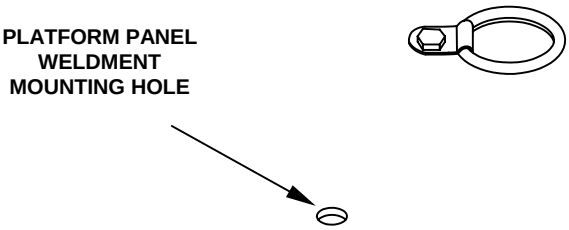

5. Remove Link as follows:

   a. Using a ¾-inch socket or wrench, remove side rail bolts (numbers 31-36), washers and spacers.

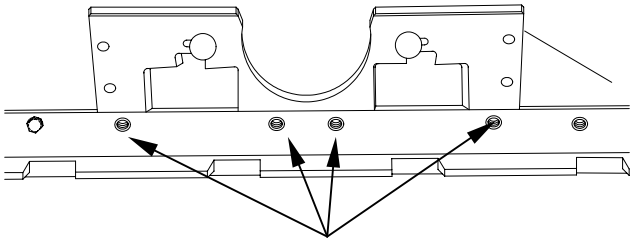

   b. Slide link from platform end, using a pry-bar if necessary to open the groove between the platform rail and platform panel end fitting.

   c. Replace side rail bolts, washers and spacers. Using a ¾-inch socket or wrench, re-tighten side rail bolts (numbers 27-36).

   d. Repeat steps 1. through 5. for opposite outrigger assembly.

CLEAN

1. Remove dirt, grease, and foreign material, using clean, warm water or a solution of dishwashing compound and water.

2. Rinse with clean water.

3. Wipe dry with clean cloth.

4. Remove burrs by filing.

5. Remove corrosion with a wire brush.

INSPECT

Inspect for wear, cracks, excessive corrosion, bends, deformation and bows.

REPLACE

1. Replace parts that show any of the defects identified in INSPECTION above.

2. Specified maintenance procedures for the mast assembly are as follows:

   a. Replace Handle.

      (1) Using a ¼-inch allen wrench, remove the two cap head screws securing the mast handle to the mast and remove handle. Discard damaged parts.

      (2) Reposition handle components and thread the two cap screws into the mast and secure using a ¼-inch allen wrench.

   b. Replace Eyebolt.

      (1) Using a $^{9}/_{16}$-inch wrench or socket to secure the eyebolt nut, position a pry bar through the eyebolt to gain the leverage needed to remove the nut.

(2) Reposition the replacement eyebolts aligning them vertically with the mast.

(3) Secure the eyebolt to the mast by once again routing a pry bar through the eyebolt and tighten the nut with a $^{9}/_{16}$-inch wrench or socket.

c. Replace Link Knob.

(1) Replace a damaged knob by simply unscrewing the knob from the link and screwing on a serviceable knob in its place.

d. Quick Release Pin Lanyard Assembly.

(1) Should the quick release pin lanyard fray or separate from the quick release pin, remove the lanyard from the mast using a $^{5}/_{32}$-inch allen wrench and remove the cap head screw.

(2) Obtain a serviceable quick release pin with lanyard and attach to the mast handle mast using a $^{5}/_{32}$-inch allen wrench and re-installing the cap head screw.

INSTALL

1. Install the link on each side of the aft end of the platform as follows:

a. If applicable, remove (pry out) the two black plastic hole plugs in the rear panel, closest to the panel joint line, and the two black hole plugs in the adjacent panel, closest to the panel joint line. Push out, through these holes, the four black plastic plugs on the opposite surface. Save these plugs for use in remaining panels as required.

CAUTION

Use of a pry-bar should not be necessary during the initial assembly of the dual row platform. If using a pry bar to install the PFA link on an assembled platform, exercise extreme caution to avoid bowing the side rail.

b. Using a ¾-inch wrench or socket, remove side rail bolts (numbers 31-36), washers and spacers.

c. Slide each link into the groove between the platform rail and the platform panel end fitting. Use a pry-bar if necessary to open the groove as the link is inserted.

d. Slide link forward until its bolt-holes are matched up with platform clevis bolt-holes 31 through 34.

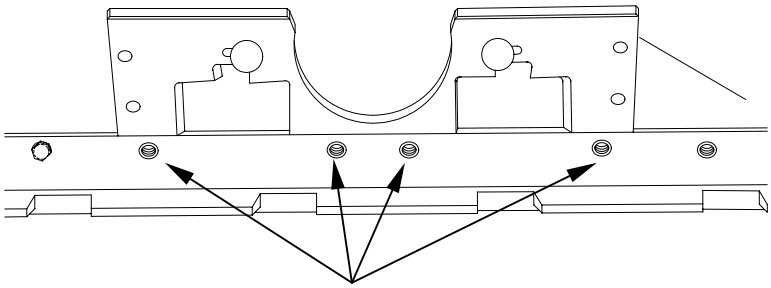

BOLT HOLES 31-34

e. Install four ½-inch X 3 $^{7}/_{32}$-inch side rail bolts, and ½-inch flat washers, on each side of the platform into clevis bolt-holes 31 through 34 and corresponding holes in the fitting.

(1) Install the two remaining side rail bolts (35 and 36), washers and bushings. Start the bolts two or three turns by hand.

f. Using a ¾-inch wrench or socket, tighten the side rails bolts to within one-quarter inch of the top of the flat washer.

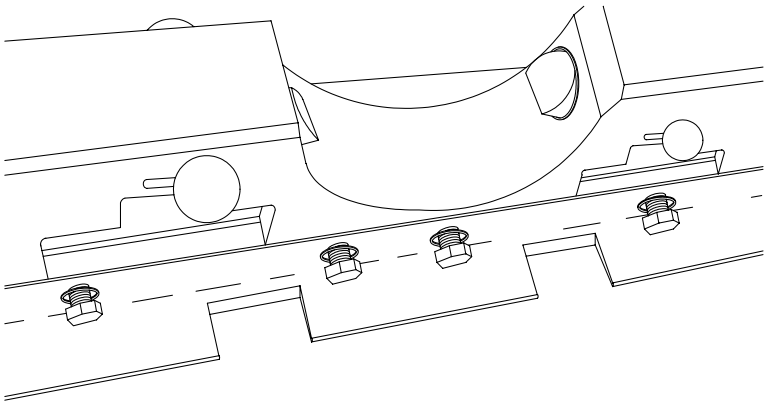

g. Working from the outside to the inside (side rail bolt 31 then 36), tighten the remaining side rail bolts (31 through 36).

2. Install the weldment on each side of the aft end of the platform as follows:

a. Position weldment so the 2 bolt-holes at each end match up with bolt holes on the link.

b. Install ½-inch diameter x 4½-inch cap bolts; insert bolts from the outside of the link assembly. Use a flat washer under bolt head and nut. Start the bolts two or three turns by hand.

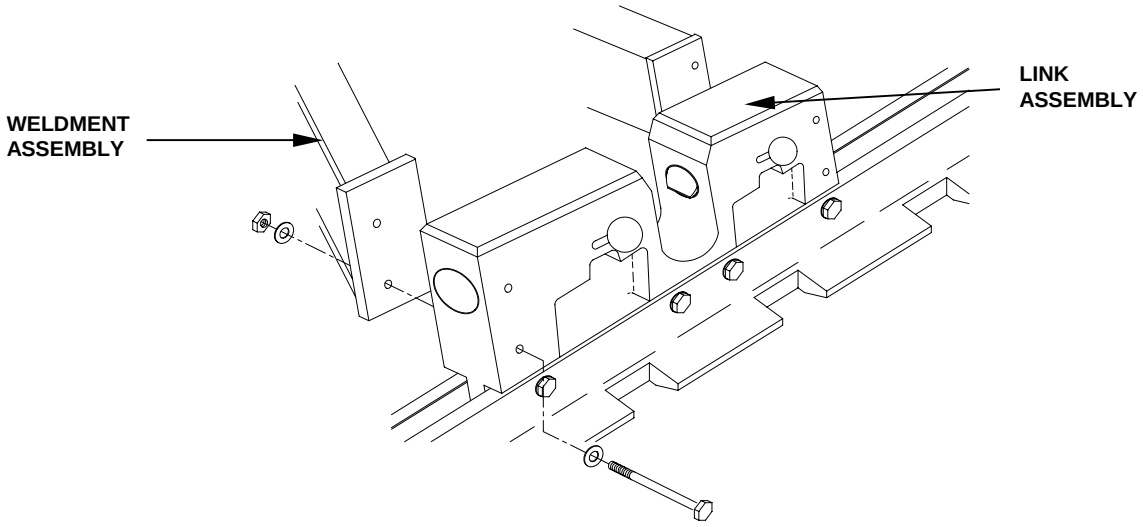

c. Pass a $^{3}/_{8}$-inch diameter by 4-inch bolt through 2-inch diameter by ¼-inch thick jumbo washer.

d. Perform alignment check by passing bolt through weldment bolt-hole and corresponding platform panel bolt-hole from top to botom.

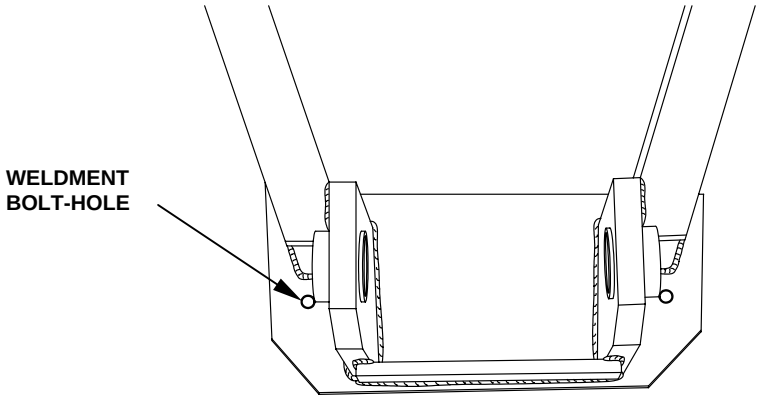

e. Reposition weldment if necessary. Install bolt and washer from the underside of the platform. Thread a $^{3}/_{8}$-inch nut onto bolt by hand. Repeat for remaining bolt-holes on assembly.

f. Using a ¾-inch wrench or socket, tighten the weldment to the link.

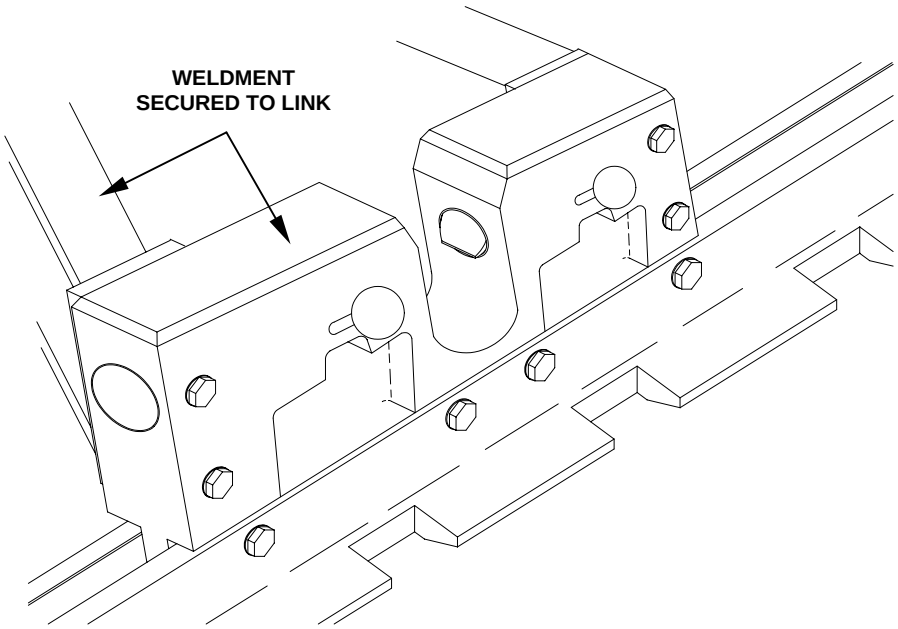

g. Using a $^{9}/_{16}$-inch wrench or socket, tighten the weldment to the platform panel.

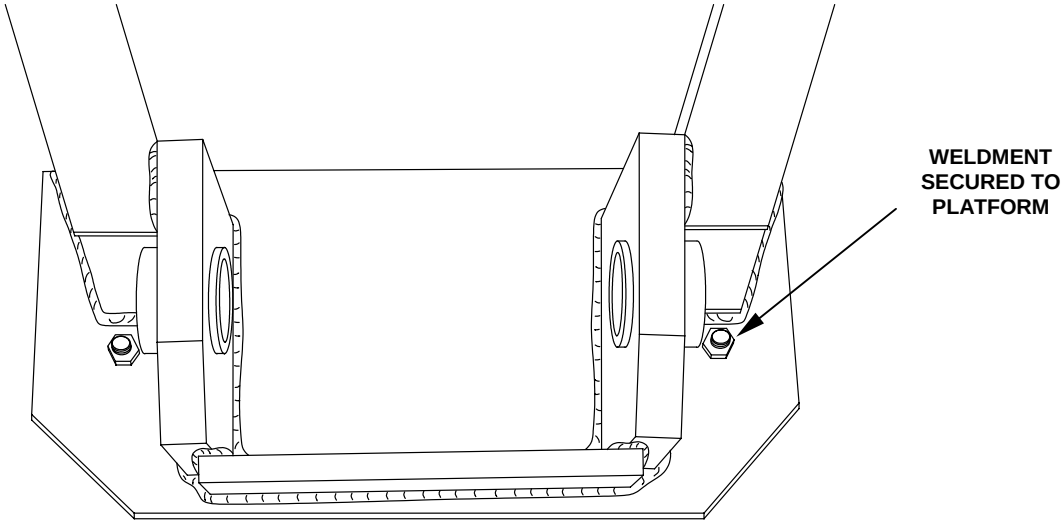

3. Install outrigger assembly as follows:

a. Installation of outrigger mast.

(1) Install the outrigger mast onto the mounted link in a horizontal position. Each mast can be mounted to either side of the platform. Position mast so that handle is up and at end away from platform.

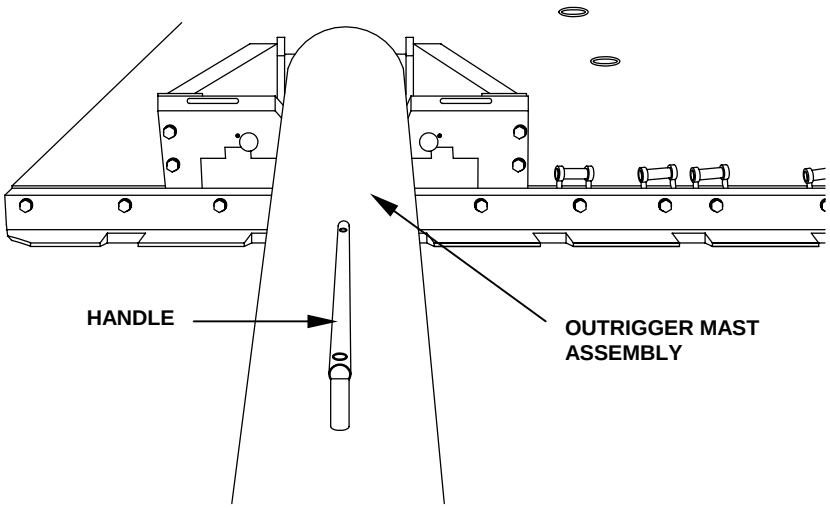

CAUTION

Keep hands and feet away from the cradle area as the mast is lowered.

(2) Lower pivot end of mast (close to rectangular latch holes), using handle provided, into the pivot end of the weldment, until it comes to rest in mast the link. The latch pins in the link will slide into place, locking the mast in place.

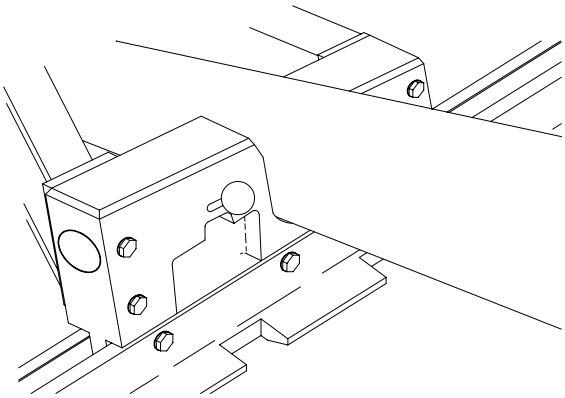

Dual Row Mast Seated

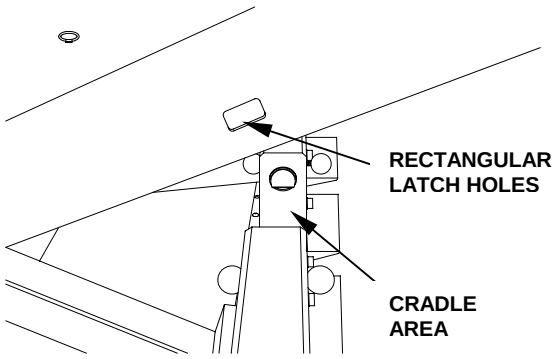

Dual Row Mast Lowered

(3) Install shaft through both assemblies. Install quick release pin attached by lanyard at end of mast to secure pivot pin in place. Ensure lanyard is inside mast tube.

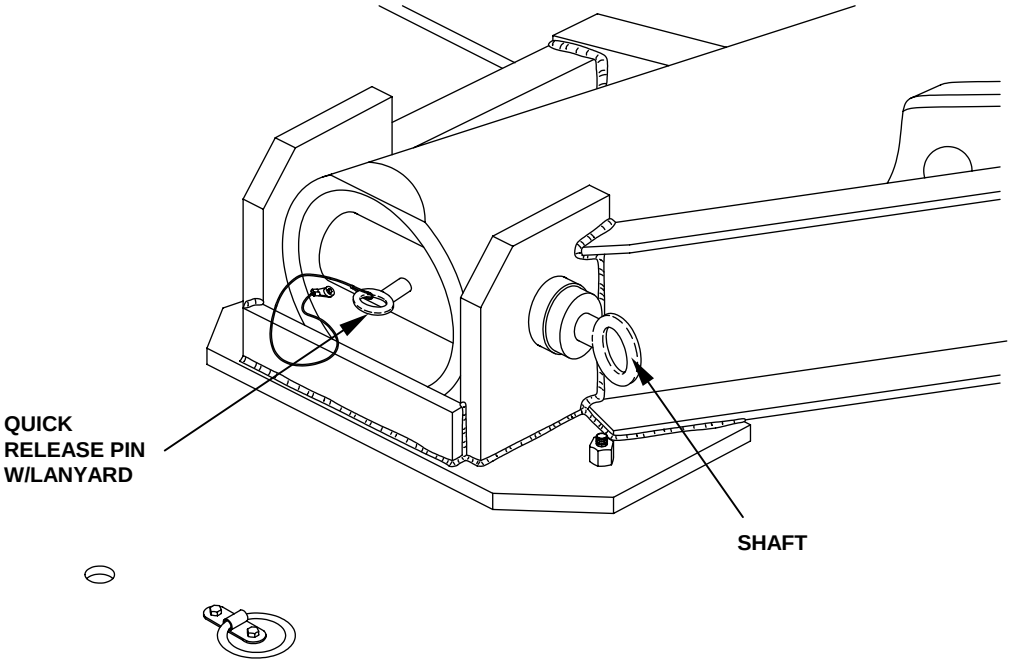

(4) Repeat steps (1) through (3) for opposite outrigger mast.

b. Installation of outrigger foot.

(1) Position foot so handle is facing up and at far end of foot.

(2) Align holes of mast and foot, install foot shaft through both holes.

(3) Install quick release pin in the end of mast to secure shaft in place.

(4) Ensure lanyard is inside mast tube.

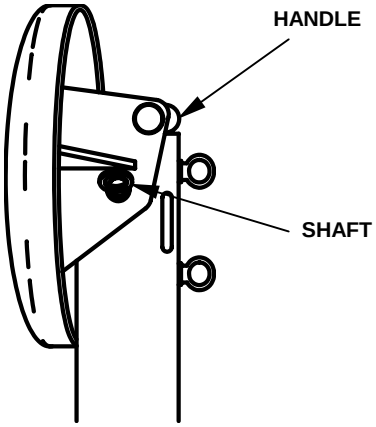

(5) Repeat steps for opposite outrigger foot.

4. Temporarily securing outrigger masts in place for airdrop. Three personnel are required for this task.

CAUTION

Outrigger Masts cannot stand on their own. All personnel must stand clear of the path of the fall of the mast assemblies while securing outrigger masts. Failure to do so could cause personal injury.

a. Two persons retract knob handles on link and rotate one mast assembly to its vertical position. (To unlock the mast assemblies, pull back on the knob handles on link and raise the mast assembly at the foot end).

b. One-person holds mast upright while two persons repeat above procedure with opposite mast.

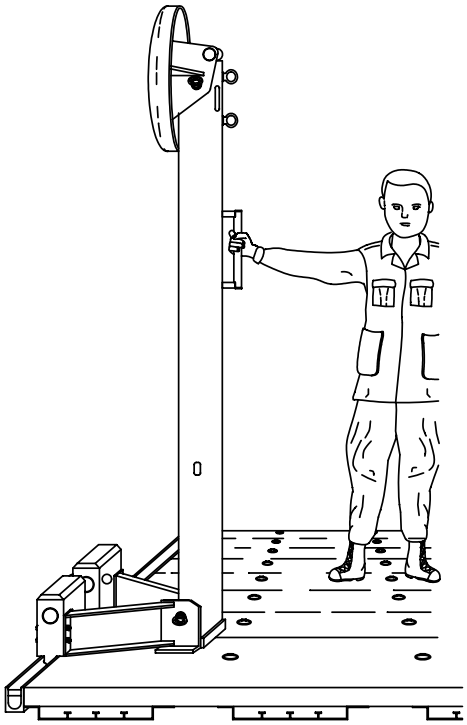

CAUTION

CGU-1B tie down strap must be tightened before masts can be released. Failure to do so could cause personal injury.

c. Install CGU-1B cargo tie-down strap around both outriggers.

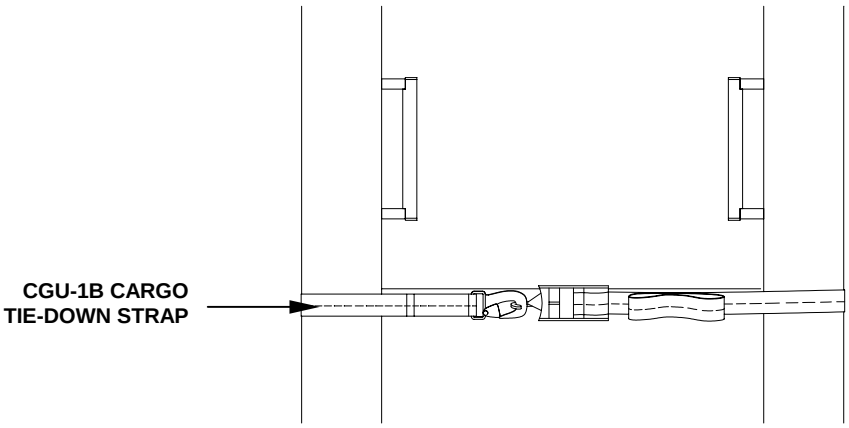

d. Two sets of eyebolts are provided at the foot end of each mast assembly. Inspect for burrs, and remove any burrs with file. Apply 2-inch adhesive tape to the edges of the eyebolts to prevent sharp edges from cutting the tie line.

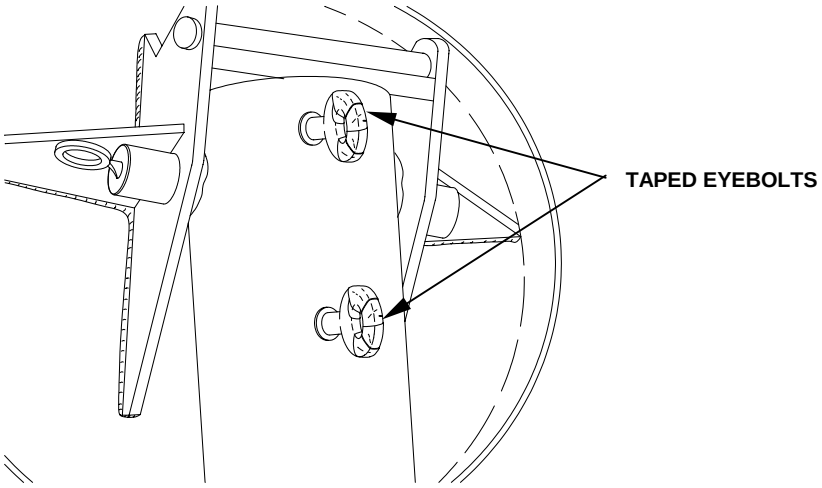

END OF WORK PACKAGE

SUPPORTING INFORMATION
TYPE V AND DUAL ROW AIRDROP PLATFORM
PREPARATION FOR STORAGE

THIS WORK PACKAGE COVERS:
- Storage Criteria
- General Storage Requirements
- Specific Storage Requirements
- Administrative Storage

INITIAL SETUP:

Applicable Configurations:
All

General Safety Instructions:
Observe all warnings and cautions.

Personnel Required:
92R (10) Parachute Rigger

STORAGE CRITERIA

Administrative storage of the type V and dual row airdrop platform will be accomplished in accordance with AR 750-1, and the instructions furnished below.

GENERAL STORAGE REQUIREMENTS

To ensure that serviceability standards of stored airdrop equipment are maintained, every effort will be extended to adhere to the following storage requirements:

1. When available, a heated building should be used, however, type V and dual row airdrop platform may be stored outside in all types of weather if indoors storage is unavailable. Stack the different size type V platforms in such a way that the shorter platforms are on top of the larger platforms.

2. Airdrop platforms should be stored in a dry, well-ventilated location and protected from pilferage and fire.

3. Airdrop platforms will not be stored in a manner, which would interfere with light fixtures, heat vents, and fire fighting devices.

4. Airdrop platforms will not be stored in damaged facilities or dirty conditions.

5. All stored platforms will be marked, segregated, and located for accessibility and easy identification.

6. Storage will be accommodated using dunnage to provide airspace between the storage area floor and the equipment.

7. All available materials handling equipment (MHE) should be used as much as possible in the handling of the airdrop platforms.

8. Conversion of available space, proper housekeeping policies, and strict adherence to all safety regulations will be practiced at all times.

OUTSIDE STORAGE OF TYPICAL 8-FOOT TYPE V PLATFORMS

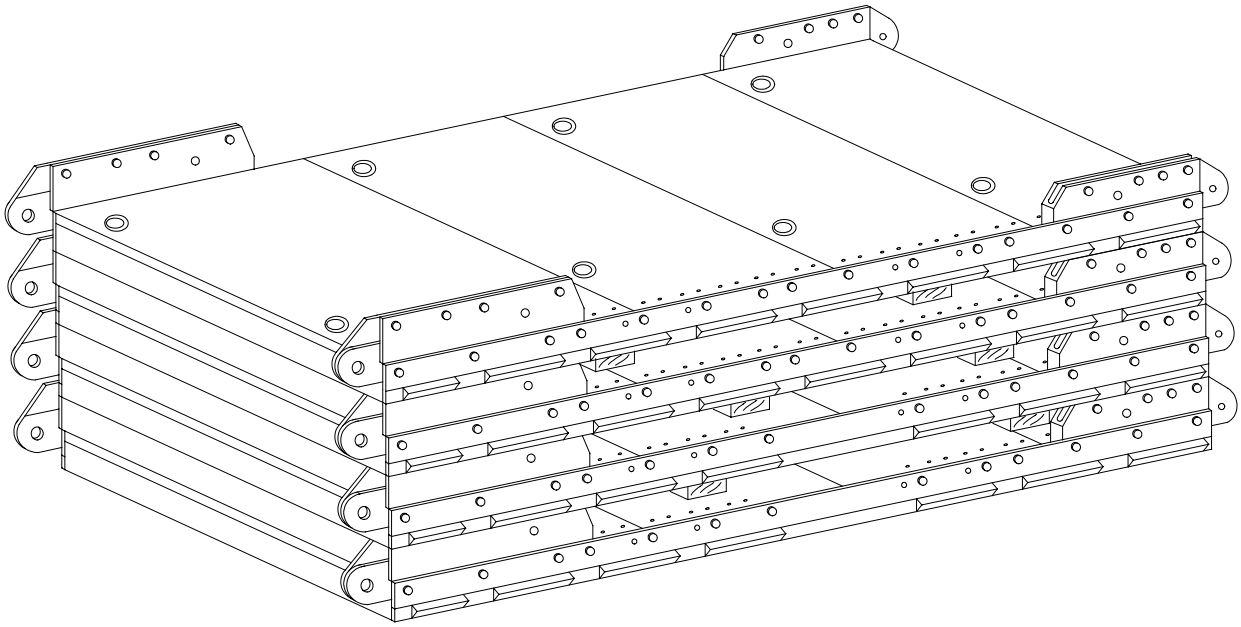

OUTSIDE STORAGE OF ASSEMBLED TYPICAL 16, 20, 24 AND 28-FOOT TYPE V PLATFORMS

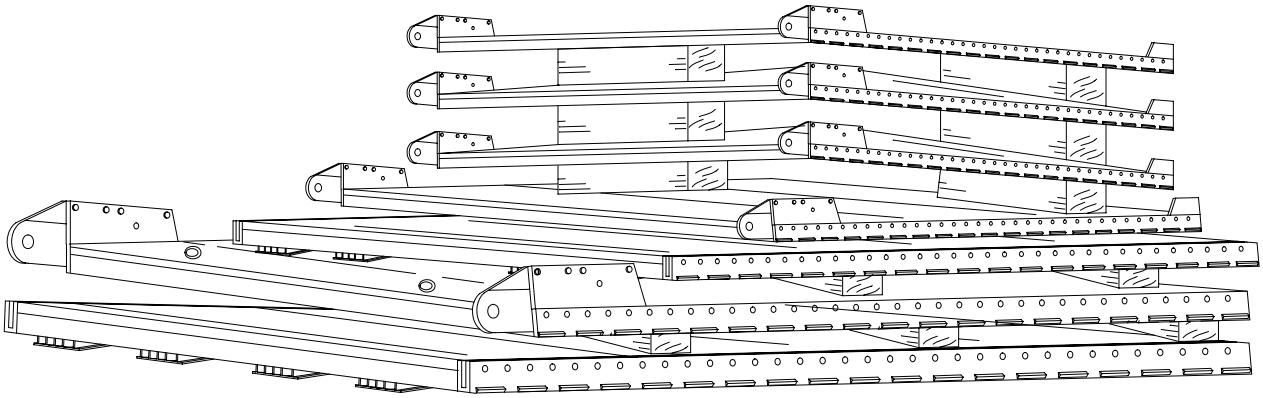

OUTSIDE STORAGE OF TYPICAL DUAL ROW PLATFORMS WITHOUT OUTRIGGER ASSEMBLIES

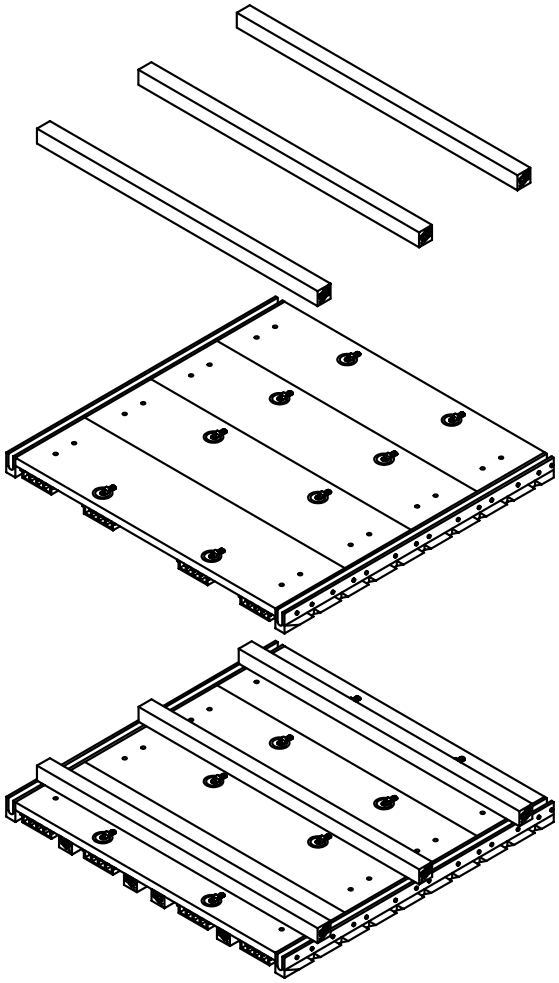

SPECIFIC STORAGE REQUIREMENTS

Due to the unique design of the dual row airdrop platform specific storage requirements exists. Adhere to the following storage requirements:

Stack the dual row airdrop platform as follows:

CAUTION

When stacking or moving the Dual Row platform assemblies with Material Handling Equipment (MHE), do not lift more than two dual row platforms at one time. Ensure that the MHE lifting forks are at the maximum width and that fork extensions are used. Lift no more than ONE platform without the wooden spacers in position.

1. After the initial installation of the outrigger assembly, the mast and foot assembly should be removed so that the platforms can be stacked for storage. With the link and weldment installed on the platform, the distance between the platforms needed for stacking is a minimum six inches. The mast and foot assembly can be stored separately. At the time loads are being rigged, it is recommended that the outrigger mast and foot assemblies be attached last in the rigging process.

2. Dual Row Airdrop Platform Assemblies may be neatly stacked up to ten high providing that a minimum of three wooden spacers, with an actual lumber dimension of 6-inches by 6-inches by 84-inches long, are positioned as follows:

   a. Place one wooden spacer in the center of the platform.

   b. Place one wooden spacer in the center of the first platform panel.

   c. Place one wooden spacer in the center of the last platform panel.

   d. The bottom platform shall be supported in the same fashion as the platforms stacked on top of it.

   e. Platforms will be stored with wooden spacers in position.

ADMINISTRATIVE STORAGE

Administrative storage represents a short-term period with duration of 1 to 45 days. It covers storage of equipment, which can be prepared for mission within 24-hours. Before placing the platforms in administrative storage, perform preventive maintenance checks and services and correct all known deficiencies.

END OF WORK PACKAGE

SUPPORTING INFORMATION
TYPE V AND DUAL ROW AIRDROP PLATFORM
PREPARATION FOR SHIPMENT

THIS WORK PACKAGE COVERS:
- Shipment

INITIAL SETUP:

Applicable Configurations:
All

General Safety Instructions:
Observe all warnings and cautions.

Personnel Required:
92R (10) Parachute Rigger

SHIPMENT

Initial Shipment. The Initial packaging and shipping of airdrop components is the responsibility of item manufactures that are required to comply with overseas shipping requirements. Except for those airdrop components that are unpackaged and subjected to random inspections or testing by depot activity, type V and dual row airdrop platforms received by a using unit will be contained in original packaging materials.

Shipping Between Maintenance Activities. The shipping of airdrop components between maintenance activities will be accomplished on a signature basis using whatever means of available military transportation. Used airdrop components will be tagged as prescribed in DA PAM 738-751 and placed into a suitable used container. Unused airdrop components will be transported in original shipping containers. During shipment, every effort will be made to protect airdrop components from weather elements, dust, dirt, oil, and petroleum products.

Other Shipping Instructions. Type V and dual row airdrop platforms destined for domestic or overseas shipment will be packaged and marked in accordance with AR 700-15, TM 38-230-1, and TM 38-230-2. Shipment of airdrop components will be accomplishment in accordance with TB 55-45.

END OF WORK PACKAGE

SUPPORTING INFORMATION
TYPE V AND DUAL ROW AIRDROP PLATFORM
REFERENCES

THIS WORK PACKAGE COVERS:

- Scope
- Publication Indexes
- Forms
- Army Regulations
- DA PAM
- Field Manuals
- Technical Bulletins
- Technical Manuals
- Air Force Technical Orders
- Air Force Technical Order Forms
- Marine Corps Forms

SCOPE

This appendix lists all forms, technical manuals, and miscellaneous publications referenced in this manual.

PUBLICATION INDEXES

The following publication indexes should be consulted frequently for the latest changes or revisions of references given in this appendix, and for new publications relating to the material covered in this manual:

FORMS

Accident Identification Card	DD Form 518
Equipment Inspection and Maintenance Work Sheet	DA Form 2404
Maintenance Request	DA Form 5504
Product Quality Deficiency Report	SF 368
Recommended Changes to DA Publications	DA Form 2028
Parachute Log Record	DA Form 3912

ARMY REGULATIONS

Dictionary of United States Army Terms	AR 310-25
Authorized Abbreviations, Brevity Codes and Acronyms	AR 310-50
Packing of Material	AR 700-15
Air Drop, Parachute Recovery, and Aircraft Personnel Escape System	AR 750-32
Army Materiel Maintenance Policy and Retail Maintenance Operations	AR 750-1

DA PAM

Consolidated Index of Army Publications and Blank Forms	DA PAM 25-30
Functional Users Manual for The Army Maintenance Management System (TAMMS)	DA PAM 738-750
Functional Users Manual for The Army Maintenance Management System (Aviation) (TAMMSA)	DA PAM 738-751

FIELD MANUALS

Airdrop of Supplies and Equipment: Rigging Airdrop Platform	FM 4-20.102 (10-500-2)
First Aid for Soldiers	FM 4-25.11 (FM 21-11)

TECHNICAL BULLETINS

Maintenance Expenditure Limits for FSC Group 16, FSC Class 1670	TB 43-0002-43

TECHNICAL MANUALS

Organizational and Direct Support Maintenance Manual for General Maintenance of Parachutes and Other Airdrop Equipment	TM 10-1670-201-23/ T.O. 13C-1-41/NAVAIR 13-1-17
Preservation, Packaging, Packing of Military Supplies and Equipment (Vols. 1 and 2)	TM 38-230-1 and TM 38-230-2
Procedures for the Destruction of Air Delivery Equipment to Prevent Enemy Use	TM 43-0002-1/T.O. 13C3-1-10/NAVAIR 13-1-19

AIR FORCE TECHNICAL ORDERS

Cleaning of Parachute Assemblies	T.O. 14D1-1-2
Parachute Logs and Records	T.O. DO-25-241

AIR FORCE TECHNICAL ORDER FORMS

Parachute Log	AFTO 391
Parachute Repack Inspection and Component Card	AFTO 392

MARINE CORPS FORMS

Marine Corps Military Incentive Awards Program	MCO 1650.17F
Product Quality Deficiency Report (PQDR)	MCO 4855.10B
Recommended Changes to Technical Publications	NAVMC 10772
Military Transportation and Movement Procedures	DOD 4500.32-R VOL 1

END OF WORK PACKAGE

SUPPORTING INFORMATION
TYPE V AND DUAL ROW AIRDROP PLATFORM
MAINTENANCE ALLOCATION CHART (MAC)

INTRODUCTION

The Army Maintenance System MAC

This introduction provides a general explanation of all maintenance and repair functions authorized at various maintenance levels under the standard Army Maintenance System concept.

The MAC (immediately following the introduction) designates overall authority and responsibility for the performance of maintenance functions on the identified end item or component. The application of the maintenance functions to the end item or component will be consistent with the capacities and capabilities of the designated maintenance levels, which are shown in the MAC in column (4) as:

Unit – includes two sub-columns, C (operator/crew) and O (unit) maintenance
Direct Support – includes an F sub-column
General Support – includes an H sub-column
Depot – includes a D sub-column

The tools and test equipment requirements (immediately following the MAC) list the tools and test equipment (both special tools and common tool sets) required for each maintenance function as referenced from the MAC.

The remarks (immediately following the tools and test equipment requirements) contain supplemental instructions and explanatory notes for a particular maintenance function.

Maintenance Functions

Maintenance functions are limited to and defined as follows:

1. Inspect. To determine the serviceability of an item by comparing its physical, mechanical, and/or electrical characteristics with established standards through examination (e.g., by sight, sound, feel). This includes scheduled inspection and gagings and evaluation of canon tubes.

2. Test. To verify serviceability by measuring the mechanical, pneumatic, hydraulic, or electrical characteristics of an item and comparing those characteristics with prescribed standards on a scheduled basis, i.e., load testing of lift devices and hydrostatic testing of pressure hoses.

3. Service. Operations required periodically to keep an item in proper operating condition, e.g., to clean (includes decontaminate, when required), to preserve, to drain, to paint, or to replenish fuel, lubricants, chemical fluids, or gases. This includes scheduled exercising and purging of recoil mechanisms.

4. Adjust. To maintain or regulate, within prescribed limits, by bringing into proper or exact position, or by setting the operating characteristics to specified parameters.

5. Align. To adjust specified variable elements of an item to bring about optimum or desired performance.

6. Calibrate. To determine and cause corrections to be made or to be adjusted on instruments of test, measuring, and diagnostic equipment used in precision measurement. Consists of comparisons of two instruments, one of which is a certified standard of known accuracy, to detect and adjust any discrepancy in the accuracy of the instrument being compared.

7. Remove/Install. To remove and install the same item when required to perform service or other maintenance functions. Install may be the act of emplacing, seating, or fixing into position a spare, repair part, or module (component or assembly) in a manner to allow the proper functioning of an equipment or system.

8. Replace. To remove an unserviceable item and install a serviceable counterpart in its place. “Replace” is authorized by the MAC and assigned maintenance level is shown as the third position code of the Source, Maintenance, and Recoverability (SMR) code.

9. Repair. The application of maintenance services, including fault location/troubleshooting, removal/installation, and disassembly/assembly procedures, and maintenance actions to identify troubles and restore serviceability to an item by correcting specific damage, fault, malfunction, or failure in a part, subassembly, module (component or assembly), end item, or system.

NOTE

The following definitions are applicable to the “repair” maintenance function:

Services – Inspect, test, service, adjust, align, calibrate, and/or replace.

Fault location/troubleshooting – The process of investigating and detecting the cause of equipment malfunctioning; the act of isolating a fault within a system or Unit Under Test (UUT).

Disassembly/assembly – The step-by-step breakdown (taking apart) of a spare/functional group coded item to the level of its least component, that is assigned an SMR code for the level of maintenance under consideration (i.e., identified as maintenance significant).

Actions – Welding, grinding, riveting, straightening, facing, machining, and/or resurfacing.

10. Overhaul. That maintenance effort (service/action) prescribed to restore an item to a completely serviceable/operational condition as required by maintenance standards in appropriate technical publications. Overhaul is normally the highest degree of maintenance performed by the Army. Overhaul does not normally return an item to like new condition.

11. Rebuild. Consists of those services/actions necessary for the restoration of unserviceable equipment to a like new condition in accordance with original manufacturing standards. Rebuild is the highest degree of materiel maintenance applied to Army equipment. The rebuild operation includes the act of returning to zero those age measurements (e.g., hours/miles) considered in classifying Army equipment/components.

Explanation of Columns in the MAC

Column (1) – Group Number. Column (1) lists FGC numbers, the purpose of which is to identify maintenance significant components, assemblies, subassemblies, and modules with the Next Higher Assembly (NHA).

Column (2) – Component/Assembly. Column (2) contains the item names of the components, assemblies, subassemblies, and modules for which maintenance is authorized.

Column (3) – Maintenance Function. Column (3) lists the functions to be performed on the item listed in column (2). (For a detailed explanation of these functions refer to “Maintenance Functions” outlined above.)

Column (4) – Maintenance Level. Column (4) specifies each level of maintenance authorized to perform each function listed in column (3), by indicating work time required (expressed as man-hours in whole hours or decimals) in the appropriate sub-column. This work time figure represents the active time required to perform that maintenance function at the indicated level of maintenance. If the number or complexity of the tasks within the listed maintenance function varies at different maintenance levels, appropriate work time figures are to be shown for each level. The work time figure represents the average time required to restore an item (assembly, subassembly, component, module, end item, or system) to a serviceable condition under typical field operating conditions. This time includes preparation time (including any necessary disassembly/assembly time), troubleshooting/fault location time, and quality assurance time in addition to the time required to perform the specific tasks identified for the maintenance functions authorized in the MAC. The symbol designations for the various maintenance levels are as follows:

C -- Operator or Crew Maintenance
O -- Unit Maintenance
F -- Direct Support Maintenance
H -- General Support Maintenance
D -- Depot Maintenance

NOTE

The “L” maintenance level is not included in column (4) of the MAC. Functions to this level of maintenance are identified by a work time figure in the “H” column of column (4), and an associated reference code is used in the REMARKS column (6). This code is keyed to the remarks and the SRA compete repair application is explained there.

Column (5) – Tools and Equipment Reference Code. Column (5) specifies, by code, those common tool sets (not individual tools), common Test, Measurement, and Diagnostic Equipment (TMDE), and special tools, special TMDE and special support equipment required to perform the designated function. Codes are keyed to the entries in the tools and test equipment table.

Column (6) – Remarks Code. When applicable, this column contains a letter code, in alphabetical order, which is keyed to the remarks table entries.

Explanation of Columns in the Tools and Test Equipment Requirements

Column (1) – Tool or Test Equipment Reference Code. The tool and test equipment reference code correlates with a code used column (5) of the MAC.

Column (2) – Maintenance Level. The lowest category of maintenance authorized to use the tool or test equipment.

Column (3) – Nomenclature. Name or identification of the tool or test equipment.

Column (4) – National Stock Number (NSN). The NSN of the tool or test equipment.

Column (5) – Tool Number. The manufacturer’s part number, model number, or type number.

Explanation of Columns in the Remarks

Column (1) – Remarks Code. The code recorded in column (6) of the MAC.

Column (2) – Remarks. This column lists information pertinent to the maintenance function being performed as indicated in the MAC.

Table 1. Maintenance Allocation Chart For Type V and Dual Row Airdrop Platform

(1) GROUP NUMBER	(2) COMPONENT/ASSEMBLY	(3) MAINTENANCE FUNCTION	(4) MAINTENANCE LEVEL					(5) TOOLS AND EQUIPMENT	(6) REMARKS
			UNIT		INTERMEDIATE		DEPOT		
			C	O	F	H	D		
00	Platform, Airdrop, Type V and Dual Row								
01	Type V Minor Components								
0101	Extraction Bracket Assembly	Inspect Service Replace		0.2 0.1 0.5				2, 6, 7, 15, 23, 25	
0102	EFTA Brackets, Inside and Outside	Inspect Service Replace		0.1 0.1 0.5				2, 7, 15, 27	
0103	Tandem Link/ Suspension Bracket Assembly	Inspect Service Replace		0.1 0.1 0.5				2, 7, 15, 22, 24, 26, 29	A
02	Type V Major Components								
0201	Panel Assembly, Main	Inspect Service Replace		0.2 0.1 2.0				5, 6, 12, 14, 18, 19, 22, 24	A
0202	Panel Assembly, Rear	Inspect Service Replace		0.2 0.1 0.5				22, 24, 25	A
0203	Side Rail	Inspect Service Replace		0.2 0.1 2.0				4, 5, 6, 7, 8, 9, 12, 14, 17, 18, 19, 22, 24, 27, 28	A
0204	Roller Pad	Inspect Service Replace		0.2 0.1 0.5				5, 6, 12, 14, 18, 19, 22, 26	A
03	Clevis Assembly	Inspect Service Replace		0.1 0.1 0.1				2, 16, 24, 26	
04	Dual Row Major Components								
0401	Panel Assembly	Inspect Service Replace		0.2 0.1 2.0				5, 6, 12, 14, 16, 18, 19, 22, 26	
0402	Side Rail	Inspect Service Replace		0.2 0.1 2.0				4, 5, 6, 7, 8, 9, 12, 14, 17, 18, 19, 22, 24, 27, 28	
0403	Roller Pad	Inspect Service Replace		0.2 0.1 0.5				5, 6, 12, 18, 19, 22, 26	

Table 1. Maintenance Allocation Chart For Type V and Dual Row Airdrop Platform - Continued

(1) GROUP NUMBER	(2) COMPONENT/ASSEMBLY	(3) MAINTENANCE FUNCTION	(4) MAINTENANCE LEVEL					(5) TOOLS AND EQUIPMENT	(6) REMARKS
			UNIT		INTERMEDIATE		DEPOT		
			C	O	F	H	D		
05	Outrigger Assembly								
0501	Outrigger Assembly Mast	Inspect Service Replace		0.2 0.1 0.5				30, 31	A
0502	Link Assembly	Inspect Service Replace		0.1 0.1 0.5				16, 19, 26	A
0503	Weldment Assembly	Inspect Service Replace		0.1 0.1 0.5				16, 17. 22	A

Table 2. Tool and Test Equipment Requirements for the Type V and Dual Row Air Drop Platform

(1) TOOL or TEST EQUIPMENT REFERENCE CODE	(2) MAINTENANCE CATEGORY	(3) NOMENCLATURE	(4) NATIONAL NATO STOCK NUMBER	(5) PN TOOL NUMBER
1	O	Bar, Pry, Crow or Wrecking	5120-00-240-6040	GGG-B-101
2	O	Brush, Wire (stainless steel)	7920-00-269-1259	H-B-178
3	O	Cord, Extension, 25-Foot	6150-00-485-6149	J-C-1270
4	O	Equipment, Materials Handling, As Required	N/A	
5	O	Extension, Socket Wrench, ½-IN. Drive, 5-inches Long	5120-00-243-7326	41B306
6	O	File, Handling and Rasp	5110-00-941-2707	VP-105
7	O	File, Mill Bastard	5110-00-242-5386	GGG-F-325
8	O	File, Mill, Bastard	5110-00-242-5387	GGG-F-325
9	O	File, Round, 2 each	5110-00-245-4177	GGG-F-331
10	O	Hammer, Ball Peen	5120-00-187-1034	MIL-H-18745
11	O	Handle, File	5110-00-595-8325	NN-H-0085
12	O	Handle, Speeder, Socket Wrench ½-IN. drive, 2 each	5120-00-104-1736	GGG-W-641
13	O	Knife, Rigger	5110-00-162-2205	MIL-K-818C
14	O	Pad, Paper Honeycomb, As Required	1670-00-753-3928	MIL-H-9884
15	O	Punch, Aligning, ¼-IN. Diameter by 8½-IN. Long, 2 each	5120-00-242-0763	GGG-P-831
16	O	Ratchet, Reversible, ½-IN. Drive, 9-IN. Long	5120-00-230-6385	41H1505

Table 2. Tool and Test Equipment Requirements for the Type V and Dual Row Air Drop Platform - Continued

(1) TOOL or TEST EQUIPMENT REFERENCE CODE	(2) MAINTENANCE CATEGORY	(3) NOMENCLATURE	(4) NATIONAL NATO STOCK NUMBER	(5) PN TOOL NUMBER
17	O	Socket, Socket Wrench ¾-IN., ½-IN. Drive, 2 each	5120-00-236-7616	B107.1
18	O	Socket, Socket Wrench $^{5}/_{8}$-IN., ½-IN. Drive, 2 each	5120-00-236-7613	B107.1
19	O	Socket, Socket Wrench $^{9}/_{16}$-IN., ½-IN. drive, 2 each	5120-00-236-7611	B107.1
20	O	Tape, Measuring, 25-Foot	5210-01-139-7444	GGG-T-106
21	O	Wrench, Adjustable	5120-00-423-6728	GGG-W-631
22	O	Wrench, Allen, Set	5120-01-004-2718	
23	O	Wrench, Box and Open, ¾-IN., 2 each	5120-00-228-9510	A-A-1358
24	O	Wrench, Box and Open, 1½-IN., 2 each	5120-00-277-8834	A-A-1358
25	O	Wrench, Box and Open, $^{11}/_{16}$-IN., 2 each	5120-00-228-9509	A-A-1358
26	O	Wrench, Box and Open, $^{15}/_{16}$-IN., 2 each	5120-00-228-9513	A-A-1358
27	O	Wrench, Box and Open, $^{5}/_{8}$-IN., 2 each	5120-00-228-9508	A-A-1358
28	O	Wrench, Box and Open, $^{9}/_{16}$-inch, 2 each	5120-00-228-9507	A-A-1358
29	O	Wrench, Box, $^{9}/_{16}$-IN. x $^{5}/_{8}$-IN.	5120-00-224-3148	41W619-628
30	O	Wrench, Impact Pneumatic, ½-IN.	5130-00-889-2134	OO-W-891
31	O	Drill, Heavy Duty, ½-Inch	5130-00-889-9004	W-D-661
32	O	Drill Bit, Twist 13/32-Inch	5133-00-227-9668	DBF13/32B

Table 3. Remarks for the Type V and Dual Row Air Drop Platform

REFERENCE CODE	REMARKS/NOTES
A	If shop air supply is not available, use of an electric impact wrench is authorized. Wrench should be calibrated to a torque of 40 to 50 foot-pounds.

END OF WORK PACKAGE

SUPPORTING INFORMATION
TYPE V AND DUAL ROW AIRDROP PLATFORM
REPAIR PARTS AND SPECIAL TOOLS LIST, INTRODUCTION

SCOPE

This manual lists and authorizes spare and repair parts; special tools; special test, measurement, and diagnostic equipment (TMDE); and other special support equipment required for performance of organizational, direct support, and general support maintenance of the Type V and Dual Row Airdrop Platform. It authorizes the requisitioning, issue, and disposition of spares, repair parts and special tools, as indicated by the Source, Maintenance and Recoverability (SMR) codes.

GENERAL

In addition to the Introduction work package, this RPSTL is divided into the following work packages:

Repair Parts List Work Packages. Work packages containing lists of spares and repair parts authorized by this RPSTL for use in the performance of maintenance. These work packages also include parts that must be removed for replacement of the authorized parts. Parts lists are composed of functional groups in ascending alphanumeric sequence, with the parts in each group listed in ascending figure, and item number sequence. Sending units, brackets, filters, and bolts are listed with the component they mount on. Bulk materials are listed by item name in FIG. BULK at the end of the work packages. Repair parts kits are listed separately in their own functional group and work package. Repair parts for reparable special tools are also listed in a separate work package. Items listed are shown on the associated illustrations.

Special Tools List Work Packages. Work packages containing lists of special tools, special TMDE, and special support equipment authorized by this RPSTL (as indicated by Basis of Issue (BOI) information in the DESCRIPTION AND USABLE ON CODE (UOC) column.) Tools that are components of common tool sets and/or Class VII are not listed.

Cross Reference Indexes Work Packages. There are two cross-reference index work packages in this RPSTL: the National Stock Number (NSN) Index work package, and the Part Number (P/N) Index work package. The National Stock Number Index work package refers you to the figure and item number. The Part Number Index work package refers you to the figure and item number.

EXPLANATION OF COLUMNS

Column 1, Item No. Indicates the number used to identify items called out in the illustration.

Column 2, SMR Code. The Source, Maintenance, and Recoverability (SMR) code is a 5-position code containing supply/requisitioning information, maintenance category authorization criteria, and disposition instructions, as shown in the following breakout:

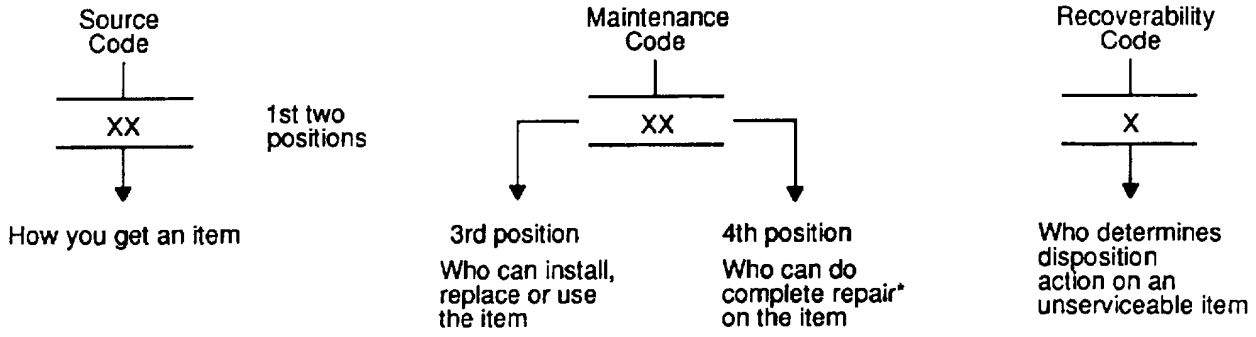

*Complete Repair: Maintenance capacity, capability, and authority to perform all the corrective maintenance tasks of the REPAIR function in a use/user environment in order to restore serviceability to a failed item.

Source Code. The source code tells you how to get an item needed for maintenance, repair, or overhaul of an end item/equipment. Source codes are always the first and second positions of the SMR code. Explanations of source codes follow:

SOURCE CODE	EXPLANATION
PA PB PC PD PE PF PG	Stock items; use the applicable NSN to requisition/ request items with these source codes. They are authorized to the level indicated by the code entered in the 3rd position of the SMR code. **NOTE** Items coded PC are subject to deterioration.
KD KF KB	Items with these codes are not to be requested/ requisitioned individually. They are part of a kit which is authorized to the maintenance level indicated in the 3rd position of the SMR code. The complete kit must be requisitioned and applied.
MO – (Made at unit/AVUM Level) MF – (Made at DS/AVIM Level) MH – (Made at GS Level) ML – (Made at SRA) MD – (Made at Depot)	Items with these codes are not to be requisitioned/requested individually. They must be made from bulk material that is identified by the P/N in the DESCRIPTION and USABLE ON CODE (UOC) column and listed in the bulk material group work package of the RPSTL. If the item is authorized to you by the 3rd position code of the SMR code, but the source code indicates it is made at a higher level, order the item from the higher level of maintenance.
AO – (Assembled by unit AVUM Level) AF – (Assembled by DS/AVIM Level) AH – (Assembled by GS Level) AL – (Assembled by SRA) AD – (Assembled by Depot)	Items with these codes are not to be requested/requisitioned individually. The parts that make up the assembled item must be requisitioned or fabricated and assembled at the level of maintenance indicated by the source code. If the 3rd position code of the SMR code authorizes you to replace the item, but the source code indicates the item is assembled at a higher level, order the item from the higher level of maintenance.
XA -	Do not requisition an XA-coded item. Order the next higher assembly. (Refer to the NOTE below.)
XB -	If an item is not available from salvage, order it using the CAGEC and P/N.

SOURCE CODE – continued	EXPLANATION - continued
XC -	Installation drawings, diagrams, instruction sheets, field service drawings; identified by manufacturer's P/N.
XD -	Item is not stocked. Order an XD-coded item through normal supply channels using the CAGEC and P/N given, if no NSN is available.

NOTE

Cannibalization or controlled exchanged, when authorized, may be used as a source of supply for items with the above source codes, except for those source coded XA or those aircraft support items restricted by requirements of AR 750-1.

Maintenance Code. Maintenance codes tell you the level(s) of maintenance authorized to use and repair support items. The maintenance codes are entered in the third and fourth positions of the SMR Code as follow:

Third position. The maintenance code entered in the third position tells you the lowest maintenance level authorized to remove, replace, and use an item. The maintenance code entered in the third position will indicate authorization to one of the following levels of maintenance.

MAINTENANCE CODE	APPLICATION/EXPLANATION
C -	Crew or operator maintenance done within unit/AVUM maintenance.
O -	Unit level/AVUM maintenance can remove, replace, and use the item.
F -	Direct support/ AVIM maintenance can remove, replace, and use the item.
H -	General support maintenance can remove, replace, and use the item.
L -	Specialized repair activity can remove, replace, and use the item.
D -	Depot can remove, replace, and use the item.

Fourth position. The maintenance code entered in the fourth position tells you whether or not the item is to be repaired and identifies the lowest maintenance level with the capability to do complete repair (perform all authorized repair functions).

NOTE

Some limited repair may be done on the item at a lower level of maintenance, if authorized by the Maintenance Allocation Chart (MAC) and SMR code.

MAINTENANCE CODE	APPLICATION/ EXPLANATION
O -	Unit/AVUM is the lowest level that can do complete repair of the item.
F -	Direct support/AVIM is the lowest level that can do complete repair of the item.
H -	General support is the lowest level that can do complete repair of the item.
L -	Specialized repair activity (designate the specialized repair activity) is the lowest level that can do complete repair of the item.
D -	Depot is the lowest level that can do complete repair of the item.
Z -	Non-repairable. No repair is authorized.
B -	No repair is authorized. No parts or special tools are authorized for the maintenance of a B-coded item. However, the item may be reconditioned by adjusting, lubricating, etc., at the user level.

Recoverability code. Recoverability codes are assigned to items to indicate the disposition action on unserviceable items. The recoverability code is entered in the **fifth position** of the SMR code as follows:

RECOVERABILITY CODE	APPLICATION/EXPLANATION
Z -	Non-repairable item. When unserviceable, condemn and dispose of the item at the level of maintenance shown in the third position of the SMR Code.

RECOVERABILITY CODE – continued	APPLICATION/EXPLANATION - continued
O -	Repairable item. When uneconomically reparable, condemn and dispose of the item at the unit level.
F -	Repairable item. When uneconomically repairable, condemn and dispose of the item at the direct support level.
H -	Repairable item. When uneconomically repairable, condemn and dispose of the item at the general support level.
D -	Repairable item. When beyond the lower level repair capability, return to depot. Condemnation and disposal of item not authorized below depot level.
L -	Repairable item. Condemnation and disposal not authorized below Specialized Repair Activity (SRA).
A -	Item requires special handling or condemnation procedures because of specific reasons (such as, precious metal content, high dollar value, critical material or hazardous material). Refer to appropriate manuals/directives for specific instructions.

Column 3, NSN. The NSN for the item is listed in this column.

Column 4, CAGEC. The Commercial and Government Entity Code (CAGEC) is a five-digit numeric code that is used to identify the manufacturer, distributor, or Government agency that supplies the item.

Column 5, Part Number. Indicates the primary number used by the manufacturer (individual, company, firm, corporation, or Government activity), which controls the design and characteristics of the item by means of its engineering drawings, specifications, standards, and inspection requirements to identify an item or range of items.

NOTE

When you use an NSN to requisition an item, the item you receive may have a different P/N from the part ordered.

Column 6, Description and Usable on Code (UOC). This column includes the following information:

1. The federal item name and, when repaired, a minimum description to identify the item.

2. P/Ns for bulk materials are referenced in this column in the line entry for the to be manufactured or fabricated.

3. Hardness Critical Item (HCI). A support item that provides the equipment with special protection from electromagnetic pulse (EMP) damage during a nuclear attack.

4. The statement END OF FIGURE appears just below the last item description in column (6) for a given figure in both the repair parts list and special tools list work packages.

Column 7, QTY. The QTY (quantity per figure) column indicates the quantity of the item used in the breakout shown on the illustration/figure, which is prepared for a functional group, sub-functional group, or an assembly. A “V” appearing in the column instead of a quantity indicates that the quantity is variable and quantity may change from application to application.

EXPLANATION OF COLUMNS

1. National Stock Number (NSN) Index Work Package.

STOCK NUMBER Column. This column lists the NSN by National Item Identification Number (NIIN) sequence. The NIIN consists of the last nine digits of the NSN, i.e.

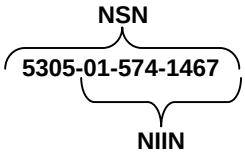

When using this column to locate an item, ignore the first 4 digits of the NSN. However, the complete NSN should be used when ordering items by stock number.

FIG. column. This column lists the number of the figure where the item is identified/located. The figures are in numerical order in the repair parts list and special tools list work packages.

ITEM column. The item number identifies the item associated with the figure listed in the adjacent FIG. column. This item is also identified by the NSN listed on the same line.

2. Part Number (P/N) Index Work Package.
P/Ns in this index are listed in ascending alphanumeric sequence (vertical arrangement of letter and number combinations which places the first letter or digit of each group in order A through Z, followed by the numbers 0 through 9 and each following letter or digit in like order).

PART NUMBER Column. Indicates the P/N assigned to the item.

FIG. Column. This column lists the number of the figure where the item is identified/located in the repair parts list and special tools list work packages.

ITEM Column. The item number is the number assigned to the item as it appears in the figure referenced in the adjacent figure number column.

SPECIAL INFORMATION

The Usable on Code title appears in the lower right corner of column (5), Description. Usable on codes are shown in the right-hand margin of the description column. Identification of the usable on codes used in the RPSTL are:

CODE:	USED ON:
FKR	Platform 8-foot
FKS	Platform 12-foot
FKT	Platform 16-foot
FRZ	Platform 18-foot (dual row)
FKU	Platform 20-foot
FKV	Platform 24-foot
FKW	Platform 28-foot
FKX	Platform 32-foot

Fabrication Instructions. Bulk materials required to manufacture items are listed in the bulk material functional group of this RPSTL. Part numbers for bulk material are also referenced in the Description Column of the line item entry for the item to be manufactured/fabricated. Detailed fabrication instructions for items source coded to be manufactured or fabricated are found in this TM.

Index Numbers. Items which have the word BULK in the figure column will have an index number shown in the item number column. This index number is a cross-reference between the NSN / P/N index work packages and the bulk material list in the repair parts list work package.

Illustration List. The illustrations in this RPSTL contain unit authorized items. Illustrations published in this TM that contain unit authorized items also appear in this RPSTL. The tabular list in the repair parts list work package contains only those parts coded “O” in the third position of the SMR code, therefore, there may be a break in the item number sequence.

HOW TO LOCATE REPAIR PARTS

1. When National Stock Number or Part Number is Not Known.

First. Using the table of contents, determine the assembly group or sub-functional group to which the item belongs. This is necessary since the figures are prepared for functional groups and sub-assembly groups, and lists are divided into the same groups.

Second. Find the item covering the figure covering the functional group or sub-functional group to which the item belongs.

Third. Identify the item on the figure and note the number(s).

Fourth. Look in the repair parts list work packages for the figure and item numbers. The NSNs and part numbers are on the same line as the associated item numbers.

2. When NSN is Known.

First. If you have the NSN, look in the STOCK NUMBER column of the NSN index work package. The NSN is arranged in NIIN sequence. Note the figure and item number next to the NSN.

Second. Turn to the figure and locate the item number. Verify that the it is the one you are looking for.

3. When P/N is Known.

First. If you have the P/N and not the NSN, look in the PART NUMBER column of the P/N index work package. Identify the figure and item number.

Second. Look up the item on the figure in the applicable repair parts list work package.

END OF WORK PACKAGE

GROUP 01 MINOR COMPONENTS OF THE TYPE V AIRDROP PLATFORM

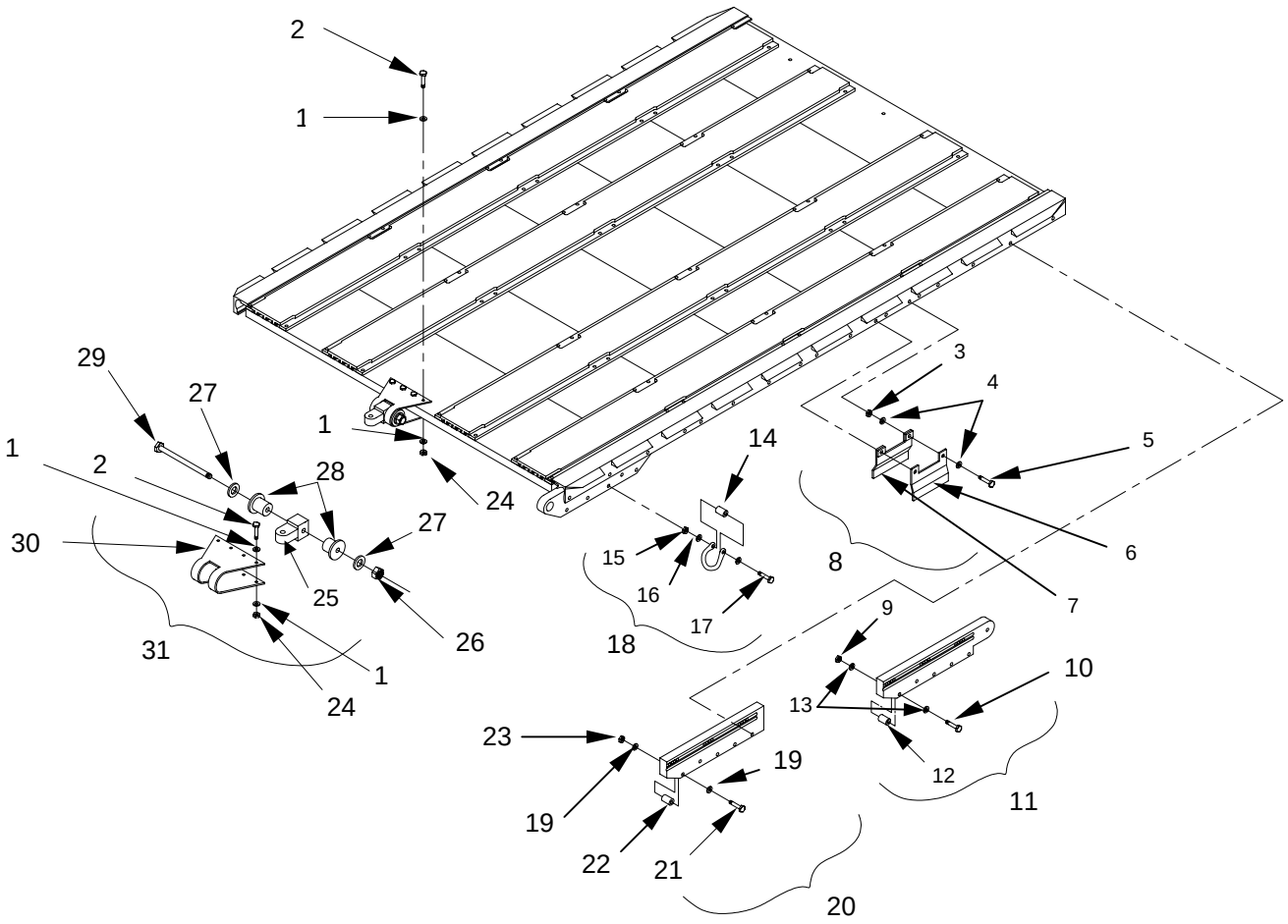

Figure 1. Minor Components of the Type V Airdrop Platform

GROUP 01 MINOR COMPONENTS OF THE TYPE V AIRDROP PLATFORM
REPAIR PARTS LIST

(1) ITEM NO.	(2) SMR CODE	(3) NSN	(4) CAGEC	(5) PART NUMBER	(6) DESCRIPTION AND USABLE ON CODE (UOC)	(7) QTY
Group 01, Type V Airdrop Platform, Minor Components Figure 1, Minor Components of the Type V Airdrop Platform						
1	PAOZZ	5310-01-408-2779	80205	NAS1149F1063P	Washer, Flat, $^{41}/_{64}$ ID	8
2	PAOZZ	5306-00-527-4240	88044	AN10-36A	Bolt, Machine, $^{5}/_{8}$-IN. X 3 $^{57}/_{64}$-IN. LG-18F	4
3	PAOZZ	5310-00-950-0039	96906	MS21044-N6	Nut, Self-Locking, $^{3}/_{8}$-IN. –24NF	2
4	PAOZZ	5310-00-167-0821	80205	NAS1149F0663P	Washer, Flat, 25/64 ID	4
5	PAOZZ	5306-00-180-1489	88044	AN6-17A	Bolt, Machine, $^{3}/_{8}$-IN. DIA–24NF 1-15/16-IN LG	2
6	XAOZZ		81337	11-1-3175	Bracket, Outside, EFTA	1
7	XAOZZ		81337	11-1-2872	Bracket, Inside, EFTA	1
8	PAOZZ	1670-01-353-8425	81337	11-1-2780-12	Bracket, Inside and Outside, EFTA, Assembly	1
9	PAOZZ	5310-00-902-7846	96906	MS21083-N7	Nut, Self-locking, $^{7}/_{16}$-IN. –20NF	4
10	PAOZZ	5306-00-004-1534	88044	AN7-24A	Bolt, Machine, $^{7}/_{16}$-IN. X 2 $^{19}/_{32}$-IN. LG. –20NF	4
11	PAOZZ	1670-01-162-2381	81337	11-1-2798-1	Tandem Link Assembly (multi-purpose)	4
12	PAOZZ	1670-01-162-2380	81337	11-1-2800	Bushing, Tandem Link Assembly	4
13	PAOZZ	5310-00-809-4085	80204	ANSI B18.22.1	Washer, Plain, Type A, Size 7/16	8

GROUP 01 MINOR COMPONENTS OF THE TYPE V AIRDROP PLATFORM
REPAIR PARTS LIST

(1) ITEM NO.	(2) SMR CODE	(3) NSN	(4) CAGEC	(5) PART NUMBER	(6) DESCRIPTION AND USABLE ON CODE (UOC)	(7) QTY
14	PAOZZ	1670-01-162-2373	81337	11-1-2803	Spacer, Clevis	1
15	PAOZZ	5310-00-088-0552	96906	MS21044-N7	Nut, Self-locking, $^{7}/_{16}$-IN. –20NF	1
16	PAOZZ	5310-00-809-4061	80204	ANSI B18.22.1	Washer, Plain, Type A, Size 3/8	1
17	PAOZZ	5306-00-208-3650	88044	AN7-27A	Bolt, Machine, $^{7}/_{16}$-IN. X 2 $^{31}/_{32}$-IN. LG –20NF	1
18	PAOZZ	1670-01-162-2372	81337	11-1-2801	Clevis Assembly	V
19	PAOZZ	5310-00-809-4085	80204	ANSI B18.22.1	Washer, Plain, Type A, Size $^{7}/_{16}$	4
20	PAOZZ	1670-01-247-2389	81337	11-1-2798-2	Suspension Bracket Assembly	V
21	PAOZZ	5306-00-004-1534	88044	AN7-24A	Bolt, Machine, $^{7}/_{16}$-IN. X 2 $^{19}/_{32}$-IN. LG –20NF	4
22	PAOZZ	1670-01-162-2380	81337	11-1-2800	Bushing, Suspension Bracket Assembly	4
23	PAOZZ	5310-00-902-7846	96906	MS21083-N7	Nut, Self-locking, $^{7}/_{16}$-IN. –20NF	4
24	PAOZZ	5310-00-982-6809	96906	MS21044-N10	Nut, Self-locking, $^{5}/_{8}$-IN. –18NF	4
25	XAOZZ		81337	11-1-2868	Lug	1
26	PAOZZ	5310-00-057-7151	96906	MS21044-N16	Nut, Self-locking, 1-IN. –12NF	1
27	PAOZZ	5310-01-397-1798	80205	NAS1149F1690P	Washer, Flat, 1 1/64 ID	2
28	XAOZZ		81337	11-1-2869	Bushing	2
29	PAOZZ	5306-01-240-8883	88044	AN17-76A	Bolt, Machine, 1-IN. X 8-IN. –12NF	1
30	XAOZZ		81337	11-1-2870	Frame	1
31	PAOZZ	1670-01-353-8424	81337	11-1-2780-11	Bracket, Assembly, Extraction	1
END OF FIGURE						

GROUP 02 MAJOR COMPONENTS OF THE TYPE V AIRDROP PLATFORM
REPAIR PARTS LIST

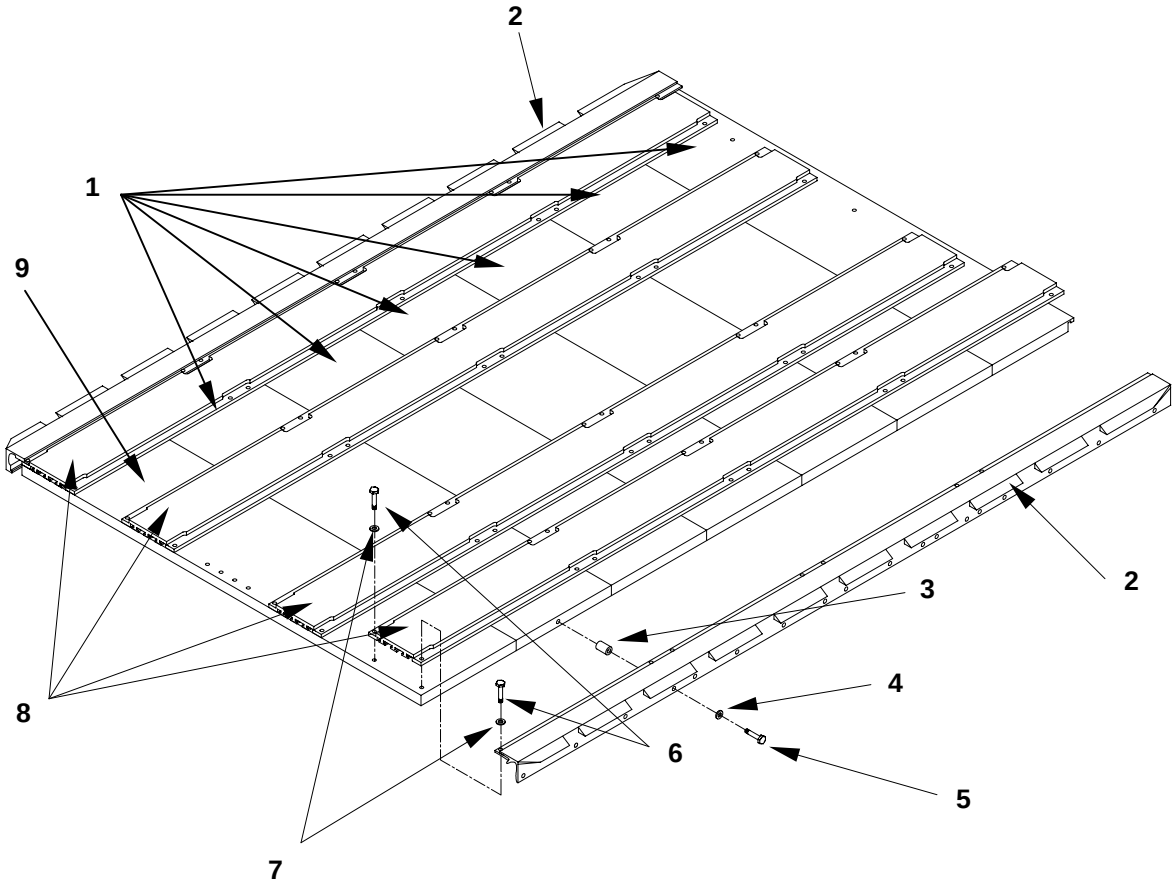

Figure 2. Major Components of the Type V Airdrop Platform

GROUP 02 MAJOR COMPONENTS OF THE TYPE V AIRDROP PLATFORM
REPAIR PARTS LIST

(1) ITEM NO.	(2) SMR CODE	(3) NSN	(4) CAGEC	(5) PART NUMBER	(6) DESCRIPTION AND USABLE ON CODE (UOC)	(7) QTY
Group 02, Type V Airdrop Platform, Major Components Figure 2, Major Components of the Type V Airdrop Platform						
1	PAOZZ	1670-01-304-3006	81337	11-1-2780-8	Panel Assembly, Main 8-FT, UOC: FKR 12-FT, UOC: FKS 16-FT, UOC: FKT 20-FT, UOC: FKU 24-FT, UOC: FKV 28-FT, UOC: FKW 32-FT, UOC: FKX	 3 5 7 9 11 13 15
2	PAOZZ	1670-01-162-2371 1670-01-162-2370 1670-01-162-2369 1670-01-162-2368 1670-01-162-2366 1670-01-162-2367 1670-01-169-9154	81337 81337 81337 81337 81337 81337 81337	11-1-2793-1 11-1-2793-2 11-1-2793-3 11-1-2793-4 11-1-2793-5 11-1-2793-6 11-1-2793-7	Rail, Side, Type V 8-FT, UOC: FKR 12-FT, UOC: FKS 16-FT, UOC: FKT 20-FT, UOC: FKU 24-FT, UOC: FKV 28-FT, UOC: FKW 32-FT, UOC: FKX	 2 2 2 2 2 2 2
3	PAOZZ	5365-01-162-2384	81337	11-1-2792	Bushing, Side Rail 8-FT, UOC: FKR 12-FT, UOC: FKS 16-FT, UOC: FKT 20-FT, UOC: FKU 24-FT, UOC: FKV 28-FT, UOC: FKW 32-FT, UOC: FKX	 32 48 64 80 96 112 128
4	PAOZZ	5310-01-396-8392	80205	NAS1149F0863P	Washer, Flat, Side Rail, MTG, ½-IN. 8-FT, UOC: FKR 12-FT, UOC: FKS 16-FT, UOC: FKT 20-FT, UOC: FKU 24-FT, UOC: FKV 28-FT, UOC: FKW 32-FT, UOC: FKX	 32 48 64 80 96 112 128

GROUP 02 MAJOR COMPONENTS OF THE TYPE V AIRDROP PLATFORM
REPAIR PARTS LIST

(1) ITEM NO.	(2) SMR CODE	(3) NSN	(4) CAGEC	(5) PART NUMBER	(6) DESCRIPTION AND USABLE ON CODE (UOC)	(7) QTY
5	PAOZZ	5306-01-212-1264	81337	11-1-2780 FIND 25	Bolt Machine, Self-Locking, Side Rail, ½-20 NF x 3 13/64 8-FT, UOC: FKR 12-FT, UOC: FKS 16-FT, UOC: FKT 20-FT, UOC: FKU 24-FT, UOC: FKV 28-FT, UOC: FKW 32-FT, UOC: FKX	 32 48 64 80 96 112 128
6	PAOZZ	5306-01-140-6356	81337	B1821BH038F125L	Bolt, Machine, Roller Pad, 3/8-IN. 24 VNF – 2A 1¼-IN. LG 8-FT, UOC: FKR 12-FT, UOC: FKS 16-FT, UOC: FKT 20-FT, UOC: FKU 24-FT, UOC: FKV 28-FT, UOC: FKW 32-FT, UOC: FKX	 64 96 128 160 192 224 256
7	PAOZZ	5310-00-167-0821	08205	NAS1149F0663P	Washer, Flat, Side Rail and Roller Pad, MTG, 3/8-IN. 8-FT, UOC: FKR 12-FT, UOC: FKS 16-FT, UOC: FKT 20-FT, UOC: FKU 24-FT, UOC: FKV 28-FT, UOC: FKW 32-FT, UOC: FKX	 64 96 128 160 192 224 256
8	PAOZZ	 1670-01-162-2386 1670-01-162-2383 1670-01-162-2382 1670-01-162-2387 1670-01-162-2388 1670-01-162-2389 1670-01-169-9155	 81337 81337 81337 81337 81337 81337 81337	 11-1-2795-1 11-1-2795-2 11-1-2795-3 11-1-2795-4 11-1-2795-5 11-1-2795-6 11-1-2795-7	Roller Pad 8-FT, UOC: FKR 12-FT, UOC: FKS 16-FT, UOC: FKT 20-FT, UOC: FKU 24-FT, UOC: FKV 28-FT, UOC: FKW 32-FT, UOC: FKX	 4 4 4 4 4 4 4

GROUP 02 MAJOR COMPONENTS OF THE TYPE V AIRDROP PLATFORM
REPAIR PARTS LIST

(1) ITEM NO.	(2) SMR CODE	(3) NSN	(4) CAGEC	(5) PART NUMBER	(6) DESCRIPTION AND USABLE ON CODE (UOC)	(7) QTY
9	PAOZZ	1670-01-304-1057	81337	11-1-2780-9	Panel, Assembly, Rear, Type V	1
END OF FIGURE						

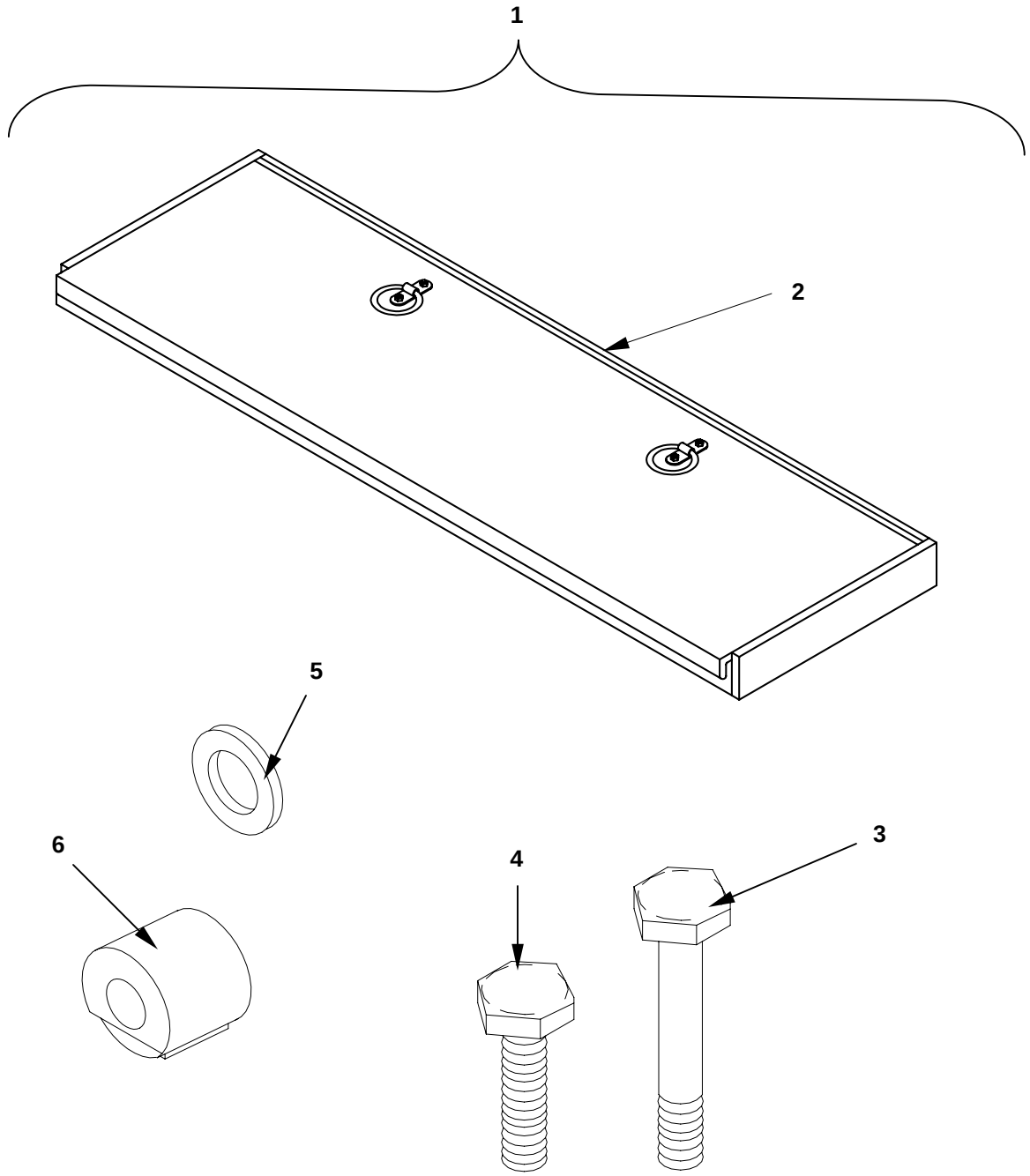

Figure 3. Main Panel, Type V Airdrop Platform

GROUP 0201 MAIN PANEL, TYPE V AIRDROP PLATFORM
REPAIR PARTS LIST

(1) ITEM NO.	(2) SMR CODE	(3) NSN	(4) CAGEC	(5) PART NUMBER	(6) DESCRIPTION AND USABLE ON CODE (UOC)	(7) QTY
Group 0201, Type V Airdrop Platform, Major Components Figure 3, Main Panel, Type V Airdrop Platform						
1	PAOZZ	1670-01-304-3006	81337	11-1-2780-8	Panel Assembly, Main 8-FT, UOC: FKR 12-FT, UOC: FKS 16-FT, UOC: FKT 20-FT, UOC: FKU 24-FT, UOC: FKV 28-FT, UOC: FKW 32-FT, UOC: FKX	3 5 7 9 11 13 15
2	XAOZZ		81337	11-1-2781-2	.Panel, Main 8-FT, UOC: FKR 12-FT, UOC: FKS 16-FT, UOC: FKT 20-FT, UOC: FKU 24-FT, UOC: FKV 28-FT, UOC: FKW 32-FT, UOC: FKX	3 5 7 9 11 13 15
3	PAOZZ	5306-01-212-1264	81337	11-1-2780 FIND 25	.Bolt Machine, Self-Locking, Side Rail, ½-20 NF x 3 13/64	8
4	PAOZZ	5306-01-140-6356	81337	B1821BH038F125L	.Bolt, Machine, Roller Pad, 3/8-IN. 24 VNF – 2A 1¼-IN. LG	16
5	PAOZZ	5310-00-167-0821	08205	NAS1149F0663P	.Washer, Flat, Side Rail and Roller Pad, MTG, 3/8-IN.	24
6	PAOZZ	5365-01-162-2384	81337	11-1-2792	.Bushing, Side Rail	8
END OF FIGURE						

GROUP 0202 REAR PANEL, TYPE V AIRDROP PLATFORM

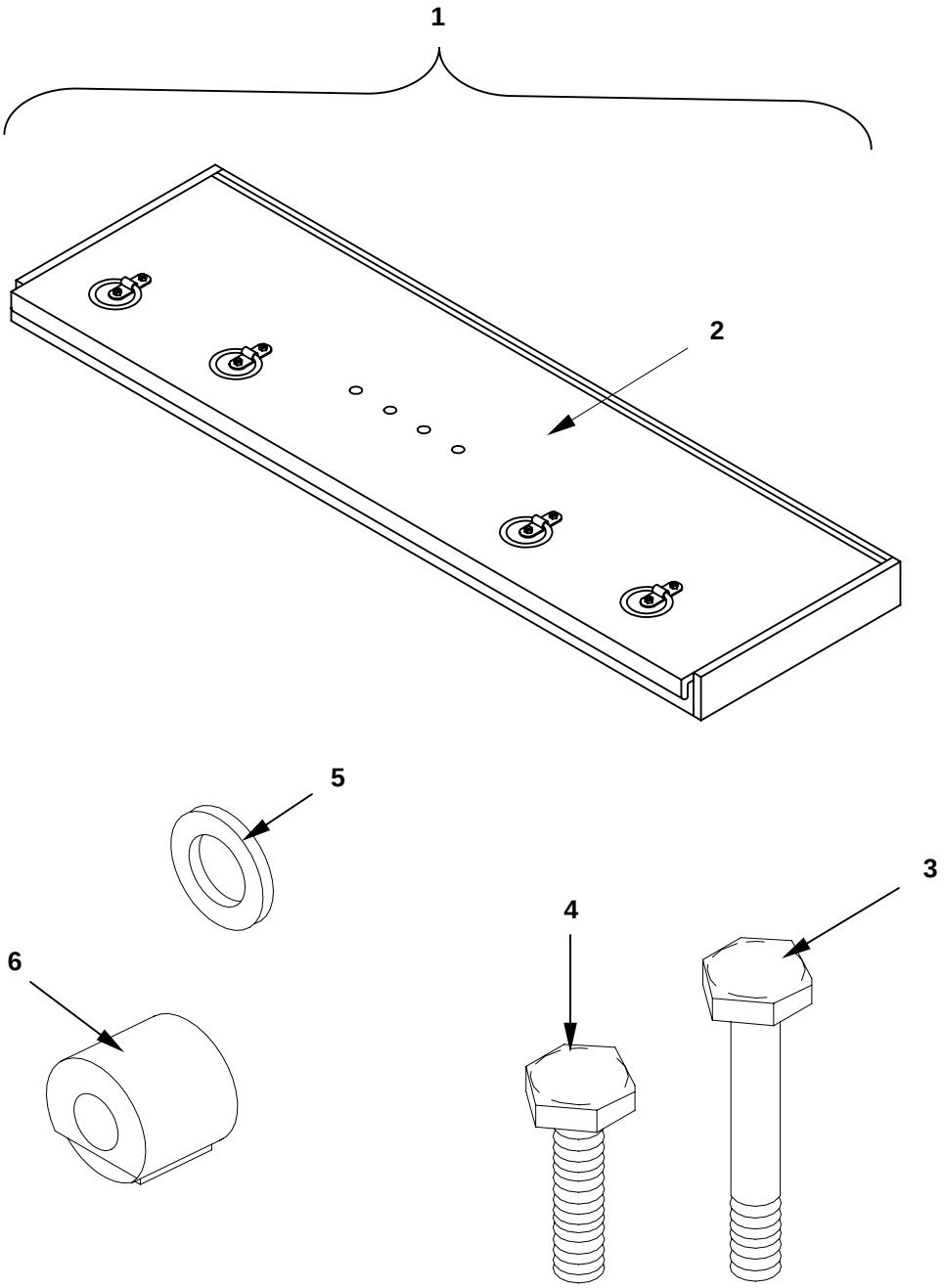

Figure 4. Rear Panel, Type V Airdrop Platform

GROUP 0202 REAR PANEL, TYPE V AIRDROP PLATFORM
REPAIR PARTS LIST

(1) ITEM NO.	(2) SMR CODE	(3) NSN	(4) CAGEC	(5) PART NUMBER	(6) DESCRIPTION AND USABLE ON CODE (UOC)	(7) QTY
Group 0202, Type V Airdrop Platform, Major Components Figure 4, Rear Panel, Type V Airdrop Platform						
1	PAOZZ	1670-01-304-1057	81337	11-1-2780-9	Panel, Assembly Rear, Type V	1
2	XAOZZ		81337	11-1-2781-1	.Panel, Rear, Type V	1
3	PAOZZ	5306-01-212-1264	81337	11-1-2780 FIND 25	.Bolt Machine, Self-Locking, Side Rail, ½-20 NF x 3 13/64	8
4	PAOZZ	5306-01-140-6356	81337	B1821BH038F125L	.Bolt, Machine, Roller Pad, 3/8-IN. 24 VNF – 2A 1¼-IN. LG	16
5	PAOZZ	5310-00-167-0821	08205	NAS1149F0663P	.Washer, Flat, Side Rail and Roller Pad, MTG, 3/8-IN.	24
6	PAOZZ	5365-01-162-2384	81337	11-1-2792	.Bushing, Side Rail	8
END OF FIGURE						

GROUP 03 CLEVIS ASSEMBLY

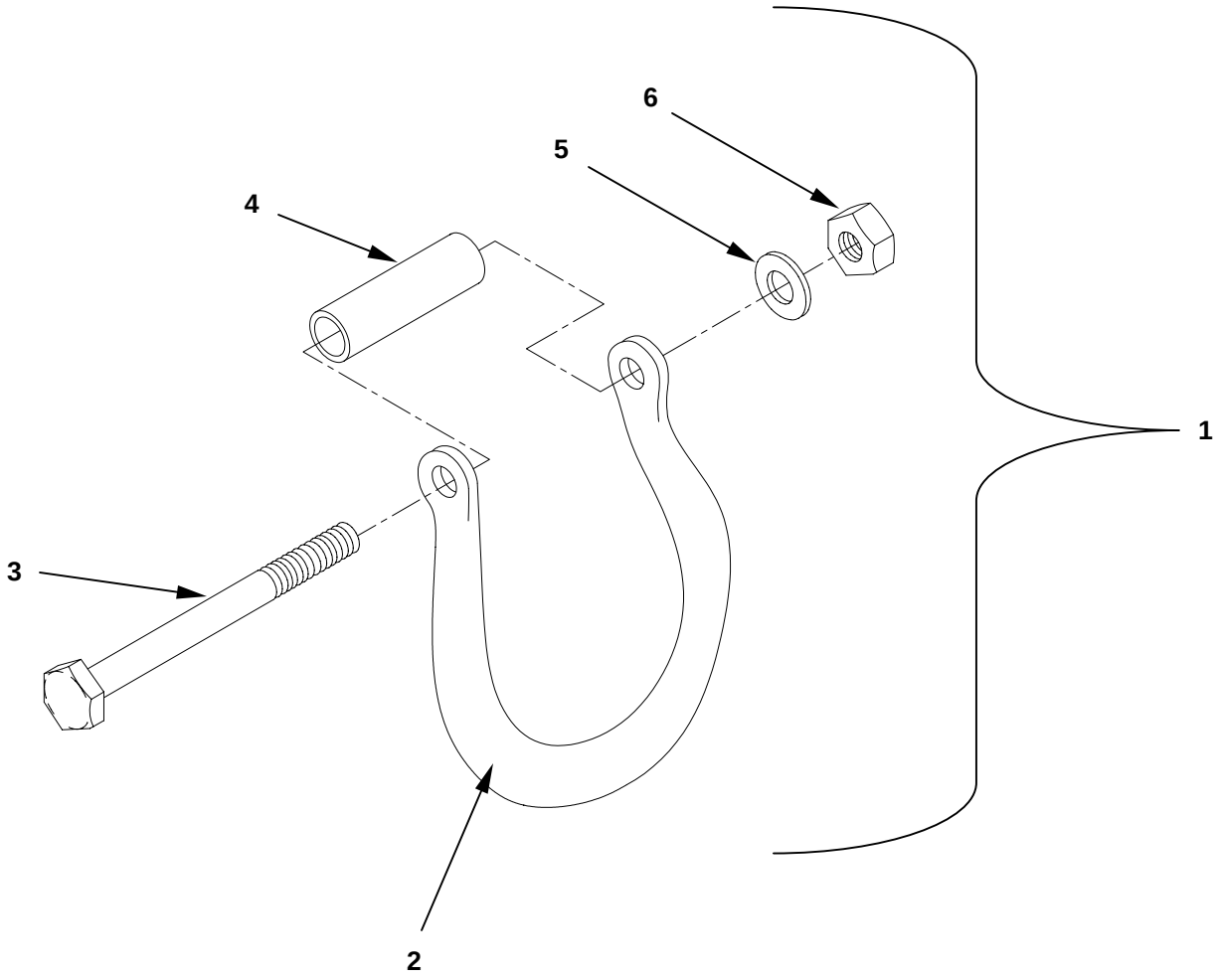

Figure 5. Clevis Assembly

GROUP 03 CLEVIS ASSEMBLY
REPAIR PARTS LIST

(1) ITEM NO.	(2) SMR CODE	(3) NSN	(4) CAGEC	(5) PART NUMBER	(6) DESCRIPTION AND USABLE ON CODE (UOC)	(7) QTY
Group 03, Clevis Assembly Figure 5, Clevis Assembly						
1	PAOZZ	1670-01-162-2372	81337	11-1-2801	Clevis Assembly	V
2	XAOZZ		81337	11-1-2802	Body, Clevis	1
3	PAOZZ	5306-00-208-3650	88044	AN7-27A	Bolt, Machine, $^{7}/_{16}$-IN. X $2^{31}/_{32}$-IN. LG-20	1
4	PAOZZ	5365-01-162-2373	81337	11-1-2803	Spacer, Clevis	1
5	PAOZZ	5310-00-809-4061	96906	ANSI B18.22.1	Washer, Flat	1
6	PAOZZ	5310-00-088-0552	96906	MS21044 N7	Nut, Self-locking, $^{7}/_{16}$-IN. –20NF	1
END OF FIGURE						

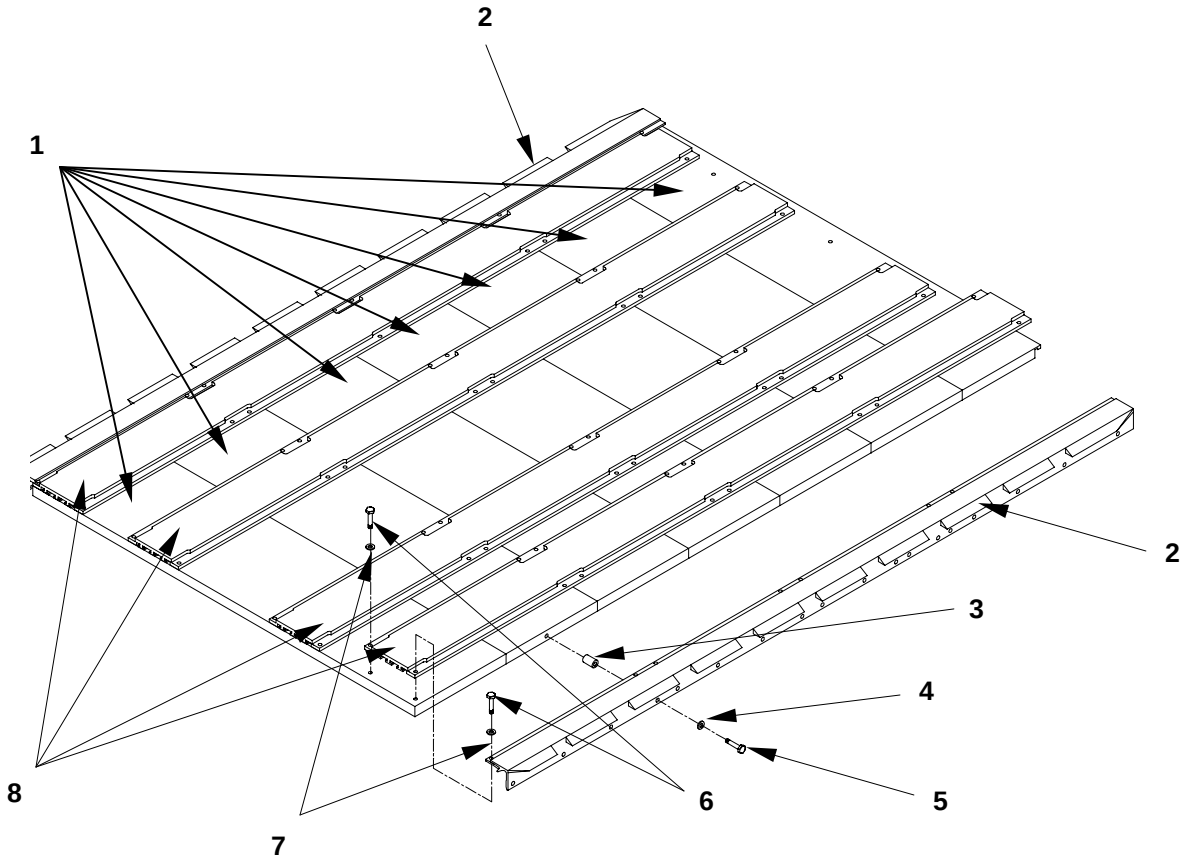

Figure 6. Major Components of the Dual Row Airdrop Platform

GROUP 04 MAJOR COMPONENTS OF THE DUAL ROW AIRDROP PLATFORM
REPAIR PARTS LIST

(1) ITEM NO.	(2) SMR CODE	(3) NSN	(4) CAGE C	(5) PART NUMBER	(6) DESCRIPTION AND USABLE ON CODE (UOC)	(7) QTY
Group 04, Dual Row Airdrop Platform, Major Components Figure 6, Major Components of the Dual Row Airdrop Platform						
1	PAOZZ	1670-01-485-1656	81337	11-1-2780-16	Panel Assembly UOC : FRZ	7
2	PAOZZ	1670-01-485-1654	81337	11-1-4144-2	Rail, DRAS UOC: FRZ	2
3	PAOZZ	5365-01-162-2384	81337	11-1-2792	Bushing, Side Rail UOC: FRZ	72
4	PAOZZ	5310-01-396-8392	80205	NAS1149F0863P	Washer, Flat, Side Rail, Mounting, ½-IN. UOC: FRZ	72
5	PAOZZ	5306-01-212-1264	81337	11-1-2780 FIND 25	Bolt Machine, Self-locking, Side Rail, Mounting, ½-20 NF x 3 13/64 UOC: FRZ	72
6	PAOZZ	5306-01-140-6356	81337	B1821BH038F125L	Bolt, Machine, Roller Pad, Mounting, $^{3}/_{8}$-IN. UOC: FRZ	144
7	PAOZZ	5310-00-167-0821	80205	NAS1149F0336P	Washer, Flat, Side Rail and Roller Pad, Mounting $^{3}/_{8}$-IN. UOC: FRZ	144
8	PAOZZ	1670-01-486-1342	81337	11-1-2795-17	Roller Pad, DRAS UOC: FRZ	4
END OF FIGURE						

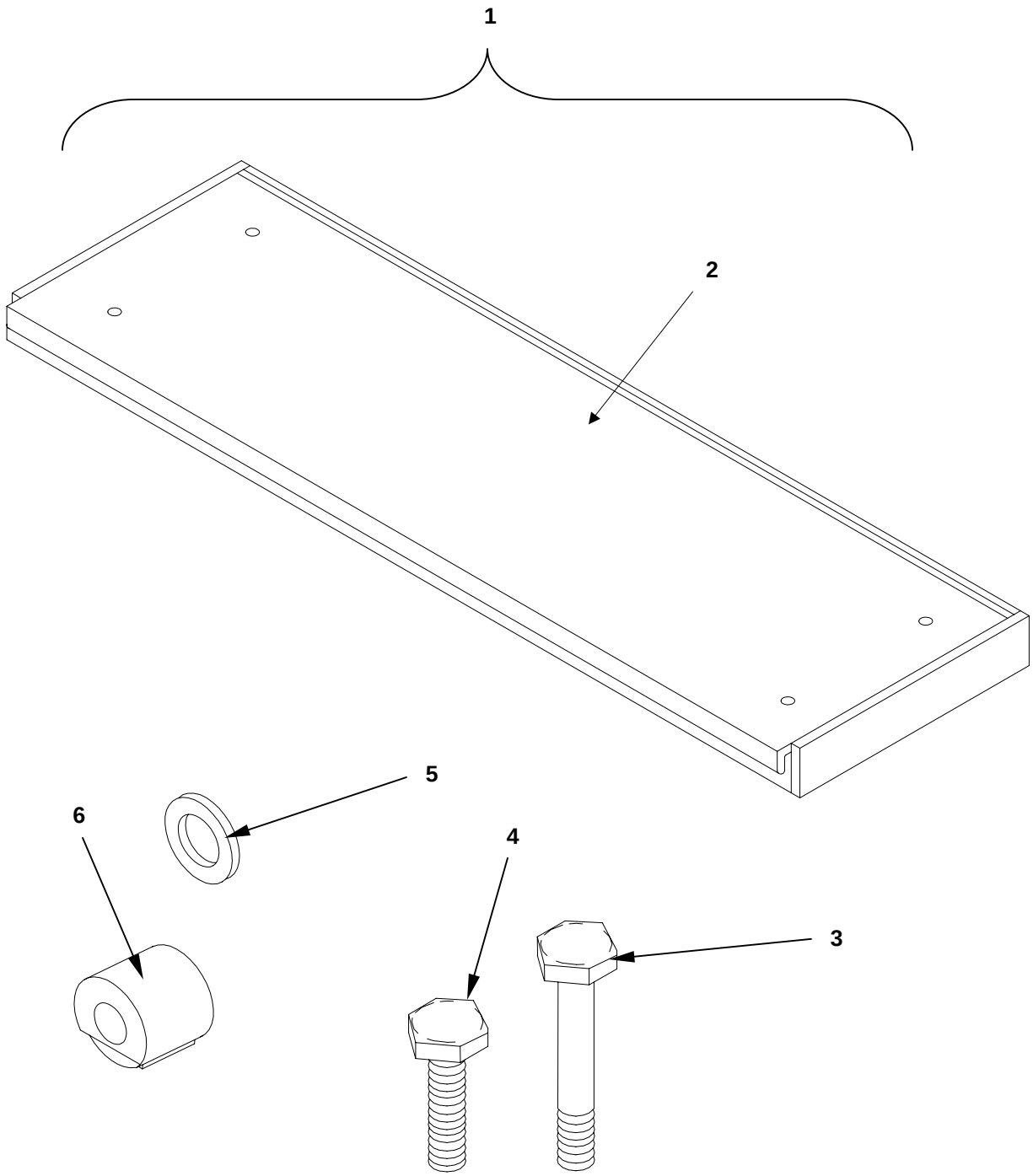

Figure 7. Panel, Dual Row Airdrop Platform

GROUP 0401 PANEL, DUAL ROW AIRDROP PLATFORM
REPAIR PARTS LIST

(1) ITEM NO.	(2) SMR CODE	(3) NSN	(4) CAGE C	(5) PART NUMBER	(6) DESCRIPTION AND USABLE ON CODE (UOC)	(7) QTY
Group 0401, Dual Row Airdrop Platform, Major Components Figure 7, Panel, Dual Row Airdrop Platform						
1	PAOZZ	1670-01-485-1656	81337	11-1-2780-16	Panel Assembly UOC: FRZ	9
2	XAOZZ		81337	11-1-4226-1	.Panel UOC: FRZ	1
3	PAOZZ	5306-01-212-1264	81337	11-1-2780 FIND 25	.Bolt Machine, Self-locking, Side Rail, Mounting, 12-20 NF x 3 13/64 UOC: FRZ	8
4	PAOZZ	5306-01-140-6356	81337	B1821BH038F125L	.Bolt, Machine, Roller Pad, Mounting, $^{3}/_{8}$-IN. UOC: FRZ	16
5	PAOZZ	5310-00-167-0821	80205	NAS1149F0336P	.Washer, Flat, Side Rail and Roller Pad, Mounting 3/8-IN. UOC: FRZ	24
6	PAOZZ	5365-01-162-2384	81337	11-1-2792	.Bushing, Side Rail UOC: FRZ	8
END OF FIGURE						

GROUP 05 OUTRIGGER ASSEMBLY, DUAL ROW AIRDROP PLATFORM
REPAIR PARTS LIST

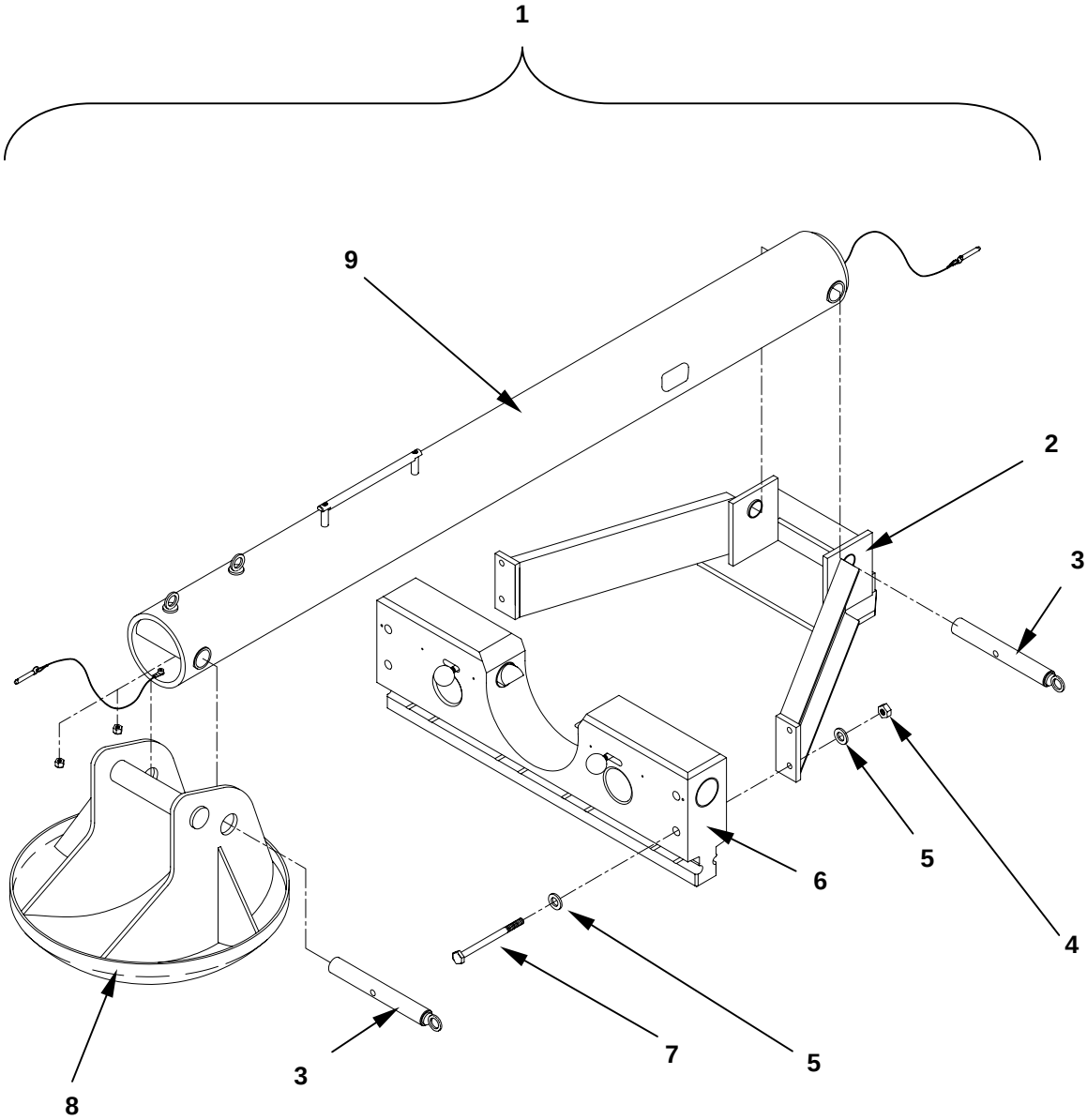

Figure 8. Outrigger Assembly, Dual Row Airdrop Platform

REPAIR PARTS LIST

(1) ITEM NO.	(2) SMR CODE	(3) NSN	(4) CAGEC	(5) PART NUMBER	(6) DESCRIPTION AND USABLE ON CODE (UOC)	(7) QTY
Group 05, Outrigger Assembly, Dual Row Airdrop Platform Figure 8, Outrigger Assembly						
1	PAOZZ	1670-01-487-5464	81337	11-1-7011-1	Outrigger Assembly UOC: FRZ	1
2	PAOZZ	1670-01-509-2688	81337	11-1-7005-1	Platform Support Weldment, Outrigger, UOC: FRZ	2
3	PAOZZ	3040-01-499-6572	81337	11-1-7004-1	Bracket, Eye, Non-rotating Shaft (Mast Shaft), UOC: FRZ	4
4	PAOZZ	5310-00-595-7421	96906	NASM17829-8C	Nut, Self Locking, Regular Height (non-metallic insert), UOC: FRZ	8
5	PAOZZ	5310-01-396-8392	80205	NAS1149F0863P	Washer, Flat, ½-IN. 515I.D. X .875 OD X .063 THK Carbon Steel Plate, UOC: FRZ	16
6	PAOZZ	1670-01-509-2687	81337	11-1-7009-1	Outrigger Link Assembly UOC: FRZ	2
7	PAOZZ	5305-00-071-2081		ANSI B 18.2.1 BH050C450N	Hex Head Cap Screw, ½-IN. – C2A THD X 4 ½-IN. Long Steel, Zinc Plated	8
8	XAOZZ		81337	11-1-7013-1	Foot, Weldment, Outrigger, UOC: FRZ	2
9	PAOZZ	1670-01-509-2685	81337	11-1-7001-1	Mast Assembly, Outrigger, UOC: FRZ	2
END OF FIGURE						

END OF WORK PACKAGE

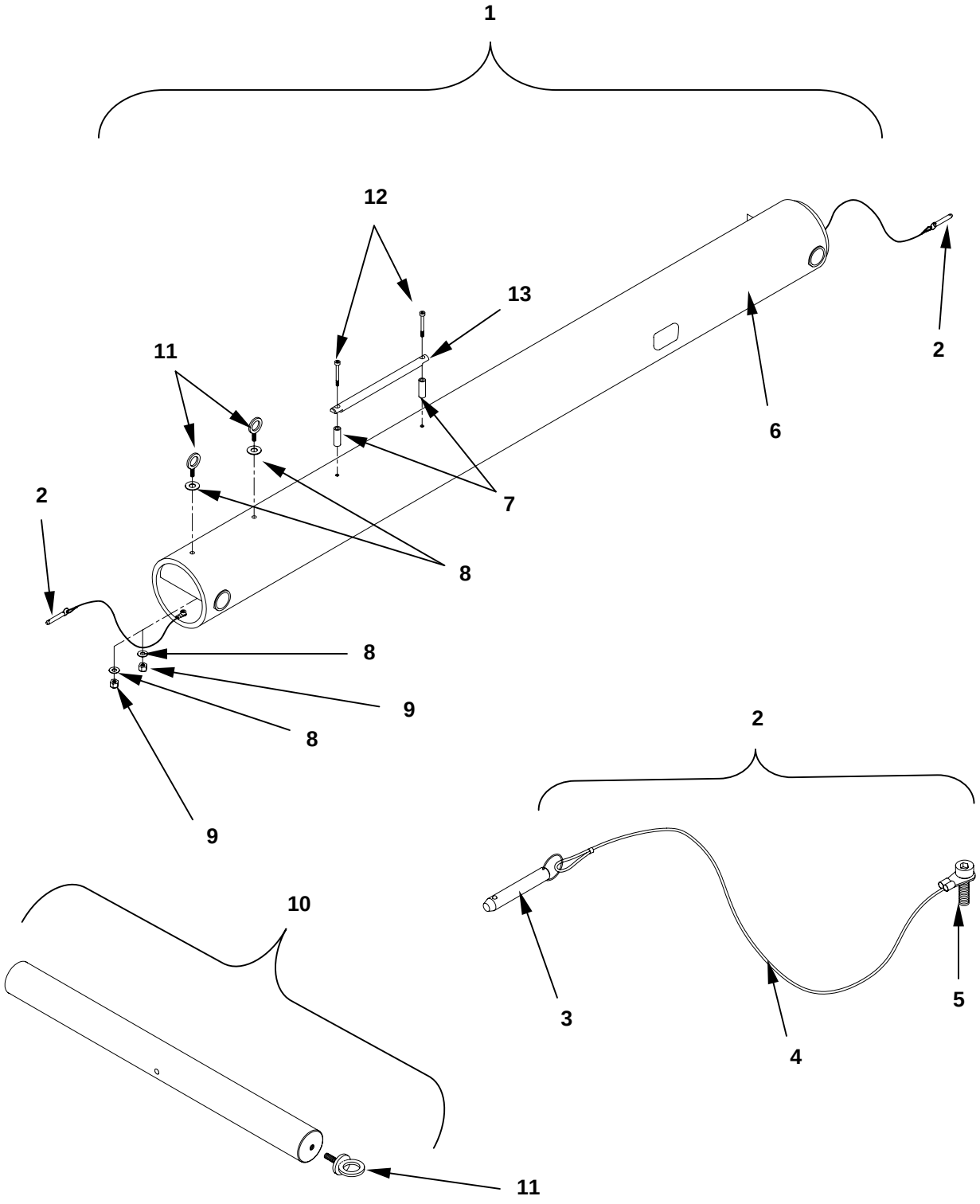

Figure 9. Mast Assembly, Dual Row Airdrop Platform

GROUP 0501 MAST ASSEMBLY, DUAL ROW AIRDROP PLATFORM
REPAIR PARTS LIST

(1) ITEM NO.	(2) SMR CODE	(3) NSN	(4) CAGEC	(5) PART NUMBER	(6) DESCRIPTION AND USABLE ON CODE (UOC)	(7) QTY
Group 0501, Mast Assembly, Dual Row Airdrop Platform Figure 9, Mast Assembly, Dual Row Airdrop Platform						
1	PAOZZ	1670-01-509-2688	81337	11-1-7001-1	Mast Assembly, Outrigger, UOC: FRZ	2
2	XAOZZ		81337	11-1-7029-1	.Pin, Quick Release Assembly, UOC: FRZ	4
3	PAOZZ	5315-01-493-6385	81337	11-1-7021-1	.Pin, Quick Release, UOC: FRZ	4
4	XAOZZ		81337	11-1-7023-1	.Lanyard, UOC: FRZ	4
5	PAOZZ	5305-00-052-6456	96906	MS16996-10	.Socket Head Cap Screw, #10-32UNF 2A Thread X ½-IN. Long, UOC: FRZ	4
6	XAOZZ		81337	11-1-7000-1	.Mast, Weldment, Outrigger, UOC: FRZ	2
7	PAOZZ	5365-01-491-2859	81337	11-1-7003-1	.Spacer, Sleeve (Mast Handle Spacer), UOC: FRZ	4
8	PAOZZ	5310-00-167-0821	80205	NAS1149F0663P	.Washer, Flat, 3/8-IN (.375) .390 ID X .625 OD X .036 THK, UOC: FRZ	8
9	PAOZZ	5310-00-483-8790	96906	NASM17829-6C	.Nut, Self Locking or Equivalent .375 ($^3/_8$) – 16UNC-2B, UOC: FRZ	4
10	PAOZZ	3040-01-499-6572	81337	11-1-7004-1	Bracket, Eye, Non-rotating Shaft (Mast Shaft), UOC: FRZ	4
11	PAOZZ	5306-01-499-4465	81337	11-1-7020-1	.Eyebolt, UOC: FRZ	4
12	PAOZZ	5305-00-992-6143	80205	MS16995-72	.Socket Head Cap Screw – 18UNC-3A THD X 2 ½-IN. X .312, UOC: FRZ	4

GROUP 0501 MAST ASSEMBLY, DUAL ROW AIRDROP PLATFORM

(1) ITEM NO.	(2) SMR CODE	(3) NSN	(4) CAGEC	(5) PART NUMBER	(6) DESCRIPTION AND USABLE ON CODE (UOC)	(7) QTY
13	PAOZZ	1670-01-502-1294	81337	11-1-7002-1	.Handle (Mast Handle), UOC: FRZ	2
END OF FIGURE						

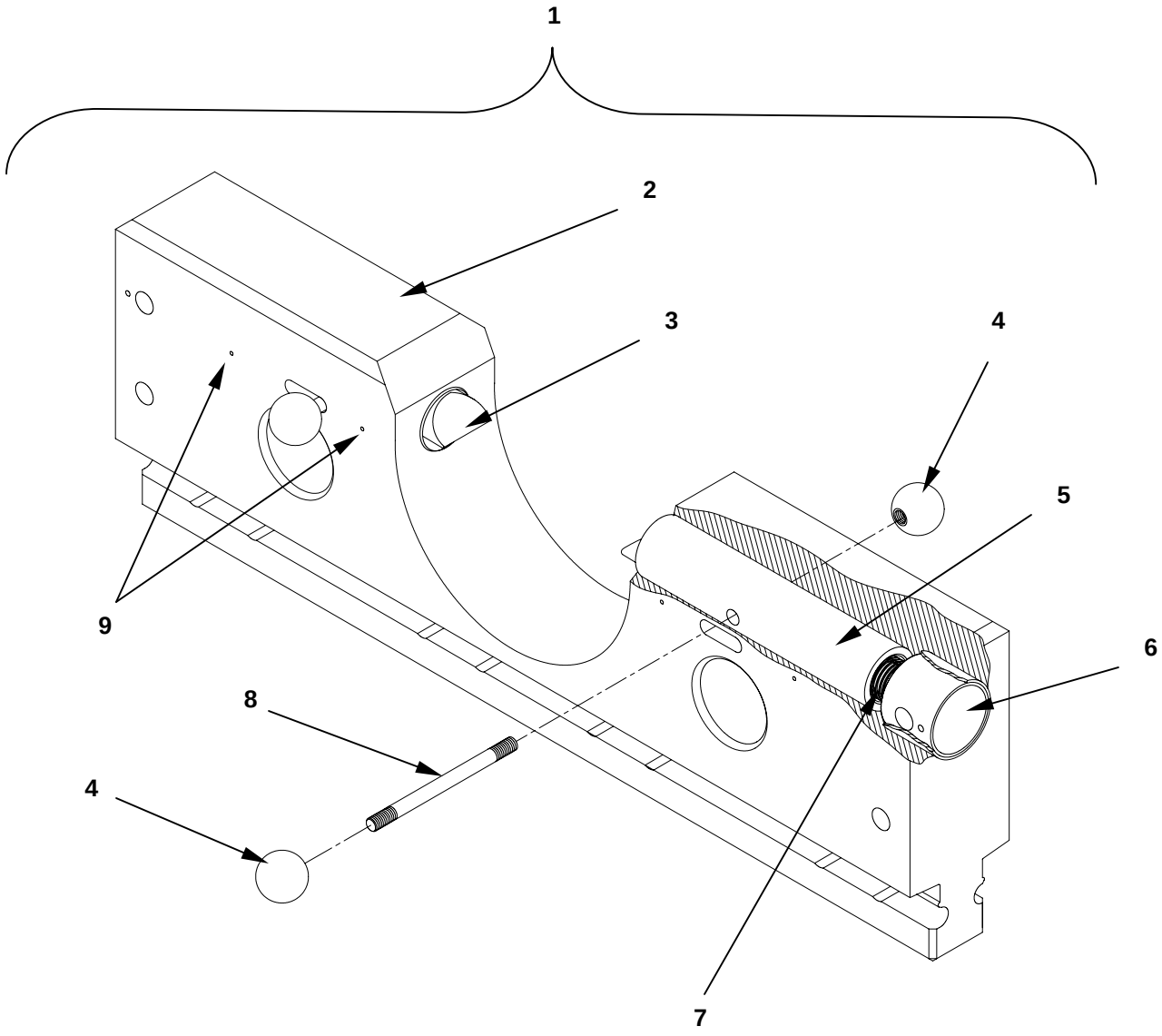

Figure 10. Link Assembly, Dual Row Airdrop Platform

GROUP 0502 LINK ASSEMBLY, DUAL ROW AIRDROP PLATFORM
REPAIR PARTS LIST

(1) ITEM NO.	(2) SMR CODE	(3) NSN	(4) CAGEC	(5) PART NUMBER	(6) DESCRIPTION AND USABLE ON CODE (UOC)	(7) QTY
Group 0502, Link Assembly, Dual Row Airdrop Platform Figure 10, Link Assembly, Dual Row Airdrop Platform						
1	PAOZZ	1670-01-509-2687	81337	11-1-7009-1	Outrigger Link Assembly UOC: FRZ	2
2	XAOZZ		81337	11-1-7010-1	.Outrigger Link UOC: FRZ	2
3	XAOZZ		81337	11-1-7006-1	.Lock pin, Outrigger UOC: FRZ	4
4	PAOZZ	5355-01-493-6386	81337	11-1-7015-1	.Knob (Knob Ball) UOC: FRZ	8
5	XAOZZ		81337	11-1-7016-1	.Sleeve Bearings, Plain UOC: FRZ	8
6	XAOZZ		81337	11-1-7008-1	.End Plug Outrigger UOC: FRZ	4
7	XAOZZ		81337	11-1-7017-1	.Spring Helical, Compression UOC: FRZ	4
8	XAOZZ		81337	11-1-7007-1	.Lock Pin Release Shaft, Outrigger UOC: FRZ	4
9	XAOZZ		96906	MS16562-224	.Roll Pin, Stainless Steel, $^{1}/_{8}$-IN. X ¾-IN. UOC: FRZ	12
END OF FIGURE						

END OF WORK PACKAGE

GROUP 0503 WELDMENT ASSEMBLY, DUAL ROW AIRDROP PLATFORM
REPAIR PARTS LIST

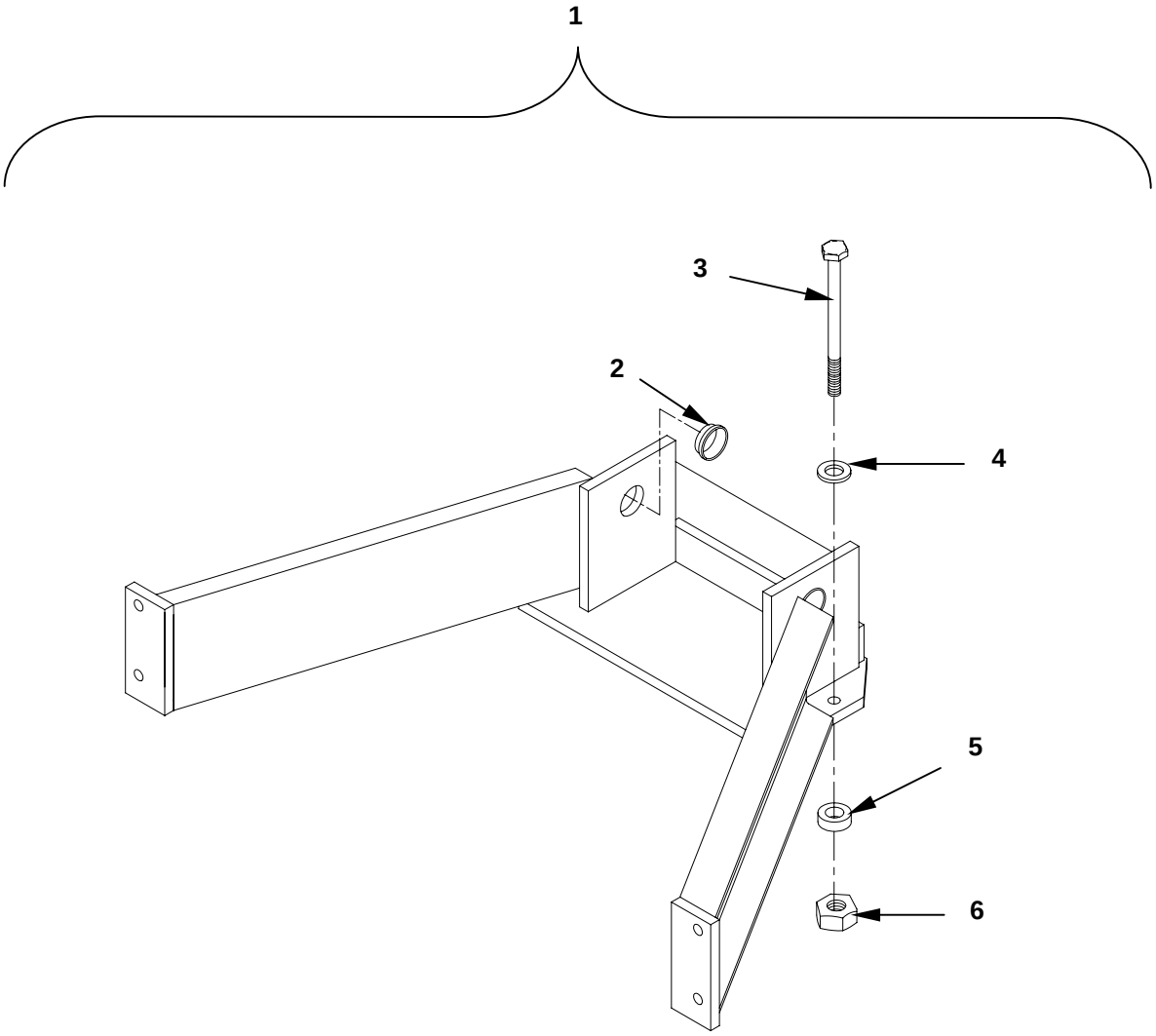

Figure 11. Weldment Assembly, Dual Row Airdrop Platform

GROUP 0503 WELDMENT ASSEMBLY, DUAL ROW AIRDROP PLATFORM REPAIR PARTS LIST

(1) ITEM NO.	(2) SMR CODE	(3) NSN	(4) CAGEC	(5) PART NUMBER	(6) DESCRIPTION AND USABLE ON CODE (UOC)	(7) QTY
Group 0503, Weldment Assembly, Dual Row Airdrop Platform Figure 11, Weldment Assembly, Dual Row Airdrop Platform						
1	PAOZZ	1670-01-509-2688	81337	11-1-7005-1	Platform Support Weldment, Outrigger Assembly UOC: FRZ	2
2	PAOZZ	3120-01-493-6384	81337	11-1-7024-1	.Bearing, Sleeve (Modified), UOC: FRZ	4
3	PAOZZ	5306-00-275-9560	88044	AN6-37A	.Bolt, Machine, $^{3}/_{8}$-IN. 24 (.375) UNF-3A X 3 $^{61}/_{64}$-IN LG, UOC: FRZ	4
4	PAOZZ	5310-00-167-0821	80205	NAS1149F0663P	.Washer, Flat, $^{3}/_{8}$-IN. (.375), .390 ID X .625 OD X .036 THK, UOC: FRZ	4
5	PAOZZ	5310-01-499-5498	81337	11-1-7022-1	.Washer, Jumbo, Extra Thick ($^{1}/_{4}$-IN. THK X 2 IN DIA), UOC: FRZ	2
6	PAOZZ	5310-00-950-0039	96906	NASM21044-N6	.Nut, Hex HD, Self-locking (.375), $^{3}/_{8}$-IN. 24UNJF-3B, Steel Plated, UOC: FRZ	4
END OF FIGURE						

END OF WORK PACKAGE

TYPE V AND DUAL ROW AIRDROP PLATFORM SPECIAL TOOLS LIST

Not Applicable

No special tools are required to assemble the Type V and Dual Row Airdrop Platform (reference WP 0019 00, Table 2).

END OF WORK PACKAGE

TYPE V AND DUAL ROW AIRDROP PLATFORM NATIONAL STOCK NUMBER (NSN) INDEX

STOCK NUMBER	FIGURE	ITEM
5306-00-004-1534	1	10
5306-00-004-1534	1	21
5305-00-052-6456	9	5
5310-00-057-7151	1	26
5305-00-071-2081	8	7
5310-00-088-0552	1	15
5310-00-088-0552	5	6
5306-01-140-6356	2	6
5306-01-140-6356	3	4
5306-01-140-6356	4	4
5306-01-140-6356	6	6
5306-01-140-6356	7	4
1670-01-162-2366	2	2
1670-01-162-2367	2	2
1670-01-162-2368	2	2
1670-01-162-2369	2	2
1670-01-162-2370	2	2
1670-01-162-2371	2	2
1670-01-162-2372	1	18
1670-01-162-2372	5	1
1670-01-162-2373	1	14
5365-01-162-2373	5	4
1670-01-162-2380	1	12
1670-01-162-2380	1	22
1670-01-162-2381	1	11
1670-01-162-2382	2	8
1670-01-162-2383	2	8
5365-01-162-2384	2	3
5365-01-162-2384	3	6
5365-01-162-2384	4	6
5365-01-162-2384	6	3
5365-01-162-2384	7	6
1670-01-162-2386	2	8
1670-01-162-2387	2	8
1670-01-162-2388	2	8
1670-01-162-2389	2	8
5310-00-167-0821	1	4
5310-00-167-0821	2	7

STOCK NUMBER	FIGURE	ITEM
5310-00-167-0821	3	5
5310-00-167-0821	4	5
5310-00-167-0821	6	7
5310-00-167-0821	7	5
5310-00-167-0821	9	8
5310-00-167-0821	11	4
1670-01-169-9154	2	2
1670-01-169-9155	2	8
5306-00-180-1489	1	5
5306-00-208-3650	1	17
5306-00-208-3650	5	3
5306-01-212-1264	2	5
5306-01-212-1264	3	3
5306-01-212-1264	4	3
5306-01-212-1264	6	5
5306-01-212-1264	7	3
5306-01-240-8883	1	29
1670-01-247-2389	1	20
5306-00-275-9560	11	3
1670-01-304-1057	2	9
1670-01-304-1057	4	1
1670-01-304-3006	2	1
1670-01-304-3006	3	1
1670-01-353-8424	1	31
1670-01-353-8425	1	8
5310-01-396-8392	2	4
5310-01-396-8392	6	4
5310-01-396-8392	8	5
5310-01-397-1798	1	27
5310-01-408-2779	1	1
5310-00-483-8790	9	9
1670-01-485-1654	6	2
1670-01-485-1656	6	1
1670-01-485-1656	7	1
1670-01-486-1342	6	8
1670-01-487-5464	8	1
5365-01-491-2859	9	7
3120-01-493-6384	11	2
5315-01-493-6385	9	3
5355-01-493-6386	10	4
5306-01-499-4465	9	11

STOCK NUMBER	FIGURE	ITEM
5310-01-499-5498	11	5
3040-01-499-6572	8	3
3040-01-499-6572	9	10
1670-01-502-1294	9	13
1670-01-509-2685	8	9
1670-01-509-2687	8	6
1670-01-509-2687	10	1
1670-01-509-2688	8	2
1670-01-509-2688	9	1
1670-01-509-2688	11	1
5306-00-527-4240	1	2
5310-00-595-7421	8	4
5310-00-809-4061	1	16
5310-00-809-4061	5	5
5310-00-809-4085	1	13
5310-00-809-4085	1	19
5310-00-902-7846	1	9
5310-00-902-7846	1	23
5310-00-950-0039	1	3
5310-00-950-0039	11	6
5310-00-982-6809	1	24
5305-00-992-6143	9	12

TYPE V AND DUAL ROW AIRDROP PLATFORM PART NUMBER INDEX

PART NUMBER	FIGURE	ITEM
11-1-2780 FIND 25	2	5
11-1-2780 FIND 25	3	3
11-1-2780 FIND 25	4	3
11-1-2780 FIND 25	6	5
11-1-2780 FIND 25	7	3
11-1-2780-11	1	31
11-1-2780-12	1	8
11-1-2780-16	6	1
11-1-2780-16	7	1
11-1-2780-8	2	1
11-1-2780-8	3	1
11-1-2780-9	2	9
11-1-2780-9	4	1
11-1-2781-1	4	2
11-1-2781-2	3	2
11-1-2792	2	3
11-1-2792	3	6
11-1-2792	4	6
11-1-2792	6	3
11-1-2792	7	6
11-1-2793-1	2	2
11-1-2793-2	2	2
11-1-2793-3	2	2
11-1-2793-4	2	2
11-1-2793-5	2	2
11-1-2793-6	2	2
11-1-2793-7	2	2
11-1-2795-1	2	8
11-1-2795-17	6	8
11-1-2795-2	2	8
11-1-2795-3	2	8
11-1-2795-4	2	8
11-1-2795-6	2	8
11-1-2795-7	2	8
11-1-2798-1	1	11
11-1-2798-2	1	20
11-1-2800	1	12
11-1-2800	1	22
11-1-2801	1	18
11-1-2801	5	1
11-1-2802	5	2
11-1-2803	1	14
11-1-2803	5	4
11-1-2868	1	25
11-1-2869	1	28
11-1-2870	1	30
11-1-2872	1	7
11-1-3175	1	6
11-1-4144-2	6	2
11-1-4226-1	7	2
11-1-7000-1	9	6
11-1-7001-1	8	9

PART NUMBER	FIGURE	ITEM
11-1-7001-1	9	1
11-1-7002-1	9	13
11-1-7003-1	9	7
11-1-7004-1	8	3
11-1-7004-1	9	10
11-1-7005-1	8	2
11-1-7005-1	11	1
11-1-7006-1	10	3
11-1-7007-1	10	8
11-1-7008-1	10	6
11-1-7009-1	8	6
11-1-7009-1	10	1
11-1-7010-1	10	2
11-1-7011-1	8	1
11-1-7013-1	8	8
11-1-7015-1	10	4
11-1-7016-1	10	5
11-1-7017-1	10	7
11-1-7020-1	9	11
11-1-7021-1	9	3
11-1-7022-1	11	5
11-1-7023-1	9	4
11-1-7024-1	11	2
11-1-7029-1	9	2
AN10-36A	1	2
AN17-76A	1	29
AN6-17A	1	5
AN6-37A	11	3
AN7-24A	1	10
AN7-24A	1	21
AN7-27A	1	17
AN7-27A	5	3
ANSI B 18.2.1 BH050C450N	8	7
ANSI B18.22.1	1	13
ANSI B18.22.1	1	16
ANSI B18.22.1	1	19
ANSI B18.22.1	5	5
B1821BH038F125L	2	6
B1821BH038F125L	3	4
B1821BH038F125L	4	4
B1821BH038F125L	6	6
B1821BH038F125L	7	4
MS16562-224	10	9
MS16995-72	9	12
MS16996-10	9	5
MS21044-N10	1	24
MS21044-N16	1	26
MS21044-N6	1	3
MS21044-N7	1	15
MS21044-N7	5	6
MS21083-N7	1	9

PART NUMBER	FIGURE	ITEM
MS21083-N7	1	23
NAS1149F0336P	6	7
NAS1149F0336P	7	5
NAS1149F0663P	1	4
NAS1149F0663P	2	7
NAS1149F0663P	3	5
NAS1149F0663P	4	5
NAS1149F0663P	9	8

PART NUMBER	FIGURE	ITEM
NAS1149F0663P	11	4
NAS1149F0863P	2	4
NAS1149F0863P	6	4
NAS1149F0863P	8	5
NAS1149F1063P	1	1
NAS1149F1690P	1	27
NASM17829-6C	9	9
NASM17829-8C	8	4
NASM21044-N6	11	6

TYPE V AND DUAL ROW AIRDROP PLATFORM EXPENDABLE/DURABLE SUPPLIES AND MATERIALS LIST

SCOPE

This work package lists expendable and durable items that you will need to operate and maintain the 28-Foot Diameter, Cargo Extraction Parachute. These items are authorized to you by CTA 50-970, Expendable/Durable Items (Except Medical, Class V, Repair Parts, and Heraldic Items) or CTA 8-100, Army Medical Department Expendable/Durable Items.

EXPLANATION OF COLUMNS

Column 1, Item Number. This number is assigned to the entry in the list and is referenced in the narrative instructions to identify the item (e.g., Use Cloth, Abrasive (Item 2,WP 0030 00).

Column 2, Level. This column identifies the lowest level of maintenance that requires the listed item. (O = Unit Maintenance).

Column 3, National Stock Number. This is the NSN assigned to the item; use it to request or requisition the item.

Column 4, Item Name, Description, Commercial and Government Entity Code (CAGEC), and Part Number (P/N). This column provides the other information you need to identify the item.

Column 5, Unit of Measure (U/M). This code shows the physical measurement or count of an item, such as gallon, dozen, gross, etc.

Table 1. Expendable/Durable Supplies and Materials List

(1) ITEM NUMBER	(2) LEVEL	(3) NATIONAL STOCK NUMBER	(4) ITEM NAME, DESCRIPTION, CAGE, PART NUMBER	(5) UNIT OF MEASURE
1		7920-00-282-2470	Brush, Scrub, Household	EA
2		5350-00-221-0872	Cloth, Abrasive	BULK
3		7930-00-281-4731	Dishwashing Compound, Hand Flake	LB
4		8030-01-025-1692	Locktite 242, Thread Adhesive, Blue	BT
5		7920-00-205-3570	Rag, Wiping	BULK
6		7510-00-633-0196	Tape, Adhesive, Pressure Sensitive, 2-IN.	RO
7		8310-00-917-3945	Thread, Cotton, Ticket 8/7, Natural	YD
8		1670-00-725-1437	Webbing, Tiedown, CGU-1B	EA

END OF WORK PACKAGE

ALPHABETICAL INDEX

Subject **WP Sequence No. – Page No.**

A

C

D

E

F

G

Subject **WP Sequence No. – Page No.**

H

I

L

M

Subject **WP Sequence No. – Page No.**

N

O

P

R

Subject **WP Sequence No. – Page No.**

R-Continued

S

T

U

Subject **WP Sequence No. – Page No.**

W

By Order of the Secretaries of the Army and Air Force:

ERIC K. SHINSEKI
General, United States Army
Chief of Staff

Official:

JOEL B. HUDSON
Administrative Assistant to the
Secretary of the Army
0223901

DISTRIBUTION:
To be distributed in accordance with Initial Distribution Number (IDN) 252492 requirements for TM 10-1670-268-20&P.

These are the instructions for sending an electronic 2028

The following format must be used if submitting an electronic 2028. The subject line must be exactly the same and all fields must be included; however only the following fields are mandatory: 1, 3, 4, 5, 6, 7, 8, 9, 10, 13, 15, 16, 17, and 27.

From: “Whomever” <whomever@avma27.army.mil>
To: amssb−rim−e@natick.army.mil

Subject: DA Form 2028

1. ***From:*** Joe Smith
2. *Unit:* home
3. ***Address:*** 4300 Park
4. ***City:*** Hometown
5. ***St:*** MO
6. ***Zip:*** 77777
7. ***Date Sent:*** 19−OCT−93
8. ***Pub no:*** 55−2840−229−23
9. ***Pub Title:*** TM
10. ***Publication Date:*** 04−JUL−85
11. *Change Number:* 7
12. *Submitter Rank:* MSG
13. ***Submitter FName:*** Joe
14. *Submitter MName:* T
15. ***Submitter LName:*** Smith
16. ***Submitter Phone:*** 123−123−1234
17. ***Problem:*** **1**
18. *Page:* 2
19. *Paragraph:* 3
20. *Line:* 4
21. *NSN:* 5
22. *Reference:* 6
23. *Figure:* 7
24. *Table:* 8
25. *Item:* 9
26. *Total:* 123
27. ***Text:***

This is the text for the problem below line 27.

RECOMMENDED CHANGES TO PUBLICATIONS AND BLANK FORMS For use of this form, see AR 25-30; the proponent agency is ODISC4.	Use Part II *(reverse)* for Repair Parts and Special Tool Lists (RPSTL) and Supply Catalogs/Supply Manuals (SC/SM).	DATE *21 October 2003*

TO: *(Forward to proponent of publication or form) (Include ZIP Code)* COMMANDER U.S. ARMY TANK-AUTOMOTIVE AND ARMAMENT COMMAND ATTN: AMSTA-LC-CECT 15 KANSAS STREET NATICK, MA 01760-5052	FROM: *(Activity and location) (Include ZIP Code)* *PFC Jane Doe* *CO A 3rd Engineer BR* *Ft. Leonardwood, MO 63108*

PART I – ALL PUBLICATIONS (EXCEPT RPSTL AND SC/SM) AND BLANK FORMS

PUBLICATION/FORM NUMBER	DATE	TITLE
TM 10-1670-296-23&P	30 October 2002	Unit Manual for Ancillary Equipment for Low Velocity Air Drop Systems

ITEM NO.	PAGE NO.	PARA-GRAPH	LINE NO. *	FIGURE NO.	TABLE NO.	RECOMMENDED CHANGES AND REASON *(Provide exact wording of recommended changes, if possible).*
	0036 00-2				*1*	*In table 1, Sewing Machine Code Symbols, the second sewing machine code symbol should be MD ZZ not MD 22.* *Change the manual to show Sewing Machine, Industrial: Zig-Zag; 308 stitch; medium-duty; NSN 3530-01-181-1421 as a MD ZZ code symbol.*

**Reference to line numbers within the paragraph or subparagraph.*

TYPED NAME, GRADE OR TITLE	TELEPHONE EXCHANGE/AUTOVON, PLUS EXTENSION	SIGNATURE
Jane Doe, PFC	508-233-4141	*Jane Doe*

TO: (*Forward direct to addressee listed in publication*)	FROM: (*Activity and location*) (*Include ZIP Code*)	DATE
COMMANDER U.S. ARMY TANK-AUTOMOTIVE AND ARMAMENT COMMAND ATTN: AMSTA-LC-CECT 15 KANSAS STREET NATICK, MA 01760-5052	*PFC Jane Doe* *CO A 3rd Engineer BR* *Ft. Leonardwood, MO 63108*	*21 October 2003*

PART II – REPAIR PARTS AND SPECIAL TOOL LISTS AND SUPPLY CATALOGS/SUPPLY MANUALS

PUBLICATION NUMBER	DATE	TITLE
TM 10-1670-296-23&P	30 October 2002	Unit Manual for Ancillary Equipment for Low Velocity Air Drop Systems

PAGE NO.	COLM NO.	LINE NO.	NATIONAL STOCK NUMBER	REFERENCE NO.	FIGURE NO.	ITEM NO.	TOTAL NO. OF MAJOR ITEMS SUPPORTED	RECOMMENDED ACTION
0066 00-1					*4*			*Callout 16 in figure 4 is pointed to a D-Ring. In the Repair Parts List key for figure 4, item 16 is called a Snap Hook. Please correct one or the other.*

PART III – REMARKS (*Any general remarks or recommendations, or suggestions for improvement of publications and blank forms. Additional blank sheets may be used if more space is needed.*)

TYPED NAME, GRADE OR TITLE	TELEPHONE EXCHANGE/AUTOVON, PLUS EXTENSION	SIGNATURE

RECOMMENDED CHANGES TO PUBLICATIONS AND BLANK FORMS For use of this form, see AR 25-30; the proponent agency is ODISC4.	Use Part II *(reverse)* for Repair Parts and Special Tool Lists (RPSTL) and Supply Catalogs/Supply Manuals (SC/SM).	DATE
TO: *(Forward to proponent of publication or form) (Include ZIP Code)* Commander, U.S. Army Tank-automotive and Armament Command ATTN: AMSTA-LC-CECT 15 Kansas Street Natick, MA 01760-5052	FROM: *(Activity and location) (Include ZIP Code)*	

PART I – ALL PUBLICATIONS (EXCEPT RPSTL AND SC/SM) AND BLANK FORMS

PUBLICATION/FORM NUMBER	DATE	TITLE
TM 10-1670-268-20&P	15 September 2002	Type V and Dual Row Airdrop Platform

ITEM NO.	PAGE NO.	PARA-GRAPH	LINE NO. *	FIGURE NO.	TABLE NO.	RECOMMENDED CHANGES AND REASON *(Provide exact wording of recommended changes, if possible).*

**Reference to line numbers within the paragraph or subparagraph.*

TYPED NAME, GRADE OR TITLE	TELEPHONE EXCHANGE/AUTOVON, PLUS EXTENSION	SIGNATURE

TO: (*Forward direct to addressee listed in publication*) Commander, U.S. Army Tank-automotive and Armament Command ATTN: AMSTA-LC-CECT 15 Kansas Street Natick, MA 01760-5052	FROM: (*Activity and location) (Include ZIP Code)*	DATE

PART II – REPAIR PARTS AND SPECIAL TOOL LISTS AND SUPPLY CATALOGS/SUPPLY MANUALS

PUBLICATION NUMBER	DATE	TITLE
TM 10-1670-268-20&P	15 September 2002	Type V and Dual Row Airdrop Platform

PAGE NO.	COLM NO.	LINE NO.	NATIONAL STOCK NUMBER	REFERENCE NO.	FIGURE NO.	ITEM NO.	TOTAL NO. OF MAJOR ITEMS SUPPORTED	RECOMMENDED ACTION

PART III – REMARKS (*Any general remarks or recommendations, or suggestions for improvement of publications and blank forms. Additional blank sheets may be used if more space is needed.)*

TYPED NAME, GRADE OR TITLE	TELEPHONE EXCHANGE/AUTOVON, PLUS EXTENSION	SIGNATURE

The Metric System and Equivalents

Linear Measure

1 centimeter = 10 millimeters = .39 inch
1 decimeter = 10 centimeters = 3.94 inches
1 meter = 10 decimeters = 39.37 inches
1 dekameter = 10 meters = 32.8 feet
1 hectometer = 10 dekameters = 328.08 feet
1 kilometer = 10 hectometers = 3,280.8 feet

Weights

1 centigram = 10 milligrams = .15 grain
1 decigram = 10 centigrams = 1.54 grains
1 gram = 10 decigrams = .035 ounce
1 dekagram = 10 grams = .35 ounce
1 hectogram = 10 dekagrams = 3.52 ounces
1 kilogram = 10 hectograms = 2.2 pounds
1 quintal = 100 kilograms = 220.46 pounds
1 metric ton = 10 quintals = 1.1 short tons

Liquid Measure

1 centiliter = 10 milliliters = .34 fl. ounce
1 deciliter = 10 centiliters = 3.38 fl. ounces
1 liter = 10 deciliters = 33.81 fl. ounces
1 dekaliter = 10 liters = 2.64 gallons
1 hectoliter = 10 dekaliters = 26.42 gallons
1 kiloliter = 10 hectoliters = 264.18 gallons

Square Measure

1 sq. centimeter = 100 sq. millimeters = .155 sq. inch
1 sq. decimeter = 100 sq. centimeters = 15.5 sq. inches
1 sq. meter (centare) = 100 sq. decimeters = 10.76 sq. feet
1 sq. dekameter (are) = 100 sq. meters = 1,076.4 sq. feet
1 sq. hectometer (hectare) = 100 sq. dekameters = 2.47 acres
1 sq. kilometer = 100 sq. hectometers = .386 sq. mile

Cubic Measure

1 cu. centimeter = 1000 cu. millimeters = .06 cu. inch
1 cu. decimeter = 1000 cu. centimeters = 61.02 cu. inches
1 cu. meter = 1000 cu. decimeters = 35.31 feet

Approximate Conversion Factors

To change	*To*	*Multiply by*	*To change*	*To*	*Multiply by*
inches	centimeters	2.540	ounce–inches	newton–meters	.007062
feet	meters	.305	centimeters	inches	.394
yards	meters	.914	meters	feet	3.280
miles	kilometers	1.609	meters	yards	1.094
square inches	square centimeters	6.451	kilometers	miles	.621
square feet	square meters	.093	square centimeters	square inches	.155
square yards	square meters	.836	square meters	square feet	10.764
square miles	square kilometers	2.590	square meters	square yards	1.196
acres	square hectometers	.405	square kilometers	square miles	.386
cubic feet	cubic meters	.028	square hectometers	acres	2.471
cubic yards	cubic meters	.765	cubic meters	cubic feet	35.315
fluid ounces	milliliters	29.573	cubic meters	cubic yards	1.308
pints	liters	.473	milliliters	fluid ounces	.034
quarts	liters	.946	liters	pints	2.113
gallons	liters	3.785	liters	quarts	1.057
ounces	grams	28.349	liters	gallons	.264
pounds	kilograms	.454	grams	ounces	.035
short tons	metric tons	.907	kilograms	pounds	2.205
pound–feet	newton–meters	1.356	metric tons	short tons	1.102
pound–inches	newton–meters	.11296			

Temperature (Exact)

_F	Fahrenheit temperature	5/9 (after subtracting 32)	Celsius temperature	_C

PIN: 060198-000

This fine document...

Was brought to you by me:

Liberated Manuals -- free army and government manuals

Why do I do it? I am tired of sleazy CD-ROM sellers, who take publicly available information, slap “watermarks” and other junk on it, and sell it. Those masters of search engine manipulation make sure that their sites that sell free information, come up first in search engines. They did not create it... They did not even scan it... Why should they get your money? Why are not letting you give those free manuals to your friends?

I am setting this document FREE. This document was made by the US Government and is NOT protected by Copyright. Feel free to share, republish, sell and so on.

I am not asking you for donations, fees or handouts. If you can, please provide a link to liberatedmanuals.com, so that free manuals come up first in search engines:

<A HREF=http://www.liberatedmanuals.com/>Free Military and Government Manuals</A>

- Sincerely
  Igor Chudov
  http://igor.chudov.com/
- Chicago Machinery Movers