DEPARTMENT OF THE ARMY TECHNICAL MANUAL

DIRECT AND GENERAL SUPPORT AND DEPOT MAINTENANCE MANUAL:

GUIDED MISSILE FLIGHT CONTROL TRAINING SETS DX-43 AND DX-44

(ENTAC ANTITANK GUIDED MISSILE SYSTEM AND M22 GUIDED MISSILE LAUNCHER HELICOPTER ARMAMENT SUBSYSTEM)

This copy is a reprint which includes current pages from Change 1.

HEADQUARTERS, DEPARTMENT OF THE ARMY

FEBRUARY 1965

TECHNICAL MANUAL
No. 9-6920-461-35

HEADQUARTERS,
DEPARTMENT OF THE ARMY
WASHINGTON, D.C., *3 February 1965*

GUIDED MISSILE FLIGHT CONTROL TRAINING SETS DX-43 AND DX-4

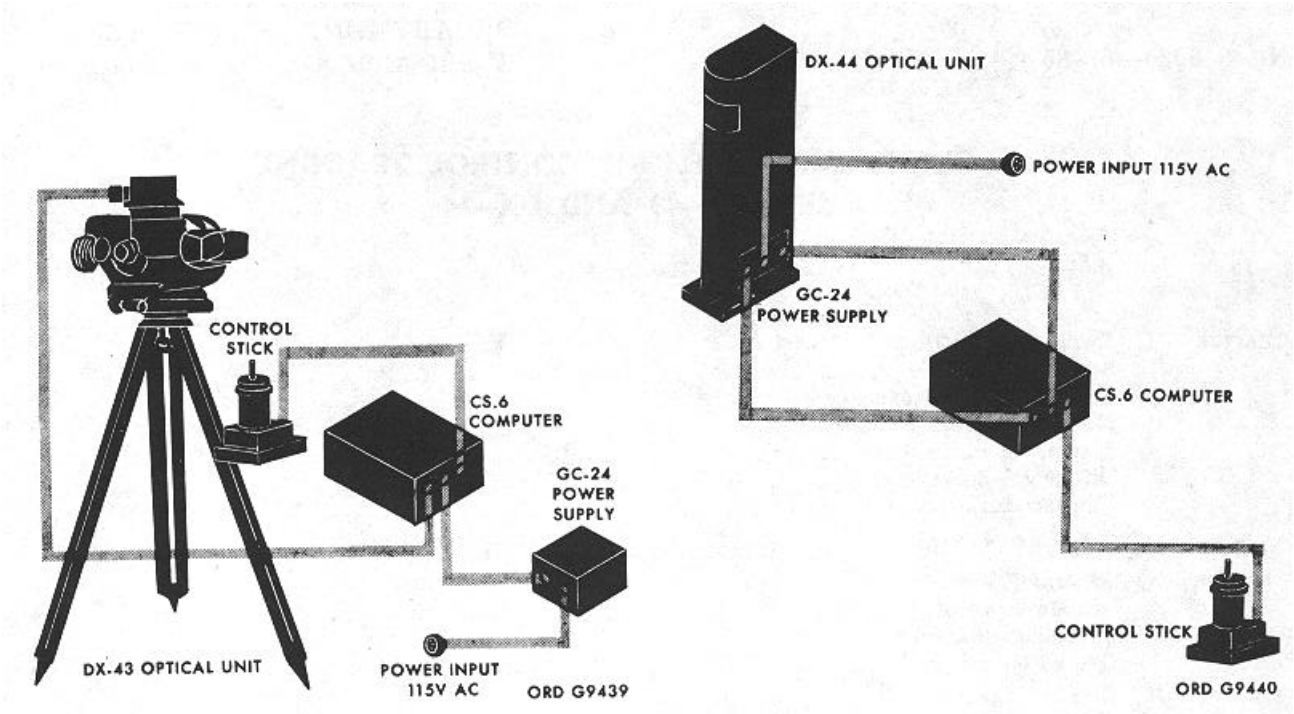

Figure 1. DX-43 and DX-14 simulators.

CHAPTER 1

INTRODUCTION

1. Scope

This manual contains instructions for maintaining DX-43 and DX-44 guided-missile flight-control trainers (fig. 1). These instructions are for direct support, general support, and depot maintenance technicians. For functional description, operating instructions, and basic information on the trainers, see TM 9-6920-461-12.

2. Errors, Omissions, and Corrections

The direct reporting of errors, omissions, and recommendations for improving this equipment manual is authorized and encouraged. DA Form 2028 will be used for reporting these improvements. This form may be completed using pencil, pen, or typewriter. DA Form 2028 will be completed in triplicate and forwarded direct to: Commanding General, U. S. Army Missile Command, ATTENTION: AMSMI-SMPT, Redstone Arsenal, Alabama 35809. One information copy will be provided to the individual's immediate supervisor, (e. g., officer, noncommissioned officer, superior, etc.).

3. Maintenance Responsibilities

Maintenance responsibilities are as indicated in the maintenance allocation chart in TM 9-6920-461-12, and reflected by the allocation of repair parts and tools listed in TM 9-6920-461-35P.

4. Forms, Records, and Reports

See TM 38-750 for instructions on the use and completion of all forms required for operating and maintaining this equipment.

5. Differences Among Models

There is only one model of the DX43 simulator and one model of the DX-44 simulator in the field. No modification work orders have been incorporated.

6. Nomenclature Cross-Reference

Table 1 lists nomenclature used in this manual which differs from approved nomenclature.

Table 1. Nomenclature Cross-Reference

TM nomenclature	Approved nomenclature	Reference no.
DX-43 simulator	TRAINING SET, GUIDED MISSILE FLIGHT CONTROL (DX-43) (ENTAC) (ground mounted)	10173191
	or	
	TRAINING SET, GUIDED MISSILE FLIGHT CONTROL (DX-43) (AGM-22)	10173200
DX44 simulator	TRAINING SET, GUIDED MISSILE FLIGHT CONTROL (DX-44) (AGM-22)	10173201
Computer	COMPUTER, CS6	10173161
Regulated power supply	POWER SUPPLY, REGULATED, GC24	10173181
ENTAC control stick adaption kit	ADAPTION KIT, GUIDED MISSILE FLIGHT CONTROL TRAINING (DX-43) (ENTAC)	10173190
AGM-22 control stick adaption kit	ADAPTION KIT, GUIDED MISSILE FLIGHT CONTROL TRAINING (AGM-22)	10173189
DX-43 optical unit	OPTICAL UNIT, DX-43	10173149
DX-44 projector	PROJECTOR UNIT, DX-44	10173193

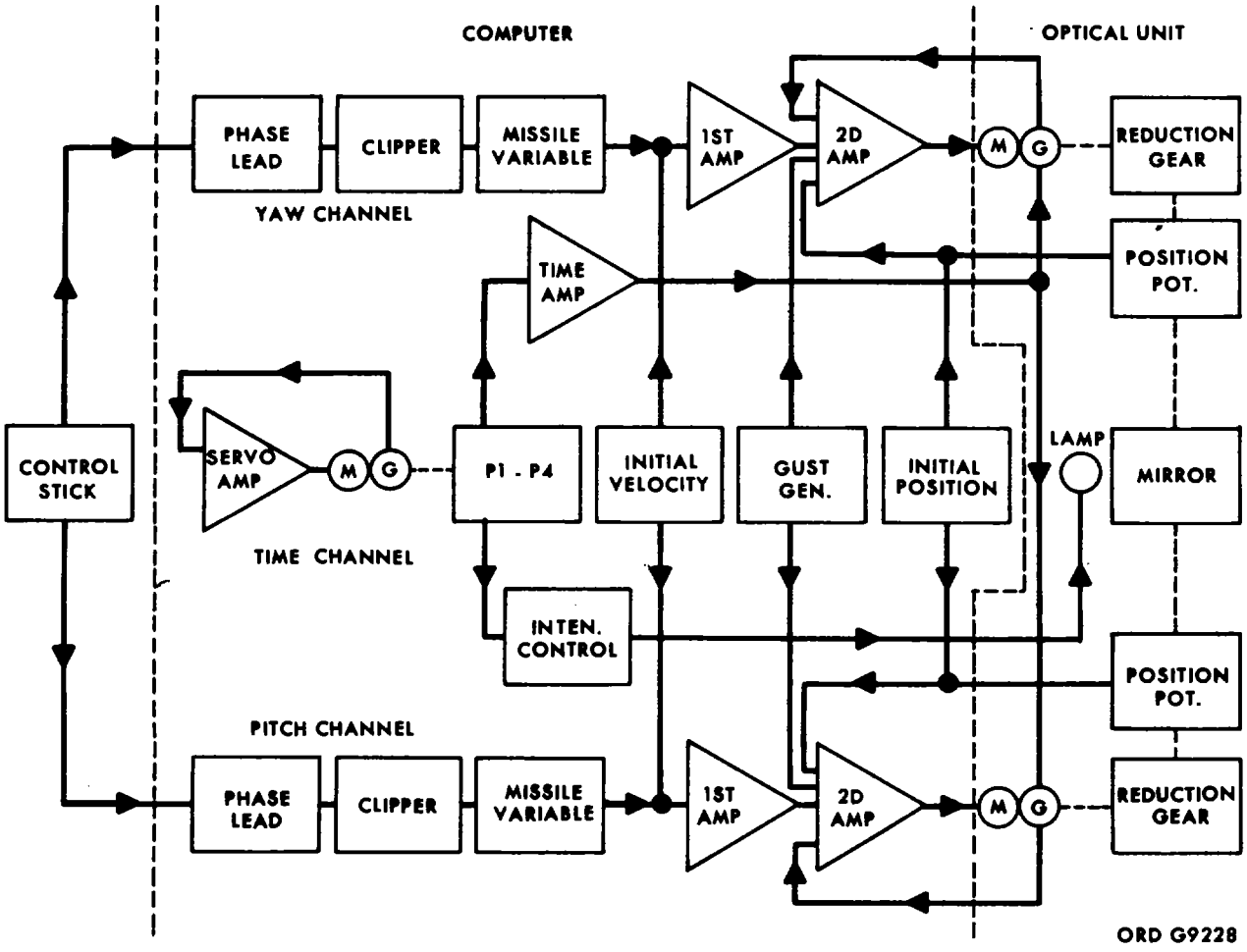

Figure 2. Block diagram-DX-43 and DX-44.

CHAPTER 2

THEORY OF OPERATION, DX-43 AND DX-44 SIMULATORS

Section I. GENERAL THEORY

7. Introduction

a. The DX43 simulator provides outdoor training in firing ENTAC or AGM-22 guided missiles. It consists of an optical unit, a computer, and a regulated power supply. Two control stick adaption kits are used with the simulator, one for ENTAC training and another for AGM-22 training. These components, together with interconnecting cables, make up the complete simulator.

b. The DX-44 simulator provides indoor training in firing the AGM-22 guided missile. It consists of a projector set and a computer. The computer is identical to the one used in the DX-43. A regulated power supply, identical with the one used with the DX-43 except for minor changes, is built into the projector set. The control stick adaption kit used with the DX-44 is the same as the one used with the DX-43 for AGM-22 training.

c. Operation of the DX-43 and DX-44 simulators is similar. The difference between the two is that the DX-43 projects a light spot representing the missile directly to the operator's eye, whereas the DX-44 projects the spot onto a screen. Since the two simulators have much in common, the following discussion of the DX-43 theory of operation applies generally to the DX-44 also. The differences will be discussed later.

8. Method of Simulation

The adaption kit uses a modified control stick which simulates that used with the tactical missile system. Movements of the control stick control voltages in the computer which determine vertical and horizontal movements of a light spot produced by the optical unit. The light spot, representing the flare of a missile in flight, is superimposed on the landscape that the operator sees through the optical unit. The motions of the light spot, in response to movements of the control stick, simulate motions of the actual missile.

9. Overall Operation (Fig. 2)

a. The computer has three channels: yaw (Y), pitch (P), and time (T). The control stick acts as a voltage divider; some positive or negative voltage is picked off for both Y and P control. In the computer and optical unit, Y and P channels are similar in operation.

b. The signal from the control stick goes through the phase-lead network, which couples rapid changes in voltage with less attenuation than slow changes. This simulates the quick react effect in the tactical system. The clipper stage clips positive and negative peaks of the signal, thus setting the voltage value for a 100% command. The missile-variables circuit, switched by the front panel missile selection switch, simulates normal variations in missile performance.

c. The first control amplifier develops the signal for initial Y and P velocity and, during missile time of flight, acts as the first integrator, computing drift velocity as affected by the control signal. The second control amplifier is the second integrator, computing instantaneous elevation and azimuth positions. The amplifier output is a varying ac voltage. This voltage is fed to the control winding of the servomoter, which drives the generator to produce an error signal. The motor also controls, through a reduction gear, the angle of the mirror in elevation and azimuth and drives the potentiometers which pick off the position voltage. The position voltage is fed back to the second control amplifier while the computer is in the ready condition. These voltages, together with the voltages set on the Y and P initial position potentiometers, establish the angle of the mirror in elevation and azimuth at the beginning of a flight.

d. Missile velocity is assumed to be constant, so distance traveled by the missile is directly proportional to time. The time channel of the computer controls missile conditions that vary with distance. An ac amplifier, supplied with a

constant voltage, drives a motor-generator. The generator provides an error signal that is fed back to the amplifier input. The motor, through a reduction gear, drives three potentiometers and a commutator. The commutator controls the relay energizing sequence and the potentiometers control a trigger for end-of-flight conditions, control the diminishing of light spot brilliance with time, and supply to the timer amplifier an ac voltage proportional to time. The timer amplifier supplies the voltage for the reference windings of the optical unit P and Y channel generators.

e. The gust generator, use of which is optional, supplies ac voltages varying at random in amplitude and phase to simulate the effect of atmospheric disturbances on missile guidance.

Section II. DETAILED THEORY

10. Power Supplies

Note. Figure 3 is the computer main chassis schematic. Figures 4 through 7 are schematics of plug-in modules. Figure 8 is the M22 control stick schematic, and figure 9 is the ENTAC control stick schematic.

a. Power to operate the simulator is supplied either by a 24v battery or by the 24v regulated power supply (see paragraph 17 for detailed theory of the 24v supply). In the computer, the 24v is further regulated by a transistor regulator circuit which produces -22v and -16v. This circuit consists of Q-Y20, Q-Y21, and Q-Y22 and associated parts. Two breakdown diodes connected between ground and, through R80, the emitter of Q-Y20 provide a 16v reference. Q-Y20 is controlled by Q-Y21 and Q-Y22, so that Q-Y20 emitter is held at -22v. The -22v output, through the brilliance control and Q-Y15, supplies the spot light bulb in the optical unit.

b. The 400-cycle oscillator (400 cps pilot) (fig. 7) supplies 0-phase 400-cycle 48v for the time servomotor reference winding, 0-phase 400cycle 12v center tapped, and O0-degree-phase 400-cycle 3v center tapped to control the power stage of the 400 cycle power generator. Q-Y4 is connected as a series Hartley oscillator. Q-Y1 is a regulator. The Q-Y4 collector-to-base coupling coil is part of the transformer which drives the push-pull amplifier, Q-Y5 and Q-Y6. At the output transformer primary, a winding picks off part of the signal, which is rectified by bridge CR-Y8. The rectified voltage is applied to the voltage divider (R1, R2, R20) where part of it is picked off and applied to regulator Q-Y1 base. The difference between QY1 base voltage and the fixed emitter voltage determines the 6 collector voltage, which controls oscillator amplitude. An increase in oscillation amplitude makes Q-Y1 base more negative. Since the emitter voltage remains at a fixed value, collector voltage becomes more positive. As a result, voltage supplying the oscillator becomes more positive and oscillation amplitude decreases until it reaches the regulated amplitude.

c. Part of the 0 phase 400-cycle 12v signal is given a 90 degree phase rotation by R19-C11. This 90-degree-phase signal is amplified by Q-Y7. At the output 3v center tapped is produced; this voltage controls the 400-cycle power generator. Negative feedback from the 83v output of the generator maintains a constant phase difference between the 0-degree and the 90-degree-phase voltages.

d. The 400-cycle power generator (fig. 3) consists of two transistors, Q-Y1 and Q-Y2, connected as a push-pull power amplifier, and an output transformer. Input is 3v 400 cps from the oscillator. There are six output voltages: 68v 400 cps; and, after rectification and filtering, +107.5v, -52.5v, 19 vdc, and 11 vdc. These are the voltage values during flight time.

11. Input Circuits (Fig. 3)

a. The control stick moves a potentiometer wiper arm in each axis, picking off a voltage between +107.5v and -52.5v. Since the stick may be moved slowly or quickly, the voltage picked off may change slowly or quickly. The waveform will vary, but for analysis of theory can be treated as a square wave. We will follow the signal through the yaw channel; the operation in the pitch channel is identical. This voltage from the control-stick potentiometer is

Apparatus List for the Computer Chassis, Figure 3

Reference designator	Description	Reference no.
C1	CAPACITOR: electrolytic, 1500 uf	6920-960-8473
C7	CAPACITOR: fixed, electrolytic, 40v, 64 uf	10022528.
C8	CAPACITOR: fixed, electrolytic, 40v, 32 uf	10022523
C9, C10	CAPACITOR: paper, 0.16 uf	10173167
C10.1	Selected at test	
C11, C12	CAPACITOR: paper, 0.1 uf	10173168
C11.1	Selected at test	
C13, C14	CAPACITOR: fixed, 0.47 uf	
C15, C16	CAPACITOR: fixed, metalized paper, 200v, 1 uf ± 56%	5910-833-5785
C17, C18	CAPACITOR: fixed, metalized paper, 160v, 0.1 uf ± 6%	10022510
C19	CAPACITOR: fixed, metalized paper, 200v, 0.47 uf ± 20%	5910-519-9738
CR-Y12	DIODE: 10J2	10022270
CR-Y16-CR-Y18	DIODE: 108Z4 (special)	10022277
CR-Y19	DIODE: 108Z4 (special)	10022278
DS1, DS2	LAMP: midget base, 28v, 0.04 amp	10173174
DS3	COUNTER: 6 digits	10173245
F1	FUZE	10134548
L1, L2	COIL	10022509
Q-Y1, Q-Y2	TRANSISTOR: ASZ18 (special)	10022261
Q-Y1S	TRANSISTOR: ASZ18 (special)	10173274
Q-Y20	TRANSISTOR: ASZ18 (special)	10173273
Q-Y21	TRANSISTOR: 2N527	10173175
R1	RESISTOR: fixed, composition, 1/2 w, 820 ohms ± 5%	5905-171-1999
R2, RS	RESISTOR: fixed, 1 ohm	10022550
RP5	RESISTOR: variable, lw, 1K ohms ± 10%	10173170
RP6	RESISTOR: variable, lw, 5K ohms ± 10%	10173171
RP7, RP8	RESISTOR: variable, lw, 5K ohms ± 10%	10173172
R8	RESISTOR: fixed, composition, %w, 10K ohms ± 65%	5906-185-8610
R9	RESISTOR: fixed, composition, %w, 1K ohms ± 65%	5905-195-6806
RP9, RP10	Same as RP7	
R10	RESISTOR: fixed, composition, %w, 1OOK ohms ± 5%	5905-195-6761
R11	RESISTOR: fixed, composition, %w, 5.6K ohms ± 5%	5905-195-6453
R12	RESISTOR: fixed, composition, %w, 6.8K ohms ± 5%	5905-279-3503
R13	RESISTOR: fixed, composition, %w, 2.2K ohms ± 5%	5905-279-1876
R14	Selected at test	
R15	RESISTOR: fixed, composition, %w, 180 ohms ± 5%	5905-279-8514
R16	RESISTOR: fixed, composition, %w, 150 ohms ± 5%	5905-299-1541
R17	RESISTOR: fixed, composition, %w, 330 ohms ± 5%	5905-192-3971
R18	Same as R10	
R19	Selected at test	
R20	RESISTOR: fixed, 68K ohms ± 1%	10022588
R21	Selected at test	
R22	RESISTOR: fixed, 18K ohms ± 1%	10022585
R23	RESISTOR: 47K ohms	10173272
R24	Selected at test	
R25	RESISTOR: fixed, composition, %w, 270 ohms ± 5%	5905-171-2006
R26	RESISTOR: fixed, composition, %w, 470 ohms ± 65%	5905-192-3973
R27	RESISTOR: fixed, 82K ohms ± 10%	10022589
R28	RESISTOR: fixed, 865K ohms ± 1%	10022603
R29	RESISTOR: fixed, composition, %w, 470 ohms ± 5%	5905-192-8973
R30	RESISTOR: fixed, 590K ohms ± 1%	10022601
R31	RESISTOR: fixed, 330K ohms, ± 1%	10022593
R32	RESISTOR: fixed, 1M ohms	
R33	RESISTOR: fixed, film, 1.2M ohms :± 2%	10022570
R34	RESISTOR: fixed, 390K ohms	
R35	RESISTOR: fixed, 330K ohms	
R36	RESISTOR: fixed, 470K ohms	

Apparatus List for the Computer Chassis, Figure 3

Reference designator	Description	Reference no.
R87	RESISTOR: fixed, 150K ohms	
R38	RESISTOR: fixed, 270K ohms	
R39	RESISTOR: fixed, 68K ohms	
R40	Selected at test	
R41	Same as R29	
R42	RESISTOR: fixed, 590K ohms ± 1%	10022601
R48	Same as R31	
R44	RESISTOR: fixed, 560K ohms	
R45	RESISTOR: fixed, 120K ohms	
R46	Same as R82	
R47	Same as R33	
R48	RESISTOR: fixed, 270K ohms	
R49	RESISTOR: fixed, 220K ohms	
R60	RESISTOR: fixed, 330K ohms	
R61	RESISTOR: fixed, 130K ohms	
R52	RESISTOR: fixed, 220K ohms	
R53	RESISTOR: fixed, 56K ohms	
R54	Selected at test	
R55	RESISTOR: fixed, composition, ½ w, 16K ohms ± 5%	5906-279-2616
R56	RESISTOR: fixed, composition, ½ w, 47K ohms ± 5%	5906-254-9201
R57	Same as R55	
R58	Same as R56	
R59	Same as R29	
R60	RESISTOR: fixed, 430K ohms ± 1%	10022594
R61	RESISTOR: fixed, 535K ohms ± 5%	10022699
R62	RESISTOR: fixed, 270 ohms ± 1%	10022592
R68	RESISTOR: fixed, 255 ohms ± 1%	10022591
R64	RESISTOR: fixed, 89K ohms ± 1%	10022587
R65	Same as R29	
R66	Same as R60	
R67	RESISTOR: fixed, 535K ohms ± 1%	10022599
R68	Same as R62	
R69	Same as R63	
R70	Same as R64	
R71	Selected at test	
R72	Selected at test	
R73	RESISTOR: fixed, 270 ohms	
R74	RESISTOR: fixed, 10 ohms	
R75	RESISTOR: fixed, 3w, 1.8 ohms	10022551
R76, R77	RESISTOR: fixed, composition, ½ w, 1K ohms ± 5%	5905-19-6806
R81	Selected at test	
R82	RESISTOR: fixed, 22K ohms ± 1%	10022586
R88, R84	RESISTOR: fixed, composition, %w, 56 ohms ± 5%	5905-279-1897
S1	SWITCH: toggle, double pole, waterproof	10022488
S2	SWITCH: pushbutton	10022487
S8	SWITCH: rotary	10022489
S-P4	Part of RESISTOR ASSEMBLY	10178173
S65	SWITCH: rotary	10022490
TBJ1	TERMINAL STRIP	10173268
TBJ2	TERMINAL STRIP	10173267
TB-J	TERMINAL STRIP	10178269
TB-J4	TERMINAL STRIP	10173270
TB-J6	TERMINAL STRIP	10173265
TB-J7	TERMINAL STRIP	10173271
TBJ8	TERMINAL STRIP	10173266
TB-J9	TERMINAL STRIP	
TB-W	TERMINAL STRIP	
K-A to K-E	RELAY: 24V, 6K ohms coil resistance, 100mw	10173165

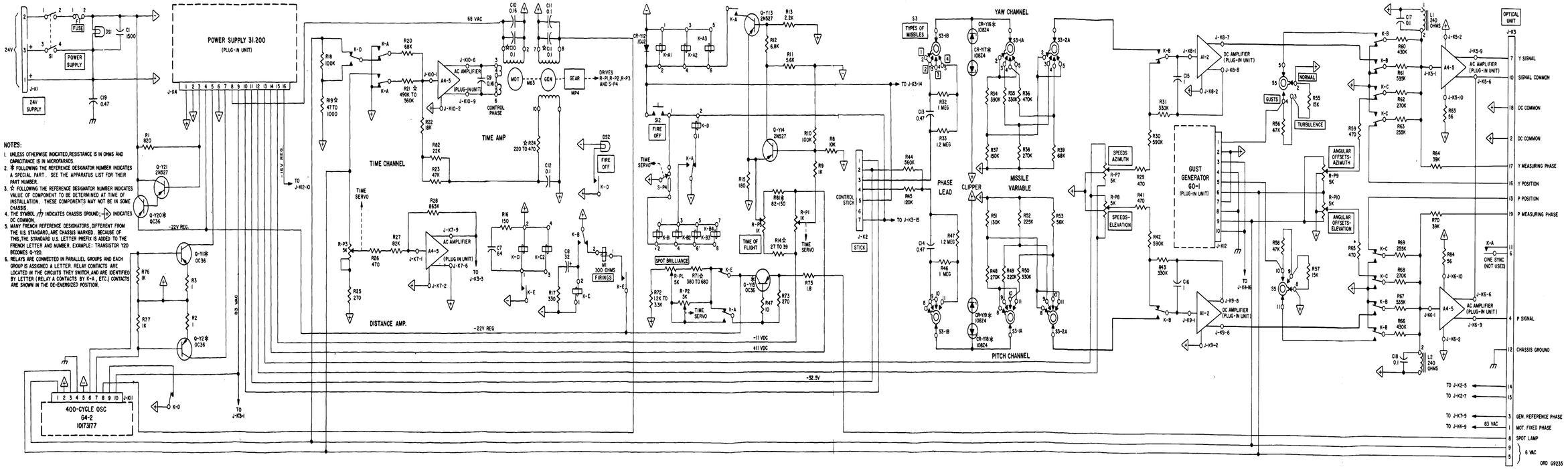

Figure 3. Computer chassis schematic.

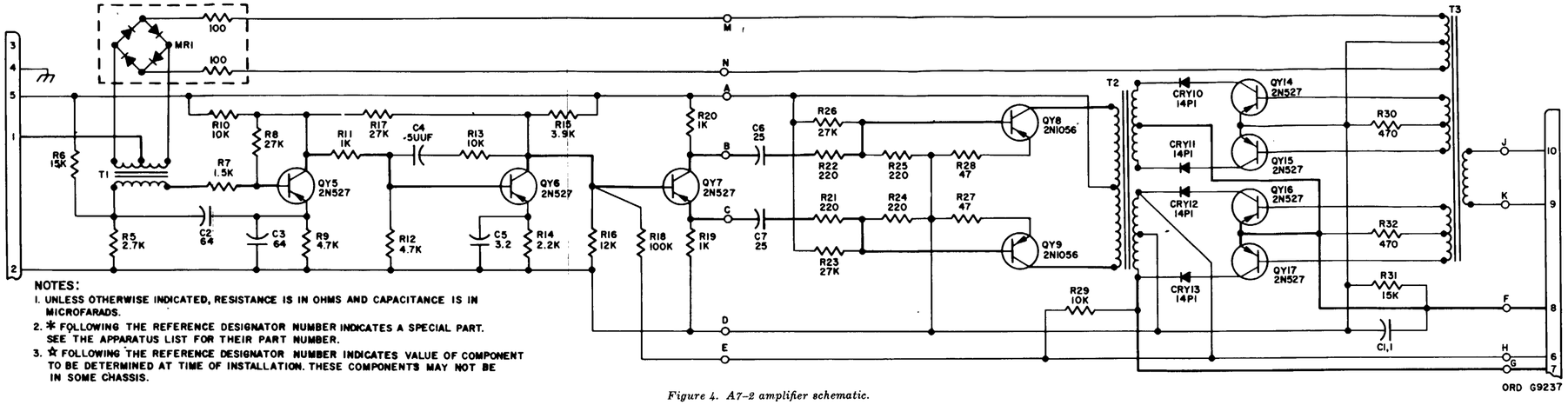

Figure 4. A7-2 amplifier schematic.

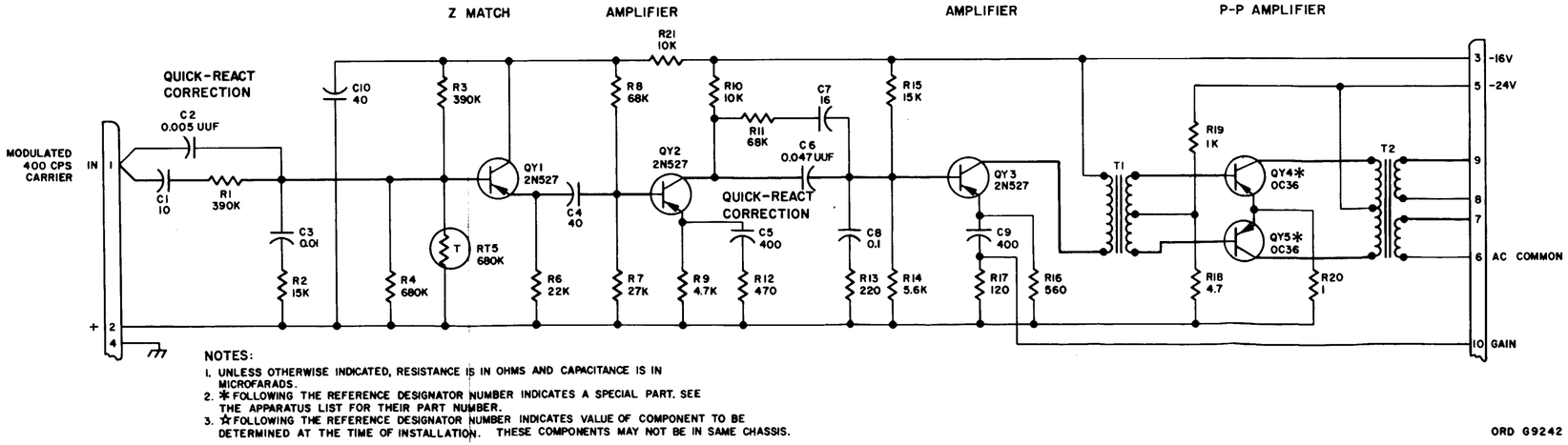

Figure 5. A4-5 amplifier schematic.

Apparatus List for the Power, Supply 31.200, Figure 3

Reference designator	Description	Reference no.
C2	CAPACITOR: fixed, cartridge, 25v, 3000 uf	10022533
C3	CAPACITOR: fixed, electrolytic, 250v, 32 uf	10022522
C4	CAPACITOR: fixed, electrolytic, 64v, 32 uf	10022524
C5, C6	CAPACITOR: fixed, electrolytic, 25v, 64 uf	10022527
C20	CAPACITOR: paper, 0.1 uf	10173168
CR-Y3, CR-Y23	DIODE GROUP: special, 108Z4 (special), 1075Z4 (special)	0022553
CR-Y4, CR-Y5	DIODE: 1N647	5960-682-2699
CR-Y6-CR-Y11	DIODE: 62J2	10022273
Q-Y22	TRANSISTOR: 2N527	10173175
R4, R5	RESISTOR: fixed, composition, ½ w, 1.5K ohms ± 5%	5905-279-1757
R6	RESISTOR: fixed, composition, ½ w, 1K ohms ± 5%	5905-195-6806
R7	RESISTOR: fixed, composition, ½ w, 470 ohms ± 5%	5906-192-3978
R78	Same as R4	
R79	RESISTOR: fixed, composition, ½ w, 560 ohms ± 5%	5905-195-6800
R80	RESISTOR: fixed, composition, ½ w, 120 ohms ± 5%	5905-252-5484
T1	TRANSFORMER	10022501

Apparatus List for the Amplifier A1.2, Figure 4

Reference designator	Description	Reference no.
C1	CAPACITOR: fixed, metalized mylar, 200v,- 1 uf	10022514
C2, C3	CAPACITOR: fixed, electrolytic, 10v, 64 uf	10172526
C4	CAPACITOR: fixed, metalized paper, 200v, 5000 uuf	0172585
C6	CAPACITOR: fixed, 40v, 3.2 uf	10172516
C6, C7	CAPACITOR: fixed, electrolytic, 26v, 26 uf	10022520
CR-Y10-CR-Y13	DIODE: 14P1	10022271
MR1	MODULATOR: ring	10022497
Q-Y6-Q-Y7	TRANSISTOR: 2N527	10173175
Q-Y8, Q-Y9	TRANSISTOR: 2N1056	5960-806-8312
Q-Y14-Q-Y17	TRANSISTOR: 2N527	10178175
R5	RESISTOR: fixed, composition, ½ w, 2.7K ohms ± 5%	5905-279-1880
R6	RESISTOR: fixed, composition, ½ w; 16K ohms ± 5%	5905-279-2616
R7	RESISTOR: fixed, composition, ½ w, 1.6K ohms ± 5%	5905-279-1757
R8	RESISTOR: fixed, composition, ½ w, 27K ohms ± 5%	5905-279-8499
R9	RESISTOR: fixed, composition, ½ w, 4.7K ohms ± 5%	5905-279-3504
R10	RESISTOR: fixed, composition, ½ w, 10K ohms ± 5%	5906-185-8510
R11	RESISTOR: fixed, composition, ½ w, 1K ohms ± 5%	5905-195-6806
R12	RESISTOR: fixed, composition, ½ w, 4.7K ohms ± 5%	5905-279-8504
R13	RESISTOR: fixed, composition, ½ w, 10K ohms ± 5%	5905-185-8510
R14	RESISTOR: fixed, composition, ½ w, 2.2K ohms ± 5%	5906-279-1876
R15	RESISTOR: fixed, composition, ½ w, 3.9K ohms ± 5%	5905-279-8505
R16	RESISTOR: fixed, composition, ½ w, 12K ohms ± 5%	5905-279-8502
R17	RESISTOR: fixed, composition, ½ w, 27K ohms ± 5%	5906-279-8499
R18	RESISTOR: fixed, composition, ½ w, 100K ohms ± 5%	5905-195-6761
R19, R20	RESISTOR: fixed, composition, ½ w, 1K ohms ± 5%	5905-195-6806
R21, R22	RESISTOR: fixed, composition, ½ w, 220 ohms ± 5%	5905-279-3513
R23	RESISTOR: fixed, composition, ½ w, 27K ohms ± 5%	5905-279-3499
R24, R25	RESISTOR: fixed, composition, ½ w, 220 ohms ± 5%	5906-279-3513
R26	RESISTOR: fixed, composition, ½ w, 27K ohms ± 5%	5905-279-3499
R27, R28	RESISTOR: fixed, composition, ½ w, 47 ohms ± 5%	5905-262-4018
R29	RESISTOR: fixed, composition, ½ w, 10K ohms ± 5%	5906-185-8610
R30	RESISTOR: fixed, composition, ½ w, 470 ohms ± 5%	5905-192-3973
R31	RESISTOR: fixed, composition, ½ w, 15K ohms ± 5%	5905-279-2616
R32	RESISTOR: fixed, composition, ½ w, 470 ohms ± 5%	5905-192-3973
T1	TRANSFORMER	10022504
T2	TRANSFORMER	10022505
T3	TRANSFORMER	10022506

Apparatus List for the Amplifier A4.5, Figure 5

Reference designator	Description	Reference no.
C1	CAPACITOR: fixed, electrolytic, 16v, 10 uf	10022517
C2	CAPACITOR: fixed, electrolytic, 250v, 5nf ± 20%	10022536
C3	CAPACITOR: fixed, electrolytic, 600v, 1000 uuf ± 20%	10022534
C4	CAPACITOR: fixed, electrolytic, 16v, 40 uf	10022525
C5	CAPACITOR: fixed, electrolytic, 6.4v, 400 uf	10022532
C6	CAPACITOR: fixed, electrolytic, 160v, 47 nf ± 10%	10022539
C7	CAPACITOR: fixed, electrolytic, 10v, 16 uf	10022518
C8	CAPACITOR: fixed, 0.1 uf	10022511
C9	CAPACITOR: fixed, electrolytic, 6.4v, 400 uf	10022532
C10	CAPACITOR: fixed, electrolytic, 16v, 40 uf	10022525
Q-Y1-Q-Y3	TRANSISTOR: 2N527	10023175
Q-Y4, Q-Y5	TRANSISTOR: ASZ18 (special)	10022262
R1	RESISTOR: fixed composition, ½ w, 390K ohms ± 5%	5905-279-2517
R2	RESISTOR: fixed composition, ½ w, 15K ohms ± 5%	5905-279-2616
R3	RESISTOR: fixed, composition, ½ w, 390K ohms ± 5%	5905-279-2517
R4	RESISTOR: fixed, composition, ½ w, 680K ohms ± 5%	5905-171-2000
R5	RESISTOR: 680K ohms (thermistor)	10022602
R6	RESISTOR: fixed, composition, ½ w, 22K ohms ± 5%	5905-171-2004
R7	RESISTOR: fixed, composition, ½ w, 27K ohms ± 5%	5905-279-3499
R8	RESISTOR: fixed, composition, ½ w, 68K ohms ± 5%	5905-249-3661
R9	RESISTOR: fixed, composition, ½ w, 4.7K ohms ± 5%	5905-279-3504
R10	RESISTOR: fixed, composition, ½ w, 10K ohms ± 5%	5905-185-8510
R11	RESISTOR: fixed, composition, ½ w, 68K ohms ± 5%	5905-249-3661
R12	RESISTOR: fixed, composition; . ½ w, 470 ohms ± 5%	5905-192-3973
R13	RESISTOR: fixed, composition, ½ w, 220 ohms ± 5%	5905-279-3513
R14	RESISTOR: fixed, composition, ½ w, 5.6K ohms ± 5%	5906-196-6453
R15	RESISTOR: fixed, composition, ½ w, 15K ohms ± 5%	5905-279-2616
R16	RESISTOR: fixed, composition, ½ w, 560 ohms ± 5%	5905-195-6800
R17	RESISTOR: fixed, composition, ½ w	5905-252-5434
R18	RESISTOR: fixed, 4.7 ohms	10022552
R19	RESISTOR: fixed, 1w, 1K ohms	10022557
R20	RESISTOR: fixed, 1 ohm	10022550
T1	TRANSFORMER	10022502
T2	TRANSFORMER	10022503

Apparatus List for the Gust Generator G0-1, Figure 6

Reference designator	Description	Reference no.
C1	CAPACITOR: fixed, electrolytic, 16v, 40 uf	10022526
C2	CAPACITOR: fixed, electrolytic, 6.4v, 400 uf	10022532
C3	CAPACITOR: fixed, electrolytic, 10v, 320 uf	10022531
C4	CAPACITOR: fixed, electrolytic, 10v, 64 uf	10022526
C5	CAPACITOR: fixed, electrolytic, 16v, 200,000 uuf	10022530
C6	CAPACITOR: fixed, metalized paper, 250v, 10 nf ± 20%	10022537
C7	CAPACITOR: fixed, electrolytic, 6.4v, 20 uf	10022519
C8	CAPACITOR: fixed, electrolytic, 10v, 16 uf	10022518
C10	CAPACITOR: fixed, electrolytic, 16v, 40 uf	10022525
C11	CAPACITOR: fixed, electrolytic, 6.4v, 400 uf	10022532
C12	CAPACITOR: fixed, electrolytic, 10v, 320 uf	10022531
C13	CAPACITOR: fixed, electrolytic, 10v, 64 uf	10022526
C14	CAPACITOR: fixed, electrolytic, 16v, 200,000 uuf	10022530
C16	CAPACITOR: fixed, metalized paper, 250v, 10 nf ± 20%	10022537
C16	CAPACITOR: fixed, electrolytic, 6.4v, 20 uf	10022519
C17	CAPACITOR: fixed, electrolytic, 10v, 16 uf	10022518
C18	CAPACITOR: fixed, electrolytic, 6.4v, 20 uf	10022519

NOTES:

1. UNLESS OTHERWISE INDICATED, RESISTANCE IS IN OHMS AND CAPACITANCE IS IN MICROFARADS.
2. ✱ FOLLOWING THE REFERENCE DESIGNATOR NUMBER INDICATES A SPECIAL PART. SEE THE APPARATUS LIST FOR THEIR PART NUMBER.
3. ☆ FOLLOWING THE REFERENCE DESIGNATOR NUMBER INDICATES VALUE OF COMPONENT TO BE DETERMINED AT TIME OF INSTALLATION. THESE COMPONENTS MAY NOT BE IN SOME CHASSIS.

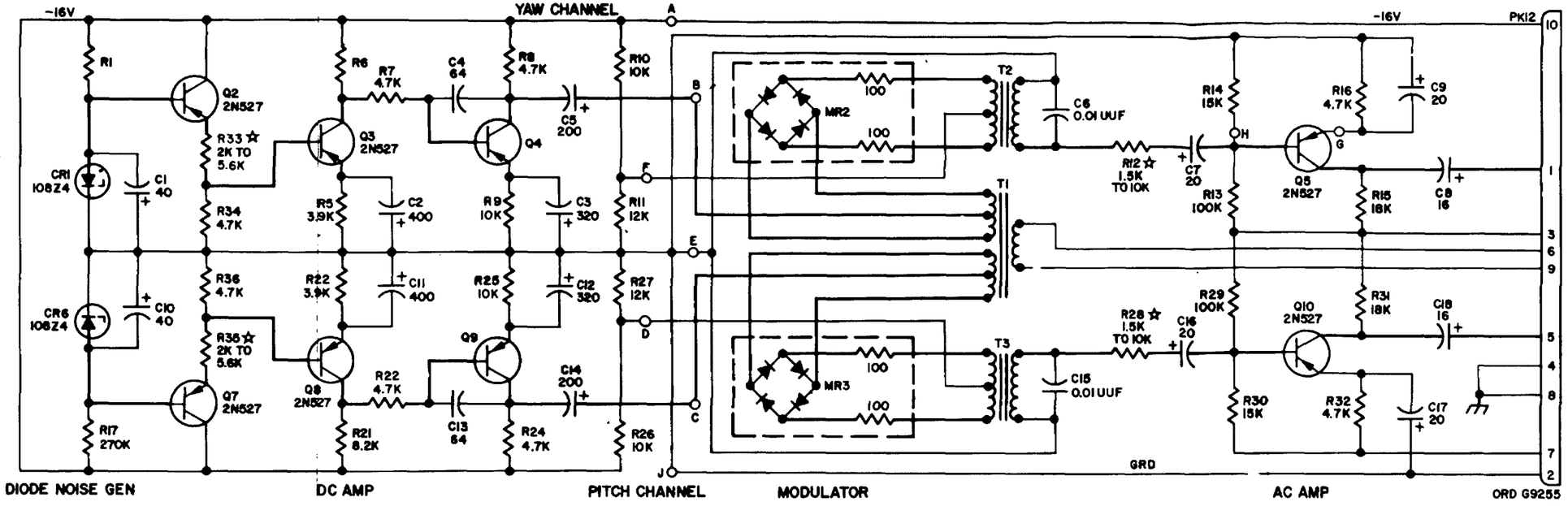

Figure 6. G0-1 generator schematic.

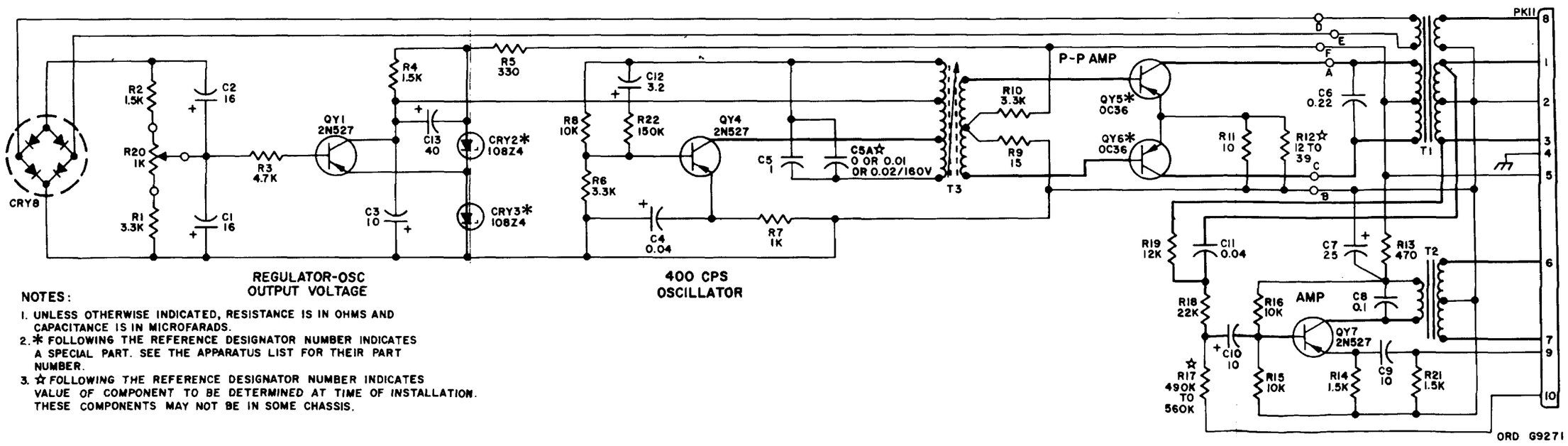

NOTES:

1. UNLESS OTHERWISE INDICATED, RESISTANCE IS IN OHMS AND CAPACITANCE IS IN MICROFARADS.
2. ✱ FOLLOWING THE REFERENCE DESIGNATOR NUMBER INDICATES A SPECIAL PART. SEE THE APPARATUS LIST FOR THEIR PART NUMBER.
3. ☆ FOLLOWING THE REFERENCE DESIGNATOR NUMBER INDICATES VALUE OF COMPONENT TO BE DETERMINED AT TIME OF INSTALLATION. THESE COMPONENTS MAY NOT BE IN SOME CHASSIS.

Figure 7. G4-2 oscillator schematic

Apparatus List for the Gust Generator GO-1-Cont'd

Reference designator	Description	Reference no.
CR1, CR6	DIODE: 108Z4 (special)	10022280
MR1, MR2	MODULATOR: ring	10022497
Q-Y2-Q-Y5, Q-Y7-Q-Y10	TRANSISTOR: 2N527	10173175
R1	RESISTOR: fixed, composition, ½ w, 270K ohms ±5%	5905-190-8865
R5	RESISTOR: fixed, composition, ½ w 3.9K ohms	5905-279-3605
R6	RESISTOR: fixed, composition, ½ w, 8.2K ohms ±5%	5905-299-1971
R7, R8	RESISTOR: fixed, composition, ½ w, 4.7K ohms ± 5%	5905-279-3504
R9, R10	RESISTOR: fixed, composition, ½ w, 10K ohms ±5%	5905-185-8510
R11	RESISTOR: fixed, composition, ½ w, 12K ohms ± 5%	5906-279-3502
R12	Selected at test.	
R13	RESISTOR: fixed, composition, ½ w, 100K ohms ± 5%	5905-195-6761
R14	RESISTOR: fixed, composition, ½ w, 15K ohms ± 5%	5905-279-2616
R15	RESISTOR: fixed, composition, ½ w, 18K ohms ± 5%	5906-279-3500
R16	RESISTOR: fixed, composition, ½ w, 4.7w ohms ± 5%	6905-279-3504
R17	RESISTOR: fixed, composition, ½ w, 270K ohms ± 5%	5905-190-8865
R21	RESISTOR: fixed, composition, ½ w, 8.2K ohms ± 5%	5905-299-1971
R22	RESISTOR: fixed, composition, ½ w, 3.9K ohms	5905-279-3505
R23, R24	RESISTOR: fixed, composition, ½ w, 4.7K ohms ± 5%	5905-279-3504
R25, R26	RESISTOR: fixed, composition, ½ w, 10K ohms ± 5%	5905-185-8510
R27	RESISTOR: fixed, composition, ½ w, 12K ohms ± 5%	5905-279-3502
R28	Selected at test	
R29	RESISTOR: fixed, composition, ½ w, 100K ohms ± 5%	5905-196-6761
R30	RESISTOR: fixed, composition, ½ w, 15K ohms ± 5%	5905-279-2616
R31	RESISTOR: fixed, composition, ½ w, 18K ohms ± 5%	5905-279-3500
R32	RESISTOR: fixed, composition, ½ w, 4.7K ohms ± 5%	5905-279-3504
R33	Selected at test	
R34	RESISTOR: fixed, composition, ½ w, 4.7K ohms ± 5%	5905-279-3504
R35	Selected at test	
R36	RESISTOR: fixed, composition, ½ w, 4.7K ohms ± 5%	5905-279-3504
T1	TRANSFORMER	10022507
T2, T3	TRANSFORMER	10022508

Apparatus List for the 400 Cycle Generator, Figure 7

Reference designator	Description	Reference no.
C1, C2	CAPACITOR: fixed, electrolytic, 10v, 16 uf	10022518
C3	CAPACITOR: fixed, electrolytic, 16v, 10 uf	10022517
C4	CAPACITOR: fixed, electrolytic, 16v, 40 uf	10022525
C6	CAPACITOR: fixed, metalized paper, 160v, 100,000 uuf ± 5%	10022510
C5.1	Selected at test	
C6	CAPACITOR: fixed, metalized paper, 0.1 uf	10022512
C7	CAPACITOR: fixed, electrolytic, 25v, 25 uf	10022520
C8	Same as C5	
C9, C10	Same as C3	
C11	CAPACITOR: fixed, electrolytic, 160v, 47 nf ± 10%	10022539
C12	CAPACITOR: fixed, 40v, 3.2 uf	10022516
C13	Same as C4	
CR-Y2, CR-Y3	DIODE: 18Z4 (special)	10022279
CR-Y8	RECTIFIER	10022282
Q-Y1, Q-Y4	TRANSISTOR: 2N527	10173175
Q-Y5, Q-Y6	TRANSISTOR: ASZ18 (special)	10022263
Q-Y7	Same as Q-Y1	
R1	RESISTOR: fixed;, composition, 46w, 3.3K ohms ± 6%	5905-279-3506

Apparatus List for the 400 Cycle Generator—Cont'd

Reference designator	Description	Reference no.
R2	RESISTOR: fixed, composition, ½ w, 1.5K ohms ± 5%	5905-279-1757
R3	RESISTOR: fixed, composition, ½ w, 4.7K ohms ± 5%	5906-279-3504
R4	Same as R2	
R5	RESISTOR: fixed, composition, ½ w, 330 ohms ± 5%	6906-192-3971
R6	Same as R1	
R7	RESISTOR: fixed, composition, ½ w, 1K ohms ± 5%	5906-195-6806
R8	RESISTOR: fixed, composition, ½ w, 10K ohms ± 5%	5905-186-8510
R9	RESISTOR: fixed, composition, ½ w, 15 ohms ± 5%	5905-279-3521
R10	Same as R1	
R11	RESISTOR: fixed, composition, ½ w, 10 ohms ± 5%	5905-190-8888
R12	Selected at test	
R13	RESISTOR: fixed, composition, ½ w, 470 ohms ± 5%	5905-192-3973
R14	RESISTOR: fixed, composition, ½ w, 1.5K ohms ± 5%	5906-279-1767
R15, R16	RESISTOR: fixed, composition, ½ w, 10K ohms ± 5%	5905-185-8510
R17	Selected at test	
R18	RESISTOR: fixed, composition, ½ w, 22K ohms ± 5%	5905-171-2004
R19	RESISTOR: fixed, composition, ½ w, 12K ohms ± 5%	5905-279-3502
R20	RESISTOR: adjustable, 1K ohms	10022556
R21	Same as R14	
T1	TRANSFORMER	1002250
T2	TRANSFORMER	10022499
T3	TRANSFORMER	10022498

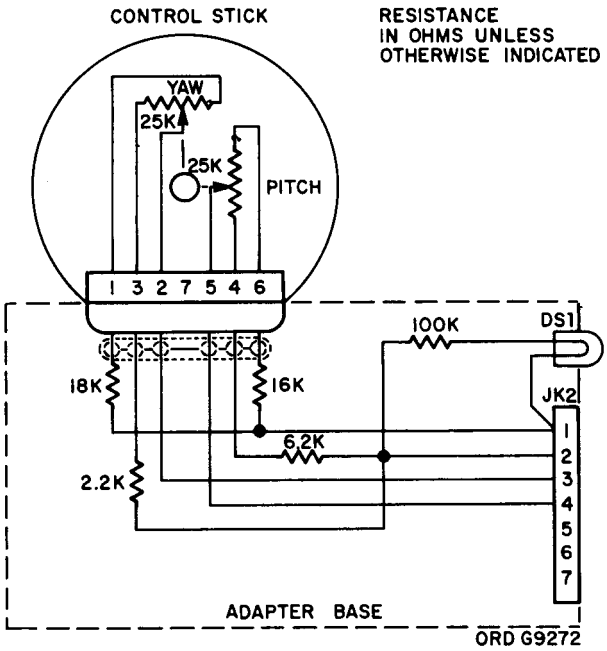

Figure 8. M22 control stick schematic.

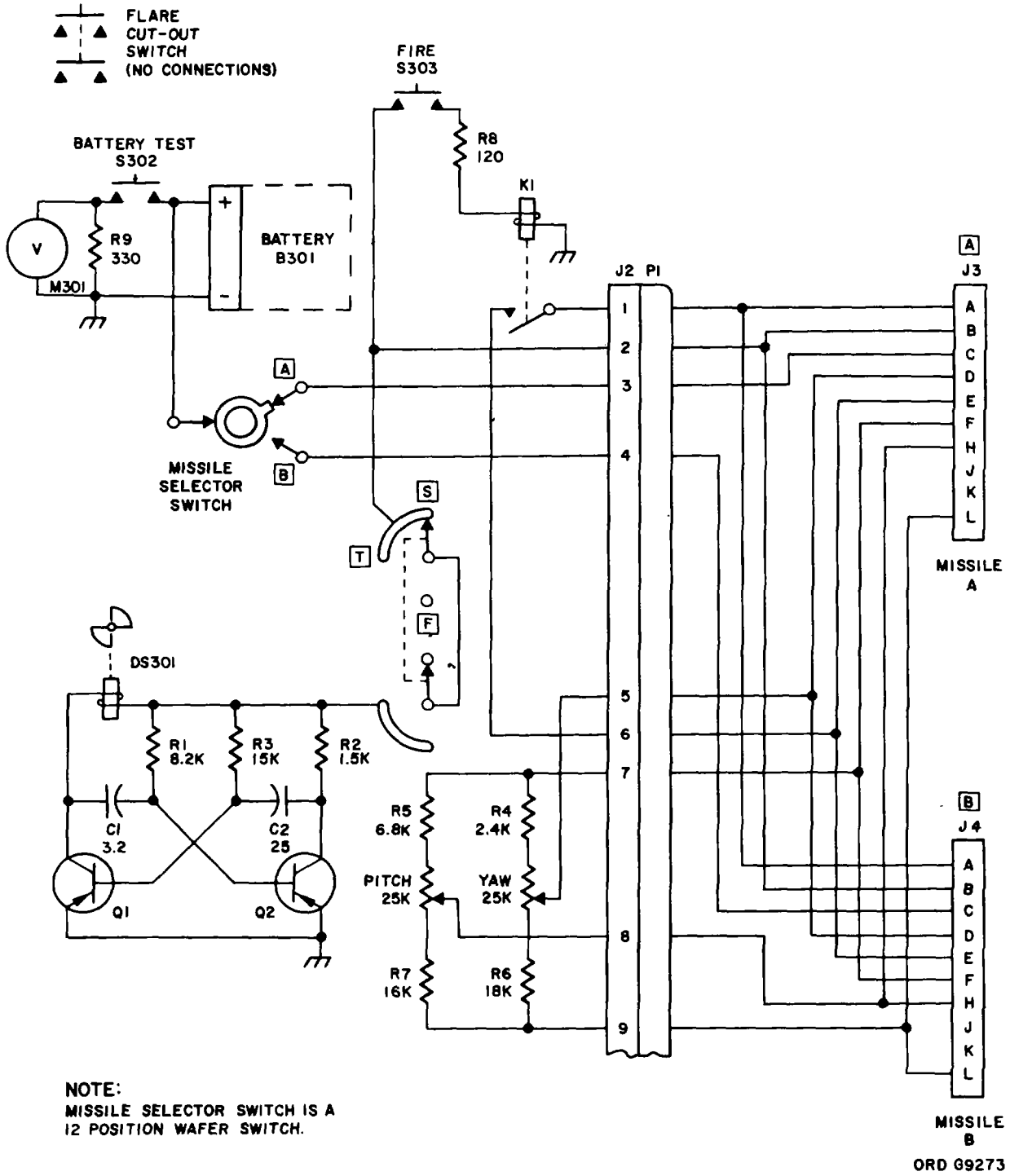

NOTE:
MISSILE SELECTOR SWITCH IS A 12 POSITION WAFER SWITCH.

Figure 9. Modified ENTAC GCU schematic.

applied to the computer phase-lead circuit, C13, R32, and R33. Rapid voltage changes caused by rapid movements of the control stick are coupled around R32-R33 and through C13. Thus a rapid change of stick position will produce a quick reaction of the simulated missile. The phase-lead circuit is switched by the missile variables control (par. 12*c*).

b. The clipper, consisting of breakdown diodes CR-Y16 and CR-Y17, establishes at +8v the maximum voltage which can be applied in the Y channel. This maximum command in the simulator corresponds to the maximum command in the tactical control system.

12. Active P and Y Channel Circuits (Fig. 3)

a. The first control amplifier is a dc amplifier, the output of which is modulated 400cps signal, 0- or 180-degree phase. Together with an RC circuit, R30-C15, it determines drift velocity of the light spot. When initial velocity is applied, C15 is shunted by R31, and the amplifier acts as

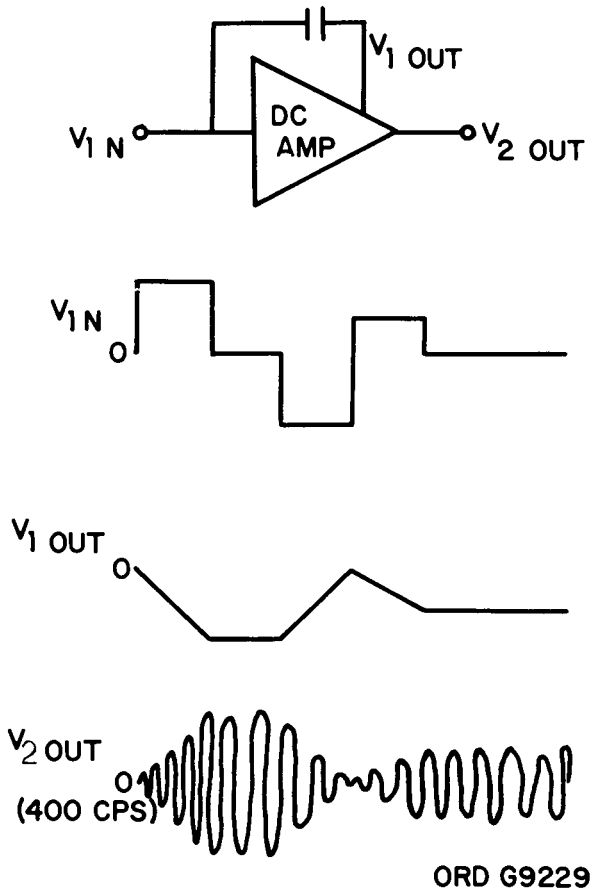

Figure 10. Integrator waveforms.

a summing amplifier, charging C15 to a potential determined by voltage applied by the initial velocity potentiometer. Upon firing, R31 and the initial velocity voltage are switched out of the circuit, and the amplifier then acts as an integrator (fig. 10), computing drift velocity as affected by the signals from the control stick. The output of the dc amplifier which goes, to the second control amplifier is modulated 400 cps act (See par. 13 for theory of operation of the dc amplifier.)

b. The second control amplifier is an ac amplifier which delivers a variable voltage to the control winding of the servo motor. The value of the voltage depends on control signals from the stick and initial velocity circuit. The motor drives a generator producing a voltage proportional to its speed. This voltage is fed back to the amplifier input. The motor also, through a reduction gear, moves the mirror in yaw. A potentiometer driven by the same shaft picks off a voltage indicating the mirror position. This voltage is applied to the input of the second control amplifier until firing. (See par. 14 for theory of operation of the ac amplifier.)

c. The missile-variables circuit is a front-panel-switched voltage divider which, together with the switched phase-lead network, allows the simulation of four typical kinds of missile guidance characteristics: normal missile, sensitive missile, sluggish missile, and sensitive missile with poor phase lead.

13. DC Amplifier A1-2

The dc amplifier receives the control signal, which is varying dc, modulates with it a 400cycle carrier, and amplifies the resulting 0-degree or 180-degree phase signal. Both the signal from the control stick and the initial velocity signal are fed into the dc amplifier. The modulated ac output of the dc amplifier is fed to the ac amplifier.

a. The dc amplifier (fig. 4) is a plug-in module, completely transistorized. It is composed of a modulator, an ac amplifier, and a demodulator.

b. The modulator circuit consists of T1, part of T3, and a silicon diode ring. A reference 0-degree phase 400cps ac voltage is supplied to the ring through T3. The modulator output at T1 secondary is ac, with the phase ((0-degree or 180-degree) determined by the polarity of the dc

input signal and the amplitude determined by the amplitude of the dc input. (The output signal eventually arrives at the control winding of the optical unit motor, where phase determines direction, and amplitude speed, of rotation.) To understand how the modulator works, let's analyze current flow for two different polarity dc inputs during a positive alternation of the ac reference.

c. With the ac reference positive and a positive de input, current flow in the modulator circuit is as follows. (See figure 11, where diodes are numbered for convenience in explaining operation.) Note that the ratio between dc input and ac reference amplitudes at the diode ring is at least 1: 40. Starting from the center tap of T3 secondary winding, current flows through the winding, out T3 terminal 5, and through CR4. At the junction of CR4 and CR3, current divides. Because the positive potential at this point resulting from the dc input signal is low compared to the positive potential on the other side of CR3, CR3 is forward biased and a large part of the current flows through CR3 and back through T3 secondary. A second part of the current flows through T1 primary, out the centertap, to ground through the power supply, and back into T3 secondary through the grounded centertap. This causes current flow in T1 secondary in a direction so that the output at terminal 5 is negative.

d. With the ac reference positive and a negative dc input, current flow is through the same two diodes, but in the opposite direction in the same half of T1 primary. Starting again at the center tap of T3 secondary, current flows through the winding, out T3 terminal 5, and through CR4. At the junction of CR4 and CR3, this current is joined by one coming from the dc input through T1 center tap and T1 winding.
The combined current flows through CR3 into T3 secondary. Part of the current flows to ground at T3 centertap, through the power supply, and back to the dc input. The rest of the current flows on through T3 secondary and out terminal 5. Current flow in half of T1 primary is opposite in direction to that in c above, and the output at terminal 5 is positive. Thus the change in polarity of the input has reversed the phase of the output, which is ac because the input is in series with the ac reference. And

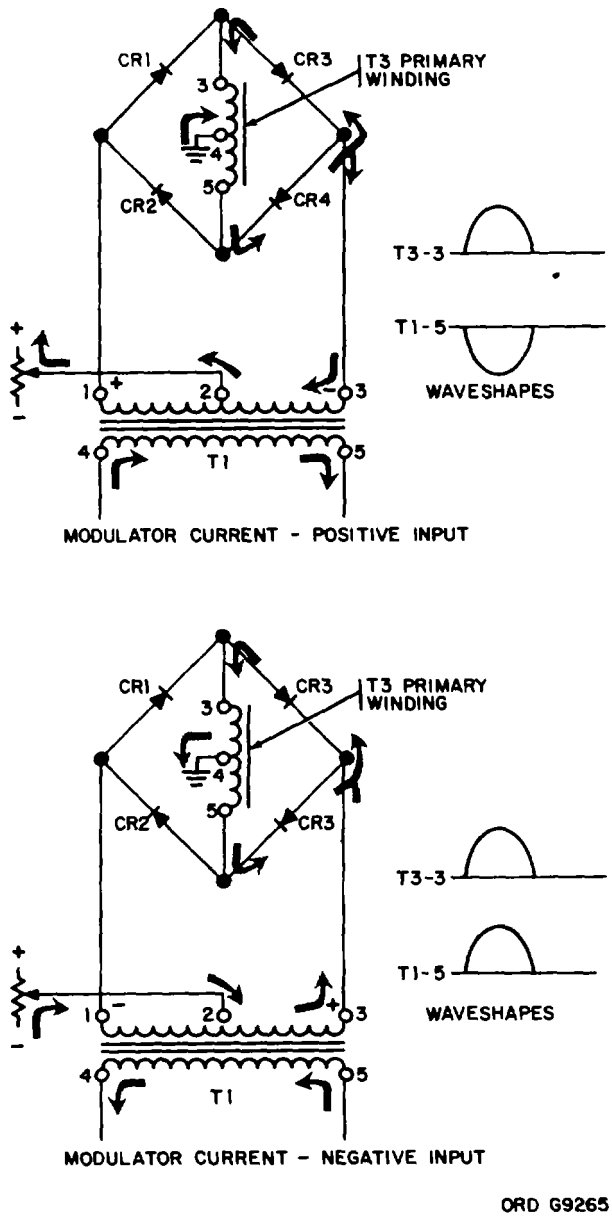

Figure 11. Modulator current flow.

since T1 primary is in series with the input, output amplitude depends on the dc input amplitude, with the ac reference voltage remaining constant in amplitude, peak-to-peak.

e. When the ac reference becomes negative, current flow is similar except that it is through CR1 and CR2 and the other half of T1 primary.

The output phase relative to the ac reference still is determined by dc input polarity, and the output amplitude by dc input amplitude.

f. In T1 secondary circuit, current flows through a voltage divider, R7, R8, R10, R6.

Voltage dropped across R7 is applied to Q-Y5 base.

g. Q-Y5 and Q-Y6 are voltage amplifiers. Q-Y7 is a phase splitter for the push-pull power amplifier stage, Q-Y8 and Q-Y9. From transformer T2, the modulated signal is fed to the demodulator, Q-Y14 - Q-Y17. The demodulator output, at connection 8, is dc varying from—15v to +15v, 180 degrees out of phase with the input. This output is coupled to the input through feedback capacitor C15 so that the amplifier acts as an integrator. The signal output, at connection 6 or 7, is 0-degree or 180-degree ac, 400 cps, 0-15v. It is coupled to the ac amplifier.

14. AC Amplifier A 4-5 (Fig. 5)

The ac power amplifier has five inputs, two or three of which are combined to produce an output controlling the instantaneous angle of the light spot in azimuth (or, in the P channel, elevation). It consists of an emitter-follower impedance-matching stage and three stages of amplification. Its output goes to the servomotor control winding.

a. Q-Y1 is an emitter follower used to match input impedance of Q-Y2 to output impedance of the previous stage. Q-Y2 and Q-Y3 are power amplifier stages. Q-Y4 and Q-Y5 make up a push-pull power amplifier.

b. C2 and R1, at the input, provide high frequency compensation, as do C6 and R11 in the coupling circuit between Q-Y2 and Q-Y3. These two networks compensate the amplifier for phase-advance signals, which would otherwise be attenuated because of the amplifier's poor high frequency response.

c. Five signals feed into the ac amplifier. Two signals are used only before firing time, and three (one of which is optional) are used only during flight time (fig. 3).

(1) The initial position signal is 400 cps, 0-6v. The voltage level is adjusted by R9. This signal, used only before firing, establishes the starting position of the mirror and, therefore, the light spot representing the missile.

(2) The initial-position feedback voltage indicates the position of the mirror. It is also 400 cps, 0-6v. The exact voltage is determined by a potentiometer with the moveable arm connected to the mirror shaft. This signal is used only before firing.

(3) The main control signal is the output of the dc amplifier (par. 13).

(4) The error signal is a feedback from the generator in the optical unit. It is combined with the main control signal, and the amplified difference between the two tends to rotate the motor at the speed necessary to eliminate the difference.

(5) The gust signal may be used when desired. It varies at random between 0 and 500 millivolts, 400 cps, 0- or 180-degree phase, to simulate the effect of atmospheric disturbances. (See par. 15 for theory of operation of the gust generator.)

15. Gust Generator GO-1 (Fig. 6)

a. The gust generator produces a voltage varying between 0 and 500 millivolts, 400 cps, 0- or 180-degree phase, which is fed to the second control amplifier to simulate the effect of random wind gusts and air disturbances.

b. P and Y channels operate identically, so the following discussion of the Y channel applies to both. The signal originates as background noise of breakdown diode CR-Y1. The noise is amplified by low frequency amplifier stages Q-Y2, Q-Y3, and Q-Y4. Q-Y4 output is the modulating signal in the silicon-ring modulator. This modulator operates in the same way as the one discussed in par. 13. After further amplification by Q-Y5, the signal is fed to the second control amplifier, where it combines with the main control signal. When the signal is connected to the control amplifier, its effect is to introduce random variations of about 3% maximum into the control signal.

16. Time Channel (Fig. 3)

a. Timing is done by a servomotor driven by an ac amplifier (par. 14). When the computer is in the ready condition, the amplifier input from the 400 cps oscillator (par. 10) is a voltage which, amplified and fed to the servomotor control winding, applies a small reverse torque to keep the potentiometers at zero position. Upon firing, a voltage from the oscillator, opposite in

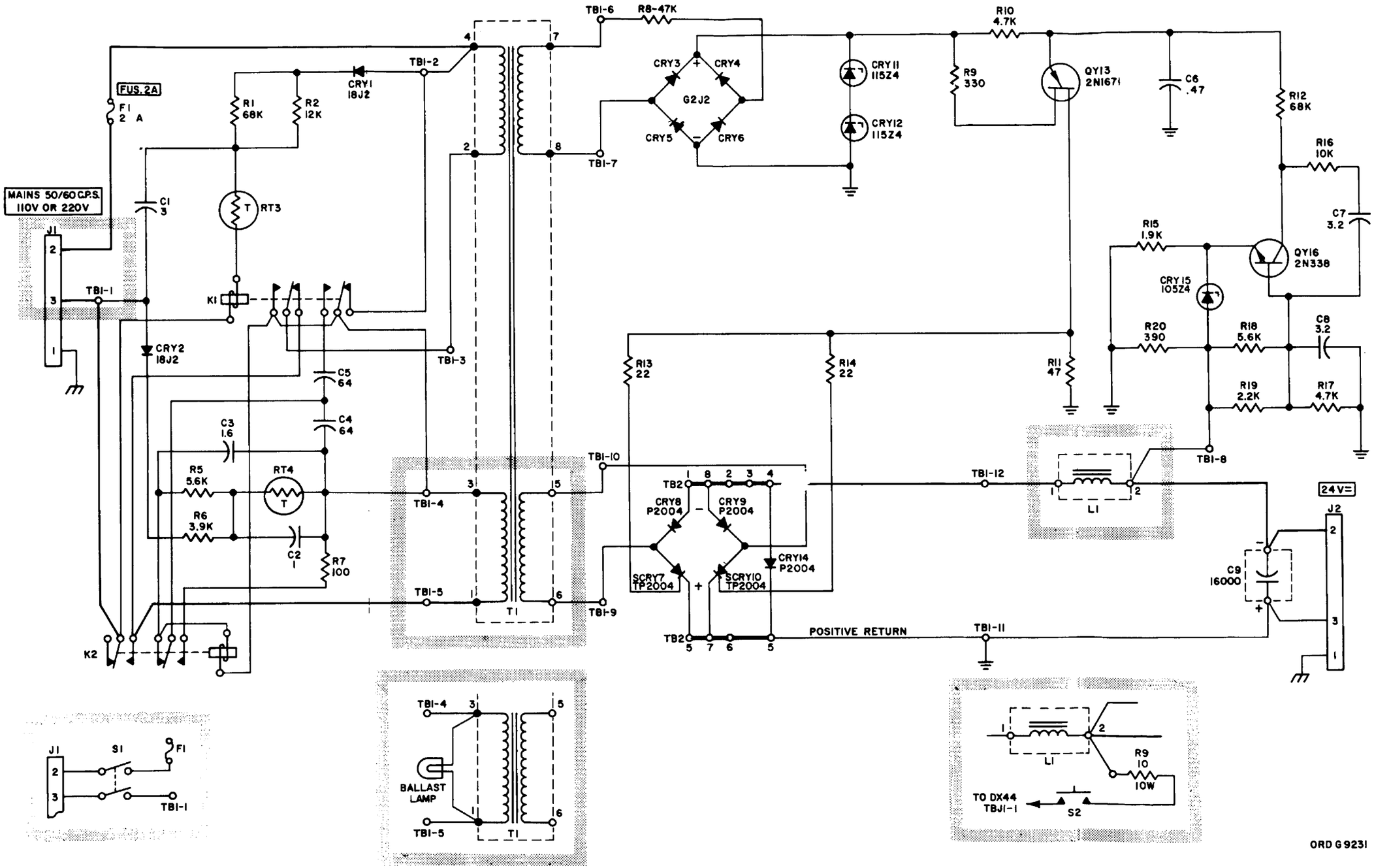

Figure 12. Regulated power supply (24v) schematic.

Apparatus List for Regulated Power Supply Schematic (Fig. 12).

Note. **Items marked are In supply &a used in DX-44 only.**

Reference designator	Description	Reference no.
C1	CAPACITOR: fixed, 250V, 3uf + 10%	10022515
C2	CAPACITOR: fixed, metalized, 200V, 1uf :+ 20%	100225645
C3	CAPACITOR: fixed, electrolytic, 64V, 1.6uf	10022646
C4, C6	CAPACITOR: fixed, electrolytic, 40V, 64uf	10022528
C6	CAPACITOR: fixed, metalized mylar, 63V, 0.47 uf + 56%	10022513
C7, C8	CAPACITOR: fixed, 40V, 3.2uf	10022516
C9	CAPACITOR: fixed, electrolytic, 26-30V, 16000uf +50% --10%	10173196
CR-Y1, CR-Y2	DIODE: 18J2	10022272
CR-Y3-CR-Y6	DIODE: 62J2	10022273
SCR-Y7	THYRATRON: TP2004	10022543
CR-Y8, CR-Y9	DIODE: P2004	10022269
SCR-Y10	THYRATRON: TP2004	10022543
CR-Y11, CR-Y12	DIODE: 11524	10022281
CR-Y14	DIODE: P2004	10022269
CR-Y15	DIODE: 10524	10022276
DS1*	LAMP: 160V, 10W	10022728
FI	FUSE: sloblo, 2 amps, 5 X 20 mm	10173169
K1, K2	RELAY	10022702
L1	COIL	10022697
P1	CONNECTOR: receptacle, 3 contacts	10022686
P2	CONNECTOR: receptacle, 3 female contacts	10022687
Q-Y13	TRANSISTOR: 2N1671	5960-492-0822
Q-Y16	TRANSISTOR: 2N338	5960-686-8578
R1	Selected at test	
R2	RESISTOR: fixed, composition, ½W, 12K ohms ± 5%	6905-279-3502
RT3, RT4	RESISTOR: voltage dropping	10022604
R6	RESISTOR: fixed, composition, ½W, 5.6K ohms + 5%	5905-196-6463
R6	RESISTOR: fixed, wire wound, 3.9K ohms	10022583
R8	RESISTOR: fixed, wire wound, 4.7K ohms	10022584
R8*	RESISTOR: fixed, wire wound, 10W, 10 ohms	10022554
R9	RESISTOR: fixed, composition, ½W, 330 ohms ± 5%	5905-192-3971
R10	RESISTOR: fixed, film, 4.7K ohms : 5%	10022567
R11	RESISTOR: fixed, composition, ½W, 47 ohms ± 5%	6906-252-4018
R12	RESISTOR: fixed, composition, ½W, 6.8K ohms ± 5%	5905-279-3503
R13, R14	RESISTOR: fixed, composition, ½W, 22 ohms ± 5%	5905-279-3519
R16	RESISTOR: fixed, composition, ½W, 1.8K ohms ± 5%	5906-190-8881
R16	RESISTOR: fixed, composition, ½W, 10K ohms ± 5%	5906-186-810
R17	RESISTOR: fixed, film, 4.7K ohms ± 5%	10022567
R18	Selected at test	
R19	RESISTOR: fixed, film, carbon, 2.2K ohms ± 5%	10022559
R20	RESISTOR: fixed, wire wound, parcelanized, 390 ohms	1002255566
S1*	SWITCH: double pole	10022655
S2*	SWITCH: push button	10022487
T1	TRANSFORMER	10022698

phase from the ready voltage, is applied to the amplifier. This voltage, which remains constant in amplitude during the time of flight, makes the amplifier and servomotor operate as a timer.

The motor drives a generator which produces an error signal. The error signal, fed back to the amplifier input, keeps motor speed constant for a constant amplifier input voltage.

b. The motor also drives, through a reduction gear, a group of three potentiometers and a commutator.

(1) R-P1 (fig. 3), connected to 10 vdc, supplies a voltage to the trigger circuit, consisting of transistors Q-Y13 and Q-Y14. The trigger circuit is controlled by the difference in potential

between R-P1 and the firing-time potentiometer, R-P5. Until the selected time set by R-P5 is reached, Q-Y14 is cut off and Q-Y13 conducts through the holding contact of the energized A relay. When the selected time is reached, Q-Y14 conducts and Q-Y13 is cut off, bypassing current to ground and deenergizing the A relays.

(2) R-P2 (fig. 3), together with a parallel voltage divider, is connected to-22v regulated. Voltage picked off by R-P2 controls Q-Y15 base potential, thus varying the voltage supplied to the spot light in the optical unit. Adjusting R-P6, the spot brilliance control, changes the voltage supplied to R-P2 and therefore the spot brilliance throughout the time of flight. At the end of flight, relay contact K-A supplies maximum voltage to Q-Y15 base, causing a sudden brilliance of the spot.

(3) R-P3 (fig. 3), connected to 6v 400 cps, supplies a time voltage to the distance amplifier, which is an ac amplifier like those used in the Y and P channels (par. 14). The output of the distance amplifier supplies the reference windings of the optical unit generators. This voltage increases with time, so that the error signal in each channel also increases with time, and the deflections of the simulated missile in response to pitch and yaw commands decrease with time.

(4) Commutator S-P4 (fig. 3) controls the relay energizing sequence. It has two segments. Segment 1 is connected to one side of relay D coil and to terminal 1 of the fire switch. Segment 2 is connected to one side of relay B coils. The wiper is connected to ground (+). The sequence of operation is as follows: When the computer is in the ready condition, the time servomotor is against its reverse stop. At this time the commutator wiper is in segment 1, so one side of relay D coil and terminal 1 of the fire switch are connected to ground. Since the other side of relay D coil is connected to-24v through K-A, relay D is energized. All other relays are deenergized. When the fire switch is pressed, one side of relay A coils is connected to ground. Since the other side is connected to -24v, the A relays are energized by the pulse from the fire switch. They remain energized through holding contact K-A (in series with the trigger circuit). When the A relays energize, the D relay is deenergized by contact K-A. Now the time servomotor is operating. At missile departure time, the commutator wiper makes contact with segment 2, thus grounding one side of relay B coils. Since the other side of relay B coils is connected to -24v through contact K-A, the B relays are energized. Contact K-B then grounds one side of the E relay coil, and, since the other side of the coil is connected to-24v, relay E is energized. Contact K-E connects-24v to one side of the C relay coils. Since the other side of the coils is grounded, the C relays are energized. The time servometer continues to run, the selected firing time is reached, and the trigger circuit deenergizes the A relays. Contact K-A opens and deenergizes the B relays. Contact K-B opens and deenergizes the E relay, after a time delay caused by capacitor C8. At the same time, contact K-B energizes the number-of shots counter. Contact K-E opens and deenergizes the C relays and cuts off the spot light, after a time delay caused by capacitor C7. Contact K-E deenergizes the number-of-shots counter. The counter has received a pulse with a duration equal to the time delay of the E relay, about 0.25 second. When the A relays are deenergized, contacts K-D and K-A connect to the time servomotor a voltage tending to rotate it in reverse, thus moving the potentiometer wipers back to the zero position and holding them there.

17. Regulated Power Supply (Fig. 12)

Note. Figure 12 is the power supply schematic and parts location diagram; figure 25 shows exploded views of the supply, and figure 33 is the locator view.

The regulated power supply, operating on 110 or 220v ac, supplies regulated 24v dc. It consists of a switching circuit, a transformer, two full wave bridge rectifiers, a filter, and a regulator circuit.

a. The switching circuit automatically switches the transformer primary windings for operation on 110v or 220v. Note that K1 relay coil is in series with voltage dropping resistor (VDR) RT3 and K2 relay coil is in parallel with voltage dropping resistor RT4.

(1) When the power supply is connected to 1 10v and the power switch is closed, neither VDR conducts, so relay K1 is deenergized and relay K2 is energized. Current flows through K2 contact 2, and branches through two parallel paths. One path is through T1 primary winding 1-3, through K1 contact 2, and back to the line. The other path is through K1 contact 1, through T1 winding 2-4, and back to the line.

(2) When the power supply is connected to 220v and the power switch is closed, RT3 conducts, so both relays are energized. Current flows through relay K2 contact 1, through half the primary winding, through relay K1 contact 1, through the other half of the primary winding, and back to the line. Thus the same voltages are produced in the transformer secondary for 110v and 220v input to the switching circuit.

(3) The power supply is protected against high line voltage. If the input voltage should much exceed 220v, VDR RT4, in parallel with K2 coil, will conduct. As a result, K2 will deenergize and cut off power to the transformer primary.

b. The regulator circuit maintains the output of the supply at -24v. The circuit operates by phase control in a rectifier bridge. The main output of the supply is from T1 winding 5-6, through a bridge made up of two standard rectifier diodes, CR8 and CR9, and two silicon TM 96920-461-35 control rectifiers (SCR's, called "thyratrons" by the manufacturer of the supply), CR7 and CR10. Unijunction transistor Q13, operating as a relaxation oscillator, supplies the positive trigger pulses which control the firing angle of the SCR's. -The SCR having positive anode voltage at the time of the trigger pulse fires and conducts for the remainder of the applied ac alternation. This SCR is turned off by reverse bias at the beginning of the next alternation.

c. Let's follow the sequence of regulation when the voltage at the power supply output tries to increase (fig. 13). Voltage at Q16 emitter goes more negative with respect to the base, increasing conduction of Q16. By shunting action, this decreases the current charging' C6, so that it takes longer for C6 to charge to the firing point of Q13. As a result the frequency of the trigger pulses at Q13 base 2 decreases.. Since the trigger is lower in frequency, it will fire the SCR's later in each alternation. The firing angle of the SCR's is reduced, lowering the average current through them and therefore lowering the voltage at the bridge output. When the power supply output voltage tries to decrease, the opposite happens.

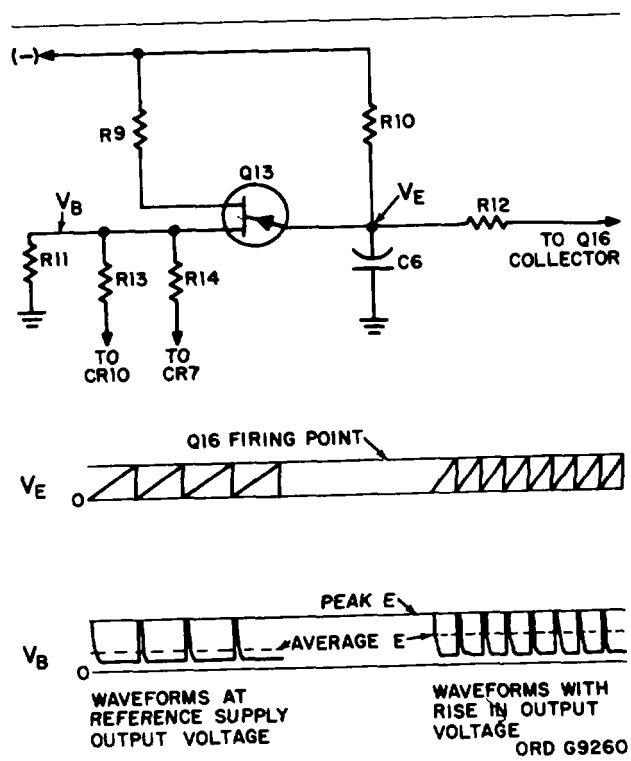

Figure 13. Regulator waveshapes.

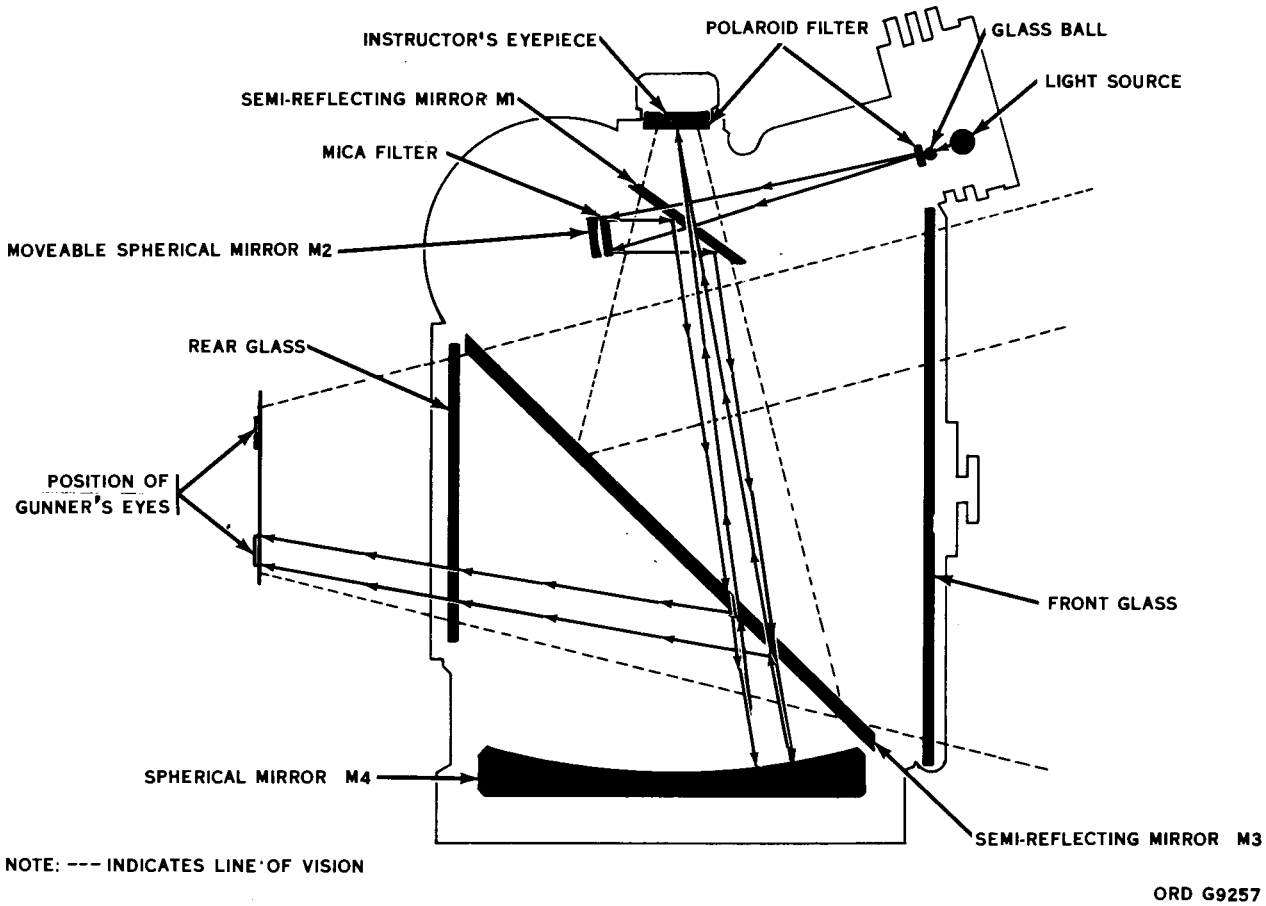

Figure 14. DX-43 optical system diagram.

18. X 43 Optical Unit

The optical unit can be divided into an optical system and an electromechanical system.

a. he optical system (fig. 14) operates as follows. The light source is an electric bulb. Light rays from the bulb pass through the glass ball, forming a point image. Rays from the point image pass through the small semi-reflecting mirror (M1) and hit the moveable spherical mirror (M2). From this mirror the light rays are reflected to the rear face of M1, and from there through the large semi-reflecting mirror (M3) to the large spherical mirror (M4). The point image produced by M2 falls at the focal point of M4. Hence M4 produces a virtual image located at infinity, that is, all light rays reflected from the mirror are parallel. This virtual image is reflected from the rear face of M3 to the gunner's eye. Part of the rays also pass through the two semi-reflecting mirrors to the instructor's eyepiece.

b. he two polaroid filters, one behind the glass ball and the other in front of the instructor's eyepiece, blank the part of the light beam which would be reflected by M1 to the instructor's eyepiece. The mica filter in front of M2 alters the polarization plane of the light so that later it will pass through the polaroid filter to the instructor's eyepiece.

c. Light rays from the landscape enter the front glass and strike M3, which divides them into two parts. One part passes through the mirror to the gunner's eyes; the other part is reflected through M1 to the instructor's eyepiece. The result is that both the gunner and the instructor see an image of the landscape on which is superimposed an image of the light spot representing the missile. The instructor sees a reversed image of what the gunner sees.

d. he electromechanical system (fig. 3) rotates M2 about the pitch and yaw axes in response to command signals from the computer.

The yaw and pitch servomotors, through reduction gears, move the mirror and the two position pickoffs. The fixed voltage windings of the servomotors are supplied with a constant 400 cps voltage. The control windings are supplied with a variable 400 cps voltage, 0- or 180-degree phase. The reference windings of the generators are connected in parallel and supplied with a 400 cps voltage proportional to time. The outputs of the measuring windings are fed back to the computer second control amplifier. The measuring windings produce a voltage proportional to the reference winding voltage (time) and to the motor speed (angular movement of the spot), and therefore proportional to the angular velocity of the spot. R1 and R2 are supplied at the ends with 12v 400 cps, and the center taps are grounded. The voltage between the wiper and ground is proportional to the position of the light spot, and the phase indicates direction with respect to center position. Before firing, this voltage, in parallel with a TM 96920-461-35 voltage set by the initial position control, is applied to the second control amplifier. The difference between the two represents position error. When amplified, it causes the servomotor to move the mirror so as to cancel the error.

19. DX-44 Projector

The DX-44 projector, used for indoor training, projects on a screen a spot of light representing the missile. The projector can ble divided into an optical system and an electromechanical system.

a. The optical system of the DX-44 projector (fig. 15) is simpler than that of the DX-43 optical unit. The light source is an electric bulb.

Light rays from the bulb pass through the diaphragm to the fixed mirror and are reflected through the lens to the movable mirror. The image is reflected by the movable mirror out of the projector to the screen, which may be from 10 to 30 feet away. The system is focused by adjusting the distance between the light source

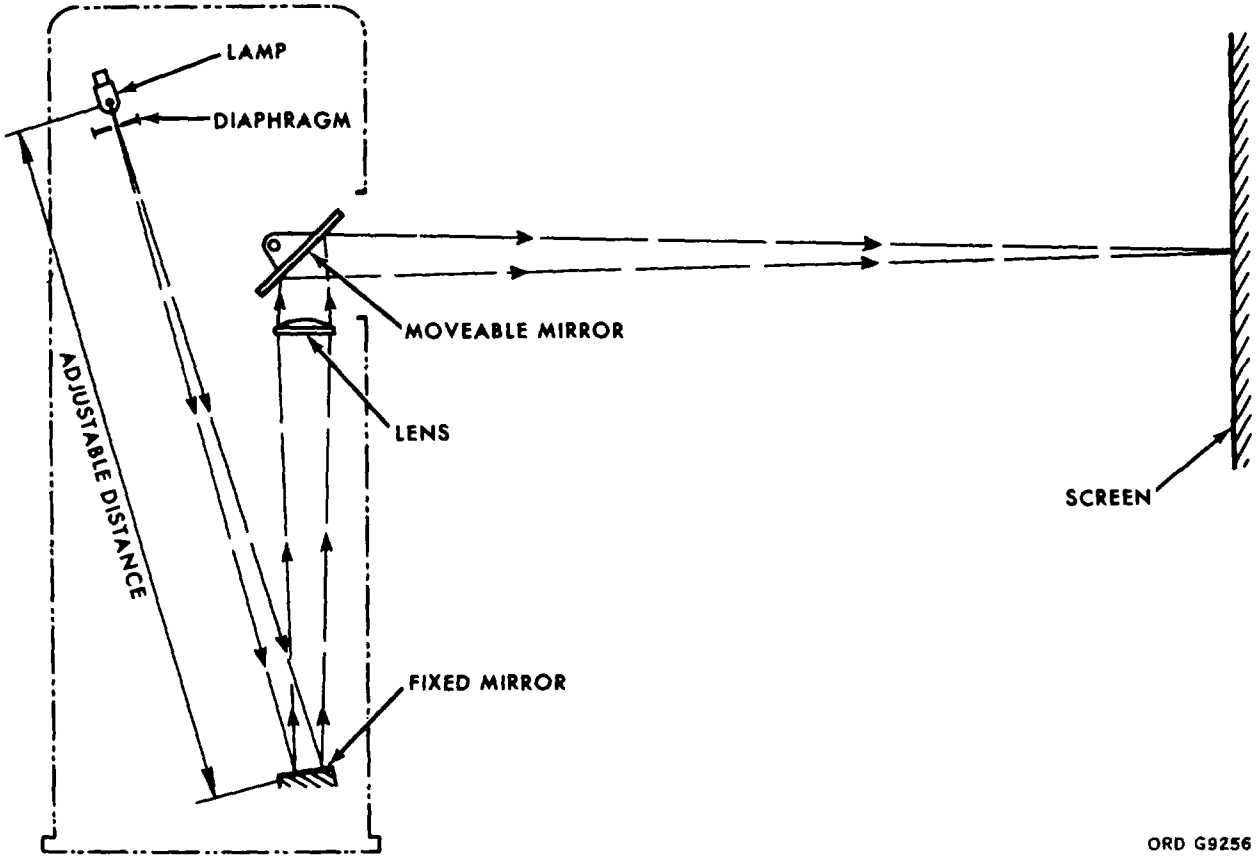

Figure 15. DX-44 projector optical diagram.

and the fixed mirror. This is the same as varying the distance between the source and the lens. The diaphragm, which varies the size of the projected spot, is actuated by a galvanometer-type motor which is connected in parallel with the lamp. Since the voltage supplied to the lamp decreases with time (par. 16), the diaphragm gradually closes as time passes, and opens again upon simulated missile explosion.

b. Electromechanical components of the control channels are like those in DX-43 optical unit (par. 18), except that the reduction gear ratios are different. The principle of operation is exactly the same.

c. he regulated power supply (par. 17), rather than being a separate unit, is installed in the base of the projector. For DX-44 use, there are two minor changes in the power supply. A power indicator lamp is added in parallel with one of the transformer windings, and a connection is made from the power supply output ahead of the filter. These changes are shown on figure 12.

CHAPTER 3

MAINTENANCE INSTRUCTIONS

Section I. GENERAL

20. Tools and Equipment

Common tools and equipment used in maintaining the simulators are authorized by tables of organization and equipment or tables of distribution. No special tools are authorized.

21. Cleaning

a. Clean rubber parts with soap and water. Apply a coating of powdered technical talcum to preserve the rubber.

b. Remove dust and lint from meter glass with a soft cloth or brush. Clean dust and lint from component boards, heat sinks, and electronic components with a brush.

c. Wash meter glass with lens tissue paper lightly moistened with alcohol.

Section II. TROUBLESHOOTING

Note. Figures 16 through 25 are exploded views of the equipment, and figures 26 through 33 are component locator views.

22. Testing AC Amplifiers (A4.5) (fig. 5)

Four identical ac amplifier modules - two second control amplifiers, one time channel servo amplifier, and one distance amplifier are used in the computer. To determine whether any ac amplifier is operating correctly, measure with a VTVM the following voltages. The computer may be in either the ready or the firing condition.

a. The 400 cps input voltage, measured across terminals l and 2, should vary from 0 to 100 millivolts.

b. The 400 cps output voltage, measured across terminals 6 and 9, should also vary from 0 to 100 millivolts.

c. The dc supply voltages should be -16v at terminal 3 and -24v at terminal 5, both with respect to terminal 2.

23. Testing DC Amplifiers (A1.2) (fig. 4)

Two identical dc amplifier modules, the first control amplifiers, are used in the computer. To determine whether dc amplifier is operating correctly, measure with a VTVM the following voltages. The computer should be in the ready condition.

a. The dc input voltage, measured at terminal 1 with respect to terminal 2, should vary from 0 to +100 millivolts.

b. The output voltages should vary from 0 to ± 15V at terminal 8 with respect to terminal 2, and from 0 to 15v 400 cps across terminals 6 or 7 and 2.

c. The dc supply voltage should be -22v at terminal 5 with respect to terminal 2.

d. The ac voltage should be 12v 400 cps across terminals 9 and 10.

24. Checking optical Unit or Projector Potentiometers

Check the optical unit or projector position pickoff potentiometers as follows:

Caution: Never check these two potentiometers with an ohmmeter, Never connect any measuring device directly to the wiper contact of potentiometers. Always include the wiper protection resistor (470 ohms) in the circuit to be measured.

a. Deenergize the optical unit and disconnect from the cable which goes to the computer.

b. Set up AN/USM-117 oscilloscope for operation. Set oscilloscope calibrate voltage to .4V.

c. Connect the oscilloscope .4 volt calibrate output to J-K1 pin U and W.

d. Connect the vertical input of the oscilloscope between J-K1 pin W and, for the yaw potentiometers, J-K1 pin P; for the pitch potentiometer, J-K1 pin T. Vary the potentiometer setting and observe the oscilloscope presentation. The potential should vary in amplitude from 0 to .4V as the potentiometer is rotated from minimum to maximum.

25. Computer Checks

a. If the computer fuze blows when power is applied, disconnect the power supply at the computer, replace the fuze, and with the multimeter set to range RX1, check the resistance of

the computer 24v supply line. This check may be made from J-K1 pin 2 to J-K1 pin 1, with the power switch on. The resistance should be, with all plug-in modules in place, 1.8 ohms or 60 ohms, depending on the polarity of the ohmmeter connection. If the resistance is zero, remove the modules one at a time and replace any defective module. Resistance with all modules removed is 200 ohms. If this procedure does not localize the trouble, check the insulation to chassis ground of transistors Q-Y1, Q-Y2, Q-Y15 and Q-Y20. If there is no short to ground, remove the transistors one at a time, test them, and replace any defective ones.

b. If the power lamp and circuit and the power supply are good, but the lamp does not glow when power is applied and the fuze does not blow, check the continuity of switch S1.

c. If the light spot remains stationary in either the pitch or the yaw channel, make the following checks (indicated for the pitch channel):

(1) If the spot responds to the initial position control setting hut not to the initial velocity control setting, check voltages of the velocity circuits and dc amplifiers (table 5). If the control voltage into the dc amplifier is zero, check switch S2 circuit to the control stick. Check that relay B energizes. Check

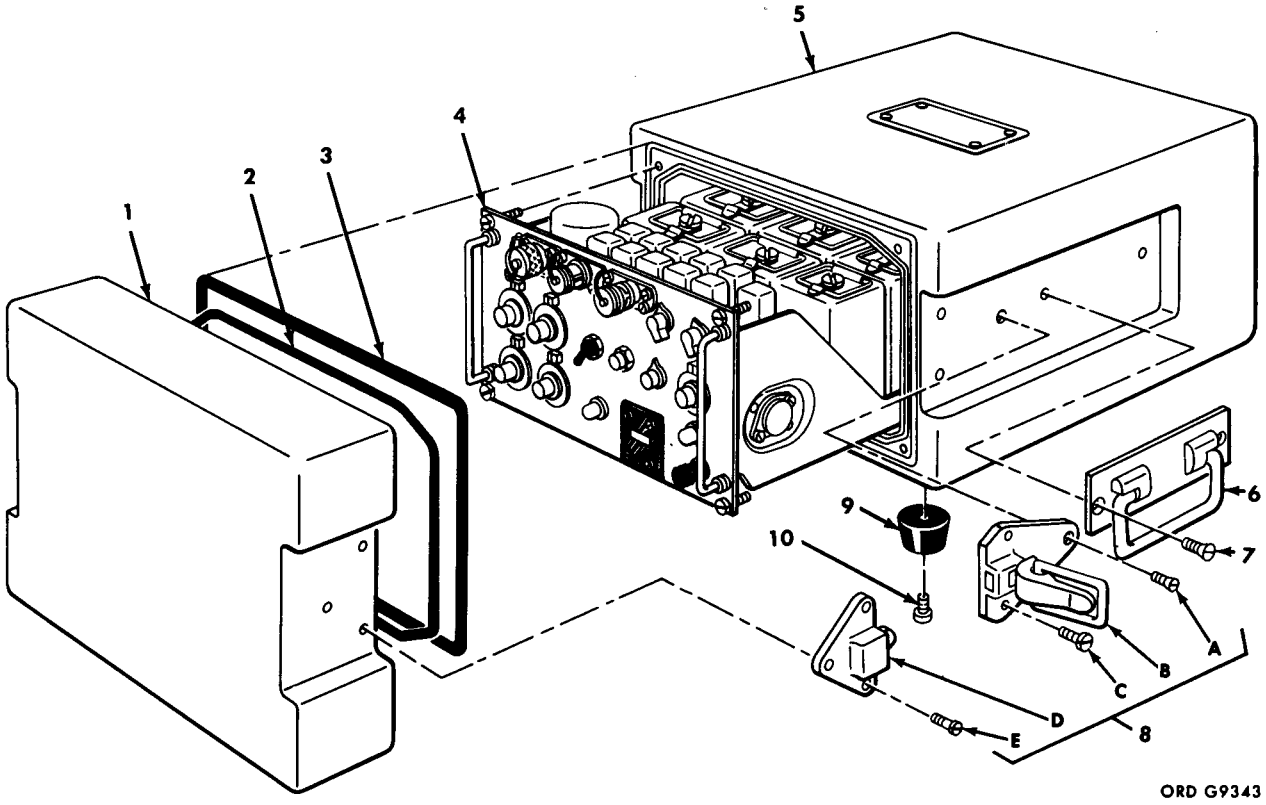

1—Cover
2—Gasket 10022429
3—Gasket 10022428
4—Drawer
5—Case
6—Handle 10022695
7—Screw 10022630
8—Fastener assembly
A—Screw 10021061
B—Fastener toggle
C—Screw 10021054
D—Part of 8B
E—Screw 10021054
9—Rubber foot 10022696
10—Screw 10022621 and washer 10022671

Figure 16. Computer case exploded view.

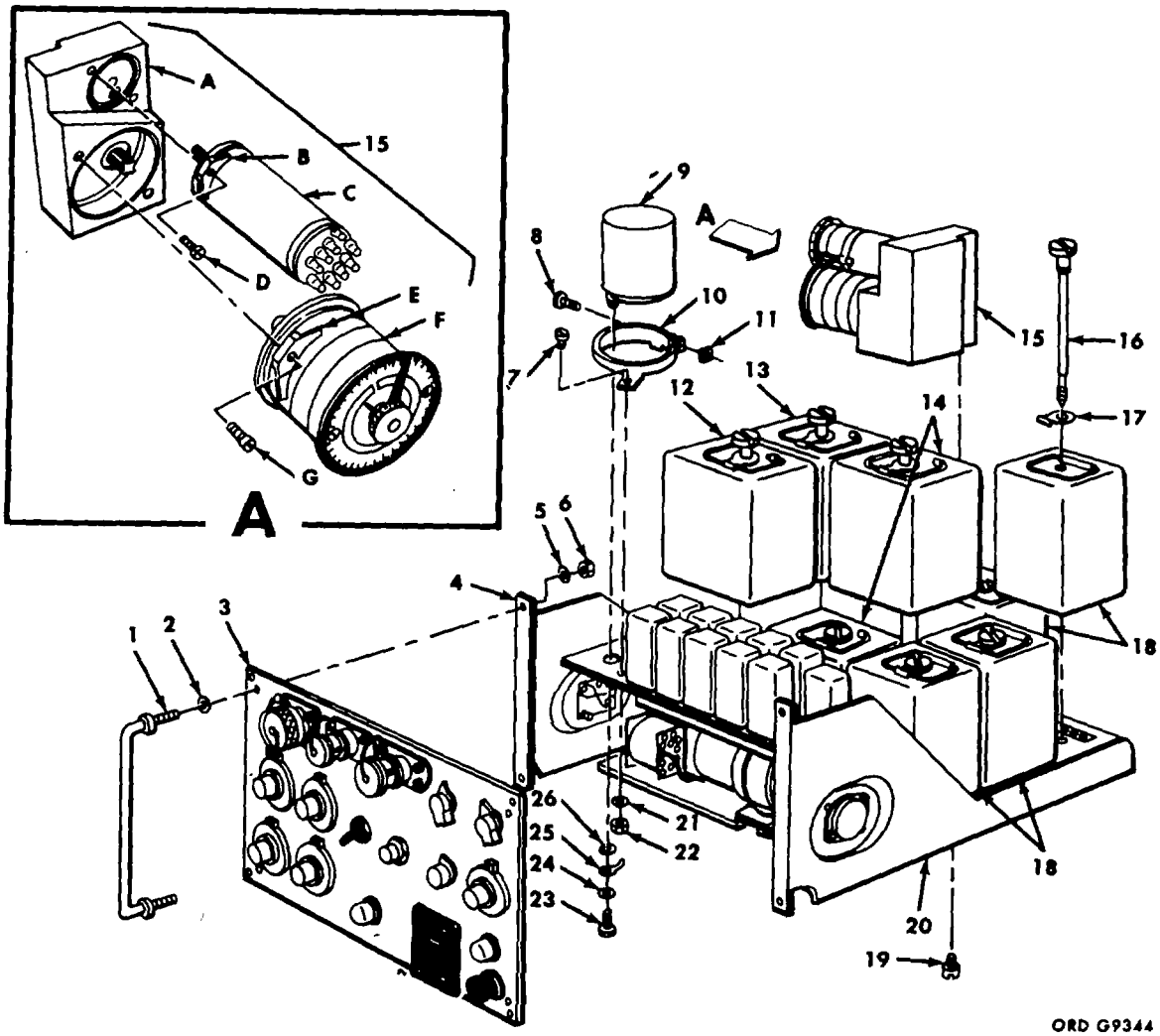

1—Handle
2—Washer 10022387
3—Plate
4—Chassis side panel
5—Washer 10022394
6—Nut 10022360
7—Screw 10022298
8—Part of 9
9—Capacitor (C1) 10173166
10—Part of 9
11—Part of 9
12—G4-2 pilot oscillator 10173177
13—G0-1 gust generator 10173178
14—A1-2 amplifier 10173163
15—Firing-time servo
A—Reduction gear housing 10173239
B—Cleat 10173235
C—Motor-generator 10173159
D—Screw 10022288
E—Cleat 10173236
F—Potentiometer group 10173173
G—Screw 10022286
16—Screw 10032337
17—Lock ring 10022405
18—A4-5 amplifier 10173164
19—Screw 10022336
20—Chassis side panel
21—Washer 10022385
22—Locknut 10022358
23—Part of 9
24—Part of 9
25—Lug 10022469
26—Part of 9

Figure 17. Computer chassis partial exploded view.

the continuity of relay B, commutator S-P4, and bus bar W. Check the combined resistance of potentiometer R-P7 and its protective resistor and their 11v supply.

(2) If the spot responds to the initial velocity control setting but not to the initial position control setting, check input and output voltages of the second control (ac) amplifiers (table 5). Check the position setting voltage and the position return voltage (table 5).

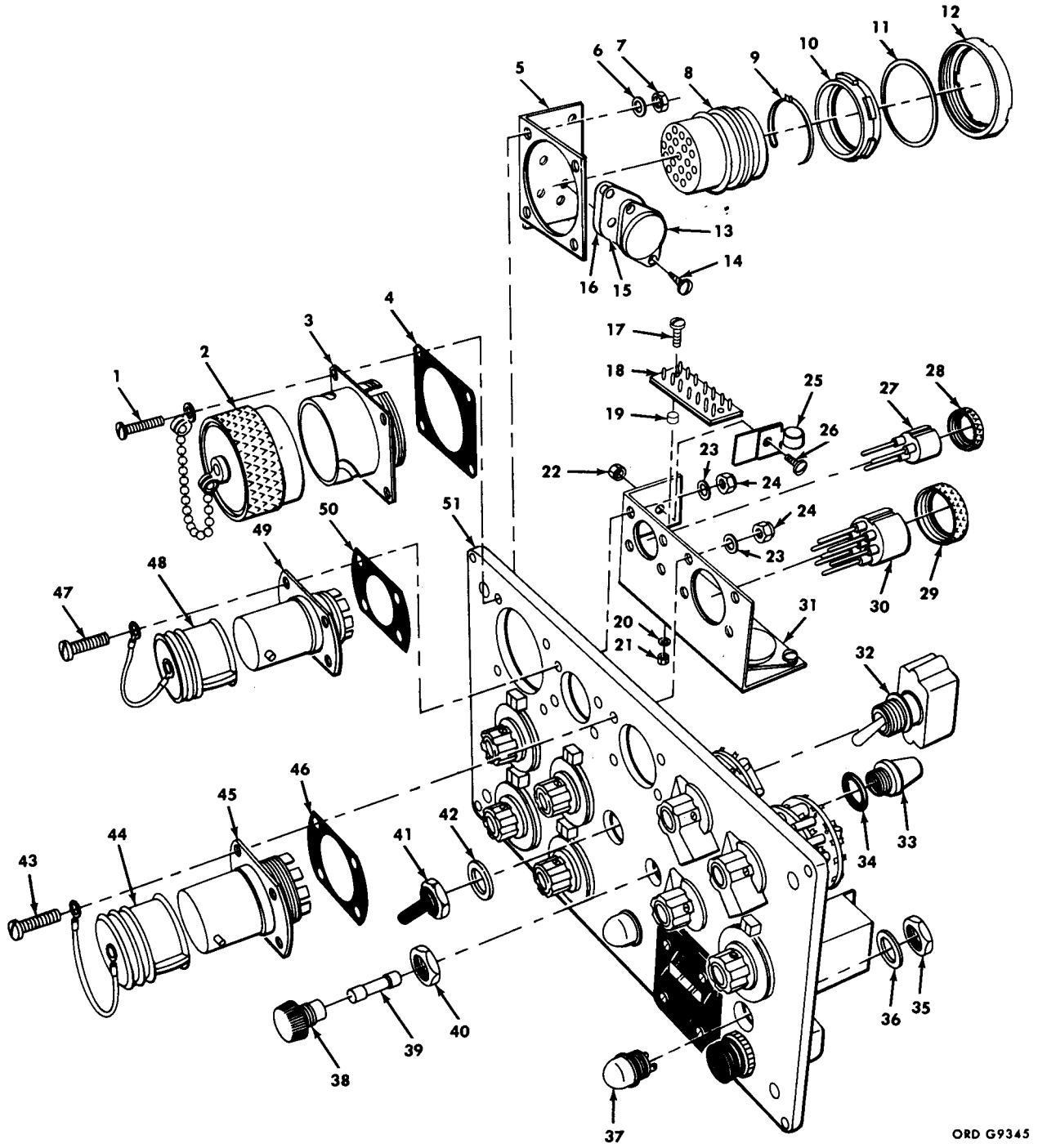

Figure 18. Computer front panel exploded view

If the position return voltage is incorrect, check the cable and optical unit circuit (table 3 or 4).

26. Troubleshooting Tables

a. Tables 2, 3, and 4 provide operational checks and troubleshooting procedures for the computer, DX-43 optical unit, and DX-44 projector.

b. Table 5 lists computer voltages at various check points, with the computer in the ready and the firing condition. Figures 3-7 are the computer schematics, and figures 19-25 are the parts locator diagrams.

1--Screw 10022301
2--Cap 10022493
3--Connector 10022466
4--Gasket 10022427
5--Mounting plate
6--Washer 10022385
7--Nut 10022368
8--Part of 3
9--Part of 3
10--Part of 3
11--Part of 3
12--Lock nut 10022362
13--Transistor (Q--Y15) 10173274
14--Screw 10022338
15--Transistor support 10023233
16--Insulator 10022438
17--Screw 10022294
18--Terminal board (TB--J7) 10173271
19--Spacer 10022449
20--Lock washer 10022370
21--Nut 10022352
22--Nut 100223556
23--Washer 10022386
24--Nut 10022359
25--Transistor clip 10173240
26--Screw 10022335
27--Part of 49
28--Part of 49
29--Part of 45
30--Part of 45
31--Mounting plate
32--Toggle switch 10022488
33--Part of 38
34--Gasket 10022407
35--Part of 37
36--Part of 37
37--Indicator 10173249 and lamp 10173174
38--Fuseholder 10173244 and gasket 10022408
39--Fuse (2.5A) 10134548
40--Part of 38
41--Part of 32
42--Part of 32
43--Screw 10022303
44--Cap 10022492
45--Connector (J--K2) 10022465
46--Gasket 10022433
47--Screw 10022303
48--Cap 10022491
49--Connector (J--K1) 10022464
50--Gasket 10022432
51—Plate

Figure 18. Legend.

1--Part of 2, 29, 31, 32, 33
2--Dial w/knob 10173242
3--Part of 8
4--Part of 8
5--Index marker 10022738
6--Part of 5
7--Part of 5
8--Variable resistor 10173172
9--Switch
10--Switch
11--Mounting bracket
12--Part of 30
13--Part of 30
14--Terminal strip (TB-J8)
15--Screw 10022295
16--Lock washer 10022371
17--Nut 10022353
18--Variable resistor 10173171
19--Variable resistor 10173170
20--Counter 10173245
21--Nut 10022354
22--Lock washer 10022372
23--Switch 10022487
24--Part of 23
25--Boot 10173246
26--Gasket 10022417
27--Cover 10173247
28--Screw 10022300
29--Knob 10022737
30--Indicator 10173248 and lamp 10173174
31--Knob 10173241
32--Dial w/knob 10022739
33--Dial w/knob 10173243

Figure 19. Legend.

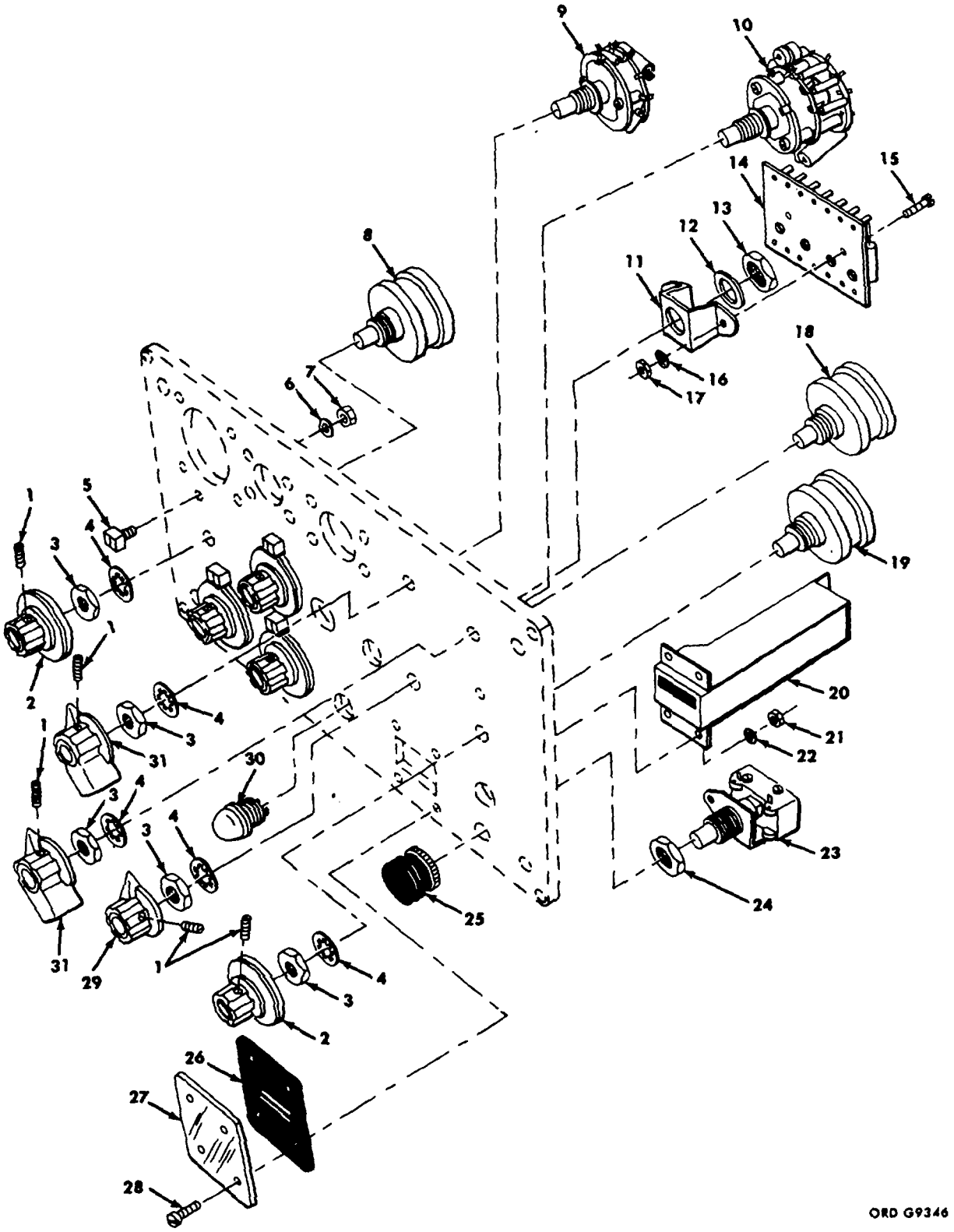

Figure 19. Computer front panel exploded view.

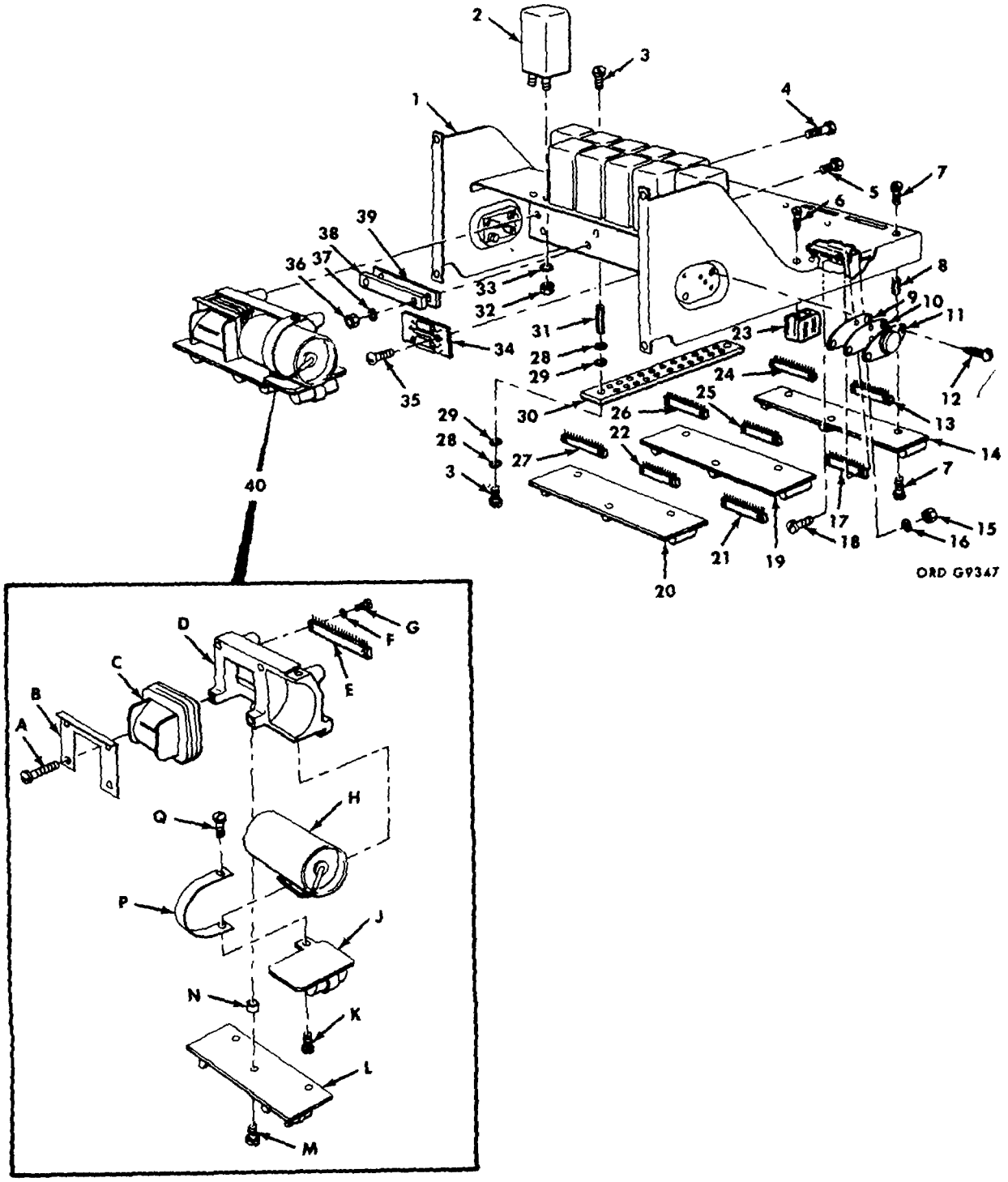

Figure 20. Computer chassis partial exploded view.

1---Side panel
2--Relay 10178165
3--Screw 10022311
4--Screw 10022302
5--Screw 10022310
6--Screw 10022309
7--Screw 10022311
8--Spacer 10022452
9--Insulator 10022439
10--Lead support 101723
11--Transistor (Q--Y2) 10022261
12--Screw 10022338
13--Receptacle 10022461 and spacer 10173259
14--Terminal strip (TB--J3) 10178269
16--Washer 1002271
17--Same as 13
18--Screw 10022296
19--Terminal strip (TB--J2 w/o components) 10173267
20--Terminal strip (TB--J1 w/o components) 10173268
21--Same as 13
22--Same as 13
23--Coil 10022509
24--Same as 13
25--Same as 13
26--Receptacle 10022641-- and spacer 10173260
27--Same as 26
28--Washer 10022386
29--Sleeve 10022439
30--Buss bar
31--Spacer 10022453
32--Nut, part of 2
33--Washer, part of 2
34--Parts group
Terminal strip (TB--J4) 10173290
Insulator 10022434
Insulator 1022485
35--Parts group
Screw 10022309
Nut 10223563
Washer 1022884
36--Nut 10022353
37--Washer 100223 77
38--Receptacle (J--K4) 10022462
39--Spacer 10173258
40--Power supply 10173176
A--Screw 1002228515--Nut 10022353
B--Hold down plate
C--Transformer 10022501
D--Support
E--Connector 10022460
F--Washer 10022377
G--Screw 10022296
H--Capacitor (C2) 10022533
J--Support
K--Screw 10022297
L--Terminal strip (TB--J6 w/o components) 10173265
M--Screw 10022299
N--Spacer 10022445
P--Collar
Q--Screw 10022297
R--Screw 10022287
41--Screw 10022297
42--Screw 10022299

Figure 20. Legend.

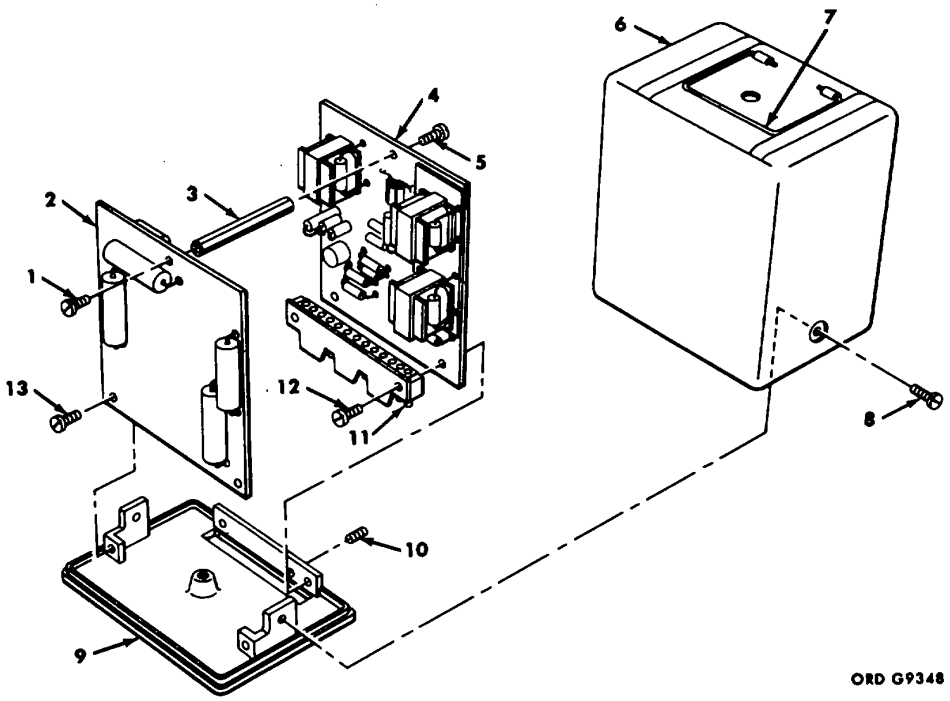

1--Screw 10022295
2--Printed circuit board 10173250
3--Spacer 10022446
4--Printed circuit board 10173251
5--Screw 10022295
6--Cover 10173230
7--Handle 10173232
8--Screw 10022324
9--Base
10--Screw 10022338
11--Connector 10022459
12--Screw 10022326
13--Screw 10022824

Figure 21. G0-1 generator exploded view.

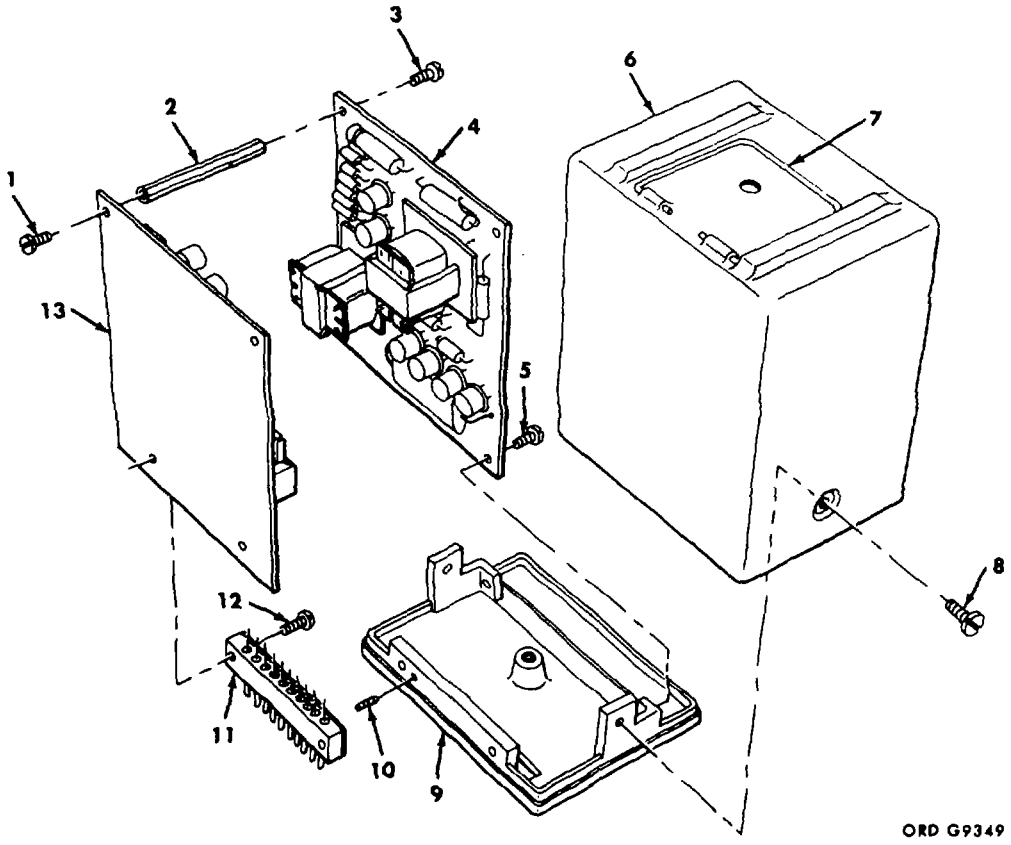

1--Screw 10022295
2--Spacer 10022446
3--Screw 10022295
4--Printed circuit board 10173265
5--Screw 10022324
6--Cover 10173280
7--Handle 10173232
8--Screw 10022324
9--Base
10--Screw 10022333
11--Connector 10022459
12--Screw 10022326
13--Printed circuit board 10173254

Figure 22. A1-2 amplifier exploded view.

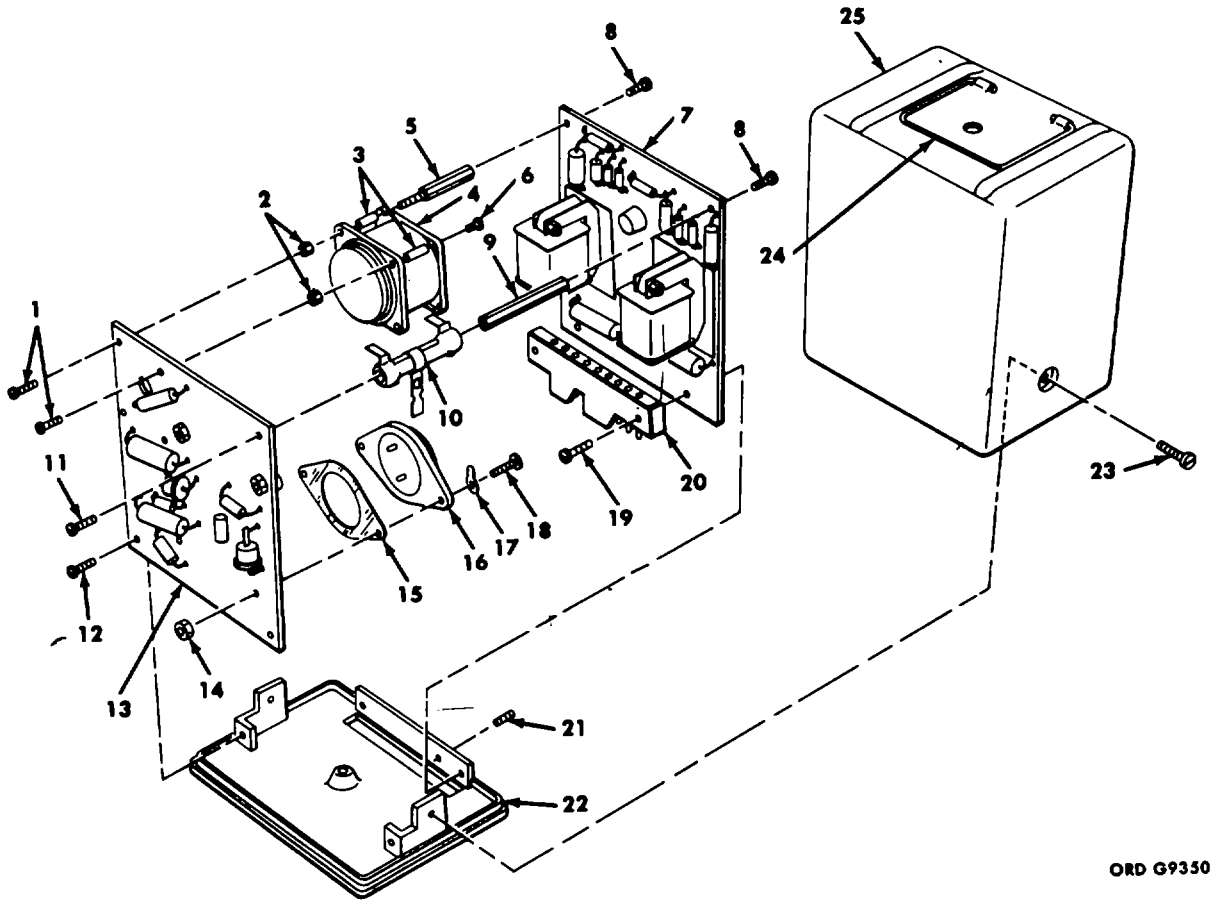

1--Screw 10022319
2--Part of 4
3--Part of 4
4--Transformer (T3)
5--Spacer 10022447
6--Part of 4
7--Printed circuit board 10173252
8--Screw 10022295
9--Spacer 10022446
10--Resistor (R20) 10022556
11--Screw 10022295
12--Screw 10022324
13--Printed circuit board 10173253
14--Nut 10022858
15--Part of 16
16--Transistor (Q--Y6) 10022263
17--Lug 10022467
18--Screw 10022321
19--Screw 10022226
20--Connector 10022459
21--Screw 100223333
22--Base
23--Screw 10022324
24--Handle 10173232
25--Cover 10173230

Figure 23. G4-2 oscillator exploded view.

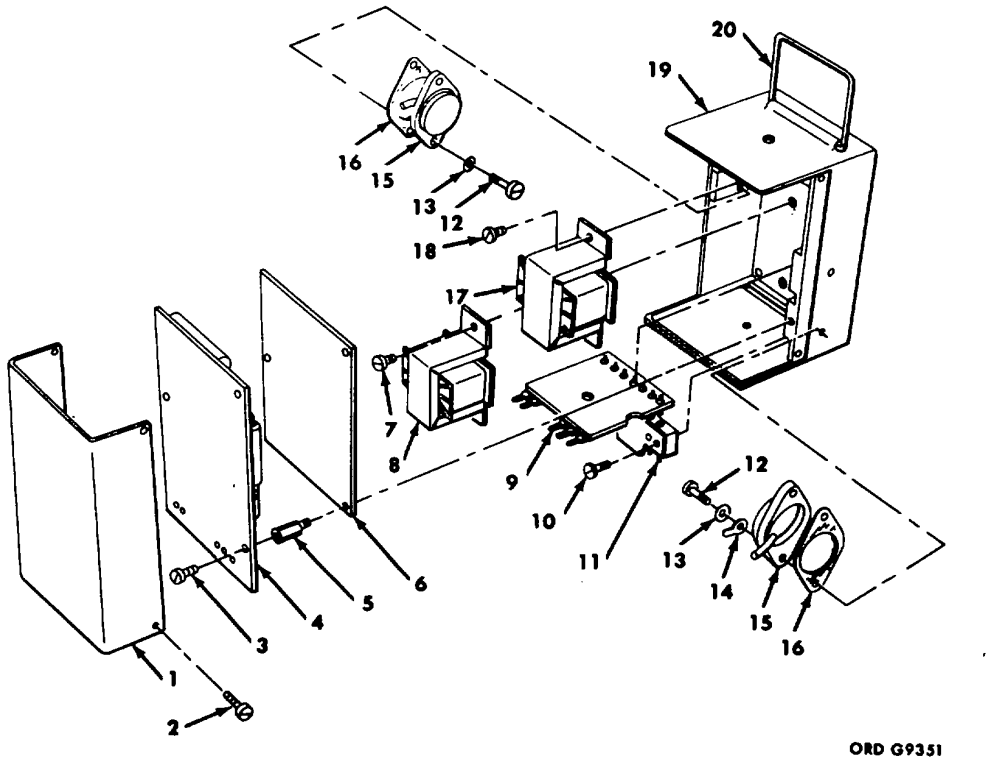

1--Cover 10178231
2--Screw 10022323
3--Screw 10022295
4--Printed circuit board 10173257
5--Spacer 10022448
6--Plate
7--Screw 10022304
8--Transformer (T2) 10022503
9--Printed circuit board
10--Screw 10022318
11--Spacer key 10173262
Connector 10022458
Spacer 10022736
12--Screw 10022325
13--Insulating sleeve 10022440
14--Lug 10022471
15--Transistor 10022262
16--Insulator 10022438
17--Transformer (T1) 10022502
18--Screw 10022304
19--Case
20--Handle 10173232
21--Lug 10022468

Figure 14. A4-5 amplifier exploded view.

Figure 25. Legend.

1--Handle 10022695
2--Screw 10022680
3--Case top
4--Identification plate
5--Screw 10022622
6--Gasket 10022652
7--Choke (L1) 10022687
8--Washer 10022697
9--Gasket 10022407
10--Nut
11--Fuse (F1) 10173169
12--Gasket 10022408
18--Fuseholder cap
14--Gasket
15--Connector (J--K2) 10022687
16--Screw 10022624
17--Connector cap 10022667
18--Connector cap 10022656
19--Screw 10022624
20--Connector 10022686
21--Gasket
22--Screw 10022626
2B--Case bottom
24--Lockwasher 10022468
25--Nut 10022667
26--Lug 10022624
27--Lock washer 10022468
28--Nut 10022667
29--Fuseholder 10173244
30--Transformer (T1) 10022698
31--Rubber foot 10022696
32--Screw 10022621
3S--Screw 10022626
34--Screw 10022625
86--Screw 10022642
86--Washer 10022672
37--Nut 10022668
88--Capacitor (C9) 10178196
39--Cover
40--Screw 10022627
41--Relay 10022702
42--Screw 10022627

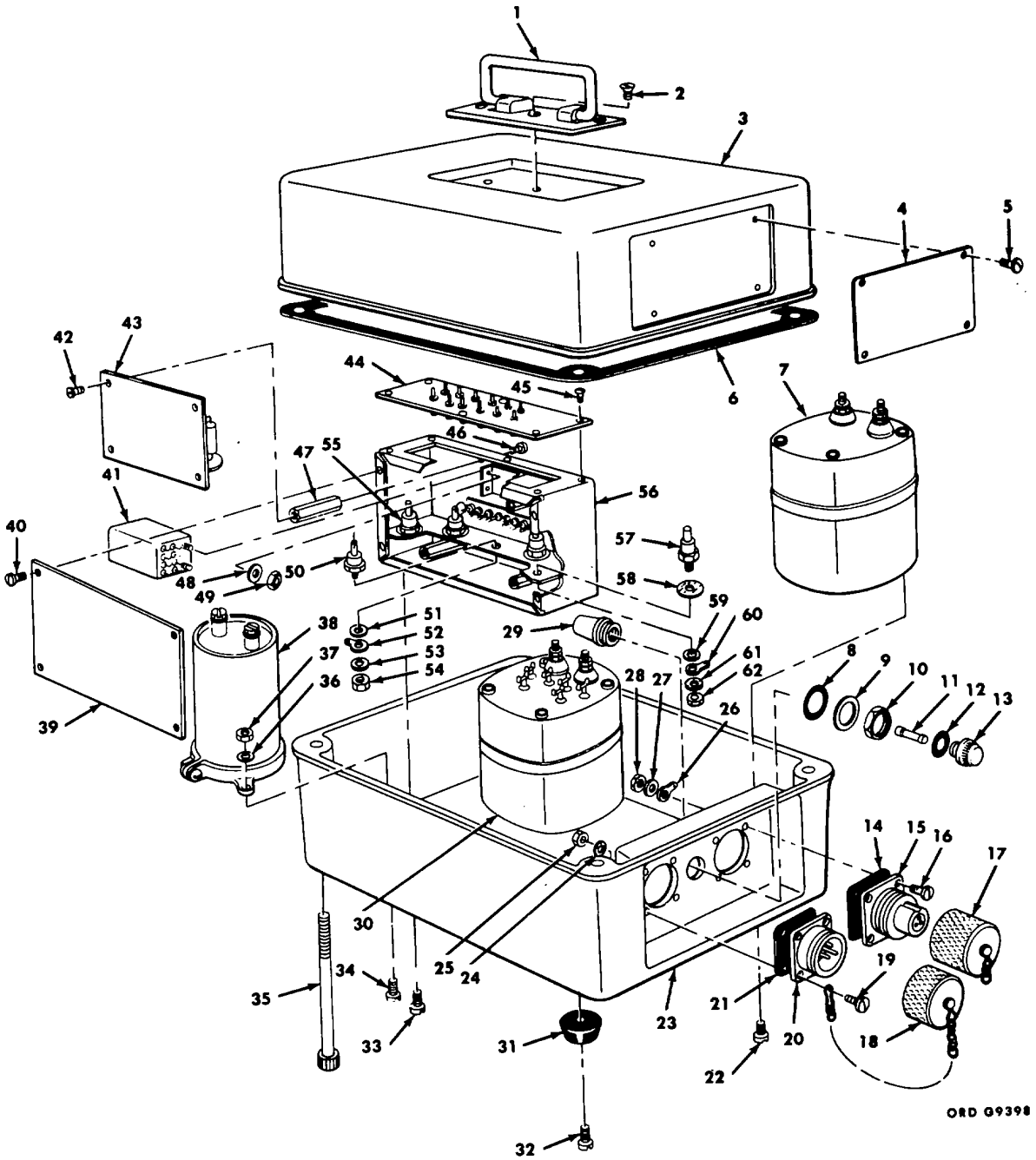

43--Printed circuit board 10022700
44--Junction
45--Screw 10022628
46--Screw 10022635
47--Spacer 10022648
48--Washer
49--Nut
50--Diode 10022269
51--Sleeve 10022650
52--Lug 10022689
53--Washer 10022677
54--Nut
55--Diode 10022543
56--Regulator 10022699
57--Diode 10022543
58--Insulator 10022649
59--Insulator 10022650
60--Lug 10022624
61--Washer 10022677
62--Nut

Figure 25. Regulated power supply exploded view.

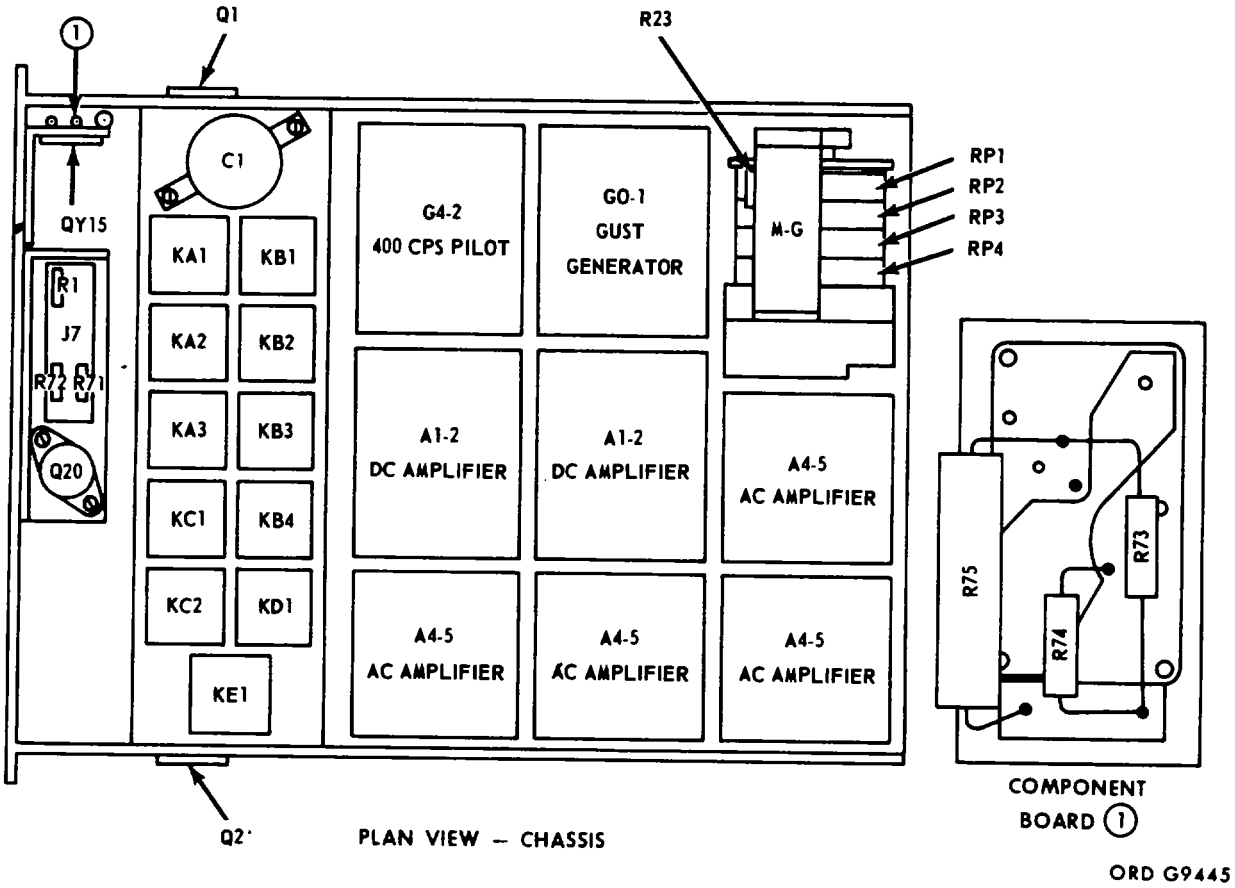

Figure 26. Computer chassis--locator view.

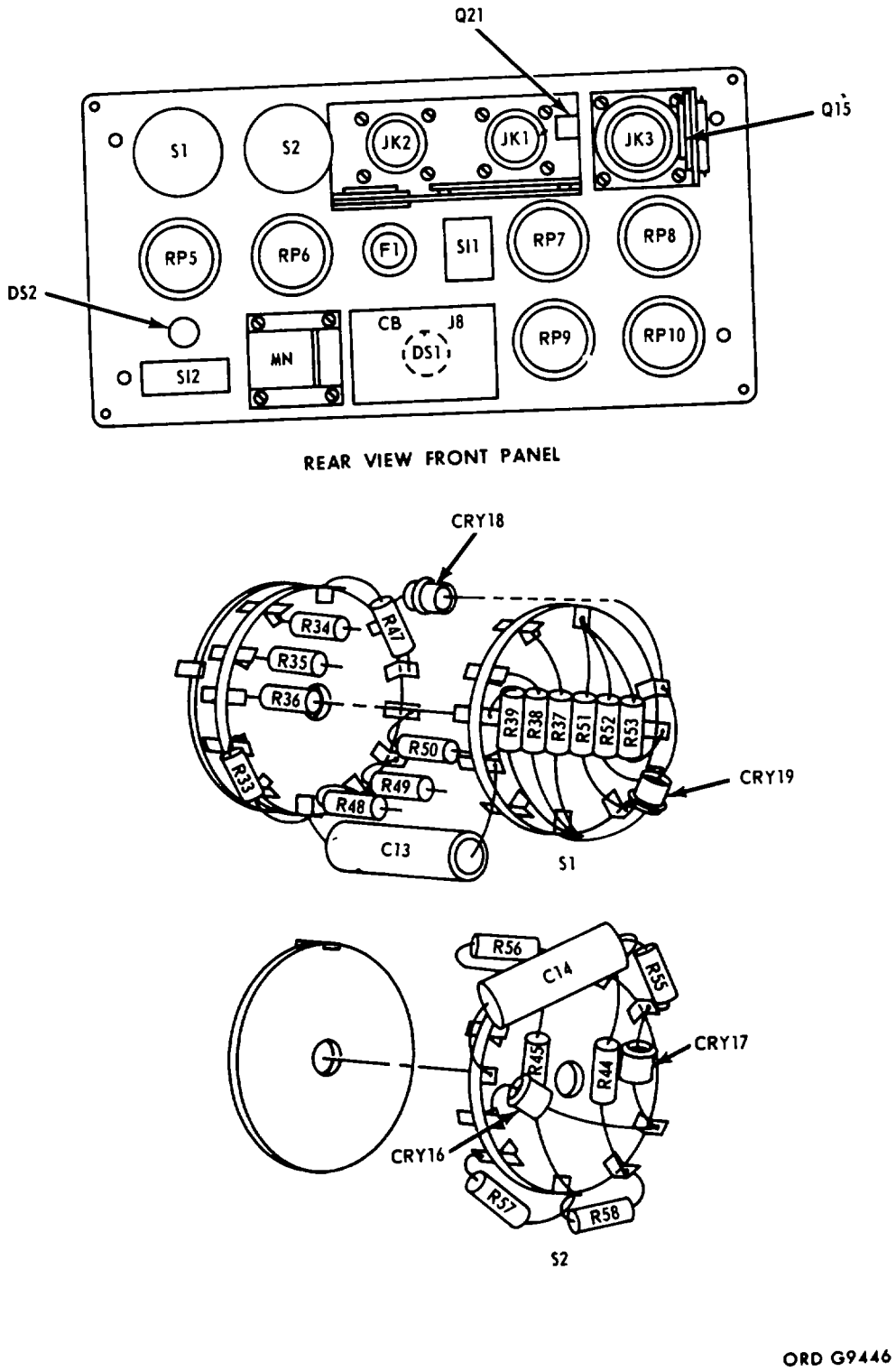

Figure 27. Front panel and switches--locator views.

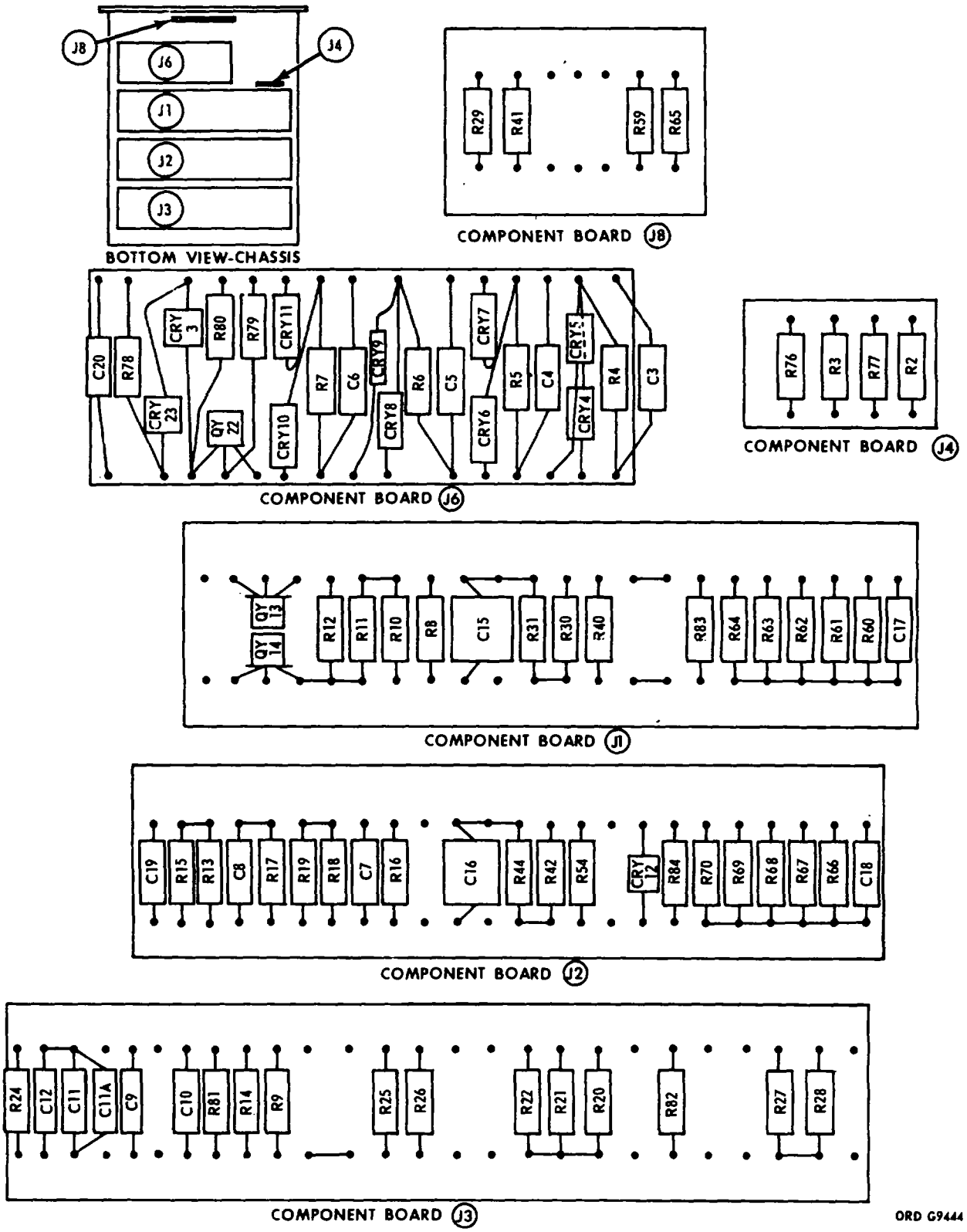

Figure 28. Terminal strips--locator views.

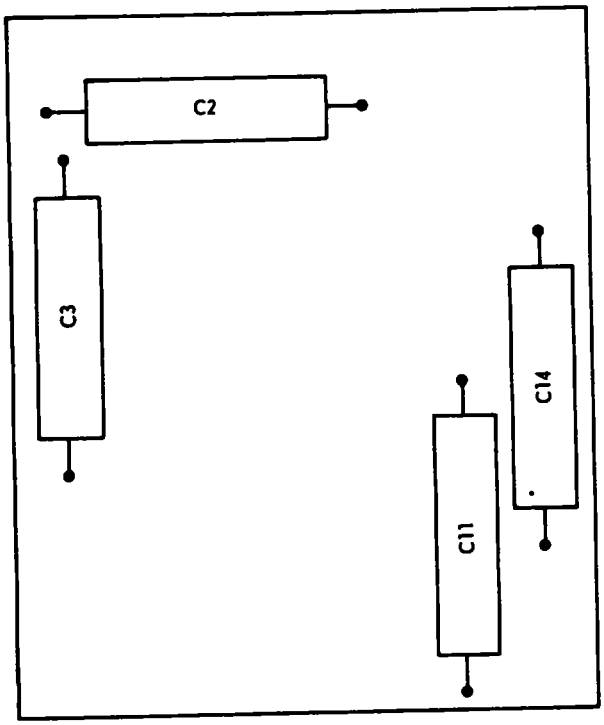

BOARD 409 (PRINTED CIRCUIT SIDE)

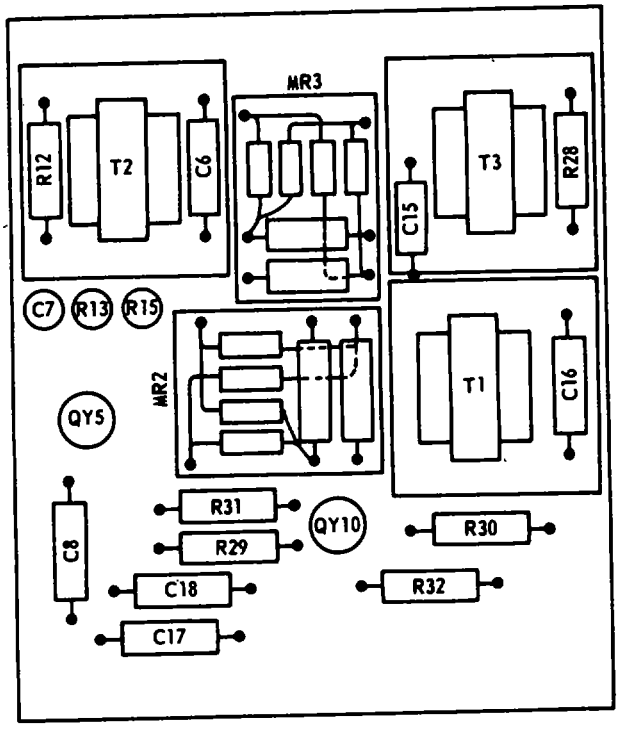

BOARD 407 (10173250)

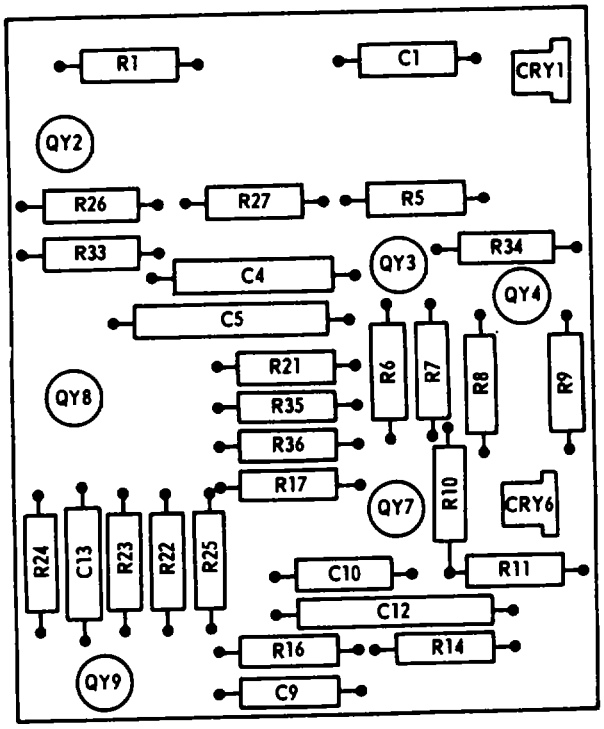

BOARD 409 (10173251)

ORD G9352

Figure 29. G0-1 generator--locator view.

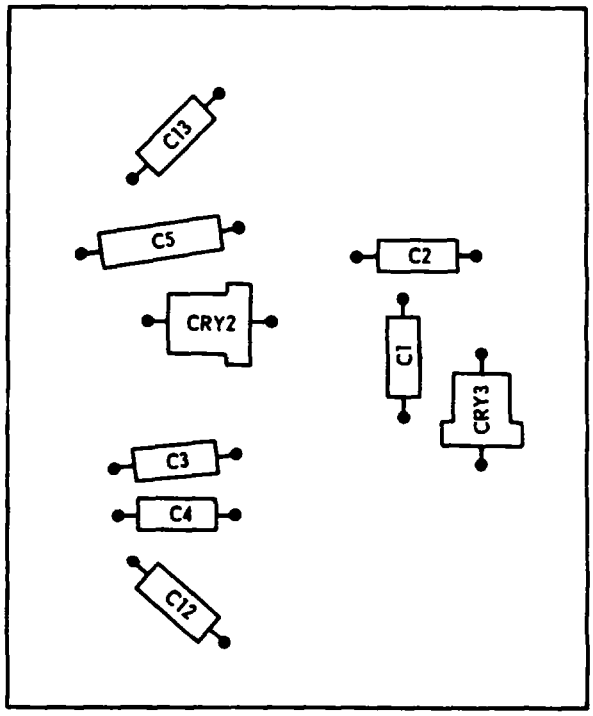

BOARD 446 (PRINTED CIRCUIT SIDE)

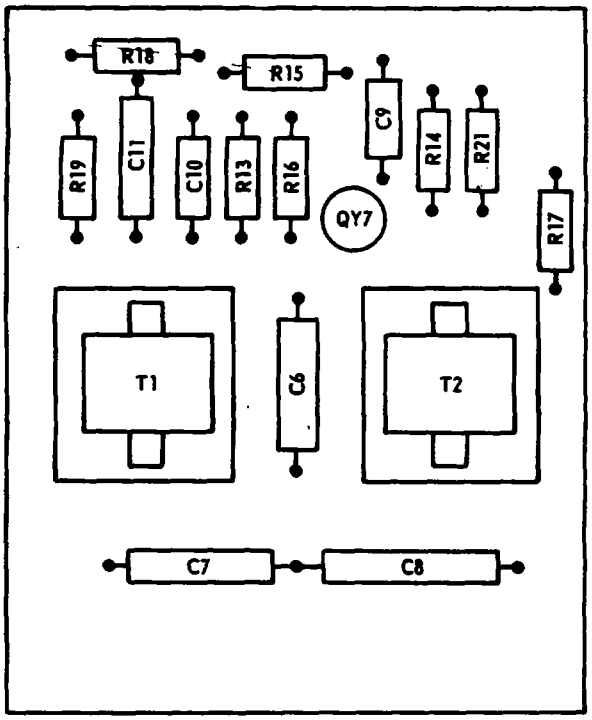

BOARD 445 (10173252)

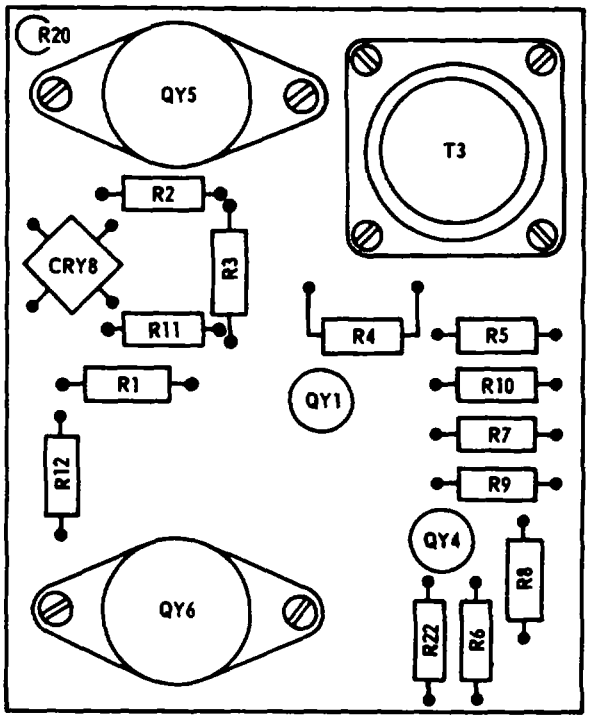

BOARD 446 (10173253)

ORD G9353

Figure 30. G4-2 oscillator--locator view.

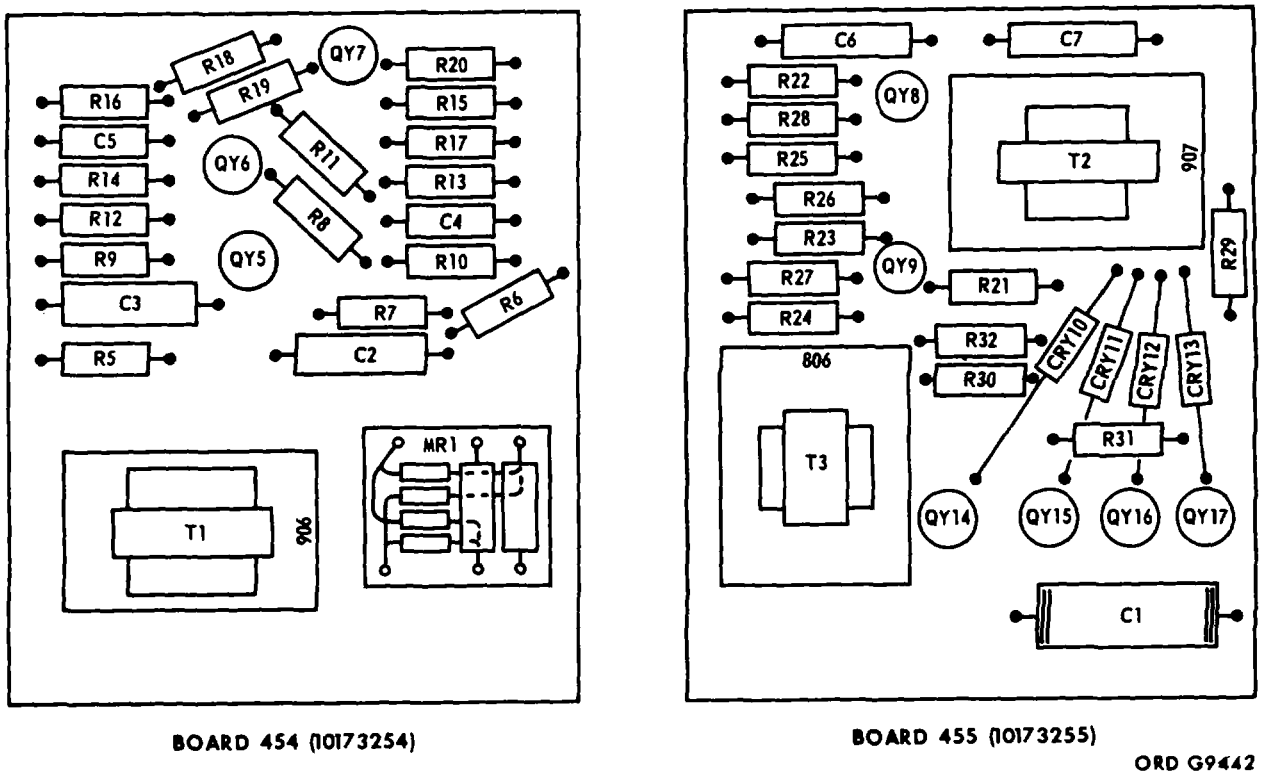

Figure 31. A1-2 amplifier--locator view.

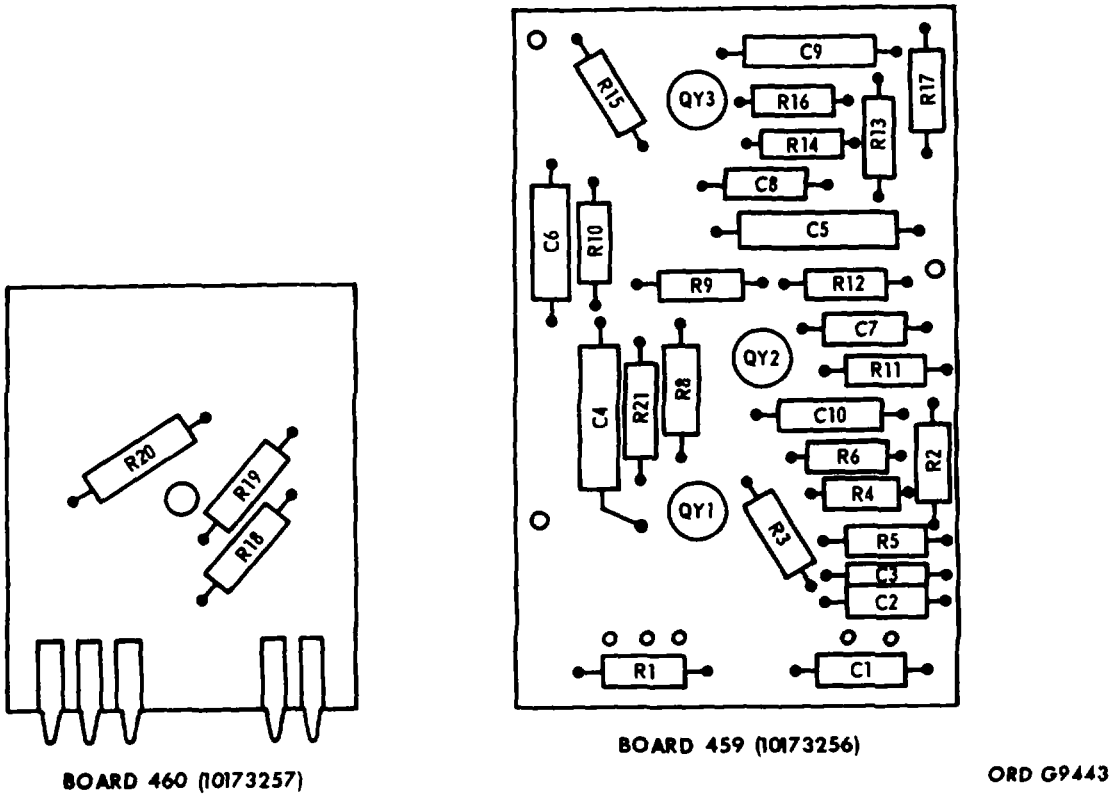

Figure 32. A4-5 amplifier--locator view.

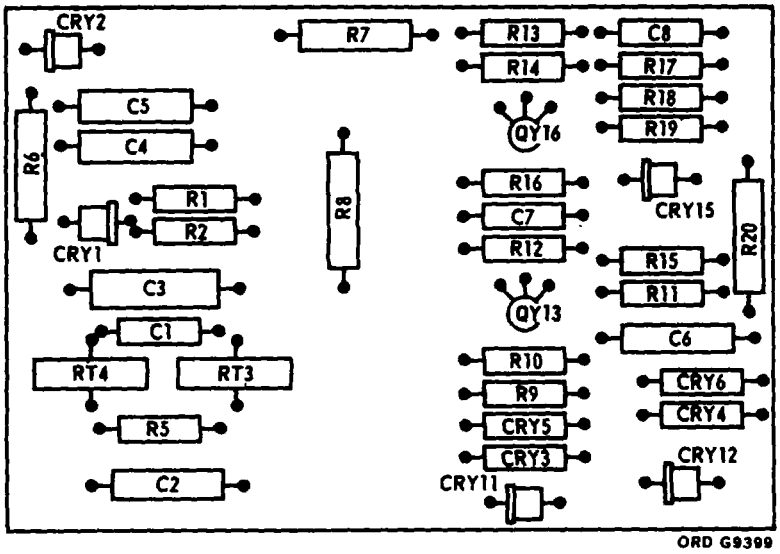

Figure 33. Regulated power supply locator view.

Table 2. Operation Check and Troubleshooting of Computer 10173161 and Adaption Kit 10173189 (M22) or 10173190 (ENTAC).

Preparation for Test:

Equipment required.

(1) Multimeter TS352/U.
(2) VTVM.
(3) DX-43 optical set 10173148.
(4) Computer set 10173194.
(5) Power supply set 10173195.
(6) Adaption kit 10173189 or 10173190.

Note

Refer to table 5 for voltages not specified in this table.

Step	Operation and normal indication	Corrective action
1	Check the spot lamp circuits. **Caution:** **To avoid damage to the computer, energize the power supply before energizing the computer.**	
	a. Energize the power supply and the computer. **On the computer, the power indicator glows.**	Check 24v supply, hookup connections, lamp, fuzes, 24v supply line (par. 25*a*), Q1, Q2, Q15, Q20 (par. 25*a*).
	Shortly afterward, the fire-authorized indicator glows.	Check lamp, lamp circuit, time servo channel (par. 16), time trigger voltages.

Table 2. Operation Check and Troubleshooting of Computer 10173161 and Adaption Kit 10173189 (M22) or 10173190 (ENTAC)--Continued.

Step	Operation and normal indication	Corrective action
1 Cont'd	*b*. Set all four initial condition controls to zero and the spot brilliance control to midrange. Push the fire button.	
	The light spot is visible at instructor's and gunner's eyepieces.	Check cable hookup, time servo channel, time trigger, spot brilliance control circuit voltages. Check relay E. Troubleshoot optical unit.
2	Check control of light spot movement.	
	a. With controls set in 1*b*, observe the spot and operate the control stick in pitch and yaw.	
	The spot moves according to direction of stick movement.	Orient the stick correctly.
	Light spot is controllable in both pitch and yaw.	Check continuity of computer-optical unit cable. Check alinement of connectors. Go to step 2c.
	b. Move the stick first in pitch, then in yaw, while observing the spot for sensitivity of response.	
	Spot response is quick and overshoot minimum.	Check timer amplifier input and output voltages. Check R-P3 resistance (5K) and supply voltage (6v, 400 cps).
	c. Initiate and observe several flights, varying the initial position and initial velocity control settings for each flight, and operating the control stick.	
	Light spot conforms to initial position and initial velocity control settings.	Check continuity of computer-optical unit cable.
	Light spot is controlled by the control stick.	Check stick supply voltages; if Ov, change power supply unit 31.200. Check control stick potentiometers and circuit continuity.
	d. Set the atmospheric condition control for gusts, initiate a flight, and observe the spot.	
	The spot shows the effect of crosswinds and turbulence in both pitch and yaw.	Check gust generator voltages.
3	Check firing time, brilliance, and counter circuits.	
	a. Set the firing time control to 20 seconds, initiate a flight, and time the flight.	
	Actual flight time is approximately 20 seconds.	Check time channel measuring phase and error signal voltages. Check that R23, on the time channel servomotor, is not shorted to ground.

Table 2. Operation Check and Troubleshooting of Computer 10173161 and Adaption Kit 10173189 (M22) or 10173190 (ENTAC) – Continued

Step	Operation and normal indication	Corrective action
3 Cont'd	*b*. Initiate a flight and observe the variation in brilliance of the light spot throughout the flight.	
	The spot decreases in brilliance with time.	Check light intensity control circuit voltages (control signal max. And min. and Q-Y15 emitter max. And min.). If only the emitter voltage is incorrect, check relay contact A5 before replacing Q-Y15.
	At the end of the flight the spot flashes more brilliant	Check relay contact K-A and relay E time delay circuit (R17-C8).
	At the end of the flight, the number-of-firings counter advances by one number.	Check relay contacts K-B and K-E and counter coil continuity (300 ohms).

Table 3. Operation Check and Troubleshooting of DX--43 Optical Unit 10173149

Preparation for Test:

a. Equipment required.

(1) Multimeter TS352/U
(2) Oscilloscope
(3) DX-43 optical set 10173148
(4) Computer set 10173194
(5) Power supply set 10173195
(6) Adaption kit 10173189

b. Connect the simulator as for normal operation.

Step	Operation and normal indication	Corrective action
1	Check the spot-lamp circuit.	
	CAUTION: **To avoid damage to the computer, energize the power supply before energizing the computer.**	
	a. Energize the power supply and the computer.	
	The computer power indicator glows, and then the fire-authorized indicator glows.	Replace indicator bulbs. Check power supply voltage. Check cable hookup. Troubleshoot computer (table 2).
	b. Set all four initial condition controls to zero and the spot brilliance control to midrange. Push the fire button.	
	The light spot is visible at both instructor's and gunner's eyepieces.	Replace spot lamp bulb. Check continuity of bulb circuit. Check continuity of optical unit-to-computer cable. Troubleshoot computer.

Table 3. Operation Check and Troubleshooting of DX-43 Optical Unit 10173149 -- Continued.

Step	Operation and normal indication	Corrective action
2	Check the control circuits.	
	a. While observing the spot during flight time, operate the control stick in pitch and yaw.	
	Control stick movement causes movement of the spot in pitch and yaw.	Check continuity of optical unit-to-computer cable, fixed phase circuit, and control winding circuit of servo-motor in the faulty channel.
	b. Operating the control stick in pitch, observe the spot.	
	Spot movements are controlled by stick movements. Spot response is quick and overshoot minimum.	Check for correct connector alinement at computer. Check continuity of cable, motor control winding, and generator reference winding in the pitch channel. Troubleshoot computer.
	c. Operating the control stick in yaw, observe the spot.	
	Same as *b* above.	
3	Check the initial position circuit.	Same as *b* above, yaw channel.
	a. Set the yaw initial position control to zero; initiate and observe several flights, setting the pitch initial position control to a different position for each flight.	
	The spot position conforms to the pitch initial position control setting.	Check continuity of cable. Check position pickoff potentiometer in pitch channel (Par. 24). Troubleshoot computer.
	b. Set the pitch initial position control to zero; initiate and observe several flights, setting the yaw initial position control to a different position for each flight.	
	The spot position conforms to the yaw initial position control setting.	Same as *a* above, yaw channel.

Table 4. Operation Check and Troubleshooting of DX-44 Projector 10173193 (excluding integral power supply)

Preparation for Test:

a. Equipment required:
  (1) Multimeter TS352/U
  (2) Oscilloscope
  (3) DX-44 projector set 10173188
  (4) Computer set 10173194
  (5) Adaption kit 10173189

b. Connect the simulator as for normal operation.

Step	Operation and normal indication	Corrective action
1	Check the spot-lamp circuit. **CAUTION:** **To avoid damage to the computer, energize the power supply before energizing the computer.**	
	a. Energize the power supply and the computer. **The computer power indicator glows, and then the fire-authorized indicator glows.**	Replace indicator bulbs. Check power supply voltage. Check cable hookup. Troubleshoot computer (table 2).
	The projector control panel light glows.	Replace bulb. Check fuse, connectors at computer, 24v or line cable short, bulb circuit or C10 open or short. Check for open supply cable.
	b. Set all four initial condition controls to zero and the spot brilliance control to midrange. Push the fire button. **The light spot is visible on the projection screen.**	Position lamp correctly. Replace bulb. Check continuity of bulb circuit and projector-computer cable. Troubleshoot computer.
2	Check the control circuits. *a*. While observing the spot during flight time, operate the control stick in pitch and yaw. **Control stick movement causes movement of the spot in pitch and yaw.**	Check continuity of projector-computer cable, fixed phase circuit and control winding circuit of servomotor in the faulty channel.
	b. Operating the control stick in pitch, observe the spot. **Spot movements are controlled by stick movements. Spot response is quick and overshoot minimum.**	Check for correct connector alinement at computer. Check continuity of cable, motor generator reference winging in the pitch channel. Troubleshoot computer.

Table 4. Operation Check and Troubleshooting of DX-44 Projector 10173193 (excluding integral potter supply) -- Continued

Step	Operation and normal indication	Corrective action
2 Cont'd	*c*. Operating the control stick in yaw, observe the spot.	
	Same as *b* above.	Same as *b* above, yaw channel.
3	Check the initial position circuit.	
	a. Set the yaw initial position control to zero; initiate and observe several flights, setting the pitch initial position control to a different position for each flight.	
	The spot position conforms to the pitch initial position control setting.	Check continuity of cable. Check position pickoff potentiometer in pitch channel (par. 24). Trouble-shoot computer.
	b. Set the pitch initial position control to zero; initiate and observe flights, setting the yaw initial position control to a different position for each flight.	
	The spot position conforms to the pitch initial position control setting.	Same as *a* above, yaw channel.

Table 5. Computer Voltages (figures 3-7 and 26-32)

Table 5 contains a list of normal voltages in the computer circuits with the computer in the ready and firing conditions. Tolerance on all voltages is ± 100%.

Preparation for test:

a. Equipment required.
  (1) Power supply set 10173195.
  (2) VTVM.
  (3) Control stick 10173179 or 10173184.

b. Remove the computer as shown in figure 34.

c. Connect the equipment as shown in figure 34.

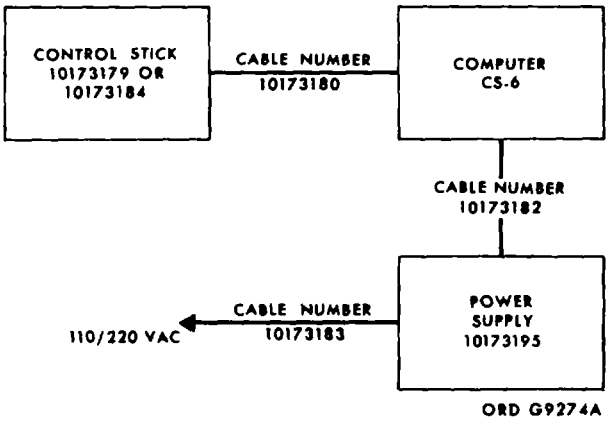

Figure 34. Test hookup -- computer voltages.

d. When measuring voltages in the firing condition, let the control stick stand at zero pitch and yaw commands. Set the TIME OF FLIGHT control to 29 seconds, and fire the computer as required. The computer is in the firing condition when the FIRE OFF indicator is out.

Note
All ac voltages are 400 cycles per second.

Table 5. Computer Voltages Con't (figures 3-7 and 26-32)

Item No.	Description	Terminals		Voltage value	
			Common	Ready condition	Firing condition
Power sources					
1	Overall power supply	TB-J1	W	-24V	-24V
2	22V regulated	TB-J6-21	W	-22V	-22V
3	16V regulated	TB-J6-26	W	-16V	-16V
4	400 cps 0-degrees phase	P-K11-1	W	6vac	6vac
5	400 cps 0-degrees phase	P-K11-3	W	6vac	6vac
6	400 cps 0-degrees phase	P-K11-8	W	48vac	48vac
7	400 cps 90 degrees phase	P-K11-6	P-K11-7	1vac	2.Svac
8	400 cps 90 degrees phase	P-K4-5	P-K4-7	8vac	29vac
9	400 cps 90 degrees phase	TB-J6-29	W	25vac	83vac
10	400 cps 90 degrees phase	TB-J6-39	W	20vac	68vac
11	Control stick supply	TB-J6-2	W	+33v	+107.5V
12	Control stick supply	TB-J6-8	W	-16V	-52.5V
13	Speed setting supply	TB-J6-11	TB-J6-12	+5.5V	+19V
14	Time switch supply	TB-J6-15	TB-J6-18	+3V	+11V
A-4.5 Amplifier					
15	Dc supply	5	2	-24V	-24V
16	Dc supply	3	2	-16V	-16V
17	Input signal	1	2	0 to 100mv ac	0 to 100mv ac
18	Output signal	6	9	0 to 100mv ac	0 to 100mv ac
A-1.2 amplifier					
19	Dc supply	5	2	-22V	-22V
20	400 cps supply	9	10	12vac	12vac
21	Input signal	1	2	0 to ±100mv	0 to ±100mv
22	Dc output signal	8	2	0 to ±15v	0 to ±15v
23	Ac output signal	6 and 7	2	0 to 15vac	0 to 15vac
G-4.2 400 cps oscillator					
24	Dc supply	P-K11-5	P-K11-2	-24v	-24v
25	400 cps 0-degree output signal	P-K11-1	P-K11-2	6vac	6vac
26	400 cps 0-degree output signal	P-K11-3	P-K11-2	6vac	6vac
27	400 cps 0-degree output signal	P-K11-8	P-K11-2	48vac	48vac
28	400 cps 90-degree output signal	P-K11-6	P-K11-2	0.5vac	1.3vac
29	400 cps 90-degree output signal	P-K11-7	P-K11-2	0.5vac	1.3vac
31.200 power supply					
30	400 cps 0-degree input	P-K4-7	P-K4-6	4vac	14vac
31	400 cps 90-degree input	P-K4-5	P-K4-6	4vac	14vac
32	Optical unit motors fixed phase	P-K4-9	P-K4-1	25vac	83vac
33	Time motor fixed phase	P-K4-8	P-K4-1	20vac	68vac
34	Control stick supply	P-K4-10	P-K4-2	+33V	+107.5V
35	Control stick supply	P-K4-11	P-K4-2	-16V	-52.5V
36	Initial speed supply	P-K4-12	P-K4-13	+5.5V	+19V
37	Flight time supply	P-K14-14	P-K4-15	+3V	+11V
0-0.1 gust generator					
38	Dc supply	P-K12-3	P-K12-2	-16V	-16V
39	400 cps supply	P-K12-6	P-K12-9	12vac	12vac
40	Output signal	P-K12-1	P-K12-2	0 to 500mv ac	0 to 500 mv ac
41	Output signal	P-K12-5	P-K12-2	0 to 500mv ac	0 to 500 mv ac
Time servo channel					
42	Motor fixed phase	TB-J3-39	TB-J3-40	20vac	68vac
43	Motor control phase	TB-J243	TB-J3-44	2vac	12vac
44	Generator reference phase	TB-J3-47	TB-J3-48	48vac	48vac
45	Generator measuring phase	TB-J3-50	TB-J3-49	7mv ac	400mv ac

Table 5. Computer Voltages -- Cont'd

Item No.	Description	Terminals		Voltage value	
			Common	Ready condition	Firing condition
46	Reverse control voltage	TB-J3-15	W	60mv ac	6vac*
47	Direct control voltage	TB-J3-17	W	0	6vac
48	Generator return	TB-J3-19	W	10mv ac	240mv ac
49	Time amplifier input	TB-J3-16	W	2.5mv ac	25mv ac
Time trigger					
50	R-P1 supply	TB-J3-36	TB-J3-38	-3V	-11V
51	R-P5 supply	TB-J3-35	TB-J3-7	-3V	-11V
52	Q-Y13, Q-Y14 emitters	TB-J1-42	W	-0.35V	-2.1V
53	Q-Y14 emitter-collector	TB-J1-38	TB-J1-42	-14.5V	-12.5V
54	Q-Y13 emitter-collector	TB-J1-37	TB-J1-41	0	0
55	Control signal	TB-J1-40	TB-J-42	-2.3V to 0	-9V to +0.2V
Distance amplifier					
56	Control signal	TB-J3-5	W	0.3vac	0.3 to 5.8vac
57	Output signal	TB-J3-3	W	3.3vac	3.3 to 6.8vac
(These two signals vary linearly with time when the computer is in the firing condition.)					
Spot brilliance circuit					
58	Control signal:				
	Max. brilliance	TB-J3-30	W	0	-22V to -15.5V
	Min. brilliance	TB-J3-30	W	0	-22V to -5V
59	Q-Y15 emitter:				
	Max. brilliance	Q-Y15-E	W	0	-21V to -15V
	Min. brilliance	Q-Y15-E	W	0	-21V to -5V
Yaw speed channel					
60	Stick signal	TB-J1-19	W	0 to ±0.65V	0 to ± 1.7V
61	Speed setting signal	TB-J1-21	W	0 to ±2.7V	0 to ± 9.6V
62	Output signal	TB-J1-25	W	0 to ±1.5V	0 to ± 15V
63	Output signal	P-K8-7	W	0 to 1.7vac	0 to 17vac
64	Input signal	TB-J1-28	W	0 to ± 5mv	0 to ±100mv
Pitch speed channel					
65	Stick signal	TB-J2-19	W	0 to ± 0.4V	0 to ± 1.2V
66	Speed setting signal	TB-J2-21	W	0 to ± 2.7V	0 to ± 9.5V
67	Output signal	TB-J2-25	W	0 to ± 1.5V	0 to ± 15V
68	Output signal	P-K9-6	W	0 to 1.7vac	0 to 17vac
69	Input signal	TB-J2-28	W	0 to ± 5mv	0 to ± 100mv
Yaw position channel					
70	Gust signal	TB-J1-3	W	0	0 to 500mv ac
71	Speed input signal	TB-J1-5	W	0	0 to 17vac
72	Position setting signal	TB-J1-7	W	0 to 6vac	0
73	Position return signal	TB-J1-9	W	0 to 6vac	0
74	Generator return signal	TB-J1-11	W	0	0 to 1vac
75	Output signal	P-K5-6	P-K6-9	0	0 to 100vac
76	Input signal	TB-J1-12	W	0	0 to 100mv ac
Pitch position channel					
77	Gust signal	TB-J2-3	W	0	0 to 500mv ac
78	Speed input signal	TB-J2-5	W	0	0 to 17vac
79	Position setting signal	TB-J2-7	W	0 to 6vac	0
80	Position return signal	TB-J2-9	W	0 to 6vac	0
81	Generator return signal	TB-J2-11	W	0	0 to 1vac
82	Output signal	P-K6-6	P-K6-9	0	0 to 100vac
83	Input signal	TB-J2-12	W	0	0 to 100mv ac

*During return to zero only. Voltage is zero during firing.

Section III. REPAIR

27. General

This section contains special instructions for disassembly and assembly and other repair procedures. Most repair requires no special procedures, but is completed by following good general practices. Figures 16-25 show disassembled views.

28. Purging the DX-43 Optical Unit

Following any repair during which the sealed DX-43 optical head has been opened, purge the unit as follows.

a. Make sure there are no water droplets on any inside surfaces of the unit.

b. Seal the unit, but leave the screws securing the cover loose, and insert a wooden spacer block about 1/4 inch thick at one side of the cover.

c. Assemble the purging equipment as shown in figures 35 and 36, but do not connect it to the optical head yet.

d. Flush the purging equipment with nitrogen for a few seconds.

e. Remove the screw sealing the purging inlet port and connect the purging equipment to the optical head (fig. 36).

f. Set the regulator for a flow gage reading of 15-1/2 liters per minute, and maintain this flow for one hour.

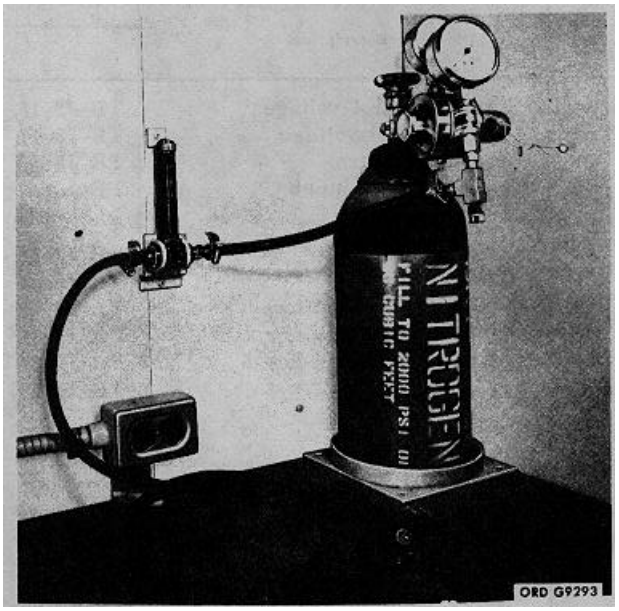

Figure 35. DX-43 nitrogen purge system.

g. At the end of one hour, close the cylinder valve and the regulator.

h. Disconnect the purging equipment from the optical head.

i. Replace the purging inlet screw, remove the spacer block, and tighten the cover on the optical head.

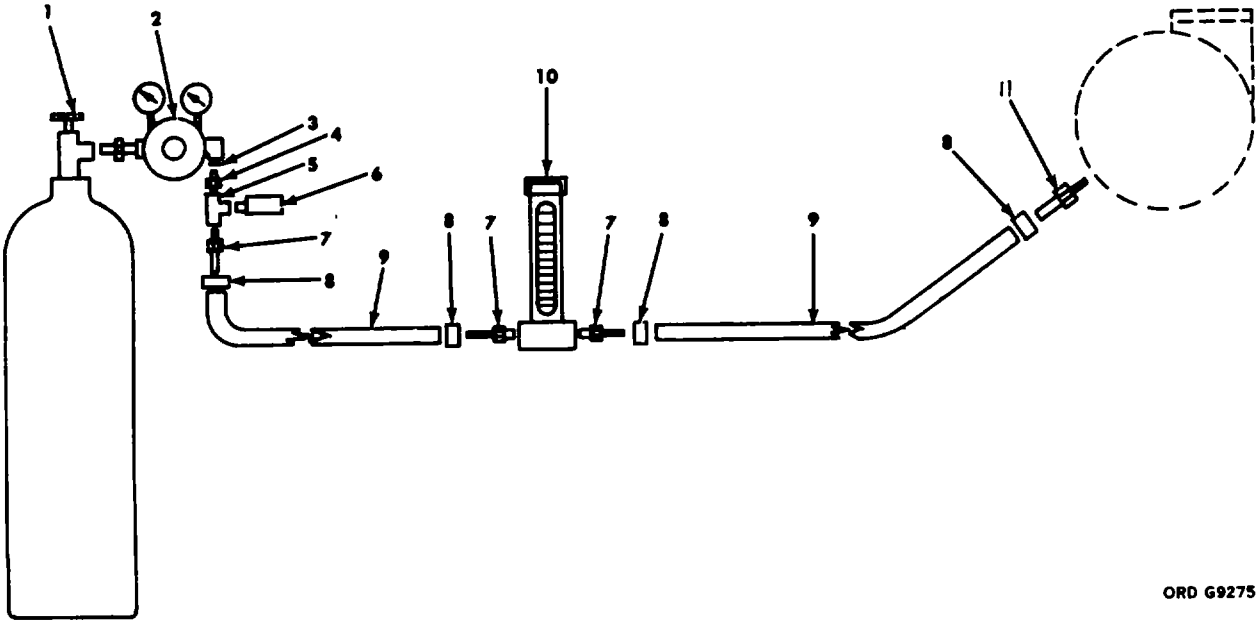

Figure 36. DX-43 nitrogen purge hookup to optical unit.

1--Cylinder assembly 10172803
2--Regulator 10172804
3--Preformed packing 5330-580-1726
4--Brass tube fitting 10172805
6--Brass tee 10172806
6--Pressure relief valve 10172807
7--Brass hose connection 10172808 (3)
8--Hose clamp 10172811 (4)
9--Rubber hose 10172809 (2)
10--Flow gage 10172810
11--Inlet fitting 10172812

Figure 36. Legend.

APPENDIX

REFERENCES

1. Publications Indexes

Consult the following indexes frequently for latest changes or revisions of references given in this appendix and for new publications relating to materiel covered in this technical manual.

Index of Administrative Publications	DA Pam 310-1
Index of Army Motion Pictures, Film Strips, Slides, and Phono-Recordings	DA Pam 108-1
Index of Blank Forms	DA Pam 310-2
Index of Graphic Training Aids and Devices	DA Pam 310-5
Index of Tables of Organization and Equipment, Tables of Organization, Type Tables of Distribution, and Tables of Distribution, and Tables of Allowances	DA Pam 310-7
Index of Technical Manuals, Technical Bulletins, Supply Bulletins, Lubrication Orders, and Modification Work Orders	DA Pam 310-4
Index of Training Publications	DA Pam 310-3
Index of Supply Manuals, Ordnance Corps	DA Pam 310-29

2. Related ENTAC and M22 Publications

Operator's and Organizational Maintenance Manual: Guided Missile Training Sets DX-43 and DX-44 (ENTAC Antitank Guided Missile System and M-22 Guided Missile Launcher Helicopter Armament Subsystem)	TM 9-6920-461-12
Direct Support, General Support, and Depot Maintenance, Repair Parts and Special Tool Lists: Guided Missile Training Sets DX-43 and DX-44	TM 9-6920-461-35P

3. Forms and Records

In addition to the forms required by the Department of the Army Equipment Record System (TM 38-750), the following forms pertain to this materiel:

Recommended Changes to DA Technical Manual, Parts Lists, or Supply Manual 7, 8, or 9	DA Form 2028
Report of Damaged or Improper Shipment	DD Form 6
Request for Issue or Turn-In	DD Form 1546
Requisition for Initial Distribution of Distribution of Publications and Blank Forms	DA Form 12-32
Requisition for Publications and Blank Forms	DA Form 17

4. Miscellaneous Publications

Army Equipment Record System and Procedures: Operation TAPER	TM 38-750
Army Safety Program	AR 385-10
Authorized Abbreviations and Brevity Codes	AR 320-50
Cleaning of Ordnance Materiel	TM 9-208-1
First Aid for Soldiers	FM 21-11
Introduction	ORD 1
Ordnance Direct Support Service	FM 9-3
Ordnance General and Depot Support Service	FM 9-4
Safety: Accident Reporting and Records	AR 385-40
Solder and Soldering	TB SIG 222

By Order of the Secretary of the Army:

HAROLD K. JOHNSON
General, United States Army,
Chief of Staff.

Official:
J. C. LAMBERT
Major General, United States Army,
The Adjutant General.

Distribution:
To be distributed in accordance with DA Form 1231, requirements for Field Maintenance instruction for G.M.L.-M22 Helicopter and DA Form 1242, Section II (Unclas) requirements for ENTAC, TM, Test Equipment (Ord).

☆ U. S. GOVERNMENT PRINTING OFFICE: 1966__754442/80

RECOMMENDED CHANGES TO EQUIPMENT TECHNICAL PUBLICATIONS

SOMETHING WRONG WITH PUBLICATION

FROM: (PRINT YOUR UNIT'S COMPLETE ADDRESS)

DATE SENT

PUBLICATION NUMBER	PUBLICATION DATE	PUBLICATION TITLE

BE EXACT PIN-POINT WHERE IT IS

PAGE NO.	PARA-GRAPH	FIGURE NO.	TABLE NO.

IN THIS SPACE, TELL WHAT IS WRONG AND WHAT SHOULD BE DONE ABOUT IT.

PRINTED NAME, GRADE OR TITLE AND TELEPHONE NUMBER	SIGN HERE

DA FORM 1 JUL 79 2028-2

PREVIOUS EDITIONS ARE OBSOLETE.

P.S.--IF YOUR OUTFIT WANTS TO KNOW ABOUT YOUR RECOMMENDATION MAKE A CARBON COPY OF THIS AND GIVE IT TO YOUR HEADQUARTERS.

The Metric System and Equivalents

Linear Measure

1 centimeter = 10 millimeters = .39 inch
1 decimeter = 10 centimeters = 3.94 inches
1 meter = 10 decimeters = 39.37 inches
1 dekameter = 10 meters = 32.8 feet
1 hectometer = 10 dekameters = 328.08 feet
1 kilometer = 10 hectometers = 3,280.8 feet

Weights

1 centigram = 10 milligrams = .15 grain
1 decigram = 10 centigrams = 1.54 grains
1 gram = 10 decigram = .035 ounce
1 decagram = 10 grams = .35 ounce
1 hectogram = 10 decagrams = 3.52 ounces
1 kilogram = 10 hectograms = 2.2 pounds
1 quintal = 100 kilograms = 220.46 pounds
1 metric ton = 10 quintals = 1.1 short tons

Liquid Measure

1 centiliter = 10 milliters = .34 fl. ounce
1 deciliter = 10 centiliters = 3.38 fl. ounces
1 liter = 10 deciliters = 33.81 fl. ounces
1 dekaliter = 10 liters = 2.64 gallons
1 hectoliter = 10 dekaliters = 26.42 gallons
1 kiloliter = 10 hectoliters = 264.18 gallons

Square Measure

1 sq. centimeter = 100 sq. millimeters = .155 sq. inch
1 sq. decimeter = 100 sq. centimeters = 15.5 sq. inches
1 sq. meter (centare) = 100 sq. decimeters = 10.76 sq. feet
1 sq. dekameter (are) = 100 sq. meters = 1,076.4 sq. feet
1 sq. hectometer (hectare) = 100 sq. dekameters = 2.47 acres
1 sq. kilometer = 100 sq. hectometers = .386 sq. mile

Cubic Measure

1 cu. centimeter = 1000 cu. millimeters = .06 cu. inch
1 cu. decimeter = 1000 cu. centimeters = 61.02 cu. inches
1 cu. meter = 1000 cu. decimeters = 35.31 cu. feet

Approximate Conversion Factors

To change	*To*	*Multiply by*	*To change*	*To*	*Multiply by*
inches	centimeters	2.540	ounce-inches	Newton-meters	.007062
feet	meters	.305	centimeters	inches	.394
yards	meters	.914	meters	feet	3.280
miles	kilometers	1.609	meters	yards	1.094
square inches	square centimeters	6.451	kilometers	miles	.621
square feet	square meters	.093	square centimeters	square inches	.155
square yards	square meters	.836	square meters	square feet	10.764
square miles	square kilometers	2.590	square meters	square yards	1.196
acres	square hectometers	.405	square kilometers	square miles	.386
cubic feet	cubic meters	.028	square hectometers	acres	2.471
cubic yards	cubic meters	.765	cubic meters	cubic feet	35.315
fluid ounces	milliliters	29,573	cubic meters	cubic yards	1.308
pints	liters	.473	milliliters	fluid ounces	.034
quarts	liters	.946	liters	pints	2.113
gallons	liters	3.785	liters	quarts	1.057
ounces	grams	28.349	liters	gallons	.264
pounds	kilograms	.454	grams	ounces	.035
short tons	metric tons	.907	kilograms	pounds	2.205
pound-feet	Newton-meters	1.356	metric tons	short tons	1.102
pound-inches	Newton-meters	.11296			

Temperature (Exact)

°F	Fahrenheit temperature	5/9 (after subtracting 32)	Celsius temperature	°C

PIN: 010387-000

This fine document...

Was brought to you by me:

Liberated Manuals -- free army and government manuals

Why do I do it? I am tired of sleazy CD-ROM sellers, who take publicly available information, slap “watermarks” and other junk on it, and sell it. Those masters of search engine manipulation make sure that their sites that sell free information, come up first in search engines. They did not create it... They did not even scan it... Why should they get your money? Why are not letting you give those free manuals to your friends?

I am setting this document FREE. This document was made by the US Government and is NOT protected by Copyright. Feel free to share, republish, sell and so on.

I am not asking you for donations, fees or handouts. If you can, please provide a link to liberatedmanuals.com, so that free manuals come up first in search engines:

<A HREF=http://www.liberatedmanuals.com/>Free Military and Government Manuals</A>

- Sincerely
  Igor Chudov
  http://igor.chudov.com/
- Chicago Machinery Movers