This is a REPRINT including Change 1.

TECHNICAL MANUAL

OPERATOR'S, ORGANIZATIONAL, DIRECT SUPPORT, AND GENERAL SUPPORT MAINTENANCE MANUAL:

DUAL-TRACE AMPLIFIER PLUG-IN, TEKTRONIX TYPE 3A6

HEADQUARTERS, DEPARTMENT OF THE ARMY

APRIL 1972

This manual is an authentication of the manufacturer's commercial literature which, through usage, has been found to cover the data required to operate and maintain this equipment. Since the manual was not prepared in accordance with military specifications, the format has not been structured to consider level of maintenance nor to include a formal section on depot overhaul standards.

CHANGE

No. 2

HEADQUARTERS
DEPARTMENT OF THE ARMY
WASHINGTON, DC, 12 August 1986

OPERATOR'S ORGANIZATIONAL, DIRECT SUPPORT AND

GENERAL SUPPORT MAINTENANCE MANUAL,

INCLUDING REPAIR PARTS AND SPECIAL TOOLS LIST:

DUAL-TRACE AMPLIFIER PLUG-IN

TEKTRONIX TYPES 3A6 AND 3A6 MOD

Current as of 16 April 1986

TM 9-6625-967-14-1, 17 April 1972, is changed as follows:

1. Remove old pages and insert new pages as indicated below. New or changed material is indicated by a vertical bar in the margin of the page.

Remove pages	Insert pages
0-1	0-1
8-1 through 8-11	8-1 through 8-15

2. File this change sheet in front of the publication for reference purposes.

By Order of the Secretary of the Army:

JOHN A. WICKHAM, JR.
General, United States Army
Chief of Staff

Official:

R. L. DILWORTH
Brigadier General, United States Army
The Adjutant General

Distribution:
To be distributed in accordance with DA Form 12-34C, Block No. 319, requirements for calibration procedures publications.

This publication has been printed by the UNITED STATES ARMY PUBLICATIONS CENTER, ST. LOUIS, MISSOURI, to meet your needs on a timely basis, and to reduce the overall cost of the Army printing program.

TECHNICAL MANUAL
No. 9-6625-967-14-1

HEADQUARTERS
DEPARTMENT OF THE ARMY
WASHINGTON, D.C., *17 April 1972*

OPERATOR'S ORGANIZATIONAL, DIRECT SUPPORT, AND GENERAL SUPPORT MAINTENANCE MANUAL, INCLUDING REPAIR PARTS AND SPECIAL TOOLS LIST: DUAL-TRACE AMPLIFIER PLUG-IN, TEKTRONIX TYPE 3A6

Table of Contents

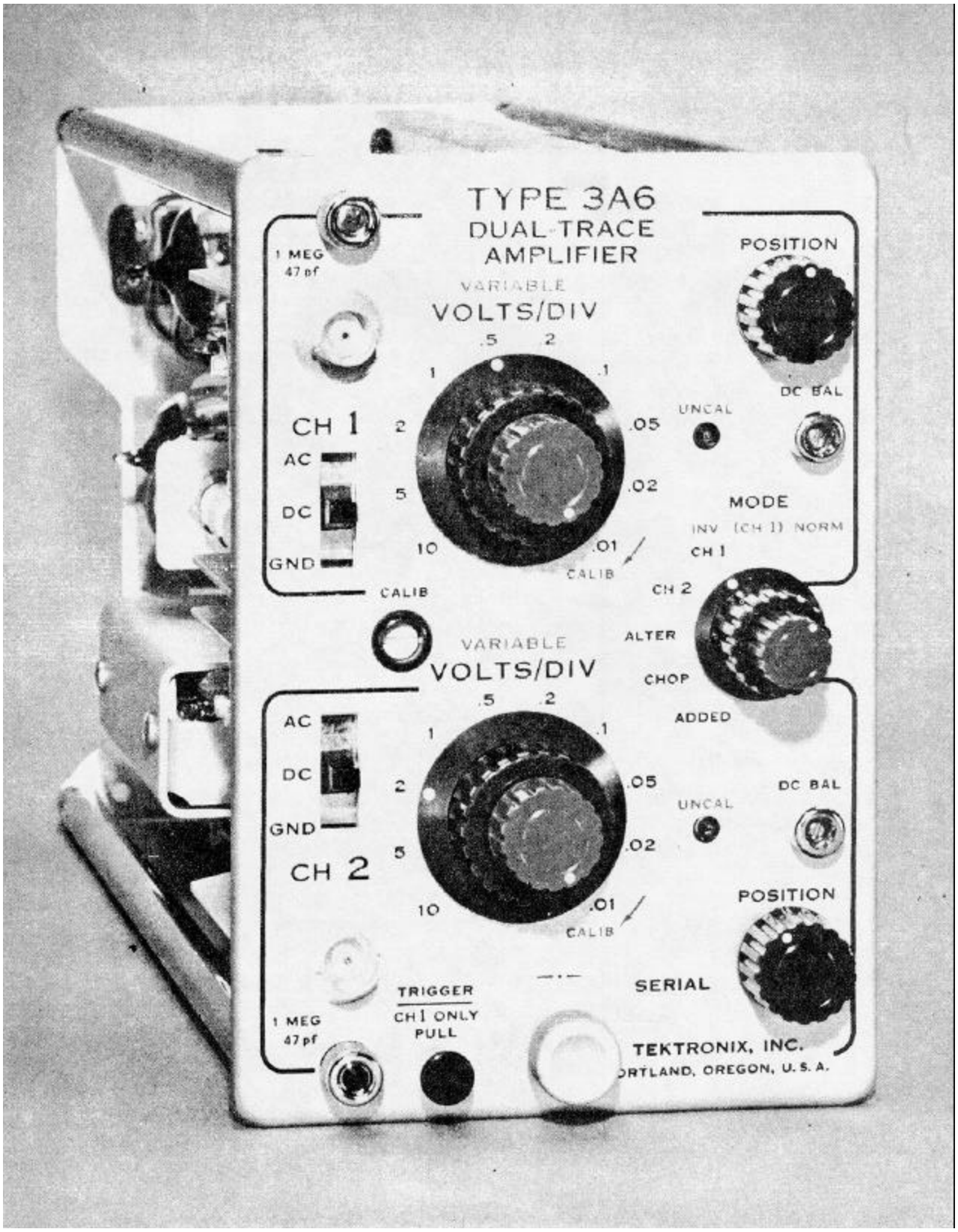

Type 3A6 Dual-Trace Amplifier

SECTION 0

INTRODUCTION

0.1. Scope

a. This manual includes installation and operation instructions and covers organizational, direct support (DS), and general support (GS) maintenance. It describes Dual-Trace Amplifier Plug-In, Tektronix Type 3A6.

b. The basic issue items list for this manual is not applicable.

0.2. Indexes of Publications

a. DA Pam 310-4. Refer to the latest issue of DA Pam 310-4 to determine if there are any new editions, changes, or additional publications pertaining to the equipment.

b. DA Pam 310-7. Refer to DA Pam 310-7 to determine whether there are Modification Work Orders (MWO's) pertaining to the equipment.

0.3. Forms, Records, and Reports

a. Reports of Maintenance and Unsatisfactory Equipment. Use equipment forms and records in accordance with instructions given in TM 38-750.

b. Report of Packaging and Handling Deficiencies. Fill out and forward DD Form 6 (Report of packaging and handling deficiencies) as prescribed in AR 700-58 (Army), NAVSUP Pub 378 (Navy), AFR 71-4 (Air Force), and MCO P4030.29 (Maine Corps).

c. Discrepancy in Shipment Report. Fill out and forward Discrepancy in Shipment Report (DISREP) (SF 361) as prescribed in AR 55-38 (Army), NAVSUP Pub 459 (Navy), AFM 75-34 (Air Force), and MCO P4610.19 (Marine Corps).

d. Reporting of Equipment Publication Improvements. The reporting of errors, omissions, and recommendations for improving this publication by the individual user is encouraged. Reports should be submitted on DA Form 2028 (Recommended Changes to Publications), and forwarded direct to: Commander, U.S. Army TMDE Support Group, ATTN: AMXTM-LML, Redstone Arsenal, AL 35898-5400.

SECTION 1

CHARACTERISTICS

Introduction

The Type 3A6 Dual-Trace Amplifier plug-in unit contains two identical amplifier channels. Either channel can be used independently for a single-trace display, or the two channels can be electronically switched for a dual-trace display. Also, the two channels can be added algebraically and the resultant waveform displayed on the indicator unit crt.

A signal delay line in the plug-in unit delays the signal to be displayed while the triggering signal passes to the time base undelayed. This allows the leading edge of the triggering signal to be viewed on the crt.

The Type 3A6 can be used with any of the Tektronix 560-Series Oscilloscopes* or with the Tektronix Type 129 Plug-In Unit Power Supply.

Frequency Response

Dc to 10 mc (not more than 3 db down at 10 mc) with a corresponding risetime of typically 35 nanoseconds.

Deflection Factors

Ten calibrated steps for each channel; .01, .02, .05, .1, .2, .5, 1, 2, 5 and 10 volts/division. Variable control in each channel permits continuous, uncalibrated adjustment from 0.01 to about 25 volts/division in conjunction with the step switch.

Accuracy

Within ±3% of indicated deflection with VARIABLE in the CALIB position.

Input Impedance

1 megohm ±1%, paralleled by about 47 pf.

Input Coupling

Ac or dc coupled, selected by front-panel switch. In the AC position low-frequency response is limited to about 2 cps (0.2 cps with 10 X passive probe).

*Cannot be used with a Type 560. Also, when used with a Type 2B67 or 3B2 time-base plug-in unit or with a Type 565 or RM565, it may not be possible to view the entire leading edge of the triggering waveform due to the delay of these time-base circuits.

Maximum Input Voltage

600 volts combined dc and peak ac; 600 volts peak-to-peak ac.

Polarity Inversion

Polarity of Channel 1 can be changed to provide 180º inversion. No polarity inversion of Channel 2.

Operating Modes

Channel 1 only.

Channel 2 only.

Alternate between channels.

Chopped between channels at approximately 150 kc rate.

Added Algebraically.

Channel Isolation

50,000:1 or greater at 100 kc.

Triggering

Internal triggering signals for time base are provided from both channels or from Channel 1 only, determined by front-panel switch.

Mechanical Features

Input connectors: BNC jacks.

Construction: Aluminum alloy chassis and panel.

Accessories

Information on accessories for use with this instrument is included at the rear of the mechanical parts list.

SECTION 2

OPERATING INSTRUCTIONS

FUNCTION OF FRONT-PANEL CONTROLS AND CONNECTORS

The function of all controls and connectors except the CALIB, MODE, INV (CH 1) NORM and TRIGGER CH 1 ONLY are identical for both channels.

Input	Signal input connector.
POSITION	Controls vertical position of the display.
VOLTS/DIV	Selects vertical deflection factor. (VARIABLE control must be in CALIB position for deflection factor indicated on front panel.)
VARIABLE	Provides continuously variable deflection factor to about 2.5 times setting of VOLTS/DIV switch.
UNCAL	Light indicates that VARIABLE control is not set to CALIB.
DC BAL	Screwdriver adjustment to set dc balance of the amplifier.
AC DC GND	Selects signal coupling method.
	AC: Blocks dc component of applied signal.
	DC: Directly couples the applied signal to grid of input stage.
	GND: Grounds grid of input stage (does not ground applied signal).
CALIB	Screwdriver adjustment to set the basic deflection factor of the plug-in unit.
MODE	Selects mode of operation.
	CH 1: Displays Channel 1 signal only.
	CH 2: Displays Channel 2 signal only.
	ALTER: Dual-trace display of both Channel 1 and 2 signals. Display is switched between channels at end of each sweep.
	CHOP: Dual-trace display of both Channel 1 and 2 signals. Display is switched between channels at about 150 kc rate.
	ADDED: Displays algebraic sum of Channel 1 and Channel 2 signals.
INV (CH 1) NORM	Inverts the Channel 1 display when in the INV position.
TRIGGER CH 1 ONLY PULL	Selects triggering from Channel 1 signal when pulled out. When pushed in, triggering signal is obtained from combined Channel 1 and Channel 2 signal.

FIRST-TIME OPERATION

The following steps are intended to acquaint the operator with the basic overall operation and function of the Type 3A6. More specific operation and basic application information is given later in this section.

1. Insert the Type 3A6 into the left-hand (Y-axis) plug-in compartment of the indicator unit. Insert a time-base plug-in unit such as a Tektronix Type 3B1 or 3B3 into the right-hand (X-axis) plug-in compartment (except with Type 565 or RM565).

2. Set the front-panel controls as follows:

AC DC GND	DC (both channels)
VOLTS/DIV	.5 (both channels)
VARIABLE	CALIB (both channels)
POSITION	Midrange (both channels)
MODE	CH 1
INV (CH 1) NORM	NORM
TRIGGER	Pushed in

3. Turn on the indicator unit power. If there is any doubt as to the operation of the indicator unit or time base, see the instruction manuals for these units.

4. Set the indicator unit calibrator for 1 volt output and the time-base for a sweep rate of 5 milliseconds.

5. Connect the calibrator output to both the Channel 1 and Channel 2 input connectors. Adjust the time-base triggering controls for a stable display.

6. Turn the Channel 1 POSITION control to move the display above the graticule centerline.

7. Set the MODE switch to CH 2. A two-division display similar to the previous display should be seen. Turn the Channel 2 POSITION control to move the display below the graticule centerline.

8. Set the MODE switch to ALTER; the Channel 1 and 2 displays as set up in steps 6 and 7 should be seen. Turn the time-base time/division switch to a faster sweep rate. Notice that the flicker between traces decreases as the sweep rate is increased. Return the time/division switch to 5 milliseconds.

9. Set the AC DC GND switch to AC. Notice the differentiation of the 60-cycle calibrator waveform which indicates loss of low frequencies due to the coupling capacitor. Return the switch to the DC position.

10. Turn one of the VARIABLE controls throughout its range. The deflection of that channel should decrease by a factor of about 2.5 to 1. Return the VARIABLE to CALIB.

11. Set the MODE switch to CHOP, the display should be identical to ALTER but with less flicker between traces. Turn the time-base time/division switch to 10 microseconds. Notice the switching between channels as shown by the segmented trace. Reduce the sweep rate slowly and notice that the trace appears solid at about 0.1 milliseconds. This is the fastest sweep rate at which CHOP mode can be used and still obtain a satisfactory display.

Operating Instructions-Type 3A6

12. Set the time/division switch to 2 microseconds and readjust the triggering controls for a stable display. Turn the intensity up slightly and notice the overshoot on the display. This is the switching transient between the channels. Set the crt cathode selector switch on the indicator unit rear-panel to chopped blanking. The switching transient should be removed from the display. Return the time/division switch to 5 milliseconds and the crt cathode selector switch to the normal position.

13. Set the MODE switch to ADDED. The display should be 4 divisions in amplitude. The Channel 1 and 2 signals (2 divisions each) are added for this display. Note that either POSITION control will move the trace.

14. Set the INV (CH 1) NORM switch to INV. The display should be a straight line. Since both displays are two divisions in amplitude but of opposite polarity, the algebraic sum is zero.

15. Set either VOLTS/DIV switch to 1. A square wave is again displayed indicating that the algebraic sum of Channel 1 and 2 is no longer zero.

CALIB Adjustment

Whenever the Type 3A6 is inserted into a plug-in compartment, check and adjust the gain to compensate for the differences between indicator units. Allow about 10 minutes warmup before performing this adjustment.

1. Set both AC DC GND switches to DC.
2. Set the MODE switch to CH 1.
3. Set both VOLTS/DIV switches to .02.
4. Turn the VARIABLE controls fully clockwise so the UNCAL lights are off.
5. Set the time-base controls for automatic triggering.
6. Connect the calibrator output to Channel 1 input.
7. Set the indicator unit calibrator to 100 millivolts.
8. Set the CALIB control for exactly 5 major divisions of deflection.
9. Set the MODE switch to CH 2.
10. Connect the calibrator output to Channel 2 input.
11. The deflection should be exactly 5 divisions. If incorrect, refer to the Channel 2 gain adjust procedure in Section 5.

DC BAL Adjustment

Check. To check the dc balance of either channel, set the AC DC GND switch to GND and the VOLTS/DIV switch to .01. Set the time-base controls for automatic triggering. Rotate the VARIABLE control throughout its range. If the trace moves vertically, adjust the DC BAL control according to the procedure which follows.

Adjustment. The following procedure can be used to adjust the dc balance of either channel. Set the MODE switch to display the desired channel. Allow about 10 minutes warmup before performing this adjustment.

1. Set the AC DC GND switch to GND.
2. Set the VOLTS/DIV switch to .01.
3. Set the time-base controls for automatic triggering.
4. Turn the POSITION control to mid-range.
5. With the VARIABLE control in the CALIB position adjust the DC BAL control to bring the trace near graticule center.
6. Turn the VARIABLE control fully counterclockwise and position the trace to the graticule centerline with the POSITION control.
7. Return the VARIABLE control to the CALIB position. Measure the exact distance the trace is displaced above or below the centerline.
8. Adjust the DC BAL control to move the trace exactly half this distance (measured in step 7) past the graticule centerline.

NOTE

Both DC BAL controls are the dual-range or coarse-fine type. To use this type of control, turn the control slightly past the desired point of adjustment (coarse adjust). Then, reverse the direction of rotation and use the fine adjustment (about 30º range) to establish balance.

9. Check the balance by rotating the VARIABLE control throughout its range. If the amplifier is not properly balanced, repeat steps 6, 7 and 8.

Signal Connections

In general, 10X attenuator probes offer the best means of coupling a signal to the input of the Type 3A6. The 10X attenuator probe offers a higher input impedance and allows the circuit under test to operate more closely to actual operating conditions. The signal probes are shielded to prevent pickup of any electrostatic or electromagnetic interference.

In some cases, the signal can be connected to the Type 3A6 inputs with short unshielded leads. This is particularly true with high-level, low-frequency signals. When such leads are used, be sure to establish a common ground between the Type 3A6 and the equipment under test. Attempt to position the leads away from any stray interference to avoid errors in the display. If interference is excessive with unshielded leads, use a coaxial cable or a probe.

In high frequency applications requiring maximum overall bandwidth, use coaxial cables terminated in their characteristic impedance at the input of the Type 3A6

Loading Effect of the Type 3A6

As nearly as possible, simulate actual operating conditions in the equipment under test. Otherwise, the equipment under test may not produce a normal signal. The 10X attenuator probes mentioned previously offer the least circuit loading. Tektronix 10X attenuator probes have an input resistance of 10 megohms with very low shunt capacitance.

When the signal is coupled directly to the input of the Type 3A6, the input impedance is 1 megohm (±1%) paralleled by about 47 pf. When the signal is coupled to the input of the Type 3A6 through a coaxial cable, the input capacitance is greatly increased. Just a few feet of coaxial cable can increase the input capacitance to well over 100 pf.

Input Coupling

The Channel 1 and 2 AC DC GND switches allow a choice of input coupling. To display both the ac and dc components of an applied signal set the switch to DC. In the AC position, only the ac component of the input signal is allowed to pass. The GND position connects the input grid to ground but does not ground the input signal.

The DC position can be used for most applications. However, if the dc component of the signal is large enough to drive the display off the crt viewing area or if the dc component is such larger than the ac component, use the AC position.

In the AC position of the switch, the dc component of the signal is blocked by a capacitor in the input circuit. The low-frequency response in the AC position is about 2 cps, 3 db down. Therefore, some low-frequency distortion can be expected near this frequency limit. Distortion will also appear in square waves which have low-frequency components.

The GND position provides a ground reference at the input of the Type 3A6. The signal applied to the input connector is internally disconnected but not grounded. The grid of the input tube is at ground potential, eliminating the need to externally ground the input to establish a zero dc reference.

Internal Triggering

Single-Trace Displays. In the CH 2 and ADDED positions of the MODE switch, push the TRIGGER switch in. When the time-base trigger coupling switch is set to dc, the setting of the POSITION controls will affect the setting of the trigger level control. Proper triggering can be obtained in the CH 1 position of the MODE switch in either TRIGGER switch position. However, in the CH 1 ONLY position (TRIGGER switch pulled out) the POSITION controls have no affect on dc triggering.

Dual-Trace Displays. To obtain proper triggering in the CHOP mode, pull out the TRIGGER switch. Then, the internal trigger signal coupled to the time base does not contain the dual-trace chopping signal. It is difficult to get a stable display if the TRIGGER switch is pushed in because of the 150 kc dual-trace chopping signal.

In the ALTER mode the TRIGGER switch can be in either position, depending upon the application. When the TRIGGER switch is pushed in, the time base will be triggered from the display of each channel. This provides stable display of two unrelated signals but does not indicate the time relationship between the signals. To display signals showing true time relationship, pull the TRIGGER switch out to trigger from Channel 1 only. If the signals on the two channels are not harmonically related, the Channel 2 display will not be stable.

In the ALTER mode with the TRIGGER switch pushed in, do not set the time-base trigger coupling switch to dc.

Dual-Trace Operation

Chopped Mode. The chopped display is produced by electronic switching between channels. To blank out the switching transients, set the CRT Cathode Selector switch on the rear of the indicator unit to the chopped blanking position.

In general, use the CHOP position (chopped-mode operation) with sweep rates slower than 0.1 millisecond/division At higher sweep rates the chopped switching becomes apparent.

Two signals which are harmonically related can be displayed in the chopped mode showing true time relationship. However, if the signals are not harmonically related, the Channel 2 display will appear unstable.

Single-shot, transient or random signals which occur within the time interval determined by the time-base time/division switch (10 times sweep rate) can be compared using the chopped mode. To trigger the sweep, the Channel 1 signal must precede the Channel 2 signal. Since the signals show true time relationship, time difference measurements can be made.

Alternate Mode. The ALTER position (alternate-mode operation) can be used at any sweep rate. However, for time comparison measurements requiring sweep rates below about 20 milliseconds/division, use the chopped mode for best results.

Algebraic Addition

In many applications the desired signal is superimposed on an undesired signal such as line frequency hum, line noise, etc. Algebraic addition in the ADDED position of the MODE switch can be used in many cases to improve the ratio of desired to undesired signal. To do this, set up the instrument as follows:

1. Connect the source which contains both the desired and undesired signals to Channel 1 input.
2. Connect a source which contains only the undesired signal to Channel 2 input.
3. Set the MODE switch to CHOP or ALTER, whichever mode provides the best display at the sweep rate used.
4. The undesired portions of the signal on Channel 1 and 2 must be of opposite polarity. If they are of the same polarity, set the INV (CH 1) NORM switch to INV.
5. Adjust the Channel 1 VOLTS/DIV switch so the desired portion of the display is large enough for proper viewing.
6. Adjust the Channel 2 VOLTS/DIV switch for about the same amplitude as the undesired signal on Channel 1. Use the Channel 2 VARIABLE to match the deflection more closely.
7. Set the MODE switch to ADDED.
8. Readjust the Channel 2 VARIABLE or VOLTS/DIV switch to cancel out the maximum amount of undesired signal.
9. If the Channel 1 VARIABLE control is left in the CALIB position (UNCAL light off), the amplitude of the desired signal can be determined directly from the crt display and the Channel 1 VOLTS/DIV setting.

NOTE

The TRIGGER switch should be pushed in to obtain the triggering signal from the algebraically added signal only. If pulled out, the time base will be triggered by the undesired signal and may result in an unstable display.

In addition to common-mode rejection applications as described above, the ADDED mode can be used for differential applications (signal addition and subtraction), dc offset or other applications. An example of the use of dc offset would be a low-frequency signal on a large dc level that could not be positioned on the display area. Ac coupling cannot be used because the input time-constant would distort the signal. However, the ac signal could be displayed using dc coupling if the dc level were not present. The dc level can be effectively removed by applying a dc offset voltage to one channel and the signal to the opposite channel. With the MODE switch in the ADDED position, increase the offset voltage until the ac signal can be viewed on the screen.

When signals are being displayed in the ADDED mode, these precautions should be observed:

Do not exceed the input voltage rating of the amplifier.

Do not apply signals that will exceed an equivalent of 20 major divisions of deflection. As an example, with a VOLTS/DIV switch setting of 1, the voltage applied to that channel's input connector should not exceed 20 volts. If this limit is exceeded, signal distortion will result.

Before displaying signals in the ADDED mode, set the MODE switch to ALTER or CHOP and position both channel signals to the center of the display area. This is also a precaution against display distortion.

BASIC APPLICATIONS

The following information describes the procedures and techniques for making basic measurements with a Type 3A6 and an associated Tektronix indicator unit and time base. No attempt has been made to describe these applications in detail as each one must be adapted to the individual requirements. Familiarity with the Type 3A6 will enable these basic techniques to be applied to a wide variety of uses.

In the following procedures it is assumed that the Type 3A6 is placed in the left-hand or vertical compartment of the indicator unit and an appropriate time-base unit is placed in the right-hand compartment (except in a Type 565).

Voltage Measurements-AC

To measure the voltage level of an ac signal, set the AC DC GND switch to AC. In this position the dc component of the signal will be blocked. However, if the ac signal is very low frequency, the DC position should be used to avoid distortion of the signal.

To make a peak-to-peak measurement, use the following procedure:

1. Set the Channel 1 VOLTS/DIV switch to a setting at least 1/8 of the expected voltage. For example, if the voltage will be about 10 volts in amplitude, set the VOLTS/DIV switch to 2 (.2 if 10 X probe is used).
2. Apply the signal to either input connector.
3. Set the MODE switch to the channel used.
4. Set the AC DC GND switch to AC.
5. Set the time-base triggering controls to obtain a stable display. Set the time/division switch to a position that will display several cycles of the waveform.
6. Turn the POSITION control so that the lower portion of the waveform coincides with one of the graticule lines below the centerline. With the time-base Position control, move the display so one of the upper peaks lies near the vertical centerline (see Fig. 2-1).

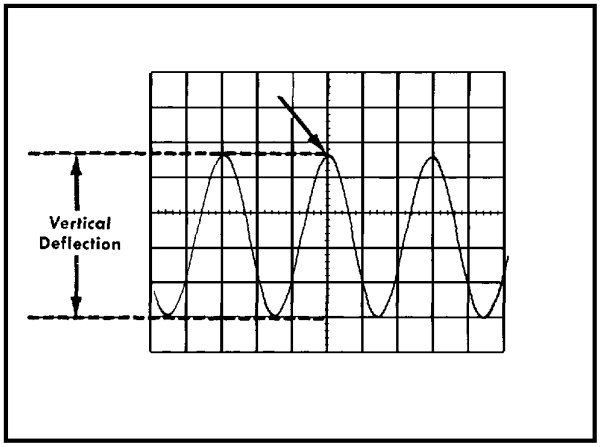

Fig. 2-1. Measuring the peak-to-peak voltage of a waveform.

7. Measure the divisions of vertical peak-to-peak deflection. Make sure the VARIABLE control is in the CALIB position.
8. Multiply the peak-to-peak distance measured in step 6 by the VOLTS/DIV setting. Also include the attenuation factor of the probe, if any.

As an example of this method of measurement, assume that the peak-to-peak vertical deflection is 4.6 divisions (see Fig. 2-1) using a 10X probe and a VOLTS/DIV setting of .5.

Using the formula:

Volts peak-to-peak	=	vertical deflection (divisions)	X	VOLTS/DIV setting	X	probe attenuation factor

Substituting the values given above:

Volts peak-to-peak = 4.6 X .5 X 10

The peak-to-peak voltage would be 23 volts.

Voltage Measurements-Instantaneous DC

To measure the dc level at a given point on a waveform, use the following procedure:

1. Set the VOLTS/DIV switch to a setting at least 1/8 of the expected voltage. For example, if the voltage will be about 10 volts in amplitude, set the VOLTS/DIV switch to 2 (.2 if 10 X probe is used).

2. Connect the signal to either input connector.
3. Set the MODE switch to the channel used.
4. Set the AC DC GND switch to GND.
5. Adjust the triggering controls for automatic triggering.
6. Align the trace with the bottom line of the graticule or other reference line. If the voltage is negative with respect to ground, set the INV (CH 1) NORM switch to INV and then align the trace with the reference line. Do not move the POSITION control after this reference line has been established.

NOTE

To measure a voltage level with respect to another voltage rather than ground, make the following changes in the above procedure. Set the AC DC GND switch to DC. Apply the reference voltage to the input and position the trace to the reference line.

7. Set the AC DC GND switch to DC. The ground reference can be checked at any time by switching to the GND position.
8. Set the time-base triggering controls to obtain a stable display. Set the time/division switch to a setting that will display several cycles of the waveform.
9. Measure the distance in divisions between the ground reference line established in step 6 and the point on the waveform to be measured. For example, in Fig. 2-2 the measurement is made between points (a) and (b).

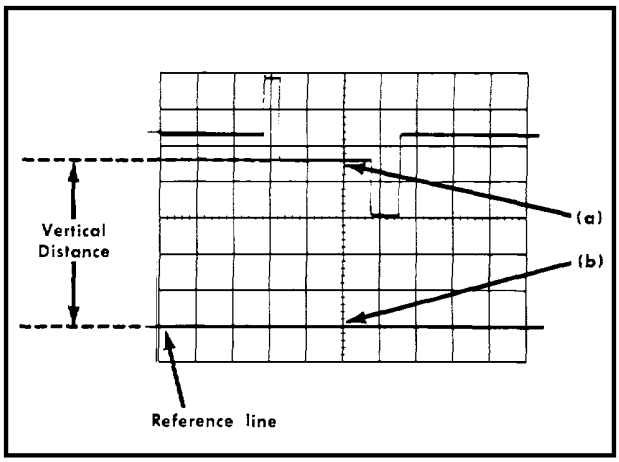

Fig. 2-2. Measuring instantaneous dc voltage with respect to a reference.

10. Establish the polarity of the signal. If the waveform is above the reference line with the INV (CH 1) NORM switch set to NORM, the voltage is positive. If the INV (CH 1) NORM switch is set to INV, the voltage is negative.
11. Multiply the distance measured in step 8 (include polarity) by the VOLTS/DIV setting. Include the attenuation factor of the probe, if any.

As an example of this method of measurement, assume that the vertical distance is 4.6 divisions (see Fig. 2-2), INV (CH 1) NORM switch set to INV, using a 10X probe and a VOLTS/DIV setting of 2.

Using the formula:

Instantaneous Voltage = vertical distance (divisions) X polarity X VOLTS/DIV setting X probe attenuation factor

Substituting the values given above:

Instantaneous Voltage = 4.6 X -1 X 2 X 10

The instantaneous voltage would be -92 volts.

Voltage Comparison Measurements

In some applications it may be necessary to establish a set of deflection factors other than those indicated by the VOLTS/DIV switch. This is useful for comparing signals which are exact multiples of a reference voltage amplitude. To establish a set of deflection factors based upon some specific reference amplitude, proceed as follows:

1. Apply a reference signal of known amplitude to the Channel 1 input connector and adjust the size of the display for an exact number of graticule divisions using the Channel 1 VOLTS/DIV switch and VARIABLE control. Do not move the VARIABLE control after obtaining the desired deflection.
2. Divide the amplitude of the reference signal (volts) by the product of the deflection in divisions (established in step 1) and the VOLTS/DIV switch setting. This is the Deflection Conversion Factor.

$$\text{Deflection Conversion Factor} = \frac{\text{Reference signal amplitude (volts)}}{\text{Deflection (divisions) X VOLTS/DIV setting}}$$

3. To calculate the Adjusted Deflection Factor at any setting of the Channel 1 VOLTS/DIV switch, multiply the VOLTS/DIV switch setting by the Deflection Conversion Factor obtained in step 2.

Adjusted Deflection Factor = VOLTS/DIV setting X Deflection Conversion Factor

This Adjusted Deflection Factor applies only to Channel 1 and is correct only if the VARIABLE control is not moved from the position set in step 1.

4. To determine the peak-to-peak amplitude of a signal compared to a reference, disconnect the reference and apply the signal to Channel 1.
5. Set the Channel 1 VOLTS/DIV switch to a setting that will provide sufficient deflection to make the measurement. Do not readjust the VARIABLE control.
6. Measure the vertical deflection in divisions and determine the amplitude by the following formula:

Signal Amplitude = Adjusted Deflection Factor X Deflection (divisions)

As an example of this method of measurement, assume a reference signal amplitude of 30 volts, a VOLTS/DIV setting of 5 and a deflection of 4 divisions.

Substituting these values in the Deflection Conversion Factor formula (step 2):

$$\text{Deflection Conversion Factor} = \frac{30}{4 \times 5} = 1.5$$

Then, with a VOLTS/DIV switch setting of 10 the Adjusted Deflection factor (step 3) would be:

$$\text{Adjusted Deflection Factor} = 10 \times 1.5 = 15 \text{ volts/division}$$

To determine the peak-to-peak amplitude of an applied signal which produces a vertical deflection of 4.5 divisions use the Signal Amplitude formula (step 6):

$$\text{Signal Amplitude} = 15 \times 4.5 = 67.5 \text{ volts}$$

Time-Difference Measurements

The calibrated sweep rate of the time base and the dual-trace feature of the Type 3A6 allow measurement of time difference between two events. To measure time difference, use the following procedure:

1. Set the AC DC GND switches to the same position, depending on the type of coupling desired.
2. Set the INV (CH 1) NORM switch to NORM.
3. Set the MODE switch to either CHOP or ALTER. In general, the CHOP position is more suitable for low-frequency signals and the ALTER position is more suitable for high-frequency signals. For more information on determining the mode, see "Dual-Trace Operation" and "Internal Triggering" in this section.
4. Pull the TRIGGER switch out to provide triggering from the Channel 1 signal only.
5. Set the VOLTS/DIV switches so that the voltages applied to the input connectors will provide suitable deflection on the crt.
6. Apply the reference signal to Channel 1 and the comparison signal to Channel 2. Use coaxial cables or probes which have equal time delay.
7. Set the triggering controls for a stable display.
8. Set the time/division switch for a sweep rate which shows a two to three division spacing between the two signals.
9. Adjust the POSITION control to center each display (or the points on the display between which the measurement is being made) in relation to the horizontal graticule centerline.
10. Measure the exact horizontal distance between the reference waveform and the Channel 2 waveform (see Fig. 2-3).
11. Multiply the measured distance by the setting of the time/division switch to obtain the apparent time interval. The actual time interval is determined by dividing this value by the sweep magnification, if sweep magnification is used.

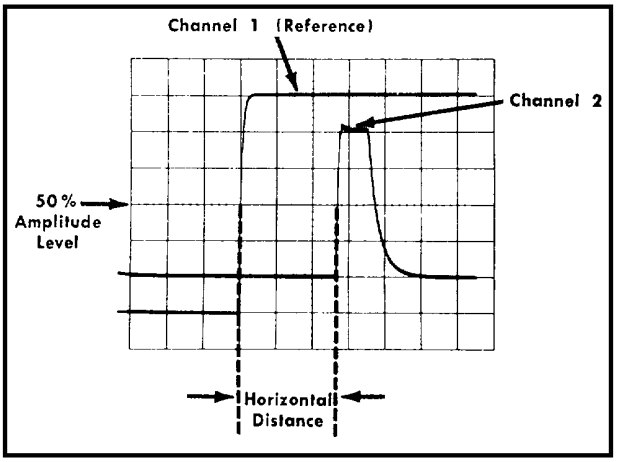

Fig. 2-3. Measuring time delay between pulses.

For example, assume that the time/division switch is set to 5 microseconds, the 5 X magnifier is on and the horizontal distance between waveforms is 2.7 divisions (see Fig. 2-3).

Using the formula:

$$\text{Time Delay} = \frac{\text{TIME/DIV setting} \times \text{Horizontal Distance (divisions)}}{\text{Sweep Magnification}}$$

Substituting the values given above:

$$\text{Time Delay} = \frac{5 \times 2.7}{5}$$

The time delay would be 2.7 microseconds.

Phase Measurements

Phase comparison between two signals of the same frequency can be made using the dual-trace feature of the Type 3A6. To make the comparison, proceed as follows:

1. Follow the procedure given in the first seven steps under "Time-Difference Measurements."
2. Set the time/division control for a sweep rate which displays less than 1 cycle of the waveform.
3. Adjust the VARIABLE control so the displays are equal and at least six centimeters in height. Reset the VOLTS/DIV switches, if necessary, to obtain equal amplitude displays.
4. Move the waveforms to the center of the graticule with the POSITION controls.
5. Turn the Variable time/division control counterclockwise until 1 cycle of the reference signal (Channel 1 signal) occupies exactly 9 divisions horizontally. Each division of the graticule represents 40º of the cycle (360º ÷ 9 divisions = 40º/ division. See Fig. 2-4).
6. Measure the horizontal distance between corresponding points on the waveforms. Note whether the Channel 2 waveform is leading or lagging the reference waveform on Channel 1.

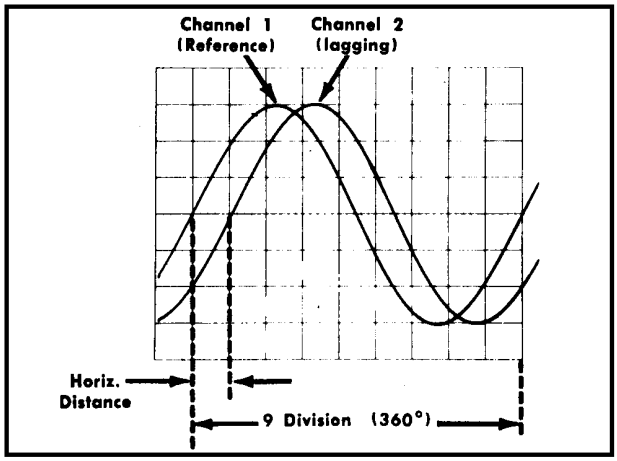

Fig. 2-4. Measuring phase shift.

7. Multiply the measured distance (in divisions) by 40° to obtain the exact amount of phase difference.

For example, with a horizontal distance of 1.1 divisions as shown in Fig. 2-4., the phase difference would be:

Phase difference = 1.1 X 40º = 44º

8. Phase difference can be measured more accurately by increasing the sweep rate of the time base. Do not change the setting of the variable time/division control. One of the easiest ways to increase the sweep rate is with the 5X magnifier. The adjusted phase factor is determined by dividing 40° by the increase in sweep rate.

For example if the sweep rate were increased 5 times with the 5X magnifier, the new phase factor would be 40° ÷ 5 = 8°/division (see Fig. 2-5).

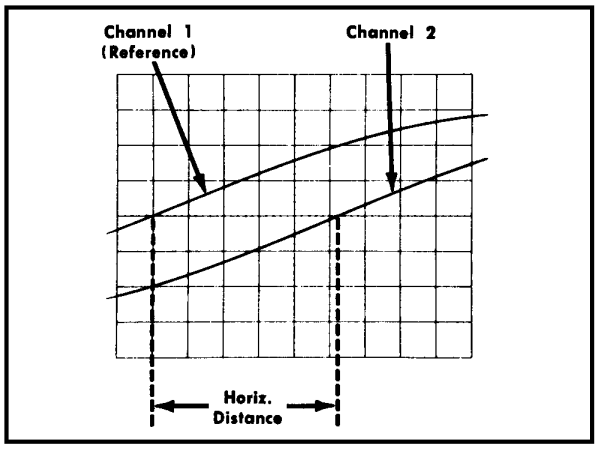

Fig. 2-5. Accurate phase measurement with sweep rate increased 5 times.

SECTION 3

CIRCUIT DESCRIPTION

The Type 3A6 Dual-Trace Amplifier contains two identical input channels, a common output amplifier, a switching circuit, and a trigger amplifier. The output of either or both input channel amplifiers may be fed to the output amplifier, depending on the condition of the switching circuit. Thus, the switching circuit makes it possible to display one signal as a single trace on the crt, two signals alternately in a dual-trace display, or the algebraic sum or difference of two signals as a single trace. Fig. 3-1 shows a block diagram of the Type 3A6.

Input Channel Amplifier

Each input channel consists of an attenuation network, an input cathode-follower, and a two-stage push-pull amplifier with switched outputs. Input cathode followers V113 and V123 (Channel 1) and V213 and V223 (Channel 2) isolate the attenuator input circuitry from emitter followers Q133 and Q143 (Channel 1) and Q233 and Q243 (Channel 2). Q134 and Q144 (Channel 1), and Q234 and Q244 (Channel 2) drive the Output Amplifier.

The gain of the last stage in each input amplifier is set by two internal calibration adjustments: R149 (Channel 1) and R249 (Channel 2) set the gain of the stage in the .01 position of the VOLTS/DIV switches, R147 (Channel 1) and R247 (Channel 2) set the gain of the stage in the remaining positions of the VOLTS/DIV switches. The VARIABLE controls increase emitter degeneration when moved from the CALIB position.

The input attenuators are resistive dividers with capacitive compensation. The attenuators maintain an input impedance of 1 megohm paralleled by about 47 pf. With the VOLTS/DIV switches in the .01 and .02 positions, input signals are fed directly to cathode-follower stages V113 and V213. In the VOLTS/DIV switch positions which provide an input deflection factor greater than 20 mv/div (.05 to 10), the attenuator sections are stacked. In the .05 position, the 2.5X attenuator increases the basic 20 mv/div deflection factor to 50 mv/div. The 5X attenuator is used to increase the deflection factor to 100 mv/div in the .1 position. These three positions (1X, 2.5X, and 5X) are used with the 10X or 100X attenuators in the higher deflection-factor positions of the VOLTS/DIV switch.

The DC BAL controls in the grid circuit of V123 and V223 adjust the balance of each input amplifier so current does not flow through R139 (Channel 1), and R239 (Channel 2) under no-signal conditions. Otherwise, the position of a no signal trace would shift on the crt as the VARIABLE control was turned or gain adjustments were made.

In the INV position, the INV (CH 1) NORM switch (SW155) inverts the Channel 1 output to the diode gates.

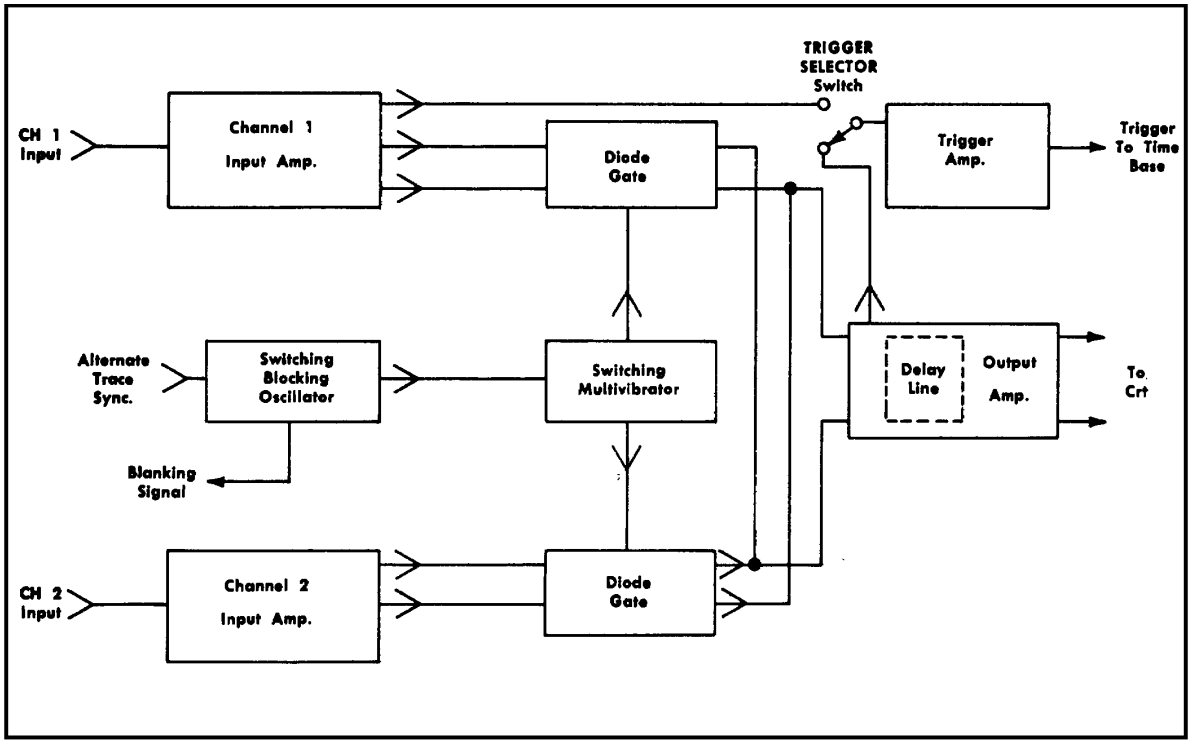

Fig. 3-1. Block diagram of Type 3A6.

Switching Circuit

The switching circuit consists of two diode gates, a switching multivibrator, a switching blocking oscillator, and a blanking emitter follower.

Each diode gate consists of two series diodes and two shunt diodes. In order that a signal can pass through the diode gates to the bases of Q304 and Q314 in the output amplifier, the series diodes must be forward biased, and the shunt diodes must be back biased.

In the CH 1, CH 2, and ADDED positions of the MODE switch, the switching multivibrator is inoperative (i.e. neither transistor is conducting). In the ALTER and CHOP positions of the MODE switch, the switching multivibrator operates as a bistable multivibrator. In this case, the multivibrator is switched by the blocking oscillator. The blocking oscillator operates as either a "triggered" oscillator in the ALTER mode or an “astable" (free running) oscillator in the CHOP mode.

When the MODE switch is in the CH 1 position, collector current of Q134 and Q144 flows through the series diodes. The MODE switch SW290 reverse-biases Q285 and holds it in the "off" state. Q275 is also "off", and holds the junction of D156 and D157 at -2.1 volts. Since the dc level in the signal output from Channel 1 input amplifier is -2.3 volts, the shunt diodes are back biased. The cathodes of the Channel 2 shunt diodes, D256 and D257 are held at about -4.2 volts by Q285. D256 and D257 are conducting and hold the Channel 2 output at about -3.5 volts. Since the output of the diode gates is at about -3 volts, D255 and D258 are back biased. With D255 and D258 cut off, the Channel 2 signal is not transmitted to the output amplifier. In addition, since D256 and D257 are conducting, they form a low-impedance path for any signals coming to the diode gate from the Channel 2 input amplifier.

When the MODE switch is in the CH 2 position, the conditions of the diode gate are reversed. The Channel 2 shunt diodes D256 and D257 and the Channel 1 series diodes D155 and D158 are back biased. Therefore, the signal from the Channel 2 input amplifier passes through D255 and D258 to the output amplifier and the Channel 1 signal is blocked by D155 and D158.

When the MODE switch is in either the ALTER or CHOP positions, D275 and D285 operate as a bistable multivibrator. Positive pulses from the switching blocking oscillator, Q260, pass through D278 or D288 to the collector of the "off" state transistor. This pulse is transmitted by either C277 or C287 to the base of the "on" transistor, turning it "off". The collector of this "off" transistor moves toward the -12.2-volt supply, turning the other transistor "on" because of the coupling through either C277 or C287. Resistive dividers R277-R286 and R276-R287 set the levels at the transistor bases. The voltage levels allow switching action to occur when a pulse is received from the blocking oscillator.

Operation of the diode gates in ALTER and CHOP is the same as described in the CH 1 and CH 2 positions of the MODE switch. However, the multivibrator is free to switch states when it receives a trigger signal from the blocking oscillator, and thus operate the diode gates and transmit a signal to the output amplifier from Channel 1 and Channel 2 alternately. Also, in the ALTER and CHOP positions of the MODE switch, R292 is bypassed and the collector loads, R278 and R288, of the multivibrator transistors are connected to the -12.2-volt supply.

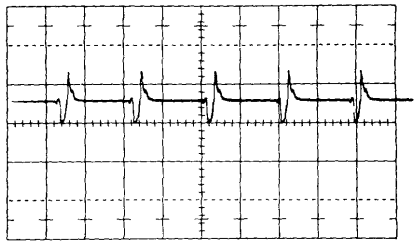

(a) Signal at base of Q260. 5 volts/div.

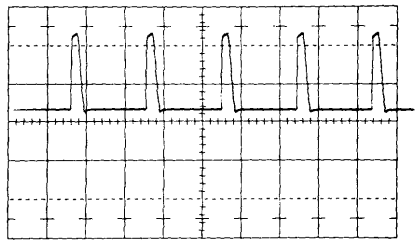

(b) Signal at collector of Q260. 20 volts/div.

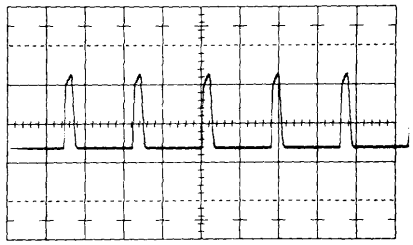

(c) Signal at pin 24 of interconnecting plug. 20 volts/div.

Fig. 3-2. Signals in blocking oscillator circuit. Test oscilloscope ac coupled at sweep rate of 2 msec/division.

In the CHOP and ALTER positions of the MODE switch, Q260 (switching blocking oscillator) is energized and supplies trigger pulses to the switching multivibrator. In the ALTER mode, the emitter of Q260 is connected to the -12.2-volt supply through R261. The collector is connected to the -100-volt supply through the collector winding of blocking oscillator transformer T263. When a positive pulse is fed from the time-base plug-in unit through terminal 3 of the interconnecting plug, the emitter voltage rises. The transistor conducts, drawing current through the collector winding of blocking oscillator transformer T263, driving Q260 further into conduction.

A normal blocking-oscillator cycle occurs, with the backswing cutting the transistor off. The transistor is biased so it does not turn on again until another sync pulse is received.

In the CHOP position of the MODE switch, the emitter of Q260 is connected to ground through R262. Normal free-running blocking oscillator action occurs. The base is forward biased since it is connected to the -12.2-volt supply. Therefore the blocking oscillator is automatically triggered and free runs at about a 300 kc rate. Fig. 3-2 shows the blocking oscillator waveforms with the MODE switch in the CHOP position.

The positive output pulses produced by Q260 in the ALTER or CHOP position of the MODE switch are coupled to the switching multivibrator through D263 and C271. These positive pulses forward bias diode D278 or D288 to switch the multivibrator. Q260 also provides the blanking pulse to blank out the chopping transient. The emitter follower Q263 provides a fast trailing edge on the blanking pulse. Q263 is biased into operation only during the trailing edge of the blanking pulse.

When the MODE switch is in the ADDED position, current is supplied to the output amplifier through R293 and R294, holding the series diodes in both diode gates in conduction. Since the multivibrator transistors are both near cut off, the shunt diodes are back biased and thus inoperative. The signal from both Channel 1 and 2 is allowed to pass to the Output Amplifier and algebraically add or subtract depending on their polarity.

Output Amplifier

The output of the diode gate passes to the bases of Q304 and Q314. These transistors are connected as a common-emitter push-pull amplifier. The feedback networks from collector to base of Q304 and Q314 form an amplifier with low input and output impedance. R300-C300, R303-C303, R305-C305 and R307-C307 boost the gain at high frequencies to compensate for the losses in the delay line. R308 and R318 add to the low output impedance of the amplifier and match the stage to the delay line. However, the output impedance of the stage tends to increase at high frequencies. R309 and C309 are added to the circuit to compensate for this by effectively lowering the output impedance as frequency increases.

The delay line has a characteristic impedance of about 186 Ω. Signal delay through the cable is 260 nsec. The output of the delay line is coupled to the Q324-Q334, V344A-V344B stage. Since this stage has a low input impedance, R320, R321, R330, R331, C321 and C331 are added so that the delay line is terminated in its characteristic impedance.

The T-coils in the plate circuits of V344A and V344B provide high-frequency peaking. The signal from the plates of V344A and V344B are coupled directly to the control grids of the cathode followers V363A and V363B. These cathode followers drive the transistors Q364 and 0374 which in turn drive the output tubes V384 and V394. The feedback from the output stage to the bases of Q364 and Q374 reduces the gain variation due to different tube transconductance (gm). This also increases the linear scan range of the output stage. Diodes D365 and D375 limit the voltage on the collectors of Q364-Q374 and therefore limit the dissipation of the transistors if one or the other of the output tubes (V384 or V394) cut off.

OUTPUT DC LEVEL Adjustment. This adjustment (R346) sets the operating level of the last few stages of the instrument so that the average output voltage to the deflection plates of the crt is +190 volts.

CALIB Adjustment. This adjustment (R389) adjusts the gain of the last stage by changing the cathode degeneration of V384 and V394. This permits the gain of the plug-in unit to be matched to the deflection factor of the indicator unit cathode-ray tube.

Trigger Amplifiers

The Type 3A6 contains a trigger amplifier to supply an internal trigger pulse to the time-base circuitry. The TRIGGER switch selects the triggering signal from either of two similar trigger pickoff amplifiers: Q164-Q174 in Channel 1 or Q404-Q414 in the Output Amplifier. Each of these trigger pickoff amplifiers is an emitter-coupled difference amplifier with double-ended input and single-ended output. The triggering signal from either pickoff amplifier circuit is obtained prior to signal delay. This allows the internal trigger signal to trigger the time-base circuitry before the vertical signal reaches the crt deflection plates.

The Channel 1 trigger signal is obtained from the Q133-Q143 stage. The CHAN 1 TRIG DC LEVEL control R171 provides a means of adjusting the dc level of the Channel 1 trigger signal.

The composite trigger signal is obtained from the Q304-Q314 stage. The COMP TRIG DC LEVEL control R412 provides a means of adjusting the dc level of the composite trigger signal. The dc level of the composite trigger signal is affected by the setting of the POSITION controls. Therefore, the COMP TRIG DC LEVEL adjustment is set with the POSITION controls at midrange.

The TRIGGER switch SW420 selects the triggering signal from the output of either Q164 (Channel 1 only) or Q414 (composite). The output of the unused trigger pickoff amplifier is connected to the -12.2 supply through R420.

The trigger output amplifier is a low input impedance amplifier having a transimpedance of 15k (⎍ 3 volt output ÷ ⎍ .2 milliamp input). D425 prevents Q444 from saturating by limiting the positive input signal. D424 provides a path to the -12.2 supply when D425 limits the positive input signal. Diode D423 limits the negative voltage excursion of the input and prevents overshoot when a large trigger signal is present.

The Zener diode D447 drops the voltage level of the trigger amplifier output signal about 15 volts so that the output to pin 11 of the interconnecting plug is nominally zero volts with a no-signal trace positioned to crt center.

SECTION 4

MAINTENANCE

PREVENTIVE MAINTENANCE

Recalibration

To insure accurate measurements, check the calibration of this instrument after each 500 hours of operation or every six months if used intermittently. Complete calibration instructions are given in Section 5.

Visual Inspection

The Type 3A6 should be inspected occasionally for such defects as broken connections, broken or damaged ceramic strips, improperly seated tubes or transistors and heat-damaged parts.

The remedy for most visible defects is obvious; however, particular care must be taken if heat-damaged parts are located. Overheating is usually only a symptom of trouble. For this reason, it is essential to determine the actual cause of overheating before the heat-damaged parts are replaced; otherwise, the damage may be repeated.

Cleaning

The Type 3A6 should be cleaned as often as operating conditions require. Accumulation of dirt in the instrument can cause overheating and component breakdown. Dirt on components acts as an insulating blanket and prevents efficient heat dissipation. It also provides a conduction path for electricity.

To clean the interior of the Type 3A6, blow off the accumulated dust with dry, low-pressure air. Remove any dirt which remains with a soft point brush or a cloth dampened with a mild detergent and water solution. A cotton-tipped applicator is useful for cleaning in narrow spaces or for cleaning ceramic terminal strips.

The front panel of the Type 3A6 can be cleaned with a soft cloth dampened with a mild solution of water and detergent. Do not use abrasive cleaners.

CAUTION

Avoid the use of chemical cleaning agents which might damage the plastics used in this unit. Avoid chemicals such as benzene, toluene, xylene, acetone or similar solvents.

CORRECTIVE MAINTENANCE

Soldering

Ceramic Terminal Strips. Solder used on the ceramic terminal strips should contain about 3% silver. Ordinary tin lead solder con be used occasionally. Use a 40- to 75-watt soldering iron with a 1/8" wide chisel-shaped tip. However, if ordinary solder is used repeatedly or if excessive heat is applied, the solder-to-ceramic bond can be broken.

Solder containing 3% silver is usually available locally.

The following precautions should be observed when soldering ceramic terminal strips:

1. Use a hot iron for a short time. Apply only enough heat to make the solder flow freely.

2. Maintain a clean, properly tinned tip.

3. Avoid putting pressure on the ceramic terminal strip.

4. Do not attempt to fill the terminal-strip notch with solder; use only enough solder to cover the wires adequately.

Metal Terminals. When soldering metal terminals (e.g., interconnecting plug pins, switch terminals, potentiometers, etc.), ordinary 60/40 solder can be used. The soldering iron should have a 40- to 75-watt rating with a 1/8" wide chisel-shaped tip.

Observe the following precautions when soldering metal terminals.

1. Apply only enough heat to make the solder flow freely.

2. If a wire extends beyond the solder joint, clip the excess close to the joint.

3. Apply only enough solder to form a solid connection. Excess solder may impair the function of the part.

Component Replacement

Certain parts in the instrument are easier to replace if a definite procedure is followed. The procedures for replacing these parts are outlined in the following paragraphs.

Many electrical components are mounted in a particular manner to reduce or control stray capacitance. Duplicate the original location and mounting when replacing components. When selecting replacement parts, remember that the physical nature of a component can affect its performance at high frequencies. After repair, check the instrument calibration.

NOTE

Turn off the indicator unit power before replacing any components.

Standard Parts

All electrical and mechanical part replacements for the Type 3A6 can be obtained through supply. See Section 7 for information on how to order parts.

Before purchasing replacement parts, consult the Parts List for values, tolerances and ratings required.

Special Parts

In addition to the standard electronic components, some special parts are used in the production of the Type 3A6. These parts are manufactured or selected by Tektronix to meet specific performance requirements, or are manufactured for Tektronix in accordance with our specifications. Most of the mechanical parts used in this instrument have been manufactured by Tektronix. Order all of these special parts directly from supply.

Ceramic Terminal Strip Replacement

A complete ceramic terminal strip assembly is shown in Fig. 4-1. Replacement strips (including studs) and spacers are supplied under separate part numbers. The old spacers may be reused unless they are damaged.

After the damaged strip has been removed, place the undamaged spacers in the chassis holes. Then, carefully press the studs into the spacers until they are completely seated. If necessary, use a soft mallet and tap lightly, directly over the stud area of the strip.

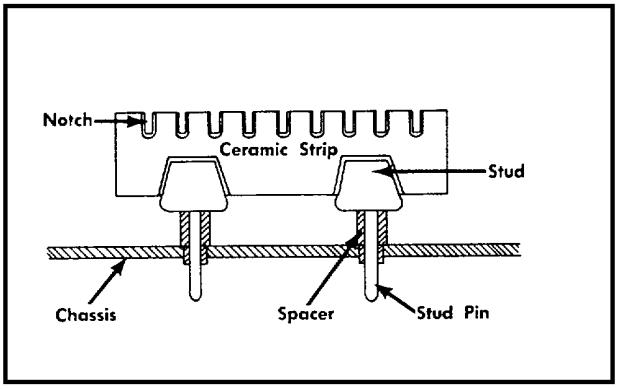

Fig. 4-1. Ceramic terminal strip assembly.

Tubes and Transistors

Do not replace tubes or transistors unless they are actually defective. If tubes or transistors are removed during routine maintenance, return them to their original sockets.

Static-tube or transistor-testers are not recommended for locating a defective tube or transistor. These testers often indicate a defective component when it is operating satisfactorily in a circuit, or may fail to indicate a characteristic which affects circuit performance. Since dynamic testers check operation under simulated circuit conditions, they provide a better check of component operation. However, the best overall test of tube or transistor performance is to substitute a new component or one which has been previously checked.

If a tube or transistor performs satisfactorily, do not replace it. Unnecessary replacement of components may require recalibration of the instrument. If tubes or transistors are replaced, check the operation of the unit.

Rotary Switches

Individual wafers or mechanical parts of rotary switches are normally not replaced. If a switch is defective, replace the entire assembly. Replacement switches can be ordered either wired or unwired; refer to the Parts List for part numbers.

TROUBLESHOOTING

Introduction

The following information is provided to facilitate troubleshooting of the Type 3A6 if trouble develops. During troubleshooting, information contained in this section of the manual should be used along with information obtained from other sections (e.g., Schematics, Operating Instructions, etc.).

Troubleshooting Aids

Schematic Diagrams. Circuit diagrams are given on pullout pages in Section 6. The circuit numbers for each electronic component in this unit along with important voltages are shown on these diagrams.

Switch wafers shown on the diagrams are coded to indicate the position of the wafer in the complete switch assembly. The number portion of the code refers to the wafer number counting from the front or mounting end of the switch toward the rear. The letters 'F' and 'R' indicate whether the front or rear of the wafer is used to perform the particular switching function.

Wiring Color-Code. All insulated wire used in the Type 3A6 is color-coded to facilitate circuit tracing. The widest color stripe identifies the first color of the code. The regulated voltages supplied by the indicator unit are identified by the following code: white background color indicates positive voltage; tan, negative voltage.

+300 volts	Orange-black-brown on white
+125 volts	Brown-red-brown on white
-12.2 volts	Brown-red-black on tan
-100 volts	Brown-black-brown on tan

The heater wiring is indicated by a white background with a blue first stripe. The remainder of the wiring in the Type 3A6 is color-coded to facilitate point-to-point circuit tracing.

Resistor Color-Code. Some stable metal-film resistors are used in this instrument. These resistors can be identified by their gray body color. If a metal-film resistor has a value indicated by three significant figures and a multiplier, it will be color-coded according to the EIA standard. If it has a value indicated by four significant figures and a multiplier, the value will be printed on the body of the resistor. For example, a 333k resistor will be color-coded, but a 333.5k resistor will have its value printed on the resistor body. The color coding sequence is shown in Fig. 4-2 and Table 4-1.

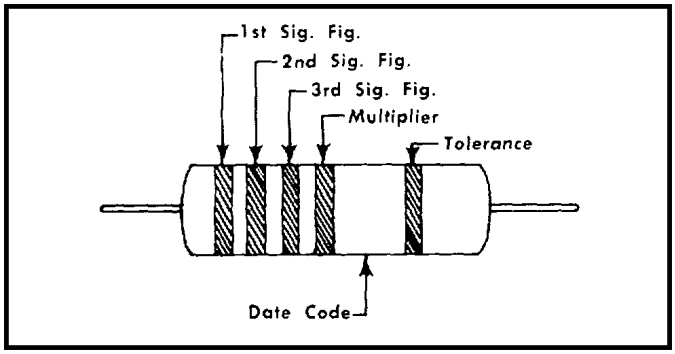

Fig. 4-2. Color coding of metal-film resistors.

Composition resistors are color coded according to the EIA standard resistor color code.

TABLE 4-1

Color Code Sequence

Color	1st Sig. Fig.	2nd Sig. Fig.	3rd Sig. Fig.	Multiplier	(±) % Tolerance
Black	0	0	0	1	-
Brown	1	1	1	10	1
Red	2	2	2	100	2
Orange	3	3	3	1,000	-
Yellow	4	4	4	10,000	-
Green	5	5	5	100,000	0.50
Blue	6	6	6	1,000,000	0.25
Violet	7	7	7	10,000,000	0.10
Gray	8	8	8	100,000,000	0.05
White	9	9	9	1,000,000,000	-
Gold				0.1	5
Silver				0.01	-
No Color					10

Test Equipment

The following equipment will be useful in troubleshooting the Type 3A6.

1. Dynamic Transistor Tester
   Purpose: To test transistors and diodes used in the Type 3A6.
   Description: Tektronix Type 575 Transistor-Curve Tracer.

2. Dc Voltmeter
   Purpose: To check operating voltages in the unit.
   Description: 20,000 ohms/volt.

3. Test Oscilloscope
   Purpose: To check circuit operation.
   Description: Tektronix Type 561A with Type 3A75 and Type 2B67 plug-in units, or equivalent.

4. Flexible Plug-in Extension Cable
   Purpose: Permits maximum accessibility to the Type 3A6 while operating the unit outside of the plug-in compartment.
   Description: 30", 24-pin. Tektronix Part No. 012-066.

Check Front-Panel Controls

Before proceeding with extensive troubleshooting, check the front-panel control settings. In addition, check the front-panel screwdriver adjustments for proper adjustment. An incorrect control setting can produce an apparent trouble. If in doubt as to the proper setting of a control or adjustment, see "First-Time Operation" in Section 2.

Check Indicator Unit and Time Base

The indicator unit and time base can be checked for proper operation by substituting another amplifier plug-in unit - preferably another Type 3A6 - which is known to be operating properly. If the trouble persists after substitution, the indicator unit or time base is defective.

Trouble Location

If the Type 3A6 is definitely at fault, make a careful operational check of the unit. Note the effect that each front-panel control has on the symptom. Also check the effect of the calibration adjustments. The normal or abnormal operation of each control or adjustment may help isolate the trouble to the defective circuit.

After the trouble has been isolated to a particular circuit, perform a complete visual check of that circuit. Many troubles can be found most easily by visual means. If a visual check fails to detect the cause of trouble, check the tubes or transistors used in the circuit by replacing them with tubes or transistors known to be good (or check with a dynamic tester). Most of the troubles which occur result from tube or transistor failures. Be sure to return any tubes or transistors found to be good to their original sockets.

The following procedure may aid in location of the defective component after the tubes or transistors have been found to be good.

1. Isolate the trouble to a portion of the circuit if possible.

2. Recheck the reaction of the front-panel controls and calibration adjustments on the affected circuit.

3. Check the voltages in the circuit. Typical operating voltages are given on the schematic diagrams.

4. Check waveforms in the circuit with a test oscilloscope.

5. Check the components in the circuit (i.e., check for faulty capacitors, off-tolerance resistors, etc.).

SECTION 5

MAINTENANCE CALIBRATION [1]

Introduction

The Type 3A6 should be calibrated every 500 hours or every six months if used intermittently. If transistors, tubes or other components are replaced, the calibration of the repaired circuit should be checked.

The following procedure is arranged in a sequence which will allow the instrument to be calibrated with the least interaction of adjustments and reconnection of equipment. If desired, the steps may be performed out of sequence or a step may be performed individually. However, it may be necessary to refer to the preceding step(s) and/or preliminary procedure for additional setup information.

All calibration adjustments in this unit are shown in Fig. 5-1.

NOTE

This procedure is written to provide a performance check of the instrument along with complete calibration. Steps entitled 'Check' permit a check of an operational standard of the unit. 'Adjust' steps provide a check of performance and adjustment if necessary.

EQUIPMENT REQUIRED

The following equipment, or equivalent, is required for a complete calibration of the Type 3A6.

(1) Calibrated 560-Series indicator unit. If the indicator unit does not contain a time base, use a Tektronix Type 3B1, 3B3 or 3B4 plug-in unit.

(2) Dc voltmeter; 20,000 ohms/volt, 2% accuracy.

(3) Square-wave generator; frequency, 100 cps to 300 kc. Risetime, 20 nanoseconds or less. Output amplitude, about 0.8 volts into 50 ohms. Tektronix Type 105 Square-Wave Generator recommended.

(4) Input capacitance standardizer; 47 pf., BNC connectors. Tektronix Part No. 011-068.

(5) Termination; 50 ohm, BNC connectors. Tektronix Part No. 011-049.

(6) Attenuator; 50 ohm, 5XT, BNC connectors. Tektronix Part No. 011-060.

(7) Cables; (two), 50 ohm, 42" long, BNC connectors. Tektronix Part No. 012-057.

(8) BNC 'T' connector. Tektronix Part No. 103-030.

(9) Screwdriver; non-metallic. Tektronix Part No. 003-000.

(10) Alignment tool; non-metallic. Tektronix Part No. 003-301.

PRELIMINARY PROCEDURE

1. Remove both side panels from the indicator unit.

2. Insert the Type 3A6 in the left-hand plug-in compartment.

3. Insert the time-base unit in the right-hand plug-in compartment.

4. Preset the indicator unit front-panel controls as follows:

Calibrator	50 mVolts

Adjust the remaining controls for a suitable display.

5. Preset the time-base controls as follows:

Mode	Norm.
Time/Div.	1 mSec
Triggering	
Level	centered
Slope	+
Coupling	Auto
Source	Int.

6. Preset the Type 3A6 controls (both channels where applicable) as follows:

POSITION	midrange
AC DC GND	GND
VOLTS/DIV	.01
VARIABLE	CALIB
MODE	CH 1
INV (CH 1) NORM	NORM
TRIGGER	pushed in

7. Connect the indicator unit to the correct line voltage and turn the POWER switch ON.

CALIBRATION PROCEDURE

1. Adjust Channel 1 and 2 Dc Balance

a. **Check** - Rotate Channel 1 VARIABLE throughout its range. If the trace moves vertically, adjust the DC BAL control as follows:

b. Turn the DC BAL control to bring the trace near graticule center.

c. Turn the VARIABLE control fully counterclockwise and position the trace to the graticule centerline with the POSITION control.

d. Return the VARIABLE control to the CALIB position. Measure the exact distance the trace is displaced above or below the centerline.

e. Adjust the DC BAL control to move the trace exactly half this distance (measure in step 1e) past the graticule centerline.

NOTE

Both DC BAL controls are the dual-range or coarse-fine type. To use this type of control, turn the control slightly past the desired point of adjustment (coarse adjust).

[1] This procedure is to be used only for maintenance. For calibration procedure, see TB 750-236.

Then, reverse the direction of rotation and use the fine adjustment (about 30° range) to establish balance.

f. Check the balance by rotating the VARIABLE control throughout its range. If the amplifier is not properly balance, repeat steps 1d, 1e, and 1f.

g. Set the MODE switch to CH 2 and repeat the above procedure for Channel 2.

2. Check Chopped Mode Operation

a. Set the MODE switch to CHOP and position the two traces about 2 major divisions apart.

b. Set the Type 3B1 Time/Div. switch for a sweep rate of 5 μSec.

c. Check the display for one to two trace segments per major graticule division.

3. Check Alternate Mode Operation

a. Set the MODE switch to ALTER.

b. Set the Type 3B1 Time/Div. switch for a sweep rate of .1 Sec.

c. Check for trace alternation between Channel 1 and 2.

d. Return the MODE switch to CH 1.

4. Adjust Output Dc Level

a. Position the trace to the graticule centerline.

b. Measure the dc voltage from each of the crt vertical deflection plate connections (on left side of crt) to ground.

c. **Check** - Average voltage of the crt plate should be +190 volts; for example, one plate at +185 and the other of at +195 volts. If not, adjust according to the following step.

d. Adjust OUTPUT DC LEVEL R346 for an average voltage of +190 volts.

5. Adjust Channel 1 Trigger Dc Level

a. Pull the TRIGGER switch out to the CHANNEL 1 ONLY position.

b. Connect the dc voltmeter to Pin 12 of the Horizontal plug-in interconnecting plug.

c. **Check** - Voltage reading should be zero. If not, adjust as follows:

d. Adjust CHAN 1 TRIG DC LEVEL R171 for zero volt reading on the meter.

e. There is some interaction between the CHAN 1 TRIG DC LEVEL control and the Channel 1 DC BAL control. Recheck step 1 if an adjustment is made in step 5d.

6. Adjust Composite Trigger Dc Level

a. Push the TRIGGER switch in.

b. Position the trace to the graticule centerline.

c. **Check** - Voltage reading should be zero volts. If not, adjust as follows:

d. Adjust COMP TRIG DC LEVEL R412 for zero volt reading on the meter.

e. Disconnect the voltmeter.

7. Adjust Channel 1 10 Mv Gain

a. Set the Channel 1 AC DC GND switch to DC.

b. Make sure the VARIABLE control is set to CALIB (UNCAL light off).

c. Connect the 50-millivolt signal from the indicator unit Cal Out connector to Channel 1 input.

d. Turn the CALIB control to midrange.

e. **Check** - Check for 5 major divisions of deflection. If incorrect, adjust as follows:

f. Adjust 10MV GAIN R149 for 5 major divisions of vertical deflection.

8. Adjust Channel 1 20 Mv Gain

a. Set the Channel 1 VOLTS/DIV switch to .02.

b. Set the indicator unit calibrator to .1 volts.

c. Check - Check for 5 major divisions of deflection. If incorrect, adjust as follows:

d. Adjust 20 MV GAIN R147 for 5 major divisions of vertical deflection.

9. Adjust Channel 2 10 Mv Gain

a. Connect the calibrator output to both inputs using the BNC 'T' connector and a 50-ohm cable.

b. Set the Channel 2 AC DC GND switch to DC.

c. Set both VOLTS/DIV switches to .01.

d. Make sure both VARIABLE controls are set to CALIB (UNCAL light off).

e. Set the calibrator for 50 mVolts output.

f. Position both traces to the center of the graticule.

g. Set the MODE switch to ADDED and the INV (CH 1) NORM switch to INV.

h. **Check** - Check for a straight line indicating identical gain in Channels 1 and 2. If square-wave signal is seen, adjust as follows:

i. Adjust 10MV GAIN R249 for complete cancellation of the Channel 1 signal indicated by a straight line.

10. Adjust Channel 2 20 Mv Gain

a. Set the calibrator to .1 Volts.

b. Set both VOLTS/DIV switches to 02.

c. **Check** - Check for a straight line indicating identical gain in Channel 1 and 2. If square-wave signal is seen, adjust as follows:

d. Adjust 20 MV GAIN R247 for a straight line.

11. Check Both VARIABLE Controls

a. Set both VOLTS/DIV switches to .01 and both VARIABLE controls to CALB.

b. Set the INV (CH 1) NORM switch to NORM.

c. Connect a 50 mVolts signal from the calibrator to the input of both channels.

d. Set the MODE switch to CH 1. The display should be 5 divisions high.

e. Turn the Channel 1 VARIABLE control fully counterclockwise. The display should be reduced to 2 major divisions or less.

f. Check that the Channel 1 UNCAL light is on.

g. Return the Channel 1 VARIABLE to CALIB; the UNCAL light should go out.

h. Set the MODE switch to CH 2. Repeat steps 11e, f and g to check the Channel 2 VARIABLE control.

i. Disconnect the calibrator signal from the input connectors.

12. Check Grid Current

a. Set both VOLTS/DIV switches to .02 and VARIABLE controls to CALIB.

b. Set both AC DC GND switches to GND.

c. Set the MODE switch to CH 1.

d. Note Channel 1 trace vertical position in the GND position and then set the Channel 1 AC DC GND switch to AC. Trace shift should not exceed 2 minor divisions (4 mm).

e. Set the MODE switch to CH 2 and repeat step 12d for Channel 2.

13. Adjust Channel 1 and 2 Input Capacitance

a. Connect the square-wave generator to the Channel 1 input through the 5XT and the capacitance standardizer.

b. Set the generator output frequency to 1 kc.

c. Set the Channel 1 VOLTS/DIV switch to .01.

d. Set the Channel 1 AC DC GND switch to DC.

e. Set the MODE switch to CH 1 and the INV (CH 1) NORM switch to NORM.

f. Set the generator output amplitude for 4 major divisions of deflection.

g. Set the time-base Time/Div. switch to .2.

h. Adjust C111 for optimum flat-top waveform.

i. Set the Channel 1 VOLTS/DIV switch to .02.

i. Adjust C112 for optimum flat-top waveform.

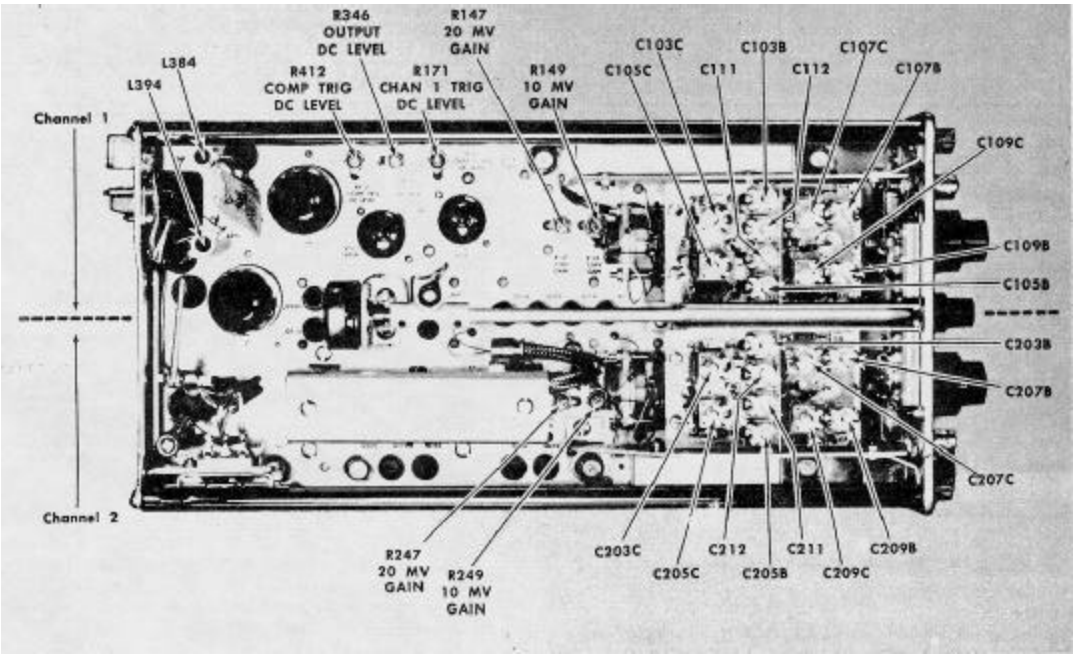

Fig. 5-1. Calibration adjustment in Type 3A6 (left-idle view).

k. Remove the signal from Channel 1 input and connect to Channel 2 input.

l. Set the MODE switch to CH 2.

m. Set the Channel 2 VOLTS/DIV switch to .01.

n. Set the Channel 2 AC DC GND switch to DC.

o. Adjust C211 for optimum flat-top waveform.

p. Set the Channel 2 VOLTS/DIV switch to .02.

q. Adjust C212 for optimum flat-top waveform.

14. Adjust Channel 1 and 2 VOLTS/DIV Compensation

a. Use the same test setup used in step 13.

b. Adjust the Channel 2 VOLTS/DIV compensation as shown in Table 5-1. Readjust the generator output with each setting of the VOLTS/DIV switch to provide 4 divisions of deflection (except in the 2 position where the maximum deflection will be about 1 division).

c. Connect the generator signal to Channel 1 input.

d. Set the MODE switch to CH 1 and adjust the Channel 1 VOLTS/DIV compensation as shown in Table 5-1.

TABLE 5-1

VOLTS/DIV Switch Setting	Channel 1 Adjust for Optimum		Channel 2 Adjust for Optimum	
	Square Corner	Flat Top	Square Corner	Flat Top
.05	C103C	C103B	C203C	C203B
.1	C105C	C105B	C205C	C205B
.2	C107C	C107B	C207C	C207B
2	C109C	C109B	C209C	C209B

15. Adjust High-Frequency Compensation

a. Set the Channel 1 VOLTS/DIV switch to .01 and the VARIABLE to CALIB.

b. Set the MODE switch to CH 1.

c. Set the time-base Time/Div. switch to .5 mSec.

d. Connect the generator signal to Channel 1 input through a 5XT attenuator and a 50-ohm termination.

e. Set the generator output frequency to 300 kc.

f. Set the generator output amplitude for a 4-centimeter display.

g. Adjust L384 and L394 for optimum square corner on the waveform with minimum overshoot.

h. Disconnect the generator from the Channel 1 input connector.

16. Check VOLTS/DIV Attenuation Ratios

a. Set the indicator unit Calibrator for 50 mVolts output.

b. Connect the Cal Out connector to the Channel 1 input with 50-ohm cable.

c. Set the time-base Time/Div. switch to 5 mSec.

d. Set the MODE switch to CH 1.

e. Check for proper vertical deflection in each position of the Channel 1 VOLTS/DIV switch using Table 5-2 as a guide.

f. Set the MODE switch to CH 2 and connect the Cal Out signal to Channel 2 input. Check the attenuation of Channel 2 VOLTS/DIV switch using Table 5-2 as a guide.

g. Disconnect the calibrator signal from the input connector.

NOTE

Since the indicator unit calibrator accuracy is ± 3% and the rated accuracy of the input attenuators is ± 3%, the maximum allowable deviation from the indicated deflection is ± 6%.

TABLE 5-2

VOLTS/DIV Switch Setting	Calibrator Output (peak-to-peak)	Vertical Deflection in Divisions
.01	50 mVolts	5
.02	.1 Volts	5
.05	.2 Volts	4
.1	.5 Volts	5
.2	1 Volts	5
.5	2 Volts	4
1	5 Volts	5
2	10 Volts	5
5	20 Volts	4
10	50 Volts	5

17. Check Channel Isolation

a. Set the Channel 1 VOLTS/DIV switch to 10 and the Channel 2 VOLTS/DIV switch to .01.

b. Set the MODE switch to ALTER

c. Set the generator output frequency for 100 kc.

d. Connect the generator to the Channel 1 input with a 50-ohm cable.

e. Set the generator output amplitude for 5 divisions of deflection.

f. The Channel 2 deflection should be 1 mm or less, indicating channel isolation of 50,000:1 or better.

NOTE

The attenuators are not shielded adequately unless the side panels are in place. Therefore, to obtain an accurate measurement of channel isolation, replace the left side panel.

SECTION 6

PREVENTIVE MAINTENANCE INSTRUCTIONS

6.1. Scope of Maintenance

The maintenance duties assigned to the operator and organizational repairman of this equipment are listed below with a reference to the paragraphs covering the specific maintenance functions. The preventive maintenance procedures require no special tools or test equipment.

a. Daily preventive maintenance checks and services (paragraph 6.5).

b. Weekly preventive maintenance checks and services (paragraph 6.6).

c. Monthly preventive maintenance checks and services (paragraph 6.7).

d. Quarterly preventive maintenance checks and services (paragraph 6.9).

e. Cleaning (paragraph 6.11).

f. Touchup painting instructions (paragraph 6.12).

6.2. Materials Required For Maintenance

a. Trichloroethane (Federal stock No. 6810-292-9625).

WARNING

The fumes of trichloroethane are toxic. Provide thorough ventilation whenever used. DO NOT use near an open flame. Trichloroethane is not flammable, but exposure of the fumes to an open flame converts the fumes to highly toxic, dangerous gases.

b. Cleaning cloth.

c. Fine sandpaper.

d. Touchup paint.

6.3. Preventive Maintenance

Preventive maintenance is the systematic care, servicing, and inspection of equipment to prevent the occurrence of trouble to reduce downtime and to insure that the equipment is serviceable.

a. Systematic Care. The procedure given in paragraphs 6.3 through 6.12 covers routine systematic care and cleaning essential to proper upkeep and operation of the equipment.

b. Preventive Maintenance Checks and Services. The maintenance checks and services charts outline functions to be performed at specific intervals. These checks and services are to maintain equipment in a combat serviceable condition; that is, in good general (physical) condition and in good operating condition. To assist operators in maintaining combat serviceability, the charts indicate what to check, how to check, and the expected results of the check. The reference column lists the paragraphs that contain additional information. If the defect cannot be found by performing the corrective action indicated, higher category of maintenance or repair is required. Records and reports of these checks and services must be made in accordance with the requirements set forth in TM 38-750.

6.4. Preventive Maintenance Checks and Services Periods

Preventive maintenance checks and services of this equipment are required daily, weekly, monthly, and quarterly. Daily maintenance checks and services are specified in paragraph 6.5. Paragraph 6.6 specifies checks and services that must be performed weekly. If the equipment is maintained in a standby condition, the daily and weekly checks should be accomplished at the same time. The maintenance checks and services that are accomplished monthly are specified in paragraph 6.7. Quarterly maintenance checks and services are specified in paragraph 6.9.

6.5. Daily Preventive Maintenance Checks and Services Chart

Sequence No.	Items to be inspected	Procedure	Reference
1	Completeness	See that the equipment is complete.	Appendix B
2	Cleanliness	Exterior of equipment must be clean and dry, free of fungus, dirt, dust, and grease.	Paragraph 6.11
3	Operational check	Check the operational efficiency.	
4	Controls	See that controls operate smoothly and are fastened in place securely.	

6.6. Weekly Preventive Maintenance and Services Chart

Sequence No.	Items to be inspected	Procedure	Reference
1	Components	Inspect cards and cables for chafed, cracked, or frayed insulation. Replace connectors that are broken, stripped, or worn.	
2	Metal surfaces	Inspect exposed metal surface for rust and corrosion. Clean and touch-up with paint as required.	Paragraphs 6.11 and 6.12.

6.7. Monthly Maintenance

Perform the maintenance functions indicated in the monthly preventive maintenance checks and services chart (paragraph 6.8) once each month. Periodic daily (paragraph 6.5) and weekly (paragraph 6.6) services constitute a part of the month checks.

6.8. Monthly Preventive Maintenance Checks and Services Chart

Sequence No.	Items to be inspected	Procedure
1	Terminations	Inspect for loose connections and cracked or broken insulation.
2	Control panel	Clean panel thoroughly and check all surfaces for chips, cracks, and abnormal wear.
3	Hardware	Inspect all hardware for possible damage.

6.9. Quarterly Maintenance

Quarterly preventive maintenance checks and services are required for this equipment. Periodic daily, weekly, and monthly services constitute a part of the quarterly preventive maintenance checks and services and must be performed in sequence. All deficiencies or shortcomings will be recorded in accordance wit the requirements of TM 38-750. Perform all the checks and services listed in the quarterly preventive maintenance checks and services chart (paragraph 6.10) in the sequence listed. Adjustment of the maintenance interval must be made to compensate for any unusual operating conditions.

6.10. Quarterly Preventive Maintenance Checks and Services Chart

Sequence No.	Items to be inspected	Procedure	Reference
1	Publications	See that all publications are complete, serviceable, and current.	DA Pam 310-4
2	Modifications	Check DA Pam 310-7 to determine whether new applicable MWO's have been published. All URGENT MWO's must be applied immediately. All normal MWO's must be scheduled.	TM 38-750 and DA Pam 310-7.

6.11. Cleaning

Inspect the exterior surfaces. The surfaces must be free of dust, dirt, grease, and fungus.

a. Remove dust and loose dirt with a clean, soft cloth.

b. Remove grease, fungus, and ground-in dirt. Use a damp cloth (not wet) with trichloroethane to clean terminations. If dirt on the body of the unit is difficult to remove, use mild soap and water.

c. Remove dust or dirt from the jacks and plugs with a brush.

6.12. Touchup Painting Instructions

Remove dust and corrosion from metal surfaces by lightly sanding them with fine sandpaper. Brush two thin coats of paint on the bare metal to protect it from further corrosion. Refer to applicable cleaning and refinishing practices specified in TB 746-10.

SECTION 7
PARTS LIST AND SCHEMATICS
PARTS PROVISIONING INFORMATION

REPLACEMENT PARTS

To obtain replacement parts, find the manufacturer's part number and description in this manual and then refer to the appropriate Repair Parts and Special Tools List (RPSTL) TM. In the RPSTL, find the assembly or subassembly first and then the description which corresponds with that in this manual. Under the description in the RPSTL find the manufacturer's part number, and then order the part by the listed Federal stock number. If the part is not listed in the RPSTL, it should be requisitioned from the NICP in accordance with AR 725-50.

ABBREVIATIONS AND SYMBOLS

a or amp	amperes
BHS	binding head steel
C	carbon
cer	ceramic
cm	centimeter
comp	composition
cps	cycles per second
crt	cathode-ray tube
CSK	counter sunk
dia	diameter
div	division
EMC	electrolytic, metal cased
EMT	electrolytic, metal tubular
ext	external
f	farad
F & I	focus and intensity
FHS	flat head steel
Fil HS	fillister head steel
g or G	giga, or 10^9
Ge	germanium
GMV	guaranteed minimum value
h	henry
hex	hexagonal
HHS	hex head steel
HSS	hex socket steel
HV	high voltage
ID	inside diameter
incd	incandescent
int	internal
k or K	kilohms or kilo (10^3)
kc	kilocycle
m	milli, or 10^{-3}
mc	megacycle
mm	millimeter
meg or M	megohms or mega 10^6)
met.	metal
m	micro, or 10^{-6}
n	nano, or 10^{-9}
Ω	ohm
OD	outside diameter
OHS	oval head steel
p	pico, or 10^{-12}
PHS	pan head steel
piv	peak inverse voltage
plstc	plastic
PMC	paper, metal cased
poly	polystyrene
Prec	precision
PT	paper tubular
PTM	paper or plastic, tubular, molded
RHS	round head steel
rms	root mean square
sec	second
Si	silicon
S/N	serial number
t or T	tera, or 10^{12}
TD	toroid
THS	truss head steel
tub.	tubular
v or V	volt
Var	variable
w	watt
w /	with
w / o	without
WW	wire-wound

SPECIAL NOTES AND SYMBOLS

X000	Part first added at this serial number.
000X	Part removed after this serial number.
*000-000	Asterisk preceding Tektronix Part Number indicates manufactured by or for Tektronix, or reworked or checked components.
Use 000-000	Part number indicated is direct replacement.
ⓘ	Internal screwdriver adjustment.
▭	Front-panel adjustment or connector.

EXPLODED VIEW

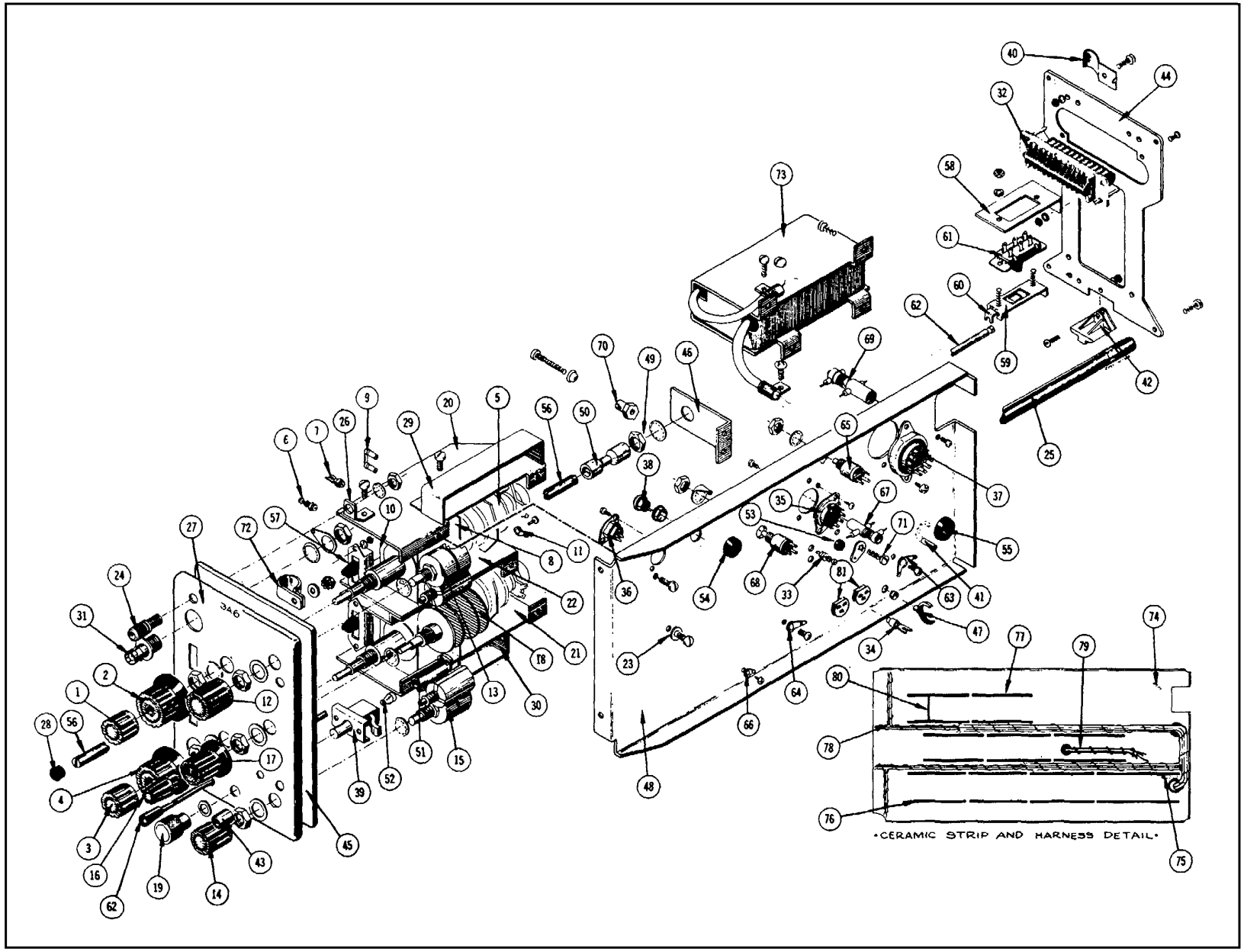

EXPLODED VIEW

REF. NO.	PART NO.	SERIAL / MODEL NO. EFF.	SERIAL / MODEL NO. DISC.	QTY.	DESCRIPTION
1	366-0031-00			1	KNOB, small red-VARIABLE (CH 1)
	- - - - - -			-	Includes:
	213-0004-00			1	SCREW, set, 6-32 x 3/16 inch HSS
2	366-0160-00			1	KNOB, large charcoal-VOLTS/DIV (CH 1)
	- - - - - -			-	Includes:
	213-0004-00			1	SCREW, set, 6-32 x 3/16 HSS
3	366-0031-00			1	KNOB, small red-VARIABLE (CH 2)
	- - - - - -			-	Includes:
	213-0004-00			1	SCREW, set, 6-32 x 3/16 HSS
4	366-0160-00			1	KNOB, large charcoal-VOLTS/DIV (CH 2)
	- - - - - -			-	Includes:
	213-0004-00			1	SCREW, set, 6-32 x 3/16 HSS
5	262-0653-00			2	SWITCH, wired-VOLTS/DIV (CH1 and 2)
	- - - - - -			-	Each Includes:
	260-0607-00			1	SWITCH, unwired-VOLTS/DIV (CH 1 and 2)
6	131-0182-00			1	CONNECTOR, terminal, feed thru
	- - - - - -			-	Mounting Hardware: (not included)
	358-0136-00			1	BUSHING, teflon
7	131-0344-00			8	CONNECTOR, terminal, feed thru
	- - - - - -			-	Mounting Hardware For Each: (not included)
	358-0241-00			1	BUSHING, teflon
8	337-0680-00			1	SHIELD, attenuator
	- - - - - -			-	Mounting Hardware: (not included w/switch assembly)
	211-0007-00	X730		1	SCREW, 4-40 x 3/16 inch BHS
	211-0008-00	X730		1	SCREW, 4-40 x 1/4 inch BHS
	210-0004-00	X730		2	LOCKWASHER, internal, #4
	210-0586-00	X730		2	NUT, keps, 4-40 x 1/4 inch
9	214-0456-00			10	FASTENER, press
10	441-0564-00			1	CHASSIS, attenuator
	- - - - - -			-	Mounting Hardware: (not included)
	210-0004-00			4	LOCKWASHER, internal, #4
	210-0406-00			4	NUT, hex, 4-40 x 3/16 inch
	211-0007-00			4	SCREW, 4-40 x 3/16 inch BHS
11	210-0227-00	100	1788	1	LUG, solder, SE #6
	210-0201-00	1789	1949X	1	LUG, solder, SE #4
	- - - - - -			-	Mounting Hardware: (not included)
	210-0406-00			1	NUT, hex, 4-40 x 3/16 inch
	211-0007-00			1	SCREW, 4-40 x 3/16 inch BHS
	- - - - - -			-	Mounting Hardware For Each Switch: (not included)
	210-0012-00			1	LOCKWASHER, internal, 3/8 x 1/2 inch
	210-0413-00			1	NUT, hex, 3/8-32 x 1/2 inch
12	366-0148-00			1	KNOB, small charcoal-POSITION (CH 1)
	- - - - - -			-	Includes:
	213-0004-00			1	SCREW, set, 6-32 x 3/16 inch HSS
13	- - - - - -			-	Mounting Hardware For Pot:
	210-0012-00			1	LOCKWASHER, internal, 3/8 x 1/2 inch
	210-0413-00			1	NUT, hex, 3/8-32 x 1/2 inch
	210-0840-00			1	WASHER, .390 ID x 9/16 inch OD
14	366-0148-00			1	KNOB, small charcoal-POSITION (CH 2)
	- - - - - -			-	Includes:
	213-0004-00			1	SCREW, set, 6-32x 3/16 inch HSS

Parts List - Type 3A6

EXPLODED VIEW (Cont'd)

REF. NO.	PART NO.	SERIAL / MODEL NO. EFF.	SERIAL / MODEL NO. DISC.	QTY.	DESCRIPTION
15	- - - - - -			-	Mounting Hardware For Pot:
	210-0012-00			1	LOCKWASHER, internal, 3/8 x 1/2 inch
	210-0413-00			1	NUT, hex, 3/8-32 x 1/2 inch
	210-0840-00			1	WASHER, .390 ID x 9/16 inch OD
16	366-0189-00			1	KNOB, small red-INV (CH 1) NORM
	- - - - - -			-	Includes:
	213-0004-00			1	SCREW, set, 6-32 x 3/16 inch HSS
17	366-0175-00			1	KNOB, medium charcoal-MODE
	- - - - - -			-	Includes:
	213-0004-00			1	SCREW, set, 6-32 x 3/16 inch HSS
18	260-0442-00			1	SWITCH, unwired-MODE
	- - - - - -			-	Mounting Hardware: (not included)
	210-0012-00			1	LOCKWASHER, internal, 3/8 x 1/2 inch
	210-0413-00			1	NUT, hex, 3/8-32 x 1/2 inch
19	366-0109-00			1	KNOB, plug-in securing
	- - - - - -			-	Includes:
	213-0004-00			1	SCREW, set, 6-32 x 3/16 inch HSS
20	337-0675-00			1	SHIELD, top
	- - - - - -			-	Mounting Hardware: (not included)
	211-0503-00			3	SCREW, 6-32 x 5/16 inch BHS
21	337-0676-00			1	SHIELD, bottom
	- - - - - -			-	Mounting Hardware: (not included)
	211-503-00			3	SCREW, 6-32 x 5/16 inch BHS
22	337-0510-00			1	SHIELD, middle
	- - - - - -			-	Mounting Hardware: (not included)
23	210-0803-00			1	WASHER, 6L x 3/8 inch
	211-0507-00			2	SCREW, 6-32 x 5/16 inch BHS
24	129-0051-00			2	POST, binding, assembly
	- - - - - -			-	Each Includes:
	200-0182-00			1	CAP, binding post
	210-0011-00			1	LOCKWASHER, internal, 1/4 inch
	210-0455-00			1	NUT, hex, 1/4-28 x 3/8 inch
	355-0507-00			1	STEM, binding post adapter
25	384-0615-00			4	ROD, spacer, 12 1/4 inches long
	- - - - -			-	Mounting Hardware For Each: (not included)
	212-0044-00			1	SCREW, 8-32 x 1/2 inch RHS, phillips
26	406-0845-00			2	BRACKET, ground
27	333-0808-00			1	PANEL, front
28	358-0178-00	100	3519	1	BUSHING, panel, charcoal
	358-0216-00	3520		1	BUSHING, panel, gray
29	337-0507-00			1	SHIELD, top box
	- - - - - -			-	Mounting Hardware: (not included)
	211-0503-00			2	SCREW, 6-32 x 3/16 inch BHS
30	337-0506-00			1	SHIELD, bottom box
	- - - - - -			-	Mounting Hardware: (not included)
	211-0503-00			2	SCREW, 6-32 x 3/16 inch BHS

EXPLODED VIEW (Cont'd)

REF. NO.	PART NO.	SERIAL / MODEL NO. EFF.	SERIAL / MODEL NO. DISC.	QTY.	DESCRIPTION
31	131-0126-00			2	CONNECTOR, coaxial, chassis mounted, BNC
	210-0241-00			2	LUG, ground
32	131-0149-00			1	CONNECTOR, chassis mounted, 24 contact
	- - - - - -			-	Mounting Hardware: (not included)
	210-0004-00			1	LOCKWASHER, internal, #4
	210-0201-00			1	LUG, solder, SE #4
	210-0406-00			2	NUT, hex, 4-40 x 3/16 inch
	211-0008-00			2	SCREW, 4-40 x 1/4 inch BHS
33	131-0182-00			7	CONNECTOR, terminal, feed thru
	- - - - - -			-	Mounting Hardware For Each: (not included)
	358-0136-00			1	BUSHING, teflon
34	131-0235-00			1	CONNECTOR, terminal
	- - - - - -			-	Mounting Hardware: (not included)
	358-0136-00			1	BUSHING, teflon
35	136-0015-00			2	SOCKET, STM9G
	- - - - - -			-	Mounting Hardware For Each: (not included)
	213-0044-00			2	SCREW, thread forming, 5-32 x 3/16 inch PHS
36	136-0101-00			4	SOCKET, 5 pin
	- - - - - -			-	Mounting Hardware For Each: (not included)
	213-0055-00			2	SCREW, thread forming, 2-56x 3/16 inch PHS
37	136-0174-00			2	SOCKET, 9 pin
	- - - - - -			-	Mounting Hardware For Each: (not included)
	213-0044-00			2	SCREW, thread forming, 5-32 x 3/16 inch PHS
38	136-0181-00			22	SOCKET, transistor, 3 pin
	- - - - - -			-	Mounting Hardware For Each: (not included)
	354-0234-00			1	RING, mounting
39	214-0052-00			1	FASTENER, right, with stop
	- - - - - -			-	Mounting Hardware (not included)
	210-0004-00			2	LOCKWASHER, internal, #4
	210-0406-00			2	NUT, hex, 4-40x 3/16 inch
40	214-0276-00			2	SPRING, ground
	- - - - - -			-	Mounting Hardware For Each: (not included)
	210-0006-00			1	LOCKWASHER, internal, #6
	210-0407-00			1	NUT, hex, 6-32 x 1/4 inch
	211-0504-00			1	SCREW, 6-32 x 1/4 inch BHS
41	343-0089-00			2	CLAMP, cable, delrin
42	351-0037-00			1	GUIDE, delrin
	- - - - - -			-	Mounting Hardware: (not included)
	210-0004-00			1	LOCKWASHER, internal, #4
	210-0406-00			1	NUT, hex, 4-40 x 3/16 inch
	211-0013-00			1	SCREW, 4-40 x 3/8 inch RHS
43	358-0075-00			2	BUSHING, 1/4-32x .295 inch long
44	387-0647-00			1	PLATE, rear
45	387-0660-00			1	PLATE, front

EXPLODED VIEW (Cont'd)

REF. NO.	PART NO.	SERIAL / MODEL NO. EFF.	SERIAL / MODEL NO. DISC.	QTY.	DESCRIPTION
46	406-814			1	BRACKET, pot
	- - - -			-	Mounting Hardware: (not included)
	211-507			2	SCREW, 6-32 x 5/16, inch BHS
47	426-121			1	HOLDER, toroid, nylon
	- - - -			-	Mounting Hardware: (not included)
	361-007			1	SPACER, nylon
48	441-544			1	CHASSIS
	- - - -			-	Mounting Hardware: (not included)
	211-507			2	SCREW, 6-32 x 5/16 inch BHS
	211-538			3	SCREW, 6-32 x 5/16 inch FHS, phillips
49	- - - -			-	Mounting Hardware For Pot:
	210-413			1	NUT, hex, 3/8-32 x 1/2 inch
	210-840			1	WASHER, .390 ID x 9/16 inch OD
50	376-011			1	COUPLING, insulating, nylon
	- - - -			-	Includes:
	213-048			2	SCREW, set, 4-40 x 1/8 inch HSS
51	352-067			2	HOLDER, single
	- - - -			-	Mounting Hardware For Each: (not included)
	210-406			1	NUT, hex, 4-40 x 3/16 inch
	211-031			1	SCREW, 4-40 x 1 inch FHS
52	378-541			1	FILTER, lens, neon light
53	348-002			1	GROMMET, rubber, 1/4 inch
54	348-004			5	GROMMET, rubber, 3/8 inch
55	348-005			1	GROMMET, rubber, 1/2 inch
56	384-246			1	ROD, extension
57	260-448			2	SWITCH, unwired - AC-DC-GND (CH 1 and 2)
	- - - -			-	Mounting Hardware For Each: (not included)
	210-406			2	NUT, hex, 4-40 x 3/16 inch
58	406-800			1	BRACKET, switch, slide
	- - - -			-	Mounting Hardware: (not included)
	211-504			2	SCREW, 6-32 x 1/4 inch BHS
59	406-949			1	BRACKET, switch, slide
	- - - -			-	Mounting Hardware: (not included)
	210-004			2	LOCKWASHER, internal, #4
	210-406			2	NUT, hex, 4-40 x 3/16 inch
60	406-918			1	BRACKET, slide, switch, actuator
61	260-447			1	SWITCH, unwired - TRIGGER
62	384-304			1	ROD, extension, with knob
63	210-204			3	LUG, solder, DE #4
	- - - -			-	Mounting Hardware For Each: (not included)
	213-044			1	SCREW, thread cutting, 5-32 x 3/16 inch PHS, phillips
64	210-201			4	LUG, solder, SE #4
	- - - -			-	Mounting Hardware For Each: (not Included)
	213-044			1	SCREW, thread cutting, 5-32 x 3/16 inch PHS, phillips

EXPLODED VIEW (Cont'd)

REF. NO.	PART NO.	SERIAL / MODEL NO. EFF.	SERIAL / MODEL NO. DISC.	QTY.	DESCRIPTION
65	- - - - - -			-	Mounting Hardware For Miniature Pot:
	210-0583-00			1	NUT, hex, 1/4-32 x 5/16 inch
	210-0940-00			1	WASHER, 1/4 ID x 3/8 inch OD
66	210-0259-00			6	LUG, solder, #2
	- - - - - -			-	Mounting Hardware For Each: (not included)
	213-0055-00			1	SCREW, thread forming, 2-32 x 3/16 inch UHS
67	- - - - - -			-	Mounting Hardware For Coil:
	213-0088-00			1	SCREW, thread forming, #4 x 1/4 inch PHS
68	- - - - - -			-	Mounting Hardware For Miniature Pot:
	210-0223-00			1	LUG, solder, 1/4 inch hole
	210-0583-00			1	NUT, hex, 1/4-32 x 5/16 inch
69	- - - - - -			-	Mounting Hardware For Coil:
	213-0054-00			1	SCREW, thread cutting, 6-32 x 5/16 inch PHS
70	- - - - - -			-	Mounting Hardware For 10 Watt Resistor:
	210-0203-00			1	LUG, solder, SE #6 long
	210-0478-00			1	NUT, hex, 5/16 x 21/32 inch long
	210-0601-00			1	EYELET
	211-0538-00			1	SCREW, 6-32 x 5/16 inch FHS 100" CSK
	211-4553-00			1	SCREW, 6-32 x 1-1/2 inches RHS
71	- - - - - -			-	Mounting Hardware For 5 Watt Resistor:
	210-0478-00			1	NUT, hex, 5/16 x 21/32 inch long
	211-0507-00			1	SCREW, 6-32 x 5/16 inch BHS
	211-0544-00			1	SCREW, 6-32 x 3/4 inch THS
72	343-0006-00			2	CLAMP, cable, 1/2 inch plastic
	- - - - - -			-	Mounting hardware For Each: (not included)
	210-0457-00			1	NUT, keps, 6-32x 5/16 inch
	210-0803-00			1	WASHER, 6L x 3/8 inch
	211-0538-00			1	SCREW, 6-32 x 5/16 inch FHS
73	119-0033-00			1	DELAY LINE ASSEMBLY
	- - - - - -			-	Includes:
	131-0272-00			2	CONNECTOR, cable
	200-0568-00			1	COVER, delay line
	210-0457-00			1	NUT, keps, 6-32 x 5/16 inch
	211-0507-00			2	SCREW, 6-32 x 5/16 inch BHS
	211-0503-00			1	SCREW, 6-32 x 3/16 inch, PHS
	211-0529-00			1	SCREW, 6-32 x 1-1/4 inches BHS
	343-0108-00			1	CLAMP, delay line
	- - - - - -			-	Mounting Hardware: (not included)
	211-0504-00			4	SCREW, 6-32 x 1/4 inch BHS
	213-0104-00			1	SCREW, thread forming, #6 x 3/8 inch THS
74	124-0087-00			1	STRIP, ceramic, 3/4 inch x 3 notches
	- - - - - -			-	Includes:
	355-0046-00			1	STUD, nylon
	- - - - - -			-	Mounting Hardware: (not included)
	361-0007-00			1	SPACER, nylon

EXPLODED VIEW (Cont'd)

REF. NO.	PART NO.	SERIAL / MODEL NO. EFF.	SERIAL / MODEL NO. DISC.	QTY.	DESCRIPTION
75	124-0118-00			1	STRIP, ceramic, 1 notch
	- - - - - -			-	Includes:
	355-0046-00			1	STUD, nylon
	- - - - - -			-	Mounting Hardware: (not included)
	361-0009-00			1	SPACER, nylon
76	124-0145-00			4	STRIP, ceramic, 76 inch x20 notches
	- - - - - -			-	Each Includes:
	355-0046-00			2	STUD, nylon
	- - - - - -			-	Mounting Hardware For Each: (not included)
	361-0009-00			2	SPACER, nylon
77	124-0146-00			14	STRIP, ceramic, 7/16 inch x 16 notches
	- - - - - -			-	Each Includes:
	355-0046-00			2	STUD, nylon
	- - - - - -			-	Mounting Hardware For Each: (not included)
	361-0009-00			2	SPACER, nylon
78	179-0874-00			1	CABLE harness, chassis
79	179-0875-00			1	CABLE, harness, calibrator
80	337-0650-00			1	SHIELD, RF
81	136-0181-00	100	114	2	SOCKET, 3 pin, transistor
	136-0182-00	115		2	SOCKET, 4 pin transistor
	- - - - - -			-	Mounting Hardware For Each: (not included w/socket)
	354-0234-00			1	RING, locking, transistor socket
					STANDARD ACCESSORIES
	070-0419-00			2	MANUAL, instruction (not shown)

ELECTRICAL PARTS

Values are fixed unless marked Variable

Ckt. No.	Tektronix Part No.	Description					S/N Range
		Bulbs					
B113	150-027	Neon, NE-23					
B150	Use 150-025	Neon, NE-2E		UNCAL			100-5779
B150	150-0030-00	Neon, NE-2V		UNCAL			5780-up
B213	150-027	Neon, NE-23					
B250	Use 150-025	Neon, NE-2E		UNCAL			100-5779
B250	150-0030-00	Neon, NE-2V		UNCAL			5780-up
		Capacitors					

Tolerance ± 20% unless otherwise indicated.

Tolerance of all electrolytic capacitors as follows (with exceptions):

3 V -	50 V =	-10%, +250%
51 V -	350 V =	-10%, +100%
351 V -	450 V =	-10%, + 50%

C101	*285-609	0.1 mf	PTM		600 v	10%	
C102	281-0626-00	3.3 pf	Cer		500 v	5%	X1950-up
C103A	281-501	4.7 pf	Cer		500 v	± 1 pf	
C103B	281-103	1.8-13 pf	Air	Var			
C103C	281-103	1.8-13 pf	Air	Var			
C103D	281-541	6.8 pf	Cer		500 v	10%	
C105A	281-501	4.7 pf	Cer		500 v	± 1 pf	
C105B	281-103	1.8-13 pf	Air	Var			
C105C	281-101	1.5-9.1 pf	Air	Var			
C105E	281-503	8 pf	Cer		500 v	± 0.5 pf	
C107A	281-509	15 pf	Cer		500v	10%	
C107B	281-103	1.8-13 pf	Air	Var			
C107C	281-101	1.5-9.1 pf	Air	Var			
C107E	281-513	27 pf	Cer		500 v		
C109A	281-509	15 pf	Cer		500 v	10%	
C109B	281-103	1.8-13 pf	Air	Var			
C109C	281-101	1.5-9.1 pf	Air	Var			
C109E	283-541	500 pf	Mica		500 v	10%	
C110	281-509	15 pf	Cer		500 v	10%	
C111	281-103	1.8-13 pf	Air	Var			
C112	281-101	1.5-9.1 pf	Air	Var			
C113	283-068	0.01 mf	Cer		500 v		
C114	281-500	2.2 pf	Cer		500 v	± 0.5 pf	
C115	283-057	0.1 mf	Cer		200 v		
C123	283-003	0.01 mf	Cer		150 v		
C125	283-003	0.01 mf	Cer		150 v		

Capacitors (Cont'd)

Ckt. No.	Tektronix Part No.	Description					S/N Range
C132	283-0059-00	1 mf	Cer		25 v		X1650-up
C137	281-549	68 pf	Cer		500 v	10%	
C149	281-523	100 pf	Cer		350 v		X240-up
C172	283-003	0.01 mf	Cer		150 v		
C201	*285-609	0.1 mf	PTM		600 v	10%	
C202	281-0626-00	3.3 pf	Cer		500 v	5%	X1950-up
C203A	281-501	4.7 pf	Cer		500 v	± 1 pf	
C203B	281-103	1.8-13 pf	Air	Var			
C203C	281-103	1.8-13 pf	Air	Var			
C203D	281-541	6.8 pf	Cer		500 v	10%	
C205A	281-501	4.7 pf	Cer		500 v	± 1 pf	
C205B	281-103	1.8-13 pf	Air	Var			
C205C	281-101	1.5-9.1 pf	Air	Var			
C205E	281-503	8 pf	Cer		500 v	± 0.5 pf	
C207A	281-509	15 pf	Cer		500 v	10%	
C207B	281-103	1.8-13 pf	Air	Var			
C207C	281-101	1.5-9.1 pf	Air	Var			
C207E	281-513	27 pf	Cer		500 v		
C209A	281-509	15 pf	Cer		500 v	10%	
C209B	281-103	1.8-13 pf	Air	Var			
C209C	281-101	1.5-9.1 pf	Air	Var			
C209E	283-541	500 pf	Mica		500 v	10%	
C210	281-509	15 pf	Cer		500 v	10%	
C211	281-103	1.8-13 pf	Air	Var			
C212	281-101	1.5-9.1 pf	Air	Var			
C213	283-068	0.01 mf	Cer		500 v		
C214	281-500	2.2 pf	Cer		500 v	±0.5 pf	
C215	283-057	0.1 mf	Cer		200 v		
C223	283-003	0.01 mf	Cer		150 v		
C225	283-003	0.01 mf	Cer		150 v		
C232	283-0059-00	1 mf	Cer		25 v		X1650-up
C237	281-549	68 pf	Cer		500 v	10%	
C249	281-523	100 pf	Cer		350 v		X240-up
C260	Use 281-518	47 pf	Cer		500 v		100-6299
C260	281-0523-00	100 pf	Cer		350 v		6300-up
C262	283-051	0.0033 mf	Cer		100 v		
C263	283-003	0.01 mf	Cer		150 v		
C265	283-057	0.1 mf	Cer		200 v		
C269	283-003	0.01 mf	Cer		150 v		
C271	281-513	27 pf	Cer		500 v		
C277	281-523	100 pf	Cer		350 v		
C287	281-523	100 pf	Cer		350 v		
C291	283-003	0.01 mf	Cer		150 v		
C300	281-621	12 pf	Cer		500 v	1%	100-6299
C300	281-0510-00	22 pf	Cer		500 v		6300-up
C303	281-622	47 pf	Cer		500 v	1%	
C305	281-546	330 pf	Cer		500 v	10%	
C307	281-575	39 pf	Cer		500 v	1%	
C308	281-518	47 pf	Cer		500 v	10%	X240-up
C309	281-542	18 pf	Cer		500 v		100-239X
C318	281-518	47 pf	Cer		500 v		X240-up
C321	281-564	24 pf	Cer		500 v	5%	
C331	281-564	24 pf	Cer		500 v	5%	
C345	283-000	0.001 mf	Cer		500 v		
C350	281-0593-00	3.9 pf	Cer			10%	X6300-up
C364	283-003	0.01 mf	Cer		150 v		

Capacitors (Cont'd)

Ckt. No.	Tektronix Part No.	Description				S/N Range
C379	283-026	0.2 mf	Cer	25 v		
C381	283-003	0.01 mf	Cer	150 v		
C383	283-003	0.01 mf	Cer	150 v		
C385	283-006	0.02 mf	Cer	600 v		
C393	283-003	0.01 mf	Cer	150 v		
C395	281-0605-00	200 pf	Cer	500 v		X1810-up
C407	281-501	4.7 pf	Cer	500 v	± 1 pf	
C413	283-003	0.01 mf	Cer	150 v		
C421	283-002	0.01 mf	Cer	500 v		
C445	281-538	1 pf	Cer	500 v		100-2539X
C446	281-0537-00	0.68 pf	Cer	500 v		X6300-up
C447	283-003	0.01 mf	Cer	150 v		
C451	283-003	0.01 mf	Cer	150 v		
C452	283-026	0.2 mf	Cer	25 v		
C453	290-134	22 mf	EMT	15 v		
C457	283-004	0.02 mf	Cer	150 v		
C458	283-003	0.01 mf	Cer	150 v		
C461	283-059	1 mf	Cer	25 v		
C462	283-003	0.01 mf	Cer	150 v		

Diodes

D130	Use *152-0185-00	Silicon	Replaceable by 1N4152	
D131	Use *152-0185-00	Silicon	Replaceable by 1N4152	
D132	152-008	Germanium		100-6299
D132	*152-0185-00	Silicon	Replaceable by 1N4152	6300-up
D140	Use *152-0185-00	Silicon	Replaceable by 1N4152	
D155	152-141	Silicon	1N4152	100-6299
D155	152-0141-02	Silicon	1N4152	6300-up
D156	152-141	Silicon	1N4152	100-6299
D156	152-0141-02	Silicon	1N4152	6300-up
D157	152-141	Silicon	1N4152	100-6299
D157	152-0141-02	Silicon	1N4152	6300-up
D158	152-141	Silicon	1N4152	100-6299
D158	152-0141-02	Silicon	1N4152	6300-up
D230	Use *152-0185-00	Silicon	Replaceable by 1N4152	
D231	Use *152-0185-00	Silicon	Replaceable by 1N4152	
D232	152-008	Germanium		100-6299
D232	152-0185-00	Silicon	Replaceable by 1N4152	6300-up
D240	Use *152-0185-00	Silicon	Replaceable by 1N4152	
D255	152-141	Silicon	1N4152	100-6299
D255	152-0141-02	Silicon	1N4152	6300-up
D256	152-141	Silicon	1N4152	100-6299
D256	152-0141-02	Silicon	1N4152	6300-up
D257	152-141	Silicon	1N4152	100-6299
D257	152-0141-02	Silicon	1N4152	6300-up
D258	152-141	Silicon	1N4152	100-6299
D258	152-0141-02	Silicon	1N4152	6300-up
D259	*152-0075-00	Germanium	Tek Spec	X4160-6299
D259	*152-0185-00	Silicon	Replaceable by 1N4152	6300-up
D260	Use *152-0185-00	Silicon	Replaceable by 1N4152	
D263	Use *152-0185-00	Silicon	Replaceable by 1N4152	

Diodes (Cont'd)

Ckt. No.	Tektronix Part No.		Description		S/N Range
D267	*152-061	Silicon	Tek Spec		
D271	*152-0185-00	Silicon	Replaceable by 1N4152		X6300-up
D278	Use *152-0185-00	Silicon	Replaceable by 1N4152		
D288	Use *152-0185-00	Silicon	Replaceable by 1N4152		
D365	Use *152-0185-00	Silicon	Replaceable by 1N4152		
D375	Use *152-0185-00	Silicon	Replaceable by 1N4152		
D379	152-024	Zener	1N3024B	1 w, 15v, 5%	
D423	Use *152-0185-00	Silicon	Replaceable by 1N4152		
D424	Use *152-0185-00	Silicon	Replaceable by 1N4152		
D425	Use *152-0185-00	Silicon	Replaceable by 1N4152		
D447	152-031	Zener	1N718A	1/4 w, 15 v, 5%	100-5039
D447	152-0243-00	Zener	1N965B	0.4 w, 15 v, 5%	5040-up
D451	152-057	Zener	1N3807B	1 w, 56 v, 5%	100-4495
D451	152-0264-00	Zener	UZ756	3 w, 56 v, 5%	4496-up

Inductors

LR103	*108-283	0.13 mh	(wound on a 43Ω resistor)		
LR105	*108-286	0.17 mh	(wound on a 36Ω resistor)		
LR107	*108-283	0.13 mh	(wound on a 43Ω resistor)		
L160	*108-072	0.75 mh			
L170	*108-072	0.75 mh			
LR203	*108-283	0.13 mh	(wound on a 43Ω resistor)		
LR205	*108-286	0.17 mh	(wound on a 36Ω resistor)		
LR207	*108-283	0.13 mh	(wound on a 43Ω resistor)		
L319	*119-033	Delay Line Ass			
L344	*108-253	7.8 mh			
L354	*108-253	7.8 mh			
L379	*108-200	40 mh			
L384	*114-151	35-50 mh		Var	Core 276-511
L394	*114-151	35-50 mh		Var	Core 276-511
L452	*108-016	29 mh			
L462	108-245	3.9 mh			

Transistors

Q133	151-107	2N967	100-6299
Q133	151-0220-00	2N4122	6300-up
Q134	Use 151-131	2N964	100-6299
Q134	151-0221-00	2N4258	6300-7300
Q134	151-0199-00	MPS-3640	7301-up
Q143	151-107	2N967	100-6299
Q143	151-0220-00	2N4122	6300-up
Q144	Use 151-131	2N964	100-6299
Q144	151-0221-00	2N4258	6300-7300
Q144	151-0199-00	MPS-3640	7301-up
Q164	151-076	2N2048	100-6299
Q164	151-0220-00	2N4122	6300-up
Q174	151-076	2N2048	100-6299
Q174	151-0220-00	2N4122	6300-up
Q233	151-107	2N967	100-6299
Q233	151-0220-00	2N4122	6300-up
Q234	Use 151-131	2N964	100-6299
Q234	151-0221-00	2N4258	6300-7300
Q234	151-0199-00	MPS-3640	7301-up
Q243	151-107	2N967	100-6299
Q243	151 -0220-00	2N4122	6300-up

Transistors (cont)

Ckt. No.	Tektronix Part No.	Description	S/N Range
Q244	Use 151-131	2N964	100-6299
Q244	151-0221-00	2N4258	6300-up
Q260	151-063	2N2207	100-6299
Q260	*151-0228-00	Tek Spec	6300-up
Q263	151-063	2N2207	100-6299
Q263	*151-0228-00	Tek Spec	6300-up
Q275	151-076	2N2048	100-6299
Q275	151-0188-00	2N3906	6300-up
Q285	151-076	2N2048	100-6299
Q285	151-0188-00	2N3906	6300-up
Q304	151-107	2N967	100-6299
Q304	151-0221-00	2N4258	6300-up
Q314	151-107	2N967	100-6299
Q314	151-0221-00	2N4258	6300-up
Q324	151-107	2N967	100-6299
Q324	151-0221-00	2N4258	6300-up
Q334	151-107	2N967	100-6299
Q334	151-0221-00	2N4258	6300-up
Q364	151-107	2N967	100-6299
Q364	151-0164-00	2N3702	6300-up
Q374	151-107	2N967	100-6299
Q374	151-0164-00	2N3702	6300-up
Q404	151-076	2N2048	100-6299
Q404	151-0220-00	2N4122	6300-up
Q414	151-076	2N2048	100-6299
Q414	151-0220-00	2N4122	6300-up
Q433	151-107	2N967	100-6299
Q433	151-0220-00	2N4122	6300-up
Q444	*151-121	Selected from TA1938	

Resistors

Resistors are fixed, composition, ± 10% unless otherwise indicated.

R101	302-100	10 Ω	1/2 w			
R103C	322-643	600 k	1/4 w	Prec	1%	100-3499
R103C	322-0643-01	600 k	1/4 w	Prec	1/2%	3500-up
R103E	322-644	666.6 k	1/4 w	Prec	1%	100-3499
R103E	322-0644-01	666.6 k	1/4 w	Prec	1/2%	3500-up
R105C	322-620	800 k	1/4 w	Prec	1%	100-3499
R105C	322-0620-01	800 k	1/4 w	Prec	1/2%	3500-up
R105E	322-614	250 k	1/4 w	Prec	1%	100-3499
R105E	322-0614-01	250 k	1/4 w	Prec	1/2%	3500-up
R107C	322-621	900 k	1/4 w	Prec	1%	100-3499
R107C	322-0621-01	900 k	1/4 w	Prec	1/2%	3500-up
R107E	322-608	111 k	1/4 w	Prec	1%	100-3499
R107E	322-1389-01	111 k	1/4 w	Prec	1/2%	3500-up
R109A	315-101	100 Ω	1/4 w		5%	
R109C	322-624	990 k	1/4 w	Prec	1%	100-3499
R109C	322-0624-01	990 k	1/4 w	Prec	1/2%	3500-up
R109D	315-510	51 Ω	1/4 w		5%	
R109E	322-605	10.1 k	1/4 w	Prec	1%	100-3499
R109E	322-1289-01	10.1 k	1/4 w	Prec	1/2%	3500-up
R109F	316-150	15 Ω	1/4 w			
R110	315-470	47 Ω	1/4 w		5%	
R111	322-481	1 meg	1/4 w	Prec	1%	100-3499
R111	322-0481-01	1 meg	1/4 w	Prec	1/2%	3500-up

Resistors (Cont'd)

Ckt. No.	Tektronix Part No.	Description					S/N Range
R109D	315-510	51 Ω	1/4 w			5%	
R109E	322-605	10.1 k	1/4 w		Prec	1%	100-3499
R109E	322-1289-01	10.1 k	1/4 w		Prec	1/2%	3500-up
R109F	316-150	15 Ω	1/4 w				
R110	315-470	47 Ω	1/4 w			5%	
R111	322-481	1 meg	1/4 w		Prec	1%	100-3499
R111	322-0481-01	1 meg	1/4 w		Prec	1/2%	3500-up
R113	315-105	1 meg	1/4 w			5%	
R114	316-101	100 Ω	1/4 w				
R115	302-221	220 Ω	1/2 w				
R116	301-562	5.6 k	1/2 w			5%	
R119	311-321	2 x 500 k		Var		CH 1 DC BAL	
R120	316-335	3.3 meg	1/4 w				
R121	302-274	270 k	1/2 w				
R123	316-182	1.8 k	1/4 w				
R124	316-101	100 Ω	1/4 w				
R125	316-101	100 Ω	1/4 w				
R126	301-562	5.6 k	1/2 w			5%	
R131	316-0103-00	10 k	1/4 w				X1650-up
R132	316-0472-00	4.7 k	1/4 w				X1650-up
R133	301-431	430 Ω	1/2 w			5%	
R134	315-391	390 Ω	1/4 w			5%	
R135	322-224	2.1 k	1/4 w		Prec	1%	
R137	316-470	47 Ω	1/4 w				
R138	315-391	390 Ω	1/4 w			5%	
R139†	*311-319	375 Ω		Var		CH 1 VARIABLE	
R142	322-210	1.5 k	1/4 w		Prec	1%	
R143	301-431	430 Ω	1/2 w			5%	
R144	315-391	390 Ω	1/4 w			5%	
R145	322-224	2.1 k	1/4 w		Prec	1%	
R147	311-258	100 Ω		Var		CH 1 20 MV GAIN	
R148	316-680	68 Ω	1/4 w				
R149	311-258	100 Ω		Var		CH 1 10 MV GAIN	
R150	316-104	100 k	1/4 w				
R151	302-683	68 k	1/2 w				
R152	301-163	16 k	1/2 w			5%	
R153	311-414	2 x 250 k		Var		CH 1 POSITION	
R154	302-683	68 k	1/2 w				
R160	316-221	220 Ω	1/4 w				
R164	315-622	6.2 k	1/4 w			5%	
R167	322-617	47.7 Ω	1/4 w		Prec	1%	
R170	316-221	220 Ω	1/4 w				
R171	311-448	20 k		Var		CH 1 TRIG DC LEVEL	
R172	316-333	33 k	1/4 w				
R174	315-622	6.2 k	1/4 w			5%	
R201	302-100	10 Ω	1/2 w				
R203C	322-643	600 k	1/4 w		Prec	1%	100-3499
R203C	322-0643-01	600 k	1/4 w		Prec	1/2 %	3500-up
R203E	322-644	666.6 k	1/4 w		Prec	1%	100-3499
R203E	322-0644-01	666.6 k	1/4 w		Prec	1/2 %	3500-up
R205C	322-620	800 k	1/4 w		Prec	1 %	100-3499
R205C	322-0620-01	800 k	1/4 w		Prec	1/2 %	3500-up
R205E	322-614	250 k	1/4 w		Prec	1%	100-3499
R205E	322-0614-01	250 k	1/4 w		Prec	1/2 %	3500-up
R207C	322-621	900 k	1/4 w		Prec	1%	100-3499

† Furnished as a unit with SW150.

Resistors (Cont'd)

Ckt. No.	Tektronix Part No.	Description					S/N Range
R209D	315-510	51 Ω	1/4 w			5%	
R209E	322-605	10.1 k	1/4 w		Prec	1%	100-3499
R209E	322-1289-01	10.1 k	1/4 w		Prec	1/2%	3500-up
R209F	316-150	15 Ω	1/4 w				
R210	315-470	47 Ω	1/4 w			5%	
R211	322-481	1 meg	1/4 w		Prec	1%	100-3499
R211	322-0481-01	1 meg	1/2 w		Prec	1/2%	3500-up
R213	315-105	1 meg	1/4 w			5%	
R214	316-101	100 Ω	1/4 w				
R215	302-221	220 Ω	1/2 w				
R216	301-562	5.6 k	1/2 w			5%	
R219	311-321	2 x 500 k		Var		CH 2 DC BAL	
R220	316-335	3.3 meg	1/4 w				
R221	302-274	270 k	1/2 w				
R223	316-182	1.8 k	1/4 w				
R224	316-101	100 Ω	1/4 w				
R225	316-101	100 Ω	1/4 w				
R226	301-562	5.6 k	1/2 w			5%	
R231	316-0103-00	10 k	1/4 w				X1650-up
R232	316-0472-00	4.7 k	1/4 w				X1650-up
R233	301-431	430 Ω	1/2 w			5%	
R234	315-391	390 Ω	1/4 w			5%	
R235	322-224	2.1 k	1/4 w		Prec	1%	
R237	316-470	47 Ω	1/4 w				
R238	315-391	390 Ω	1/4 w			5%	
R239†	*311-319	375 Ω		Var		CH 2 VARIABLE	
R242	322-210	1.5 k	1/4 w		Prec	1%	
R243	301-431	430 Ω	1/2 w			5%	
R244	315-391	390 Ω	1/4 w			5%	
R245	322-224	2.1 k	1/4 w		Prec	1%	
R247	311-258	100 Ω		Var		CH 2 20 MV GAIN	
R248	316-680	68 Ω	1/4 w				
R249	311-258	100 Ω		Var		CH 2 10 MV GAIN	
R250	316-104	100 k	1/4 w				
R251	302-683	68 k	1/2 w				
R252	301-163	16 k	1/2 w			5%	
R253	311-114	2 x 250 k		Var		CH 2 POSITION	
R254	302-683	68 k	1/2 w				
R259	315-0183-00	18 k	1/4 w			5%	X4160-up
R260	316-102	1 k	1/4 w				100-6299
R260	316-0222-00	2.2 k	1/4 w				6300-up
R261	315-221	220 Ω	1/4 w			5%	
R262	315-682	6.8 k	1/4 w			5%	100-6299
R262	315-0622-00	6.2 k	1/4 w			5%	6300-up
R263	302-470	47 Ω	1/2 w				
R264	316-102	1 k	1/4 w				
R265	301-822	8.2 k	1/2 w			5%	
R266	316-331	330 Ω	1/4 w				
R267	303-822	8.2 k	1 w			5%	
R268	301-183	18 k	1/2 w			5%	
R269	316-101	100 Ω	1/4 w				
R271	302-103	10 k	1/2 w				
R273	301-202	2 k	1/2 w			5%	
R275	301-202	2 k	1/2 w			5%	

† Furnished as a unit with SW250.

Resistors (Cont'd)

Ckt. No.	Tektronix Part No.	Description					S/N Range
R267	303-822	8.2 k	1 w			5%	
R268	301-183	18 k	1/2 w			5%	
R269	316-101	100 Ω	1/4 w				
R271	302-103	10 k	1/2 w				
R273	301-202	2 k	1/2 w			5%	
R275	301-202	2 k	1/2 w			5%	
R276	322-287	9.53 k	1/4 w		Prec	1%	100-6299
R276	321-0297-00	12.1 k	1/8 w		Prec	1%	6300-up
R277	322-239	3.01 k	1/4 w		Prec	1%	
R278	322-155	402 Ω	1/4 w		Prec	1%	
R279	322-171	590 Ω	1/4 w		Prec	1%	
R285	301-202	2 k	1/2 w			5%	
R286	322-287	9.53 k	1/4 w		Prec	1%	100-6299
R286	321-0297-00	12.1 k	1/8 w		Prec	1%	6300-up
R287	322-239	3.01 k	1/4 w		Prec	1%	
R288	322-155	402 Ω	1/4 w		Prec	1%	
R289	322-171	590 Ω	1/4 w		Prec	1%	
R291	302-100	10 Ω	1/2 w				
R292	315-152	1.5 k	1/4 w			5%	
R293	322-207	1.4 k	1/4 w		Prec	1%	
R294	322-207	1.4 k	1/4 w		Prec	1%	
R300	322-201	1.21 k	1/4 w		Prec	1%	
R301	323-330	26.7 k	1/2 w		Prec	1%	
R302	322-123	187 Ω	1/4 w		Prec	1%	
R303	322-218	1.82 k	1/4 w		Prec	1%	
R304	322-123	187 Ω	1/4 w		Prec	1%	
R305	315-273	27 k	1/4 w			5%	
R306	322-130	221 Ω	1/4 w		Prec	1%	
R307	322-297	12.1 k	1/4 w		Prec	1%	
R308	322-089	82.5 Ω	1/4 w		Prec	1%	
R309	315-221	220 Ω	1/4 w			5%	101-239X
R311	323-330	26.7 k	1/2 w		Prec	1%	
R312	322-123	187 Ω	1/4 w		Prec	1%	
R314	322-123	187 Ω	1/4 w		Prec	1%	
R318	322-089	82.5 Ω	1/4 w		Prec	1%	
R320	322-051	33.2 Ω	1/4 w		Prec	1%	
R321	322-068	49.9 Ω	1/4 w		Prec	1%	
R322	322-251	4.02 k	1/4 w		Prec	1%	
R324	322-151	365 Ω	1/4 w		Prec	1%	
R326	322-147	332 Ω	1/4 w		Prec	1%	
R330	322-051	33.2 Ω	1/4 w		Prec	1%	
R331	322-068	49.9 Ω	1/4 w		Prec	1%	
R332	322-251	4.02 k	1/4 w		Prec	1%	
R334	322-151	365 Ω	1/4 w		Prec	1%	
R341	316-470	47 Ω	1/4 w				
R344	322-200	1.18 k	1/4 w		Prec	1%	
R345	316-101	100 Ω	1/4 w				
R346	311-323	1.5 k		Var		OUTPUT DC LEVEL	
R347	322-154	392 Ω	1/4 w		Prec	1%	
R348	305-682	6.8 k	2 w			5%	
R349	322-209	1.47 k	1/4 w		Prec	1%	
R350	315-0102-00	1 k	1/4 w			5%	X6300-up
R351	316-470	47 Ω	1/4 w				
R354	322-200	1.18 k	1/4 w		Prec	1%	

Resistors (Cont'd)

Ckt. No.	Tektronix Part No.	Description					S/N Range
R376	301-622	6.2 k	1/2 w			5%	
R377	308-251	256 Ω	5 w		WW	5%	
R380	316-470	47 Ω	1/4 w				
R381	316-470	47 Ω	1/4 w				
R383	302-274	270 k	1/4 w				
R384	*310-596	1.5 k	8 w		Prec	1%	
R385	308-289	820 Ω	10 w		WW	5%	
R386	322-097	100 Ω	1/4 w		Prec	1%	
R387	303-620	62 Ω	1 w			5%	
R389	311-383	150 Ω		Var		CALIB	
R390	316-470	47 Ω	1/4 w				
R393	302-274	270 k	1/2 w				
R394	*310-596	1.5 k	8 w		Prec	1 %	
R396	322-097	100 Ω	1/4 w		Prec	1%	
R399	322-101	110 Ω	1/4 w		Prec	1%	
R401	315-471	470 Ω	1/4 w			5%	
R405	322-218	1.82 k	1/4 w		Prec	1%	
R407	322-147	332 Ω	1/4 w		Prec	1%	
R411	315-471	470 Ω	1/4 w			5%	
R412	311-448	20 k		Var		COMP TRIG DC LEVEL	
R413	Use 316-123	12 k	1/4 w				
R415	322-218	1.82 k	1/4 w		Prec	1%	
R420	302-470	47 Ω	1/2 w				
R421	316-101	100 Ω	1/4 w				
R423	323-322	22.1 k	1/2 w		Prec	1%	
R425	302-684	680 k	1/2 w				
R426	315-0820-00	82 Ω	1/4 w			5%	X6300-up
R433	315-272	2.7 k	1/4 w			5%	
R444	308-112	6 k	5 w		WW	1%	1002089
R444	308-0101-00	5.5 k	5 w		WW	5%	2090-up
R445	322-306	15k	1/4 w		Prec	1%	
R448	315-224	220 k	1/4 w			5%	100-2089
R448	304-0473-00	47 k	1 w				2090-up
R449	316-101	100 Ω	1/4 w				
R451	308-230	2.7 k	3 w		WW	5%	
R454	307-034	8.2	1/2 w				
R455	307-034	8.2 Ω	1/2 w				
R457	316-270	27 Ω	1/4 w				
R461	316-220	22 Ω	1/4 w				

Switches

	Unwired	Wired		
SW101	260-448		Slide	CH 1 AC-DC-GND
SW110	260-607	*262-653	Rotary	CH 1 VOLTS/DIV
SW150†	*311-319			CH 1 CALIB
SW155††	260-442		Rotary	CH 1 INV/NORM
SW201	260-448		Slide	CH 2 AC-DC-GND
SW210	260-607	*262-653	Rotary	CH 2 VOLTS/DIV
SW250†††	*311-319			CH 2 CALIB
SW290††	260-442		Rotate	MODE
SW420	260-447		Slide	TRIGGER CH 1 ONLY PULL

† SW150 and R139 furnished as a unit.
†† SW155 and SW290 are concentric. Furnished as a unit.
††† SW250 and R239 furnished as a unit.

Switches (cont)

Ckt. No.	Tektronix Part No.	Description		S/N Range
SW210	260-607 *262-653	Rotary	CH 2 VOLTS/DIV	
SW250†††	*311-319		CH 2 CALIB	
SW290††	260-442	Rotary	MODE	
SW420	260-447	Side	TRIGGER CH 1 ONLY PULL	

Transformer

T263	*120-193	Toroid, 7T Bifilar

Electron Tubes

V113	Use *157-0121-00	7586, checked
V123	Use *157-0121-00	7586, checked
V213	Use *157-0121-00	7586, checked
V223	Use *157-0121-00	7586, checked
V344	154-187	6DJ8
V363	154-187	6DJ8
V384	154-361	8233
V394	154-361	8233

†† SW155 and SW290 are concentric. Furnished as a unit.
††† SW250 and R239 furnished as a unit.

Manufacturer's part No. cross reference to manufacturer's code and part No., and Federal stock No.

Tektronix, Inc. part No.	Mfr code No.	Mfr part No.	Federal stock number
108-0016-00	80009	108-0016-00	5950-894-3704
108-0072-00	80009	108-0072-00	5950-688-3085
108-0200-00	80009	108-0200-00	5950-965-5350
108-0245-00	76493	70F396AI	5950-914-4094
108-0253-00	80009	108-0253-00	5950-912-8988
108-0283-00	80009	108-0283-00	5950-912-8989
108-0286-00	80009	108-0286-00	5950-913-2213
414-0151-00	80009	114-0151-00	5950-963-1244
119-0033-00	80009	119-0033-00	
120-0193-00	80009	120-0193-00	5950-907-8690
124-0087-00	80009	124-0087-00	6625-677-9002
124-0118-00	80009	124-0118-00	5970-133-8828
124-0145-00	80009	124-0145-00	5940-937-0882
124-0146-00	80009	124-0146-00	5940-937-0883
129-0051-00	80009	129-0051-00	5940-839-2346
131-0126-00	95712	9663-1NT34	5935-911-9353
131-0149-00	02660	26-159-24	5935-258-2974
131-0182-00	88245	421457-9	
131-0235-00	88245	420977-9	
131-0272-00	80009	131-0272-00	
131-0344-00	88245	421837-9	5935-879-8328
136-0015-00	91662	04-903-15	5935-721-0124
136-0101-00	71785	133-65-10-003	5935-955-2146
136-0174-00	71785	149-19-11-070	
136-0181-00	80009	136-0181-00	5935-918-0469
136-0182-00	80009	136-0182-00	5935-940-2841
150-0025-00	08806	A9AT	6240-577-8456
150-0027-00	08806	5ABT	6240-057-2684
150-0030-00	08806	A2BT	
151-0063-00	73445	2N2207	
151-0076-00	87216	2N2048	
151-0107-00	04713	2N967	
151-0121-00	02735	34915	5961-914-4136
151-0131-00	04713	2N964	
151-0164-00	01295	SKB3334	5961-931-8250
151-0188-00	04713	SPS536K	
151-0199-00	04713	MPS3640	
151-0220-00	07263	S21766	
151-0221-00	07263	S24849	
151-0228-00	07263	S21862	
152-0008-00	03877	T12G	5960-984-7802
152-0024-00	04713	1N3024B	
152-0031-00	01281	1N718A	
152-0057-00	04713	1-5M56Z6	
152-0061-00	13115	FD2161	5961-905-6871
152-0075-00	72982	ED48	5961-908-7598
152-0141-00	03508	IN3605	
152-0141-02	03508	DA1195	
152-0185-00	07910	CD8204	5961-936-7604
152-0243-00	81483	1N9658	5961-879-7529
152-0264-00	12969	UZ756	
154-0187-00	73445	6DJ8ECC88	5960-679-0016
154-0361-00	73445	8233	
157-0121-00	80009	157-0121-00	
179-0874-00	80009	179-0874-00	
179-0875-00	80009	179-0875-00	
200-0182-00	80009	200-0182-00	
200-0568-00	80009	200-0568-00	
210-0004-00	78189	1204-00-00-0541C	5310-846-4613
210-0006-00	78189	1206-00-00-0541C	5310-846-4614
210-0011-00	78189	1214-00-00-0541C	
210-0012-00	78189	1220-202-00-0541C	

Manufacturer's part No. cross reference to manufacturer's code and part No., and Federal stock No. - Continued

Tektronix, Inc. part No.	Mfr code No.	Mfr part No.	Federal stock number
210-0201-00	78189	2104-04-00-2520N	5940-156-7341
210-0203-00	78189	2103-06-00-2520N	
210-0204-00	78189	2157-06-01-2520N	5940-238-9597
210-0223-00	78189	2101-14-03-2520N	5940-271-8604
210-0227-00	72653	GC7462M	
210-0241-00	80009	210-0241-00	
210-0259-00	80009	210-0259-00	
210-0406-00	73743	2X12161-402	5310-847-1337
210-0407-00	73743	3038-0228-402	5310-894-4638
210-0413-00	73743	3145-402	5310-576-7214
210-0455-00	73743	3089-402	
210-0457-00	83385	NOTE291	5310-893-5972
210-0478-00	80009	210-0478-00	5340-649-8429
210-0583-00	73743	2X20319-402	
210-0586-00	78189	NOTE240	
210-0601-00	83664	A424	5325-809-6768
210-0803-00	12327	NOTE013	5310-978-7897
210-0840-00	89663	644R	5310-275-0650
210-0940-00	79807	NOTE211	
211-0007-00	83385	NOTE035	5305-899-7867
211-0008-00	83385	NOTE036	5905-861-5761
211-0013-00	83385	NOTE039	
211-0031-00	83385	NOTE053	
211-0503-00	83385	NOTE059	
211-0504-00	83385	NOTE060	
211-0507-00	83385	NOTE062	5905-638-0557
211-0529-00	83385	NOTE076	
211-0538-00	83385	NOTE082	5305-899-3282
211-0544-00	83385	NOTE088	
211-0553-00	83385	NOTE090	5305-847-1081
212-0044-00	83385	NOTE112	
213-0004-00	74445	NOTE253	5305-841-8014
213-0044-00	83385	NOTE387	5305-957-7630
213-0048-00	74445	NOTE131	5305-952-0172
213-0054-00	83335	NOTE133	
213-0055-00	83385	NOTE255	
213-0088-00	83385	NOTE135	
213-0104-00	83385	NOTE136	
214-0052-00	24248	43-99-125-41	
214-0276-00	80009	214-0276-00	
214-0456-00	80009	214-0456-00	5910-072-8089
260-0442-00	80009	260-0442-00	5930-939-4416
260-0447-00	82389	11A1029	5930-943-0324
260-0448-00	82389	11D1002	5930-937-1242
260-0607-00	80009	260-0607-00	
262-0653-00	80009	262-0653-00	
281-0101-00	74970	189-4-4	5910-789-5294
281-0103-00	74970	189-6-4	
281-0500-00	72982	301-000C0J0229D	5910-577-1259
281-0501-00	72982	301-000S2H0479F	5910-023-9446
281-0503-00	72982	301-000C0H0809D	5910-865-5456
281-0509-00	72982	301-000C0G0150K	5910-667-3891
281-0510-00	72982	301-000C0G0220M	5910-577-1261
281-0513-00	72982	301-000P2G0270M	5910-815-5898
281-0518-00	72982	301-000U2J0470M	5910-577-1264
281-0523-00	72982	301-000U2M0101M	5910-681-9152
281-0537-00	80009	281-0537-00	5910-794-3269
281-0538-00	80009	281-0538-00	5910-828-1455
281-0541-00	72982	301-000C0H0689K	5910-984-2337
281-0542-00	72982	301-002C0G0180K	5910-715-0452
281-0546-00	72982	301-000X5P0331K	5910-984-2340
281-0549-00	72982	301-000U2J0680K	5910-812-8742

Manufacturer's part No. cross reference to manufacturer's code and part No., and Federal stock No.-Continued

Tektronix, Inc. part No.	Mfr code No.	Mfr part No.	Federal stock number
281-0564-00	72982	301-000C0G0240J	
281-0575-00	72982	308-000C0G0390F	
281-0593-00	72982	301-000C0J0399C	
281-0605-00	72982	301-000Y5D0201K	
281-0621-00	72982	301-000C0G0120F	
281-0622-00	72982	308-000C0G0470F	
281-0620-00	72982	301-000C0J0339B	
283-0000-00	72982	831Z5U102P	5910-688-8702
283-0002-00	72982	811Z5U0103Z	5910-721-2030
283-0003-00	56289	20C205A1	5910-801-1005
283-0004-00	71590	DA149-001CB	5910-577-1346
283-0006-00	71590	DA049-227B	5910-850-0976
283-0026-00	56289	5C2A	5910-954-9055
283-0051-00	72982	8131-100C0G-332J	
283-0057-00	56289	41C208A2	5910-924-4340
283-0059-00	72982	8141M036651105Z	5910-932-7113
283-0068-00	56289	19C241	5910-814-7525
283-0541-00	72982	654-03818A0501K	5910-855-5242
285-0609-00	80009	285-0609-00	5910-225-9572
290-0134-00	56289	150D226X0015B2	5910-752-4270
301-0163-00	01121	EB1635	5905-883-3466
301-0183-00	01121	EB1835	5905-279-3500
301-0202-00	01121	EB2025	
301-0431-00	01121	EB4315	5905-660-6332
301-0562-00	01121	EB5625	5905-114-3930
301-0622-00	01121	EB6225	5905-883-3450
301-0822-00	01121	EB8225	5905-299-1971
302-0100-00	01121	EB1001	5905-196-4533
302-0103-00	01121	EB1031	5905-283-1984
302-0221-00	01121	EB2211	5905-256-0409
302-0274-00	01121	EB2741	5905-279-2521
302-0470-00	01121	EB4701	5905-195-9639
302-0683-00	01121	EB6831	5905-254-7087
302-0684-00	01121	EB6841	5905-187-9660
303-0620-00	01121	GB6205	
303-0822-00	01121	GB8225	5905-279-1718
304-0473-00	01121	GB4731	5905-107-7345
305-0682-00	01121	HB6825	
307-0034-00	01121	EB82G1	
308-0077-00	63743	15698	
308-0101-00	63743	K46937	5905-807-2196
308-0112-00	63743	1855	5905-978-7445
308-0230-00	56289	242E2725	
308-0251-00	56289	57E54A	
308-0289-00	56289	10E8215A	
310-0596-00	80009	310-0596-00	5905-905-7492
311-0114-00	12697	CM30915	
311-0258-00	11237	4962	5905-081-0644
311-0319-00	80009	311-0319-00	5905-912-0298
311-0321-00	12697	CM28832	
311-0323-00	12697	CM30933	
311-0383-00	01121	JA1N048S151MA	5905-850-9122
311-0448-00	01121	GA1G024S203MA	
315-0101-00	01121	CB1015	5905-577-9497
315-0102-00	01121	CB1025	5905-577-9495
315-0105-00	01121	CB1055	5905-577-9667
315-0152-00	01121	CB1525	5905-577-9947
315-0183-00	01121	CB1835	
315-0221-00	01121	CB2215	5905-577-9480
315-0224-00	01121	CB2245	5905-577-9460
315-0272-00	01121	CB2725	
315-0273-00	01121	CB2735	

Manufacturer's part No. cross reference to manufacture's code and part No., and Federal stock No. - Continued

Tektronix, Inc. part No.	Mfr code No.	Mfr part No.	Federal stock number
315-0391-00	01121	CB3915	5905-577-9946
315-0470-00	01121	CB4705	
315-0471-00	01121	CB4715	5905-683-2242
315-0510-00	01121	CB5105	5905-577-9473
315-0622-00	01121	CB6225	5905-577-9487
315-0682-00	01121	CB6825	
315-0820-00	01121	CB8205	5905-822-2390
316-0101-00	01121	CB1011	5905-726-5340
316-0102-00	01121	CB1021	5905-729-0563
316-0103-00	01121	CB1031	5905-755-2613
316-0104-00	01121	CB1041	5905-853-3629
316-0123-00	01121	CB1231	
316-0150-00	01121	CB1501	
316-0182-00	01121	CB1821	5905-726-5346
316-0220-00	01121	CB2201	
316-0221-00	01121	CB2211	5905-721-0131
316-0222-00	01121	CB2221	5905-726-6433
316-0270-00	01121	CB2701	
316-0331-00	01121	CB3311	5905-726-6435
316-0333-00	01121	CB3331	5905-726-6436
316-0355-00	01121	CB3351	
316-0470-00	01121	CB4701	5905-811-7912
316-0472-00	01121	CB4721	5905-809-8029
316-0680-00	01121	CB6801	5905-726-6836
321-0297-00	75042	CEAT0-1212F	
322-0051-00	75042	CEBT0-33R20F	
322-0068-00	75042	CEBT0-49R90F	
322-0089-00	19701	MF6CD82R50F	
322-0097-00	19701	MF6CD1000F	
322-0101-00	75042	CEBT0-1100F	
322-0123-00	19701	MF6CD1870F	
322-0130-00	19701	MF6CD2210F	
322-0147-00	19701	MF6CD3320F	
322-0151-00	19701	MF6CD3650F	
322-0154-00	19701	MF6CD3920F	
322-0155-00	19701	MF6CD-4020F	
322-0171-00	19701	MF6CD5900F	
322-0200-00	19701	MF6CD1181F	
322-0201-00	19701	MF6CD1211F	
322-0207-00	19701	MF6CD1401F	
322-0209-00	75042	CEBT0-1471F	
322-0210-00	19701	MF6CD1501F	
322-0218-00	19701	MF6CD1821F	
322-0224-00	19701	MF6CD2101F	
322-0239-00	79701	MF6CD3011F	
322-0251-00	19701	MF6CD4021F	
322-0287-00	19701	MF6D9531F	
322-0297-00	19701	MF6CD1212F	
322-0306-00	19701	MF6CD1502F	
322-0481-00	75042	CEBT0-1004F	
322-0481-01	75042	CEBT0-1004D	
322-0605-00	19701	MF6CD1012F	
322-0608-00	19701	MF6CD1113F	
322-0614-00	19701	MF6CD2503F	
322-0614-01	19701	MF6CD2503D	
322-0617-00	19701	MF6CD47R70F	
322-0620-00	75042	CEBT0-8003F	
322-0620-01	75042	CEBT0-8003D	
322-0621-00	75042	CEBT0-9003F	
322-0621-01	75042	CEBT0-9003D	
322-0624-00	75042	CEBT0-9903F	

Manufacturer's part No. cross reference to manufacturer's cod and part No., and Federal stock No.-Continued

Tektronix, Inc. part No.	Mfr code No.	Mfr part No.	Federal s tock number
322-0624-01	75042	CEBT0-9903D	
322-0643-00	75042	CEBT0-6003F	
322-0643-01	75042	CEBT0-6003D	
322-0644-00	75042	CEBT0-66662F	
322-0644-01	75042	CEBT0-66662D	
322-1289-01	75042	CEBT0-1012D	
322-1389-01	75042	CEBT0-1113D	
323-0322-00	19701	MF7CD2212F	
323-0330-00	19701	MF7CD2672F	
333-0808-00	80009	333-0808-00	
337-0506-00	80009	337-0506-00	
337-0507-00	80009	337-0507-00	
337-0510-00	80009	337-0510-00	
337-0650-00	80009	337-0650-00	
337-0675-00	80009	337-0675-00	
337-0676-00	80009	337-0676-00	
337-0680-00	80009	337-0680-00	
343-0006-00	95987	1-2-6B	5340-753-3694
343-0089-00	80009	343-0089-00	
343-0108-00	80009	343-0108-00	
348-0002-00	70485	54G	5325-813-6936
348-0004-00	70485	763	5325-276-4993
348-0005-00	70485	230	5325-275-7557
351-0037-00	80009	351-0037-00	5895-975-6783
352-0067-00	80009	352-0067-00	5970-089-7366
354-0234-00	80009	354-0234-00	5961-020-9131
355-0046-00	80009	354-0046-00	
355-0507-00	80009	355-0507-00	
358-0075-00	80009	358-0075-00	5340-922-3509
358-0136-00	88245	420971	
358-0178-00	80009	358-0178-00	
358-0216-00	80009	358-0216-00	5355-016-8665
358-0241-00	88245	421565	
361-0007-00	80009	361-0007-00	5340-816-0002
361-0009-00	80009	361-0009-00	5340-792-2001
366-0031-00	80009	366-0031-00	5355-685-5580
366-0109-00	80009	366-0109-00	5355-983-8412
366-0148-00	80009	366-0148-00	5355-913-5492
366-0160-00	80009	366-0160-00	5355-913-5491
366-0175-00	80009	366-0175-00	5355-923-5660
366-0189-00	80009	366-0189-00	5355-064-0133
376-0011-00	80009	376-0011-00	3010-862-5752
378-0541-00	80009	378-0541-00	6210-103-6337
384-0246-00	80009	384-0246-00	
384-0304-00	80009	384-0304-00	
384-0615-00	80009	384-0615-00	
387-0647-00	80009	387-0647-00	
387-0660-00	80009	387-0660-00	
406-0800-00	80009	406-0800-00	
406-0814-00	80009	406-0814-00	
406-0845-00	80009	406-0845-00	
406-0918-00	80009	406-0918-00	
406-0949-00	80009	406-0949-00	
426-0121-00	80009	426-0121-00	5950-865-0278
441-0544-00	80009	441-0544-00	
441-0564-00	80009	441-0564-00	

IMPORTANT:

Circuit voltages measured with 20,000Ω/volt VOM, All readings in VOLTS.

Voltage measurements are not absolute and may vary from unit to unit. For these measurements, a 30" flexible plug-in extension cable (012-066) was used to operate the Type 3A6 outside of the indicator unit plug-in compartment.

The time-base used with the Type 3A6 was set for automatic triggering at a 1 millisecond/division sweep rate.

VOLTAGE READINGS were obtained under the following conditions (control settings apply to both channels):

Input Signal	None
AC DC GND	GND
VOLTS/DIV	.2
VARIABLE	CALIB
POSITION	Centered
MODE	CH 1
INV (CH 1) NORM	NORM
TRIGGER	Pushed in

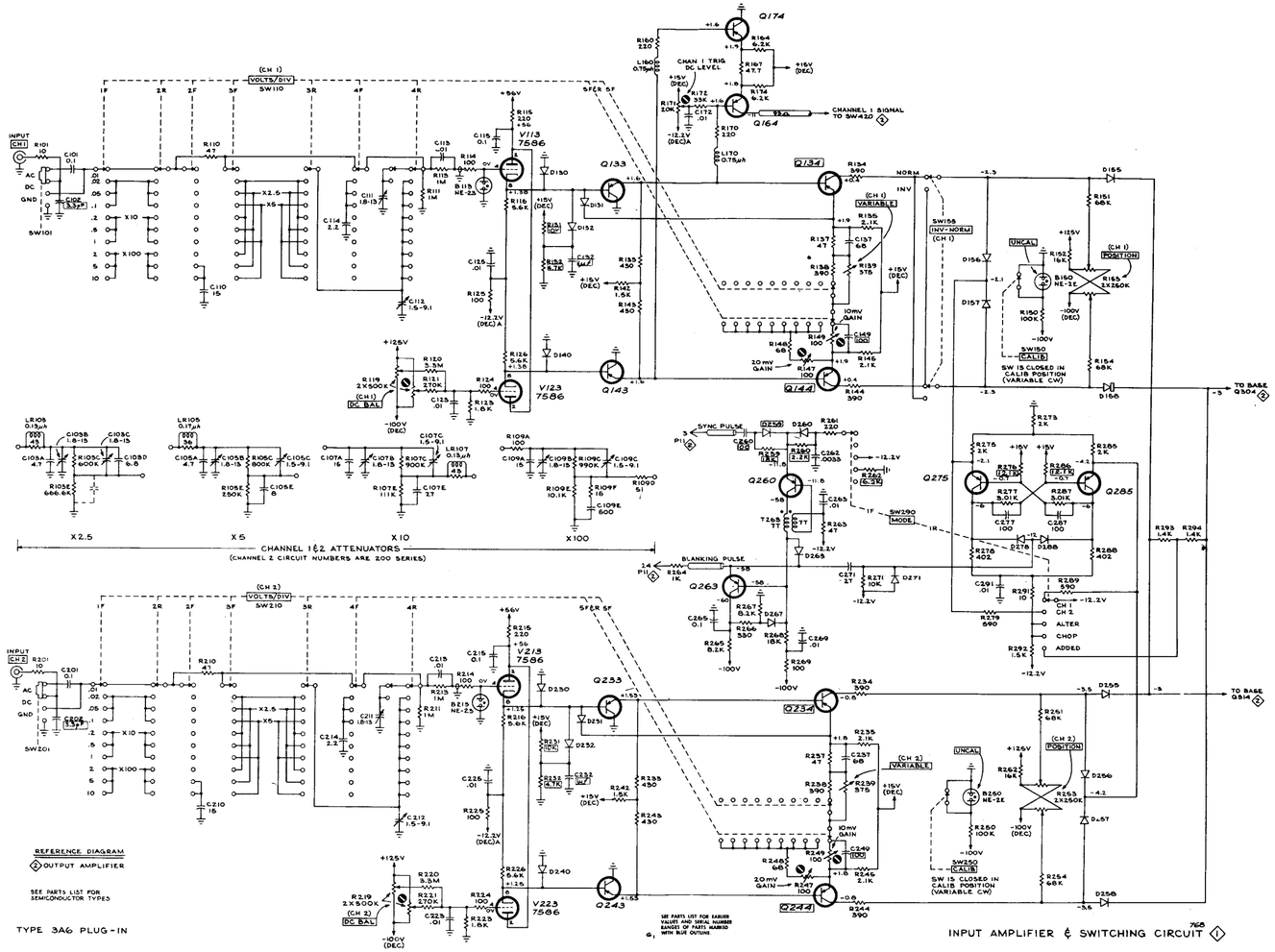

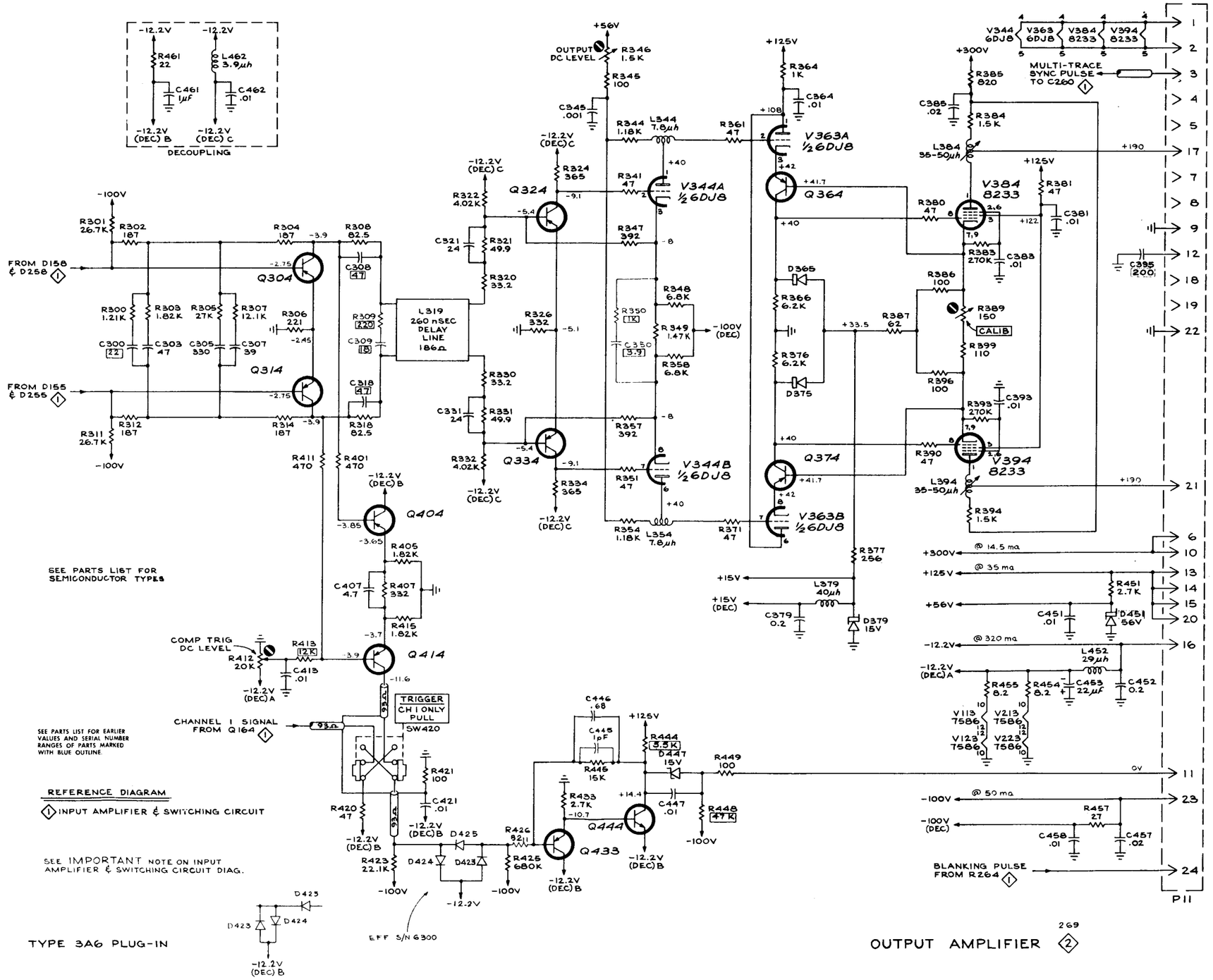
DECOUPLING
-12.2V
R461 22
C461 1μF
L462 3.9μh
C462 .01
-12.2V (DEC) B
-12.2V (DEC) C
OUTPUT DC LEVEL
R346 1.5K
+56V
R345 100
C345 .001
R344 1.18K
L344 7.8μh
R361 47
+125V
R364 1K
C364 .01
V363A ½6DJ8
V344A ½6DJ8
V344B ½6DJ8
V363B ½6DJ8
Q324
Q334
Q364
Q374
Q404
Q414
Q304
Q314
Q433
Q444
-100V
FROM D158 & D258
FROM D155 & D255
R301 26.7K
R302 187
R304 187
R308 82.5
C308 47
R309 220
C309 15
R318 82.5
C318 47
R312 187
R314 187
R311 26.7K
R300 1.21K
R303 1.82K
R305 27K
R307 12.1K
R306 221
C300 22
C303 47
C305 330
C307 39
L319 260 nSEC DELAY LINE 186Ω
R322 4.02K
C321 24
R321 49.9
R320 33.2
R324 365
R326 332
R330 33.2
C331 24
R331 49.9
R332 4.02K
R334 365
R341 47
R347 392
R348 6.8K
R350 1K
R349 1.47K
C350 3.9
R358 6.8K
R357 392
R351 47
R354 1.18K
L354 7.8μh
R371 47
R377 256
L379 40μh
C379 0.2
D379 15V
+15V
+15V (DEC)
R411 470
R401 470
R405 1.82K
C407 4.7
R407 332
R415 1.82K
COMP TRIG DC LEVEL
R412 20K
R413 12K
C413 .01
-12.2V (DEC) A
CHANNEL 1 SIGNAL FROM Q164
TRIGGER CH 1 ONLY PULL
SW420
R421 100
C421 .01
R420 47
R423 22.1K
D424
D423
D425
R426 82
R425 680K
C446 .68
C445 1pF
R445 15K
R444 3.3K
D447 15V
R449 100
R448 47K
R433 2.7K
C447 .01
D365
R366 6.2K
R376 6.2K
D375
R387 62
+33.5
R385 820
C385 .02
R384 1.5K
L384 35-50μh
V384 8233
R380 47
R381 47
C381 .01
R383 270K
C383 .01
R386 100
R389 150
CALIB
R399 110
R396 100
R393 270K
C393 .01
R390 47
V394 8233
L394 35-50μh
R394 1.5K
+300V
V344 6DJ8
V363 6DJ8
V384 8233
V394 8233
MULTI-TRACE SYNC PULSE TO C260
+190
C395 200
@ 14.5 ma
@ 35 ma
R451 2.7K
C451 .01
D451 56V
@ 320 ma
L452 29μh
C452 0.2
C453 22μf
R455 8.2
R454 8.2
V113 7586
V123 7586
V213 7586
V223 7586
0V
@ 50 ma
R457 27
C458 .01
C457 .02
BLANKING PULSE FROM R264
P11
SEE PARTS LIST FOR SEMICONDUCTOR TYPES
SEE PARTS LIST FOR EARLIER VALUES AND SERIAL NUMBER RANGES OF PARTS MARKED WITH BLUE OUTLINE.
REFERENCE DIAGRAM
1 INPUT AMPLIFIER & SWITCHING CIRCUIT
SEE IMPORTANT NOTE ON INPUT AMPLIFIER & SWITCHING CIRCUIT DIAG.
EFF S/N 6300
TYPE 3A6 PLUG-IN
OUTPUT AMPLIFIER 2
269

SECTION 8

DIRECT SUPPORT AND GENERAL SUPPORT MAINTENANCE

REPAIR PARTS AND SPECIAL TOOLS LIST

INTRODUCTION

1. Scope. This RPSTL lists and authorizes spares and repair parts required for performance of direct and general support maintenance of Dual-Trace Amplifier Plug-In, Tektronix Types 3A6 and 3A6 MOD. It authorizes the requisitioning, issue, and disposition of spares and repair parts as indicated by the Source, Maintenance and Recoverability (SMR) codes.

2. General. This Repair Parts and Special Tools List is divided as follows:

a. Repair Parts List. A list of spares and repair parts authorized by this RPSTL for use in the performance of maintenance. Parts lists are composed of functional groups in ascending numeric sequence. Parts are listed in alphabetical sequence within each figure number.

b. Special Tools List. Not applicable.

c. National Stock Number and Part Number Index. A list, in National Item Identification Number (NIIN) sequence, of all National Stock Numbered items (NSN) appearing in the listing, followed by a list in alphanumeric sequence of all part numbers appearing in the listing. NSN's and part numbers are cross-referenced to the figure and item number appearance.

3. Explanation of Columns (Repair Parts List)

a. Item No. (Column (1)). Indicates the number used to identify each item appearing in the listing.

b. SMR CODE (Column (2)). The Source, Maintenance, and Recoverability (SMR) code is a 5-position code containing supply/requisitioning information, maintenance category authorization criteria, and disposition instructions as shown in the following breakdown:

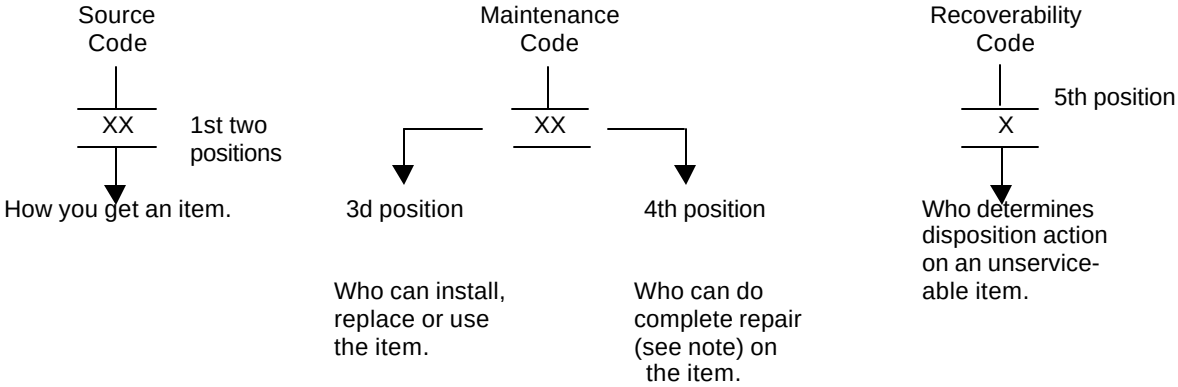

*Complete Repair: Maintenance capacity, capability, and authority to perform all the corrective maintenance tasks of the "Repair" function in a use/user environment in order to restore serviceability to a failed item.

(1) **Source Code.** The source code tells you how you get an item needed for maintenance, repair, or overhaul of an end item/equipment. Source codes are always the first two positions of the SMR code. Explanation of source codes follows:

Code		Explanation
PA	-	Stocked items; use the applicable NSN to request/requisition items with this code. This item is authorized to the category indicated by the code entered in the 3d position of the SMR code.
XD	-	Item is not stocked. Order an "XD" coded item through normal supply channels using the FSCM and part number given, if no NSN is available.

(2) **Maintenance Code.** Maintenance codes tell you the level(s) of maintenance authorized to USE and REPAIR support items. The maintenance codes are entered in the third and fourth positions of the SMR code as follows:

(a) The maintenance code entered in the third position tells you the lowest maintenance level authorized to remove, replace, and use an item. The maintenance code entered in the third position will indicate authorization to the following level of maintenance.

Code	Application/Explanation
F	-Direct support level can remove, replace, and use the item.

(b) The maintenance code entered in the fourth position tells you whether or not the item is to be repaired and identifies the lowest maintenance level with the capability to do complete repair (.ie., perform all authorized repair functions). This position will contain the following code.

Code	Application/Explanation
Z	-Nonreparable. No repair is authorized.

(3) **Recoverability Code.** Recoverability codes are assigned to items to indicate the disposition action on unserviceable items. The recoverability code is entered in the fifth position of the SMR code as follows:

Recoverability Codes	Definition
Z	-Nonreparable item. When unserviceable, condemn and dispose of the item at the level of maintenance shown in the third position of the SMR code.

c. FSCM (Column (3)). The Federal Supply Code for Manufacturer (FSCM) is a 5-digit numeric code which is used to identify the manufacturer, distributor, or Government agency, etc., that supplies the item.

d. PART NUMBER (Column (4)). Indicates the primary number used by the manufacturer (individual, company, firm, corporation, or Government activity), which controls the design and characteristics of the item by means of its engineering drawings, specifications standards, and inspection requirements to identify an item or range of items.

NOTE: When you use an NSN to requisition an item, the item you receive may have a different part number from the part ordered, but go ahead and use or furnish it as the replacement part.

e. DESCRIPTION AND USABLE ON CODE (UOC) (Column (5)). This column includes the following information:

(1) The Federal item name and, when required, a minimum description to identify the item.

(2) The usable on code, when applicable (see paragraph 5, Special Information).

f. QTY (Column (6)). The QTY (quantity per figure column) indicates the quantity of the item used in the parts list which is prepared for a functional group, subfunctional group, or an assembly.

4. Explanation of Columns

a. NATIONAL STOCK NUMBER (NSN) INDEX

(1) **STOCK NUMBER column.** This column lists the NSN by National Item Identification Number (NIIN) sequence. The NIIN consists of the last nine digits of the NSN (i.e., 5305-$\underbrace{\text{01-674-1467}}_{\text{NIIN}}$). When using this column to locate an item, ignore the first 4 digits of the NSN. However, the complete NSN should be used when ordering items by stock number.

(2) **FIG. column.** Indicates the figure number used to identify each item appearing in the listing. The figures are in numerical order in Section II.

(3) **ITEM column.** The item number identifies the item associated with the figure listed in the adjacent FIG. column. This item is also identified by the NSN listed on the same line.

b. PART NUMBER INDEX. Part numbers in this index are listed by part number in ascending alphanumeric sequence (i.e., vertical arrangement of letter and number combination which places the first letter or digit of each group in order A through Z, followed by the numbers 0 through 9 and each following letter or digit in like order).

(1) **FSCM column.** The Federal Supply Code for Manufacturer (FSCM) is a 5-digit numeric code used to identify the manufacturer, distributor, or Government agency, etc., that supplies the item.

(2) **PART NUMBER column.** Indicates the primary number used by the manufacturer (individual, firm, corporation, or Government activity), which controls the design and characteristics of the item by means of its engineering drawings, specifications standards, and inspection requirements to identify an item or range of items.

(3) **STOCK NUMBER column.** This column lists the NSN for the associated part number and manufacturer identified in the PART NUMBER and FSCM columns to the left. The part number line entry (with NSN, when available) identifies the first figure/item number appearance for which the part number is applicable. The part number is not listed for additional figure/item number appearances identified by that part number.

(4) **FIG. column.** This column lists the number of the figure where the item is located in Section II.

(5) **ITEM column.** The item number is that number assigned to the item as it appears in the figure referenced in the adjacent figure number column.

5. Special Information

a. Repair parts for components of standards sets which can be identified as existing in the supply system will be requisitioned through normal supply channels from the appropriate supply commodity manager.

b. Repair parts for components of standards sets which cannot be identified as to proper supply source will be requisitioned from USAMICOM, using routing identifier B64 and furnishing, as a minimum, the following as exception data.

(1) Component stock number of the individual end item to be repaired.

(2) Component manufacturer's equipment model number and serial number.

(3) The equipment manufacturer's stock number as listed in the appropriate manual for the desired repair part.

(4) The repair part reference designation, circuit reference, circuit symbol schematic designation, or reference number as listed in the manufacturer's manual.

(5) The technical specification of the repair part as contained in the appropriate manufacturer's manual.

(6) The title and date of the manufacturer's manual from which the information in **a** and **b**(3), (4), and (5) above was taken.

c. For requisitioning miscellaneous consumable maintenance supplies or expendable supplies, use CTA 50-970.

d. The usable on code appears in the lower left corner of the Description column heading. Usable on codes are shown as "UOC" in the Description column (justified left) on the first line applicable item description/nomenclature.

e. This RPSTL does not contain illustration for items listed in the Repair Parts List, since the manufacturer's manuals contain exploded view illustrations which are adequate for repair parts location. Copies of the manufacturer's manuals (Tektronix, Types 3A6 and 3A6 MOD) are furnished with the equipment for which this RPSTL is prepared. The figure and item numbers in the listing are for locating the item within this RPSTL.

6. How to Locate Repair Parts

a. When National Stock Number or Part Number is Not Known.

(1) **First.** Refer to the parts list to locate the item by description. This list is listed in alphabetical sequence within each figure number.

(2) **Second.** After locating the item in the Repair Parts List, refer to the Part Number Index to find the NSN.

b. When National Stock Number or Part Number is Known.

(1) **First.** Using the Index of National Stock Numbers and Part Numbers, find the pertinent National Stock Number or Part Number. The NSN index is in National Item Identification Number (NIIN) sequence. The part numbers in the Part Number index are listed in ascending alphanumeric sequence.

Both indexes cross-reference you to the illustration figure and item number of the item you are looking for.

(2) **Second.** After finding the figure and item number, verify that the item is the one you're looking for, then locate the item number in the repair parts list for the figure.

7. Abbreviations. Not applicable.

REPAIR PARTS LIST

(1) ITEM NO	(2) SMR CODE	(3) FSCM	(4) PART NUMBER	(5) DESCRIPTION AND USABLE ON CODES (UOC)	(6) QTY
				GROUP 0010 - FIGURE 1 AMPLIFIER, DUAL TRACE 7911441-2 (19200)	
10	XDFZZ	80009	285-0609-00	CAPACITOR, ELECTRICA	2
20	XDFZZ	18876	10015883-016	CAPACITOR, FIXED 25 V DC, 200,000 UUF (+- 20 %)	2
30	PAFZZ	81349	CC22SH4R7C	CAPACITOR, FIXED 500 V DC, 4.7 UUF (+- 1 %)	5
40	PAFZZ	81349	CC22UJ470G	CAPACITOR, FIXED 500 V DC, 47 UUF (+- 2 %)	3
50	PAFZZ	56289	5CZ5U105X0050C5	CAPACITOR, FIXED, CER 25 V DC, 1 UF (+- 20 %)	3
60	PAFZZ	56289	41C208	CAPACITOR, FIXED 200 V DC, 100,000 UUF (+ 80 - 20 %)	3
70	PAFZZ	81349	CK22AX331K	CAPACITOR, FIXED 500 V DC, 330 UUF, TYPE CK22AX331K	1
80	XDFZZ	81349	CC30RH680G	CAPACITOR, FIXED	2
90	XDFZZ	81349	CC22TH390G	CAPACITOR, FIXED	1
100	PAFZZ	72982	8131N145C0G332J	CAPACITOR, FIXED 100 V, .0033 UF	1
110	XDFZZ	81349	CC21HK2R2C	CAPACITOR, FIXED 500 V DC, 2.2 UF, TYPE CC21HK2R2C	1
120	XDFZZ	81349	CC22HH240G	CAPACITOR, FIXED,	2
125	PAFZZ	81349	CC22UJ150G	CAPACITOR, FIXED 500 V DC, 15 UUF, TYPE CC22UJ150G	1
130	PAFZZ	81349	CC22CJ3R3C	CAPACITOR, FIXED 500 V DC, 3.3 UF, TYPE CC22CJ3R3C (+- 5 %)	2
140	PAFZZ	81349	CC22UJ6R8C	CAPACITOR, FIXED 500 V DC, 6.8 UUF, TYPE CC22UJ6R8C	2
150	PAFZZ	81349	CC22CH080C	CAPACITOR, FIXED 500 V DC, 8 UUF, TYPE CC22CH080C	2
160	PAFZZ	81349	CC22CH120G	CAPACITOR, FIXED 500 V DC, 12 UUF, TYPE CC22CH120G	1
170	PAFZZ	81349	CK21AX180K	CAPACITOR, FIXED 500 V DC, 18 UUF, TYPE CK2 1AX180K	1
180	PAFZZ	18876	10156805-1	CAPACITOR, FIXED 500 V DC, 1,000 UUF,	1
190	PAFZZ	81349	CC22UJ270G	CAPACITOR, FIXED 500 V DC, 27 UUF	3
200	PAFZZ	81349	CC30UJ101G	CAPACITOR, FIXED 500 V DC, 100 UUF, TYPE CC30UJ101G	5
210	PAFZZ	91418	BR02UFM0P100UUF	CAPACITOR, FIXED 600 V DC, 20,000 UUF (+- 20 %)	1
220	PAFZZ	81349	M39003/01-2991	CAPACITOR, FIXED, ELE 1 SEC, 15 V DC, 22 UF (+- 10 %)	1
230	PAFZZ	74970	189-506-5	CAPACITOR, VARIABLE	12
240	PAFZZ	80009	108-0283-00	COIL, RADIO .13 UH	4
250	PAFZZ	80009	108-0286-00	COIL, RADIO .17 UH	2
260	XDFZZ	18876	10193706	COIL, RADIO 70 TURNS, SGLE LAYER WIRE WOUND, SOLID COIL FORM, 0.225 DIA, 0.625 LG, W/2 WIRE LEAD TYPE TERM	1
270	PAFZZ	96906	MS18130-14	COIL, RADIO SGLE LAYER WOUND TYPE,	1

(1) ITEM NO	(2) SMR CODE	(3) FSCM	(4) PART NUMBER	(5) DESCRIPTION AND USABLE ON CODES (UOC)	(6) QTY
				SOLID COIL FOR M, 0.156 OD, 0.375 LG, W/ 2 WIRE LEAD TYPE TERM	
280	PAFZZ	81349	M39012/21-0001	CONNECTOR	2
290	XDFZZ	80009	119-0033-00	DELAY LINE	1
300	PAFZZ	81349	6DJ8	ELECTRON TUBE TYPE 6DJ8	2
310	PAFZZ	81349	8233	ELECTRON TUBE	2
320	PAFZZ	81349	7586	ELECTRON TUBE TYPE 7586	4
330	XDFZZ	80009	114-151	INDUCTOR, VARIABLE	2
340	PAFZZ	80009	366-0160-00	KNOB	2
350	PAFZZ	80009	378-0541-00	LENS, INDICATOR	1
360	PAFZZ	19200	7598197	NUT, PLAIN, HEXAGON S, ZN-PLTD FIN., 3/ 8-32NEF, 3/32 THK	5
370	PAFZZ	96906	MS35650-3255	NUT, PLAIN, HEXAGON	2
380	PAFZZ	81349	RCR07G150JS	RESISTOR , FIXED 1/4 W, 15 OHMS, TYPE RCR07G150JS (+- 5 %)	2
390	PAFZZ	81349	RCR07G220JS	RESISTOR, FIXED 1/4 W, 22 OHMS, TYPE RCR07G220JS (+- 5 %)	1
400	PAFZZ	81349	RCR07G270JS	RESISTOR, FIXED 1/4 W, 27 OHMS, TYPE RCR07G270JS (+- 5 %)	1
410	PAFZZ	81349	RCR07G470JS	RESISTOR, FIXED 1/4 W, 47 OHMS, TYPE RCR07G470JS (+- 5 %)	1
420	PAFZZ	81349	RCR07G510JS	RESISTOR, FIXED 1/4 W, 51 OHMS, TYPE RCR07G510JS (+- 5 %)	2
430	PAFZZ	81349	RCR07G680JS	RESISTOR, FIXED, COMP 1/4 w, 68 OHMS, TYPE RCR07G680JS (+- 5 %)	2
440	PAFZZ	81349	RCR07G101JS	RESISTOR, FIXED 1/4 W, 100 OHMS, TYPE RCR07G101JS (+- 5 %)	12
450	PAFZZ	81349	RCR07G221JS	RESISTOR, FIXED 1/4 W, 220 OHMS, TYPE RCR07G221JS (+- 5 %)	4
460	PAFZZ	81349	RCR07G331JS	RESISTOR, FIXED 1/4 W, 330 OHMS, TYPE RCR07G331JS (+- 5 %)	1
470	PAFZZ	81349	RCR07G391JS	RESISTOR, FIXED 1/4 W, 390 OHMS, TYPE RCR07G391JS (+- 5 %)	6
480	PAFZZ	81349	RCR07G471JS	RESISTOR, FIXED 1/4 W, 470 OHMS, TYPE RCR07G471JS (+- 5 %)	2
490	PAFZZ	81349	RCR07G102JS	RESISTOR , FIXED 1/4 W, 1,000 OHMS, TYPE RCR07G102JS (+- 5 %)	2
500	PAFZZ	81349	RCR07G182JS	RESISTOR, FIXED 1/4 W, 1,800 OHMS, TYPE RCR07G182JS (+- 5 %)	2
510	PAFZZ	81349	RCR07G272JS	RESISTOR, FIXED 1/4 W, 2,700 OHMS, TYPE RCR07G272JS (+- 5%)	1
520	PAFZZ	81349	RCR07G472JS	RESISTOR, FIXED 1/4 W, 4,700 OHMS, TYPE RCR07G472JS (+- 5%)	2
530	PAFZZ	81349	RCR07G622JS	RESISTOR, FIXED 1/4, 6,200 OHMS, TYPE RCR07G622JS (+- 5 %)	1
540	PAFZZ	81349	RCR07G682JS	RESISTOR, FIXED 1/4 W, 6,800 OHMS, TYPE RC07GF682J (+- 5 %)	1
550	PAFZZ	81349	RCR07G822JS	RESISTOR, FIXED 1/4 W, 8,200 OHMS, TYPE RCR07G822JS (+- 5 %)	2
560	PAFZZ	81349	RCR07G103JS	RESISTOR, FIXED 1/4 W, 10,000 OHMS, TYPE RCR07G103JS (+- 5 %)	2
570	PAFZZ	81349	RCR07G123JS	RESISTOR, FIXED 1/4 W, 12, 000 OHMS,	1

(1) ITEM NO	(2) SMR CODE	(3) FSCM	(4) PART NUMBER	(5) DESCRIPTION AND USABLE ON CODES (UOC)	(6) QTY
				TYPE RCR07G123JS (+- 5 %)	
580	PAFZZ	81349	RCR07G183JS	RESISTOR, FIXED 1/4 W, 18,000 OHMS, TYPE RCR07G183JS (+- 5 %)	1
590	PAFZZ	81349	RCR07G273JS	RESISTOR, FIXED 1/4 W, 27,000 OHMS, TYPE RCR07G273JS (+- 5 %)	1
600	PAFZZ	81349	RCR07G333JS	RESISTOR, FIXED 1/4 W, 33,000 OHMS, TYPE RCR07G333JS (+- 5 %)	1
610	PAFZZ	81349	RCR07G473JS	RESISTOR, FIXED 1/4 W, 47,000 OHMS, TYPE RCR07G473JS (+- 5%)	8
620	PAFZZ	81349	RCR07G104JS	RESISTOR, FIXED 1/4 W, 100,000 OHMS, TYPE RCR07G104JS (+- 5%)	2
630	PAFZZ	81349	RCR07G105JS	RESISTOR, FIXED 1/4 W, 1 MEG, TYPE RCR07G105JS (+- 5 %)	4
650	PAFZZ	81349	RCR07G335JS	RESISTOR, FIXED 1/4 W, 3.3 MEG, TYPE RCR07G335JS (+- 5 %)	2
660	PAFZZ	81349	RCR20G100JS	RESISTOR, FIXED 1/2 W, 10 OHMS, TYPE RCR20G100JS (+- 5 %)	3
670	PAFZZ	81349	RCR20G470JS	RESISTOR, FIXED 1/2 W, 47 OHMS, TYPE RCR20G470JS (+- 5 %)	2
680	PAFZZ	81349	RCR20G221JS	RESISTOR, FIXED 1/2 W, 220 OHMS, TYPE RCR20GF221JS (+- 5 %)	2
690	PAFZZ	81349	RCR20G431JS	RESISTOR, FIXED 1/2 W, 430 OHMS, TYPE R020GF431J (+- 5 %)	8
710	PAFZZ	81349	RCR20G202JS	RESISTOR, FIXED 1/2 W, 2,000 OHMS, TYPE RCR20G202JS (+- 5 0/0)	3
720	PAFZZ	81349	RCR20G562JS	RESISTOR, FIXED 1/2 W, 5,600 OHMS, TYPE RCR20G562JS (+ - 5 %)	4
730	PAFZZ	81349	RCR20G622JS	RESISTOR, FIXED 1/2 W, 6,200 OHMS, TYPE RCR20G622JS (+- 5 %)	2
740	PAFZZ	81349	RCR20G822JS	RESISTOR, FIXED 1/2 W, 8,200 OHMS, TYPE RCR20G822JS (+- 5 %)	1
750	PAFZZ	81349	RCR20G163JS	RESISTOR, FIXED 1/2 W, 16,000 OHMS, TYPE RCR20G163JS (+- 5 %)	2
760	PAFZZ	81349	RCR20G683JS	RESISTOR, FIXED 1/2 W, 68,000 OHMS, TYPE RCR20G683JS (+- 5 %)	4
770	PAFZZ	81349	RCR20G274JS	RESISTOR, FIXED 1/2 W, 270,000 OHMS, TYPE RCR20G274JS (+- 5 %)	4
780	PAFZZ	81349	RCR20G684JS	RESISTOR, FIXED 1/2 W, 680,000 OHMS TYPE RC20GF684J (+- 5 %)	1
790	PAFZZ	81349	RCR32G620JS	RESISTOR, FIXED	1
800	PAFZZ	81349	RCR32G822JS	RESISTOR, FIXED 1 k.8,200 OHMS, TYPE RCR32G822JS (+- 5 %)	1
810	PAFZZ	81349	RCR32G473JS	RESISTOR, FIXED 1 W, 47,000 OHMS, TYPE RCR32G473JS (+- 5%)	1
820	PAFZZ	81349	RC42GF682J	RESISTOR, FIXED 2 W, 6, 800 OHMS, TYPE RC42GF682J (+- 5 %)	2
830	PAFZZ	80009	322-0620-01	RESISTOR, FIXED 1/4 W, 800,000 OHMS (+- .5 %)	1

(1) ITEM NO	(2) SMR CODE	(3) FSCM	(4) PART NUMBER	(5) DESCRIPTION AND USABLE ON CODES (UOC)	(6) QTY
840	XDFZZ	19701	MF6CD47R5D	RESISTOR, FIXED, FILM 1/4 W, 47.5 OHMS, TYPE MF6CD47R5D (+- 1/2 %)	1
850	XDFZZ	81349	RN65D4021F	RESISTOR, FIXED, FILM 1/2 W, 4,020 OHMS, TYPE RN65D4021F (+- 1 %)	2
860	PAFZZ	81349	RNC65K2212FS	RESISTOR, FIXED, FILM	1
870	PAFZZ	81349	RN65D49R9F	RESISTOR, FIXED, FILM 1/4 W, 49.9 OHMS, TYPE RN65D49R9F (+- 1 %)	2
880	PAFZZ	81349	RNC65H82R5FS	RESISTOR, FIXED, FILM 1/4 W, 82.5 OHMS (+- 1 %)	2
890	XDFZZ	81349	RN65D1870F	RESISTOR, FIXED, FILM 1/4 W, 187 OHMS, TYPE RN65D1870F (+- 1 %)	4
900	XDFZZ	81349	RN65C5900F	RESISTOR, FIXED, FILM 1/4 W, 590 OHMS (+- 1 %)	2
910	PAFZZ	81349	RNC60K1401FS	RESISTOR, FIXED, FILM 1/4 W, 1,400 OHMS, TYPE RN60D1401F (+- 1%)	2
920	PAFZZ	81349	RNC65K101FS	RESISTOR, FIXED, FILM 1/4 W, 2,100 OHMS (+- 1 %)	4
930	XDFZZ	81349	RNC65H2493DS	RESISTOR, FIXED, FILM 1/4 W, 249,000 OHMS (+- 1/2 %)	2
940	PAFZZ	81349	RNC60H6003BS	RESISTOR, FIXED, FILM 1/4 W, 600,000 OHMS (+- 1/2 %)	1
950	XDFZZ	81349	RN65E6653D	RESISTOR, FIXED, FILM 1/4 W, 665,000 OHMS, TYPE RN65E6653D (+- .5 %)	2
960	XDFZZ	81349	RN65C8983D	RESISTOR, FIXED, FILM 1/4 W, 898,000 OHMS, TYPE RN65C8983D	2
970	PAFZZ	81349	RNC65H9883DS	RESISTOR, FIXED, FILM 1/4 W, 988,000 OHMS (+- 1/2 %)	2
980	PAFZZ	81349	RNC60K1004FS	RESISTOR, FIXED, FILM 1/4 W,1 MEG, TYPE RN60D1004F (+- 1 %)	2
990	XDFZZ	81349	RN65D33R2F	RESISTOR, FIXED, FILM 1/2 W, 33.2 OHMS, TYPE RN65D33R2F (+- 1 %)	2
1000	PAFZZ	81349	RNC65K1000FS	RESISTOR, FIXED, FILM 1/2 W, 100 OHMS (+- 1 %)	2
1010	XDFZZ	81349	RN65D1100F	RESISTOR, FIXED, FILM 1/2 W, 110 OHMS. TYPE RN65D1100F (+ - 1 %)	1
1020	XDFZZ	81349	RN65D2210F	RESISTOR, FIXED, FILM 1/2 W, 221 OHMS (+- 1 0/0)	1
1030	PAFZZ	81349	RNC65K3320FS	RESISTOR, FIXED FILM 1/2 W, 332 OHMS, TYPE RN65D3320F (+- 1 %)	2
1040	XDFZZ	81349	RN65D3650F	RESISTOR, FIXED, FILM 1/2 W, 365 OHMS, TYPE RN65D3650F (+- 1 %)	2
1050	XDFZZ	81349	RN65D3920F	RESISTOR, FIXED, FILM 1/2 W, 392 OHMS, TYPE RN65D3920F (+- 1 %)	2
1060	XDFZZ	81349	RN65D1181F	RESISTOR, FIXED, FILM 1/2 W, 1,180 OHMS, TYPE RN65D1181F (+- 1 %)	2
1070	PAFZZ	81349	RNC65K1211FS	RESISTOR, FIXED, FILM 1/2 W, 1,210 OHMS, TYPE RN65D1211F (+- 1 %)	1
1080	XDFZZ	81349	RN65D1471F	RESISTOR, FIXED, FILM 1/2 W, 1,470 OHMS, TYPE RN65D1471F (+- 1 %)	1
1090	XDFZZ	81349	RN65D1501F	RESISTOR, FIXED, FILM 1/2 W, 1,500 OHMS, TYPE RN65D1501F (+- 1 %)	2
1100	PAFZZ	81349	RNC65K1821FS	RESISTOR, FIXED, FILM 1/2 W, 1,820	3

(1) ITEM NO	(2) SMR CODE	(3) FSCM	(4) PART NUMBER	(5) DESCRIPTION AND USABLE ON CODES (UOC)	(6) QTY
				OHMS, TYPE RN65D1821F (+- 1 %)	
1110	XDFZZ	81349	RN65D3011F	RESISTOR, FIXED, FILM 1/2 W, 3,010 OHMS, TYPE RN65D3011F (+- 1 %)	2
1120	PAFZZ	81349	RNC65K9531FS	RESISTOR, FIXED, FILM 1/2 W, 9,530 OHMS, TYPE RN65D9531F (+- 1 %)	2
1130	XDFZZ	81349	RN65D1212F	RESISTOR, FIXED, FILM 12 M, 12,100 OHMS, TYPE RN65D1212F (+- 1 %)	1
1140	PAFZZ	81349	RNC55K1502FS	RESISTOR, FIXED, FILM 1/2 W, 15,000 OHMS (+- 1 %)	1
1150	PAFZZ	81349	RN70D2672F	RESISTOR, FIXED, FILM 1 W, 26,700 OHMS, TYPE RN70D2672F (+- 1 %)	2
1160	XDFZZ	56289	57E54A	RESISTOR, FIXED, FILM 5 W, 256 OHMS (+- 5 %)	1
1170	PAFZZ	80009	310-0596-00	RESISTOR, FIXED, WIRE 8 W, 1,500 OHMS, (+- 1 %)	2
1180	PAFZZ	81349	RW69V102	RESISTOR, FIXED, WIRE 3 W, 1,000 OHMS, TYPE RW69V102 (+- 5 %)	1
1190	PAFZZ	81349	RW67V562	RESISTOR, FIXED, WIRE 5 W, 5,500 OHMS (+- 5 %)	1
1200	XDFZZ	56289	10E8215A	RESISTOR, FIXED, WIRE 10 W, 820 OHMS (+- 5 %)	1
1210	PAFZZ	81349	RV5NAYSL504A	RESISTOR, VARIABLE 1/2 W, 500,000 OHMS (+- 20 %)	2
1220	PAFZZ	80009	311-0258-00	RESISTOR, VARIABLE 100 OHMS	4
1230	PAFZZ	12697	CM30933	RESISTOR, VARIABLE	1
1240	PAFZZ	81349	RV4NAYSD151A	RESISTOR, VARIABLE NONWIRE WOUND, 150 OHMS	1
1250	PAFZZ	80009	311-0272-00	RESISTOR, VARIABLE 1/4 W, 2,700 OHMS (+- 5 %)	1
1260	PAFZZ	59873	152-0061-00	SEMICONDUCTOR DEVIC	1
1270	PAFZZ	81349	JAN1N3024B	SEMICONDUCTOR TYPE JAN1N3024B	1
1280	PAFZZ	81349	JAN1N965B	SEMICONDUCTOR TYPE 1N965B	1
1290	XDFZZ	71785	149-19-11-07C	SOCKET	2
1300	PAFZZ	80009	136-0101-00	SOCKET, PLUG-IN	4
1310	PAFZZ	81349	TS103C03	SOCKET, PLUG-IN	2
1320	PAFZZ	80009	262-0653-00	SWITCH, ROTARY	2
1330	PAFZZ	80009	260-0442-00	SWITCH, ROTARY	2
1340	PAFZZ	80009	260-0607-00	SWITCH, ROTARY	1
1350	XDFZZ	80009	120-0193-00	TRANSFORMER, RADIO F	1
1360	PAFZZ	80009	114-0151-00	TRANSFORMER, RADIO F	2
1370	PAFZZ	80009	108-0253-00	TRANSFORMER, RADIO	2
1380	PAFZZ	80009	151-0108-00	TRANSISTOR	2
1390	PAFZZ	81349	JAN2N964	TRANSISTOR GERMANIUM, HERMETICALLY SEALED, 0.23 DIA, 0.21 LG, W/3 WIRE LEAD TYPE TERM	4
1400	PAFZZ	18876	10395523-001	TRANSISTOR GERMANIUM, HERMETICALLY SEALED, 0.37 X 0.26, W/3 WIRE LEAD TYPE TERM	6
1410	PAFZZ	80131	2N3118	TRANSISTOR SILICON, 0.37 X 0.264, W/ 3 WIRE LEAD TYPE TERM	1
1420	PAFZZ	96906	MS35333-42	WASHER, LOCK INT-TEETH, S, CD-PLTD W/ CHROMATE FIN., 0.398 ID, 0.692 OD, 0.04 THK	1

NATIONAL STOCK NUMBER AND PART NUMBER INDEX

STOCK NUMBER	FIG.	ITEM
5905-00-004-6118	1	1140
5910-00-007-3974	1	220
5950-00-018-1283	1	1360
5905-00-044-2282	1	1150
5905-00-058-5461	1	1180
5960-00-060-6613	1	320
5910-00-064-2919	1	50
5905-00-101-1693	1	880
6210-00-103-6337	1	350
5905-00-104-5755	1	660
5905-00-104-8350	1	680
5905-00-104-8358	1	550
5905-00-104-8368	1	410
5905-00-106-1249	1	420
5905-00-106-1278	1	570
5905-00-106-3666	1	560
5905-00-106-3668	1	390
5930-00-106-4835	1	1320
5905-00-106-9345	1	760
5935-00-109-9850	1	1300
5905-00-110-0388	1	620
5905-00-110-7620	1	490
5905-00-110-7622	1	540
5905-00-111-4727	1	510
5905-00-111-4734	1	670
5905-00-111-4746	1	750
5905-00-113-4860	1	400
5905-00-114-0710	1	460
5905-00-114-0711	1	520
5905-00-114-5343	1	500
5905-00-114-5416	1	770
5905-00-114-5456	1	780
5905-00-115-3560	1	580
5905-00-116-8554	1	630
5905-00-118-4559	1	600
5905-00-119-3504	1	590
5905-00-120-9154	1	480
5905-00-121-9922	1	690
5905-00-121-9932	1	470
5905-00-126-6677	1	650
5910-00-132-2287	1	230
5905-00-135-3971	1	380
5905-00-135-3973	1	450
5905-00-141-0594	1	730
5905-00-141-0600	1	740
5905-00-141-0717	1	610
5905-00-141-1116	1	720
5905-00-141-1183	1	440
5905-00-158-5065	1	1000
5905-00-189-2454	1	980
5905-00-194-8008	1	830
5905-00-200-9532	1	860
5905-00-208-4407	1	910
5961-00-226-8581	1	1390
5905-00-228-5506	1	530
5905-00-232-3383	1	1030
5905-00-250-3370	1	1120
5905-00-254-2188	1	970
5905-00-279-2528	1	820
5905-00-349-6142	1	1070
5905-00-369-6929	1	810
5905-00-433-1065	1	920
5905-00-456-0662	1	800
5905-00-463-9584	1	790
5905-00-502-3978	1	1100
5905-00-556-4090	1	1240
5935-00-577-8695	1	1310
5310-00-595-7237	1	1420
5910-00-615-0105	1	200
5910-00-702-8060	1	60
5910-00-713-4314	1	210
5910-00-719-4522	1	30
5961-00-722-1390	1	1410
5950-00-724-6215	1	270
5910-00-726-8696	1	160
5905-00-728-5675	1	1190
5961-00-752-6163	1	1280
5310-00-759-8197	1	360
5961-00-759-9392	1	1380
5905-00-807-0999	1	1210
5910-00-807-1527	1	150
5910-00-807-1543	1	40
5910-00-823-1339	1	125
5910-00-823-1916	1	70
5935-00-835-0510	1	280
5910-00-847-4776	1	190
5961-00-847-5508	1	1270
5310-00-869-1018	1	370
5960-00-869-3995	1	310
5910-00-878-7978	1	140
5960-00-880-0457	1	300
5905-00-890-9395	1	1250
5905-00-892-6465	1	870
5910-00-900-1209	1	100
5961-00-900-2374	1	1400
5961-00-905-6871	1	1260
5905-00-905-7492	1	1170
5905-00-910-0763	1	1220

NATIONAL STOCK NUMBER AND PART NUMBER INDEX

STOCK NUMBER	FIG.	ITEM	STOCK NUMBER	FIG.	ITEM
5950-00-912-8988	1	1370			
5950-00-912-8989	1	240			
5905-00-913-0282	1	1230			
5950-00-913-2213	1	250			
5355-00-913-5491	1	340			
5910-00-916-3648	1	180			
5905-00-935-8539	1	710			
5930-00-939-4416	1	1330			
5930-00-939-4417	1	1340			
5910-00-950-2380	1	130			
5910-00-951-8544	1	170			
5905-01-138-6236	1	430			
5905-01-173-7555	1	940			

NATIONAL STOCK NUMBER AND PART NUMBER INDEX

PART NUMBER INDEX

FSCM	PART NUMBER	STOCK NUMBER	FIG.	ITEM
91418	BR02UFM0P100UUF	5910-00-713-4314	1	210
81349	CC21HK2R2C		1	110
81349	CC22CH080C	5910-00-807-1527	1	150
81349	CC22CH120G	5910-00-726-8696	1	160
81349	CC22CJ3R3C	5910-00-950-2380	1	130
81349	CC22HH240G		1	120
81349	CC22SH4R7C	5910-00-719-4522	1	30
81349	CC22TH390G		1	90
81349	CC22UJ150G	5910-00-823-1339	1	125
81349	CC22UJ270G	5910-00-847-4776	1	190
81349	CC22UJ470G	5910-00-807-1543	1	40
81349	CC22UJ6R8C	5910-00-878-7978	1	140
81349	CC30RH680G		1	80
81349	CC30UJ101G	5910-00-615-0105	1	200
81349	CK21AX180K	5910-00-951-8544	1	170
81349	CK22AX331K	5910-00-823-1916	1	70
12697	CM30933	5905-00-913-0282	1	1230
81349	JAN1N3024B	5961-00-847-5508	1	1270
81349	JAN1N965B	5961-00-752-6163	1	1280
81349	JAN2N964	5961-00-226-8581	1	1390
19701	MF6CD47R5D		1	840
96906	MS18130-14	5950-00-724-6215	1	270
96906	MS35333-42	5310-00-595-7237	1	1420
96906	MS35650-3255	5310-00-869-1018	1	370
81349	M39003/01-2991	5910-00-007-3974	1	220
81349	M39012/21-0001	5935-00-835-0510	1	280
81349	RCR07G101JS	5905-00-141-1183	1	440
81349	RCR07G102JS	5905-00-110-7620	1	490
81349	RCR07G103JS	5905-00-106-3666	1	560
81349	RCR07G104JS	5905-00-110-0388	1	620
81349	RCR07G105JS	5905-00-116-8554	1	630
81349	RCR07G123JS	5905-00-106-1278	1	570
81349	RCR07G150JS	5905-00-135-3971	1	380
81349	RCR07G182JS	5905-00-114-5343	1	500
81349	RCR07G183JS	5905-00-115-3560	1	580
81349	RCR07G220JS	5905-00-106-3668	1	390
81349	RCR07G221JS	5905-00-135-3973	1	450
81349	RCR07G270JS	5905-00-113-4860	1	400
81349	RCR07G272JS	5905-00-111-4727	1	510
81349	RCR07G273JS	5905-00-119-3504	1	590
81349	RCR07G331JS	5905-00-114-0710	1	460
81349	RCR07G333JS	5905-00-116-4559	1	600
81349	RCR07G335JS	5905-00-126-6677	1	650
81349	RCR07G391JS	5905-00-121-9932	1	470
81349	RCR07G470JS	5905-00-104-8368	1	410
81349	RCR07G471JS	5905-00-120-9154	1	480
81349	RCR07G472JS	5905-00-114-0711	1	520
81349	RCR07G473JS	5905-00-141-0717	1	610
81349	RCR07G510JS	5905-00-106-1249	1	420
81349	RCR07G622JS	5905-00-228-5506	1	530

NATIONAL STOCK NUMBER AND PART NUMBER INDEX

PART NUMBER INDEX

FSCM	PART NUMBER	STOCK NUMBER	FIG.	ITEM
81349	RCR07G680JS	5905-01-138-6236	1	430
81349	RCR07G682JS	5905-00-110-7622	1	540
81349	RCR07G822JS	5905-00-104-8358	1	550
81349	RCR20G100JS	5905-00-104-5755	1	660
81349	RCR20G163JS	5905-00-111-4746	1	750
81349	RCR20G202JS	5905-00-935-8539	1	710
81349	RCR20G221JS	5905-00-104-8350	1	680
81349	RCR20G274JS	5905-00-114-5416	1	770
81349	RCR20G431JS	5905-00-121-9922	1	690
81349	RCR20G470JS	5905-00-111-4734	1	670
81349	RCR20G562JS	5905-00-141-1116	1	720
81349	RCR20G622JS	5905-00-141-0594	1	730
81349	RCR20G683JS	5905-00-106-9345	1	760
81349	RCR20G684JS	5905-00-114-5456	1	780
81349	RCR20G822JS	5905-00-141-0600	1	740
81349	RCR32G473JS	5905-00-369-6929	1	810
81349	RCR32G620JS	5905-00-463-9584	1	790
81349	RCR32G822JS	5905-00-456-0662	1	800
81349	RC42GF682J	5905-00-279-2528	1	820
81349	RNC55K1502FS	5905-00-004-6118	1	1140
81349	RNC60H6003BS	5905-01-173-7555	1	940
81349	RNC60K1004FS	5905-00-189-2454-	1	980
81349	RNC60K1401FS	5905-00-208-4407	1	910
81349	RNC65H2493DS		1	930
81349	RNC65H82R5FS	5905-00-101-1693	1	880
81349	RNC65H9883DS	5905-00-254-2188	1	970
81349	RNC65K1000FS	5905-00-158-5065	1	1000
81349	RNC65K1211FS	5905-00-349-6142	1	1070
81349	RNC65K1821FS	5905-00-502-3978	1	1100
81349	RNC65K2101FS	5905-00-433-1065	1	920
81349	RNC65K2212FS	5905-00-200-9532	1	860
81349	RNC65K3320FS	5905-00-232-3383	1	1030
81349	RNC65K9531FS	5905-00-250-3370	1	1120
81349	RN65C5900F		1	900
81349	RN65C8983D		1	960
81349	RN65D1100F		1	1010
81349	RN65D1181F		1	1060
81349	RN65D1212F		1	1130
81349	RN65D1471F		1	1080
81349	RN65D1501F		1	1090
81349	RN65D1870F		1	890
81349	RN65D2210F		1	1020
81349	RN65D3011F		1	1110
81349	RN65D33R2F		1	990
81349	RN65D3650F		1	1040
81349	RN65D3920F		1	1050
81349	RN65D4021F		1	850
81349	RN65D49R9F	5905-00-892-6465	1	870
81349	RN65E6653D		1	950
81349	RN70D2672F	5905-00-044-2282	1	1150

NATIONAL STOCK NUMBER AND PART NUMBER INDEX

PART NUMBER INDEX

FSCM	PART NUMBER	STOCK NUMBER	FIG.	ITEM
81349	RV4NAYSD151A	5905-00-556-4090	1	1240
81349	RV5NAYSL504A	5905-00-807-0999	1	1210
81349	RW67V562	5905-00-728-5675	1	1190
81349	RW69V102	5905-00-058-5461	1	1180
81349	TS103C03	5935-00-577-8695	1	1310
56289	10E8215A		1	1200
18876	10015883-016		1	20
18876	10156805-1	5910-00-916-3648	1	180
18876	10193706		1	260
18876	10395523-001	5961-00-900-2374	1	1400
80009	108-0253-00	5950-00-912-8988	1	1370
80009	108-0283-00	5950-00-912-8989	1	240
80009	108-0286-00	5950-00-913-2213	1	250
80009	114-0151-00	5950-00-018-1283	1	1360
80009	114-151		1	330
80009	119-0033-00		1	290
80009	120-0193-00		1	1350
80009	136-0101-00	5935-00-109-9850	1	1300
71785	149-19-11-070		1	1290
80009	151-0108-00	5961-00-759-9392	1	1380
59873	152-0061-00	5961-00-905-6871	1	1260
74970	189-506-5	5910-00-132-2287	1	230
80131	2N3118	5961-00-722-1390	1	1410
80009	260-0442-00	5930-00-939-4416	1	1330
80009	260-0607-00	5930-00-939-4417	1	1340
80009	262-0653-00	5930-00-106-4835	1	1320
80009	285-0609-00		1	10
80009	310-0596-00	5905-00-905-7492	1	1170
80009	311-0258-00	5905-00-910-0763	1	1220
80009	311-0272-00	5905-00-890-9395	1	1250
80009	322-0620-01	5905-00-194-8008	1	830
80009	366-0160-00	5355-00-913-5491	1	340
80009	378-0541-00	6210-00-103-6337	1	350
56289	41C208	5910-00-702-8060	1	60
56289	5CZ5U105X0050C5	5910-00-064-2919	1	50
56289	57E54A		1	1160
81349	6DJ8	5960-00-880-0457	1	300
81349	7586	5960-00-060-6613	1	320
19200	7598197	5310-00-759-8197	1	360
72982	8131N145C0G332J	5910-00-900-1209	1	100
81349	8233	5960-00-869-3995	1	310

APPENDIX A

REFERENCES

Following is a list of publications available to the Dual-Trace Amplifier Plug-In, Tektronix Type 3A6 operator and maintenance personnel.

DA Pam 310-4	Index of Technical Manuals, Technical Bulletins, Supply Manuals (types 7, 8, and 9), Supply Bulletins and Lubrication Orders.
DA Pam 310-7	US Army Equipment Index of Modification Work Orders
TM 38-750	The Army Maintenance Management System (TAMMS).
SB 38-100	Preservation, Packaging, Packing, and Marking Materials, Supplies, and Equipment used by the Army.
TB 746-10	Field Instructions for Painting and Preserving Electronics Command Equipment.
TB 750-236	Calibration Requirements for the Maintenance of Army Materiel.

APPENDIX B

BASIC ISSUE ITEMS LIST

(Not Applicable)

APPENDIX C

MAINTENANCE ALLOCATION CHART

Nomenclature of End Item or Component:
DUAL-TRACE AMPLIFIER PLUG-IN, 7911441-1

This Maintenance Allocation Chart designates overall responsibility for the performance of maintenance functions on the identified end item or component. The implementation of field maintenance tasks upon this end item or component will be consistent with the assigned maintenance operations which are defined as follows:

Operation	Definition
Depot (D)	That level of logistics which has the facilities, personnel, and capabilities to equal the quality of the equipment repair available at the contractor's facilities.
Reference (H)	That level in the maintenance of calibration equipment which provides DS and GS logistical support.
Transfer (F)	That level in the maintenance of calibration equipment which provides organizational and limited DS logistical support to secondary transfer equipment

Maintenance Allocation Chart; Amplifier, Dual-Trace Plug-in;
Chart Number 7911441-1

Group number	Functional group	Maintenance functions												
		a Inspect	b Test	c Service	d Adjust	e Align	f Calibrate	g Install	h Replace	i Repair	j Overhaul	k Rebuild	l Tool reqd.	m Remarks
1	AMPLIFIER, DUAL-TRACE, PLUG-IN	F	F	F			F	F	F	F	D		1	A
2	Attenuator X2.5	F							F	F	D		2	B
3	Attenuator X5	F							F	F	D		2	B
4	Attenuator X10	F							F	F	D		2	B
5	Attenuator X100H H	F	H						F	F	D		3	B
6	Switch, slide, unwired, AC-DC-GND	F	H						F	F	D		4	B
7	Switch, rotary, CH2, VOLTS/DIV, wired	F							F	F	D		5	B
8	Switch, rotary, wired, CH2, VOLTS/DIV	F							F	F	D		5	B
9	Delay Line Assy	F							F	F	D		6	B

Amplifier, Dual-Trace Plug-In; Tools Required

Tool code	Category	Nomenclature	Tool number
1-b	F	Calibrator, voltage, 8205523	4931-555-2247
	F	Generator square wave, MIS-10284	6625-455-5855
	F	Oscilloscope, 7910655-2	6625-935-1313
	F	Plug-In Unit, electrical, time base, 7912040-1	4931-916-5937
	F	Voltmeter/Ratiometer, digital, 7910588-3	4931-913-3069
	F	Adapter, connector, 10519439	6625-953-3214
	F	Adapter, connector, MS 35173-274	5935-926-7523
	F	Connector, plug, electrical, 7907592	5935-053-9454
	F	Adapter, connector, 10528711	
	F	Cable Assembly, radio frequency, 7907467 (2 required)	4931-843-2792
	F	Lead, test probe, standard 7911545	6625-738-6751
1-c	F	Cleaner, electrical contact	6850-913-3122
	F	Brush, artist	8020-224-8022
	F	Brush, dusting	7920-685-3980
	F	Clean Soft Cloth	7920-205-3571
1-f	F	Calibrator, voltage, 8205523	4931-455-2247
	F	Generator, square wave, MIS-10284	6625-455-5855
	F	Oscilloscope, 7910655-2	6625-935-1313
	F	Plug-In Unit, electrical, time base, 7912040-1	4931-916-5937
	F	Voltmeter/Ratiometer, digital, 7910588-3	4931-913-3069
	F	Adapter, connector, 10519439	6625-953-3214

Tool code	Category	Nomenclature	Tool number
	F	Adapter, connector, MS 35173-274	5935-926-7523
	F	Connector, plug, electrical, 7907592	5935-053-9454
	F	Adapter, connector, 10528711	
	F	Cable Assembly, radio frequency, 7907467 (2 required)	4931-843-2792
	F	Lead, test probe, standard, 7911545	6625-738-6751
1-g	F	Tool Kit	5180-650-7821
1-h	F	Tool Kit	5180-650-7821
1-i	F	Tool Kit	5180-650-7821
	F	Solder	3439-821-1674
	F	Multimeter, 7904729	6625-649-3290
	F	Impedance, 7912149-2	4931-913-2897
	F	Cable Assembly, GR874 to GR874	4931-914-5949
	F	Semiconductor Tester with probe	4931-914-5185
	F	Heat Sink	(28493) 30A
	F	Galvanometer, 7910439	6625-510-1814
	F	Power Supply, DC MIS-10230	4931-115-0567
	F	Cable Assembly, radio frequency (3 required), 7907470	4931-846-0010
	F	Oscillator, audio-radio frequency, MIS-10224	4931-113-2943
1-j	D	Tool Kit	5180-650-7821
	D	Solder	3439-821-7674
	D	Multimeter, 7904729	6625-649-3290
	D	Capacitance Measuring Assembly, 7910842	4931-916-5952
	D	Cable Assembly, GR 874 to GR 874	4931-914-5949
	D	Semiconductor Tester with probe	4931-914-5185
	D	Heat Sink	(28493) 30A
	D	Bridge, resistance, 7909149	4931-869-7997
	D	Detector, galvanometer, 7907452	4931-788-0021
	D	Power Supply, precision, 7907279	4931-778-3688
	D	Cable Assembly, radio frequency (3 required), 7907470	4931-846-0010
	D	Bridge, inductance, 7907184-1	6625-777-4118
	D	Oscillator, audio-radio frequency, MIS-10224	4931-113-2943
	D	Tuned Amplifier and Null Detector, 8616466-1	4931-916-8256
2-h	F	Tool Kit	5180-650-7821
	F	Solder	3439-821-7674
2-i	F	Galvanometer, 7910439	6625-510-1814
	F	Power Supply, DC MIS-10230	4931-115-0567
	F	Cable Assy., radio frequency (3 required), 7907470	4931-946-0010
	F	Impedance Measuring 7912149-2	4931-913-2897
	F	Oscillator, audio-radio frequency, MIS-10224	4931-113-2943
	F	Cable Assy., GR874 to GR874, 36 in.	4931-914-5949

Tool code	Category	Nomenclature	Tool number
	F	Tool Kit	5180-640-7821
	F	Solder	3439-821-7674
2-j	D	Bridge, resistance, 7909149	4931-869-7997
	D	Detector, galvanometer, 7907452	4931-788-0021
	D	Cable Assy., radio frequency (8 required), 7907470	4931-846-0010
	D	Bridge, inductance, 7907184-1	6625-777-4118
	D	Oscillator, audio-radio frequency, MIS-10224	4931-113-2943
	D	Tuned Amplifier and Null Detector, 8616466-1	4931-916-8256
	D	Capacitance Measuring Assembly, 7910842	4931-916-5952
	D	Cable Assy., GR874 to GR 874	4931-914-5949
	D	Tool Kit	5180-650-7821
	D	Solder	8439-821-7674
3-h	F	Tool Kit	5180-650-7821
	F	Solder	3439-821-7674
3-i	F	Galvanometer, 7910439	6625-510-1814
	F	Power Supply, DC, MIS-10230	4931-115-0567
	F	Cable Assy., radio frequency (3 required), 7907470	4931-846-0010
	F	Tool Kit	5180-450-7821
	F	Solder	3439-821-7674
	F	Impedance Measuring, 7912149-2	4931-913-2897
	F	Cable Assy., GR874 to GR874, 36 in.	4931-914-5929
	F	Multimeter, 7904729	6625-649-3290
3-j	D	Bridge, resistance, 7909149	4931-869-7997
	D	Detector, galvanometer, 7907452	4931-788-0021
	D	Power Supply, precision, 7907279	4931-778-3688
	D	Cable Assy., radio frequency (3 required), 7907470	4931-846-0010
	D	Tool Kit	5180-650-7821
	D	Solder	3439-821-7674
	D	Capacitance Measuring Assy 7910842	4931-916-5952
	D	Cable Assy., GR874 to GR874, 36 in.	4931-916-5952
	D	Cable Assy., GR874 to GR874, 36 in.	4931-914-5949
	D	Multimeter, 7904729	6625-649-3290
4-h	F	Tool Kit	5180-650-7821
	F	Solder	3439-821-1674
4-i	F	Impedance Measuring, 7912149-2	4931-913-2897
	F	Cable Assembly, GR874 to GR874	4931-914-5949
	F	Multimeter, 7904729	6625-649-3290
	F	Tool Kit	5180-650-7821
	F	Solder	3439-821-7674
4-i	D	Capacitance Measuring Assembly, 7910842	4931-916-5952
	D	Cable Assembly, GR874 to GR874	4931-914-5949

Tool code	Category	Nomenclature	Tool number
	D	Multimeter, 7904729	6625-649-3290
	D	Tool Kit	5180-650-7821
	D	Solder	3439-821-7674
5-h	F	Tool Kit	5180-650-7821
5-4	F	Multimeter, 7904729	6625-649-3290
	F	Impedance Measuring, 7912149-2	4931-913-2897
	F	Cable Assembly, GR874 to GR874	4931-914-5949
	F	Tool Kit	5180-650-7821
	F	Solder	3439-821-7674
5-j	D	Multimeter, 7904729	6625-649-3290
	D	Capacitance Measuring Assembly, 7910842	4931-916-5952
	D	Cable Assembly, GR874 to GR874	4931-914-5949
	D	Tool Kit	5180-650-7821
	D	Solder	3439-821-7674
6-h	F	Tool Kit	5180-650-7921
	F	Solder	3439-821-7674
6-i	F	Tool Kit	5180-650-7821
	F	Multimeter, 7904729	6625-649-3290
	F	Solder	3439-821-7674
6-j	D	Tool Kit	5180-650-7821
	D	Multimeter, 7904729	6625-649-3290
	D	Solder	3439-821-7674

Amplifier, Dual-Trace Plug-in; REMARKS

Remarks code	Remarks
A-b	Test in accordance with calibration procedure TB 9-625-967-50
A-c	Clean components and case periodically
A-f	Calibrate in accordance with calibration procedure, TB 9-6625-967-50
A-g	Install in case 26 of calibration van (M292A5)
A-h	Install in case 26 of calibration van (M292A5)
A-i	Solder all connections as per MIL-S-45743
A-j	Solder all connections as per MIL-S45743. Solder used on ceramic terminal strips should contain about 3% silver, if available.
B-h	Solder all connections as per MIL-S-45743
B-i	Solder all connections as per MIL-S-45743
B-j	Solder all connections as per MIL-S-4574

By Order of the Secretary of the Army:

W. C. WESTMORELAND,
General, United States Army,
Chief of Staff.

Official:

VERNE L BOWERS,
Major General United State Army,
The Adjutant General.

Distribution:

To be distributed in accordance with DA Form 12-34, Section II (qty rqr block no. 75) Requirements for Calibration Procedures Publications.

This fine document...

Was brought to you by me:

Liberated Manuals -- free army and government manuals

Why do I do it? I am tired of sleazy CD-ROM sellers, who take publicly available information, slap “watermarks” and other junk on it, and sell it. Those masters of search engine manipulation make sure that their sites that sell free information, come up first in search engines. They did not create it... They did not even scan it... Why should they get your money? Why are not letting you give those free manuals to your friends?

I am setting this document FREE. This document was made by the US Government and is NOT protected by Copyright. Feel free to share, republish, sell and so on.

I am not asking you for donations, fees or handouts. If you can, please provide a link to liberatedmanuals.com, so that free manuals come up first in search engines:

<A HREF=http://www.liberatedmanuals.com/>Free Military and Government Manuals</A>

- Sincerely
  Igor Chudov
  http://igor.chudov.com/
- Chicago Machinery Movers