TM 9-6625-474-14&P-1

TECHNICAL MANUAL

OPERATOR, ORGANIZATIONAL,
DIRECT SUPPORT, AND GENERAL SUPPORT
MAINTENANCE MANUAL
(INCLUDING REPAIR PARTS)
FOR

POWER MODULE,
TEKTRONIX, MODEL TM 503
NSN 6625-00-373-7528

DEPARTMENT OF THE ARMY 21 DECEMBER 1984

WARNING

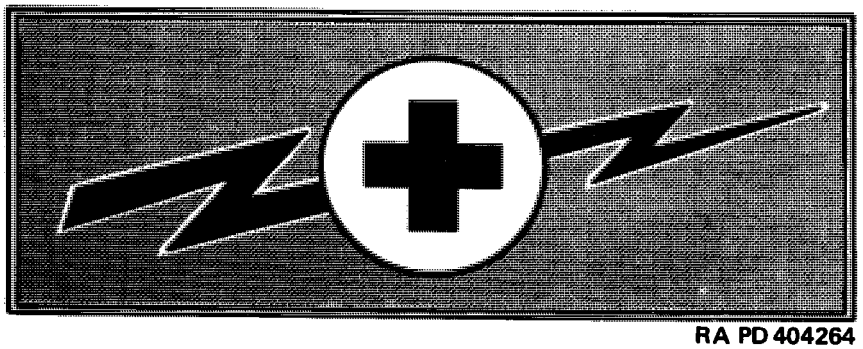

RA PD 404264

DANGEROUS VOLTAGE

is used in the operation of this equipment

DEATH ON CONTACT

may result if personnel fail to observe safety precautions

Never work on electronic equipment unless there is another person nearby who is familiar with the operation and hazards of the equipment and who is competent in administering first aid. When the technician is aided by operators, he must warn them about dangerous areas.

Whenever possible, the power supply to the equipment must be shut off before beginning work on the equipment. Take particular care to ground every capacitor likely to hold a dangerous potential. When working inside the equipment, after the power has been turned off, always ground every part before touching it.

Be careful not to contact high-voltage connections when installing or operating this equipment.

Whenever the nature of the operation permits, keep one hand away from the equipment to reduce the hazard of current flowing through vital organs of the body.

WARNING

Do not be misled by the term “low voltage.” Potentials as low as 50 volts may cause death under adverse conditions.

COMMON and probe ground straps are electrically connected. Herefore, an elevated reference applied to any is present on each - as indicated by the yellow warning bands under the probe retractable hook tips.

For Artificial Respiration, refer to FM 21-11,

Power Source

This product is intended to operate from a power source that will not apply more than 250 volts rms between the supply conductors or between either supply conductor and ground. A protective ground connection by way of the grounding conductor in the power cord is essential for safe operation.

TECHNICAL MANUAL)
)
No. 9-6625-474-14&P-1)

HEADQUARTERS
DEPARTMENT OF THE ARMY
Washington, D. C., *21 December 1984*

OPERATOR, ORGANIZATIONAL, DIRECT SUPPORT, AND GENERAL SUPPORT MAINTENANCE MANUAL (INCLUDING REPAIR PARTS)

FOR

POWER MODULE, TEKTRONIX, MODEL TM 503 (NSN 6625-00-373-5728)

REPORTING OF ERRORS

You can help improve this manual. If you find any mistakes or if you know of a way to improve the procedures, please let us know. Mail your letter or DA Form 2028 (Recommended Changes to Publications and Blank Forms), direct to: Commander, US Army Missile Command, ATTN: DRSMI-SNPM, Redstone Arsenal, AL 35898-5238. A reply will be furnished to you.

TABLE OF CONTENTS

This manual is, in part, authenticated manufacturer's commercial literature. Recommended Spare Parts List has been added to supplement the commercial literature. The format of this manual has not been structured to consider levels of maintenance.

SECTION 0

GENERAL INFORMATION

0-1. Scope. This manual contains instructions for the operator, organizational, direct support, and general support maintenance of and calibration procedures for Tektronix Power Module, Model TM 503. Throughout this manual, Tektronix Power Module, Model TM 503 is referred to as the TM 503.

0-2. Indexes of publications. *a. DA Pam 310-4.* Refer to the latest issue of DA Pam 310-4 to determine whether there are new editions, changes, or additional publications pertaining to Tektronix Power Module, Model TM 503.

b. DA Pam 310-7. Refer to the latest issue of DA Pam 310-7 to determine whether there are modification work orders (MWO's) pertaining to Tektronix Power Module, Model TM 503.

0-3. Forms, Records, and Reports. Department of Army forms and procedures used for equipment maintenance and calibration are those prescribed by TM 38-750, The Army Maintenance Management System. Accidents involving injury to personnel or damage to materiel will be reported on DA Form 285, Accident Report, in accordance with AR 385-40.

0-4. Reporting Equipment improvement Recommendations (EIR). If your TM 503 needs improvement, let us know. Send us an EIR. You, the user, are the only one who can tell us what you don't like about your equipment. Let us know why you don't like the design. Tell us why a procedure is hard to perform. Put it on an SF 368 (Quality Deficiency Report). Mail it to Commander, U.S. Army Missile Command, ATTN: DRSMI-QMD, Redstone Arsenal, AL 35898-5290. We'll send you a reply.

0-5. Administrative Storage. To prepare the Tektronix Power Module, Model TM 503 for placement into and removal from administrative storage, refer to Section 3, Chapter 4, AR 750-25-1, Maintenance of Equipment and Supplies. Temporary storage should be accomplished in accordance with TB 750-25-1, Section 2, Maintenance of Supplies and Equipment.

0-6. Destruction of Army Electronics Materiel. Destruction of Tektronix Power Module, Model TM 503 to prevent enemy use shall be in accordance with TM 750-244-2.

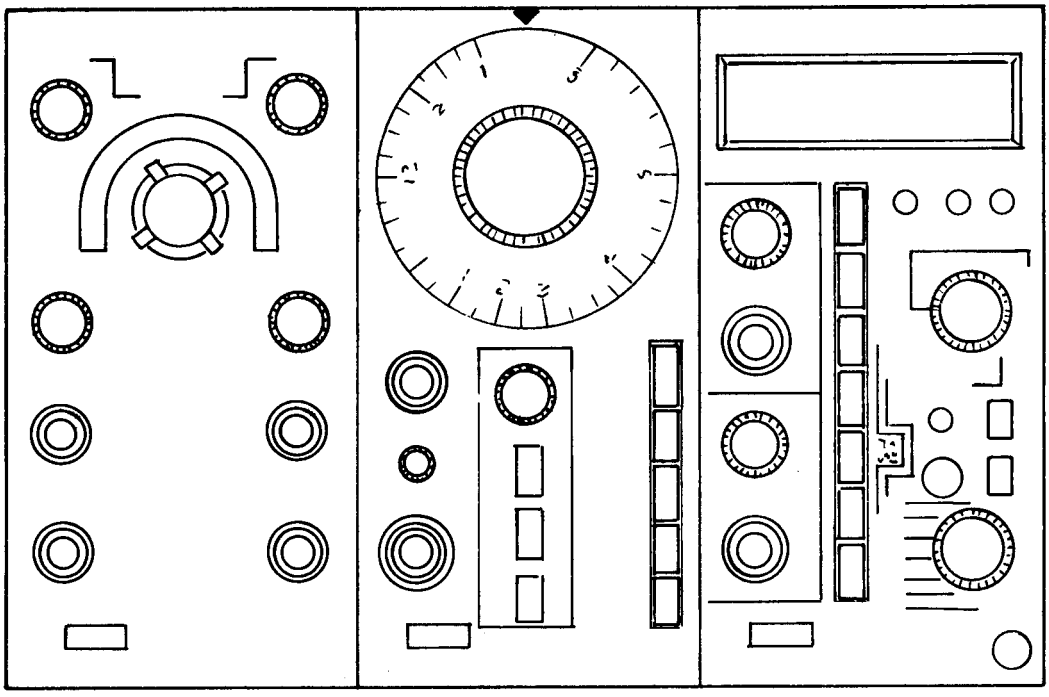

Fig. 0-1. **TM 503 Power Module with plug-ins.**

SECTION 1

SPECIFICATION

INTRODUCTION

Description

The TM 503 is a three-wide power module compatible with all TM 500 plug-ins. It provides unregulated dc and ac supplies and non-dedicated power transistors for plug-in usage. Option 2 rear interface allows interconnection of special features between Plug-ins or with external devices through the back panel.

Performance Conditions

The values listed below are valid only when the instrument is operated at an ambient termperature between 0° C and 50° C.

Table 1-1

ELECTRICAL CHARACTERISTICS

Characteristics	Performance Requirements	Supplemental Information
SUPPLIES		
+33.5 Vdc		
Tolerance[a]		+23.7 V to +40.0 V
PARD (Periodic and Random Deviation)		≤2.5 Vpp
Maximum load		350 mA
Maximum load di/dt		10 mA/μs
−33.5 Vdc		
Tolerance[a]		−23.7 V to −40.0 V
PARD		≤2.5 Vpp
Maximum load		350 mA
Maximum load di/dt		10 mA/μs
+11.5 Vdc		
Tolerance[a]		+7.6 V to +16.0 V
PARD		≤2.5 Vpp
Maximum load		1.3 A
Maximum load di/dt		20 mA/μs
25 Vac (2 each)		
Range		25.0 Vrms +10%, −15% floating
Maximum load		25 Vac
Maximum floating voltage		350 V peak

Table 1-1 (cont)

Characteristics	Performance Requirements	Supplemental Information
17.5 Vac[b]		
Range		With a grounded center tap 20.5 Vrms +10%, −20%
Maximum load		30 VA
Maximum plug-in power drawn from mainframe[c]		35 Wdc or 75 VAac
Combined power drawn sharing limitation[c]		VAac +2.1 (Wdc) ⩽ VAac
Fuse data		
+33.5 Vdc		2.5 A, 3 AG, fast blow
−33.5 Vdc		2.5 A, 3 AG, fast blow
+11.5 Vdc		7.5 A, 3 AG, fast blow
SERIES PASS TRANSISTORS		
Type		One each NPN or PNP per compartment.
Maximum dissipation		7.5 W each, 15 W total
SOURCE POWER REQUIREMENTS		
Voltage ranges		Selectable 100 V, 110 V, 120 V, 200 V, 220 V, and 240 V nominal line ±10%
Line frequency		48 Hz to 440 Hz
Max power consumption		Approximately 120 W
Fuse data		
100 V, 110 V, 120 V ranges		1.6A slow blow
200 V, 220 V, 240 V ranges		0.8A slow blow
MISCELLANEOUS		
Maximum recommended plug-in power dissipation		
One-wide		10 to 15 W
Two-wide		25 to 35 W

[a] **Worst case; low line-full load and high line-no load values including PARD.**

[b] **Floating in high-power compartment, 350 V peak.**

[c] **At nominal line voltage.**

Table 1-2

PHYSICAL CHARACTERISTICS

Characteristics	Supplemental Information
ENVIRONMENTAL[a]	
Overall	Meets or exceeds MIL-T-28800B, class 5 requirements with exception for vibration, shock, and EMC.
Temperature	
Operating	0°C to +50°C
Non-operating	−40°C to +75°C
Humidity	90-95% RH for 5 days cycled to +50°C.
Altitude	
Operating	4.6 km (15,000 ft)
Non-operating	15 km (50,000 ft)
Vibration	0.26 mm (0.010"), 10 Hz to 55 Hz, 75 minutes.
Shock	20 g's (1/2 sine), 11 ms, 18 shocks
Bench handling	45°, 4", or equilibrium whichever occurs first
Transportation	Qualified under National Safe Transit Association Preshipment Test Procedures 1A-B-1 and 1A-B-2.
MECHANICAL	
Net weight	9.5 lbs (4.3 kg)
Overall dimensions	6.0 in (15.2 cm)H, 8.7 in (22.1 cm)W, 15.3 in (38.9 cm)L

[a] **With plug-ins. Some plug-ins require additional limitations.**

SECTION 2

OPERATING INSTRUCTIONS

GENERAL

Installation

For full installation instructions refer to the procedure at the end of this section.

Power Source

The TM 503 is designed to operate from a power source with its neutral at or near earth (ground) potential with a separate safety-earth conductor. It is not intended for operation from two phases of a multi-phase system.

Power Usage

With three plug-ins installed, the TM 503 may require up to 120 watts at the upper limits of high line voltage ranges. Actual power consumption depends on the particular plug-in configuration and operating modes selected.

Loading Considerations. The power capability of the TM 503 can best be used by carefully planning the plug-in configuration, the external loads, and the resulting power distributions. Optimum conditions may be obtained by:

1. Having equal loads in all compartments.
2. Dissipating as much power as possible in the external loads.
3. Operating the system in an ambient temperature near 25° C.

Each plug-in is provided access to a pair of heat-sinked, series-pass transistors, one NPN and the other PNP. These transistors enable the plug-in to operate in power ranges not possible if the power were to be dissipated i n the plug-ins themselves.

Operating Temperatures

The TM 503 can be operated in an ambient air temperature of O°C to 50°C. Thermal cutout devices protect the system by disconnecting the power to the TM 503 Power Module when internal temperatures rise above a safe operating level. These devices automatically return power to the unit when the internal temperatures return to a safe level.

Since the TM 503 can be stored in temperatures between −40°C and +75°C, allow the instrument's chassis to return to within the operating limits before applying power.

Power Modules

It is not necessary that all the plug-in compartments be utilized in order to operate the Power Module. The only modules needed are those necessary to complete the task.

CAUTION

Turn the Power Module off before inserting the plug-in; otherwise damage may occur to the plug-in circuitry.

Module Installation

1. Check the location of the white plastic barrier keys on the TM 503 interconnecting jack to ensure that their locations match the slots in the edge of the plug-in module's circuit board.

2. Align the plug-in module chassis with the upper and lower guides of the selected compartment. Push the module in and press firmly to seat the circuit board in the interconnecting jack. (Remove the plug-in module by pulling on the white release latch in the lower left corner of each module.)

Turn-on Procedure

After completing the installation procedure, found at the end of this section, and installing the plug-ins, pull the PWR switch on the left side of the TM 503. Some plug-ins have independent power switches, usually labeled OUTPUT, controlling application of mainframe power to the plug-in. Press this button to activate the plug-in.

BUILDING A SYSTEM

Family Compatibility

Mechanically, the plug-in modules are very similar to other Tektronix product families. However, they are not electrically compatible. Therefore, the TM 503 interface has barriers on the mating connectors between pins 6 and

7 to ensure that incompatible modules cannot be inserted. See Fig. 2-1. A compatible module will have a matching slot between pins 6 and 7 of its main circuit board edge connector. This slot and barrier combination is the primary keying assignment.

TM 500-compatible plug-in modules are also identified by the white color of the release latch.

Customizing the Interface

The modularity of this instrumentation system provides for many different functions to be performed by the plug-in modules. Specific functions are grouped into families or classes, of which there may be several plug-in module members. For instance, some classes are Power Supplies, Signal Sources, Measurement, and so forth, Each modular member of a functional family will have a second slot peculiar to its family assignment located in its edge connector. The TM 503 user can "program" one or more compartments to accept only members of that family by installing a second barrier in the interface connector to match the module's slot location. An entire TM 503 can be "programmed" in this manner to set up instruction systems for specific work functions. For extra barriers, order Tektronix Part No. 214-1593-02.

Jumper wires can be used to further specialize the interface. Compartments can be made to "talk" to each other by connecting jumpers on the back side of the interface board, using pins 14 through 28 (A-side and B-side both) of the interconnecting jacks. Seethe following description of Option 2. Refer to each plug-in module's Manual for the I/O assignments of each pin at the rear interface. Once having made interconnections of a specialized nature, it is recommended that barriers be installed on the interconnecting jacks to ensure module compatibility with the customized wiring.

Rear Panel

The rear subpanel has a connector mounting plate for BNC and multi-pin connector mountings. Customer or factory-installed connectors and wiring (see following description of Option 2) could provide external access to the interface for external I/O control. This feature makes the TM 500 Series Modular Instrumentation System very flexible in bench-top or rackmounted systems.

Option 2. This factory-installed option adds 25-mil square-pin connectors to the rear of the interconnecting jacks at all pin locations from pins 14A and B through pins 28A and B. This will keep the interface flexible by making it

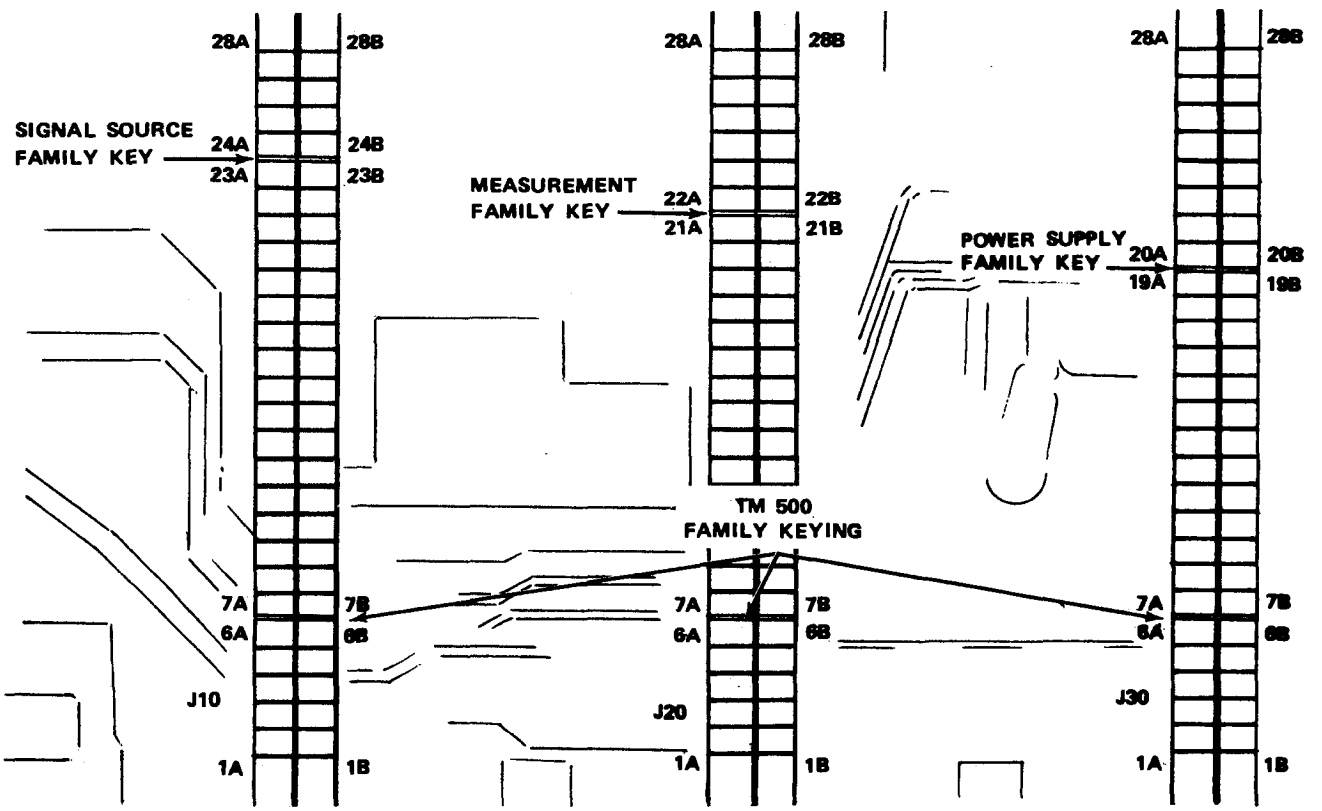

Fig. 2-1. Keying assignments for family functions. One of many possible sequence combinations.

easy and fast to change customized wiring using prepared wires with square-pin receptacles and long-nose pliers or tweezers. It also protects the circuit board from damage by repeated soldering and unsoldering of jumper wires. This option also adds six BNC connectors and one 50-pin connector to the rear panel. These connectors are not pre-wired. Instead, prepared jumpers, coaxial cables, and interconnection jack barriers are included in a kit. This gives a system designer as much flexibility as possible.

Option 7. The following described bus wires and keys are added to the connector boards of the above named TM 500-Series Power Modules to provide rear interface connections between the DC 502 Option 7, the TR 502, and the SW 503.

BUS WIRES. Six-conductor ribbon cable (Tektronix Part No. 175-0829-00) is used to make bus runs between the following points:

B14 on J10, J20, and J30

B15 on J10, J20, and J30

B16 on J10, J20, and J30

B17 on J10, J20, and J30

B18 on J10, J20, and J30

A18 on J10, J20, and J30

BARRIER KEYS. Plastic barrier keys (Tektronix Part No. 214-1593-02) are inserted between pins 21 and 22 on J10 between pins 23 and 24 on J20 and between pins 17 and 18 on J30.

Once the above bus connections are made and barrier keys inserted, the three connectors so changed the system dedicated and the three slots should only be used for system-dedicated plug-ins.

Stacking and Rackmounting

TM 503's with their cabinets and feet in place may be stacked on top of each other. The feet provide clearance for the lower unit's handle and at the same time give adequate spacing for the necessary ventilation.

The TM 503 is designed to be half-rack width. Field conversion kits with slide-out tracks are available to mount one or two TM 503's in a standard 19-inch rack. Vertical space needed is 5 1/4 inches,

For the necessary hardware and instructions to mount two TM 503's side-by-side with slide-out assemblies, order Tektronix Part Number 040-0616-02.

To mount a single TM 503 with a half-rack assembly and slide-out tracks, order Tektronix Part Number 040-0617-02.

To convert from a rackmount to a bench configuration for a single TM 503, order Tektronix Part Number 040-0618-01.

INSTALLATION AND PRE-TURN ON PROCEDURE

Check the rear panel markings. If the factory settings are compatible with the available line voltage and frequency, insert the desired plug-ins and use the bail to raise the front of the instrument. If a change is needed, refer a qualified service person to the procedure in the Maintenance section of this manual,

SECTION 3

MAINTENANCE

GENERAL

Introduction

This section of the manual is meant to support the entire TM 500 Series family of modules with a general coverage of the most commonl y-needed service information pertinent to preventive maintenance, troubleshooting, ordering parts, and replacing components and sub-assemblies.

Cabinet Removal

WARNING

Dangerous potentials exist at several points throughout the system. When the system must be operated with the cabinet removed, do not touch exposed connections or components. Some transistors have voltage present on their cases. Disconnect power before cleaning the system or replacing parts.

Five screws secure the cabinet to the TM 503 frame. Remove them and lift the cabinet straight up. Do not operate the system with the cabinet removed any longer than necessary for troubleshooting and calibration. Reinstall the cabinet to protect the interior from dust and to remove personnel shock hazards.

Cleaning

CAUTION

Avoid using chemical cleaning agents which might damage plastic parts. Avoid chemicals containing benzene, toluene, xylene, acetone, or similar solvents.

Exterior. Loose dust may be removed with a soft cloth or a dry brush. Water and a mild detergent may be used. However, abrasive cleaners should not be used.

Interior. Cleaning the interior of a unit should precede calibration since the cleaning processes could alter the settings of calibration adjustments. Use low-velocity compressed air to blow off accumulated dust. Hardened dirt can be removed with a soft brush, cotton-tipped swab, or a cloth dampened in a solution of water and mild detergent.

Preventive Maintenance

Preventive maintenance steps performed on a regular basis will enhance the reliability of the instrumentation systems. However, periodic checks of the semiconductors in the absence of a malfunction are not recommended as preventive maintenance measures. See the semiconductor checking information under Troubleshooting Techniques which follow. A convenient time to perform preventive maintenance is just before instrument calibration.

Calibration

To ensure accurate signal generation and measurement, the performance of individual units comprising the system should be checked periodically. Refer to the Instruction Manual for each unit for complete calibration and verification procedures.

TROUBLESHOOTING AIDS

Introduction

The following is provided to augment information contained elsewhere in this and other TM 500 series family manuals when troubleshooting becomes necessary.

Circuit Description

Each manual has a section devoted to explaining circuit operating theory. Used with the schematics, this can be a powerful analytic tool.

Diagrams

Block diagrams and detailed circuit schematics are located on foldout pages in the service section of most of the TM 500 Series family manuals. The schematic diagrams show the component values and assigned circuit reference numbers of each part necessary to the circuit design. Usually the first page of the service section defines the circuit symbols and reference designators

used in that particular instrument. Major circuits are usually identifiable by a series of component numbers. Important waveforms and voltages may be shown within the diagrams or on adjoining aprons. Those portions of the circuits located on circuit boards are enclosed with a grey tint outline.

Cam Switch Charts

Cam switches shown on the diagrams are coded on charts to located the cam number of the switch contact in the complete switch assembly, counting from the front, or knob end, toward the rear of the switch. The charts also indicate with a solid dot when each contact is closed.

Circuit Board Illustrations

Line illustrations showing component locations keyed with a grid scheme for each circuit board are usually placed on the back of a foldout page and sequenced as close as possible to an associated schematic. The GRID LOC columns, located near the Parts Location Grid, keys each component to easy location on the board.

Component and Wiring Color Codes

Colored stripes or dots on electrical components signify electrical values, tolerances, etc., according to EIA standards. Components not color-coded usually have information printed on the body. The wiring coding follows the same EIA standards with the exception of the ac power cord of the Power Modules. It is coded like this:

Power Cord Conductor Identification

Conductor	Color	Alternate Color
Ungrounded (Line)	Brown	Black
Grounded (Neutral)	Blue	White
Grounding (Earthing)	Green-Yellow	Green-Yellow

Testing Equipment

Generally, a wide-band oscilloscope, a probe, and a multimeter are all that is needed to perform basic waveform and voltage checks for diagnostic purposes. The calibration procedures in the manual for each plug-in module list specific test equipment and the features necessary to adequately check out that particular module.

TROUBLESHOOTING TECHNIQUES

Introduction

This troubleshooting procedure is arranged i n an order which checks the simple trouble possibilities before proceeding to extensive troubleshooting.

Control Settings

Incorrect control settings can indicate a trouble that does not exist. If there is any question about the correct function or operation of any control, see the Operating Instructions section of the manual for the instrument involved.

System and Associated Equipment

Before proceeding with troubleshooting the TM 500 Series system, check that the instruments in the system are operating correctly. Check for proper interconnection between the power module and the plug-in modules. Check the line voltage at the power source. Check that the signal is properly connected and that the interconnecting cables and signal source are not defective.

The associated plug-in modules can be checked for proper operation quickly by substituting other like units known to be operating properly. If the trouble persists after substitution, then the power module is probably at fault. Moving a properly operating plug-in from compartment to compartment will help determine if one or more compartments have a problem.

Visual Check

Inspect the portion of the system in which the trouble is suspected. Many troubles can be located by visual clues such as unsoldered connections, broken wires, damaged circuit board, damaged components, etc.

Instrument Calibration

Check the calibration of the suspected plug-in module or the affected circuit if the trouble is obviously in a certain circuit. The trouble may only be a result of misadjustment or may be corrected by re-calibration. Complete calibration instructions are given in the manual for each instrument in the system.

Circuit Isolation

Note the trouble symptoms. These often identify the circuit in which the trouble is located. When trouble symptoms appear in more than one circuit, check the affected circuits by making waveform and voltage measurements.

Incorrect operation of all circuits often means trouble in the power supplies. Using a multimeter, check first for correct voltages of the individual regulated supplies according to the plug-in module schematics and calibration procedures. Then check the unregulated supplies of the power modules. Defective components elsewhere in the instruments can appear as power supply problems. In these instances, suspected circuits should be dis-

connected from apparently bad power supplies one at a time to narrow the search.

Voltages and Waveforms

Often defective components can be located by using waveform and voltage indications when they appear on the schematic or in the calibration procedures. Such waveforms and voltage labels are typical indications and will vary between instruments. To obtain operating conditions similar to those used to take these readings, refer to the first diagram in the service sections.

Component Checking

If a component cannot be disconnected from its circuit, then the effects of the associated circuitry must be considered when evaluating the measurement. Except for soldered-in transistors and integrated circuits, most components can be lifted at one end from the circuit board.

Transistors and IC's. Turn the power switch off before removing or replacing any semiconductor.

A good check of transistor operation is actual performance under operating conditions. A transistor can most effectively be checked by substituting a new component for it (or one which has been checked previously). However, be sure that circuit conditions are not such that a replacement transistor might also be damaged. If substitute transistors are not available, use a dynamic tester. Static-type testers are not recommended, since they do not check operation under simulated operating conditions. A suction-type desoldering tool must be used to remove soldered-in transistors; see component replacement procedure for details.

Integrated circuits can be checked with a voltmeter, test oscilloscope, or by direct substitution. A good understanding of the circuit description is essential to troubleshooting circuits using IC's Operating waveforms, logic levels, and other operating information for the IC's are given in the circuit description information of the appropriate manual. Use care when checking voltages and waveforms around the IC's so that adjacent leads are not shorted together. A convenient means of clipping a test probe to the 14- and 16-pin in-line IC's is with an integrated circuit test clip. This device also doubles as an extraction tool.

Diodes. Do not use an ohmmeter that has a high internal current. High currents may damage the diode.

A diode may be checked for an open or shorted condition by measuring the resistance between terminals. With an ohmmeter scale having an internal source of between 800 mV, and 3 V, the resistance should be very high in one direction and very low when the leads are reversed.

Resistors. Check the resistors with an ohmmeter. Resistor tolerances are given in the Electrical Parts List in every manual. Resistors do not normally need to be replaced unless the measured value varies widely from the specified value.

Capacitors. A leaky or shorted capacitor can be detected by checking resistance with an ohmmeter on the highest scale. Use an ohmmeter that will not exceed the voltage rating of the capacitor. The resistance reading should be high after initial charge of the capacitor. An open capacitor can best be detected with a capacity meter, or by checking whether it passes at-signals.

PARTS ORDERING AND REPLACING

Ordering

Obtaining Replacement Parts. Most electrical and mechanical-parts can be obtained through your local Tektronix field office or representative. However, you should be able to obtain many of the standard electronic components from a local commercial source i n your area. Before you purchase or order a part from a source other than Tektronix Inc., please check the electrical parts list for the proper value, rating, tolerance and description.

Special Parts. Some parts are manufactured or selected by Tektronix, Inc. to satisfy particular requirements, or are manufactured for Tektronix, Inc., to our specifications. Most of the mechanical parts used in this system have been manufactured by Tektronix, Inc. Order all special parts directly from the local Tektronix Field Office or representative.

Ordering Procedure. When ordering replacement parts from Tektronix, Inc., please include the following minimum information:

1. Instrument Type (PS 501, SG 502, DC 501, etc.)

2. Instrument Serial Number (For example, B010251)

3. A description of the part (if electrical include the circuit number)

4. Tektronix part number

Please do not return any instruments or parts before receiving directions from Tektronix, Inc.

A listing of Tektronix Field Offices, Service Center and Representatives can be found in the Tektronix Product Catalog and Supplements.

Replacing

The exploded view drawings with the Mechanical Parts List, located to the rear of most manuals, may be especially helpful when disassembling or reassembling individual components or sub-assemblies.

Circuit Boards. If a circuit board is damaged beyond repair, either the entire assembly including all soldered-on components, or the board only, can be replaced.

To remove or replace a board, proceed as follows:

1. Disconnect all leads connected to the board (both soldered lead connections and solderless pin connections).

2. Remove ail screws holding the board to the chassis or other mounting surface. Some boards may be held fast by plastic mounting clips around the board edges. For these, push the mounting clips away from the circuit board edges to free the board. Also, remove any knobs, etc., that would prevent the board from being lifted out of the instrument.

3. Lift the circuit board out of the unit. Do not force or bend the board.

4. To replace the board, reverse the order of removal. Use care when replacing pin connectors. If forced into place incorrectly positioned, the pin connectors may be damaged.

Transistors and IC's. Transistors and IC's should not be replaced unless they are actually defective. If removed from their sockets during routine maintenance, return them to their original sockets. Unnecessary replacement or switching of semiconductor devices may affect the calibration of the instruments. When a transistor is replaced, check the operation of the part of the instrument that may be affected.

Replacement semiconductors should be of the original type or a direct replacement. Figure 3-1 shows the lead configurations of the semiconductors used in this instrument system. When removing soldered-in transistors, use a suction-type resoldering tool to remove the solder from the holes in the circuit board.

Static-Sensitive Components

CAUTION

Static discharge can damage any semiconductor component in this instrument,

This instrument contains electrical components that are susceptible to damage from static discharge. See Table 3-1 for relative susceptibility of various classes of semiconductors. Static voltages of 1 kV to 30 kV are common in unprotected environments.

Observe the following precautions to avoid damage:

1. Minimize handling of static-sensitive components.

2. Transport and store static-sensitive components or assemblies in their original containers, on a metal rail, or on conductive foam. Label any package that contains static-sensitive assemblies or components.

3. Discharge the static voltage from your body by wearing a wrist strap while handling these components. Servicing static-sensitive assemblies or components should be performed only at a static-free work station by qualified service personnel.

4. Nothing capable of generating or holding a static charge should be allowed on the work station surface.

5. Keep the component leads shorted together whenever possible.

6. Pickup components by the body, never by the leads.

7. Do not slide the components over any surface.

8. Avoid handling components in areas that have a floor or work surface covering capable of generating a static charge.

9. Use a soldering iron that is connected to earth ground.

10, Use only special antistatic suction type or wick type resoldering tools.

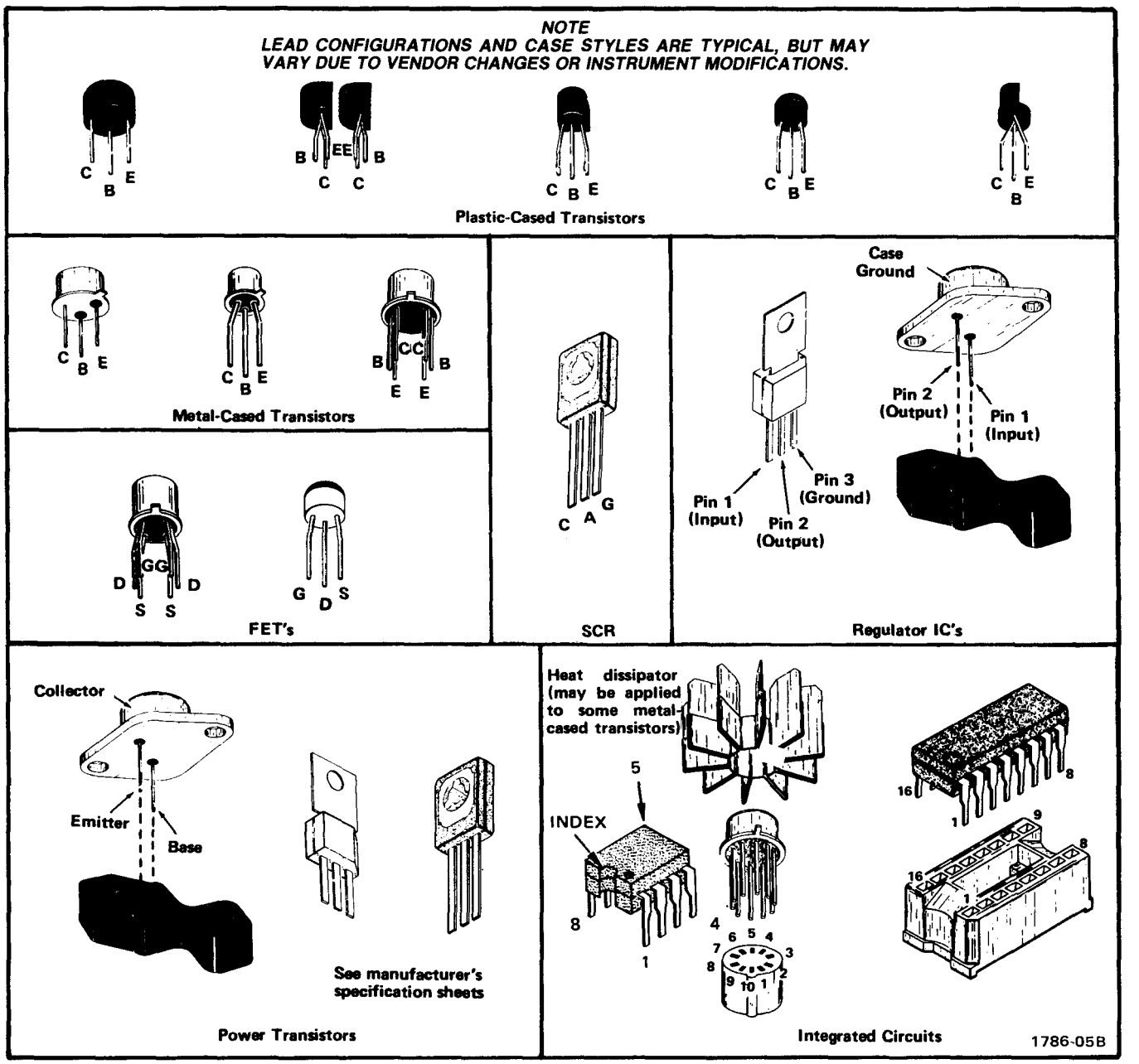

Fig. 3-1. Semiconductor device lead configurations found in the TM 500 family.

Test Equipment

Before using any test equipment to make measurements on static-sensitive components or assemblies, be certain that any voltage or current supplied by the test equipment does not exceed the limits of the component to be tested.

Table 3-1

RELATIVE SUSCEPTIBILITY TO STATIC DISCHARGE DAMAGE

Semiconductor Classes	Relative Susceptibility Levels[a]
MOS or CMOS microcircuits or discretes, or linear microcircuits with MOS inputs (Most Sensitive)	1
ECL	2
Schottky signal diodes	3
Schottky TTL	4
High-frequency bipolar transistors	5
JFETs	6
Linear Microcircuits	7
Low-power Schottky TTL	8
TTL (Least Sensitive)	9

[a] Voltage equivalent for levels:

1 = 100 to 500 V	4 = 500 V	7 = 400 to 1000 V (est.)
2 = 200 to 500 V	5 = 400 to 600 V	8 = 900 V
3 = 250 V	6 = 600 to 800 V	9 = 1200 V

(Voltage discharged from a 100 pF capacitor through a resistance of 100 ohms.)

Interconnecting Pins. To replace a pin that is mounted on a circuit board, first disconnect any pin connectors. Then, unsolder the damaged pin and pull it out of the board with a pair of pliers. Be careful not to damage the wiring on the board with too much heat. Ream out the hole in the circuit board with a 0.031-inch drill. Remove the ferrule from the new interconnecting pin and press the new pin into the hole in the circuit board. Position the pin in the same manner as the old pin and solder it in. If the old pin was bent at an angle to mate with a connector, bend the new pin to match the associated pins.

NOTE

A pin replacement kit including necessary tools, instructions, and replacement pins is available from Tektronix, Inc. Order Tektronix Part No. 040-0542-00.

Cam Switches. Repair of cam-type switches should be undertaken only by experienced maintenance personnel. Switch alignment and spring tension of the contacts must be carefully maintained for proper operation of the switch. For assistance, contact your local Tektronix Field Office or representative.

NOTE

A cam-type switch repair kit including necessary tools, instructions, and replacement contacts is available from Tektronix, Inc. Order Tektronix Part No. 040-0541-00.

The cam-type switches consist of rotating cam drums which are turned by front-panel knobs, and sets of spring-leaf contacts mounted on adjacent circuit boards. The contacts are actuated by lobes on the cams. These switches can be dissembled for inspection, cleaning, repair, or replacement as follows:

1. Remove the screws which hold the metal cover on the switch, and lift the cover off the switch. The switch is now open for inspection or cleaning.

2. To completely remove a switch from the circuit board, first remove any knobs or shaft extensions. Loosen the coupling at the potentionmeter at the rear of the switch, and pull the long shaft out of the switch assembly.

3. Remove the screws (from the opposite side of the circuit board) that holds the cam drum to the board,

4. To remove the cam drum from the front support block, remove the retaining ring from the shaft on the front of the switch and slide the cam drum out of the support block. Be careful not to lose the small detent roller.

5. To replace defective switch contacts, follow the instructions given in the switch repair kit.

6. To re-install the switch assembly, reverse the above procedure.

Pushbutton Switches. The pushbutton switches are not repairable and should be replaced as a unit if defective. Use a suction-type resoldering tool to remove solder from the circuit board when removing these switches.

Incandescent Bulbs. Most of these light bulbs are mounted on the sub-panel using plastic sleeve stand-offs. Unsolder the lead wires and pull the bulb out of the sleeve from the rear of the sub-panel.

Light-Emitting Diodes. LED's used as indicators are mounted on the sub-panels with plastic sleeve sockets similar to the incandescent bulb mountings or they are soldered directly to a sub-assembly and so mounted that they protrude through holes in the panel. In these cases, the sub-assembly must be exposed and the anode and cathode lead orientations carefully noted before unsoldering the defective LED. See Fig. 3-2 for LED lead identifying information.

Power Transformer. Replace the transformer only with a Tektronix direct replacement transformer. Refer to the exploded view drawing at the rear of the Power Module manuals for disassembly of the rear panel to expose the power transformer. Refer to the schematic diagram color-coding information for correct wiring. After replacement check out the power supply voltages before installing a plug-in module.

Option 2

This factory installed option adds 25-mil square pin connectors to the rear of the interconnecting jacks at all pin locations from pins 14A and B. This will keep the interface flexible by making it easy and fast to change customized wiring using prepared wires wit h square pin receptacles. It also protects the circuit board from damage by repeating soldering and unsoldering of jumper wires. This option also adds six bnc connectors and one 50-pin connector to the rear panel. These connectors are not prewired in order to give a system designer as much flexibility as possible. Instead, prepared jumpers, coaxial cables and interconnection jack barriers are included in the TM 504.

System Design Directions.

1. Plan the plug-in location based on the front-panel controls and operator convenience as well as interface connections.

2. Plan the wiring between interconnecting jacks and to the rear panel connectors carefully before starting assembly. A mating rear panel 50-pin connector and cover are provided for external cabling.

NOTE

There are no pin assignments for the rear panel connectors, due to the great variety of possible connections.

When high frequency or fast digital signals are involved, plan the wires so as to minimize crosstalk. Make allowance for the possible need to make auxiliary ground connections.

The 50-pin rear panel connector may be easier to *connect if it is removed from the rear panel and remounted after connections are made. Remove the top rear cabinet piece for ease of access.*

If more than 50 pins are needed, an AMP HD-22 series connector with 104 pins may be mounted in the same cut out. It is suggested that these parts be obtained directly from AMP Inc., Harrisburg, PA or their distributors. For further application information, contact Tektronix' TM 500 Marketing Group, Beaverton, OR.

3. Pin assignments for individual plug-ins will be found in the appropriate instruction manual.

4. Instaii an interconnection jack barrier at the appropriate location on the interconnection jack. Refer back to operating instructions for keying assignment for famiiy functions.

5. Select and install the wires (hook-up or coax) following the guidelines in the Wire Use part of these instructions.

6. Wires or cables which may be at large potential differences should be dressed or bundled so as to avoid contact. Keep all interface wiring away from the TM 506 primary line wiring.

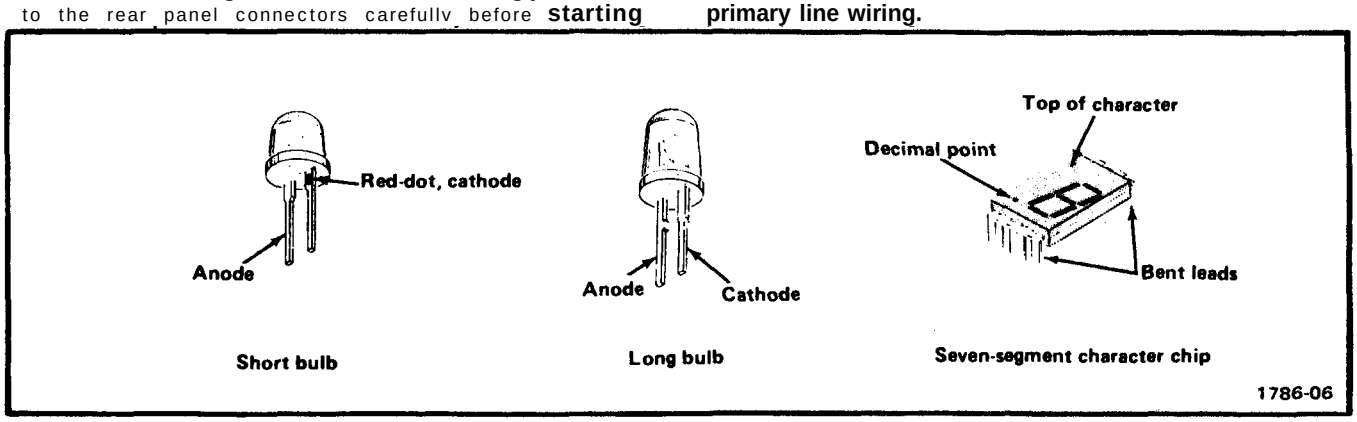

Fig. 3-2. Light.emitting diode (LED) lead orientation illustration.

7. There is an empty cut-out which will mount the standard IEC digital interface connector. The connector is not supplied with this option.

Wire Use.

1. Hook up wire with square-pin receptacle on both ends. These may be used for low frequency or dc circuits where impedance levels and crossstalk are not a problem. The wire is supplied in four lengths for connection between compartments (adjacent or nonadjacent) or between a compartment and the rear panel. For connection to the rear panel, cut to length then tin and solder the end going to the rear panel.

2. Coaxial wire with square pin receptacles on both ends. These are used for connections which require shielding or which must maintain a 50 Ω characteristic impedance. The outer conductor should be connected to either chassis ground or circuit ground. Plug-in lines which require coax leads usually have a specified ground pin assignment. If necessary, establish auxiliary ground connections at the appropriate wire ends. The coaxial wire is supplied in four lengths for connection between compartments (adjacent or non-adjacent) or between a compartment and the rear panel. For connection to the rear panel, cut to length then tin and solder the end going to the rear panel.

Packaging Information

A list of standard accessories (and part numbers) is located in the Replaceable Mechanical Parts list.

If the Tektronix instrument is to be shipped to a Tektronix Service Center for service or repair, attach a tag showing owner (with address) and the name of an individual at your firm that can be contacted. Include the complete instrument serial number and a description of the service required.

Save and re-use the package in which your instrument was shipped. If the original packaging is unfit for use or not available, repackage the instrument as follows:

Surround the instrument with polyethylene sheeting to protect the finish of the instrument. Obtain a carton of corrugated cardboard of the correct carton strength and having inside dimensions of no less than 6 inches more than the instrument dimensions. Cushion the instrument by tightly packing 3 inches of dunnage or urethane foam between carton and instrument on all sides. Seal the carton with shipping tape or an industrial stapler.

The carton test strength for this instrument is 275 pounds per square inch.

INSTALLATION PROCEDURE

Due to regional variations in the power source line voltage the TM 503 has selectable transformer primary taps. The taps are located on the interface board and are implemented by using the appropriate selector blocks. See Figs. 3-3, 3-4, and 3-5.

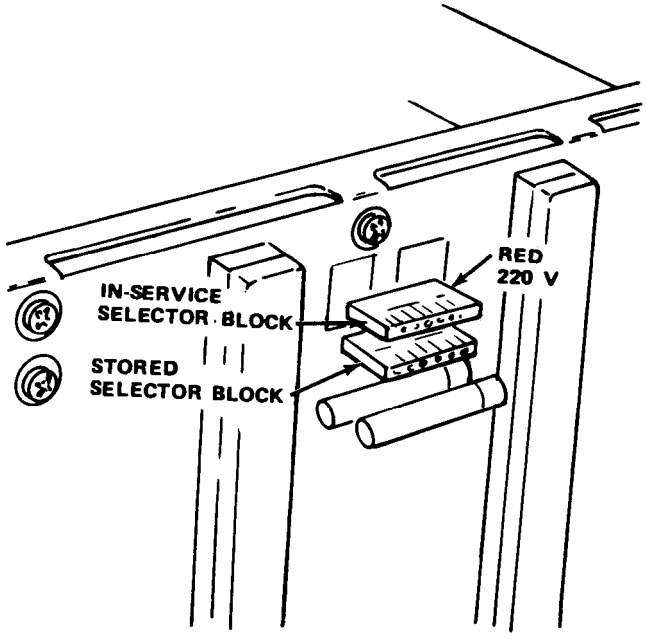

Fig. 3-3. 220 V Selector block in service.

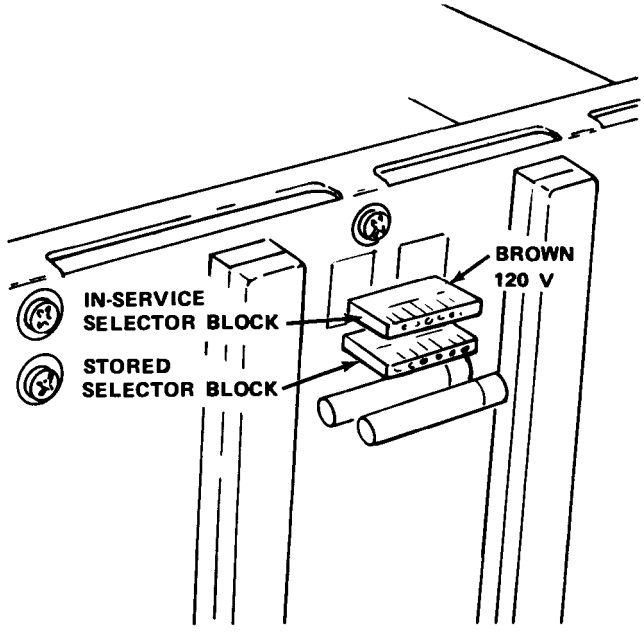

Fig. 3-4. 120 V Selector block in service.

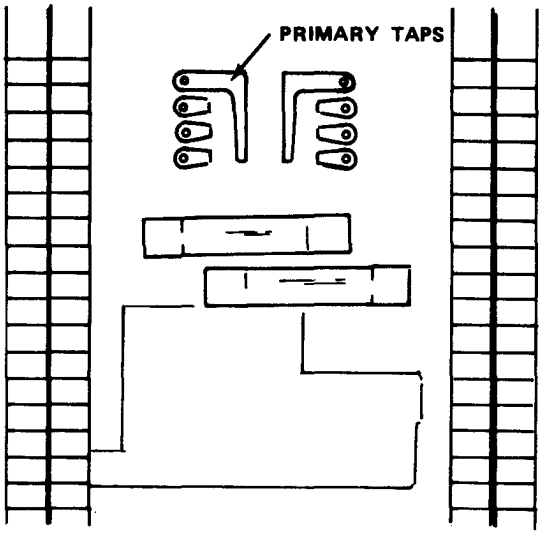

Fig. 3-5. Primary taps locations.

Table 3-2 shows which position the selector block should be in for specific line voltages. The brown selector block should be used for nominal line voltages of 120 V, and the red selector block for 220 V nominal line voltages. For example, if the power source is 120 V nominal and found to be exactly 115 V then the brown selector should be used on the high (H) primary taps.

Table 3-2

UNIVERSAL TRANSFORMER
(SN B040000 - up)

Line Selector Block Position	Regulating Ranges	
	120 Volts Nominal	220 Volts Nominal
L	90 VAC to 110 VAC	180 VAC to 220 VAC
M	99 VAC to 121 VAC	198 VAC to 242 VAC
H	108 VAC to 132 VAC	216 VAC to 264 VAC
Line Fuse Data	1.6 slow-blow	0.8A slow-blow

STANDARD TRANSFORMER
(SN B039999 - below)

Line Selector Block Position	Regulating Ranges
L Do not use	Internally Disconnected
M (110 V Nominal)	99 VAC to 121 VAC
H (120 V Nominal)	108 VAC to 132 VAC

To determine how the TM 503 is set and if a change is necessary, the following procedure should be used:

1. Determine what the actual line voltage of the power source is and note.

2. Remove the five hold-down screws on the top of the dust cover cabinet and lift off.

3. Locate and determine the position of the line selector block.

4. Using the above noted line voltage and Table 3-2, determine if a change is necessary.

5. if a change is necessary place the selector block on the appropriate taps. If no change is needed go on to the next step.

6. Replace the cabinet and hold-down screws.

7, After completing change record new setting on back panel (see Fig. 3-6).

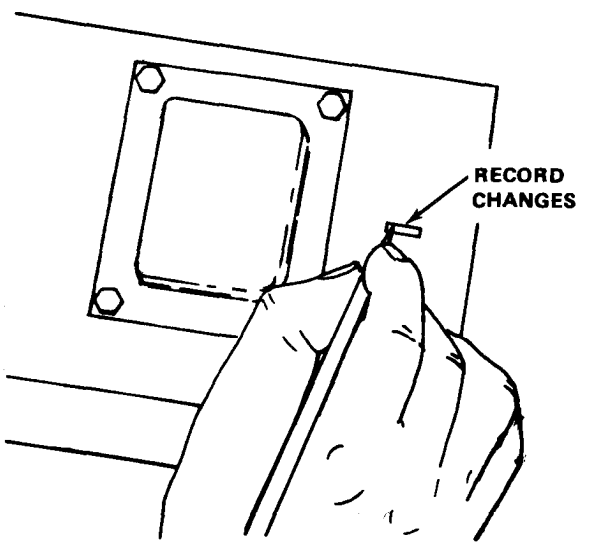

Fig. 3-6. Line voltage indicator.

SECTION 4

OPTIONS

Option 2. Information about this option may be found in the following sections:

Section 2 - Operating Instructions

Section 3 - Maintenance

Section 7- Replaceable Mechanical Parts

Option 7. Information about this option may be found in Section 2 - Operating Instructions.

SECTION 5

REPLACEABLE ELECTRICAL PARTS

PARTS ORDERING INFORMATION

Replacement parts are available from or through your local Tektronix, Inc Field Office or representative.

Changes to Tektronix instruments are sometimes made to accommodate Improved components as they become available, and to give you the benefit of the latest circuit improvements developed in our engineering department. It is therefore important, when ordering parts, to include the following information in your order: Part number, instrument type or number, serial number, and modification number if applicable.

If a part you have ordered has been replaced with a new or improved part, your local Tektronix, Inc. Field Office or representative will contact you concerning any change in part number.

Change information, if any, is located at the rear of this manual,

SPECIAL NOTES AND SYMBOLS

X000	Part first added at this serial number
00X	Part removed after this serial number

ITEM NAME

In the Parts List, an Item Name is separated from the description by a colon (:). Because of space limitations, an Item Name may sometimes appear as incomplete, For further Item Name identification, the U.S. Federal Cataloging Handbook H6-1 can be utilized where possible.

ABBREVIATIONS

ACTR	ACTUATOR	PLSTC	PLASTIC
ASSY	ASSEMBLY	QTZ	QUARTZ
CAP	CAPACITOR	RECP	RECEPTACLE
CER	CERAMIC	RES	RESISTOR
CKT	CIRCUIT	RF	RADIO FREQUENCY
COMP	COMPOSITION	SEL	SELECTED
CONN	CONNECTOR	SEMICOND	SEMICONDUCTOR
ELCTLT	ELECTROLYTIC	SENS	SENSITIVE
ELEC	ELECTRICAL	VAR	VARIABLE
INCAND	INCANDESCENT	WW	WIREWOUND
LED	LIGHT EMITTING DIODE	XFMR	TRANSFORMER
NONWIR	NON WIREWOUND	XTAL	CRYSTAL

CROSS INDEX–MFR. CODE NUMBER TO MANUFACTURER

Mfr. Code	Manufacturer	Address	City, State, Zip
01121	ALLEN-BRADLEY COMPANY	1201 2ND STREET SOUTH	MILWAUKEE, WI 53204
03508	GENERAL ELECTRIC COMPANY, SEMI-CONDUCTOR PRODUCTS DEPARTMENT	ELECTRONICS PARK	SYRACUSE, NY 13201
04713	MOTOROLA, INC., SEMICONDUCTOR PROD. DIV.	5005 E MCDOWELL RD,PO BOX 20923	PHOENIX. AZ 85036
14099	SEMTECH CORP.	652 MITCHELL RD.	NEWBURY PARK, CA 91320
56289	SPRAGUE ELECTRIC CO.	87 MARSHALL ST.	NORTH ADAMS, MA 01247
71400	BUSSMAN MFG., DIVISION OF MCGRAW-EDISON CO.	2536 W. UNIVERSITY ST.	ST. LOUIS, MO 63107
72982	ERIE TECHNOLOGICAL PRODUCTS, INC.	644 W. 12TH ST.	ERIE, PA 16512
73803	TEXAS INSTRUMENTS, INC., METALLURGICAL MATERIALS DIV.	34 FOREST STREET	ATTLEBORO, MA 02703
80009	TEKTRONIX, INC.	P. O. BOX 500	BEAVERTON, OR 97077
90201	MALLORY CAPACITOR CO., DIV. OF P. R. MALLORY AND CO., INC.	3029 E. WASHINGTON STREET P. O. BOX 372	INDIANAPOLIS, IN 46206
91418	RADIO MATERIALS COMPANY, DIV. OF P.R. MALLORY AND COMPANY, INC.	4242 W BRYN MAWR	CHICAGO, IL 60646
91637	DALE ELECTRONICS, INC.	P. O. BOX 609	COLUMBUS, NE 68601
91929	HONEYWELL, INC., MICRO SWITCH DIV.	CHICAGO & SPRING STS.	FREEPORT, IL 61032
95238	CONTINENTAL CONNECTOR CORP.	34-63 56TH ST.	WOODSIDE, NY 11377

CKT NO.	TEKTRONIX PART NO.	SERIAL/MODEL NO. EFF	DSCONT	MFR NAME AND DESCRIPTION	CODE	MFR PART NUMBER
A1	670-2024-00			CKT BOARD ASSY:INTERFACE (STANDARD AND OPTION 7 ONLY)	80009	670-2024-00
A1	670-3405-00			CKT BOARD ASSY:INTERFACE (OPTION 2 ONLY)	80009	670-3405-00
C2	283-0022-00			CAP.,FXD,CER DI:0.02UF,1400VDCAC	91418	AU203-Z142-1R0
C10	283-0004-00			CAP.,FXD,CER DI:0.02UF,+80-20%,150V	72982	855-558Z5V0203Z
C12	283-0004-00			CAP.,FXD,CER DI:0.02UF,+80-20%,150V	72982	855-558Z5V0203Z
C14	283-0004-00			CAP.,FXD,CER DI:0.02UF,+80-20%,150V	72982	855-558Z5V0203Z
C20	290-0520-00			CAP,FXD,ELECTLT:4500UF,+100-0%,40V	56289	68D10474
C22	290-0520-00			CAP.,FXD,ELECTLT:4500UF,+100-0%,40V	56289	68D10474
C30	283-0002-00			CAP.,FXD,CER DI:0.01UF,+80-20%,500V	72982	811-546E103Z
C32	283-0002-00			CAP.,FXD,CER DI:0.01UF,+80-20%,500V	72982	811-546E103Z
C35	290-0321-00	B010100	B113569	CAP.,FXD,ELECTLT:11000UF,+100-10%,15V (STANDARD AND OPTION 7 ONLY)	90201	20-24012
C35	290-0508-00	B113670		CAP.,FXD,ELCTLT:18,000UF,+100-10%,15V (STANDARD AND OPTION 7 ONLY)	56289	68D10444
C35	290-0321-00	B010100	B113719	CAP.,FXD,ELCTLT:11000UF,+100-10%,15V (OPTION 2 ONLY)	90201	20-24012
C35	290-0508-00	B113720		CAP.,FXD,ELCTLT:18,000UF,+100-10%,15V (OPTION 2 ONLY)	56289	68D10444
C40	283-0004-00			CAP.,FXD,CER DI:0.02UF,+80-20%,150V	72982	855-558Z5V0203Z
C42	283-0004-00			CAP.,FXD,CER DI:0.02UF,+80-20%,150V	72982	855-558Z5V0203Z
C44	283-0004-00			CAP.,FXD,CER DI:0.02UF,+80-20%,150V	72982	855-558Z5V0203Z
CR10	152-0488-00			SEMICOND DEVICE:SILICON,200V,1500MA	04713	3N55 FAMILY
CR30	152-0198-00	B010100	B059999	SEMICOND DEVICE:SILICON,200V,3A	03508	1N5624
CR30	152-0198-02	B060000		SEMICOND DEVICE:SILICON,200V,3A	14099	3SM2
CR32	152-0198-00	B010100	B059999	SEMICOND DEVICE:SILICON,200V,3A	03508	1N5624
CR32	152-0298-01	B060000		SEMICOND DEVICE:SILICON,200V,3A	14099	3SM2
F2	159-0003-00			FUSE,CARTRIDGE:3AG,1.6A,250V,SLOW-BLOW (FOR 120 VOLT OPERATION)	71400	MDX 1 6/10
F2	159-0018-00			FUSE,CARTRIDGE:3AG,0.8A,250V,SLOW-BLOW (FOR 220 VOLT OPERATION)	71400	MDL 8/10
J10	131-1078-00			CONNECTOR,RCPT,:28/56 CONTACT	95238	600-1156Y256DF30
J20	131-1078-00			CONNECTOR,RCPT,:28/56 CONTACT	95238	600-1156Y256DF30
J30	131-1078-00			CONNECTOR,RCPT,:28/56 CONTACT	95238	600-1156Y256DF30
Q10	151-0373-00			TRANSISTOR:SILICON,PNP	80009	151-0373-00
Q12	151-0349-00			TRANSISTOR:SILICON,NPN,SEL FROM MJE2801	04713	SJE924
Q20	151-0373-00			TRANSISTOR:SILICON,PNP	80009	151-0373-00
Q22	151-0349-00			TRANSISTOR:SILICON,NPN,SEL FROM MJE2801	04713	SJE924
Q30	151-0373-00			TRANSISTOR:SILICON,PNP	80009	151-0373-00
Q32	151-0349-00			TRANSISTOR:SILICON,NPN,SEL FROM MJE2801	04713	SJE924
R2	308-0704-00			RES.,FXD,WW:8.8 OHM,5%,5W	91637	CW5-8R800J
R20	301-0202-00			RES.,FXD,CMPSN:2K OHM,5%,0.50W	01121	EB2025
R22	301-0202-00			RES.,FXD,CMPSN:2K OHM,5%,0.50W	01121	EB2025
R30	302-0102-00			RES.,FXD,CMPSN:1K OHM,10%,0.50W	01121	EB1021
R35	315-0511-00			RES.,FXD,CMPSN:510 OHM,5%,0.25W	01121	CB5115
S2	260-1222-00			SWITCH,PUSH-PULL:10A,250VAC	91929	2DM301
S3	260-0551-00			SW,THERMOSTATIC:NC,10A,240VAC	73803	20700L63-327
S4	260-0551-00			SW,THERMOSTATIC:NC,10A,240VAC	73803	20700L63-327
T1	120-0792-00	B010100	B039999	XFMR,PWR,STPDN:	80009	120-0792-00
T1	120-0793-00	B040000		XFMR,PWR,STPDN:	80009	120-0793-00

DIAGRAMS AND CIRCUIT BOARD ILLUSTRATIONS

Symbols

Graphic symbols and class designation letters are based on ANSI Standard Y32.2-1 975.

Logic symbology is based on ANSI Y32.14-1973 in terms of positive logic. Logic symbols depict the logic function performed and may differ from the manufacturer's data.

The overline on a signal name indicates that the signal performs its intended function when it is in the low state.

Abbreviations are based on ANSI Y1.1-1972.

Other ANSI standards that are used in the preparation of diagrams by Tektronix, Inc. are:

Y14.15, 1966 Drafting Practices.
Y14.2, 1973 Line Conventions and Lettering.
Y10.5, 1968 Letter Symbols for Quantities Used in Electrical Science and Electrical Engineering.

American National Standard Institute
1430 Broadway
New York, New York 10018

Component Values

Electrical components shown on the diagrams are in the following units unless noted otherwise:

Capacitors = Values one or greater are in picofarads (pF). Values less than one are in microfarads (μF).
Resistors = Ohms (Ω).

The information and special symbols below may appear in this manual.

Assembly Numbers and Grid Coordinates

Each assembly in the instrument is assigned an assembly number (e. g., A20). The assembly number appears on the circuit board outline on the diagram, in the title for the circuit board component location illustration, and in the lookup table for the schematic diagram and corresponding component locator illustration. The Replaceable Electrical Parts list is arranged by assemblies in numerical sequence; the components are listed by component number *(see following illustration for constructing a component number).

The schematic diagram and circuit board component location illustration have grids. A lookup table with the grid coordinates is provided for ease of locating the component. Only the components illustrated on the facing diagram are listed in the lookup table. When more than one schematic diagram is used to illustrate the circuitry on a circuit board, the circuit board illustration may only appear opposite the first diagram on which it was illustrated; the lookup table will list the diagram number of other diagrams that the circuitry of the circuit board appears on.

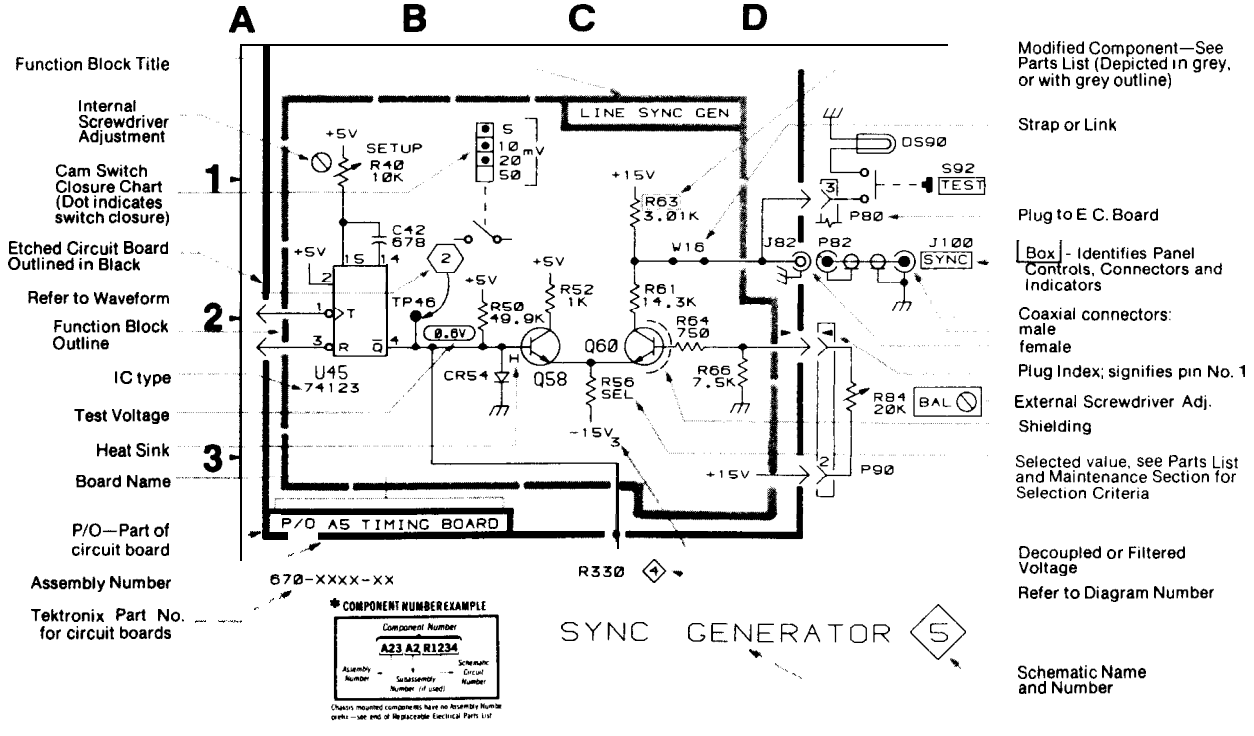

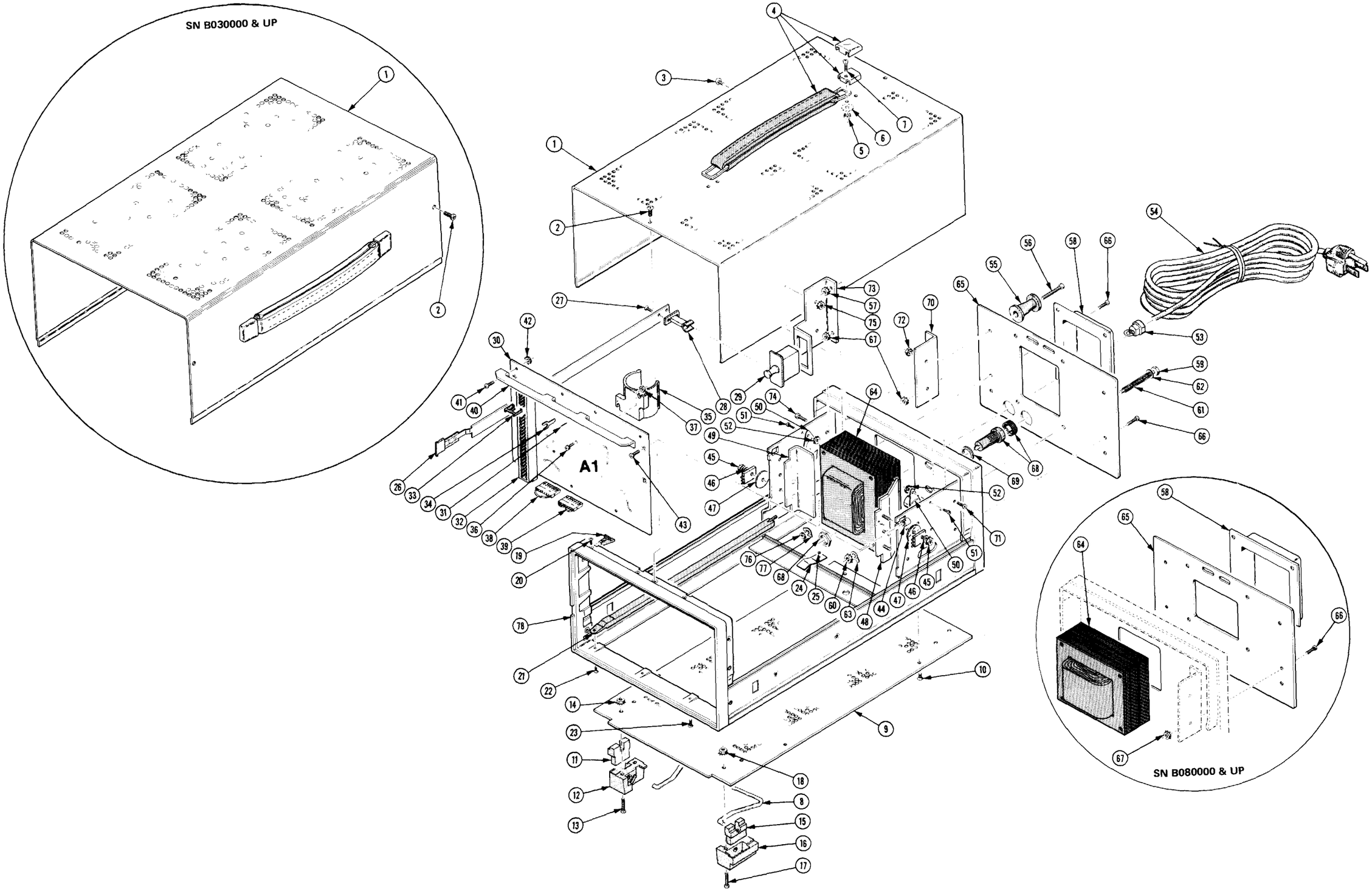

TM 503 POWER MODULE
EXPLODED VIEW

OPTION 2

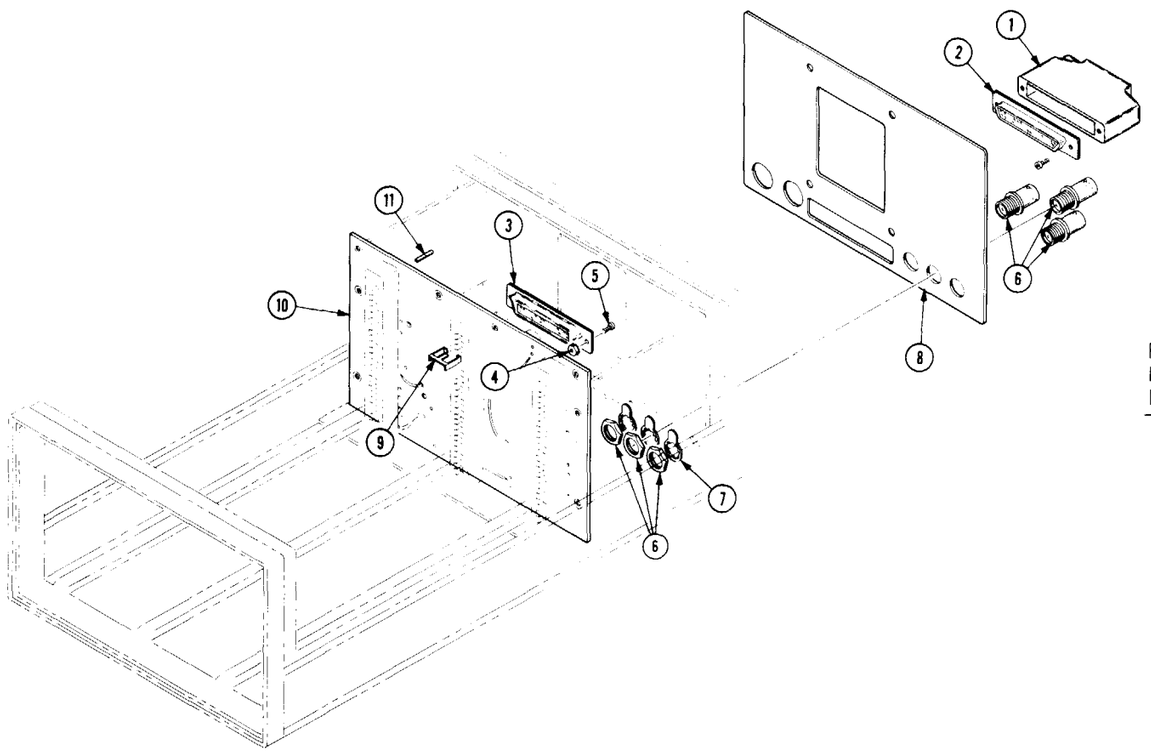

Fig. & Index No.	Tektronix Part No.	Serial/Model No. Eff	Dscont	Qty	1 2 3 4 5 Name & Description	Mfr Code	Mfr Part Number
2-1	131-1319-00			1	SHLD,ELEC CONN:	71468	DD51216-1
-2	131-1345-00			1	CONNECTOR,RCPT,:50 FEMALE CONTACT	71468	DD-50S
-3	131-1344-00			1	CONNECTOR,PLUG,:50 CONT,MALE D	71468	DD-50P
					(ATTACHING PARTS)		
-4	210-0586-00			2	NUT,PL,ASSEM WA:4-40 X 0.25,STL CD PL	83385	OBD
-5	211-0008-00			2	SCREW,MACHINE:4-40 X 0.25 INCH,PNH STL	83385	OBD
					- - - * - - -		
-6	131-0955-00			3	CONNECTOR,RCPT,:CKT BD,28/56 CONTACT	13511	31-279
					(ATTACHING PARTS)		
-7	210-0255-00			3	TERMINAL,LUG:0.391" ID INT TOOTH	80009	210-0255-00
					- - - * - - -		
-8	333-1701-00	B010100	B079999	1	PANEL,REAR:	80009	333-1701-00
	333-1900-00	B080000		1	PANEL,REAR:	80009	333-1900-00
-9	214-1593-02			15	KEY,CONN PLZN:CKT BD CONN	80009	214-1593-02
-10	----- -----			1	CKT BOARD ASSY:INTERFACE(SEE A1 REPL)		
-11	131-0608-00			84	. TERMINAL,PIN:0.365 L X 0.025 PH BRZ GOLD	22526	47357
	----- -----			-	. (OTHER SUBPARTS SAME AS STANDARD INTERFACE		
	----- -----			-	. CIRCUIT BOARD)		
	020-0074-00			1	WIRE KIT:TM503,OPTION 2	80009	020-0074-00

POWER MODULE INTERFACE PIN ASSIGNMENTS FRONT VIEW

No permanent I/O assignments. Refer to plug-in module manuals for specific assignments.

	A	B	
	28	28	
	27	27	
	26	26	
	25	25	
	24	24	
	23	23	
	22	22	
	21	21	
	20	20	
	19	19	
	18	18	
	17	17	
	16	16	
	15	15	
	14	14	
25 VAC winding.	13	13	25 VAC winding.
+33.5 V filtered DC.	12	12	+33.5 V filtered DC.
Base lead of PNP Series-Pass.	11	11	Collector lead of PNP Series-Pass.
Emitter lead of PNP Series-Pass.	10	10	Transformer shield lead.
±33.5 V common return.	9	9	±33.5 V common return.
−33.5 V filtered DC.	8	8	−33.5 V filtered DC.
Emitter lead of NPN Series-Pass.	7	7	Collector lead of NPN Series-Pass.
Base lead of NPN Series-Pass.	6	6	No connection.
17.5 VAC winding.	5	5	17.5 VAC winding.
+11.5 V common return.	4	4	+11.5 V common return.
+11.5 V common return.	3	3	+11.5 V common return.
+11.5 V filtered DC.	2	2	+11.5 V filtered DC.
25 VAC winding.	1	1	25 VAC winding.
	A	B	

No permanent I/O assignments. Refer to plug-in module manuals for specific assignments.

1305-05

DETAILED BLOCK DIAGRAM

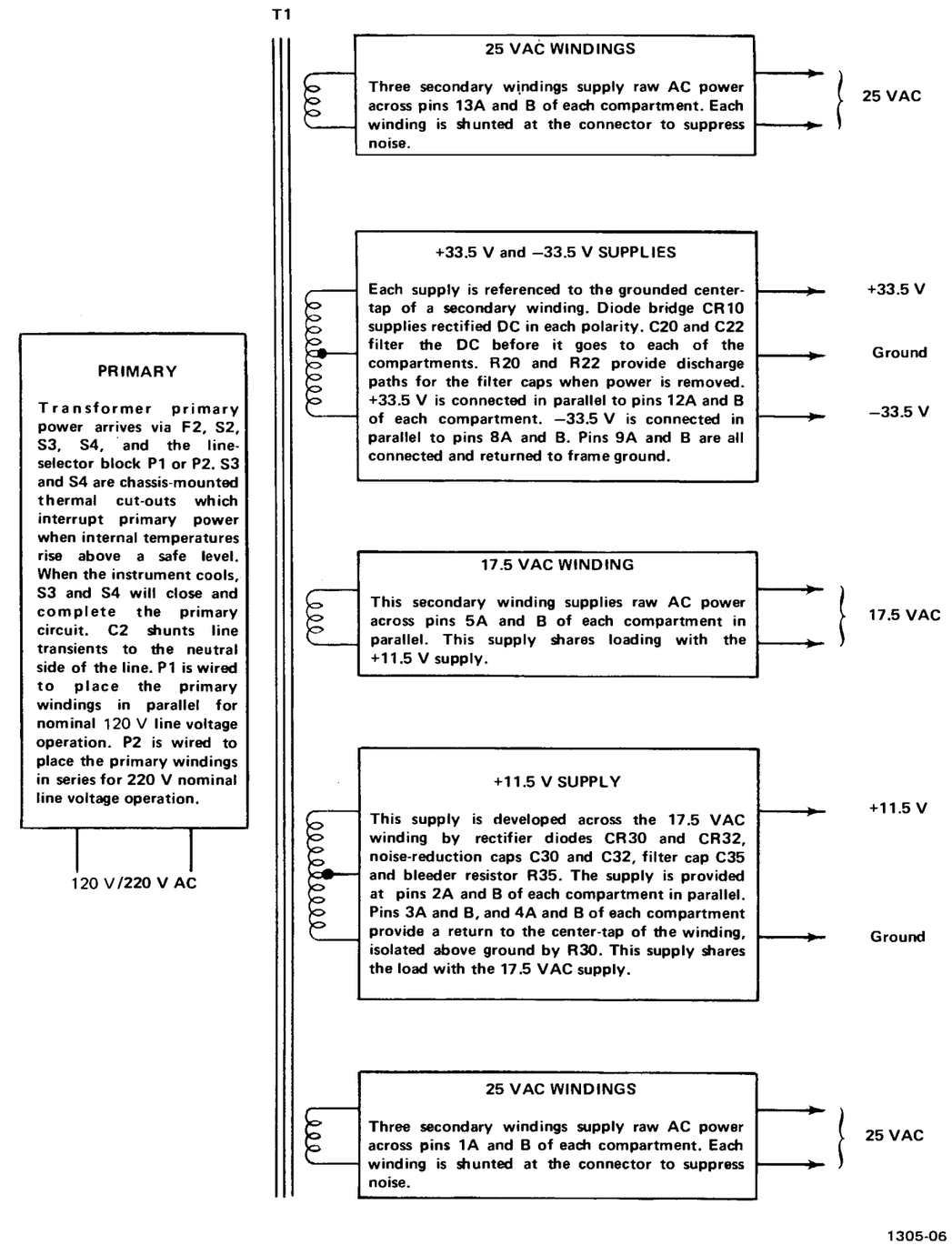

1305-06

PARTS LOCATION GRID

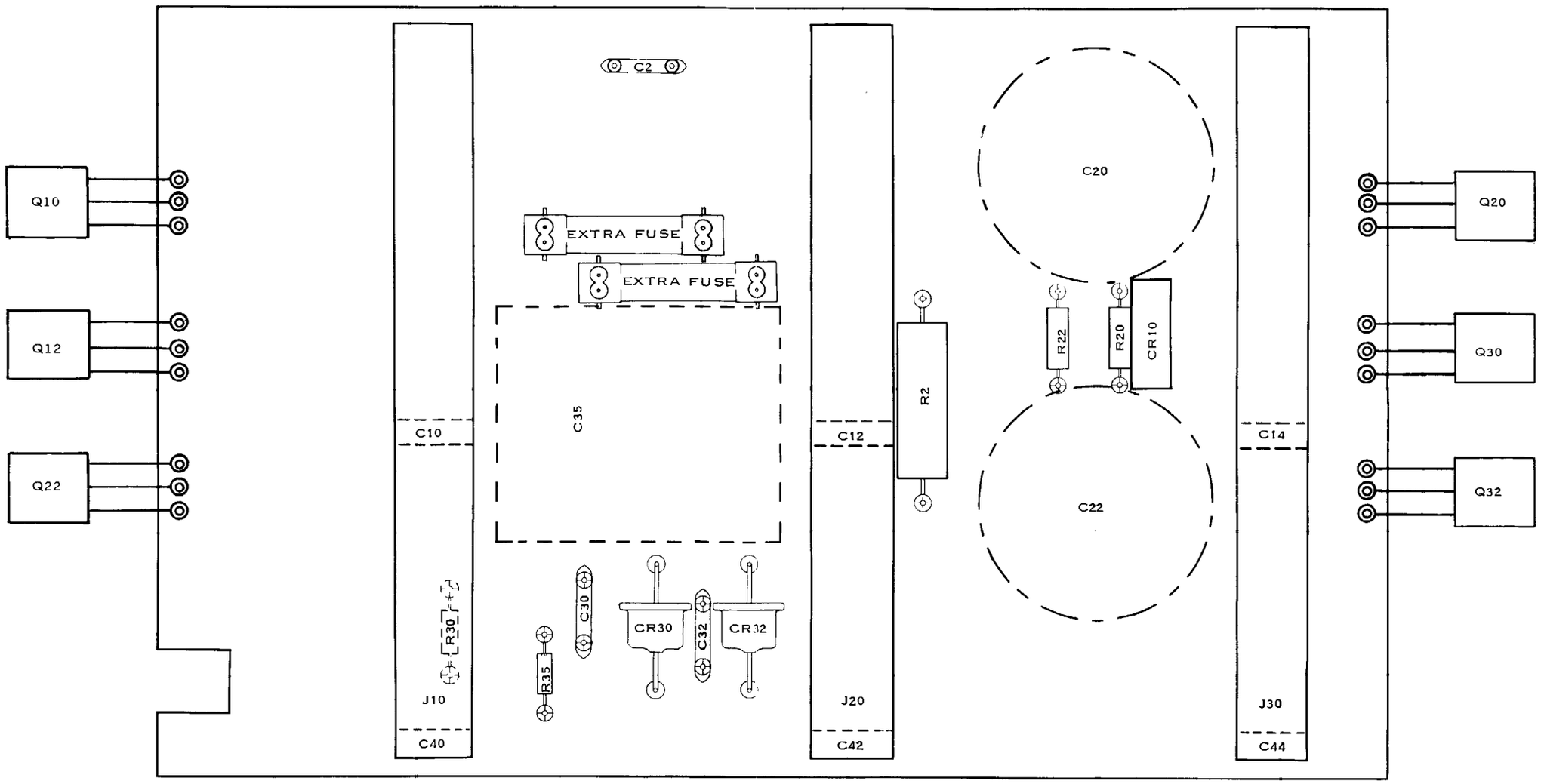

NOTE: COMPONENTS SHOWN WITH DASHED LINES ARE LOCATED ON BACK SIDE OF BOARD.

1305-07

CKT NO	GRID LOC	CKT NO	GRID LOC	CKT NO	GRID LOC
C2	E1	CR10	I3	Q22	A4
C10	D4	CR30	E5	Q30	K3
C12	G4	CR32	F5	Q32	K4
C14	I4	CR32	F5		
C20	H2			R2	G4
C22	H4	J10	D6	R20	H3
C30	E5	J20	G6	R22	H3
C32	E5	J30	I6	R30	D5
C35	E4			R35	D6
C40	D6	Q10	A2		
C42	F6	Q12	A3		
C44	I6	Q20	K2		

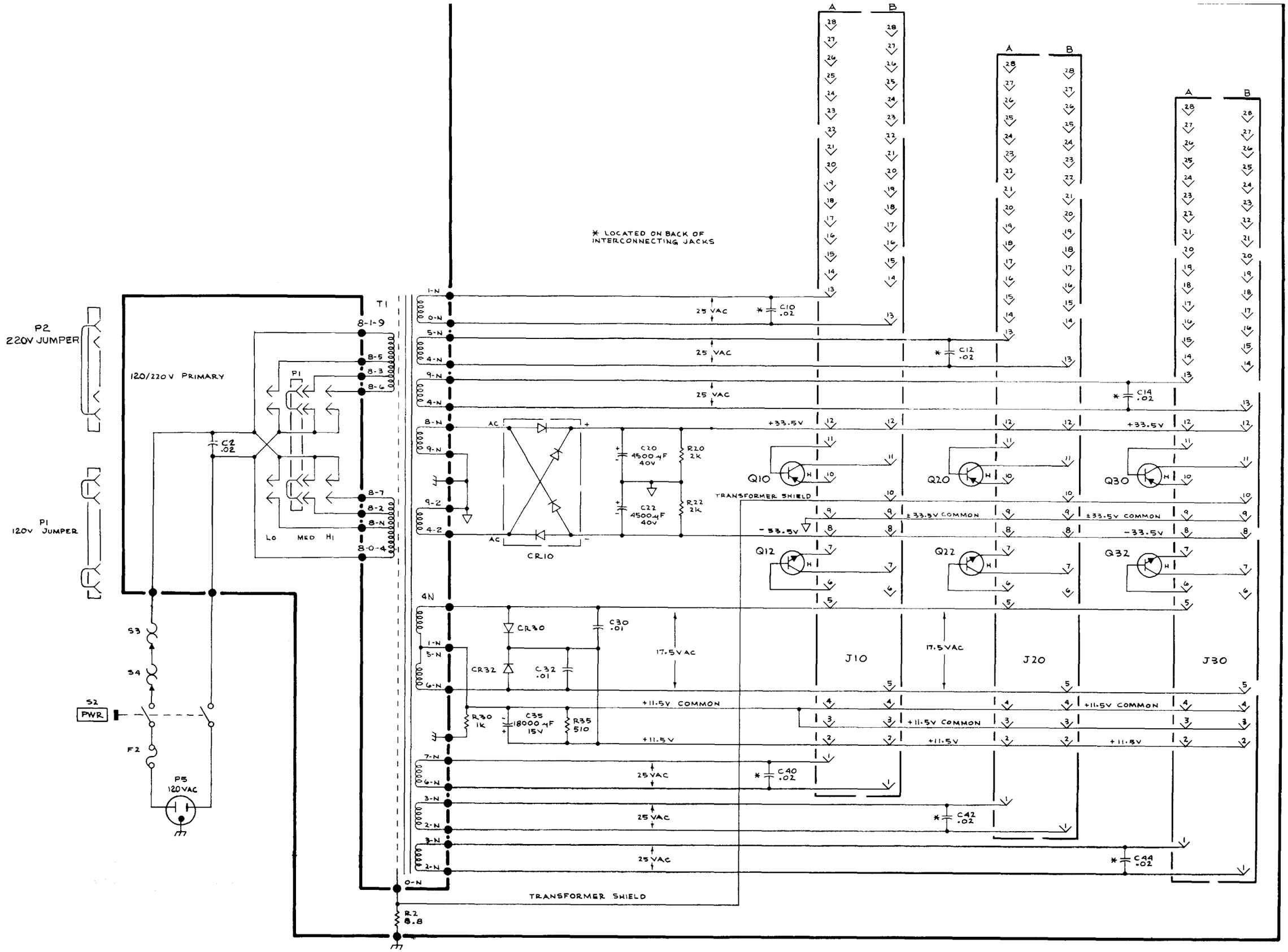

TM 503

POWER SUPPLY DEH 773 ◇1

REPLACEABLE MECHANICAL PARTS

PARTS ORDERING INFORMATION

Replacement parts are available from or through your local Tektronix, Inc. Field Office or representative.

Changes to Tektronix instruments are sometimes made to accommodate improved components as they become available, and to give you the benefit of the latest circuit improvements developed in our engineering department. It is therefore important, when ordering parts, to include the following information in your order: Part number, instrument type or number, serial number, and modification number if applicable.

If a part you have ordered has been replaced with a new or improved part, your local Tektronix, Inc. Field Office or representative will contact you concerning any change in part number.

Change information, if any, is located at the rear of this manual.

SPECIAL NOTES AND SYMBOLS

X000	Part first added at this serial number
00X	Part removed after this serial number

FIGURE AND INDEX NUMBERS

Items in this section are referenced by figure and index numbers to the illustrations.

INDENTATION SYSTEM

This mechanical parts list is indented to indicate item relationships. Following is an example of the indentation system used in the description column,

```
1 2 3 4 5                    Name & Description

Assembly and/or Component
Attaching parts for Assembly and/or Component
                    - - - * - - -
  Detail Part of Assembly and/or Component
  Attaching parts for Detal/ Part
                    / - - - * - - -
    Parts of Detail Part
    Attaching parts for Parts of Detal Part
                    - - - * - - -
```

Attaching Parts always appear in the same indentation as the item it mounts, while the detail parts are indented to the right. Indented items are part of, and included with, the next higher indentation. The separation symbol --- ‘ --- indicates the end of attaching parts.

Attaching parts must be purchased separately, unless otherwise specified.

ITEM NAME

In the Parts List, an Item Name is separated from the description by a colon (:). Because of space limitations, an Item Name may sometimes appear as incomplete. For further Item Name identification, the U.S. Federal Cataloging Handbook H6-1 can be utilized where possible.

ABBREVIATIONS

"	INCH
#	NUMBER SIZE
ACTR	ACTUATOR
ADPTR	ADAPTER
ALIGN	ALIGNMENT
AL	ALUMINUM
ASSEM	ASSEMBLED
ASSY	ASSEMBLY
ATTEN	ATTENUATOR
AWG	AMERICAN WIRE GAGE
BD	BOARD
BRKT	BRACKET
BRS	BRASS
BRZ	BRONZE
BSHG	BUSHING
CAB	CABINET
CAP	CAPACITOR
CER	CERAMIC
CHAS	CHASSIS
CKT	CIRCUIT
COMP	COMPOSITION
CONN	CONNECTOR
COV	COVER
CPLG	COUPLING
CRT	CATHODE RAY TUBE
DEG	DEGREE
DWR	DRAWER
ELCTRN	ELECTRON
ELEC	ELECTRICAL
ELCTLT	ELECTROLYTIC
ELEM	ELEMENT
EPL	ELECTRICAL PARTS LIST
EQPT	EQUIPMENT
EXT	EXTERNAL
FIL	FILLISTER HEAD
FLEX	FLEXIBLE
FLH	FLAT HEAD
FLTR	FILTER
FR	FRAME or FRONT
FSTNR	FASTENER
FT	FOOT
FXD	FIXED
GSKT	GASKET
HDL	HANDLE
HEX	HEXAGON
HEX HD	HEXAGONAL HEAD
HEX SOC	HEXAGONAL SOCKET
HLCPS	HELICAL COMPRESSION
HLEXT	HELICAL EXTENSION
HV	HIGH VOLTAGE
IC	INTEGRATED CIRCUIT
ID	INSIDE DIAMETER
IDENT	IDENTIFICATION
IMPLR	IMPELLER
IN	INCH
INCAND	INCANDESCENT
INSUL	INSULATOR
INTL	INTERNAL
LPHLDR	LAMPHOLDER
MACH	MACHINE
MECH	MECHANICAL
MTG	MOUNTING
NIP	NIPPLE
NON WIRE	NOT WIRE WOUND
OBD	ORDER BY DESCRIPTION
OD	OUTSIDE DIAMETER
OVH	OVAL HEAD
PH BRZ	PHOSPHOR BRONZE
PL	PLAIN or PLATE
PLSTC	PLASTIC
PN	PART NUMBER
PNH	PAN HEAD
PWR	POWER
RCPT	RECEPTACLE
RES	RESISTOR
RGD	RIGID
RLF	RELIEF
RTNR	RETAINER
SCH	SOCKET HEAD
SCOPE	OSCILLOSCOPE
SCR	SCREW
SE	SINGLE END
SECT	SECTION
SEMICOND	SEMICONDUCTOR
SHLD	SHIELD
SHLDR	SHOULDERED
SKT	SOCKET
SL	SLIDE
SLFLKG	SELF-LOCKING
SLVG	SLEEVING
SPR	SPRING
SO	SQUARE
SST	STAINLESS STEEL
STL	STEEL
SW	SWITCH
T	TuBE
TERM	TERMINAL
THD	THREAD
THK	THICK
TNSN	TENSION
TPG	TAPPING
TRH	TRUSS HEAD
V	VOLTAGE
VAR	VARIABLE
W/	WITH
WSHR	WASHER
XFMR	TRANSFORMER
XSTR	TRANSISTOR

CROSS INDEX—MFR. CODE NUMBER TO MANUFACTURER

Mfr. Code	Manufacturer	Address	City, State, Zip
000BK	STAUFFER SUPPLY	105 SE TAYLOR	PORTLAND, OR 97214
04713	MOTOROLA, INC., SEMICONDUCTOR PROD. DIV.	5005 E MCDOWELL RD, PO BOX 20923	PHOENIX, AZ 85036
07707	USM CORP., USM FASTENER DIV.	510 RIVER RD.	SHELTON, CT 06484
12136	PHILADELPHIA HANDLE COMPANY, INC.	1643 HADDON AVENUE	CAMDEN, NJ 08103
12360	ALBANY PRODUCTS CO., DIV.OF PNEUMO DYNAMICS CORPORATION	145 WOODWARD AVENUE	SOUTH NORWALK, CT 06586
13511	AMPHENOL CARDRE DIV., BUNKER RAMO CORP.		LOS GATOS,CA 95030
16428	BELDEN CORP.	P. O. BOX 1331	RICHMOND, IN 47374
22526	BERG ELECTRONICS,INC.	YOUK EXPRESSWAY	NEW CUMBERLAND, PA 17070
45722	USM CORP., PARKER-KALON FASTENER DIV.		CAMPBELLSVILLE,KY 42718
53387	MINNESOTA MINING AND MFG. CO., ELECTRO PRODUCTS DIVISION	3M CENTER	ST. PAUL, MN 55101
57771	STIMPSON, EDWIN B., CO., INC.	900 SYLVAN AVENUE	BAYPORT, NY 11705
70485	ATLANTIC INDIA RUBBER WORKS, INC.	571 W. POLK ST.	CHICAGO, IL 60607
71468	ITT CANNON ELECTRIC	666 E. DYER RD.	SANTA ANA,CA 92702
73743	FISCHER SPECIAL MFG. CO.	446 MORGAN ST.	CINCINNATI, OH 45206
75915	LITTELFUSE, INC.	800 E. NORTHWEST HWY	DES PLAINES, IL 60016
77250	PHEOLL MANUFACTURING CO., DIVISION OF ALLIED PRODUCTS CORP.	5700 W. ROOSEVELT RD.	CHICAGO, IL 60650
78189	ILLINOIS TOOL WORKS, INC. SHAKEPROOF DIVISION	ST. CHARLES ROAD	ELGIN, IL 60120
78471	TILLEY MFG. CO.	900 INDUSTRIAL RD.	SAN CARLOS, CA 94070
80009	TEKTRONIX, INC.	P O BOX 500	BEAVERTON, OR 97077
83385	CENTRAL SCREW CO.	2530 CRESCENT DR.	BROADVIEW, IL 60153
86445	PENN FIBRE AND SPECIALTY CO., INC.	2032 E. WESTMORELAND ST.	PHILADELPHIA, PA 19134
86928	SEASTROM MFG. COMPANY, INC.	701 SONORA AVENUE	GLENDALE, CA 91201
93907	CAMCAR SCREW AND MFG. CO.	600 18TH AVE.	ROCKFORD, IL 61101
95238	CONTINENTAL CONNECTOR CORP.	34-63 56TH ST.	WOODSIDE, NY 11377

FIG. & INDEX NO.	TEKTRONIX PART NO.	SERIAL/MODEL NO. EFF	DSCONT	QTY	1 2 3 4 5 NAME & DESCRIPTION	MFR CODE	MFR PART NUMBER
1-1	390-0285-00	B010100	B029999	1	COVER,PWR SPLY:WRAPAROUND	80009	390-0285-00
	390-0285-01	B030000	B089999	1	COVER,PWR SPLY:WRAPAROUND	80009	390-0285-01
	390-0285-02	B090000		1	COVER,PWR SPLY:WRAPAROUND	80009	390-0285-02
					(ATTACHING PARTS)		
-2	211-0622-00	B010100	B029999	2	SCREW,MACHINE:6-32 X 0.188,TRH,SST,POZ	12360	OBD
	211-0622-00	B030000		4	SCREW,MACHINE:6-32 X 0.188,TRH,SST,POZ	12360	OBD
-3	212-0112-00	XB060000		1	SCREW,MACHINE:8-32 X 0.188,TRH,SST	000BK	OBD
					-*-		
					COVER INCLUDES:		
-4	367-0171-00			1	HANDLE,CARRYING	12136	845-R-372-140-37
					(ATTACHING PARTS)		
-5	210-0586-00	B010100	B089999	2	NUT,PL,ASSEM WA:4-40 X 0.25,STL CD PL	83385	211-041800-00
-6	210-0958-00	B010100	B089999	2	WASHER,FLAT:0.115 ID X 0.469 INCH OD,STL	78741	OBD
-7	211-0012-00	B010100	B089999	2	SCREW,MACHINE:4-40 X 0.375,PNH STL CD PL	83385	OBD
	210-0783-00	B090000		2	RIVET,BLIND:0.125 OD X 0.357 L,DOMED HEAD	07707	AD 44 ABS
	210-0993-00	B090000		2	WSHR,SHOULDERED:0.143 ID X 0.75 OD,BRS	86928	OBD
					-*-		
	348-0187-00	B010100	B079999X	4	FOOT,CABINET:0.780 X 1.650 INCH LONG	80009	348-0187-00
					(ATTACHING PARTS)		
	211-0511-00	B010100	B079999X	4	SCREW,MACHINE:6-32 X 0.500,PNH,STL,CD PL	83385	OBD
					-*-		
	348-0026-00	B010100	B079999X	8	HINGE BLOCK,STA:LEFT	80009	348-0026-00
	348-0027-00	B010100	B079999X	8	HINGE BLOCK,STA:RIGHT	80009	348-0027-00
-8	348-0348-00	B010100	B079999	4	STAND,ELEC EQPT:	83385	OBD
	348-0275-00	B080000		4	FLIPSTAND,CAB.:	80009	348-0275-00
-9	390-0274-00	B010100	B062278	4	COVER,PWR SPLY:BOTTOM	80009	390-0274-00
	390-0388-00	B062279	B079999	4	COVER,PWR SPLY:BOTTOM	80009	390-0388-00
	390-0438-01	B080000		4	COVER,PWR SPLY:BOTTOM	80009	30-0438-01
					(ATTACHING PARTS)		
-10	211-0105-00			4	SCREW,MACHINE:4-40 X 0.188100 DEG,FLH STL	83385	OBD
					-*-		
					CABINET BOTTOM ASSY INCLUDES:		
	390-0438-00	XB080000		1	COVER,PWR SPLY:BOTTOM	80009	390-0438-00
-11	348-0208-00	XB080000		2	FOOT,CABINET:LEFT FRONT AND RIGHT REAR	80009	348-0208-00
-12	348-0073-00	XB080000		2	HINGE BLOCK,STA:L FR,R REAR, BLACK ACETAL	80009	348-0073-00
					(ATTACHING PARTS)		
-13	211-0532-00	XB080000		2	SCREW,MACHINE:6-32 X 0.75 INCH,FILH STL	83385	OBD
-14	210-0457-00	XB080000		2	NUT,PL,ASSEM WA:6-32 X 0.312 INCH,STL	83385	OBD
					-*-		
-15	348-0207-00	XB080000		2	FOOT,CABINET:RIGHT FRONT AND LEFT REAR	80009	348-0207-00
-16	348-0074-00	XB080000		2	HINGE BLOCK,STA:R FR,L REAR,BLACK ACETAL	80009	348-0074-00
					(ATTACHING PARTS)		
-17	211-0532-00	XB080000		2	SCREW,MACHINE:6-32 X 0.75 INCH,FILH STL	83385	OBD
-18	210-0457-00	XB080000		2	NUT,PL,ASSEM WA:6-32 X 0.312 INCH,STL	83385	OBD
					-*-		
-19	351-0334-00	B010100	B029999	3	GUIDE,PL-IN UNi:	80009	351-0334-00
	351-0379-01	B030000		3	GUIDE,PL-IN:UPPER	80009	351-0379-01
					(ATTACHING PARTS)		
-20	213-0254-00	B010100	B029999	3	SCREW,TPG,TF:2-32 X 0.250,100 DEG,FLH	45722	OBD
	211-0087-01	B030000		3	SCREW,MACHINE:2-56 X 0.188 82 DEG,FLH,STL	83385	OBD
					-*-		
-21	351-0286-00	B010100	B019999	3	GUIDE,PL-IN UNI:	80009	351-0286-00
	351-0286-01	B020000	B069999	3	GUIDE,PL-IN UNI:	80009	351-0286-01
	351-0286-02	B070000	B089999	3	GUIDE,PL-IN UNI:	80009	351-0286-02
	351-0286-04	B090000	B121599	3	GUIDE,PL-IN UNI:LOWER,BLACK NYLON	80009	351-0286-04
	351-0286-07	B121600		3	GUID5,PL-IN UNI:LOWER,NYLON	80009	351-0286-07
					(ATTACHING PARTS)		
-22	211-0101-00	B010100	B121599	1	SCREW,MACHINE:4-40 X 0.25 100 DEG,FLH STL	83385	OBD
	213-0814-00	B121600		1	SCREW,TPG,TR:4-20,0.25 L,PLASTITE	93907	OBD
-23	211-0038-00	B010100	B121599	2	SCREW,MACHINE:4-40 X 0.312,FLH,100 DEG	83385	OBD
	213-0813-00	B121600		2	SCREW,TPG,TR:4-20,0.312 L,PLASTITE	93907	OBD
					-*-		
-24	131-1254-00			3	CONTACT,ELEC:GROUNDING,PH BRZ	80009	131-1254-00
					-*-		
					(ATTACHING PARTS)		
-25	210-0617-00			3	EYELET,METALLIC:0.089 OD X 0.125 L,BRASS	57771	G53-4
					-*-		

FIG. & INDEX NO.	TEKTRONIX PART NO.	SERIAL/MODEL NO. EFF	DSCONT	QTY	1 2 3 4 5 NAME & DESCRIPTION	MFR CODE	MFR PART NUMBER
1-26	384-1166-00	B010100	B029999	1	EXTENSION SHAFT:13.612 L X 0.048 STL W/PB	80009	384-1166-00
	384-1166-01	B030000		1	EXTENSION SHAFT:13.612 L X 0.048 STL W/PB	80009	384-1166-01
					(ATTACHING PARTS)		
-27	211-0101-00	B010100	B121599	2	SCREW,MACHINE:4-40 X 0.25,100 DEG,FLH STL	83385	OBD
	213-0815-00	B121600		2	SCREW,TPG,TR:4-20,0.188L,PLASTITE	93907	OBD
					-*-		
-28	214-1790-00			1	ADAPTR,SW ACTR:POWER	80009	214-1790-00
-29				1	SWITCH,PUSH-PUL:10A,250VAC(SEE S2 REPL)		
-30				1	CKT BOARD ASSY:INTERFACE(SEE A1 REPL)		
-31	131-0608-00			14	TERMINAL,PIN:0.365 L X 0.025 PH BRZ GOLD	22526	47357
-32	131-1078-00			3	CONNECTOR,RCPT:28/56 CONTACT	95238	600-1156Y256DF30
-33	214-1593-02			3	KEY,CONN PLZN:CKT BD CONN	80009	214-1593-02
-34	344-0154-00			4	CLIP,ELECTRICAL:FUSE,CKT BD MT	80009	344-0154-00
-35	352-0322-00	B010100	B129285	1	RETAINER,CAP.:	80009	352-0322-00
	352-0322-01	B129286		1	RETAINER,CAP.:	80009	352-0322-01
					(ATTACHING PARTS)		
-36	211-0534-00			2	SCR,ASSEM,WSHR:6-32 X 0.312 INCH,PNH STL	83385	OBD
-37	210-0407-00			2	NUT,PLAIN,HEX.:6-32 X 0.25 INCH,BRS	73743	3038-0228-402
					-*-		
-38	131-1895-00			1	LINK,TERM. CONN:8,22 AWG,1.5 L	80009	131-1895-00
-39	131-1896-00			1	LINK,TERM. CONN:8,22 AWG,1.5 L	80009	131-1896-00
-40	386-1938-00			1	REINF,CKT BD:INTERFACE	80009	386-1938-00
					(ATTACHING PARTS)		
-41	211-0008-00	B010100	B074839	4	SCREW,MACHINE:4-40 X 0.25 INCH,PNH STL	83385	OBD
-42	210-0586-00	B010100	B074839	4	NUT,PL,ASSEM WA:4-40 X 0.25,STL CD PL	83385	OBD
	210-0777-00	B074840		4	RIVET,BLIND:0.125 DIA GRIP,AL	45722	AD42AB5
					-*-		
					(ATTACHING PARTS FOR CKT BD ASSY)		
-43	211-0510-00			2	SCREW,MACHINE:6-32 X 0.375,PNH,STL,CD PL	83385	OBD
-44	220-0546-00			2	NUT,CHASSIS MTG:6-32 X 0.312 OD X 0.312 L	80009	220-0546-00
-45	210-0457-00			6	NUT,PL,ASSEM WA:6-32 X 0.312 INCH,STL	83385	OBD
-46	210-0071-00			6	WASHER,SPR TNSN:0.146 ID X 0.323" OD,STL	78189	4706-05-01-0531
-47	342-0136-00			6	INSULATOR,WSHR:0.812 OD X 0.0025 INCH THK	04713	OBD
					-*-		
-48	214-1764-00			1	HEAT SINK,XSTR:ALUMINUM	80009	214-1764-00
-49	214-1791-00			1	HEAT SINK,XSTR:ALUMINUM	80009	214-1791-00
-50				2	SWITCH,THERMO:(SEE S3,S4 REPL)		
					(ATTACHING PARTS)		
-51	211-0008-00			4	SCREW,MACHINE:4-40 X 0.25 INCH,PNH STL	83385	OBD
-52	210-0586-00			4	NUT,PL,ASSEM WA:4-40 X 0.25,STL CD PL	83385	OBD
					-*-		
-53	358-0365-00			1	BSHG,STRAIN RLF:	80009	358-0365-00
-54	161-0033-04	B010100	B120989	1	CABLE ASSY,PWR:	16428	KH854-2
	161-0033-05	B120990		1	CABLE ASSY,PWR:3,18 AWG,125V,92.0 L	80009	161-0033-05
-55	348-0190-00	XB080000	B099999	4	FOOT,CABINET:	80009	348-0190-00
	348-0191-00	B100000		4	LEG,ELEC EQUIP.:PLASTIC	80009	348-0191-00
					(ATTACHING PARTS)		
-56	212-0022-00	XB080000		4	SCREW,MACHINE:8-32 X 1.5 INCH,PNH,STL	83385	OBD
-57	210-0458-00	XB080000		4	NUT,PL,ASSEM WA:8-32 X 0.344 INCH,STL	83385	OBD
					-*-		
	210-0205-00			1	TERMINAL,LUG:SE #8	86928	5442-7
-58	200-0772-02			1	COVER,ELEC XFMR:3.125 X 3.75 X 0.875	80009	200-0772-02
					(ATTACHING PARTS)		
-59	212-0516-00	B010100	B039999	4	SCREW,MACHINE:10-32 X 2 INCH,HEX HD STL	77250	OBD
	212-0515-00	B040000		4	SCREW,MACHINE:10-32 X 2.250" HEX.HD STL	83385	OBD
-60	220-0410-00			4	NUT,EXTENDED WA:10-32 X 0.375 INCH,STL	83385	OBD
-61	166-0227-00			4	INS SLV,ELEC:0.187 ID X 1.50 INCH LONG	80009	166-0227-00
-62	210-0812-00	XB050000	B074839	4	WASHER,NONMETAL:#10,FIBER	86445	OBD
	210-0010-00	B074840		4	WASHER,LOCK:INT,0.20 ID X0.376" OD,STL	78189	1210-00-00-0541C
-63	210-0206-00	XB074840		1	TERMINAL,LUG:SE #10	86928	A373-147-1
					-*-		
-64				1	TRANSFORMER:(SEE T1 REPL)		
-65	333-1597-00	B010100	B079999	1	PANEL,REAR:	80009	333-1597-00
	333-1901-00	B080000		1	PANEL,REAR:	80009	333-1901-00
					(ATTACHING PARTS)		
-66	211-0510-00	XB080000		2	SCREW,MACHINE:6-32 X 0.375,PNH,STL,CD PL	83385	OBD
-67	210-0457-00	XB080000		2	NUT,PL,ASSEM WA:6-32 X 0.312 INCH,STL	83385	OBD
					-*-		

FIG. & INDEX NO.	TEKTRONIX PART NO.	SERIAL/MODEL NO. EFF	DSCONT	QTY	1 2 3 4 5 NAME & DESCRIPTION	MFR CODE	MFR PART NUMBER
1-68	352-0076-00	B010100	B049999	1	FUSEHOLDER:W/HARDWARE	75915	342012-L
	352-0362-00	B050000		1	FUSEHOLDER: W/MOUNTING HARDWARE	75915	345001
-69	210-0873-00			1	WASHER,NONMETAL:0.5 ID X 0.688 INCH OD,NPRN	70485	OBD
-70	407-1062-00	B010100	B114739	1	BRACKET,ANGLE:CKT BOARD,RIGHT,ALUMINUM	80009	407-1062-00
	407-1062-01	B114740		1	BRACKET,ANGLE:CKT BOARD,RIGHT,ALUMINUM	80009	407-1062-01
					(ATTACHING PARTS)		
-71	211-0507-00			2	SCREW,MACHINE:6-32 X 0.312 INCH,PNH STL	83385	OBD
-72	210-0457-00			2	NUT,PL,ASSEM WA:6-32 X 0.312 INCH,STL	83385	OBD
					-*-		
-73	407-1178-00	B010100	B114739	1	BRACKET,ANGLE:CKT BOARD,LEFT,ALUMINUM	80009	407-1178-00
	407-1178-01	B114740		1	BRACKET,ANGLE:CKT BOARD,LEFT,ALUMINUM	80009	407-1178-01
					(ATTACHING PARTS)		
-74	211-0507-00			2	SCREW,MACHINE:6-32 X 0.312 INCH,PNH STL	83385	OBD
-75	210-0457-00			2	NUT,PL,ASSEM WA:6-32 X 0.312 INCH,STL	83385	OBD
					-*-		
-76	210-0204-00			1	TERMINAL,LUG:0.146 INCH DIA DE,45 DEG BEND	78189	2157-06-01-2520N
					(ATTACHING PARTS)		
-77	210-0586-00			1	NUT,PL,ASSEM WA:4-40 X 0.25,STL CD PL	83385	OBD
					-*-		
-78	426-0919-00	B010100	B029999	1	FRAME ASSY,CAB.:	80009	426-0919-00
	426-0919-01	B030000	B079999	1	FRAME ASSY,CAB.:	80009	426-0919-01
	426-0919-02	B080000	B106689	1	FRAME ASSY,CAB.:	80009	426-0919-02
	426-0919-04	B106690		1	FRAME SECT,CAB.:	80009	426-0919-04
	334-2709-00			1	MARKER,IDENT:MARKED "CAUTION"	80009	334-2709-00
	334-2037-00			2	MARKER,IDENT:	80009	334-2037-00
	334-3379-01	XB119080		1	MARKER,IDENT:MARKED GROUNDSYMBOL	80009	334-3379-01

APPENDIX A

REFERENCES

DA PAM 310-4	Index of Technical Manuals, Technical Bulletins, Supply Manuals (Types 7, 8, and 9), Supply Bulletins, and Lubrication Orders
DA PAM 310-7	Index of US Army Equipment Modification Work Orders
FM 21-11	First Aid for Soldiers
AR 385-40	Accident Reporting and Records
AR 750-1	Army Materiel Maintenance Concept and Policies
TB 750-25-1	Maintenance Supplies and Equipment: Army Metrology and Calibration System
TM 38-750	The Army Maintenance Management System (TAMMS)
TM 750-244-2	Procedures for Destruction of Electronics Materiel to Prevent Enemy Use

APPENDIX B
MAINTENANCE ALLOCATION CHART

Section I. INTRODUCTION

B-1. GENERAL.

a. This section provides a general explanation of all maintenance and repair functions authorized at various maintenance categories.

b. The Maintenance Allocation Chart (MAC) in Section II designates overall authority and responsibility for the performance of maintenance functions on the identified end items or component. The application of the maintenance functions to the end item or component will be consistent with the capacities and capabilities of the designated maintenance categories.

c. Section Ill lists the tools and test equipment (both special and common) required for each maintenance function as referenced from Section II.

d. Section IV contains supplemental instructions and explanatory notes for a particular maintenance function.

B-2. MAINTENANCE FUNCTIONS. Maintenance Functions will be limited to and defined as follows:

a. Inspect. To determine the serviceability of an item by comparing its physical, mechanical, and/or electrical characteristics with established standards through examination (e.g., by sight, sound, or feel).

b. *Test.* To verify serviceability by measuring the mechanical, pneumatic, hydraulic, electrical characteristics of an item and comparing those characteristics with prescribed standards.

c. *Service.* Operations required periodically to keep an item in proper operating condition, i.e., to clean (includes decontaminate, when required), to preserve, to drain, to paint, or to replenish fuel, lubricants, chemical fluids, or gases.

d. Adjust. To maintain or regulate, within prescribed limits, by bringing into proper or exact position, or by setting the operating characteristics to specified parameters.

e. *Aline.* To adjust specified variable elements of an item to bring about optimum or desired performance.

f. Calibrate. To determine and cause corrections to be made or to be adjusted on instruments or test, measuring, and diagnostic equipment used in precision measurement. Consists of comparisons of two instruments, one of which is a certified standard of known accuracy, to detect and adjust any discrepancy in the accuracy of the instrument being compared.

g. *Removal/Install.* To remove and install the same item when required to perform service or other maintenance functions. install may be the act of emplacing, seating, or fixing into position a spare, repair part, or module (component or assembly) in a manner to allow the proper functioning of an equipment or system.

h. Replace. To remove an unserviceable item and install a serviceable counterpart in its place.

i. Repair. The application of maintenance services 1, including fault location/troubleshooting 2, removal/ installation, and disassembly/assembly 3, procedures, and maintenance actions 4, to identify troubles and restore serviceability to an item by correcting specific damage, fault, malfunction, or failure in a part, subassembly, module (component or assembly), end item, or system.

j. Overhaul. That maintenance effort (service/action) prescribed to restore an item to a completely serviceable-operational condition as required by maintenance standard in appropriate technical publications. Overhaul is normally the highest degree of maintenance performed by the Army. Overhaul does not normally return an item to like-new condition.

k. Rebuild. Consists of those services/actions necessary for the restoration of unserviceable equipment to a like-new condition in accordance with original manufacturing standards. Rebuild is the highest degree of material maintenance applied to army equipment and is normally reserved for the depot category of maintenance. The rebuild operation includes the act of returning to zero those age measurements (hours/mile, etc.) considered in classifying army equipment/components.

(1) Services - inspect, test, service, adjust, aline, calibrate, and/or replace.

(2) Fault locate/troubleshoot - the process of investigating and detecting the cause of equipment malfunctioning; the act of isolating a fault within a system or Unit Under Test (UUT).

(3) Disassembly/assembly - encompasses the step-by-step taking apart (or breakdown) of a repairable assembly (group numbered item) to the level of its least componency identified as maintenance significant (i.e., assigned an SMR code) for the category of maintenance under consideration.

(4) Actions - welding, griding, riveting, straightening, facing, remachinery, and/or resurfacing.

B-3. EXPLANATION OF COLUMNS IN THE MAC, Section II.

a. Column 1, Group Number. Column 1 lists group numbers, the purpose of which is to identify maintenance significant components, assemblies, subassemblies, and modules with the next higher assembly.

b. Column 2, Component/Assembly. Column 2 contains the names of components, assemblies, subassemblies, and modules for which maintenance is authorized.

c. Column 3, Maintenance Function. Column 3 lists the functions to be performed on the item listed in Column 2 (for detailed explanation of these functions, see paragraph B-2).

d. Column 4, Maintenance Category. Column 4 specifies, by the listing of a work time figure in the appropriate subcolumn(s), the category of maintenance authorized to perform the function listed in Column 3. This figure represents the active time required to perform that maintenance function at the indicated category of maintenance. If the number of complexity of the tasks within the listed maintenance function vary at different maintenance categories, appropriate work time figures will be shown for each category. The work time figure represents the average time required to restore an item (assembly, subassembly, component, module, end item, or system) to a serviceable condition under typical field operating conditions. This time includes preparation time (including any necessary disassembly/assembly time), troubleshooting/fault location time, and quality assurance/quality control time in addition to the time required to perform the specific tasks identified for the maintenance functions authorized in the maintenance allocation chart. The symbol designations for the various maintenance categories are as follows:

C ..... Operator or Crew
O ..... Organizational Maintenance
F ..... Direct Support Maintenance
H ..... General Support Maintenance
L ..... Specialized Repair Activity (SRA)[5]
D ..... Depot Maintenance

5 This maintenance category is not included in Section II, column (4) of the Maintenance Allocation Chart. To identify functions to this category of maintenance, enter a work time figure in the "H" column of Section II, column (4), and use an associated reference code in the Remarks column (6). Key the code to Section IV, Remarks, and explain the SRA complete repair application there. The explanatory remark(s) shall reference the specific Repair Parts and Special Tools List (RPSTL) TM which contains additional SRA criteria and the authorized spare/repair parts.

e. *Column 5, Tools and Test Equipment.* Column 5 specifies, by code, those common tools sets (not individual tools) and special tools, TMDE, and support equipment required to perform the designated function.

f. Column 6, Remarks. This column shall, when applicable, contain a letter code, in alphabetic order, which shall be keyed to the remarks contained in Section IV.

B-4. EXPLANATION OF COLUMNS IN TOOL AND TEST EQUIPMENT REQUIREMENTS, SECTION III.

a. *Column 1, Reference Code.* The tool and test equipment reference code correlates with a code used in the MAC, Section III, Column 5.

b. Column 2, Maintenance Category. The lowest category of maintenance authorized to use the tool or test equipment.

c. *Column 3, Nomenclature.* Name or identification of the tool or test equipment.

d. Column 4, National Stock Number. The National Stock Number of the tool or test equipment.

e. Column 5, Tool *Number.* The manufacturer's part number

B-5. EXPLANATION OF COLUMNS IN REMARKS, SECTION IV.

a. Column 1, Reference Code. The code recorded in Column 6, Section II.

b. Column 2, Remarks. This column lists information pertinent to the maintenance function being performed as indicated in the MAC, Section II.

SECTION II. MAINTENANCE ALLOCATION CHART
FOR
TEKTRONIX TM 503 POWER MODULE

(1)	(2)	(3)	(4)					(5)	(6)
GROUP NUMBER	COMPONENT/ASSEMBLY	MAINTENANCE FUNCTION	NA					TOOLS AND EQUPT	AR
			C	O	F	H	D		
Fig 1	TM 503 Power Module	Insp	.10						A
		Repair				1.00		1	C D
	Circuit Card Assy A1	Insp				.10			A
		Replace				.50		1	
	Bumper, Plastic	Insp				.10			A
		Replace				.10		1	
	Fuse, Cartridge	Insp				.10			A
		Replace				.10		1	

*C.operator/crew O.organizational F.direct support H.general support D.depot

SECTION III. TOOL AND TEST EQUIPMENT REQUIREMENTS
FOR
TEKTRONIX TM 503 POWER MODULE

TOOL OR TEST EQUIPMENT	MAINTENANCE CATEGORY	NOMENCLATURE	NATIONAL/NATO STOCK NUMBER	TOOL NUMBER
1		JTK 17LAL, 35H Tool Kit	4931-01-073-3845	

SECTION IV. REMARKS

REFERENCE CODE	REMARKS
A	Organizational maintenance will be accomplished by the organization owning and using the equipment.
B	Supply of parts will be through normal supply channels.
C	A recommended repair parts list will be published as part of this manual. Parts that have NSN's assigned will be requisitioned separately and will not be part of this kit.

APPENDIX C

RECOMMENDED SPARE PARTS LIST FOR TEKTRONIX TM 503 POWER MODULE

ITEM NO.	TEKTRONIX PART NO.	ITEM NAME	REC. QTY
1	159-0003-00	FUSE, CARTRIDGE	5
2	348-0429-00	BUMPER, PLASTIC	1
3	670-2024-02	CIRCUIT BD ASSY	1

By Order of the Secretary of the Army:

JOHN A. WICKHAM, JR.
General, ***United States Army***
Chief of Staff

Official:

DONALD J. DELANDRO
Brigadier General, United States Army
The Adjutant General

Distribution:

To be distributed in accordance with DA Form 12-37, Organizational, Direct and General Support Maintenance requirements for Bradley Fighting Vehicle TOW Subsystem.

RECOMMENDED CHANGES TO EQUIPMENT TECHNICAL PUBLICATIONS

SOMETHING WRONG WITH THIS PUBLICATION?

THEN. . JOT DOWN THE DOPE ABOUT IT ON THIS FORM, CAREFULLY CUT IT *OUT, FOLD IT AND DROP IT IN THE MAIL!*

FROM: (PRINT YOUR UNIT'S COMPLETE ADDRESS)

DATE SENT

PUBLICATION NUMBER	PUBLICATION DATE	PUBLICATION TITLE

BE EXACT . . .PIN-POINT WHERE IT IS

PAGE NO.	PARA-GRAPH	FIGURE NO.	TABLE NO.

IN THIS SPACE TELL WHAT IS WRONG AND WHAT SHOULD BE DONE ABOUT IT:

PRINTED NAME, GRADE OR TITLE, AND TELEPHONE NUMBER

SIGN HERE

DA FORM 1 JUL 79 2028-2

PREVIOUS EDITIONS ARE OBSOLETE.

PS - - IF YOUR OUTFIT WANTS TO KNOW ABOUT YOUR RECOMMENDATION MAKE A CARBON COPY OF THIS AND GIVE IT TO YOUR HEADQUARTERS

CUT ALONG THIS LINE

THE METRIC SYSTEM AND EQUIVALENTS

'NEAR MEASURE

. Centimeter = 10 Millimeters = 0.01 Meters = 0.3937 Inches
1 Meter = 100 Centimeters = 1000 Millimeters = 39.37 Inches
1 Kilometer = 1000 Meters = 0.621 Miles

'VEIGHTS

Gram = 0.001 Kilograms = 1000 Milligrams = 0.035 Ounces
1 Kilogram = 1000 Grams = 2.2 lb.
1 Metric Ton = 1000 Kilograms = 1 Megagram = 1.1 Short Tons

LIQUID MEASURE

1 Milliliter = 0.001 Liters = 0.0338 Fluid Ounces
1 Liter = 1000 Milliliters = 33.82 Fluid Ounces

SQUARE MEASURE

1 Sq. Centimeter = 100 Sq. Millimeters = 0.155 Sq. Inches
1 Sq. Meter = 10,000 Sq. Centimeters = 10.76 Sq. Feet
1 Sq. Kilometer = 1,000,000 Sq. Meters = 0.386 Sq. Miles

CUBIC MEASURE

1 Cu. Centimeter = 1000 Cu. Millimeters = 0.06 Cu. Inches
1 Cu. Meter = 1,000,000 Cu. Centimeters = 35.31 Cu. Feet

TEMPERATURE

5/9(°F - 32) = °C
212° Fahrenheit is evuivalent to 100° Celsius
90° Fahrenheit is equivalent to 32.2° Celsius
32° Fahrenheit is equivalent to 0° Celsius
9/5C° + 32 =°F

APPROXIMATE CONVERSION FACTORS

TO CHANGE	TO	MULTIPLY BY
Inches	Centimeters	2.540
Feet	Meters	0.305
Yards	Meters	0.914
Miles	Kilometers	1.609
Square Inches	Square Centimeters	6.451
Square Feet	Square Meters	0.093
Square Yards	Square Meters	0.836
Square Miles	Square Kilometers	2.590
Acres	Square Hectometers	0.405
Cubic Feet	Cubic Meters	0.028
Cubic Yards	Cubic Meters	0.765
Fluid Ounces	Milliliters	29.573
ıts	Liters	0.473
arts	Liters	0.946
allons	Liters	3.785
Ounces	Grams	28.349
Pounds	Kilograms	0.454
Short Tons	Metric Tons	0.907
Pound-Feet	Newton-Meters	1.356
Pounds per Square Inch	Kilopascals	6.895
Miles per Gallon	Kilometers per Liter	0.425
Miles per Hour	Kilometers per Hour	1.609

TO CHANGE	TO	MULTIPLY BY
Centimeters	Inches	0.394
Meters	Feet	3.280
Meters	Yards	1.094
Kilometers	Miles	0.621
Square Centimeters	Square Inches	0.155
Square Meters	Square Feet	10.764
Square Meters	Square Yards	1.196
Square Kilometers	Square Miles	0.386
Square Hectometers	Acres	2.471
Cubic Meters	Cubic Feet	35.315
Cubic Meters	Cubic Yards	1.308
Milliliters	Fluid Ounces	0.034
Liters	Pints	2.113
Liters	Quarts	1.057
'ers	Gallons	0.264
.ms	Ounces	0.035
.ograms	Pounds	2.205
Metric Tons	Short Tons	1.102
Newton-Meters	Pounds-Feet	0.738
Kilopascals	Pounds per Square Inch	0.145
'lometers per Liter	Miles per Gallon	2.354
›meters per Hour	Miles per Hour	0.621

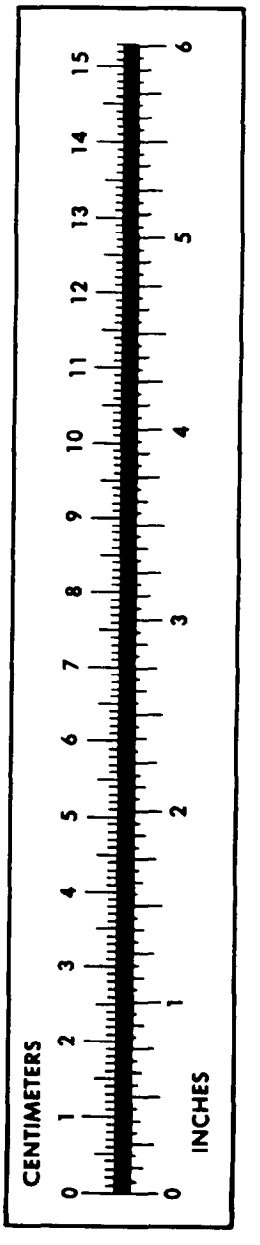

PIN: 056815-000

This fine document...

Was brought to you by me:

Liberated Manuals -- free army and government manuals

Why do I do it? I am tired of sleazy CD-ROM sellers, who take publicly available information, slap “watermarks” and other junk on it, and sell it. Those masters of search engine manipulation make sure that their sites that sell free information, come up first in search engines. They did not create it... They did not even scan it... Why should they get your money? Why are not letting you give those free manuals to your friends?

I am setting this document FREE. This document was made by the US Government and is NOT protected by Copyright. Feel free to share, republish, sell and so on.

I am not asking you for donations, fees or handouts. If you can, please provide a link to liberatedmanuals.com, so that free manuals come up first in search engines:

<A HREF=http://www.liberatedmanuals.com/>Free Military and Government Manuals</A>

- Sincerely
  Igor Chudov
  http://igor.chudov.com/
- Chicago Machinery Movers