TM 9-6625-1754-14

DEPARTMENT OF THE ARMY TECHNICAL MANUAL

OPERATOR, 0RGANIZATIONAL,
DIRECT SUPPORT AND GENERAL SUPPORT
MAINTENANCE MANUAL

MULTIMETER

AN/USM-303

This copy is a reprint which includes current pages from Changes 1 and 2.

HEADQUARTERS, DEPARTMENT OF THE ARMY
OCTOBER 1967

OPERATING INSTRUCTIONS

FOR TYPE 130 POLARITY REVERSE SWITCH

On Multimeter AN/USM-303A.

I. General

The polarity reversal switch is a convenience feature of the Multimeter AN /USM-303A. There are two switch positions:

1. Normal 2. Reverse

Normal Operation. When the polarity reverse switch is in this position, the polarity of the test leads is:

red = positive black = negative

In this position the operation of the Multimeter AN/USM-303A will be as described in the Manual.

Reverse Operation. When the polarity reverse switch is in this position, the polarity of the test leads is the opposite that of *normal operation.*

red = negative black = positive

II. Operation of The Test Lead Polarity Reverse Switch

CAUTION

Due to the high voltage measured with this instrument, extreme care must be exercised to insure the operators safety. The prime rule is to use good common sense; however, the following rules should be observed:

1. When measuring high voltage, de-energize the circuit being measured, discharge all circuit components, select the proper range, and connect the instruments. Re-energize circuit and record measurement.
2. Do not "float"' the instrument above ground potential.
3. When making current measurements, be certain one side of the instrument is at ground potential. De-energize the circuit under test when connecting the instrument.

DC Volts: Start with the polarity switch in the normal position, connect the circuit under test. If the meter pointer deflects down scale, reverse the polarity and proceed normally.

DC Current: Start with the polarity switch in the normal position; connect the circuit under test. If the meter pointer deflects downscale, reverse the polarity and proceed normally.

CAUTION

Do not switch the polarity or function switches while under current measurements as this may exceed the rating of the multimeter AN/USM-303A.

TECHNICAL MANUAL
No. 9-6625-1754-14

HEADQUARTERS
DEPARTMENT OF THE ARMY
WASHINGTON, D. C., 5 *October* 1967

OPERATOR'S ORGANIZATIONAL, DIRECT SUPPORT AND GENERAL SUPPORT MAINTENANCE MANUAL

MULTIMETERS AN/ USM-303 AND AN/ USM-303A

SECTION I. GENERAL

1. Scope

This manual contains information and instructions for operators, organizational, and general support maintenance personnel responsible *for* the operation and maintenance of Multimeter AN/ USM-303 and AN/ USM-303A.

2. Indexes of Publications

a. *DA Pam* 310-4. Refer to the latest issue of DA Pam 310-4 to determine whether there are new editions, changes, or additional publications pertaining to the equipment.

b. DA Pam 310-7. Refer to DA Pam 310-7 to determine whether there are modification work orders (MWO) pertaining to the equipment.

3. Forms and Records

a. Reports of Maintenance and Unsatisfactory Equipment. Use equipment forms and records in accordance with instructions given in TM 38-750.

b. Report of Packaging and Handling Deficiencies. Fill out and forward DD Form 6 (Report of Packaging and Handling Deficiencies] as provided 'in AR 700-58 (Army)/ NAVSUP PUB 378 (Navy) / AFR 71-4 (Air Force) / and MCO P40302.29 (Marine Corps.)

c. *Discrepancy in Shipment Report (DISREP) (SF361).* Fill out and forward Discrepancy in Shipment Report (DISREP) (SF361) as prescribed in AR 55-38 (Army)/ NAVSUP PUB 459 (Navy) / AFM 75-34 (Air Force) / and MCO P4610.19 (Marine Corps).

4. Reporting of Equipment Publication Improvements

The reporting of errors, omissions, and recommendations for improving this publication by the individual user is encouraged. Reports should be submitted on DA Form 2028 (Recommended Changes to Publications) and forwarded direct to Commanding General, U. S. Army Electronics Command, ATTN: AMSEL-ME-NMP-EM, Fort Monmouth, N.J. 07703.

SECTION II DESCRIPTION AND DATA MULTIMETER AN/USM-303 AND AN/USM-303A

5. Purpose and Use

a. Purpose. Multimeters AN/ USM-303 and AN/ USM-303A (multimeter) (fig. 1) (fig. 1.1) measure direct current (dc) and alternating current (ac) voltages, direct current, and resistance in electrical and electronic equipment.

b. Use. Multimeters AN/ USM-303 and AN/ USM-303A can be used in two modes of operation. The digital mode of operation provides direct-reading, three significant figure presentation, including decimal point and electrical function. The search mode of operation uses conventional analog scale interpretation with decade ranges.

5.1. Items Comprising Multimeter AN/ USM-303 or AN/ USM-303A (fig. 1 and 1.1)

The items in the chart below make up an operable Multimeter AN / USM-303. One copy of TM 9-6625-175-14 with change 1 and 2 is packed with the equipment.

FSN	Nomenclature	Qty (ea)	Dimension (in.) Height	Depth	Width	Weight (lb)
6625-933-2406	MultimeterAN/USM -303	1	4-3/4	7-1 / 2	10	6-3 / 4
6625-123-0478	Multimeter ME-258/U	1	4-3/4	7-1 / 2	10	6-3/4
6135-125-5265	Battery, Dry BA-1030/U	1	.....	.....	.....	.....
6135-135-0194	Battery, Dry BA-1400/U	1	.....	.....	.....	.....
	Cover, multimeter	1	.....	.....	.....	.....
5940-195-9699	Clip, electrical	2	.....	.....	.....	.....
5975-284-6588	Insulator, sleeve	1	.....	.....	.....	.....
5975-296-1875	Insulator, sleeve	1	.....	.....	.....	.....
6625-168-0355	Prod, test	2		.....	.....	.....
6625-168-0585	Multimeter AN/ USM-303A	1	4-3/4	7-1/2	10	6-3 / 4
6625-408-5079	Multimeter ME-258A/U	1	4-3/4	7-1 / 2	10	6-3 /4
6135-125-5265	Battery, Dry BA-1030U	1	.....	.....	.....	.....
6135-135-0194	Battery, Dry BA-1400/U	1	.....	.....	.....	.....
	Cover, multimeter	1	.....	.....	.....	.....
6625-168-0355	Prod, tat	2				
6625-123-0478	Adapter set, test lead	1				

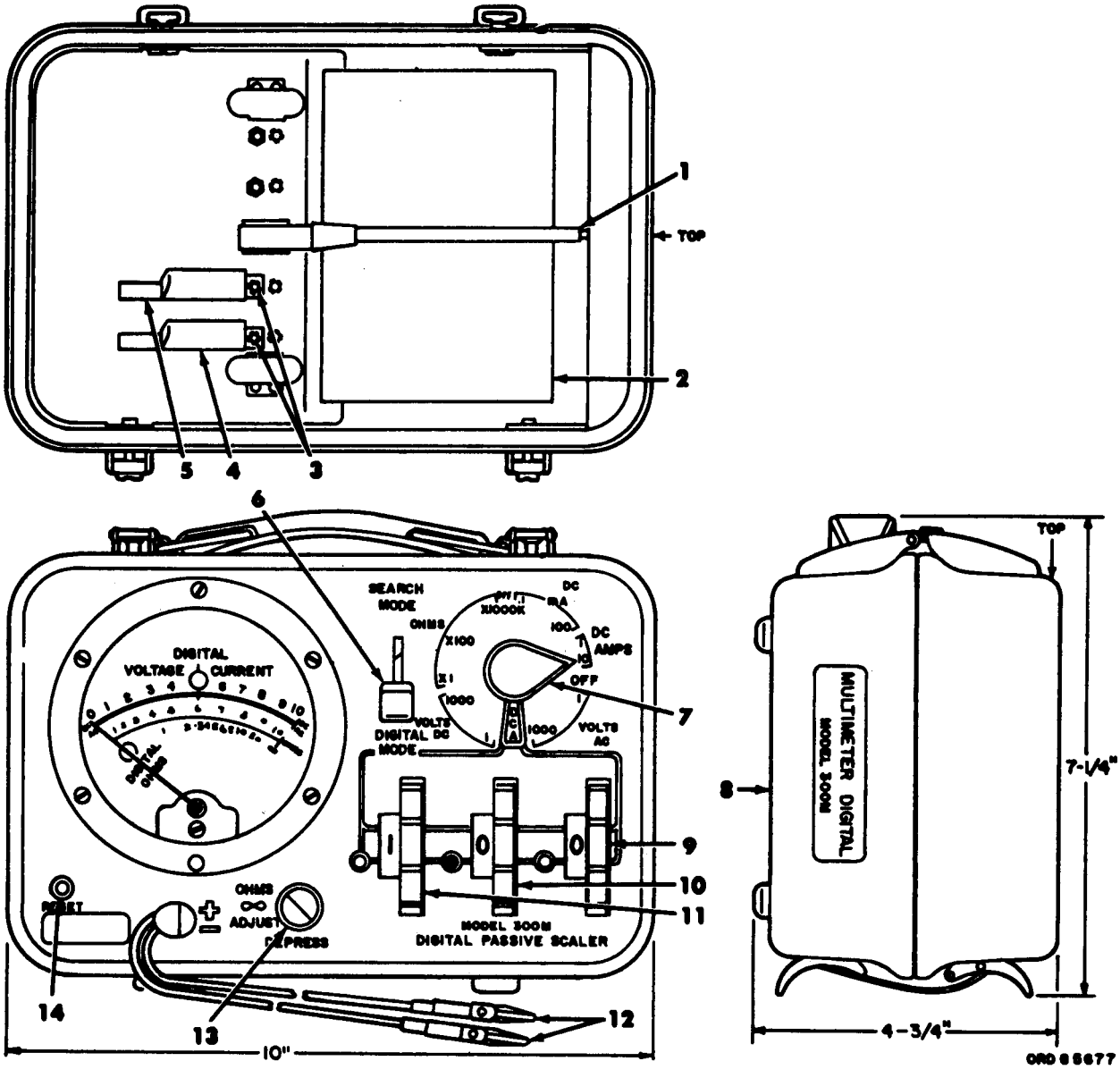

Figure 1. Model 300M multimeter.

Teat probe
Condensed operating instructions
Alligator clip-2 rquired

Black alligator clip insulator
Mode switch knob
Function/Range switch knob

8 Instrument case
Thumbwheel knob (ref. 0-10)
10 Thumbwheel knob (ref. 0-9)
11 Thumbwheel knob (ref. 1-9)
12 Teat lead assemblv
13 OHMS ∞ ADJUST knob
14 RESET switch button

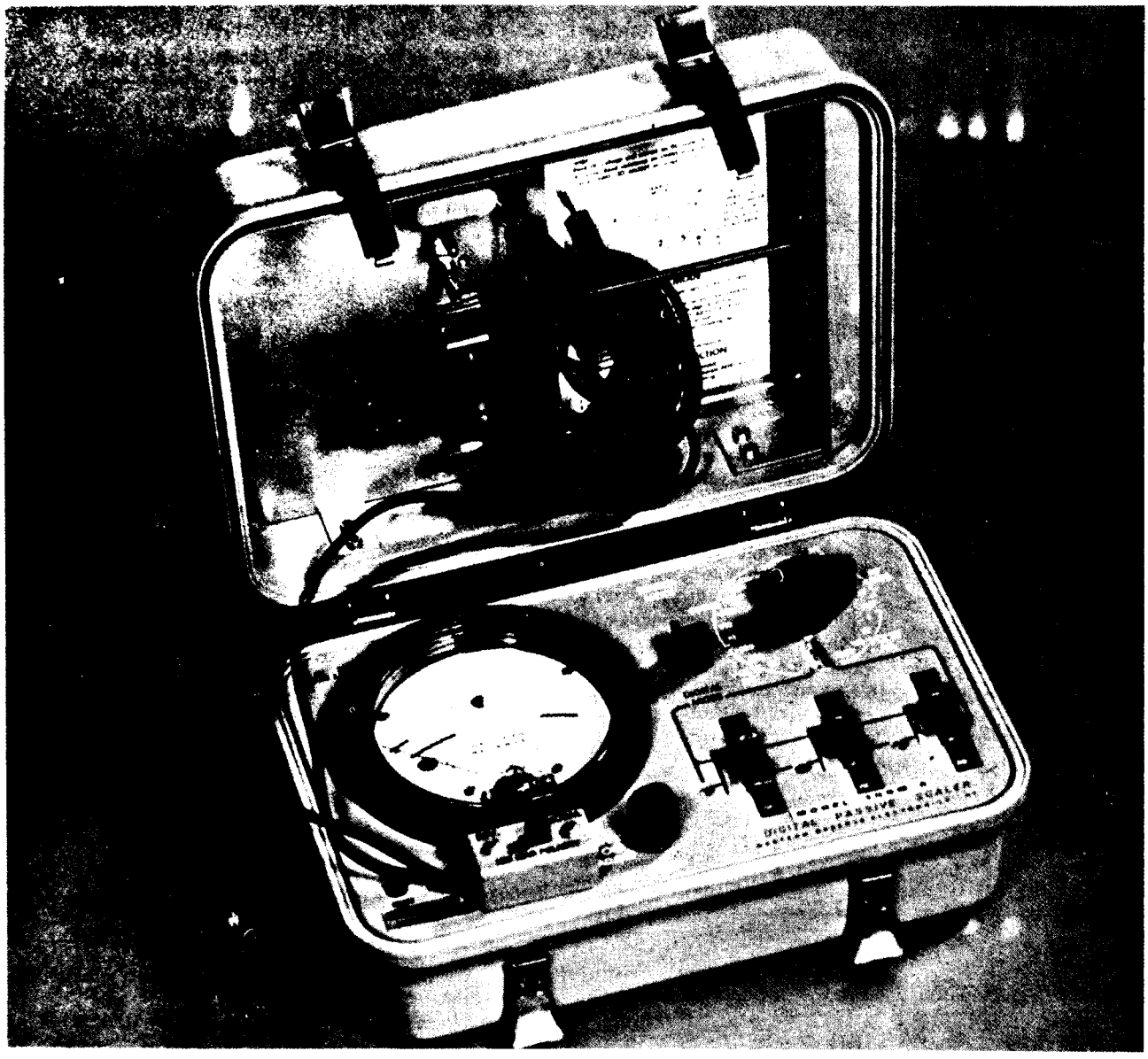

Figure 1.1 Multimeter AN/USM-303A

6. Technical Characteristic

a. Power Sources.

Two batteries:
BA-1030/U..... 1.5 volts dc
BA-1400/U..... 6.7 volts dc

b. Dc Voltage.

Range..... 0.1 to 1,000 volts dc in 4-decade ranges.

Accuracy:
Digital mode ±1 percent of indicated
Search mode. . . . ±2 percent of full scale

Circuit loading 10 to 100 microampere (μa)

c. Ac Voltage.

Range . . . 0.1 to 1,000 volts ac in 4-decade ranges.

Accuracy:
Digital mode. . . .±1 percent of indicated
Search mode. . . . ±3 percent of indicated

Frequency response (sine wave):

Digital mode . . . ± 1 percent from 10 Hertz per second (Hz) to 100 kiloHertz (kHz) per second below 10 volts;
± 1 percent from 10 Hz to 10 kHz below 100 volts;
± 1 percent from 10 Hz to 1 kHz below 1,000 volts.

Search mode . . . . ± 3 percent from 10 Hz to 100 kHz below 10 volts;
± 3 percent from 10 Hz to 10 kHz below 100 volts;
± 3 percent from 10 Hz to 1 kHz below 1.000 volts.

waveform **responseThe ac voltage measurement is** *quasi-rms* **responding, calibrated in rms value of sine wave.** *Quai-rms* **is defined as a response between average and peak for minimizing the measurement error, as referred to true rms, of "waveforms other than sine wave. The waveform** *error* **shall not exceed the limits listed in table 1 for the waveforms defined. The waveform error for average and peak response is included in the table for reference.**

Circuit loading . . . . . 40 to 400 ***pa.***

d. Direct Current.

Range . . . . . 10) p a to 10 amperes in 6-decade ranges.

Accuracy:
Digital mode . . . . ± 1 percent of indicated
Search mode . . . . ± 2 percent of full scale
Insertion loss . . . . . 25 to 250 (millivolts) mv

e. Resistance.

Measurement circuit:
Digital mode . . . . . Wheatstone bridge
Search mode . Power-limited, shunt ohm-meter circuit for safer and effective use in semiconductor circuitry.
Range ., ... to ohm to megohm in 6-decade steps.

Accuracy:
Digital mode . . . . ± 1 percent of indicated, plus lead resistance (0. 1 ohm nominal).
Search mode . . . . ±10 percent indicated (±2 percent of arc length), plus lead resistance (0. 1 ohm nominal).

Measurement power:
Digital mode **Power dissipated in measured resistance near null varies from 14 microvolt** (pw) to 20 mw, **dependent on value (Whetstone bridge).**
Search mode **Maximum power dissipation in measured circuit is limited by multimeter range: X 1 range up to 250 p.w, X1.0 range up to 25 p.w, X 100 range up to 2.5 p.w, X 1K range up to 0.25 p.w X 10K range up to 2.5 p.w, and X100K range up to 25 p.w ohmmeter).**

Table 1. Waveform Error Referred to True Rms

Waveform	Reference				Requirement
	Crest factor	True rms	Peak	Average	Quasi-rms
Square Wave	1	±0	−30%	+11%	±6%
Sine Wave	1.414	±0	±0	±0	±0
Notched sine wave with 90 degree conduction	2	± 0	+41%	_30%	_14%

f. Measurement Extension. **Useful measurements with analog scale interpretation can be extended to** *2* **mv dc, 10 mv ac,** 0.2 **ua dc, 0.1 ohm, and 10 megohms.**

g . Accuracy. **The accuracies stated in** ***b, c, d,*** **and** ***e*** **above apply to measurements made with the multimeter in a horizontal position and over** an **ambient temperature range of + 15° to +35° C. The multimeter is usable over an extended temperature range with a slight reduction in accuracy as indicated in table 2.**

Table 2. Maximum Accuracy Variation With Temperature Extremes

Temperature	Accuracy derating
85° c.	Storage
65° c.	+ 1% —0% of indicated
35° c.	None
25° c.	None
15° c.	None
0 ° c.	+0% — 1 % of indicated
_20° c.	+ 0% —2% of indicated
—40° c.	+ 0% —3% of indicated
—65° c.	Storage

h. Overload protection. A fail-safe, resettable protection system protects all ranges, except the l-and 10-ampere ranges, against overload within the limits of 1,000 volts ac or dc and 20-ampere single surge. The approximate ac and dc voltage overload trip levels for dc current, dc voltage, ac voltage, and resistance measurements are shown in table 3. The meter, converter, and current generator are protected against overload by a network of solid state diodes which are shown as a double-arrow symbol on the simplified schematics. The overall measurement system is protected against overload with a disconnect relay activated by either an overcurrent or an overvoltage sensor composed of solid state diode networks applied to the relay. The safe voltage selection for the various voltage ranges is made by a network of neon lamps applied to the overvoltage sensor. The relay is electrically reset with the D-cell used in the resistance measurement system. The l-ampere range is protected by a fuse and a thermal circuit breaker and the 10-ampere range is protected by a fuse.

Table 3. Overload Protection

Search-range	Digital range	APPROXIMATE overload trip level [1]	
		Dc volts	Ac Volts
Dc current:			
0.1 ma	10-100 p.a	± 4	3
1 ma	0.1-1 ma	± 4	3
10ma	1-10 ma	± 4	3
100 ma	10-100 ma	± 4	3
1 amp	0.1-1 amp	± 4	3
10amps	1-10 amp	± 4	3

Table 3. Overload Protection —continued

Search-range	Digital range	APPROXIMATE overload trip level [1]	
		Dc Volts	Ac volts
Dc voltage:			
1 v	0.1-1 v	±25	18
10v	1-10 v	±100	70
100v	10-100 v	±260	185
1000 v	0.1-1 kv	NA	NA
Ac voltage :			
1v	0.1-1 v	±25	18
10v	1-10V	±100	70
100v	10.100 v	±260	185
1000 v	0.1.1 kv	NA	NA
Resistance:			
x1	1.10	± 4	3
X10	10.100	± 4	3
X100	0.1-1 K	± 4	3
X1K	1-10 K	± 4	3
X10K	10-100K	+100,—25	18
X100 K	0.1-1 mego	+100,—25	18

[1] Measured between the test leads.

i. Circuit Disturbance Measurements.

(1) Voltage and current. Circuit loading and current drain for ac and dc voltage measurements using the digital and search modes of operation are shown in table 4. Table 4 also shows the resistance inserted into an electrical or electronic circuit to measure different current values and the resulting loss in dc mv.

(2) *Resistance.* The current, voltage, and power for resistance measurements with digit wheel setting of 1 0 0 and 9 9 10 are shown in table 5. Table 6 shows the open circuit voltage, short circuit current, and maxim urn mid-scale power for resistance measurement using the search mode of operation.

Table 4. Circuit Disturbance Voltage and Current Measurements

Digital range	Search range (full-scale)	Resistance		Current drain in dc ua or ac us rms		Insertion less in dc mv	
		Loading	Insertion	Digital	Search	Digital	Search
Dc voltage:							
0.1-1 v	1v	10K					
1-10v	10v	100K		1x {1 Digit wheel setting}	10x {2 DC scale reading}		
10-100v	100v	1 mego					
0.1-1 kv	1000v	10 mego					
Ac voltage:							
0.1-1 v	1v	2.5K					
1-10 v	10v	25K		0.4x {Digit wheel setting}	40x {A[2]C scale reading}		
10-100v	100v	250K					
0.1-1 kv	1000v	2.5 mego					
Dc current:							
10-100µa	0.1 ma		2.5 K				
0.1-1 ma	1 ma		250				
1-10ma	10 ma		25			0.25x {1 Digit wheel setting}	25x {2 DC scale reading}
10-100ma	100 ma		2.5				
0.1-1 amp	1 amp		0.25				
1-10 amp	10 amp		0.025				

[1]Ignore decimal point; use only the 3-digit presentation indicated by thumbwheels.
[2]Ignore full-scale interpretation, interpret the scale reading directly from the scale markings on the meter face.

Table 5. Circuit Disturbance Resistance Measurements for Digital Mode (Wheatstone Bridge)

Digital range	Circuit disturbance near null					
	Digit wheat setting 100			Digit wheel setting 9910		
	Current	Voltage	Power	Current	Voltage	Power
1-10	42 ma	42 mv	1.7 mw	33 ma	330 mv	11mw
10-100	5.6 ma	56 mv	310µw	4.3 ma	430 mv	1.8 mw
0.1-lK	560 µa	56 mv	32µw	320µa	320 mv	100µw
l-l0K	270µa	260 mv	71µw	32µa	320 mv	11µw
10-100K	64µa	640 mv	41 µW	11µa	1.1µa	12µw
0.1.1 mego	80µa	8v	640 µw	8 µa	8v	64 µW

Table 6. Circuit Disturbance Resistance Measurements for Search Mode (Safe Ohmmeter)

Search multiplier range	Center scale resistance	Circuit disturbance		
		Open circuit volt age	Short circuit voltage	Maximum power (mid-scale)
Xl	2.5	50 mv	*20* ma	250 *µw*
X10	25	50 mv	*2* ma	*25 µw*
Xl00	250	50 mv	*200* ma	*2.5 µw*
X1K	2.5K	50 mv	20µa	*0.25µw*
X10K	25K	500 mv	20µa	*2.5µw*
X100K	250K	5 v	*20* µa	*25 µw*

7. Description of Multimeter

a. Case. The multimeter has a fiberglass case which is watertight when properly closed. A detachable cover, which protects the operating controls and meter when the instrument is not in use, contains facilities for storage of accessories.

b. Test Leads. The captive red and black 36-inch leads are made from flexible, 16-gage stranded insulated copper wire with a voltage rating of 5,000 volts and a temperature rating of 105°C. The leads are terminated at one end with a slim-line banana plug. The plugs are silver plated brass with a standard four-leaf spring tip. The body of the plug is covered with an insulating plastic to protect the user from electrical shock. The plug also contains a cross hole which accepts a banana plug and allows for patchcord interconnections.

c. *Dimensions and Weight.*

Width . . . . 10 inches
Depth . . . .7-1/4 inches
Height with cover latched . . . .4-3 / 4 inches
Height with cover removed . . . .3-1 / 4 inches
Weight . . . .6-3 /4 lb

8. Description of Accessories

a. Test Probes. The lance-styling of the test probes makes them well suited for making firm contact with test points deep within complex equipment or on printed-circuit boards which have a high component density. The straight-through conductor is made of silver-plated brass. The shaft sections of the probes are covered to within 4/10 inch of their tips with insulating plastic. This covering protects the user from accidental electrical shocks and also protects the circuitry being tested from accidental short circuits. The handle section of the probe is made of insulating phenolic. A banana plug receptacle is recessed in the handle of the probe so that no portion of the plug's conducting surface is exposed to user's touch. The receptacle is designed to accept most commercially available banana plugs. The overall length of the probe is 5-19/32 inches and the maximum diameter is $^3/_8$ inch.

b. Alligator Clip and Insulator Assembly. The alligator clips are nickel-plated brass and have a jaw opening of $^3/_8$ inch. Each clip is covered with a vinyl plastic boot which leaves only the tips of the jaws exposed and thereby affords the same type of user and circuit protection as the test leads and test probes. The clip has a banana plug receptacle.

c. *Batteries.* The required batteries for the multimeter are not supplied with it but can be requisitioned by the procedures set forth in SB 11-6.

SECTION III. THEORY OF OPERATION

9. Current and Voltage Measurement System

The block diagram and simplified schematic of the current and voltage measuring systems appear in figures 2 through 5.

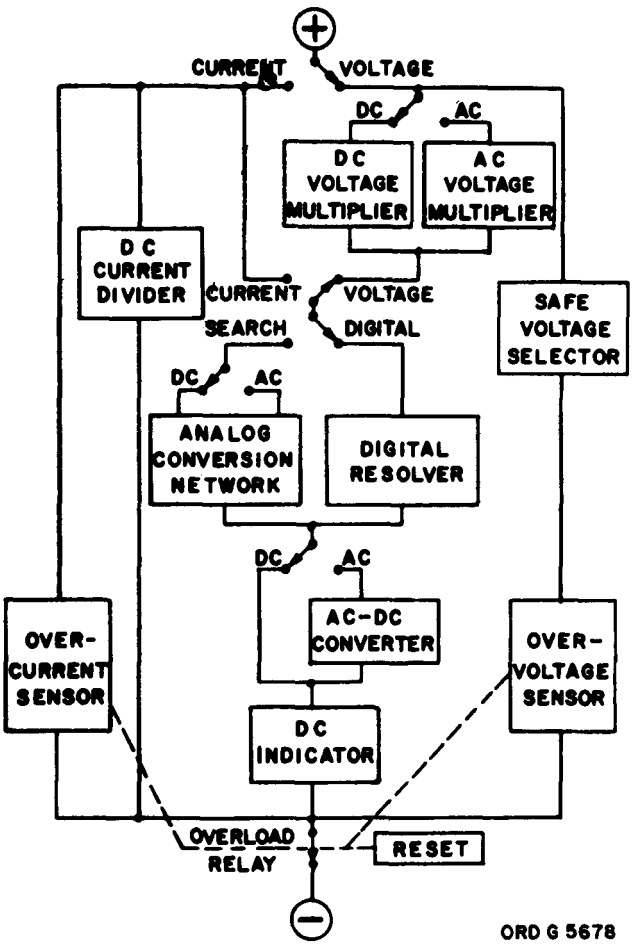

Figure 2. Block diagram of current and voltage measurement system.

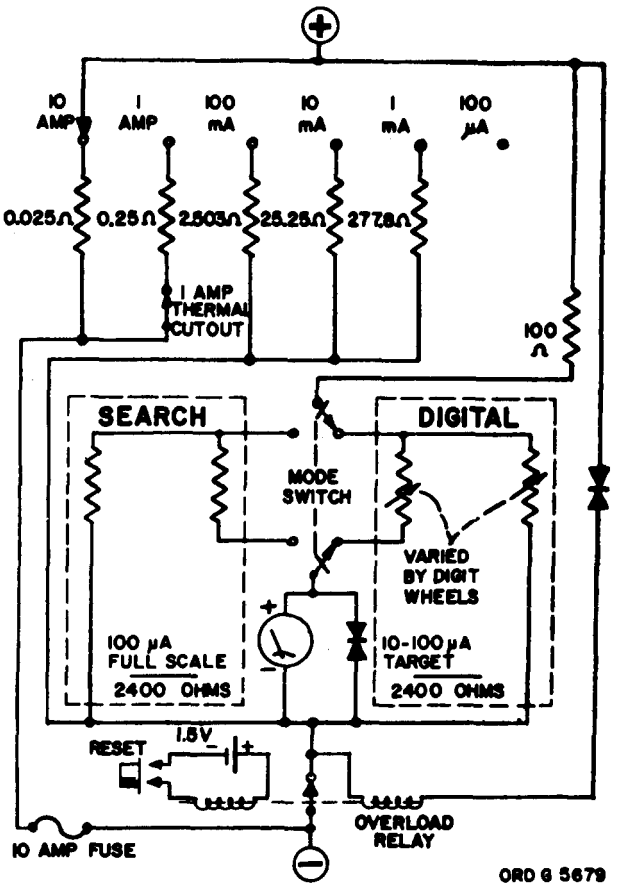

Figure 3. Simplified schematic diagram of dc current measuring circuit.

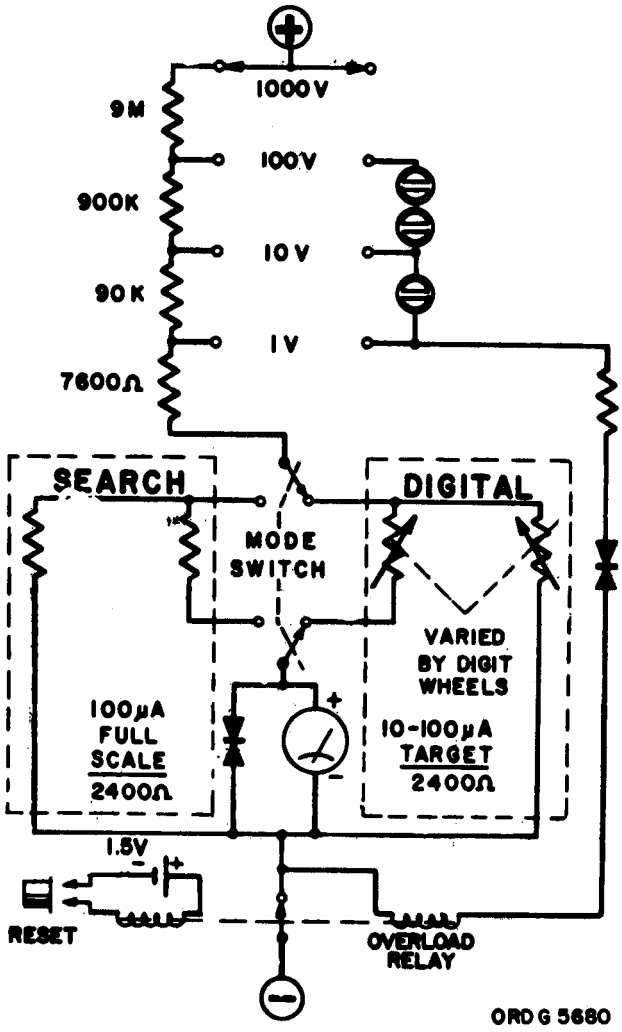

Figure 4. Simplified schematic diagram of dc voltage measuring circuit.

a. Range. The broad range of measurement functions is provided by the use of a dc current divider, a dc voltage multiplier, or an ac voltage multiplier applied to a basic indicator system. The read-out method of the basic indicator system is established as digital or analog (search) by a mode switch.

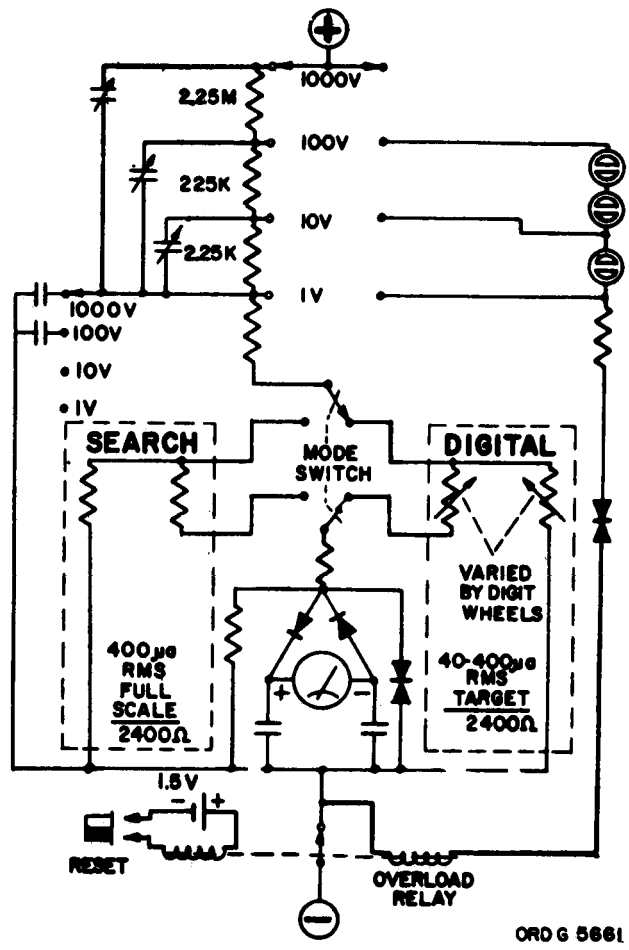

Figure 5. Simplified schematic diagram of ac voltage measuring circuit.

b. Operating Modes. In the digital mode, a three-digit-wheel resolver delivers a fixed quantity of dc or ac current to a detector, and the digit wheels read directly the value of the input to the basic indicator system. A target point on the meter is used directly as the dc detector and as the ac detector in conjunction with the ac/dc converter. In the search mode, a dc or ac analog conversion network delivers a varying current to the meter or ac converter in a conventional manner.

10. Resistance Measurement System

a. The simplified schematic of the resistance measurement systems appear in figures 6 through 8.

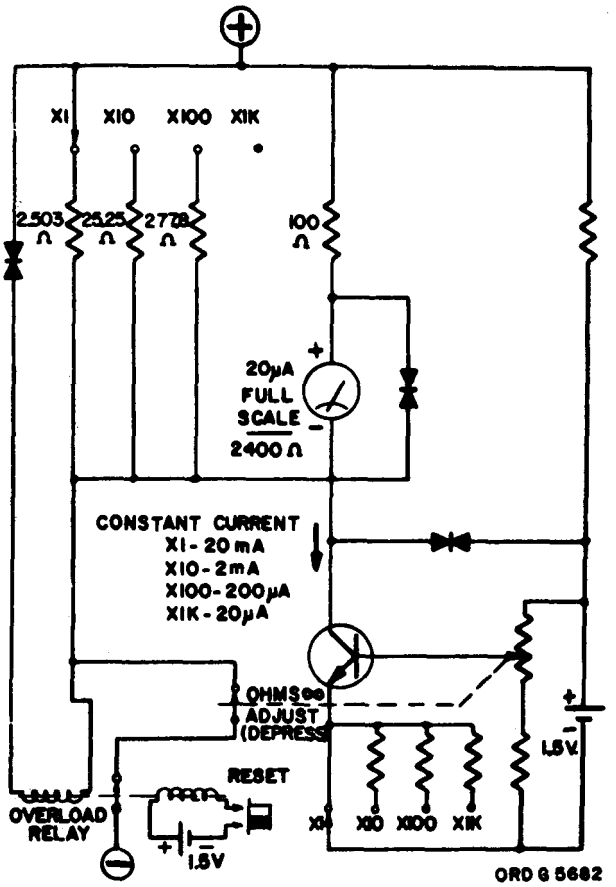

Figure 6. Simplified schematic diagram of search ohmmeter X1, X10, X100, and X1K ranges.

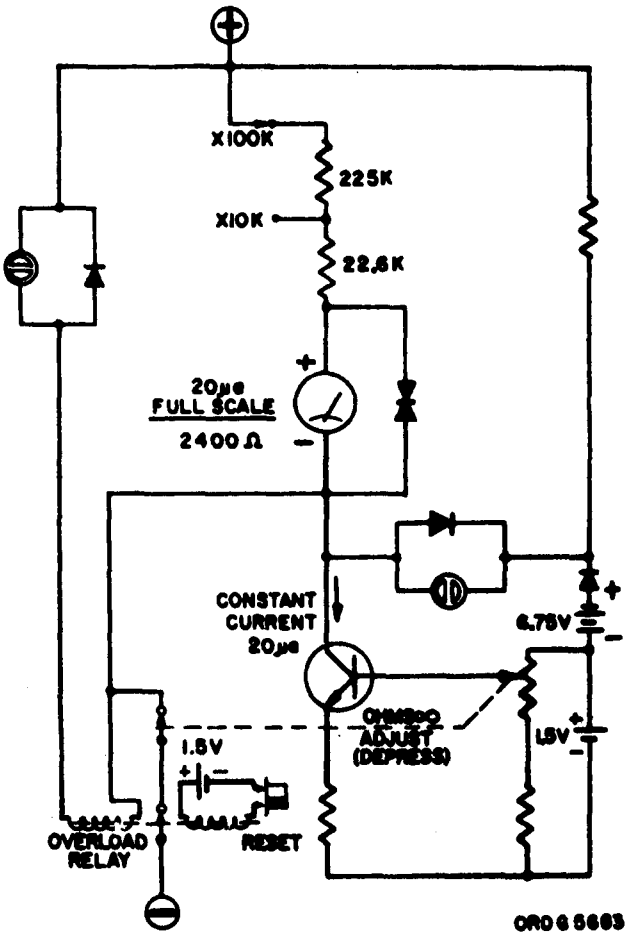

Figure 7. Simplified schematic diagram of search ohmmeter X10K and X100K ranges.

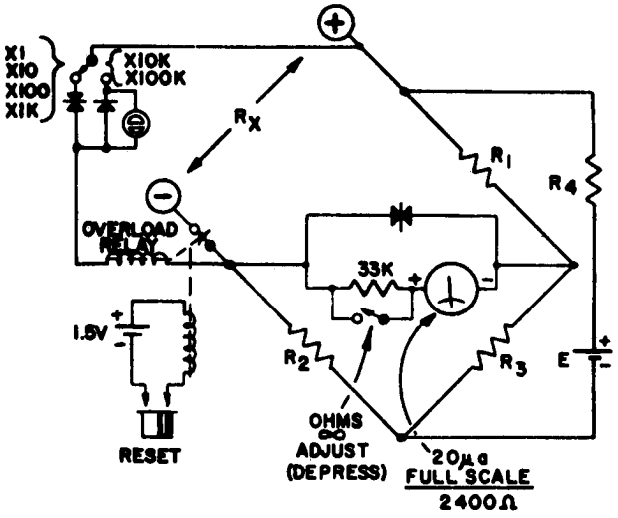

RANGE	R_X Ω	R_1 Ω	R_2 Ω	R_3 Ω	R_4 Ω	E V
X1	1-10	96	25	DIGIT WHEEL VARIABLE 2.4K TO 240	10	1.5
X10	10-100	96	250		10	1.5
X100	100-1K	96	2500		110	1.5
X1K	1K-10K	1K	DIGIT WHEEL VARIABLE 2.4K TO 24K	2.4K	11K	1.5
X10K	10K-100K	10K		2.4K	56K	0.25
X100K	100K-1MEG	100K		2.4K	11K	0.25

ORD G 5684

Figure 8. Simplified schematic diagram of digital ohms (Wheatstone bridge) measuring circuit.

b. In the search mode, measurement is made with a power-limited shunt ohmmeter circuit **specifically designed to provide a minimum disturbance in semiconductor circuitry. The operating power for the shunt circuit is provided by a solid state, constant current generator. In the digital mode, measurement is made with a wheatstone bridge, and the results are digitally readable for digital interpretation as in the current and voltage measurement system described in paragraph 9.**

SECTION IV. OPERATING INSTRUCTIONS

11. Controls and Indicators

The multimeter controls are identified in figure 9 and their purpose is explained in table 6.

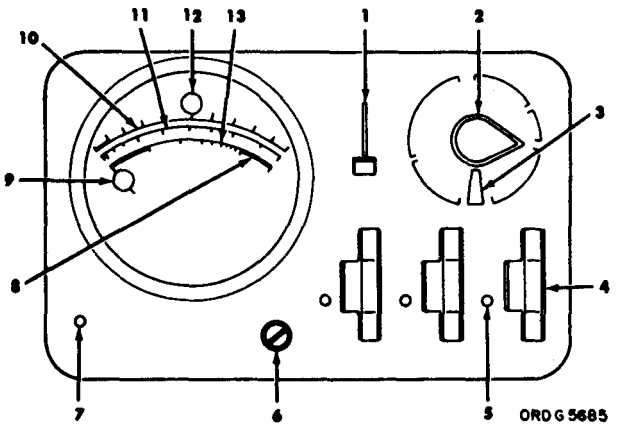

Figure 9. Control and indicator locations.

1 Mode selector switch
2 Function/Range switch
3 Electrical function window
4 Digit wheels—3 places
5 Decimal point indicator—3 places
6 OHMS ∞ADJUST control knob
7 RESET pushbutton
8 Red sector scale markings
9 DIGITAL OHMS target
10 DC scale
11 AC scale
12 DIGITAL VOLTAGE/CURRENT target
13 OHMS scale

Table 7. Control and Indicator Purpose

Find No.[1]	Control or indicator	Purpose	
		Search mode	Digital mode
1	Mode selector switch	Selects mode of operation.	
2	Function/Range switch	Selects electrical function and full-scale value to be indicated by the meter.	Selects electrical function to be indicated by three-significant figure presentation and places the decimal point.
3	Electrical function window	Not used	Presents units of electrical function being indicated.
4	Digit wheels	Not used	Resolve meter pointer to appropriate target hence indicating digital reading.
5	Decimal point indicator	Not used	Shows decimal point (red) location in digital reading.

[1] See footnote at end of table.

Table 7. Control and Indicator Purpose—Continued

Find No.[1]	Control or indicator	Purpose	
		Search mode	Digital mode
6	OHMS ∞ ADJUST control knob	When function/range switch is in any of the OHMS position: 1. Positions meter pointer when rotated. 2. Disconnects test leads (internally) for making ∞ adjustment when depressed.	Increases meter sensitivity when depressed and function/range switch is in any of the OHMS positions. (Typical wheatstone bridge operation.)
7	RESET pushbutton	Reset protection system when depressed. (Internally reconnects test leads to instruments.)	
8	Meter: red sector scale markings	Meter indications in the red indicate that function/range switch is improperly positioned for converting to digital presentation via the mode selector switch.	Not used
9	Meter: DIGITAL OHMS target	Not used	When meter pointer is on target the digital presentation indicates the measurement result for resistance.
10	Meter: DC scale	Markings indicate dc voltage and dc current according to function/range switch full-scale designation.	Not used
11	Meter: AC scale	Markings indicate ac voltage according to function/range switch full-scale designation.	Not used
12	Meter: DIGITAL VOLTAGE/CURRENT target	Not used	When meter pointer is on target the digital presentation indicates the measurement result for voltage or current depending on the electrical function selection.
13	Meter: OHMS scale	Markings indicate resistance according to function/range switch times designation.	Not used

[1] Reference figure 9 for find numbers 1 through 13.

12. Operational Notes

a. General Use.

(1) When the approximate value of the quantity being measured is known, it is not necessary to first use the multimeter's search mode. Use the digital mode only, but remember to resolve the meter pointer proceeding from left to right with the digit wheels.

(2) This multimeter has been calibrated for rotation of the meter pointer in the horizontal plane. Should it become occasionally necessary to use the model 300M in the vertical plane, any additional error incurred will not be greater than one percent of full-scale. If the multimeter is to be permanently operated in the vertical plane, it should be re-calibrated.

b. Resistance Measurements.

(1) The multimeter indicates true ohms. In the Xl OHMS range in the search mode, the instrument will not indicate zero resistance with the test lead terminals shorted together. The value indicated is due to lead and termination resistance and is nominally 0.1 ohm. When low

resistance measurements are made, the lead and termination resistance should be subtracted from the measurement.

(2) The ohmmeter in this multimeter (search mode) is safe and effective for resistance measurements in circuits with semiconductors present.

(3) When making resistance measurements in the search mode, it is not necessary to open circuit the test leads to make adjustments. Simply depress the OHMS ∞ ADJUST control knob as it is rotated and the leads will be open-circuited automatically within the instrument.

(4) When making resistance measurements in the digital mode, depress the OHMS ∞ ADJUST control knob for increased meter sensitivity. The control functions like the galvanometers shunt on a wheatstone bridge.

c. *Protection System.*

Caution: **Normal power lines, because of their low impedance nature, are capable under certain conditions of delivering surge currents in excess of the protection specifications of this instrument. Repeated exposure to this type of overload should be avoided as much as possible.**

(1) This multimeter is protected against all damaging overloads within its overload protection specification. The protection systems generally provided with conventional multifunction meters protect only meter movements. This multimeter is circuit protected since activation of its resettable protection system open-circuits the test leads for overloads, within the specifications, which would be damaging to the meter and precision components. Mild overloads that drive the meter pointer off-scale in either direction are not damaging to the meter or circuit components.

(2) Before depressing the RESET pushbutton, analyze the circuit to find the source of overload. This will eliminate continued reapplication of the overload to the instrument by continued use of the RESET pushbutton.

13. Typical Operation Examples

a. Measurement of an AC Voltage of Unknown Value.

(1) Set mode selector switch to the SEARCH MODE.

(2) Select an ac voltage range that gives an indication greater than 1 on the AC meter scale.

(3) Estimate the analog reading and set the digit wheels to the estimated reading.

(4) Set the mode selector switch to the DIGITAL MODE and resolve the meter pointer to the target line using the digit wheels, proceeding from left to right.

(5) Read the in-line presentation of the measured value from the digit w-heels and note decimal point, location. Read the units in the window above the digit wheels.

b. Measurement of a DC Voltage of Unknown Value.

(1) Set mode selector switch to the SEARCH MODE.

(2) Select a dc voltage range that gives an indication greater than 1 on the meter scale.

(3) Estimate the analog reading and set the digit wheels to the estimated rending.

(4) Set the mode selector switch to the DIGITAL MODE and resolve the meter pointer to the target line using the digit wheels, proceeding from left to right.

(5) Read the in-line presentation of the measured value from the digit wheels and note decimal point location. Read the units in the window above the digit wheels.

c. *Measurement of an Unknown AC Voltage on an Unknown DC Level.*

(1) First measure the magnitude of the dc voltage using the, procedure outlined in paragraph b above.

(2) Choose a suitable coupling capacitor to block the dc voltage measured in step (1) above and re-connect the multimeter through the capacitor to the voltage source.

(3) Measure the value of the ac voltage using the procedure outlined in paragraph a above.

d. Measurement of a Resistance of Unknown Value.

(1) Set the mode selector switch to the SEARCH MODE.

(2) Select the ohms range that gives an indication between 1 and 10 on the bottom meter scale (OHMS).

(3) Depress the OHMS ∞ ADJUST control knob and rotate the knob until the meter pointer is on the ∞ mark.

(4) Release the knob and note the meter analog indication.

Note. **If a more accurate measurement is desired** and it is determined that the special features of the ohmmeter are not required for the measurement, proceed to make a digital **measurement as indicated in (5) and (6) below.**

(5) Set the digit wheels to the noted meter analog indication.

(6) Set the mode selector switch to the DIGITAL MODE and resolve the meter pointer to the DIGITAL OHMS target line using the digit wheels.

SECTION V. APPLICATION

14. DC Power Supply Maintenance Calibration

Maintenance calibration of dc voltage power supplies is performed using the multimeter as follows :

Note. This procedure is equally applicable to sources of ac voltage.

a. Set the mode selector switch to DIGITAL MODE.

b. Set the function/range switch to the appropriate VOLTS DC position.

c. Set the digit wheels to indicate the desired voltage level,

d. Connect the multimeter to the power supply.

e. Adjust the power supply voltage control for the mid-scale target indication on the multimeter.

15. Safe Resistance Measurements in Semiconductor Circuits

a. The model 300M can be used for resistance measurements or circuit tracing without fear of damage to expensive semiconductor elements.

b. This multimeter presents a maximum voltage of 50 mv on the Xl through X1K OHMS ranges with a maximum current of 20 ~a on the X10K and X100K OHMS ranges to the circuit under test.

c. The threshold of conductivity for most silicon devices is greater than the 50 mv applied by the Xl through "Xl K OHMS ranges of the model 300M. This permits resistance measurements in circuits containing silicon devices with no noticeable shunting error contribution.

d. The current limiting on the X10K and X100K ranges allows making resistance measurements in circuits containing silicon devices without fear of over-dissipating any silicon junction present.

16. Silicon Diode Checking

Checking of silicon diodes is accomplished as follows :

a. Set the mode selector switch to SEARCH MODE.

b. Set the function/range switch to the X1K OHMS position.

c. Connect the multimeter to the diode. A good silicon diode should not conduct for either polarity connection, If conduction is noted in both directions, the silicon diode is probably shorted.

d. Set the function/range switch to the X10K OHMS position.

e. Connect the multimeter to the diode. A good silicon diode should conduct in the forward direction only. If no conduction is evident in either direction, the silicon diode is probably open.

17. Low Level DC Voltage and Current Measurements

The dc voltage and current measurement capability of the multimeter may be extended at reduced accuracy as follows:

a. Set the mode selector switch to DIGITAL MODE.

b. Set the digit wheels to 100.

c. Select the desired function/range switch position. See table 8 for function/range switch settings.

Table 8. Extended DC Voltage and Current Measurement Capability

Function/Range switch position	Meter mid-scale indication	Meter full-scale indicator	Division scale
0.1 mA DC	10 µa dc	20 µa dc	0.4 µa da
0.1 mA DC	25 mv dc	50 mv dc	1 mv dc
1 VOLT DC	100 mv dc	200 mv dc	4 mv dc

18. Low Loading DC Voltage Measurements

The sensitivity of the dc voltage measurement capability of the multimeter may be extended as follows :

Note. In this operation the sensitivity of the multimeter, using conventional terminology, is 50,000 ohms per volt. The accuracy is ± 2 percent *of* full-scale.

a. Set the mode selector switch to DIGITAL MODE.

b. Set the digital wheels to 100.

c. Select the desired function/range switch position. See table 9 for function/range switch settings.

Table 9. DC Voltage Measurement Sensitivity Capability

Function/Range switch position	Meter-full-scale indicator	Division value	Meter resistance
1 VOLTS DC	0.2 vdc	0.004 vdc	10k
10 VOLTS DC	2.0 vdc	0.04 vdc	100k
100 VOLTS DC	20 vdc	0.40 vdc	1 meg
1000 VOLTS DC	200 vdc	4.0 vdc	10 meg

19. Low Insertion Loss DC Current Measurements

The sensitivity of the dc current measurement capability of the multimeter may be extended as follows :

Note. In this operation the insertion loss of the multi meter is limited to 50 mv. The accuracy is ± 2 percent of full-scale.

a. Set the mode selector switch to DIGITAL MODE.

b. Set the digit wheels to 100.

c. Select the desired function/range switch position. See table 10 for function/range switch settings.

Table 10. DC Current Measurement Sensitivity Capability

Function/Range switch position	Meter full-scale indication	Division value	Meter resistance
0.1 mA DC	20µa dc	0.4µa dc	2500
1 mA DC	0.2ma dc	4µa dc	250
10 mA DC	2ma dc	40µa dc	25
100 mA DC	20ma dc	0.4ma dc	2.3
1 AMPS DC	200ma dc	4ma dc	0.25
10 AMPS DC	2 amps dc	40ma dc	0.025

20. Low Level AC Voltage Measurements

The ac voltage measurement capability of the multimeter may be extended as follows:

a. Set the mode selector switch to DIGITAL MODE.

b. Set the digit wheels to 100.

c. Set the function/range switch to the 1 VOLT AC position.

d. Use the DC (linear) scale, and note the meter pointer indication.

e. Read from the curve of figure 10 the measured ac voltage value which corresponds to the obtained dc scale indication value.

f. The accuracy is in accordance with the search mode specification.

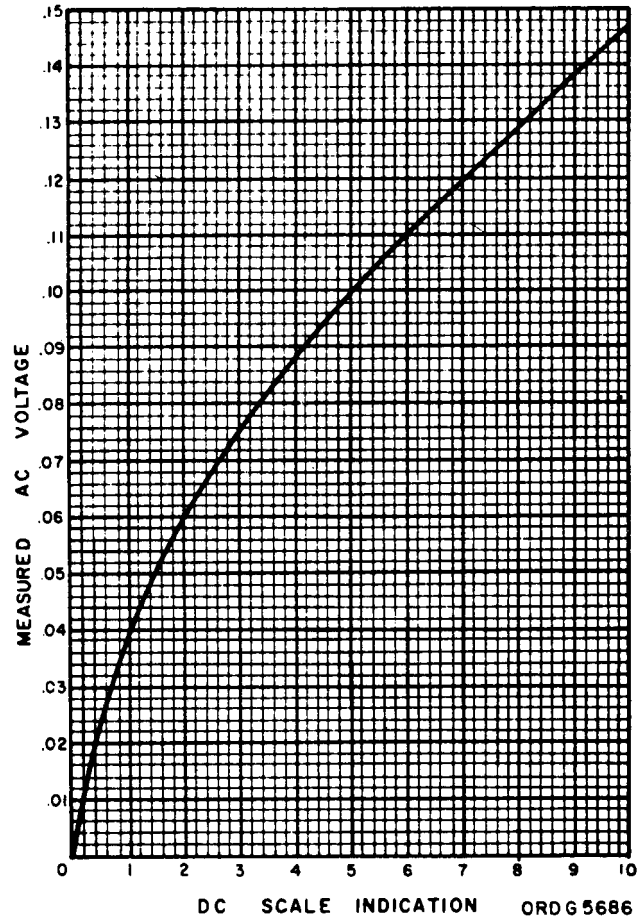

Figure 10. Measured ac voltage vs dc scale indication in the digital mode, with a digit wheel setting of 1 0 0, and in the 1 volt ac range

21. Low Loading AC Voltage Measurements

The sensitivity of the ac voltage measurement capability of the multimeter may be extended as follows :

Note. **In this operation the sensitivity of the multimeter, using conventional terminology, is in excess of 12,500 ohms per volt. The accuracy is in accordance with the search mode specification.**

a. Set the mode selector switch to the DIGITAL **MODE.**

b. Set the digit wheels to 1 0 0.

c. Select the desired function/range switch position. See table 11 for function/range switch settings.

d. Use the DC (linear) scale, and note the meter pointer indication.

e. Read from the appropriate curve in figure 10 or 11 the measured ac voltage value which corresponds to the obtained dc indication value.

Table 11. AC Voltage Measurement Sensitivity Capability

Functional/Range switch position	*Meter full-scale*	*Appropriate curve*	*Meter resistance*
1 VOLTS AC	**0.146 vac**	**Figure 10**	**2.5k**
10 VOLTS AC	**1.68 vac**	**Figure 11**	**25k**
100 VOLTS AC	**16.8 vac**	**Figure 11**	**250k**
1000 VOLTS AC	**168 vac**	**Figure 11**	**2.5 meg**

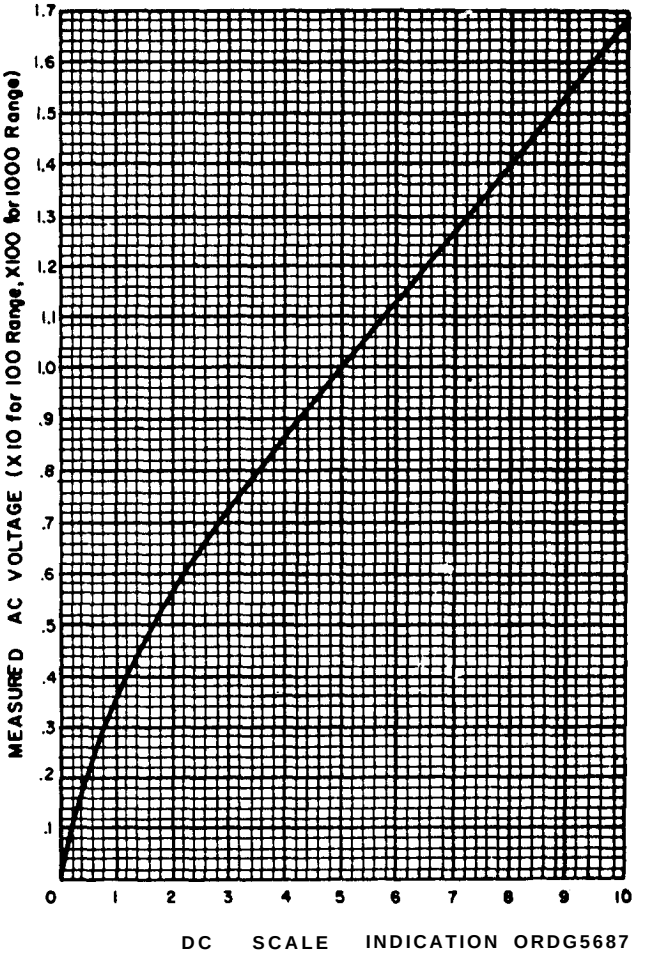

Figure 11. Measured ac voltage vs dc scale indication* in *the digital mode, with a digit wheel setting of 100, and ac voltage range of 10, 100, and 1000.

SECTION VI. MAINTENANCE

22. Parts and Replacement

All the resistors and component parts of the multimeter are protected by the overload protection system described in paragraph *6g*. There are conditions under which parts may become defective and need replacement. Consult table 12 for troubleshooting procedures and figures 12 and 13 to find and identify any suspected defective parts. The multimeter cover is removed by rotating the slotted screwheads, on the outside of the hinges to the right and left of the carrying case handles, a quarter turn. This will permit separation of the hinge halves and removal of the cover.

Table 12. Troubleshooting Chart

Symptom	*Probable cause*	*Remedy*
General		
Unit totally inoperative	1. 10-amp fuse, F1	Replace
	2. Protection relay is disconnected. (If relay will not reset, check for weak D cell.)	Reset
AC voltage ranges		
All **AC** voltage ranges inoperative.	Detector assembly, A2	Replace
X 10 **AC** voltage range inoperative. (Unit functions normally on X 1 AC voltage range but not on X10, X100, or X1K ranges.)	X 10 Multiplier resistor, R54	Replace
X100 AC voltage range inoperative. (Unit functions normally on X 1 and X10 **AC** voltage ranges but not on X100 or X1K ranges.)	X100 Multiplier resistor, R55	Replace
AC voltage ranges-continued		
X1K A-C *votlage* range inoperative. (Unit functions normally on X 1, X10, and X100 AC voltage ranges.)	X1K Multiplier resistor, R25	Replace
DC voltage ranges		
All DC voltage ranges inoperative.	X 1 Multiplier resistor, R34	Replace
X 10 DC voltage range inoperative. (Unit functions normally on X 1 DC voltage range but not on X10, X100, or X1K ranges.)	X 10 Multiplier resistor, R28	Replace
X100 DC voltage range inoperative. (Unit functions normally on X 1 and X 10 DC voltage ranges but not on X100 or X1K ranges.)	X100 Multiplier resistor, R27	Replace
X1K DC voltage range inoperative. (Unit functions normally on X 1, X10, and X100 ranges).	X1K Multiplier resistor, R26.	Replace
Search ohmmeter		
Search ohmmeter inoperative. (Digital ohmmeter functions normally).	Transistor assembly, A1	Replace
Search ohmmeter cannot be set at infinity (∞) on X1, X10, X100, and X1K ranges.	D cell	Replace
Search ohmmeter cannot be set at infinity (∞) on X10K and X100K ranges.	6.75 Mercury battery.	Replace

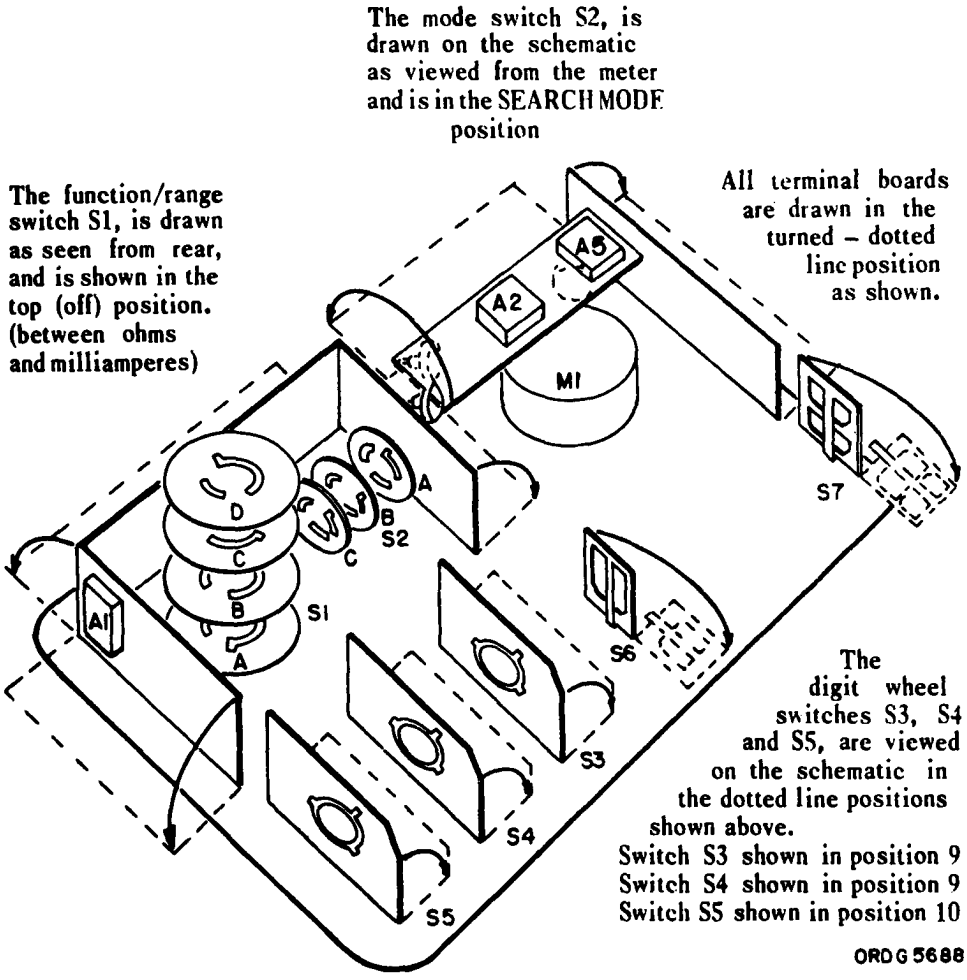

Figure 12. Physical location of switches, detector assembly, transistor assembly, and meter assembly.

23. Replacement of Batteries and 10-Ampere Fuse

a.. Replacement of Batteries.

(1) To remove 1.5 volt D cell, pull straight out .

(2) To replace 1.5 volt D cell, place positive terminal (centerpost) on spring contact. Push contact in and slip negative side of D cell in.

Replacement of 10-Ampere Fuse.

(1) To remove 10-ampere fuse, first remove D cell, then pull fuse straight out.

(2) To replace fuse, push fuse straight in.

(3) To remove 6.75 volt mercury buttery, remove D cell and lift up from center of battery.

(4) To replace 6.75 volt mercury battery, put the negative end down into position and slide the battery into place.

24. Replacement of Test Leads

a. Take out the batteries and the 10-ampere fuse, then unsolder then black and red leads from terminals.

b. Grip the strain relief clamp at front panel surface with Heyco pliers or needle-nose pliers, compress the two parts, and pull the clamp out.

c. To replace the test leads, place both lends through the Heyco clamp leaving about 1 1/4 inches. Close the clam and push through the hole from the front. Solder the red lend to the loft terminal and the black lead to the right terminal. Replace the batteries and the 10-ampere fuse as outlined in paragraph 23.

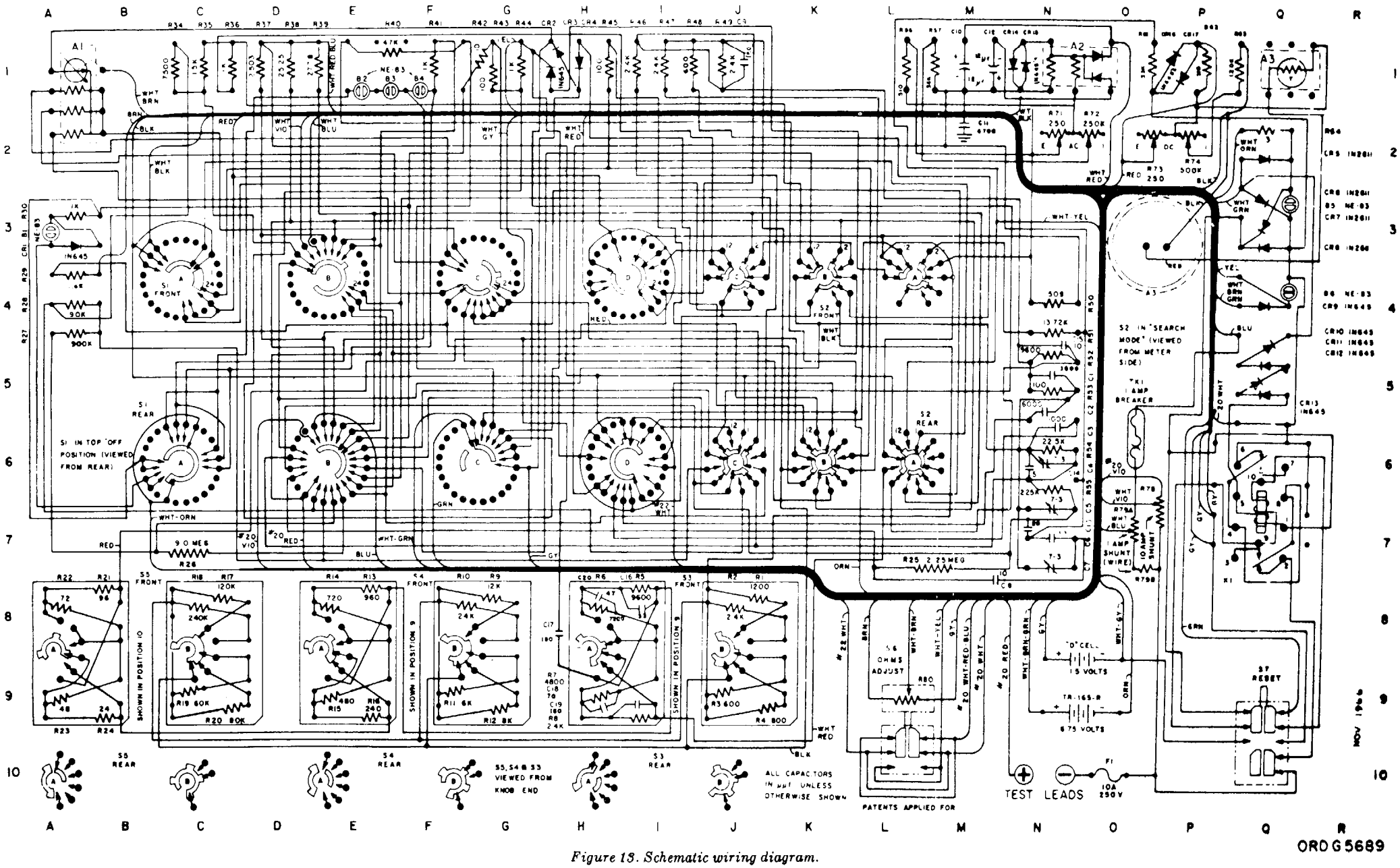

Figure 13. Schematic wiring diagram.

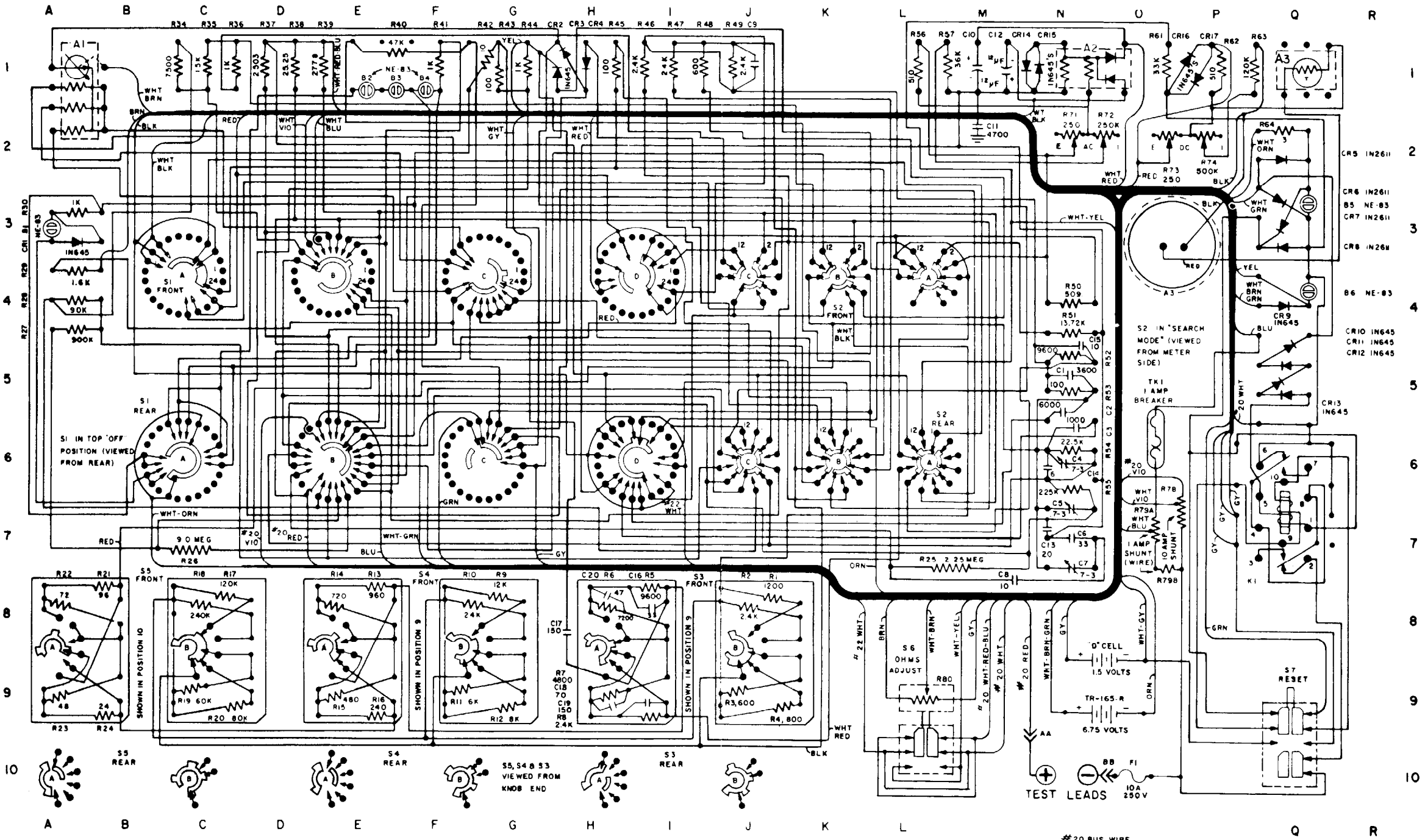

NOTE:
UNLESS OTHERWISE INDICATED, ALL CAPACITORS ARE IN UUF.

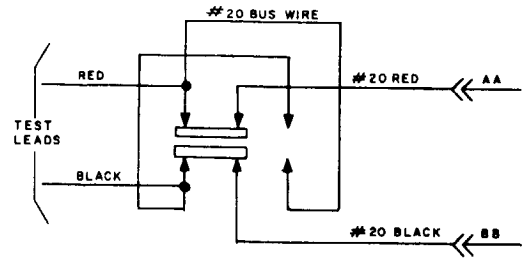

SCHEMATIC
SHOWN IN NORM. POSITION

Figure 14. Schematic shown in normal position.

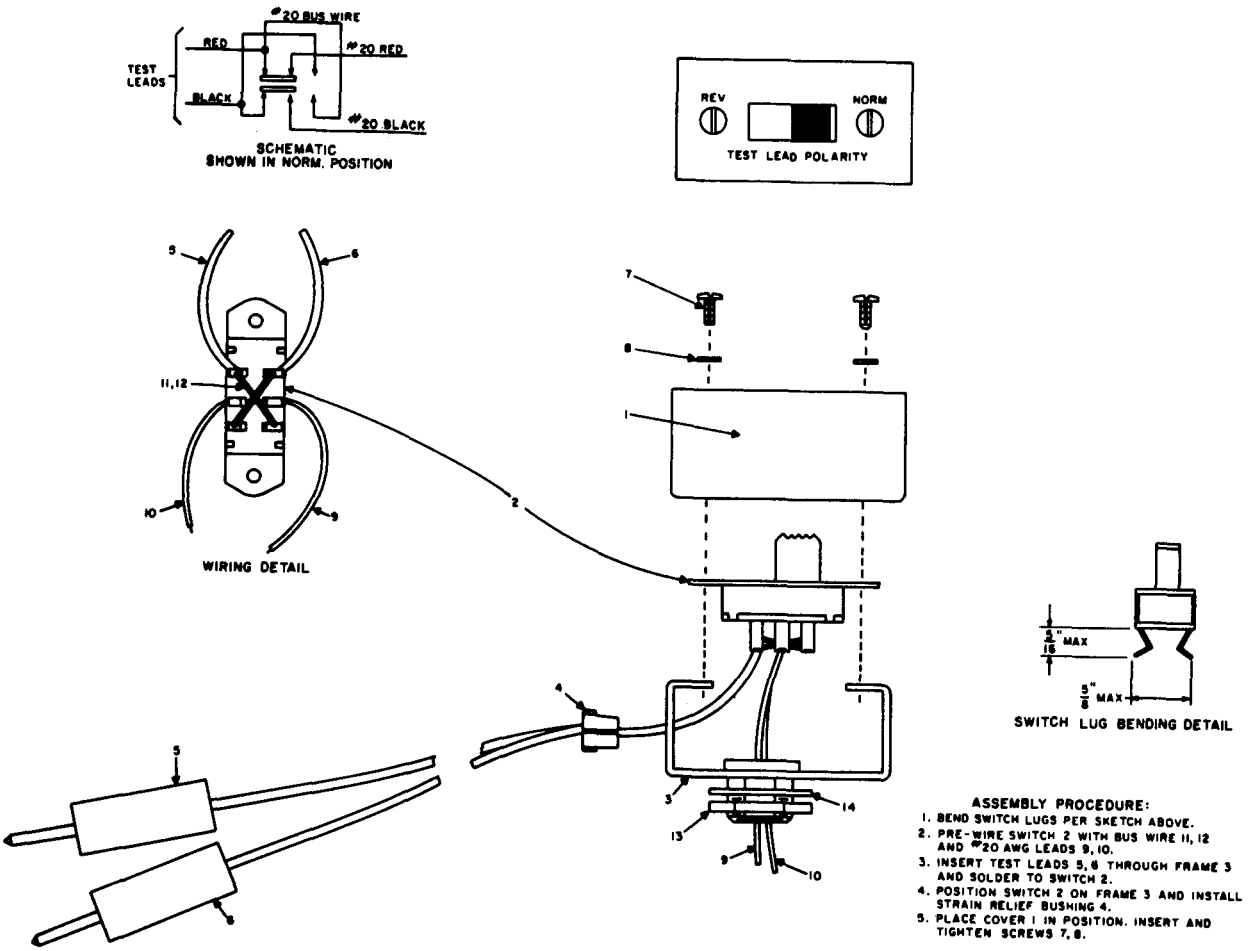

1 Cover, assembly
2 Switch. slide
3 Frame assembly
4 Bushing, strain relief
5 Test lead assembly, red
6 Test lead assembly, black
7 Screw, 4-40 x 3/ 16
8 Washer, lock, split type no. 4
9 Wire, no, 20 AWG, nylon jacket, black
10 Wire. no. 20 AWG, nylon jacket, red
11 Wire. copper bus. no. 20 AWG
12 Sleeving, teflon, no. 20, clear
13 Nut, hexagonal
14 Washer, internal tooth

Figure 15. Adapter assembly. polarity reversal.

APPENDIX A

REFERENCES

The following are applicable publications which should be available to the operator and maintenance personnel of Multimeters AN/ USM-303 and AN/ USM-303A.

DA Pam 310-4	**Index of Technical Manuals, Technical Bulletins, Supply Manuals (types 7, 8, and 9), Supply Bulletins, and Lubrication Orders.**
DA Pam 310-7	**U. S. Army Equipment Index of Modification Work Orders.**
SB 11-6	**Dry Battery Supply Data.**
TM 38-750	**The Army Maintenance Management System (TAMMS)**

APPENDIX B

MAINTENANCE ALLOCATION

Section L INTRODUCTION

B-1. General

This appendix provides a summary of the maintenance operations covered in the equipment literature. It authorizes categories of maintenance for specific maintenance functions on repairable items and components and the tools and equipment required to perform each function. This appendix may be used as an aid in planning maintenance operations.

B-2. Maintenance Functions.

Maintenance functions will be limited to and defined as follows:

a. Inspect. To determine serviceability of an item by comparing its physical, mechanical, and electrical characteristics with established standards.

b. Test. To verify serviceability and to detect incipient electrical or mechanical failure by use of special equipment such as gages, meters, etc. This is accomplished with external test equipment and does not include operation of the equipment and operator type tests using internal meters or indicating devices.

c. *Service*. To clean, to preserve, to charge, and to add fuel, lubricants, cooling agents, and air. If it is desired that elements, such as painting and lubricating, be defined separately, they may be so listed.

d. Adjust. To rectify to the extent necessary to bring into proper operating range.

e. Align. To adjust two or more components or assemblies of an electrical or mechanical system so that their functions are properly synchronized. This does not include setting the frequency control knob of radio receivers or transmitters to the desired frequency.

f. Calibrate. To determine the corrections to be made in the readings of instruments or teat equipment used in precise measurement. Consists of the comparison of two instruments, one of which is a certified standard of known accuracy, to detect and adjust any discrepancy in the accuracy of the instrument being compared with the certified standard.

g. Install. To set up for use in an operational environment such as an encampment, site, *or* vehicle.

h. Replace. To replace unserviceable items with serviceable like item.

i. Repair. To restore an item to serviceable condition through correction of a specific failure of unserviceable condition. This function includes, but is not limited to welding, grinding, riveting, straightening, and replacement of parts other than the trial and error replacement of running spare type items such as fuses, lamps, or electron tubes.

j. Overhaul. Normally, the highest degree of maintenance performed by the Army in order to minimize time work in process is consistent with quality and economy of operation. It consists of that maintenance necessary to restore an item to completely serviceable condition as prescribed by maintenance standards in technical publications for each item of equipment. Overhaul normally does not return an item to like new, zero mileage, or zero hour condition.

k. Rebuild. The highest degree of materiel maintenance. It consists of restoring equipment as nearly as possible to new condition in accordance with original manufacturing standards. Rebuild is performed only when required by operational considerations or other paramount factors and then only at the depot maintenance category. Rebuild reduces to zero the hours or miles the equipment, or component thereof, has been in use.

L *Symbols.* The uppercase letter placed in the appropriate column indicates the lowest level at which that particular maintenance function is to be performed.

B-3. Explanation of Format

a. Column 1, Group Number. Column 1 lists group numbers, the purpose of which is to identify components, assemblies, subassemblies and modules with the next higher assembly.

b. Column 2, Functional Group. Column 2 list the noun names of components, assemblies, subassemblies and modules on which maintenance is authorized.

c. Column 3, Maintenance Functions. Column 3 lists the maintenance category at which performance of the specific maintenance function is authorized. Authorisation to perform a function at any category also includes authorization to perform that function at higher categories. The codes used represent the various maintenance categories as follows:

Code	*Maintenance category*
C	Operator / Crew
O	Organizational Maintenance
F	Direct Support Maintenance
H	General Support Maintenance
D	Depot Maintenance

d. Column 4. Tools and Test Equipment. Column 4 specifies, by code, those tools and test equipment required *to* perform the designated function. The numbers appearing in this column refer to specific tools and test equipment which are identified in table 1.

e. Column 5, Remarks. Self-explanatory.

B-4. Explanation of Format *of* Table I, Tool and Test Equipment Requirements

The column in table 1, Tool and Teat Equipment Requirements are as follows:

a. Tools and Equipment. The numbers in this column coincide with the numbers used in the tools and equipment column of the applicable tool for the maintenance function.

b. Maintenance Category. The codes in this column indicate the maintenance category normally allocated the facility.

c. Nomenclature. This column lists tools, test, and maintenance equipment required to perform the maintenance functions.

d. Federal Stock Number. This column lists the Federal stock number of the specific tool or test equipment.

e. Tool Number. Not used.

This page intentionally left blank.

SECTION II. MAINTENANCE ALLOCATION CHART

GROUP NUMBER	COMPONENT ASSEMBLY NOMENCLATURE	MAINTENANCE FUNCTIONS											TOOLS AND EQUIPMENT	REMARKS
		INSPECT	TEST	SERVICE	ADJUST	ALIGN	CALIBRATE	INSTALL	REPLACE	REPAIR	OVERHAUL	REBUILD		
	MULTIMETER AN/USM-303; AN/USM-303A	O		O										
			H			H							1,2,3,4 5	
										H				
											D		1,2,3,4,5	
	MULTIMETER ME-258/U; ME-258A/U	O		O										
			H			H							1,2,3,4 5	
										H				
											D		1,2,3,4,5	
	PROD, TEST MICOM PART/DWG No. 10242934		H			H							1	

TABLE I.

TOOL AND TEST EQUIPMENT REQUIREMENTS

TOOLS AND EQUIPMENT	MAINTENANCE CATEGORY	NOMENCLATURE	FEDERAL STOCK NUMBER	TOOL NUMBER
		AN/USM-303; AN/USM-303A (cont)		
1	H,D	MULTIMETER AN/USM-303A	6625-168-0585	
2	H,D	TEST SET, ELECTRICAL, METER TS-682/GSM-1	6625-669-0747	
3	H,D	TEST SET, SEMICONDUCTOR DEVICE TS-1836B/U	6625-893-2628	
4	H,D	RESISTANCE, DECADE ZM-16A/U	6625-669-0266	
5	H,D	TOOL KIT, ELECTRONIC EQUIPMENT TK-105/G	5180-610-8177	

APPENDIX C

ORGANIZATIONAL, DIRECT SUPPORT, GENERAL SUPPORT AND DEPOT MAINTENANCE REPAIR PARTS AND SPECIAL TOOLS LIST

Section 1. INTRODUCTION

C-1. Scope

This appendix lists repair parts and special tools required for the performance of organizational, general support, and depot maintenance of the AN/ USM-303 and AN/ USM-303A.

NOTE

No parts authorized for stockage at direct support maintenance.

C-2. General

This Repair Parts and Special Tools List is divided into the following sections:

a. Prescribed Load Allowance *(PLA) — Section II.* A composite listing of repair parts, special tools, test and support equipment having quantitative allowance for initial stockage at the organizational level.

b. Repair Parts for Organizational Maintenance-Section III. A list of repair parts authorized for the performance of maintenance at the organizational level.

c. Special Tools, Test and Support Equipment For Organizational Maintenance—Section IV. Not applicable.

d. Repair Parts for Direct Support, General Support. and Depot Maintenance—Section V. A list of repair parts authorized for the performance of maintenance at the general support and depot level.

e. Special Tools Test and Support Equipment for Direct Support, General Support. and Depot Maintenance—Section VI. Not applicable.

f. *Index—Federal Stock Number Cross Reference to Figure and Item Number or Reference Designation-Section VII.* A list of Federal stock numbers in ascending numerical sequence, followed by a list of reference numbers in ascending alpha-numeric sequence, cross-referenced to the illustration figure number and item number or reference designation.

g. Index—Reference Designation Cross Reference to Page Number Section VIII. A list of reference designations cross-referenced to page numbers.

C-3. Explanation of Columns

The following provides an explanation of columns in the tabular lists:

a. Source, Maintenance, and Recoverability Codes (SMR).

(1) Source code indicates the selection status and source for the list item. Source codes are:

Code	*Explanation*
P	Repair parts which are stocked in or supplied from the GSA / DSA, or Army Supply system and authorized for use at indicated maintenance categories.
P2	Repair parts which are procured and stocked for insurance purposes because the combat or military essentiality of the end item dictates that a minimum quantity be available in the supply system .
P9	Assigned to items which are NSA design controlled: unique repair parts, special tools, teat, measuring and diagnostic equipment, which l re stocked and supplied by the Army COMSEC logistic system, and which are not subject to the provisions of AR 380-41.
P10	Assigned to items which are NSA design controlled: special tools. test, measuring l nd diagnostic equipment for COMSEC support. which are accountable under the provisions of AR 380-41. and which are stocked and supplied by the Army COMSEC logistic system,
M	Repair parts which are not procured or stocked, but art to be manufactured in indicated maintenance levels.

Code	Explanation
A	Assemblies which are not procured, or stocked as such, but are made up of two or more units. Such component units carry individual stock numbers and descriptions, are procured and stocked separately and can be assembled to form the required assembly at indicated maintenance categories.
X	Parts and assemblies which are not procured or stocked and the mortality of which normally is below that of the applicable end item or component. The failure of such part or assembly should result in retirement of the end item from the supply system.
X1	Repair parts which are not procured or stocked. The requirement for such items will be filled by use of the next higher assembly or component.
X2	Repair parts which are not stocked. The indicated maintenance category requiring such repair parts will attempt to obtain same through cannibalization. Where such repair parts are not obtainable through cannibalization, requirement will will be requisitioned, with accompanying justification, through normal supply channels.
G	Maior assemblies that are procured with PEMA funds for initial issue only as exchange assemblies at DSU and GSU level. These assemblies will not be stocked above DS and GS level or returned to depot supply level.

(2) Maintenance code indicates the lowest category of maintenance authorized to install the listed items. The maintenance level codes are:

Code	Explanation
C	Operator / Crew
O	Organizational Maintenance
F	Direct support maintenance
H	General support maintenance
D	Depot maintenance

(3) Recoverability code indicates whether unserviceable items should be returned for recovery or salvage. Items not coded are expendable. Recoverability codes are:

Code	Explanation
R	Repair parts and assemblies that are economically repairable at DSU and GSU activities and are nortmally furnished by supply on an exchange basis.
S	Repair parts and assemblies which are economically repairable at DSU and GSU activities and which normally are furnished by supply on an exchange basis. When items are determined by GSU to be uneconomically repairable, the y will be evacuated to a depot for evaluation and analysis before final disposition.
T	High dollar value recoverable repair parts which are subject to special handling and are issued on an exchange basis. Such repair parts normally are repaired or overhauled at depot maintenance activities.
U	Repair parts specifically selected for salvage by reclamation units because of precious metal content, critical materials, or high dollar value reuseble casings or castings.

b. Federal Stock Number. Indicates the Federal stock number assigned to the item and will be used for requisitioning purposes.

c. *Description.* Indicates the Federal item name and any additional description of the item required., The index number has been included as part of the description to aid in the location of "SAME AS" items. A part number or other reference number is followed by the applicable five-digit Federal supply code for manufactures in parentheses.

d. Unit of Measure (U/M). A two character alphabetic abbreviation indicating the amount or quantity of the item upon which the allowances are based, e.g., ft, ea, pr, etc.

e. *Quantity Incorporated in Unit. Indicates* the quantity of the item used in AN / USM-303 and AN / USM-303A.

f. 15-Day Organizational Maintenance Allowance.

(1) The allowance columns are divided into four subcolumns. Indicated in each subcolumn opposite the first appearance of each item is the total quantity of items authorized for the number of equipments supported. Subsequent appearances of the same item will have the letters "REF" in the allowance columns. Items authorized for use as required, but not for initial stockage, are identified with an asterisk in the allowance column.

(2) The quantitative allowance for organizational level of maintenance represents one initial prescribed load for a 15-day period for the number of equipments supported. Units and organizations authorized additional prescribed loads will multiply the number of prescribed loads authorized by the quantity of repair parts reflected in the appropriate density column to obtain the total quantity of repair parts authorized.

(3) Organizational units providing maintenance for more than 100 of these equipments shall determine the total quantity of parts required by converting the equipment quantity to a decimal point before the next to last digit of the number to indicate hundredths, and multiplying the decimal factor by the parts quantity authorized in the 51-100 allowance column. Example, authorized allowance for 51-100 equipments is 12; for 140 equipments multiply 12 by 1.40 or 16.80 rounded off to 17 parts required.

(4) Subsequent changes to allowances will be limited as follows: No change in the range of items is authorized. If additional items are considered necessary, recommendation should be forwarded to Commanding General, U.S. Army Electronics Command, ATTN: AMSEL-ME-NMP-EM, Fort Monmouth, NJ 07703 for exception or revision to the allowance list. Revisions to the range of items authorized will be made by the USAECOM National Maintenance Point based upon engineering experience, demand data, or TAERS information.

g. 30-Day DS/GS Maintenance Allowances.

NOTE

Allowances in GS Column are GS maintenance only.

(1) The allowance columns are divided into three subcolumns. Indicated in each subcolumn, opposite the first appearance of each item, is the total quantity of items authorized for the number of equipments supported. Subsequent appearances of the same item will have the letters "REF" in the applicable allowance columns. Items authorized for use as required but not for initial stockage are identified with an asterisk in the allowance column.

(2) The quantitative allowances for GS levels of maintenance will represent initial stockage for a 30-day period for the number of equipments supported.

(3) Determination of the total quantity of parts required for maintenance of more than 100 of these equipments can be accomplished by converting the equipment quantity to a decimal factor by placing a decimal point before the next to last digit of the number to indicate hundredths, and multiplying the decimal factor by the parts quantity authorized in the 51-100 equipments is 40; for 150 equipments multiply 40 by 1.50 or 60 parts required.

h. One-Year Allowances Per 100 Equipments/Contingency Planning Purposes. Indicates opposite the first appearance of each item the total quantity required for distribution and contingency planning purposes. The range of items indicates total quantities of all authorized items required to provide for adequate support of 100 equipments for one year.

i. Depot Maintenance Allowance Per 100 Equipments. Indicates opposite the first appearance of each item the total quantity authorized for depot maintenance of 100 equipments. Subsequent appearances of the same item will have the letters "REF" in the allowance column. Items authorized for use as required but not for initial stockage are identified with an asterisk in the allowance column.

j. Illustrations.

(1) *Figure number.* Indicates the figure number of the illustration in which the item is shown.

(2) *Item number or reference designation.* Indicates the item number or reference designation used to identify the item in the illustration.

C-4. Special Information

a. Identification of the usable on codes of this publication are:

Code	*Explanation*
1	AN/ USM-303
2	AN / USM-303A

b. Repair parts mortality is computed from failure rates derived from experience factors with the individual parts in a variety of equipments. Variations in the specific application and periods of use of electronics equipment, the fragility of electronic piece parts, plus intangible material and quality factors intrinsic to the manufacture of electronic parts, do not permit mortality to be based on hours of end item use. However, long periods of continuous use under adverse conditions are likely to increase repair parts mortality.

C-5 Location Of Repair Parts

a. This appendix contains two cross reference indexes (sec. VII and VIII) to be used to locate a repair part when either the Federal stock number, reference number (manufacturer's part number), or reference designation is known. The first column in each index is prepared in numerical and/or alphanumeric sequence is

ascending order. Where a Federal stock number is not listed, refer to the reference number (manufacturer's part numbers) immediately following the Federal stock number.

b. When the Federal stock number is known, follow the procedures given in (1) and (2) below.

(1) Refer to the index of Federal stock numbers (sec. VII) and locate the Federal stock number. The FSN is cross-reference to the applicable figure and reference designation.

(2) When the reference designation is determined, refer to the reference designation index (sec. VIII). The reference designations are listed in alphanumeric ascending order (or numerical ascending order) and are cross referenced to the page number on which they appear in the repair parts list (sec. III and V). Refer to the number noted in the index and locate the reference designation in the repair parts list (col. 7b, Repair Parts for Organizational Maintenance; or COl. 10b, Repair Parts for Direct Support, General Support and Depot Maintenance). If the description column indicates that it is a "SAME AS" item, locate the first appearance of the item by the index number (sequence number) referenced.

c. When the reference designation is known, follow the procedures given in *b(2)* above.

d. When neither the FSN nor reference designation is known, identify the part in the illustration and follow directions given in c above or scrutinize column 3 of the repair parts lists (sec. III and V).

C-6. Federal Supply Code For Manufacturer's

Code	*Manufacturer's name*
01121	Allenbradley Co
01295	Texas Instruments Inc Semiconductor-Components Div
02690	Buckeye Rubber and Packing Co
03508	General Electric Co Semiconductor Product Dept.
12126	Kidco Inc
13913	Western Reserve Electronics Inc
15915	Tepro of Flordia Inc
17733	Diebold Inc
18876	Easton Machine Corp.
19200	Frankford Arsenal
28520	Heyman Mfg Co.
72982	Eric Technological Products Inc.
75915	Littfefuse Inc.
76545	Mueller Electric Co.
76854	Oak Mfg Co Div of Oak Electro/netices Corp
78277	Sigma Instruments Inc
80795	International Telephone and Telegraph Corp.
81349	Military Specifications
83330	Smith Herman H. Inc
88204	Sylvania Electric Products Inc Lighting Products Div.
94144	Raytheon Co Component Div.

This page intentionally left blank.

SECTION II. PRESCRIBED LOAD ALLOWANCE

(1) FEDERAL STOCK NUMBER	(2) DESCRIPTION	USABLE ON CODE	(3) 15-DAY ORG. MAINT. ALLOWANCE (a) 1-5	(b) 6-20	(c) 21-50	(d) 51-100
5920-280-5002	FUSE, CARTRIDGE: 314010; (75915)		*	*	2	2
6625-168-0355	PROBE, TEST: 10242934; (18876)		*	*	*	2

SECTION III. REPAIR PARTS FOR ORGANIZATIONAL MAINTENANCE

(1) SMR CODE	(2) FEDERAL STOCK NUMBER	(3) DESCRIPTION Reference Number & Mfr Code		USABLE ON CODE	(4) UNIT OF MEAS	(5) QTY INC IN UNIT	15- (a) 1-5	(b) 6-20	(c) 1-50	(d) 51-1(	(a) FIG NO.	(7) ILLUSTRATIONS (b) ITEM NO. OR REFERENCE DESIGNATION
	6625-933-0406	1	MULTIMETER AN/JSM-303: (This item is nonexpendable)									
	6625-168-0585	1A	MULTIMETER AN/JSM-303A: (This item is nonexpendable)									
	6625-123-0478	1C	ADAPTER SET, TEST LEAD: 10556499; 19200	2	ea	1	*	*	*	*		
	5940-195-9695	18	CLIP, ELECTRICAL: 60; (76545)	1	ea	2	*	*	*	*	1-3	
	5920-280-5002	20	FUSE, CARTRIDGE: 314010; (75915)	1,2	ea	1	*	*	2	2	13	F1
	5975-284-6588	21	INSULATOR,SLEEVE: 62 BLACK; (76545)	1	ea	1	*	*	*	*	1	5
	5975-296-1875	22	INSULATOR, SLEEVE: 62 RED ; (76545)	1	ea	1	*	*	*	*	1	4
		26	KNOB: 0185911-B; (17733)	1,2	ea	1	*	*	*	*	1	6
	5355- 582-3804	27	KNOB: MS-91528-2P2B; (94144)	1,2	ea	1	*	*	*	*	1	7
	5355-599-8942	28	KNOB: MS-91528-1N1B ; (94144)	1,2	ea	1	*	*	*	*	1	13
	6625-168-0355	33	PROBE,TEST: 10242934; (18876)	1,2	ea	2	*	*	*	2	1	1

SECTION V. REPAIR PARTS FOR DIRECT SUPPORT, GENERAL SUPPORT, AND DEPOT MAINTENAN

(1) SMR CODE	(2) FEDERAL STOCK NUMBER	DESCRIPTION REFERENCE NUMBER & MFR. CODE		USABLE CODE	(4) UNIT OF MEA	(5) QTY INC. UNIT	(6) 30-DAY DS MAIN ALLOWANCE (a) 1-20	(b) 21-6	(c) 1-1	(7) 30 GS ALLOWANCE (a) 1-2	(b) 1-4	(c) 1-1	(8) UNIT LWR EQU WTG	(9) EP MAIN WT OU	(10) ILLUSTRATIONS (a) FIG NO	(b) ITEM NO. OR REFERENCE DESIGNATION
	625-933-240	1	MULTIMETER AN/USM-303: (This item is nonexpendable)													
	625-168-058	1A	MULTIMETER AN/USM-303-A (This item is nonexpendable)													
P-H	625-439-413	1B	ADAPTER ASSEMBLY, SWITCH: 11731054 ; 19200	2	ea	1				*	*	1	8			
P-O	625-123-047	1C	ADAPTER SET, TEST LEAD: 10556499; 19200	2	ea	1				*	*	1	8			
P-H	935-502-034	2	BANANA PLUG: 100; (83330)	1	ea	2				*	*	2	1	6		
P-H	975-583-855	3	BUSHING , STRAIN RELIEF: SR-14-1 ; (28520)	1,2	ea	1				*	*	2				
P-H	525-110- 988	4	CASE, MULTIMETER: 156-001-384-0: (13913)	1,2	ea	1				*	*	*				
P-H		5	CAPACITOR, FIXED, CERAMIC DIELECTRIC : TSD-10-362-K; (02690)	1,2	ea	1				*	*	*	5		13	C1
P-H		6	CAPACITOR FIXED, CERAMIC DIELECTRIC : TSD-12-602-K; (02690)	1,2	ea	1				*	*	*	5		13	C2
P-H		7	CAPACITOR FIXED, CERAMIC DIELECTRIC : TSD-6-102-K; (02690)	1,2	ea	1				*	*	*	5	3		C3
P-H		8	CAPACITOR, VARIABLE , PLASTIC DIELECTRIC : 053008-4R; (72982)	1,2	ea	3				*	*	2	1	1	13	C4, C5, C7
P-H		9	CAPACITOR, FIXED, CERAMIC DIELECTRIC : TCD-6-NPO-330-J ; (02690)	1,2	ea	2				*	*	2	1	6	13	C6,C16
P-H		10	CAPACITOR, FIXED, CERAMIC DIELECTRIC : TSD-4-151-K; (02690)	1,2	ea	3				*	2	2	1	1	13	C9, C17, C19
P-H		11	CAPACITOR, FIXED, ELECTROLYTIC: T-0296 ; (80795)	1,2	ea	2				*	*	2	1	1	13	C10, C12
P-H		12	CAPACITOR, FIXED, CERAMIC DIELECTRIC : TSD-12-472-4 (02690)	1,2	ea	1				*	*	*	5	3		C11
P-H		13	CAPACITOR, FIXED, CERAMIC DIELECTRIC : TCD-5-NPO-200-J ; (02690)	1,2	ea	1				*	*	2	5	3	13	C13
P-H		14	CAPACITOR, FIXED, CERAMIC DIELECTRIC : TCD-4-NPO-060-J; (02690)	1,2	ea	1				*	*	2	5	3	13	C14
P-H		15	CAPACITOR, FIXED, CERAMIC DIELECTRIC : TCD-4-NPO-100-J ; (02690)	1,2	ea	1				*	*	2	5	3	13	15
P-H		16	CAPACITOR, FIXED, CERAMIC DIELECTRIC : TCD-10-NPO-700-J; (02690)	1,2	ea	1				*	*	2	5	3	13	18
P-H		17	CAPACITOR, FIXED, CERAMIC DIELECTRIC : TCD-8-NPO-470-J ; (02690)	1,2	ea	1				*	*	2	5	3	3	20
P-O	5940-195-9699	18	CLIP, ELECTRICAL: 60; (76545)	1	ea	2				*	*	2	10	6	13	
P-H	5625-110-9883	19	DETECTOR ASSEMBLY: 257-001-232-0; (13913)	1,2	ea	1				*	*	2	8	5	2	2
P-O	5920-280-5002	20	FUSE CARTRIDGE: 314010 ;	1,2	ea	1				*	*	2	30	50	3	1

SECTION V. REPAIR PARTS FOR DIRECT SUPPORT, GENERAL SUPPORT, AND DEPOT MAINTENANCE (CONTINUED)

(1) SMR CODE	(2) FEDERAL STOCK NUMBER	(3) DESCRIPTION REFERENCE NUMBER & MFR. CODE	USABLE ON CODE	(4) UNIT OF MEAS	(5) QTY INC IN UNIT	(6) 30-DAY DS MAINT ALLOWANCE (a) 1-20	(b) 21-50	(c) 51-100	(7) 30-DAY GS MAINT ALLOWANCE (a) 1-20	(b) 21-50	(c) 51-100	(8) 1 YR ALW PER EQUIP CNTGCY	(9) DEPOT MAINT ALW PER 100 EQUIP	(10) ILLUSTRATIONS (a) FIG NO.	(b) ITEM NO. OR REFERENCE DESIGNATION
H-C	5975-284-6588	21 INSULATOR, SLEEVE: 62 Black; (76545)	1	ea	1				*	*	*	5	2	1	5
H-C	5975-296-1875	22 INSULATOR, SLEEVE: 62 Red; (76545)	1	ea	1				*	*	*	5	2	1	4
H-H		23 KNOB: 454-001-104-2; (13913)	1,2	ea	1				*	*	*	5	2	1	11
H-H		24 KNOB: 454-002-105-2; (13913)	1,2	ea	1				*	*	*	5	2	1	10
H-H		25 KNOB: 454-003-106-2; (13913)	1,2	ea	1				*	*	*	5	2	1	9
H-O		26 KNOB : 0185911-B; (17733)	1,2	ea	1				*	*	*	5	3	1	6
H-O	5355-582-3804	27 KNOB: MS-91528-2F2B; (94144)	1,2	ea	1				*	*	*	5	3	1	7
H-O	5355-559-8942	28 KNOB: MS-91528-1N1B; (94144)	1,2	ea	1				*	*	*	5	3	1	13
H-H		29 LAMP, GLOW: 5AH; (03508)	1,2	ea	6				2	4	7	83	600	13	B1 thru B6
H-H	6625-110-9855	30 LEAD, TEST: 900-001-695-0 (Black); (13913)	1	ea	1				*	*	2	8	5	1	12
H-H	6625-110-9856	31 LEAD, TEST: 900-002-695-0; (13913)	1	ea	1				*	*	2	8	5	1	12
H-H	6625-110-9884	32 METER ASSEMBLY: 522-1-2-00001; (13913)	1,2	ea	1				*	*	2	8	5	12	A3
H-C	6625-168-0355	33 PROBE, TEST: 10242934; (18876)	1,2	ea	2				*	2	2	13	10	1	1
H-H		34 RELAY, ELECTROMAGNETIC ACTUATOR: 32RJFD-9507; (78277)	1,2	ea	1				*	*	2	8	5	13	K1
		35 RELAY, THERMAL: MS-315; (88204)	1,2	ea	1				*	*	2	8	5	13	TK1
H-H		36 RESISTOR, FIXED, FILM: M1/2-TO-1201C; (12126)	1,2	ea	1				*	*	2	8	5	13	R1
		37 RESISTOR, FIXED, FILM: M1/2-TO-2401C; (12126)	1,2	ea	3				*	2	2	18	15	13	R2, R8, R47
H-H		38 RESISTOR, FIXED, FILM: M1/2-TO-6000C; (12126)	1,2	ea	1				*	*	2	8	5	13	R3
		39 RESISTOR, FIXED, FILM: M1/2-TO-8000C; (12126)	1,2	ea	1				*	*	2	8	5	13	R4
		40 RESISTOR, FIXED, FILM: M1/2-TO-9601C; (12126)	1,2	ea	1				*	*	2	8	5	13	R5
		41 RESISTOR, FIXED, FILM: M1/2-TO-7201C; (12126)	1,2	ea	1				*	*	2	8	5	13	R6
		42 RESISTOR, FIXED, FILM: M1/2-TO-4801C ; (12126)	1,2	ea	1				*	*	2	8	5	13	R7
		43 RESISTOR, FIXED, FILM: M1/2-TO-1202D; (12126)	1,2	ea	1				*	*	2	8	5	13	R9
H-H		44 RESISTOR, FIXED, FILM: M1/2-TO-2402D; (12126)	1,2	ea	1				*	*	2	8	5	13	R10

SECTION V. REPAIR PARTS FOR DIRECT SUPPORT, GENERAL SUPPORT, AND DEPOT MAINTENANCE (CONTINUED)

(1) SMR CODE	(2) FEDERAL STOCK NUMBER	(3) DESCRIPTION REFERENCE NUMBER & MFR. CODE		USABLE ON CODE	(4) UNIT OF MEAS	(5) QTY INC IN UNIT	(6) 30-DAY DS MAINT ALLOWANCE (a) 1-20	(b) 21-50	(c) 51-100	(7) 30-DAY GS MAINT ALLOWANCE (a) 1-20	(b) 21-50	(c) 51-100	(8) 1 YR ALW PER EQUIP CNTGCY	(9) DEPOT MAINT ALW PER 100 EQUIP	(10) ILLUSTRATIONS (a) FIG NO.	(b) ITEM NO. OR REFERENCE DESIGNATIO
A-H		45	RESISTOR, FIXED, FILM: M1/2 -TO-6001D; (12126)	1,2	ea	1				*	*	2	8	5	13	R11
A-H		46	RESISTOR, FIXED, FILM: M1/2-TO-8001D; (12126)	1,2	ea	1				*	*	2	8	5	13	R12
A-H		47	RESISTOR, FIXED, FILM: M1/2-TO-9600D; (12126)	1,2	ea	1				*	*	2	8	5	13	R13
A-H		48	RESISTOR, FIXED, FILM: M1/2-TO-7200D; (12126)	1.2	ea	1				*	*	2	8	5	13	R14
A-H		49	RESISTOR, FIXED, FILM: M1/2-TO-4800D; (12126)	1,2	ea	1				*	*	2	8	5	13	R15
A-H		50	RESISTOR, FIXED, FILM: M1/2-TO-2400D ; (12126)	1,2	ea	1				*	*	2	8	5	13	R16
A-H		51	RESISTOR, FIXED, FILM: M1/2-TO-1203F; (12126)	1,2	ea	1				*	*	2	8	5	13	R17
A-H		52	RESISTOR, FIXED, FILM: M1/2-TO-2403F; (12126)	1,2	ea	1				*	*	2	8	5	13	R18
A-H		53	RESISTOR, FIXED, COMPOSITION : M1/2-TO-6002F; (12126)	1,2	ea	1				*	*	2	8	5	13	R19
A-H		54	RESISTOR, FIXED, FILM: M1/2-TO-8002F; (12126)	1,2	ea	1				*	*	2	8	5	13	R20
A-H		55	RESISTOR, FIXED, FILM: M1/2-TO-0960F; (12126)	1,2	ea	1				*	*	2	8	5	13	R21
A-H		56	RESISTOR, FIXED, FILM: M1/2-TO-0720F; (12126)	1,2	ea	1				*	*	2	8	5	13	R22
A-H		57	RESISTOR, FIXED, FILM: M1/ 2-TO-0480F ; (12126)	12,	ea	1				*	*	2	8	5	13	R23
A-H		58	RESISTOR, FIXED, FILM: C1/2-B-0240F; (12126)	1,2	ea	1				*	*	2	8	5	13	R24
A-H		59	RESISTOR, FIXED, FILM: M2-TO-2254D; (12126)	1,2	ea	1				*	*	2	8	5	13	R25
A-H		60	RESISTOR, FIXED, FILM: M2-TO-9004D; (12126)	1,2	ea	1				*	*	2	8	5	13	R26
A-H		61	RESISTOR, FIXED, FILM: M1/2-TO-9003D; (12126)	1,2	ea	1				*	*	2	8	5	13	R27
A-H		62	RESISTOR, FIXED, FILM: M1/2-TO-9002D; (12126)	1,2	ea	1				*	*	2	8	5	13	R28
A-H	5905-107-4258	63	RESISTOR, FIXED, COMPOSITION: RC20GF162J; (81349)	1,2	ea	1				*	*	2	8	5	13	R29
A-H	5905-195-6806	64	RESISTOR, FIXED, COMPOSITION: RC20GF102J; (81349)	1,2	ea	3				*	2	2	18	15	13	R30, R41, R44
A-H		65	RESISTOR, FIXED, FILM: M1/2-TO-7501D; (12126)	1,2	ea	1				*	*	2	8	5		R34

SECTION V. REPAIR PARTS FOR DIRECT SUPPORT, GENERAL SUPPORT, AND DEPOT MAINTENANCE (CONTINUED)

(1) SMR CODE	(2) FEDERAL STOCK NUMBER	(3) DESCRIPTION REFERENCE NUMBER & MFR. CODE		USABLE ON CODE	(4) UNIT OF MEAS	(5) QTY INC IN UNIT	(6) 30-DAY DS MAINT ALLOWANCE (a) 1-20	(b) 21-50	(c) 51-100	(7) 30-DAY GS MAINT ALLOWANCE (a) 1-20	(b) 21-50	(c) 51-100	(8) 1 YR ALW PER EQUIP CNTGCY	(9) DEPOT MAINT ALW PER 100 EQUIP	(10) ILLUSTRATIONS (a) FIG NO.	(b) ITEM NO. OR REFERENCE DESIGNATION
P-H		66	RESISTOR, FIXED, FILM: M1/2-TO-1501F; (12126)	1,2	ea	1				*	*	2	8	5	13	R35
P-H		67	RESISTOR, FIXED, FILM: M1/2-TO-1001D; (12126)	1,2	ea	1				*	*	2	8	5	13	R36
P-H		68	RESISTOR, FIXED, WIREWOUND: TS-3W,2.503 ohms ±1/2%; (15915)	1,2	ea	1				*	*	*	5	3	13	R37
P-H		69	RESISTOR, FIXED, WIREWOUND: TS-3W,25.25 ohms ±1/2%; (15915)	1,2	ea	1				*	*	*	5	3	13	R38
P-H		70	RESISTOR, FIXED, WIREWOUND: TS-3W.277.8 ohms ±1/2%; (15915)	1,2	ea	1				*	*	*	5	3	13	R39
P-H	5905-254-9201	71	RESISTOR, FIXED, COMPOSITION: RC20GF473J; (81349)	1,2	ea	1				*	*	2	8	5	13	R40
P-H	5905-190-8883	72	RESISTOR, FIXED, COMPOSITION: RC20GF100J; (81349)	1,2	ea	1				*	*	2	8	5	13	R42
P-H	5905-190-8885	73	RESISTOR, FIXED, COMPOSITION: RC20GF101J; (81349)	1,2	ea	1				*	*	2	8	5	13	R43
P-H		74	RESISTOR, FIXED, FILM: M1/2-TO-1000F; (12126)	1,2	ea	1				*	*	2	8	5	13	R45
P-H		75	RESISTOR, FIXED, FILM: M1/2-TO-2401F; (12126)	1,2	ea	1				*	*	2	8	5	13	R46
P-H		76	RESISTOR, FIXED, FILM: M1/2-TO-6000F; (12126)	1,2	ea	1				*	*	2	8	5	13	R48
P-H		77	RESISTOR, FIXED, FILM: M1/2-TO-2401B; (12126)	1,2	ea	1				*	*	2	8	5	13	R49
P-H		78	RESISTOR, FIXED, FILM: M1/2-TO-50908 ; (12126)	1,2	ea	1				*	*	2	8	5	13	R50
P-H		79	RESISTOR, FIXED, FILM: M1/2-TO-1372F; (12126)	1,2	ea	1				*	*	2	8	5	13	R51
P-H		80	RESISTOR, FIXED, FILM: M1/2-TO-9601F; (12126)	1,2	ea	1				*	*	2	8	5	13	R52
P-H		81	RESISTOR, FIXED, WIREWOUND: TS-3W, 100 ohms ±1/2%; (15915)	1,2	ea	1				*	*	*	5	3	13	R53
P-H		82	RESISTOR, FIXED, FILM: M1/2-TO-2252D; (12126)	1,2	ea	1				*	*	2	8	5	13	R54
P-H		83	RESISTOR, FIXED, FILM: M1/2-TO-2253D; (12126)	1,2	ea	1				*	*	2	8	5	13	R55
P-H	5905-279-3513	84	RESISTOR, FIXED, COMPOSITION: RC20GF511J; (81349)	1,2	ea	2				*	2	2	13	10	13	R56, R62

SECTON V. REPAIR PARTS FOR DIRECT SUPPORT, GENERAL SUPPORT, AND DEPOT MAINTENANCE (CONTINUED)

(1) SMR CODE	(2) FEDERAL STOCK NUMBER	(3) DESCRIPTION REFERENCE NUMBER & MFR. CODE		USABLE ON CODE	(4) UNIT OF MEAS	(5) QTY INC IN UNIT	(6) 30-DAY DS MAINT ALLOWANCE (a) 1-20	(b) 21-50	(c) 51-100	(7) 30-DAY GS MAINT ALLOWANCE (a) 1-20	(b) 21-50	(c) 51-100	(8) 1 YR ALW PER EQUIP CNTGCY	(9) DEPOT MAINT ALW PER 100 EQUIP	(10) ILLUSTRATIONS (a) FIG NO.	(b) ITEM NO. OR REFERENCE DESIGNATION
P-H	5905-249-4256	85	RESISTOR, FIXED, COMPOSITION: RC20GF363J; (81349)	1,2	ea	1				*	*	2	8	5	13	R57
P-H	5905-171-1998	86	RESISTOR, FIXED, COMPOSITION: RC20GF333J; (81349)	1,2	ea	1				*	*	2	8	5	13	R61
P-H	5905-279-3494	87	RESISTOR, FIXED, COMPOSITION: RC20GF823J; (81349)	1,2	ea	1				*	*	2	8	5	13	R63
P-H		88	RESISTOR, FIXED, COMPOSITION: EB-0305; (01121)	1,2	ea	1				*	*	2	8	5	13	R64
P-H	5905-707-3326	89	RESISTOR, VARIABLE: RV5LAYSB251B; (81349)	1,2	ea	2				*	2	2	13	10	13	R71, R73
P-H	5905-993-4747	90	RESISTOR, VARIABLE: RV5LAYSB254B; (81349)	1,2	ea	1				*	*	2	8	5		R72
P-H		91	RESISTOR, VARIABLE: RV5LAYSB504B; (81349)	1,2	ea	1				*	*	2	8	5	13	R74
P-H		92	RESISTOR, VARIABLE: 708-002-253-0 (13913)	1,2	ea	1				*	*	2	8	5	13	R78
P-H		93	RESISTOR, VARIABLE: 708-001-252-0; (13913)	1,2	ea	1				*	*	2	8	5	13	R79A
P-H		94	RESISTANCE ELEMENT: 727-002-253-0; (13913)	1,2	ea	1				*	*	2	8	5	13	R79B
P-H		95	RESISTOR, VARIABLE: RV5NAYSD102B; (81349)	1,2	ea	1				*	*	2	8	5	13	R80
P-H		96	SCREW, INSULATION: 789-12-07-001; (13913)	1,2	ea	2				*	*	*	5	4		
P-H		97	SWITCH, ROTARY: 225408-MF4; (76854)	1,2	ea	1				*	*	2	8	5	12	S1
P-H		98	SWITCH, LEVER: 223907-187-J3; (76854)	1,2	ea	1				*	*	2	8	5	12	S2
P-H		99	SWITCH, ROTARY: 878-013-691-0; (13913)	1,2	ea	1				*	*	2	8	5	12	S3
P-H		100	SWITCH, ROTARY: 878-014-692-0; (13913)	1,2	ea	2				*	2	2	13	10	12	S4, S5
P-H		101	SWITCH, PUSH: 231136-170; (76854)	1,2	ea	1				*	*	2	8	5	12	S6
P-H		102	SWITCH, PUSH: 231137-170; (76854)	1,2	ea	1				*	*	2	8	5	12	S7
P-H	5961-765-4612	103	SEMICONDUCTOR DEVICE, DIODE: 1N645; (01295)	1,2	ea	13				2	3	5	58	65	13	CR1 thru CR4, CR9 thru CR17
P-H	5961-883-7605	104	SEMICONDUCTOR DEVICE DIODE: 1N2611; (03508)	1,2	ea	4				*	2	2	21	20	13	CR5 thru CR8
P-H		105	TRANSISTOR ASSEMBLY: 929-2-00000[illegible]; (13913)	1,2	ea	1				*	*	2	8	5	12	A1

SECTION VII. INDEX-FEDERAL STOCK NUMBER CROSS REFERENCE TO FIGURE AND ITEM NUMBER OR REFERENCE DESIGNATION

FE ERA STOCK NUMBER	FIGURE NUMBER	ITEM NUMBER OR REF. DESIGNATION
5355-559-8942	1	13
5355-582-3804	1	7
5905-107-4258	13	R29
5905-171-1998	13	R61
5905-190-8883	13	R42
5905-190-8889	13	R43
5905 -195-6806	13	R30
5905-249-4256	13	R57
5905-254-9201	13	R40
5905 -279-3494	13	R63
5905-279-3511	13	R56
5905-707-3326	13	R71
5905-993-4747		R72
5920-280-5002	13	F1
5961-765-4612	13	CR1 thru CR4
5961-883-7605	13	CR5 thru CR8
5975-284-6588	1	5
5975-296-1875	1	4
6625-110-9855	1	12
6625-110-9856	1	12
6625-110-9883	12	A2
6625-110-9884	12	A3
6625-168-0355	1	1

Reference No.	Mfg Code	Fig No.	Item No.
C1/2-B-0240F	12126	13	R24
EB-0305	01121	13	R64
MB-315	88204	13	TK1
M1/2-T0-0480F	12126	13	R23
M1/2-T0-0720F	12126	13	R22
M1/2-T0-0960F	12126	13	R21
M1/2-T0-1000F	12126	13	R45
M1/2-T0-1001D	12126	13	R36
M1/2-T0-1201C	12126	13	R1
M1/2-T0-1202D	12126	13	R9
M1/2-T0-1203F	12126	13	R17
M1/2-T0-1372F	12126	13	R51
M1/2-T0-1501F	12126	13	R35
M1/2-T0-2252D	12126	13	R54
M1/2-T0-2253D	12126	13	R55
M1/2-T0-2400D	12126	13	R16
M1/2-T0-2401B	12126	13	R49
M1/2-T0-2401C	12126	13	R2
M1/2-T0-2401F	12126	13	R46
M1/2-T0-2402D	12126	13	R10
M1/2-T0-2403F	12126	13	R18
M1/2-T0-4800D	12126	13	R15
M1/2-T0-4801C	12126	13	R7
M1/2-T0-50908	12126	13	R50
M1/2-T0-6000C	12126	13	R3
M1/2-T0-6000F	12126	13	R48
M1/2-T0-6001D	12126	13	R11
M1/2-T0-6002F	12126	13	R19
M1/2-T0-7200D	12126	13	R14
M1/2-T0-7201C	12126	13	R6
M1/2-T0-7501D			R34
M1/2-T0-8000C	12126	13	R4
M1/2-T0-8001D	12126	13	R12
M1/2-T0-8002F	12126	13	R20
M1/2-T0-9002D		13	R28
M1/2-T0-9003D	12126	13	R27
M1/2-T0-9600D	12126	13	R13
M1/2-T0-9601C	12126	13	R5
M1/2-T0-9601F	12126	13	R52
M2-T0-2254D	12126	13	R25

SECTION VII. INDEX-FEDERAL STOCK NUMBER CROSS REFERENCE TO FIGURE AND ITEM NUMBER OR REFERENCE DESIGNATION (CONTINUED)

Reference No.	Mfg. Code	Fig. No.	No.
M2-T0-9004D	12126	13	R26
RV5LAYSB504B	81349	13	R74
RV5NAYSD102B	81349	13	R80
TCD-10-NPO-700-J	02690	13	C18
TCD-4-NPO-060-J	02690	13	C14
TCD-4-NPO-100-J	02690	13	C15
TCD-5-NPO-200-J	02690	13	C13
TCD-6-NPO-330-J	02690	13	C6
TCD-8-NPO-470-J	02690	13	C20
TSD-10-362-K	02690	13	C1
TSD-12-472-4	02690		C11
TSD-12-602-K	02690	13	C2
TSD-4-151-K	02690	13	C9
TSD-6-102-K	02690		C3
TS-3W, 100 ohms ±1/2%	15915	13	R53
TS-3W, 2.503 ohms ±1/2%	15915	13	R37
TS-3W, 25.25 ohms ±1/2%	15915	13	R38
TS-3W, 277.8 ohms ±1/2%	15915	13	R39
T-0296	80795	13	C10
0185911-B	17733	1	6
053008-4R	72982	13	C4
223907-187-J3	76854	12	S2
225408 -MF4	76854	12	S1
231136-170	76854	12	S6
231137-170	76854	12	S7
32RJPD-9507	78277	13	K1
454-001-104-2	13913	1	11
454-002-105-2	13913	1	10
454-003-106-2	13913	1	9
5AH	03508	13	B1 thru B6
708-001-252-0	13913	13	R79A
708-002-253-0	13913	13	R78
727-002-253-0	13913	13	R79B
878-013 -691-0	13913	12	S3
878-014 -692-0	13913	12	S4
929-2-000001	13913	12	A1

SECTION VIII REFERENCE DESIGNATION CROSS REFERENCE TO PAGE NUMBER

REFCRENCK DESIGNATION	PAGE NUMBER
1	D-7
4	D-7
5	D-7
6	D-7
7	D-7
9	D-7
10	D-7
11	D-7
12	D-7
13	D-7
A1	D-10
A2	D-6
A3	D-7
B1 thru B6	D-7
C1	D-6
C2	D-6
C3	D-6
C4	D-6
C5	D-6
C6	D-6
C7	D-6
C9	D-6
C10	D-6
C11	D-6
C12	D-6
C13	D-6
C14	D-6
C15	D-6
C16	D-6
C17	D-6
C18	D-6
C19	D-6
C20	D-6
CR1 thru CR4	D-10
CR5 thru CR8	D-10
CR9 thru CR17	D-10
F1	D-6
K1	D-7
R1	D-7
R2	D-7
R3	D-7
R4	D-7
R5	D-7
R6	D-7
R7	D-7
R8	D-7
R9	D-7
R10	D-7
R11	D-8
R12	D-8
R13	D-8
R14	D-8
R15	D-9
R16	D-8
R17	D-8
R18	D-8
R19	D-8
R20	D-8
R21	D-8
R22	D-8
R23	D-8
R24	D-8
R25	D-8
R26	D-8
R27	D-8
R28	D-8
R29	D-8
R30	D-8
R34	D-8
R35	D-9
R36	D-9
R37	D-9
R38	D-9
R39	D-9
R40	D-9
R41	D-8
R42	D-9
R43	D-9
R44	D-8
R45	D-9
R46	D-9
R47	D-7
R48	D-9
R49	D-9
R50	D-9
R51	D-9
R52	D-9
R53	D-9
R54	D-9
R55	D-9
R56	D-9
R57	D-10
R61	D-10
R62	D-9
R63	D-10

SECTION VIII REFERENCE DESIGNATION

CROSS REFERENCE TO PAGE NUMBER (CONTINUED)

REFERENCE DESIGNATION	PAGE NUMBER	REFERENCE DESIGNATION	PAGE NUMBER	REFERENCE DESIGNATION	PAGE NUMBER
R64	D-10				
R71	D-10				
R72	D-10				
R73	D-10				
R74	D-10				
R78	D-10				
R79A	D-10				
R79B	D-10				
R80	D-10				
S1	D-10				
S2	D-10				
S3	D-10				
S4	D-10				
S5	D-10				
S6	D-10				
S7	D-10				
TK1	D-7				

By Order of the Secretary of the Army:

HAROLD K. JOHNSON,
General, United States Army,
Chief of Staff.

Official:
KENNETH G. WICKHAM,
Major General, United States Army,
The Adjutant Genenal.

Distribution:
To be distributed in accordance with DA Form 12-32, Sec II (Unclas) requirements for Shillelagh and LCSS missle systems.

☆ U.S GOVERNMENT PRINTING OFFICE: 1993- 733-005/80333

PIN: 018197-000

This fine document...

Was brought to you by me:

Liberated Manuals -- free army and government manuals

Why do I do it? I am tired of sleazy CD-ROM sellers, who take publicly available information, slap “watermarks” and other junk on it, and sell it. Those masters of search engine manipulation make sure that their sites that sell free information, come up first in search engines. They did not create it... They did not even scan it... Why should they get your money? Why are not letting you give those free manuals to your friends?

I am setting this document FREE. This document was made by the US Government and is NOT protected by Copyright. Feel free to share, republish, sell and so on.

I am not asking you for donations, fees or handouts. If you can, please provide a link to liberatedmanuals.com, so that free manuals come up first in search engines:

<A HREF=http://www.liberatedmanuals.com/>Free Military and Government Manuals</A>

- Sincerely
  Igor Chudov
  http://igor.chudov.com/
- Chicago Machinery Movers