TECHNICAL MANUAL

OPERATOR'S, ORGANIZATIONAL, DIRECT SUPPORT
AND GENERAL SUPPORT MAINTENANCE
MANUAL INCLUDING REPAIR PARTS LIST
FOR

CLEANER, STEAM PRESSURE
MODEL 200-AO
(NSN 4940-00-186-0027)
AMERICAN KLEANER MFG. CO., INC.

This copy is a reprint which includes current pages from Change 1.

HEADQUARTERS, DEPARTMENT OF THE ARMY
OCTOBER 1981

SOAP MIXING INSTRUCTIONS

WARNING

This unit may conduct static electricity through the discharge gun nozzle and is not designed for cleaning applications using combustible liquids, materials or flammable gases. FAILURE TO DO SO COULD RESULT IN SEVERE POSSIBLE FATAL INJURY TO PERSONNEL.

1. With Cleaning Gun secured and "On and Off" Valve (gun) closed, open Soap Tank "Fill and Stir" Valve and turn on Pump Switch. Allow pump to fill soap tank one third (1/3) full. Turn off Pump Switch.
2. Add soap (P-C-437) as follows: Ten (10) ounces of cleaning compound for each gallon of solution desired. One third (1/3) tank full requires 4.2 lbs. of compound; one half (1/2) tank full - 6.25 lbs.; a full tank - 12 1/2 lbs.
3. After soap has been added turn on Pump and Burner switches operate until soap tank has been filled to desired lever. Turn off Burner and Pump Switches, close soap tank "Fill and Stir" Valve, and open cleaning gun "on and off" valve.
4. Cleaner is now ready for normal use: Start cleaner in norm-al manner and adjust Soap Metering Valve to desired concentration. Most cleaning is best accomplished between one third (1/3) to one half (1/2) turn open.

CARE AND MAINTENANCE OF THE SOAP TANK

The soap tank interior has been treated and preserved to prevent corrosion during shipping and storage, however, use of cleaning concentrates will eventually break down and remove this protective coating. Most steam cleaning compounds (P-C-437) contain an oxygen absorbing chemical which removes excess free oxygen from water preventing rust or corrosion of the interior of the soap tank.

To avoid corrosion it is advisable to recharge the solution tank at the end of each use period or each days activity keeping the Soap Tank Port Cover closed to prevent debris from entering tank.

If cleaner has to be moved and soap tank should be drained. When draining soap tank elevate front (vent) end of cleaner at least 15° to assure complete drainage. Wipe dry all interior surfaces reachable through Soap Tank Port. If cleaner is stored indoors leave Soap Tank Port Cover open, if outdoors close Soap Tank Port Cover.

If cleaner is in constant daily use and soap tank is constantly recharged it is advisable to periodically drain and flush the soap tank to remove any debris or accumulation of undissolved chemicals. Always recharge soap tank after flushing with fresh water.

If cleaner is not going to be used for a reasonable period of time, or is being transported (trips of less than a day or two) it is advisable to drain and thoroughly dry the soap tank and as an added precaution spray the interior of the soap tank with a solution of 50% Ethylene Glycol (Permanent Anti-Freeze) and 50% clean water.

For longer trips or storage a water displacing thin film preservation (cold application) conforming to Mil-C-16173 Grade 3 is recommended. In either case any wand type hand pump pressure sprayer may be used. Care should be taken to assure getting the spray or mist behind the baffle located in the center of the Tank.

CAUTION

Before attempting any of the above procedures, the operation and maintenance manual supplied with the cleaner should be thoroughly read and understood by operating personnel.

Change No. 1

HEADQUARTERS
DEPARTMENT OF THE ARMY
Washington, DC, *10 June 1982*

Operator's Organizational Direct Support and General Support Maintenance Manual Including Repair Parts List For CLEANER, STEAM PRESSURE MODEL 200-AO (NSN 4940-00-186-0027) (AMERICAN KLEANER MFG. Co., INC.)

TM 9-4940-525-14&P, 16 October 1981, is changed as follows:

Page iv. Figure II.1 is added as follows:

MODIFIED
ELECTRICAL DIAGRAM
MODEL 200-AO
FIGURE II.1

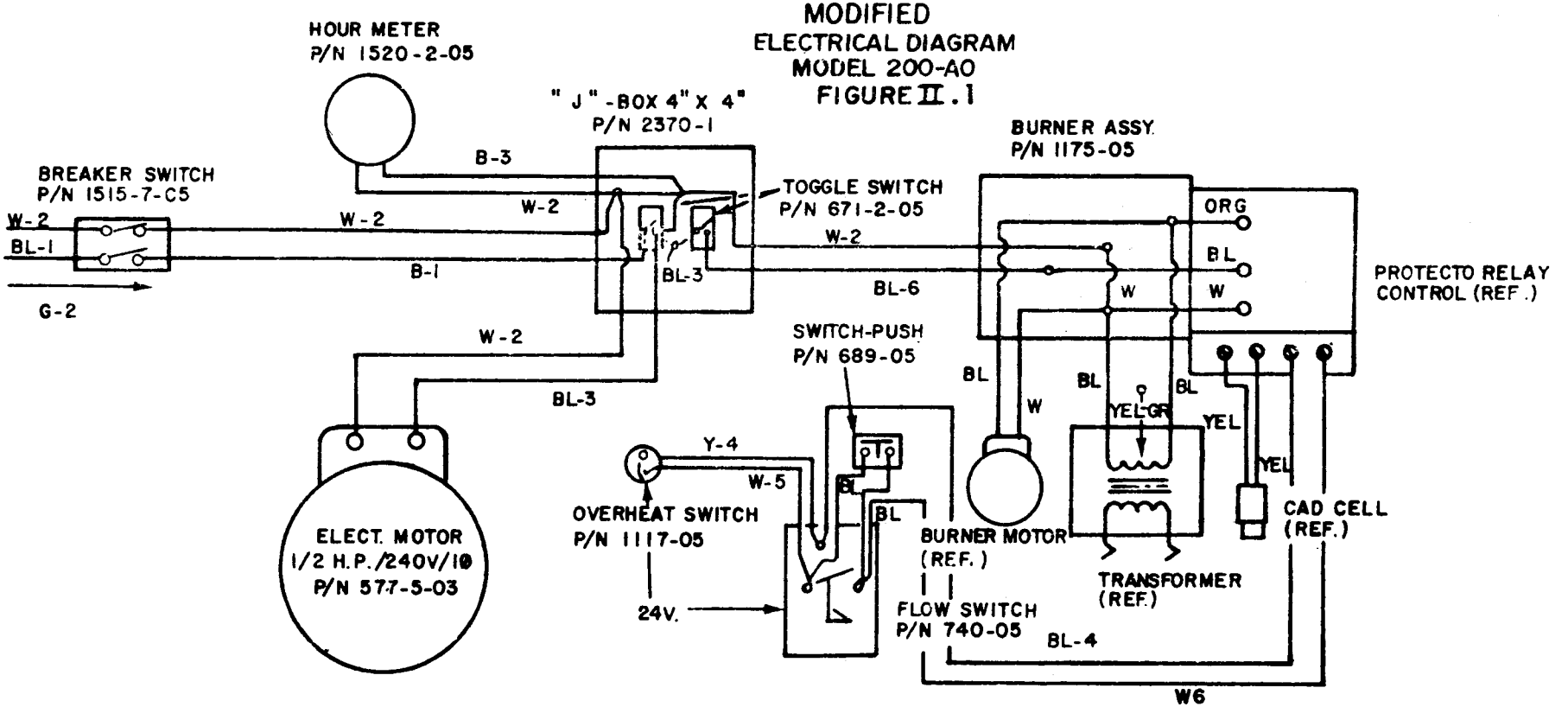

Following figure II.1 add the following:

This modification (fig. II. 1) change the electrical current supply to the Flow Switch, Part No. 740-05, and Overheat Switch, Part No. 1117-05, from 230 Volts (Primary) to 24 Volts (SecoSWOndary Burner) as further protection against damage due to excess voltage and amperage (accidently supplying wrong voltage to unit). This change needed for foreign power only (208V, 50Hz).

WARNING

Before attempting this procedure, make certain all service (electric and water) has been secured and both fuel and plumbing systems have been *relieved* of all pressure. FAILURE TO DO SO COULD RESULT IN SEVERE OR FATAL INJURY TO PERSONNEL.

Remove Front Machinery Panel (page 54, item 26) and loosen Instrument Panel (page 54, Item 13) enough to gain easy access to "J" box (page 47, item 2).

Using Figure XVI, page 47, as reference, remove cable wires (item 12) from Burner Switch (item 29) and from Burner Cable's (item 11) Black Wire No. 6 at Wire Nut (item 19). Attach Black Wire No. 6 of Burner Cable (item 11) to Burner Switch (item 29).

Remove Cable (item 12) and Squeeze Connector (item 4) from "J" box (item 2) and seal opening of "J" box with plug or tape, reattach "J" box (item 2) to Instrument Panel. Replace Cable (item 12) or add sufficient 2-wire cable to item 12 to permit rerouting leadwires to Burner Assembly's Flame Detector Control (item 41, page 48). Be careful to route Cable (item 12) so as to avoid any moving parts or coil discharge plumbing (Heat) .

Remove black wire loop between Terminals "T" and attach the two wires of Cable (item 12) one to each of Terminals "T". Before reinstalling Instrument Panel and Front Machinery Cover, check Cable Leads for continuity,

By Order of the Secretary of the Army:

E. C. MEYER
General, United States Army
Chief of Staff

Official:

ROBERT M. JOYCE
Major General, United States Army
The Adjutant General

Distribution:
To be distributed in accordance with Special List.

TECHNICAL MANUAL
NO. 9-4940-525-14&P

HEADQUARTERS
DEPARTMENT OF THE ARMY
Washington, DC, *16 October 1981*

OPERATOR'S, ORGANIZATIONAL, DIRECT SUPPORT AND GENERAL SUPPORT MAINTENANCE MANUAL INCLUDING REPAIR PARTS LIST

FOR

CLEANER, STEAM PRESSURE MODEL 200-A0 (NSN 4940-00-186-0027)

REPORTING OF ERRORS

You can help improve this manual. If you find any mistakes or if you know of a way to improve the procedures, please let us know. Mail your letter, DA Form 2028 (Recommended Changes to Publications and Blank Forms), or **DA** Form 2028-2, located in the back of this manual direct to: **Commander, US Army Armament Materiel Readiness Command, ATTN: DRSAR-MAS, Rock Island, IL 61299. A reply will be furnished directly to you.**

NOTE

This manual is published for the purpose of identifying an authorized commercial manual for the use of the personnel to whom this equipment is issued.

Manufactured by: American Kleaner Mfg. Co., Inc.
9415 Kruse Road
Pico Rivera, CA 90660

Procured under Contract No. DAAA09-79-C-4918

This technical manual is an authentication of the manufacturers' commercial literature and does not conform with the format and content specified in AR 310SWO-3, Military Publications. This technical manual does, however, contain available information that is essential to the operation and maintenance of the equipment.

INSTRUCTIONS FOR REQUISITIONING PARTS

NOT IDENTIFIED BY NSN

When requisitioning parts not identified by National Stock Number, it is mandatory that the following information be furnished the supply officer.

1- Manufacturer's Federal Supply Code Number -94774

2- Manufacturer's Part Number exactly as listed herein.

3- Nomenclature exactly as listed herein, including dimensions, if necessary.

4- Manufacturer's Model Number -

5- Manufacturer's Serial Number (End Item)

6- Any other information such as Type, Frame Number, and Electrical Characteristics, if applicable.

7- If DD Form 1348 is used, fill in all blocks except 4,5,6, and Remarks field in accordance with AR 725-50.

Complete Form as Follows:

(a) In blocks 4, 5, 6, list manufacturer's Federal Supply Code Number - 94774 followed by a colon and manufacturer's Part Number for the repair part.

(b) Complete Remarks field as follows:

Noun:	(nomenclature of repair part)
For:	NSN:
Manufacturer:	American Kleaner Mfg. Co., Inc. 9415 Kruse Road
Model:	Pico Rivers, CA 90660

Serial: (of end item)

Any other pertinent information such as Frame Number, Type, Dimensions, etc.

MODEL 200-AO

TABLE OF CONTENTS

Introduction i
Dimensions, Figure I ii
Warnings iii
Electrical Diagrams, Figure II iv

General and Description and Data 1
Operating Procedures, Figure III . , ... 2, 4 & 6
Pre-Operating Instructions and Initial Starting Procedure 3
Charging the Solution Tank and Starting Instructions 5
Stopping Instructions and Freezing Weather Precautions 7
Maintenance Procedures, Figure IV . . . . . 8, 10 & 12
Maintenance Instructions, Daily and Monthly . . . . . 7 & 9
Blowdown Procedure 9
Coil Descaling Procedure 11
Adjustments as may be Required 13
Preparing for Storage or Reshipping, Figure V . . . . . 14 & 15
Trouble Shooting Chart (Quick Reference) 16
Trouble Shooting Information . . . . . 17 to 19
Component Servicing Information 20
Installation and Repairing - Hydro/Fuel Safety Modulator 20
Servicing the Burner Assembly . . . . . 21 & 22
Removing Burner Assembly 23
Servicing the Burner Drawer Assembly . . , ... 24
Trouble Shooting and Servicing the Water Pump . . . . . 25 to 30
Replacing the Heating Coil, Figure VI . . . . . 32 & 34
Coil Replacement Procedure . . . . . 33 & 35
Preventative Maintenance Schedule 36

PARTS CATALOG,. 37

Water Supply Tank Assembly and Parts List, Figure VII 38
Pump Inlet Assembly and Parts List, Figure VIII 39
Pump Plumbing Assembly and Parts List, Figure IX 40
Coil Inlet Assembly and Parts List, Figure X 41
Soap Tank Valve Assemblies and Parts List, Figure XI 42
Coil Outlet Assembly and Parts List, Figure XII 43
Flow Switch Assembly and Parts List, Figure XIII 44
Water Pump and Parts List, Figure XIV 45
Bypass Valve Assembly and Parts List, Figure XV 46
Instrument Panel Wiring Diagram and Parts List, Figure XVI 47
Burner Assembly and Parts List, Figure XVII . . . . . 48 & 49
Hydro/Fuel Safety Modulator, Plumbing, Figure XVIII 50

Parts Catalog Continued Next Page.

TABLE OF CONTENTS

PARTS CATALOG . . . . . Continued

Hydro/Fuel Safety Modulator and Parts List, Figure XIX 51
Fuel Filter and Parts List,Figure XX 51
Instrument Panel and Parts List, Figure XXI 52
Pump and Motor Mount Assembly and Parts List, Figure XXII 53
Component Parts List I, Figure XXIII 54
Component Parts List II, Figure XXIV 55
Component Parts List III, Figure XXV . . . . . 56 & 57
Hose and Tubing Parts List, Figure XXVI 58
Tags and Data Plate Parts List, Figure XXVII 59
Heater Shell and Insulation Assembly Parts List, Figure XXVIII 60
Accessories Parts List, Figure XXIX 61
Optional Nozzle Control Steam Gun, Figure XXX 62
Optional Accessories, Figure XXXI 63
Water Treatment for American Kleaners . . . . . 64 & 65

A NOTE ABOUT YOUR HEATER SYSTEM

For each pound of fuel burned in your heating system a pound of water (moisture) is created. Most of this moisture is carried away by the hot exhaust gases, however, a certain amount will remain on the walls of the heat exchanger (coil) and shell assembly and is commonly referred to as "sweating".

This "sweating" is particularly noticeable on new equipment, in extremely humid climates, or during periods of frequent usage for short duration of time wherein the heating system does not have the opportunity to reach and maintain normalized operating temperatures.

Your heating system is designed to control this "sweating" in two ways. The moisture accumulating between the heater coil and heater shell is allowed to drain itself through the lap seal at the bottom of the heater shell assembly; this weeping is normal and is no cause for alarm. The interior moisture accumulating on the interior walls of the heater coil will accumulate through gravity and blower air pressure at the lower vent end of the heater shell assembly where the extreme high temperature of the exhaust gases will evaporate the moisture.

This may be noted as an occasional puff of white smoke (steam) emitting from the heater vent opening. Again, this is normal and no cause for alarm, it simply means the heating system is doing what it was designed to do.

MODEL 200-AO

INTRODUCTION

The MODEL 200-AO Skid Mounted Pressure Jet Steam Cleaner is fully enclosed cleaner mounted on a frame supported by skids equipped with lifting and towing rungs. The cleaner is designed to heat a predetermined quantity of water with or without a selectable amount of detergent to a certain temperature each hour. The cleaner will operate as a cold water rinse unit or as a steam cleaner at the rate of 200 gallons per hour. This unit is designed for the steam cleaning and decontamination of vehicles and miscellaneous ground equipment by the application of steam vapor with suitable detergents and cold water rinse at a designed operating pressure of 80 to 100 P.S.I.

ACCESSORIES FURNISHED

1 - 1/2″ I.D. X 25′ STEAM HOSE COUPLED

1 - 1/2″ I.D. X 50′ STEAM HOSE COUPLED

1 - 3/4″ I.D. X 50′ WATER SUPPLY HOSE WITH FITTINGS

1 - 1" I.D. x 30' SUCTION HOSE WITH FOOT VALVE & STRAINER

1 - 75′ x 3 CONDUCTOR ELECTRIC POWER CORD, LESS CONNECTOR

1 - CLEANING GUN COMPLETE WITH NOZZLE CONTROL VALVE

1 - ROUND HI-IMPACT STEAM NOZZLE

1 - 2″ FLAT FAN STEAM NOZZLE

1 - 4″ FLAT FAN STEAM NOZZLE

1 - PRESSURE RINSE NOZZLE

2 - OPERATOR AND MAINTENANCE INSTRUCTION MANUAL WITH COMPLETE PARTS LIST.

ADDITIONAL COPIES OF THIS PUBLICATION MAY BE OBTAINED THROUGH NORMAL DA DISTRIBUTION CHANNEL FROM THIS ADDRESS:

COMMANDER
US ARMY PUBLICATION CENTER
1655 WOODSON ROAD
ST. LOUIS, MO. 63114

FIGURE I

DIMENSIONS & GRAVITY CENTERLINE
200-AO

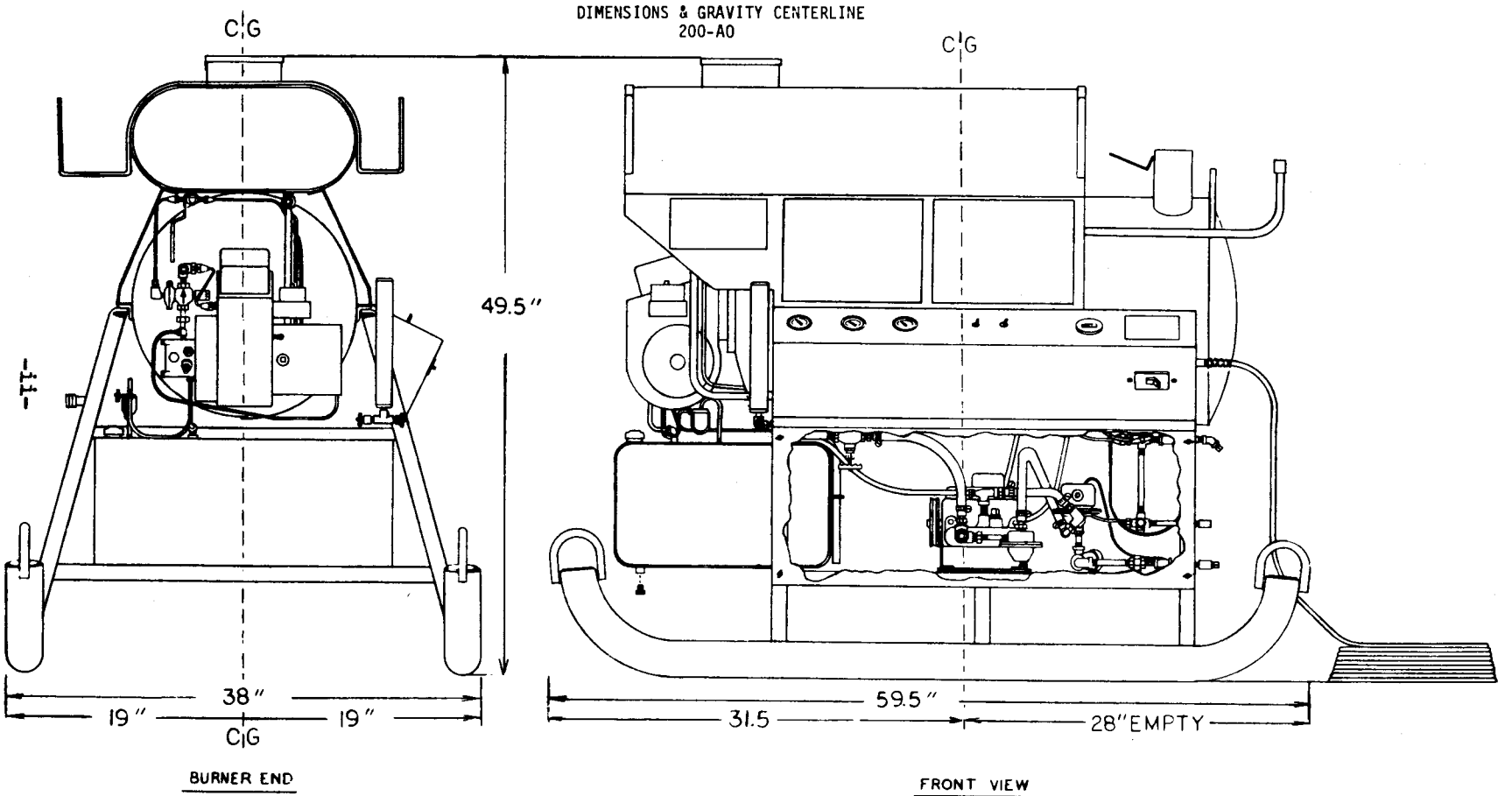

WARNINGS

This equipment can be hazardous to the operator's safety and only authorized personnel who have read and understand the installation and operating manual should be permitted to operate this unit. DO NOT ALLOW THIS EQUIPMENT TO OPERATE UNATTENDED.

DO NOT use gasoline, solvent or improper rated fuels in this equipment and only fill fuel tank when unit is in off condition, main power disconnected and all components are cool. FAILURE TO DO SO COULD RESULT IN SEVERE OR POSSIBLE FATAL INJURY TO PERSONNEL.

Install and operate this unit ONLY in areas where open flame type of equipment is permitted, such as, acetylene or electric welders, FAILURE TO DO SO COULD RESULT IN SEVERE OR POSSIBLE FATAL INJURY TO PERSONNEL.

DO NOT install or operate this unit in an enclosed room unless adequate fresh air and exhaust ventilation is available, This equipment requires intake air for proper combustion and may draw flammable vapors into combustion chamber creating an extremely hazardous condition. FAILURE TO DO SO COULD RESULT IN SEVERE OR POSSIBLE FATAL INJURY TO PERSONNEL.

Acid forming gases such as formed in trichlorethylene vapor degreasers will 11 attack heating coils and should be located away from the unit,

DO NOT operate this equipment unless it is connected to a properly wired and GROUNDED electrical source per local electrical codes.

This unit may conduct static electricity through the discharge nozzle and is not designed for cleaning applications using combustible liquids, materials or flammable gases. TO DO SO COULD RESULT IN SEVERE OR POSSIBLE FATAL INJURY TO PERSONNEL.

DO NOT use any type of insecticide, toxic chemicals or heat activated chemicals that produce toxic fumes or explosive materials in the soap solution system of this equipment. Use ONLY those detergents proven safe for human contact. FAILURE TO DO SO COULD RESULT IN SEVERE OR FATAL INJURY TO PERSONNEL.

DO NOT stand or allow other personnel to stand in front of steam gun nozzle and avoid contact with hot water discharge. TO DO SO COULD RESULT IN SEVERE OR POSSIBLE FATAL INJURY.

ALWAYS turn the unit off and disconnect power cord from power source prior to performing any maintenance. FAILURE TO DO SO COULD RESULT IN SEVERE OR POSSIBLE FATAL INJURY.

Bleed off all pressure prior to removal of nozzles, hoses, or port sealing plugs, and NEVER LEAVE UNIT UNATTENDED WHEN IN OPERATION.

ELECTRICAL DIAGRAMS
MODEL 200-AO
FIGURE II

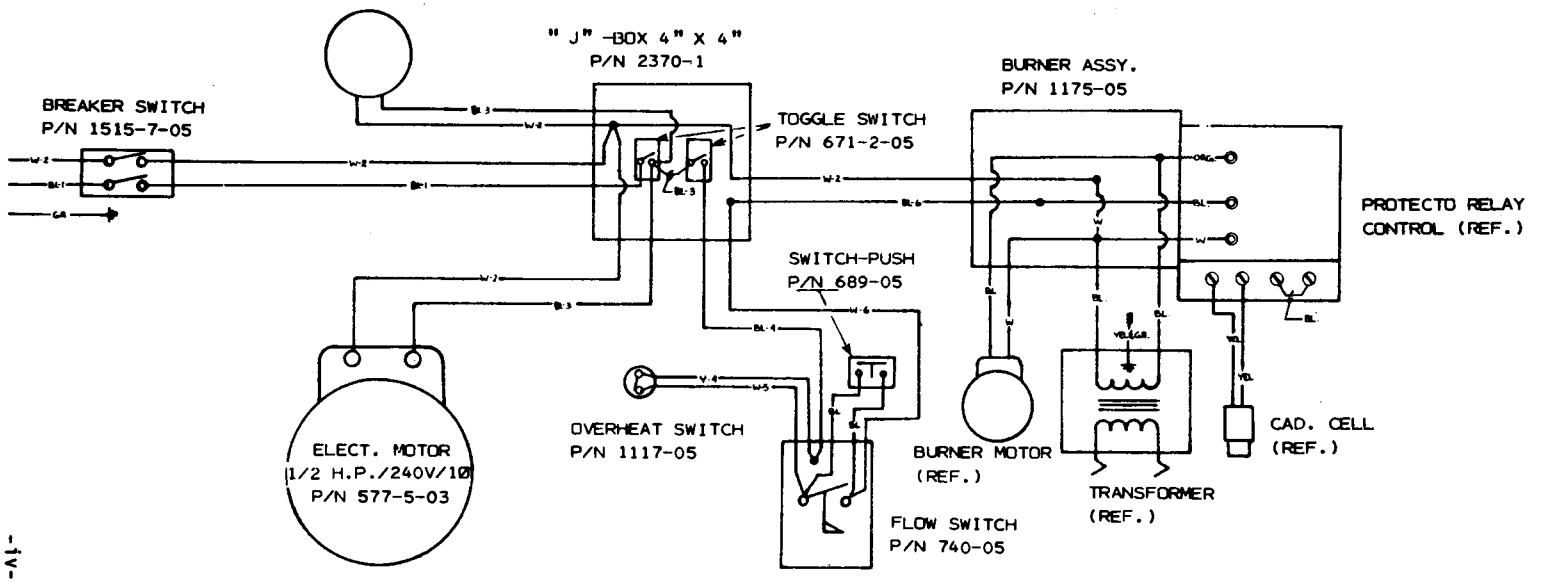

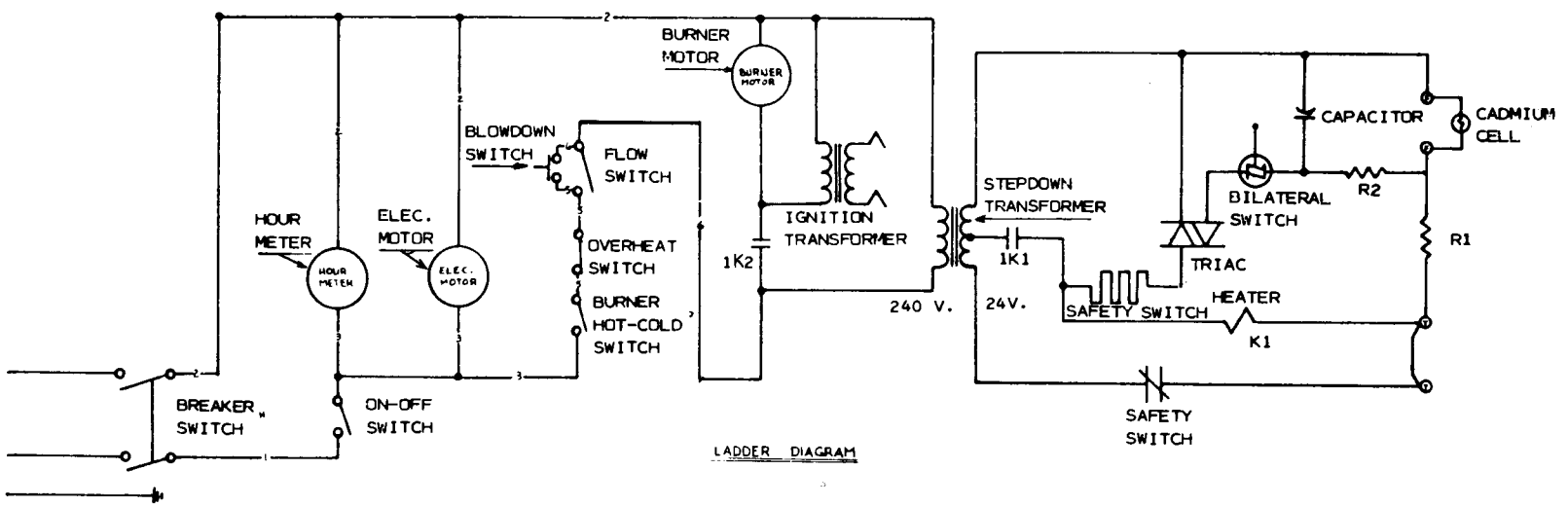

LADDER DIAGRAM

D A N G E R

THIS EQUIPMENT CAN BE HAZARDOUS TO THE OPERATOR'S SAFETY AND ONLY AUTHORIZED PERSONNEL WHO HAVE READ AND UNDERSTAND THE INSTALLATION AND OPERATING MANUAL SHOULD BE PERMITTED TO OPERATE THIS UNIT. D0 NOT ALLOW THIS EQUIPMENT TO OPERATE UNATTENDED.

1.0 GENERAL

1.1 These instructions are published for Model 200-AO Diesel Fuel Steam Cleaner. Paragraphs 3.0 through 10.0 provide necessary information on the operation, maintenance, and trouble shooting of the equipment, components and attachments,

2.0 DESCRIPTION AND DATA

2.1 Description: The 200-AO Diesel Fuel Fired Steam Cleaner has a capacity Of 200 gallons per hour and 200 gallons per hour cold water rinse. The cleaner has a fuel tank, soap solution tank, burner assy, heating coils, electric motor, together with all necessary controls, pumps and connections for using where there is an available electrical and pressured water source of 25 to 125 P.S.I. or other outside source of water. Unit is designed to operate at 80 to 100 PSI solution pressure.

2.2 Tabulated Data:

A. Distributor: Not Applicable

Model 200-AO

B. Fuel :

Type: . . . . . Fuel oil, #l or #2 diesel fuel,

W A R N I N G

D0 NOT use gasoline, solvent or improper rated fuels in this equipment and only fill fuel tank when unit is in off condition, main power disconnected and all components are cool. FAILURE TO D0 SO COULD RESULT IN SEVERE OR POSSIBLE FATAL INJURY TO PERSONNEL,

Tank Capacity . . . . . Approximately 20 gallons
Running Time . . . . . Approximately 5 hours

C. Soap Solution . . . . . Liquid or powdered conforming to P-C 437
Tank Capacity . . . . . Approximately 20 gallons

D. Dimensions and Weight:

	Crated	Uncrated
Overall length	64.0 inches	59.5 inches
Overall width	43.0 inches	38.0 inches
Overall height	54.5 inches	49,5 inches
Weight (dry)	815.0 pounds	(dry) 730,0 pounds (wet) 1100.0 pounds

Vo1ume	
Crated	86.8 Cubic Feet
Uncrated..	64.8 Cubic Feet

E. Electrical Equirements:

Voltage . . . . . 230 volts, single phase, 60Hz is standard unless optional voltage has been specified. Check serial numbered data plate for proper voltage requirement.

Amps . . . . . 15 amp source

F. Water Requirements:

Size of pressure line . . . . . 3/4" - 220 GPH continuous capacity
Pressure . . . . . **25 - 125 PSI**
Size of auxiliary water supply hose - 1" 1.D. x 30' with strainer and foot valve (furnished).

G. Venting Requirements: . . . . . Units located within or near a flammable structure must be vented away from structure. Should venting be required due to location Installation, Adapt a 30" x 10" I.D. Stack to unit and place a 10" 1.D. down draft diverter between this 30" x 10" 1.D. stack and balance of stack.

OPERATION PROCEDURE
FIGURE III
MODEL 200-AO

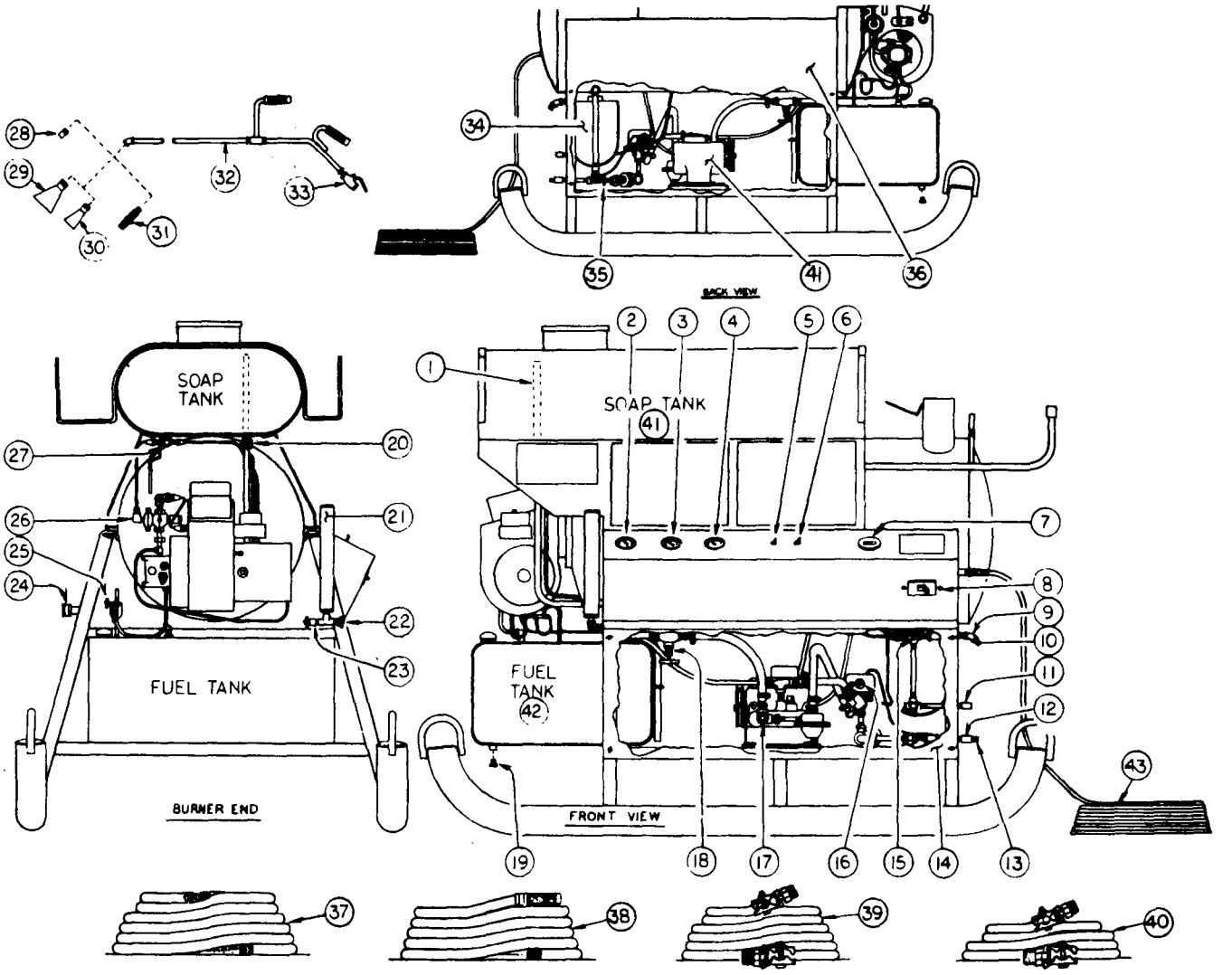

CAUTION

The Electric Motor, item 41, is equipped with an automatic overload protector switch. If tripped it will reset automatically when motor cools, causing motor to restart without warning.

In case overload protector switch is tripped, turn off pump Switch, item 6, and Burner Switch, item 5. Check for cause of problem, motor to pump belt too tight, low or improper electrical voltage, loss of water pump crankcase oil (bearing seizure), etc. Allow five (5) minutes for motor to cool before restarting.

3.0 PRE-OPERATING INSTRUCTIONS (SEE FIGURE III, PAGE 2)

3.1 Remove all packing, tape and material used to protect during shipment

W A R N I N G

Install and operate this unit ONLY in areas where open flame type of equipment is permitted, such as, acetylene or electric welders. FAILURE TO D0 SO COULD RESULT IN SEVERE OR POSSIBLE FATAL INJURY TO PERSONNEL .

W A R N I N G

DO NOT install or operate this unit in an enclosed room unless adequate fresh air and exhaust ventilation is available. This equipment requires intake air for proper combustion and may draw flammable vapors into combustion chamber creating an extremely hazardous condition. FAILURE TO DO SO COULD RESULT IN SEVERE OR POSSIBLE FATAL INJURY TO PERSONNEL.

CAUTION

Acid forming gases such as formed in trichlorethylene vapor degreasers will attack heating coils and should be located away from the unit.

3.2 Check all fuel lines for loose connections and secure Fuel Tank Drain Plug, item 19, Fig. III.

3.3 Fill fuel tank with fuel as specified in paragraph 2.2.B. Open fuel valve at filter, if closed.

3.4 Be sure unit is located and properly vented to protect structures. If unit is located inside a building, a vent stack should be installed to eliminate fumes and interference with timer combustion. Use the same size stack (10") I.D. Venting. Stack should be self-supporting with the exhaust opening higher than nearby roofs, buildings or other obstructions which may cause a down draft. A down draft diverter should be installed in the stack, should the stack create excessive draft. If the cleaner is located in a warm room during freezing weather, the stack must have a damper to be closed when the cleaner is not in operation and fully open while the unit is in operation.

NOTE : D0 not restrict the stack size. Consult your local inspector for ordinances in the event a stack is required.

3.5 Protect unit from down drafts and excessive winds when operating the unit in the open.

3.6 Be sure unit is relatively level during operation and installed on a fireproof-type base.

3.7 Attach steam gun to one end of steam hose. Attach other end of steam hose to cleaner's steam outlet port (Ref. Figure III, item 11). Tighten both hose clamps after securing spuds to cleaner & gun.

3.8 Connect one end of a water supply hose to an ample water source and other end to cleaner's Inlet Water Connector (Figure III,item 24). Turn hydrant valve fully on to insure full flow of water to float tank or prime intake suction hose as per note below.

3.9 Connect cleaner's power cord to an adequately wired and grounded electrical source. Check serial numbered nameplate for proper voltage requirement. Turn on safety reset Power Control switch, item 8.

NOTE : When using Intake Suction Hose item 38, Figure IV, after attaching to Auxiliary Water Source port Item l, and have inserted foot valved end into auxiliary water source, hose aid system may be primed as follows. Remove Rear panel, item 36, and Front panel, item 14, open Water Supply Tank Valve, item 35, and slowly pour water into Supply tank until a 3 to 4 inch level is maintained. Close Water Supply Tank Valve, item 35, reinstall front and rear panels and proceed as follows.

W A R N I N G

D0 NOT operate this equipment unless it is connected to a properly wired and GROUNDED electrical source per local electrical codes.

4.0 INITIAL STARTING PROCEDURE: (SEE FIGURE III, PAGE 2)

4.1 Close Valves items 15, 20, 23, & 27. Open Valves items 18, & 35. Remove Cleaning Gun Nozzle (s) item 28, 29, 30, or 31, and secure Cleaning Gun, item 32, to prevent whipping. Open Cleaning Gun Valve, item 33, and turn on Pump Switch, item 6.

NOTE: If water pump does not prime within 30 seconds shut off Pump Switch, item 6, and check for cause. Water must be available to pump intake manifold. It is advisable to initially prime pump & system operating with a pressurized water source.

OPERATION PROCEDURE
FIGURE III
MODEL 200-AO

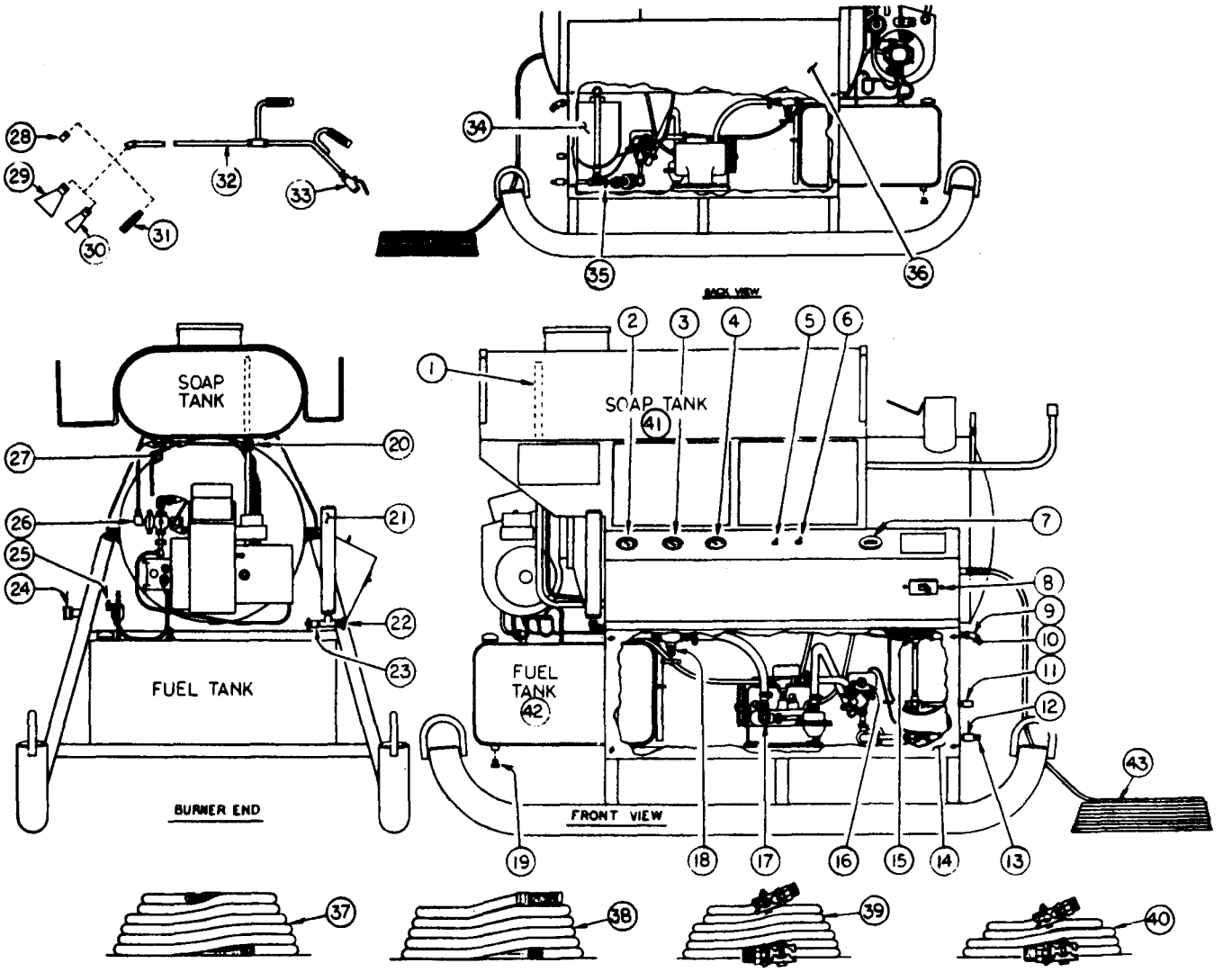

4.2 Allow cold water (fire off) to Purge system for four (4) or five (5) minutes. Turn on Burner Switch, Item 5, and operate for another four (4) or five (5) minutes. Turn off Burner Switch, item 5

4.3 Allow unit to operate until cl ear cool water emerges from cleaning gun. Shut off Pump Switch, item 6, shut off Cleaning Gun Valve, item 33 , and reinstall selected Gun Nozzle, items 28 , 29 , 30 , or 31 . Cl caner is now ready for normal use,

5.0 CHARGING THE SOLUTION TANK: (SEE FIGURE III, PAGE 4)

WARNING

This unit may conduct static electricity through the discharge nozzle and is not designed for cleaning applications using combustible liquids, materials or flammable gases. FAILURE TO DO SO COULD RESULT IN SEVERE OR POSSIBLE FATAL INJURY TO PERSONNEL.

5.1 With Cleaning Gun, item 32, secured, "On & Off" Valve, item 33, closed, open Soap Tank 'Fill-Mix' Valve, item 27 and turn on Pump Switch, item 6. Allow pump to fill soap tank one third (1/3) full, shut off Pump Switch, item 6

5.2 Add soap (P-C-437) as follows: Ten (10) ounces of cleaning compound for each gallon of solution desired. 1/3rd tank full requires 4.2 lbs of compound; 1/2 tank full, 6.25 lbs; and a full tank, (20 gallons), 12-1/2 lbs.

5.3 After soap has been added turn on Pump Switch, item 6, and Burner Switch, item 5, and operate until soap tank has been filled to desired level. Turn off Soap Tank 'Fill-Mix' Valve, item 27, and switches, items 5 & 6. Open "on-off" Valve, item 33.

5.4 Open Soap Metering Valve, item 20. to desired concentration out of cleaning gun. One quarter turn is approximately 1/4 of 1%; one-half turn open is approximately 2/3 of 1%, and one full turn open is approximately 1%. Nest cleaning is best accomplished between 1/3rd and 1/2 turn open. Excessive use of detergent is not only unnecessary but can damage painted surfaces.

WARNING

DO NOT use any type of insecticide, toxic chemicals or heat activated chemicals that produce toxic fumes or explosive materials in the soap solution system of this equipment. Use ONLY those detergents proven safe for human contact. FAILURE TO DO SO COULD RESULT IN SEVERE OR FATAL INJURY TO PERSONNEL.

SPECIAL NOTES

A. Airdome, item 21 Figure III, should be drained daily or every four (4) hours of continuous use. (see daily maintenance).

B. Hydro/Fuel Safety Modulator, Item 26, Fig. III,is factory Set to maintain an operating pressure of 80-100 PSI., and should not require further adjustment. Turning adjusting Hex Cap clockwise increases steam pressure, counter-clockwise decreases steam pressure.

C. When first starting cleaner and water is still cool, the Outlet Pressure Gauge, Item 4, should not indicate over 25 PSI. If over 25 PSI the cleaning gun nozzle is restricted or the "on-off" valve, item 33, is partially closed. Open valve and/or clean gun nozzle orifice.

6.0 STARTING INSTRUCTIONS : (See Figure III, PAGE 4)

6.1 Close Air Dome Valve, item 22, if open, turn on Power Control Switch, item 8

6.2 Check that water supply to cleaner is 'ON' and Water Supply Tank supply Valve, item 35, is open. (If using auxiliary water source, see paragraph 3.9-Note.) Secure cleaning gun prior to starting unit. Never leave cleaning gun unattended with unit operating and secure gun when not in use.

6.3 Open Gauge Dampener Valves, items 15, and 23, and turn on Pump Switch, item 6, When a steady stream of water flows from cleaning gun, turn on Burner Switch, item 5, Burner will ignite.

WARNING

DO NOT stand or allow other personnel to stand in front of steam gun nozzle and avoid contact with hot water discharge.

6.4 Partially open Soap Metering Valve, item 20, one quarter to one turn open. Adjust soap solution flow to meet job requirements.

OPERATION PROCEDURE
FIGURE III
MODEL 200-AO

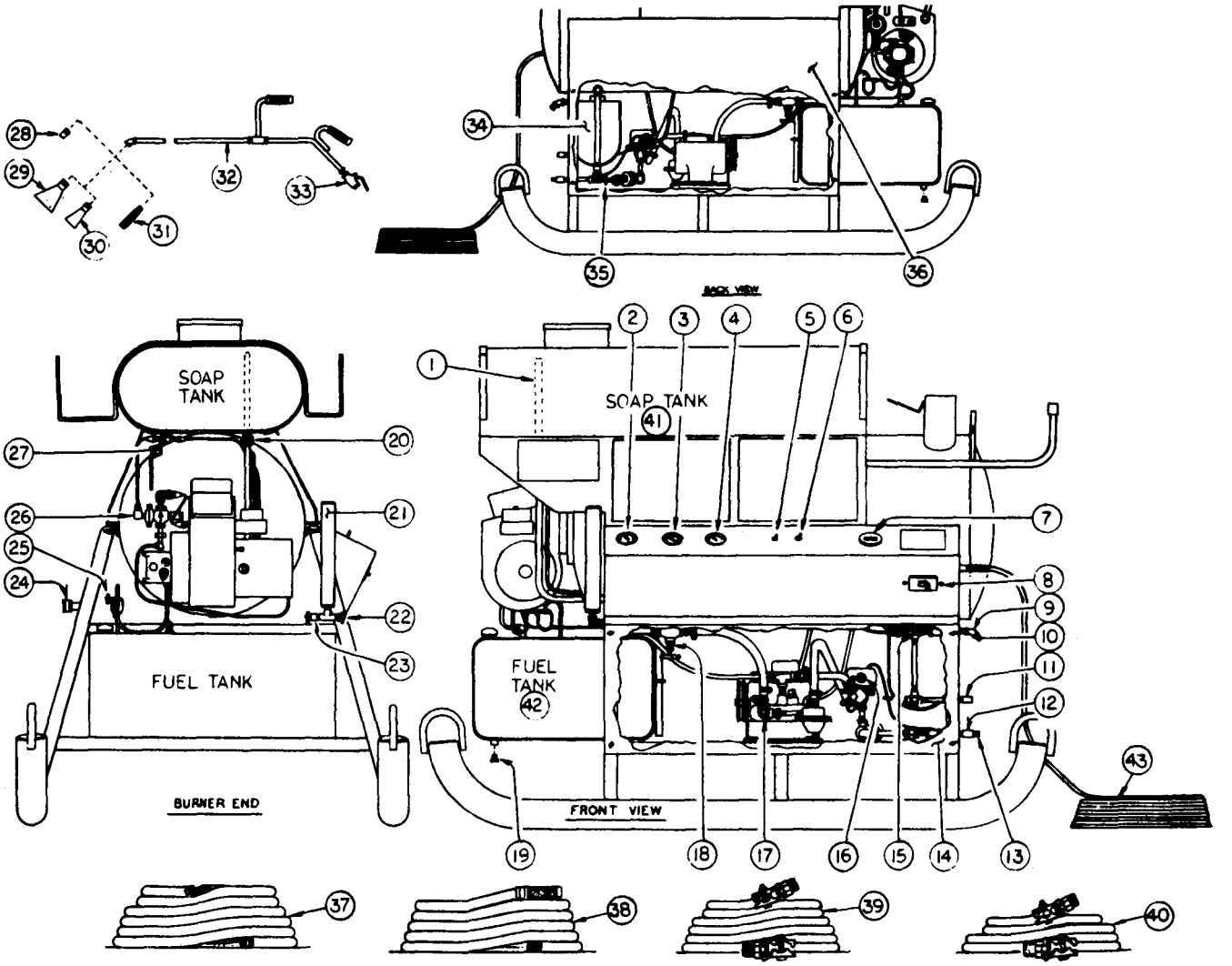

6.5 Unit will gradually come up to operating pressure, approximately 80-100 PSI. Unit is now in full operation.

6.6 Adjust (close) Gauge Dampener Valves, items 15 , and 23, until excessive gauge needle vibration is eliminated.

7.0 STOPPING INSTRUCTIONS (SEE FIGURE III, PAGE 6)

7.1 Secure steam gun and turn off Burner 'ON-OFF' Switch, item 5, and close Soap Metering Valve, item 20.

7.2 Continue to run water pump until cool solid water flows from steam gun nozzle.

7.3 Turn Pump Switch, item 6 , and Circuit Breaker, Item 8, to the "off'" position.

7.4 Turn water supply to the unit OFF.

7.5 In freezing or extremely cold weather, the unit must be drained thoroughly when not in use as follows:

A. Remove Cleaning Hose and Gun, items 32 & 39 , and drain for storage. Caution - Be sure cleaning gun valve is open before removal to bleed off any trapped pressure and to facilitate draining after removal . Turn on water supply,

B. Remove Front Machinery Panel, item 14, and close both Soap Metering Valve, item 20, and Soap Tank 'Fill-Mix' Valve, item 27, and turn on Pump Switch, item 6 .

NOTE : MAKE SURE NO PERSONNEL ARE WITHIN A TEN (10) FOOT RADIUS FROM HOSE DISCHARGE PORT SIDE OF UNIT.

C. Turn on Burner Switch, item 5, and observe discharge from a secure position. When steam or flashes of steam appear at Hose Discharge Port, Item 11, close Blowdown Valve, item 18, and depress Pushbutton Switch, item 16, for not longer than one minute, or until dry steam appears from hose discharge port.

D. Turn off Pump Switch, item 6, wait until all steam ceases emerging from Hose Discharge Port, item 11. Turn on Pump Switch, item 6, and depress Pushbutton, item 16, for not longer than 30 second, to 45 seconds. Turn off Pump Switch, item 6,

NOTE : Procedure 'D' may have to be repeated a few times until all condensate in coils has been dried up (no steam from hose discharge port), Allow 5 minutes between repeated procedures.

E. Turn off Burner Switch, item 5. Remove Soap Tank Overflow-Drain Stand Pipe, iterm 1 . Remove pump Discharge Manifold Drain Plug, item 17, Blowdown Port Plug, item 10, and Auxiliary water Source Port Plug, item 13. Remove and drain for stowage Water Supply Hose, item 37, or 38.

F. Turn on Pump Switch, i tern 6 , and allow to run until it gulps air (runs dry). Turn off Pump Switch, item 6 . Fully open Soap Tank Fill & Mix Valve, item 27, Soap Metering Valve. item 20, and Blowdown Valve, item 1B. Allow unit to drain,

NOTE : Never operate water pump when dry to avoid excessive wear of cups and/or scoring of cylinder walls.

G. To fully protect water pump it is advisable to remove discharge manifold, drain and wipe (or blow) cylinders dry, and reinstall (See Servicing the Water Pump, page 25).

H. When completely drained, reinstall blowdown port plug and auxiliary water source port plug. open Gauge Dampener Valves fully, items 15 & 23, and open Airdome Drain Valve, item 22.

I. If auxiliary intake hose has been used, drain for stowage. If unit is to be stored for long periods or for transportation, drain fuel tank by removing Drain Plug, item 19.

NOTE: If frequent usage is required during freezing temperature the entire system can be charged with a 50% solution of permanent type anti-freeze through the cleaner's auxiliary hose port system. The anti-freeze solution can be reclaimed and used again as required through the use of a suitable container, i.e., 50 gallon drum.

8.0 MAINTENANCE INSTRUCTIONS (SEE FIGURE IV, PAGE 8)

MAINTENANCE PROCEDURE
FIGURE IV
MODEL 200-AO

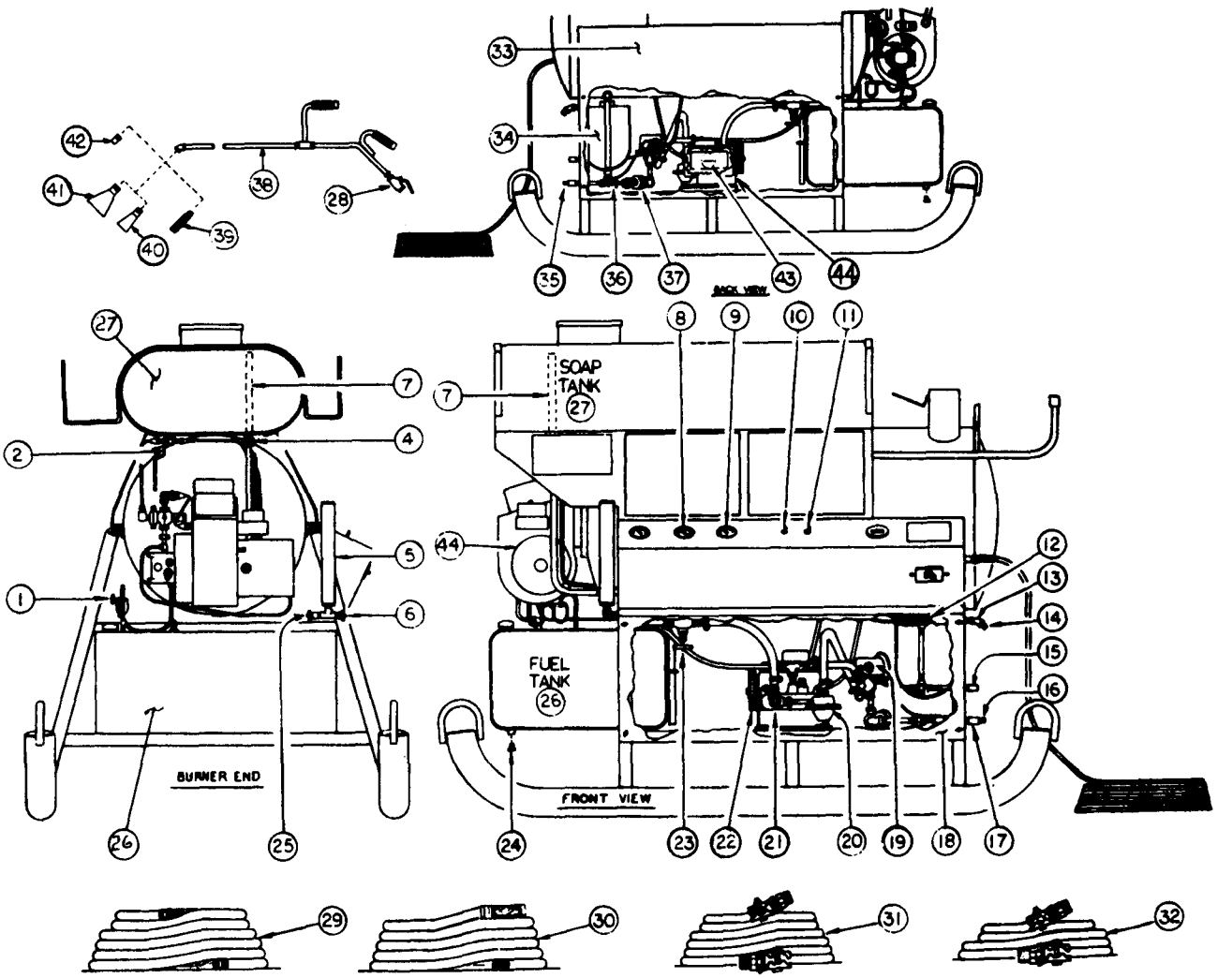

CAUTION

The Electric Motor, item 44, is equipped with an automatic overload protector switch. If tripped, it will reset automatically when motor cools, causing motor to restart without warning.

In case overload protector switch is tripped, turn off Pump Switch, item 10. Check for cause of problem, Pump Belt, item 22, too tight, low or improper electrical voltage, loss of water pump crankcase oil (bearing seizure), etc. Allow five (5) minutes for motor to cool before restarting.

8.1 Daily Maintenance: Drain solution line air dome by opening Air Dome Drain Valve, item 6, located between the coil and pump. Always drain when machine is idle and switch is off. Since the air dome acts as a cushion between the pump and the pressure In the coil, it should be drained each day before starting and after every four (4) hours of continuous use. Failure to do this may result in undue wear on check valves and pump bearings. Additionally, this air cushion prevents each pump injection from hammering the coil and loosening bits of scale that could clog the nozzle tip.

8.1.2 Remove Rear Panel, item 33. Check pump for proper oil level and condition; check pump V-belt alignment and tension. Lubricate oil wicks in water pump every week with S.A.E. #30 non-detergent oil.

8.1.3 Check water supply tank for proper water level and water supply tank 'On-Off'. valve (open for pressurized supply, closed for auxiliary water supply), Reinstall Rear Panel, item 33.

8.1.4 Remove Front Panel, item 18. Check hoses, clamps and fittings for condition and leaks, Replace Front Panel, item 18.

8.1.5 Inspect water supply and discharge steam hose for loose fittings, kinks, cracks, etc. and for leaks. If damaged do not use, repair or replace.

8.1.6 Under all operating conditions, mineral deposits in the water will form scale within the heating coils. Initial deposits are soft sludge, gradually hardening to form hard scale. The blowdown procedure (see Paragraph 8.3) performed daily (every 8 hours of operation) will remove most of this soft sludge and eliminate excessive acid descaling procedures.

8.2 Monthly Maintenance. (REFERENCE FIG. Iv, PAGE 8)

8.2.1 Clean Water Supply Tank, item 34, and Soap Supply Tank, item 27, Remove Drain Plug, item 16, and Overflow-Drain Pipe, item 7 , and flush out with clear water, Replace plug and overflow-drain pipe.

8.2.2 Check pump V-belt tension. Belt, item 22, must not slip when operating at maximum pressure.

8.2.3 Clean Water Supply Filter, item 37. Remove Plug, item 37, and flush out with clear water. Replace plug.

8.2.4 Carefully inspect all supply and steam hoses and fittings for kinks, cracks, signs of deterioration, wear and tightness, repair or replace as required,

8.2.5 Check Fuel Oil Filter, item 1, If dirty, remove bowl and screen, clean and replace,

8.2.6 Check for coil restriction (scale). Remove nozzle from Cleaning Gun, Item 38, Turn on Pump Switch, item 11, check Coil Inlet Pressure Gauge, item 8, with Coil Outlet Pressure Gauge, item 9. If differential is 40 PSI or more, the coil should be descaled (See Descaling Procedure, paragraph 8.4).

8.3 BLOWDOWN PROCEDURE (REFERENCE FIG. IV, PAGE 8)

CAUTION

Improper procedure can damage equipment, hose and cleaning gun assembles, Only authorized personnel who have READ and UNDERSTAND this procedure should be permitted to perform this function.

8.3.1 If operating, shut down unit in normal manner. See "Stopping the Cleaner", Paragraph 7.0. Secure cleaning gun with gun "on-off" valve in "off" position, and remove BLOWDOWN Port Sealing Plug, item 14.

WARNING: **BLEED OFF ALL PRESSURE PRIOR TO REMOVING BLOWDOWN PORT SEALING PLUG. MAKE SURE NO PERSONNEL ARE WITHIN A TEN (10) FOOT RADIUS FROM BLOWDOWN PORT SIDE OF UNIT.**

8.3.2 **Remove Machinery Panel, item 18, and shut off inlet and outlet Guage Dampner Valves, items 12 & 25 ,** Soap Metering Valve, item 4, and Soap Tank Fill and Mix Valve, item 2, Start cleaner in normal manner. See "Starting the Cleaner", Paragraph 6.0.

NOTE: Water should discharge from the blowdown port only, cleaning gun must remain closed during entire operation to avoid possible excessive heat damage to steam hose or whipping of hose and gun.

8.3.3 Turn on Burner Switch, item 10, and observe discharge from a secure position, When steam or flashes of steam appear at blowdown port, close Blowdown Valve, item 23, and depress Pushbutton Switch, item 19, for not longer than ONE MINUTE or until dry steam appears from Blowdown Port.

8.3.4 Next, quickly turn off Burner Switch, item 10, and open Blowdown Valve, item 23. Cold Hater entering the very hot coil will flash into steam, loosening and blowing out obdurate scale formation. Allow cleaner cooperate (fire off) until cool water emerges from Blowdown Port. Turn off Pump Switch, item 11. (See note)

MAINTENANCE PROCEDURE

FIGURE IV

MODEL 200-AO

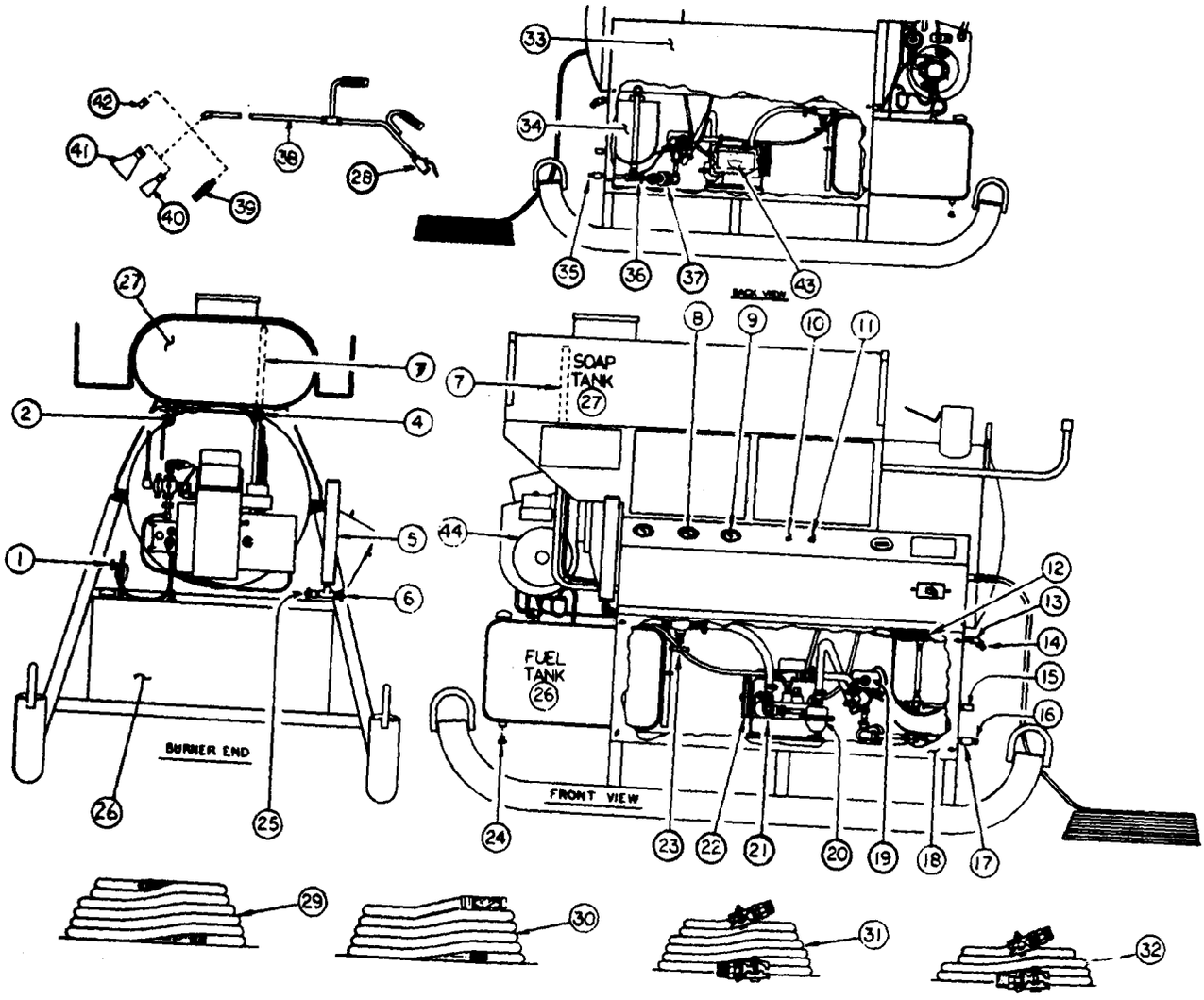

(REFERENCE FIG. IV, PAGE 10)

8.3.5 Reinstall Blowdown Port Sealing Plug, item 14, remove nozzle from secured steam cleaning gun, and **open cleaning gun "on & off" valve.** Turn on Pump Switch, item 11, and Burner Switch, item 10, allow cleaner to operate for four or five minutes.

8.3.6 Turn off Burner Switch, item 10. Allow unit to run until cool water emerges from cleaning gun. Then turn off Pump Switch, item 11. Close cleaning gun "on-off" valve and reinstall cleaning gun nozzle, restart cleaner in normal manner, when operating, (gun open, burner on), open and adjust inlet and outlet pressure gauge dampener valves, and reinstall Machinery Panel, item 18. Cleaner is now ready for normal operation.

NOTE : If cleaner is badly scaled, this procedure can be repeated a few times. If repeated blowdowns fail to reduce back pressure to acceptable limits. Cleaner should be descaled. See "Descaling Procedure" paragraph 8.4.

WARNING

Whenever preparing cleaner for blowdown procedure be sure no personnel are within a ten (10) foot radius of the Blowdown Port, item 13. During this procedure superheated steam will emerge from the blowdown port. FAILURE TO D0 SO COULD RESULT IN SEVERE OR POSSIBLE FATAL INJURY TO PERSONNEL.

8.4 COIL DESCALING PROCEDURE (REFERENCE FIG. IV, PAGE 10)

WARNING

Inhibited coil descaling liquid contains hydrocloric acid and is both a poison as well as a corrosive chemical. The acid should not be handled unless user is properly clothed, including rubber boots, apron, gloves, full face mask, and has read and understands the following procedure as well as all precautions printed on acid container. FAILURE TO DO SO COULD RESULT IN SEVERE OR POSSIBLE FATAL INJURY TO PERSONNEL.

8.4.1 Under all operating conditions mineral deposits in the water will form scale on the inside of the heating coils requiring periodic removal. The descaling procedure Is accomplished as follows:

8.4.2 With the cleaner in normal operating mode but secured, remove both Machinery Panels, item 18 & 33, and selected cleaning gun nozzle. Close Soap Tank Fill & Mix Valve, item 2; Gauge Dampener Valves, itams 12 & 25 and open "ON" & "OFF Valvelve on cleaning gun, item 28. Turn off Soap Metering Valve, item 4. Operate cleaner, burner off long enough to clear all soap solution out of system, four (4) or five (5) minutes.

8.4.3 Shut off water pump and secure (shut off) water supply to cleaner. Turn water pump on just long enough to reduce water level in Water Supply Tank, item 34, to approximately two (2) inches.

NOTE : If water supply is through Auxiliary Hater Port, item 17, it will be necessary to first reinstall Auxiliary Hater Port Sealing Plug, item 16, open Water Supply Tank Shut Off Valve, item 36, and add enough water to Water Supply Tank, item 34 to two (2") inch level with unit fully primed.

8.4.4 To avoid nuisance clogging of the cleaners Water Filter, item 37, it is recommended a dished filter of steel or copper window screening be inserted on top of Water Supply Tank, item 34, and cleaning gun be positioned and secured to permit recirculation of water from water supply tank through cleaner, hose and cleaning gun back into water supply tank through dished filter screen.

8.4.5 With Pump Switcn, item 11, "on" and Burner Switch, item 10" off." (NOTE: THIS ENTIRE PROCEDURE IS DONE WITHOUT HEAT.). Allow water to start recirculating. Add one (1) pint of descaler every five (5) minutes (if badly scaled every ten (10) minutes for the first gallon) until two (2) gallons of descaler liquid have been added. Scale remover is most effective if added slowly in this manner.

8.4.6 **Allow acid to recirculate through cleaner for approximately one and one half (1½) hours after** adding the descaler. It may be necessary to stop cleaner from time to time to remove scale accumulation from dished filter screen and/or to pump excess solution into another container to avoid overflowing water supply tank.

8.4.7 Stop cleaner's pump, remove cleaning gun and dished filter screening from water supply tank insert cleaning gun into drain, sump, or suitable container. Open water supply to water supply tank and circulate fresh water through cleaner until clear water emerges from cleaning gun.

NOTE : If water supply is through Auxiliary Water Port, item 17, it will be necessary to first remove auxiliary water port sealing plug and allow descaling solution to drain from Water Supply Tank, item 34, and it's related plumbing, flush water supply tank with clear water to remove any residual descaling solution then close Water Supply Tank Shut Off Valve, item 36 Reattach supply hose to Auxiliary Water port, item 17, and resume following procedures.

MAINTENANCE PROCEDURE
FIGURE IV
MODEL 200-AO

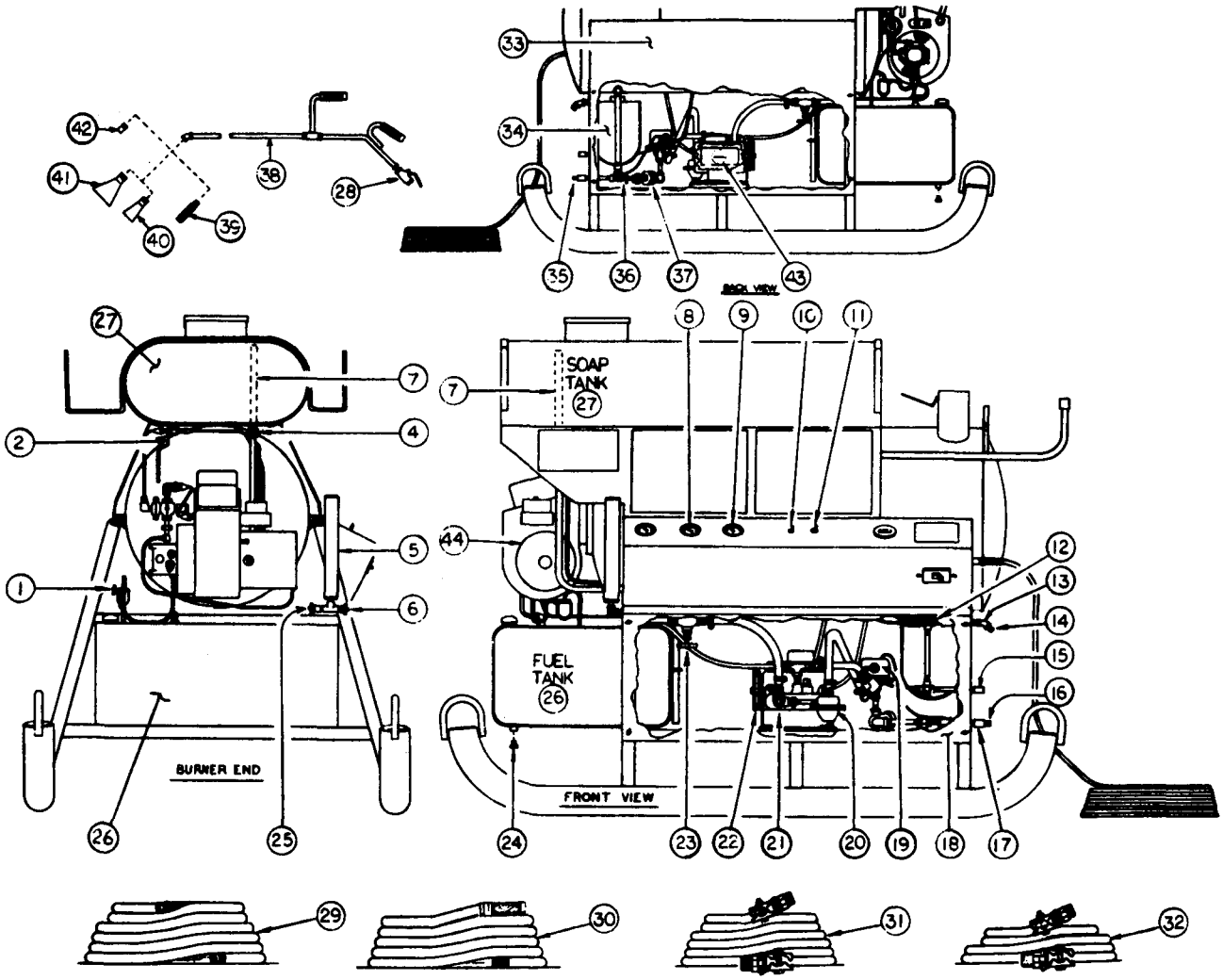

(REFERENCE FIG. IV, PAGE 12)

8.4.8 With cleaning gun secured, Valve, item 28, open, and water supply tank maintaining correct level, open Soap Metering Valve, item 4, to its normal supply position and turn on Burner Switch, item 10 Operate cleaner for approximately five (5) minutes, turn off Burner Switch, item 10, allow discharge to cool, turn off Water Pump Switch, item 11.

8.4.9 Reinstall Cleaning Gun Nozzle, item 39, and Machinery Panel, item 33. Start up cleaner in normal manner, open and adjust Gauge Dampener Valves, items 12 & 25, reinstall Machinery Panel, item 18. Cleaner is now ready for normal operation or may be secured.

9.0 ADJUSTMENTS AS MAY BE REQUIRED

W A R N I N G

DISCONNECT MAIN POWER SUPPLY PRIOR TO ADJUSTING ANY ELECTRICAL COMPONENTS .

9.1 Hydro/Fuel Safety Modulator (Reference Figure III, item 26, Page 6)

The Hydro/Fuel Safety Modulator has been factory adjusted at 80-100 PSI. Should You desire a higher or lower steam pressure, proceed as follows:

9.1.1 With unit operating at factory adjusted pressure, turn Hydro/Fuel Safety Modulator hex cap clockwise for more pressure, counter-clockwise for less pressure. Allow approximately two (2) minutes for unit to attain new setting before readjusting the modulator again. Once desired pressure is obtained, the Hydro/Fuel Safety Modulator will automatically maintain the pressure,

9.2 Burner Electrode Adjustment (Reference Figure A, Page 24)

9.2.1 The automatic electric ignition is preset at the factory and should not require further adjustment. However, if electrode insulation should crack or electrode tips wear, adjustment or replacement may be necessary. Please refer to Figure A for proper alignment of electrodes. NOTE: Electrode tip height and position away from burner nozzle is critical for proper ignition of fuel and should be maintained for satisfactory operation.

9.3 Float Valve Adjustment (Reference Figure VII, item 2, Page 38)

9.3.1 The float valve should be adjusted to maintain a water level of approximately three inches below water tank overflow outlet. If water level is too high or low, loosen wing-screw on ratchet float rod mounting arm to the next notch according to the water level required. If the selected notch locates the float ball too high or low, gently bend float rod until proper setting is obtained.

9.4 Pump V-Belt Adjustment (Reference Figure IV, item 22).

9.4.1 With unit in an "off" condition, loosen the four pump or motor mounting nuts and slide either forward or backward until proper belt tension is acquired. Be sure to check Motor and Pump pulleys for proper alignment. Straighten as required

9.5 Burner, Flame Detector (Figure XVII, items 41 & 42, Page 48)

9.5.1 The burner is equipped with a flame safety device which terminates burner operation in the event of flame failure and consists of a Cad-Cell, item 42, and Main Control Switch, item 41.

9.5.2 The Cad-Cell, item 42, is mounted on the inside of the hinged transformer cover, item 5 . Remove the Cad-Cell from its socket assembly (grasp end of cell, push in and turn counter clockwise). If Cad-Cell has soot accumulation, wipe clean with a soft cloth and. reinstall into socket assembly.

NOTE: The Cad-Cell clip assembly must be positioned to allow face of Cad-Cell to point directly through the hole in the Air Tube Assembly to sight flame (See Burner Safety Control, Page 24).

9.6 Fuel Pump Pressure Adjustment (Reference Page 23)

9.6.1 The Fuel Pump, item 10, is factory preset at 125-135 PSI and should require no further adjustment. If, for any reason, adjustment is necessary, the slotted Adjusting Screw, item 11, is located at the upper right of the pump when viewed from the rear of the burner assembly.

9.6.2 To increase pressure turn slotted Adjusting Screw, item 11, clockwise. To decrease pressure, turn counter-clockwise. Maximum pressure should not exceed 145 PSI. Pump will “lock out” at 150+ PSI.

9.7 Air Mixture Adjustment (Reference Figure XVII, Page 48)

9.7.1 The air intake is located on the left side of the Blower Housing and consists of two interlocking bands, item 11. To adjust, loosen the screw on the outer band and rotate to desired position. Retighten screw to assure permanent adjustment.

PREPARING FOR STORAGE OR RESHIPPING
FIGURE V
MODEL 200-AO

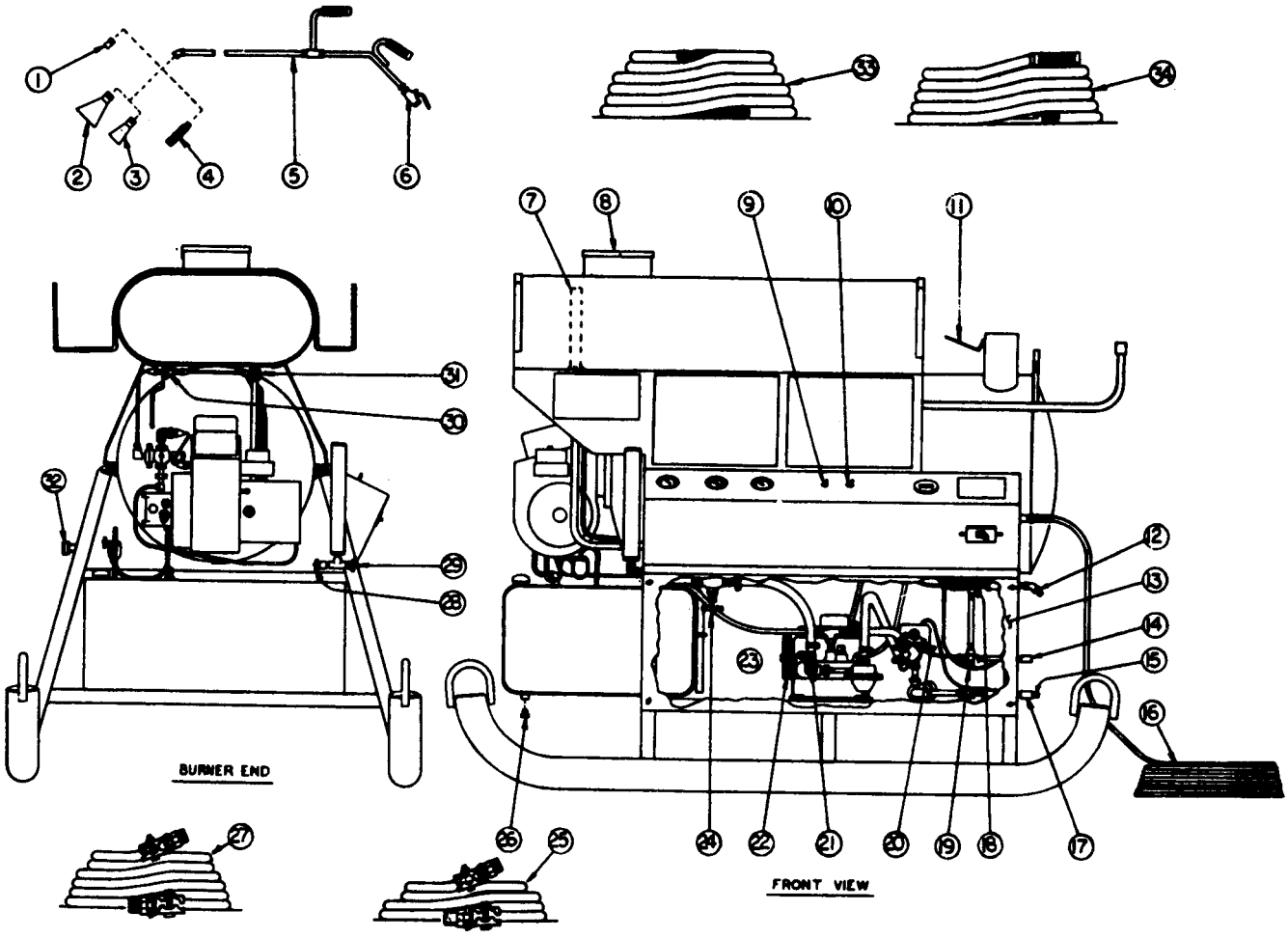

NOTE: For maximum burner efficiency, adjust bands closed until burner emits dark smoke; slowly open until exhaust clears.

9.7.2 If air adjustment fails to provide proper exhaust, Inspect for dirty, loose or worn burner nozzle or excessively sooted coil. Clean and/or replace as necessary,

9.8 Flow Switch Adjustment (Reference Figure XIII, Page 44)

9.8.1 The Flow Switch, item 1 , monitors adequate water supply to the Water Pump, In the event of inadequate or loss of water supply, the switch will "open" and shut down the burner system.

9.8.2 The Flow Switch is factory set and should require no further adjustment, Should, for any reason, the switch require adjustment, turning the adjusting screw clockwise increases water flow required to actuate Burner System; counter-clockwise decreases required water flow.

9.9 Bypass Valve Adjustment (Reference Figure XV, Page 46, & Figure XXV, Page 56)

9.9.1 The Bypass Valve, 415-15-01, is designed to recycle the water pump's capacity back to the pump intake whenever the Cleaning Gun "on-off" Valve is closed, Since water ceases to flow through the Flow Switch, burner operation Is terminated along with soap solution flow if Soap Metering Valve is open.

9.9.2 The Bypass Valve, item 30. is factory set to be fully open at 165 to 185 PSI and should not require further adjustment.

9.9.3 To adjust valve, loosen lock nut and turn stem clockwise to increase bypass pressure; turn counter-clockwise to decrease bypass pressure,

9.10 Over-Temperature Safety Switch (Reference Figure XXV, Page 56)

9.10.1 The Over-Temperature Safety Switch, item 27, is located on the outlet side of the coil just upstream of the steam hose discharge port and is designed to terminate burner operation in the event the solution discharge temperature exceeds design limits,

9.10.2 This switch is factory set and is non-adjustable and is wired in series with the Flow Switch, item 29 . If it malfunctions, it must be replaced,

9.11 Preparing Cleaner for Storage or Reshipping (SEE FIGURE V, PAGE 14)

9.11.1 Drain unit as per instructions in paragraph 7.5, items A through I.

9.11.2 Drain Hater Supply Hoses, items 33 and 34 , Steam Hoses, items 25 and 27 , and seal fittings with suitable tape to protect treads and coil with at least three string ties 120° apart. Stow and secure on hose racks.

9.11.3 Secure Nozzle(s), items 1 , 2 , 3 , or 4 onto Cleaning Gun, item 5, and the balance in their respective storage receptacles. Drain and stow Cleaning Gun, item 5,across front or rear hose racks and tie securely.

9.11.4 Coil and string tie as in Paragraph 9.11.2 Electric Supply Cable, item 16 , and stow and secure on available stowage rack.

9.11.5 Cover with suitable tape, pipe plug or cap all exposed fittings, i.e. , Float Valve Connector, item 32 and Steam Hose Port, item 14 , and tape shut Soap Tank Port Cover, item 8 and Vent Stack Cover, item 11

9.11.6 If storing, cover with tarpaulin or other suitable protective cover. If reshipping, it is recommended the unit be recrated in original shipping container or in crate conforming to either I.C.C. Regulations or Mil-Std. 1188A (Commercial).

9.11.7 The Cleaner, when properly drained for storage, will store without damage in a temperature range of minus 65° Fahrenheit (F) to plus 150° Fahrenheit (F).

TROUBLE SHOOTING CHART

OIL FIRED 200-AO SERIES

How to use: Evaluate exact behavior of equipment failure and cross-reference with possible cause at applicable boxes marked with an X.

PROBLEM \ POSSIBLE CAUSES	Power Failure to Equipment	Improper Supply Voltage	Circuit Breaker Switch Open	Inadequate Water from Supply Line	Plugged Auxiliary Hose Intake Screen	Improperly adjusted Float Valve	Air Leaks in Pump Intake Lines	Obstruction in Pump Check Valves	Worn Pump Cups - O-Rings	Oil Filter Valve Closed	Burner Switch Off or Defective	Cad-Cell Dirty, Misaligned or Defective	Burner Safety Reset Switch Open	Excessive Draft - Readjust Blower Gate	Cleaning Gun Valve Closed - Open	Blowdown Valve Closed - Open	Motor Overload Switch Open	Improper Hydro/Fuel Safety Modulator Adjustment	Inadequate Water Flow to Actuate Flow Switch	Electrodes Shorted or Improper Gap	Burned Out or Shorted Transformer	Excessive Scale in Coil	Nozzle too Large or Worn	Belts Loose and Slipping	Soap Agitating Valve left Open	Faulty Pump Cups and/or Seals	Water Bypass Regulator Leaking	Excessive Operating Pressure	Nozzle Too Small	Nozzle, Gun, Hoses Restricted - Plugged	Back Pressure in Heating Coils	Improper Flow Switch Setting	Leaking Discharge Hose or Fittings	Overtemperature Switch Open or Shorted	Airdome Drain Valve Open	Airdome Needs Draining	Unit not Level (Max. Allow. 15° Any Direction)	Soap Valve Off	Lack of Chemical in Soap Tank	Improper Air Adjustment	Float Valve Leaking or Improper Adjustment	Improper Grounding of Equipment	Loose Electrical Terminals
Main switches will not engage	X	X	X																																									X
Motor & Pump runs - no water flow				X	X	X	X	X	X						X	X						X			X					X					X								
Burner will not Ignite					X					X	X	X	X	X	X	X	X	X	X	X	X	X					X	X		X		X		X									
Low nozzle pressure				X	X			X	X														X	X	X	X	X								X								
Motor stalls while operating		X	X														X											X	X														X
Regulator bypassing-gun open																X							X				X		X	X	X												
Burner stays on - gun closed																									X							X	X		X								
Unit vibrates or hammers							X																	X		X					X					X							
Nozzle pressure erratic				X	X		X		X															X		X	X								X								
Lack of chemical at nozzle																																						X	X				
Low operating temperature														X				X				X																		X			
Burner cycles on and off												X						X														X			X								
Electrical shock from unit																																										X	X
Water tank overflows						X																															X			X			
Excessive operating temperature																		X																									
Motor will not start	X		X																																								
Pump will not prime				X	X	X	X	X	X																	X																	
Gun opened - no discharge flow					X											X						X					X			X					X								

10.0 TROUBLE SHOOTING INFORMATION

As an aid in locating and correcting problems which may occur in transit or while the cleaner is in operation, this section was developed to assist the operator, Many operational problems are caused by inexperienced operators rather then mechanical failures, With this in mind, this list was prepared as completely as possible to remedy problems and eliminate unnecessary maintenance in the furure.

PROBLEM	PROBABLE CAUSE	REMEDY
10.1 Lack of water at steam gun when pump is turned on (burner off). Dry steam from gun when burner is on.	a. Insufficient water in water supply tank.	a (1) Check for low water line pressure. (2) Check float valve and float valve setting, Repair or replace. (3) Check main water supply valve for restriction and fully "ON" position. Open valve, remove restriction.
	b. Loss of water through leaky valves.	b (1) Air dome drain valve partially open or leaking. Close or replace. (2) pump by-pass valve leaking. Clean or replace.
	c. Coil restricted or plugged.	c. See Descale Procedure, paragraph 8.4.
	d. Solution pump not operating properly.	(1) V-belt or pulleys slipping. Tighten or replace. (2) Pump intake hose restricted or loose. Clean and/or tighten hose clamps. (3) See (Trouble shooting-Water pump Page 25).
10.2 Loss of Motor Speed	a. Improper voltage or frequency.	a (1) Check motor nameplate electrical requirements. (2) Inspect main power supply, fuses, circuit breakers for proper voltage and frequency.
	b. Inadequate size feed line to unit.	Check local electrical code requirements. Repair or replace as required.
	c. Electric motor overloaded.	c (1) Check coil back pressure, descale i f back pressure exceeds 30-40 PSI. (2) Check pump bearings for binding. Replace as required. (3) Pump V-belt too tight. Loosen.
	d. Loose connections.	d (1) Check power cord for loose connections. Tighten. (2) Check motor, ignition transformer and start switch for loose connections. Tighten. (3) Check for bare wires shorting out. Repair or replace.
10.3 Excessive steam pressure, over 100 PSI.	a. Restriction in steam hose, gun, nozzle or gun 'on & off' valve partially open.	a(l) Remove restriction and clean. Open Gun Valve. (2) Check steam hose for bulges, kinks or restrictions. Clean and/or replace as necessary.
	b. Lack of water from water pump.	b. See paragraph 10.1
	c. Hydro/Fuel Safety Modulator set too high.	c. Readjust per paragraph 9.1
	d. Steam pressure gauge inoperative.	d. Replace as necessary.
	e. Hydro/Fuel Safety Modulator restricted or plugged.	e(l) Remove line and clean. (2) Check line for cracks or leaks. Replace as required.

PROBLEM (continued)	PROBABLE CAUSE	REMEDY
10.4 Excessive pressure on steam pressure gauge when pump is ON, burner OFF.	a. Restriction in steam hose, gun, nozzle or gun 'on & off' valve partially open.	a. Remove restriction or replace. Make sure gun valve is fully opened.
10.5 Burner will not light.	a. Burner filter valve turned off	a. Open valves.
	b. Restriction causing back pressure to actuate Hydro/Fuel Safety Modulator to "off" position. Gun valve closed.	b. Check steam gun, nozzle and steam hose for restriction. Remove and clean, Open gun valve.
	c. Hydro/Fuel Safety Modulator not adjusted properly.	c. Readjust per paragraph 9.1.
	d. Burner nozzle dirty or restricted,	d. Clean and/or replace nozzle. Clean nozzle with air pressure only.
	e. Electrodes cracked or out of alignment.	e. If electrode is cracked, replace. Re-align electrode per Fig. A, page 24.
	f. Cad-Cell sooted or misaligned.	f. Clean or replace, check alignment.
	g. Ignition transformer open or shorted.	g. Replace transformer.
	h. Safety Control 'Open!	h. Depress reset button (see paragraph 9,5)
	j. Fuel pump inoperative.	j. Check fuel pump for proper operation. Repair as required.
	k. Motor thermal overload open.	k. Depress reset button on burner motor.
	l. Water in fuel tank.	l. Remove filter bowl and check. Drain if necessary.
	m. Excessive air adjustment.	m. Adjust air per paragraph 9.7.
10.6 Unit will not heat properly.	a. Dirty burner nozzle or wrong size.	a. Clean and/or replace with nozzle (4.0 x 80° PLP-Monarch)
	b. Hydro/Fuel Safety Modulator not adjusted properly.	b. Readjust per paragraph 9.1.
	c. Fuel pump pressure too low.	c. Readjust fuel pump pressure per paragraph 9.6.
	d. Improper fuel/air mixture.	d. Adjust air gate per paragraph 9.7.
	e. Back pressure in coil.	e. Descale if back pressure exceeds 30-40 PSI .
	f. Restriction in combustion chamber or vent stack.	f. Clean as required.
	g. Improper or contaminated fuel.	g. Clean or replace fuel to proper specification,
10.7 Lack of soap at steam gun.	a. Soap solution tank empty.	a. Recharge tank.
	b. Soap metering valve closed or restricted.	b. Open valve, remove restriction.
	c. Soap solution weak.	c. Add more soap concentrate when recharging soap tank.
	d. Soap solution line to pump clogged, restricted or kinked.	d. Clean, repair or replace tubing.

(continued)

PROBLEM	PROBABLE CAUSE	REMEDY
10.8 Coil hammering or pounding.	a. Air dome full of water.	a(1) Drain air dome every four (4) hours of continuous use. (2) Leak in air dome. Repair or replace.
	b. Restriction in water system.	b(1) Clean steam gun, nozzle or hose. (2) If coil back pressure exceeds 30-40 PSI, descale. (See page 11.)
10.9 Pressure bypass valve opens.	a. Back pressure in coil.	a. Descale coil if back pressure exceeds 30-40 PSI.
	b. Restriction in steam hose, gun or nozzle.	b(l) Remove restriction. (2) Open blowdown valve.
	c. Restriction in safety relief valve.	c. Clean or replace valve.
10.10 Water pump hammering or pounding.	a. Air dome full of water.	a. Drain air dome.
	b. Restriction in steam hose, gun or nozzle.	b. Remove restriction.
	c. Pump v-belt loose.	c. Tighten belt.
	d. Worn parts in pump.	d. Replace as required.
	e. Weak check valve springs.	e. Replace as required.
10.11 Burner cycles on and off steam gun closed, pump on.	a. Leaks in water pressure system.	a. Check all valves, fittings, hose clamps for leaks. Repair or replace as required.
	b. Leak in heater coil.	b. Repair or replace.
	c. By-pass valve leaking.	c. Repair or replace.
10.12 Burner will not start when steam gun 'ON-OFF' valve is open, pump and burner ON.	a. Restriction in steam hose, gun or nozzle.	a. Remove restriction.
	b. Flow switch malfunctioning.	b. Clean or replace.
	c. Shorts, opens or loose connections in electrical wiring.	c (1) Repair, tighten connections or replace wire. (2) Check overtemperature switch.
10.13 Burner will not stay lit.	a. Cracked electrode insulation.	a. Repair or replace.
	b. Cad-Cell dirty or misaligned.	b. Clean Cad-Cell, Check alignment.
	c. Excessive back pressure in hose or gun causing Hydro/Fuel Safety Modulator to shut off fuel to burner.	c. Remove restriction or descale.
	d. Dirty Fuel.	d. Drain tank and fill with clean fuel.
	e. Poor transformer contact.	e. Engage transformer contacts with electrode buss bar.

11.0 COMPONENT SERVICING INFORMATION

This section was developed to assist the operator or service personnel in service, repair or rebuilding of serviceable components. Items not covered in this section are either nonrepairable, or more economical to replace.

11.1 Installation of Hydro/Fuel Safety Modulator Repair Kits

NOTE: Before attempting these procedures, cool down and stop "cleaner as per paragraph 7.0. Disconnect main electrical power source and open cleaning gun valve to relieve all discharge pressures. Close Soap Tank Fill-Mix Valve and Fuel Filter Valve.

11.1.1 Installing Repair Kit #1178-K1 (Reference Figure Below)

A. Remove the Hydro/Fuel Safety Modulator assembly as a unit by removing tubing flare nut fittings and removing assembly at pipe union.

B. Unscrew Adjusting Cap (item 10) to relieve all Spring (item 11) pressure off of Diaphragm (item 3). Remove Cap Screws (item 1) and lift off Cover (item 4), marking cover and body to assure proper reassembly and tube fitting alignment.

C. Remove old Diaphragm (item 3) and Diaphragm Gasket (item 2) and clean resting surfaces of Cover (item 4) and Valve Body (Item 8).

D. Install new Diaphragm (item 3), new Gasket (item 2) and old Cover (item 4) in that order, using care not to nick or scratch mating surfaces, then install and carefully tighten Screws (item 1) evenly to assure a high pressure seal, Reinstall assembly on cleaner.

NOTE: Whenever replacing this Hydro/Fuel Safety Modulator, be sure flow arrow is in direction of normal fuel oil flow . . . from fuel pump towards burner.

11.1.2 Installing Repair Kit #1178-K2 (Reference Figure Below)

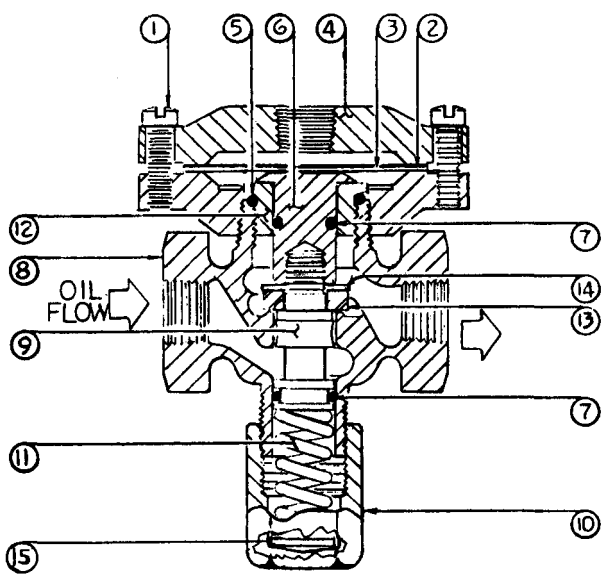

HYDRO/FUEL SAFETY MODULATOR
Part No. 1178-01

A. Same procedure as A, B and C of Paragraph 11.1.1 above.

B, Retighten Adjusting Cap (item 10) to raise Valve Assembly (item 6) and item 9) to full open position. Pull out Plunger (item 6) free of Valve Body (item 8) and use wide blade screw driver to unscrew Plunger Cup (item 12), and pull out Valve Assembly (item 9).

c. Remove Brass Washer (item 14), old Plunger Disc (item 13) and O-Rings (items 5 & 7). Grease new O-rings and install on Valve (item 9) and Plunger (item 6), avoiding O-ring distortion.

D, Install new Plunger Disc (item 13) and Washer (item 14) round face up as indicated on Valve (item 7), then reinstall Plunger Cup (item 12).

E. Remove Adjusting Cap (item 10) and old Spring (item 11), Insert Plunger (item 6) using care to avoid distortion of O-ring and reassemble Diaphragm (item 3), Gasket (item 2), and Cover (item 4) , as per paragraph 11.1.1, item D above.

F. Install new Spring (item 11) and Adjusting Cap (item 10) and reinstall assembly to cleaner. Re-attach tubing at elbow fittings. Be sure washer (item 15) is installed as shown.

NOTE: Bleed pressure line of all air by loosening flare nut at fitting on Cover (item 4), and open Fuel Filter Valve.

11.1.3 Adjusting Hydro/Fuel Safety Modulator

To readjust the Hydro/Fuel Safety Modulator follow procedure as outlined in paragraphs 9.1 and 9.1.1.

SERVICING THE BURNER ASSEMBLY

1. Checking the Transformer:

To check the transformer it is necessary to operate the cleaner in a normal manner with water pump operating, Burner Switch 'off' and Fuel Filter Valve closed as follows:

a) Loosen Transformer locking clip enough to free transformer, Hinge transformer, back on its side.

b) Place a small insulated handle screw drived blade across the transformer's exposed terminals (CAUTION - Be sure to use an insulated handled screw driver to avoid shock)

c Turn on Burner Switch and raise one end of screw driver blade from one terminal. A spark arc gap of 1/2 inch indicates good transformer condition. Weak or no spark indicates loose or broken primary connections or a replacement transformer is required.

NOTE: There is only a forty-five (45) seconds interval from the time the Burner Switch is turned "on" and the Flame Detector Control automatically terminates power to the transformer. The above test must be made during this forty-five (45) second period. The Flame Detector Control reset button must be activated after this test, and Fuel Filter Valve opened.

2. Fuel Pump Pressure Adjustment:

The Fuel Pump is factory preset at 125 to 135 p.s.i. and should require no further adjustment. If, for any reason, adjustment is necessary proceed as follows:

a) The slotted Adjusting Screw is located on the upper right side of the Fuel Pump when viewed from the rear of the Burner Assembly.

b) Using a smell screw driver, turning adjusting screw clockwise (tightening) increases pump pressure, counter-clockwise (loosening) decreases pump pressure.

3. Burner Air Adjustment:

The proper supply of air is necessary for proper and efficient burner combustion. D0 NOT attempt to operate this equipment in a completely closed room. If used indoors, or within an enclosure, provide an opening of at 1 east two (2) square feet for make-up air and vent cleaner exhaust to the outside. FAILURE TO D0 SO COULD RESULT IN SEVERE OR POSSIBLE FATAL INJURY TO PERSONNEL. Adjust air intake as follows:

a) The Burner is equipped with adjustable Air Gates (Bands) located on the left side of the blower housing with a clamp type locking screw on the outer gate (band). To adjust, loosen locking screw so outer gate may be hand rotated.

b) Opening the air ports increases air supply, closing ports decreases air supply. With cleaner operating normally, fire on, close air ports until dark smoke emerges from Coil Vent Port, slowly open air ports until smoke clears. Tighten air gate locking screws to secure adjustment.

NOTE: See High Altitude Burner Adjustment, Page 22. .

Checking the Cad Cell:

1. The Cad Cell is a device that "sights" the flame; in the event of flame failure the Cad Cell will signal the Flame Detector Control to shut down the Burner System. Nuisance shutdown of Burner System will occur if Cad Cell face is dirty or is misaligned with sight hole in the Baffle Plate located within the air tube assembly. These two possibilities should be checked out prior to the following procedures:

a) Remove Cad Cell leadwires to Flame Detector control, start cleaner and burner in normal manner. After Burner fires, place a temporary jumper between terminals F-F. Now connect ohmmeter across Cad Cell leadwires, resistance should read under 1600 ohms.

b) Stop burner at burner switch and remove temporary jumper and check 'dark' (fire off) Cad Cell resistance across leadwires, resistance should be greater than 20,000 ohms.

Checking the Cad Cell: (continued)

c) If Cad Cell resistances differ from above. recheck wiring, sight alignment, or for dirty Cad Cell, Part No. 1175-42-05. Reconnect Cad Cell leadwires.

Checking the Flame Detector Control:

1. If the Cad Cell tests Indicate a properly functioning Cad Cell, check the Flame Detector Control as follows:

a) Turn Burner Switch to off position, depress reset button on Flame Detector Control and remove the Cad Cell leadwires from the terminals F-F.

b) Attach one lead of a 2000 ohm resistor (of any wattage value) to one 'F' terminal. Start cleaner in normal manner and turn on burner switch. As soon as flame is established, attach the other lead of the 2000 ohm resistor to the other ' F' terminal.

NOTE: The 2000 ohm resistor must be attached to the 'F' - 'F' terminals within 8 seconds after flame has been established or Flame Detector Control will lock out on safety and shut down burner operation.

c) If the Flame Detector Control still locks out on safety and terminates burner operation, the Flame Detector Control must be replaced, Part No. 1175-41-05.

NOTE: To verify above test results, wait at least 10 minutes and repeat step (b) above.

d) After above tests, and repairs or replacement are completed, remove the 20O0 ohm resistor. The Flame Detector Control will not allow the burner to start if the Cad Cell terminals (F-F) are jumpered.

NOTE: If Cad Cell and Flame Detector Control prove functional, and burner still fails to operate properly. check "Trouble Shooting Information" for other possible causes, paragraphs 10.5, 10.6, l0.ll, 10.12 and 10.13.

High Altitude Burner Adjustment:

The air Adjusting Bands on, the burner have been factory adjusted for proper operation between sea level and 1000-foot elevation at standard conditions (60° ambient water and air temperature) with sufficient excess fuel pressure (before modulation) to assure satisfactory operation with as low as 45° F, ambient water and air temperatures.

For each additional 1000 feet of elevation it will be necessary to increase the air supply to the burner compartment approximately 5% to assure proper and efficient combustion of the fuel.

In the event the cleaner is operated with ambient water and air temperatures below 45° F., it may be necessary to increase the burner's fuel pressure which will also require more air supply for the increased fuel supply.

To avoid inefficient operation and possible excessive sooting at higher elevations or in extreme cold weather operation It will become necessary to read just the burner's air supply and it is recommended the air adjustment be set with the use of a Smoke Analyzer kit. A reading of #3 smoke spot or less is acceptable during full burner (before modulation of fuel pressure) operation.

REMOVING THE BURNER ASSEMBLY

While there is rarely any cause to remove the entire Burner Assembly since such items as Burner Nozzle, Electrodes, Transformer, Flame Detector Control and Cad Cell can be replaced without removal of the complete unit.

However, should the Burner Assembly be removed for replacement or 'Bench' overhaul the following procedure should be followed:

WARNING

Before attempting this procedure make certain all service (Electric & Water) has been secured and both Fuel and Plumbing Systems have been relieved of all pressure. FAILURE TO D0 SO COULD RESULT IN SEVERE OR FATAL INJURY TO PERSONNEL.

1. Removing the Burner Assembly:

   a) After making sure unit is no longer connected to any electrical source, lift Flame Detector Control, item 1, from Its Mounting Box, item 2, by loosening the slotted screws anchoring control upon the Mounting Box. Disconnect wire leads at Burner Junction Box, item 2, open Squeeze Clamp to permit removal of Burner Switch Wiring, re-attach Flame Detector Control to Mounting Box.

   b) Turn 'Off' Fuel Filter Valve, item 6 , and disconnect "Fuel Filter to Fuel Pump" Hose, item 5, and "Fuel Return, Pump to Tank" Hose, item 4. Disconnect 1/4" Copper Tube lead, item 8, at Hydro/Fuel Safety Modulator, item 9, and 1/4" Copper Tube Lead, item 7, from Fuel Pump to Fuel Pressure Gauge.

   c) The Burner Assembly is fastened to the Heater End Bell by three bolts welded directly to the Heater End Bell. After Removing the three stud nuts and washers, the Burner Assembly can be withdrawn, being careful not to tip the air tube during withdrawal to avoid damaging the Burner Drumhead Moulded Insulation.

   NOTE #1 : It may be advisable to have help when removing the Burner Assembly which weighs approximately fifty pounds,

2. To reinstall a new or repaired Burner Assembly, reverse the directions as given in paragraph one (1) above.

   NOTE #2: As explained in the first paragraph above, most components of the Burner Assembly are not repairable, only replaceable, Including the Fuel Pump, item 10, Part No. 1175-21-05. However, the replacement Fuel Oil Pump is factory supplied as a single tube bypassing system along with a small plug to install to convert the Fuel Oil Pump into a dual tube (supply & return) fuel pump to make the fuel system self-priming.

   Before installing a factory supplied Fuel Oil Pump replacement, first install the supplied plug fully into the threaded port as shown below. (This is the lower right-hand port opening (return line port) when facing the fuel pump side of the Burner Assembly)

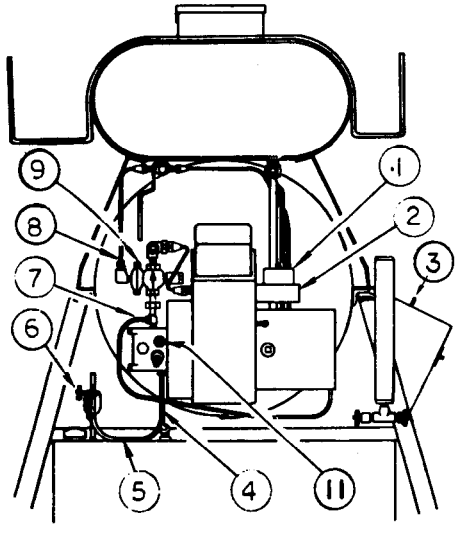

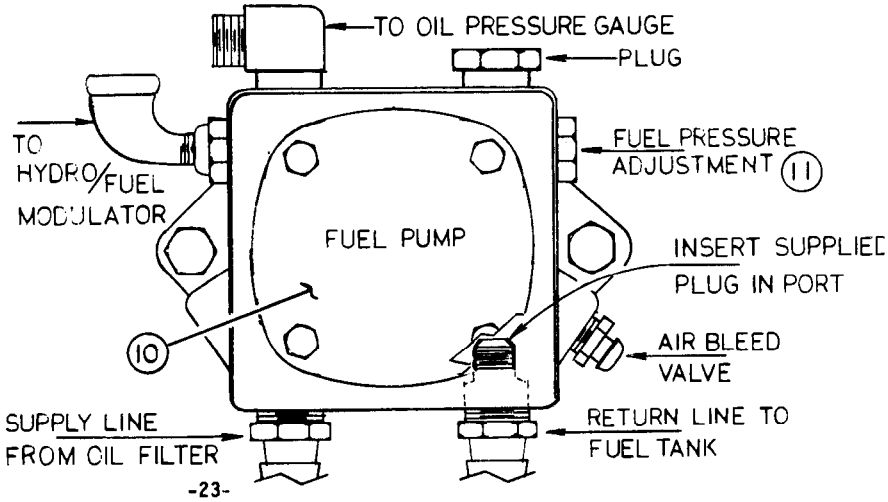

CHECKING THE BURNER DRAWER ASSEMBLY

1. The Burner Drawer Assembly consists of the following items: Fuel Nozzle, Part No. 1175-46-05; Adaptor, Part No. 1175-33-05; Electrodes, 1175-48-05 & 1175-49-05; Baffle Plate Part No. 1175-31-05; Electrode Holder, Part No. 1175-29-05; Electrode Leads, Part No. 1175-25-05; Oil Pipe, Part No. 1175-24-05, and Oil Line Fitting, Part No. 1175-23-05.

2. Of the above components, only the Fuel Nozzle and Electrodes may require periodic inspection cleaning and/or replacement. The Drawer Assembly can be readily removed from the Burner Assembly as follows: (Reference Figures A and B below)

   a) With cleaner secured and disconnected from electrical power source, disconnect 3/16" Copper Tube, item 3, Figure B, to Burner" at Burner connection, Loosen and remove Pipe Adaptor Locking Nut, item 4.

   b) Loosen transformer locking clamp enough to permit hinging the transformer on its side and gently push Drawer Oil Pipe fitting into blower housing. Rotate Drawer Oil Pipe 90° clockwise and "work" Drawer Assembly Oil Pipe backwards through slot in rear air vane panel until Drawer Assembly can be removed from Air Tube. Burner Drawer Assembly is now available for "bench" servicing.

   c) The Burner Fuel Nozzle, Figure A, may now be removed for cleanlng or replacement. Never clean nozzle face with wire brush nor probe orifice with wire or pick, such handling will ruin nozzle. Clean only with air pressure and/or disassemble and clean in carburetor, small parts cleaner, or replace with new fuel nozzle.

   d) Check electrode insulators for cracks or shorts, replace as required, see Figure A below for proper electrode alignment.

   e) Check electrode alignment and position in relation to fuel nozzle tip and centerline. Proper position and spacing (gap) is critical to designed burner performance.

   CAUTION: During this procedure do not loosen Slot Cover Locking Screw, item 2, Figure B, below, as the Slot Cover, item 1, positions the Burner Drawer for both Fuel Nozzle and Nozzle Adaptor alignment for optimum burner performance. If, for any reason, the Arrow Locator Decal, item 5, is lost and slot cover is moved, the entire Burner Assembly will have to be removed to properly realign the Burner Drawer in relation to Air Tube Cone, item 7.

3. To replace the Burner Drawer Assembly, reverse the procedures as outlined in paragraphs (b) and (a) above.

   NOTE : When reattaching Pipe Adaptor Locking Nut, item 4, be sure it is wrench tightened as depicted below to assure proper centering of the Fuel Nozzle within the Air Tube. Improper fuel nozzle centering in relation to the Air Tube can result in poor combustion due to flame impingement.

4. If Nozzle Adaptor (see Figure A below) is removed or replaced. make certain when reinstalling that the flat surface stamped "TOP" is in the correct "installed" position. This is a "dribble-proof nozzle adaptor and will only function as intended when installed properly.

FIGURE A

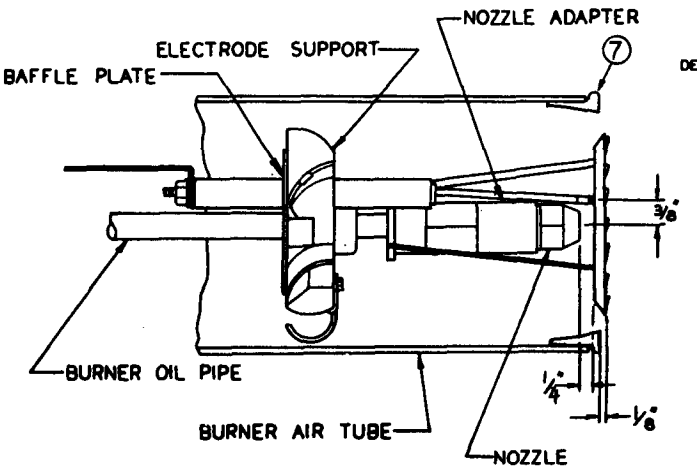

FIGURE B

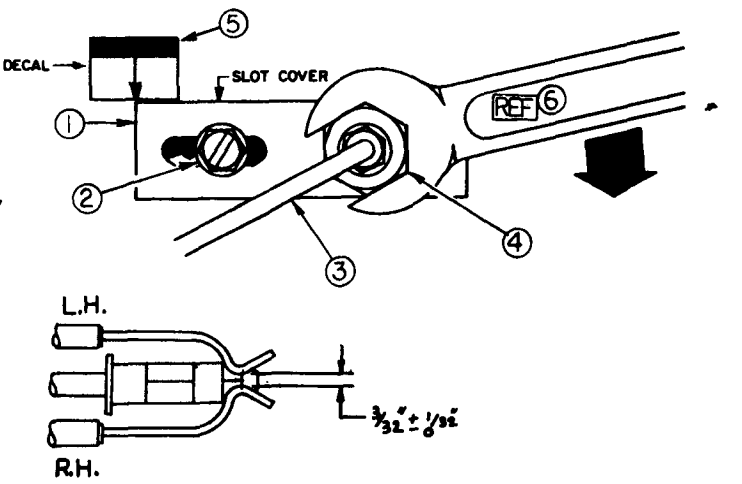

TROUBLE SHOOTING

Malfunction	Pump	System	Cause	Field	Shop	Remedy
Water in crankcase	X	X	Condensation in crankcase	X	X	Drain oil and refill
	X		Defective intake manifold seals		X	Replace seals
Water runs out manifold drain	X		Defective intake manifold seals		X	Replace Seals
		X	High pressure at inlet	X		Replace intake manifold assembly
				X		Reduce pressure below 50 PSI
Oil leaks from crankcase	X		Drain plug loose	X	X	Tighten finger tight only
	X		Cracked cover on crankcase	X	X	Replace cover
	X		Cover gasket split	X	X	Replace gasket
	X		Loose crankcase cover	X	X	Tighten screws
	X		Defective crankshaft seal		X	Replace seal
	X		Defective or missing bearing Retainer O-Ring		X	Replace O-ring
Loss of pressure and poor suction		X	Slipping drive belt	X		Tighten belt
	X		Piston cup failure	X	X	Replace piston assembly
	X		Broken back up ring			
		X	Unloader stuck open	X	X	Repair or replace unloader
		X	Spray nozzle worn	X		Replace nozzle
	X		Scored cylinder walls	X	X	Replace cylinders
	X		Defective discharge valves	X	X	Replace discharge valves
	X		Broken discharge valve spring	X	X	Replace spring
	X		Intake valves pitted	X	X	Replace intake valves
		X	Restriction in inlet line	X		Clean inlet screen
	X		Defective intake manifold seals		X	Replace seals
				X		Replace intake manifold assembly
Noisy operation	X		Crankshaft bearing failure		X	Replace bearings
	X		Connecting rod bearing failure		X	Replace connecting rod
	X		Broken connecting rod			
	X		Piston retainer loose or off	X	X	Replace retainer
		X	Loose pulleys	X		Tighten pulleys

LUBRICATION: After 50 HOURS OPERATION, drain oil and add 1 oz. oil additive P/N 1190-47-05 into the crankcase, then refill with fresh SAE #30 Non-Detergent oil to oil level line. Check the oil level periodically. No further oil changes are necessary unless water enters the crankcase, usually from condensation or a leaking pushrod seal. This type of contamination would cause the oil level to rise above the line and during operation the oil would have an opaque discoloration. Change the oil and additive and replace seals if necessary. Extra 2 Oz. bottles of additive are available as Part 1190 -47-05. When draining the crankcase, be careful to replace the aluminum drain plug without pinching the O-ring seal, as this would cause leakage of oil. This drain plug should be finger tight only. Do not tighten with a pliers.

The oil wicks are lubricated at assembly, but add one squirt of SAE #30 non-detergent motor oil in each oil fill hole in the top of the intake manifold prior to initial operation and every week or 50 hours thereafter. Failure to oil the wicks regularly will cause premature pump leakage.

PUMP REPAIR SECTION

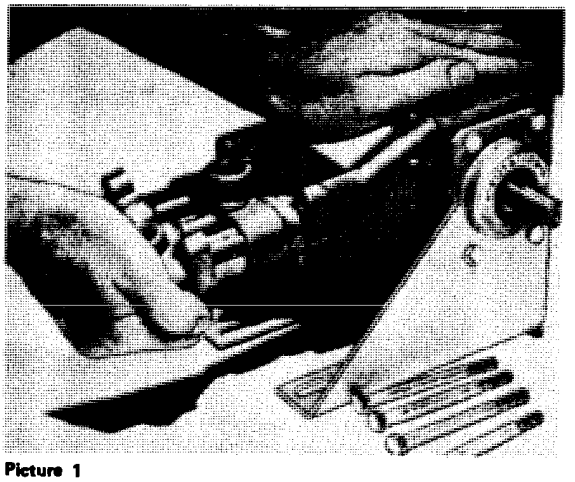

Picture 1

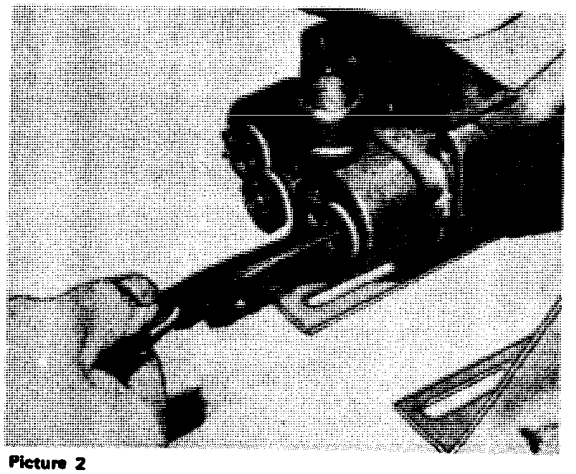

Picture 2

Picture 3

PISTON REPLACEMENT

1. Remove the four hex head cap screws holding the discharge manifold. Pull the discharge manifold off with a slight rocking motion as shown in Picture 1, then pull out the cylinders. Use a pair of pliers as shown in Picture 2 and unscrew the piston retainer. Remove the intake valve seat and piston assembly. Use a wire brush to clean all sealant off the threaded ends of the retainers and wipe the threads clean with a rag soaked in alcohol or decreasing solvent.

2. Place the piston assembly and the intake valve seat on the retainer. The rubber cup side of the piston is placed adjacent to the "+" portion of the retainer and the rounded or smooth side of the intake valve seat adjacent to the metal side of the piston. Put one or two small drops of adhesive/sealant onto the end of the male thread on the retainer. Install the retainer in the pushrod and tongue to 40-50 inch-pounds. Do not "fill" the female threaded port ion of the push rod or you will not be able to disassemble the parts at some future time.

3. Check the inside surface of the cylinder before replacing it; if it is badly scratched or scored, replace it. Put a light film of oil on the inside diameter of the cylinder and on the O-rings at each end. Slip the cylinder over the piston as shown in Picture 3 until it touches the intake manifold bore. Push the cylinder into the intake manifold bore as shown in Picture 4 until it is firmly seated. Take care not to pinch the O-ring when replacing the cylinder.

Tools referenced are not required to disassemble, repair, or assemble the water pump. They are available for major repair shops when volume warrants.

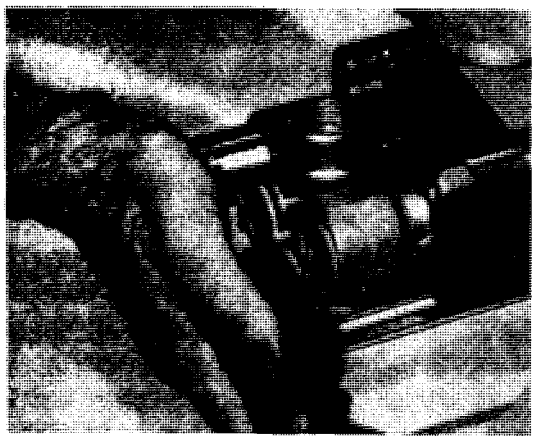

Picture 4

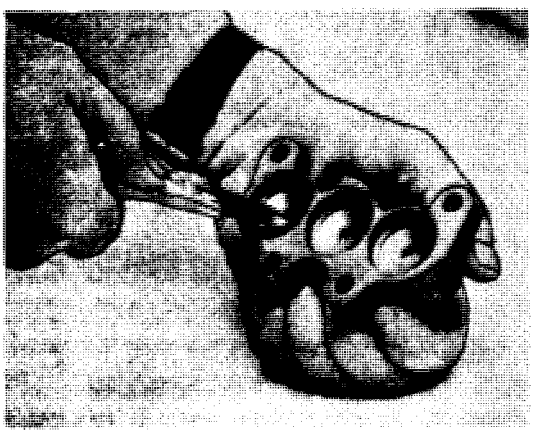

Picture 5

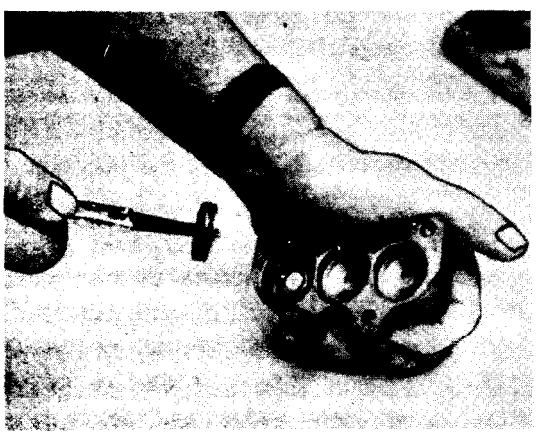

Picture 6

4. Clean the discharge valve seats and bores, then replace the discharge manifold assembly onto the cylinders until seated firmly, again being careful not to pinch the O-rings, Check at both ends of the cylinders for any part of an O-ring showing. If any O-ring is visible, it has been cut during assembly and must be replaced or the pump will leak.

5. Replace the four hex head cap screws and tighten by hand, then wrench tighten them 1/4 turn at a time in the following sequence until seated. #1, #4, #2, #3. Do not overtighten! Maximum torque is 60 inch-pounds.

#1 ● ● #3

#2 ● ● #4

6. After pump is reassembled, turn the pulley over a few turns by hand to make sure all parts are moving freely.

DISCHARGE VALVES

Remove the discharge manifold as per instructions in Piston Replacement section. Use the Valve Extractor tool, Part 1190-49-05, as shown in Pictures 5 and 6, to remove the discharge valve seat, then remove the discharge valve poppet and spring. If the seat of the discharge valve is worn until it no longer seals, replace it. The same is true of the face of the poppet. Clean the spring and poppet. Insert one end of the spring into the discharge manifold and, with a turning motion, press it down over the boss at the bottom of the bore until it is firmly seated, Make sure the spring is centered in the bore and place the poppet over the upper end of the spring. The poppet should now be centered in the bore. Replace the discharge valve seat O-ring. Coat the O-ring with a film of oil and, using both thumbs, push the discharge valve seat into the bore until it bottoms. Replace the discharge manifold on the cylinders and tighten the four bolts according to the previous instructions.

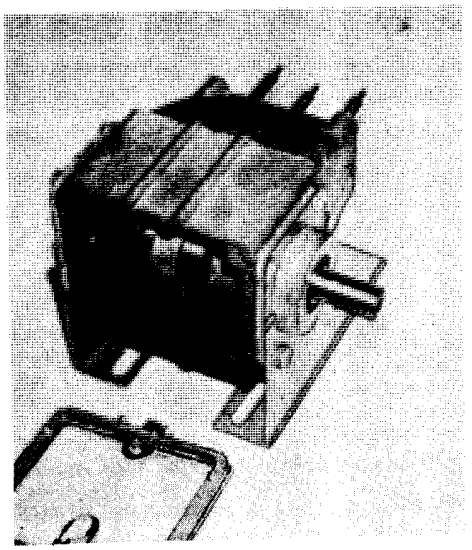

Picture 7

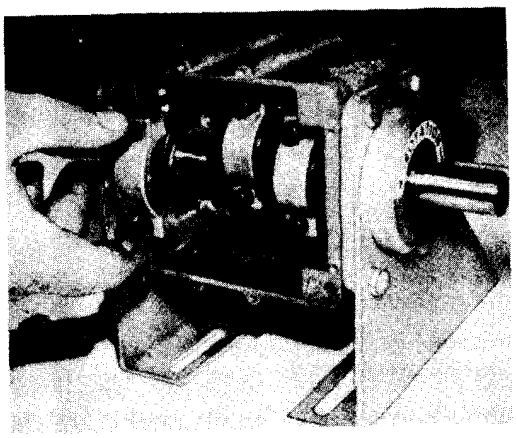

Picture 8

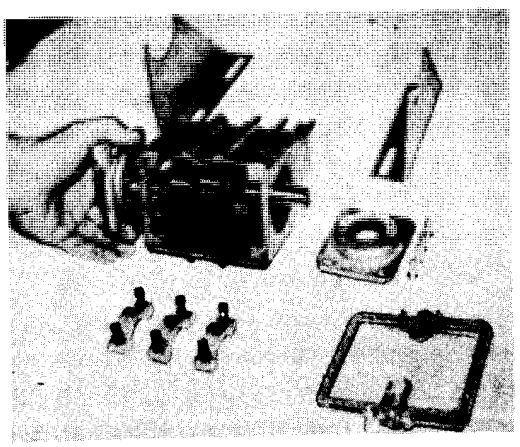

Picture 9

INTAKE MANIFOLD SEAL REPLACEMENT

1. Remove the discharge manifold, cylinders and pistons as previously instructed.

2. Tap the back of the intake manifold boss and pull it forward off the pushrods.

3. Turn the intake manifold cylinder end down and remove the oil wicks.

4. Tap out the old manifold seal with a bolt or screwdriver.

5. Turn the intake manifold over. Using Seal Insert Tool, Part 1190-48-05, hammer new seals into the manifold until they bottom firmly. Apply Loctite to the seal O.D. before pressing it into the manifold. Place flanged ring on seal adjacent to tool.

6. Using a paper towel, press out the oil from the old wicks and replace them in the manifold, aligning the hole in the wick with the hole 'in the new pushrod seal. Reoil until saturated.

7. Cover each pushrod end with a pushrod inserter cap, Part 1190-51-05, then slide the intake manifold on the pushrods until seated against the crankcase.

8. Remove the pushrod inserter caps and reassemble the pistons, cylinders, and discharge manifold. Be sure to clean ail old Loctite off the threaded end of the retainer and to use alcohol or a decreasing solvent to remove any oil film on the retainer before re-Loctiting.

CRANKCASE SEAL REPLACEMENT

1. Remove the discharge manifold, cylinders, pistons, and intake manifold as previously instructed.

2. Drain oil from crankcase and remove plastic crankcase cover with gasket and bezels. See Picture 7.

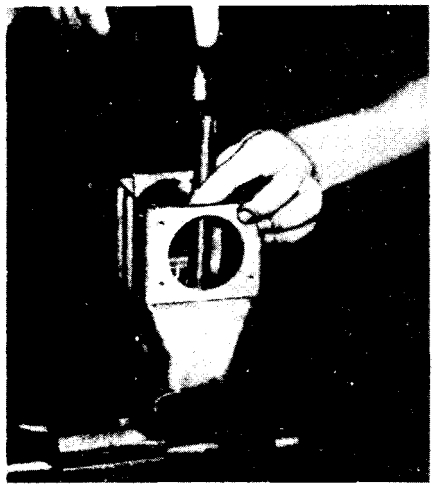

Picture 10

Picture 11

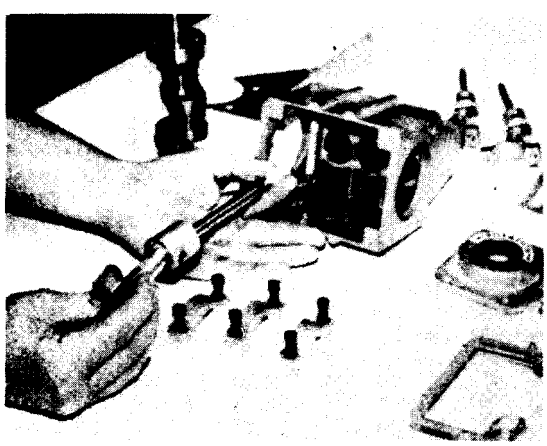

Picture 12

3. Remove connecting rod caps. Note: Match numbers for rods and caps and replace each set on its original journal of the crankshaft. See Picture 8.

4. Push connecting rods up to the crankshaft and remove the 8 bolts holding pump mounts and bearing retainers on both ends of the crankshaft.

5. Using a plastic mallet, tap the crankshaft end to remove it from the open end bearing retainer; leave the closed end bearing retainer in place on the crankshaft.

6. Slide the crankshaft out of the crankcase and pull the connecting rod and pushrod assemblies out of the crankcase; keep them in position with their matching caps so they can each be replaced on their original crankshaft journal.

7. Place the crankcase in an open vise with the seal side down. Use a 3/4" O.D. rod and knock out the old seals. See Picture 10.

8. Using a seal inserter tool, Part 1190-48-05, held against the flanged ring of the seal, press or tap the new seals into the sleeves until firmly seated. Apply Loctite #601 to the seal O.D. before pressing it into the crankcase.

9. Using push rod inserter caps, Part 1190-51-05, on pushrod ends, slide the connecting rod and pushrod assemblies through the new seals, maintaining the original locations. The cast notches on the sides of the connecting rod bearings must be toward the bottom of the crankcase; they serve as oil scoops. See Picture 12.

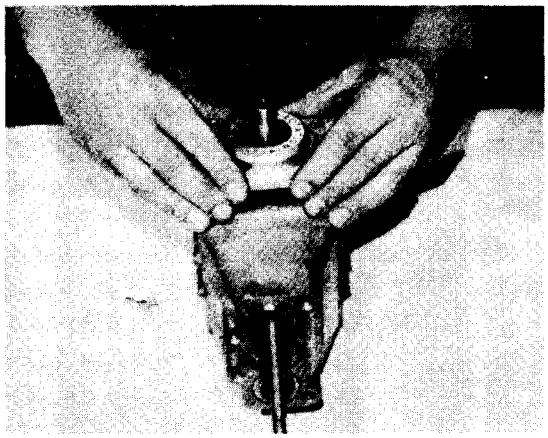

Picture 13

10. Check that the O-rings on both crankshaft bearing retainers are in place and in good condition.

11. Insert the crankshaft with the attached closed end bearing retainer and tighten the top two bolts lightly.

12. Replace the open end bearing retainer on the crankshaft and tighten the top two bolts lightly. See Picture 13. Be careful not to damage the crankshaft seal.

13. Attach pump mounts and tighten the remaining bolts lightly.

14. Tighten all (8) bearing retainer and pump mount bolts firmly (60-70 inch-pounds torque). Check the crankshaft for free rotation.

15. Replace the caps on their matching numbered connecting rods with the stamped number on the cap adjacent to the number on the connecting rod and tighten the socket head cap screws lightly. Rotate the crankshaft to make certain each rod is free.

16. Tighten the socket head cap screws firmly, checking for free rotation of the crankshaft after tightening each set (60-70 inch-pounds torque).

17. Replace crankcase cover, gasket, and bezel and fasten securely. Always use a new gasket 1190-40-05.

18. Replace intake manifold, pistons, cylinders, and discharge manifold as previously instructed.

19. Replace pulley and refill with oil per lubrication instructions before returning to service.

IMPORTANT NOTICE

The following tools are not required to disassemble, repair, or assemble the water pump. These tools are available for major repair shops when volume warrants.

Item	Part No.	Description
1.	1190-48-05	Seal Inserter Tool
2.	1190-49-05	Valve Extractor Tool
3.	1190-51-05	Push Rod Inserter Tool, Plastic

USE THIS PAGE FOR NOTES.

REPLACING THE HEATING COIL
FIGURE VI
MODEL 200-AO

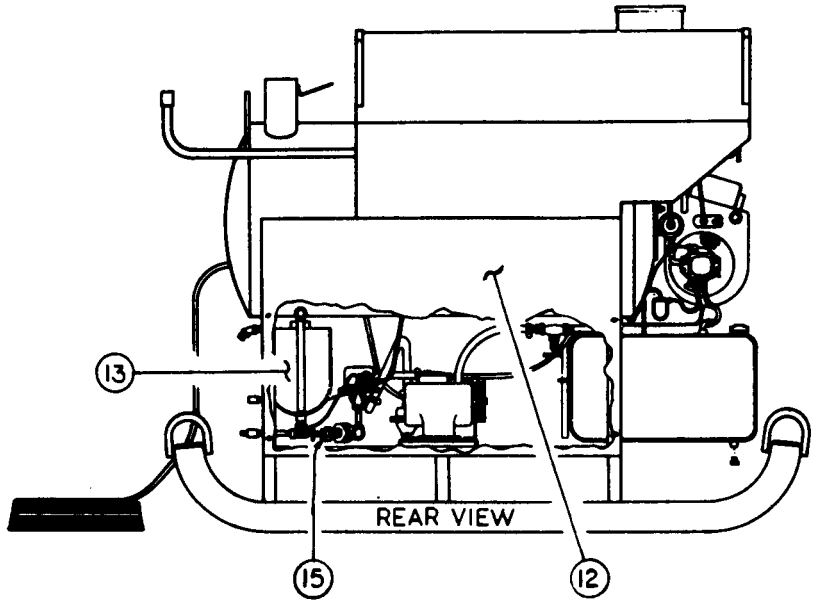

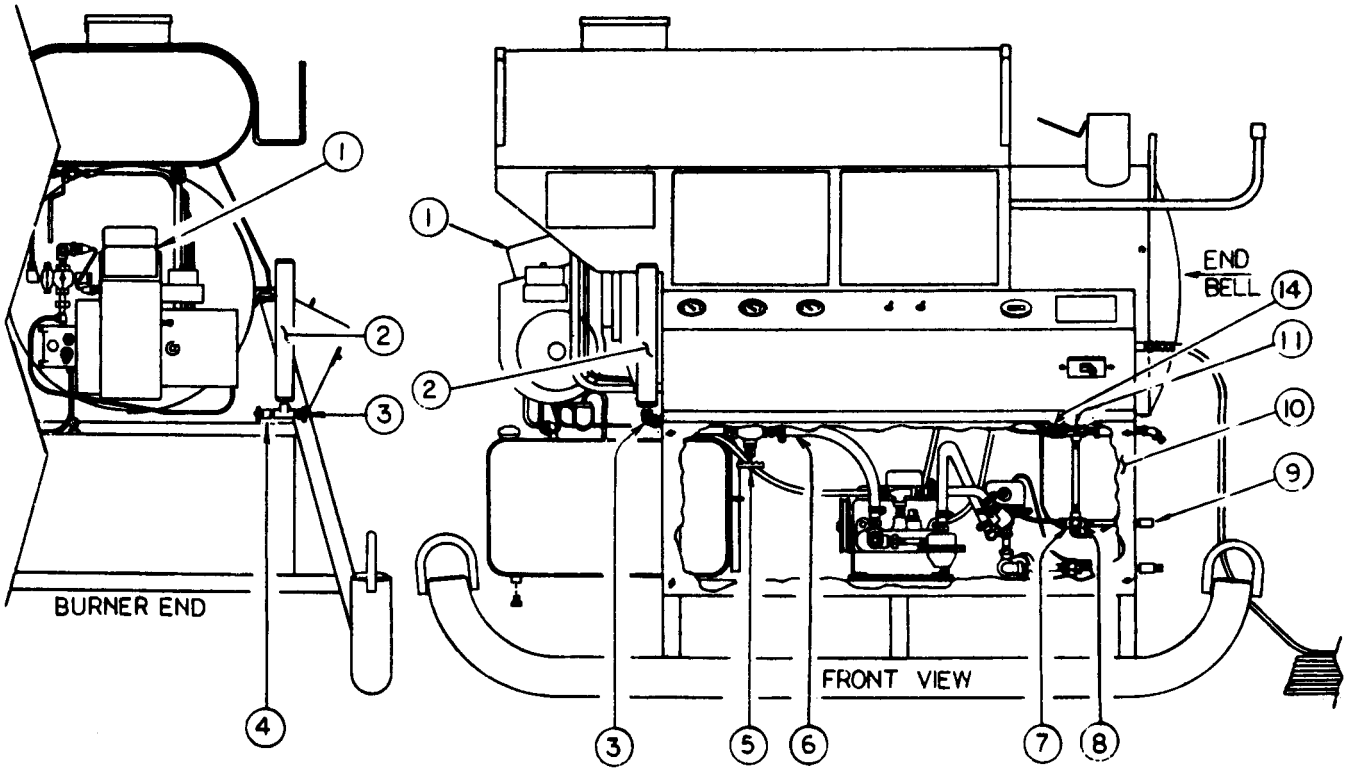

COIL REPLACEMENT PROCEDURE
SEE FIGURES VI & XXVIII

Replacing the coil is a major repair procedure and should not be attempted in other than regular shop facilities It is further recommended that the following insulation also be replaced during this procedure.

Item:	Part No.	Description
1.	1014-2-05	Insulation, Strip, 3" x 54" x 1"
2.	1014-3-05	Insulation, End, 16" Dia. x 1/2"
3.	1014-4-05	Insulation, Strip, 6" x 54" x 1"

WARNING

Before attempting this repair, make certain all service (Electric & Water) has been secured and the system relieved of all pressure. FAILURE TO DO SO COULD RESULT IN SEVERE OR POSSIBLE FATAL INJURY TO PERSONNEL.

1. Removal of End Bell Housing:

a) "Match" mark Bell Housing prior to removal to assure proper alignment when replacing. Remove the three (3) #8 x 1/2" Hex Head-Slotted Self-Tapping Screws equally spaced around periphery of Coil Shell.

b) With suitable mallet inserted through Heater Shell vent opening, tap around the periphery of of the Bell Housing being careful not to dent nor bend the Insulation Retainer Assembly. When removed, set aside.

2. Removal of Coil Inlet Manifold:

a) Remove Front Panel, item 10 . Loosen clamp and remove hose, water pump to coil inlet assembly, at Coil Inlet Assembly, item 6 . Disconnect 1/4" Copper Tubing to Inlet Pressure Gauge at Pressure Gauge Dampening Valve, item 4 .

b) In sequence, remove the following: Inlet Pressure Gauge Dampening Valve, item 4 ; Airdome Drain Valve, item 3 ; Airdome, item 2 ; 1/2" Side Outlet Tee along with the 1/2" x 2" connecting pipe nipple.

c) From the opposite side, in sequence, remove the bonnet of the Blowdown Valve, item 5 ; and as a single assembly remove the hose spud, valve body and 1/2" x 4" connecting pipe nipple. The remaining 1/2" tee along with its coil connecting 1/2" nipple can now be removed from the Coil Assembly.

3. Removal of the Coil Outlet Manifold:

a) Remove the Steam Hose from Steam Hose Outlet Port, item 9 ; loosen pipe mounting clamp and remove 1/2" x 5-1/2" pipe nipple; from the same Side Outlet Tee remove both the Primary Safety Relief Valve, item 8 , and Overheat Safety Switch, item 7 , being careful not to damage the switch's lead wires. Next, remove the Side Outlet Tee along with its 1/2" Dropleg Nipple.

b) Disconnect the 1/4" and 3/8" Copper Tubes and remove Outlet Pressure Gauge Dampening Valve, item 11 , and remaining Side Outlet Tee. From the opposite side remove Blowdown Port Assembly with its connecting 1/2" x 2" nipple. The Coil Discharge Tee l long with its connecting 1/2" nipple can now be removed from the Coil Assembly.

4. Pulling the Coil:

a) If old insulation is to be re-used, gently work 6" Insulation Strip, Part #1014-4-05 from coil and shell assembly and set aside. Remove Rear Panel, item 12 .

b) Before coil can be removed, three 1/4-20 x 1/2" Hex Head Self-Tapping Coil Alignment bolts must be removed; two are located on either side of the heater shell (burner side) slightly below the horizontal centerline, the third bolt is located at the bottom of the vent end and can be reached through rear opening between Water Supply Tank, item 13, and Heater Shell.

REPLACING THE HEATING COIL
FIGURE VI
MODEL 200-AO

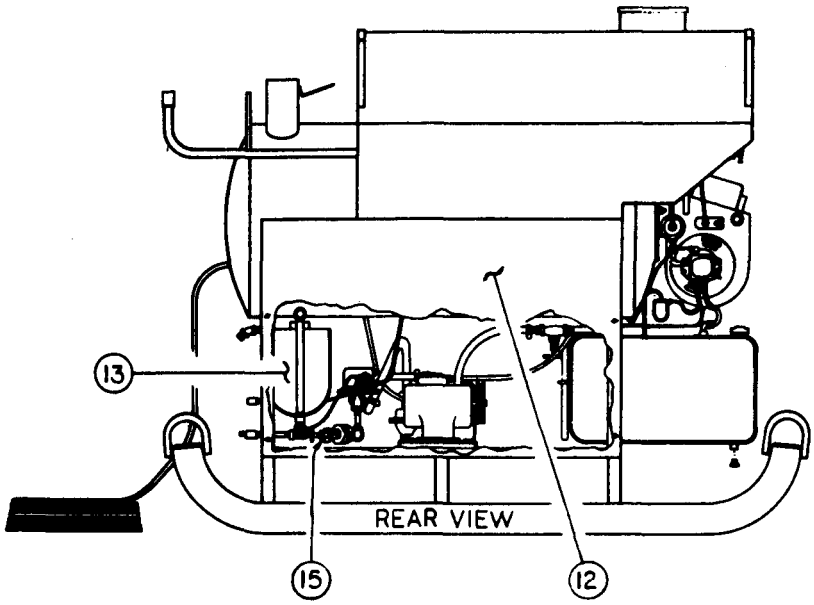

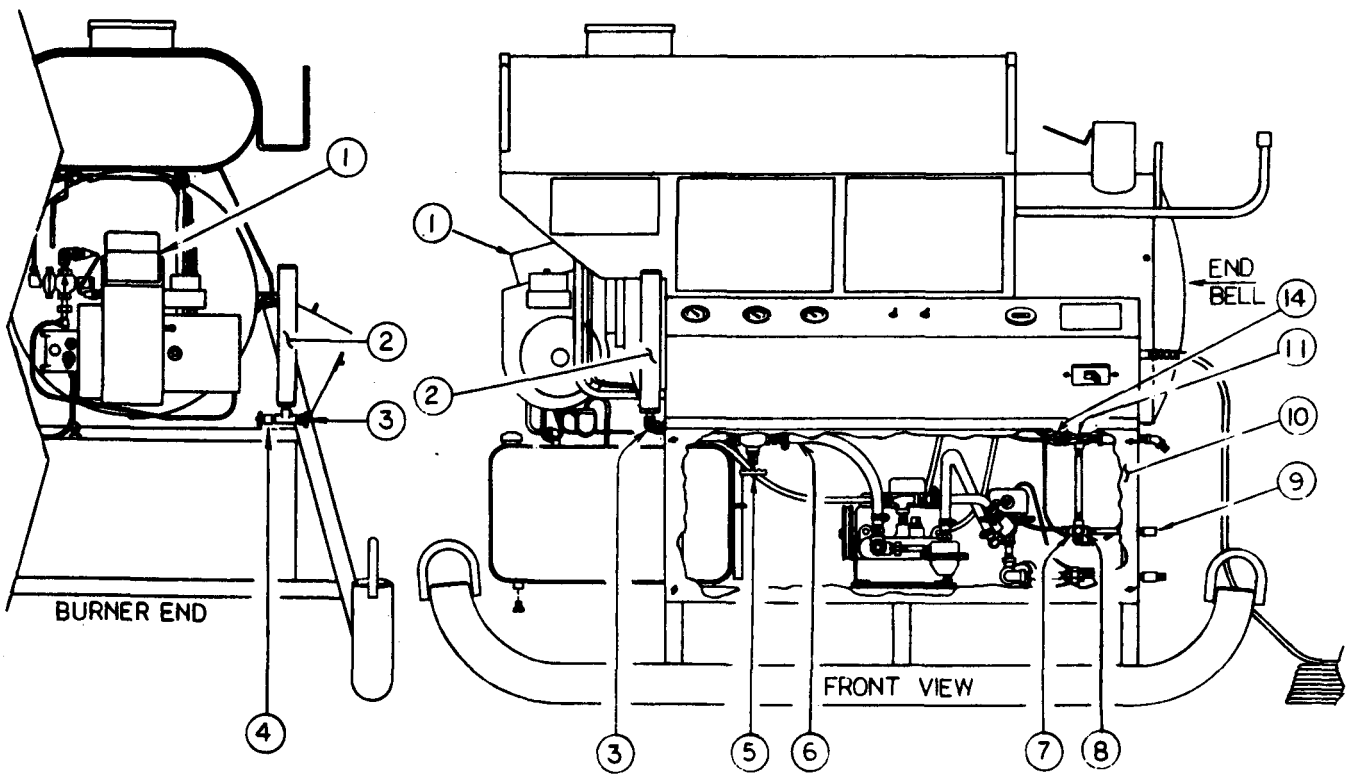

REFERENCE FIG. VI, PAGE 34

NOTE #1: If insufficient space prevents unscrewing this third bolt, the Water Supply Tank can be lowered by first removing the 1/4″ Copper Tubing from Pump Inlet Assembly to Water Tank, loosening the 3/4″ union in front of the Water Supply Tank, and removing the side mounting bolt which holds left upper corner of tank to cleaner frame, Tank may now be lowered, pivoting at 3/4″ union to assure adequate access to third bolt. Do not reinstall Water Supply Tank until after new coil is installed and third bolt replaced and tightened.

c) Grasp the coil by the discharge elbow (a 1/2″ x 4″ pipe nipple may provide a better hand grip) and the elevated pipe section where the inner and outer coil sections join, It may be necessary to rap the coil a few times with a hammer to free the coil. It should then slide out easily.

NOTE #2: If any device such as a crowbar, etc., is used, the edge of the Heater Shell must be sufficiently protected so as not to bend or distort the Heater Shell in any way to assure proper and easy reinstallation of the replacement coil and End Bell Assembly.

d) Upon removal of the old coil, if the three-inch strip of insulation, Part No. 1014-2-05, comes out with old coil, or remains at the burner end and it is to be re-used, it must be carefully removed and set aside. With a flashlight or extension cord light, carefully clean Heater Shell interior and inspect the Preformed Burner Drumhead Insulation for cracks or breaks. If cracked or broken, remove all remaining parts of the Burner Drumhead and replace with a new Preformed Burner Drumhead Insulation, Part No. 1014-1-05.

5. Installing Replacement Coil Assembly, Part No, 1123-6-02

a) Prior to installing the replacement coil assembly it is recommended the three-inch Strip Insulation, Part No. 1014-2-05, be installed outside of the Stainless Steel Heat Band with care being used to allow sufficient opening to permit insertion of 1/2″ Pipe Inlet Nipple Assembly after installation. It is recommended that masking tape be used, a strip every six inches, to keep insulation from protruding beyond edge of Heat Band and interfering with its sealing against the Burner Drumhead Insulation. Strips of masking tape 1/2″ or 3/4″ x 12″ long should be used.

b) Insert Coil into heater shell with end positioning tab at the bottom, being careful not to loosen or tear insulation installed around Heat Band. When coil is in position install front (vent end) 1/4-20 x 1/2″ Hex Head Coil Alignment Bolt, but do not tighten.

c) Install Inlet Coil Nipple with Inlet Tee using teflon tape on all threaded fittings. Align holes and install two remaining Coil Alignment Bolts at burner end of coil assembly and tighten all three Coil Alignment Bolts,

d) Install Outlet Coil Nipple with outlet tee and reassemble both Inlet and Outlet Manifold Assemblies in a reverse order as in paragraphs 2 and 3 above, using teflon tape on all threaded fittings.

e) Reposition Water Supply Tank Assembly, see paragraph 4, Note #1, and secure all fittings and connections. Reattach-Steam Hose and Cleaning Gun to Steam Hose Outlet Port.

NOTE #3: Prior to final assembly of cleaner it is suggested the reinstalled plumbing and components be tested hydrostatically for leaks by running unit (fire-off) with cleaning gun valve ‘open’ until a full flow of water emerges from cleaning gun, then close cleaning gun valve and check all fittings for leaks. CAUTION: Do not operate longer than ten minutes with cleaning gun closed.

f) Reinstall six-inch Installation Strip, Part No, 1014-4-05 between coil and open end of Heater Shell wedging edge of insulation strip as firmly as possible between Heater Shell and Coil, making sure Insulation covers all exposed area of Heater Shell. Next, reinstall End Bell Assembly, being careful to keep “match” mark and screw holes properly aligned, reinstall the three #B x 1/2″ Hex Head Slotted Screws. Check insulation for proper coverage through Heater Vent opening.

g) Reinstall Front and Rear Panels, items 10 and 12 . If Cleaner is to be shipped or stored, see paragraph 9.11, page 15, If freezing weather, drain cleaner as per paragraph 7.5, page 7.

MODEL 200-AO

PREVENTATIVE MAINTENANCE SCHEDULE

MAINTENANCE	REQUIRED FREQUENCY
1. a. Drain Airdome	Every 4 hours of operation.
2. a. Check Oil Pump level in pump crankcase. b. Check "V" Belt tension, c. Clean Auxiliary Hose Foot Valve Strainer (if used). d. Check Discharge Hose Clamp for tightness. e. Blowdown Procedure. f. Check Valve" Packings for tightness. g. Inspect Hoses for kinks, cuts or cracks.	Every 8 hours of operation. See Paragraph 8.3, Page 9. See Paragraph 8.1.5, Page 9.
3. a. Clean Fuel Filter Element (drain water trap as needed). b. Oil Water Pump Piston Rod Wicks (one squirt each). c. Descaling Procedure (if required).	Every 40 hours of operation. See Paragraph 8.4, Page 11.
4. a. Change Water Pump break-in oil (initial oil change only).	After initial 50 hours of operation. Thereafter only when required (See Page 25).
5. a. Clean 'Y' Strainer in Water Supply System. b. Desooting Procedure, use commercially available Triple 'X' Red Devil (one pint to tank full of fuel). c. Check all plumbing, fittings, tubing, and hoses for leaks, cracks, etc. Repair or replace.	Every 120 hours of operation. Use Red Devil, A.K. Part #1002-05 (1 pint - or 1 case, 12 pints).

PARTS CATALOG

FIGURE VII

200-AO
WATER SUPPLY TANK ASSEMBLY

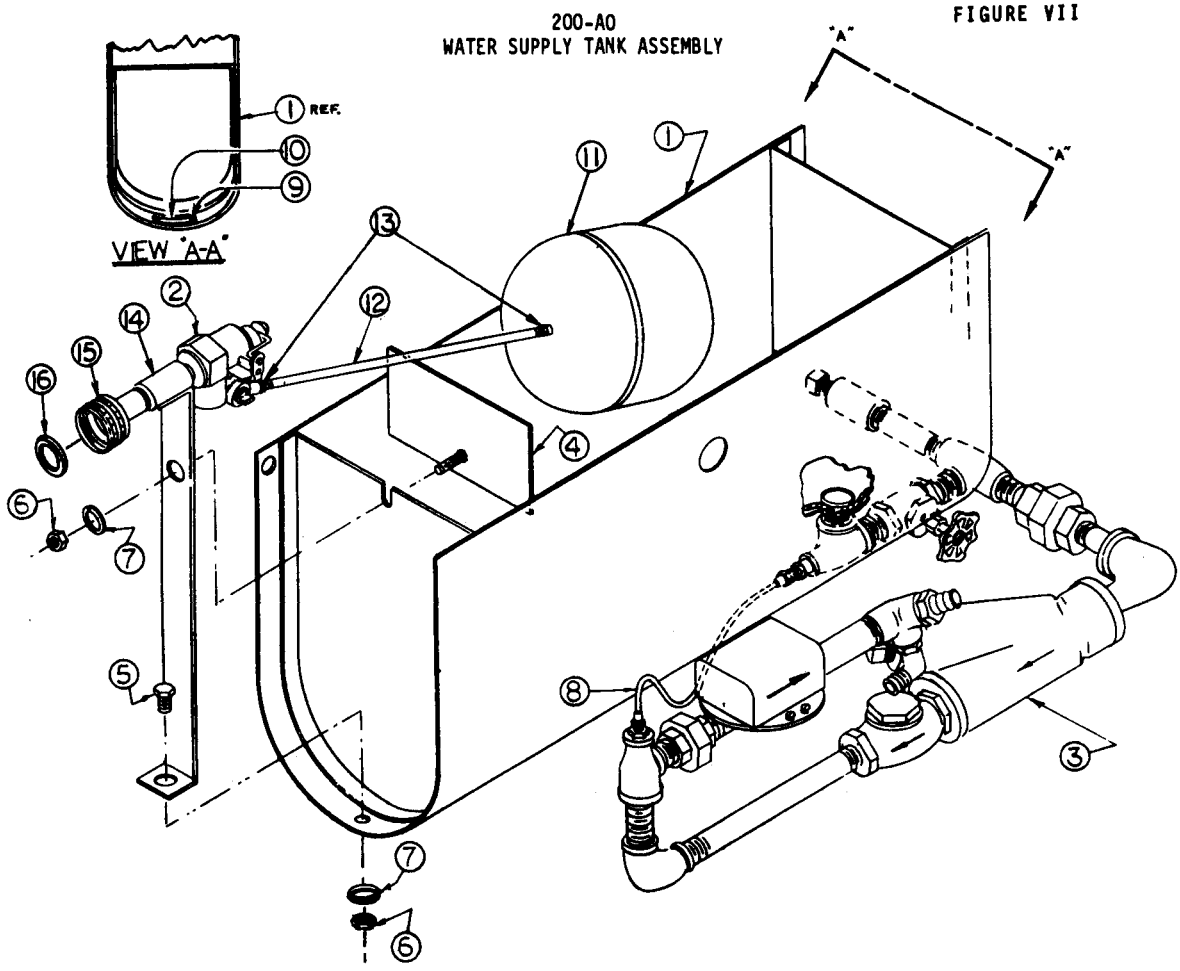

ITEM	PART NO.	DESCRIPTION
1.	1118-02	Tank, Water Supply (S.S)
2.	2173	Valve, Float 3/8"
3.	REF.	Pump Intake Sub. Assy. (See Figure VIII)
4.	1131-02	Guard, Splash (S.S.)
5.	Com'l.	Bolt, 1/4" x 20 x 1/2" Lg. Hex Head
6.	Com'l.	Nut, 1/4" x 20 Hex Head (2 required)
7.	Com'l.	Washer, Lock 1/4" (2 required)
8.	1189-03	Tubing, Copper c/w Tube Nuts

ITEM	PART NO.	DESCRIPTION
9.	N.P.N.	Rivet, Not Available.
10.	1670-9-05	Tag, "Primary Hater Valve"
11.	417	Ball, Float 4" x 5" Plastic
12.	418	Rod, Float 1/4" x 8" Lg. T.B. E. Brass
13.	Com'l.	Nut, 1/4" x 20, Hex Brass (2 required)
14.	1132-02	Mount Assembly, Float Valve
15.	587-05	Connector, 3/8" P. Hale x 3/4" Hose
16,	337-2-05	Washer, 3/4" Hose, Garden

200-AO
PUMP INLET ASSEMBLY
FIGURE VIII

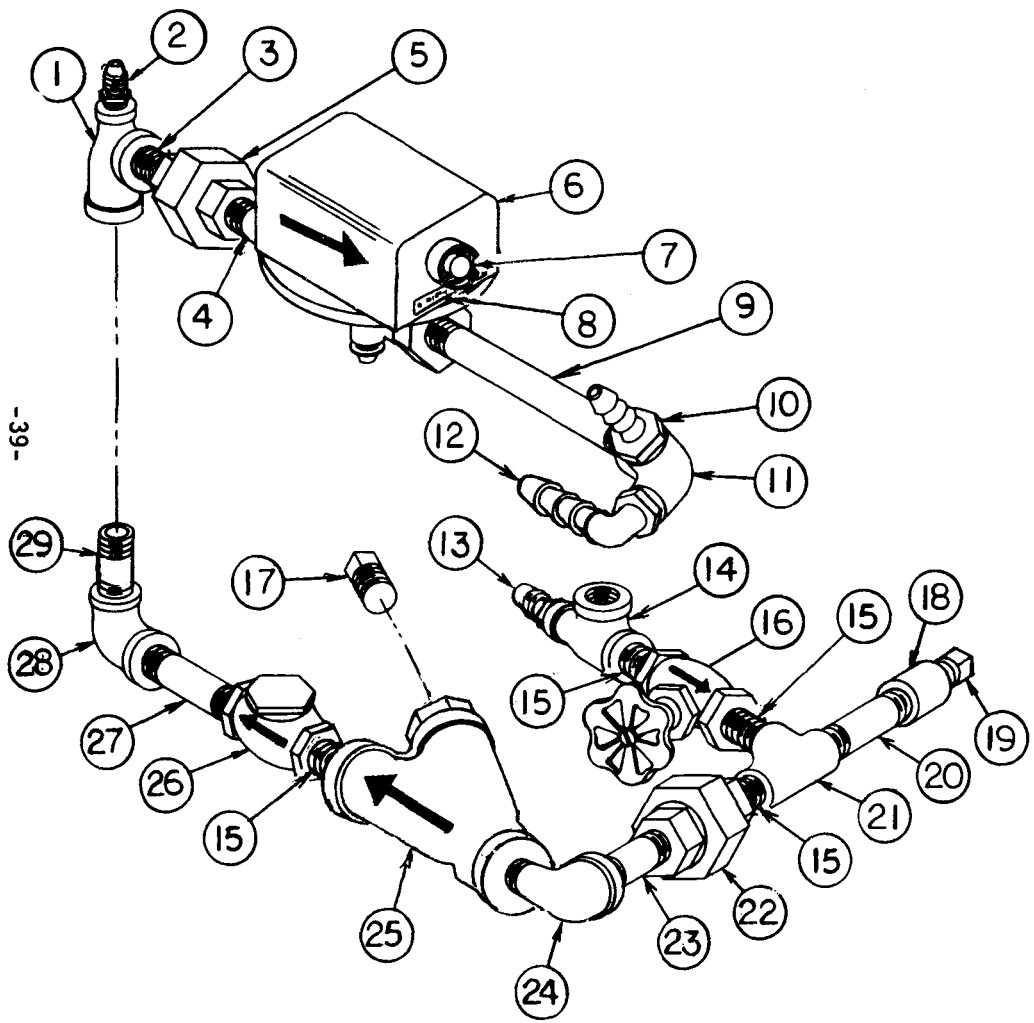

ITEM	PART NO.	DESCRIPTION
1.	Com'l.	Tee, 1/2" x 1/4" x 1/2"
2.	1198-05	Valve, Secondary Relief, 1/8"P. x 1/4" Fl. Brass
3.	Com'l.	Nipple, 1/2" Close
4.	Com'l.	Nipple, 1/2" x 1-1/2" lg.
5.	Com'l.	Union, 1/2"
6.	1140-3-01	Switch, Water Flow c/w item 7
7.	689-05	Switch, Push Button
8.	1670-21-05	Tag, "Blowdown Switch"
9.	Com'l.	Nipple, 1/2" x 5" lg.
10.	733-3-05	Spud, 1/2"P. x 5/8"H. Str. Nylon
11.	Com'l.	Elbow, 1/2" Side Outlet
12.	Com'l.	Spud, 1/2"P. x 3/8" H. 90° Nylon
13.	Com'l.	Spud, 1/4"P. x 1/4"FL. Str. Brass
14.	Com'l.	Tee, 3/4" x 1/4" x 3/4"
15	Com'l.	Nipple, 3/4" Close (4)
16.	1560-05	Valve, 3/4" Globe
17.	Com'l.	Plug, 1/2" or 3/8" Pipe
18.	Com'l.	Coupling 3/4"
19.	Com'l.	Plug, 3/4" Pipe
20.	Com'l.	Nipple, 3/4" x 3-1/2" lg.
21.	Com'l.	Tee, 3/4"
22.	Com'l.	Union, 3/4"
23.	Com'l.	Nipple, 3/4" x 3" lg
24.	Com'l.	Elbow, 3/4" x 90° Street
25	1529-1-05	Strainer, 3/4" Cast Iron "Y"
26.	490-05	Valve, Swing Check 3/4"
27.	Com'l.	Nipple, 3/4" x 5-1/2" lg.
28.	Com'l.	Elbow, 3/4" x 1/2" 90°
29.	Com'l.	Nipple, 1/2" x 2" lg.

200-A0
PUMP PLUMBING ASSEMBLY
FIGURE XIV

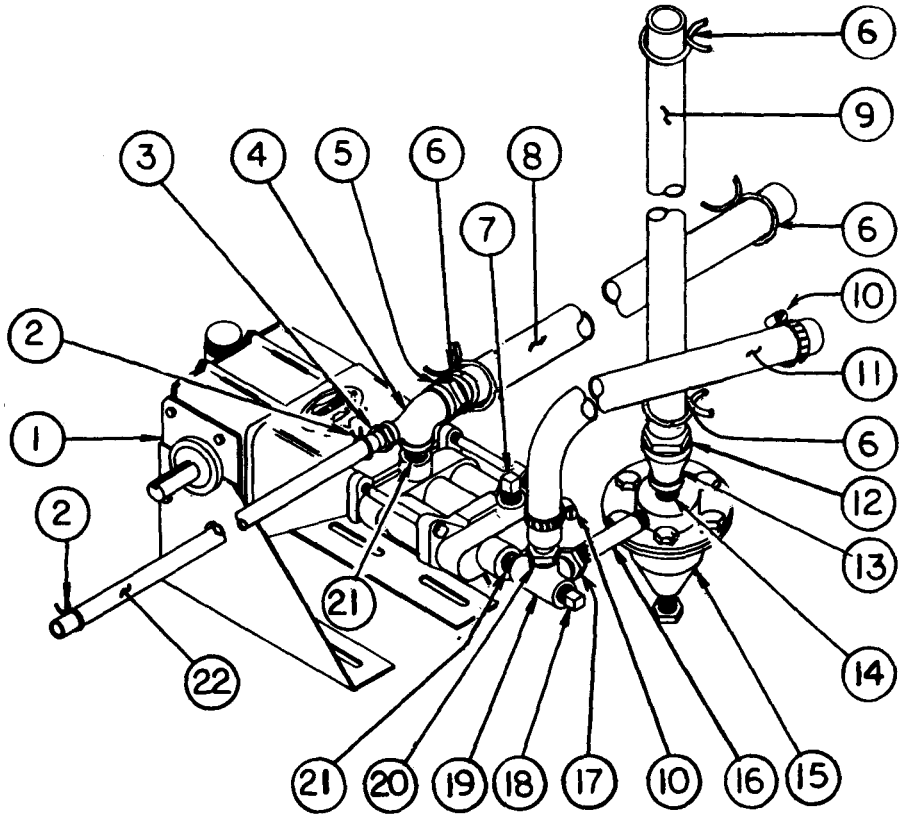

ITEM	PART NO.	DESCRIPTION
1.	1190-03	Pump, Water
2.	1194-4-05	Clamp, Hose Spring (2)
3.	Com'l.	Spud, 1/4"P.x1/4"H. Str. Nylon
4.	Com'l.	Tee, 1/2" x 1/4" x 1/2", Galv.
5.	733-3-05	Spud, 1/2"P.x5/8"H.,Str. Nylon
6.	1194-12-05	Clamp, Hose Spring (4)
7.	Com'l.	Plug, 3/8" Pipe, Galv.
8.	1196-3-03	Hose, Pump Intake
9.	1196-2-03	Hose, Pump Bypass
10.	733-05	Clamp, Worm
11.	1196-1-03	Hose, Wire Braid, Pump to Coil
12.	1550-1-05	Spud, 3/8"P.x 5/8"H. Str.Brass
13.	Com'l.	Bell, Reducer, 3/8" to 1/4" Galv.
14.	Com'l.	Nipple, 1/4" Close, Galv.
15.	415-15-01	Valve, Bypass
16.	Com'l.	Nipple, 1/4" x 2", Galv.
17.	Com'l.	Bushing, 1/2" x 1/4" Hex, Galv.
18.	Com'l.	Plug, 1/2" Pipe, Galv.
19.	Com'l.	Tee, 1/2" Side Outlet Galv.
20.	3005-05	Spud, 1/2"P.x1/2"H. Str. Brass
21.	Com'l.	Nipple, 1/2" Close, Galv.
22.	1196-4-03	Hose, Soap Metering Valve to Pump

MODEL 200-A0
COIL INLET ASSEMBLY
FIGURE X

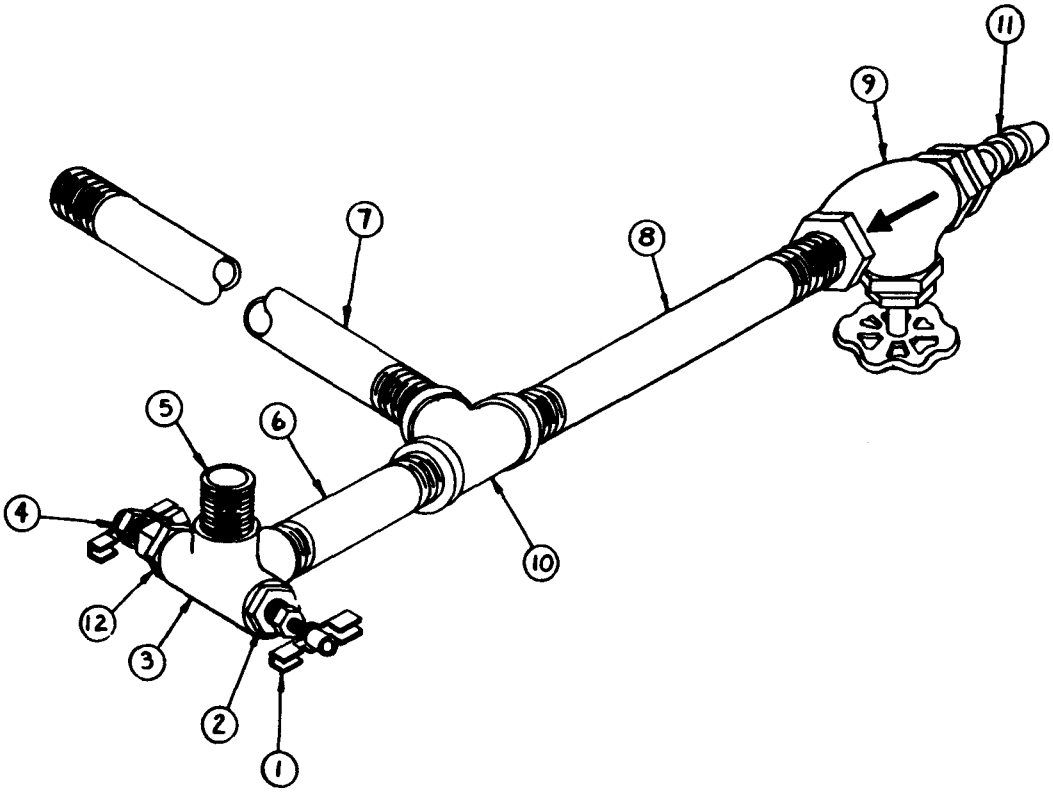

ITEM	PART NO.	DESCRIPTION
1.	426	Petcock, Airdome Drain, 1/4″ Brass
2.	Com'l.	Bushing, 1/2″ x 1/4″ Hex
3.	Com'l.	Tee, 1/2″ Side Outlet
4.	205	Valve, Gauge Dampener, l/8"P.xl/4″T. Comp. x 90°
5.	Com'l.	Nipple, 1/2″ Close
6.	Com'l.	Nipple, 1/2″ x.2″ 1g.
7.	Com'l.	Nipple, 1/2″ x 9-1/2″ lg.
8.	Com'l.	Nipple, 1/2″ x 4″ lg.
9.	2160	Valve, Blowdown, 1/2″ Globe
10.	Com'l.	Tee, 1/2″
11.	3005-05	Spud, Brass Hose 1/2″ P. x 1/2″ H. Str.
12.	Com'l.	Bushing, 1/2″ x 1/8″ Hex

MODEL 200-AO

SOAP TANK VALVE ASSEMBLIES

FIGURE XI

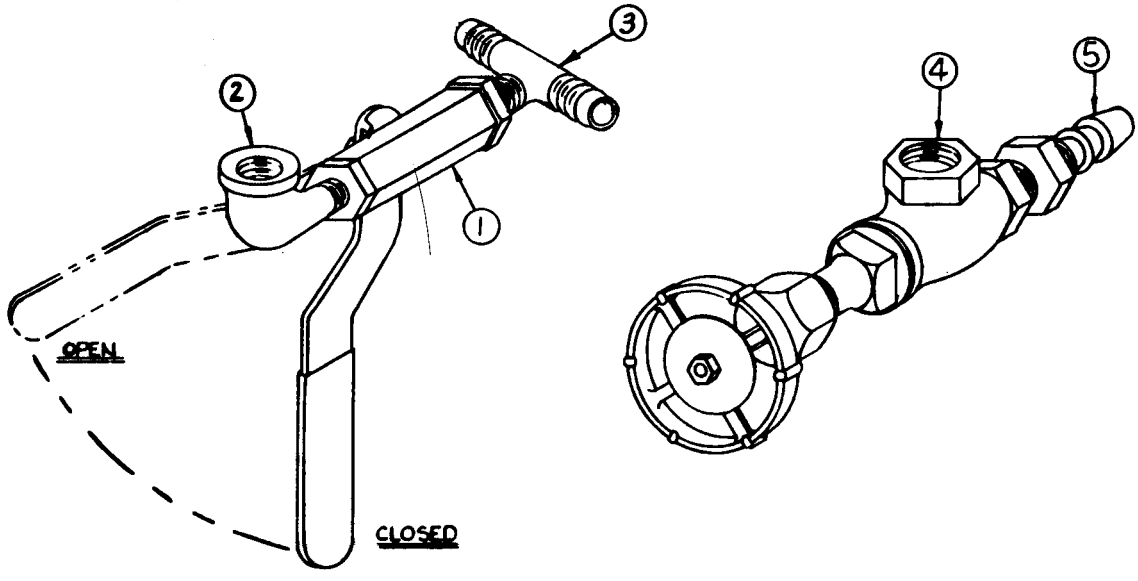

ITEM	PART NO.	DESCRIPTION
1.	652-05	Valve, Soap Tank Fill-Mix Ball, 3/8″
2.	Com'l.	Elbow, 3/8″ x 90° Street Galv.
3.	Com'l.	Tee, 3/8″F. x 3/8″ F. x 3/8″ Male Pipe, Brass
4.	401	Valve, Soap Metering, Angle
5.	Com'l.	Spud, l/4″P. x 1/4″ H. Str. Nylon

MODEL 200-AO
COIL OUTLET ASSEMBLY
FIGURE XII

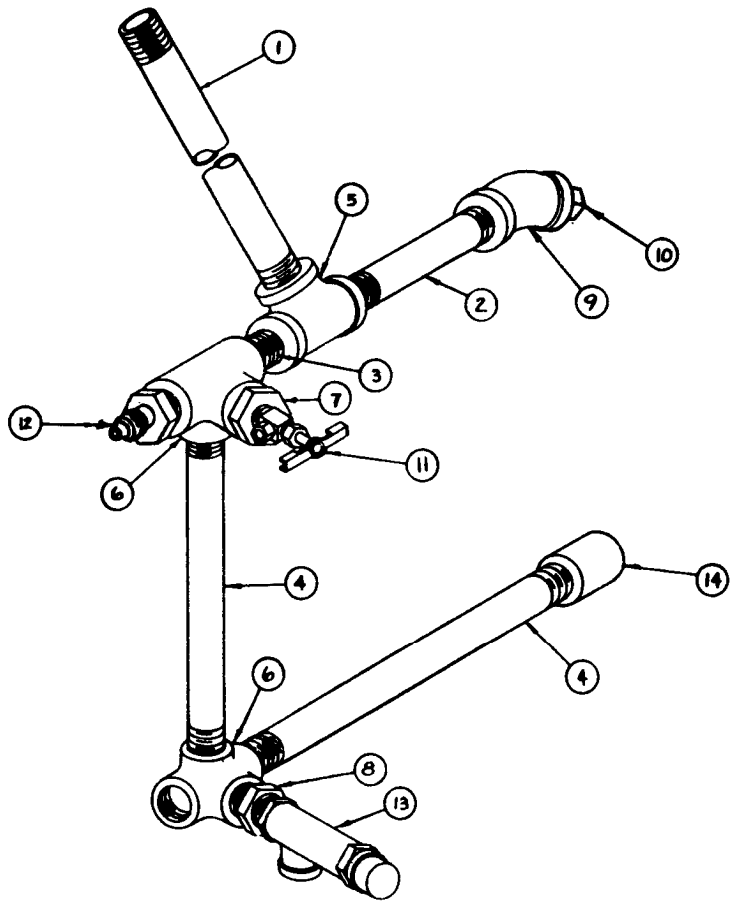

ITEM	PART NO.	DESCRIPTION
1.	Com'l.	Nipple, 1/2" x 10" lg.
2.	Com'l .	Nipple, 1/2" x 3" lg.
3.	Com'l.	Nipple, 1/2" Close
4.	Com'l.	Nipple, 1/2" x 5-1/2" lg. (2)
5.	Com'l.	Tee, 1/2"
6.	Com'l.	Tee, 1/2" Side Outlet (2)
7.	Com'l.	Bushing, 1/2" x 1/8" Hex
8.	Com'l.	Bushing, 1/2" x 1/4" Hex
9.	Com'l.	Elbow. 1/2" X 45°
10.	Com'l.	Plug, l/2"
10.	205	Valve, Gauge Dampening, l/8"P. x l/4"T. Comp. x 90°
12.	Com'l.	Fitting, l/2"P. x 3/8" Flare, Str. Brass
13.	1193-05	Valve, Primary Pressure Relief
14.	Com'l.	Coupling, 1/2"

FIGURE XIII

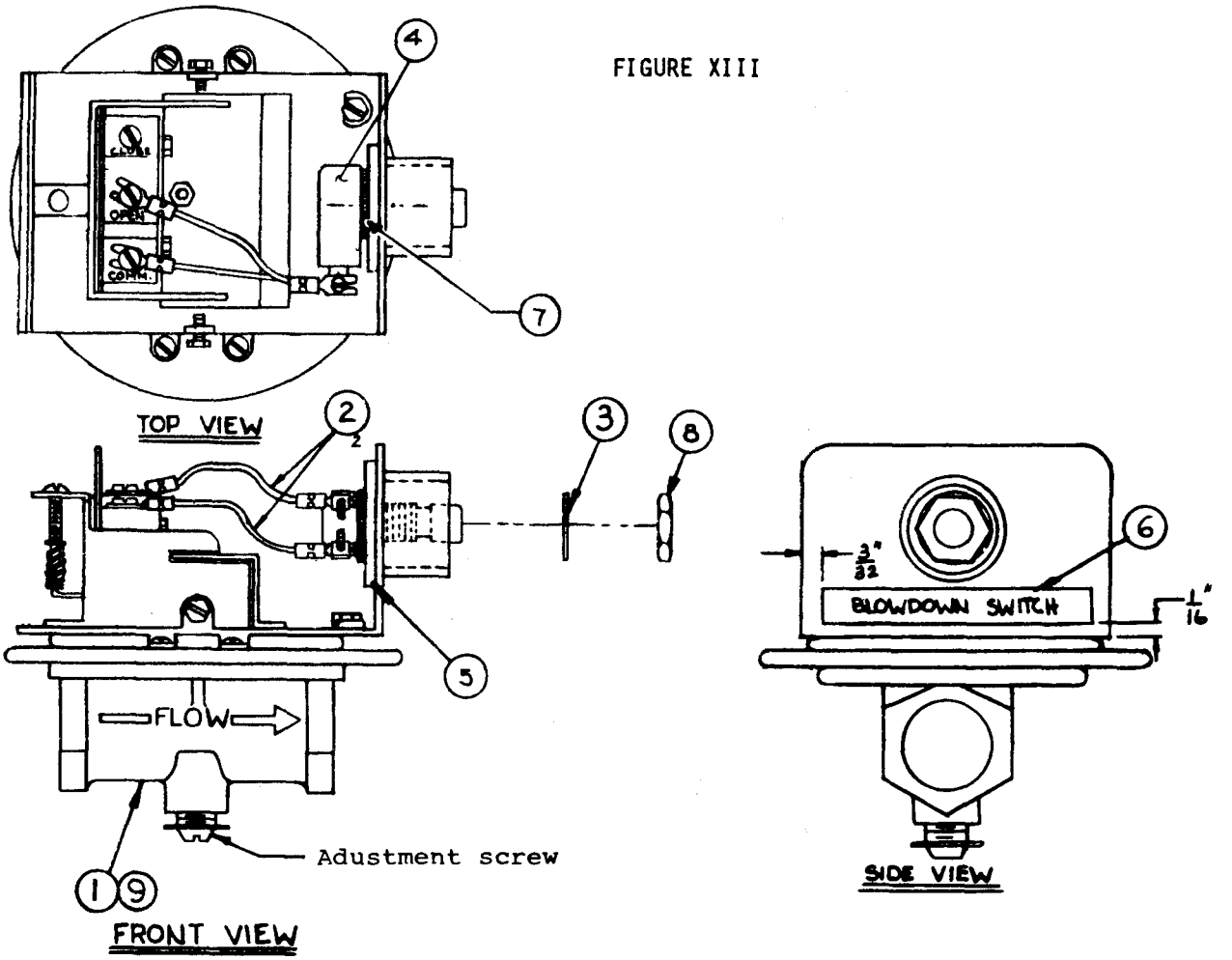

ITEM	PART NO.	DESCRIPTION
1.	740-3-03	Flow Switch, Modified, Less Back End Plate
2.	1197-03	Wire, 18 AWG x 2" BK, c/w Terminals
3.	1136-2-05	Washer, Blowdown Switch
4.	689-05	Switch, Pushbutton
5.	1136-1-02	Bracket, Mounting, Blowdown Switch
6.	1670-21-05	Tag, "Blowdown Switch"
7.	Ref.	Nut, Round (supplied with Item 4)
8.	Ref.	Nut, Hex (supplied with Item 4)
9.	1140-3-01	Flow, Switch, Complete Assembly

WATER PUMP PARTS LIST - PART NO. 1190-03

FIGURE XIV

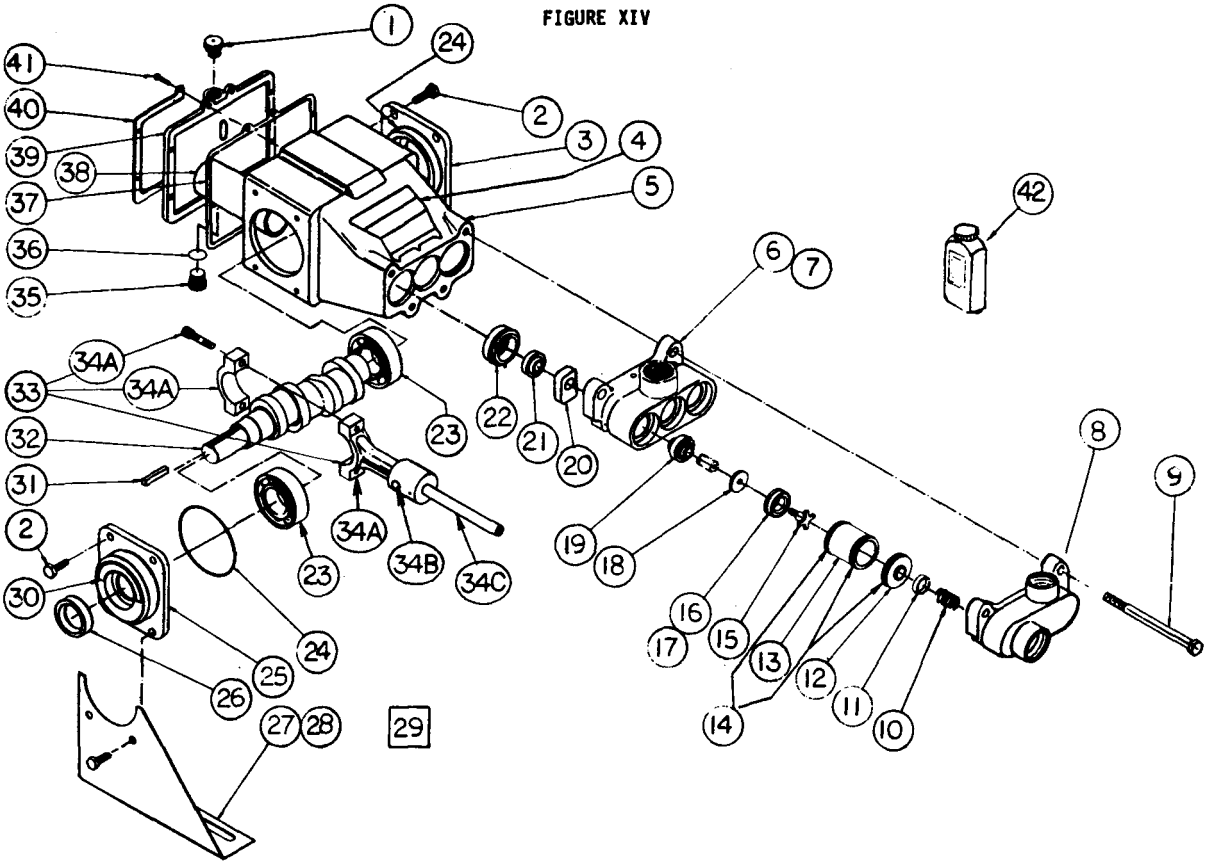

Item	Part No.	Description
1.	1190-1-05	Cap, Oil Fill
2.	1190-2-05	Screw, 1/4" 20 x 3/4" Cap, Hex Head
3.	1190-3-05	Retainer, Closed Bearing
* 4.	1670-05	Plate, Serial
5.	1190-5-05	Crankcase
6.	1190-6-05	Intake Manifold, Casting Only
7.	1190-7-05	Intake Manifold Assembly (includes 1 #1190-6-05; 3 #1190-19-05 & 3 #1190-20-05)
8.	1190-8-05	Manifold, Discharge
9.	1190-9-05	Bolt - 5/16 x 18 x 4" Cap, Hex Head
10.	1190-10-05	Spring, Discharge
11.	1190-11-05	Poppet, Discharge
12.	1190-12-05	Seat, Discharge Valve
13.	1190-13-05	Cylinder
14.	1190-14-05	O-Ring, Cylinder & Seat
15.	1190-15-05	Retainer
16.	1190-16-05	Piston Assy. (includes piston, Cup & Guide Rings)
17.	1190-17-05	Cup Kit, (includes 3 #1190-16-05; Vial Loctite #601; & Instructions)
18.	1190-18-05	Seat, Intake Valve
19.	1190-19-05	Seal, Intake Manifold
20.	1190-20-05	Hick, Oiler
21.	1190-21-05	Seal, Crankcase
22.	1190-22-05	Seal, Sleeve
23.	1190-23-05	Bearing, Main
24.	1190-24-05	O-Ring, Bearing Retainer

* Unless old serial number is supplied, replacement serial plate will be furnished without serial number.

Item	Part No.	Description
25.	1190-25-05	Retainer, Open Bearing
26,	1190-26-05	Seal, Oil Crankshaft
27.	1190-27-05	Mount, Pump Right Side
28.	1190-28-05	Mount, Pump Left Side
29.	1190-03	Pump, Complete, Water (with mounts)
30.	1190-29-05	Arrow. Rotation (decal)
31.	1190-30-05	Key, 3/16 x 1"
32.	1190-31-05	Crankshaft
33.	1190-32-05	Connecting Rod & Pushrod Assy. #1 Red
	1190-33-05	Connecting Rod & Pushrod Assy. #2 Yellow
	1190-34-05	Connecting Rod & Pushrod Assy.
		(above include 1 #1190-36-05; 1 #1190-37-05, & 1 #1190-35-05)
34A.	1190-35-05	Connecting Rod/End Cap & Screws
348.	1190-36-05	Wrist Pin
34C.	1190-37-05	Push Rod Assembly
35.	1190-38-05	Plug, Oil Drain
36.	1190-39-05	O-Ring, Oil Drain Plug
37.	1190-40-05	Gasket, Rear Cover
38.	1190-41.05	Sleeve, Crosshead
39.	1190-42-05	Cover, Rear Crankcase
40.	1190-43-05	Bezel
41.	1190-44-05	Screw, Machine 8-32 x 3/4"
42.	1190-47-05	Additive, Crankcase Oil, 2 oz.
43.	1190-48-05	Inserter Tool
44.	1190-49-05	Valve Extraction Tool
45.	1190-51-05	Push Rod Inserter

BYPASS VALVE ASSEMBLY, PART NO. 415-15-01
MODEL 200-A)
FIGURE XV

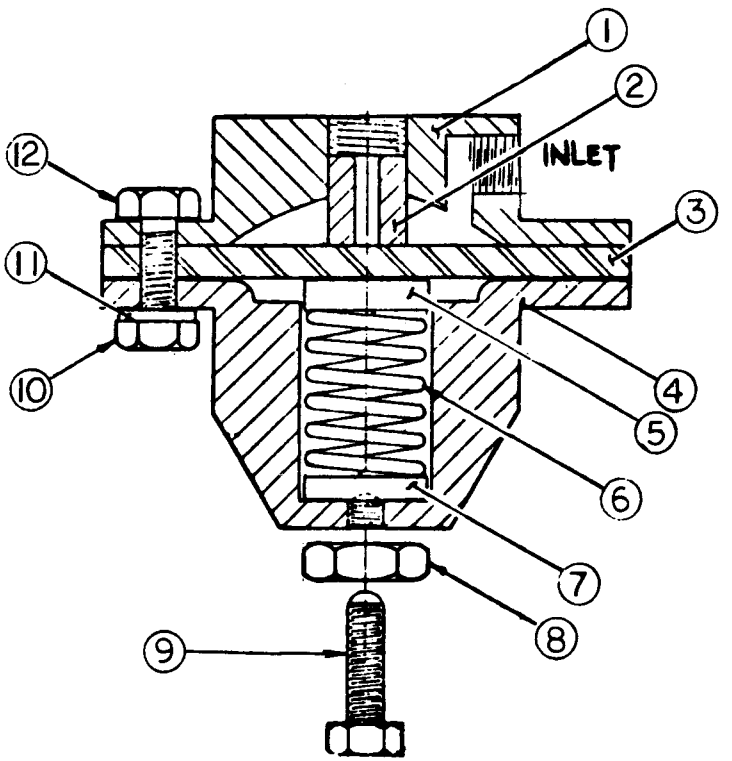

Item	Part No.	Description
1.	415-4	Bypass Regulator Head
2.	415-11	Top Seat
3.	157-1-04	Diaphragm
4.	415-5	Bypass Regulator Body
5.	415-3	Top Spring Washer
6.	161	Spring
7.	415-9	Adjusting Spring Washer
8.	Com'l.	Hex Jam Nut 5/16-18
9.	Com'l.	Adjusting Screw 5/16-18x1" Hex Hd.
10.	Com'l.	1/4-20 Hex Nut
11.	Com'l.	1/4 Lockwasher
12.	Com'l.	1/4-20 x 1" Hex Hd. Bolt

To Adjust: Loosen Jam Nut, item 8, turning adjusting screw, item 9, clockwise increases bypass pressure; counter-clockwise decreases pressure. To readjust, relieve all spring tension (turning adjusting screw counter-clockwise). Turn on water pump, operate cold (no fire) with cleaning gun closed. Turn adjusting screw clockwise until inlet pressure gauge reads 165-185 PSI. Tighten Jam Nut. Turn off pump and open Cleaning Gun Valve.

MODEL 200-AO
INSTRUMENT PANEL WIRING DIAGRAM
FIGURE XVI

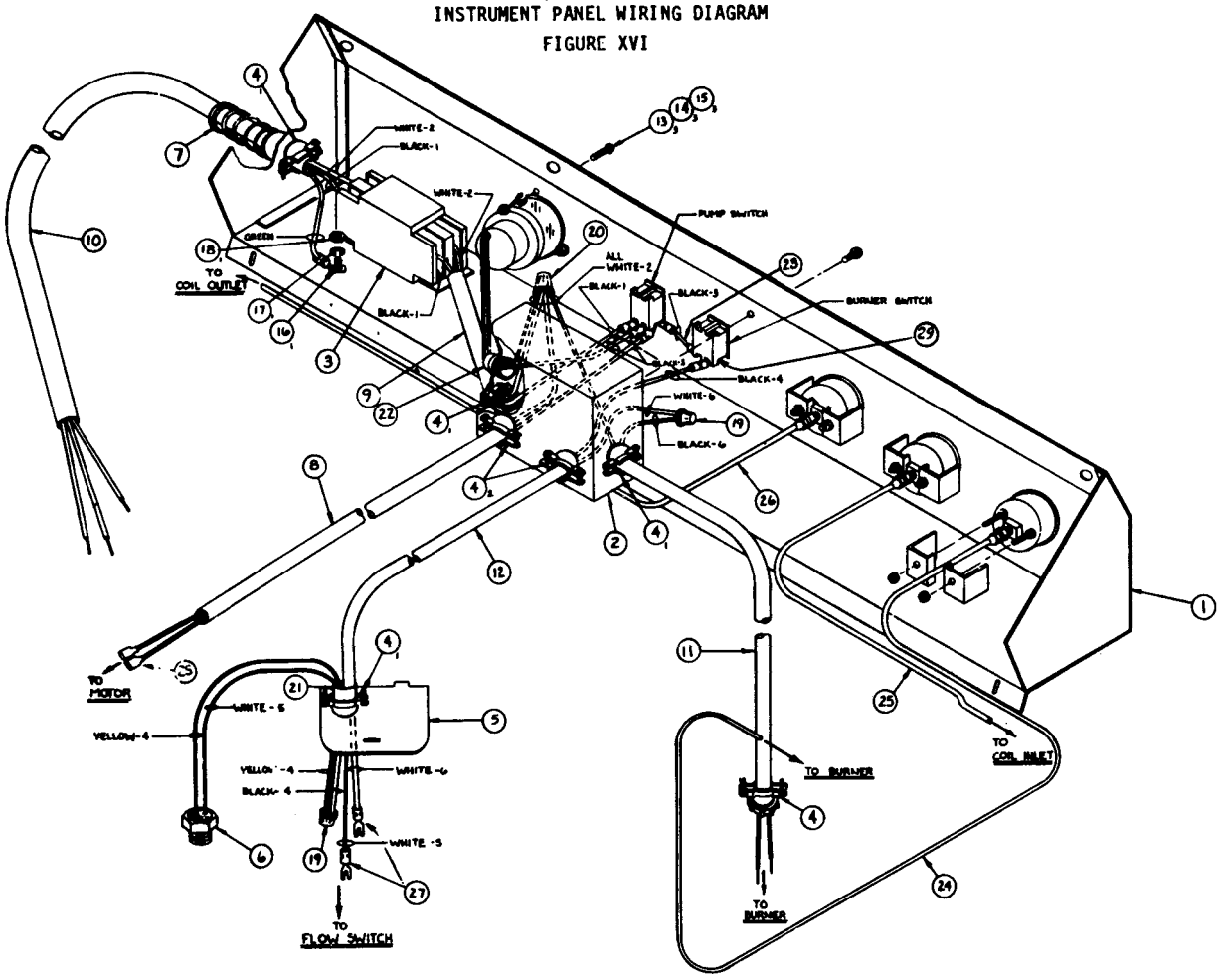

ITEM	PART NO.	DESCRIPTION
1.	1124-02	
2.	2370-1	"J"-Box 4" X 4"
3.	1515-7-05	Switch, Circuit Breaker
4.	Com'l.	Connector, 3/8" Str.Squeeze (7 Req'd)
5.	740-4-03	End Plate, Flow Switch
6.	1117-05	Switch. Overheat Safety
7.	3796-02	Guard, Electric Cable Strain
8.	1199-03	Cable, 2 Wire, 'J'-Box to Motor
9.	1199-1-03	Cable, 2 Wire, Circuit Breaker to 'J' Box
10.	1199-2-03	Cable, 3 Mire x 75; Power Supply
11.	1199-3-03	Cable, 2 Wire, 'J' Box to Burner
12.	1199-4-03	Cable, 2 Wire, 'J' Box to F1ow Switch
13.	Com'l.	Screw, 6-32 x 1/2" Lg. Rd. Hd. (3 Req'd)
14.	Com'l.	Washer, No. 6 Lock (3 Req'd)
15.	Com'l.	Nut, 6-32 Hex (3 Req'd)
16.	Com'l.	Screw, 10-32 x 3/8" Lg.

ITEM	PART NO.	DESCRIPTION
17.	Com'l.	Washer., No. 10 Lock
18.	Com'l.	Nut, 10-32 Hex
19.	Com'l.	Nut, 33 Wire (2 Req'd)
20.	Com'l.	Nut, No. 44 Wire
21.	Com'l.	Tubing, 3/8" x 1" Lg. Clear
22.	Com'l.	Grommet, 7/8" Rubber
23.	1197-1-03	Jumper, 18 AWG x 3" Lg. B1. Wire
24.	1189-1-03	Tubing, 1/4" Copper x 32" Lg. F. O. E., Oil Press. Gauge to Fuel Pump
25.	1189-2-03	Tubing, 1/4" Copper x 12½" Lg. F.O.E., Inlet Press. Gauge to Coil Inlet Assy.
26.	1189-3-03	Tubing, 1/4" Copper x 1%" Lg. F. O. E., Outlet Press. Gauge to Coil Outlet Assy.
27.	Com'l.	Terminal, Spade Lug (2 Req'd)
28.	Com'l.	Terminal, Female Slide (2 Req'd)
29.	Com'l.	Terminal, Ring (7 Req'd)

BURNER ASSEMBLY
FIGURE XVII

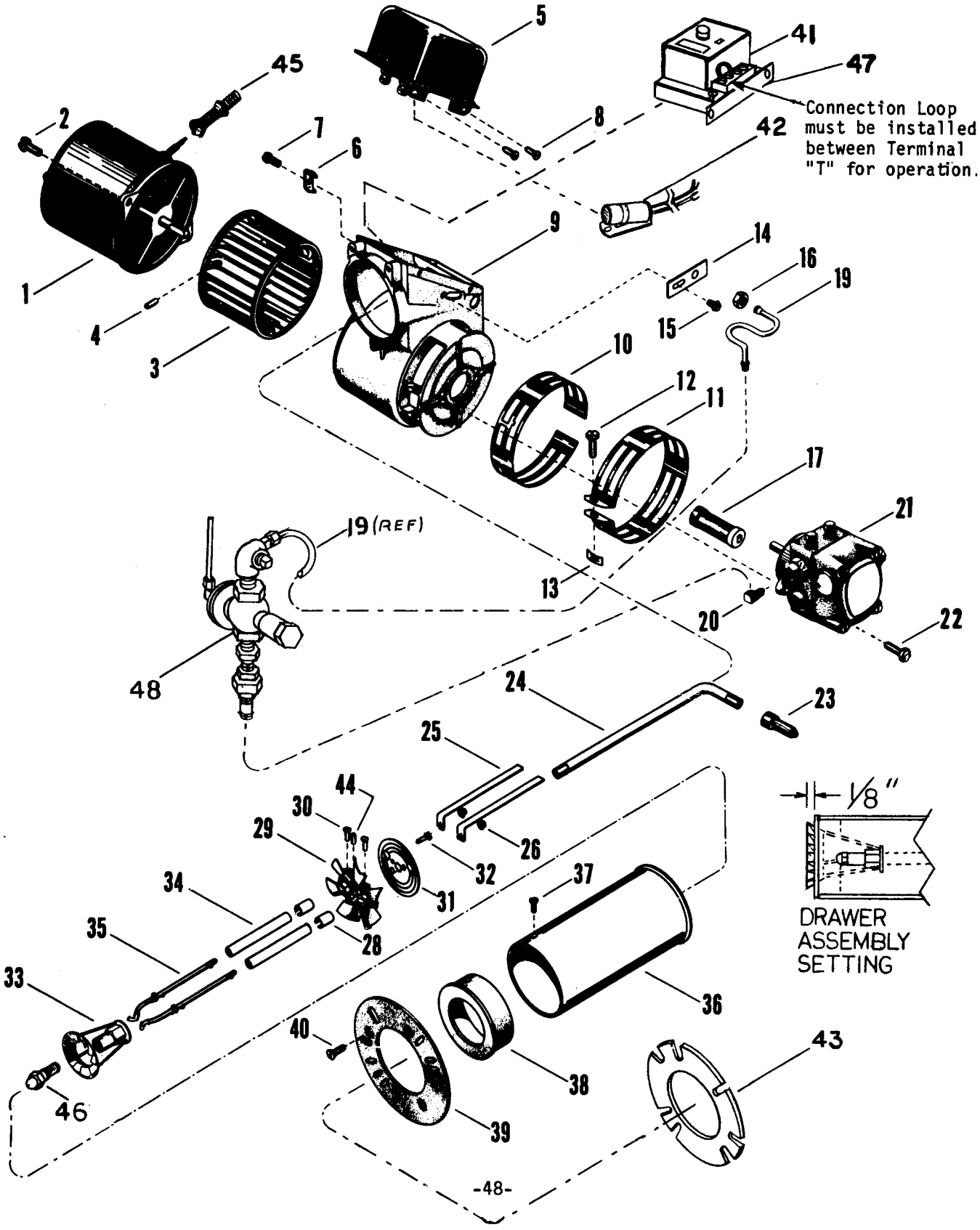

200-A0 BURNER PARTS LIST

PART NO. 1175-05

ITEM	PART NO.	DESCRIPTION
1.	1175-1-05	MOTOR, 1/4 H.P. 3450 RPM, 230V, 60 HZ, SINGLE PHASE
2.	1175-2-05	SCREW, MOTOR MOUNTING (HEX HD. 5/16-18-1", COM'1.)
3.	1175-3-05	CAGE, FAN, 6"
4.	1175-4-05	SCREW, SET (SUPPLIED WITH ITEM 3)
5.	1175-5-05	TRANSFORMER, 230 V, 60 HZ, SINGLE PHASE PRIMARY
6.	1175-6-05	CLIP. TRANSFORMER HOLD DOWN
7.	1175-7-05	SCREW, TRANSFORMER HOLD DOWN CLIP (HEX WASHER HD., SLOTTED) 5/16 X 18 X 1", COM'1.)
8.	1175-8-05	SCREW, TRANSFORMER HINGE (HEX SERRATED -THREAD CUTTING, 5/16"X1/2" COM'1.)
9.	1175-9-05	HOUSING, FAN ASSEMBLY
10.	1175-10-05	BAND, INNER AIR ADJUSTING
11.	1175-11-05	BAND, OUTER AIR ADJUSTING
12.	1175-12-05	SCREW, AIR BAND (HEX HD. 5/16-18 X 1", COM'1.)
13.	1175-13-05	NUT, TINNERMAN
14.	1175-14-05	COVER, OIL LINE SLOT ADJUSTMENT
15.	1175-15-05	SCREW, OIL LINE SLOT COVER (HEX WASHER HD. SLOTTED THREAD CUTTING #10-24 X 1/2", COM'1.)
16.	1175-16-05	LOCKNUT, OIL LINE
17.	1175-17-05	COUPLING, FUEL PUMP
19.	1175-19-03	TUBE, OIL LINE ASSEMBLY
20.	1175-20-05	ELBOW, OIL LINE, 1/8-90° STREET E11
21.	1175-21-05	PUMP, FUEL OIL
22.	1175-22-05	SCREW, FUEL PUMP MOUNTING (HEX HD. 5/16-18 X 1", COM'1.)
23.	1175-23-05	ADAPTER, OIL LINE FITTING
24.	1175-24-05	PIPE, OIL SUPPLY
* 25.	N.P.N.	BUSS BAR, ELECTRODE LEADS
* 26.	N.P.N.	PAL NUT, ELECTRODE } NOT AVAILABLE. ORDER ITEMS 50 & 51.
* 28.	1175-28-05	BUSHING, ELECTRODE INSULATOR
29.	1175-29-05	STABILIZER, ELECTRODE HOLDER
30.	1175-30-05	SCREW, ELECTRODE LOCKING (PHILLIPS FLATHEAD-UNDERCUT #8-32 X 3/8", COM'L.)
31.	1175-31-05	PLATE, BAFFLE, 2 1/2" O.D.
32.	1175-32-05	SCREW, BAFFLE PLATE (RT. HAND MACHINE SCREW #4-40 X 5/16, COM'L.)
33.	1175-33-05	ADAPTOR (FLAMELOCK ASSEMBLY)
* 34.	N.P.N.	INSULATOR, ELECTRODE } NOT AVAILABLE. ORDER ITEMS 50 & 51.
* 35.	N.P.N.	STEM AND WASHER, ELECTRODE
36.	1175-36-05	TUBE, AIR SUPPLY
37.	1175-37-05	SCREW, AIR CONE MOUNTING (RT. HAND MACHINE SCREW #10-24 X 3/8",COM'L.)
38.	1175-38-05	CONE, AIR SUPPLY
39.	1175-39-05	FLANGE, MOUNTING
40.	1175-40-05	SCREW, FLANGE MOUNTING (FLAT HD. 5/16-18 X 5/8", COM'L.)
41.	1175-41-05	CONTROL, FLAME DETECTOR
42.	1175-42-05	CAD-CELL, FLAME DETECTOR
43.	1175-43-05	GASKET, MOUNTING FLANGE (2 REQ'D.)
44.	1175-44-05	SCREW, SET (ALLEN #10-24 X 1/4" HOLLOW PT., COM'L.)
45.	1175-45-05	COVER, MOTOR LEAD CORD
46.	1175-46-05	NOZZLE FUEL BURNER, 4.0 X 80° PLP-MONARCH
47.	1175-47-05	BOX, FLAME DETECTOR CONTROL MOUNTING C/W SCREWS
48.	REF.	CONTROL, HYDRO/FUEL SAFETY MODULATOR
49.	1175-50-05	GUN ASSEMBLY, BURNER COMPLETE (INCLUDES ITEMS 23 THROUGH 26, 28 THROUGH 35, 44 AND 46)
* 50.	1175-48-05	ELECTRODE, LEFT HAND, COMPLETE (INCLUDES ITEMS 25,26,28,34 & 35)
* 51.	1175-49-05	ELECTRODE, RIGHT HAND, COMPLETE (INCLUDES ITEMS 25,26,28,34 & 35)

200-A0
HYDRO/FUEL SAFETY MODULATOR
PLUMBING ASSEMBLY

FIGURE XVIII

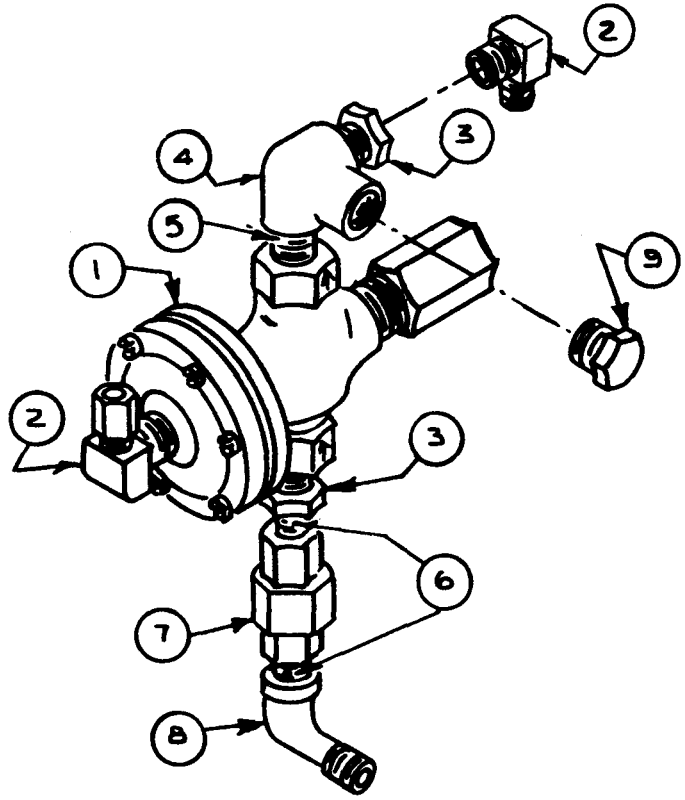

ITEM	PART NO.	DESCRIPTION
1.	1178-01	Hydro/Fuel Safety Modulator
2.	Com'l.	Connector, Brass 1/4"P. x 1/4" T x 90° Comp.
3.	Com'l.	Bushing, Hex 1/4" x 1/8" Pipe (2 required)
4.	Com'l.	Elbow, Side Outlet 1/4"
5.	Com'l.	Nipple, 1/4" Close
6.	Com'l.	Nipple, 1/8" Close (2 required)
7.	Com'l.	Union, 1/8" Std.
8.	Com'l.	Elbow, 1/8" Street
9.	Com'l.	Plug, 1/4" Hex Pipe

HYDRO/FUEL SAFETY MODULATOR - 200-AO

FIGURE XIX

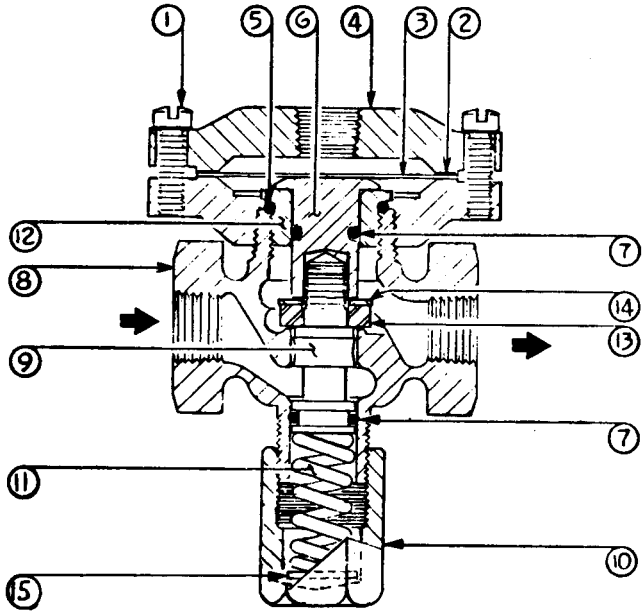

PART NO. 1178-01 HYDRO/FUEL SAFETY MODULATOR
PARTS LIST

ITEM	PART NO.	DESCRIPTION
1.	2111-1	Screw, Brass Fil. #10-32X5/8"
2.	2111-2	Gasket, Diaphragm
3.	2111-3	Diaphragm
4.	2111-4	Cover, Diaphragm
5.	2111-5	O-Ring, Plunger Cup
6.	2111-6	Plunger
7.	2111-7	O-Ring, Valve (2 req'd.)
8.	2111-8	Body Assembly
3.	2111-9	Valve
10.	3505-1-04	Cap, Adjusting Hex
11.	2111-11	Spring
12.	2111-12	Cup, Plunger
13.	2111-15	Disc, Plunger (Teflon)
14.	2111-14	Washer, Brass #14L
15.	2111-16	Washer, Spring Spacer

REPAIR KITS (not shown)

16.	1178-K1	Diaphragm Kit, consists of items 2 & 3.
17.	1178-K2	Repair Kit, consists of items 2,3,5,5,11 & 13.

FUEL FILTER 200-AO

FIGURE XX

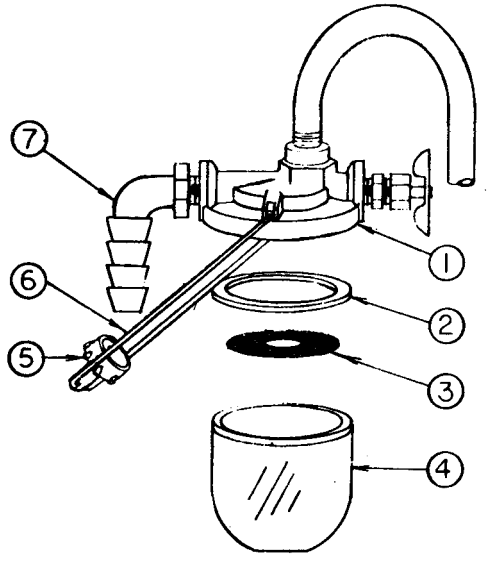

ITEM	PART NO.	DESCRIPTION
1.	2056	Filter, Complete
2.	2056-3 05	Gasket, Seal
3.	2056-2-05	Screen, Filter
4.	2056-4-05	Bowl, Glass
5.	2056-5-05	Assembly, Bail
6.	2056-6-05	Nut, Bail Assembly
7.	Com'l.	Spud, l/8"P.xl/4"H. 90° Nylon

200-AO INSTRUMENT PANEL PARTS LIST

FIGURE XXI

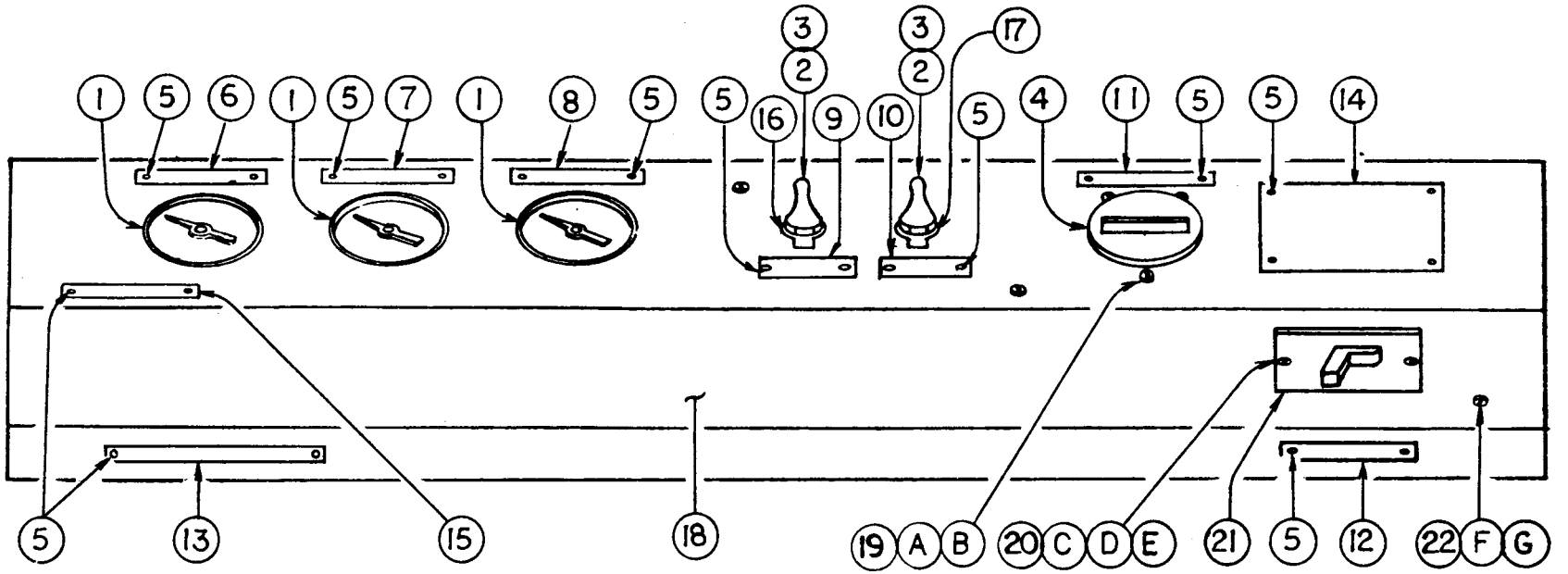

ITEM	PART NO.	DESCRIPTION
1.	422-1	Gauge, Pressure, 0-300 PSI,2" Dia.(3Req'd)
2.	671-2-05	Switch, Toggle (DPST) (2 Req'd)
3.	1513-05	Boot, Switch (2 Req'd)
4.	1520-2-05	Meter, Hour 220V/60/1 c/w Leads
5.	N.P.N.	Rivet, Not Available (22 Req'd.)
6.	1670-1-05	Tag, "Fuel Pump Pressure"
7.	1670-2-05	Tag, "Coil Inlet Pressure"
8.	1670-3-05	Tag, "Coil Outlet Pressure"
9.	1670-4-05	Tag, "Burner Control Switch"
10.	1670-5-05	Tag, "Pump Control Switch"
11.	1670-6-05	Tag, "Hour Meter"
12.	1670-7-05	Tag, "Circuit Breaker"
13.	1670-8-05	Tag, "Open-Blowdown Valve-Closed"
14.	1670-22-05	Tag, "Identification Plate"
15.	1670-23-05	Tag, "Airdome Drain Valve"

ITEM	PART NO.	DESCRIPTION
16.	1670-27-05	Tag Switch "Hot-Cold"
17.	1670-28-05	Tag, Switch "On-Off"
18.	1124-02	Panel, Instrument Assembly
19.	Com'l.	Screw, 6-32 x 1/2" Lg., Rd. Hd.(3 Req'd)
19A.	Com'l.	Washer, No. 6 Lock (3 Req'd)
19B	Com'l.	Nut, 6-32 Hex (3 Req'd)
20.	Com'l.	Screw, 1/4"-20 x 1/2" Lg. Rd.Hd.(2 Req'd)
20C.	Com'l.	Washer, 1/4" Flat (2 Req'd)
20D	Com'l.	Washer, 1/4" Lock (2 Req'd)
20E.	Com'l.	Nut, 1/4"-20 Hex (2 Req'd)
21.	1515-7-05	Breaker, Circuit
22.	Com'l.	Screw, 10-32 x 3/8" Lg.
22F.	Com'l.	Washer, No. 10 Lock
22G.	Com'l.	Nut, 10-32 Hex

MODEL 200-AO
FIGURE XXII

PUMP AND MOTOR MOUNTING

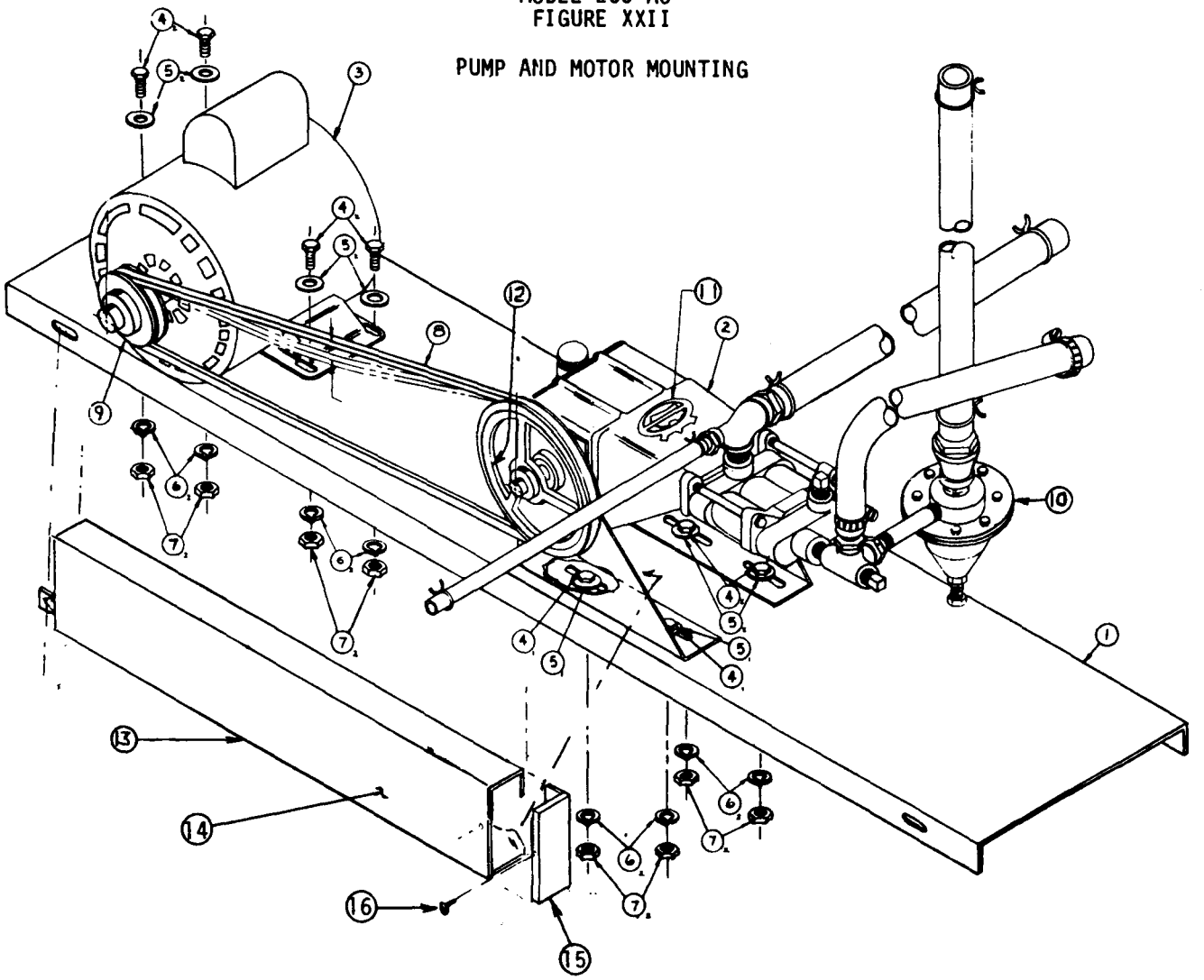

ITEM	PART NO.	DESCRIPTION
1.	1127-02	Base Plate, Pump and Motor Mount
2.	1190-03	Pump, Water (See Fig. XIV)
3.	577-5-03	Motor, 1/2 H.P. 240V/60Hz/1Ø
4.	Com'l.	Bolt, 5/16"-18 x 3/4" Lg. (8 Req'd)
5.	Com'l .	Washer, 5/16" Flat (8 Req'd)
6.	Com'l.	Washer, 5/16" Lock (8 Req'd)
7.	Com'l.	Nut, 5/16"-18 Hex (8 Req'd)
8.	1192-05	'V' Belt
9.	125-1	Pulley, Motor
10.	415-15-01	Valve, Bypass
11.	1670-05	Label, Pump I.D. and Serial NO
12.	1191-05	Pulley, Water Pump
13.	1155-01	Guard, Motor & Pump Belt
14.	1155-1-02	Cover, Motor & Pump Guard
15.	1155-5-02	Lid, Motor & Pump Guard
16.	Com'l.	Screw, #8 x l/2" Sheet Metal, Hex Hd.

MODEL 200-AO
COMPONENT PARTS LIST I

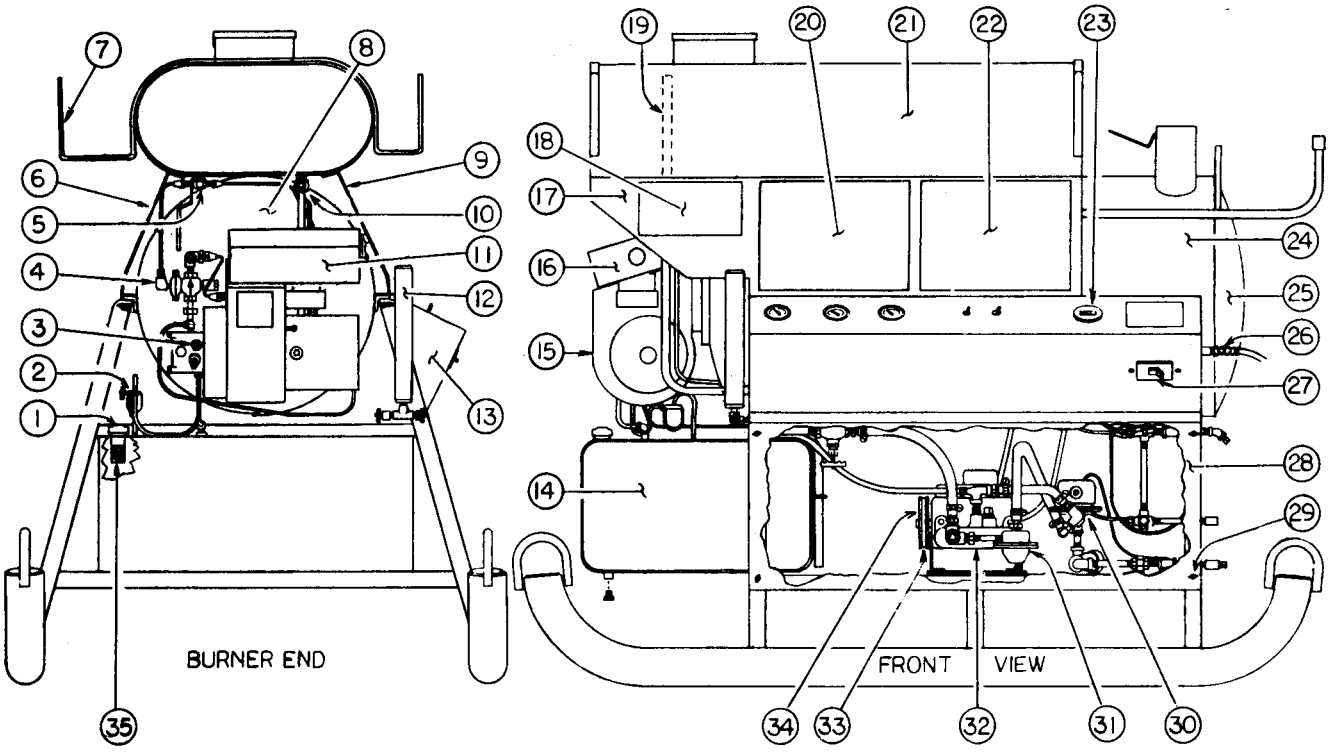

FIGURE XXIII

ITEM	PART NO.	DESCRIPTION
1.	1357-05	Cap, Fuel Tank
2.	2056	Filter, Fuel
3.	Ref.	Screw, Fuel Pump Pressure Adjustment
4.	1178-01	Modulator, Hydro/Fuel Safety
5.	652-05	Valve, Soap Tank Fill-Mix Ball
6.	1128-02	Panel, Rear Soap Tank Support
7.	1133-02	Hose Rack, Soap Tank (2 Req'd)
8.	1397-5-03	Bell End, Burner
9.	1129-02	Panel, Front Soap Tank Support
10.	401	Valve, Soap Metering
11.	1137-02	Cover, Burner Guard
12.	2169-02	Airdome
13.	1124-02	Panel, Instrument (Panel Only)
14.	1120-02	Tank, Fuel
15.	Ref.	Burner. Oil
16.	Ref.	Cover (See Item 11)
17.	Ref.	Panel (See item 9)
18.	1670-32-05	Label, "Warning Information"

ITEM	PART NO.	DESCRIPTION
19.	Com'l.	Nipple. Drain-Overflow 3/4"x8" T.O.E.
20.	1670-29-05	Plate, "Operating Instructions"
21.	1121-02	Tank, Soap Solution Supply
22.	1670-30-05	Plate, "Maintenance Instructions"
23.	1520-2-05	Meter, Hour
24.	1122-02	Shell, Heater Assembly, Less Coil
25.	1397-4-03	Bell, End Heater Shell
26.	3796-02	Guard, Electric Cable Strain
27.	1515-7-05	Switch, Circuit Breaker
28.	1125-02	Panel, Front Machinery, Less Labels
29.	Com'l.	Screw, Thumb l/4"x20xl/2" Lg. c/w Shoulder (8 Req'd)
30.	1140-3-01	Switch, Flow Safety
31.	415-15-01	Regulator, Bypass
32.	1190-03	Pump, Mater
33.	1192-05	Belt, "V" Motor to Pump
34.	1191-05	Pulley, Water Pump
35.	1151-02	Strainer, Fuel Tank Inlet

MODEL 200-AO
COMPONENT PARTS LIST II

FIGURE XXIV

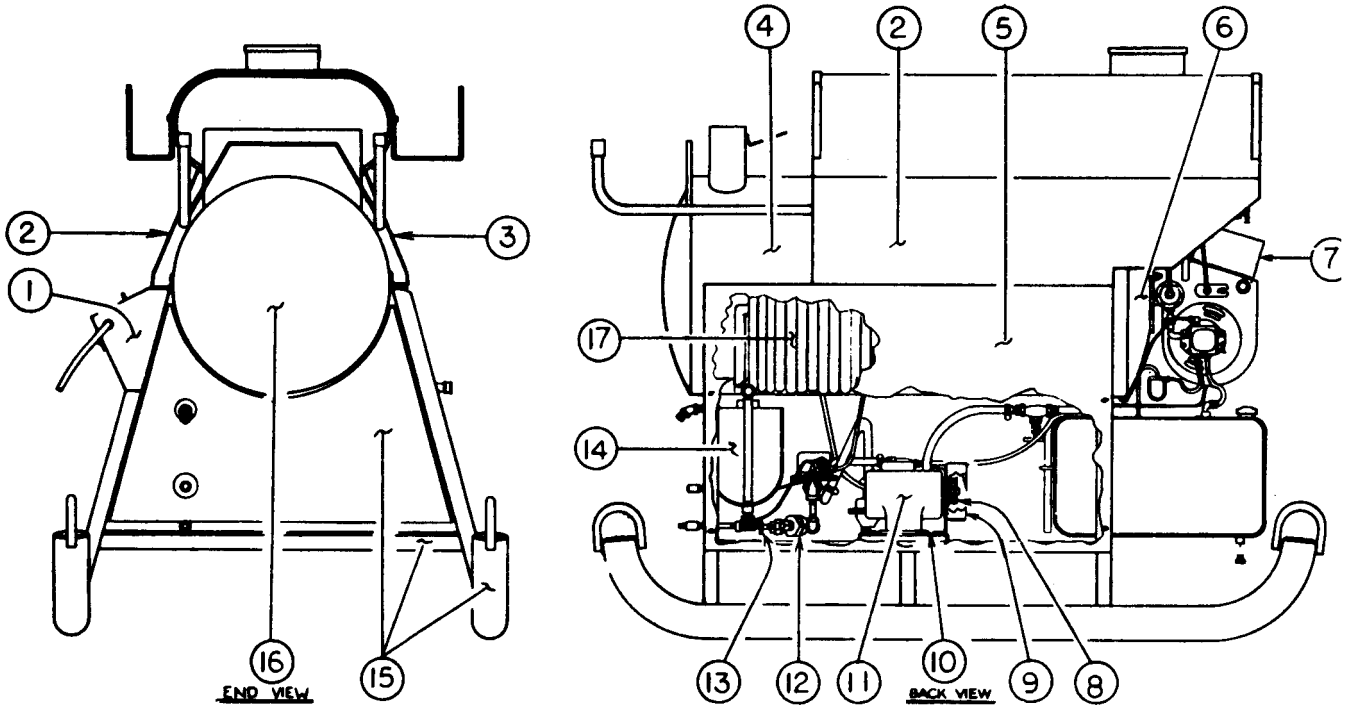

ITEM	PART NO.	DESCRIPTION
1.	1124-02	Panel, Instrument
2.	1129-02	Panel, Front Soap Tank Support
3.	1128-02	Panel, Rear Soap Tank Support
4.	1122-02	Shell, Heater Assy. Less Coil
5.	1126-02	Panel, Rear Machinery
6.	1397-5-03	End Bell, Burner Assembly
7.	1137-02	Cover, Burner Guard
8.	125-1	Pulley, Motor
9.	1155-01	Guard, Motor & Pump Belt
10.	1127-02	Plate, Motor and Pump Mounting
11.	577-5-03	Motor, 1/2 H.P. 240V/60Hz/Single Phase
12.	1529-1-05	Strainer, 3/4" Cast Iron "Y"
13.	1560-05	Valve, 3/4" Primary Water Supply
14.	1118-02	Tank, Water Supply S.S.
15.	1119-02	Skid and Chassis Assembly
16.	1397-4-03	Bell End, Heater Shell
17	1123-6-02	Coil, Complete Heater

MODEL 200-AO
COMPONENT PARTS LIST III
FIGURE XXY

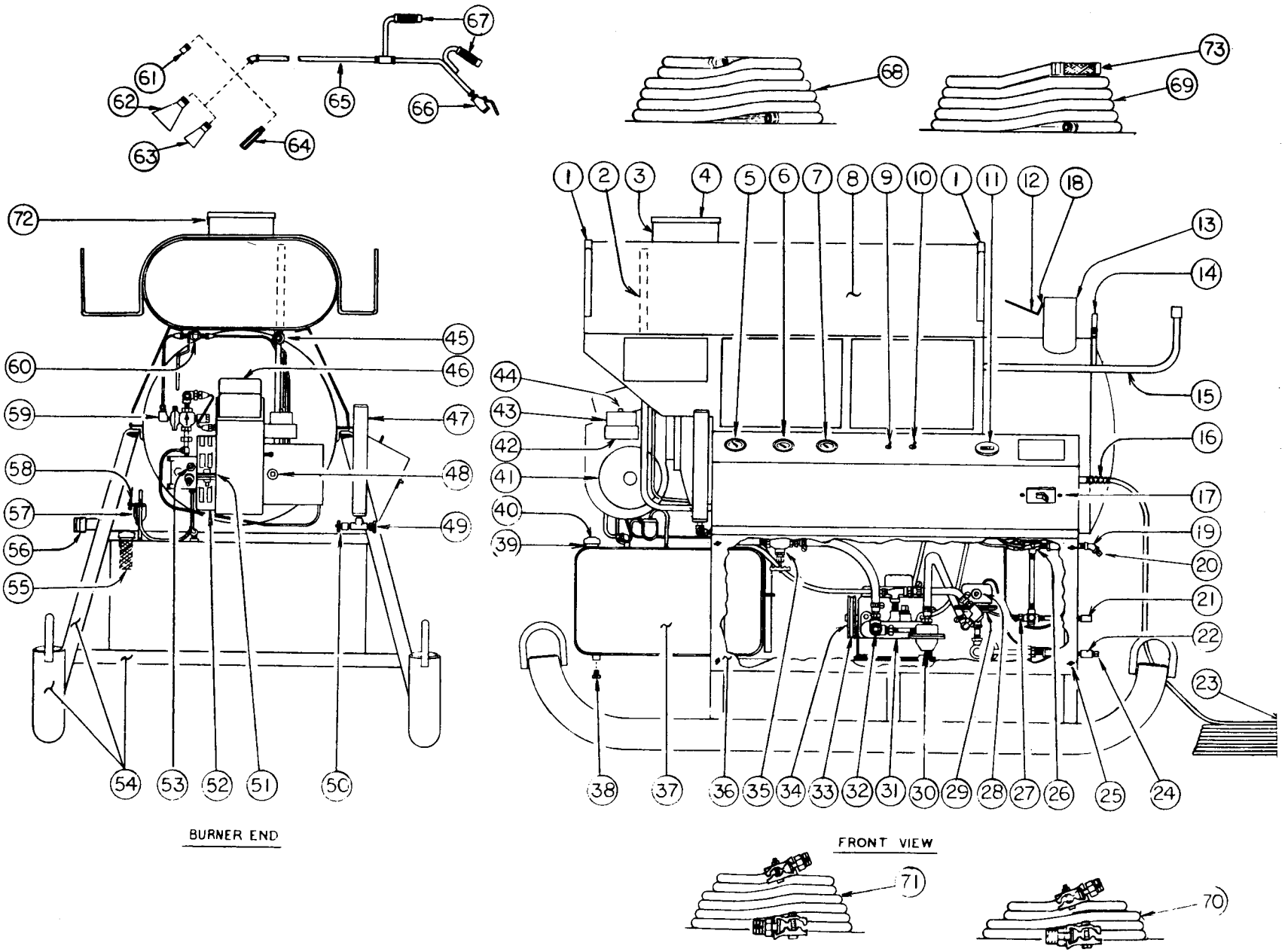

ITEM	PART NO.	DESCRIPTION
1.	1133-02	HOSE RACK, SOAP TANK SADDLE (2 REQ'D)
2.	COM'L	NIPPLE, DRAIN OVERFLOW, 3/4" X 8" T.O.E.
3.	REF.	FILL PORT, SOAP TANK (SEE ITEM 8)
4.	REF.	COVER, SOAP TANK FILL PORT
5.	422-1	GAUGE, OIL PUMP PRESSURE
6.	422-1	GAUGE, COIL INLET PRESSURE
7.	422-1	GAUGE, COIL OUTLET PRESSURE
8.	1121-02	TANK, SOAP SOLUTION SUPPLY
9.	671-2-05	SWITCH, TOGGLE (DPST)
10.	671-2-05	SWITCH, TOGGLE (DPST)
11.	1520-2-05	METER, HOUR
12.	REF.	COVER, VENT STACK
13.	REF.	VENT, HEATER SHELL ASSEMBLY
14.	REF.	GUARD,VENT STACK
15.	REF.	RACK, HOSE END ASSEMBLY (2 REQ'D)
16.	3796-02	STRAIN GUARD, ELECTRIC CABLE
17.	1515-7-05	SWITCH, MAIN CIRCUIT BREAKER
18.	REF.	HINGE, VENT STACK COVER
19.	COM'L	ELBOW, 1/2" X 45@, GALV.
20.	COM'L.	PLUG, 1/2" GALV.
21.	COM'L.	COUPLING, 1/2", ARMY GREY
22.	COM'L.	COUPLING, 3/4", ARMY GREY
23.	1199-2-03	CABLE, ELECTRIC 14-3 X 75'
24.	COM'L.	PLUG, 3/4", ARMY GREY
25.	COM'L.	SCREW, PANEL THUMB (8 REQ'D)1/4"X20X1/2"/SHOULDER
26.	205	VALVE, OUTLET GAUGE DAMPENING
27.	1117-05	SWITCH, OVERHEAT SAFETY
28.	689-05	SWITCH, PUSHBUTTON BLOWDOWN
29.	740-3-03	SWITCH, FLOW SAFETY (LESS ITEM 28)
30.	415-15-0T	REGULATOR, BYPASS
31.	1190-03	PUMP, WATER
32.	COM'L	PLUG, MANIFOLD DRAIN, 1/2" GALV.
33.	1192-05	V BELT, MOTOR TO PUMP
34.	1191-05	PULLEY, WATER PUMP
35.	2160	VALVE, 1/2" BLOWDOWN
36.	1125-02	PANEL, FRONT MACHINERY

ITEM	PART NO.	DESCRIPTION
37,	1120-02	TANK, FUEL SUPPLY
38.	COM'L,	PLUG, 1/4" P. HEX HD.
39.	REF.	NECK, FUEL TANK (SEE ITEM 37)
40.	1357-05	CAP, FUEL TANK NECK
41.	1175-1-05	MOTOR, 1/4 H.P. BURNER (SEE PAGE 48)
42.	1175-47-05	BOX, FLAME CONTROL MOUNT (SEE PAGE 48)
43.	1175-41-05	CONTROL, FLAME DETECTOR (SEE PAGE 48)
44.	REF.	SWITCH, FLAME CONTROL RESET
45.	401	VALVE, SOAP METERING, ANGLE
46.	1175-5-05	TRANSFORMER BURNER (SEE PAGE 48)
47.	2169-02	AIRDOME
48.	REF.	SWITCH, BURNER MOTOR RESET
49.	426	VALVE, AIRDOME DRAIN, 1/4" BRASS
50.	205	VALVE, INLET GUAGE DAMPENER
51.	REF.	SCREW, AIR BAND LOCK (SEE PAGE 48)
52.	REF.	BANDS, AIR ADJUSTMENT (SEE PAGE 48)
53.	REF.	SCREW, FUEL PUMP PRESSURE ADJUSTMENT
54.	1119-02	SKID AND CHASSIS ASSEMBLY
55.	1151-02	STRAINER, FUEL TANK INLET
56.	587-05	CONNECTOR, WATER SUPPLY
57.	2056	FILTER, FUEL
58.	REF.	VALVE, "ON-OFF" FUEL FILTER
59.	1178-01	MODULATOR, HYDRO/FUEL SAFETY
60.	652-05	VALVE, SOAP TANK FILL-MIX BALL
61.	649-3-04	NOZZLE, RINSE (#30 ORIFICE)
62.	676-2-02	NOZZLE 4" FLAT STEAM
63.	675-2-02	NOZZLE, 2" FLAT STEAM
64.	408-2-04	NOZZLE, HI-IMPACT STEAM
65.	1134-01	GUN, NOZZLE CONTROLLED STEAM
66.	764-05	VALVE, "ON-OFF" STEAM GUN
67.	405-11	GRIP, STEAM GUN (2 REQ'D)
68.	517-1-05	HOSE, WATER SUPPLY, 3/4"I.D.X50' COUPLED
69.	1157-1-05	HOSE, AUXILIARY WATER SUPPLY, 1"I.D.X30'
70.	462-3-05	HOSE, STEAM 1/2"I.D.X25' WIRE BRAID COUPLED
71.	463-3-05	HOSE, STEAM 1/2"I,D.X50' WIRE BRAID COUPLED
72.	REF.	HINGE, SOAP TANK FILL PORT COVER
73.	1535-05	VALVE, AUXILIARY HOSE STRAINER AND FOOT

200-AO HOSE & TUBING LIST

FIGURE XXVI

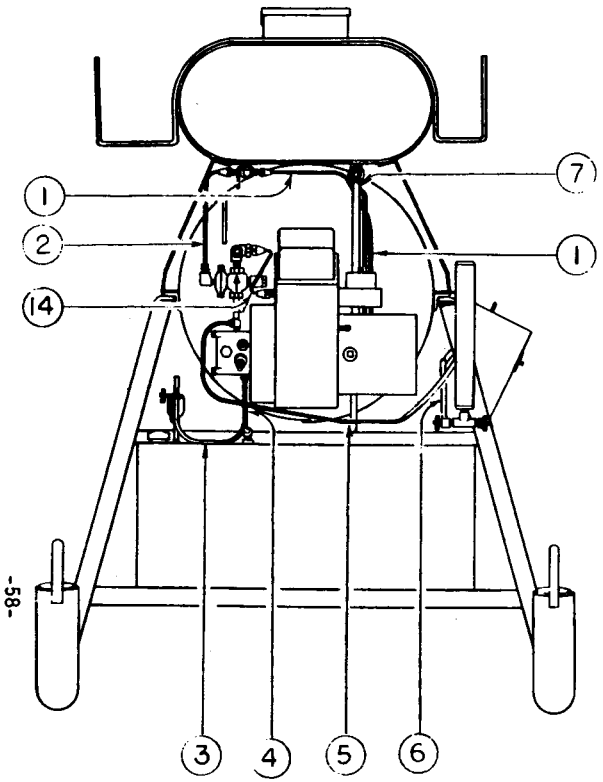

BURNER END

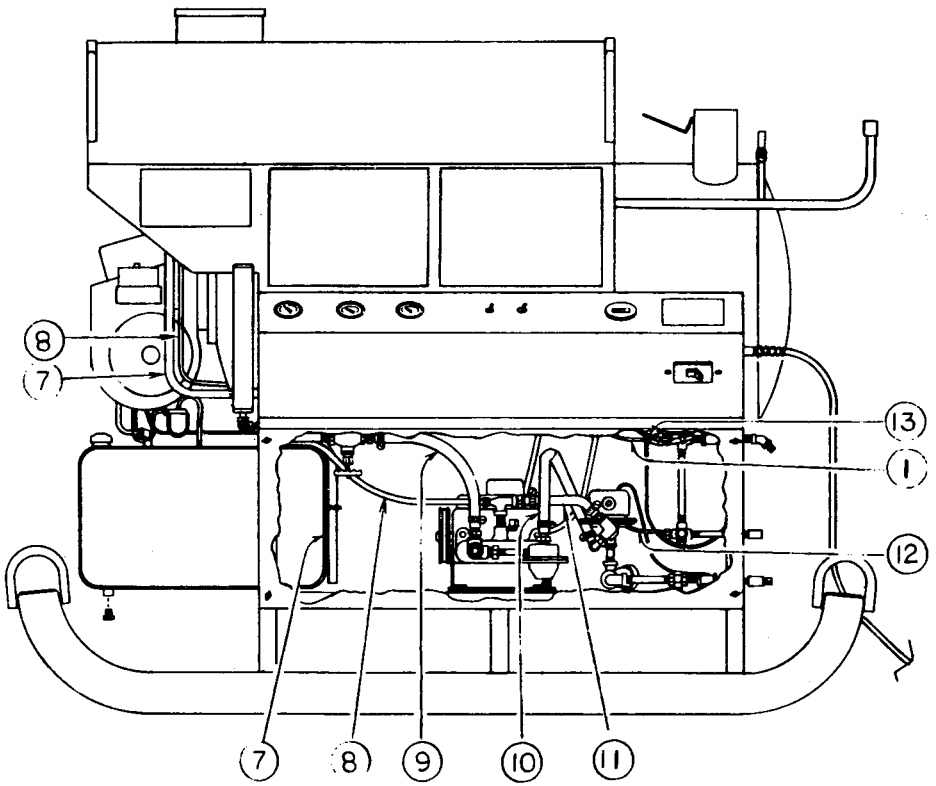

FRONT VIEW

ITEM	PART NO.	DESCRIPTION
1.	1189-4-03	Tubing, 3/8 x 51" Lg. Copper, Flared Both Ends with 3/8" Tubing Nuts. Coil Outlet Assembly to Soap "Fill/Mix" Valve.
2.	1189-5-03	Tubing, 1/4" x 8" Lg. Copper, Flared One End. Soap "Fill/Mix" Valve to Hydro/Fuel Safety Modulator.
3.	1196-5-03	Hose, 1/4" I.D. x 6½" Lg. Oil Resistant, Fuel Filter to Oil Pump.
4.	1196-5-03	Hose, 1/4" I.D. x 6½" Lg. Oil Resistant, Oil Pump to Fuel Tank.
5.	1189-1-03	Tubing, 1/4" x 32" Lg. Copper, Flared One End. Oil Pump to Oil Pump Pressure Gauge
6.	1189-2-03	Tubing, 1/4" x12½" Lg. Copper, Flared One End. Coil Inlet Assembly to Inlet Pressure Gauge,
7.	1196-03	Hose, 5/8" I.D. x 32" Lg. Contractors, Soap Tank Drain.

ITEM	PART NO.	DESCRIPTION
8.	1196-4-03	Hose, 1/4" I.D. x 34" Lg. Contractors, Soap Metering Valve to Water Pump Intake Manifold.
9.	1196-1-03	Hose, 1/2" I.D. x 11" Lg. Wire Braid, Water Pump Discharge Manifold to Coil Inlet Assembly.
10.	1196-2-03	Hose, 5/8" I.D. x 20" Lg. Contractors, Water Pump By-Pass Valve to Water Inlet Assembly.
11.	1196-3-03	Hose, 5/8" I.D. x 7" Lg. Contractors, Water Inlet Assembly to Water Pump Inlet Manifold.
12.	1189-03	Tubing, 1/4" x 17" Lg. Copper, Flared Both Ends with 1/4" Tubing Nuts. 1/4" Check Valve to Water Supply Tank.
13.	1189-3-03	Tubing, 1/4" x19½" Lg. Copper, Flared One End. Coil Outlet Assembly to Outlet Pressure Gauge.
14.	1175-19-03	Tubing, 3/16" x 8½" Lg. Copper, Flared Both Ends with 3/16" Tubing Nuts. Hydro/Fuel Safety Modulator to Burner Assembly.

MODEL 200-AO TAGS AND DATA PLATES

FIGURE XXVII

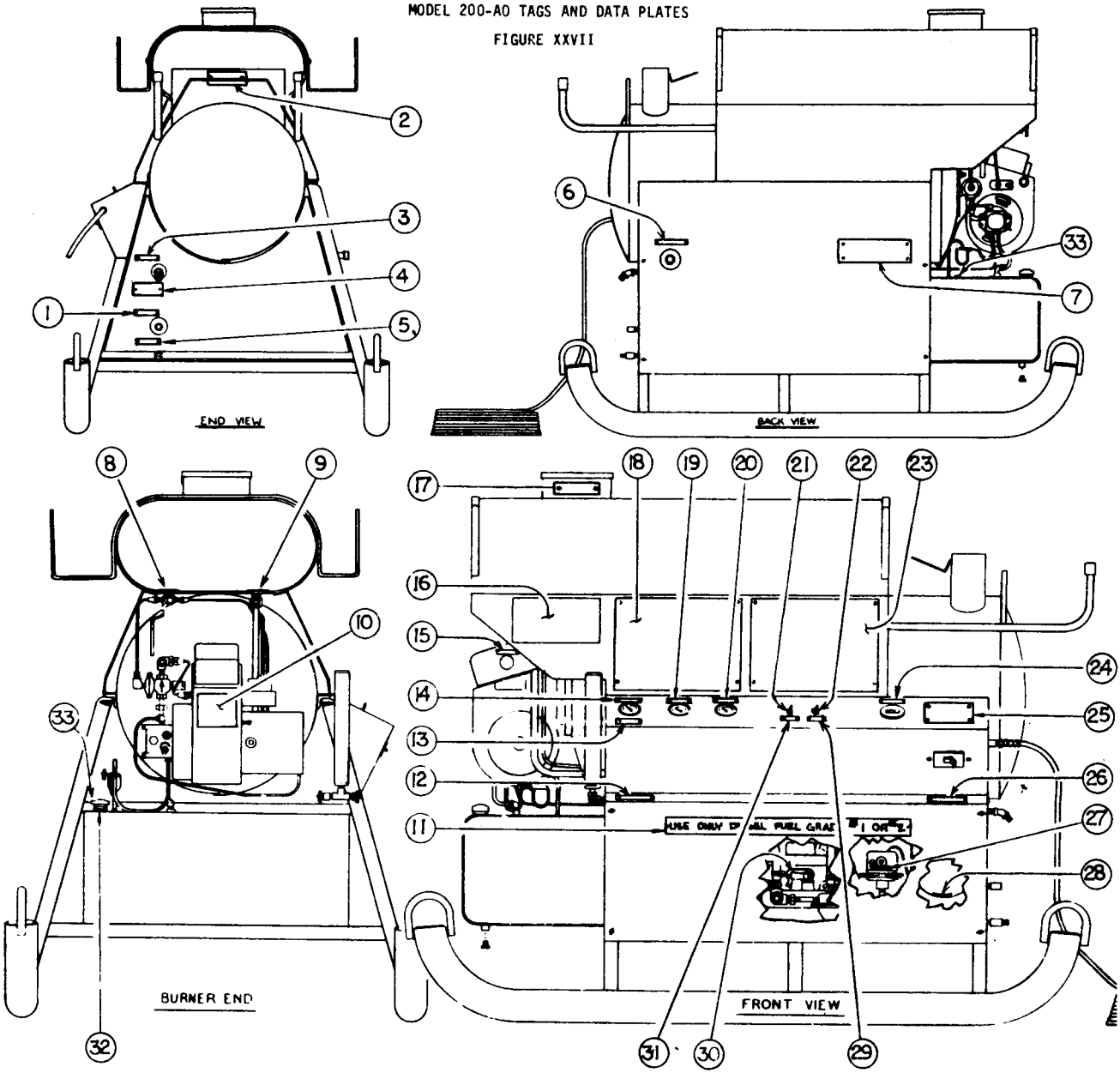

ITEM	PART NO.	DESCRIPTION
1.	1670-13-05	Tag, "Steam Hose Outlet
2.	1670-10-05	Tag, "Caution: Keep Clear, Open while in Operation:
3.	1670-12-05	Tag, "Blowdown Outlet"
4.	1670-11-05	Tag, "Warning: Keep (10) Ten Feet Clear in Front of Outlet During Blowdown Procedure"
5.	1670-14-05	Tag, "Auxiliary Water Inlet"
6.	1670-15-05	Tag, "Primary Water Inlet"
7.	1670-19-05	Tag. "Use only Diesel Fuel Grade #l or #2
8.	1670-18-05	Tag, "Fill and Stir Valve"
9.	1670-17-05	Tag, "Soap Control Valve"
10.	1670-25-05	Label, "Hydro/Fuel Safety Modulator"
11.	1670-31-05	Label, "Use Only Diesel Fuel Grade #1 or #2
12.	1670-8-05	Tag, "Blowdown Valve"
13.	1670-23-05	Tag, "Air dome Drain Valve"
14.	1670-1-05	Tag, "Fuel Pump Pressure"
15.	1670-26-05	Tag, "Burner Reset"

ITEM	PART NO.	DESCRIPTION
16.	1670-32-05	Label, "Warning Information"
17.	1670-20-05	Tag, "Cleaning Solution"
18.	1670-29-05	Plate, "Operating Instructions"
19.	1670-2-05	Tag, "Coil Inlet Pressure"
20.	1670-3-05	Tag, "Coil Outlet Pressure"
21.	1670-27-05	Tag, "Hot-Cold" Mini-Burner Switch
22.	1670-28-05	Tag, "On-Off" Mini -Pump Switch
23.	1670-30-05	Plate "Maintenance Instructions"
24.	1670-6-05	Tag, "Hour Meter"
25.	1670-22-05	Plate, "Identification"
26.	1670-7-05	Tag "Circuit Breaker"
27.	1670-21-05	Tag, "Blowdown Switch"
28.	1670-9-05	Tag, "Prim dry Water Valve"
29.	1670-5-05	Tag, "Pump Control Switch"
30.	1670-05	Plate, "Serial Pump I .0. "
31.	1670-4-05	Tag, "Burner Control Switch"
32.	1670-24-05	Label, "Fuel Fill Port"
33.	1670-16-05	Label, " Fuel Valve"

HEATER SHELL AND INSULATION ASSEMBLY
FIGURE XXVIII
MODEL 200-AO

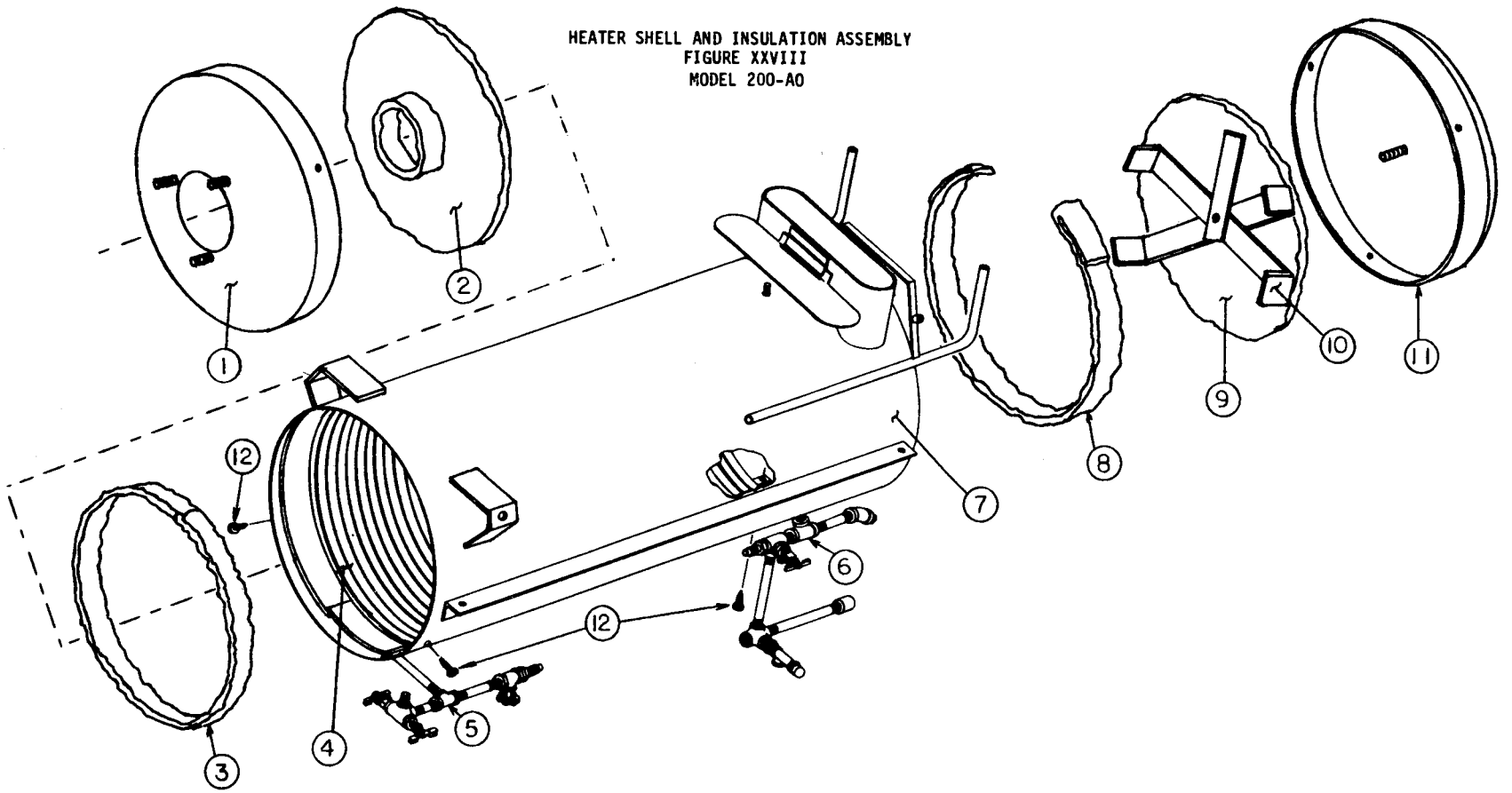

Replacing the coil is a major repair procedure and should not be attempted in other than regular shop facilities. It is further recommended that the following insulation also be replaced during this procedure.

Item	Part No.	Description
1.	1014-2-05	Insulation, Strip, 3" x 54" x 1"
2.	1014-3-05	Insulation, End, 16" Dia. x 1/2"
3.	1014-4-05	Insulation, Strip, 6" x 54" x 1"

ITEM	PART NO.	DESCRIPTION
1.	1397-5-03	Bell, Burner End
2.	1014-1-05	Insulation, Preformed Burner Drum Head
3.	1014-2-05	Insulation, Strip 3" x 54" x 1"
4.	1123-6-02	Coil, Complete
5.	Ref.	Plumbing Assembly, Inlet Coil (See Page 41)
6.	Ref.	Plumbing Assembly, Outlet Coil (See Page 43)
7.	1122-02	Shell, Heater
8.	1014-4-05	Insulation, Strip 6" x 54" x 1"
9.	1014-3-05	Insulation, End Bell 16" Dia. x 1/2"
10.	1130-02	Retainer, End Bell Insulation
11.	1397-4-03	Bell, Vent End
12.	Com'l.	Bolt, Coil Alignment, Hex Hd. 1/2"-20 x 1/2" (3 Req'd.)

MODEL 200-AO
FIGURE XXVIII

ACCESSORIES

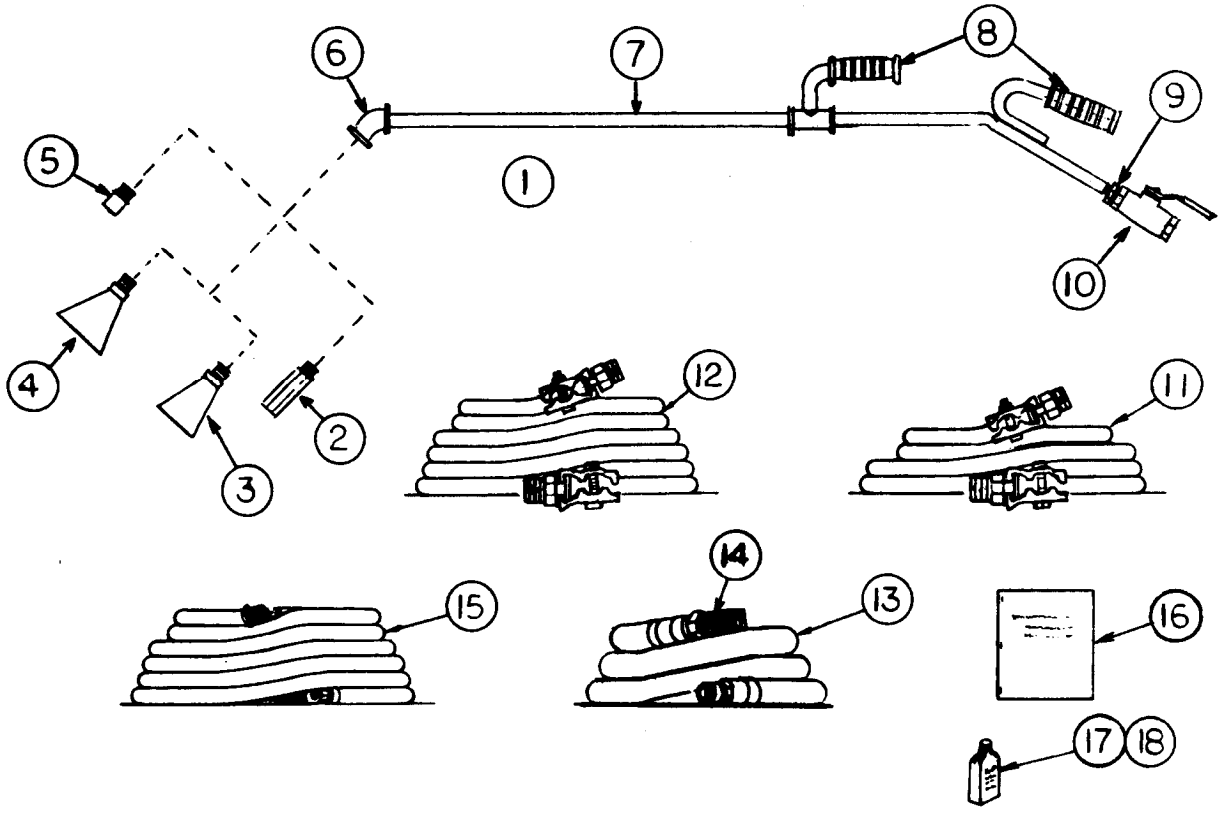

ITEM	PART NO.	DESCRIPTION
1.	1134-01	Gun, Nozzle Controlled Steam, includes items 6, 7, 8, 9 & 10
2.	408-2-04	Nozzle, Hi Impact Steam
3.	675-2-02	Nozzle, 2" Flat Steam
4.	676-2-02	Nozzle, 4" Flat Steam
5.	649-3-04	Nozzle, Rinse (#30 Orifice)
6.	Com'l	Elbow, 3/8" X 45°
7.	Ref.	Wand, Steam Gun (less items 8 & 10)
8.	405-11.	Grip, Steam Gun (2 Req'd)
9.	Com'l.	Bushing, 1/2" x 3/8" Hex
10.	764-05	Valve, Steam Gun 'ON-OFF'
11.	462-3-05	Hose, Steam 1/2" I.D. x 25' Wire Braid, Coupled
12.	463-3-05	Hose, Steam 1/2" I.D. x 50' Wire Braid, Coupled
13.	1557-1-05	Hose, Auxiliary Water Supply, 1" I.D. x 30'
14.	1535-05	Valve, Auxiliary Hose Strainer & Foot
15.	517-1-05	Hose, Water Supply 3/4" I.D. x 50', Coupled
16.	1748	Manual, Operation & Maintenance
17.	1002-05	Desooter, 1 Pint
18.	1002-1-05	Desooter, 1 Case (12 pints)
19.		NSN 6810-00-236-5665 Hydrochloric Acid (Deliming) (5 Gal) (Not Shown)
20		NSN 6850-00-753-5000 Liquid Cleaner (55 Gal Drum) (Not Shown)

OPTIONAL NOZZLE CONTROL STEAM GUN
FIGURE XXX

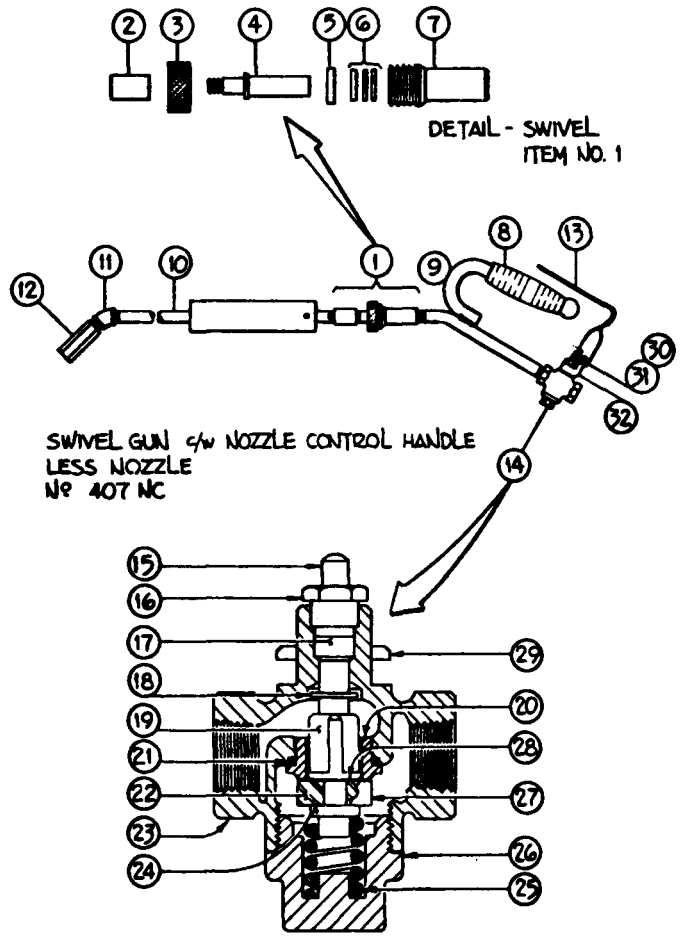

FIGURE XIII. STEAM GUN AND NOZZLE CONTROL VALVE PARTS LIST
(Nozzle Control Units Only)

ITEM	PART NO.	DESCRIPTION
1.	405A.	Swivel Assembly, Complete
2.	551	Coupling, 3/8
3.	405-6	Cap, Packing Gland
4.	405-F	Nipple, Swivel, Brass
5.	405-E	Bushing, Packing Ring
6.	405-D	Packing, Set, Chevron (3 to set)
7.	405-G	Body, Swivel
8.	405-11	Grip, Hand, Rubber
9.	405-B	Handle, Rear Grip
10.	405-3	Gun Extension and Hand Grip
11.	N.P.N.	Elbow, 45 x 3/8"
12.	Ref.	Hex Nozzle
13.	550-16	Handle Lever, Squeeze Valve
14.	550-05	Squeeze Valve, 1/2"
15.	550-1	Stem, Squeeze Valve
16.	550-2	Gland, Packing
17.	550-3	Packing
18.	550-4	Ring, Retainer
19.	550-5	Plunger
20.	550-6	Seat, Insert
21.	550-7	O-Ring
22.	550-8	Disc, Teflon
23.	550-9	Body, Squeeze Valve
24.	550-10	Nut, Plunger
25.	550-11	Spring, Plunger
26.	550-12	Cap, Body
27.	550-13	Cage, Disc
28.	550-14	Disc, Plunger
29.	550-15	Locknut
30.	550-17	Cotter Pin
31.	550-18	Pin, Pivot, Lever H.D.
32.	550-19	Bracket, Lever Mounting H.D.

NOTE: THESE OPTIONAL ACCESSORIES ARE AVAILABLE FROM THE MANUFACTURER BUT WERE NOT SUPPLIED AS STANDARD WITH MODEL 200-AO.

OPTIONAL ACCESSORIES - MODEL 200-AO
FIGURE XXXI

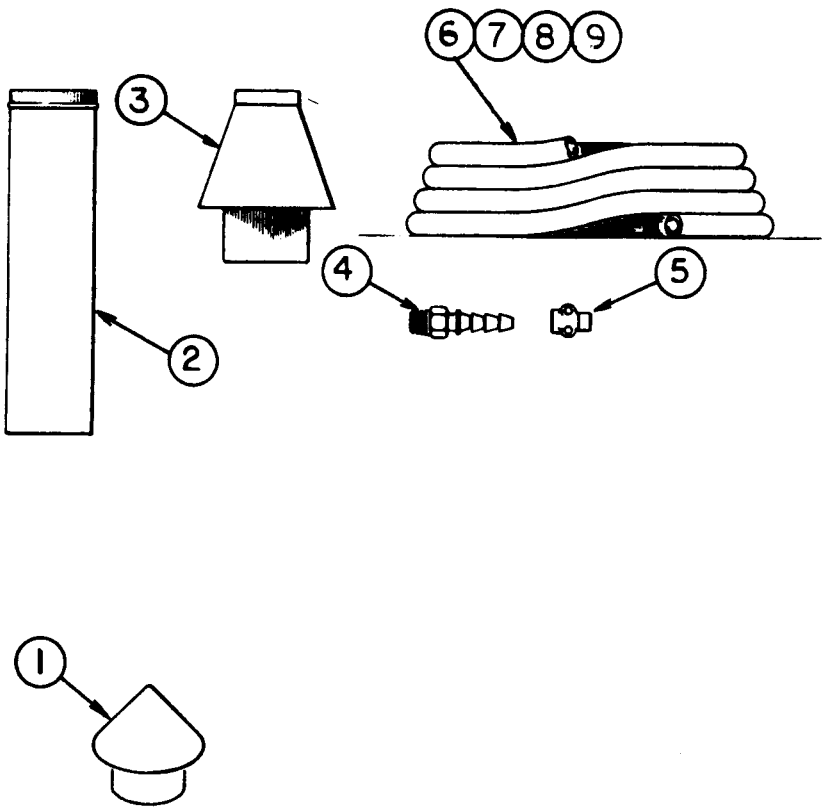

Item	Part No.	Description
1.	485-10	Cover, Rain Protection, 10" I.D.
2.	653-05	Stack, 10" I.D. x 30"
3.	486-10	Diverter, Downdraft 10" I.D.
4.	412	Spud, Steam Hose, 1/2"
5.	411	Clamp, Steam Hose Spud 1/2"
* 6.	462	Hose, Steam, 1/2" I.D. x 25', 1 Wire Braid
* 7.	463	Hose, Steam 1/2" I.D. x 50', 1 Wire Braid
* 8.	462-2	Hose, Steam, H.D., 1/2" x 25', 2 Wire Braid
* 9.	463-2	Hose, Steam, H.D., 1/2" x 50', 2 Wire Braid

* Hoses listed are standard commercial quality.

NOTE: THESE OPTIONAL ACCESSORIES ARE AVAILABLE FROM THE MANUFACTURER BUT WERE NOT SUPPLIED AS STANDARD WITH MODEL 200-AO

WATER TREATMENT

Water treatment is the responsibility Of the user. The treatment of water, care of cleaner and accessories, are beyond the control of the manufacturer. Provisions for water treatment, when required, should be planned and installed prior to placing cleaner in service.

In general, all water used in a modern cleaner must:

A. Have controlled or zero hardness,
B. Have controlled or zero free oxygen,
c. Have sufficient alkalinity (pH).

Normal Hardness:

In normal cleaning operations and when water hardness is not excessive (under 15 grains), the use of quality cleaning compounds such as Compound and Liquid Concentrates, when used in recommended amounts, will properly treat water for the conditions outlined above. However, even under the most ideal conditions, hard water will, over a period of time, deposit some scale within the cleaner's coils.

The build-up of scale (mineral deposits) is relative to type of hardness, quality of compounds or concentrates used, and hours per week of operation. Removal of this scale is quite simple through the use of a quality inhibited acid, such as Coil Descaler. The frequency of descaling should not exceed two to three times per year. Excessive descaling is indicative of poor quality soaps, inadequate usage, or excessive water hardness.

Excessive Hardness:

If the water hardness is excessive and cannot be controlled by use of quality compounds and, IN ALL CASES WHERE SUCH COMPOUNDS CANNOT BE USED, a means of removing mineral hardness from the water must be used prior to supplying the water to the cleaner.

Ion exchange type softener is the most common method used. The size of the softener is dependent upon the gallonage required between regenerations, maximum flow rate, hardness of the water, and regeneration cycle desired either of the manual, push-button semi-automatic, or full automatic type.

Free Oxygen and Other Gases:

While ion exchange type water softening will eliminate coil scale formation, and filter out much of the sludge (suspended solids), it will not remove nor control excessive oxygen or other gases . . . the cause of interior corrosion of heating coils and plumbing.

Any good water treatment compound, used in the recommended quantity, will provide free oxygen control and proper pH adjustment during operation and can be metered into the soft water being supplied to the cleaner through the cleaner's regular soap system, instead of soap.

Sizing of Water Softeners:

1. Determine feedwater hardness in grains per gallon (1 grain per gallon equals 17.1 parts per million). Example: 342 p.p.m. equals 20 g.p.g.

2. Determine gallonage between the required regeneration periods (grains per gallon times gallons per hour capacity of cleaner, times hours of daily or weekly use, times 1.15 - 15% safety factor) equals size required.

Example: Model 200-A0 (200 g.p.h.). 342 parts per million hardness used 4 hours per day - 6 days per week (342 p.p.m. divided by 17.1 = 20 grains per gallon). Objective: size of softener for manual - weekly or daily automatic time clock type.

A. Manual - Weekly

200	gallons per hour
x 4	hours per day
800	gallons per day
x 6	days per week
4,800	gallons per week
x 20	grains per gallon
96,000	grains per week
x 115	Safety Factor
110,400	grains per week

B. Automatic Daily

200	gallons per hour
x 4	hours per day
800	gallons per day
x 20	grains per gallon
16,000	grains per day
X 115	Safety Factor
18,400	grains per day

A - Required a 120,000 grain Manual Softener to be regenerated once each week.

B - Required a 20,000 grain Automatic Softener to be regenerated daily.

NOTE: The above is a guide to assure selection of proper size and type of water softening equipment. In all cases we would recommend consulting your local water softener dealer. Hardness of your water supply is available through your local water department, city engineer, or your local water softener dealer.

By Order of the Secretary of the Army:

E. C. MEYER
General, United States Army
Chief of Staff

Official:

B. G. JOYCE
Brigadier General, United States Army
The Adjutant General

☆U.S. GOVERNMENT PRINTING OFFICE: 1993 - 342-421/80204

RECOMMENDED CHANGES TO EQUIPMENT TECHNICAL PUBLICATIONS

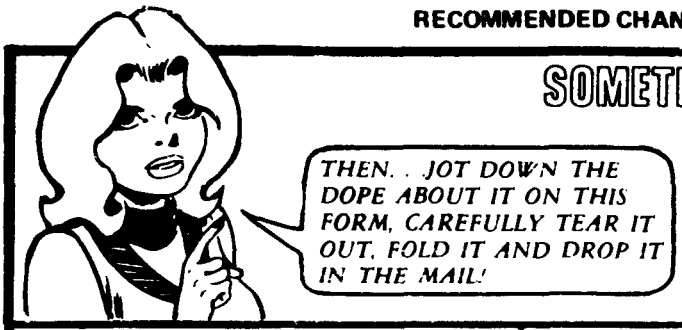

SOMETHING WRONG WITH THIS PUBLICATION?

FROM: (PRINT YOUR UNIT'S COMPLETE ADDRESS)

DATE SENT

PUBLICATION NUMBER	PUBLICATION DATE	PUBLICATION TITLE
TM 9-4940-525-14&P	16 Oct 81	Cleaner, Steam Pressure

BE EXACT. . PIN-POINT WHERE IT IS

PAGE NO	PARA-GRAPH	FIGURE NO	TABLE NO
13	9.6		

IN THIS SPACE TELL WHAT IS WRONG AND WHAT SHOULD BE DONE ABOUT IT:

Fuel Pump Pressure Adjustment (Reference Page 22) change to Page 23

SAMPLE

PRINTED NAME, GRADE OR TITLE, AND TELEPHONE NUMBER

SIGN HERE:

DA FORM 1 JUL 79 2028-2

PREVIOUS EDITIONS ARE OBSOLETE.

P.S.--IF YOUR OUTFIT WANTS TO KNOW ABOUT YOUR RECOMMENDATION MAKE A CARBON COPY OF THIS AND GIVE IT TO YOUR HEADQUARTERS.

REVERSE OF DA FORM 2028-2

FILL IN YOUR UNIT'S ADDRESS

FOLD BACK

DEPARTMENT OF THE ARMY

OFFICIAL BUSINESS

TEAR ALONG PERFORATED LINE

Commander
US Army Armament Materiel Readiness Command
ATTN: DRSAR-MAS
Rock Island, IL 61299

RECOMMENDED CHANGES TO EQUIPMENT TECHNICAL PUBLICATIONS

THEN. . JOT DOWN THE DOPE ABOUT IT ON THIS FORM, CAREFULLY TEAR IT OUT, FOLD IT AND DROP IT IN THE MAIL!

SOMETHING WRONG WITH THIS PUBLICATION?

FROM: (PRINT YOUR UNIT'S COMPLETE ADDRESS)

DATE SENT

PUBLICATION NUMBER	PUBLICATION DATE	PUBLICATION TITLE
TM 9-4940-525-14&P	16 Oct 81	Cleaner, Steam Pressure

BE EXACT. . .PIN-POINT WHERE IT IS

PAGE NO	PARA-GRAPH	FIGURE NO	TABLE NO

IN THIS SPACE TELL WHAT IS WRONG AND WHAT SHOULD BE DONE ABOUT IT:

PRINTED NAME, GRADE OR TITLE, AND TELEPHONE NUMBER

SIGN HERE:

TEAR ALONG PERFORATED LINE

DA FORM 1 JUL 79 2028-2

PREVIOUS EDITIONS ARE OBSOLETE.

P.S.—IF YOUR OUTFIT WANTS TO KNOW ABOUT YOUR RECOMMENDATION MAKE A CARBON COPY OF THIS AND GIVE IT TO YOUR HEADQUARTERS.

REVERSE OF DA FORM 2028-2

FILL IN YOUR UNIT'S ADDRESS

FOLD BACK

TEAR ALONG PERFORATED LINE

DEPARTMENT OF THE ARMY

OFFICIAL BUSINESS

Commander
US Army Armament Materiel Readiness Command
ATTN: DRSAR-MAS
Rock Island, IL 61299

RECOMMENDED CHANGES TO EQUIPMENT TECHNICAL PUBLICATIONS

THEN. . JOT DOWN THE DOPE ABOUT IT ON THIS FORM, CAREFULLY TEAR IT OUT, FOLD IT AND DROP IT IN THE MAIL!

SOMETHING WRONG WITH THIS PUBLICATION?

FROM: (PRINT YOUR UNIT'S COMPLETE ADDRESS)

DATE SENT

PUBLICATION NUMBER	PUBLICATION DATE	PUBLICATION TITLE
TM 9-4940-525-14&P	16 Oct 81	Cleaner, Steam Pressure

BE EXACT. . .PIN-POINT WHERE IT IS

PAGE NO	PARA-GRAPH	FIGURE NO	TABLE NO

IN THIS SPACE TELL WHAT IS WRONG AND WHAT SHOULD BE DONE ABOUT IT:

PRINTED NAME, GRADE OR TITLE, AND TELEPHONE NUMBER

SIGN HERE:

DA FORM 1 JUL 79 2028-2

PREVIOUS EDITIONS ARE OBSOLETE.

P.S.—IF YOUR OUTFIT WANTS TO KNOW ABOUT YOUR RECOMMENDATION MAKE A CARBON COPY OF THIS AND GIVE IT TO YOUR HEADQUARTERS.

TEAR ALONG PERFORATED LINE

REVERSE OF DA FORM 2028-2

FILL IN YOUR UNIT'S ADDRESS

FOLD BACK

DEPARTMENT OF THE ARMY

OFFICIAL BUSINESS

Commander
US Army Armament Materiel Readiness Command
ATTN: DRSAR-MAS
Rock Island, IL 61299

TEAR ALONG PERFORATED LINE

RECOMMENDED CHANGES TO EQUIPMENT TECHNICAL PUBLICATIONS

SOMETHING WRONG WITH THIS PUBLICATION?

FROM: (PRINT YOUR UNIT'S COMPLETE ADDRESS)

DATE SENT

PUBLICATION NUMBER	PUBLICATION DATE	PUBLICATION TITLE
TM 9-4940-525-14&P	16 Oct 81	Cleaner, Steam Pressure

BE EXACT. . .PIN-POINT WHERE IT IS

PAGE NO	PARA-GRAPH	FIGURE NO	TABLE NO

IN THIS SPACE TELL WHAT IS WRONG AND WHAT SHOULD BE DONE ABOUT IT:

PRINTED NAME, GRADE OR TITLE, AND TELEPHONE NUMBER

SIGN HERE:

DA FORM 1 JUL 79 2028-2

PREVIOUS EDITIONS ARE OBSOLETE.

P.S.—IF YOUR OUTFIT WANTS TO KNOW ABOUT YOU RECOMMENDATION MAKE A CARBON COPY OF THIS AND GIVE IT TO YOUR HEADQUARTERS.

TEAR ALONG PERFORATED LINE

REVERSE OF DA FORM 2028-2

FILL IN YOUR UNIT'S ADDRESS

FOLD BACK

TEAR ALONG PERFORATED LINE

DEPARTMENT OF THE ARMY

OFFICIAL BUSINESS

Commander
US Army Armament Materiel Readiness Command
ATTN: DRSAR-MAS
Rock Island, IL 61299

TM 9-4940-525-14&P CLEANER, STEAM PRESSURE—1981

PIN: 049958-001

This fine document...

Was brought to you by me:

Liberated Manuals -- free army and government manuals

Why do I do it? I am tired of sleazy CD-ROM sellers, who take publicly available information, slap “watermarks” and other junk on it, and sell it. Those masters of search engine manipulation make sure that their sites that sell free information, come up first in search engines. They did not create it... They did not even scan it... Why should they get your money? Why are not letting you give those free manuals to your friends?

I am setting this document FREE. This document was made by the US Government and is NOT protected by Copyright. Feel free to share, republish, sell and so on.

I am not asking you for donations, fees or handouts. If you can, please provide a link to liberatedmanuals.com, so that free manuals come up first in search engines:

<A HREF=http://www.liberatedmanuals.com/>Free Military and Government Manuals</A>

- Sincerely
  Igor Chudov
  http://igor.chudov.com/
- Chicago Machinery Movers