TECHNICAL MANUAL

OPERATOR'S, ORGANIZATIONAL, DIRECT SUPPORT AND GENERAL SUPPORT MAINTENANCE MANUAL INCLUDING REPAIR PARTS LIST

FOR

SEPARATOR, OIL AND WATER

MODEL P/N 50-6655

(ECLIPSE SYSTEMS, INC.)

(NSN 4940-00-242-4101)

HEADQUARTERS, DEPARTMENT OF THE ARMY

18 DECEMBER 1980

TECHNICAL MANUAL
No. 9-4940-446-14&P

HEADQUARTERS
DEPARTMENT OF THE ARMY
WASHINGTON, DC, *18 December 1980*

Operator's, Organizational, Direct Support and General Support Maintenance Manual
Including Repair Parts List
For

SEPARATOR, OIL AND WATER
MODEL P/N 50-6655
(ECLIPSE SYSTEMS, INC.)
(NSN 4940-00-242-41 01)

REPORTING ERRORS AND RECOMMENDING IMPROVEMENTS

You can help improve this manual. If you find any mistakes or if you know of a way to improve the procedures, please let us know. Mail your letter, DA Form 2028 (Recommended Changes to Publications and Blank Forms), or DA Form 2028-2, located in the back of this manual direct to: Commander, US Army Armament Materiel Readiness Command, ATTN: DRSAR-MAS, Rock Island, IL 61299. A reply will be furnished directly to you.

NOTE

This manual is published for the purpose of identifying an authorized commercial manual for the use of the personnel to whom this oil and water separator is issued.

Manufactured by: Eclipse Systems Inc.
P. O. Box E, Cork Hill Road
Franklin, NJ 07416

Procured under Contact No. DAAA09-78-C-4674

This technical manual is an authentication of the manufacturers' commercial literature and does not conform with the format and content specified in AR 310-3, Military Publications. This technical manual does, however, contain available information that is essential to the operation and maintenance of the equipment.

INSTRUCTIONS FOR REQUISITIONING PARTS NOT IDENTIFIED BY NSN

When requisitioning parts not identified by National Stock Number, it is mandatory that the following information be furnished the supply officer.

1 - Manufacturer's Federal Supply Code Number - 19272

2 - Manufacturer's Part Number exactly as listed herein.

3 - Nomenclature exactly as listed herein, including dimensions, if necessary.

4 - Manufacturer's Model Number - Model P/N 50-6655

5 - Manufacturer's Serial Number (End Item)

6 - Any other information such as Type, Frame Number, and Electrical Characteristics, if applicable.

7 - If DD Form 1348 is used, fill in all blocks except 4, 5, 6, and Remarks field in accordance with AR 725-50.

Complete Form as Follows:

(a) In blocks 4, 5, 6, list manufacturer's Federal Supply Code Number - 19272 followed by a colon and manufacturer's Part Number for the repair part.

(b) Complete Remarks field as follows:
Noun: (nomenclature of repair part)
For: NSN: 4940-00-242-4101
Manufacturer: Eclipse Systems, Inc.

Model: P/N 50-6655
Serial: (of end item)

Any other pertinent information such as Frame Number, Type, Dimensions, etc.

MAINTENANCE INSTRUCTIONS
SEPARATOR DUAL REGULATOR

The bowl of the filter should be drained daily or whenever water accumulates in the bottom of the bowl. Filter should be disassembled and cleaned periodically.

Supply air inlet is a 1/2" NPS male adapter in side of filter. The gage mounted in body indicates line air pressure.

Regulated filtered air is supplied through the regulators mounted on the body. The regulators are used to control the air pressure, which is indicated on the gage mounted on the regulator. To adjust the air pressure, turn adjustment knob (5) on regulator counter clockwise to decrease pressure and clockwise to increase air pressure (maximum pressure 100 psi).

DISASSEMBLY OF FILTER FOR CLEANING AND MAINTENANCE.

6-4429 Filter Disassembly

Remove clamp ring (1) and remove bowl (2) with bowl gasket (3). Unscrew filter cartridge retainer (4) to remove filter cartridge (5) and replace, if needed.

To assemble filter, follow above instructions in reverse.

6-4430 Regulator

Dirt on valve (9) will cause regulator pressure to creep. After regulator is set, the pressure will increase. To correct, remove bottom plug (6). Unscrew plug (6) carefully, so as not to lose o-ring (7), spring (8), valve (9). Clean valve seat or replace, if necessary, and assemble.

Disassembly of regulator

Unscrew and remove adjustment screw (1) together with rivet (2) and spring (3). Unscrew cover (4). Then lift out diaphragm (5). Unscrew plug (6), remove o-ring (7), spring (8) and valve (9) from body (10). Clean all parts in a clean mild solvent and reassemble in the reverse order of above disassembly.

Gages, valves, mounting bracket and fittings may be removed for cleaning by unscrewing from body or regulators.

OPERATING INSTRUCTIONS

Air inlet (1/2" NPS) to separator is in side of separator head. Mainline air pressure is indicated on pressure gage mounted on body. Gage reads in pounds per square inch (psi) from 0 — 200 psi. Shut-off valves are mounted on body which is filtered mainline air pressure. Valve is off with handle in 90° position to valve body and on with handle parallel to body of valve.

Air pressure regulators are mounted on body for filtered regulated air supply. Automatically removes water, dirt, pipe scale and other harmful foreign matter from air lines. Incoming air is led down the center tube, then directed out against the curved baffle. The centrifugal action imparted to the air efficiently separates dirt and water which drops to the bottom. The air then passes through the cleanable micronic filter element as a final safeguard. The lower flat baffle plate prevents accumulated water and dirt from re-entering the air stream.

The regulators are spring-loaded diaphragm type regulators. The direction of air flow is indicated by an in marking next to the required port on the regulator. Air enters the air inlet on the in marked side and flows past the spring-loaded valve disc which is held in the open position by the valve stem which extends up to the lower side of the diaphragm. A spring-loaded spring retainer presses against the opposite side of the diaphragm. Air flows up past the valve stem to the pressure chamber below the diaphragm. If the incoming air pressure does not exceed the pressure for which the regulator is set, the air flows through a small aperature on the outlet side of the pressure chamber to the outlet connection. If the inlet pressure exceeds the pressure for which the regulator is set, the pressure on the bottom of the diaphragm forces the diaphragm up. The valve stem is forced to follow the diaphragm by the action of the spring below the valve disc. When the pressure in the pressure chamber is high enough, the valve disc seats and prevents more air from passing through the regulator. As air is used from the outlet of the regulator, the pressure in the pressure chamber drops and the spring above the diaphragm forces the valve disc open to allow more air from the inlet side to pass into the pressure chamber. The regulator pressure is adjusted by increasing or decreasing the pressure on the spring above the diaphragm with the adjusting knob through the top of the regulator. Increasing the pressure on the spring increases the regulated pressure.

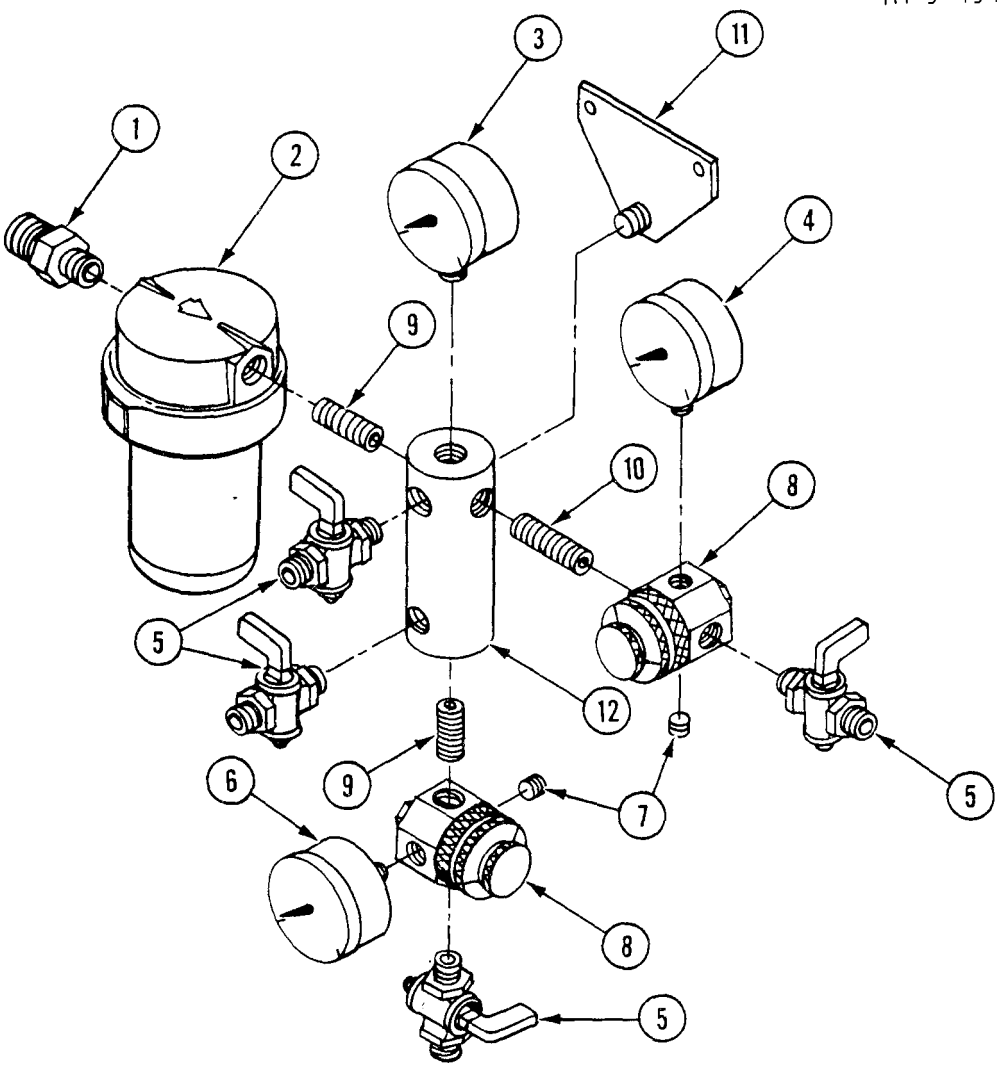

SEPARATOR – 50-6655			
Item No.	Part No.	Description	Qty.
1	20-4400-35	Adapter	1
2	6-4429	Filter	1
3	6-4320-200	Gage	1
4	6-4321-100	Gage	1
5	5-4392	Shut off cock	4
6	6-4428-100	Gage	1
7	20-6077	Plug	2
8	6-4430	Regulator	2
9	20-6074	Nipple	2
10	20-6076	Nipple	1
11	20-4342	Mounting Bracket	1
12	20-6073	Body	1

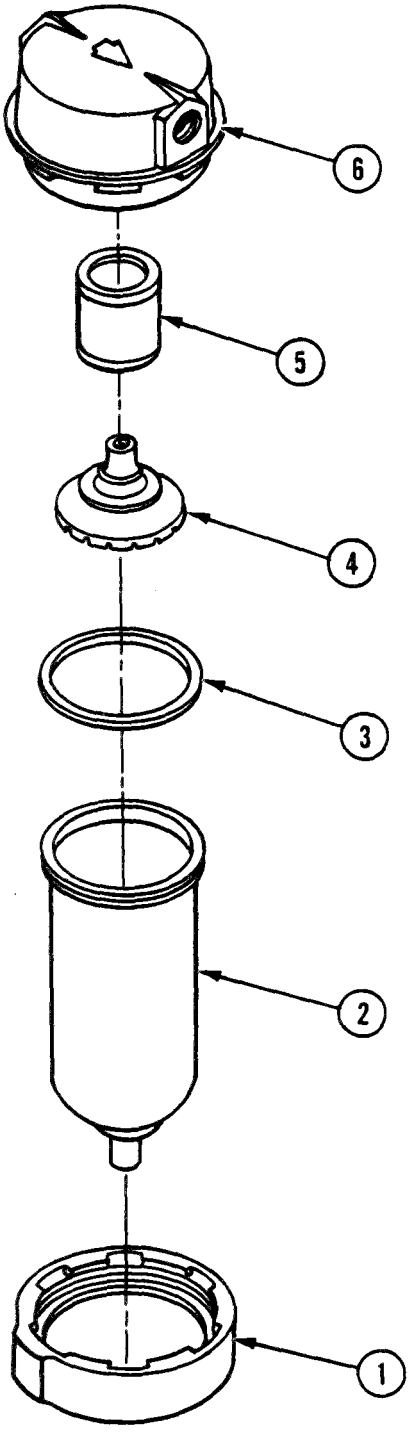

FILTER 6-4429			
Item No.	Part No.	Description	Qty.
1	11-6143	Clamp ring	1
2	11-6144	Filter Bowl	1
3	11-6145	Gasket, Filter Bowl	1
4	11-6146	Retainer, filter cartridge	1
5	11-6147	Filter cartridge	1
6	11-6148	Head, filter	1

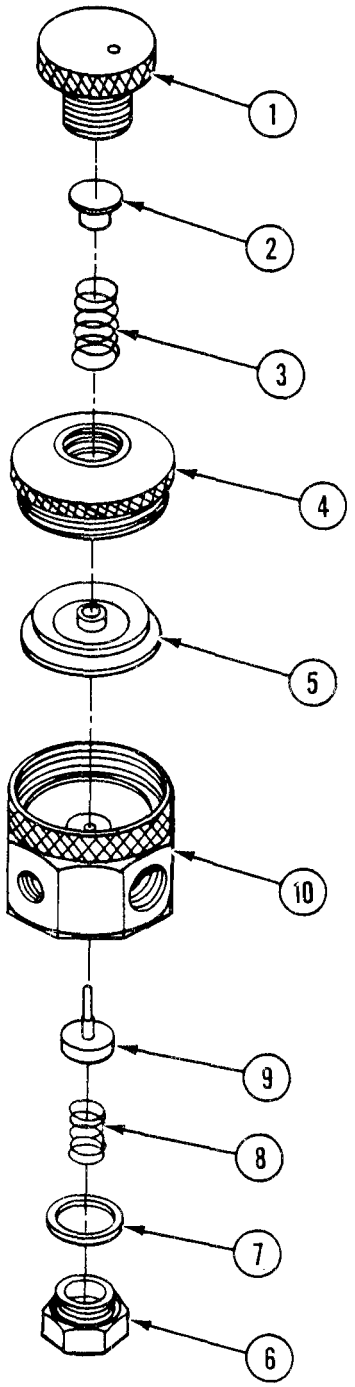

REGULATOR – 6-4430			
Item No.	Part No.	Description	Qty.
1	11-6149	Adjustment screw	1
2	11-6150	Rivet	1
3	11-6151	Spring	1
4	11-6152	Cover	1
5	11-6153	Diaphragm	1
6	11-6154	Bottom Plug	1
7	11-6155	Gasket, Bottom Plug	1
8	11-6156	Spring	1
9	11-6157	Valve	1
10	11-6158	Body	1

By Order of the Secretary of the Army:

E. C. MEYER
General United States Army
Chief of Staff

Official:

J. C. PENNINGTON
Major General, United States Army
The Adjutant General

RECOMMENDED CHANGES TO EQUIPMENT TECHNICAL PUBLICATIONS

THEN. . JOT DOWN THE DOPE ABOUT IT ON THIS FORM, CAREFULLY TEAR IT OUT, FOLD IT AND DROP IT IN THE MAIL!

SOMETHING WRONG WITH THIS PUBLICATION?

FROM: (PRINT YOUR UNIT'S COMPLETE ADDRESS)

Your mailing address

DATE SENT

Date you filled out form.

PUBLICATION NUMBER	PUBLICATION DATE	PUBLICATION TITLE
TM 9-XXXX-XXX-XX	Date of TM	Title of TM

BE EXACT. . .PIN-POINT WHERE IT IS

PAGE NO	PARA-GRAPH	FIGURE NO	TABLE NO	IN THIS SPACE TELL WHAT IS WRONG AND WHAT SHOULD BE DONE ABOUT IT:
400		183		Change illustration Reason: Tube end shown assembled on wrong side of lever cam.
512		191		Figure 191, item 3 has the wrong NSN. Supply rejects orders for this item. The NSN shown here is not listed in the AMDF or the MCRL. Please give us the correct NSN and P/N.

SAMPLE

PRINTED NAME, GRADE OR TITLE, AND TELEPHONE NUMBER

John Smith, S. SGT. 793/XXXX

SIGN HERE

John Smith

DA FORM 1 JUL 79 2028-2

PREVIOUS EDITIONS ARE OBSOLETE.

P.S.—IF YOUR OUTFIT WANTS TO KNOW ABOUT YOUR RECOMMENDATION MAKE A CARBON COPY OF THIS AND GIVE IT TO YOUR HEADQUARTERS.

RECOMMENDED CHANGES TO EQUIPMENT TECHNICAL PUBLICATIONS

THEN. . JOT DOWN THE DOPE ABOUT IT ON THIS FORM, CAREFULLY TEAR IT OUT, FOLD IT AND DROP IT IN THE MAIL!

SOMETHING WRONG WITH THIS PUBLICATION?

FROM: (PRINT YOUR UNIT'S COMPLETE ADDRESS)

DATE SENT

PUBLICATION NUMBER	PUBLICATION DATE	PUBLICATION TITLE
TM 9-4940-446-14&P	18 Dec 80	Separator, Oil and Water, Model P/N 50-6655

BE EXACT. . PIN-POINT WHERE IT IS

PAGE NO	PARA-GRAPH	FIGURE NO	TABLE NO

IN THIS SPACE TELL WHAT IS WRONG AND WHAT SHOULD BE DONE ABOUT IT:

PRINTED NAME, GRADE OR TITLE, AND TELEPHONE NUMBER

SIGN HERE

DA FORM 1 JUL 79 2028-2

PREVIOUS EDITIONS ARE OBSOLETE.

P.S.--IF YOUR OUTFIT WANTS TO KNOW ABOUT YOUR RECOMMENDATION MAKE A CARBON COPY OF THIS AND GIVE IT TO YOUR HEADQUARTERS.

REVERSE OF DA FORM 2028-2 AMSMC OP 103-85

TEAR ALONG PERFORATED LINE

FILL IN YOUR
UNITS ADDRESS

DEPARTMENT OF THE ARMY

OFFICIAL BUSINESS

NO POSTAGE
NECESSARY
IF MAILED
IN THE
UNITED STATES

BUSINESS REPLY MAIL

FIRST CLASS PERMIT NO. 82 ROCK ISLAND IL

POSTAGE WILL BE PAID BY ROCK ISLAND ARSENAL

Director
Armament and Chemical Acquisition
and Logistics Activity
ATTN: AMSTA-AC-NML
Rock Island, IL 61201-9948

The Metric System and Equivalents

Linear Measure

1 centimeter = 10 millimeters = .39 inch
1 decimeter = 10 centimeters = 3.94 inches
1 meter = 10 decimeters = 39.37 inches
1 dekameter = 10 meters = 32.8 feet
1 hectometer = 10 dekameters = 328.08 feet
1 kilometer = 10 hectometers = 3,280.8 feet

Weights

1 centigram = 10 milligrams = .15 grain
1 decigram = 10 centigrams = 1.54 grains
1 gram = 10 decigram = .035 ounce
1 dekagram = 10 grams = .35 ounce
1 hectogram = 10 dekagrams = 3.52 ounces
1 kilogram = 10 hectograms = 2.2 pounds
1 quintal = 100 kilograms = 220.46 pounds
1 metric ton = 10 quintals = 1.1 short tons

Liquid Measure

1 centiliter = 10 milliters = .34 fl. ounce
1 deciliter = 10 centiliters = 3.38 fl. ounces
1 liter = 10 deciliters = 33.81 fl. ounces
1 dekaliter = 10 liters = 2.64 gallons
1 hectoliter = 10 dekaliters = 26.42 gallons
1 kiloliter = 10 hectoliters = 264.18 gallons

Square Measure

1 sq. centimeter = 100 sq. millimeters = .155 sq. inch
1 sq. decimeter = 100 sq. centimeters = 15.5 sq. inches
1 sq. meter (centare) = 100 sq. decimeters = 10.76 sq. feet
1 sq. dekameter (are) = 100 sq. meters = 1,076.4 sq. feet
1 sq. hectometer (hectare) = 100 sq. dekameters = 2.47 acres
1 sq. kilometer = 100 sq. hectometers = .386 sq. mile

Cubic Measure

1 cu. centimeter = 1000 cu. millimeters = .06 cu. inch
1 cu. decimeter = 1000 cu. centimeters = 61.02 cu. inches
1 cu. meter = 1000 cu. decimeters = 35.31 cu. feet

Approximate Conversion Factors

To change	*To*	*Multiply by*	*To change*	*To*	*Multiply by*
inches	centimeters	2.540	ounce-inches	newton-meters	.007062
feet	meters	.305	centimeters	inches	.394
yards	meters	.914	meters	feet	3.280
miles	kilometers	1.609	meters	yards	1.094
square inches	square centimeters	6.451	kilometers	miles	.621
square feet	square meters	.093	square centimeters	square inches	.155
square yards	square meters	.836	square meters	square feet	10.764
square miles	square kilometers	2.590	square meters	square yards	1.196
acres	square hectometers	.405	square kilometers	square miles	.386
cubic feet	cubic meters	.028	square hectometers	acres	2.471
cubic yards	cubic meters	.765	cubic meters	cubic feet	35.315
fluid ounces	milliliters	29,573	cubic meters	cubic yards	1.308
pints	liters	.473	milliliters	fluid ounces	.034
quarts	liters	.946	liters	pints	2.113
gallons	liters	3.785	liters	quarts	1.057
ounces	grams	28.349	liters	gallons	.264
pounds	kilograms	.454	grams	ounces	.035
short tons	metric tons	.907	kilograms	pounds	2.205
pound-feet	newton-meters	1.356	metric tons	short tons	1.102
pound-inches	newton-meters	.11296			

Temperature (Exact)

°F	Fahrenheit temperature	5/9 (after subtracting 32)	Celsius temperature	°C

PIN: 047877-000

This fine document...

Was brought to you by me:

Liberated Manuals -- free army and government manuals

Why do I do it? I am tired of sleazy CD-ROM sellers, who take publicly available information, slap “watermarks” and other junk on it, and sell it. Those masters of search engine manipulation make sure that their sites that sell free information, come up first in search engines. They did not create it... They did not even scan it... Why should they get your money? Why are not letting you give those free manuals to your friends?

I am setting this document FREE. This document was made by the US Government and is NOT protected by Copyright. Feel free to share, republish, sell and so on.

I am not asking you for donations, fees or handouts. If you can, please provide a link to liberatedmanuals.com, so that free manuals come up first in search engines:

<A HREF=http://www.liberatedmanuals.com/>Free Military and Government Manuals</A>

- Sincerely
  Igor Chudov
  http://igor.chudov.com/
- Chicago Machinery Movers