TECHNICAL MANUAL

OPERATOR'S, ORGANIZATIONAL, DIRECT SUPPORT AND GENERAL SUPPORT MAINTENANCE MANUAL INCLUDING REPAIR PARTS LIST

FOR

TEST SET, DIESEL INJECTOR (BACHARACH INSTRUMENT COMPANY) (NSN 4910-00-317-8265)

HEADQUARTERS, DEPARTMENT OF THE ARMY
OCTOBER 1981

WARNING

The force of the spray from a feel injection nozzle is sufficiently great to penetrate the skin. Fuel oil in the blood stream can cause blood-poisoning. Keep hands away from injectors and nozzles when they are being tested.

This manual contains copying material

Technical Manual

No. 9 4910-604-14&P

HEADQLARTERS
DEPARI MENT OF THE ARMY
Washington DC, 15 October 1981

Operator's, Organizational, Direct Support
and General Support Maintenance Manual
Including Repair Parts List
For

TEST SET, DIESEL INJECTOR
(NSN 4910-00-317-8265)

REPORTING ERRORS AND RECOMMENDING IMPROVEMENTS

You can help improve this manual. If you find-any mistakes or if you know of a way to improve the procedures, please let us know. Mail your letter, DA Form 2028 (Recommended Changes to Publications and Blank Forms), or DA Form 2028-2, located in the back of this manual direct to: Commander, LIS Army Armament Materiel Readiness Command, ATTN: DRSAR-MAS, Rock Island, II. 61299. A reply will be furnished direct to you.

NOTE

This manual is published for the purpose of identifying an authorized commercial manual for the use of the personnel to whom this diesel injector test set is Issued.

Manufactured by: Bacharach Instrument Company
625 Alpha Drive
Pittsburgh, PA 15238

Procured under Contract No. DAAA09-75-C-6725

This technical manual is an authentication of the manufacturers' commercial literature and does not conform with the format and content specified in AR 310-3, Military Publications. This technical manual does, however, contain available information that is essential to the operation and maintenance of the equipment.

INSTRUCTIONS FOR REQUISITIONING PARTS

NOT IDENTIFIED BY NSN

When requisitioning parts not identified by National Stock Number, it is mandatory that the following information be furnished the supply officer.

1 - Manufacturer's Federal Supply Code Number - 05083

2 - Manufacturer's Part Number exactly as listed herein.

3 - Nomenclature exactly as listed herein, including dimensions, if necessary.

4 - Manufacturer's Model Number -

5 - Manufacturer's Serial Number (End Item)

6 - Any other information such as Type, Frame Number, and Electrical Characteristics, if applicable.

7 - If DD Form 1348 is used, fill in all blocks except 4, 5, 6, and Remarks field in accordance with AR 725-50.

Complete Form as Follows:

(a) In blocks 4, 5, 6, list manufacturer's Federal Supply Code Number - 05083 followed by a colon and manufacturer's Part Number for the repair part.

(b) Complete Remarks field as follows:

Noun:	(nomenclature of repair part)
For:	NSN: 4910-00-317-8265
Manufacturer:	Bacharach Instrument Company 625 Alpha Drive Pittsburgh, PA 15238
Model:	
Serial:	(of end item)

Any other pertinent information such as Frame Number, Type, Dimensions, etc.

TABLE OF CONTENTS

INSTRUCTIONS

FOR USE OF NOZZLE-INJECTOR CLEANING TOOLS

These tools are intended as cleaning aids and should be used only to remove foreign particles or deposits detrimental to operation of fuel injection nozzles. Proper lapping blocks for removal of heat and other surface discolorations or small pits on flat sealing surfaces are available as separate items.

Such operations as lapping valve seats and regrinding nozzle valves are special operations, requiring more tools than provided, and, unless operator is equipped to do such work, should not be attempted.

Injectors should be dismantled and cleaned in accordance with manufacturer's recommendations, both as to cleaning methods and tools. Cleanliness is all important and no detail, however small, should be neglected to insure and maintain clean air, oil and surroundings. Dirt particles too small to be seen without magnification are still large enough to cause serious damage to fuel injection equipment.

GENERAL FACILITIES

A separate room for fuel injection work, supplied only with clean, filtered air, is preferable. If this is done, and room air is maintained at pressure slightly above atmosphere, airborne dirt cannot enter from outside atmosphere. If separate room specification cannot be met, choose isolated corner in shop; this corner should be kept clean and shop traffic kept to minimum .

Be as clean as possible; use clean tools; keep work bench clean; wear shop coats or coveralls, heavily starched

to minimize lint problems. Keep all openings on nozzles capped. Use paper towels as mats on which parts can be placed. Use only clean fuel oils and solvents. Two or three porcelain or glass trays are best to use for holding solvents and fuel oil. Minimum of two trays, one for solvent-and one for clean fuel oil, is suggested. A piece of brass screen, placed on half-inch blocks, will hold parts in bath and allow dirt particles to settle on bottom of tray.

Ordinary wooden work bench surfaces tend to accumulate dirt and grease; steel bench tops may damage tools or nozzles if they are accidentally dropped. Acceptable and preferred surfaces are linoleum, masonite or varnished hardwood tops. Use copper or fibre jaws on vise; grip injector only on vise flats. Use only proper wrenches to dismantle and assemble injector parts in clean fuel oil or preservative and assemble wet; avoid handling, particularly lapped surfaces.

Nozzle injector servicing after cleaning includes complete testing. Tests generally include adjustment to correct opening pressure, observation of spray form, check for leakage and chatter to indicate freedom of movement of nozzle valve. These operation, s are performed with aid of suitable testing equipment. If injector is to be stored, use special test oils to minimize oxidation and gumming which sometimes occur when regular fuel oil is used. Flush injector thoroughly to insure test oil penetrating to and coating all surfaces of unit.

CAUTION: Never, under any circumstances, interchange nozzle bodies and valves. Best way to eliminate even accidental interchanging is to dismantle one nozzle body and valve at a time: clean and reassemble it before working on another. This will avoid confusion and prevent subsequent trouble.

APPLICATION OF TOOLS

Bristle Brushes: Codes 66-0016 66-1062	For INJECTORS: Use to clean rack hole in injector body. Also use as general purpose brush on all injectors where size permits.
Honing Stone: Code 66-0017	For NOZZLES, and INJECTORS: Use to deburr cleaning needle, seat scraper, pressure chamber scraper, cleaning drills, and so forth. Use also to sharpen cleaning needles to wedge-type point or two-fluted reamer.
Spray Tip Cleaner: Codes 66-0018 66-1109	For INJECTORS: After clogged and dirty orifices in spray tip have been opened, clean dirt from axial hole in spray tip. Dirt pushed into spray tip while cleaning orifices should be removed.
Bristle Brush: Code 66-0019	For NOZZLES; Use to clean interior of nozzle holder, nozzle cap, nut and other regions not readily accessible to wire brush. For INJECTORS: Use to clean interior of injector body. If necessary soak parts in solvent to soften carbon and lacquer.
Pin Vises: Codes 66-0021 (0-.062") 66-0068 (.052-.125")	For NOZZLES, and INJECTORS: Use to hold cleaning drills and needles when cleaning orifices. Also use to hold small injector parts when they are being lapped. For example, Pin Vise, Code 66-0068, is recommended to hold I-H check and reverse check valves in this operation.
Inspection Magnifier: Code 66-0023	For NOZZLES, and INJECTORS: Use to closely inspect orifices and other critical parts. Magnetic base holds magnifier mounting post vertical. Lens and protector are removable from post for additional inspection facility and packing convenience.
Tallow: Code 66-0029	For NOZZLES and INJECTORS: Use to clean lacquered and stained valves. Soak heavily lacquered valves in solvent before attempting to clean with tallow. Tallow can be also applied to cleaning sticks and polishing sticks to clean pintle orifice and nozzle valve seat. If this is done, excess tallow should be removed and seat polished before assembly of nozzle.
Brass Wire Brush: Code 66-0030	For NOZZLES: Use to remove carbon, rust spots and similar deposits from external surfaces of nozzle holder, nozzle nut. and nozzle body, and from external surfaces of injector

Brass Wire Brush: Code 66-0030 (cont'd)	body, top plate and cup. Alternate soaking in fuel oil or carbon solvent and brushing may be necessary. Do not brush mating lapped surfaces; do not brush nozzle body or injector cup in vicinity of orifice more than necessary to remove dirt. Never use power-driven wire wheels.
Pressure Chamber Scrapers: Codes 66-0047 66-0050	For NOZZLES: Insert hooked end of scraper into nozzle body and rotate scraper to clean pressure chamber gallery in nozzle body. Flush with clean fuel oil and blow dry with clean compressed air. Remove burrs and sharpen end of scraper with smooth-cut file when necessary.
Cleaning Drills Codes 66-0048 66-0049	For INJECTORS: Use to clean all dirt and foreign particles from interior of injector cup. This is to be done after orifices have been cleaned. Hold in finger tips and rotate, pushing just hard enough to perform necessary cleaning operations.
Pressure Chamber Scraper: Code 66-0050	Refer to Code 66-0047
Polishing Sticks: Codes 66-0059 66-0060 66-0086 66-0087	For NOZZLES: Using stick which most closely fits bore of nozzle body and after other cleaning operations on body have been completed, polish valve seat with polishing stick which has been previously soaked in fuel oil. This operation is best done by rotating nozzle body or stick in a chuck at not more than 100 revolutions per minute and holding other part in hand, applying light pressure to give seat desired polish. Refinish conical end of stick with file when necessary.
Pintle Cleaning Block: Code 66-0061	For NOZZLES: Insert pintle end of nozzle valve into slot in cleaning block, squeeze sides of block with one hand and rotate nozzle valve to clean stopped sections of pintle. Insert into conical hole; rotate and push slightly to clean conical area of valve. Soak valve, if necessary, in suitable carbon solvent to loosen stubborn deposits.
Valve Seat Scrapers: Codes 66-0062 66-0069	For NOZZLES: Insert end of scraper which best fits bore of nozzle body and rotate scraper by hand to clean seat area of gum and foreign deposits. Nozzle body should be previously soaked in carbon solvent. Resharpen scraper with smooth-cut file when necessary.
Centering Sleeves: Codes 66-0063 66-0064 66-0065 66-0066 66-0067 66-0111	For NOZZLES: Use to align nozzle in nozzle cap in assembling nozzle holder. Before beginning to tighten nozzle cap nut, install centering sleeve between nozzle and nozzle cap nut; then tighten to torque specified by equipment manual. This automatically centers nozzle in assembly.

Replace protective plug on end of centering sleeve when not in use.

Pin Vise: Code 66-0068	Refer to Code 66-0021
Valve Seat: Scraper: Code 66-0069	Refer to Code 66-0062
Nozzle Seat Scraper: Code 66-0072	For NOZZLES: Use to clean seat in nozzles. Scraper should be used with very light pressure and rotated only enough to clean carbon from seat. Use hone to keep wedge sides and end sharp and square, free of burrs.
Burring Tool: Code 66-0075	For INJECTORS: Use to deburr sharp corner of valve seat. Chamfer of 0.002" to 0. 005" is recommended. To use stone, hold between forefinger and thumb and rotate, applying light end pressure.
Wiper Pad: Code 66-0076	For NOZZLES: Use as polishing pads to apply tallow to nozzle valve for cleaning purposes. If possible, nozzle valve should be inserted in rotating chuck for this operation.
Orifice Clean- ing Stick: Code 66-0077	For NOZZLES: Use cleaning sticks to clean orifice in nozzle body through which pintle protrudes. Insert stick into orifice and clean with combined rotary and pushing motion. Cleaning sticks should be soaked in fuel oil prior to use.
Spray Tip Driver and Bushing Cleaner: Code 66-0078	For 71 INJECTORS: 1. Use to drive sticking spray tips out of injector nut. 2. Use to clean bushing by sliding tissue paper through axial slot and wrapping around shaft. Bushing is then cleaned similar to gun barrel. Soak in solvent or clean fuel oil. 3. Use as assembly pilot by placing body seal and all parts of spray tip assembly except injector nut on top of bushing. Use long rod to hold parts in position with one hand and slide injector nut down over rod with other hand and then by switching hands carefully, move injector nut over spray tip assembly and screw onto injector. body.

Injector Nut Tip Seat Reamers: Codes 66-0079 66-0081 66-1108	For INJECTORS: Use to remove carbon from spray tip seat and boss of injector nut. On reamer with adjustable collar, set collar before using to permit 0. 005" clearance under stop when reamer is inserted in new injector flute. On reamer with fixed collar, be certain when re-sharpening to remove equal amount of material from collar.
Injector Spray Tip Driver: Code 66-0082	For 110 INJECTORS: Use to drive sticking spray tip out of injector nut.
Injector Bushing Cleaner and Assembly Pilot: Code 66-0083	For 110 INJECTORS: 1. Use to clean bushing by sliding tissue paper through axial slot and wrapping around shaft. Bushing is then cleaned similarly to gun barrel. Soak in solvent or clean fuel oil. 2. Use as assembly pilot by placing body seal and all parts of spray tip assembly except injector nut on top of bushing. Use long rod to hold parts in position with one hand and slide injector nut down over rod with other hand and then by switching hands carefully, move injector nut over spray tip assembly and screw onto injector body.
Polishing Sticks: Codes 66-0086 66-0087	Refer to Code 66-0059
Bristle Brush: Code 66-1062	Refer to Code 66-0016
Cleaning Needles and Drills:	For NOZZLES, and INJECTORS: Use needles to clean and open up clogged orifices. Needle should be inserted in pin vise with 1/16"protruding for first cleaning operation. For subsequent operations, needle should be relocated to extend about 1/8", and cleaning operation should be repeated until all orifices are fully open. If orifices are badly plugged, soak piece in solvent, and with needle extruded only 1/32" from end of pin vise, tap gently with small mallet and rotate needle; repeat, extending needle in small increments, until orifice is fully open. Use cleaning drill for cleaning axial hole in spray tip after orifices have been cleaned. Dirt which is pushed into center hole can thus be removed.

BRISTLE BRUSHES

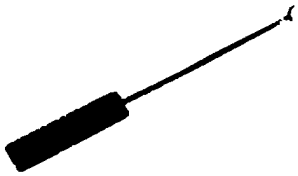

Application	CODE
GM71 & General	66-0016
GM 51, 71, 110 & Gen.	66-0019
GM110 & Gen.	66-1062

HONING STONE

Application	CODE
General	66-0017

PIN VISES

Application	CODE
Gen. (0-.062")	66-0021
Gen. (.052-.125")	66-0068

INSPECTION MAGNIFIER

Application	CODE
General	66-0023

TALLOW

Application	CODE
General	66-0029

BRASS WIRE BRUSH

Application	CODE
General	66-0030

PRESSURE CHAMBER SCRAPERS

For American Bosch Type Nozzles

Application	CODE
R, S, T	66-0047
T, U, V	66-0050

POLISHING STICKS

For American Bosch Type Nozzles

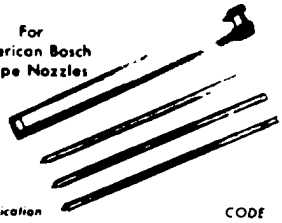

Application	CODE
S	66-0059
R, S, T	66-0060
T, U	66-0086
V	66-0087

PINTLE CLEANING BLOCK

For Pintle Nozzles

Application	CODE
All Pintles	66-0061

VALVE SEAT SCRAPERS

For American Bosch Type Nozzles

For Caterpillar Nozzles

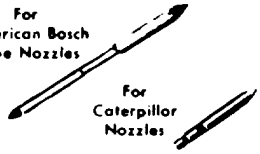

Application	CODE
R, S, T	66-0062
T, U, V	66-0069
Cat. Flat Valve	66-0072

CENTERING SLEEVES

For American Bosch Type Nozzles

Application	CODE
R	66-0063
S	66-0064
S (Mack END 673)	66-0111
T	66-0065
U	66-0066
V	66-0067

NOZZLE VALVE WIPERS

For American Bosch Type Nozzles

Application	CODE
All Sizes	66-0076

PINTLE ORIFICE CLEANING STICKS

For Pintle Nozzles

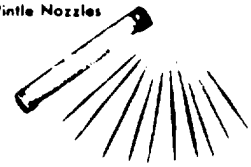

Application	CODE
All Sizes	66-0077

SPRAY TIP REAMER

For General Motors Injectors

Application	CODE
Series 71 & 110	66-0018
Series 51	66-1109

DEBURRING STONES

For General Motors Injectors

Application	CODE
Series 51, 71 & 110	66-0075

INJECTOR SPRAY TIP DRIVERS and Bushing Cleaner

For General Motors Injectors

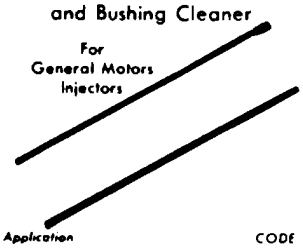

Application	CODE
Series 51 & 71	66-0078
Series 110	66-0082

INJECTOR NUT TIP SEAT REAMERS

For General Motors Injectors

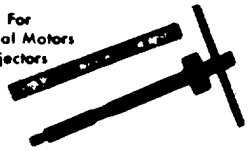

Application	CODE
Series 71	66-0079
Series 110	66-0081
Series 51	66-1108

INJECTOR BUSHING CLEANER and Assembly Pilot

For General Motors Injectors

Application	CODE
Series 110	66-0083

CENTER HOLE CLEANING DRILLS

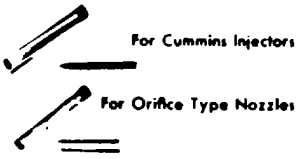

For Cummins Injectors

For Orifice Type Nozzles

Application	CODE
Cummins A, JS, H, NH	66-0048
Cummins L, LR, VL	66-0049
Orifice Type Nozzles	

CLEANING NEEDLES

Use with Pin Vise 66-0021

For Orifice Type Nozzles

Application	CODE
Orifice Type Nozzles	

INSTRUCTIONS
CONNECTOR SET 44

This Connector Set contains:

	Connector Nuts					Connector Tube	Adapter
No.	**N-3**	**N-4 (2)**	**N-5**	**N-7**	**N-8**	**N-1**	**N-16**
Size	**12 x 1.5 MM**	**14 x 1.5 MM**	**18 x 1.5 MM**	**9/16" x 18**	**5/8" x 18**	**60 Swaged Ends**	**Adapts tube for Seat**

This connector set, composed of the items listed above, simplifies test connection between the injector to be tested and the Nozzle Tester. For proper use of the various fittings see detailed instructions below.

Attaching CONNECTOR TUBE N-1 to NOZZLE TESTER

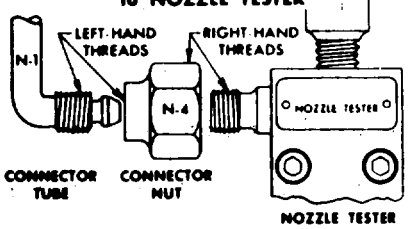

Start CONNECTOR NUT N-4, using round end, on CONNECTOR TUBE N-1.

Hold CONNECTOR TUBE N-1 in desired position and screw CONNECTOR NUT N-4 on discharge connection of NOZZLE TESTER, tighten securely.

1

FUEL INJECTION NOZZLE CONNECTION with 60° Cone Seat

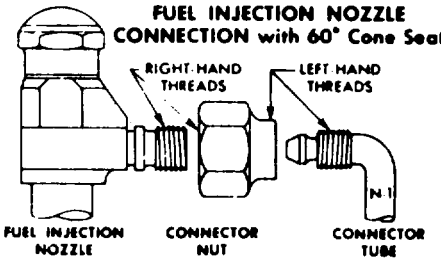

Select proper CONNECTOR NUT for FUEL INJECTION NOZZLE to be tested, engage CONNECTOR NUT (round end) not more than one turn on CONNECTOR TUBE N-1.

Hold FUEL INJECTION NOZZLE inlet threads to hex end of CONNECTOR NUT and screw on CONNECTOR NUT, tightening securely

2

FUEL INJECTION NOZZLE CONNECTION with SEAT

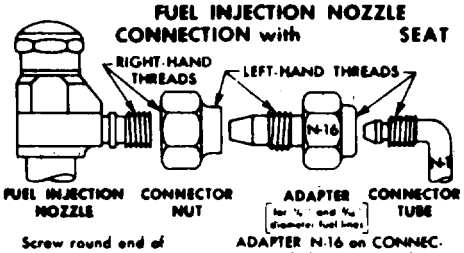

Screw round end of ADAPTER N-16 on CONNECTOR TUBE N-1 as indicated in exploded view and tighten; select proper CONNECTOR NUT for FUEL INJECTION NOZZLE to be tested and engage CONNECTOR NUT not more than one turn on tapered end of ADAPTER N-16.

Hold FUEL INJECTION NOZZLE inlet threads to hex end of CONNECTOR NUT and screw on CONNECTOR NUT, tightening securely

3

GENERAL INFORMATION

MODEL YJH TEST FIXTURE and NOZZLE TESTER will test injectors for Series A, H, NH, or NVH engines. By using accessories provided, complete tests may be made on injector and inlet tube under field or shop conditions. NOZZLE TESTER is also used to test hydraulically-operated, differential-pressure type nozzles as covered in instruction pamphlet on NOZZLE TESTER.

Several tests are necessary to determine condition of injector. Before proceeding with injector and inlet tube tests, injector should be tested for clogged orifices in tip.

For permanent installation, fasten test fixture to bench with 3/8" bolts; for portable use (field service trucks, etc.), stand may be used without permanent fastenings. For all injector tests described in following paragraphs, FLEXIBLE CONNECTOR (1) may be attached to either upper or lower connection of DISCHARGE BLOCK (2) on TESTER (3) by simultaneously engaging right-hand threads on DISCHARGE CONNECTION and left-hand threads on FLEXIBLE CONNECTOR with dual-threaded CONNECTOR NUT (4), tightening securely. Left-hand threads are on rounded end of CONNECTOR NUT. CAP NUT (5) is tightly screwed on discharge connection not in use. GAUGE VALVE (6) should be fully open during all tests.

TESTING INJECTORS

BACK PRESSURE TEST

After injector tip has been cleared of clogged orifices, place CLAMP SLEEVE (7) on top housing of injector (remove wire bale on NH injectors) and set injector in place on REVERSE FLOW BLOCK (8) making certain that PLUNGER STUD (9) does not protrude below PRESSURE SCREW (10) and that PRESSURE SCREW clears CLAMP SLEEVE when seating injector in REVERSE FLOW BLOCK. Simplest method of doing this is to hold injector vertically in seat and turn PRESSURE SCREW down into CLAMP SLEEVE.

FLEXIBLE CONNECTOR (1) is attached to REVERSE FLOW BLOCK with second CONNECTOR NUT (4). Screw DRIP TUBE (11) into injector drain line hole. This test set-up is illustrated by Figure 1.

Using TESTER, maintain pressure of 2, 000 psi. (sixteen hundred psi. for A injectors), pumping as required. Fuel flow through DRIP TUBE should be caught in BURETTE (12) provided and should not exceed six cubic centimeters per minute at 2, 000 psi.; flow in excess of this rate indicates worn plunger or barrel and injector should be returned to factory for repair or replacement. For accurate measurements, do not meter fuel until at least one drop has been observed at DRIP TUBE.

Fuel at inlet connection indicates leakage past injector body check valve. Leakage of one or two drops per minute past injector body check valve is permissible since design of valve is such that when leakage causes unsatisfactory operation of this part an almost continuous flow of oil will result.

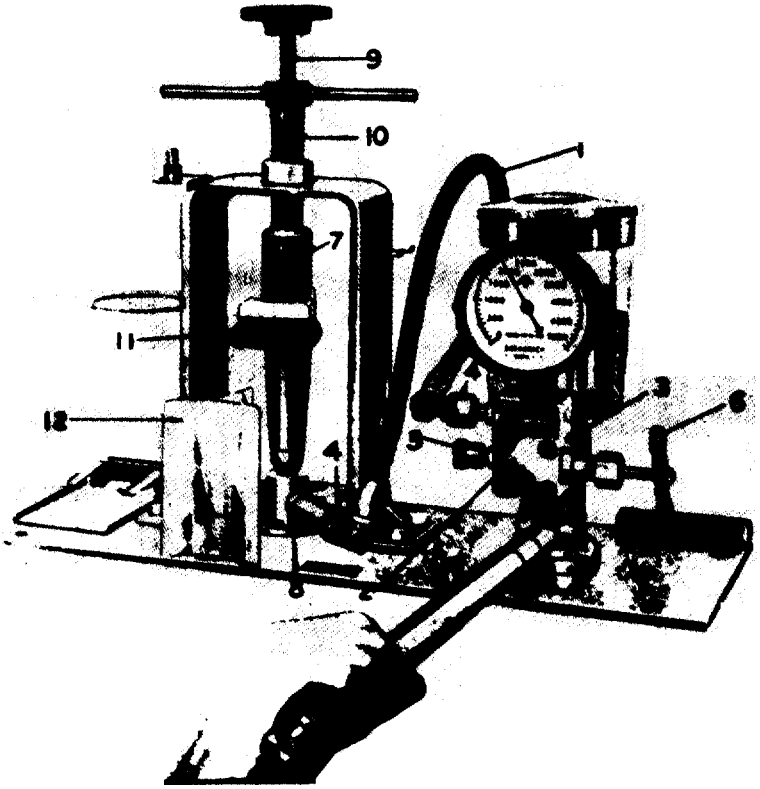

FIG. 1 Back Pressure Test

INLET FUEL CONNECTION TESTS

Prepare inlet connection for test by removing brass connection and strainer screen from inlet connection. Assemble ADAPTER (13) to inlet connection and attach LOW PRESSURE GAUGE (14) with UNION CONNECTION (15) as illustrated in Figure 2. Attach FLEXIBLE CONNECTION (1) to LOW PRESSURE GAUGE with CONNECTOR NUT (4). Using TESTER (3), determine that opening pressure of check valve in inlet tube is within limits specified in engine manual; opening point of valve is best determined by pumping slowly.

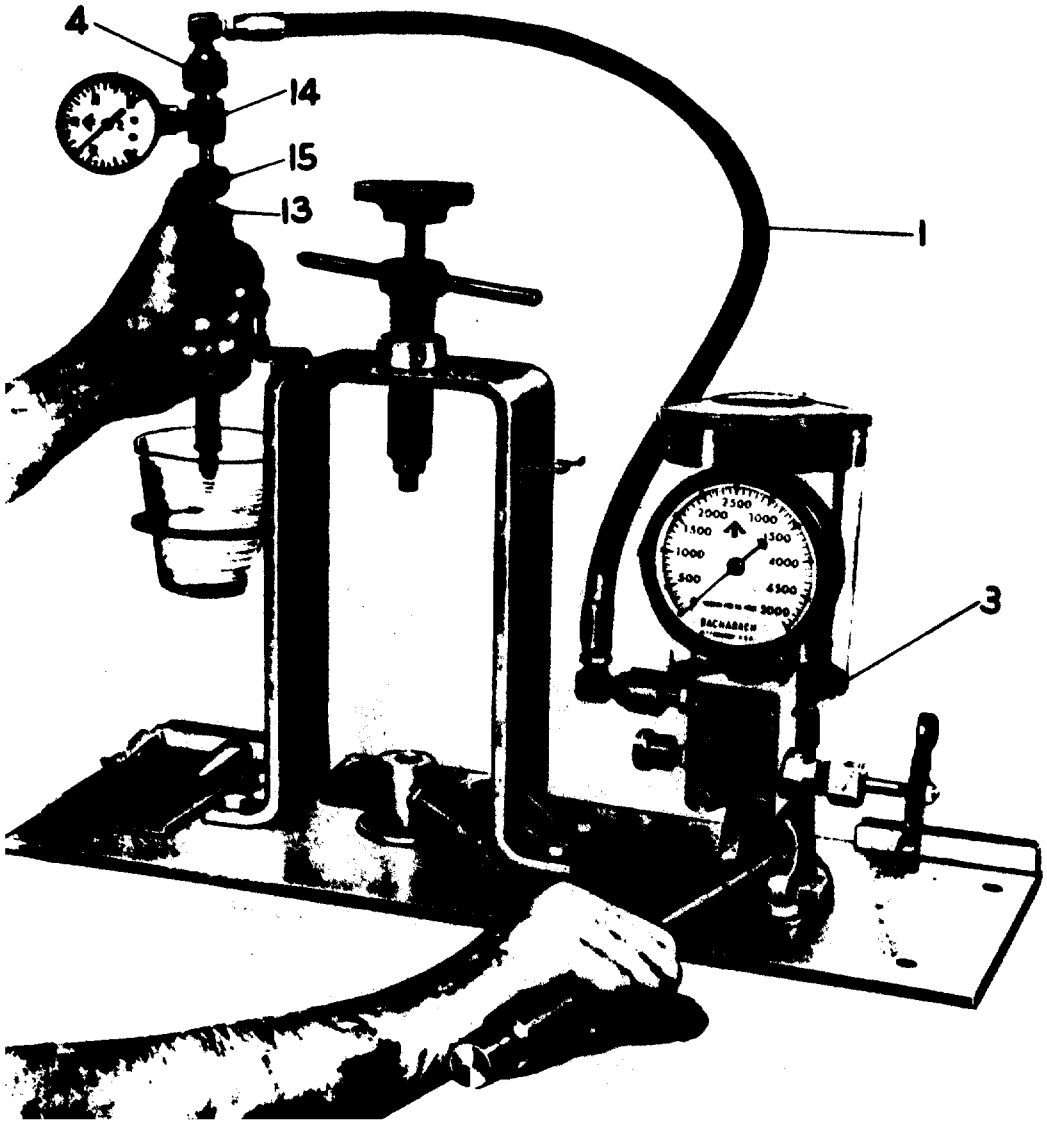

FIG. 2 Inlet Connection Opening Test

Fuel inlet connection check valve is checked for leakage (Figure 3) by screwing end of inlet connection normally screwed into injector body into female threads of ADAPTER (13) and connecting ADAPTER to FLEXIBLE CONNECTOR (1) with CONNECTOR NUT (I). There should be no leakage at 2, 000 psi.

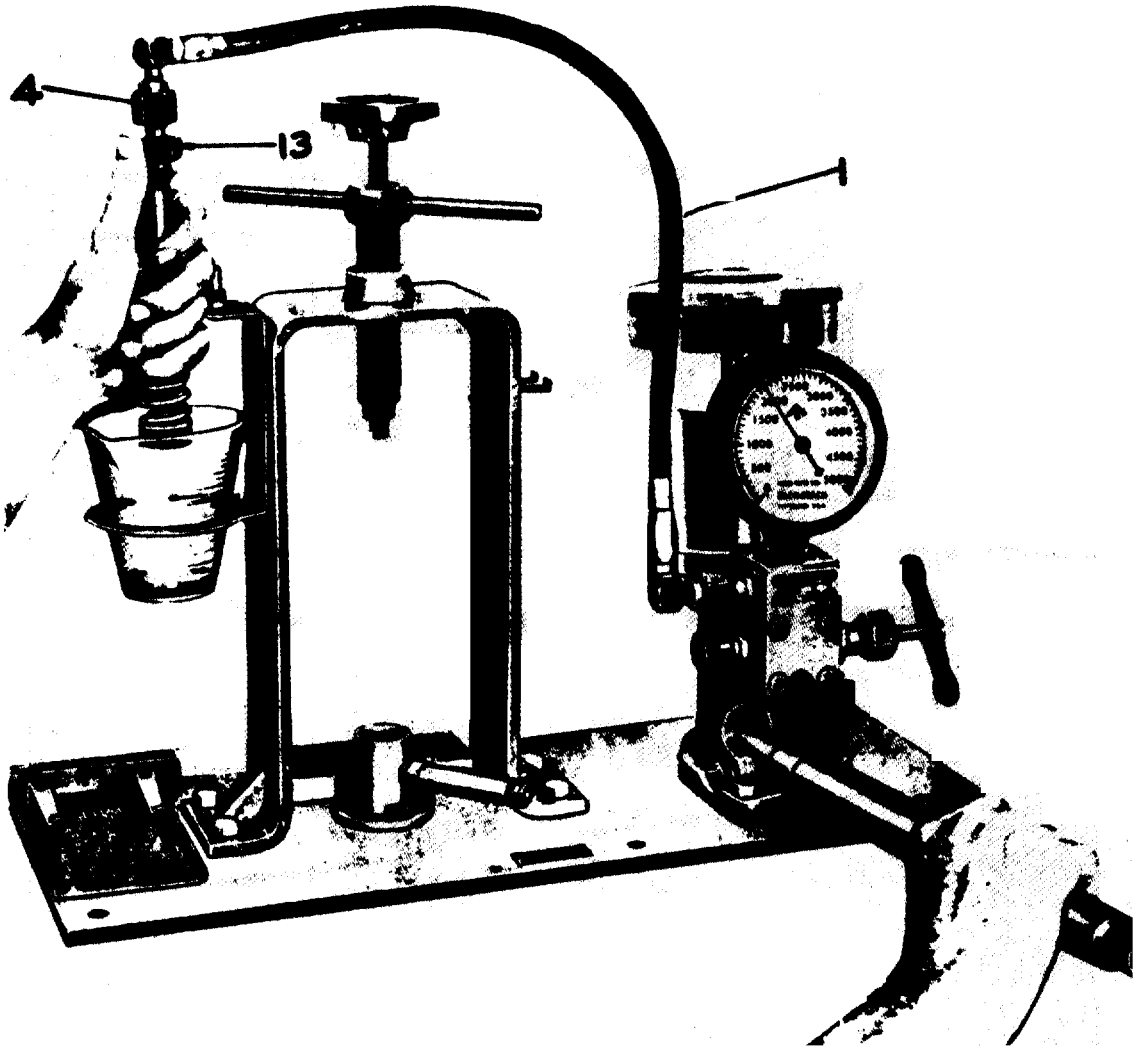

FIG. 3 Inlet Connection Leakage Test

INJECTOR FLOW AND CUT-OFF TESTS

Figure 4 illustrates set-up to determine opening pressure of injector and inlet tube in series. Using ADAPTER (13), connect FLEXIBLE CONNECTOR (1) to inlet connection with LOW PRESSURE GAUGE (1L) in system. Opening pressure of inlet tube and injector inlet valve in combination should be 10 to 15 psi. Higher than opening pressure of inlet connection check valve. STUD (16) is mounted on yoke on top of stand and engages hole in injector body housing; spray can be caught in CUP (17).

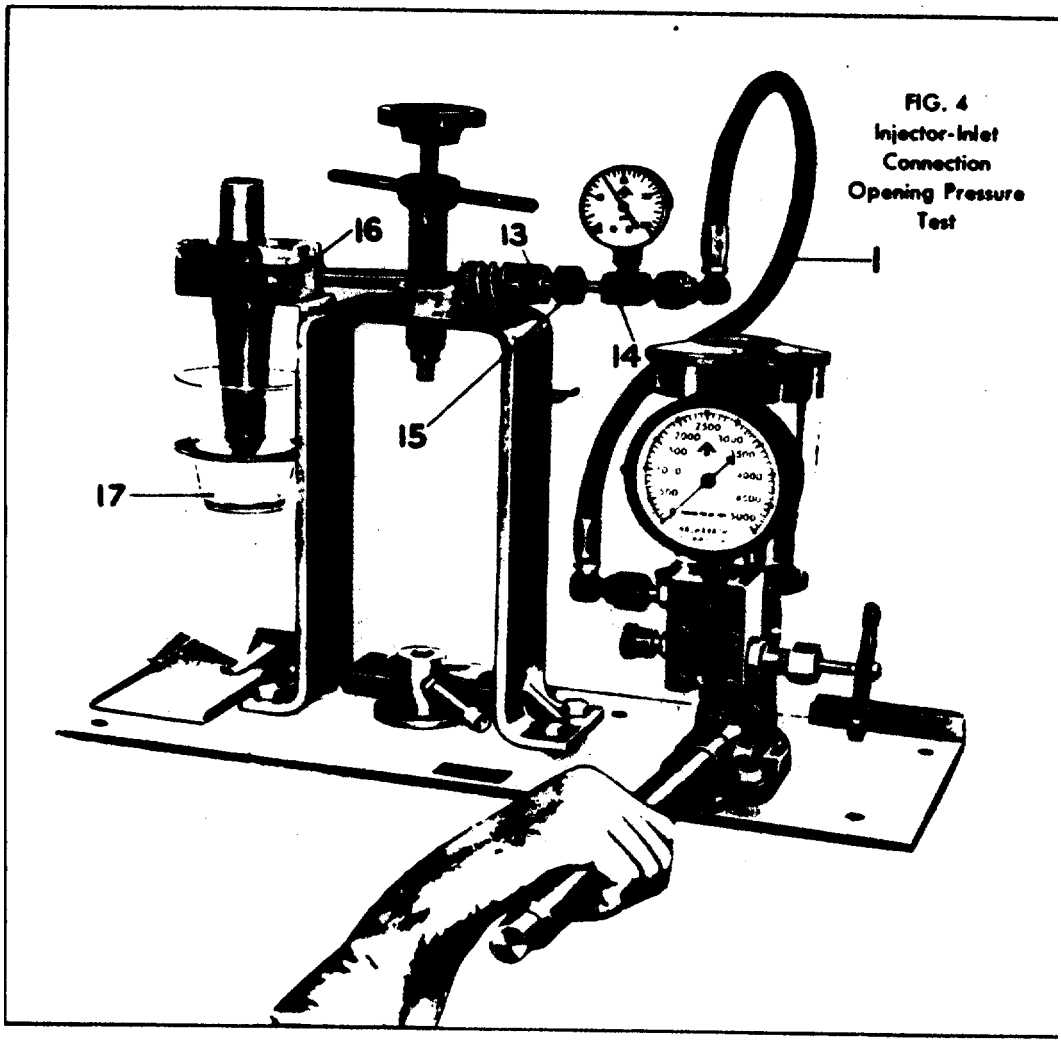

FIG. 4 Injector Inlet Connection Opening Pressure.

Figure 5 shows test set-up to observe plunger cut-off characteristic.

Mount SPACER BLOCK (18) on REVERSE FLOW BLOCK (8); set injector in conical seat on top of SPACER BLOCK; screw down HANDLE (19) until injector plunger is firmly seated against bottom of injector barrel. Connect injector and inlet tube assembly to FLEXIBLE CONNECTOR (1) with INLET TUBE ADAPTER (13) and CONNECTOR NUT (4). There should be no leakage at tip of injector or injector body at test pressure of 2, 000 psi.

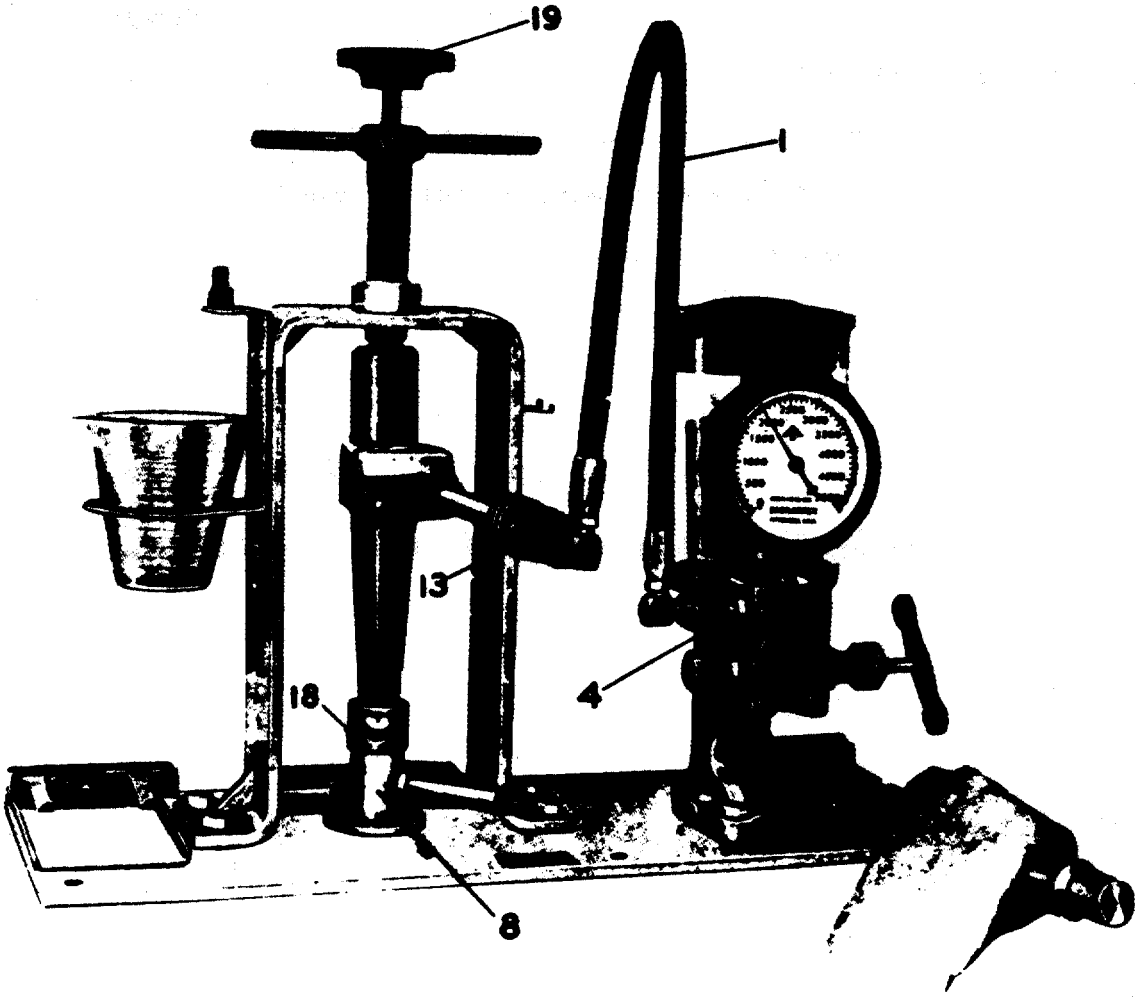

FIG. 5 Plunger Cut-Off Test

MAINTENANCE AND GENERAL OPERATING INSTRUCTIONS

All necessary operating instructions and maintenance information concerning

NOZZLE TESTER are in separate instruction pamphlet. Parts for the

MODEL YJH TEST FIXTURE or NOZZLE TESTER are replaceable.

Minor leakage is permissible at seat of REVERSE FLOW BLOCK (8), provided required fuel pressure can be maintained by slowly pumping NOZZLE TESTER. Care should be given to proper insertion of injector in conical seal since damage to both seat and injector tip result if injector is not properly seated. High forces are not necessary since seal is obtained by rubber O rings in conical seat of REVERSE FLOW BLOCK. Rings are replaceable, and for user's convenience, extra 0 rings are supplied with each stand.

INSTRUCTION DEAWINO
(DO NOT USE FOR ORDINRINO PARTS)

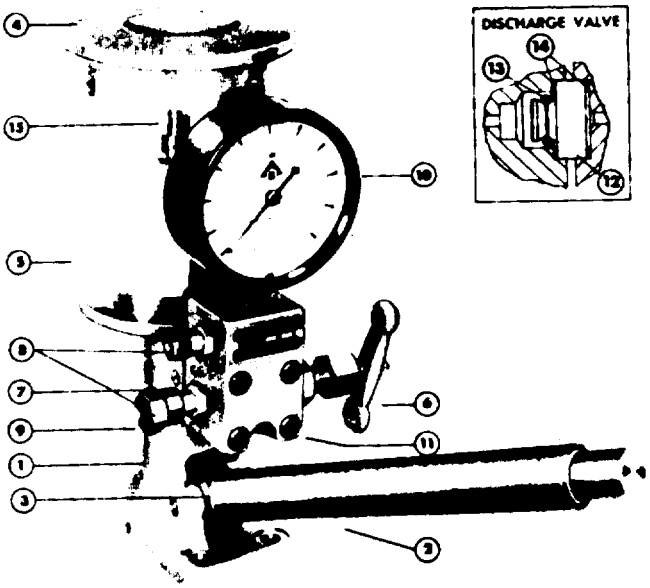

DIESEL NOZZLE TESTER—SERIES 65-000

GENERAL REMARKS

Series 65-000 Nozzle Test Pump, can be used interchangeably with nozzle testers of earlier design on connector sets and test fixtures which have been developed for specific Diesel engine applications.

OPERATING PROCEDURE

1. Bolt NOZZLE TESTER (1) to bench with 3/8' bolts; for portable use, mount on wooden or metal base similar to type illustrated in Figure 1.
2. Slide tubular end of PUMP HANDLE (2)on HANDLE SHOE (3) in base of NOZZLE TESTER. Solid shaft in telescoping PUMP HANDLE may be extended or telescoped, depending on pressures needed.
3. Remove COVER (4) of FUEL SUPPLY cup (5) with combined twisting and pulling motion; fill SUPPLY CUP with testing fluid.
4. Open GAUGE VALVE (6).
5. NOZZLE TESTER is self-priming; several strokes may be necessary to evacuate entrapped air. Although not necessary, VENT SCREW (7) in side of housing and directly behind lower discharge fitting can be opened for through venting and as priming aid.
6. Attach nozzle and connector to DISCHARGE BLOCK FITTING (8), using lower connection for conventional tests on hydraulically-operated nozzles; use upper connection for leakage rate measurements.
7. Install CAP NUT (9) on connection not In use and tighten all connections.
8. Note opening pressure, leakage and spray form, service injection nozzle according to engine builder's recommendations.
9. In general, nozzle should be serviced to obtain:
   (a) Correct opening pressure.
   (b) Proper spray appearance during rapid pumping.
   (c) No leakage at 100 psi below opening pressure. (300 for pintle type nozzles).
   (d) "Chattering" under extended pumping.

USE OF OUTLETS

DISCHARGE BLOCK ASS Y (8) has two discharge outlets to facilitate various tests which are required by nozzle and injector manufacturers. When nozzle under test is connected to the lower connection, closing the GAUGE VALVE (6) isolates prolonged pumping when flushing nozzle or checking spray form. Using upper connection and closing the GAUGE VALVE (6) isolates the GAUGE and Nozzle from the NOZZLE TESTER, permitting accurate measurement of leakage rates or pressure drop. CAP-NUT (9) must be tightly screwed onto connection not in use.

LEAKAGE AND DISCHARGE VALVE REPLACEMENT

Minor leaks may develop occasionally. They are usually easy to find and service. If GAUGE (10) indicates that TESTER will not hold pressure, test tightness o, f threaded connections, GAUGE VALVE (6) and DISCHARGE FITTING (8). Use Allen wrench to tighten socket head cap screws in DISCHARG, E FITTING. If leakage persists, dismantle and clean DISCHARGE Valve e as follows:

1. Remove four SOCKET HEAD CAP SCREWS (11) in DISCHARGE FIT'TING.
2. Lift DISCHARGE FITTING from pump housing and remove DISCHARGE VALVE (12).
3. Roll O-RING (13) off DISCHARGE VALVE; examine seat for scratches or particles preventing O-RING from sealing; replace scored or pitted DISCHARGE VALVE.
4. Inspect O-RING for fraying or extrusion; it should have slight tension when Installed; if O-RING is not available, use S-7-8 O-RING or equivalent, provided it is oil-resistant rubber.
5. Reassemble, making certain that DISCHARGE VALVE GASKETS (14) are in place; tighten CAP SCREWS alternately to draw DISCHARGE FITTING up evenly. Leakage past nozzle tester plunger is detected by accumulation of fuel at base of tester housing. Some seepage is desirable for lubrication but there should not be visible drippage past plunger. Since plunger is lapped into bore of nozzle tester housing, it is necessary to return instrument to factory for repairs; the lapped fit of the plunger is similar to Diesel fuel injection equipment and should receive similar care.

STARVATION AND FILTER REPLACEMENT

Fuel starvation may be caused by several causes. Series 65-000 Nozzle Tester uses improved paper type filter; oil is forced through filter by atmospheric pressure and pump suction. Dirty filters can cause nozzle tester to starve for lack of fuel; in addition, leaking O-rings or gaskets in reservoir and filter assembly may also cause starvation. CENTER ROD ASSEMBLY (15) with can over filter enables fuel level to be pumped to bottom of can before refilling is required.

Filter in, OIL SUPPLY CUP (5), should be replaced at least annually. Appearance of filter and fuel starvation, especially during sustained rapid pumping, are symptoms of dirty filter. Special care should be used to prevent unfiltered oil from entering NOZZLE TESTER (1) and fittings while replacing filter. Replace filter as follows:

1. Remove COVER (4) and empty OIL SUPPLY CUP (preferably by inverting NOZZLE TESTER).
2. Unscrew CENTER ROD (15); pull filter off CENTER ROD. Be careful not to lose gaskets and spring which seal top side of filter unit. 3. Install new filter and reassemble in reverse order.

SPECIAL TEST OILS

Careful consideration should be given to oils used for testing since Diesel fuel oils may have undesirable properties for nozzle test work. Oils with noncorrosive & noncongealing characteristics are preferred when injector being tested may be stored for some time before being used. It is suggested that recommendations of manufacturer by followed concerning use and type of testing fluid.

Parts List for
NOZZLE TESTER-SERIES 65-000

CODE NO.	DESCRIPTION
*	Hydraulic Gauge
65-358	Discharge Valve Seat
65-505	Gauge Valve Gasket
65-507	Discharge Valve Gasket (2 Req'd.)
65-508	Socket Head Cap Screw (4 Req'd.)
65-627	Plunger Spring Collar
65-521	Plunger Spring
65-675	Plunger Stop Pin
65-550	Discharge Valve O-ring
65-553	Gauge Valve, complete
65-555	Valve Bonnet
65-556	Gland Follower
65-558	Valve Stem
65-559	Stuffing Box
65-561	Discharge Block Assembly
65-582	Cap Nut Assembly
65-622	Valve Handle
65-629	Plunger Collar Retaining Ring
65-759	Filter Washer
65-761	Filter Gasket (2 Req'd.)
65-781	Body Plug O-ring
65-781	Plunger O-ring
65-781	Valve Gland O-ring
65-786	Fuel Reservoir

CODE NO.	DESCRIPTION
65-787	Fuel Reservoir Cover
65-788	Fuel Filter
65-789	Center Rod Assembly
65-790	Center Rod O-ring
65-791	Filter Spring
65-792	Body and Plunger Assembly
65-793	Body Screw
65-794	Body Screw Gasket
65-794	Priming Screw Gasket
65-795	Body Plug
65-796	Body Plug Lock Pin
65-797	Fuel Reservoir-To-Body Seal
65-798	Handle Fulcrum Pin
65-799	Handle Stop Pin
65-800	Handle Shoe
65-801	Handle Shoe Snap-Ring
65-802	Handle Assembly
65-803	Filler Rod Assembly
65-804	Valve Gland Back-Up Washer
65-805	Pipe Plug
65-807	Priming Screw
65-947	Complete Fuel Reservoir Assembly
65-948	Complete Body and Plunger Assembly
65-949	Complete Discharge Block Assembly

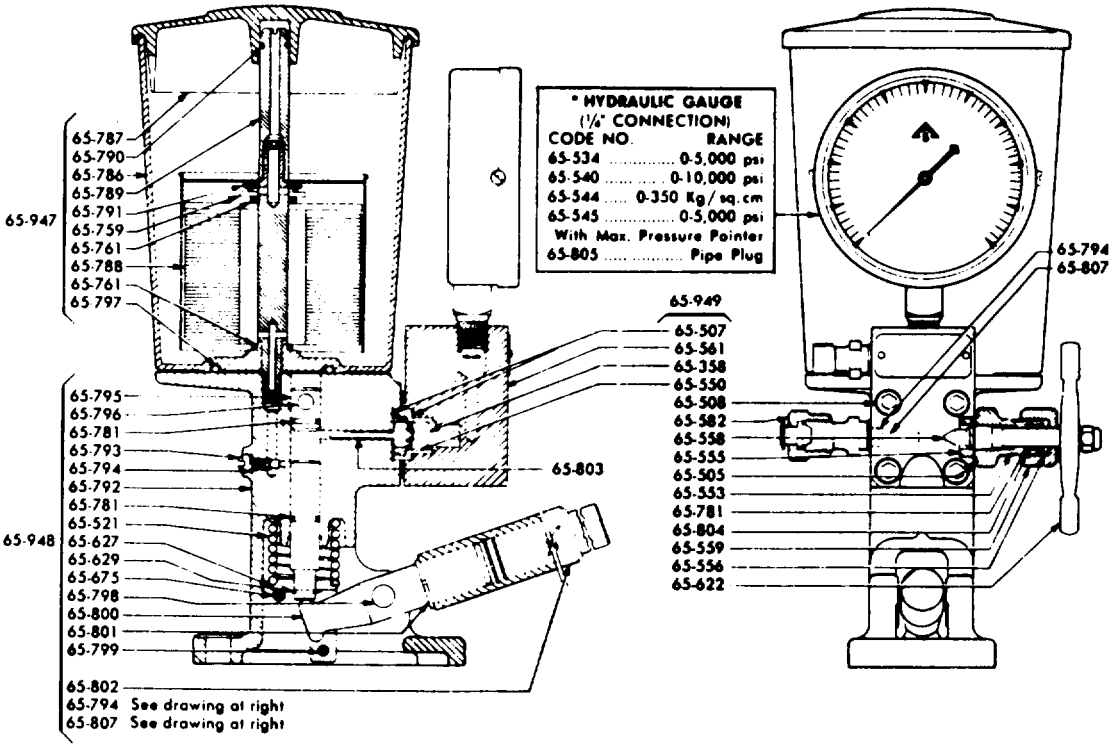

Instructions for Operation

and Maintenance

INJECTOR TEST SET

CODE 65-1014

for all

GENERAL MOTORS
SERIES 53, 71 and 110
UNIT INJECTORS

WARNING

The force of e spray, from a fuel injection nozzle is sufficiently great to penetrate the skin Fuel oil in the blood stream Con cause blood-poisoning. Kept hands away from injectors and nozzles when they ore being tested

GENERAL

Model YHQ Nozzle Test Fixture, used in conjunction with Model YFL Nozzle Tester and Connector Combination 65-881, is designed to test all Series 53, 71 and 110 unit injectors by applying factory recommended tests to determine injector condition. Test Fixture is available with two interchangeable Seat Blocks. One Seat Block will test Series 53 and 71 standard and offset body injectors. The other Seat Block is used to test Series 110 standard and offset injectors. Use of these Seat Blocks is discussed in the titled section below. Connector Combination 65-881 includes a Connector Tube, Nuts and Adapter for testing the spray tip and check valve assembly of the Series 71 needle valve unit injector while it is connected to the Model YFL Nozzle Tester. This test requires that the Nozzle Tester be equipped with a 5000 psi gauge as shown in Fig. 5. Servicing injectors requires specialized equipment, facilities and trained personnel. In all instances, actual test and repair procedures which have been established by the engine builder should be closely followed. Refer to the engine manual for specific performance figures and injector disassembly and assembly instructions. Figures 5 and 6 identify parts of the Nozzle Test Fixture and Connector Combination referred to in these instructions. Operation and maintenance of the YFL Nozzle Tester is covered in a separate pamphlet, 8-I-54. Nozzle Tester is shown mounted on Test Fixture, but if Fixture and Nozzle Tester were purchased separately, mount Tester on Base Plate (1) using three 3/8" 16 x 5/8" lg. cap screws.

Nozzle Test Fixture can be permanency mounted to bench or table top with 3/8" bolts through holes in the Base Plate, or it may be used as a portable tool by fastening it to bench or table with C-clamps or similar fasteners.

INSTALLING SEAT BLOCKS

Series 53, 71 and 110 injectors, both offset and standard body, are positioned in the Test Fixture by means of Seat Blocks. Seat Block (2) is used when testing Series 53 and 71 injectors; Seat Block (3) is used with Series 110 injectors.

The photographs and drawings (Figs. 1 through 4) illustrate the position of the Seat Block on the frame of the Test Fixture. The Seat Block must be located in the proper holes so the filter caps of the injector will align and seal properly with the Sockets (4) when the injector is installed in the Test Fixture. Slots in the Seat Blocks receive the injector dowel pin and guide the injector into the Test Fixture.

With the standard body 110 injector pull out the Shift Knob (5), away from the Test Fixture, to change the spacing between the Sockets (4) to accommodate the filter caps. All other injectors are tested with the Shift Knob pushed in toward the Test Fixture Frame.

When the injector is properly positioned in the Test Fixture the leaf spring on the Seat Block will automatically position the injector fuel rack in the full fuel position.

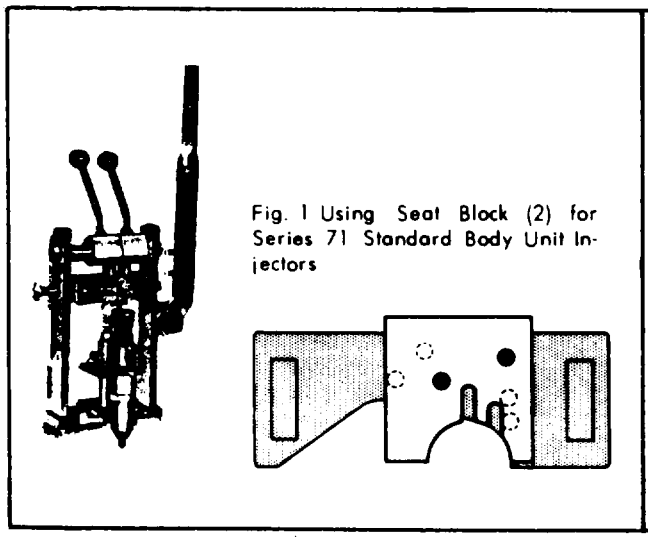

Fig. 1 Using Seat Block (2) for Series 71 Standard Body Unit Injector

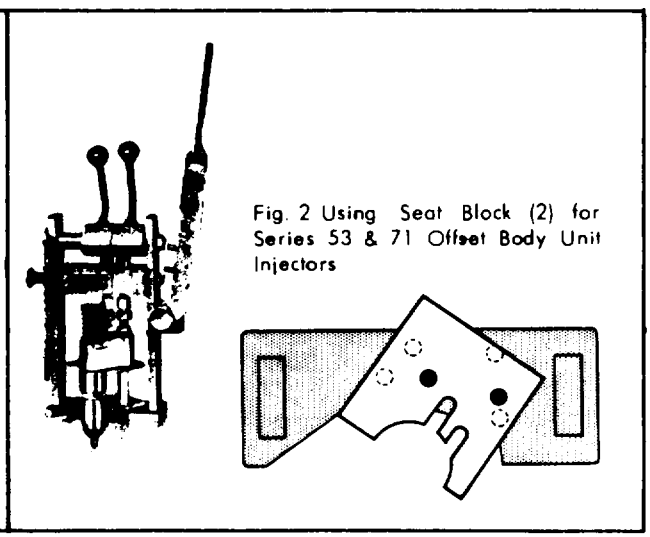

Fig. 2 Using Seat Block (2) for Series 53 &71 Offset Body unit Injector

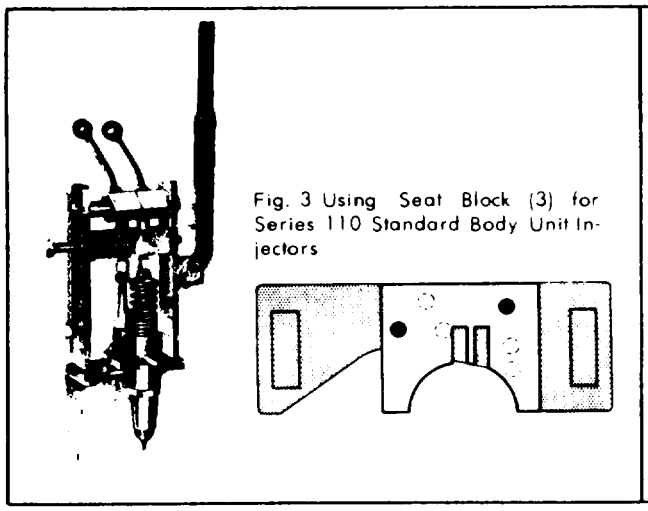

Fig.3 Using Seat Block (3) for Series 110 Standard Body Unit Injectors

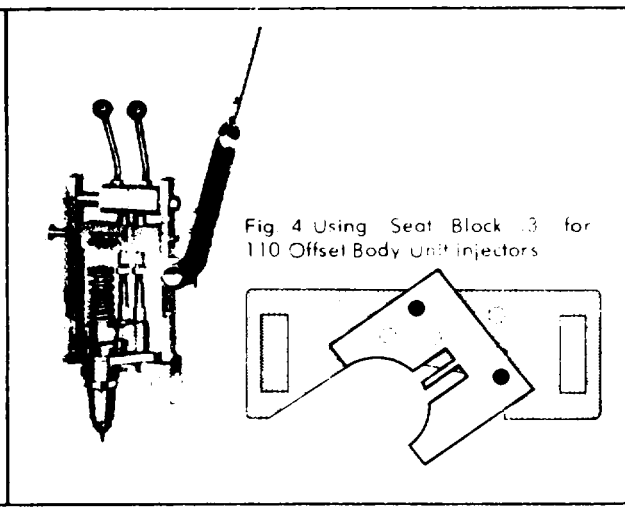

Fig.4 Using Seat Block (3) for 110 Offset Body Unit Injectors

PREPARING FOR TEST

1. Ready the Nozzle Tester (6) for use by filling the Fuel Reservoir (7) with clean fuel oil or recommended test fluid.
2. Nozzle Tester is self priming; several strokes may be necessary to evacuate entrapped air. Although it is not necessary, the Priming Screw in the side of the Nozzle Tester Body and directly behind the lower discharge fitting can be opened for thorough venting as a priming aid.
3. Install Seat Block in proper holes of Test Fixture for injector under test as illustrated in Figs. 1 through 4.
4. Install injector by sliding in place and engaging dowel on under side of body in proper slot in Seat Block. Check that fuel rack is against leaf spring of Seat Block.
5. Connect injector to Fuel Line (8)by rotating Inlet (Cam Handle (9) toward Nozzle Tester to move Socket (4) against injector inlet filter cap.
6. Purge injector of air by operating Nozzle Tester until clear fuel flows from outlet filter cap. Then rotate Outlet Cain Handle (10) toward Nozzle Tester to scale (outlet filter cap, Operate Nozzle Tester 14) build up slight pressure in test system and pop injector two or three times with Popping Handle (11).

INJECTION TESTS

This outline of tests for injectors is principally to guide the user in properly operating the Test Fixture to perform recommended tests. For specific procedures, pressures and results of observations refer to engine manual since variation exists between different types and models of injector.

1. Check injector rack and plunger movement for freedom of travel. Move Spring on Seat Block out of position to allow full rack travel. Put rack in no fuel position; depress Popping Handle (11) to bottom of stroke. Slowly release Popping Handle while moving rack back and forth. Friction of rack indicates dirty or damaged internal injector parts.
2. Determine valve opening pressure of injector by operating Nozzle Tester Handle with full, smooth strokes; simultaneously watch Test Fixture Gauge (12) and note pressure when injector sprays fuel. The opening or pop pressure should be 450 to 850 psi.
3. Determine valve holding pressure by operating Nozzle Tester Handle to bring the pressure to a point just below popping pressure. Quickly close Nozzle Tester Valve (1 3) and note pressure at which valve is closed and time the pressure drop over specified interval. Time for pressure drop from 450 to 250 psi should not be less than 40 seconds.
4. Check for leaks at high pressure at injector nut seal ring, rack hole, plugs, filter cap gaskets and internal lapped surfaces. Depress plunger with Popping Handle (11) far enough to cover ports in plunger bushing; to, .k handle by inserting Lock Pin (14) in hole in Test Fixture frame. Maintain approximately 1600 psi by operating Tester -Handle while checking for leaks.

5. Observe spray pattern using Tester Handle to raise pressure to just below opening pressure and pop injector several times with Popping Handle. Check for clogged orifices and uniform spray pattern.
Before removing injector from Test Fixture, pop with Popping Handle until no pressure is observed on Gauge (12) to avoid fuel spray as Sockets (4) are disconnected from injector. After injectors pass above tests they should be flow tested and matched into sets on a Bacharach YZR or YQT Injector Compactor.

ADDITIONAL TESTS FOR NEEDLE VALVE INJECTORS

In addition to the tests for rack and plunger freedom, holding pressure, and spray pattern as outlined in crown valve injector tests; needle valve injectors are also tested for opening and holding pressure of the needle valve.

After the above tests are completed disconnect the Fuel Line (8) at the Nozzle Tester. Install Connector Tube N-1 (15) to the discharge block of the Nozzle Tester with Nut N-4 (16). The Nuts are tapped with both left and right hand threads. The end of the nut with the circular

Hold Adapter N47 (17) in vise at hex and assemble check valve, valve cage, spring and seat, spring cage, needle valve and tip on lapped surface of Adapter. Place injector nut over spray tip and thread it to Adapter using 75-85 ft. lb. Of torque. Connect Adapter with injector parts to Connector Tube using Nut N4 as shown in Fig. 5. Operate Tester Handle until assembly is purged of air and needle valve has opened several times.

1. Observe opening pressure of needle valve shoulder has the left hand thread and is always connected to the Tube. Engage one or two threads of Nut on Tube then tighten Nut to discharge block.
2. Establish valve holding time by operating Tester Handle to bring Gauge (18) pressure to 2000 psi and quickly close Valve (13). Time for pressure drop from 2000 psi to 1500 psi should not be less 4han 20 seconds with no drops of fuel collecting at spray tip.

Open Valve and allow pressure to bleed off before removing Adapter from Connector Tube. After injectors pass above tests they should be flow tested and matched into sets on a Bacharach YZR or YQT Injector Compactor.

MAINTENANCE INFORMATION

Replacement parts for Fixture are available should they become necessary due to normal wear or other reasons. Ordinarily, stand needs no maintenance. If leakage should develop, it is suggested that a dummy injector or test block, Code 65-252 be used to locate and repair leak.

Test block is connected in system at Socket (4) on Test Fixture in same manner as unit injector. Using Nozzle Tester, build up system pressure to 1500 psi. Close Pump Valve; leakage should be less than 60 psi per fifty seconds from 1500 psi. If Gauge indicates leakage in excess of this, locate as follows:

1. With clean, compressed air, blow dry all joints where leakage may occur and inspect for seepage. Lacking compressed air, use clean cloth or tissue paper.
2. If seepage appears at Sockets, turn Cam Handle to be certain that trouble is not due to insufficient force between Socket and test block.
3. Make certain Pump Valve is tightly closed.
4. Leakage other than that of 2 and 3 is corrected by tightening connections, replacing defective parts or similar repair procedures. Some care should be used when installing injectors; align injector filter caps with Socket (4). Misalignment may cause Sockets to permanently damage seals to such an extent that seals need to be replaced. Extra seals are supplied with Test Fixture and are installed by unscrewing Socket Cap (19), removing old seal and installing new one. When this is done, new seals should be ordered from factory.

Nozzle Tester can also be used to test nozzles of _ hydraulically- operated, differential- pressure type. To do this, optional gauges of required ranges are available. On stands so equipped, these nozzles are tested by disconnecting Fuel Line (8) at Nozzle Tester and attaching nozzle as indicated in instruction bulletin on Nozzle Tester. Keep Cap Nut (20) tightly screwed on when discharge outlet not in use.

INSTRUCTION DRAWINGS

(DO NOT USE FOR ORDERING PARTS)

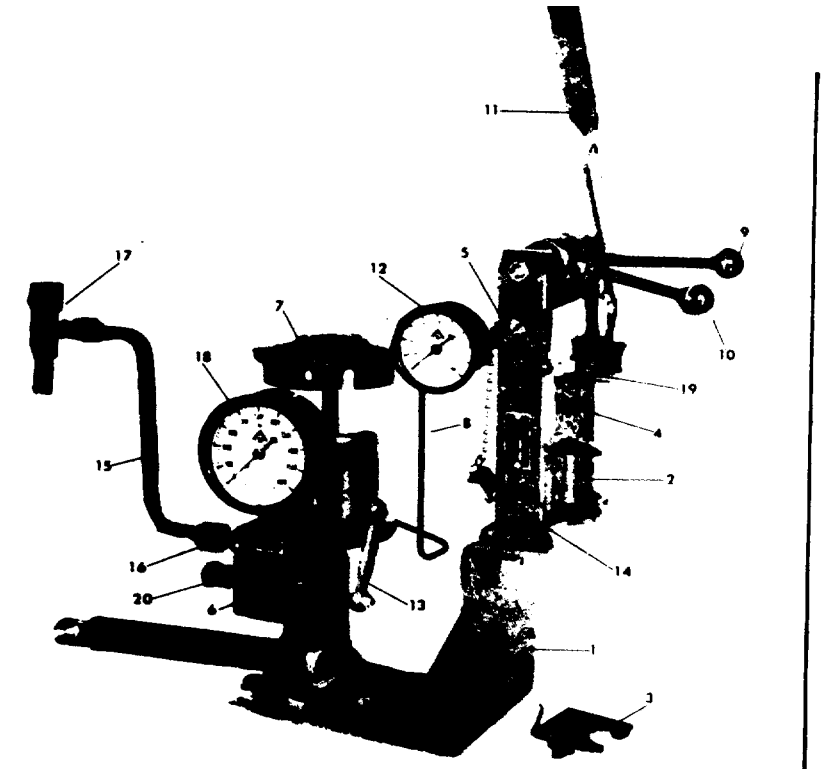

Fig. 5 Injector Test Set Code 65-1014

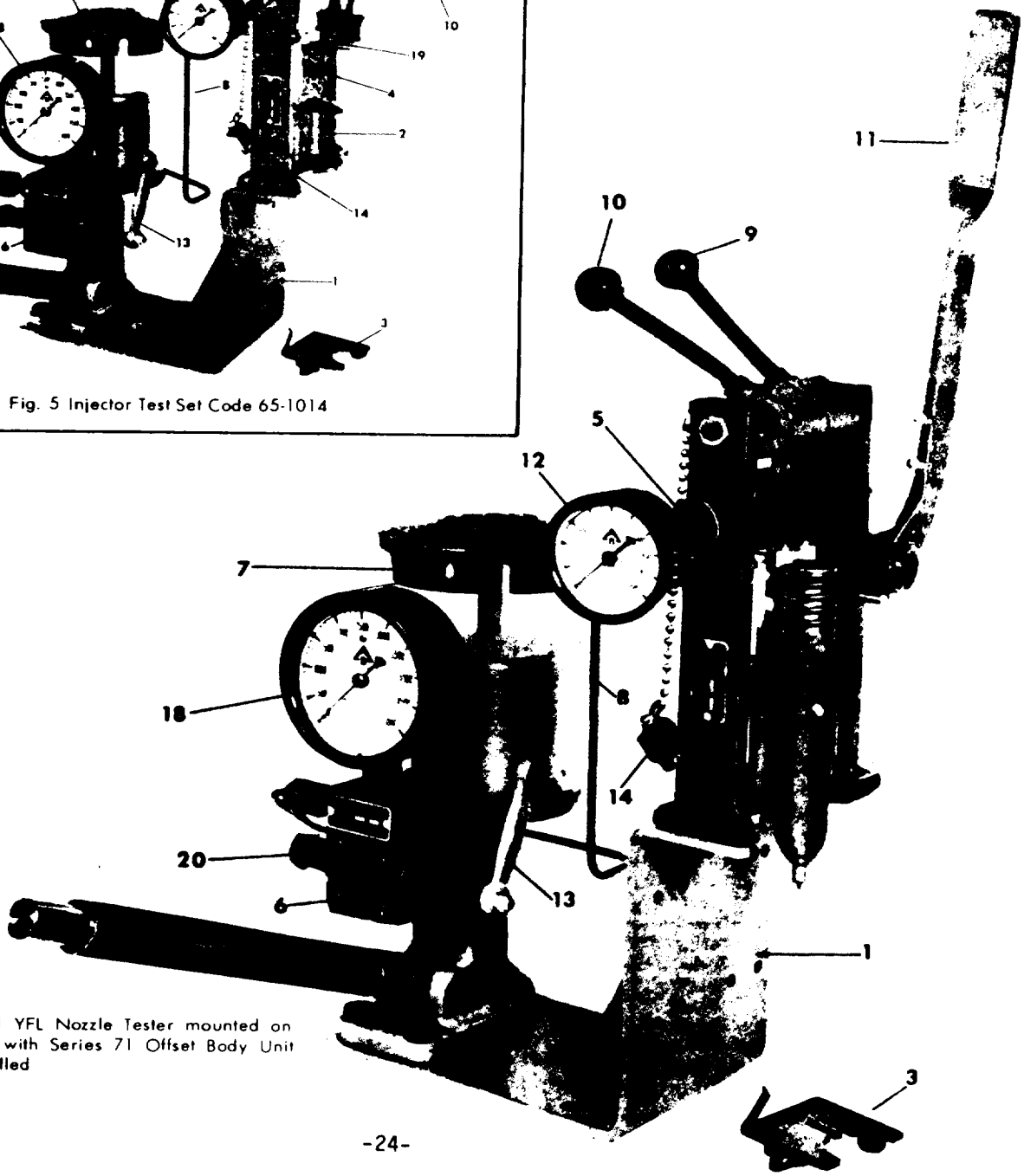

Fig. 6 Model YFL Nozzle Tester mounted on Test Fixture with Series 71 Offset Body Unit Injector installed

Fig. 6 Model YFL Nozzle Tester mounted on Test Fixture with Series 71 Offset Body Unit Injector installed

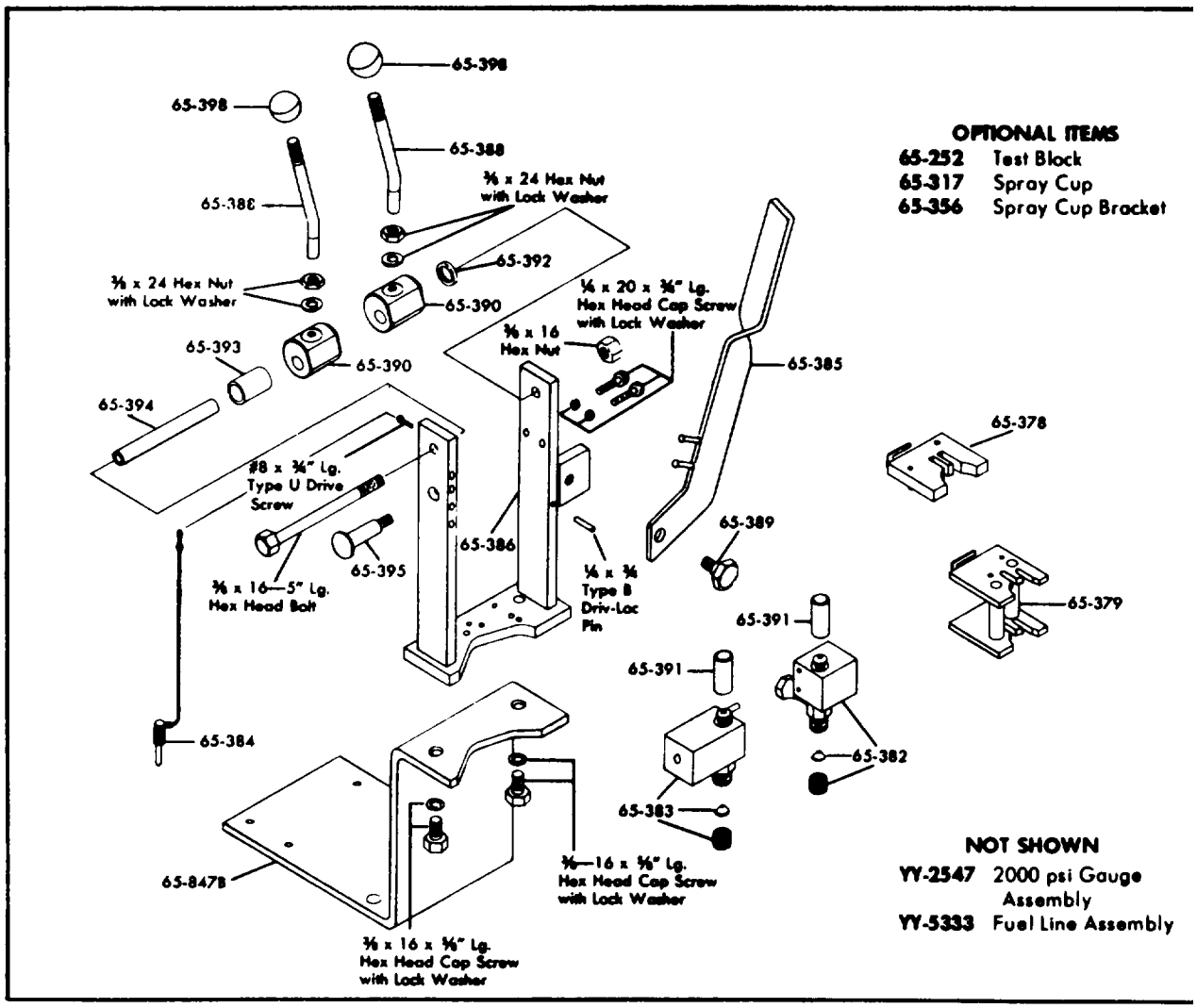

PARTS LIST for TEST FIXTURE - Code 65-928B

Code No.	Description
65-378	Seat Block for Series 110 Injectors
65-379	Seat Block for Series 53 & 71 Injectors
65-382	Injector Inlet Connector Block
65-383	Injector Outlet Connector Block
65-384	Detent Pin and Chain Assembly
65-385	Injector Popping Handle
65-386	Frame Assembly
65-388	Cam Handle Arm
65-389	Popping Handle Stud
65-390	Eccentric Cam
65-391	Cam Follower
65-392	Spacer
65-393	Spacer
65-394	Spacer
65-395	Connector Block Shift Knob
65-398	Cam Handle Knob
65-847B	Z-shaped Base Plate

PARTS LIST for CONNECTOR COMBINATION - Code 65-881

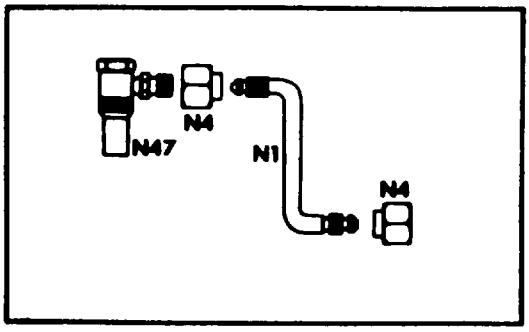

Code No.	Description
65-276	Connector Tube N-1
65-279	Connector Nut N-4
65-498	Adapter N-47

See Instructions 8-1-54 and PARTS LIST #31 for NOZZLE TESTER Model YFL

By Order of the Secretary of the Army:

E. C. MEYER
General, United States Army
Chief of Staff

Official:

ROBERT M. JOYCE
Brigadier General, United States Army
The Adjutant General

Distribution:

To be distributed in accordance with Special List.

***U.S COVERNMENT PRINTING OFFICE:1995-388/40039**

TEAR ALONG PERFORATED LINE

RECOMMENDED CHANGES TO EQUIPMENT TECHNICAL PUBLICATIONS

THEN. . JOT DOWN THE DOPE ABOUT IT ON THIS FORM, CAREFULLY TEAR IT OUT, FOLD IT AND DROP IT IN THE MAIL!

SOMETHING WRONG WITH THIS PUBLICATION?

FROM: (PRINT YOUR UNIT'S COMPLETE ADDRESS)

DATE SENT

PUBLICATION NUMBER	PUBLICATION DATE	PUBLICATION TITLE

BE EXACT. . .PIN-POINT WHERE IT IS

PAGE NO.	PARA-GRAPH	FIGURE NO	TABLE NO.

IN THIS SPACE TELL WHAT IS WRONG AND WHAT SHOULD BE DONE ABOUT IT:

PRINTED NAME, GRADE OR TITLE, AND TELEPHONE NUMBER

SIGN HERE:

DA FORM 1 JUL 79 2028-2

PREVIOUS EDITIONS ARE OBSOLETE.

P.S.—IF YOUR OUTFIT WANTS TO KNOW ABOUT YOUR RECOMMENDATION MAKE A CARBON COPY OF THIS AND GIVE IT TO YOUR HEADQUARTERS.

PIN: 049862-000

This fine document...

Was brought to you by me:

Liberated Manuals -- free army and government manuals

Why do I do it? I am tired of sleazy CD-ROM sellers, who take publicly available information, slap “watermarks” and other junk on it, and sell it. Those masters of search engine manipulation make sure that their sites that sell free information, come up first in search engines. They did not create it... They did not even scan it... Why should they get your money? Why are not letting you give those free manuals to your friends?

I am setting this document FREE. This document was made by the US Government and is NOT protected by Copyright. Feel free to share, republish, sell and so on.

I am not asking you for donations, fees or handouts. If you can, please provide a link to liberatedmanuals.com, so that free manuals come up first in search engines:

<A HREF=http://www.liberatedmanuals.com/>Free Military and Government Manuals</A>

- Sincerely
  Igor Chudov
  http://igor.chudov.com/
- Chicago Machinery Movers