DEPARTMENT OF T HE ARMY TECHNICAL MANUAL

OPERATOR'S MANUAL

LATHE, BRAKE DRUM, FLOOR MOUNTED, 60 INCH RATED SWING, 25 INCH MAXIMUM DRUM DIAMETER, W/GRINDING PROVISIONS, 1 HORSEPOWER DRIVE MOTOR, 1/2 HORSEPOWER GRINDING MOTOR, 115-VOLT, 60-CYCLE, SINGLE-PHASE (STAR MACHINE AND TOOL COMPANY MODEL 1960) (4910-516-6192)

This reprint includes all changes in effect at the time of publication -Change 1.

HEADQUARTERS, DEPARTMENT OF THE ARMY

MAY 1965

HEADQUARTERS
DEPARTMENT OF THE ARMY
WASHINGTON, D. C., *19 May 1965*

TM 9-4910-446-10 is published for the information and use of all concerned.

By Order of the Secretary of the Army:

HAROLD K. JOHNSON,
General, United States Army,
Chief of Staff.

Official:
J. C. LAMBERT,
Major General, United State Army,
The Adjutant General

Distribution:
Active Army:
USASA (1)
DCSLOG (1)
CNGB (1)
TSG (1)
CofEngrs (2)
CofSptS (2)
Dir of Trans (1)
CC-E (1)
USAOCDA (1)
USCONARC (3)
USAMC (2)
USACDC (1)
ARADCOM (2)
ARADCOM Rgn (2)
LOGCOMD (3)
OS Maj Comd (2) except
USASETAF (1)
USAMUCOM (3)
USAWECOM (74)
USASMC (2)
Armies (3) except
Seventh USA (5)
EUSA (5)
Corps (2)
USAC (2)
Ft Belvoir (1)
Ft Eustis (1)
USA Ord Seh (2)
GENDEP (2)
Army Dep (3)
Arsenals (2)
USDB (Ft Leavenworth) (1)
USA Cold Rgn Rsch Engr Lab (1)
Ord Test Activity Yuma (1)
OART (1)
ARMISH (1)
USAAVCOM (2)
APG (2)
4th USASA Fld Sta (1)
USACOMZEUR (2)
DPG (1)
USAPRDC (1)
QM Fld Maint Shops (2)
Engr Fld Maint Shops (2)
MAAG Iran, Vietnam (1)
Units org under fol TOE:
(2 copies each)
6-635
7
9-7
9-25
9-26
9-65
9-66
9-127
9-197
9-217
9-357
9-500 (CA, CC, DA)
10-445
10-443
17
29-51
29-55
29-56
29-57

NG: State AG (2); United-Same as Active Army except allowance in one copy to each unit.
USAR: None.
For explanation of abbreviations used, see AR 32-50.

CHANGE
No. 1

HEADQUARTERS
DEPARTMENT OF THE ARMY
WASHINGTON, D.C., *16 January 1973*

Operator's Manual

LATHE, BRAKE DRUM, FLOOR MOUNTED,

60 INCH RATED SWING, 25 INCH

MAXIMUM DRUM DIAMETER, W/GRINDING

PROVISIONS, 1 HORSEPOWER DRIVE MOTOR,

1/2 HORSEPOWER GRINDING MOTOR,

115-VOLT, 60-CYCLE, SINGLE-PHASE

(STAR MACHINE AND TOOL COMPANY

MODEL 1960) (4910-516-6192)

This change is current as of 6 December 1972

TM 9-4910-446-10, 19 May 1965, is changed as follows:

1. This change identifies the type of catalog maintenance action taken in connection with the updating of previously published data.

2. This change is separated by additions, deletions, and changes and is a list of items added, deleted, and/or changed since the last previously published data.

3. All Federal stock numbers and reference numbers, additions, deletions, and changes should be made to the indexes.

4. Parts included with end items and considered a component or part of the item configuration, are listed on the following tables. The part numbers listed are for Star Machine and Tool Company
Model 1960.

5. The reporting of errors, omissions, and recommendations for improving this publication by the individual user is encouraged. Reports should be submitted on DA Form 2028 (Recommended Changes to Publications) and forwarded direct to Commander, US Army Weapons Command, ATTN: AMSWE-MAS, Rock Island, IL 61201.

Part	Part No.
ARBOR, DRUM: 1 in. dia, 1 in. thd	57127:R-740
ARBOR, DRUM: 1 in. dia, 11/16 thd	57127:R-640
ARBOR, DRUM: 2 in. dia, 2 in. thd	57127:R-390
BAND, BRAKE DRUM SILENCING: passenger car	57127:SB-10
BAND, BRAKE DRUM SILENCING: truck	57127:SB-20
BAR, DRAW: arbor holding	57127:R-405
CONE, CENTERING: 1-15/32 X 2-3/8 X 1 bore	57127:R-680
CONE, CENTERING: 2-15/16 X 3-1/4 X 1 bore	57127:R-665
CONE, CENTERING: 3-1/16 X 4 X 4 X 1 bore	57127:R-670
CONE, RADII: 1-13/32 X 2-3/8 X 1 bore	57127:R-580
CONE, RADII: 1-1/2 X 1-45/64 X 1 bore	57127:R-550
CONE, RADII: 1-19/32 X 1-49/64 X 1 bore	57127:R-560
CONE, RADII: 1-27/32 X 2-55/64 X 1 bore	57127:R-620
CONE, RADII: 1-61/64 X 2-13/64 X 1 bore	57127:R-570
CONE, RADII: 2-1/16 X 3-19/64 X 1 bore	57127:R-630
CONE, RADII: 2-19/64 X 2-1/2 X 1 bore	57127:R-590
CONE, RADII: 2-27/64 X 2-39/64 X 1 bore	57127:R-600
CONE, RADII: 2-35/64 X 2-25/64 X 1 bore	57127:R-610
CONE, TAPERED: 3/4 X 1-1/2 X 11/16 bore	57127:R-510
CONE, TAPERED: 1-1/16 X 1-3/4 X 1 bore	57127:R-520
CONE, TAPERED: 2-15/64 X 3-3/8 X 2 bore	57127:R-385
CONE, TAPERED: 2-23/64 X 3-11/32 X 2 bore	57127:R-380
CONE, TAPERED: 3-17/64 X 3-52/64 X 2 bore	57127:R-375
CONE, TAPERED: 3-25/32 X 4-27/64 X 2 bore	57127:R-370

Part	Part No.
CONE, TAPERED: 4-5/16 X 4-31/32 X 2 bore	57127:R-365
CONE, TAPERED: 4-56/64 X 5-1/2 X 2 bore	57127:R-360
CONE, TAPERED: 5-25/64 X 6-1/32 X 2 bore	57127:R-355
CONE, TAPERED: 5-59/64 X 6-9/16 X 2 bore	57127:R-350
CONE, TAPERED: 6-31/64 X 7-1/8 X 2 bore	57127:R-345
CONE, TAPERED: 6-63/64 X 7-5/8 X 2 bore	57127:R-340
CONE, TAPERED: 7-17/64 X 8-11/61 X 2 bore	57127:R-335
HONE, SHARPENING: tool bit	57127:CB-75
NUT, ARBOR: 11/16 thd	57127:R-645
NUT, ARBOR: 1 in. thd	57127:R-745
NUT, ARBOR: 2 in. thd	57127:R-395
PLATE, FACE: 1 in. bore	57127:R-655
REDUCER: 1 in. od to 11/16 id, 1-3/8 lg	57127:R-501
REDUCER: 2 in. od to 1 in. id, 1-1/8 lg	57127:R-331
SPACER, ARBOR: 11/16 bore, 1 in. lg	57127:R-530
SPACER, ARBOR: 1 in. bore, 1 in. lg	57127:R-540
SPACER, ARBOR: 2 in. bore, 1 in. lg	57127:R-330
SPACER, ARBOR: 2 in. bore, 2 in. lg	57127:R-325
SPACER, ARBOR: 2 in. bore, 3 in. lg	57127:R-320
SPRING, COIL: 4 coil, 2-1/8 od	57127:R-315
SPRING, COIL: 4 coil, 2-3/8 id tapered to 1-1/2 id	57127:R-675
TOOL BIT: 5/8 sq, carbide tipped	57127:CB-35
TOOL BIT: 5/8 sq HSS	57127:CB-36
WRENCH, OPEN END, FIXED: sgle-hd type, 15 deg angle of hd, 7/16 wrench opng	57127:R-152
WRENCH, OPEN END, FIXED: sgle-hd type, 15 deg angle of hd, 3 wrench opng, 17 nom o/a lg	57127:R-410

Page 17, appendix. Section II is superseded as follows:

Section II. BASIC ISSUE ITEMS LIST

(1) Source, maint. and recov. code			(2) Federal stock No.	(3) Description	(4) Unit of issue	(5) Qty. inc. in unit pack	(6) Illustration	
(a) Source	(B) Maint.	(C) Recov.					(a) Fig. No.	(b) Item No.
				BASIC ISSUE ITEMS LIST-SECTION II BIIL is a list in alphabetical sequence of items which are furnished with, and which must be turned in with, the end item.				
C	O		5120-224-2504	KEY, SOCKET HEAD SCREW: hex type, L-hdl, 5/64 across fl, 1-7/8 nom lg arm lg	EA	1	1	50
C	O		5120-240-5292	KEY, SOCKET HEAD SCREW: hex type, L-hdl, 1/8 across fl, 2-1/4 nom lg arm lg	EA	1	1	49
C	O		5120-293-1266	WRENCH, BOX: stght sgle-hd type, hex shape wrench opng, 3/4 opng, 4-3/8 nom o/a lg	EA	1	1	45
C	O		5120-293-2124	WRENCH, OPEN END, FIXED, dble-hd type, 15 deg angle of hd, engineer style, 1-1/4 and 1-5/8 wrench opngs, 14 nom o/a lg, 9/16 thk of hd	EA	1	1	51
C	O		NA	WRENCH, OPEN END, FIXED: sgle-hd type, 15 deg angle of hd, 1/4 wrench opng, 3-1/2 nom o/a lg, 3/16 thk hd	EA	1	1	48
C	O		5120-277-1261	WRENCH, OPEN END, FIXED: sgle-hd type, 15 deg angle of hd, 3/8 wrench opng, 3-7/8 nom o/a lg, 17/64 thk hd	EA	1	1	47
				Federal stock numbers are being assigned for items marked NA and then numbers will be published at a later date.				

By Order of the Secretary of the Army:

CREIGHTON W. ABRAMS
General, United States Army
Chief of Staff

Official:

VERNE L. BOWERS
Major General, United States Army
The Adjutant General

Distribution:

Active Army

DCSLOG (1)
TSG (1)
COE (6)
Dir of Trans (1)
CONARC (3)
AMC (10)
MUCOM (2)
ARADCOM (2)
ARADCOM Rgn (2)
TACOM (5)
AVSCOM (10)
WECOM (10)
OS Maj Comd (5)
LOGCOMD (3)
Armies (3) except
7th USA (5)
8th USA (5)
Corps (2)
USACOMZEUR (2)
USARYIS (1)
ANAD (2)
TOE 55-465 (2)

NG: None.

USAR. None

For explanation of abbreviations used, see AR 310-50.

SECTION I
USE AND MAINTENANCE

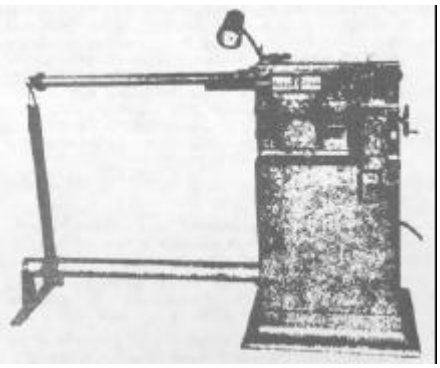

Fig. 1-1. Brake Drum Lathe

1-1. INTRODUCTION

1-2. The Star Brake Drum Lathe, Model 1960 is designed to put a smooth, accurate finish on used or unfinished brake drums (see figure 1-1).

1-3. The Model 1960 wilt handle passenger car drums as well as being capable of turning the largest and heaviest truck drums.

1-4. The Model 1960 is designed to keep maintenance expenses at a minimum and operating efficiency at a maximum.

1-5. The following instructions and parts breakdown will help ensure many years of high quality, troublefree drum turning. Numbers in parentheses refer to item numbers (see figure 2-1).

1-6. TABLE OF SPECIFICATIONS

Drum Capacity Range (dia.)	6" to 42"
Drum Cutting Depth (face)	10"
Speeds, Number of Changes	Infinite
Speeds, Cutting Range	30 to 150 r.p.m.
Swing	60"
Motor	1 h.p., 115-230v., 60C., Single Phase 1725 r.p.m.
Feed, Range	O to Rapid Traverse
Number of Feeds	Infinite
Weight	590 lbs.

1-7. INSTALLATION

1-8. Remove machine and all accessories from shipping container.

1-9. Check all parts with packing slip to insure all items are included.

1-10. Clean the entire machine, adapters, and accessories with a good grease solvent to remove the protective coating on the machined surfaces,.

1-11. Place machine in desired position and securely bolt it to the floor. Make sure machine is level by using a level on the top plate of the cabinet.

1-12, Install the 2" Arbor, R-390, into the Spindle (28) and tighten until Arbor is drawn up tightly in Spindle (28).

1-14. Place the Vertical Tube (184) over the Horizontal Tube (197) and position the Horizontal Tube (197) over the plug which is welded to the base.

1-15. Fasten the Bottom Mounting Plate (198) to the base of the Horizontal Tube, (197).

1-16. By use of a plumb bob, level, and shims, permanently position the Bottom Mounting Plate (198) so that the Horizontal Tube (197) is directly beneath the Arbor and level to the floor. Tighten Cap Screw (200) at rear of Horizontal Tube (197).

1-17. Swing the Vertical Tube (184) into the upright position and slide it toward the Arbor. Raise the Adjusting Bushing (187) by hand until the Rod End Bearing (188) will slide over the end of Arbor and the Vertical Tube (184) is directly below Arbor. Fasten the Vertical Tube (184) to the Horizontal Tube (197) by tightening the Locking Screw Shaft (195). Place Cam Shaft (190) in the up position until Pin (194) hits Stop Pin (193). Rotate the Adjusting Bushing (187) until you feel it touch the Cam (191). This is done by slowly moving the Cam Shaft (190) while you are rotating the Adjusting Bushing (187) until you feel a slight drag on the Cam (1917). Tighten the Jam Nut (189). The outboard support is now permanently adjusted.

1-18. Place Tool Bit, CB-35, into Boring Bar (77) and fasten securely with the two Square Head Set Screws (78). The tool bit slot in the end of the Boring Bar (77) is deep enough to enable several degrees of adjustment of the tool bit angle. The groove running along the Boring Bar (77) should be lined up with the slit in the Compound Rest (73).

1-19. Position Lamp (121) over Lamp Bracket (122) and plug into Receptacle (85). Use standard bulb, 75 watts or less, moistening bulb neck before slipping it through silicone grommet at the base of reflector.

After screwing bulb into socket, make sure air space between shade and reflector is equal on all sides.

1-20. Plug machine into 115 volt outlet and the machine is now properly installed.

1-21. OPERATIONAL PROCEDURES

1-22. Mount drum on arbor using one of the following methods which apply. Be sure that the Arbor is mounted in Spindle (28) before mounting hub and drum assembly.

a.-Loose Drum Set-up. Select proper Tapered Cone to fit in center of drum. Place one Face Plate on Arbor followed by the Spring and Tapered Cone. Place drum on Arbor over Tapered Cone and push drum up to pads of Face Plate. Place other Face Plate on Arbor and push up to drum. Place additional Spacers on Arbor so that the two Face Plates can be tightened together when the Arbor Nut is put on the end of Arbor and tightened. Make sure that the face plate pads are riding on a smooth dean surface of the drum (see figure 1-2).

b.-Tapered Hub. Select the proper Tapered Cones to fit in drum hub. On some drums the Tapered Cones go in about 1/4 of an inch. Place Tapered Cone for inside

of tapered hub onto Arbor followed by the drum and outside Tapered Cone. Place additional Spacers onto Arbor so that when the Arbor Nut is tightened at the end of the Arbor, the two Tapered Cones are drawn up tightly against the tapered hub (see figure 1-3).

c.-Ball Bearing Equipped Hub. Select the proper Radii Cone to fit into the inner and outer bearing cups. Radius of Radii Cone selected should seat in Center of bearing cup radius. Place Radii Cone for inner bearing cup onto Arbor followed by drum and Radii Cone for outer bearing cup. Place additional Spacers on Arbor so that when the Arbor Nut on the end of Arbor is tightened, the two Radii Cones are drown up securely to the bearing cups. Make sure bearing cups and Radii Cones are clean before mounting (see figure 1-4).

d.-Tapered Bearing Equipped Hub. Select the proper Radii Cone to fit into the inner and outer bearing cups. Radius of Radii Cone selected should seat somewhere on cup bearing surface. In most cases, this will be approximately in the center of bearing cup. Place Radii Cone for inner bearing cup on Arbor, followed by hub and Radii Cone for outer bearing cup. Place additional Spacers on Arbor so that when the Arbor Nut is tightened on the end of the Arbor, the two Radii Cones will draw up securely to the bearing cups and Radii Cones are clean before mounting (see figure 1-5).

e.-Tapered Bearing Hub. (Truck). Select the proper Tapered Cones to fit into the inner and outer bearing cups. The Tapered Cone should fit so that it is almost completely inside the bearing cup. There are conditions when the Tapered Cone will barely enter the cup or just about go through the cup. Place the Tapered Cone for the inner bearing cup on the Arbor, followed by the drum and Tapered Cone for outer bearing cup. Place additional Spacers on the Arbor so that when the Arbor Nut on the end of the Arbor is tightened, the two Tapered Cones are drawn securely against the bearing cups. Make sure that the Tapered Cones and bearing cups are clean (see figure 1-6).

1-23. Place Brake Drum Silencing Band, SB-10 or SB-20, around drum and apply enough tension so that the drum is snugly wrapped. On passenger drums, the Brake Drum Silencing Band, SB-10, should be positioned even with the edge of open side of drum. The Brake Drum Silencing Band should not be too tight or too loose on drum.

1-24. If drum is to be turned with wheels mounted, then the outboard support should always be used.

1-25. Before drum and wheel assembly is resting with full weight on the Arbor, make sure that the Vertical Tube (184) of the outboard support is in place and the Cam Shaft (190) is In the up position.

1-26. For best results, the outboard support should be used on all drum and wheel assemblies.

1-27. The Boring Bar (77), Compound Rest (73), Cross Slide (59) and Apron (45) should be adjusted so that the Tool Bit can be placed in the rear of the drum without interference. This adjustment depends on the diameter and depth of the drum. The Boring Bar (77) can be slid in and out of the Compound Rest (73) by loosening the Cap Screw (76). The Compound Rest (73) can be rotated by loosening Cap Screw (74) and Cap Screw (76) the Cross Slide (59) can be moved in or out by rotating Handle (71).

1-28. Turn machine on at Switch (112). Make sure Cut Off Switch (117) is also on.

1-29. If drum has a prominent ridge on outer or inner edge of braking surface, remove with rough cut before observing the following procedures.

1-30. Bring Tool Bit into rear of drum by moving Direction Lever (208) down and moving Speed Lever (207) down into the rapid traverse range.

1-31. As Tool Bit approaches rear of drum, raise up on Speed Lever (207) and move Direction Lever up to neutral position.

1-32. Bring Tool Bit to maximum depth of drum by rotating Large Handwheel (182).

1-33. Adjust Cut Off Rod (53) so that machine will shut off after Tool Bit has cleared drum. The Cut Off Rod (53) con be adjusted by merely pushing it. The drag on the Cut Off Rod (53) is set at the factory and should be such that the Cut Off Rod (53) will trip the Cut Off Switch (117) but not accidentally break it if the Apron (45) is hand cranked.

1-34. Advance Handle (71) until Tool Bit touches inside surface of drum. Each graduation on the Graduated Collar (68) represents .001" of travel of the Tool Bit. Advance Handle (71) an additional .10" into the drum. Lock Cross Slide (59) by tightening Thumb Screw (57).

1-35. Rotate Handwheel (99) counter clockwise in order that the drum will rotate in the lower r.p.m.
range.

1-36. Move Direction Lever (208) up to move Tool Bit to the right.

1-37. Move Speed Lever (207) down into the rough cut range and lock into position by rotating Speed Lever (207) clockwise. If drum does not clean up, repeat above procedures.

1-38. When Tool Bit leaves drum, move Direction Lever (208) down to neutral position.

1-39. Remember Graduated Collar (68) reading, loosen Thumb Screw (57) and rotate Handle (71) back .015".

1-40. Move Direction Lever (208) down and unlock Speed Lever (207) and move it down to the rapid traverse range.

1-41. As Tool Bit approaches rear of drum, -raise Speed Lever (207) until Tool Bit stops moving.

1-42. Move Direction Lever (208) up to neutral position.

1-43. Bring Tool Bit to maximum depth of drum by rotating Large Handwheel (182).

1-44. Turn Handle (71) to rough cut reading plus an additional .002" and lock Cross Slide (59) by tightening Thumb Screw (57).

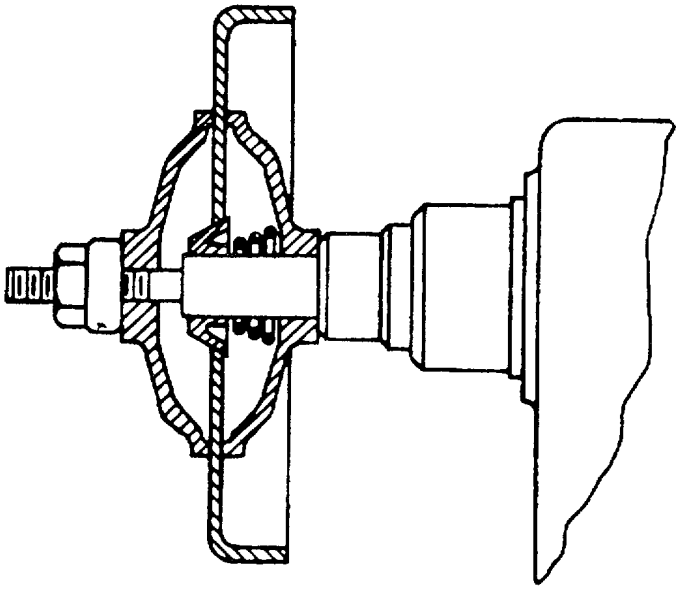

Fig. 1-2 - LOOSE DRUM SET-UP

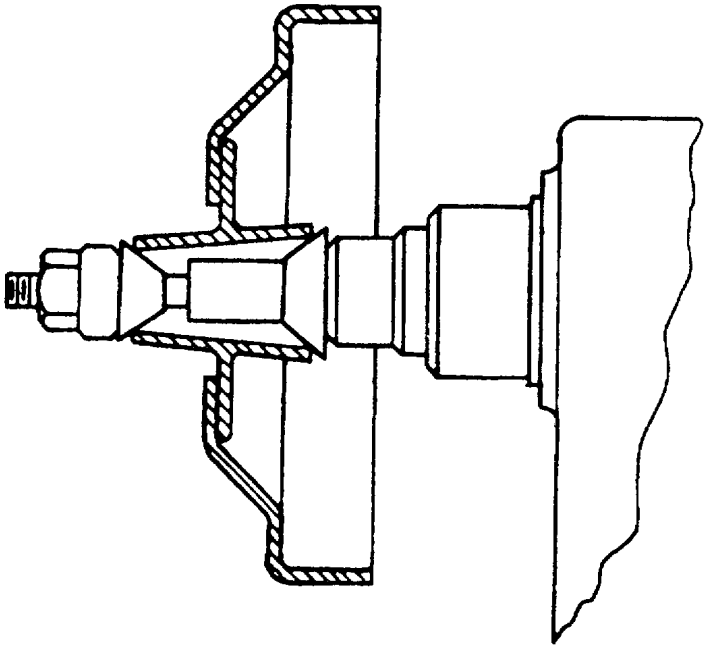

Fig. 1-3 - TAPERED HUB

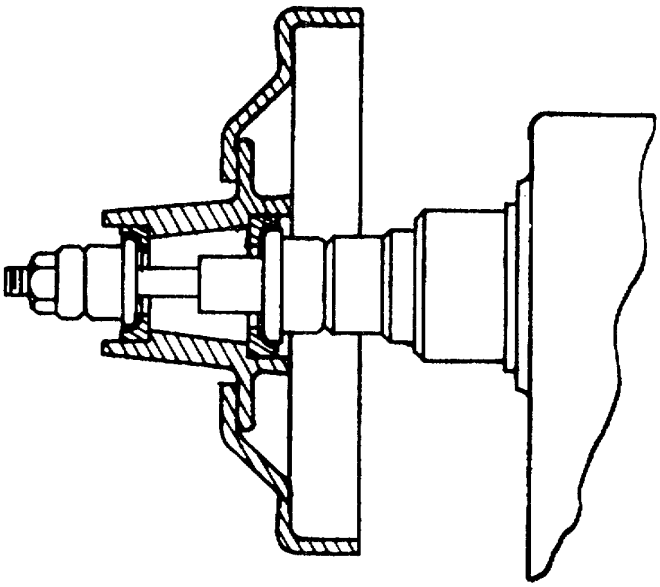

Fig. 1-4 - BALL BEARING EQUIPPED HUB

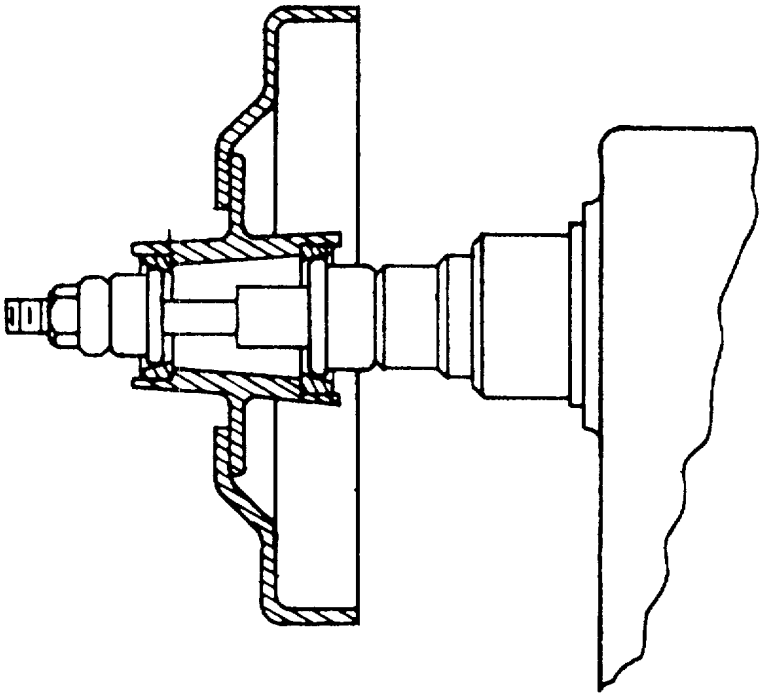

Fig. 1-5 - TAPERED BEARING EQUIPPED HUB

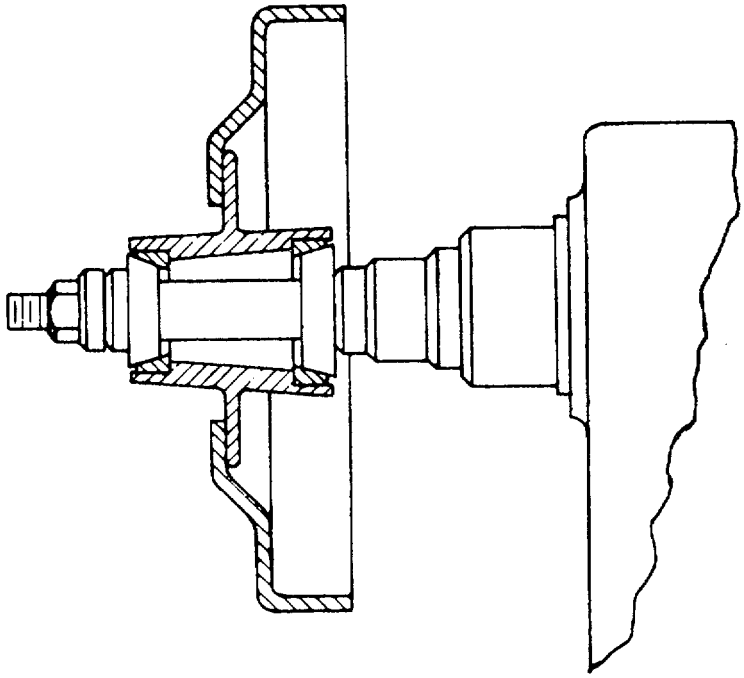

Fig. 1-6 - TAPERED BEARING HUB (TRUCK)

1-45. Rotate Handwheel (99) clockwise until drum is rotating in the high r.p.m. range.
1-46. Move Direction Lever (208) up and move Speed Lever (207) down into finish cut range and lock by rotating Speed Lever (207) clockwise.
1-47. When Tool Bit leaves the drum, the drum should have an accurate and smooth finish.
1-48. Move Direction Lever (208) down to the neutral position and raise Speed Lever (207) up to the up position.
1-49. Turn machine off at Switch (112) and remove drum from machine.
1-50. The above procedures are for instruction purposes and are not necessarily correct for all cases.
Drum condition determines the proper depth of cuts, carriage feed, and spindle r.p.m. As the operator gains experience with this machine, he will be able to make the proper settings for maximum performance, efficiency and accuracy.

1-51. MAINTENANCE PROCEDURES

1-52. Lubrication

a.-Main Bearings (3 & 4). Apply a few drops of light machine oil (SAE #10) in both Head Oilers (5).
b.-Lead Screw (42) and Lead Screw Nut (43). Apply a few drops of light machine oil (SAE #10) along length of Lead Screw (42) once a week.
c.-Cross Slide (59). Apply a few drops of light machine oil (SAE #10) at Oiler (60) and between Graduated Collar (68) and End Plate (66).
d.-Bearing (161) and Pillow Block Bearing (166). Apply a few drops of light machine oil (SAE #10) at both oil cups inside Guard (173) every 90 days.
e.-Gear box. Maintain the oil level in the center of Oil Window (8) with gear oil (SAE #90 or MIL L 15019C, Grade 6135). Add oil by removing Vented Plug (6). Caution: Do not fill higher than the top of Oil Window (8).
f.-Control Box (143). This box should be drained once each year or each 1500 hours of operation by removing Drain Plug (210). Twelve ounces of new oil (all purpose #80) or MIL L-2105) should be added at Vent Plug (209).
g.-Variable Speed Pulley (201). Lubricate grease fitting in rear of machine with one shot of light needle bearing grease every 90 days.
h.-Apron ways. Move Apron (45) to extreme front position, wipe away all dirt or cutting particles and apply several drops of light oil (SAE #10) to all exposed surfaces of the dovetail ways. Move Apron (45) in the, opposite direction and repeat above procedures. Perform weekly.
i.-Cross slide ways. Back out Cross Slide (59) to extreme out position, wipe the dovetail surfaces clean and apply light oil (SAE #10) weekly.
j.-Wipe machine free of dust and cutting particles with oil rag doily.

1-53. Trouble Shooting.

a.-Problem: Chatter.
Reason:
Wrong Cones and Adapters.
Face Plate, R-655, making poor contact due to excessive dirt between face plate pads and drum.
Dull Tool Bit.
Misaligned Boring Bar (77).
Failure to use Brake Drum Silencing Band, SB-10 or SB-20.
Improper mounting of Brake Drum Silencing Band, SB-10 or SB-20.
Spindle r.p.m. too slow or too fast for depth of cut.
Outboard support not bolted to floor.
The following areas should be checked for tightness:
(1) Tool bit, CB-35 or CB-36.
(2) Boring Bar (77).
(3) Gib (61).
(4) Gib (49).
(5) Draw bar, R-405.
(6) Arbor Nut, R-645, R-745 or R-395.
(7) Drum on hub.
(8) Bearing cup in hub.
Failure to tighten Cross Slide (59), Thumb Screw (57).

b.-Problem: Loss of power.
Reason.
Low voltage to motor.
Worn or loose drive belts.
Dull tool bit.
Failure to follow lubrication Instructions.

c.-Problem: Machine shuts off during operation.
Reason: Cut Off Rod (53) not adjusted properly.
Thermal overload switch (112) cuts off because machine is overworked.

d.-Problem: Machine will not start.
Reason: Cut Off Switch (117) Is in off position.
Thermal overload Switch (112) has not had time to cool.

1-54. Calibration.

a.-Gib (49) adjustment. Loosen Jam Nuts (51). Tighten Set Screws (50) until Apron (45) looseness is taken up. Tighten Jam Nuts (51).
b.-Cross slide Gib (51) adjustment, Loosen Jam Nuts (63). Tighten Gib Screws (62) until Cross Slide (59) looseness is taken up. Tighten Jam Nuts (63).
c.-Spindle (28). End play adjustment. Remove Guard (173) and Housing Cover (39). Loosen Lock Washer (35) from Nut (36). Tighten Nut (36) so that when you press hard at rear of Spindle (28) you can get a .003 feeler gauge between the Spindle (28) nose and the Front Main Bearing (3). Tighten Lock Washer (35) onto Nut (36) and replace Housing Cover (39) and Guard (173).
d.-Worm (14) end play. Remove Guard (173), Large Pulley (25) and Bearing Retainer (19). Remove either .010" Shim, (23) or .005" Shim (24) depending on amount of take up. Replace Bearing Retainer (19), Large Pulley (25), and Guard (173).

1-55. DISASSEMBLY.

1-56. Remove Arbor, R-390, R-640, or R-740 by loosening the Draw Bar, R-405, one turn and hitting end of Draw Bar with lead hammer until Arbor breaks free of Spindle (28).
1-57. Outboard support is removed by loosening two Cap Screws (199) and Cap Screw (200) and sliding Horizontal Tube (197) off of welded plug.

TABLE 1 - BRAKE DRUM CHARACTERISTICS - MILITARY VEHICLES

SNL	MODEL	HUB NO.	DIA. X DEP.	ORD ENG STD	CONE NO	LOC	ORD ENG STD	CUP NO	LOC
G842	XM455 XM456	8719915	14.9 x 3.3	CAS X 5.1	712869		CAS X 6.1	712868	
G751	M119 M118 M118A1 M164E1	8343586	16.4 x 6	CAS X 7.1 CAS X 6	706691 712120	IN OUT	CAS X 7.1 CAS X 6	712286 712119	IN OUT
G815	M349	8720968	16.5 x 6.7	CAS X 5 CAS X 4	706683 706671	IN OUT	CAS X 6 CAS X 4	705143 705116	IN OUT
G800	M197	8327340	16.4 x 6	CAS X 7.1 CAS X 4	706691 706671	IN OUT	CAS X 7.1 CAS X 4	712286 705116	IN OUT
	M197A1	8747994		CAS X 7.1 CAS X 4	706691 706671	IN OUT	CAS X 7.1 CAS X 4	712286 705116	IN OUT
	M198	7409395		CAS X 7.1	706691		CAS X 7.1	705155	OUT
G816	M345	8710723	16.4 x 6	CAS X 7.1	706691	IN OUT	CAS X 7.1 CAS X 7.1	712286 705155	IN OUT
G750	M126 M127 M126A1 M127A1 M128A1	7409395 8333869	16.4 x 6	CAS X 7.1 CAS X 7.1 CAS X 7.1	706691 706691 712286	 IN OUT	CAS X 7.1 CAS X 7.1 CAS X 7.1 CAS X 7.1	712286 705155 712286 705155	IN OUT IN OUT
G755	M131	7509395	16.4 x 6	CAS X 7.1	706691		CAS X 7.1 CAS X 7.1	712286 705155	IN OUT
	M131A1 M131A2	8333869		CAS X 7.1	706691		CAS X 7.1 CAS X 7.1	712286 705155	IN OUT
G802	M269 M270	7979324	16.4 x 6	CAS X 7.1	706691		CAS X 7.1 CAS X 7.1	712286 705155	IN OUT
G797	M172	8379664		CAS X 6 CAS X 5.1	706704 707081	IN OUT	CAS X 7 CAS X 6	705187 705167	IN OUT
	M172A1	8787067RT 8687068LH	12.2 x 6.6	CAS X 7 CAS X 5.1	706704 707081	IN OUT	CAS X 7 CAS X 6	705187 705167	IN OUT
G811	M199	8720685	16.4 x 7.5	CAS X 6.1 CAS X 7	706707 706704	IN OUT	CAS X 7 CAS X 7	705194 705187	IN OUT
G160	M15A1 M15A2	7348199	16 x 6	CAS X 7 CAS X 5.1	706704 706784	IN OUT	CAS X 7 CAS X 5.1	705187 705341	IN OUT

SNL	HUB ORD NO	CUP MFG'S NO*	LOC	CONE MFG'S NO*	LOC	BRAKE DRUM DIA. IN	BRAKE DRUM DEPTH IN.
G740 & G758	7375142 7375144	18520	INF OUTF	18590	INF OUTF	8.948	2 17/64
	Rear wheel hubs are taper bored to fit tapered shaft						
G741	8376840	28622 2924	INF INR OUTF OUTR	28682 2984	INF INR OUTF OUTR	14.155	2 11/32
G742	8357986	3920E 3920E	INF INR OUTF OUTR	3994 392	INF INR OUTF OUTR	14.995	3 11/16
G749	GM2280042	39520 39520	INF INR OUTF OUTR	39590 39590	INF INR OUTF OUTR	14.995	3 11/32
G744	7979324	592A 592A	INFR OUTRF	593A 596	INF OUTRF	16.495	6 1/16
G792	M34KM46 M12QJ451	5735 522 64700 854	INF OUTF INR OUTR	5760 528A 64450 861	INF OUTF INR OUTR	17.25	6 15/32

*Timken IN—Inner OUT—Outer F—front R—rear

SECTION II PARTS BREAKDOWN
PARTS LIST FOR MODEL 1960-G, LATHE, BRAKE DRUM

Item No.	Ass'y. No.	Part No.	Description	Quan. per Ass'y.	Quan. per Mach.
1	100387		Main Housing Assembly		1
2		300083	Housing Main	1	1
3		150005	Bearing, Main, Front	1	1
4		150006	Bearing, Main, Rear	1	1
			END Main Housing Assembly		
5		230015	Oiler, Head	2	2
6		230016	Plug, Vented	1	1
7		990021	Plug	1	1
8		990019	Window, Oil	1	1
9		990274	Plate, Name	1	1
10		990018	Plate, Name, Star	1	1
11			Screw, Drive, #2, 1/4" Long, Plated, Hardened	4	4
12	100036		Shaft Assembly		1
13		600002	Shaft, Drive	1	1
14		500006	Worm	1	1
15		150007	Cone, Bearing	2	2
16		150012	Cup, Bearing	1	2
17		350003	Key, Shaft, Drive	1	1
			END Shaft Assembly		
18	100029		Bearing Retainer Assembly		1
19		300008	Retainer, Bearing	1	1
20		250002	Seal, Oil	1	1
21		150012	Cup, Bearing	1	2
			END Bearing Retainer Assembly		
22			Screw, Cap, Socket Head, 1/4-20 x 3/4"	4	10
23		250029	Shim, .010	2	2
24		250030	Shim, .005	1	1
25		500133	Pulley, Large	1	1
26			Screw, Set, Socket, Nyloc, 5/16-18 NC x 5/16"	1	2
27		350002	Key, Pulley, Large	1	1
28		600086	Spindle	1	1
29		250056	Seal, Spindle	1	1
30			Screw, Machine, Round Hd. 6-32 x 3/4"	2	2
31		990024	Ring "O"	1	1
32		650006	Spacer, Spindle	1	1
33		500134	Gear, Worm	1	1
34		350001	Key, Gear		1
35		990013	Washer, Lock	1	1
36		700005	Nut	1	
37		250001	Gasket, Cover	1	1
38	100389		Cover Assembly		1
39		170107	Cover, Housing	1	1
40		250003	Seal	1	1
			END Cover Assembly		
41			Screw, Cap, Socket Hd. 1/4-20 x 3/4"	6	10
42		700234	Screw, Lead	1	1
43		700241	Nut, Screw, Lead	1	1
44			Nut, Hex, Jam, Finished, Plated, 1/2-13	1	1
45		300084	Apron	1	1
46		130216	Plate, Wiper	2	2
47		990286	Wiper	2	2
48			Screw, Machine, Round Hd, 10-24 x 1/2", Plated	6	6
49		130381	Gib	1	2
50		700242	Screw, Set	3	3
51			Nut, Jam, Hex, Finished, 1/4-20	3	6
52	100391		Cut Off Rod Assembly		1
53		370114	Rod, Cut Off	1	1
54		650010	Retaining Ring	1	1
			END Cut Off Rod Assembly		
55			Screw, Set, Socket, 1/4-20 x 3/8"	1	1
56		990140	Plug, Nylon	1	2
57			Screw, Thumb, Plated, 1/4-20 x 1-1/2"	1	1
58		990140	Plug, Nylon	1	2
59		300085	Cross Slide	1	1
60		230017	Oiler	1	1
61		130381	Gib	1	2
62		700199	Screw, Gib	3	3
63			Nut, Jam, Hex, Finished, 1/4-20	3	6
64		700235	Screw, Cross Slide	1	1

PARTS LIST FOR MODEL 1960-G, LATHE, BRAKE DRUM

Item No.	Ass'y. No.	Part No.	Description	Quan. per Ass'y.	Quan. per Mach.
65		990023	Washer, Bronze	1	1
66		130382	Plate, End	1	1
67			Screw, Cap, Socket Head, 5/16-18 x 1/2"	2	2
68		650250	Collar, Graduated	1	1
69		990144	Plug, Nylon, Collar,	1	1
70			Screw, Set, Socket, 8-52 x 1/4"	1	1
71		370115	Handle	1	1
72		450039	Pin, Spring, Handle	1	1
73		300086	Compound Rest	1	1
74			Screw, Cap, Hex Head, 1/2-13 x 1-1/2	1	1
75			Washer, Flat, 17/32 I.D. x 1-1/16 O.D.	1	1
76			Screw, Cap, Hex Head, 1/2-13 x 3-1/2	1	1
77		900268	Boring Bar	1	1
78			Screw, Set, Sq. Hd. 3/8-16 x 5/8	2	2
79			Screw, Cap, Socket Hd, 3/8-16 x 1-1/4	4	4
80			Washer, Lock, 3/8" Med.	4	8
81		200062	Clip, Cord	1	1
82	100392		Cabinet Assembly		1
83		170108	Cover, Louvered	1	1
84			Screw, Machine, Round Hd., 10-24 x 5/16"	8	8
85		200006	Receptacle	1	1
86			Screw, Machine, Round Hd., Plated, 10-24 x 7/16"	2	2
87	850164		Pulley Base Subassembly		1
88		990296	Base, Pulley	1	1
89		650260	Collar, Base	2	2
90			Screw, Set, Socket, Nyloc, 1/4-20 x 1/4	2	4
91		150087	Bearing, Thrust	2	4
92		150088	Race, Thrust	4	8
93		400005	Sleeve, Connecting	1	1
94		450043	Pin, Spring	1	3
			END Pulley Base Subassembly		
95			Washer, Lock, 3/8" Med.	4	8
96			Nut, Hex, Finished, Full, 3/8-16	4	4
97		400006	Rod, Control	1	1
98		150078	Bushing, Flanged	1	1
99	100404		Handwheel Assembly		1
100		450358	Pin, Spring, Handwheel	1	2
101		200057	Motor	1	1
102		200058	Cord	1	1
103		200052	Plug, Cord	1	1
104		200050	Adapter	1	1
105		200042	Connector, Screw	1	1
106		500137	Pulley, Motor	1	1
107		350013	Key, Pulley	1	1
108			Screw, Set, Socket, Nyloc, 5/16-18 x 7/16"	2	2
109			Screw, Cap, Hex Head, 5/16-18 x 3/4	4	4
110			Washer, Flat, 3/8 I.D. x 7/8 O.D.	4	6
111			Washer, Lock, 5/16" Med.	4	11
112		200053	Switch	1	1
113		200060	Heater Coil	1	1
114			Screw, Mach., Round Hd., 1/4-20 x 5/16"	2	2
115			Screw, Mach., Round Hd., Plated, 8-32 x 1/4	1	1
116		200061	Bushing, Snap	1	1
117		200003	Switch, Cut Off	1	1
118		990150	Ring, Off & On	1	1
119		200011	Nut, Switch	1	1
120		990151	Seal, Nut	1	1
121		200004	Lamp	1	1
122		200036	Bracket, Lamp	1	1
123		130385	Plate, Mounting	1	1
124	850163		Plate Bearing Retainer Subassembly		1
125		650251	Retainer, Bearing, Plate	1	1
126		250058	Seal, Retainer	1	1
127		150087	Bearing, Thrust	1	4
128		150088	Race, Thrust	2	8
129		150090	Bearing, Needle, Collar	2	2
			END Plate Bearing Retainer Subassembly		
130		150087	Bearing, Thrust	1	4
131		150088	Race, Thrust	2	8
132		250022	Seal, Dust	1	1

PARTS LIST FOR MODEL 1960-G, LATHE, BRAKE DRUM

Item No.	Ass'y. No.	Part No.	Description	Quan. per Ass'y.	Quan. per Mach.
133		450356	Pin, Dowel	2	6
134			Screw, Cap, Soc. Hd., 1/4-20 x 1-1/2"	3	3
135		450356	Pin, Dowel	2	6
136			Screw, Cap, Hex Head, 5/16-18 x 5/8"	3	3
137			Washer, Lock, 5/16" Med.	3	11
138		650252	Spacer	1	1
139		450042	Pin, Spring, Spacer	1	1
140		500135	Gear, Nylon	1	1
141		450359	Pin, Spring, Gear	1	1
142			Screw, Set, Socket, 1/4-20 x 1/4"	1	1
143		990297	Control Box	1	1
144	100394		Overload Coupling Assembly		1
145		990298	Coupling, Overload	1	1
146		990299	Adapter, Coupling	1	1
147	850155		Pinion Gear Subassembly		1
148		500138	Gear, Pinion	1	1
149		150002	Bushing, Bronze	1	1
150			Screw, Set, Socket, Nyloc, 10-24 x 1/4"	4	4
			END Pinion Gear Subassembly		
			END Overload Coupling Assembly		
151		450356	Pin, Dowel	2	6
152			Bolt, Oven Head, 1/4-20 x 1/2"	4	4
153			Washer, Lock, Shakeproof, 1214 Pheoll	4	4
154		990300	Coupling	1	1
155			Screw, Set, Socket, Nyloc, 1/4-20 x 5/16"	2	2
156		600087	Shaft, Long	1	1
157		500139	Pulley	2	2
158			Screw, Set, Socket, Nyloc, 5/16-18 x 3/8"	2	2
159		650253	Collar, Set	2	2
160			Screw, Set, Socket, Nyloc, 1/4-20 x 1/4"	2	4
161		150091	Bearing	1	1
162		650254	Spacer, Long	2	2
163			Screw, Cap, Hex Head, 5/16-18 x 2-3/4	2	2
164			Washer, Flat, 3/8 I.D. x 7/8 O.D.	2	6
165			Washer, Lock, 5/16" Med.	2	11
166		150092	Bearing, Pillow Block	1	1
167		600088	Shaft, Short	1	1
168			Screw, Cap, Hex Head, 5/16-18 x 7/8	2	2
169			Washer, Lock, 5/16" Med.	2	11
170		500140	Belt, "V", 57"	1	1
171		500141	Belt, "V", 42"	1	1
172		500142	Belt, "V", 58"	1	1
173		170109	Guard	1	1
174		250060	Gasket, Felt	1	1
175			Screw, Machine, Round Head, 10-24 x 1/4	5	5
176			Screw, Machine, Round Head, 8-32 x 1/4	2	2
177		700076	Screw, Cover	2	2
178		990318	Decal	1	1
179		990319	Decal, Spindle Speed Selector	1	1
180		990320	Decal, Oil	1	1
181		990321	Decal, Carriage Speed Control	1	1
182	100385		Large Handwheel Assembly		1
183		450358	Pin, Spring, Handwheel	1	2
184	100396		Vertical Tube Assembly		1
185		650256	Retaining Ring	2	2
186		150093	Bushing	1	1
187	100399		Adjusting Bushing Assembly		1
188		150094	Bearing, Rod End	1	1
189			Nut, Jam, Hex, Finished, Plated, 5/8-18	1	1
190	100398		Cam Shaft Assembly		1
191		370119	Cam	1	1
192		700243	Screw, Set, Socket	1	1
193		450355	Pin, Spring, Stop	1	1
194		450043	Pin, Spring	1	3
195	100397		Locking Screw Shaft Assembly		1
196		330081	Ball	1	2
197	100395		Horizontal Tube Assembly		1
198		130386	Plate, Mounting, Bottom	1	1
199			Screw, Cap, Hex Head, 1/2-13 x 1" Long	2	2
200			Screw, Cap, Hex Head, 1/2-13 x 5/8" Long	1	

PARTS LIST FOR MODEL 1960-G, LATHE, BRAKE DRUM

Item No.	Ass'y. No.	Part No.	Description	Quan. per Ass'y.	Quan. per Mach.
201		500136	Pulley, Variable Speed	1	1
202		150089	Bearing, Needle	2	2
203		250057	Seal, Pulley	2	2
204		650261	Collar, Pulley	1	1
205			Screw, Set, Socket, Nyloc, 5/16-18 x 5/16"	1	2
206		450043	Pin, Spring	1	3
207			Lever, Speed		
208			Lever, Direction		
209			Plug, Vent		
210			Plug, Drain		
			ACCESSORIES		
		R-315	Spring		1
		R-320	Spacer, 3" Long x 2" Bore		4
		R-325	Spacer, 2" Long x 2" Bore		1
		R-330	Spacer, 1" long x 2" Bore		1
		R-331	Reducer, 2" Dia. x 1" Bore x 1-1/8" Long		2
		R-335	Tapered Cone, 7-17/32" x 8-11/64" x 2" Bore		1
		R-340	Tapered Cone, 6-63/64" x 7-5/8" x 2" Bore		1
		R-345	Tapered Cone, 6-31/64" x 7-1/8" x 2" Bore		1
		R-350	Tapered Cone, 5-59/64" x 6-9/16" x 2" Bore		1
		R-355	Tapered Cone, 5-25/64" x 6-1/32" x 2" Bore		2
		R-360	Tapered Cone, 4-55/64" x 5-1/2" x 2" Bore		2
		R-365	Tapered Cone, 4-5/16" x 4-31/32" x 2" Bore		2
		R-370	Tapered Cone, 3-25/32" x 4-27/64" x 2" Bore		2
		R-375	Tapered Cone, 3-17/64" x 3-57/64" x 2" Bore		1
		R-380	Tapered Cone, 2-23/32" x 3-11/32" x 2" Bore		1
		R-385	Tapered Cone, 2-15/64" x 3-3/8" x 2" Bore		1
		R-390	Arbor, 2" Diameter		1
		R-395	Arbor Nut, 2"		1
		R-405	Draw Bar		1
		R-501	Reducer, 1" to 11/16" Diameter x 1-3/8" Long		1
		R-510	Tapered Cone, 3/4" x 1-1/2" x 11/16" Bore		1
		R-520	Tapered Cone, 1-1/16" x 1-3/4" x 1" Bore		1
		R-530	Spacer, 1" Long x 11/16" Bore		2
		R-540	Spacer, 1" Long x 1" Bore		2
		R-550	Radii Cone, 1-1/2" x 1-45/64" x 1" Bore		1
		R-560	Radii Cone, 1-19/32" x 1-49/64" x 1" Bore		1
		R-570	Radii Cone, 1-61/64" x 2-13/64" x 1" Bore		1
		R-580	Radii Cone, 1-13/32" x 2-3/8" x 1" Bore		1
		R-590	Radii Cone, 2-19/64" x 2-1/2" x 1" Bore		1
		R-600	Radii Cone, 2-27/64" x 2-39/64" x 1" Bore		1
		R-610	Radii Cone, 2-35/64" x 2-25/32" x 1" Bore		1
		R-620	Radii Cone, 1-27/32" x 2-55/64" x 1" Bore		1
		R-630	Radii Cone, 2-1/16" x 3-19/64" x 1" Bore		1
		R-640	Arbor, 1" x 11/16"		1
		R-645	Arbor Nut, 11/16"		1
		R-655	Face Plate, 1" Bore		2
		R-665	Centering Cone, 2-5/16" x 3-1/4" x 1" Bore		1
		R-670	Centering Cone, 3-1/16" x 4" x 1" Bore		1
		R-675	Spring		1
		R-680	Centering Cone, 1-15/32" x 2-3/8" x 1" Bore		1
		R-740	Arbor, 1"		1
		R-745	Arbor Nut, 1"		1
		SB-10	Broke Drum Silencing Band, Passenger		1
		SB-20	Brake Drum Silencing Band, Truck		1
			SPARE PARTS' & TOOLS		
		83	Allen Wrench, No. 8 Screw		1
		119	Allen Wrench, 1/4" Screw		1
		500140	"V" Belt, 3/8" x 57"		1
		500141	"V" Belt, 1/2" x 42"		1
		500142	"V" Belt, 1/2" x 58"		1
		CB-35	5/8" Solid Carbide-Tipped Tool Bit		2
		CB-36	5/8" High Speed Steel Tool Bit		2
		CB-75	Hone		1
		R-148	3/8" Open End Wrench		1
		R-149	3/4" Box Wrench		1
		R-152	7/16" Open End Wrench		1
		R-153	1/4" Open End Wrench		1
		R-154	Open End Wrench, 1-1/4" x 1-5/8"		1
		R-410	Open End Wrench, 3"		1

APPENDIX

BASIC ISSUE ITEMS LIST

Section I. INTRODUCTION

1. General

This appendix is a list of basic issue items. It is composed of those items which make up the major end item of equipment and the operator's tools and equipment that are issued with the equipment and are required for stockage.

2. Requisition Notes

a. Repair Part Identified by Federal Stock Number.

(1) If the exact item requisitioned is not furnished, or if other action is necessary, the exact nature of the action taken by the commodity command will be indicated by standard symbols on prescribed forms.

(2) When requisitioning an item, the requesting agency will order the listed item. However, the commodity command will take necessary action to issue the exhaust stock item until stock is exhausted, whether it be an individual item, kit, set, or assembly.

b. Part to Which FSN Has Not Been Assigned.

When requisitioning a C source (local procurement) item identified only by a manufacturer's part number, it is mandatory that the following information be furnished the supply officer:

(1) Manufacturer's code number (5-digit number preceding the colon in the descriptive column).

(2) Manufacturer's part number (the number, and sometimes letters, following the colon, ((1) above). Dashes, commas, or other marks must be included exactly as listed.(3) Nomenclature exactly as listed herein, including dimensions if necessary (4) Name of manufacturer of end item (from cover of TM or manufacturer's name plate).

(5) Federal stock number of end item (from TM).

(6) Manufacturer's model number (from TM or name/data plate, preferably name/data plate).

(7) Manufacturer's serial number (from name/data plate).

(8) Any other information such as type, frame number, and electrical characteristics, if applicable.

(9) If DD Form 1348 is used, fill in all blocks except 4, 5, 6, and remarks field, in accordance with AR 725-50. Complete form as follows:

(a) In blocks 4, 5, and 6, list manufacturer's code and manufacturer's part number (as listed in description column).

(b) In remarks field, list noun name (repair part), end item application (FSN of end item), manufacturer, model number (end item), serial number (end item), and any other pertinent information such as frame number, type, etc.

3. Explanation of Columns

a. Source, Maintenance, and Recoverability Code (*col 1).*

(1) Materiel numerical codes (*col 1a*). Not required.

(2) Source (col lb). This column indicates the selection status and source for the listed item. Source code used in this list is-

Code	*Explanation*
C.....	Obtain through local procurement. If not obtainable from local procurement, requisition through normal supply channels with a supporting statement of nonavailability from local procurement.

(3) *Maintenance level* (*col 1c*). This column indicates the category of maintenance authorized to install the listed item. Maintenance level code used in this list is-

Code	*Explanation*
O	Organizational maintenance.

(4) *Recoverability* (*col 1d).* This column indicates whether unserviceable items should be returned for recovery or salvage. When no code is indicated, the item will be considered expendable. Recoverability code used in this list is-

Code	*Explanation*
R	Items which are economically repairable at direct and general support maintenance activities and are normally furnished by supply on an exchange basis.

b. Federal Stock Number (*col 2*). This column indicates the Federal stock number has been assigned by the Cataloging Division, Defense Logistics Services Center.

c. Description (col 3). This column indicates the Federal item name (shown in capital letters) and any additional description required for supply operations. The manufacturer's code and part number are also included for reference.

Code	*Explanation*
57127	Star Machine & Tool Company.

d. Unit of Issue (col 4). This column indicates the quantity to be requisitioned.

e. Quantity Authorized (col 5). This column indicates the quantity of the listed item authorized for stockage to constitute the prescribed load.

4. Abbreviations and Symbols

a. Abbreviations.

Abbreviations	*Explanation*
c	cycle(s)
cire	circumference
deg	degree(s)
fl	flat
hdl	handle(d) (s)
hd	head
HSS	high speed steel
min	minimum
mtd	mounted
nom	nominal
o/a	overall
sgle-ph	single phase
v	volt(s)
w	wide, width
w/	with

b. Symbols.

Symbols	*Explanation*
x	by(2 x 4)

5. Suggestions and Recommendations

The direct reporting by the individual user, of errors, omissions, and recommendations for improving this manual, is authorized and encouraged. DA Form 2028 (Recommended Changes to DA Publications) will be used for reporting these improvements. This form will be completed in triplicate using pencil, pen, or typewriter. The original and one copy will be forwarded direct to Commanding General, Headquarters, U.S. Army Weapons Command, ATTN: AMSWE-SMM-P, Rock Island Arsenal, Rock Island, Ill. 61202. One information copy will be provided to the individual's immediate supervisor (e.g., officer, noncommissioned officer, supervisor, etc,).

(1) Source, maint. and recov. code				(2) Federal stock No.	(3) Description	(4) Unit of issue	(5) Qty auth	(6) Illustration	
(a) Mat. code	(b) Sour.	(c) Maint	(d) Recov.					(a) Fig. No.	(b) Item No.
					MAJOR COMBINATION The following item is to be requisitioned for initial use only.				
			R	4910-516-6192	LATHE,BRAKE DRUM: floor mtd, 60 in. rated swing, 25 in. max drum dia, 9 in. min drum dia, w/grinding provisions, 1 hp drive motor, 1/2 hp grinding motor, 115-v, 60 c, sgle-ph (57127:1960).	ea			
					COMPONENTS OF MAJOR COMBINATION				
					None authorized.				
					SPARE PARTS				
					None authorized.				
					REPAIR PARTS				
	C	O			BELT, V: rubberized fabric, 57 outside circ, 3/8 top w (57127:500140).	ea	1	1	16
	C	O			BELT, V: rubberized fabric, 42 outside circ, 1/2 top w (57127:500141).	ea	1	1	23
	C	O			BELT, V: rubberized fabric, 58 outside circ, 1/2 top w (57127:500142).	ea	1	1	27
					TOOLS AND EQUIPMENT FOR:				
					LATHE, BRAKE DRUM: (57127:1960)				
	C	O			ARBOR, DRUM: 1 in. dia, 1 in. thd (57127:R-760).	ea	1	1	15
	C	O			ARBOR, DRUM: 1 in. dia, 11/16 thd (57127:R-640).	ea	1	1	34
	C	O			ARBOR, DRUM: 2 in. dia, 2 in. thd (57127:R-390).	ea	1	1	1
	C	O			BAND, BRAKE DRUM SILENCING: passenger car (57127:SB-10).	ea	1	1	9
	C	O			BAND, BRAKE DRUM SILENCING: truck (57127:SB-20).	ea	1	1	8
	C	O			BAR, DRAW: arbor holding (57127:R-405)	ea	1	1	2
	C	O			CONE, CENTERING: 1 15/32 x 2 3/8 x 1 bore (57127:R-680).	ea	1	1	58
	C	O			CONE, CENTERING: 2 15/16 x 3 1/4 x 1 bore (57127:R-665).	ea	1	1	53
	C	O			CONE, CENTERING: 3 1/16 x 4 x 1 bore (57127:R-470).	ea	1	1	55

(1) Source, maint. and recov. code				(2) Federal stock No.	(3) Description	(4) Unit of issue	(5) Qty auth.	(6) Illustration	
(a) Mat. code	(b) Sour.	(c) Maint	(d) Recov.					(a) Fig. No.	(b) Item No.
					TOOLS AND EQUIPMENT FOR-Cont. LATHE, BRAKE DRUM: (57127:1960)-Cont.				
	C	O			CONE, RADII: 1 13/32 x 2 3/8 x 1 bore (57127:R-580).	ea	1	1	37
	C	O			CONE, RADII: 1 1/2 x 1 45/64 x 1 bore (57127:R-550).	ea	1	1	38
	C	O			CONE, RADII: 1 19/32 x 1 49/64 x 1 bore (57127:R-560).	ea	1	1	39
	C	O			CONE, RADII: 1 27/32 x 2 55/64 x 1 bore (52727:R-620).	ea	1	1	41
	C	O			CONE, RADII: 1 61/64 x 2 13/64 x 1 bore (57127:R-570).	ea	1	1	42
	C	O			CONE, RADII: 2 1/16 x 3 19/64 x 1 bore (57127:R-630).	ea	1	1	43
	C	O			CONE, RADII: 2 19/64 x 2 1/2 x 1 bore (57127:R-590).	ea	1	1	40
	C	O			CONE, RADII: 2 27/64 x 2 39/64 x 1 bore (57127:R-600).	ea	1	1	44
	C	O			CONE, RADII: 2 35/64 x 2 25/64 x 1 bore (57127:R-610).	ea	1	1	52
	C	O			CONE, TAPERED: 3/4 x 1 1/2 x 1 bore (57127: R-510).	ea	1	1	28
	C	O			CONE, TAPERED: 1 1/16 x 1 3/4 x 1 bore (57127: R-520).	ea	1	1	29
	C	O			CONE, TAPERED: 2 15/64; x 3 3/8 x 2 bore(57127: R-385).	ea	1	1	13
	C 12	O			CONE, TAPERED: 2 23/64 x 3 11/32 x 2 bore(57127: R-380).	ea	1	1	1
	C	O			CONE, TAPERED: 3 17/64x 3 52/64x 2 bore (57127: R-375).	ea	1	1	6
	C 25	O			CONE, TAPERED: 3 25/32 x 4 27/64x 2 bore (57127: R-370).	ea	2	1	1
	C	O			CONE, TAPERED: 4 5/16 x 4 31/32x 2 bore (57127: R-365).	ea	2	1	18
	C	O			CONE, TAPERED: 4 55/64 x 5½ x 2 bore (57127: R-360).	ea	2	1	11
	C	O			CONE, TAPERED: 5 25/64 x 6 9/16 x 2 bore (57127: R-355).	ea	2	1	5
	C	O			CONE, TAPERED: 5 59/64 x 6 9/16 x 2 bore(57127: R-350).	ea	1	1	24
	C	O			CONE, TAPERED: 6 31/64 x 7 1/8x 2 bore (57127: R-345).	ea	1	1	17
	C	O			CONE, TAPERED: 6 63/64 x 7 5/8x 2 bore (57127: R-340).	ea	1	1	10
	C	O			CONE, TAPERED: 7 17/64 x 8 11/61 x 2 bore (57-127: R-335).	ea	1	1	4
	C	O			HONE, SHARPENING: tool bit (57127:CB-75)_	ea	1	1	32
	C	O		5120-224-2504	KEY, SOCKET HEAD SCREW: hex type, L-hdl, 5/64 across fl, 1 7/8 nom lg arm lg.	ea	1	1	50
	C	O		5120-240-5292	KEY, SOCKET HEAD SCREW: hex type, L-hdl, 1/8 across fl, 2 1/4 nom lg arm lg.	ea	1	1	49

(1) Source, maint. and recov. code				(2) Federal stock No.	(3) Description	(4) Unit of issue	(5) Qty auth	(6) Illustration	
(a) Mat. code	(b) Sour.	(c) Maint	(d) Recov.					(a) Fig. No.	(b) Item No.
					TOOLS AND EQUIPMENT FOR-Cont. LATHE, BRAKE DRUM: (57127:1960)-Cont.				
	C	O			NUT, ARBOR: 11/16 thd (57127:R-645)	ea	1	1	35
	C	O			NUT, ARBOR: 1 in. thd (57127:R-745)	ea	1	1	22
	C	O			NUT, ARBOR: 2 in. thd (57127:R-395)	ea	1	1	3
	C	O			PLATE, FACE: 1 in. bore (57127:R-655)	ea	2	1	19
	C	O			REDUCER: 1 in. od to 11/16 id, 1 3/8 lg (57127:R-501).	ea	1	1	57
	C	O			REDUCER: 2 in. od to 1 in. id, 1 1/8 lg (57127:R-331).	ea	2	1	26
	C	O			SPACER, ARBOR: 11/16 bore, 1 in. lg (57127:R-530).	ea	2	1	33
	C	O			SPACER, ARBOR: 1 in, bore, 1 in. lg (57127:R-540).	ea	2	1	36
	C	O			SPACER, ARBOR: 2 in. bore, 1 in. lg (57127:R-330).	ea	1	1	21
	C	O			SPACER, ARBOR: 2 in. bore, 2 in. lg (57127:R-325).	ea	1	1	20
	C	O			SPACER, ARBOR: 2 in. bore, 3 in. lg (57127:R-320).	ea	4	1	14
	C	O			SPRING, COIL: 4 coil, 2 3/8 od (57127:R-315)	ea	1	1	7
	C	O			SPRING, COIL: 4 coil, 2 3/8 id tapered to 1½ id (57127:R-675).	ea	1	1	56
	C	O			TOOL BIT: 5/8 sq, carbide tipped (57127:CB-35).	ea	2	1	30
	C	O			TOOL BIT: 5/8 sq HSS (57127:CB-36)	ea	2	1	31
	C	O		5120-293-1266	WRENCH, BOX: stght, sgle-hd type, hex shape wrench opng, 3/4 opng, 4 3/8 nom o/a lg (57127:R-149).	ea	1	1	45
	C	O		5120-293-2124	WRENCH, OPEN END, FIXED: dble-hd type, 15 deg angle of hd, engineer style, 1 1/4 and 1 5/8 wrench opngs, 14 nom o/a lg, 9/16 thk of hd (57127:R-154).	ea	1	1	51
	C	O		5120-293-1840	WRENCH, OPEN END, FIXED: sgle-hd type, 15 deg angle of hd, 1/4 wrench opng, 3½ nom o/a lg, 3/16 thk hd (57127:R-153).	ea	1	1	48
	C	O		5120-277-1261	WRENCH, OPEN END, FIXED: sgle-hd type, 15 deg angle of hd, 3/8 wrench opng, 3 7/8 nom o/a lg, 17/64 thk hd (57127:R-148).	ea	1	1	47
	C	O			WRENCH, OPEN END, FIXED: sgle-hd type, 15 aeg angle of hd, 7/16 wrench opng (57127:R-152).	ea	1	1	46
	C	O			WRENCH, OPEN END, FIXED: sgle-hd type, 15 deg angle of hd, 3 wrench opng, 17 nom o/a lg (57127:R-410).	ea	1	1	54

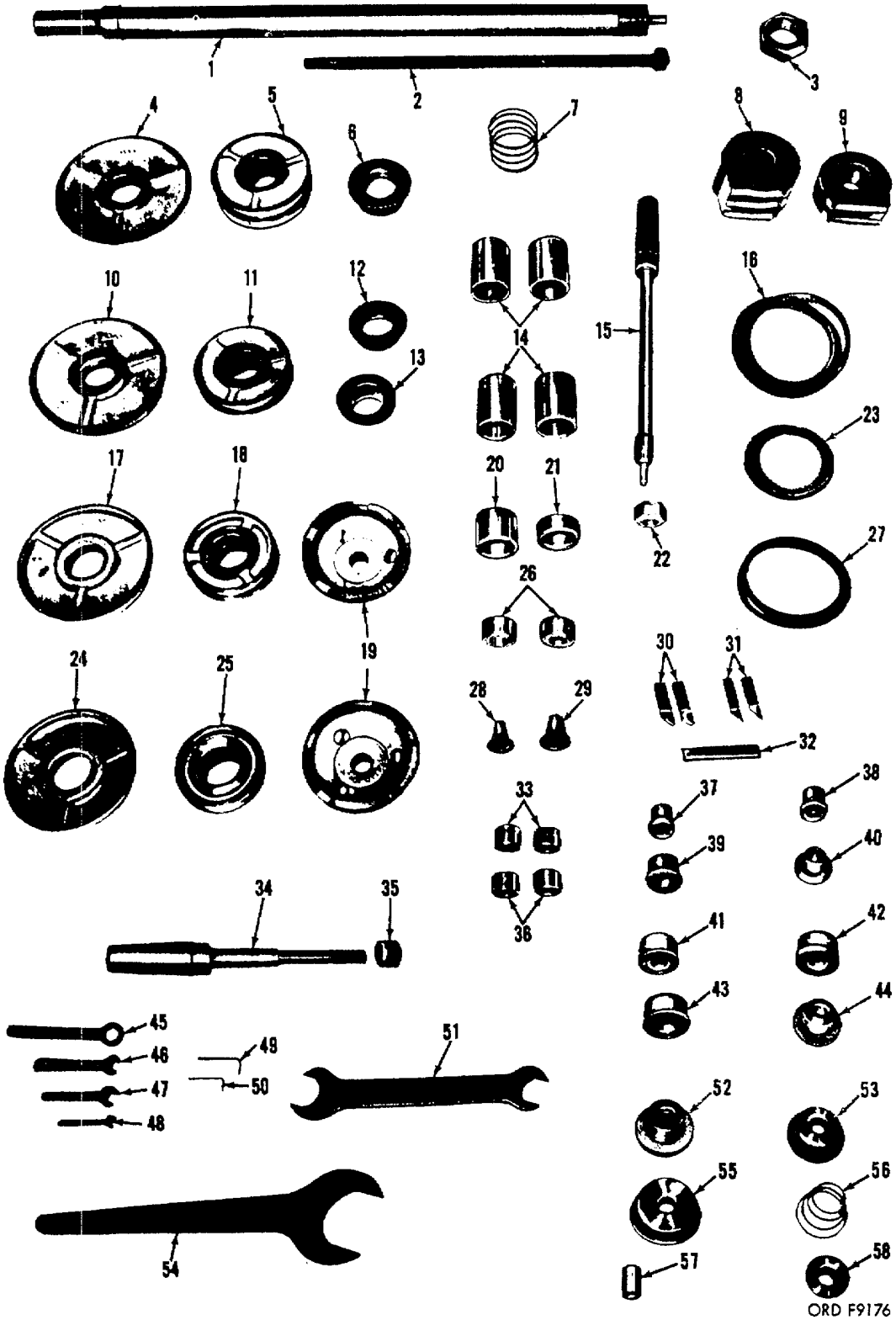

TAGO 8756-A

Figure 1. Tools and equipment.

☆ U.S. GOVERNMENT PRINTING OFFICE : 1985 0 - 461-421 (20652)

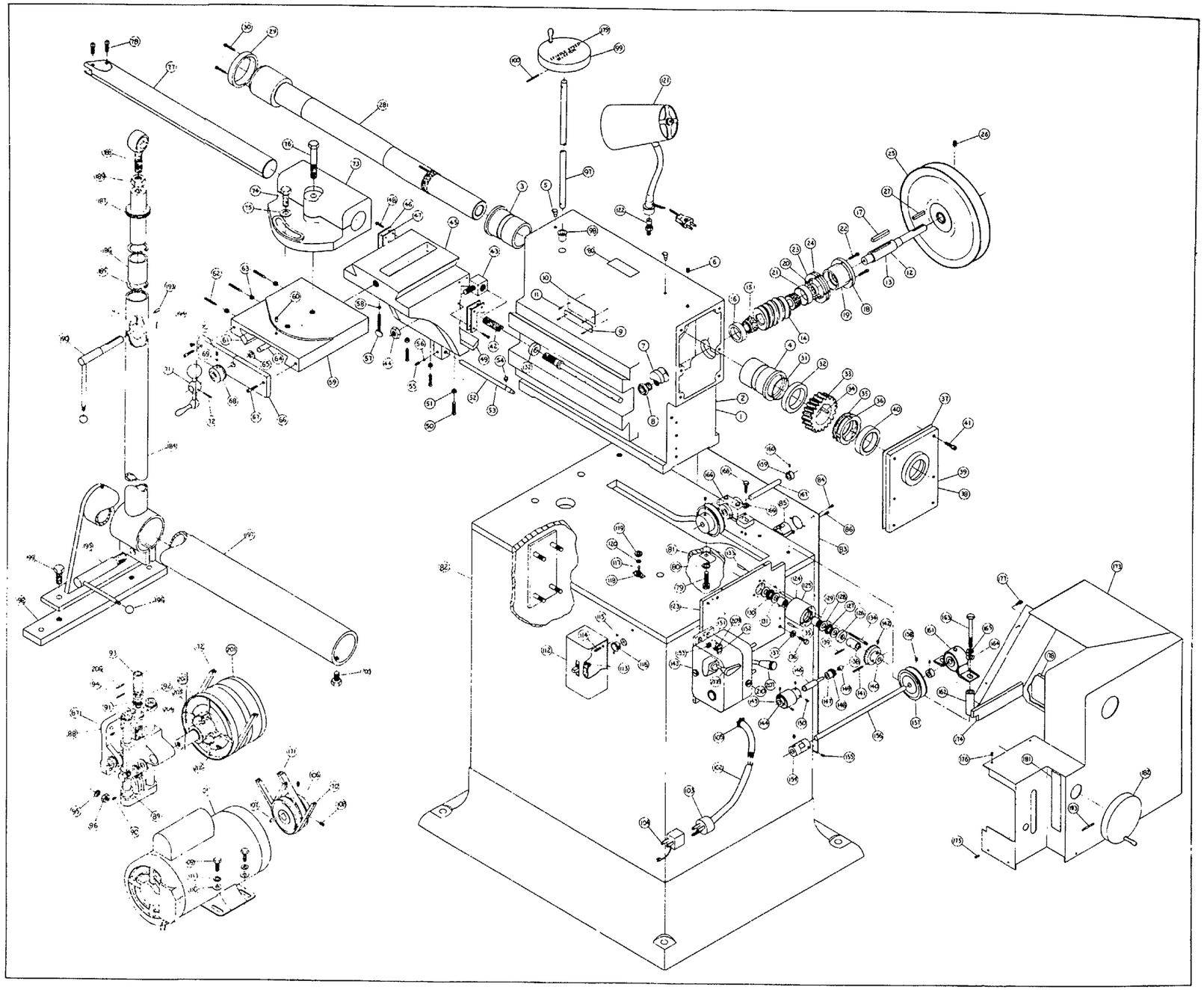

FIG. 2-1. PARTS BREAKDOWN MODEL 1960

RECOMMENDED CHANGES TO EQUIPMENT TECHNICAL PUBLICATIONS

THEN. . JOT DOWN THE DOPE ABOUT IT ON THIS FORM, CAREFULLY TEAR IT OUT, FOLD IT AND DROP IT IN THE MAIL!

SOMETHING WRONG WITH THIS PUBLICATION?

FROM: (PRINT YOUR UNIT'S COMPLETE ADDRESS)

DATE SENT

PUBLICATION NUMBER	PUBLICATION DATE	PUBLICATION TITLE

BE EXACT. . .PIN-POINT WHERE IT IS

PAGE NO.	PARA-GRAPH	FIGURE NO	TABLE NO.

IN THIS SPACE TELL WHAT IS WRONG AND WHAT SHOULD BE DONE ABOUT IT:

PRINTED NAME, GRADE OR TITLE, AND TELEPHONE NUMBER

SIGN HERE:

DA FORM 1 JUL 79 2028-2

PREVIOUS EDITIONS ARE OBSOLETE.

P.S.—IF YOUR OUTFIT WANTS TO KNOW ABOUT YOUR RECOMMENDATION MAKE A CARBON COPY OF THIS AND GIVE IT TO YOUR HEADQUARTERS.

TEAR ALONG PERFORATED LINE

PIN: 006042-000

This fine document...

Was brought to you by me:

Liberated Manuals -- free army and government manuals

Why do I do it? I am tired of sleazy CD-ROM sellers, who take publicly available information, slap “watermarks” and other junk on it, and sell it. Those masters of search engine manipulation make sure that their sites that sell free information, come up first in search engines. They did not create it... They did not even scan it... Why should they get your money? Why are not letting you give those free manuals to your friends?

I am setting this document FREE. This document was made by the US Government and is NOT protected by Copyright. Feel free to share, republish, sell and so on.

I am not asking you for donations, fees or handouts. If you can, please provide a link to liberatedmanuals.com, so that free manuals come up first in search engines:

<A HREF=http://www.liberatedmanuals.com/>Free Military and Government Manuals</A>

- Sincerely
  Igor Chudov
  http://igor.chudov.com/
- Chicago Machinery Movers