TM 9-4120-399-14

TECHNICAL MANUAL

OPERATOR'S, UNIT, DIRECT SUPPORT, AND GENERAL SUPPORT MAINTENANCE MANUAL

AIR CONDITIONER, VERTICAL, COMPACT
36,000 Btu/hr COOLING
28,600 Btu/hr HEATING
208 VOLT, 3 PHASE, 400 HERTZ
MODEL 3863
NSN 4120-01-244-6385

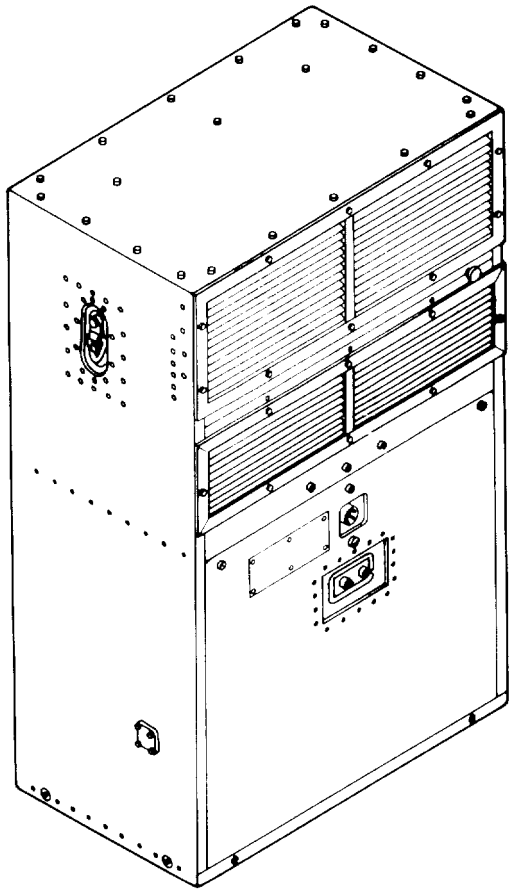

Page

HEADQUARTERS, DEPARTMENT OF THE ARMY

18 JANUARY 1991

WARNING
HIGH VOLTAGE

is used in operation of this equipment.

DEATH ON CONTACT

may result if personnel fail to observe safety precautions.

Never work on electrical equipment unless there is another person nearby who is familiar with operation and hazards of equipment and who is competent in ministering first aid. When technician is aided by operators, he must warn them about dangerous areas.

Whenever possible, input power supply to equipment must be shut off before beginning work. Take particular care to ground every capacitor likely to hold a dangerous charge. When working inside, after power has been turned off, always ground every part before touching it. Be careful not to contact high voltage connections of 208 volts ac input when installing or operating this equipment.

Whenever nature of operation permits, keep one hand away from equipment to reduce hazard to current flowing through vital organs of body. Do Not operate equipment without all guards, louvers, and covers in place and tightly secured.

WARNING

Do not be misled by term “low voltage.” Potentials as low as 50 volts may cause death under adverse conditions.

WARNING

Voltages used can kill. Always disconnect power cord to air conditioner before performing any internal maintenance. Shutting unit off at its control panel does not disconnect unit power.

WARNING

Do not attempt any disassembly of solenoid valve other than coil removal with a refrigerant charge in the system. Refrigerant will be sprayed out dangerously if screws that attach tub and plunger assembly to valve body are loosened.

WARNING

Panels, covers, screens, and guards installed on unit are there for a purpose. Do not operate unit with them off or open unless instructions tell you to. When necessary, do so with care.

WARNING

Discharge refrigerant in an open area and not around an open flame.

WARNING
DANGEROUS CHEMICAL

(R22)
is used in this equipment.

DEATH

or severe injury may result if personnel fail to observe safety precautions. Use great care to avoid contact with liquid refrigerant gas being discharged under pressure. Sudden and irreversible tissue damage can result from freezing. Wear thermal protective gloves and a face protector or goggles in any situation where skin-eye-contact is possible. Prevent contact of refrigerant gas with flame or hot surfaces. Heat causes refrigerant to break down and form carbonyl chloride (phosgene), a highly poisonous and corrosive gas.

WARNING

Avoid inhaling fumes and bums from acid formed by burnout of oil and refrigerant. Acid in sludge can cause burns. Wear a gas mask if area is not thoroughly ventilated. Wear protective goggles or glasses to protect eyes. Wear rubber gloves to protect hands.

WARNING

All refrigerant-22 must be discharged from system and entire system must be purged with dry nitrogen before beginning any debrazing operation.

WARNING

Polyurethane foam used as insulation in air conditioner will break down to form toxic gases if exposed to flame of a torch at brazing temperature.

WARNING

Serious injury could occur if heavy equipment is moved/lifted without sufficient personnel to do the job. Use proper physical lifting procedures or use a suitable lifting device or dolly. Wear safety shoes, gloves and other suitable protective clothing.

WARNING

While handling coils, wear gloves to avoid cuts and reduce fin damage on coil.

WARNING

Heating element is extremely hot. Severe burns can be caused by touching with bare skin.

WARNING

Clean parts in a well ventilated area.

Avoid inhalation of solvent fumes and prolonged exposure of skin to cleaning solvent. Wash exposed skin thoroughly.

Dry cleaning solvent (Fed. Spec. P-D-680) used to clean parts is potentially dangerous to personnel and property.

Do not use near open flame or excessive heat. Flash point of solvent is 100° F to 138° F (38° C to 59° C).

Wear eye protection when blowing solvent from parts. Air pressure should not exceed 30 psig (2.1 kg/cm^2).

WARNING

Acetone and methyl-ethyl ketone (MEK) are flammable, and their vapors can be explosive. Repeated or prolonged skin contact or inhalation of vapors can be toxic. Use a well-ventilated area, and keep away from sparks or flame. Use goggles, gloves, and apron when appropriate.

WARNING

Death or serious injury could occur if compressed air is directed against the skin. Do not use compressed air for cleaning or drying unless the pressure is/has been reduced to 30 psi (2.11 kg/cm^2) or less. When working with compressed air always use chip guards and wear eye protection and other protective equipment.

WARNING

DO NOT LIFT without holding unit in upright position. Otherwise, unit will fall over and could cause injury to personnel.

LIST OF EFFECTIVE PAGES

INSERT LATEST CHANGED PAGES, DESTROY SUPERSEDED PAGES

NOTE: The portion of the text affected by the changes is indicated by a vertical line in the outer margins of the page. Changes to illustrations are indicated by miniature pointing hands. Changes to wiring diagrams are indicated by shaded areas.

Dates of issue for original and changed pages are:

Total number of pages in this manual is 266, consisting of the following:

Original ..... 0 ..... 18 Jan 1991
Change..... 1 ..... 16 January 1992
Change..... 2 ..... 1 July 1992
Change ..... 3 ..... 15 January 1993
Change ..... 4 ..... 31 October 1994
Change ..... 5 ..... 15 May 2000

Page No.	* Change No.	Page No.	* Change No.	Page No.	* Change No
Cover	0				
a thru d(blank)	4				
A/(B blank)	5				
i	5				
ii thru iii/(iv blank)	0				
1-0 thru 1-4	0				
1-5	1				
1-6 thru 1-8	0				
1-9/(1-10 blank)	3				
2-1 thru 2-11	0				
2-12	1				
2-13	0				
2-14	4				
2-15	0				
2-16	3				
2-17 thru 4-6	0				
4-7 thru 4-9	5				
4-10 thru 4-104	0				
4-105	1				
4-106 thru 4-112	0				
4-113	1				
4-114 thru 5-6	0				
5-7	2				
5-8 thru 5-16	0				
5-17	2				
5-18	1				
5-19 thru 5-22	0				
5-23	1				
5-24	0				
5-25	5				
5-26 thru B-8	0				
B-9	2				
B-10 thru I-5/I-6 blank	0				
FO-1/FO-2 blank	4				

* Zero in this column indicates an original page.

Change

No. 5

HEADQUARTERS,
DEPARTMENTS OF THE ARMY
Washington, DC, 15 May 2000

Operator's, Unit, And Direct Support Maintenance Manual

AIR CONDITIONER, VERTICAL, COMPACT 36,000 BTU/HR COOLING, 28,600 BTU/HR HEATING, 208 VOLT, 3 PHASE, 400 HERTZ Model 3863, NSN 4120-01-244-6385

DISTRIBUTION STATEMENT A: Approved for public release; distribution is unlimited.

TM 9-4120-399-14, dated 18 Jan 91, is changed as follows:

1. Remove old pages and insert new pages as indicated below. New or changed material is indicated by a vertical bar in the margin of the page. Added or revised illustrations are indicated by a vertical bar adjacent to the illustration caption.

Remove Pages	*Insert Pages*
None	A/B(blank)
i and ii	i and ii
4-7 and 4-8	4-7 and 4-8
4-9 and 4-10	4-9 and 4-10
5-25 and 5-26	5-25 and 5-26

2. File this change sheet in front of the publication for reference purposes.

By Order of the Secretary of the Army:

ERIC K. SHINSEKI
General, United States Army
Chief of Staff

Official:

JOEL B. HUDSON
Administrative Assistant to the
Secretary of the Army
0024901

DISTRIBUTION:

To be distributed in accordance with the initial distribution number (IDN) 255687 requirements for TM 9-4120-399-14.

CHANGE

NO. 4

HEADQUARTERS
DEPARTMENT OF THE ARMY
WASHINGTON, D.C., 31 October 1994

Operator's Unit, Direct Support, and General Support
Maintenance Manual

AIR CONDITIONER, VERTICAL, COMPACT
36,000 BTU/HR COOLING
28,600 BTU/HR HEATING
208 VOLT, 3 PHASE, 400 HERTZ
MODEL 3863
NSN 4120-01-244-6385

DISTRIBUTION STATEMENT A: Approved for public release; distribution is unlimited

TM 5-4120-399-14, 18 January 1991, is changed as follows:

1. Remove and insert pages as indicated below. New or changed text material is indicated by a vertical bar in the margin. An illustration change is indicated by a miniature pointing hand.

Remove pages	Insert pages
i and ii	i and ii
2-13 and 2-14	2-13 and 2-14
	FO-1/(FO-2 blank)

2. Retain this sheet in front of manual for reference purposes.

By Order of the Secretary of the Army:

GORDON R. SULLIVAN
General, United States Army
Chief of Staff

Official:

MILTON H. HAMILTON
Administrative Assistant to the
Secretary of the Army
07513

DISTRIBUTION:
To be distributed in accordance with DA Form 12-25-E, block no. 5687, requirements for TM 9-4120-399-14.

CHANGE

NO. 3

HEADQUARTERS
DEPARTMENT OF THE ARMY
WASHINGTON, D.C., 15 January 1993

OPERATOR'S, UNIT, DIRECT SUPPORT AND GENERAL SUPPORT
MAINTENANCE MANUAL

AIR CONDITIONER, VERTICAL, COMPACT,
36,000 BTU/HR COOLING
28,600 BTU/HR HEATING
208 VOLT, 3 PHASE, 400 HERTZ
MODEL 3863
NSN 4120-01-244-6385

DISTRIBUTION STATEMENT A: Approved for public release; distribution is unlimited.

TM 9-4120-399-14, 18 January 1991, is changed as follows:

1. Remove and insert pages as indicated below. New or changed text material is indicated by a vertical bar in the margin. An illustration change is indicated by a miniature pointing hand.

Remove pages	Insert pages
1-9/(1-10 blank)	1-9/(1-10 blank)
2-15 and 2-16	2-15 and 2-16

2. Retain this sheet in front of manual for reference purposes.

By Order of the Secretary of the Army:

GORDON R. SULLIVAN
General, United States Army
Chief of Staff

Official:

MILTON H. HAMILTON
Administrative Assistant to the
Secretary of the Army
03306

DISTRIBUTION:
To be distributed in accordance with DA Form 12-25-E, block no. 5687, requirements for TM 9-4120-399-14.

CHANGE

NO. 2

HEADQUARTERS
DEPARTMENT OF THE ARMY
WASHINGTON D.C., 1 JULY 1992

Operator's, Unit, Direct Support and General Support
Maintenance Manual

AIR CONDITIONER, VERTICAL, COMPACT, 36,000 BTU/HR COOLING 28,600 BTU/HR HEATING 208 VOLT, 3 PHASE, 400 HERTZ MODEL 3863 NSN 4120-01-244-6385

Approved for public release; Distribution is unlimited

TM 5-4120-399-14, 18 January 1991 is changed as follows:

1. Remove and insert pages as indicated below. New or changed text material is indicated by a vertical bar in the margin. An illustration change is indicated by a miniature pointing hand.

Remove pages	Insert pages
5–7 and 5-8	5-7 and 5-8
5-17 and 5–18	5-17 and 5-18
B–9 and B-1 O	B-9 and B–1 O

2. Retain this sheet in front of manual for reference purposes.

By Order of the Secretary of the Army:

GORDON R. SULLIVAN
General, United States Army
Chief of Staff

Official:

MILTON H. HAMILTON
Administrative Assistant to the
Secretary of the Army
01522

DISTRIBUTION:

To be distributed in accordance with DA Form 12–25E, (qty rqr block no. 5687).

CHANGE

NO. 1

HEADQUARTERS
DEPARTMENT OF THE ARMY
WASHINGTON, DC, 16 January 1992

Operator's, Unit, Direct Support and General Support
Maintenance Manual

AIR CONDITIONER, VERTICAL, COMPACT, 36,000 BTU/HR COOLING 28,600 BTU/HR HEATING 208 VOLT, 3 PHASE, 400 HERTZ MODEL 3863 NSN 4120-01-244-6385

Approved for public release; distribution is unlimited

TM 9--4120-399-14, 18 January 1991, is changed as follows:

1. Remove and insert pages as indicated below. New or changed text material is indicated by a vertical bar in the margin. An illustration change is indicated by a miniature pointing hand.

Remove pages	Insert pages
1–5 and 1–6	1–5 and 1–6
2–11 and 2–12	2–11 and 2–12
4–105 and 4–106	4–105 and 4–106
4–113 and 4–114	4–113 and 4–114
5–17 and 5–18	5–17 and 5–18
5–23 and 5–24	5–23 and 5–24

2. Retain this sheet in front of manual for reference purposes.

By Order of the Secretary of the Army:

GORDON R. SULLIVAN
General, United States Army
Chief of Staff

Official:

MILTON H. HAMILTON
Administrative Assistant to the
Secretary of the Army

00688

DISTRIBUTION:
To be distributed in accordance with DA Form 12–25E, (qty rqr block no. 5687)

TECHNICAL MANUAL
TM 9-4120-399-14

HEADQUARTERS
DEPARTMENT OF THE ARMY
Washington, D.C. 18 January 1991

Operator's, Unit, Direct Support, and General Support Maintenance Manual

For

AIR CONDITIONER, VERTICAL, COMPACT
36,000 Btu/hr COOLING
28,600 Btu/hr HEATING
208 VOLT, 3 PHASE, 400 HERIZ
MODEL 3863
NSN 4120-01-244-6385

REPORTING ERRORS AND RECOMMENDING IMPROVEMENTS

You can help improve this manual. If you find any mistakes or if you know of a way to improve the procedures, please let us know. Mail your letter or DA Form 2028 (Recommended Changes to Publications and Blank Forms), or DA Form 2028-2 located in the back of this manual directly to: Commander, US Army Aviation and Troop Command, ATTN: AMSAT-I-MP, 4300 Goodfellow Blvd., St. Louis, MO 63120-1798. A reply will be furnished directly to you.

TABLE OF CONTENTS

TABLE OF CONTENTS – Continued

TABLE OF CONTENTS

LIST OF ILLUSTRATIONS

LIST OF ILLUSTRATIONS - Continued

LIST OF ILLUSTRATIONS

LIST OF TABLES

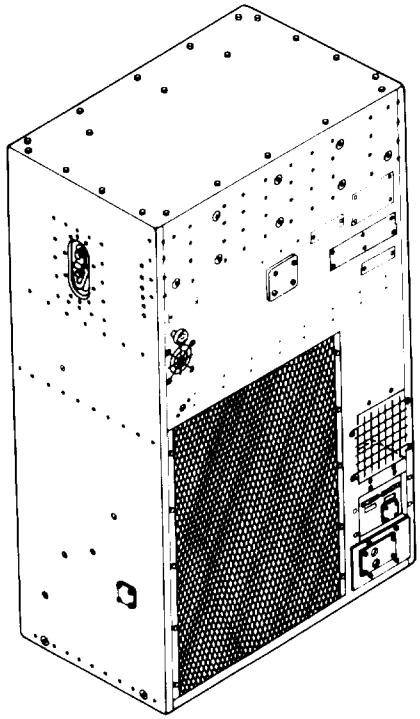

REAR THREE QUARTER VIEW
(With Fabric Cover Removed)

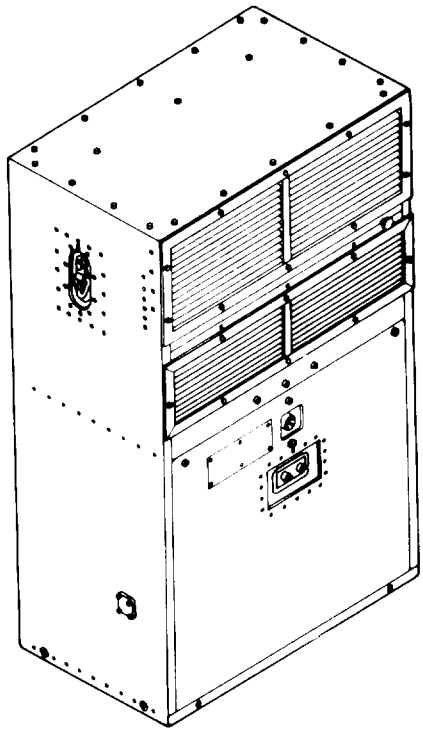

FRONT THREE QUARTER VIEW

Figure 1-1. Air Conditioner.

CHAPTER 1

INTRODUCTION

Section I. GENERAL INFORMATION

1-1. SCOPE.

a. Type of Manual. Operator's, Unit, Direct Support, and General Support Maintenance Manual.

b. Model Number and Equipment Name. Applied Model 3863, Vertical, Compact, 36,000 BTU/HR Cooling, 28,600 BTU/HR Heating, 208 VAC, 3 Phase, 400 Hertz, Air Conditioner.

c. Purpose of Equipment. Cools, heats, and ventilates enclosed spaces. The unit covered by this manual is designed for cooling of equipment or personnel within the conditioned area.

1-2. MAINTENANCE FORMS AND RECORDS. Department of the Army forms and procedures used for equipment maintenance will be those prescribed by DA PAM 738-750. The Army Maintenance Management System (TAMMS).

1-3. WARRANTY INFORMATION. Refer to TB 9-4120-399-24.

1-4. REPORTING EQUIPMENT IMPROVEMENT RECOMMENDATIONS (EIR'S). If your Air Conditioner needs improvement, let us know. Send us an EIR. You, the user, are the only one who can tell us what you don't like about your equipment. Let us know why you don't like the design or performance. Put it on a SF 368 (Quality Deficiency Report). Mail it to us at Commander, Headquarters, U.S. Army Troop Support Command, Attention: AMSTR-MOF, 4300 Goodfellow Blvd., St. Louis, Missouri 63120-1738. We will send you a reply.

1-5. DESTRUCTION OF ARMY MATERIEL TO PREVENT ENEMY USE. Refer to TM 750-244-3, Procedures for Destruction of Equipment to Prevent Enemy Use.

1-6. PREPARATION FOR STORAGE OR SHIPMENT. Contact unit maintenance for air conditioning unit preparation for storage or shipment. Refer to para. 4-48.

Section II. EQUIPMENT DESCRIPTION AND DATA

1-7. PURPOSE, CAPABILITIES, AND FEATURES.

a. Purpose. The Air Conditioner is designed to ventilate, cool or heat, and to filter air in rooms or enclosures.

b. Capabilities and features.

(1) Provides a maximum of 36,000 BTU/HR of cooling or 28,600 BTU/HR of heating.
(2) Has two stages of heat.

1-7. PURPOSE, CAPABILITIES, AND FEATURES. - Continued

(3) Provides source of filtered outside (fresh) ventilation air.

(4) Is self contained in a single cabinet that is ideally suited for van, shelter, or room installations.

(5) Operates in environmental conditions from tropic to arctic.

(6) Is fully portable.

(7) Has connection point for a NBC (nuclear, biological, chemical) filter.

(8) Has alternate power input connection locations to provide a variety of installations.

(9) Designed for low-noise level operation.

c. Special features.

The control module may be removed from the unit and remote mounted.

NOTE

When control module is remote mounted, a block off panel must be used on the air conditioner. The block off panel must be ordered separately. Interconnected cables must also be fabricated. See para. 4-7 for additional information.

1-8. LOCATION AND DESCRIPTION OF MAJOR COMPONENTS. (Refer to Figure 1-2.)

(1) Fresh Air Filter and Damper -- Provides filtered outside air.

(2) Condenser Air Outlet Guard -- Protects personnel from injury and fans from damage.

(3) Pressure Switches -- Contains HIGH and LOW PRESSURE CUTOUT switches (S5 and S6).

(4) Refrigerant Sight Glass (liquid sight indicator) -- Allows visual inspection and indicates condition of liquid refrigerant when the unit is operating in the cool mode.

(5) Condenser Coil -- Serves as a heat exchanger by transferring heat from the refrigerant passing through the tubing to the air passing over the tubing and fins.

(6) Condenser Coil Guard -- Protects coil from damage.

(7) Evaporator Fan and Motor -- Draw air into the evaporator section and exhausts it through the evaporator (cooling) coil heater elements and into the room or enclosure.

(8) Evaporator Coil -- Serves as a heat exchanger by transferring heat from the air passing over the tubing and fins to the refrigerant passing through the tubing.

(9) Fabric Cover -- Shown in stowed (operational) position. When rolled down and snapped it protects the rear (exposed) surface of the unit.

(10) Heater Elements -- Consists of two banks of three elements each. Only one bank operates in the LO HEAT mode. Both banks operate in the HI HEAT mode, however, the temperature control thermostat controls only one bank.

(11) Conditioned Air Discharge Guard -- Adjustable louvers allow directional control of conditioned air.

(12) Intake (Return Air) Guard -- Adjustable louvers allow control of outside (fresh) and return (from room or enclosure) air.

(13) Input Power Receptacle (located in junction box) -- For connection of external power source cable.

NOTE

The air conditioner is designed so that the input power receptacle may be used in the front panel location shown, or it may be moved to one of four other alternative locations. See installation instructions (para. 4-11).

(14) Control Module -- Contains a five position mode selector switch and a temperature control thermostat.

NOTE

The control module is shown in its location when the air conditioner is installed as a self-contained unit. The control module is designed so that it may be removed from the cabinet and installed in a remote location. See installation instructions.

(15) Condensate Water Drip Pan and Drain -- The drip pan is located directly below the evaporator coil and mist eliminator and is built into the casing. Its purpose is to collect condensate that drips off the evaporator coil and mist eliminator during cooling operations. Condensate water then flows through tubing to the drain located inside the lower left hand front comer of the cabinet.

(16) Compressor -- Pumps refrigerant through the system during cooling operations. Exiting from the junction box are the control circuit breakers (CB1 and CB3), compressor circuit breaker (CB1) and input power receptacle.

(17) Junction Box -- Contains and protects electrical system control devices.

(18) Condenser Air Fan and Motor -- Draws air through the condenser coil and discharges the heated air back to the outside during cooling operations.

(19) Conditioned Air Filter -- Provides filtered return air.

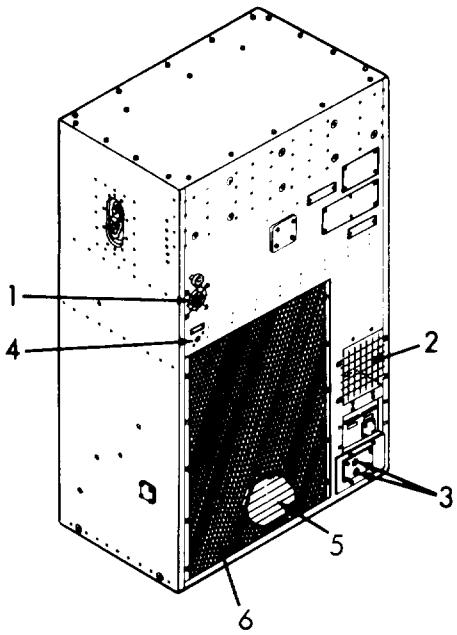

Rear 3/4 View

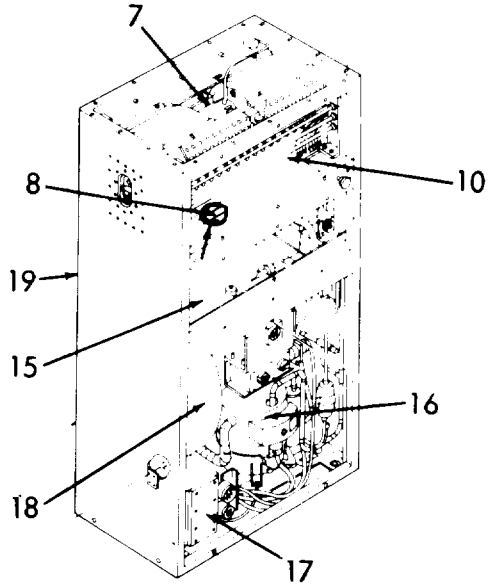

Front 3/4 View With
Panels and Louvers Removed

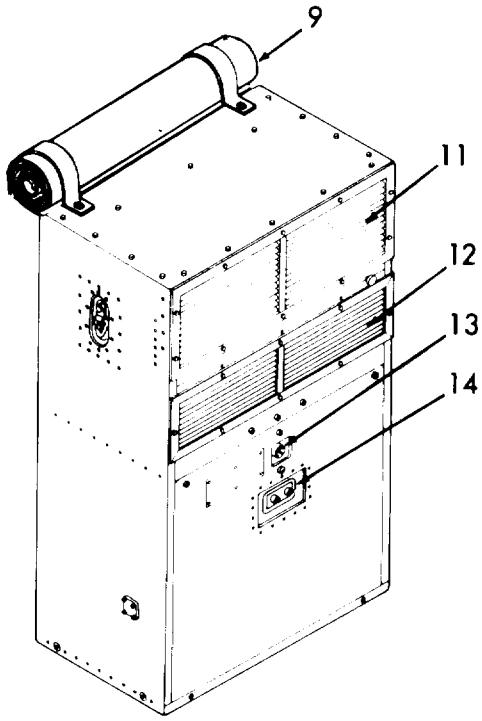

Front 3/4 View

Figure 1-2. Location of Major Components.

1–9. PERFORMANCE DATA. Refer to Table 1–1 for the performance data for this air conditioner.

Table 1–1. Performance Data

OPERATING TEMPERATURES	
LOW	–50°F(–45°C)
HIGH	+125 °F(+52°C)
PERFORMANCE	
COOLING CAPACITY	36,000 Btu/hr
HEATING CAPACITY	28,600 Btu/hr
POWER REQUIRED	
VOLTAGE	208 VAC
PHASE	3
HERTZ	400
AMPERAGE	48
DIMENSIONS	
WIDTH	30.75 in. (78.1 cm)
DEPTH	20.50 in. (54.6 cm)
HEIGHT	55.36 in. (140.6 cm)
WEIGHT	390 lb (204.1 kg)
REFRIGERANT	
TYPE	R–22
CHARGE	8 lb (3.6 kg)
COMPRESSOR OIL CAPACITY	
INITIAL	55 oz
RECHARGE	52 oz
AIRFLOW	
AIR FILTER	Permanent–Re–usable

Section III. TECHNICAL PRINCIPLES OF OPERATION

1-10. REFRIGERATION CYCLE. (Refer to Figure 1-3.)

a. Cooling cycle. -- Unit operation with mode selector switch set on **COOL** and the temperature control thermostat set to **DECREASE** (cooler).

(1) Compressor (B1) starts.

(2) To prevent compressor overload and damage during start-up, solenoid valve (K4) is open at start of cooling cycle to equalize pressure on both sides of the compressor.

(3) The compressor (B1) takes cold, low pressure refrigerant gas and compresses it to a high temperature, high pressure gas. This gas flows through the metal tubing to the condenser coil (C) and receiver (R1).

(4) The condenser fans draw outside ambient air over and through the condenser coil (C). The high temperature, high pressure gas from the compressor (B1) is cooled by the flow of air and is changed into a high pressure liquid.

(5) The refrigerant desiccant dehydrator (filter/dryer) (D) removes any moisture (water vapor) or dirt that may be carried by the liquid refrigerant.

(6) The liquid indicator (sight glass) (G) indicates the presence of moisture and quantity of refrigerant in the system.

(7) The solenoid valve (K3) is controlled by the temperature control thermostat on the control module. This valve will shut off the flow of refrigerant to the evaporator section when the temperature in the conditioned area reaches the set point.

(8) The expansion valve (V5) controls the amount and pressure of liquid refrigerant to the evaporator coil (E). The expansion valve (V5) senses the temperature and pressure of the refrigerant as it leaves the evaporator coil. By use of a sensing bulb and “external equalizer line” the valve constantly adjusts the flow of liquid refrigerant to the evaporator coil (E).

(9) As the liquid refrigerant leaves the expansion valve (V5) it passes through a distributor and enters the evaporator coil (E). As the liquid enters the coil at a reduced pressure, the reduction in pressure and the warmer air being forced across the tubes of the coil cause the refrigerant to boil and change to a gas (vapor). The evaporator fans circulate the warn-t air from the conditioned space over and through the evaporator coil. Refrigerant absorbs heat when it changes from a liquid to a gas. As the air from the conditioned spaces comes in contact with evaporator coil (E), the air is cooled.

(10) The refrigerant gas is then drawn back to the compressor (B1) and the cycle is repeated.

b. Bypass cycle. -- This unit has a bypass cycle which allows cooling operation at low cooling loads without cycling the compressor (B1) on and off. In bypass, the refrigerant is piped from the discharge (high side) to the suction (low side) of the compressor, bypassing the evaporator coil (E).

(1) When the temperature control thermostat on the control module senses that cooling conditions have reached the set point, it closes the solenoid valve (K3) to shut off refrigerant flow to the evaporator coil (E).

(2) As the compressor suction pressure starts to drop, the pressure regulating valve (V2) opens to allow flow of hot gas from the compressor.

(3) The liquid quench expansion valve (V4) senses the temperature of the gas at the suction side of the compressor. To prevent excessively hot gas from reaching the compressor, the liquid quench expansion valve (V4) opens to allow liquid refrigerant to mix with the hot gas.

(4) The linear actuating cylinders (L1 and L2) automatically control the condenser air discharge louver assemblies to maintain an adequate discharge pressure.

(5) The service valves (V1) are provided for charging, and general servicing of the high and low pressure sides of the refrigerant system.

(6) The low pressure switch (S6), the high pressure switch (S5), and the pressure relief valve (V3) are provided to protect the unit from damage due to pressure extremes.

1-11. HEATING.

a. HI HEAT mode. When the mode selector switch is set for **HI HEAT** the six heating elements, located in front of the evaporator coil, are energized. These elements are protected from overheating by a thermal cutout switch. Three of the elements are thermostatically controlled by the temperature control thermostat, and remaining three are on all of the time.

b. LO HEAT mode. When the mode selector switch is set for **LO HEAT,** only the three thermostatically controlled heating elements are used.

FIND NO.	PART NUMBER	QTY	DESCRIPTION
1	13218E7546	1	ACCUMULATOR
2	13214E4309	1	SWITCH, PRESSURE (LOW)
3	13217E6796-2	1	COMPRESSOR
4	13229E6191-2	2	VALVE, ACCESS
5	13229E6472	1	COIL, CONDENSER
6	13211E8404	1	SWITCH PRESSURE (HIGH)
7	13229E6163-1	1	PLUG, FUSIBLE
8	13214E3798-4	1	RECEIVER, LIQUID REFRIGERANT
9	13214E4209	1	DEHYDRATOR, DESICCANT, REFRIGERANT
10	13214E3971	1	VALVE, SOLENOID
11	13216E6155-3	1	INDICATOR, SIGHT, LIQUID
12	13229E6200	1	VALVE, EXPANSION
13	SUPPLIED WITH NO 14	1	RESTRICTOR, FLUID FLOW
14	13229E6473	1	COIL, EVAPORATOR
15	13229E6493	1	CYLINDER, ACTUATING, LINEAR
16	13211E3800	1	VALVE, PRESSURE REGULATING
17	13229E6201	1	VALVE, QUENCH

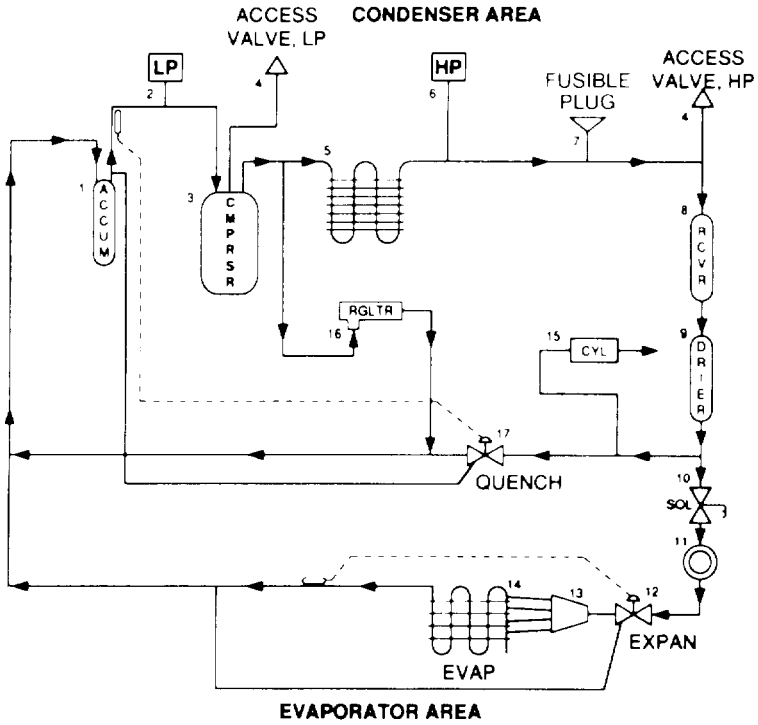

Figure 1-3. Refrigeration Flow Schematic.

COMPONENT REFERENCE LIST		
SYMBOL	PART NO	DISCRIPTION
B1	13226E9445	COMPRESSER MOTOR
B2	13229E6474	COMPRESSER MOTOR
B3	13229E6475	EVAPORATOR
CB1	13229E6535	CIRCUIT BREAKER
CB2	13225E8129	CIRCUIT BREAKER
CB3	13225E8130	CIRCUIT BREAKER
CR	13211E3791	RECTIFIER, SEMOCONDUCTOR DEVICE
FL1-4	13226E9445	INTERFERENCE FILTER ASSEMBLY
HR1-6	13214E3981	HEATING ELEMENT
HR7	PART OF B1	HEATER, CRANKCASE
K1,K7	13229E6483	RELAY, 50 AMP

COMPONENT REFERENCE LIST		
SYMBOL	PART NO	DISCRIPTION
TD1	13225E8024	RELAY, TIME DELAY
L1	13214E3971	VALVE , SOLENIOD, LIQUID LINE
S	13216E6201-1	SWITCH, ROTARY
S1	13211E8301-1	THERMOSTAT, TEMPERATURE CONTROLLER
S2	PART OF B3	THERMOSTAT, EVAPORATOR MOTOR
S3	13225E8404	THERMOSTAT, HEATER COMPARTMENT
S4	PART OF B1	THERMOSTAT, COMPRESSURE MOTOR
S5	13211E8404	SWITCH, HIGH PRESSURE CUTOUT
S6	13214E4309	SWITCH, LOW PRESSURE CUTOUT
S8	PART OF B1	THERMOSTAT, CRANKCASE
S9	PART OF B2	THERMOSTAT, CONDENSER MOTOR
T	13214E3818	TRANSFORMER

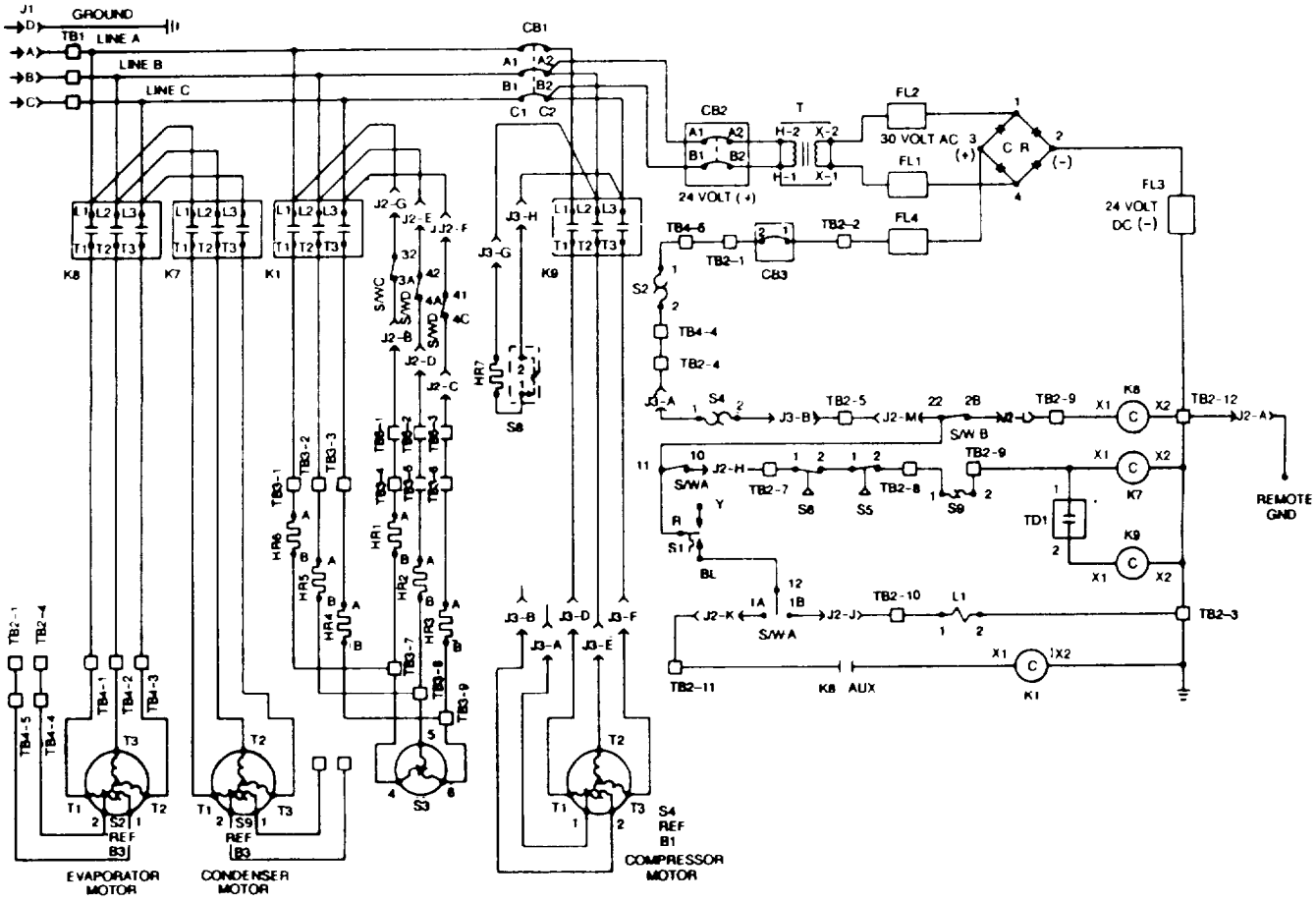

Figure 1-4. Electrical Schematic.

CHAPTER 2

OPERATING INSTRUCTIONS

Section I. DESCRIPTION AND USE OF OPERATOR'S CONTROLS AND INDICATORS

2-1. GENERAL. The Model 3863 Air Conditioner is designed for a variety of installations and for operation under a wide range of climatic conditions. It is also designed for continuous or intermittent operation as a self-contained unit or may be connected to or used with external filtering equipment for operation under nuclear, biological, chemical (NBC) environmental conditions. Operators must be aware of any peculiarities or operational limitations for their specific installation. See the appropriate shelter or system manual for instructions peculiar to your specific installation.

2-2. OPERATOR'S CONTROLS. See Figures 2-1 and 2-2 for a general description of the controls that an operator will normally be concerned with. For specific operating instructions, see Sections III and IV of this chapter.

2-3. INDICATORS. The refrigerant sight glass (Refer to Figure 2-2) is the only visual indicator used on the Air Conditioner. The sight glass is a port or window through which the refrigerant condition can be seen. Liquid refrigerant actually flows though the sight glass chamber only during cooling cycles when the air conditioner is in operation in the **COOL** mode. The unit must be operated approximately 15 minutes at maximum cooling prior to checking condition of refrigerant at sight glass. The sight glass is equipped with a center indicator that is moisture sensitive. Dry refrigerant is indicated by green, it turns to chartreuse when the moisture content becomes undesirable, and to yellow when the level becomes unacceptable. Excessive moisture in the refrigerant may damage or possibly destroy the compressor. If the liquid refrigerant observed in the sight glass has an opaque, milky appearance, or frequent bubbles appear, the volume of refrigerant is low and the system should be charged. Either moisture or low charge indications should be reported to direct support maintenance.

CAUTION

Do not operate the air conditioner in the **COOL** mode if the refrigerate color has reached the yellow bank or if numerous bubbles appear in the sight glass. **COOL** mode operation may be continued with the refrigerant color in the chartreuse band or with only an occasional bubble appearing in the window, but the sight glass should be rechecked after each four hours of operation to insure that the condition has not become worse.

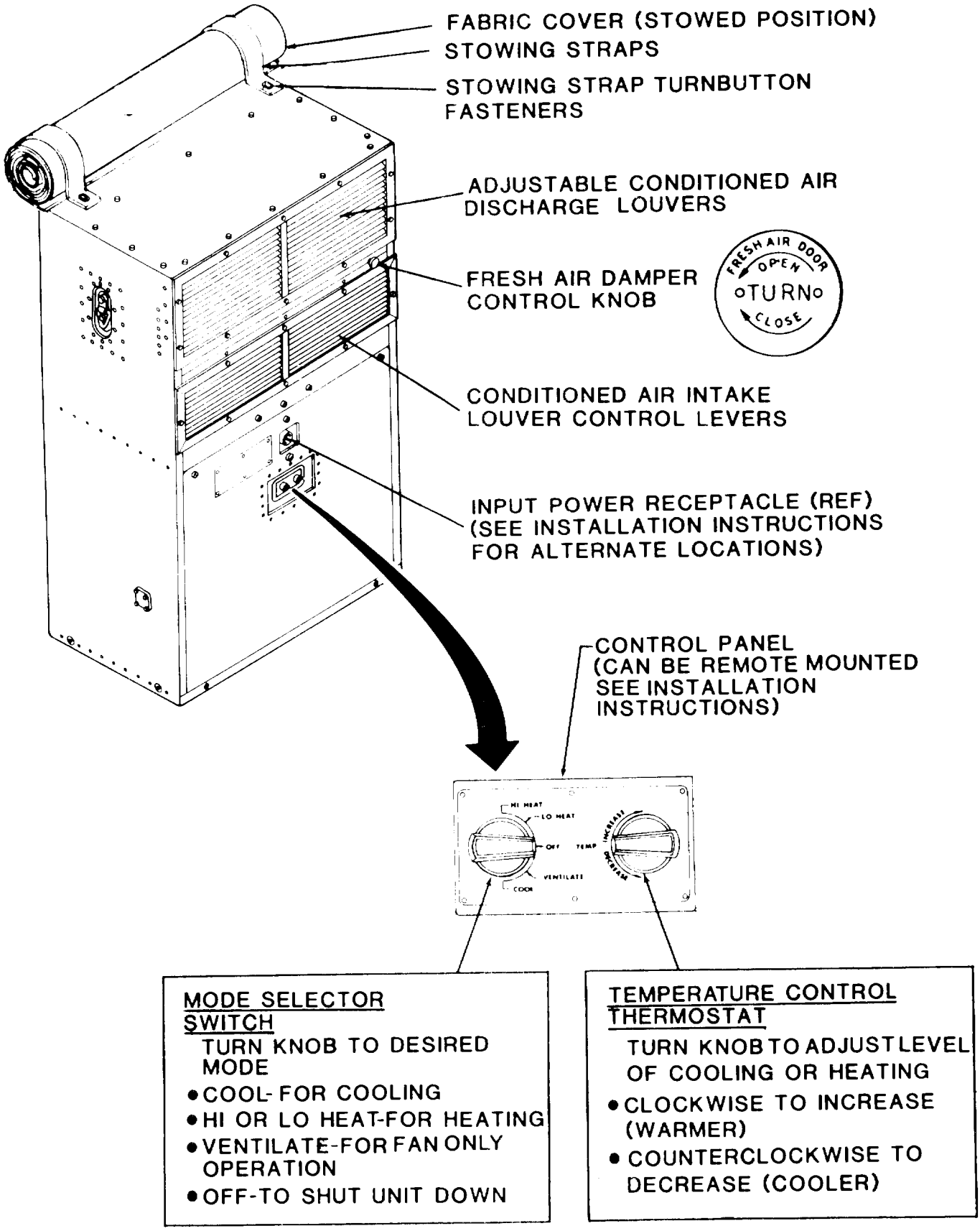

Figure 2-1. Operator's Controls and indicators, Front.

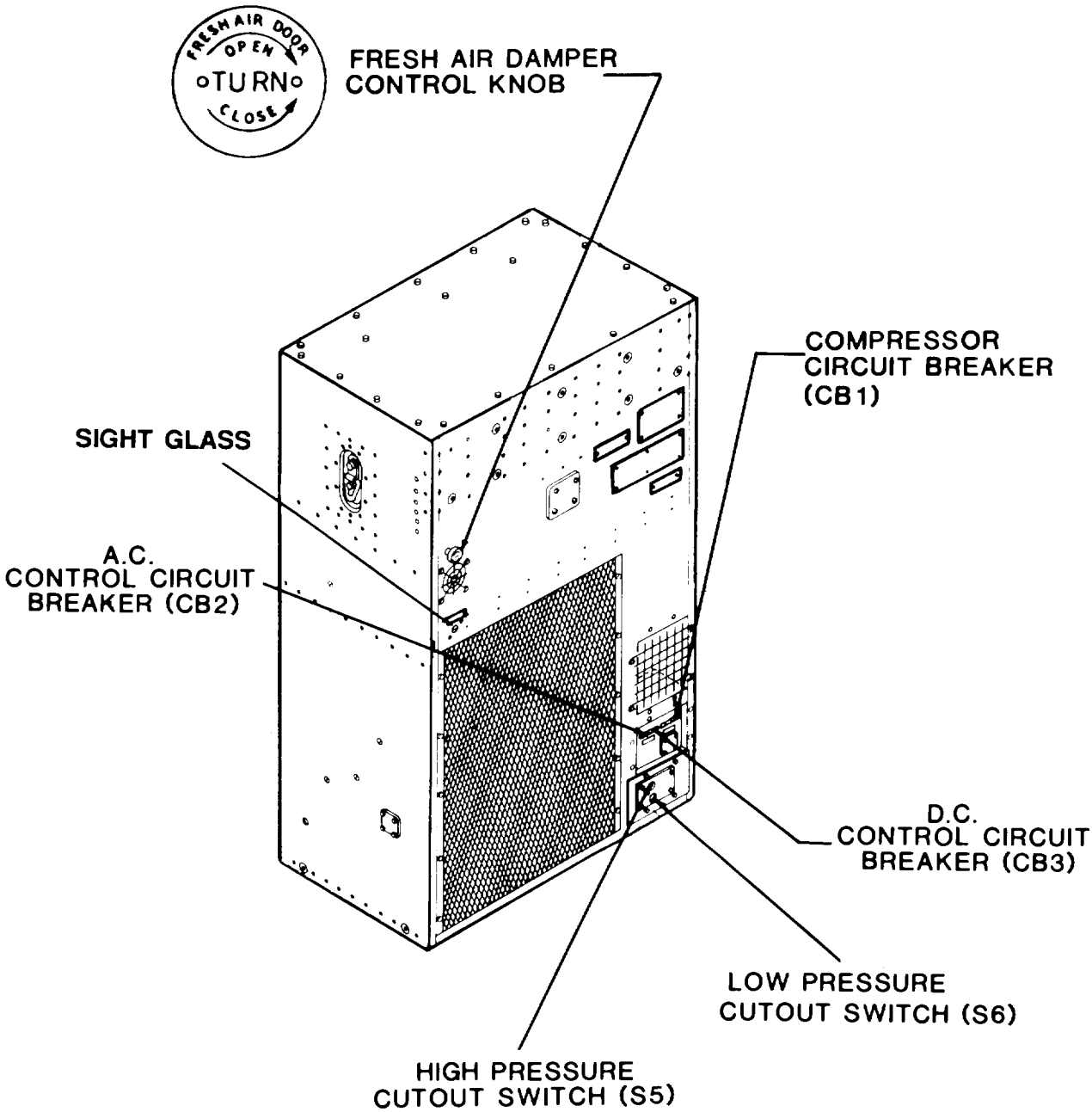

Figure 2-2. Operator's Controls and Indicators, Rear.

Section II. OPERATOR PREVENTIVE MAINTENANCE CHECKS AND SERVICES (PMCS)

2-4. GENERAL. Preventative Maintenance Checks and Services (PMCS) are essential to the efficient operation of the air conditioner and to prevent possible damage that might occur through neglect or failure to observe warning symptoms in a timely manner. Checks and services performed by operators are limited to those functions which are described in Table 2-1.

a. Before You Operate. Always keep in mind and observe the **WARNINGS** and **CAUTIONS.** Perform your before (B) PMCS.

b. While You Operate. Always keep in mind and observe the **WARNINGS** and **CAUTIONS.** Perform your during (D) PMCS.

c. After You Operate. Be sure to perform your after (A) PMCS.

d. If Your Equipment Fails to Operate. Troubleshoot with proper equipment. Report any deficiencies using DA form 2404. See DA PAM 738-750 for instructions.

e. Perform weekly as well as be for operations PMCS if:

(1) You are the assigned operator and have not operated the item since the last weekly.

(2) You are operating the item for the first time.

NOTE

If the equipment must be kept in continuous operation, check and service only those items that can be checked and serviced without disturbing operation. Make the complete checks and services when the equipment can be shut down.

Table 2-1. Operator Preventive Maintenance Checks and Services.

B = Before D = During A = After W = Weekly M = Monthly

Item No.	B	D	A	W	M	Item To Be Inspected	Procedure Check for and have repaired or adjusted as necessary.	Equipment Is Not Ready / Available If:
1	•					Fabric Cover	Check that cover is rolled up for normal operation.	
					•		Roll cover down and check condition of snaps, torn or worn edges, and mildew.	

Table 2-1. Operator Preventive Maintenance Checks and Services.

B = Before D = During A = After W = Weekly M = Monthly

Item No.	B	D	A	W	M	Item To Be Inspected	Procedure Check for and have repaired or adjusted as necessary.	Equipment Is Not Ready / Available If:
2	•					Metal Covers/ Panels	Check that all panel are in place.	Panels are missing.
					•		Inspect all covers and panels for dents or missing hardware	Covers or panels are missing. Any cover or panel hardware is missing.
3	•					Condenser Air Outlet Guard	Check that guard is in place.	Guard is missing.
					•		Check that guard is not obstructed, damaged, or loose.	Guard is obstructed. Guard is damaged or loose. Mounting hardware is missing.
					•		Check for missing hardware.	
					•		Clean debris from guard.	
4	•					Fresh Air Ventilation Guard	Check that guard is in place.	Guard is missing.
					•		Check that guard is not obstructed, damaged or loose.	Guard is obstructed. Guard is damaged or loose. Mounting hardware is missing.
					•		Check for missing hardware.	Hardware is missing.
					•		Clean debris from guard.	

Table 2-1. Operator Preventive Maintenance Checks and Services. - Continued.

B = Before D = During A = After W = Weekly M = Monthly

Item No.	B	D	A	W	M	Item To Be Inspected	Procedure Check for and have repaired or adjusted as necessary.	Equipment Is Not Ready / Available If:
5	•					Fresh Air Ventilation Filter	Check that filter is in place.	Filter is missing.
					•		Check that filter is not clogged or dirty.	Filter is clogged or dirty.
6					•	Intake (Return Air) Guard and Conditioned Air Discharge Guard	Check that louvers are not obstructed or loose. Check for missing hardware.	Louvers are obstructed or loose. Hardware is missing.
		•					Adjust louvers for proper direction air flow.	
7	•					Filter, Air Conditioning	Check that filter is in place.	Filter is missing.
					•		Inspect for clogged or dirty filter.	Filter is clogged or dirty.

Section III. OPERATION UNDER USUAL CONDITIONS

2-5. ASSEMBLY AND PREPARATION FOR USE. Services of unit maintenance should be employed for original unpacking, assembly installation, and preparation for use. See paragraph 4-2 through 4-12.

2-6. INITIAL ADJUSTMENTS AND CHECKS.

a. Inspect all covers, panels, and screens for loose mounting, obstructions, or shipping damage. Report any deficiencies to unit maintenance.

b. Perform the preventative maintenance checks and services listed in Table 2-1.

2-7. GENERAL OPERATING PROCEDURES. The following general operation procedures and explanations should be used and understood to be sure that the air conditioner unit will operate in the best possible manner. Refer to Figure 2-1. for location of operator's controls and indicators.

a. Before operation.

(1) Thermal Protection for Compresor. Check to see that power cable has been connected to a source of 208 volt, 3 phase, 4 wire, 400 hertz power, and to the input power connector on the unit. When possible, power- should be connected to the unit at least 30 minutes prior to operating in the COOL mode. This is critical when outside temperature is cold and unit is to be operated in the COOL mode. The compressor is equipped with a warm up heater and thermostat that will not allow the compressor to operate until the compressor has completely warmed up. This same heater and thermostat will continue to keep the compressor warm as long as power remains connected to the air conditioner. The unit will operate immediately (fans only) in the COOL mode before the compressor has warmed up. However, the refrigeration systems controlled by the compressor will operate only when warm up is complete (less than 30 minutes). If additional cooling is required before the. compressor has warmed up enough to start, the fresh air damper can be opened. When compressor reaches safe operating temperature it will start automatically. Fresh air damper and temperature control thermostat can then be adjusted to suit.

CAUTION

Under normal operating conditions, if the condenser cover or any other screen or guard is closed or out of place, damage to the unit may occur. Do not operate in the COOL mode with the fabric cover pulled down. Make sure that the fabric condenser cover on the back of the condenser section is rolled up and secured and that all screens and guards are in place and unobstructed before operating unit.

(2) Fabric Cover. Check that fabric cover has been unsnapped, rolled up, and secured with both straps to the two turn button fasteners.

NOTE

Under extreme cold climatic conditions, when blowing snow or freezing rain might enter and damage condenser section, the unit may be operated in the VENTILATE, LO HEAT, or HI HEAT modes with the fabric cover rolled down and snapped in place.

(3) Damper Control. It is normally better to keep the fresh air damper slightly open and the fabric cover rolled up. This will create a slight overpressure which will provide replacement oxygen and help reduce room odors.

NOTE

Damper should be closed during extreme weather conditions and during periods when fast warm up or cooling is necessary.

2-7. GENERAL OPERATING PROCEDURES. - Continued.

b. General Operation of Controls. Do not adjust controls unnecessarily. When the controls are properly set (See paragraphs 2-8. through 2-11.), the unit will automatically control the temperature. The temperature control thermostat on the control module operates like a conventional room thermostat except that the temperature scale is not marked on the control module. The thermostat has a control range of 40° F to 90° F (5° C to 32° C). The centered position of the control knob would be approximately 65° F (18° C). The full INCREASE (warmer) would be 90° F (30° C). The full DECREASE (cooler) would be 40° F (5° C). When the control module is mounted in the unit, the control temperature is sensed at the conditioned air inlet. When the control module is mounted in a remote location (away from the unit) the temperature is sensed at that location.

(1) During Cold Weather;

(1) Adjusts shades, blinds, etc. (when applicable) to admit sunlight during day. Close them at night.

(2) Adjust the conditioned air outlet louvers slightly downward.

(2) During Hot Weather;

(1) Adjust shades, blinds, etc. (when applicable) to block out sunlight during day.

(2) Adjust the conditioned air outlet louvers slightly upward.

2-8. OPERATION IN VENTILATE MODE. (No Heating or Cooling Needed).

NOTE

The fabric cover must be rolled up and secured if fresh air damper (door) is to be opened. When using fresh air for ventilation, a window, door, or vent should be opened. If the room or enclosure is tightly closed, an overpressure will build up and decrease the volume of fresh air drawn in.

a. Turn mode selector switch to VENTILATE.

b. Adjust fresh air damper to desired setting. The unit can be operated in the VENTILATE mode with the fresh air damper (door) closed, open, or partially open.

c. Adjust louvers to suit.

NOTE

To pull in maximum of fresh (outside) air, close conditioned air inlet louvers.

2-9. OPERATION IN LO HEAT MODE. In the LO HEAT mode three thermostatically controlled heaters are activated. To operate the unit in LO HEAT mode perform the following steps.

a. Turn mode selector switch to LO HEAT.

b. Turn temperature control thermostat knob as far as it will go in the INCREASE (warmer) position.

NOTE

For faster warmer up, start unit in HI HEAT mode. In moderate temperature, unit can then be switched back to LO HEAT.

c. When room or enclosure temperature reaches the desired level, slowly turn the temperature control thermostat knob toward DECREASE (cooler). Heating will stop when you reach the approximate room temperature. Further adjustment can be made by turning the temperature control thermostat knob slightly toward INCREASE (warmer) or DECREASE (cooler) until desired temperature is controlled automatically.

NOTE

Should unit fail to heat the room or enclosure to the desired temperature or fail to maintain the desired temperature with temperature control thermostat set in maximum INCREASE position, switch to HI HEAT.

d. Adjust fresh air damper (door) to desired setting. It is normally better to keep the fresh air damper slightly open. Damper should be closed during very cold weather and during fast warmup periods.

e. Adjust louvers to suit. Since warm air tends to rise, it is normally better to adjust the conditioned air outlet louvers slightly downward. The conditioned air inlet louvers should be full open.

NOTE

An overheat thermostat located near the heating elements will turn them off if the temperature in the heater compartment reaches an excessive level.

2-10. OPERATION IN HI HEAT MODE. In the HI HEAT mode, six heaters are activated. Three are thermostatically controlled. Three of these heater elements operate all of the time. To operate the unit in the HI HEAT mode, perform the following steps.

a. Turn mode selector switch to HI HEAT.

b. Turn temperature control thermostat knob as far as it will go in the INCREASE (warmer) position.

c. When room or enclosure temperature reaches the desired level, slowly turn the temperature thermostat knob toward DECREASE (cooler). Make small adjustments until desired temperature is maintained.

2-10. OPERATION IN HI HEAT MODE. Continued.

NOTE

Should unit continue to produce too much heat with temperature control thermostat knob adjusted toward the DECREASE (cooler) setting, switch to LOW HEAT.

d. Adjust fresh air damper (door) to desired setting. It is normally better to keep the fresh air damper slightly open. Damper should be closed during very cold weather and during fast warmup periods.

e. Adjust louvers to suit. Since warm air tends to rise it is normally better to adjust the conditioned air outlet louvers slightly downward. The conditioned air inlet louvers should be full open.

f. During periods of very cold weather the fabric cover should be rolled down and snapped.

NOTE

- Fresh (outside) air cannot be introduced with fabric cover down. Close damper.
- An overheat thermostat located near the heating elements will turn them off if the temperature in the heater compartment reaches an excessive level.

2-11. OPERATION IN COOL MODE. To operate the unit in the COOL mode, perform the following steps.

CAUTION

Fabric cover must be rolled up and secured with turn button fasteners. If fabric cover is not rolled up, a high temperature/high pressure condition will occur within the unit which may damage the compressor or cause the unit to stop functioning.

a. Turn mode selector switch to COOL.

b. Turn temperature control thermostat knob as far as it will go in the DECREASE (cooler) position.

c. For faster cool down at initial start-up, fresh air damper (door) should be closed. After desired cooling temperature is reached, it is normally better to keep the fresh air damper (door) slightly open. During periods of very hot outside temperatures, it should be closed to improve efficiency and conserve energy.

d. When room or enclosure temperature reaches the desired level, slowly turn the temperature control thermostat knob toward INCREASE (warmer). Cooling will stop when you reach the approximate room temperature. Further adjustment can be made by turning the temperature control thermostat knob slightly toward DECREASE (cooler) or INCREASE (warmer) until desired temperature is controlled automatically.

e. Adjust louvers to suit. Since cold air tends to flow downward, it is normally better to adjust the conditioned air outlet louvers slightly upward. The conditioned air inlet louvers should be full open.

2-12. SHUTDOWN. Turn the mode selector switch to OFF.

NOTE

DO NOT disconnect or turn off power to the air conditioner during periods of normal shutdown. If power is disconnected, the heater and thermostat inside the compressor will not allow the unit to be operated in the COOL mode until 30 minutes after power has been reconnected. Power should be disconnected only if unit is to be serviced, during emergency conditions, or during periods of extended shutdown.

2-13. PREPARATION FOR MOVEMENT. When the unit is to be moved, the services of unit maintenance shall be employed for the necessary preparations. See Chapter 4, Section VII.

2-14. INFORMATION PLATES. Refer to Figures 2-3 and 2-4 for the locations and text of the identification and information plates on the air conditioner.

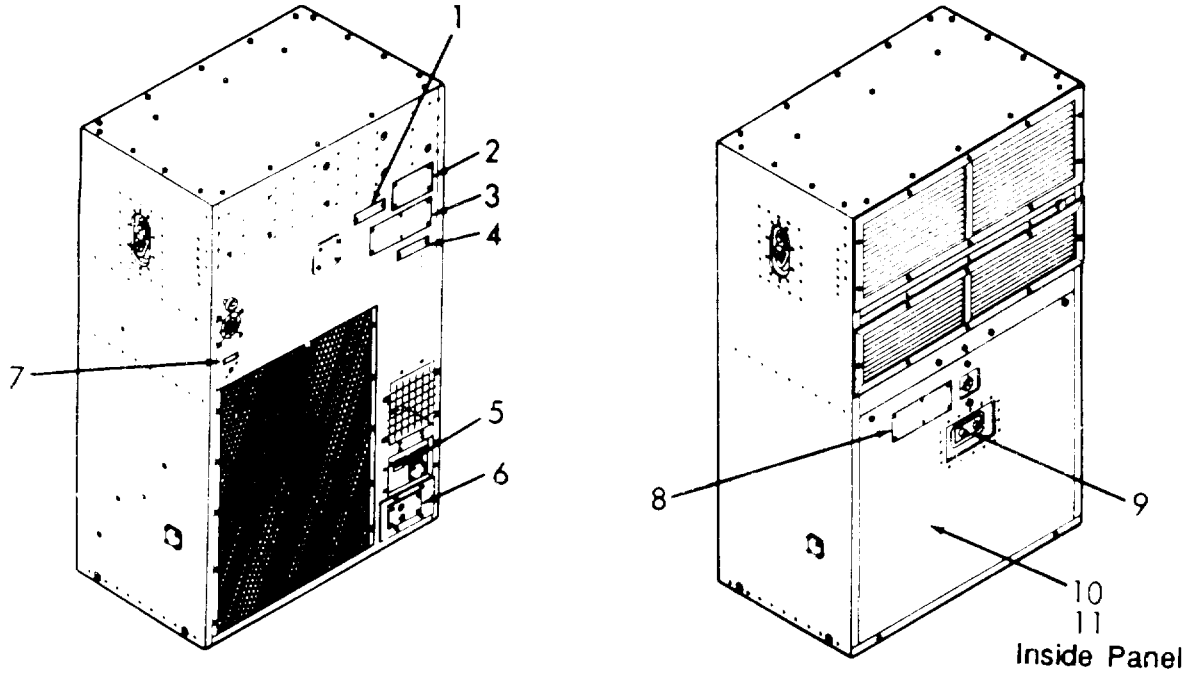

Figure 2-3. Location of Information Plates.

THIS UNIT CHARGED
WITH 8.0 LB
REFRIGERANT 22

Information Plate (1)

US Army Troop Support Command
AIR CONDITIONER, VERTICAL COMPACT
36,000 BTU/HR, 208 V, 3 PHASE
400 HERTZ

NSN 4120-01-244-6385
PART NO. 97403ASSY13229E6468
MFD BY Applied Companies
CONTRACT NO. DAAK01-86-D-C072
DATE [redacted]
SERIAL NO. [redacted] WT [redacted] LB

Information Plate (2)

GROSS WEIGHT
390 POUNDS

Information Plate (3)

Figure 2–4. Identification of Information Plates (Sheet 1 of 5).

WARRANTED ITEM

WTB: TB9-4120-399-24
DATE [redacted]
LIMIT: 24 MONTHS
CONTRACT NO: DAAK01-86-D-C072

Information Plate (4).

AC DC COMPRESSOR
CONTROL

Information Plate (5).

HIGH PRESSURE
CUT-OUT

PUSH TO RESET

LOW PRESSURE
CUT-OUT

Information Plate (6).

Figure 2-4. Identification of Information Plates. (Sheet 2 of 5).

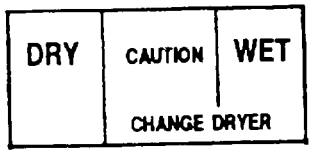

Information Plate (7).

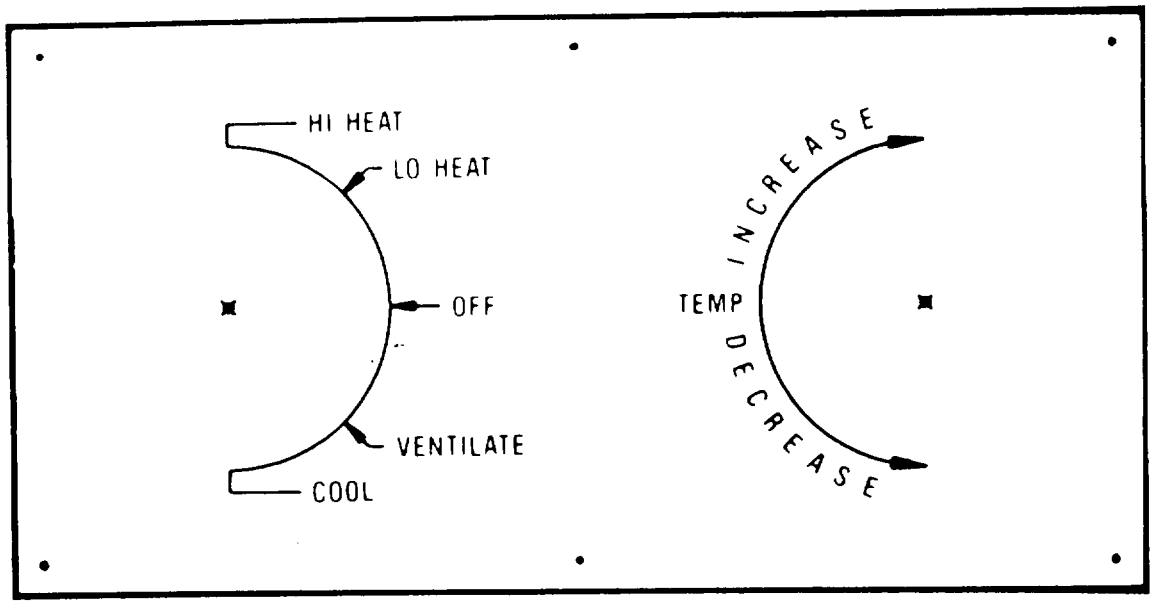

Information Plate (8).

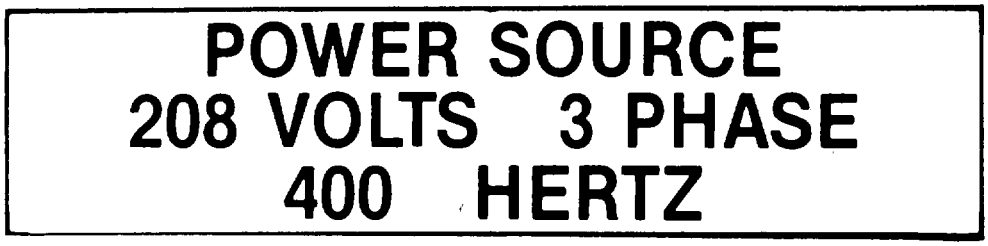

Information Plate (9).

Figure 2-4. identification of Information Plates. (Sheet 3 of 5).

*U.S. GOVERNMENT PRINTING OFFICE: 1994 - 655-028/00431

FIND NO.	PART NUMBER	QTY	DESCRIPTION
1	13218E7546	1	ACCUMULATOR
2	13214E4309	1	SWITCH, PRESSURE (LOW)
3	13217E6796-2	1	COMPRESSOR
4	13229E6041-2	2	VALVE, ACCESS
5	13229E6472	1	COIL, CONDENSER
6	13211E8404	1	SWITCH PRESSURE (HIGH)
7	13229E6163-1	1	PLUG, FUSIBLE
8	13214E3798-4	1	RECEIVER, LIQUID REFRIGERANT
9	13214E4309	1	DEHYDRATOR, DESICCANT, REFRIGERANT
10	13214E3971	1	VALVE, SOLENOID
11	13215E6155-1	1	INDICATOR, SIGHT, LIQUID
12	13229E6200	1	VALVE, EXPANSION
13	SUPPLIED WITH NO. 14	1	RESTRICTOR, FLUID FLOW
14	13229E6471	1	COIL, EVAPORATOR
15	13224E4143	1	CYLINDER, ACTUATING, LINEAR
16	13211E0830	1	VALVE, PRESSURE REGULATING
17	13229E6267	1	VALVE, QUENCH

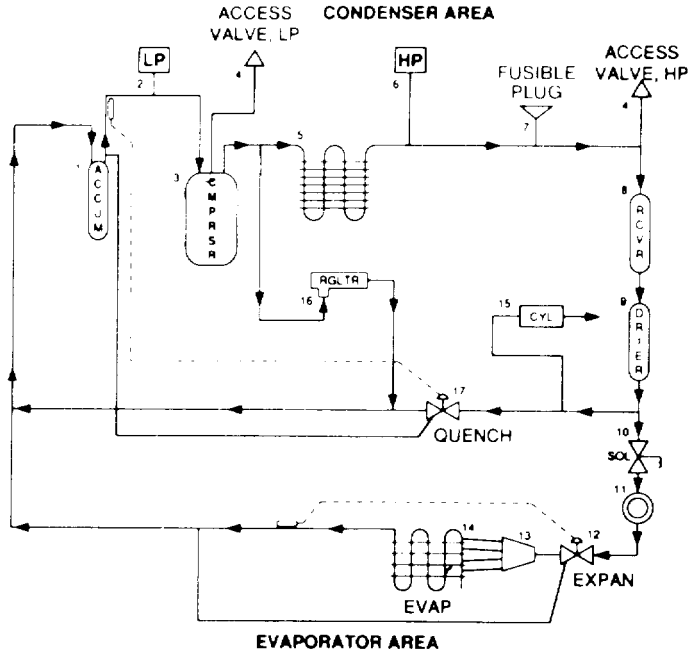

Figure 2-4. Identification of Information Plates. (Sheet 4 of 5).

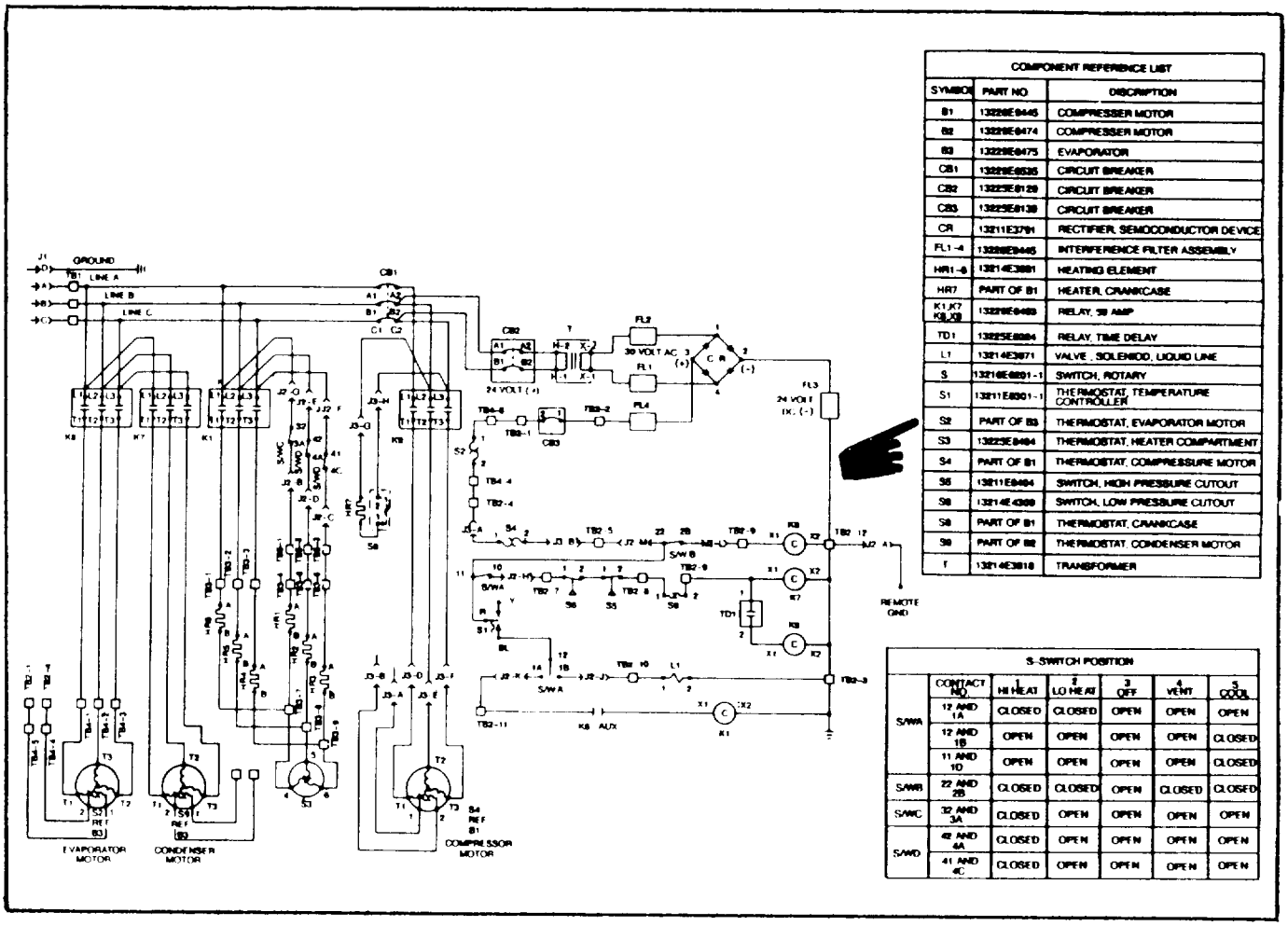

COMPONENT REFERENCE LIST		
SYMBOL	PART NO.	DESCRIPTION
B1	13220E0445	COMPRESSER MOTOR
B2	13220E0474	COMPRESSER MOTOR
B3	13220E0475	EVAPORATOR
CB1	13220E0535	CIRCUIT BREAKER
CB2	13225E0129	CIRCUIT BREAKER
CB3	13225E0139	CIRCUIT BREAKER
CR	13211E3791	RECTIFIER, SEMICONDUCTOR DEVICE
FL1-4	13220E0445	INTERFERENCE FILTER ASSEMBLY
HR1-6	13214E3881	HEATING ELEMENT
HR7	PART OF B1	HEATER, CRANKCASE
K1,K7 K8,K9	13220E0469	RELAY, 50 AMP
TD1	13225E0884	RELAY, TIME DELAY
L1	13214E3871	VALVE, SOLENOID, LIQUID LINE
S	13214E0891-1	SWITCH, ROTARY
S1	13211E0801-1	THERMOSTAT, TEMPERATURE CONTROLLER
S2	PART OF B3	THERMOSTAT, EVAPORATOR MOTOR
S3	13223E0484	THERMOSTAT, HEATER COMPARTMENT
S4	PART OF B1	THERMOSTAT, COMPRESSURE MOTOR
S5	13211E0484	SWITCH, HIGH PRESSURE CUTOUT
S6	13214E4369	SWITCH, LOW PRESSURE CUTOUT
S8	PART OF B1	THERMOSTAT, CRANKCASE
S9	PART OF B2	THERMOSTAT, CONDENSER MOTOR
T	13214E3818	TRANSFORMER

S-SWITCH POSITION						
	CONTACT NO.	1 HI HEAT	2 LO HEAT	3 OFF	4 VENT	5 COOL
S/WA	12 AND 1A	CLOSED	CLOSED	OPEN	OPEN	OPEN
	12 AND 1B	OPEN	OPEN	OPEN	OPEN	CLOSED
	11 AND 1D	OPEN	OPEN	OPEN	OPEN	CLOSED
S/WB	22 AND 2B	CLOSED	CLOSED	OPEN	CLOSED	CLOSED
S/WC	32 AND 3A	CLOSED	OPEN	OPEN	OPEN	OPEN
S/WD	42 AND 4A	CLOSED	OPEN	OPEN	OPEN	OPEN
	41 AND 4C	CLOSED	OPEN	OPEN	OPEN	OPEN

Information Plate (11).

Figure 2-4. Identification of Information Plates. (Sheet 5 of 5).

*U.S. GOVERNMENT PRINTING OFFICE: 1993 - 755-028/80093

Section IV. OPERATION UNDER UNUSUAL CONDITIONS

2-15. GENERAL. The air conditioner is designed to operate normally within a wide range of climatic conditions. However, some extreme conditions require special operating and servicing procedures to prevent undue loading and excessive wear on the equipment. These unusual conditions and the special steps to be performed are listed in the following paragraphs.

2-16. OPERATION IN EXTREME HEAT. When operating the air conditioner in temperatures of 125°F (52°C) or higher, extra care should be taken to minimize the cooling load. Some of the precautions that may be taken are:

a. Check all openings in the shelter or enclosure, especially doors and windows, to be sure they are tightly closed. Limit in and out traffic, if possible.

b. When possible, use shades or awnings to shut out direct rays of the sun.

c. Limit the use of electric lights and other heat producing equipment.

d. Limit the amount of hot, outside air introduced through the fresh air damper to that needed for ventilation.

NOTE

Weather stripping, the installation of storm doors and windows (if appropriate), and insulation of surfaces exposed to the outside is recommended when operation in extremely high temperatures for extended periods is anticipated.

2-17. OPERATION IN EXTREME COLD. When operating the air conditioner in temperatures down to -50°F (-45'°C), extra care should be taken to minimize the heating load. Some of the steps that may be taken are:

CAUTION

Do not disturb electrical wiring that has been exposed to extremely low temperatures. When exposed to cold, both the wire and insulation become brittle and can be easily broken.

a. Check all openings in the enclosure, especially doors and windows, to be sure they are tightly closed. Limit in and out traffic, if possible.

b. Open shades and awnings to permit entry of direct rays of the sun, if appropriate.

c. Limit the amount of cold, outside air introduced through the fresh air damper to that needed for ventilation.

NOTE

Weather stripping, the installation of storm doors and windows (if appropriate), and insulation of surfaces exposed to the outside is recommended when operation at extremely low temperatures for extended periods is anticipated.

2-18. OPERATION IN DUSTY OR SANDY CONDITIONS. Dusty and sandy conditions can seriously reduce the efficiency of the air conditioner by clogging the air filters which will restrict the volume of airflow. Accumulation of dust or sand in the condenser coil and/or in the compressor compartment may cause overheating of the refrigeration system. Dust or sand may also clog the condensate trap and water drain lines. When operating the air conditioner in these dusty and sandy conditions, perform the following steps.

a. Frequent cleaning of filters and all other areas of dust and sand accumulation. In extreme conditions, daily cleaning of filters may be necessary.

b. Limit the amount of dusty or sandy outside air introduced through the fresh air damper to that essential for ventilation.

c. Roll down and secure the fabric cover on the back of the cabinet during periods of shut-down.

2-19. OPERATION IN UNUSUALLY WET CONDITIONS. When operating the air conditioner in unusually wet conditions, perform the following steps.

a. More frequent inspection and cleaning of the condensate trap and drain lines to insure proper drainage and prevent accumulation of water inside the cabinet.

b. Roll down and secure the fabric cover on the back of the cabinet during periods of wet, windy weather when the air conditioner is not in operation.

c. Roll up and secure the fabric cover during dry spells when the air conditioner is not in operation so that the interior can dry out and condensation will not accumulate.

2-20. OPERATION IN SALT AIR OR SEA SPRAY. Salt air or sea spray may cause many of the same clogging problems as encountered when operating in a dusty or sandy environment. In addition, the nature of salt presents serious corrosion problems.

WARNING
HIGH VOLTAGE
is used in operation of this equipment.

DEATH ON CONTACT
may result if personnel fail to observe safety precautions.

Never work on electrical equipment unless there is another person nearby who is familiar with operation and hazards of equipment and who is competent in administering first aid. When technician is aided by operators, he must warn them about dangerous areas.

Whenever possible, input power supply to equipment must be shut off before beginning work. Take particular care to ground every capacitor likely to hold a dangerous charge. When working inside, after power has been turned off, always ground every part before touching it. Be careful not to contact high voltage connections of 208 volts ac input when installing or operating this equipment.

Whenever nature of operation permits, keep one hand away from equipment to reduce hazard to current flowing through vital organs of body. Do Not operate equipment without all guards, louvers, and covers in place and tightly secured.

WARNING
Do not allow excessive amounts of water to enter unit. Water can collect in electrical component areas and cause electrical shorts.

Frequent cleaning is necessary during which all exposed surfaces should be thoroughly sprayed rinsed or sponged with fresh water to remove salt. The fabric cover on the back of the cabinet should be rolled down and secured during all periods when the air conditioner is not in operation.

2-21. OPERATION UNDER EMERGENCY CONDITIONS.

a. NBC (nuclear, biological, chemical). This unit has provisions for connection to an external NBC filtering source. The location of the NBC connection point is shown if Figure 2-5. Should it be necessary to operate in conditions requiring use of NBC filtration equipment, see specific instructions for your shelter or facility installation. For additional general NBC information, refer to MIL-HDBK-116, Environmental Control of Small Shelters. The following are general suggestions for operation in NBC hazards and do not apply if they conflict with instructions for you shelter or facility installation.

(1) The fresh air damper should be closed, the opening should be covered with duct tape (Appendix E, item 22) and sealed air tight.

(2) The conditioned air inlet louvers should be adjusted (partially or completely) closed in conjunction with the NBC filter intake volume. This will cause a more positive pressure on inside of shelter or enclosure and keep air from being drawn.

b. Power conservation. During periods when full 208 volt, 3 phase power is in critically short supply, the air conditioner should not be turned off completely, but should be operated in VENTILATE mode only.

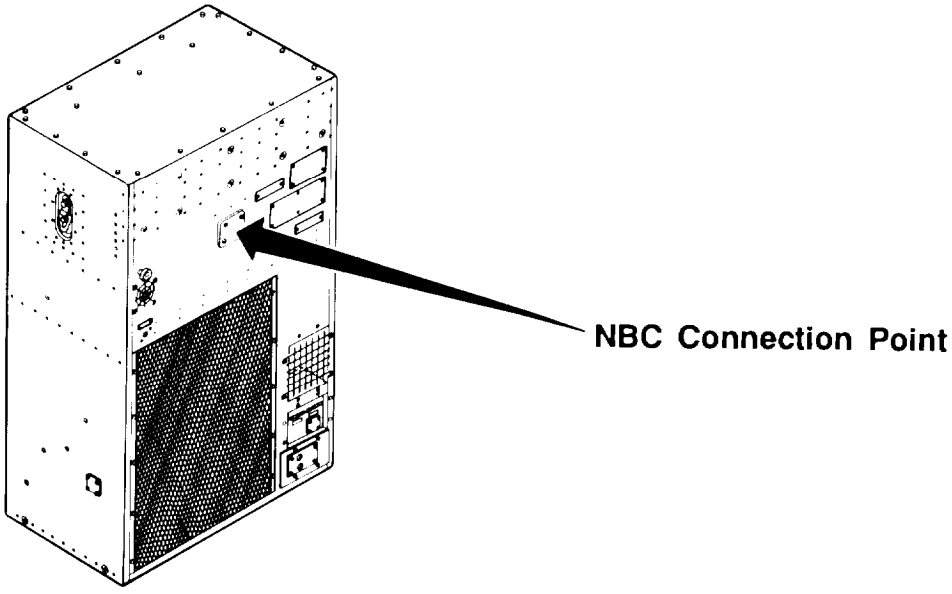

Figure 2-5. Nuclear, Biological, and Chemical (NBC) Connection.

CHAPTER 3

OPERATOR'S MAINTENANCE INSTRUCTIONS

Section I. LUBRICATION INSTRUCTIONS

3-1. GENERAL. No operator lubrication is required.

Section II. OPERATOR TROUBLESHOOTING PROCEDURES

3-2. USE OF TABLE. Table 3-1 contains troubleshooting instructions designed to be useful in diagnosing and correcting unsatisfactory operation or failure of the air conditioner.

a. The table lists the common malfunctions which you may find during the operation or maintenance of the air conditioner or its components. You should perform the tests/inspections and corrective actions in the order listed.

b. This manual cannot list all malfunctions that may occur, nor all test or inspections and corrective actions. If a malfunction is not listed or is not corrected by listed corrective actions, notify your supervisor.

c. Any trouble or corrective action beyond the scope of operator maintenance shall be reported to unit maintenance.

Table 3-1. Operator Troubleshooting.

MALFUNCTION TEST OR INSPECTION CORRECTIVE ACTION
1. AIR CONDITIONER FAILS TO OPERATE IN ANY MODE.
Step 1. Check to see if main power cord is plugged in.
Connect power cord to a source supplying 208 VAC, 3 phase, 400 Hertz power.
Step 2. Check to see that the AC control circuit breaker is in the ON position.
Place circuit breaker in the ON position.
Step 3. Check to see if mode selector is in the ventilate position.
Place mode selector in VENT position.

Table 3-1. Operator Troubleshooting. - Continued.

MALFUNCTION TEST OR INSPECTION CORRECTIVE ACTION	
Step 4.	Check to see if DC control circuit breaker is in the ON position. Place control circuit breaker in the ON position.
Step 5.	Check to see if compressor circuit breaker is in the ON position. Place compressor circuit breaker in the ON position. If unit still malfunctions, notify your supervisor.
2. INSUFFICIENT COOLING.	
Step 1.	Check to see if mode selector is in COOL position. Place mode selector in COOL position.
Step 2.	Check to see if temperature selector is in DECREASE position. Place temperature selector in DECREASE position.
Step 3.	Check to see AC and DC control circuit breakers are in the ON position. Place control circuit in the ON position.
Step 4.	Check to see air filter is not obstructed. If air filter is obstructed, notify your supervisor.
Step 5.	Inspect sight indicator for bubbles or yellow color. If sight indicator has bubbles or is yellow, notify your supervisor.
3. INSUFFICIENT HEATING (LOW HEAT).	
Step 1.	Check to see if mode selector is in LOW HEAT position. Place mode selector in LOW HEAT position.
Step 2.	Check to see if DC control circuit breaker is in the ON position. Place control circuit breaker in the ON position.

Table 3-1. Operator Troubleshooting.

MALFUNCTION TEST OR INSPECTION CORRECTIVE ACTION	
Step 3.	Check to see if compressor circuit breaker is in the ON position.
	Place compressor circuit breaker in the ON position.
Step 4.	Check to see if temperature control thermostat is in the INCREASE position.
	Place temperature control thermostat in the INCREASE position.
	If unit still malfunctions, notify your supervisor.
4. INSUFFICIENT HEATING (HIGH HEAT).	
Step 1.	Check to see if mode selector is in HIGH HEAT position.
	Place mode selector in HIGH HEAT position.
Step 2.	Check to see if DC control circuit breaker is in the ON position.
	Place DC control circuit breaker in the ON position.
Step 3.	Check to see if compressor circuit breaker is in the ON position.
	Place the compressor circuit breaker in the ON position.
Step 4.	Check to see if temperature control thermostat is in the INCREASE position.
	Place temperature control thermostat in the INCREASE position.
	If unit still malfunctions, notify your supervisor.

Section Ill. OPERATOR MAINTENANCE PROCEDURES

3-3. General. This section contains all of the operator maintenance procedures authorized by the Maintenance Allocation Chart contained in Appendix B of this technical manual.

3-4. Metal Covers.

a. Removal.

(1) Remove four screws (1), four flat washers (2), and cover (3).

(2) Remove four screws (4) and cover (5).

(3) Remove four screws (6) and cover (7).

(4) Remove four screws (8), four lock washers (9), four flat washers (10), and cover (11).

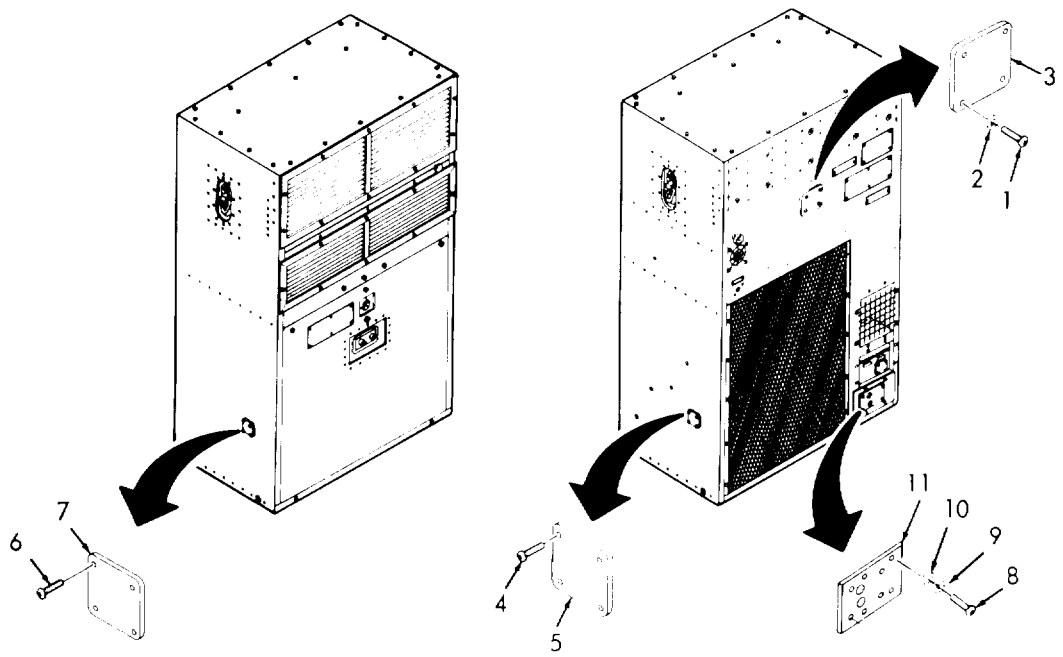

Figure 3-1. Metal Covers.

b. Installation.

(1) Install cover (11), four flat washers (10), four lock washers (9), and four screws (8).

(2) Install cover (7) and four screws (6).

(3) Install cover (5) and four screws (4).

(4) Install cover (3), four flat washers (2), and four screws (1).

3-5. Intake (Return Air) Guard and Conditioned Air Discharge Guard.

a. Removal.

(1) Remove ten screws (1), ten lock washers (2), ten flat washers (3), and conditioned air discharge guard (4) from unit.

(2) Remove ten screws (5), ten lock washers (6), ten flat washers (7), and intake (return air) guard (8) from unit.

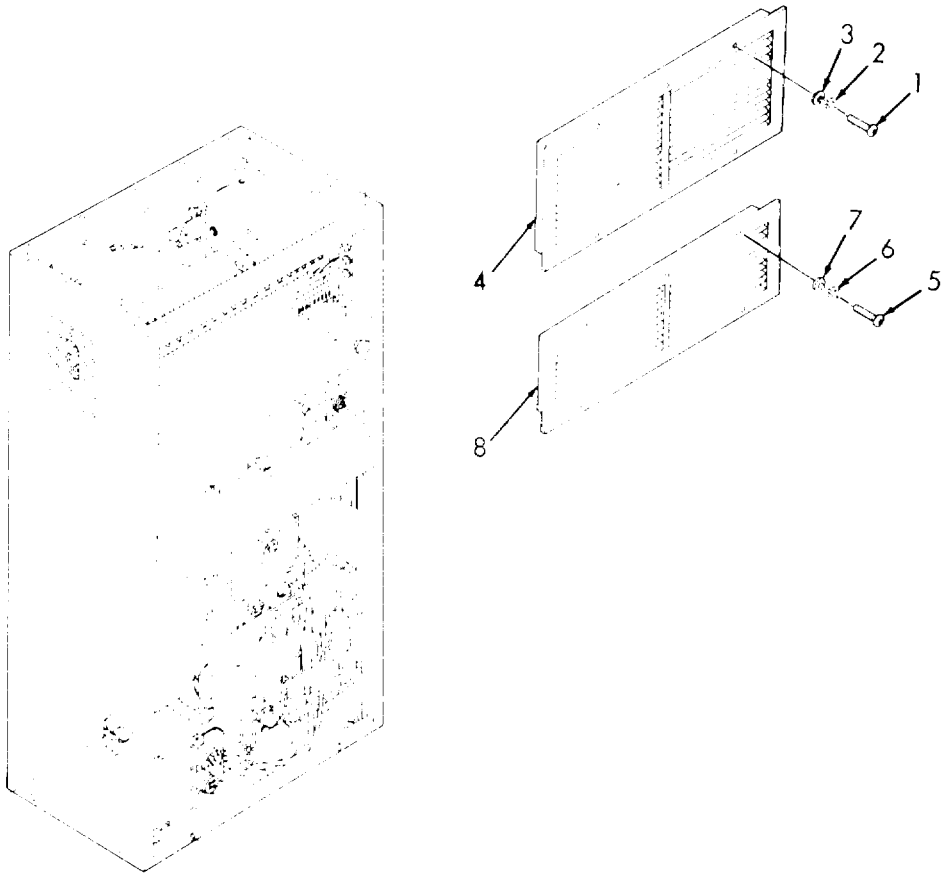

Figure 3-2. Intake (Return Air) Guard and Conditioned Air Discharge Guard.

b. Installation.

(1) Install intake (return air) guard (8), two flat washers (7), ten lock washers (6), and ten screws (5).

(2) Install conditioned air discharged guard (4), ten flat washers (3), ten lock washers (2), and ten screws (1).

CHAPTER 4

UNIT MAINTENANCE INSTRUCTIONS

Section I. REPAIR PARTS, SPECIAL TOOLS, TMDE, AND SUPPORT EQUIPMENT

4-1. COMMON TOOLS AND EQUIPMENT. For authorized common tools and equipment, refer to the Modified Table of Organization and Equipment (MTOE) applicable to your unit.

4-2. SPECIAL TOOLS, TMDE, AND SUPPORT EQUIPMENT. No special tools are required for maintenance of the equipment. Test, Measurement, and Diagnostic Equipment (TMDE) and Support Equipment include standard equipment found in any maintenance shop.

4-3. REPAIR PARTS. Repair parts are listed and illustrated in the Repair Parts and Special Tools List (RPSTL), TM 9-4120-399-24P, covering unit, direct support, and general support maintenance for this equipment.

Section Il. SERVICE UPON RECEIPT AND PREPARATION FOR MOVEMENT

4-4. SERVICE UPON RECEIPT. The following paragraphs contain the procedures for unloading, unpacking, and general checking of the unpacked air conditioner.

a. Unloading. The air conditioner is packaged in a container designed for shipment and handling with the unit in an upright position. The base of the container is constructed as a shipping pallet with provisions for the insertion of the tongs of a fork-lift. The unit may be lifted by fork-lift, crane, or sling. To unload the air conditioner, perform the following steps.

(1) Remove all blocking and tie downs that may have been to secure the container to the carrier.

WARNING

Do not allow the unit to swing while suspended from a lifting device. Failure to observe this warning may result in injury to personnel and damage to the equipment.

CAUTION

Use care in handling to avoid damage to the air conditioner. If an overhead lifting device must be used, use an appropriate sling so that the weight of the unit is supported by the base of the shipping container.

(2) Use a forklift truck or other suitable material handling equipment to remove the unit from the carrier.

4-4. SERVICE UPON RECEIPT. - Continued.

b. Unpacking.

CAUTION

To protect the air conditioner and prevent damage, the air conditioner should be left packaged until it is moved to the location where it is to be installed.

NOTE

The shipping container is of such a design that it may be retained for re-use for mobility purposes if frequent relocation of the air conditioner is anticipated.

(1) Remove shipping container.

(2) Cut the metal bands that hold the top and sides of the container to the base.

(3) Use a pry bar to gently remove top and sides of container to expose unit.

(4) Remove the cushioning around the top of the cabinet and retain, if re-use is anticipated.

(5) Remove the preservation barrier by tearing around the bottom of the cabinet.

(6) Remove the technical publications envelope and accessory sack that are taped to the cabinet and put them in a safe place.

NOTE

It is recommended that the cabinet be left bolted to the shipping pallet until time to place it in the installation position. All receiving inspection actions can be conducted without removal from the pallet.

(7) Remove pallet.

(8) Attach an overhead hoist with an appropriate sling and spreader bar to the lifting fittings provided at each side of the cabinet then raise the cabinet and remove the four bolts that hold the air conditioner to the pallet.

(9) Remove and retain the pallet and bolts if re-use is anticipated. Be sure to remove all remaining barrier material from the underside of the cabinet base.

(10) Lower the cabinet to the floor in the desired position and remove the sling and hoist.

NOTE

The bolts used to anchor the cabinet base to the pallet may be used to anchor it in place in the installed location if the installation method allows for anchoring from beneath.

c. Checking Unpacked Equipment. To check the unpacked air conditioner, perform the following steps.

(1) Inspect the equipment for damage incurred during shipment. If the equipment has been damaged, report damage on DD Form 6, Packaging Improvement Report.

(2) Check the equipment against the packing slip to see if the shipment is complete. Report all discrepancies in accordance with the instructions as defined within DA PAM 738-750. See that all components of end item and basic issue items are with the equipment.

(3) Check to see whether the equipment has been modified.

4-5. INSTALLATION SITE PREPARATION.

a. General. The air conditioner is designed so that it is adaptable to a variety of installation arrangements. Most typical installations are made by preparing an opening in an exterior wall of the room or enclosure to be conditioned and positioning the air conditioner so that the front of the cabinet is inside the room or enclosure and back outside. Alternate installations may be made with the entire cabinet either inside or outside the conditioned area. Refer to MIL-HDBK-116, Environmental Control of Small shelters, for additional general information. The following are minimum requirements for all installations:

(1) A relatively level surface, capable of bearing the weight of the air conditioner, on which to set the base. To insure proper condensate drainage, the surface should be level within 5° from front to back and side to side.

(2) An unobstructed flow of air from outside the conditioned area to the inlet and two outlets of the condenser fans.

(3) An obstructed flow of air from inside the conditioned area to the conditioned air intake and discharge.

(4) An obstructed flow of air from outside the conditioned area to the fresh air damper intake and/or NBC filter intake, if installed.

(5) Access to the front and back of the cabinet for routine operation and servicing and for necessary maintenance actions.

(6) Access to the top of the cabinet for removal of the top panel and sufficient headroom to allow maintenance actions and internal component removal and installation through the top panel opening if possible.

(7) A source of 208 VAC, 3 phase, 400 hertz input power rated at 48 amps. The power source outlet should be located as near as possible to the installed location of the air conditioner. The power source wiring must include a disconnect switch. However, provisions should be made to insure that power is not disconnected during normal operation and that the disconnect is not used to turn off the air conditioner for normal shut-down.

4-5. INSTALLATION SITE PREPARATION. - Continued.

(8) An earth ground capable of handling 48 amps.

(9) Check that no source of dangerous or objectionable fumes are located near the fresh air intake.

(10) If possible make use of terrain features such as trees and buildings to provide a shaded location. This will minimize the cooling load on the air conditioner.

(11) If possible avoid locations where the condenser and fresh air intakes will be laden with dust, dirt, soot, smoke, or other debris.

b. Through the wall installation. Prepare an opening in the wall large enough to slide the air conditioner through. Consideration should be given to service of internal components. All openings around air conditioner must be sealed air tight.

c. Inside installation. Manufacture an arrangement of ducts for the condenser intake and discharge air openings, and the fresh air damper intake and/or NBC filter intake, if installed. Ducts may be made for attachment to the air conditioner cavinet using the mounting holes for the condenser inlet and outlet guards, and the fresh air filter frame and/or the air intake on the NBC filter or some other arrangement may be made. Prepare appropriate openings in an exterior wall for the ducts. Ducts may be designed to use the condenser inlet and outlet guards and fresh air filter and frame supplied with the air conditioner and relocated and installed on new duct work. Adequate replacements or some other arrangement of these items may be provided.

CAUTION

Easy access to air filters must be provided. Filters may be left in unit or relocated in duct work. Some installations (filters relocated in duct work) may require different size filters.

d. Outside installation. Manufacture an arrangement of ducts for the conditioned air intake and discharge air. Ducts may be made for attachment to the air conditioner cabinet using the mounting holes for the conditioned air intake and discharge guards or some other arrangement may be made. Ducts may also be made for installation of the conditioned air intake and discharge guards on the inside ends or replacements for these items may be used. Prepare appropriate openings in the appropriate wall for the ducts.

NOTE

Retain all items removed from air conditioner. Store them in a safe place. These parts must be reinstalled prior to returning air conditioner to supply. For a list of required items, see Appendix C.

4-6. AIR CONDITIONER PREPARATION FOR INSTALLATION.

a. General. No preparation is necessary if the air conditioner is to be installed by the typical exterior wall opening method and operataed as a self-contained unit. Refer to MIL-HDBK-116, Environmental Control of Small Shelters, for additioal general information. For alternate installation methods, some preparation is necessaury.

b. The unit is designed to provide for several basic types of installation. See the following paragraphs for instructions only if they are applicable to your requirements.

(1) Remote mounting of control module. (See para. 4-7).

(2) When power and/or control cables(s) are to be connected through the return air duct. (See para. 4-8).

(3) Alternate input power cable connector locations. (See para. 4-11).

(4) Installations that require removal of the fabric cover. (See para. 4-10.)

4-7. REMOTE MOUNTING OF CONTROL MODULE. This paragraph is applicable only when the control module is to be remote mounted. If the control module is to be removed from the unit and installed in a remote location, follow instructions of this paragraph. (Refer to Figure 4-1).

WARNING

HIGH VOLTAGE
is used in operation of this equipment.

DEATH ON CONTACT
may result if personnel fail to observe safety precautions.

Never work on electrical equipment unless there is another person nearby who is familiar with operation and hazards of equipment and who is competent in administering first aid. When technician is aided by opertors he must warn them about dangerous areas.

Whenever possible, input power supply to equipment must be shut off before beginnin work. Take particular care to ground every capacitor likely to hold a dangerous charge. When working inside, after power has been turned off, always ground every part before touching it. Be careful not to contact high voltage connections of 208 volts ac input when installing or operating this equipment.

Whenever nature of operation permits, keep one hand away from equipment to reduce hazard to current flowing through vital organs of body. Do Not operate equipment without all guards, louvers, and covers in place and tightly secured.

4-7. REMOTE MOUNTING OF CONTROL MODULE. - Continued.

WARNING

Be sure input power is disconnected before doing any work inside the air conditioner cabinet.

a. Remove eight screws (1), eight lock washers (2), and eight flat washers (3). Remove conditioned air intake guard (4).

b. Loosen four captive panel fastener screws (5) in front panel (6).

c. Tip top of lower front panel (6) away from unit and lift panel up to clear flange on bottom of panel.

d. Loosen screw (7) and nut (8) in loop clamp (9) that holds the sensing bulb (10) to evaporator drip pan.

CAUTION

Take care that sensing bulb capillary line is not kinked and that bulb and capillary are not cut or damaged during removal.

e. Carefully cut and remove plastic tie down strap.

f. Slip sensing bulb (10) out of clamp (9) and carefully guide capillary line and sensing bulb down into lower compartment.

g. Reinstall capillary retaining clamp (9) (for possible future use) and tighten bulb and clamp hardware to evaporator drip pan.

h. Disconnect wiring harness connector P8 from connector J8 on the control module.

i. Remove four screws (11), four flat washers (12), four lock washers (13), four fiat washers (14), and four nuts (15) and remove control module (16) from air conditioner.

j. The control module (16) is provided with three sets of four holes. These holes are sized for use with 0.25 inch (0.64 cm) diameter hardware. The control module can be mounted using the top, bottom, or rear face holes.

k. Care should be taken to locate the control module (16) and sensing bulb (10) where there will be an accurate temperature indication.

NOTE

Do not locate control module on thin outside walls or near heat producing equipment or lights.

l. Secure the control module (16) using appropriate hardware in the remote location.

m. Install block-off panel (Appendix D) using the four mounting screws (11) and nuts (15) removed from the control module (16).

n. Install the P8 connector to connector J19. (See Figure 4–2)

o. Install lower front panel.

p. Fabricate an interconnecting cable/harness of the required length and connect J20 to J8 of the control module (16).

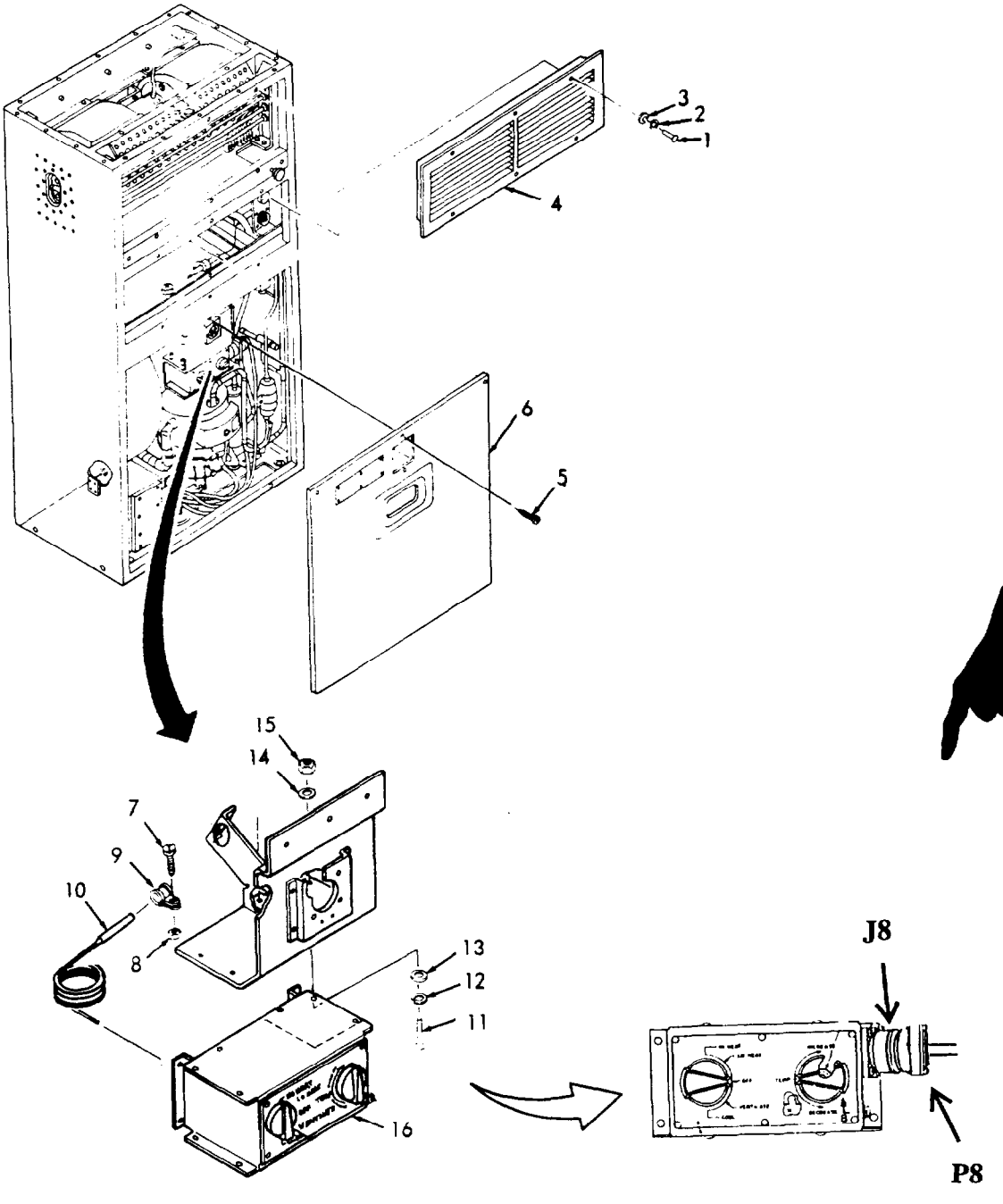

Figure 4–1. Remote Mounting of Control Module.

4-8. CABLE CONNECTIONS THROUGH RETURN (CONDITIONED AIR INTAKE) DUCT. This paragraph is applicable only when the conditioned air intake guard is to be removed from the unit and one or both of the alternate (J18 input power connector of J20 remote control connector) cable locations are to be used. These alternate cable connection locations permit cables to be routed through the return air ducting to the air conditioner.

WARNING

Voltages used can kill. Always disconnect power cord to air conditioner before performing any internal maintenance. Shutting unit off at its control panel does not disconnect unit power.

a. Remove eight screws (1), eight lock washers (2), and eight flat washers (3). Remove conditioned air intake guard (4). Store guard in a safe place for possible future use.

b. Loosen four captive panel fastener screws (5) in front panel (6).

c. Tip top of lower front panel (6) away from unit and lift panel up to clear flange on bottom of panel.

d. If input power cable is to be connected through return air duct:

(1) Remove four screws (7) and four nuts (8) from J1 connector (9).

(2) Pull J1 (9) connector and harness free from mounting plate (10).

(3) Remove rubber gasket (11) and electrical cover cap and chain (12) and store in a safe place for possible future use.

(4) Remove plastic dust cap from connector J18. Store cap in a safe place for possible future use.

(5) Connect J1 connector (9) and harness to J17 connector (13) and harness.

(6) Install cover plate (item 1, Appendix C) to seal original J1 connector opening. Use original J1 connector mounting hardware removed in step (1) and gasket removed in step (3) above.

e. If control module is to be mounted in a remote location and remote control cable connector is to be connected through return air duct:

(1) See paragraph 4-7.d through 4-7.m for control module relocation.

NOTE

Fabrication of interconnecting remote control cable described in paragraph 4–7p will apply except that it will be connected to the J20 connector on the unit in place of the J8 connector on block off. (J8 is on Figure 4–1 and J20 is on Figure 5–1)

(2) Remove plastic dust cap from connectors J20. Store cap in a safe place for possible future use.

(3) Connect P8 connector and harness to J19 connector and harness. (P8 is on Figure 4–1)

f. Reinstall lower front panel (6).

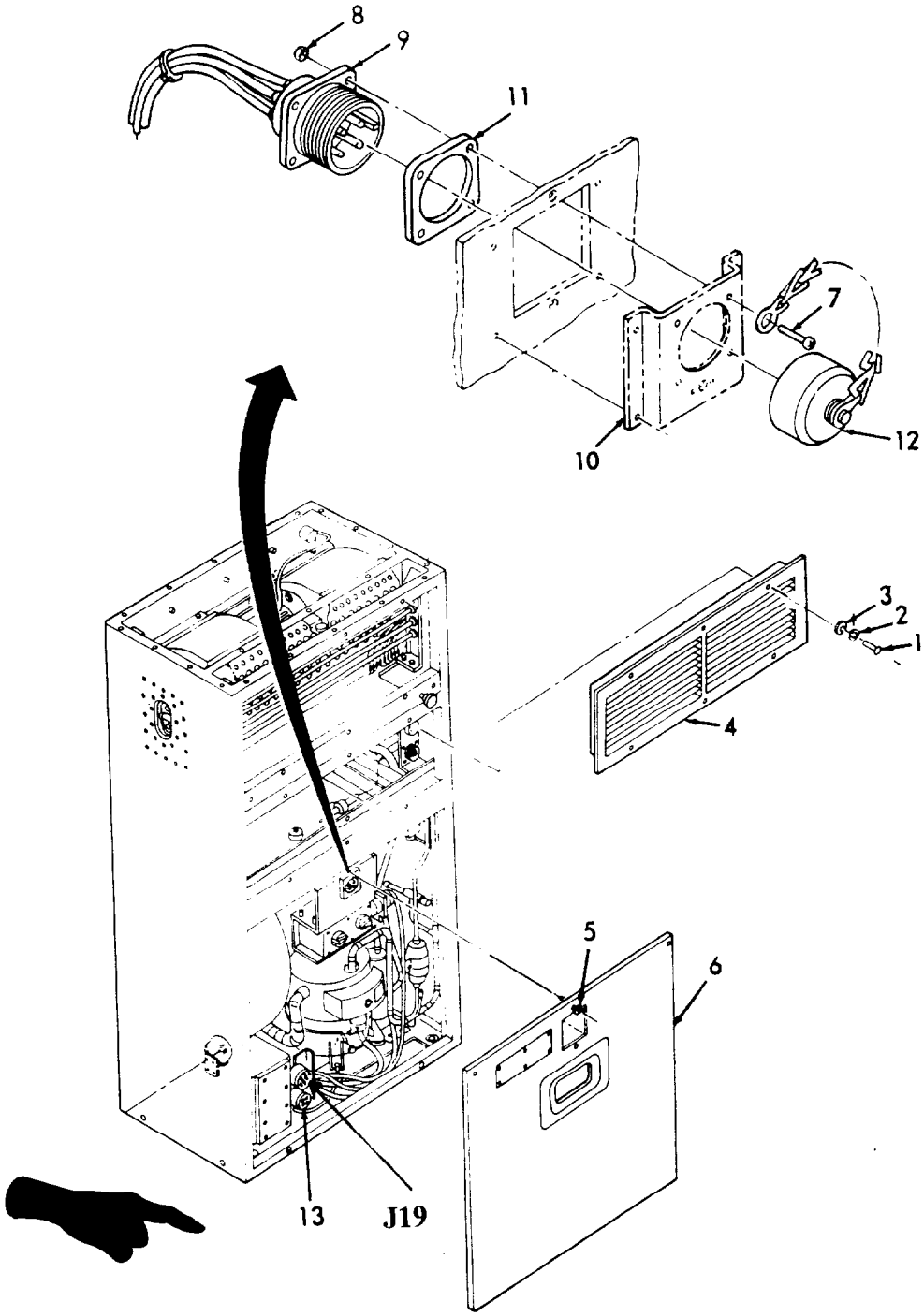

Figure 4–2. Cable Connections Through Return (Conditioned Air Intake) Duct.

4-9. ALTERNATE INPUT POWER CABLE CONNECTOR (J1) LOCATIONS.

a. See paragraph 4-8. for cable connections through return (conditioned air intake) duct.

b. If input power cable connection (J1) is to be relocated to one of the alternate locations, perform the following steps.

WARNING

Voltages used can kill. Always disconnect power cord to air conditioner before performing any internal maintenance. Shutting unit off at its control panel does not disconnect unit power.

(1) (Refer to Figure 4-2.) Loosen four captive panel fastener screws (5) in front panel (6).

(2) Tip top of front panel (6) away from unit and lift panel up to clear flange on bottom of panel.

(3) Remove four screws (7) and four nuts (8) from J1 connector.

(4) Remove J1 connector and harness, rubber gasket (11), and electrical cover cap and chain (12) from mounting plate (10).

(5) Perform the following steps for relocating connector J1 to the left or right side alternate connector locations.

(a) Remove four screws and four nuts from cover plate (refer to para. 3-4).

(b) Install connector J1 (9), electrical cover cap and chain (12), and rubber gasket (11) in new location with four screws (7) and four nuts (8).

(c) Install cover plate removed from side of unit on mounting plate (10) where J1 connector (9) was removed with the four screws and four nuts which held cover plate to side of unit.

(6) Perform the following steps for relocating connector J1 to the rear alternate connector location. (Refer to Figure 4-3.)

(a) Remove two screws (1), two lock washers (2), two flat washers (3), and ground cable (4).

(b) Remove auxiliary power connector bracket (5).

(c) Remove six screws (6) from side of unit.

(d) Remove eight screws (8), eight lock washers (9), and eight flat washers (10) from rear of unit.

(e) Remove junction box assembly (11) from unit.

(f) Remove twelve screws (12), twelve lock washers (13), twelve flat washers (14), and junction box cover (15).

(g) Remove eight screws (16), eight lock washers (17), eight flat washers (18), and cover (19).

(h) Tag and disconnect J1 harness wires from terminal block TB1 inside junction box assembly (11), and carefully cut and remove any cable ties holding J1 harness wires in place.

(i) Loosen cap (20), washer (21) and grommet (22) from connector (23) and pull J1 harness wires from junction box assembly (11).

(j) Feed connector J1 through back of junction box assembly (11) through opening where cover (15) was installed.

(k) Remove four screws (24), four lock nuts (25), and cover (26).

(l) Install cover (26), four screws (24), and four lock nuts (25) onto original J1 connector location.

(m) Install connector J1 onto cover (19) using original J1 mounting hardware.

(n) Reconnect wires from J1 harness per wire tags and remove tags.

(o) Install cover (18), eight screws (16), eight lock washers (17), and eight flat washers (18) onto junction box assembly (11).

(p) Install cover (15), twelve screws (12), twelve lock washers (13), and twelve flat washers (14) onto junction box assembly (11).

(q) Install cap (20), washer (21), and grommet (22) onto connector (23).

(r) Plug hole in connector (23) with molding sealing compound (Appendix E, item 18).

(s) Install junction box assembly (11) into unit and install eight screws (8), eight lock washers (9), and eight flat washers (10).

(t) Install six screws (6) into side of unit.

(u) Install auxiliary power connector bracket (5), ground cable (4), two screws (1), two lock washers (2), and two flat washers (3).

(7) Reinstall front panel (para. 4-8).

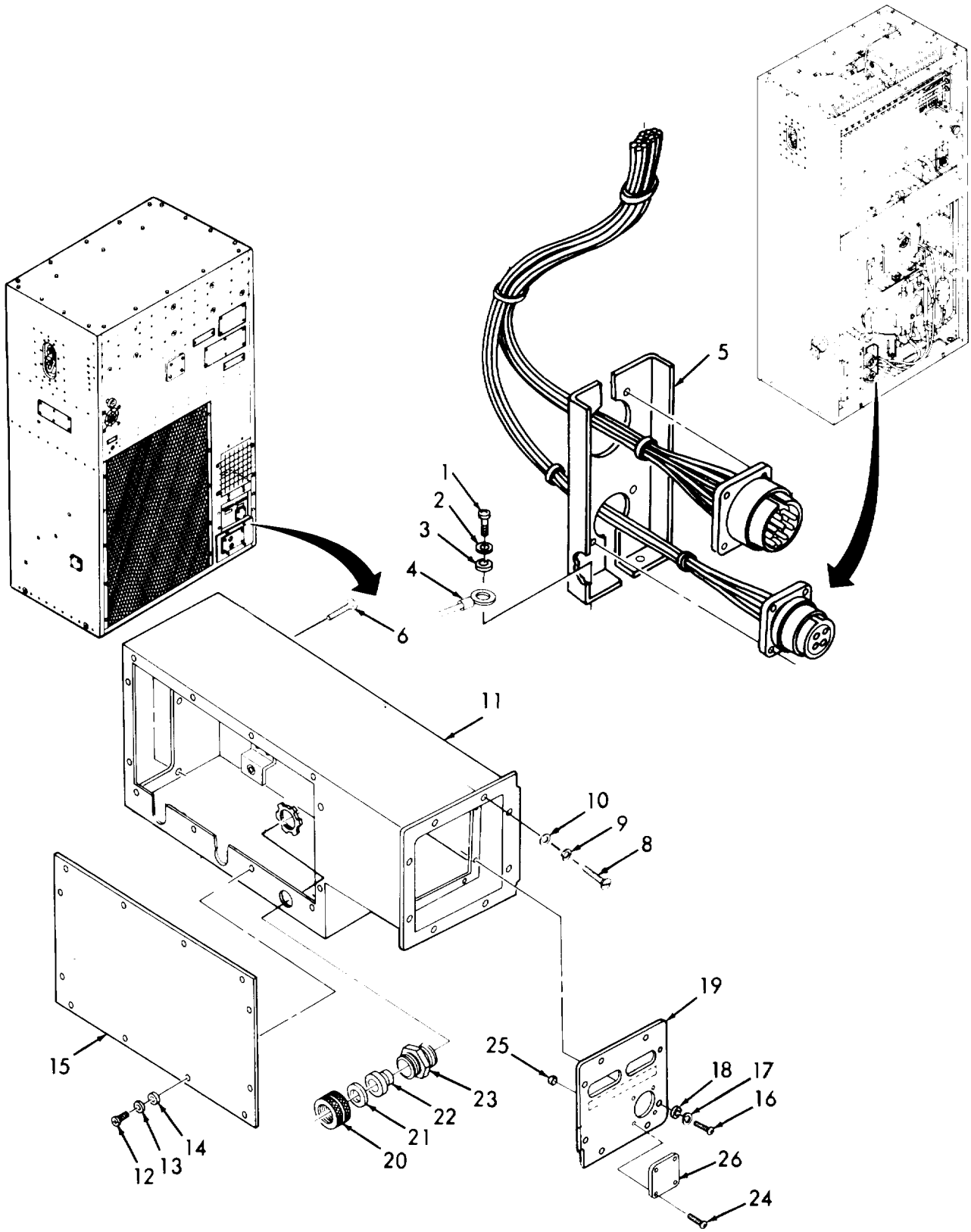

Figure 4-3. Relocation of J1 to Rear Location.

4-10. INSTALLATIONS THAT REQUIRE REMOVAL OF FABRIC COVER. Some installations require removal of the condenser side fabric cover. This generally applies only when air conditioner is positioned inside with condenser and fresh air openings ducted to the outside.

NOTE

If air conditioner is to be installed with condenser side (rear) exposed, the fabric cover should be left in place if possible.

a. Remove twenty-five screws (1), twenty-five flat washers (2), and twenty-five lock washers (3).

b. Carefully remove the fabric cover (4) from unit (5). Store the cover in a safe place for future use.

c. Reinstall twenty-five lock washers (3), twenty-five flat washers (2), and twenty-five screws (1) into unit (5).

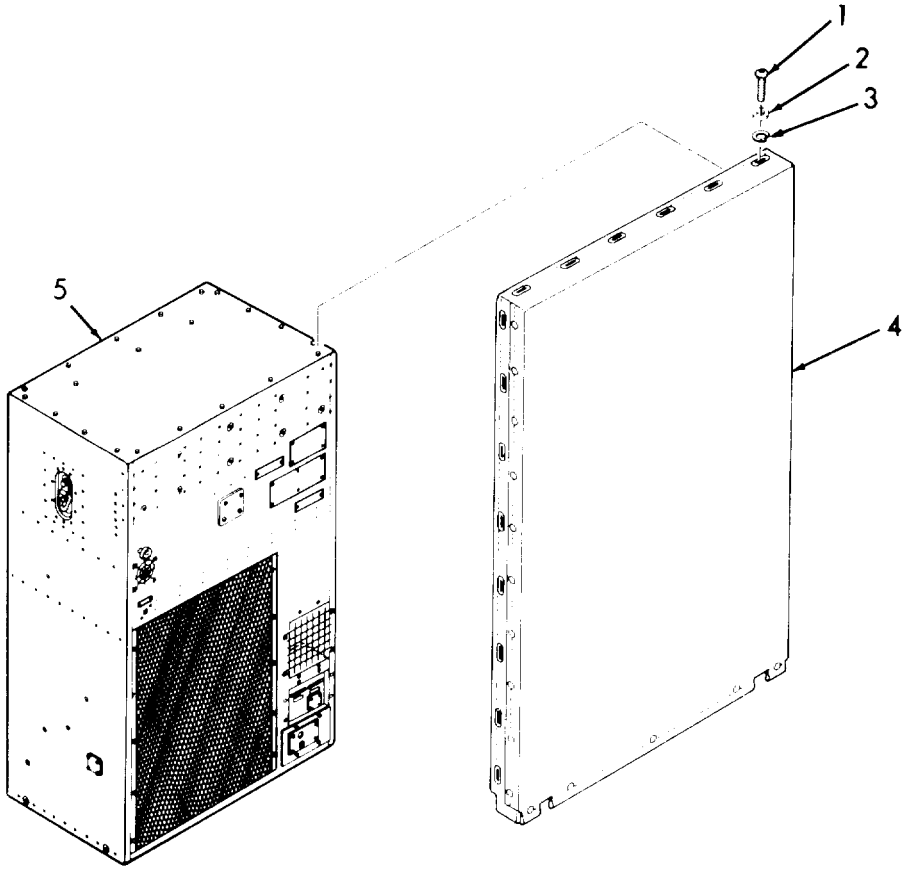

Figure 4-4. Fabric Cover Removal.

4-11. INSTALLATION INSTRUCTIONS. All alterations to the shelter or facility into which the air conditioner is to be installed should be complete before installation of air conditioner.

a. Attach an overhead hoist, sling, and spreader bar to the lifting fittings on each side of the cabinet.

b. Move air conditioner into position and align mounting holes.

c. Secure unit with appropriate mounting hardware.

d. Seal all openings around cutouts for air conditioned air and water tight. Use gasket, caulking, or other suitable material (Appendix E, Item 23).

e. The air conditioner is provided with eight drain holes in base. Remove plugs from all drains possible for most complete drainage of condensate water. If water from these drains will be objectionable or create a hazard, external overboard drains can be connected. Use standard 1/2-14 NPT male pipe fittings to connect base drains. Any type of hose or tubing may be used as a drain line. The drain line should lead to an appropriate facility drain, storm sewer, dry sump, or an acceptable outside area. Be sure the entire length of the drain line is lower than the base to ensure gravity drainage.

f. Fabricate a power cable. (See para. 4-12.)

WARNING

HIGH VOLTAGE
is used in operation of this equipment.

DEATH ON CONTACT
may result if personnel fail to observe safety precautions.

Never work on electrical equipment unless there is another person nearby who is familiar with operation and hazards of equipment and who is competent in administering first aid. When technician is aided by operators, he must warn them about dangerous areas.

Whenever possible, input power supply to equipment must be shut off before beginning work. Take particular care to ground every capacitor likely to hold a dangerous charge. When working inside, after power has been turned off, always ground every part before touching it. Be careful not to contact high voltage connections of 208 volts ac input when installing or operating this equipment.

Whenever nature of operation permits, keep one hand away from equipment to reduce hazard to current flowing through vital organs of body. Do Not operate equipment without all guards, louvers, and covers in place and tightly secured.

g. Connect power cable to a 208 VAC, 3 phase, 400 hertz power source (See para. 4-12). Check input power as follows:

(1) Apply power to power cable.

(2) Use a multimeter set to AC voltage range of at least 250 volts for following tests.

(3) Measure voltage between pin D of connector P1 and a good chassis ground. Voltage must be zero (0). If more than zero voltage is observed, disconnect cable and check power source. Correct problem at power source or at cable connection as indicated.

(4) With zero voltage on pin D of P1 connector, check voltages between remaining pins as shown on Table 4-1. Voltages should be approximately as shown. If voltages are not within ten volts of those indicated in Table 4-1, disconnect power. Locate and correct problem.

CAUTION

Connecting power source with unit in operating position may damage electrical components. Put mode selector switch to OFF.

(5) Remove lower front panel.

(6) After proper voltages are indicated on all pins of connector P1, connect P1 to connector J1 on air conditioner.

Table 4-1. Power Voltages.

Measure from Pin	To Pin			
	A	B	C	D
A	N/A	208	208	120
B	208	N/A	208	120
C	208	208	N/A	120
D	208	208	208	N/A

(7) Turn mode selector switch to COOL and immediately back to OFF.

(8) Observe the condenser fan to determine the direction of rotation.

(9) If fan rotation is clockwise, unit power cable is not wired properly. Exchange wires connected to pins A and B at power source connection and repeat steps (7) and (8) above.

(10) Check unit operation in accordance with para. 2-6 through 2-12.

h. See air conditioner electrical schematic Figure 1-4, for additional wiring information.

4-12. INPUT POWER CABLE.

a. Determine length of cable required to connect the air conditioner to power source.

b. Fabricate input power cable using connector (Appendix D, item 1) and cable (Appendix D, item 2) to match the electrical connections on the power source to be used. Refer to para. 4-18 for general wiring procedures.

4-13. OPERATIONAL CHECK. To perform an operational check of the air conditioning unit, do the following steps.

(a) Operation Checks.

(1) Be sure the mode selector switch is in the OFF position and reconnect input power.

NOTE

If power has just been connected to unit, a short (30 minute maximum during very cold weather) warm up period is required for COOL mode operation. When compressor reaches a safe operating temperature, it will come on automatically if the mode selector is in the COOL mode.

(2) Check that the fabric cover is rolled up and secured.

(3) Adjust conditioned air intake and outlet louvers to the full open position.

(4) Adjust fresh air damper to full closed position.

(5) Turn mode selector switch to VENTILATE. Fan should start.

(6) Use a paper streamer or smoke and note amount of air being discharged from conditioned air outlet grille.

(7) Open fresh air damper fully.

(8) Close conditioned air intake guard louvers fully.

(9) Again check air flow as in step f. above. Air flow should be approximately the same.

(10) Fully open louvers in conditioned air intake grille and fully close fresh air damper.

(11) Turn temperature control thermostat knob to fully INCREASE (clockwise) position and then turn mode selector switch to LO HEAT. Place your hand in air flow from the conditioned air outlet grille and feel for a temperature rise. When discharge air temperature has reached a relatively stable level, turn mode selector switch to HI HEAT and feel for a further temperature rise. Next, turn temperature control thermostat knob to fully DECREASE (counterclockwise) position. Feel that discharge air temperature drops to approximately same relatively stable level previously noted in LO HEAT. Finally, turn mode selector switch to LO HEAT and feel discharge air temperature drop to ambient level.

(12) The temperature control thermostat has an effective functional range between 40° and 90°F (5° and 32°"C). In extreme conditions when ambient air temperature is below 40°F (5°C) or above 90°F (32°C), operation in either LO HEAT or HI HEAT mode will vary from that described above.

(13) Turn temperature control thermostat knob to fully INCREASE (clockwise) position, then turn mode selector switch to COOL. Note that evaporator and condenser fans start immediately and that compressor starts approximately 30 seconds later. Hold your hand in air flow from conditioned air outlet grille; there should be no change in temperature. Now turn temperature control thermostat knob to fully DECREASE (counterclockwise) position and feel outlet air temperature begin to drop almost immediately. Leave controls in present position and perform next check.

(14) After 15 minutes of operation, check in sight glass and compare refrigerant condition with the color coded information plate provided (See para. 2-3.)

(15) Turn mode selector switch to OFF and observe that all air conditioner functions cease.

(16) Set-up the air conditioner for the desired operational mode.

Section IlI. LUBRICATION

4-14. GENERAL. No lubrication is required for this unit.

Section IV. PREVENTIVE MAINTENANCE CHECKS AND SERVICES (PMCS)

4-15. INTRODUCTION, INSPECTION, AND SERVICE.

a. Systematic, periodic, Preventive Maintenance Checks and Services (PMCS) are essential to ensure that the air conditioner is ready for operation at all times. The purpose of a preventive maintenance program is to discover and correct defects and deficiencies before they can cause serious damage or complete failure of the equipment. Any effective preventive maintenance program must begin with the indoctrination of operators to report all unusual conditions notes during daily checks or actual operation to unit maintenance. All defects and deficiencies discovered during maintenance inspections must be recorded, together with corrective action taken, on DA Form 2404 (Equipment Inspection and Maintenance Worksheet).

b. A schedule for unit preventive maintenance inspection and service should be established immediately after installation of the air conditioner. A quarterly interval, equal to three calendar months or 250 hours of operation (whichever occurs first) is recommended for usual operating conditions. When operating under unusual conditions, such as a very dusty or sandy environment, it may be necessary to reduce the interval to monthly or even less if conditions are extreme.

c. Table 4-2 lists the unit preventive maintenance checks and services that should be performed at quarterly (or otherwise established) intervals. The PMCS items in the table have been arranged and numbered in a logical sequence to provide for greater personnel efficiency and least amount of required maintenance downtime.

WARNING

Disconnect input power before disassembly of the air conditioner for PMCS to prevent dangerous, possibly fatal, electrical shock.

Table 4-2. Unit Preventive Maintenance Checks and Services (PMCS).

Item No.	Interval			Item To Be Inspected	Procedure
	M	Q	A		
1	•			Fresh Air Ventilation Filter	• Remove and clean filter per para. 4-21.
2	•			Intake (return air) and Conditioned Air Discharge Guard	• Remove any debris from louvers. • Remove guards per para. 3-5 and clean louvers.

Table 4-2. Unit Preventive Maintenance Checks and Services (PMCS).

Item No.	Interval M	Interval Q	Interval A	Item To Be Inspected	Procedure
3		•		Filter, Air Conditioning	• Remove filter per para. 4-23 and thoroughly clean.
4		•		Information Plates	• Inspect for missing or damaged plates. • Clean dirty plates, using a clean cloth and clean water with mild soap.
5		•		Heater Diffuser	• Check that diffuse is in place and that no hardware is loose or missing.
6			•	Thermostat Cutout and Heater Elements	• Remove top panel per para. 3-4. • Remove conditioned air discharge guard per para. 3-5. • Check that thermostat is in place and that mounting hardware is not loose or missing. • Inspect thermostat and heater element leads for cracked or burned insulation and for loose connections. • Check heating elements for obvious damage.
7			•	Terminal Board	• Remove conditioned air discharge guard per para. 3-5. • Inspect terminal board for loose or missing hardware. • Check that terminal board is not cracked or broken.
8			•	Evaporator Fan Assembly	• Remove top panel per para. 3-4. • Inspect for loose or missing hardware.

Table 4-2. Unit Preventive Maintenance Checks and Services (PMCS). - Continued.

Item No.	Interval M	Interval Q	Interval A	Item To Be Inspected	Procedure
9			•	Evaporator Impeller Fans	• Remove top panel per para. 3-4. • Inspect evaporator fans for bent or loose blades. • Check that fans are not rubbing against fan scrolls.
10			•	Evaporator Scrolls	• Remove top panel per para. 3-4. • Inspect scrolls for dents, cracks, or bent metal. • Check for loose or missing mounting hardware.
11			•	Evaporator Fan Motor and Bracket	• Remove top panel per para. 3-4. • Check motor for loose, broken or cut motor leads and connections. • Check for smooth rotation of motor. • Check for loose or missing mounting hardware. • Inspect for bent motor shafts.
12			•	Fresh Air Damper	• Check that fresh air damper operates without binding. • Check that damper door opens and closes properly.
13			•	Junction Box Assembly	• Remove front panel per para. 3-4. • Inspect junction box for loose or missing mounting hardware. • Check that all connectors are in place and tight.

Table 4-2. Unit Preventive Maintenance Checks and Services (PMCS).

Item No.	Interval M	Interval Q	Interval A	Item To Be Inspected	Procedure
14				Wire Harnesses	• Remove front panel per para. 3-4.
			•		• Check wiring on all harnesses for cracks, breaks, or burns.
	•				• Check all connectors for damage or looseness.
	•				• Inspect all wires for loose connections.
15			•	Condensate Drain Assembly	• Remove intake (return air) guard per para. 3-5.
					• Remove front panel per para. 3-4.
					• Cheek that all four drains in evaporator pan are clean and unobstructed.
					• Inspect all drain tubing for cuts or cracks.
					• Check for loose or missing clamps.
					• Check for broken or leaking elbows and tees.
16	•			Control Module	• Inspect for loose, cracked, or missing knobs.
					• Remove front panel per para. 3-4.
					• Check for loose or disconnected P8 connector.
17			•	Condenser Drain Assembly	• Remove front panel per para. 3-4.
					• Check that damper actuator is properly connected to damper door.
					• Check for proper operation of door during unit operation.
					• Check for loose or missing hardware.

Table 4-2. Unit Preventive Maintenance Checks and Services (PMCS). - Continued.

Item No.	Interval M	Interval Q	Interval A	Item To Be Inspected	Procedure
18			•	Condenser Motor	• Remove front panel per para. 3-4. • Inspect motor wire leads for cracks, breaks, bums, or loose connections. • Check that motor rotates smoothly. • Cheek that motor shaft is not bent • Check for loose or missing mounting hardware.
19			•	Condenser Scroll	• Remove front panel per para. 3-4. • Check for loose or missing mounting hardware. • Inspect scroll for dents, cracks, or bent metal surfaces.
20			•	Condenser Fan	• Remove front panel per para. 3-4. • Check for loose fan mounting set screw. • Check for missing or damaged fan impeller blades. • Check that fan does not rub condenser scroll.
21			•	Condenser Fan Motor Support	• Remove front cover per para. 3-4. • Check for loose or missing mounting hardware. • Inspect support for cracks or bends.
22			•	Solenoid Valve	• Remove front cover per para. 3-4. • Check for loose or missing mounting hardware. • Check for leaks.

Table 4-2. Unit Preventive Maintenance Checks and Services (PMCS).

Item No.	Interval M	Interval Q	Interval A	Item To Be Inspected	Procedure
					• Check that solenoid functions properly during unit operation.
23			•	Evaporator Coil	• Remove intake (return air) guard per para. 3-5.
					• Remove air conditioning filter per para. 4-23.
					• Check for loose or missing mounting hardware.
					• Inspect evaporator coil for leaks.
			•		• Remove debris from intake side of evaporator coil.
24			•	Compressor	• Remove front panel per para. 3-4.
					• Check for loose or missing compressor mounting hardware.
					• Check for loose, cracked, or burned wire leads and connectors.
					• Check for refrigerant leaks around tubing connections.
					• Check for proper compressor function when unit is in operation.
25			•	Condenser Coil	• Remove front panel per para. 3-4.
					• Check for loose or missing condenser coil mounting hardware.
					• Check for refrigerant leaks.
			•		• Remove any debris from condenser coil fins.
26	•			Condenser Guard	• Check condenser guard for loose or missing hardware.
					• Check for clogged or dirty screen.

Section V. UNIT TROUBLESHOOTING PROCEDURES.

4-16. GENERAL.

a. This section contains troubleshooting information for locating and correcting most of the operating troubles which may develop in the air conditioner. Each malfunction for an individual component, unit, or system is followed by a list of tests or inspections which will help you to determine corrective actions to take. You should perform the tests/inspections and corrective actions in the order listed.

b. This manual cannot list all malfunctions that may occur, nor all tests or inspections and corrective actions. If a malfunction is not listed, or is not corrected by listed corrective actions, notify your supervisor.

c. Table 4-3 lists the common malfunctions which you may find during the operation or maintenance of the air conditioner or its components. You should perform the tests/inspections and corrective actions in the order listed.

WARNING

HIGH VOLTAGE
is used in operation of this equipment.

DEATH ON CONTACT
may result if personnel fail to observe safety precautions.

Never work on electrical equipment unless there is another person nearby who is familiar with operation and hazards of equipment and who is competent in administering first aid. When technician is aided by operators, he must warn them about dangerous areas.

Whenever possible, input power supply to equipment must be shut off before beginning work. Take particular care to ground every capacitor likely to hold a dangerous charge. When working inside, after power has been turned off, always ground every part before touching it. Be careful not to contact high voltage connections of 208 volts ac input when installing or operating this equipment.

Whenever nature of operation permits, keep one hand away from equipment to reduce hazard to current flowing through vital organs of body. Do Not operate equipment without all guards, louvers, and covers in place and tightly secured.

NOTE

Before you use this table, be sure you have performed all applicable operating checks.

Table 4-3. Unit Troubleshooting.

MALFUNCTION TEST OR INSPECTION CORRECTIVE ACTION	
1. AIR CONDITIONER FAILS TO OPERATE IN ANY MODE.	
Step 1.	Check to see if main power cord is plugged in. Connect power cable to a source supplying 208 VAC, three phase, 400 Hertz power.
Step 2.	Check to see if AC control supply circuit breaker is in the ON position. Place AC control circuit breaker in the ON position.
Step 3.	Check to see if DC control circuit breakers is in the ON position. Place control circuit breaker in the ON position. If the air conditioner will not operate, check for a defective circuit breaker. Replace defective circuit breaker per para. 4-34.
Step 4.	Check to see if compressor circuit breaker is in the ON position. Place compressor circuit breaker in ON position. If the air conditioner will not operate in the COOL position, check for defective compressor circuit breaker. Replace defective compressor circuit breaker per para. 4-34.
Step 5.	Check to see if mode selector is in the VENTILATE position. Place mode selector in the VENTILATE position. If the air conditioner will not operate, check for a defective switch. Replace defective mode selector switch per para. 4-43.

Table 4-3. Unit Troubleshooting. (Continued).

MALFUNCTION TEST OR INSPECTION	CORRECTIVE ACTION
1. AIR CONDITIONER FAILS TO OPERATE IN ANY MODE. (Continued).	
Step 6. Check for loose electrical connections.	Tighten electrical connections.
Step 7. See wiring schematic Figure 1-4 and check for defective wiring.	Repair wires as required. If unit still malfunctions, notify your supervisor.
2. EVAPORATOR AND CONDENSER FANS BOTH RUN, BUT COMPRESSOR DOES NOT START AFTER TIME DELAY.	
Step 1. Check to see if high or low pressure cut-out switch has tripped.	Push reset button. If compressor fails to start, contact your supervisor.
Step 2. Check operation of mode selector switch.	Turn switch to VENTILATE, wait 2 minutes, then reset to COOL. **NOTE** Allow 30 seconds time delay before compressor starts.
Step 3. Check for loose or damaged electrical connectors, or damaged wires in wiring harnesses.	Tighten or replace connector or repair damaged wires.
Step 4. Check operation of time delay relay (TD1).	Check that relay is functioning. Replace if defective per para. 4-36.
Step 5. Check operation of compressor relay (K9).	Check relay. Replace if defective per para 4-39.

Table 4-3. Unit Troubleshooting.

MALFUNCTION TEST OR INSPECTION CORRECTIVE ACTION	
2. EVAPORATOR AND CONDENSER FANS BOTH RUN, BUT COMPRESSOR DOES NOT START AFTER TIME DELAY. (Continued).	
Step 6.	Check operation of compressor (B1).
	If compressor is not operating, contact your supervisor.
3. COMPRESSOR STARTS NORMALLY, BUT COMPRESSOR CIRCUIT BREAKER SOON TRIPS.	
Step 1.	Check to be sure fabric cover is rolled up.
	Roll up and secure fabric cover.
Step 2.	Check to be sure there is no restriction to air flow through condenser section.
	Clean all obstructions from condenser inlet, outlet, and condenser coil.
Step 3.	Check to be sure that condenser fan is operating.
	Inspect fan motors. Replace if defective per para. 4-45.
Step 4.	Check to be sure that condenser damper is operating properly.
	If door is not functioning, repair door per para. 4-44.
	If door is not jammed or defective, notify your supervisor.
4. REDUCED COOLING CAPACITY.	
Step 1.	Check that all doors, windows, and other openings in the room or enclosure are tightly closed.
	Tightly close all openings.
Step 2.	Check that louvers, conditioned air discharge guard, and intake return. air guard are properly adjusted. (Must be open).
	Adjust louvers properly.

Table 4-3. Unit Troubleshooting. (Continued).

MALFUNCTION TEST OR INSPECTION CORRECTIVE ACTION	
4. REDUCED COOLING CAPACITY. (Continued).	
Step 3.	Check to be sure that excessive hot, outside air is not being introduced through the fresh air dampers. Fully close damper; then, if condition improves, adjust properly.
Step 4.	Check to be sure that condenser air inlet and outlet are not obstructed. Remove obstructions.
Step 5.	Check air flow out of evaporator louver. If air volume is low: Adjust evaporator intake louvers. Clean or replace air conditioner filter. Clean evaporator coil.
Step 6.	Check to be sure that condenser damper is operating properly. If damper door is defective, repair per para. 4-44. If damper is not defective, but not operating, notify your supervisor.
Step 7.	Check operation of temperature selector. Set control at maximum DECREASE then, if condition improves, adjust properly. If conditions do not improve, test mode selector switch per para. 4-43. Replace defective mode selector switch per para. 4-43.
Step 8.	Check operation of temperature control thermostat switch. Inspect sensing bulb and capillary for damage or leakage. Replace switch if damage or leakage is found per para. 4-43. Test temperature control thermostat switch. Replace defective switch per para. 4-43.

Table 4-3. Unit Troubleshooting.

MALFUNCTION TEST OR INSPECTION CORRECTIVE ACTION
Step 9. With unit operating in COOL mode, check the condition of refrigerant in sight glass. If color is yellow or a light hue of chartreuse, or if numerous bubbles appear, turn air conditioner OFF. Contact your supervisor.
5. REDUCED HEATING CAPACITY.
Step 1. Check that all doors, windows and other openings in the room or enclosure are tightly closed. Tightly close all openings.
Step 2. If control panel is remotely located, check to be sure that sensing bulb is not near a light bulb or some type of heat producing equipment. Turn off or move heat source, or move the remote control panel per para. 4-8.
Step 3. Check that the evaporator inlet and outlet louvers are properly adjusted. Adjust louvers properly.
Step 4. Check to be sure that excessive cold, outside air is not being introduced through the fresh air damper. Fully close damper then, if condition improves, adjust properly.
Step 5. Check air flow out of evaporator outlet louver. If air flow volume is low: a. Adjust intake (return air) guard louvers. b. Clean and service or replace conditioned air filter element. c. Clean evaporator coil.

Table 4-3. Unit Troubleshooting. (Continued).

MALFUNCTION TEST OR INSPECTION CORRECTIVE ACTION	
5. REDUCED HEATING CAPACITY. (Continued).	
Step 6.	Check operation of temperature control thermostat switch (S1). Set control to fully decrease then, if condition improves, adjust properly. If condition does not improve, replace temperature control thermostat switch per para. 4-43.
Step 7.	Check operation of heater thermostat cut-out switch (S3). Test and replace defective thermostat cut-out switch per para. 4-26.
Step 8.	Check individual heating elements (HR1 through HR6). Replace defective heating element per para. 4-27.
Step 9.	Check for loose or damaged wires and terminals. **WARNING** Disconnect input power before performing internal electrical troubleshooting. Voltages used can be deadly. Tighten loose or damaged terminals. Repair or replace damaged wires.
6. NO HEAT IN EITHER HI HEAT OR LO HEAT MODE.	
Step 1.	Check for loose or damaged electrical connectors, or damaged wires in wiring harnesses. **WARNING** Disconnect input power before performing internal electrical troubleshooting. Voltages used can be deadly. Tighten or replace loose or damaged connectors or repair damaged wires.

Table 4-3. Unit Troubleshooting.

MALFUNCTION TEST OR INSPECTION CORRECTIVE ACTION	
Step 2.	Check operation of heater thermostat cut-out switch (S3). Test and replace defective thermostat cut-out switch per para. 4-26.
Step 3.	Check operation of mode selector switch. Test and replace defective mode selector switch per para. 4-43.
7. HEAT IN HI HEAT MODE, BUT NOT IN LO HEAT MODE.	
Step 1.	Check for loose or damaged electrical connectors, or damaged wires in wiring harnesses. **WARNING** Disconnect input power before performing internal electrical troubleshooting. Voltages used can be deadly. Tighten or replace loose or damaged connectors, or repair damaged wires.
Step 2.	Check operation of heater relay (K1). Test relays. Replace relays if defective per para. 4-39.
Step 3.	Check operation of temperature control thermostat switch (S1). a. Inspect sensing bulb and capillary for damage or leakage. Replace entire temperature control thermostat switch if bulb is damaged or leaking per para. 4-43. b. Test switch in temperature control thermostat switch. Replace entire control if defective per para. 4-43.
Step 4.	Check operation of mode selector switch (S3). Test and replace defective switch per para. 4-43.

Table 4-3. Unit Troubleshooting. (Continued).

MALFUNCTION TEST OR INSPECTION CORRECTIVE ACTION
8. CONDENSER FAN MOTOR DOES NOT OPERATE.
WARNING Disconnect input power before performing internal electrical troubleshooting. Voltages used can be deadly.
Step 1. Check for loose or damaged connectors or wires. Tighten or replace loose or damaged connectors, or repair damaged wires.
Step 2. Using wiring diagram Figure 1-4, check electrical connectors at TB2 and individual wires for tightness and continuity. Tighten, repair, or replace as indicated per para. 4-18.
Step 3. Check operation of fan motor relay (K7). Test relay. Replace relay if defective per para. 4-39.
Step 4. Check operation of mode selector switch. Test switch. Replace if defective per para. 4-43.
Step 5. Check operation of fan motor. Test motor. Repair or replace as needed per para. 4-45.
9. EVAPORATOR FAN MOTOR DOES NOT OPERATE.
WARNING Disconnect input power before performing internal electrical troubleshooting. Voltages used can be deadly.
Step 1. Check for loose or damaged wires. Tighten or replace loose or damaged connectors, or repair damaged wires per para. 4-18.

Table 4-3. Unit Troubleshooting.

MALFUNCTION TEST OR INSPECTION CORRECTIVE ACTION
Step 2. Using wiring diagram Figure 1-4, check individual wires for tightness and continuity. Tighten, repair, or replace as indicated. Step 3. Check operation of fan motor relay (K8). Test relay. Replace relay if defective per para. 4-39. Step 4. Check operation of mode selector switch. Test switch. Replace defective switch per para. 4-43. Step 5. Check operation of fan motor. Test motor. Replace per para. 4-32.
10. EXCESSIVELY NOISY OPERATION. **CAUTION** If a knocking or hammering sound is heard when compressor starts, turn mode selector switch to OFF, immediately. Such noise is usually caused by liquid refrigerant in compressor which can seriously damage or destroy compressor. Contact your supervisor. Step 1. Check fans for looseness or damage, and for rotational clearance. Tighten loose fans, adjust rotational clearance, or replace fans per para. 4-30 and 4-47. Step 2. Check all internal components for looseness, vibration, and security. Tighten, adjust, and secure as necessary. If unit is still noisy, notify supervisor.

Section VI. UNIT MAINTENANCE PROCEDURES.

4-17. GENERAL INFORMATION. This section contains the maintenance procedures authorized for the Unit maintenance as defined in the Maintenance Allocation Chart located in Appendix B. Before performing any procedure in this section, use the Unit Troubleshooting procedures to identify and locate the parts on the air conditioner unit requiring maintenance.

4-18. ELECTRICAL WIRING REPAIR GENERAL. Preferred repair methods consist of replacing wires, terminals, connectors, etc., rather than splicing wires, bending ends to form terminals, and other make-shift procedures; although the latter may be appropriate for emergency field repairs. Determine the proper size and length of wire, or the terminal, or connector to be used for replacement by referring to Table 4-4, Wire List, and to the wiring diagram.

a. Soldering Connections. Wire connections must be made mechanically sound before they are soldered; solder alone does not provide sufficient strength to prevent breakage. Joining surfaces of connections to be soldered must be clean and bright. If a separate flux is used, it should conform to soldering flux (Appendix E, item 6) and should be brushed onto the joint before soldering. If an uncored solder is used, it should be a lead-tin solder, (Appendix E, item 1). Wires should always be heated to the point at which the solder will melt completely and flow into all parts of the joint. Excessive build-up solder “gobs” on the joint should be avoided or removed.

b. Insulation Joints. The preferred method of insulating electrical joints is by the use of heat-shrink tubing. To apply, cut a piece of heat-shrink tubing of suitable diameter to a one-inch length for covering joints at terminals or connectors, or to a length about 1/2 inch (1.3 cm) longer than the joint to be insulated, and slide the tubing over the wire before making the joint. After the joint is made, slide the tubing so that it covers the joint, and shrink in place with moderate heat.

c. Splicing Wires. To repair broken or cut wires that are otherwise sound, the mating ends can be stripped and spliced. A commercial butt splice can be crimped onto the end to join them, or a : Western Union wire splice can be made. The latter is made by stripping 1/4 - 1/2 inch (0.6 - 1.3 c,) of insulation from the wire ends, holding the ends parallel and facing opposite directions, then twisting each end around the other wire at least three turns. Solder and apply insulation as described above.

d. Crimping Terminals. To install a terminal on the end of a wire, strip 1/4 - 1/2 inch (0.6 - 1.3 cm) of insulation from the end of the wire, apply a one-inch piece of heat-shrink tubing (if the terminals are of the uninsulated type), and insert wire end into the shank of the terminal. Crimp the shank, and install heat-shrink tubing, if necessary.

Table 4-4. Wire List.

FROM	TERMINAL TYPE	TO	TERMINAL TYPE	AWG WIRE SIZE	LENGTH IN.	LENGTH CM
	Wiring Harness, Heat Sensor - 13229E6538					
S3-4	13214E4036	TB3-7	MS25036-153	14	26.5	67.3
S3-5	13214E4036	TB3-8	MS25036-153	14	26.5	67.3
S3-6	13214E4036	TB3-9	MS25036-153	14	26.5	67.3
	Wiring Harness, Power Supply - 13229E6539					
J18-A	MS3100R24-22P	J17-A	13211E8399C24-22S	10	78.0	198.1
J18-B	MS3100R24-22P	J17-B	13211E8399C24-22S	10	78.0	198.1
J18-C	MS3100R24-22P	J17-C	13211E8399C24-22S	10	78.0	198.1
J18-D	MS3100R24-22P	J17-D	13211E8399C24-22S	10	78.0	198.1
	Wiring Harness, Control Connector - 13229E6540					
J20-A	MS3100R28-9S	J19-A	13211E8399C28-9P	18	78.0	198.1
J20-B	MS3100R28-9S	J19-B	13211E8399C28-9P	14	78.0	198.1
J20-C	MS3100R28-9S	J19-C	13211E8399C28-9P	14	78.0	198.1
J20-D	MS3100R28-9S	J19-D	13211E8399C28-9P	14	78.0	198.1
J20-E	MS3100R28-9S	J19-E	13211E8399C28-9P	14	78.0	198.1
J20-F	MS3100R28-9S	J19-F	13211E8399C28-9P	14	78.0	198.1
J20-G	MS3100R28-9S	J19-G	13211E8399C28-9P	14	78.0	198.1
J20-H	MS3100R28-9S	J19-H	13211E8399C28-9P	18	78.0	198.1
J20-J	MS3100R28-9S	J19-J	13211E8399C28-9P	18	78.0	198.1
J20-K	MS3100R28-9S	J19-K	13211E8399C28-9P	18	78.0	198.1
J20-L	MS3100R28-9S	J19-L	13211E8399C28-9P	18	78.0	198.1
J20-M	MS3100R28-9S	J19-M	13211E8399C28-9P	18	78.0	198.1
	Wiring Harness, TB4, TB3/Junction Box - 13229E6541					
TB4-1	MS25036-153	PX1	13229E6188-2	14	32.5	82.6
TB4-2	MS25036-153	PX2	13229E6188-2	14	32.0	81.3
TB4-3	MS25036-149	PX3	13229E6188-2	14	31.5	80.0
TB4-4	MS25036-149	PX4	13229E6188-2	18	31.0	78.7
TB4-5	MS25036-149	PX5	13229E6188-2	18	30.5	77.5
TB4-6	MS25036-153	PX6	13229E6188-2	14	30.0	76.2
TB3-1	MS25036-153	PX7	13229E6188-2	14	21.5	54.6
TB3-2	MS25036-153	PX8	13229E6188-2	14	22.0	55.9
TB3-3	MS25036-153	PX9	13229E6188-2	14	22.5	57.2
TB3-4	MS25036-153	PX10	13229E6188-2	14	23.0	58.4
TB3-5	MS25036-153	PX11	13229E6188-2	14	23.5	59.7
TB3-6	MS25036-153	PX12	13229E6188-2	14	24.0	61.0

Table 4-4. Wire List

FROM	TERMINAL TYPE	TO	TERMINAL TYPE	AWG WIRE SIZE	LENGTH IN.	LENGTH CM
	Wining Harness, Junction Box/Control Module - 13229E6542					
TB2-3		P8-A			50.0	127.0
TB2-5		P8-M			49.7	126.2
TB2-6		P8-L			49.4	125.5
TB2-7		P8-H			49.1	124.7
TB2-10		P8-J			48.8	124.0
TB2-11		P8-K			48.5	123.2
K1-L3		P8-F			49.5	125.7
K1-L2		P8-E			49.1	124.7
K1-L1		P8-G			48.7	123.7
TB5-1		P8-B			53.0	134.6
TB5-2		P8-D			53.0	134.6
TB5-3		P8-C			53.0	134.6
	Wiring Harness, Junction Box/Condenser Fan - 13229E6543					
K1-T3	MS25036-153	SX-9	13229E6187-2	14	73.0	185.4
K1-T2	MS25036-153	SX-8	13229E5187-2	14	72.5	184.2
K1-T1	MS25036-153	SX-7	13229E6187-2	14	72.0	182.9
K7-T3	MS25036-153	B2-T3	13229E6187-2	14	68.5	174.0
K7-T2	MS25036-153	B2-T2	13229E6187-2	14	68.0	172.7
K7-T1	MS25036-153	B2-T1	13229E6187-2	14	67.5	171.5
K9-T3	MS25036-156	P3-F	MS3106R24-11S	10	42.0	106.7
K9-T2	MS25036-156	P3-E	MS3106R24-11S	10	41.5	105.4
K9-T1	MS25036-156	P3-D	MS3106R24-11S	10	41.0	104.1
K9-L3	MS25036-149	P3-H	MS3106R24-11S	18	38.0	96.5
K9-L2	MS25036-149	P3-G	MS3106R24-11S	18	37.5	95.3
TB2-1	13229E6187-1	SX-5	MS25036-102	18	68.5	174.0
TB2-3	13229E6187-1	L1-2	MS25036-102	18	57.2	145.3
TB2-4	13229E6187-1	SX-4	MS25036-102	18	67.3	170.9
TB2-4	MS25036-102	P3-A	MS3106R25-11S	18	41.3	104.9
TB2-5	MS25036-102	P3-B	MS3106R24-11S	18	41.0	104.1
TB2-7	13229E6187-1	S6-1	MS25036-102	18	45.7	116.1
TB2-8	13229E6187-1	S5-2	MS25036-102	18	45.3	115.1
TB2-8	13229E6187-1	S9-1	MS25036-102	18	63.8	162.1
TB2-9	13229E6187-1	S9-2	MS25036-102	18	63.5	161.3
TB2-10	13229E6187-1	L1-1	MS25036-102	18	54.6	138.7
K8-T1	MS25036-153	SX-1	13229E6187-2	14	61.0	154.9
K8-T2	MS25036-153	SX-2	13229E6187-2	14	60.5	153.7
K8-T3	MS25036-153	SX-3	13229E6187-2	14	60.0	152.4
TB5-1	MS25036-153	SX-10	1322936187-2	14	64.0	162.6

Table 4-4. Wire List

FROM	TERMINAL TYPE	TO	TERMINAL TYPE	AWG WIRE SIZE	LENGTH IN.	LENGTH CM
TB5-2	MS25036-153	SX-11	13229E6187-2	14	64.0	162.6
TB5-3	MS25036-153	SX-12	13229E6187-2	14	64.0	162.6
E1	MS25036-112	B2-GND	13229E6187-2	14	64.5	163.8
E1	MS25036-112	SX-6	13229E6187-2	14	66.5	168.9
	Wiring Harness, Power Input - 13229E6559					
J1-A	MS3100R24-22P	TB1-1	MS25036-156	10	42.5	108.0
J1-B	MS3100R24-22P	TB1-2	MS25036-156	10	42.5	108.0
J1-C	MS3100R24-22P	TB1-3	MS25036-156	10	42.5	108.0
J1-D	MS3100R24-22P	E1	MS25036-156	10	45.5	115.6

4-19. FABRIC COVER.

This Task Covers:

a. Removal b. Inspection c. Installation

Initial Setup:

Tools Required
Tool kit, Refrigeration

Material's Required
Tape, Duct (Appendix E, item 22)

Equipment Condition
Air conditioner shut down and cool.

a. Removal.

(1) Rotate two turn buttons (1) and roll down fabric cover (2).

(2) Remove six screws (3), six lock washers (4), and twelve flat washers (5) attaching cover (2) to top of unit.

(3) Remove fifteen screws (6), fifteen lock washers (7), and fifteen flat washers (8) attaching fabric cover (2) to side of unit.

(4) Remove four screws (9), four lock washers (10), and four flat washers (11) attaching fabric cover (2) to bottom of unit.

(5) Remove fabric cover (2) from unit.

b. Repair.

(1) Repair minor fabric rips, cuts, tears or punctures by applying a patch of duct tape (Appendix E, item 22) to inside surface.

(2) If damage to fabric cover is extensive, replace fabric cover.

c. Installation.

(1) Place fabric cover onto bottom of unit and install four flat washers (11), four lock washers (10), and four screws (9).

(2) Attach fabric cover to side of unit by installing fifteen flat washers (7), fifteen lock washers (6), and fifteen screws (5).

(3) Attach cover to top of unit by installing six flat washers (5), six lock washers (4), and six screws (3).

(4) Roll up fabric cover (2), slide cover under two turn buttons (1) and then rotate turn buttons.

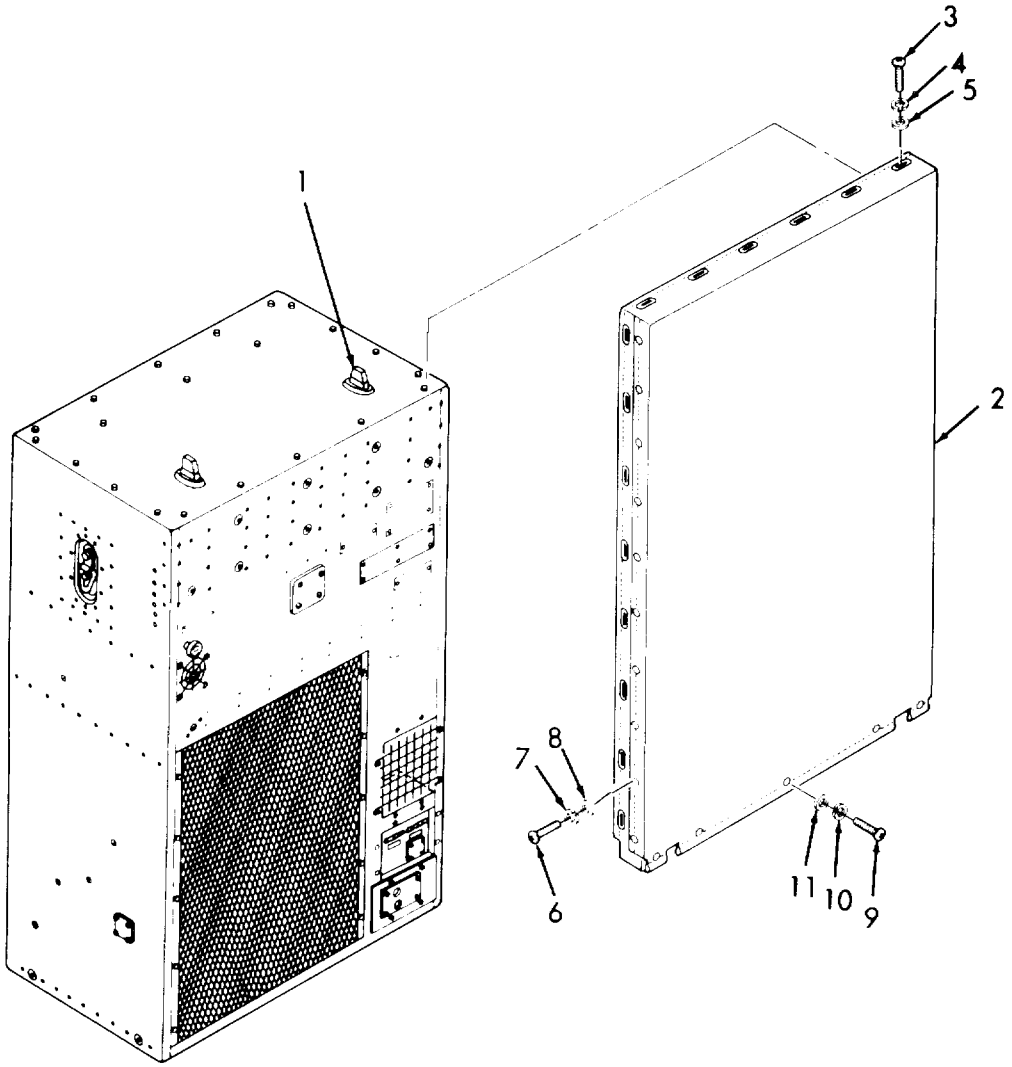

Figure 4-5. Fabric Cover.

4-20. METAL COVERS/PANELS.

This Task Covers:

a. Removal b. Repair c. Installation

Initial Setup:

Tools Required
Tool kit, Refrigeration

Material's Required
None

Euuipment Condition
Air conditioner shut down and cool.
Covers removed. (See para. 3-4).

a. Removal.

(1) Remove twenty-one screws (1) and top cover (2).

(2) Loosen four panel screws (3) tilt top of front lower panel (4) forward, and remove panel.

(3) Remove two turn buttons (5) from top panel (2).

b. Repair.

(1) Repair covers and panels by straightening bent metal.

(2) Replace turn buttons if damaged in any way.

(3) If covers or panel damage is extensive, replace.

c. Installation.

(1) Install two turn buttons (5) to top panel (2).

(2) Install front lower panel (4) and tighten four panel screws (3).

(3) Install top cover (2) and twenty-one screws (1).

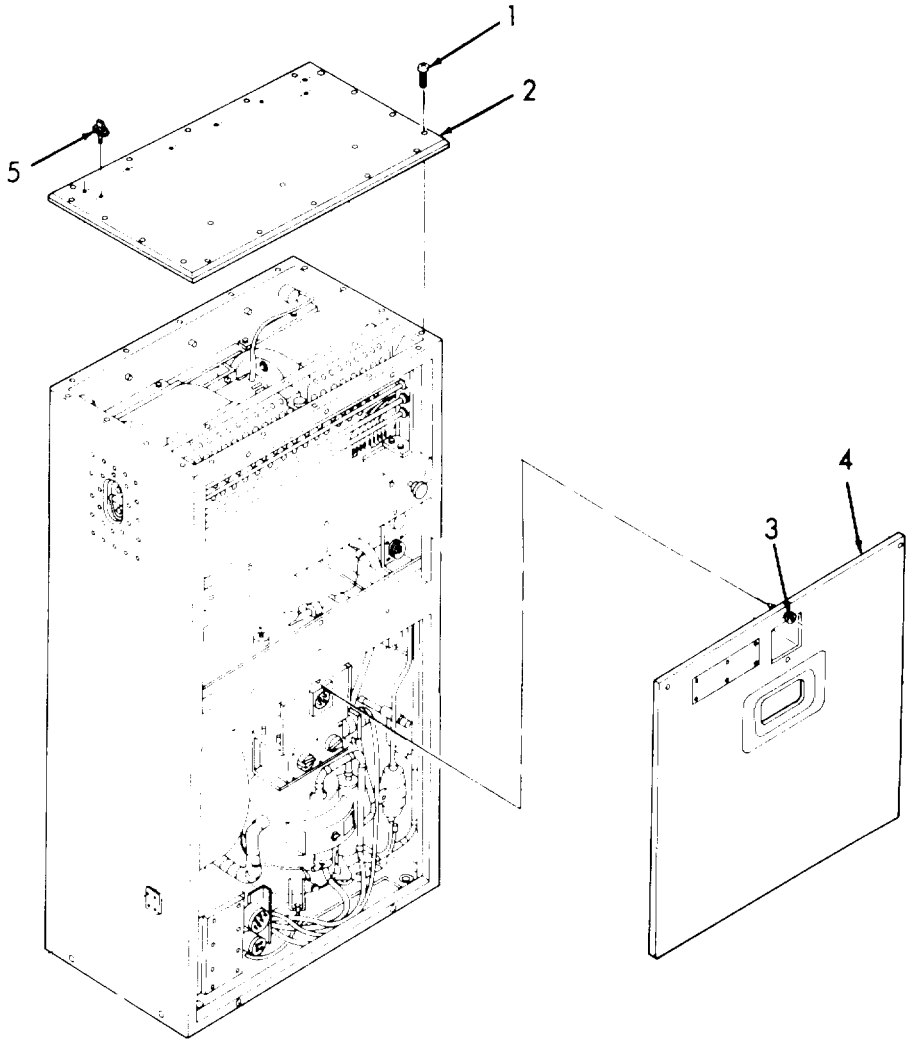

Figure 4-6. Metal Covers and Panels.

4-21. CONDENSER AIR OUTLET GUARD.

This Task Covers:

a. Removal b. Installation

Initial Setup:

Tools Required
Tool kit, Refrigeration

Material's Required
None

Equipment Condition
Air conditioner shut down and cool.

a. Removal.

Remove four screws (1), four lock washers (2), four flat washers (3), and condenser air outlet guard (4).

b. Installation.

Install condenser air outlet guard (4), four flat washers (3), four lock washers (2), and four screws (1).

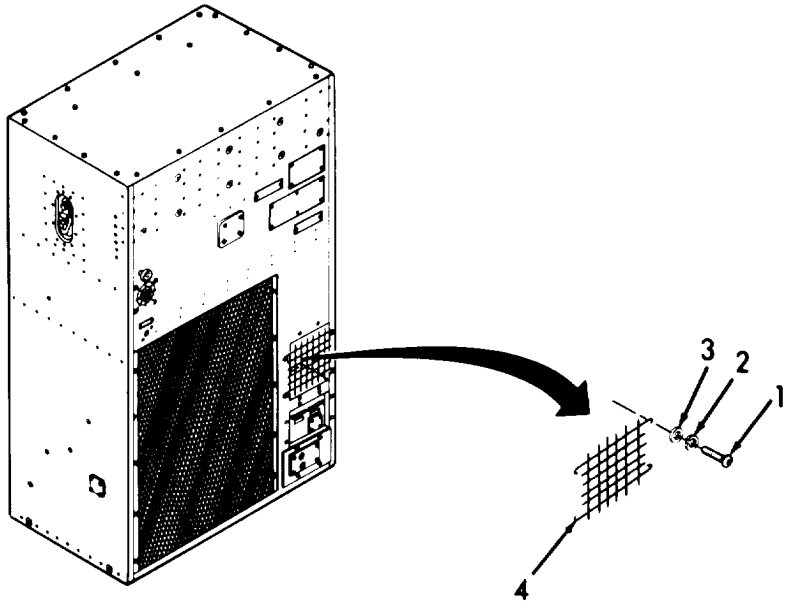

Figure 4-7. Condenser Air Outlet Guard.

4-22. FRESH AIR GUARD AND FILTER.

This Task Covers:

a. Removal b. Servicing c. Installation

Initial Setup:

Tools Required
Tool kit, Refrigeration

Material's Required
Mild soap (Appendix E, item 15)

Equipment Condition
Air conditioner shut down and cool.

a. Removal.

(1) Remove four screws (1), four lock washers (2), four flat washers (3), and fresh air guard (4).

(2) Remove fresh air filter (5) from unit.

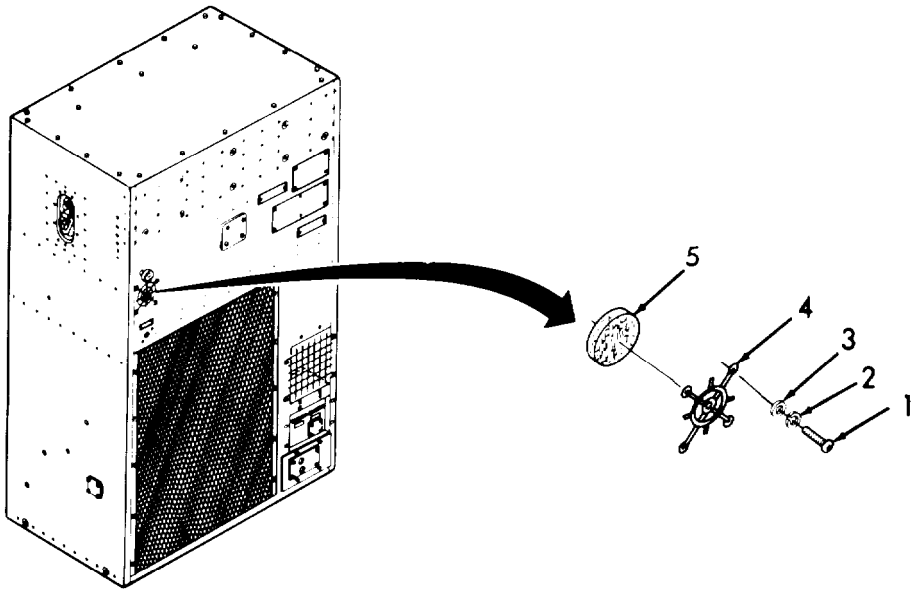

Figure 4-8. Fresh Air Guard and Filter.

b. Servicing.

(1) Wash filter thoroughly with mild soap (Appendix E, item 15) and water solution.

(2) Drain excess water from filter and allow to dry.

c. Installation.

(1) Install fresh air filter (5) to unit.

(2) Install fresh air guard (4), four flat washers (3), four lock washers (2), and four screws (1).

4-23. FILTER, AIR CONDITIONING.

This Task Covers:

a. Removal b. Servicing c. Installation

Initial Setup:

Tools Required
Tool kit, Refrigeration

Material's Required
Mild soap (Appendix E, item 15)

Equipment Condition
Air conditioner shut down and cool.
Intake (return air) guard removed. (See para. 3-5).

a. Removal.

(1) Remove three screws (1), three lock washers (2), three flat washers (3), and three retainers (4).

(2) Remove air conditioning filter (5) from unit.

b. Servicing

(1) Clean filter thoroughly with mild soap (Appendix E, item 15) and water solution.

(2) Drain excess water and allow filter to dry.

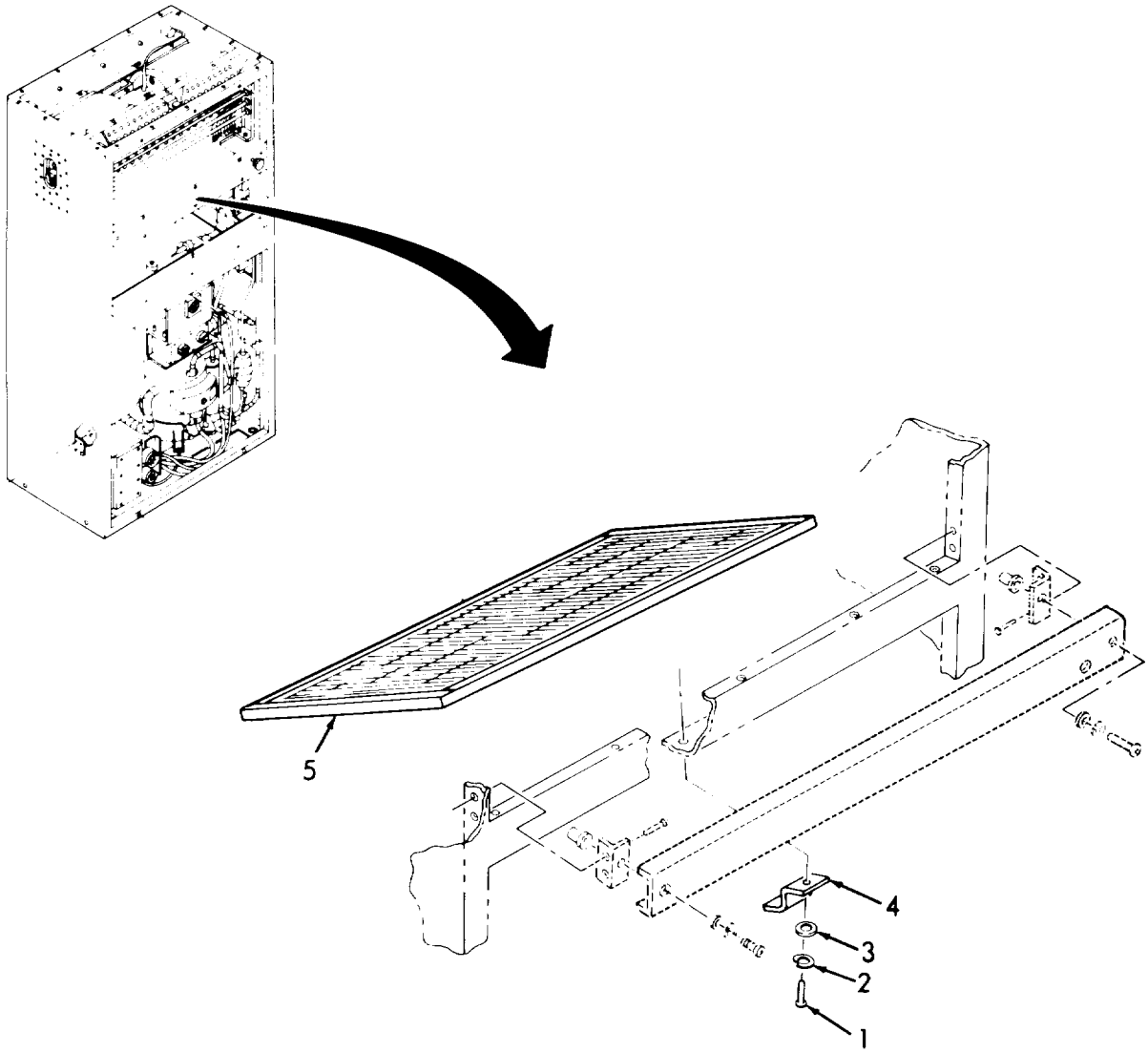

Figure 4-9. Filter, Air Conditioning.

c. **Installation.**

(1) Install air conditioning filter (5) into unit. Be sure back edge of filter lays on top of filter bracket.

(2) Install three retainers (4), three flat washers (3), three lock washers (2), and three screws (1).

(3) Install intake (return air) guard. (See para. 3-5).

4-24. INFORMATION PLATES.

This Task Covers:

a. Removal b. Inspection c. Installation

Initial Setup:

Tools Required
Tool kit, Refrigeration

Material's Required
None

Equipment Condition
Air conditioner shut down and cool.

a. Removal.

(1) Remove six rivets (1) and information plate (2) from front of unit.

(2) Remove twenty-four rivets (3) and information plates (4), (5), (6), (7), (8), (9), (10) and (11).

(3) Remove set screw (12) and mode select knob (13).

(4) Remove set screw (14) and temperature control knob (15).

CAUTION
Damage to electrical wiring can occur if drill bit enters too deeply into control module. Be sure to allow drill to only enter .12 inch into control module.

(5) Remove six rivets (16) and control module information plate (17).

b. Installation.

(1) Install control module information plate (17) and six rivets (16).

CAUTION
Damage to electrical wiring can occur if drill bit enters too deeply into control module. Be sure to allow drill to only enter .12 inch into control module.

(2) Install temperature control knob (15) and set screw (14).

(3) Install mode select knob (13) and set screw (12).

(4) Install information plates (11), (10), (9), (8), (7), (6), (5) and (4), and install twenty-four rivets (3).

(5) Position information plate (2) onto front of unit and install six rivets (1).

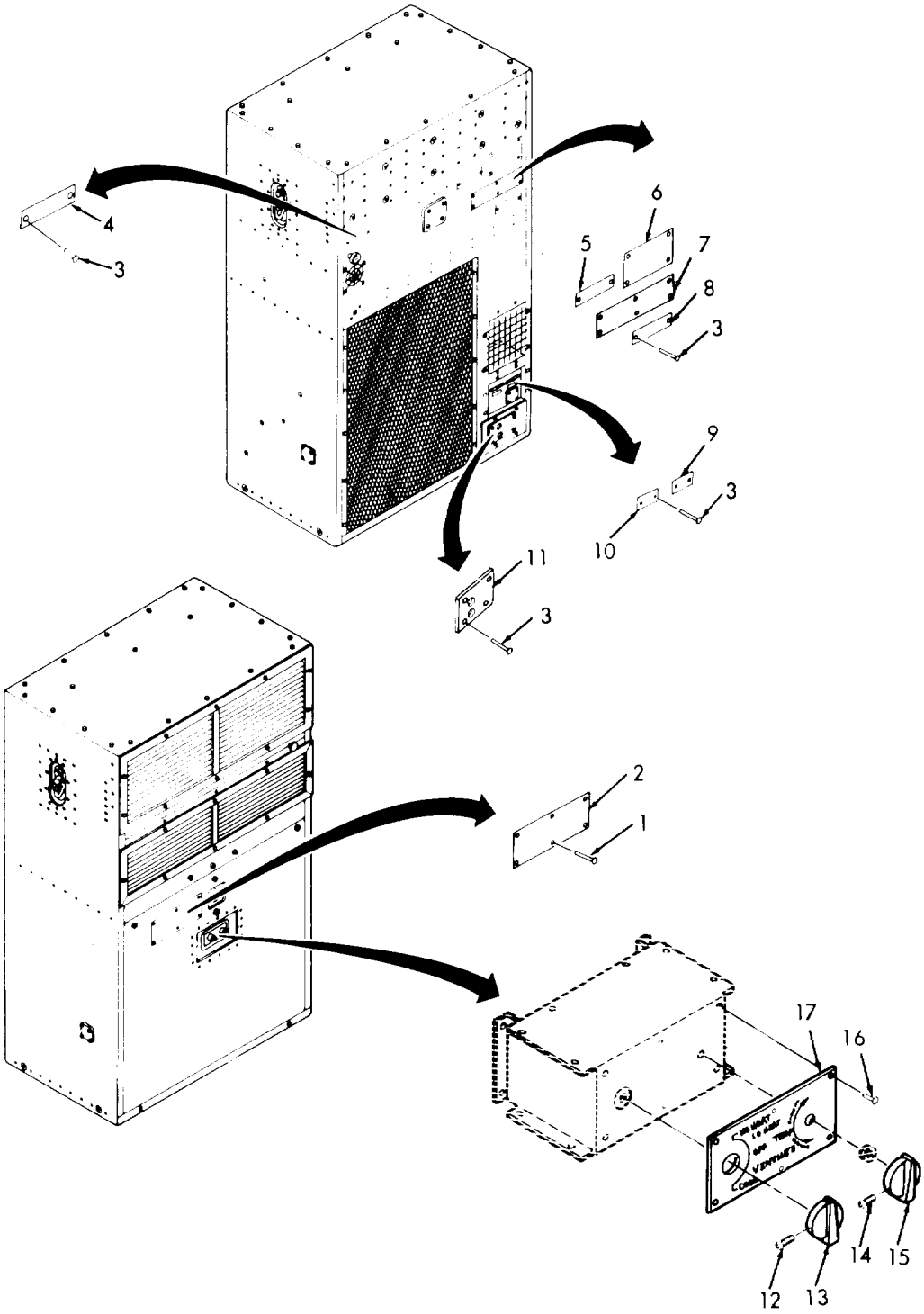

Figure 4-10. Information Plates.

4-25. HEATER DIFFUSER.

This Task Covers:

a. Removal b. Installation

Initial Setup:

Tools Required
Tool kit, Refrigeration

Material's Required
None

Equipment Condition
Air conditioner shut down and cool.
Conditioned air discharge guard removed. (See para. 3-5).
Top panel removed. (See para. 4-20).

WARNING

HIGH VOLTAGE
is used in operation of this equipment,

DEATH ON CONTACT
may result if personnel fail to observe safety precautions.

Never work on electrical equipment unless there is another person nearby who is familiar with operation and hazards of equipment and who is competent in administering first aid. When technician is aided by operators, he must warn them about dangerous areas.

Whenever possible, input power supply to equipment must be shut off before beginning work. Take particular care to ground every capacitor likely to hold a dangerous charge. When working inside, after power has been turned off, always ground every part before touching it. Be careful not to contact high voltage connections of 208 volts ac input when installing or operating this equipment.

Whenever nature of operation permits, keep one hand away from equipment to reduce hazard to current flowing through vital organs of body. Do Not operate equipment without all guards, louvers, and covers in place and tightly secured.

a. Removal.

(1) Remove two screws (1), two lock washers (2), two flat washers (3), and lift thermostat bracket (4) away from diffuser assembly (5).

(2) Remove two screws (6), two screws (7), two lock washers (8), and two flat washers (9) holding diffuser assembly (5) into unit.

(3) Lift diffuser assembly (5) from unit taking care not to damage heating elements,

(4) Remove eight screws (10) and diffuser (11) from two diffuser brackets (12).

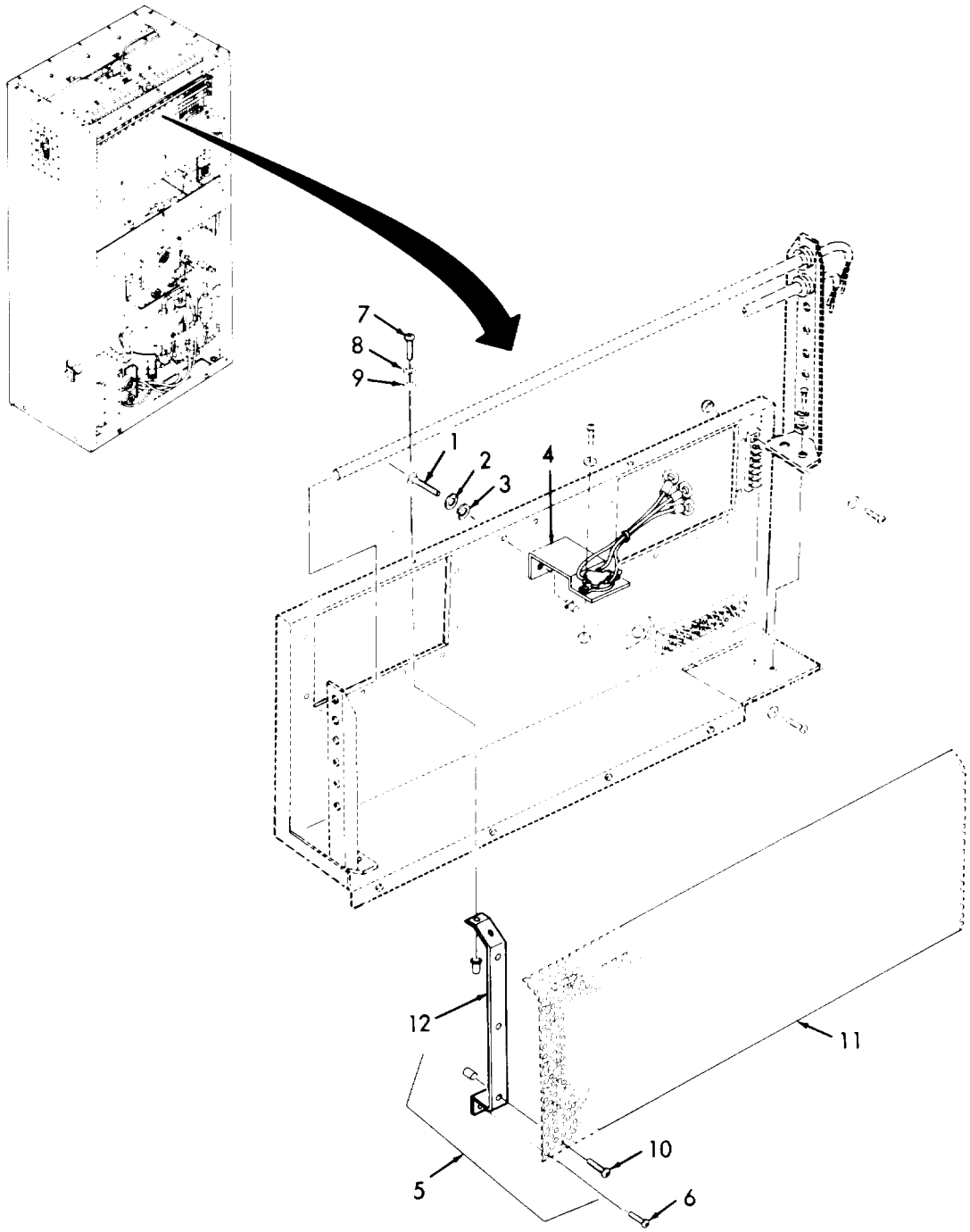

Figure 4-11. Heater Diffuser.

b. Installation.

(1) Install diffuser (11) and eight screws (10) onto two diffuser brackets (12).

(2) Position diffuser assembly (5) into unit taking care not to damage heating elements.

(3) Install two flat washers (9), two lock washers (8), two screws (7), and two screws (6) to attach the diffuser assembly (5) onto the unit.

(4) Install thermostat bracket (4), two flat washers (3), two lock washers (2), and two screws (1).

(5) Install top panel (See para. 4-20).

(6) Install conditioned air discharge guard (See para. 3-5).

4-26. THERMOSTAT CUTOUT.

This Task Covers:

a. Removal b. Test c. Installation

Initial Setup:

Tools Required
Tool kit, Refrigeration

Material's Required
None

Equipment Condition
Air conditioner shut down and cool.
Top panel removed. (See para. 4-20).
Heater diffuser removed. (See para. 4-25).

WARNING

HIGH VOLTAGE
is used in operation of this equipment.

DEATH ON CONTACT
may result if personnel fail to observe safety precautions.

Never work on electrical equipment unless there is another person nearby who is familiar with operation and hazards of equipment and who is competent in administering first aid. When technician is aided by operators, he must warn them about dangerous areas.

WARNING

Whenever possible, input power supply to equipment must be off before beginning work. Take particular care to ground every capacitor likely to hold a dangerous charge. When working inside, after power has been turned off, always ground every part before touching it. Be careful not to contact high voltage connections of 208 volts ac input when installing or operating this equipment.

Whenever nature of operation permits, keep one hand away from equipment to reduce hazard to current flowing through vital organs of body. Do Not operate equipment without all guards, louvers, and covers in place and tightly secured.

a. Removal.

(1) Remove two screws (1), two flat washers (2), two lock nuts (3), and thermostat (4) from bracket (5).

(2) Remove screw (6) and clamp (7).

(3) Tag and disconnect thermostat wires from terminal blobvk TB3.

(4) Remove thermostat (4) from unit.

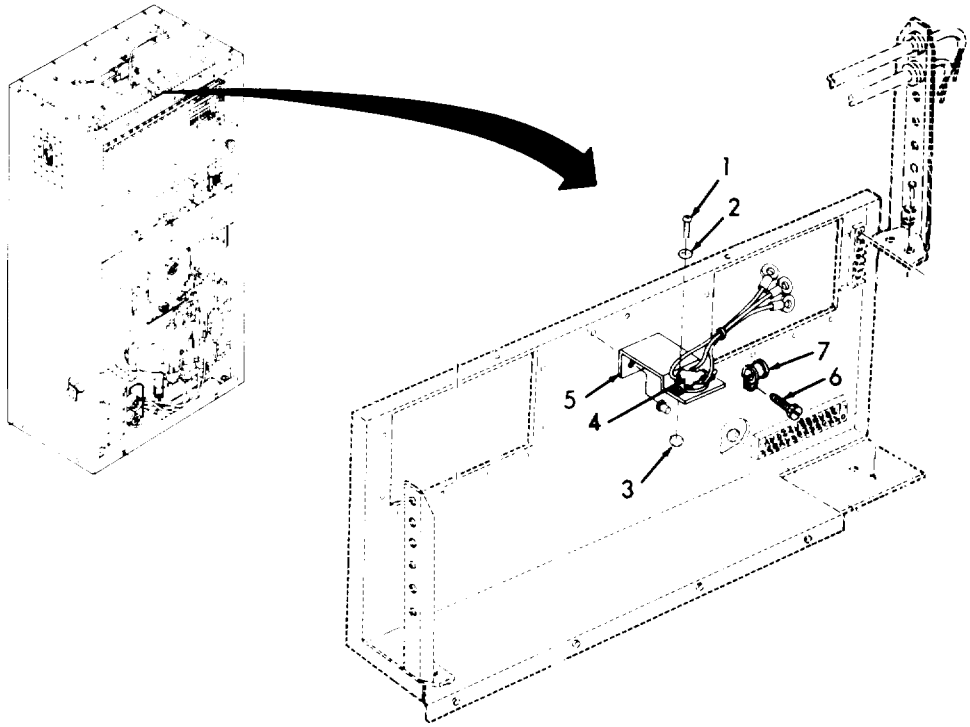

Figure 4-12. Thermostat Cutout.

b. Test.

(1) Using a multimeter check that circuits are closed across terminals 4 and 5, 5 and 6, and 4 and 6.

(2) Discontinuity across any terminals indicates a defective thermostat and it must be replaced.

c. Installation.

(1) Position thermostat (4) onto unit.

(2) Connect thermostat wires to terminal block TB3.

(3) Install clamp (7) and screw (6).

(4) Install thermostat (4), two lock nuts (3), two flat washers (2), and two screws (1) onto bracket (5).

(5) Install heater diffuser (See para. 4-25).

(6) Install top panel (See para. 4-20).

4-27. HEATING ELEMENTS.

This Task Covers:

a. Removal b. Test c. Installation

Initial Setup:

Tools Required
Tool kit, Refrigeration

Material's Required
None

Equipment Condition
Air conditioner shut down and cool.
Conditioned air discharge guard removed (See para. 3-5).

WARNING

HIGH VOLTAGE
is used in operation of this equipment.

DEATH ON CONTACT
may result if personnel fail to observe safety precautions.

Never work on electrical equipment unless there is another person nearby who is familiar with operation and hazards of equipment and who is competent in administering first aid. When technician is aided by operators, he must warn them about dangerous areas.

Whenever possible, input power supply to equipment must be shut off before beginning work. Take particular care to ground every capacitor likely to hold a dangerous charge. When working inside, after power has been turned off, always ground every part before touching it. Be careful not to contact high voltage connections of 208 volts ac input when installing or operating this equipment.

Whenever nature of operation permits, keep one hand away from equipment to reduce hazard to current flowing through vital organs of body. Do Not operate equipment without all guards, louvers, and covers in place and tightly secured.

a. Removal.

(1) Remove four screws (1), four lock washers (2), and four flat washers (3).

(2) Slide heating element brackets (4) and (5) apart to disengage left bracket (5) from heating elements (6).

(3) Remove heating element bracket (5) from unit.

(4) Tag and disconnect all heating element wires from terminal block TB3.

(5) Remove heating elements (6) and heating element bracket (4) from unit as an assembly.

(6) On each heating element, remove nut (7), lock washer (8), flat washer (9), and insulator (10) and then remove heating elements (6) from bracket (4).

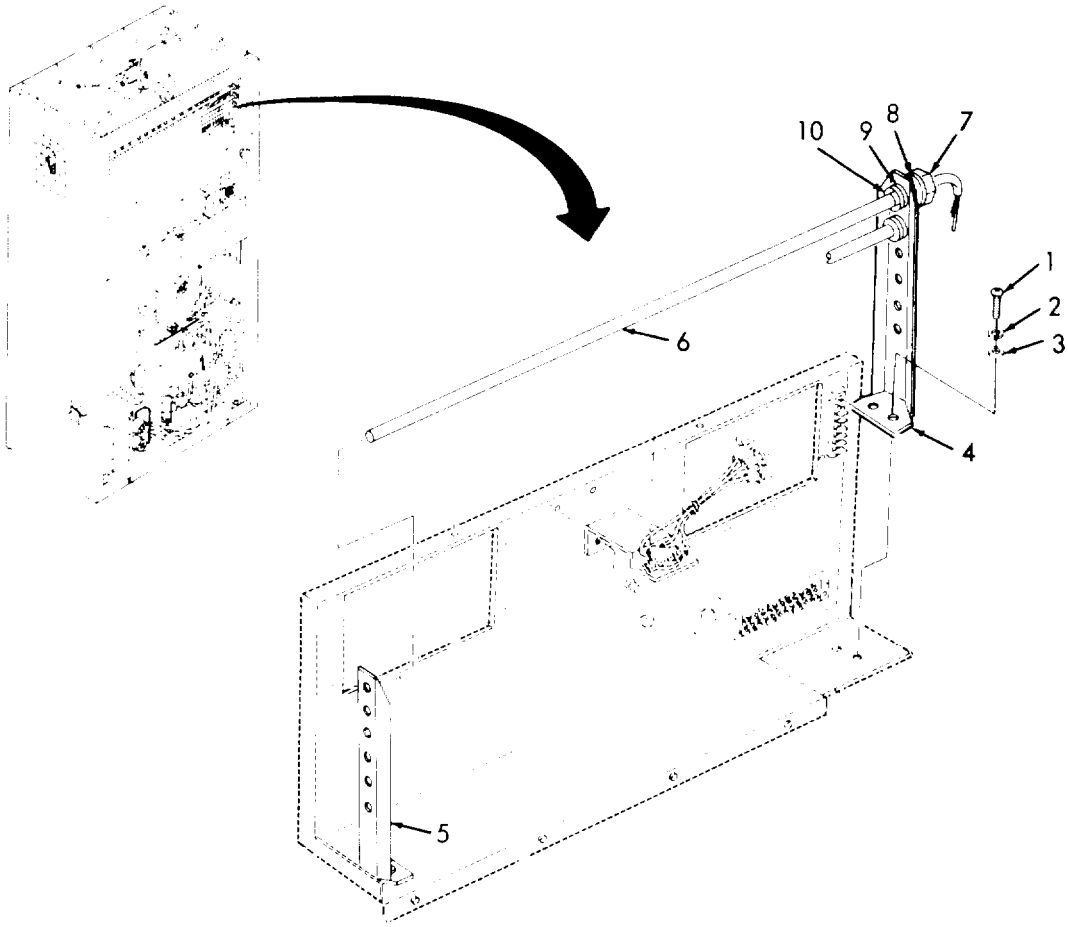

Figure 4-13. Heating Elements.

b. Test.

(1) Test each heating element for continuity between two wires on element.

(2) Discontinuity between heating element wires indicates a defective element and it must be replaced.

c. Installation.

(1) Place heating elements (6) on bracket (4), and install insulator (10), flat washer (9), lock washer (8), and nut (7) onto each heating element.

(2) Install as an assembly heating element bracket (4) and heating elements (6).

(3) Connect all heating element wires to terminal block TB3 and remove tags.

(4) Attach heating element bracket (4) to unit.

(5) Attach left bracket (5) to heating elements (6) and then slide heating element brackets (4) and (5) together.

(6) Install four flat washers (3), four lock washers (2), and four screws (1).

(7) Install conditioned air discharge guard (See para. 3-5).

4-28. TERMINAL BOARD (TB3).

This Task Covers:

a. Removal

b. Installation

Initial Setup:

Tools Required

Tool kit, Refrigeration

Material's Required

None

Equipment Condition

Air conditioner shut down and cool.
Conditioned air discharge guard removed (See para. 3-5).

WARNING

HIGH VOLTAGE
is used in operation of this equipment.

DEATH ON CONTACT
may result if personnel fail to observe safety precautions.

Never work on electrical equipment unless there is another person nearby who is familiar with operation and hazards of equipment and who is competent in administering first aid. When technician is aided by operators, he must warn them about dangerous areas.

Whenever possible, input power supply to equipment must be shut off before beginning work. Take particular care to ground every capacitor likely to hold a dangerous charge. When working inside, after power has been turned off, always ground every part before touching it. Be careful not to contact high voltage connections of 208 volts ac input when installing or operating this equipment.

Whenever nature of operation permits, keep one hand away from equipment to reduce hazard to current flowing through vital organs of body. Do Not operate equipment without all guards, louvers, and covers in place and tightly secured.

a. Removal.

(1) Tag and disconnect all wires connected to board terminal TB3 (1).

(2) Remove four screws (2), four lock nuts (3), four lock washers (4), and terninal board TB3 (1).

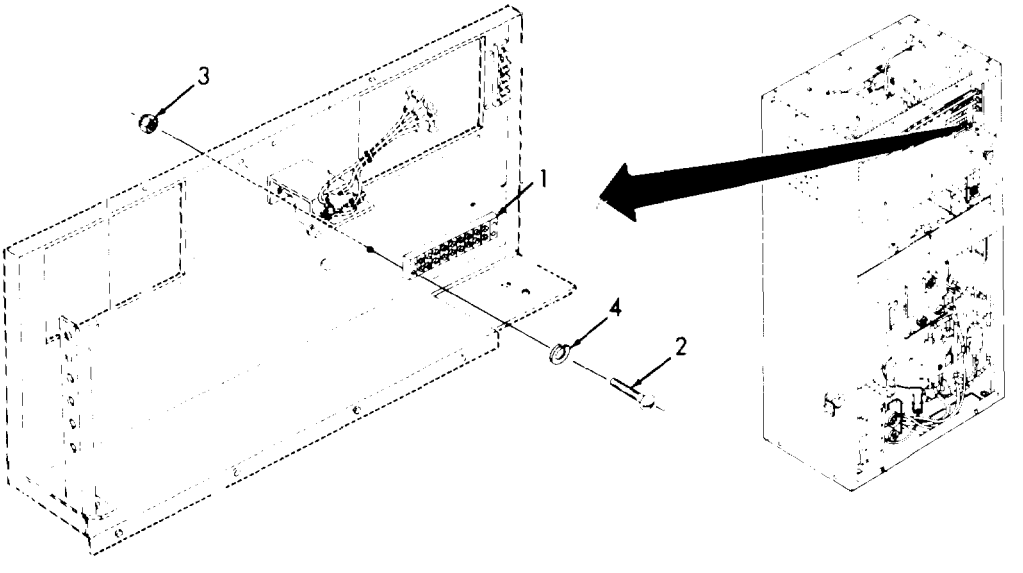

Figure 4-14. Terminal Board (TB3).

b. Installation.

(1) Install terminal board TB3 (1), four lock washers (4), four lock nuts (3), and four screws (2).

(2) Connect all wires to terminal board TB3 (1) and remove tags.

(3) Condition air discharge guard installed. (See para. 3-5).

4-29. EVAPORATOR FAN ASSEMBLY.

This Task Covers:

a. Removal

b. Installation

Initial Setup:

Tools Required

Tool kit, Refrigeration

Material's Required

None

Equipment Condition

Air conditioner shut down and cool.
Top panel removed (See para. 4-20).
Conditioned air discharge guard removed (See para. 3-5).
Heater diffuser removed (See para. 4-25).

WARNING

HIGH VOLTAGE
is used in operation of this equipment.

DEATH ON CONTACT
may result if personnel fail to observe safety precautions.

Never work on electrical equipment unless there is another person nearby who is familiar with operation and hazards of equipment and who is competent in administering first aid. When technician is aided by operators, he must warn them about dangerous areas.

Whenever possible, input power supply to equipment must be shut off before beginning work. Take particular care to ground every capacitor likely to hold a dangerous charge. When working inside, after power has been turned off, always ground every part before touching it. Be careful not to contact high voltage connections of 208 volts ac input when installing or operating this equipment.

WARNING

Whenever nature of operation permits, keep one hand away from equipment to reduce hazard to current flowing through vital organs of body. Do Not operate equipment without all guards, louvers, and covers in place and tightly secured.

a. Removal.

(1) Tag and disconnect all evaporator fan wires connected to terminal on cabinet frame,

(2) Remove twelve screws (1), twelve lock washers (2), and twelve flat washers (3).

(3) Remove six screws (4), six lock washers (5), and six lock nuts (6) holding evaporator fan assembly (7) to cabinet.

(4) Remove evaporator fan assembly (7) from unit.

(5) Remove four screws (8), four lock washers (9), four flat washers (10), two upper scroll retainer brackets (11) and two lower scroll retainer brackets (12).

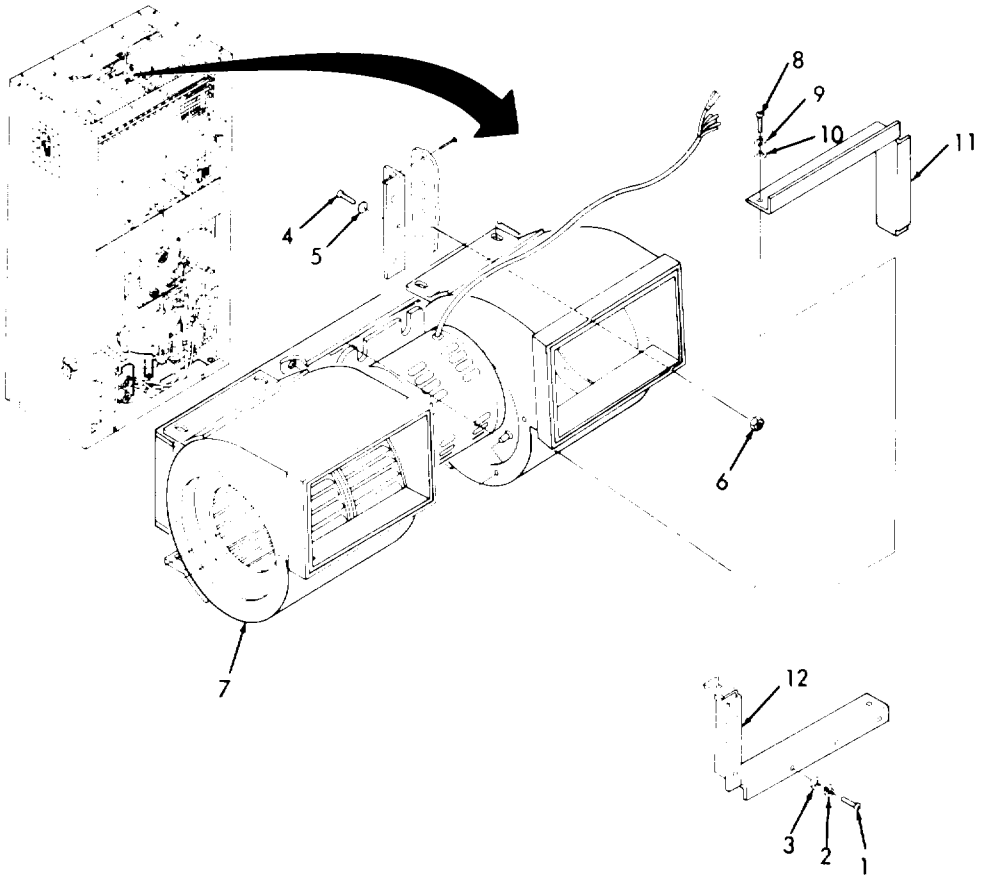

Figure 4-15. Evaporator Fan Assembly.

b. Installation.

(1) Install two lower scroll retainer brackets (12), two upper scroll retainer brackets (11), four flat washers (10), four lock washers (9), and four screws (8).

(2) Place evaporator fan assembly (7) into unit.

(3) Install six lock nuts (6), six lock washers (5), and six screws (4) to attach the evaporator fan assembly (7) to cabinet.

(4) Install twelve flat washers (3), twelve lock washers (2) and twelve screws (1).

(5) Connect all evaporator fan wires to terminal on cabinet frame and remove tags.

(6) Install heater diffuser (See para. 4-25).

(7) Install conditioned air discharge guard (See para. 3-5).

(8) Install top panel (See para. 4-20).

4-30. EVAPORATOR IMPELLER FAN.

This Task Covers:

a. Removal b. Repair c. Installation

Initial Setup:

Tools Required
Tool kit, Refrigeration

Material's Required
None

Equipment Condition
Air conditioner shut down and cool.
Top panel removed (See para. 4-20).
Conditioned air discharge guard removed (See para. 3-5).
Heater diffuser removed (See para. 4-25).
Evaporator fan assembly removed (See para. 4-29).

a. Removal.

(1) Remove five screws (1), five lock washers (2), five flat washers (3), and scroll end plate (4).

(2) Remove two set screws (5) and impeller fan (6) from evaporator fan motor (7).

(3) Repeat for other impeller fan.

b. Repair.

Repair is limited to replacement of damaged impeller fan.

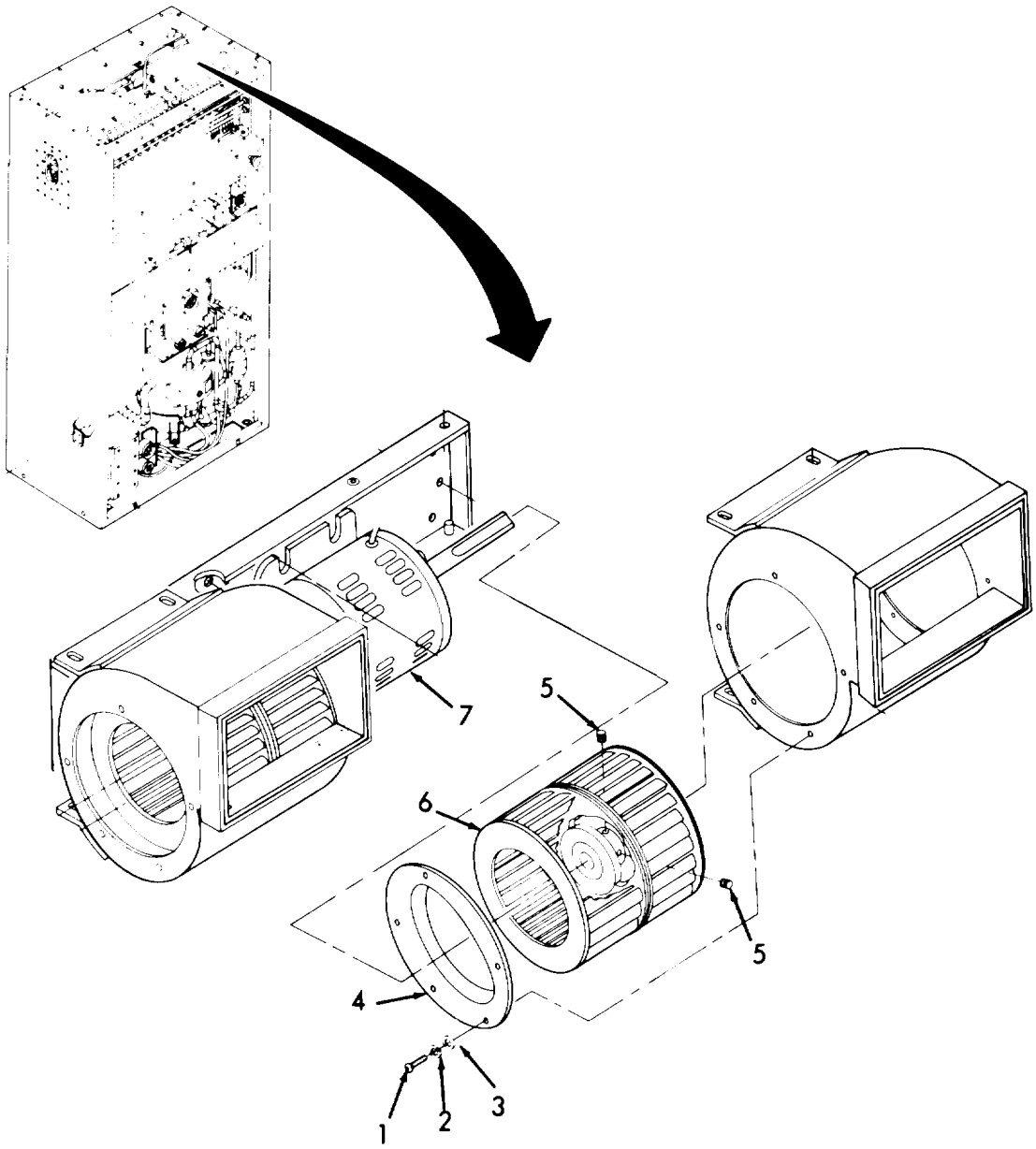

Figure 4-16. Evaporator Impeller Fan.

c. **Installation.**

(1) Install impeller fan (6) and loosely install two set screws (5) to evaporator fan motor (7).

(2) Center impeller fan (6) in scroll and tighten two set screws (5).

(3) Install scroll end plate (4), five flat washers (3), five lock washers (2), and five screws (1).

(4) Repeat for other impeller fan.

(5) Install evaporator fan assembly (See para. 4-29).

(6) Install heater diffuser (See para. 4-25).

(7) Install conditioned air discharge guard (See para. 3-5).

(8) Install top panel (See para. 4-20).

4-31. EVAPORATOR SCROLLS.

This Task Covers:

a. Removal b. Repair c. Installation

Initial Setup:

Tools Required

Tool kit, Refrigeration

Material's Required

None

Equipment Condition

Air conditioner shut down and cool.
Top panel removed (See para. 4-20).
Conditioned air discharge guard removed (See para. 3-5).
Heater diffuser removed (See para. 4-25).
Evaporator fan assembly removed (See para. 4-29).
Evaporator impeller fans removed (See para. 4-30).

a. **Removal.**

(1) Remove two screws (1), two lock washers (2), and two flat washers (3).

(2) Remove five screws (4), five lock washers (5), five flat washers (6), and scroll end plate (7).

(3) Remove scroll (8) from evaporator fan assembly (9).

(4) Repeat for other side.

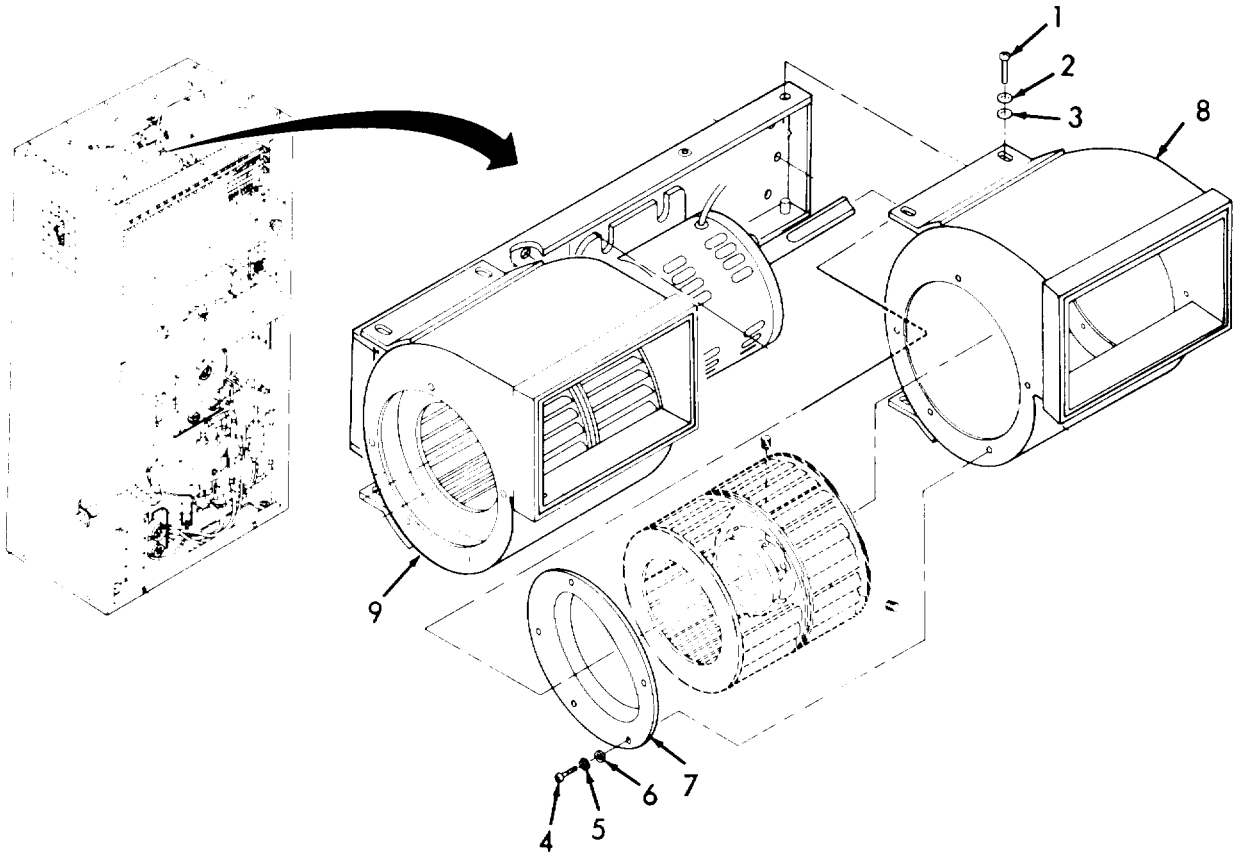

Figure 4-17. Evaporator Scrolls.

b. Repair.

Repair is limited to replacement of the scroll.

c. Installation.

(1) Place scroll (8) onto evaporator fan assembly (9).

(2) Install scroll end plate (7), five flat washers (6), five lock washers (5), and five screws (4).

4-31. EVAPORATOR SCROLLS. - Continued.

c. Installation. - Continued.

(3) Loosely install two flat washers (3), two lock washers (2) and two screws (1).

(4) Adjust scroll (8) until it is centered around evaporator impeller fan.

(5) Tighten two flat washers (3), two lock washers (2), and two screws (1).

(6) Repeat for other side.

(7) Install impeller fans (See para. 4-30).

(8) Install evaporator fan assembly (See para. 4-29).

(9) Install heater diffuser (See para. 4-25).

(10) Install conditioned air discharge guard (See para. 3-5).

(11) Install top panel (See para. 4-20).

4-32. EVAPORATOR FAN MOTOR AND BRACKET.

This Task Covers:

a. Removal b. Repair c. Test d. Installation

Initial Setup:

Tools Required

Tool kit, Refrigeration

Material's Required

None

Equipment Condition

Air conditioner shut down and cool.
Top panel removed (See para. 4-20).
Conditioned air discharge guard removed (See para. 3-5).
Heater diffuser removed (See para. 4-25).
Evaporator fan assembly removed (See para. 4-29).
Evaporator impeller fans removed (See para. 4-30).
Evaporator scrolls removed (See para. 4-31).

a. Removal.

(1) Remove four bolts (1), four flat washers (2), four lock washers (3), four nuts (4), and remove evaporator fan motor (5) from evaporator fan bracket (6).

(2) Remove four bolts (7), four flat washers (8), four lock washers (9), four nuts (10), and evaporator fan bracket (6).

b. Repair.

Repair is limited to replacement of damaged components,

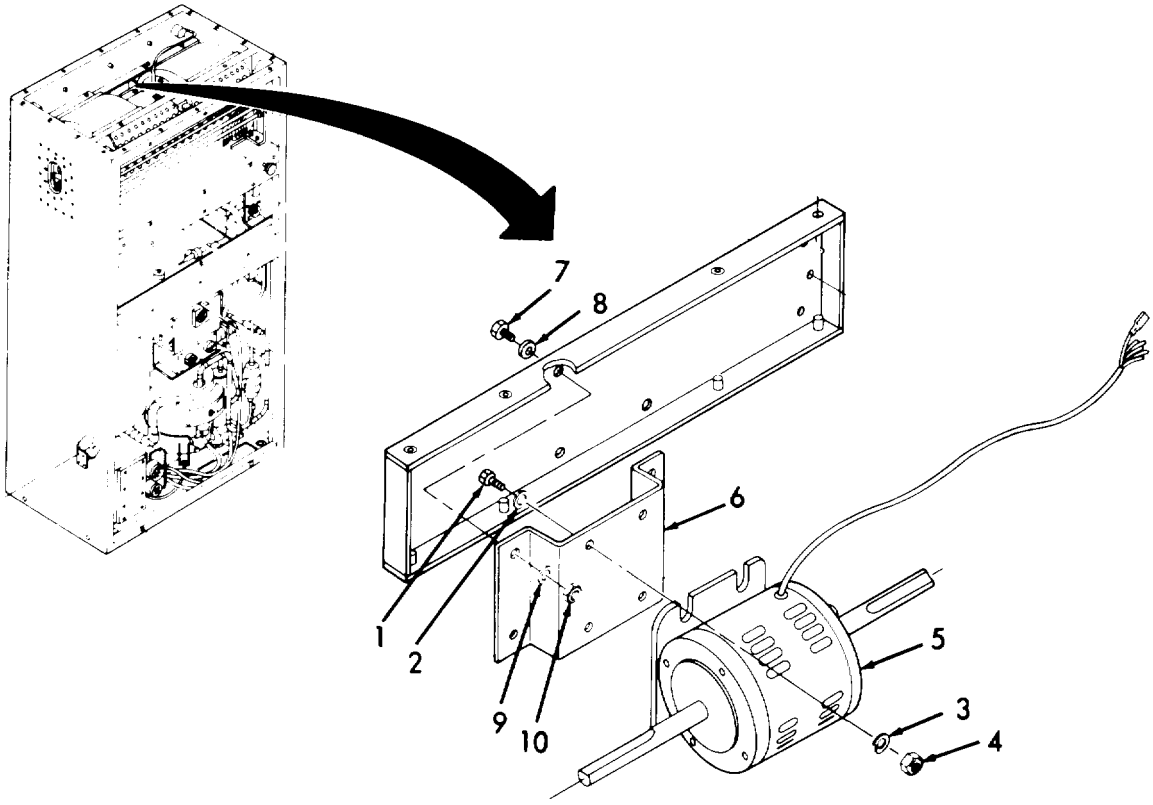

Figure 4-18. Evaporator Fan Motor and Bracket.

4-32. EVAPORATOR FAN MOTOR AND BRACKET. - Continued.

C. Test.

(1) Rotate shaft on motor and check for smooth bearing operations.

(2) Test motor for electrical continuity as follows:

NOTE

This test must be conducted when motor is cool.

(a) Using an ohmmeter set on lowest ohms scale, check continuity between wire leads El (black ground wire) and BLUE, WHITE, and RED. Continuity must not be indicated between ground and each wire lead.

(b) If continuity is found, replace motor.

(c) Using an ohmmeter set on lowest ohms scale, check continuity between wire leads VIOLET and YELLOW (thermoprotector). Continuity must be indicated.

(d) If continuity is not indicated, replace motor.

(e) Using an ohmmeter set on lowest scale, check continuity between wire leads BLUE, WHITE, and RED. Continuity must be indicated.

(f') If continuity is not indicated, replace motor.

d. Installation.

(1) Install evaporator fan bracket (6) and loosely install four nuts (10), four leek washers (9), four flat washers (8), and four bolts (7).

(2) Attach evaporator fan motor (5) to evaporator fan bracket (6) and loosely install four nuts (4), four lock washers (3), four flat washers (2), and four bolts (1).

(3) Center all components to eliminate contact between all rotating components and then tighten all hardware.

(4) Install evaporator scrolls (See para. 4-31).

(5) Install evaporator impeller fans (See para. 4-30)

(6) Install evaporator fan assembly (See para. 4-29).

(7) Install heater diffuser (See para. 4-25).

(8) Install conditioned air discharge guard (See para. 3-5).

(9) Install top panel (See para. 4-20).

4-33. JUNCTION BOX ASSEMBLY.

This Task Covers:

a. Removal b. Installation

Initial Setup:

Tools Required
Tool kit, Refrigeration

Material's Required
None

Equipment Condition
Air conditioner shut down and cool.
Lower front panel removed (See para. 4-20).

WARNING

HIGH VOLTAGE
is used in operation of this equipment.

DEATH ON CONTACT
may result if personnel fail to observe safety precautions.

Never work on electrical equipment unless there is another person nearby who is familiar with operation and hazards of equipment and who is competent in administering first aid. When technician is aided by operators, he must warn them about dangerous areas.

Whenever possible, input power supply to equipment must be shut off before beginning work. Take particular care to ground every capacitor likely to hold a dangerous charge. When working inside, after power has been turned off, always ground every part before touching it. Be careful not to contact high voltage connections of 208 volts ac input when installing or operating this equipment.

Whenever nature of operation permits, keep one hand away from equipment to reduce hazard to current flowing through vital organs of body. Do Not operate equipment without all guards, louvers, and covers in place and tightly secured.

a. Removal.

(1) Remove two screws (1), two lock washers (2), two flat washers (3), ground wire (4), and auxiliary connector bracket (5).

(2) Remove six screws (6) from side of unit holding junction box assembly (7) in place.

(3) Remove eight screws (8), eight lock washers (9) and eight flat washers (10) holding junction box assembly (7) to rear of unit.

(4) Lift junction box assembly (7) from unit.

(5) Remove four screws (11), four lock nuts (12), cap and chain assembly (13), and remove connector J1 (14) from bracket.

(6) Disconnect connector P8 (15) from connector J8 on control module.

(7) Disconnect connector P3 (16) from compressor.

(8) Tag and disconnect all other loose wires connected to junction box assembly. Cut cable ties as required.

(9) Remove junction box assembly (7) from unit.

(10) Remove twelve screws (17), twelve lock washers (18), twelve flat washers (19), and cover (20) from junction box assembly (7).

b. Installation.

(1) Attach cover (20) to junction box assembly (7) and install twelve flat washers (19), twelve lock washers (18), and twelve screws (17).

(2) Position junction box assembly (7) beside unit.

(3) Connect all wires to junction box assembly (7) and remove tags.

(4) Connect connector P3 (16) to compressor.

(5) Connect connector P8 (15) to connector J8 on control module.

(6) Install connector J1 (14) to bracket and install cap and chain assembly (13), four lock nuts (12), and four screws (11).

(7) Place junction box (7) into unit.

(8) Install eight flat washers (10), eight lock washers (9), and eight screws (8) to fasten junction box assembly (7) onto rear of unit.

(9) Install six screws (6) to hold the junction box assembly (7) in place onto side of unit.

(10) Install auxiliary connector bracket (5), ground wire (4) two lock washers (2), two flat washers (3), and two screws (1).

(11) Install lower front panel (See para. 4-20).

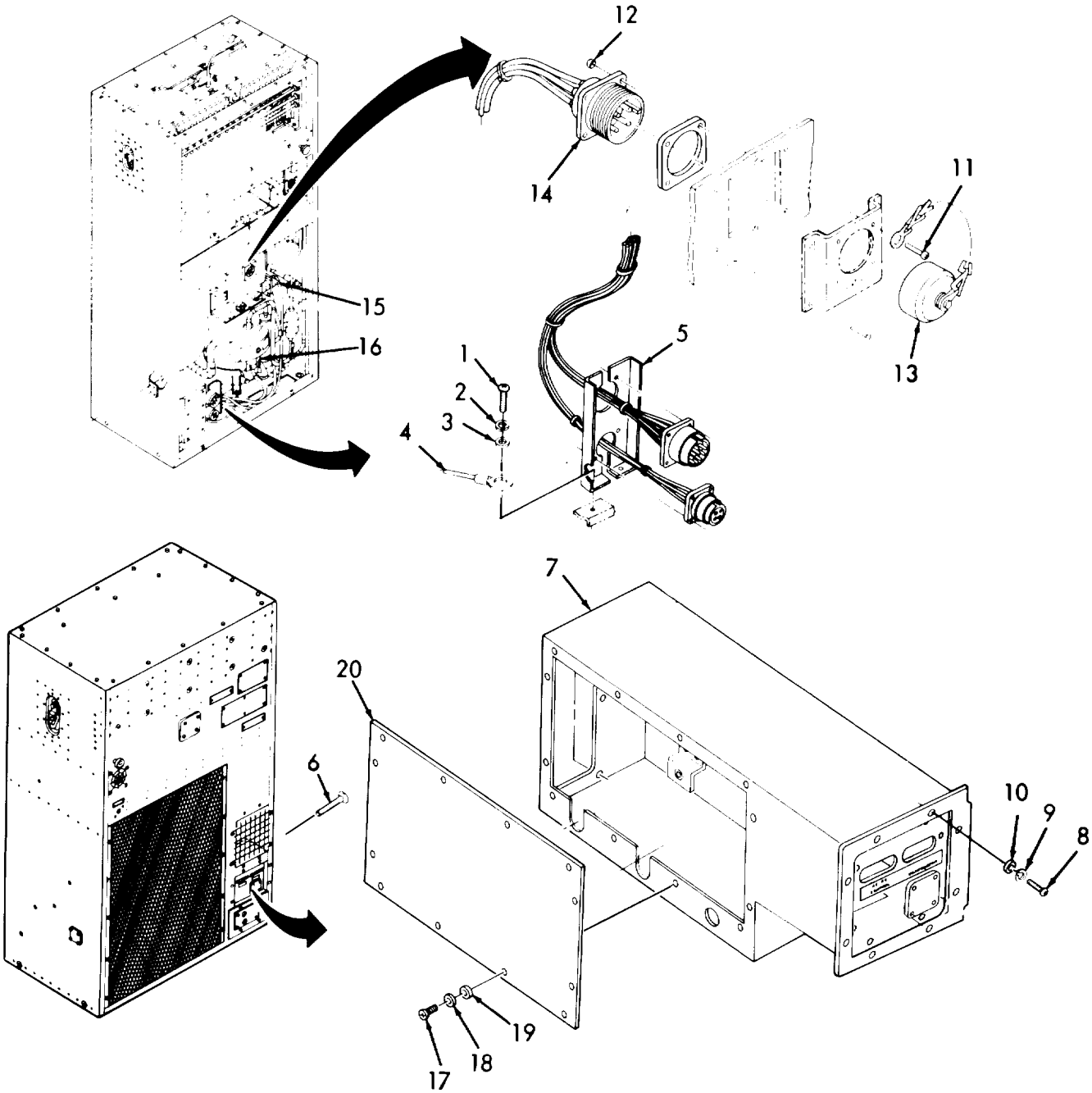

Figure 4-19. Junction Box Assembly.

4-34. CIRCUIT BREAKERS. (CB1, CB2, CB3).

This Task Covers:

a. Removal b. Test c. Installation

Initial Setup:

Tools Required
Tool kit, Refrigeration

Material's Required
None

Equipment Condition
Air conditioner shut down and cool.

a. Removal.

WARNING

HIGH VOLTAGE
is used in operation of this equipment.

DEATH ON CONTACT
may result if personnel fail to observe safety precautions.

Never work on electrical equipment unless there is another person nearby who is familiar with operation and hazards of equipment and who is competent in administering first aid. When technician is aided by operators, he must warn them about dangerous areas.

Whenever possible, input power supply to equipment must be shut off before beginning work. Take particular care to ground every capacitor likely to hold a dangerous charge. When working inside, after power has been turned off, always ground every part before touching it. Be careful not to contact high voltage connections of 208 volts ac input when installing or operating this equipment.

Whenever nature of operation permits, keep one hand away from equipment to reduce hazard to current flowing through vital organs of body. Do Not operate equipment without all guards, louvers, and covers in place and tightly secured.

(1) Remove eight screws (1), eight lock washers (2), eight flat washers (3), and cover (4) from rear of unit.

(2) Tag and disconnect all wires attached to each circuit breaker.

(3) Remove twelve screws (5) and circuit breaker (6), circuit breaker (7), and circuit breaker (8).

b. Test.

(1) AC circuit breaker.

(a) With breaker in ON position, check for continuity across terminals A1 and A2, and B1 and B2.

(b) With circuit breaker in OFF position, check for discontinuity between A1 and A2, and B1 and B2.

(c) If circuit breaker fails either test in steps (a) or (b), replace breaker.

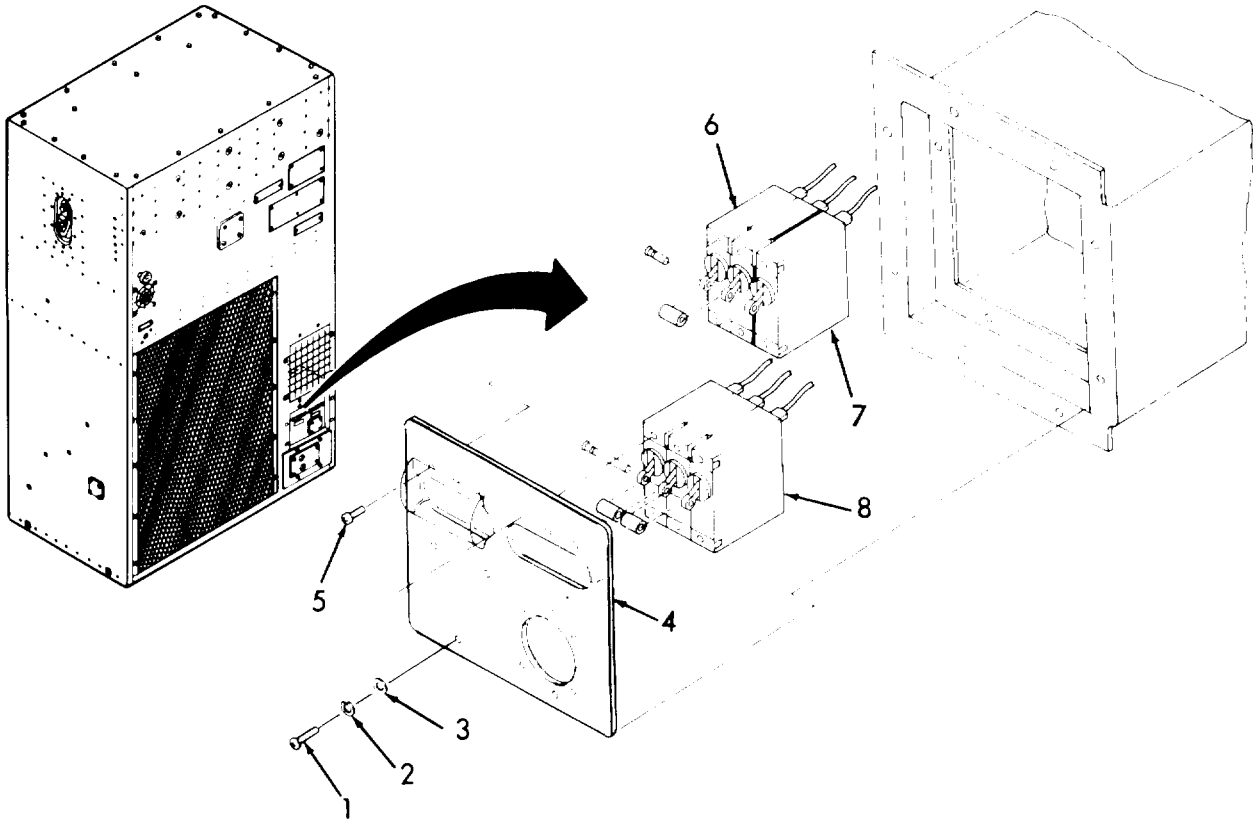

Figure 4-20. Circuit Breakers (CB1, CB2, and CB3).

4-34. CIRCUIT BREAKERS. (CB1, CB2, CB3). - Continued.

b. Test. - Continued.

(2) DC Circuit Breaker.

(a) With circuit breaker in ON position, check for continuity between terminals 1 and 2.

(b) With circuit breaker in OFF position, check for discontinuity between terminals 1 and 2.

(c) If circuit breaker fails either test in steps (a) or (b), replace circuit breaker.

(3) Compressor Circuit Breaker.

(a) With circuit breaker in ON position, check for continuity, between terminals A1 and A2, B1 and B2, and C1 and C2.

(b) With circuit breaker in OFF position, check for discontinuity between terminals A1 and A2, B1 and B2, and C1 and C2.

(c) If circuit breaker fails either test in steps (a) or (b), replace breaker.

c. Installation.

(1) Install circuit breaker (8), circuit breaker (7), circuit breaker (6), and twelve screws (5).

(2) Connect all wires to circuit breakers and remove tags.

(3) Place cover (4) onto rear of unit and install with eight flat washers (3), eight lock washers (2), and eight screws (1).

4-35. TRANSFORMER (TR).

This Task Covers:

a. Removal b. Test c. Installation

Initial Setup:

Tools Required
Tool kit, Refrigeration

Material's Rewired
None

Euipment Condition
Air conditioner shut down and cool.
Junction box assembly removed (See para. 4-33).

a. **Removal.**

WARNING

HIGH VOLTAGE
is used in operation of this equipment.

DEATH ON CONTACT
may result if personnel fail to observe safety precautions.

Never work on electrical equipment unless there is another person nearby who is familiar with operation and hazards of equipment and who is competent in administering first aid. When technician is aided by operators, he must warn them about dangerous areas.

Whenever possible, input power supply to equipment must be shut off before beginning work. Take particular care to ground every capacitor likely to hold a dangerous charge. When working inside, after power has been turned off, always ground every part before touching it. Be careful not to contact high voltage connections of 208 volts ac input when installing or operating this equipment.

Whenever nature of operation permits, keep one hand away from equipment to reduce hazard to current flowing through vital organs of body. Do Not operate equipment without all guards, louvers, and covers in place and tightly secured.

(1) Tag and disconnect all wires connected to transformer.

(2) Remove two screws (1), two lock washers (2), and two flat washers (3).

(3) Remove transformer bracket (4) and transformer (5).

b. Test.

(1) Tag and remove transformer leads.

(2) Using a multimeter set on lowest OHMS scale probe terminal X1 and H1.

(3) If resistance is less that infinity (no continuity) the transformer is shorted. Replace transformer.

(4) Using a multimeter set on lowest OHMS scale, probe terminal H1 to H2.5.

(5) Resistance reading should be 0.5 OHMS ± 0.2. Replace transformer if criteria is not met.

(6) Using a multimeter set on lowest OHMS scale, probe terminal X1 to X2.

(7) Resistance reading should be 9 OHMS ± 3 OHMS. Replace transformer if criteria is not met.

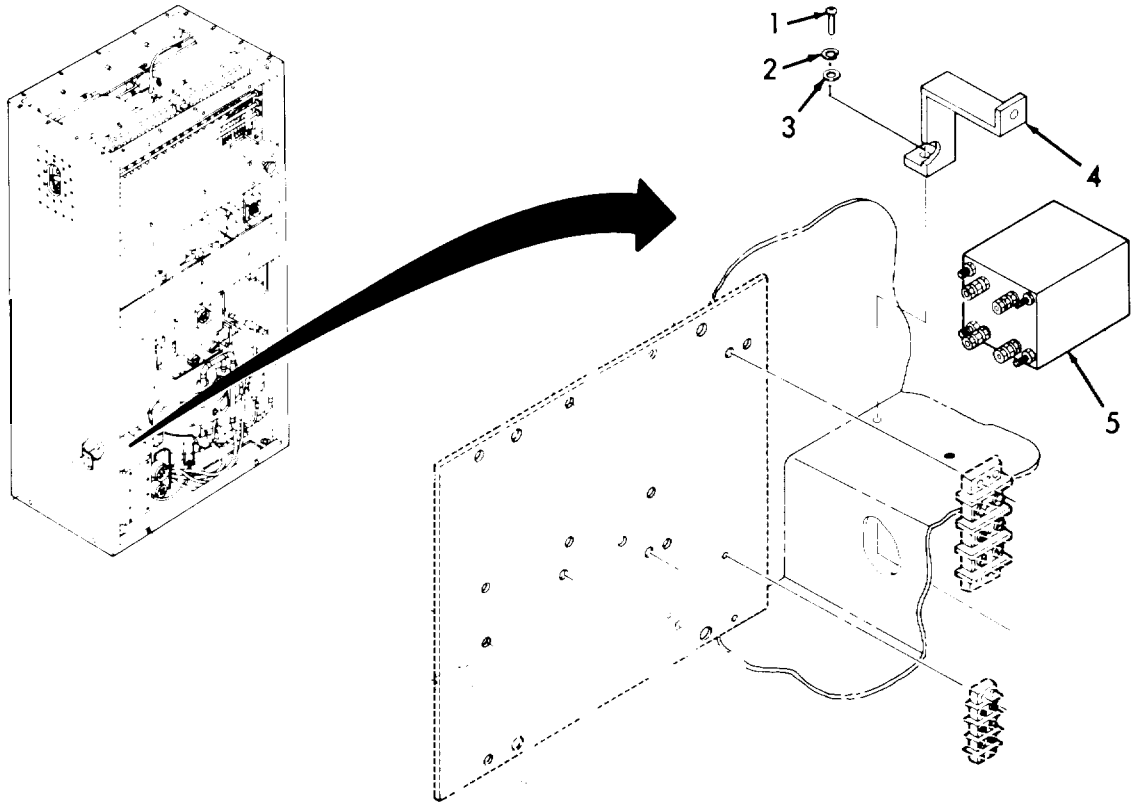

Figure 4-21. Transformer (TR).

c. **Installation.**

(1) Install transformer (5) and transformer bracket (4).

(2) Then install two flat washers (3), two lock washers (2), and two screws (1).

(3) Connect all wires to transformer and remove tags.

(4) Install junction box assembly (See para. 4-33).

4-36. TIME DELAY RELAY (TD1).

This Task Covers:

a. Removal b. Test c. Installation

initial Setup:

Tools Required

Tool kit, Refrigeration

Material's Required

None

Equipment Condition

Air conditioner shut down and cool.
Junction box assembly removed (See para. 4-33).

a. **Removal.**

WARNING

HIGH VOLTAGE
is used in operation of this equipment.
DEATH ON CONTACT
may result if personnel fail to observe safety precautions.
Never work on electrical equipment unless there is another person nearby who is familiar with operation and hazards of equipment and who is competent in administering frost aid. When technician is aided by operators, he must warn them about dangerous areas.

Whenever possible, input power supply to equipment must be shut off before beginning work. Take particular care to ground every capacitor likely to hold a dangerous charge. When working inside, after power has been turned off, always ground every part before touching it. Be careful not to contact high voltage connections of 208 volts ac input when installing or operating this equipment.

Whenever nature of operation permits, keep one hand away from equipment to reduce hazard to current flowing through vital organs of body. Do Not operate equipment without all guards, louvers, and covers in place and tightly secured.

(1) Tag and disconnect wires attached to time delay relay (1).

(2) Remove screw (2) and time delay relay (1).

b. Test.

(1) Using a multimeter set on lowest OHMS scale, check for discontinuity across terminals 1(+)and 2 (-). Continuity should not be indicated.

(2) Using a multimeter at on lowest OHMS scale check for continuity and resistance across terminals 3 and 4. Continuity should be indicated and indicated resistance should be 432K OHMS ± 5%.

(3) Set multimeter on appropriate voltage scale and check for 32 volts ac across terminals 3 and 4.

(4) Replace time delay relay if it fails any of the above test.

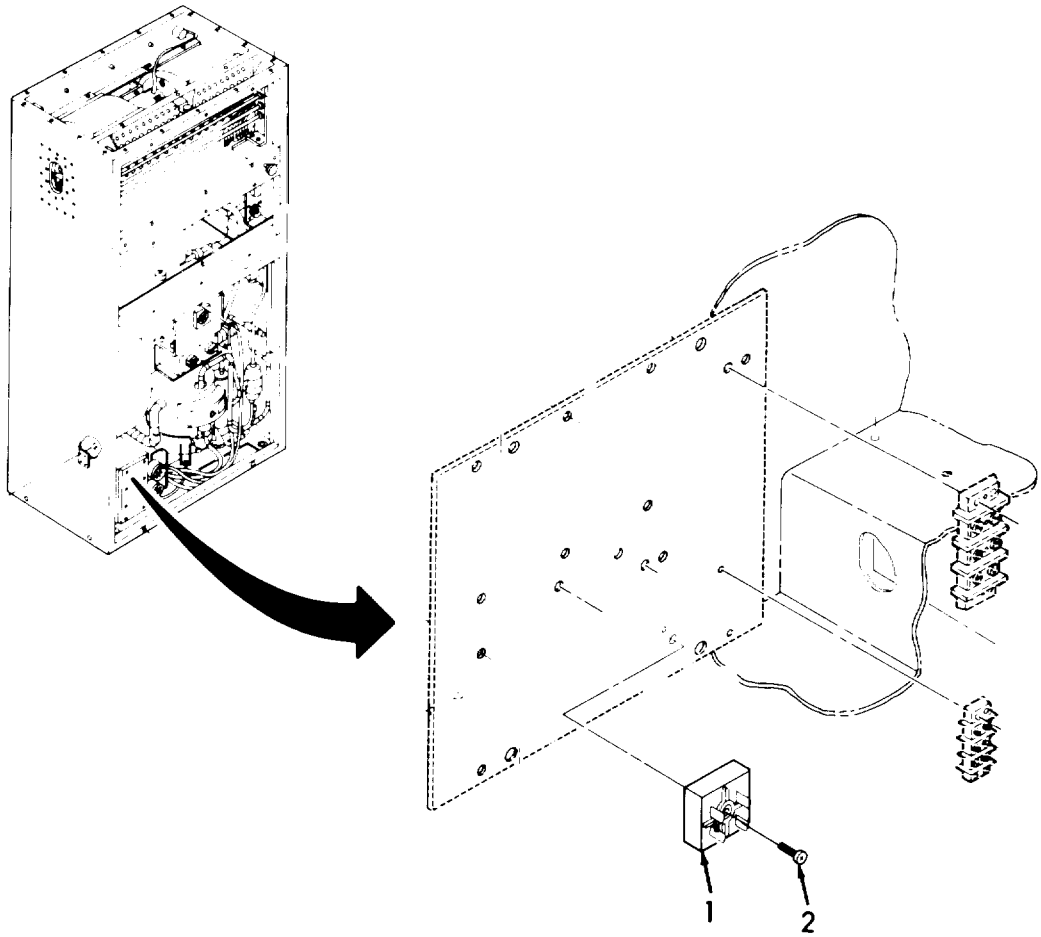

Figure 4-22. Time Delay Relay (TD1).

4-36. TIME DELAY RELAY (TD1). - Continued.

c. Installation.

(1) Attach time delay relay (1) and screw (2).

(2) Connect wires to time delay relay (1) and remove tags.

(3) Install junction box assembly (See para. 4-33).

4-37. RF! FILTER (FL).

This Task Covers:

a. Removal b. Test c. Installation

Initial Setup:

Tools Required
Tool kit, Refrigeration

Material's Required
None

Equipment Condition
Air conditioner shut down and cool.
Junction box assembly removed (See para. 4-33).

a. Removal.

WARNING

HIGH VOLTAGE
is used in operation of this equipment.
DEATH ON CONTACT
may result if personnel fail to observe safety precautions.
Never work on electrical equipment unless there is another person nearby who is familiar with operation and hazards of equipment and who is competent in administering first aid. When technician is aided by operators, he must warn them about dangerous areas.

Whenever possible, input power supply to equipment must be shut off before beginning work. Take particular care to ground every capacitor likely to hold a dangerous charge. When working inside, after power has been turned off, always ground every part before touching it. Be careful not to contact high voltage connections of 208 volts ac input when installing or operating this equipment.

Whenever nature of operation permits, keep one hand away from equipment to reduce hazard to current flowing through vital organs of body. Do Not operate equipment without all guards, louvers, and covers in place and tightly secured.

(1) Tag and disconnect wires attached to RFI filters (1).

(2) Remove two screws (2) and two lock washers (3) holding RFI bracket (4) onto junction box.

(3) Remove RFI filters (1) and bracket (4) from junction box.

(4) Remove four nuts (5), four lock washers (6), and four RFI filters (1) from RFI bracket (4).

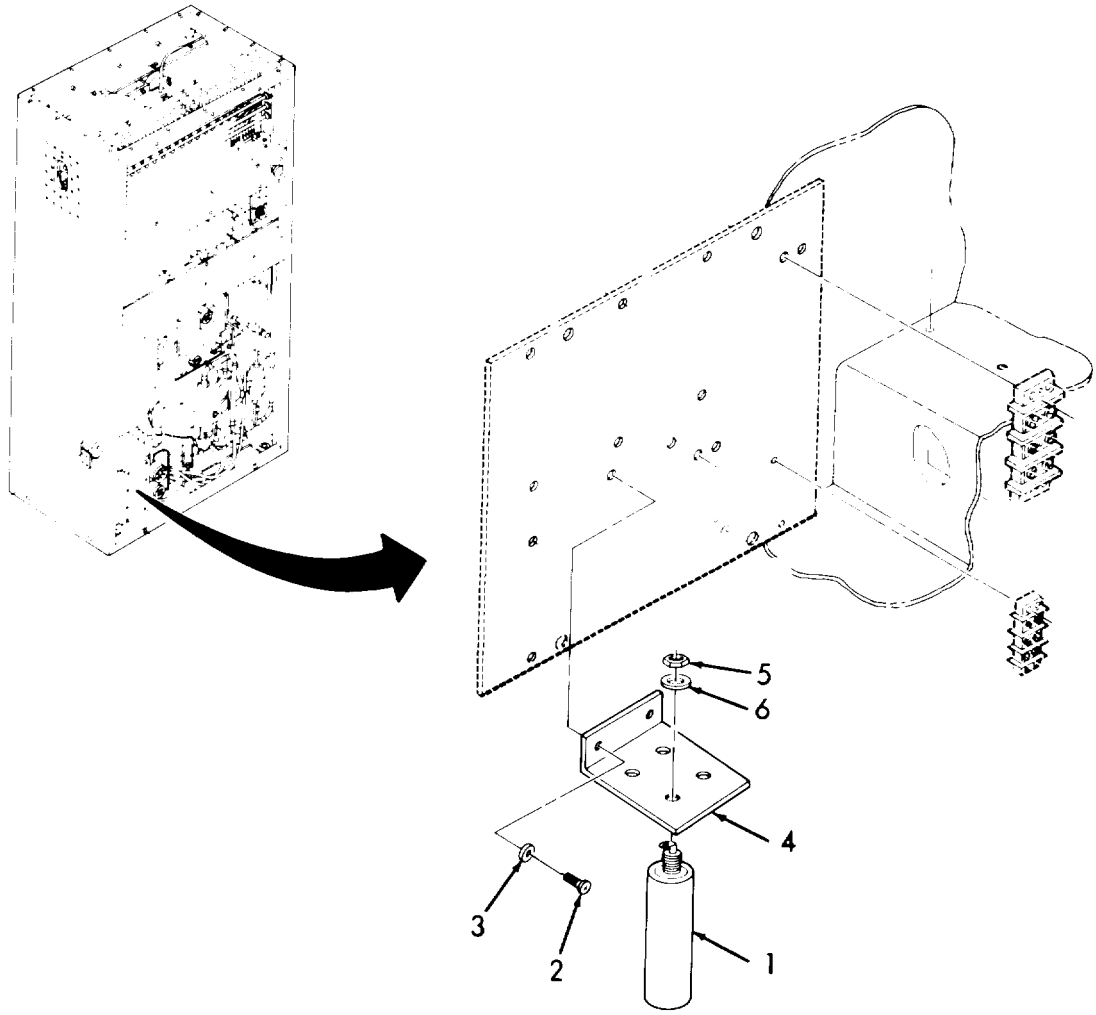

Figure 4-23. RFI Filter (FL).

4-37. RFI FILTER (FL). - Continued.

b. Test.

(1) Perform continuity check on each RFI filter.

(2) Replace any filter that is discontinuous.

c. Installation.

(1) Install four RFI filters (1) to RFI bracket (4) with four lock washers (6) and four nuts (5).

(2) Attach RFI filter and bracket assembly to junction box.

(3) Install two lock washers (3), two screws (2), and RFI bracket (4) onto junction box.

(4) Connect wires to RFI falters (1) and remove tags.

(5) Install junction box assembly (See para. 4-33).

4-38. RECTIFIER (CR).

This Task Covers:

a. Removal b. Test c. Installation

Initial Setup:

Tools Required
Tool kit, Refrigeration

Material's Required
None

Equipment Condition
Air conditioner shut down and COOL
Junction box assembly removed (See para. 4-33),

WARNING

HIGH VOLTAGE
is used in operation of this equipment.

DEATH ON CONTACT
may result if personnel fail to observe safety precautions.

Never work on electrical equipment unless there is another person nearby who is familiar with operation and hazards of equipment and who is competent in administering first aid. When technician is aided by operators, he must warn them about dangerous areas.

Whenever possible, input power supply to equipment must be shut off before beginning work. Take particular care to ground every capacitor likely to hold a dangerous charge. When working inside, after power has been turned off, always ground every part before touching it. Be careful not to contact high voltage connections of 208 volts ac input when installing or operating this equipment.

Whenever nature of operation permits, keep one hand away from equipment to reduce hazard to current flowing through vital organs of body. Do Not operate equipment without all guards, louvers, and covers in place and tightly secured.

a. **Removal.**

(1) Tag and disconnect all wires attached to rectifier (1).

(2) Remove two screws (2), two lock washers (3), and rectifier and bracket assembly from junction box.

(3) Remove nut (4), lock washer (5), and rectifier (1) from rectifier bracket (6).

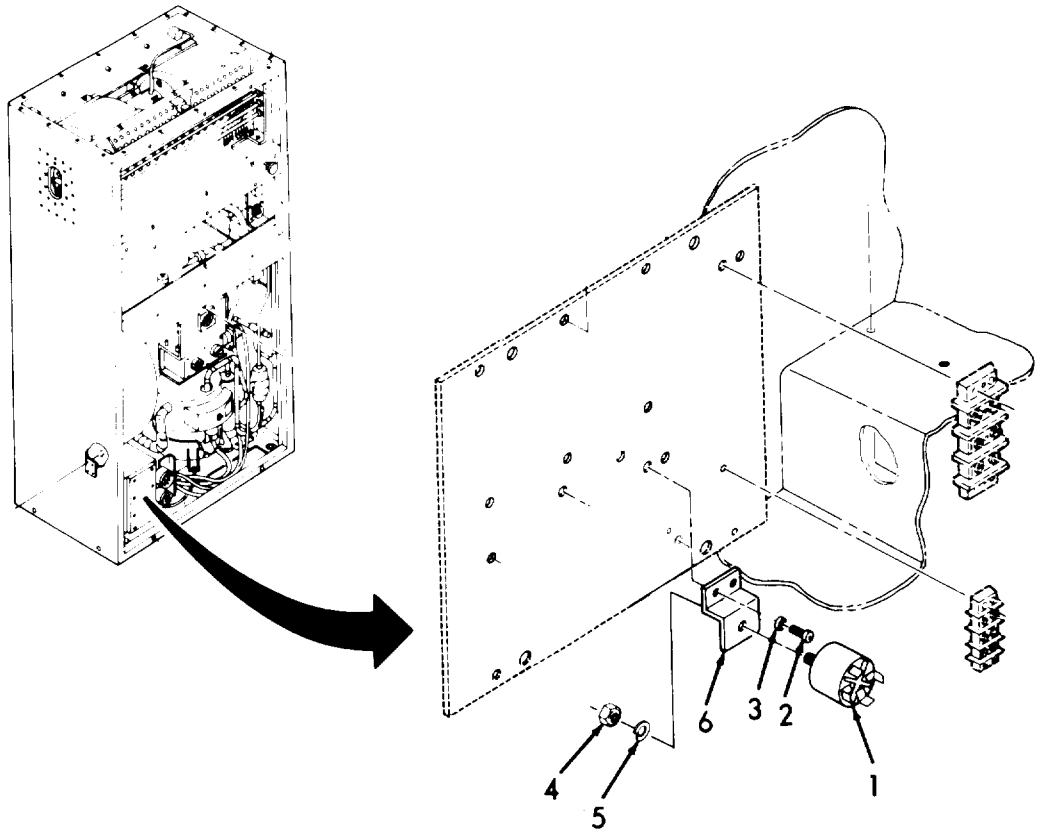

Figure 4-24. Rectifier (CR).

b. Test.

(1) Using an ohmmeter on lowest OHM setting, check for continuity across terminals 1 and 3, 4 and 3, 2 and 4, and 2 and 1.

(2) Check for discontinuity across all other terminal combinations.

(3) If rectifier fails any test in steps (1) and (2), replace rectifier.

c. Installation.

(1) Install rectifier (1), lock washer (5), and nut (4) onto rectifier bracket (6).

(2) Place rectifier and bracket assembly into junction box and install two lock washers (3) and two screws (2).

(3) Connect all wires to rectifier (1) and remove tags.

(4) Install junction box assembly (See para. 4-33).

4-39. RELAYS (K1, K6, K7, K8, and K9).

This Task Covers:

a. Removal b. Test c. Installation

Initial Setup:

Tools Rewired
Tool kit, Refrigeration

Material's Rewired
None

Equipment Condition
Air conditioner shut down and cool.
Junction box assembly removed (See para. 4-33).

a. Removal.

WARNING

HIGH VOLTAGE
is used in operation of this equipment.

DEATH ON CONTACT
may result if personnel fail to observe safety precautions.

Never work on electrical equipment unless there is another person nearby who is familiar with operation and hazards of equipment and who is competent in administering first aid. When technician is aided by operators, he must warn them about dangerous areas.

Whenever possible, input power supply to equipment must be shut off before beginning work. Take particular care to ground every capacitor likely to hold a dangerous charge. When working inside, after power has been turned off, always ground every part before touching it. Be careful not to contact high voltage connections of 208 volts ac input when installing or operating this equipment.

Whenever nature of operation permits, keep one hand away from equipment to reduce hazard to current flowing through vital organs of body. Do Not operate equipment without all guards, louvers, and covers in place and tightly secured.

(1) Tag and disconnect all wires attached to relay (1), relay (2), relay (3), and relay (4).

(2) Remove nine screws (5) and relays (l), (2), (3), and (4).

b. Test.

(1) Using an ohmmeter set on lowest OHMS reading, check each relay for discontinuity across terminals L1 and T1, L2 and T2, and L3 and T3.

(2) Replace any relay found to be continuous across any set of terminals.

c. Installation.

(1) Install relays (1), (2), (3), (4), and nine screws (5).

(2) Connect all wires to relay (1), relay (2), relay (3), and relay (4) and remove tags.

(3) Install junction box assembly (See para. 4-33).

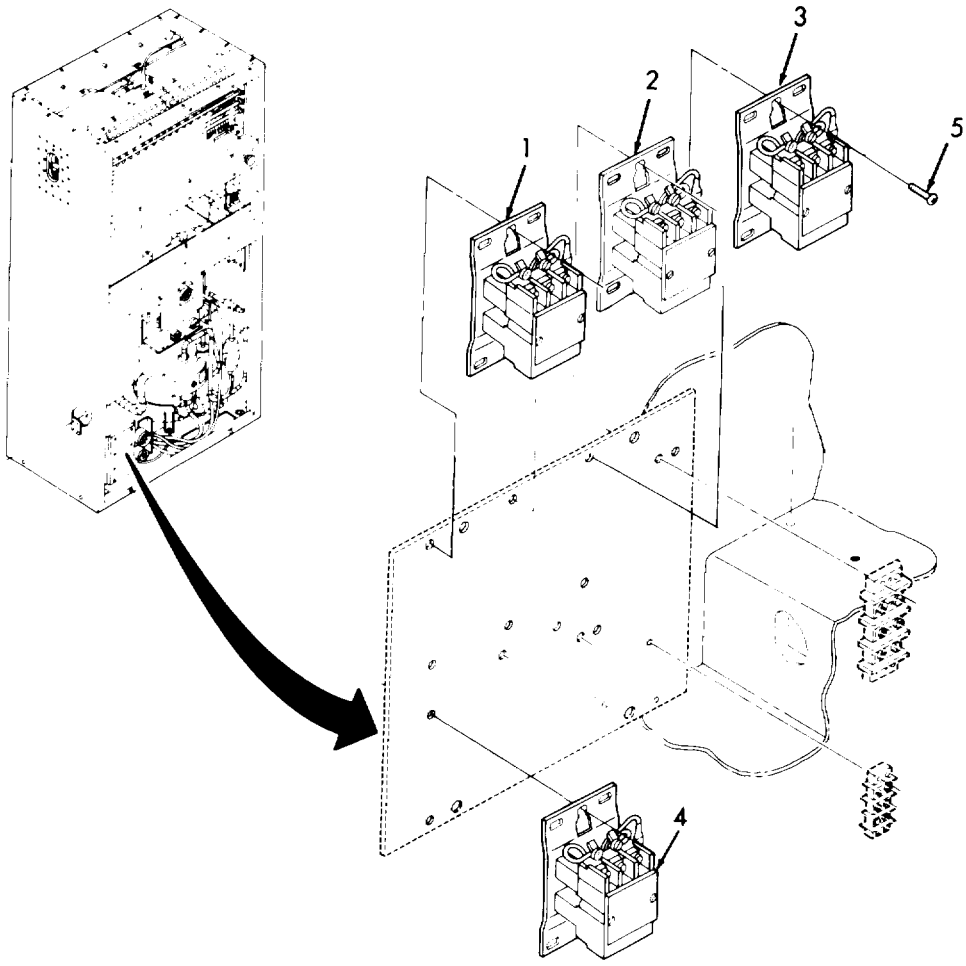

Figure 4-25. Relays (K1, K6, K7, K8, and K9).

4-40. Junction Box.

This Task Covers:

a. Removal b. Test c. Installation

Initial Setup:

Tools Required

Tool kit, Refrigeration

Material's Required

None

Equipment Condition

Air conditioner shut down and COOL
Junction box assembly removed (See para. 4-33).
Circuit breakers removed. (See para. 4-34).
Transformer removed. (See para. 4-35).
Time delay relay removed. (See para 4-36).
RFI filter removed. (See para. 4-37).
Rectifier removed. (See para. 4-38).
Relays removed. (See para. 4-39).
Wiring harnesses removed. (See para. 4-41).

a. Removal.

WARNING

HIGH VOLTAGE
is used in operation of this equipment.

DEATH ON CONTACT
may result if personnel fail to observe safety precautions.

Never work on electrical equipment unless there is another person nearby who is familiar with operation and hazards of equipment and who is competent in administering first aid. When technician is aided by operators, he must warn them about dangerous areas.

Whenever possible, input power supply to equipment must be shut off before beginning work. Take particular care to ground every capacitor likely to hold a dangerous charge. When working inside, after power has been turned off, always ground every part before touching it. Be careful not to contact high voltage connections of 208 volts ac input when installing or operating this equipment.

Whenever nature of operation permits, keep one hand away from equipment to reduce hazard to current flowing through vital organs of body. Do Not operate equipment without all guards, louvers, and covers in place and tightly secured.

(1) Tag and disconnect all remaining wires in junction box (1).

(2) Remove six screws (2), six lock washers (3), and six flat washers (4) holding mounting panel (5) into junction box (1).

(3) Remove two screws (6), two lock washers (7), and terminal block (8).

(4) Remove two screws (9), two lock washers (10), and terminal block (11).

(5) Remove three connectors (12) from junction box (1).

(6) Remove ground bolt (13), five washers (14), and three nuts (15) from junction box (1).

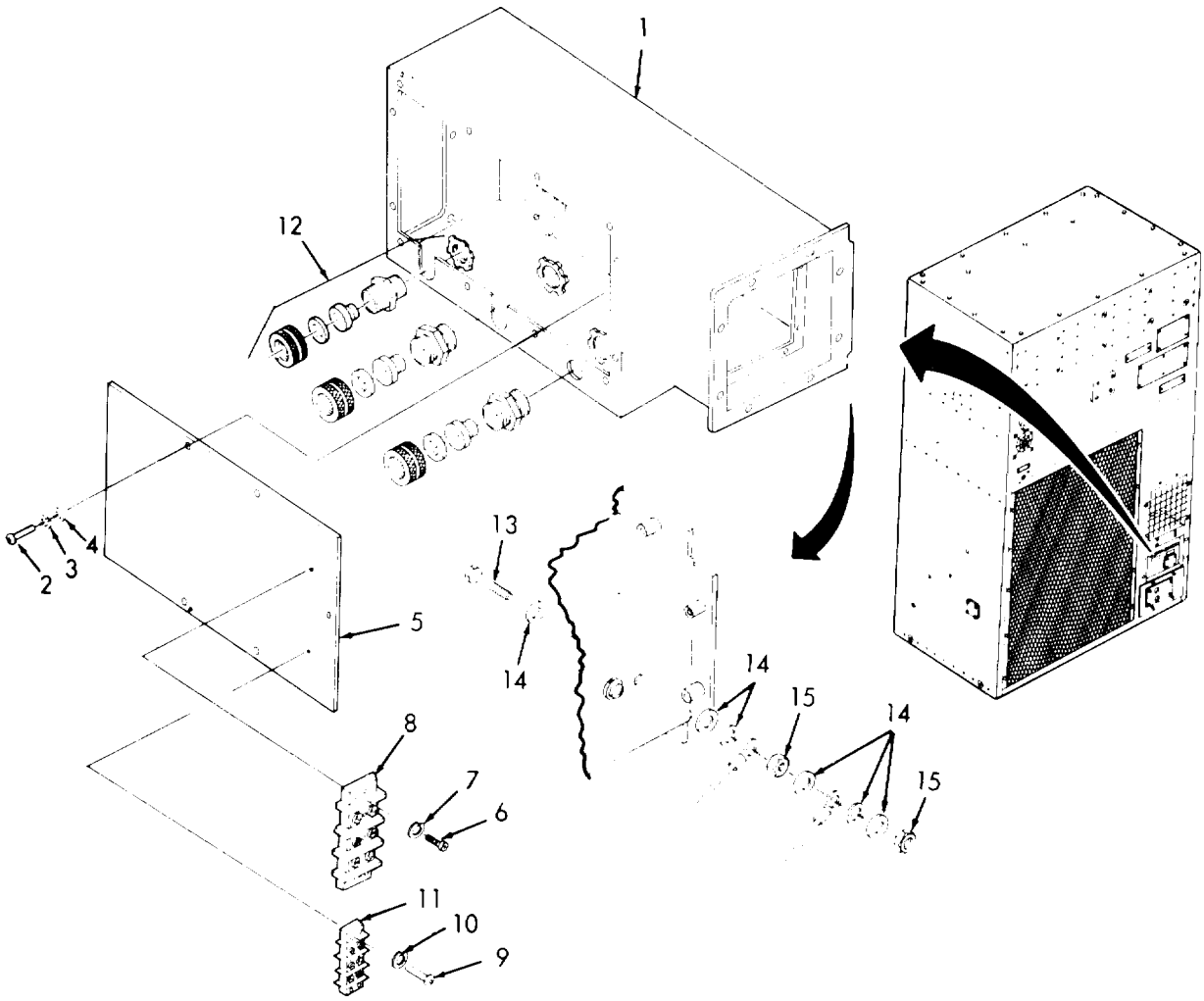

Figure 4-26. Junction Box.

4-40. Junction Box. (Continued).

b. Test.

(1) Use a multimeter to test all wires for continuity.

(2) Replace any wire found discontinuous.

c. Installation.

(1) Attach three nuts (15), five washers (14), and ground bolt (13) to junction box (l).

(2) Install three connectors (12) into junction box (l).

(3) Install teminal block (ll), two lock washers (10), and two screws (9).

(4) Install terminal block (8), two lock washers (7), and two screws (6).

(5) Attach mounting panel (5) to junction box (1) with six flat washers (4), six lock washers (3), and six screws (2).

(6) Connect all remaining wires in junction box (1) and remove tags.

(7) Install wiring harnesses (See para. 4-41).

(8) Install relays (See para. 4-39).

(9) Install rectifier (See para. 4-38).

(10) Install RFI filter (See para. 4-37).

(11) Install time delay relay (See para. 4-36).

(12) Install transformer (See para. 4-35).

(13) Install circuit breakers (See para. 4-34).

(14) Install junction box assembly (See para. 4-33).

4-41. WIRING HARNESSES.

This Task Covers:

a. Removal b. Test c. Installation

Initial Setup:

Tools Required
Tool kit, Refrigeration

Material's Required
None

Equipment Condition
Air conditioner shut down and cool.
Junction box assembly removed (See para. 4-33).

a. **Removal.**

WARNING

HIGH VOLTAGE
is used in operation of this equipment.

DEATH ON CONTACT
may result if personnel fail to observe safety precautions.

Never work on electrical equipment unless there is another person nearby who is familiar with operation and hazards of equipment and who is competent in administering first aid. When technician is aided by operators, he must warn them about dangerous areas.

Whenever possible, input power supply to equipment must be shut off before beginning work. Take particular care to ground every capacitor likely to hold a dangerous charge. When working inside, after power has been turned off, always ground every part before touching it. Be careful not to contact high voltage connections of 208 volts ac input when installing or operating this equipment.

Whenever nature of operation permits, keep one hand away from equipment to reduce hazard to current flowing through vital organs of body. Do Not operate equipment without all guards, louvers, and covers in place and tightly secured.

(1) Tag and disconnect ends of cable assemblies (1), (2), and (3) from inside junction box assembly (4).

(2) Loosen three nuts (5) on three connectors (6).

(3) Remove cable assemblies (1), (2), and (3) from junction box assembly (4).

(4) Cut cable ties as required to separate cable assemblies.

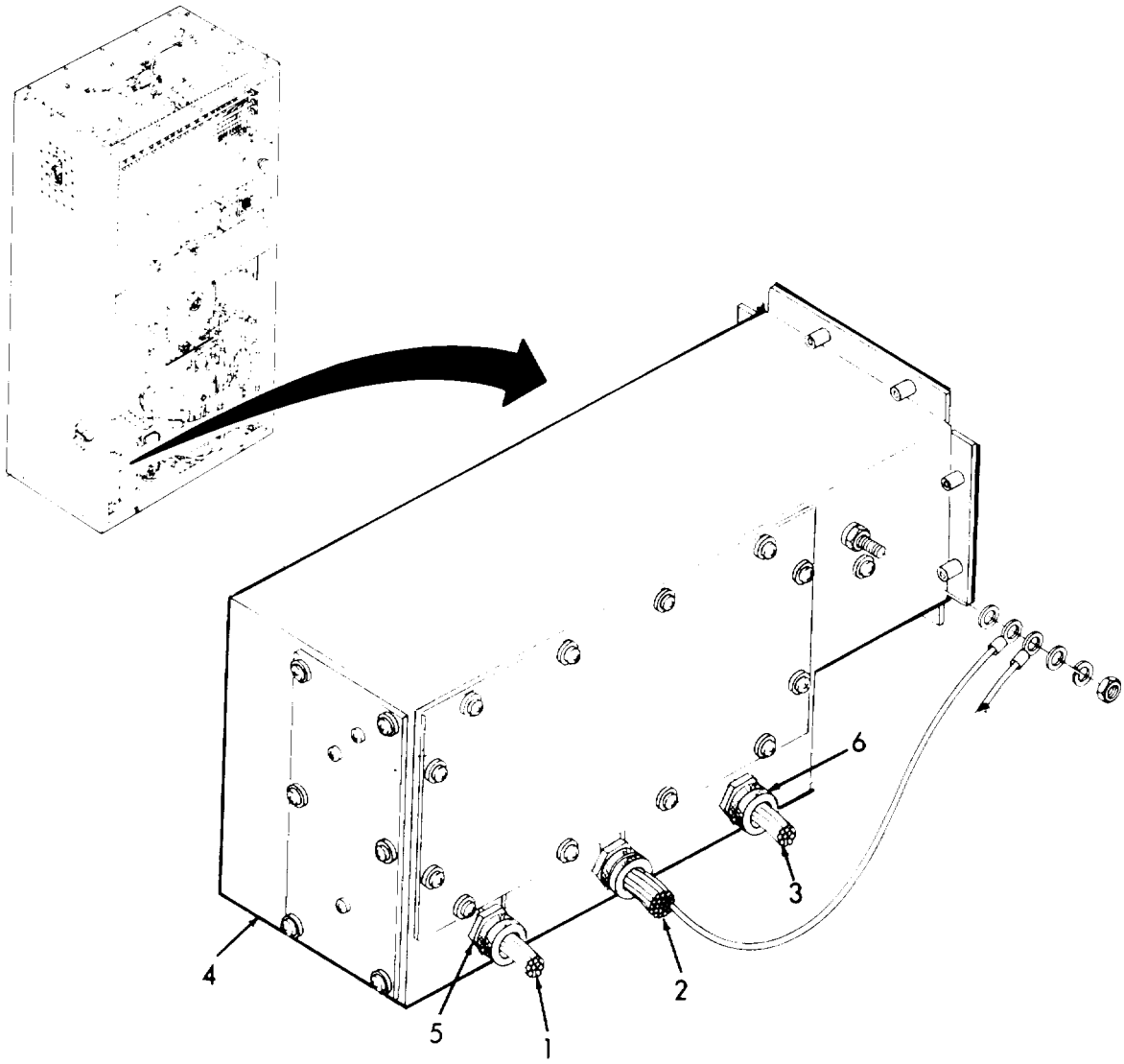

Figure 4-27. Wiring Harnesses.

b. Test.

(1) Refer to wiring diagram on Figure 1-4 and use a multimeter to test the conductors in each wiring harness for continuity.

(2) Replace any conductor found discontinuous.

c. Installation.

(1) Install cable ties as needed to hold wiring together.

(2) Install cable assemblies (1), (2), and (3) to junction box assembly (4).

(3) Tighten three nuts (5) on three connectors (6).

(4) Connect ends of cable assemblies (1), (2), and (3) to inside junction box assembly (4) and remove tags.

(5) Install junction box assembly (See para. 4-33).

4-42. CONDENSATE DRAIN ASSEMBLY.

This Task Covers:

a. Removal b. Repair c. Installation

Initial Setup:

Tools Required
Tool kit, Refrigeration

Material's Required
None

Equipment Condition
Air conditioner shut down and cool.
Front panel removed (See para. 4-20).
Control module removed (See para. 4-43).
Condenser motor removed (See para. 4-45).
Condenser fan removed (See para. 4-47).
Condenser scroll removed (See para. 4-46).

a. Removal.

(1) Loosen four clamps (1), (2), (3), and (4), and remove condensate drain assembly hoses (5), (6), (7), and (8) from bottom of evaporator drain pan.

(2) Slide trap (9) and lower condensate hose (10) from upper condensate hose (11) at the point where the trap is held in place with hose clamp (12) mounted on filter/dryer dehydrator.

(3) Remove eight clamps (1), (2), (3), (4), (13), (14), (15), and (16) and four tubes (5), (6), (7), and (8).

(4) Remove two clamps (17) and (18), and two elbows (19) and (20).

(5) Remove two clamps (21) and (22), and two tubes (23) and (24).

(6) Remove two clamps (25) and (26), tee (27), and tube (28).

(7) Remove two clamps (29) and (30), tube (31), and two tees (32) and (33).

(8) Remove clamps (12) and (34), trap (9), and hose (11).

b. Repair.

Repair is limited to replacement of defective components.

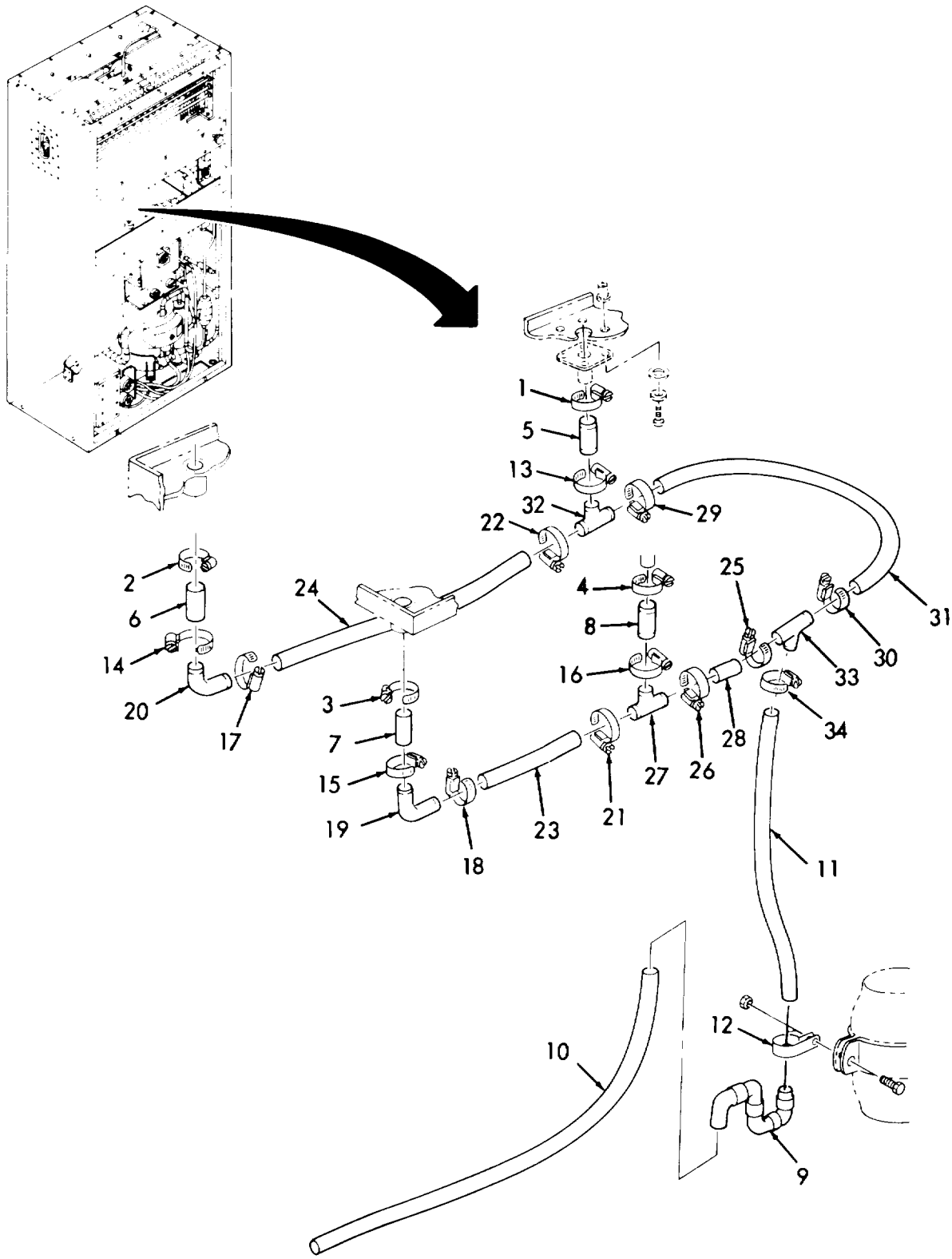

Figure 4-28. Condensate Drain Assembly.

4-42. CONDENSATE DRAIN ASSEMBLY. (Continued).

c. Installation.

(1) Install hose (11), trap (9), and clarnp (12).

(2) Install two tees (33) and (32), tube (31), two clamps (30) and (29), clamp (34).

(3) Install tube (28), tee (27), and two clamps (26) and (25).

(4) Install two tubes (23) and (24), and two clamps (22) and (21).

(5) Install two elbows (20) and (19), and two clamps (18) and (17).

(6) Install four tubes (8), (7), (6), and (5), and eight clamps (16), (15), (14), (13), (4), (3), (2), and (1).

(7) Slide trap (9) and lower condensate hose (10) onto upper condensate hose (11) at the point where the trap is held in place with hose clamp (12) mounted on filter/dryer dehydrator.

(8) Attach condensate drain assembly hoses (8), (7), (6), and (5) onto bottom of evaporator drain pan and then tighten four clamps (4), (3), (2), and (1).

(9) Install condenser scroll (See para. 4-46).

(10) Install condenser fan (See para. 4-47).

(11) Install condenser motor (See para. 4-45).

(12) Install control module (See para. 4-43).

(13) Install front panel (See para. 4-20).

4-43. CONTROL MODULE.

This Task Covers:

a. Removal b. Disassembly c. Test d. Assembly e. Installation

Initial Setup:

Tools Required

Tool kit, Refrigeration

Material's Rquired

None

Equipment Condition

Air conditioner shut down and cool.
Front panel removed (See para. 4-20).
Intake (return air) guard removed (See para. 3-5).

a. Removal.

WARNING

HIGH VOLTAGE

is used in operation of this equipment,

DEATH ON CONTACT

may result if personnel fail to observe safety precautions. Never work on electrical equipment unless there is another person nearby who is familiar with operation and hazards of equipment and who is competent in administering first aid. When technician is aided by operators, he must warn them about dangerous areas.

Whenever possible, input power supply to equipment must be shut off before beginning work. Take particular care to ground every capacitor likely to hold a dangerous charge. When working inside, after power has been turned off, always ground every part before touching it. Be careful not to contact high voltage connections of 208 volts ac input when installing or operating this equipment.

Whenever nature of operation permits, keep one hand away from equipment to reduce hazard to current flowing through vital organs of body. Do Not operate equipment without all guards, louvers, and covers in place and tightly secured.

(1) Disconnect connector P8 from J8 (1) on side of control module (2).

(2) Remove four screws (3), four lock washers (4), four flat washers (5), four flat washers (6), and four nuts (7).

CAUTION

Damaging the capillary tube attached to the control module will cause unit to malfunction. Use care when moving control module.

(3) Remove screw (8), lock nut (10), clamp (9), and sensing bulb (11).

(4) Carefully feed capillary tube of sensing bulb (11) into bottom of unit and remove control module (2).

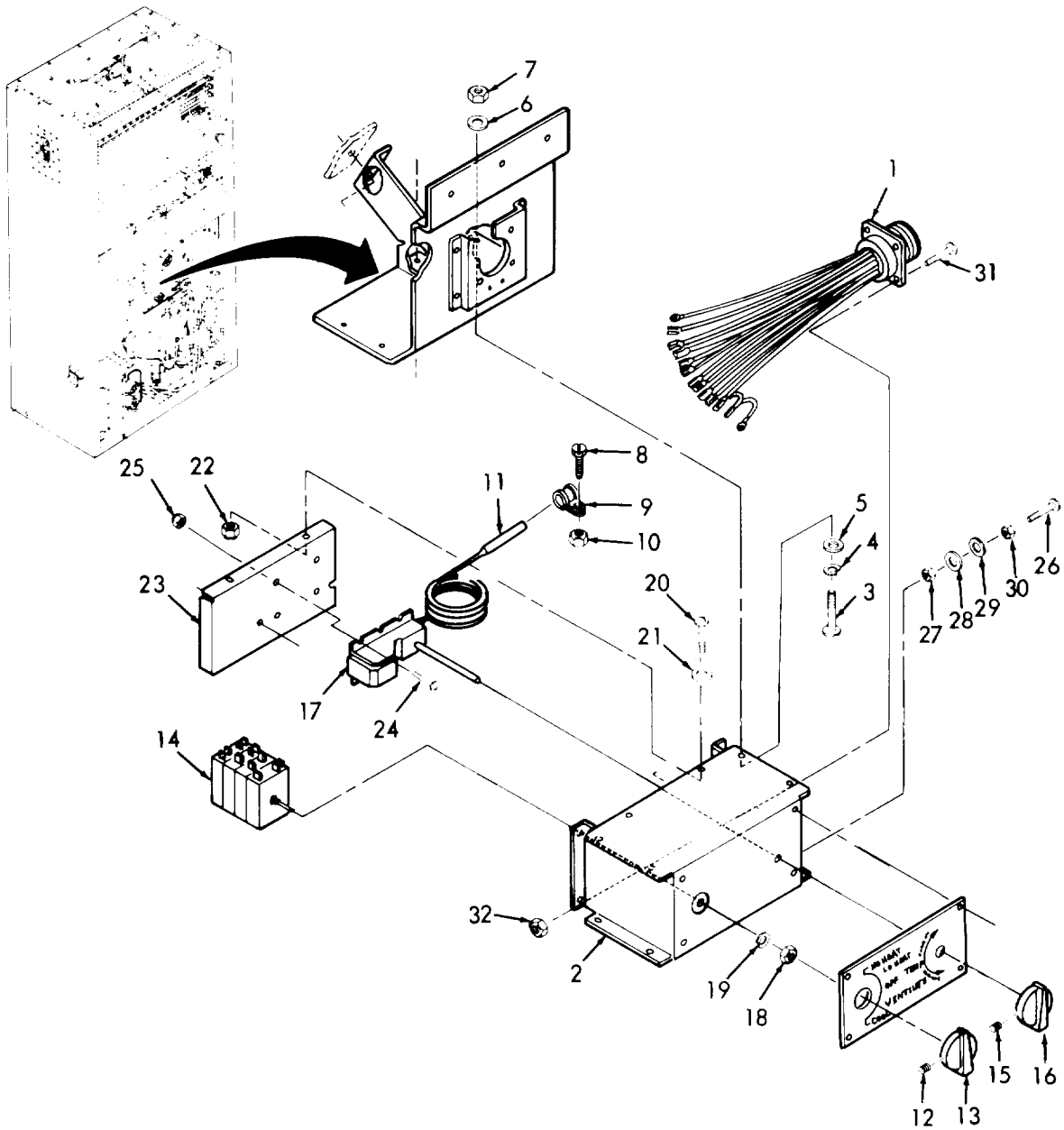

Figure 4-29. Control Module.

4-43. CONTROL MODULE. - Continued.

b. Disassemble.

(1) Remove set screw (12) and knob (13) from mode select switch (14).

(2) Remove set screw (15) and knob (16) from temperature control switch (17).

(3) Remove nut (18) and lock washer (19) from mode select switch (14).

(4) Remove four screws (20), four flat washers (21), four lock nuts (22), and remove cover (23) from control module (2).

(5) Remove four screws (24), four lock nuts (25), and temperature control switch (17) from control module cover (23).

(6) Tag and disconnect all wires from mode select switch (14) and temperature control switch (17).

(7) Remove ground screw (26), nut (27), flat washer (28), flat washer (29), and jamb nut (30).

(8) Remove four screws (31), four lock nuts (32), and J8 connector (1) from control module (2).

C. Test.

(1) Temperature Select Switch.

(a) Using multimeter, place probes on the red and blue terminals.

(b) Turn temperature control thermostat shaft fully clockwise.

(c) Check continuity. If temperature at sensing bulb is above 40° F (5° C), there should be no continuity.

(d) Slowly turn shaft counterclockwise until continuity is indicated. Turn shaft back and forth slightly to check that switch contacts open and close on a very narrow band.

(e) Place multimeter probes on the red and yellow terminals.

(f) Turn temperature control thermostat shaft fully counterclockwise.

(g) Chenk continuity. If temperature at sensing bulb is below 90° F (32° C) there should be no continuity.

(h) Slowly turn shaft clockwise until continuity is indicated. Turn shaft back and forth slightly to check that switch contacts open and close on a very narrow band.

(i) Replace temperature control thermostat if it fails any of the above tests.

(2) Mode Select Switch.

(a) Using multimeter and switch positions shown in Figure 4-30, check continuity at contacts indicated. With switch position closed, continuity should be indicated. With switch position open, no continuity should be indicated. Check between each set of contacts and at each switch position.

(b) Replace mode select switch if it fails any of these tests.

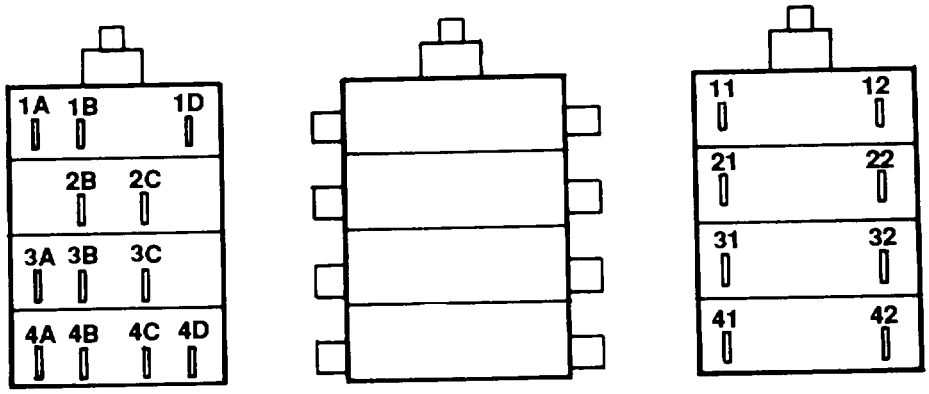

S-SWITCH POSITION						
	CONTACT NO.	1 HI HEAT	2 LO HEAT	3 OFF	4 VENT	5 COOL
S/WA	12 AND 1A	CLOSED	CLOSED	OPEN	OPEN	OPEN
	12 AND 1B	OPEN	OPEN	OPEN	OPEN	CLOSED
	11 AND 1D	OPEN	OPEN	OPEN	OPEN	CLOSED
S/WB	22 AND 2B	CLOSED	CLOSED	OPEN	CLOSED	CLOSED
S/WC	32 AND 3A	CLOSED	OPEN	OPEN	OPEN	OPEN
S/WD	42 AND 4A	CLOSED	OPEN	OPEN	OPEN	OPEN
	41 AND 4C	CLOSED	OPEN	OPEN	OPEN	OPEN

Figure 4-30. Switch Position and Terminal Identification.

d. Assembly.

(1) Attach J8 connector (1) to control module (2) and install four lock nuts (32) and four screws (31).

(2) Install jamb nut (30), flat washer (29), flat washer (28), nut (27), and ground screw (26).

4-43. CONTROL MODULE. - Continued.

d. Assembly. - Continued.

(3) Connect all wires to mode select switch (14) and temperature control switch (17) and remove tags.

(4) Place temperature control switch (17) onto control module cover (23) and install four lock nuts (25) and four screws (24).

(5) Attach cover (23) to control module (2) and install four lock nuts (22), four flat washers (21), and four screws (20).

(6) Install lock washer (19) and nut (18) onto mode select switch (14).

(7) Install knob (16) and set screw (15) onto temperature control switch (17).

(8) Install knob (13) and set screw (12) onto mode select switch (14).

e. Installation.

CAUTION

Damaging the capillary tube attached to the control module will cause unit to malfunction. Use care when moving control module.

(1) Carefully install capillary tube of sensing bulb (11) into upper compartment of unit.

(2) Install sensing bulb (11), clamp (9), lock nut (10) and screw (8).

(3) Install four nuts (7), four lock washers (4), four flat washers (6), four flat washers (5), and four screws (3).

(4) Reconnect connector P8 to J8 (1) on side of control module (2).

(5) Install intake (return air) guard (See para. 3-5).

(6) Install front panel (See para. 4-20).

4-44. CONDENSER DAMPER ASSEMBLY.

This Task Covers:

a. Removal b. Installation c. Adjustment

Initial Setup:

Tools Required

Tool kit, Refrigeration

Materials Required

None

Equipment Condition

Air Conditioner shut down and cool
Front panel removed (See para. 4–20).
Condenser outlet guard removed (See para.421).

a. Removal,

WARNING

Damage to actuator refrigerant lines or connectors can cause injury to personnel and components. Do not disconnect damper actuator lines or fillings. Do not bend refrigerant tubing more than needed to remove damper.

(1) Remove two nuts (1), two lock washers (2), two flat washers (3), disengage damper actuator (4) from damper shaft (5), and carefully move damper actuator away from condenser fan scroll (6).

(2) Remove four screws (7), four flat washers (8), four lock washers (9), and damper butterfly (10) from condenser scroll (6).

(3) Loosen two set screws (11) from damper shaft and remove two damper butterfly shafts (12) and Iwo bushings (13) from condenser scroll (6).

c. Installation.

(1) Install two bushings (13) and two damper butterfly shafts (12) on condenscr scroll (6) and tighten two sets screws (11) on damper shaft (5).

(2) Attach damper butterfly (10), four lock washers (9), four flat washers (8), and four screws (7) onto condenser scroll (6).

WARNING

Damage to actuator refrigerant lines or connectors can cause injury to personnel and components. Do not disconnect damper actuator lines or fittings. Do not bend refrigerant tubing more than needed to remove damper.

(3) Carefully move damper actuator (4) toward condenser fan scroll (6) and then attach damper actuator onto damper shaft (5).

(4) Install two flat washers (3), two lock washers (2), and two nuts (1).

(5) Install condenser outlet guard (See para. 4-21).

(6) Install front panel (See para. 4-20).

c. Adjustment.

(1) Loosen set screws on damper shaft.

(2) Hand position butterfly to fully closed position.

NOTE

Damper butterfly should appear to have an eleven and five o'clock position.

(3) Tighten set screws on damper shaft.

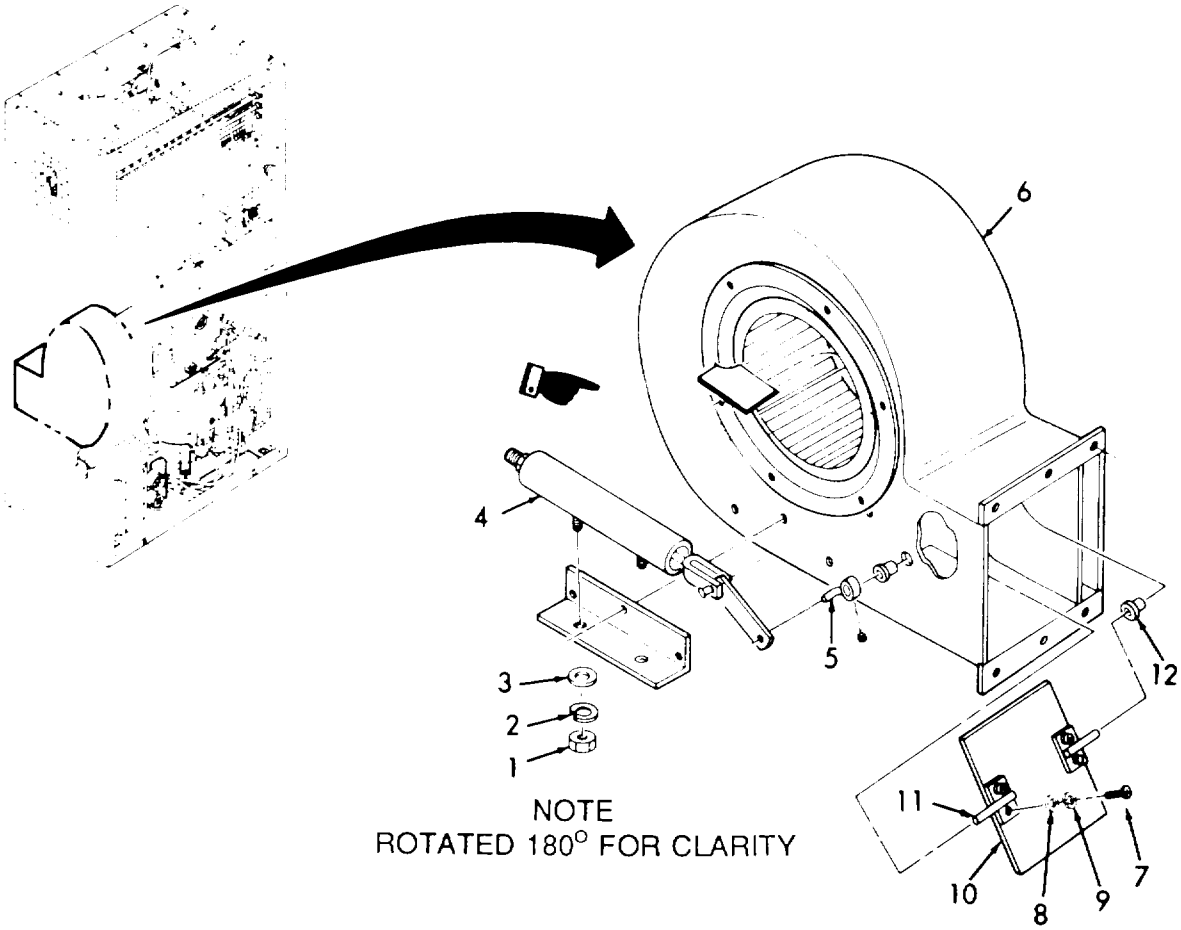

Figure 4-31. Condenser Damper Assembly.

4-45. CONDENSER FAN MOTOR.

This Task Covers:

a. Removal b. Test c. Installation

Initial Setup:

Tools Required

Tool kit, Refrigeration

Material's Required

None

Equipment Condition

Air conditioner shut down and cool.
Front panel removed (See para. 4-20).
Control module removed (See para. 4-43).

a. Removal.

WARNING

HIGH VOLTAGE
is used in operation of this equipment.
DEATH ON CONTACT
may result if personnel fail to observe safety precautions.
Never work on electrical equipment unless there is another person nearby who is familiar with operation and hazards of equipment and who is competent in administering first aid. When technician is aided by operators, he must warm them about dangerous areas.

Whenever possible, input power supply to equipment must be shut off before beginning work. Take particular care to ground every capacitor likely to hold a dangerous charge. When working inside, after power has been turned off, always ground every part before touching it. Be careful not to contact high voltage connections of 208 volts ac input when installing or operating this equipment.

Whenever nature of operation permits, keep one hand away from equipment to reduce hazard to current flowing through vital organs of body. Do Not operate equipment without all guards, louvers, and covers in place and tightly secured.

(1) Remove three screws (1), three flat washers (2), and three lock washers (3).

(2) Remove two screws (4) and J1 mounting bracket (5).

(3) Remove two screws (6), two flat washers (7), two lock washers (8), and stiffener bracket(9) from motor mounting bracket (5).

(4) Tag and disconnect motor wiring from wiring harness.

(5) Loosen set screw (10) on condenser impeller fan (11).

(6) Remove four bolts (12), four flat washers (13), four flat washers (14), and four lock nuts (15).

(7) Disengage motor shaft (16) from impeller fan (11) and remove motor from unit.

(8) Remove four screws (17), four flat washers (18), four lock washers (19), and motor mount (20).

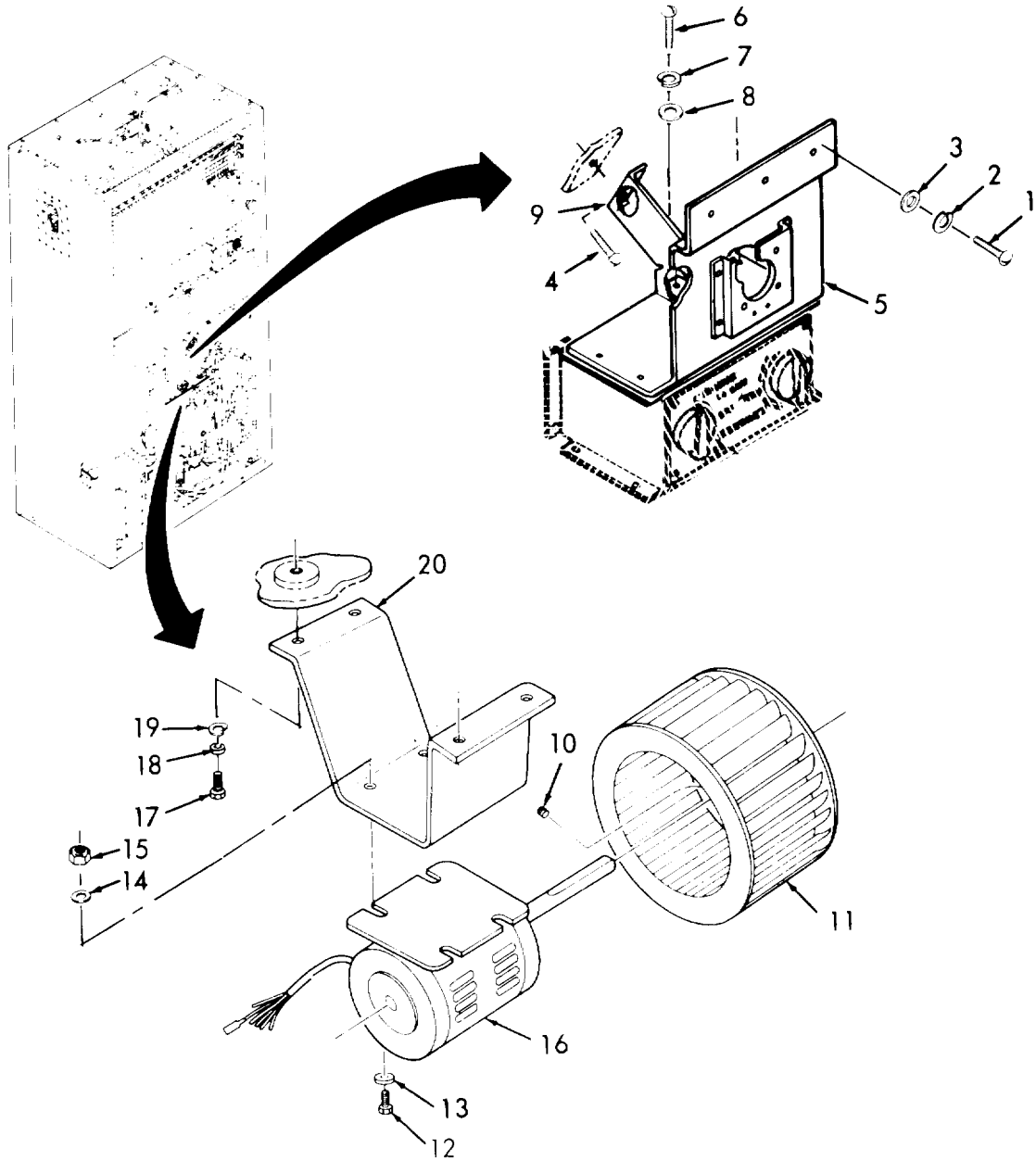

Figure 4-32. Condenser Fan Motor.

4-45. CONDENSER FAN MOTOR. (Continued).

b. Test.

NOTE
Motor must be cool when tested.

(1) Using a multimeter, test for continuity across violet and yellow leads.

(2) If continuity is not indicated, replace motor.

c. **Installation.**

(1) Install motor mount (20), four lock washers (19), four flat washers (18), and four screws (17).

(2) Attach motor shaft (16) to impeller fan (11) and place motor to unit.

(3) Install four lock nuts (15), four flat washers (14), four flat washers (13), and four bolts (12).

(4) Center impeller fan (11) in scroll and tighten set screw (10) on impeller fan.

(5) Connect motor wiring to wiring harness and remove tags.

(6) Install stiffener bracket (9), motor mounting bracket (5), two lock washers (8), two flat washers (7), and two screws (6).

(7) Install J1 mounting bracket (5) and two screws (4).

(8) Install three lock washers (3), three flat washers (2), and three screws (1).

(9) Install control module (See para. 4-43).

(10) Install front panel (See para. 4-20).

4-46. CONDENSER SCROLL.

This Task Covers:

a. Removal b. Repair c. Installation

Initial Setup:

Tools Required

Tool kit, Refrigeration

Material's Required

None

Equipment Condition

Air conditioner shut down and cool.
Front panel removed (See para. 4-20).
Control module removed (See para. 4-43).
Condenser motor removed (See para. 4-45).
Condenser outlet guard removed (See para. 4-21).

a. Removal.

WARNING

Damage to actuator refrigerant connectors or lines can cause serious injury to personnel and components. Do not disconnect damper actuator lines or fittings. Do not bend refrigerant tubing more than necessary to allow condenser scroll removal.

(1) Remove two nuts (l), two lock washers (2), two flat washers (3), disengage actuator (4) from damper shaft (5) and carefully move damper actuator away from condenser scroll (6).

(2) Remove two screws (7) from side of unit holding condenser scroll (6).

(3) Remove four screws (8), four lock washers (9), and four flat washers (10) holding condenser scroll (6) from rear of unit.

(4) Loosen set screw (11) and remove damper actuator (5) from condenser scroll (6).

(5) Perform the following steps for units with serial numbers 0001 through 0006.

(a) Drill out rivnut (12) on side on unit.

(b) Drill out three rivnuts (13) holding condenser damper actuator bracket (14) to side of condenser scroll (6) and remove bracket.

(c) Remove five screws (15), five flat washers (16), five lock washers (17), and right condenser inlet guard retainer (18).

(d) Loosen screws (19) on left retainer (20).

(6) Remove condenser scroll (6) from unit.

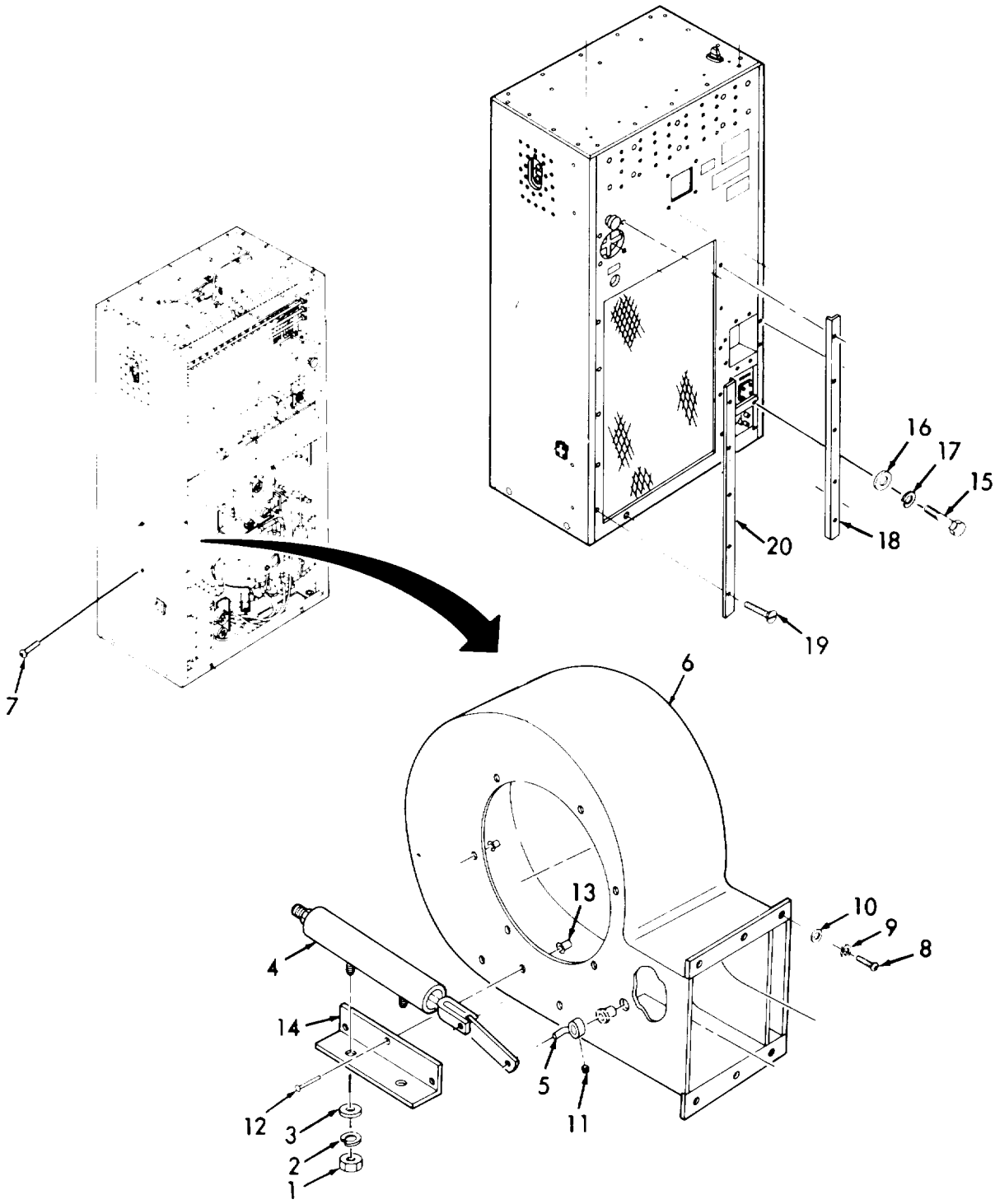

Figure 4-33. Condenser Scroll.

4-46. CONDENSER SCROLL. - Continued.

b. Repair.

(1) Repair of condenser scroll is limited to removing dents and straightening bent metal.

(2) If damage to condenser scroll is extensive, replace scroll.

c. Installation.

(1) Place condenser scroll (6) into position in unit.

(2) Perform the following steps for units with serial numbers 0001 through 0006.

(a) Tighten screws (19) on left retainer (20). Install right condenser inlet guard retainer (18), five lock washers (17), five flat washers (16), and five screws (15).

(b) Install bracket (14) and three rivnuts (13) holding condenser damper actuator bracket (14) to side of condenser scroll (6).

(c) Install rivnut (12) on side of unit.

(3) Install damper actuator (4) to condenser scroll (6) and tighten set screw (11).

WARNING

Damage to actuator refrigerant connectors or lines can cause serious injury to personnel and components. Do not disconnect damper actuator lines or fittings. Do not bend refrigerant tubing more than necessary to allow condenser scroll removal.

(4) Install four flat washers (10), four lock washers (9), and four screws (8) holding condenser scroll to rear of unit.

(5) Install two screws (7) holding condenser scroll (6) to side of unit.

(6) Place damper actuator (4) next to condenser scroll (6) and attach actuator to damper shaft (5).

(7) Install two flat washers (3), two lock washers (2) and two nuts (1).

(8) Install condenser outlet guard (See para. 4-21).

(9) Install condenser motor (See para. 4-45).

(10) Install control module (See para. 4-43).

(11) Install front panel (See para. 4-20).

4-47. CONDENSER FAN.

This Task Covers:
a. Removal b. Installation

Initial Setup:

Tools Required
Tool kit, Refrigeration

Material's Required
None

Equipment Condition
Air conditioner shut down and cool.
Front panel removed (See para. 4-20).
Control module removed (See para. 4-43).
Condenser motor removed (See para. 4-45).
Condenser scroll removed (See para. 4-46).

a. Removal.

(1) Remove six screws (6), six flat washers (5), six lock washers (4), and scroll end plate (3).

(2) Remove condenser fan (2) from scroll (1).

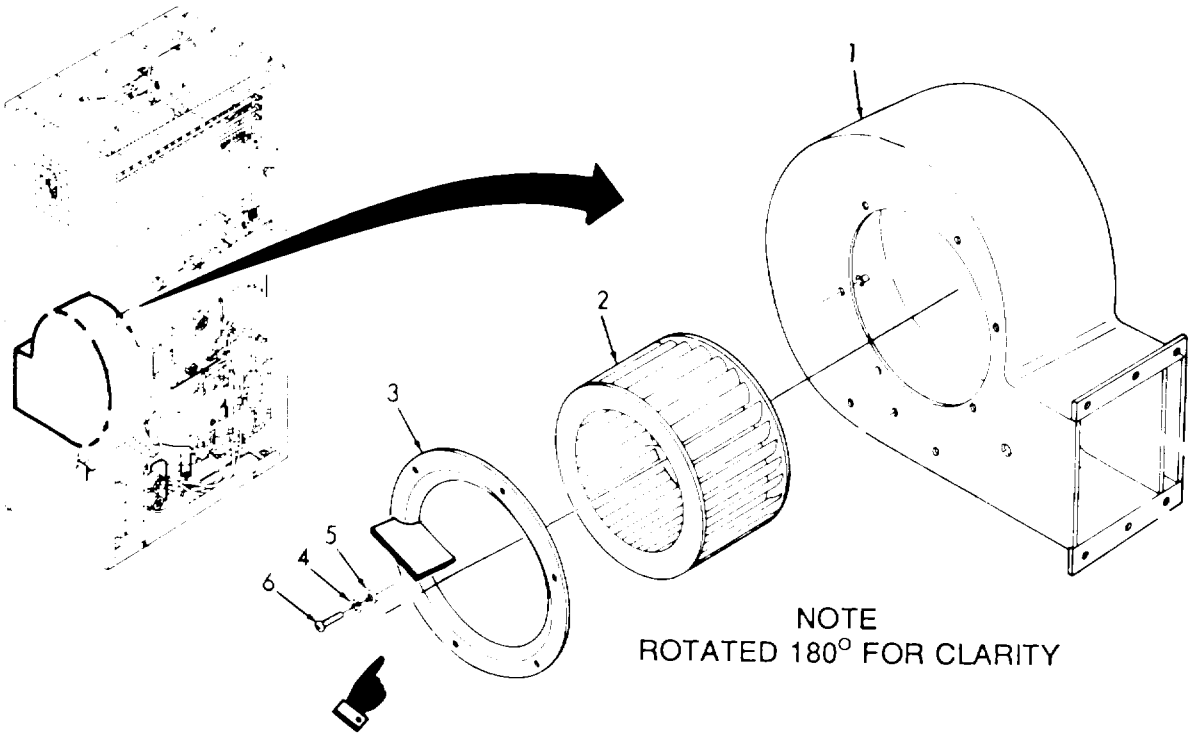

Figure 4-34. Condenser Fan.

4-47. CONDENSER FAN. - Continued.

b. Installation.

(1) Install condenser fan (2) to scroll (1).

(2) Install scroll end plate (3), six lock washers (4), six flat washers (5), and six screws (6).

(3) Install condenser scroll (See para. 4-46).

(4) Install condenser motor (See para. 4-45).

(5) Install control module (See para. 4-43).

(6) Install front panel (See para. 4-20).

Section II. PREPARATION FOR STORAGE OR SHIPMENT

4-48. PREPARATION FOR STORAGE.

a. Administrative Storage of Equipment Reference TM 740-90-1, Administrative Storage of equipment. Administrative storage is short term storage - 1 to 45 days. It covers a storage of equipment which can be readied for mission performance within 24 hours. Before placing an item in administrative storage, the next scheduled preventive maintenance checks and services should be performed, all known deficiencies corrected, and all current modification work orders applied. The administrative storage site should provide required protection from the elements and allow access for visual inspection when applicable.

(1) Roll down the fabric cover.

(2) Snap the cover in place.

b. Intermediate Storage (46 to 180 days). No special handling is required other than protection from damage and the elements.

(1) Unroll the fabric cover.

(2) Snap the cover in place.

(3) Place the air conditioner in a dry, covered area.

c. Long Term or Flyable Storage (Indefinite time).

(1) Unroll the fabric cover.

(2) Snap the cover in place.

(3) Bolt the unit to a skid base, preferably the original used to ship the unit if it has been preserved.

(4) Wrap the unit with two layers of heavy plastic sheet or barrier paper.

(5) Tape and strap the wrapping in place.

(6) Mark the air conditioner in accordance with the standard Army procedures contained in TM 740-90-1, Administrative Storage of Equipment.

CHAPTER 5

DIRECT SUPPORT MAINTENANCE INSTRUCTIONS

Section I. REPAIR PARTS, SPECIAL TOOLS; TMDE, AND SUPPORT EQUIPMENT

5-1. COMMON TOOLS AND EQUIPMENT. For Authorized common tools and equipment, refer to the Modified Table of Organization and Equipment (MTOE) applicable to your unit.

5-2. SPECIAL TOOLS, TMDE, AND SUPPORT EQUIPMENT. Test, Maintenance and Diagnostic Equipment (TMDE) and support equipment include electrical test equipment, standard pressure and vacuum gages, vacuum pumps, and charging manifolds found as standard equipment in any direct support refrigeration shop.

5-3. REPAIR PARTS. Repair parts are listed and illustrated in the TM 9-4120-399-24P, Repair Parts and Special Tools List (RPSTL), covering unit, direct support, and general support maintenance for this equipment.

Section II. DIRECT SUPPORT TROUBLESHOOTING PROCEDURES

5-4. GENERAL.

a. Table 5-1. contains Direct Support troubleshooting information for location and correcting most of the operating troubles which may develop in the air conditioner and can be repaired at the direct support maintenance level. Each malfunction for an individual component, unit or system is followed by a list of tests or inspections which will help you to determine probable causes and corrective actions to take. You should perform the tests/inspections and corrective actions in the order listed.

b. This manual cannot list all malfunctions that may occur, nor all tests or inspections and corrective actions, If a malfunction is not listed or is not corrected by listed corrective actions, notify your supervisor.

Table 5-1. Direct Support Troubleshooting.

MALFUNCTION TEST OR INSPECTION CORRECTIVE ACTION
1. **DISCHARGE PRESSURE TOO HIGH.**
Step 1. Check for dirty or clogged condenser coil.
Clean condenser coil.

Table 5-1. Direct Support Troubleshooting. (Continued).

MALFUNCTION TEST OR INSPECTION CORRECTIVE ACTION
1. DISCHARGE PRESSURE TOO HIGH. (Continued).
Step 2. Check for refrigerant overcharge.
See paragraph 5-13.
Step 3. Check sight glass for air in refrigerant system.
Leak check per paragraph 5-10.
Step 4. Check operation of condenser fan motor.
Replace defective fan motor per para. 4-45.
Step 5. Check to see if condenser fan is loose on shaft.
Tighten condenser fan on shaft per para. 4-45.
Step 6. Check to see if there is too much oil in the refrigerant system.
Remove compressor and check oil level per para. 5-28.
2. DISCHARGE PRESSURE TOO LOW.
Step 1. Check too see that cold outside air is not entering the room.
FoI1ow instructions of paragraph 2-7 to limit cold outside air.
Step 2. Check sight glass for low refrigerant charge.
Charge the refrigerant system per paragraph 5-12.
Step 3. Check pressure regulating valve.
Replace pressure regulating valve per para. 5-20.
Step 4. Check compressor operation.
Replace defective compressor per para. 5-28.

Table 5-1. Direct Support Troubleshooting.

MALFUNCTION TEST OR INSPECTION CORRECTIVE ACTION
3. SUCTION PRESSURE TOO HIGH.
Step 1. Check for dirty air conditioner filter.
Clean filter.
Step 2. Check to see if conditioned discharge air guard and intake return air guard louvers are closed.
Adjust louvers.
Step 3. Check for dirty evaporator coil.
Clean evaporator coil.
Step 4. Check sight glass for low refrigerant charge.
Charge the refrigerant system per paragraph 5-12.
Step 5. Check to see if solenoid valve is stuck closed.
Replace valve if defective per para, 5-19
Step 6. Check operation of evaporator fan motor.
Replace motor if defective per para, 4-32
Step 7. Check to see if evaporator impeller fans are loose on shafts.
Tighten evaporator impeller fans on shafts per para. 4-30.
Step 8. Test the liquid quench expansion valve.
Replace faulty valve per para. 5-21.
Step 9. Check distributor and evaporator coil tubing for kinks and restrictions.
Repair and replace tubing as required per para. 5-32.

Table 5-1. Direct Support Troubleshooting. (Continued).

MALFUNCTION TEST OR INSPECTION CORRECTIVE ACTION
3. SUCTION PRESSURE TOO HIGH. - Continued.
Step 10. Check sight glass for evidence of bubbles and refrigeration level that indicate severe refrigerant blockage.
Repair and replace tubing as required per para. 5-32.
Replace clogged filter/dryer dehydrator per para. 5-15.
Step 11. Check the sight glass for moisture in the system (Yellow indications).
Replace filter/dryer dehydrator per para. 5-15.
4. SUCTION PRESSURE TOO HIGH.
Step 1. Check operation of compressor.
Replace faulty compressor per para. 5-28.
Step 2. Check condition of liquid quench expansion valve bulb. Check to see that it is properly contacted to suction line.
Replace liquid quench expansion valve if bulb damaged per para. 5-21.
Secure bulb to suction line if loose.
Step 3. Check performance of liquid quench expansion valve.
Replace defective liquid quench expansion valve per para. 5-21.

Section III. DIRECT SUPPORT

MAINTENANCE PROCEDURES

5-5. GENERAL.

a. The procedures in this section cover items which appear in the direct support maintenance level on the Maintenance Allocation Chart (MAC) which is in Appendix B.

b. When working on the refrigeration system there are certain general maintenance procedures which may need to be performed at some point during the specific repair or replacement of items within the refrigeration system. Paragraphs 5-6 through 5-12 cover these general procedures.

c. The refrigeration system must by pumped down and in some actions totally discharged before any maintenance is performed on system components. Be sure that all refrigerant in the section of the system that you are working on has been discharged. Read and understand all Instructions prior to attempting repairs. Leak testing and dehydrator replacement are required after any system component has been removed and replaced. The section of the system that was opened must be evacuated before it is charged. The system must be properly charged to function properly.

WARNING
DANGEROUS CHEMICAL
(R22)
is used in this equipment.

DEATH
or severe injury may result if personnel fail to observe safety precautions. Use great care to avoid contact with liquid refrigerant gas being discharged under pressure. Sudden and irreversible tissue damage can result from freezing. Wear thermal protective gloves and a face protector or goggles in any situation where skin-eye-contact is possible. Prevent contact of refrigerant gas with flame or hot surfaces. Heat causes refrigerant to break down and form carbonyl chloride (phosgene), a highly poisonous and corrosive gas.

WARNING
REFRIGERANT UNDER PRESSURE
is used in the operation of this equipment.

DEATH
or severe injury may result if you fail to observe safety precautions. Never use a heating torch on any part that contains refrigerant 22. Do not let liquid refrigerant touch you, and do not inhale refrigerant gas.

5-6. DETECTING AND REMOVING MOISTURE.

a. Detecting Moisture. Excessive water vapor may enter the refrigeration system, At the low temperatures developed in the system, this vapor condenses and may freeze the expansion valve in an open or closed position. The operating characteristics of a unit with a frozen expansion valve are given below.

(1) Valve Frozen Shut. If expansion valve is frozen shut, the following operating characteristics may be observed:

(a) Unit operates continuously; box temperature remains high.
(b) Suction pressure remains abnormally low.
(c) Suction tubing remains abnormally warm.

5-6. DETECTING AND REMOVING MOISTURE. (Continued).

(2) Valve Frozen Open. If the expantion valve is frozen open, the following characteristics may be observed:

(a) Suction pressure remains abnormally high.
(b) Compressor pounds.

(3) Liquid **Moisture Indicator.** If coloe indicator is pink, moisture is in system.

b. Removing Moisture. The following means may be used to remove moisture from the refrigeration system. It will be necessary to artificially warm the expansion valve or shut off and warm the entire unit for a long enough period of time to thaw the frozen water in the system, enabling it to be recirculated with the refrigerant.

(1) Change Dehydrator. If activated silicagel charge of dehydrator has absorbed all the moisture it can hold, change the dehydrator. Run on this for approximately one day; then change again to another fresh dehydrator. This may strip enough moisture from system to correct the condition.

(2) Use Service Dehydrator. Operate the unit approximately an hour with service drier and replace dehydrator on unit with fresh dehydrator.

5-7. DISCHARGING THE REFRIGERANT SYSTEM.

WARNING
DANGEROUS CHEMICAL
(R22)
is used in this equipment

DEATH
or severe injury may result if personnel fail to observe safety precautions. Use great care to avoid contact with liquid refrigerant gas being discharged under pressure. Sudden and irreversible tissue damage can result from freezing. Wear thermal protective gloves and a face protector or goggles in any situation where skin-eye-contact is possible. Prevent contact of refrigerant gas with flame or hot surfaces. Heat causes refrigerant to break down and form carbonyl chloride (phosgene), a highly poisonous and corrosive gas.

WARNING
REFRIGERANT UNDER PRESSURE
is used in the operation of this equipment.

DEATH
or severe injury may result if you fail to observe safety precautions. Never use a heating torch on any part that contains refrigerant 22. Do not let liquid refrigerant touch you, and do not inhale refrigerant gas.

a. Preliminary procedure.

(1) Remove access cover.

(2) Unscrew hose connection protective caps.

WARNING

Death or serious injury may result if personnel fail to observe safety precautions. Use great care to avoid contact with liquid rcfrigerant or refrigerant gas being discharged under pressure. Sudden and irreversible tissue damage can result f'rom freezing. Wear thermal protective gloves and a face protector or goggles in any situation where skin-eye-contact is possible.

WARNING

Prevent contact of refrigerant gas with flame or hot surfaces. Heat causes refrigerant to break down and form carbonyl chloride (phosgene). a highly poisonous and corrosive gas.

NOTE

In accordance with Environmental Protection Agency regulations refrigerants cannot be discharged into the atmosphere. A refrigerant recovery & recycling unit must be used whenever discharging the refrigerant system.

(3) Connect the charging manifold hoses to the manifold and air coconditioner services valves.

(4) Attach a hose assembly to the center conection of the manifold.

NOTE

Operation of the recovery/recycling unit must be by AUTHORIZED PERSONNEL ONLY

(5) Connect and operate a recovery/recycling unit in accordance with the manufacturer's instructions.

5-8. PURGING THE REFRIGERANT SYSTEM.

WARNING

DANGEROUS CHEMICAL
(R22)
is used in this equipment.

DEATH

or severe injury may result if personnel fail to observe safety precautions. Use great care to avoid contact with liquid refrigerant gas being discharged under pressure. Sudden and irreversible tissue damage can result from freezing. Wear thermal protective gloves and a face protector or goggles in any situation where skin-eye-contact is possible. Prevent contact of refrigerant gas with flame or hot surfaces. Heat causes refrigerant to break down and form carbonyl chloride (phosgene), a highly poisonous and corrosive gas.

WARNING

REFRIGERANT UNDER PRESSURE
is used in the operation of this equipment.

DEATH

or severe injury may result if you fail to observe safety precautions. Never use a heating torch on any part that contains refrigerant 22. Do not let liquid refrigerant touch you, and do not inhale refrigerant gas.

a. Supplies. To purge the refrigerant system you will need the following items.

Nitrogen cylinder (Appendix E, item 2)
Nitrogen regulator (Appendix B, item 5)

b. Preliminary procedure. Discharge the refrigerant system. (See para. 5-7).

NOTE

The refrigeration system must be purged with dry nitrogen cylinder, (Appendix E, item 2), before any brazing is performed on any component. A flow of dry nitrogen between 1 and 2 cfm (0.028-0.057 m^3/minute) should be continued during all brazing operations to minimize internal oxidation and scaling.

WARNING

Nitrogen is an inert gas. However, it also presents danger as a suffocant and, therefore, must also be discharged in a ventilated location.

CAUTION

Nitrogen cylinders are pressurized containers. The pressure in the cylinder can exceed 2000 psig. A nitrogen pressure regulator should be used at all times when nitrogen is used for leak check or purge operations.

NOTE

The refrigeration system must be purged with dry nitrogen from nitrogen cylinder (Appendix E, item 2) before any brazing is performed on any component. A flow of dry nitrogen between 1 and 2 cfm (0.028-0.057) m^3/minutes) should be continued during all brazing operations to minimize internal oxidation and scaling.

(1) Discharge system (See para. 5-7).

(2) Connect the center hose from the charging manifold to a nitrogen regulator (Appendix B, item 5) and dry nitrogen cylinder (Appendix E, item 2).

(3) The hose from the high pressure service valve to the charging manifold must be connected.

(4) The hose from the low pressure service valve must be disconnected from the charging manifold.

(5) Close the unused valve on the charging manifold, and open the one with the nitrogen tank hook up.

(6) Open the nitrogen cylinder valve and adjust the regulator so that 1 to 2 cfm (0.028-0.057 m^3/minute) of nitrogen flows through the system.

(7) Check discharge from hose attached to the low pressure charging valve to be sure that no oil is being forced out of the system.

(8) Allow nitrogen to sweep through the system at the rate of less than 1 - 2 cfm (0.028-0.057 m^3 minute) for a minimum of 5 minutes, before starting any brazing operation. Then allow it to continue to flow at the same rate until all brazing operations are completed (See para. 5-9 for brazing/debrazing procedures).

(9) After installation brazing operations are completed, allow nitrogen to flow for a minimum of 5 minutes.

(10) Close nitrogen cylinder valve, nitrogen regulator and charging manifold valve.

(11) Disconnect the hose from the nitrogen tank.

(12) Replace filter/dryer dehydrator (para. 5-15).

(13) Leak test system (See para. 5-10).

5-9. BRAZING/DEBRAZING PROCEDURES.

WARNING

DANGEROUS CHEMICAL
(R22)
is used in this equipment.

DEATH
or severe injury may result if personnel fail to observe safety precautions. Use great care to avoid contact with liquid refrigerant gas being discharged under pressure. Sudden and irreversible tissue damage can result from freezing. Wear thermal protective gloves and a face protector or goggles in any situation where skin-eye-contact is possible. Prevent contact of refrigerant gas with flame or hot surfaces. Heat causes refrigerant to break down and form carbonyl chloride (phosgene), a highly poisonous and corrosive gas.

WARNING

REFRIGERANT UNDER PRESSURE
is used in the operation of this equipment.

DEATH
or severe injury may result if you fail to observe safety precautions. Never use a heating torch on any part that contains refrigerant 22. Do not let liquid refrigerant touch you, and do not inhale refrigerant gas.

a. Supplies. To perform any brazing or debrazing procedures, you will need the following items.

Brazing alloy (silver) (Appendix E, items 3)
Nitrogen cylinder (Appendix E, item 2)
Brazing flux (Appendix E, item 5)
Abrasive cloth (Appendix E, item 7)
Rags (Appendix E, item 8)
Heat Sink (Appendix E, item 21)

b. General. All tubing in the refrigeration system is seamless copper with a bright internal finish that permits thorough cleaning and prevents entrapment of moisture or other impurities. Rigid grade copper is used for straight sections and soft grade for sections that must be bent. All interconnecting fittings, such as elbows, tees, etc., are also copper. The bodies of all valves and all connections on other components are brass. All joints, except those provided with flare fittings, are made by brazing in accordance with MIL-B-7883, except that radiographic examination is not required.

c. Filler Alloy. Grade IV or VI brazing alloy and Type B flux, as specified in MIL-B-7883, must be used for all copper to brass joints. Grade III brazing alloy may be substituted for Grade IV or VI for copper to copper joints; flux is not required for copper to copper joints.

d. Debrazing. Debraze joints for removal of refrigeration system components as follows:

WARNING

All refrigerant 22 must be discharged from system and entire system must be purged with dry nitrogen before beginning any debrazing operation.

(1) Determine which joints are to be debrazed. Due to the limited work space inside the air conditioner, it may be more convenient to remove a part of the interconnecting tubing with the component rather than debrazing the joints on the component itself.

(2) Before debrazing a joint on a valve, disassemble the valve to the extent possible, then apply heat sink (Appendix E, item 21) to all but joint. (If heat sink is not available a wet rag may be used).

WARNING

Polyurethane foam used as insulation in air conditioner will break down to form toxic gases if exposed to flame of a torch at brazing temperature.

(3) Protect insulation, wiring harnesses, cabinet, and other surrounding components with appropriate shields.

(4) Be sure the work area is well ventilated and that dry nitrogen is flowing through the refrigeration system at a rate of 1 to 2 cfm (0.028-0.057 m^3/minute).

(5) Apply sufficient heat uniformly around the joint to quickly melt the filler alloy. If heat is applied slowly, or only on one side, the entire component or length of tubing will be heated and filler alloy in adjacent joints may also be melted. Remove heat as soon as the joint separates.

d. Cleaning debrazed joints. All filler alloy must be cleaned from debrazed joints before reassembly. Heat each piece of the joint until the filler alloy is melted and then wipe it away with a damp cloth. Be sure no filler alloy or other debris are left inside any tubing, fitting, or component.

e. Reassembly. If tubing sections or fittings were removed with a component, debraze them from the component, clean the joints, and braze them to the new component before reinstallation.

f. Brazing. Braze joints within the air conditioner as folIows:

(1) Position the component to be installed.

5-9. BRAZING / DEBRAZING PROCEDURES. (Continued).

(2) To prepare a joint on a valve for brazing, disassemble the valve to the extent possible. Then apply heat sink (Appendix E, item 21) to all but the joint. (If heat sink is not available a wet rag may be used).

(3) Protect insulation, wiring harnesses, and surrounding components with appropriate shields.

(4) Be sure the work area is well ventilated and that dry nitrogen is flowing through the refrigeration system at a rate of 1 to 2 cfm (0.028-0.057 m^3/minute).

(5) Apply sufficient heat uniformly around the joint to quickly raise it to a temperature that will melt the filler alloy. Remove heat as soon as brazing is completed.

5-10. LEAK TESTING THE REFRIGERANT SYSTEM.

WARNING
DANGEROUS CHEMICAL
(R22)
is used in this equipment.

DEATH
or severe injury may result if personnel fail to observe safety precautions. Use great care to avoid contact with liquid refrigerant gas being discharged under pressure. Sudden and irreversible tissue damage can result from freezing. Wear thermal protective gloves and a face protector or goggles in any situation where skin-eye-contact is possible. Prevent contact of refrigerant gas with flame or hot surfaces. Heat causes refrigerant to break down and form carbonyl chloride (phosgene), a highly poisonous and corrosive gas.

WARNING
REFRIGERANT UNDER PRESSURE
is used in the operation of this equipment.

DEATH
or severe injury may result if you fail to observe safety precautions. Never use a heating torch on any part that contains refrigerant 22. Do not let liquid refrigerant touch you, and do not inhale refrigerant gas.

a. Supplies. To test the refrigeration system for leaks, you will need the following items.

Nitrogen cylinder (Appendix E, item 2)
Refrigerant 22 (Appendix E, item 17)

b. When to Test. The entire repaired area should be thoroughly leak tested after repair or replacement of any component, before it is recharged with refrigerant 22. Leak testing is also the method for troubleshooting when a system has lost all or part of its refrigerant charge through an undetermined cause.

c. Testing Method. There are two acceptable methods for leak testing the refrigeration system.

(1) Refrigerant gas leak detector. If an electronic refrigerant gas leak detector is available, it should be used in accordance with the procedures contained in TM 9-4940-435-14, Leak Detector, Refrigerant Gas.

NOTE

The electronic refrigerant gas leak detector is highly sensitive to the presence of a minute quantity of gas in the air, and due to this factor is quite effective in the detection of small leaks. However, due to the rapid dispersion of refrigerant gas into the surrounding air, difficulty may be encountered in pinpointing large leaks. The detector must be used in a well ventilated but draft-free area.

(2) Soap solutions. In this method, a strong solution of a liquid detergent and water is brushed onto all points of possible leakage while closely watching for the formation of bubbles.

CAUTION

If the soap solution testing method is used, thoroughly rinse with fresh water after testing is completed. A residual soap film will attract and accumulate an excessive amount of dust and dirt during operation.

d. Testing Procedures. To perform leak testing by use of the electronic detector, it is necessary that the system be pressurized with a proportion of refrigerant gas. To perform leak testing by use of the soap solution method, the system may be pressurized with dry nitrogen alone.

(1) To pressurize a system that has some refrigerant charge, for either leak testing method:

(a) Remove the hose connection protective caps from the high and low pressure service valves.

(b) Connect the hoses from a charging manifold to the service valves.

NOTE

If it is possible that the problem may not be a leak and that you may not have to replace a refrigeration system component, refrigerant 22 may be substituted for the nitrogen in the following test. If nitrogen is used, you will have to discharge, evacuate and re-charge the system after this test is completed.

5-10. LEAK TESTING THE REFRIGERANT SYSTEM. (Continued).

(c) Connect a nitrogen pressure regulator and nitrogen bottle to the center hose connection of the charging manifold.

(d) Open the charging manifold valves,

(e) Open the nitrogen tank valve and pressurize the system to 350 psig (24.7 kg/cm^2).

(f) Perform leak tests.

(g) If a leak is found, discharge and purge the system and repair leak. See specific instructions for components to be removed.

(h) If a leak was not found and refrigerant 22 was used to pressurize the system, see charging instructions. (See para. 5-12).

(2) To pressurize a system that has been discharged and purged for leak testing with an electronic detector:

(a) Remove the hose connection protective caps from the high and low pressure service valves.

(b) Connect the hoses from a charging manifold to the service valves.

CAUTION

Connect the refrigerant 22 cylinder so that only gas will be used for pressurization.

(c) Connect a drum of refrigerant 22 to the center hose connection of the charging manifold.

(d) Open the charging manifold valves.

(e) Open the refrigerant drum valve slightly and adjust as necessary to prevent formation of frost, and allow system pressure to build up until the gages read 40-50 psig (2.8 - 3.5 kg/cm^2).

(f) Close the charging manifold valves and the refrigerant drum valve.

(g) Remove the refrigerant 22 cylinder from the center hose connection.

(h) Connect a nitrogen regulator and cylinder of dry nitrogen to the center hose connection.

(i) Open the charging manifold valves and the nitrogen cylinder and regulator valve. Allow system pressure to build up until gages read 350 psig (24.7 kg./cm^2).

(j) Perform leak tests, then discharge and purge the system, in accordance with paragraphs 5-7 and 5-8 before performing maintenance, or before evacuating and charging the system, as appropriate.

(3) Final Leak Testing. Always perform a final leak test after performing any repair or replacement of components before the air conditioner is reassembled and the refrigeration system is evacuated and charged.

5-11. EVACUATING THE REFRIGERANT SYSTEM. The refrigeration system must be evacuated to remove all moisture before it is charged with refrigerant 22. To evacuate the refrigeration system, perform the following procedures.

WARNING

DANGEROUS CHEMICAL
(R22)
is used in this equipment.

DEATH

or severe injury may result if personnel fail to observe safety precautions. Use great care to avoid contact with liquid refrigerant gas being discharged under pressure. Sudden and irreversible tissue damage can result from freezing. Wear thermal protective gloves and a face protector or goggles in any situation where skin-eye-contact is possible. Prevent contact of refrigerant gas with flame or hot surfaces. Heat causes refrigerant to break down and form carbonyl chloride (phosgene), a highly poisonous and corrosive gas.

WARNING

REFRIGERANT UNDER PRESSURE
is used in the operation of this equipment.

DEATH

or severe injury may result if you fail to observe safety precautions. Never use a heating torch on any part that contains refrigerant 22. Do not let liquid refrigerant touch you, and do not inhale refrigerant gas.

CAUTION

Don't evacuate a leaking system. The vacuum created can cause air, moisture, and dirt to enter system.

5-11. EVACUATING THE REFRIGERANT SYSTEM. (Continued).

a. Check that system was leak tested and it has NO LEAKS. (See para. 5-10).

b. Check that new filter dryer dehydrator was installed. If not, install one.

c. Check that both charging manifold valves are closed.

d. Attach hose assemblies to service valves and charging manifold valves.

e. Attach center hose assembly to vacuum pump.

f. Start vacuum pump.

g. Open charging manifold valves.

h. Run the vacuum pump until at least 29 inches of mercury, measured on the gage, is reached.

NOTE

Inability to reach 29 inches of mercury may indicate either a leak or a problem with the pump.

i. Continue running the pump for one more hour, while observing the gage. If the gage needle moves back and forth, you have a leak which must be located and corrected first.

j. Close charging manifold valves.

k. Stop vacuum pump.

l. Disconnect pump from center hose connection.

m. Charge the refrigeration system per para. 5-12.

5-12. CHARGING THE REFRIGERATION SYSTEM.

WARNING

DANGEROUS CHEMICAL
(R22)
is used in this equipment.
DEATH

or severe injury may result if personnel fail to observe safety precautions. Use great care to avoid contact with liquid refrigerant gas being discharged under pressure. Sudden and irreversible tissue damage can result from freezing. Wear thermal protective gloves and a face protector or goggles in any situation where skin-eye-contact is possible. Prevent contact of refrigerant gas with flame or hot surfaces. Heat causes refrigerant to break down and form carbonyl chloride (phosgene), a highly poisonous and corrosive gas.

WARNING

REFRIGERANT UNDER PRESSURE
is used in the operation of this equipment.

DEATH
or severe injury may result if you fail to observe safety precautions. Never use a heating torch on any part that contains refrigerant 22. Do not let liquid refrigerant touch you. and do not inhale refrigerant gas.

a. Supplies. To charge the refrigeration systcm, you will need the following supplies.

Filter/Dryer Dehydrator (TM 9-4120-399-24P)
Refrigerant 22 (Appendix E, item 17)

WARNING

DANGEROUS CHEMICAL
(R22)
is used in this equipment.

DEATH
or severe injury may result if personnel fail to observe safety precautions. Use great care to avoid contact with liquid refrigerant gas being discharged under pressure. Sudden and irrevcrsible tissue damage can result from freezing. Wear thermal projectile gloves and a face protector or goggles in any situation where skin-eye-contact is possible. Prevent contact of refrigerant gas with flame or hot surfaces. Heat causes refrigerant to break down and form carbonyl chloride (phosgene), a highly poisonous and corrosive gas.

CAUTION

Nevcr introduce liquid refrigerant into the low pressure (suction) service valve.

NOTE

The system must be evacuated before charging. Use only refrigerant 22 to charge the unit. If available, use recycled refrigerant.

a. Check that the hose from the low pressure charging valve is connected to the compound gage side of the charging manifold, The hose from the high pressure charging valve should be connected to the pressure gage side of the charging manifold.

b. Connect the center hose from the charging manifold to a well charged cylinder of refrigerant 22.

c. Loosen the hose connections to the two air conditioner charging valves slightly.

d. Open the two charging manifold valves.

5-12. CHARGING THE REFRIGERATION SYSTEM. (Continued).

e. Open the refrigerant 22 cylinder valve slightly to allow a small amount of refrigerant to purge air from the hoses. Tighten the hose connections at the air conditioner charging valves.

f. Close the low pressure (suction) charging manifold valve. Never introduce liquid refrigerant into the low pressure (suction) charging valve.

g. Position the refrigerant 22 cylinder so that liquid will be used for charging. (Some cylinders must be inverted and some are equipped with a selector valve).

h. Open the refrigerant 22 cylinder valve.

i. Allow liquid refrigerant to enter the system until the cylinder weight has decreased by 8.0 pounds (3.6 kg) or until system pressure has equalized.

j. Close the refrigerant cylinder valve and the high pressure (discharge) manifold valve.

k. Connect power.

l. Be sure circuit breakers are on.

m. Press and release both pressure switch reset buttons.

n. Turn air conditioner on and operate in the COOL mode with the temperature control thermostat set at a maximum DECREASE position. 9-0.6

o. If the 8.0 pound (3.6 kg) full charge was obtained, skip p. thru r. If the system pressure equalized prior to obtaining a full charge of 8.0 pounds (3.6 kg), proceed with step q.

p. Switch the refrigerant cylinder to the gas only position.

q. Be sure that the refrigerant cylinder has been switched to the gas position and open the refrigerant drum valve and the low (suction) pressure charging manifold valve.

r. Monitor the weight of the refrigerant cylinder as the air conditioner compressor pulls additional refrigerant gas into the system until the full 8.0 pound (3.6 kg) charge is obtained. When the system is fully charged, immediately close the refrigerant cylinder valve.

s. Run the air conditioner in COOL mode (with temperature control thermostat in full COOLER position for 15 minutes.

CAUTION

Do not skip the next step.

t. After 15 minutes, observe the sight glass on back of condenser section. Green center means the refrigerant moisture content is acceptable. Yellow center means there is too much moisture in the system. It must be discharged, evacuated, and charged again.

NOTE

Milky white or bubbly liquid means the system has a low charge. Clear bubble-free liquid around the center means the system is fully charged.

u. If charge is low, add gas refrigerant.

(1) Be sure that cylinder is switched to gas position. Open the drum valve.

(2) Continue to charge until sight glass is clear and bubble-free.

(3) Close the refrigerant cylinder valve.

v. Check air conditioner for proper cooling. There should be at least a 15° F temperature difference between evaporator discharge air and the inlet air. Turn the mode selector switch to OFF.

WARNING

DANGEROUS CHEMICAL
(R22)
is used in this equipment.

DEATH

or severe injury may result if personnel fail to observe safety precautions. Use great care to avoid contact with liquid refrigerant gas being discharged under pressure. Sudden and irreversible tissue damage can result from freezing. Wear thermal protective gloves and a face protector or goggles in any situation where skin-eye-Contact is possible. Prevent contact of refrigerant gas with flame or hot surfaces. Heat causes refrigerant to break down and form carbonyl chloride (phosgene), a highly poisonous and corrosive gas.

w. Remove the charging manifold hoses from the air conditioner charging valves.

x. Install service valve protective caps.

y. Using screwdriver, secure charging valve access cover with eight screws.

5-13. REFRIGERANT PRESSURE CHECK. To check the pressure in the refrigeration system, perform the following steps.

a. Preliminary Procedure. Remove access cover. Except in cases where it is obvious that the refrigerant charge has been lost, the first step in troubleshooting problems in the refrigeration system should be to check discharge and suction pressures under operating conditions. Check pressures as follows:

(1) Turn the mode selector switch to OFF.

(2) Remove service valve access cover. (Refer to Figure 3-4).

WARNING

DANGEROUS CHEMICAL
(R22)
is used in this equipment.

DEATH
or severe injury may result if personnel fail to observe safety precautions. Use great care to avoid contact with liquid refrigerant gas being discharge under pressure. Sudden and irreversible tissue damage can result from freezing. Wear thermal protective gloves and a face protector or goggles in any situation where skin-eye-contact is possible. Prevent contact of refrigerant gas with flame or hot surfaces. Heat causes refrigerant to break down and form carbonyl chloride (phosgene), a highly poisonous and corrosive gas.

(3) Remove protective caps from charging valves.

(4) Connect individual pressure gages, or a refrigeration charging manifold and hoses to the high (discharge) and low (suction) charging valves.

CAUTION

Take care that only a very small amount of refrigerant is allowed to escape during hose purging. Large amounts of escaping refrigerant will freeze components.

(5) Loosen hose connections at gages or charging manifold.

(6) Open high (discharge) high pressure manifold valve slightly to purge air from hose. Tighten low pressure hose connection at gage fitting as soon as a hissing sound is Heard.

(7) Open low (suction) pressure manifold valve slightly to purge air from hose. Tighten low pressure hose connection at gage fitting as soon as a hissing sound is heard.

(8) Open the low (suction) and high (discharge) manifold valves.

(9) Both gages should read the same. Check the reading with the appropriate column in Table 5-1. If the system is even partially charged, the pressure should be approximately equal to that shown in the table for the appropriate ambient temperature. If the pressure is considerably less than shown in the table, the system does not contain enough refrigerant to continue the pressure check; go to leak testing.

(10) Turn the mode selector switch to the COOL mode with the temperature control thermostat in the full DECREASE setting for a few minutes.

(11) With the unit operating, allow gages to stabilize. Take readings of the two gages.

(12) Refer to Section II Troubleshooting Table to isolate malfunction.

(13) When pressure tests are completed, proceed with the maintenance action indicated.

(14) Turn unit OFF.

(15) Close manifold valves.

WARNING

DANGEROUS CHEMICAL
(R22
is used in this equipment.

DEATH
or severe injury may result if personnel fail to observe safety precautions. Use great care to avoid contact with liquid refrigerant gas being discharge under pressure. Sudden and irreversible tissue damage can result from freezing. Wear thermal protective gloves and a face protector or goggles in any situation where skin-eye-contact is possible. Prevent contact of refrigerant gas with fleme or hot surfaces. Heat causes refrigerant to break down and form carbonyl chloride (phosgene), a highly poisonous and corrosive gas.

(16) Remove gages or service manifold hoses from charging valves.

(17) Install charging valve protective caps.

(18) Install service valve access cover. (Refer to Figure 3-4).

Table 5-2. Pressure-Temperature Relationship of Saturated Refrigerant 22

Temperature		Pressure		Temperature		Pressure	
Deg F	Deg C	Psig	kg/cm²	Deg F	Deg C	Psig	kg/cm²
10	-12.3	32.93	2.315	66	18.9	114.2	8.029
12	-11.1	34.68	2.439	68	20.0	118.3	8.318
14	-10.0	36.89	2.593				
16	-8.9	38.96	2.739	70	21.1	122.5	8.612
18	-7.8	41.09	2.889	72	22.2	126.8	8.915
				74	23.3	131.2	9.225
20	-6.6	43.28	3.043	76	24.4	135.7	9.541
22	-5.5	45.23	3.180	78	25.6	140.3	9.864
24	-4.3	47.85	3.364				
26	-3.4	50.24	3.532	80	26.7	145.0	10.195
28	-2.2	52.70	3.705	82	27.8	149.8	10.522
				84	28.9	154.7	10.877
30	-1.1	55.23	3.883	86	30.0	159.8	11.236
32	0.0	57.83	4.066	88	31.1	164.9	11.594
34	1.1	60.51	4.254				
36	2.2	63.27	4.448	90	32.2	170.1	11.960
38	3.3	66.11	4.648	92	33.3	175.4	12.332
				94	34.5	180.9	12.719
40	4.4	69.02	4.853	96	35.6	186.5	13.113
42	5.5	71.99	5.062	98	36.7	192.1	13.506
44	6.6	75.04	5.276				
46	7.7	78.18	5.497	100	37.8	197.9	13.914
48	8.8	81.40	5.723	102	38.9	203.8	14.329
				104	40.0	209.9	14.758
50	10.0	84.70	5.955	106	41.4	216.0	15.187
52	11.1	88.10	6.257	108	42.2	222.3	15.630
54	12.2	91.5	6.433				
56	13.3	95.1	6.686	110	43.3	228.7	16.080
58	14.5	98.8	6.947	112	44.4	235.2	16.537
				114	45.6	241.9	17.008
60	15.6	102.5	7.206	116	46.7	248.7	17.486
62	16.7	106.3	7.474	118	47.8	255.6	17.971
64	17.8	110.2	7.748	120	48.9	262.5	18.456

ALL DATA ON THIS PAGE HAS BEEN DELETED

5-14. FRESH AIR DAMPER.

This Task Covers

a. Removal b. Installation

Initial Setup:

Tools Required
Tool kit, Refrigeration

Material's Rewired
None

Equipment Condition
Air conditioner shut down and cool.
Top panel removed para. 4-20).
Fresh air guard and filter removed (para 4-22)
Intake (Return air) guard removed (para. 3-5)
Discharge system removed (para. 5-7).

a. Removal.

(1) Loosen set screw (1) and remove knobs (2) and (3) from front and rear of unit.

(2) Remove two screws (4), two lock washers (5), and two flat washers (6).

(3) Remove four screws (7), four lock washers (8), four flat washers (9), and auxiliary power connector bracket (10).

(4) Disconnect evaporator coil fitting (11) from top of expansion valve (12).

(5) Remove four screws (13), four lock washers (14), four flat washers (15) holding damper to unit.

(6) Remove cotter pin (16), washer (17), and bushing (18) and disengage actuator arm (19) from door (20).

(7) Remove fresh air damper (21) through front of unit.

*U.S. GOVERNMENT PRINTING OFFICE: 1997 - 654-028/60049

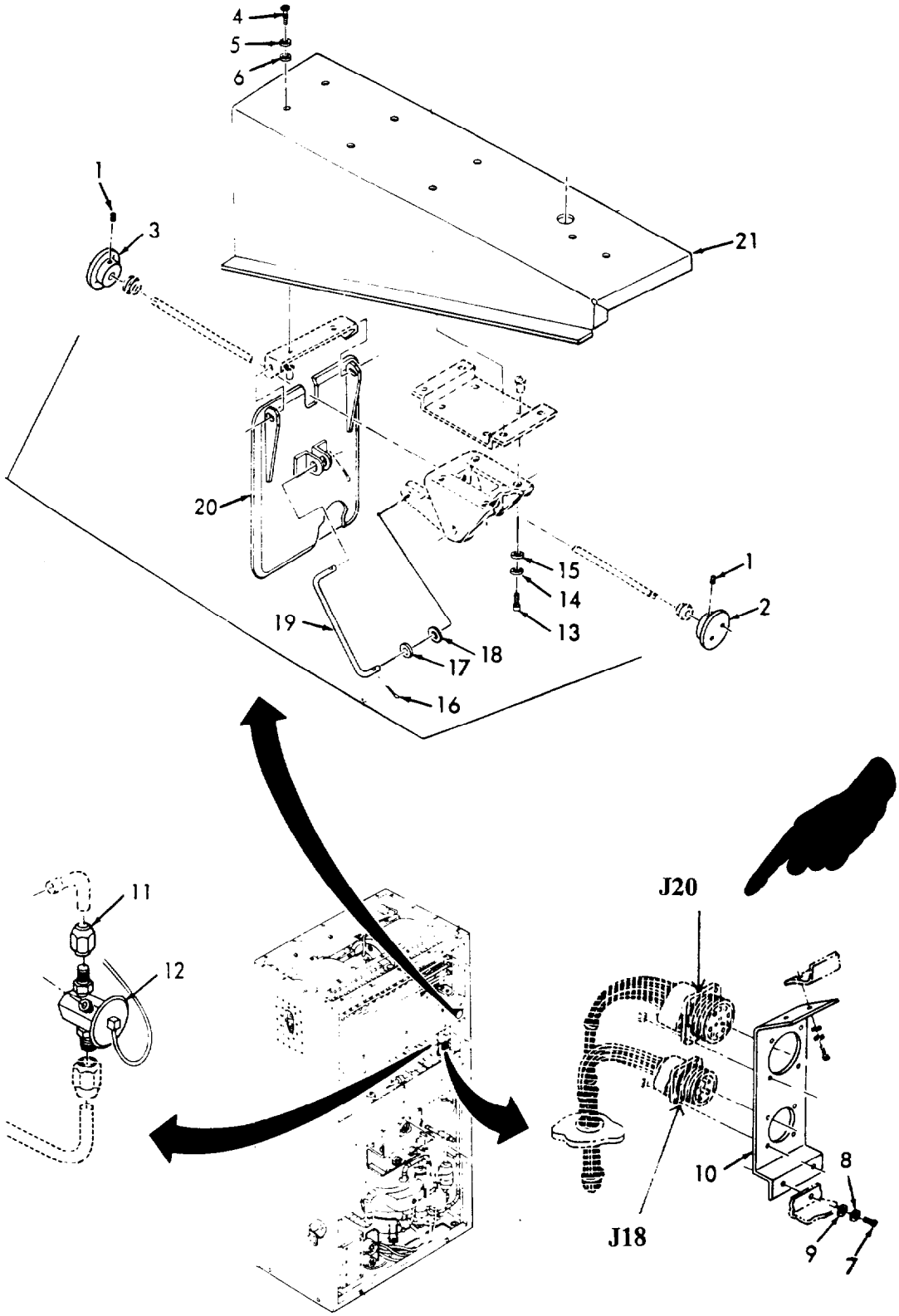

Figure 5-1. Fresh Air Damper.

b. Installation.

(1) Place fresh air damper (21) into unit.

(2) Attach actuator arm (19) to door (20), and install bushing (18), washer (17), and cotter pin (16).

(3) Install four flat washers (15), four lock washers (14), and four screws (13) to attach damper to unit.

(4) Connect evaporator coil fitting (11) to top of expansion valve (12).

(5) Install auxiliary power connector bracket (10), four flat washers (9), four lock washers (8), and four screws (7).

(6) Install two flat washers (6), two lock washers (5), and two screws (4).

(7) Install knobs (3) and (2) to front and rear of unit and tighten set screw (1).

(8) Replace filter/dryer dehydrator (See para. 5-15).

(9) Leak test all newly connected joints and those in the repaired area (See para. 5-10).

(10) Evacuate the refrigeration system (See para. 5-11).

(11) Charge the refrigeration system (See para. 5-12).

(12) Install intake (return air) guard (See para. 3-5).

(13) Install fresh air guard and filter (See para. 4-22).

(14) Install top panel (See para. 4-20).

5-15. FILTER/DRYER DEHYDRATOR.

This Task Covers:

a. Removal b. Installation

Initial Setup:

Tools Required
Tool kit, Refrigeration

Material's Required
None

Equipment Condition
Air conditioner shut down and cool.
Front panel removed (See para. 4-20).
Discharge the refrigeration system (See para. 5-7).

WARNING
HIGH VOLTAGE
is used in operation of this equipment.

DEATH ON CONTACT
may result if personnel fail to observe safety precautions.

Never work on electrical equipment unless there is another person nearby who is familiar with operation and hazards of equipment and who is competent in administering first aid. When technician is aided by operators, he must warn them about dangerous areas.

Whenever possible, input power supply to equipment must be shut off before beginning work. Take particular care to ground every capacitor likely to hold a dangerous charge. When working inside, after power has been turned off, always ground every part before touching it. Be careful not to contact high voltage connections of 208 volts ac input when installing or operating this equipment.

Whenever nature of operation permits, keep one hand away from equipment to reduce hazard to current flowing through vital organs of body. Do Not operate equipment without all guards, louvers, and covers in place and tightly secured.

NOTE
The filter/dryer dehydrator must be replaced each time the refrigeration system has been opened. It should be installed just before unit is leak tested.

a. Removal.

(1) Disconnect two flare nuts (1) and (2).

(2) Loosen screw (3), nut (4), and washer (5) that secures clamp (6) to bracket.

(3) Pivot filter/dryer dehydrator (7) and clamp (6) to gain access to clamp hardware.

(4) Remove nut (8), screw (9), and lock washer (10) that secure clamp (6) and filter/dryer dehydrator (7).

(5) Remove filter/dryer dehydrator (7).

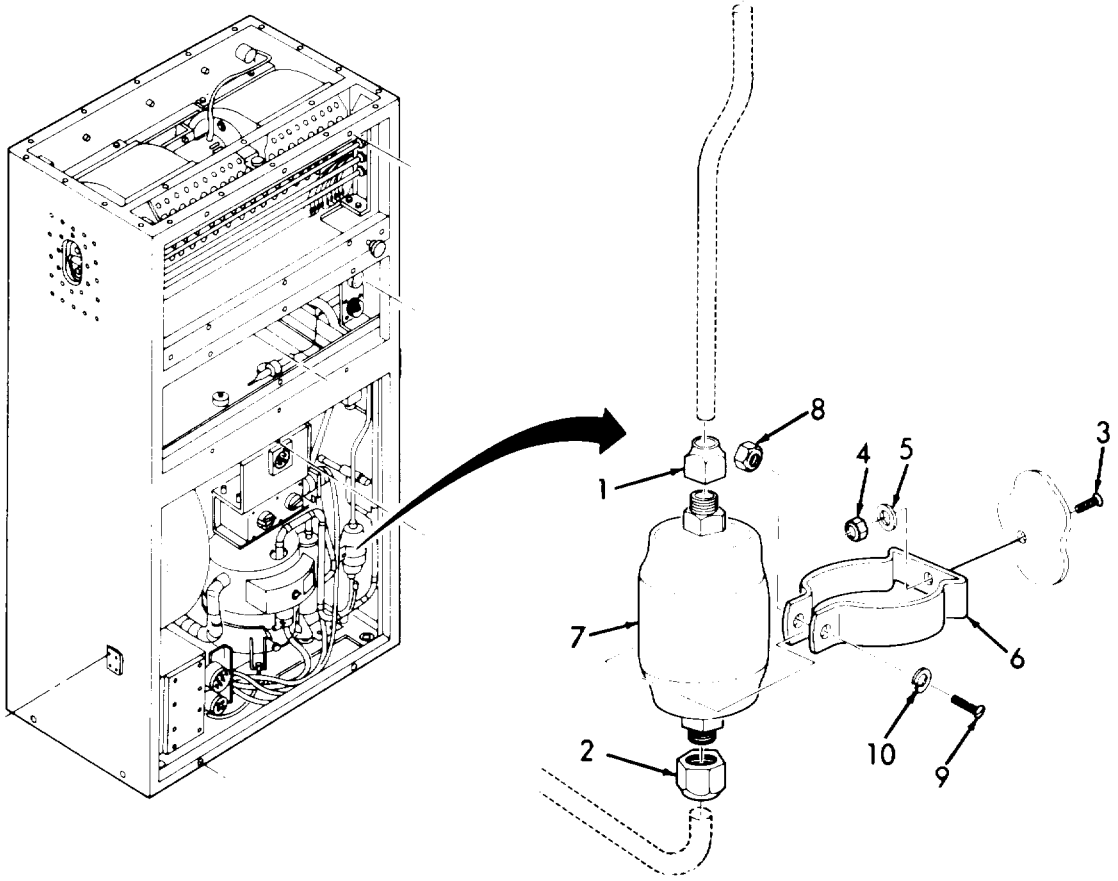

Figure 5-2. Filter/Dryer Dehydrator.

b. Installation.

CAUTION

Replacement dehydrators are packaged with sealing caps on the flare fittings to prevent moisture contamination of the desiccant filtering media. Remove these caps immediately prior to installation. Never install a dehydrator from which caps have been removed for an extended or unknown period of time.

CAUTION

Improper installation of dehydrator may damage components. Be sure to install dehydrator with arrow pointing up.

(1) Install dehydrator (7) in clamp (6).

(2) Secure clamp (6) to dehydrator (7) with screw (9), lock washer (10), and nut (8).

(3) Pivot dehydrator (7) and clamp (6) into position.

(4) Secure two flare nuts (1) and (2) to dehydrator (7).

(5) Leak test all newly connected joints and those in the repair area (See para. 5-10).

(6) Evacuate the refrigeration system (See para. 5-11).

(7) Install front panel (See para. 4-20).

(8) Charge the refrigeration system. (See para. 5-12).

5-16. RECEIVER.

This Task Covers:

a. Removal b. Installation

Initial Setup:

Tools Required

Tool kit, Refrigeration

Material's Required

None

Equipment Condition

Air conditioner shut down and cool.
Front panel removed (See para, 4-20).
Refrigeration system discharged (See para. 5-7).
Fusible plug removed (See para. 5-17).
Purge the system with dry nitrogen (See para. 5-8).
Debraze tube connections (See para. 5-9).

a. Removal.

WARNING

DANGEROUS CHEMICAL
(R22)
is used in this equipment.

or severe injury may result if personnel fail to observe safety precautions. Use great care to avoid contact with liquid refrigerant gas being discharged under pressure. Sudden and irreversible tissue damage can result from freezing. Wear thermal protective gloves and a face protector or goggles in any situation where skin-eye-contact is possible. Prevent contact of refrigerant gas with flame or hot surfaces. Heat causes refrigerant to break down and form carbonyl chloride (phosgene), a highly poisonous and corrosive gas.

(1) Remove screw (1), lock washer (2), and nut (3) from clamp (4).

(2) Remove receiver (5).

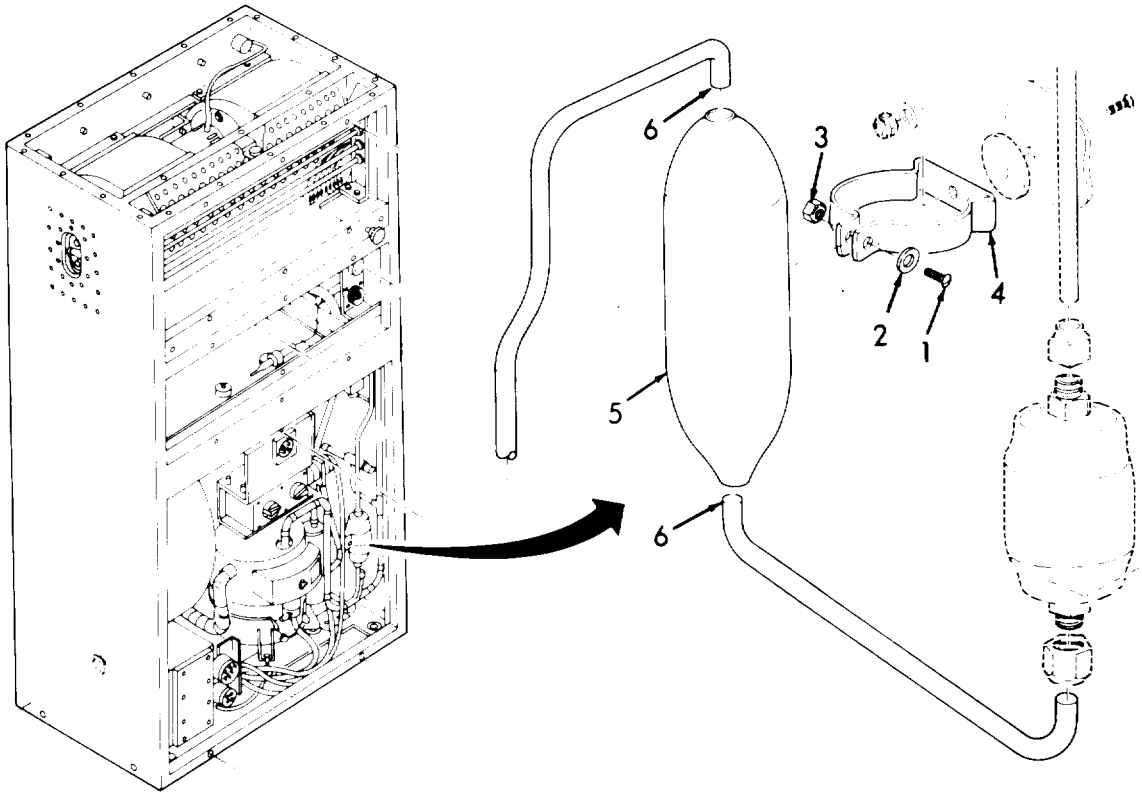

Figure 5-3. Receiver.

b. Installation.

(1) Place receiver (5) in clamp (4).

(2) Loosely install screw (1), lock washer (2), and nut (3) in clamp (4).

(3) Place receiver (5) on tube ends (6).

(4) Purge the system with nitrogen (See para. 5-8).

(5) Braze the tube joints (See para. 5-9).

(6) Tighten hardware installed in (2).

(7) Install fusible plug (See para. 5-17).

(8) Replace filter/dryer dehydrator (See para. 5-15).

(9) Leak test all newly connected joints and those in the repair area (See para. 5-10).

(10) Evacuate the refrigeration system (See para. 5-11).

(11) Install front panel (See para. 4-20).

(12) Charge the refrigeration system (See para. 5-12).

5-17. FUSIBLE PLUG.

This Task Covers:

a. Removal b. Installation

Initial Setup:

Tools Required
Tool kit, Refrigeration

Material's Required
Anti-seize tape (Appendix E, Item 10)

Equipment Condition
Air conditioner shut down and cool.
Front panel removed (See para. 4-20).
Discharge the refrigerant system (See para. 5-7).

a. Removal.

Hold fitting (2) **so** that it cannot be twisted and unscrew fusible plug (1).

b. Installation.

(1) Apply anti-seize tape (Appendix E, Item 10) to threads of fusible plug (1).

(2) Screw fusible plug (1) in place while holding adapter fitting (2).

(3) Replace the filter/dryer dehydrator (See para. 5-15).

(4) Leak test all newly connected joints and those in the repair area (See para. 5-10).

(5) Evacuate the system (See para. 5-11).

(6) Charge the system (See para. 5-12).

(7) Install front panel (See para. 4-20).

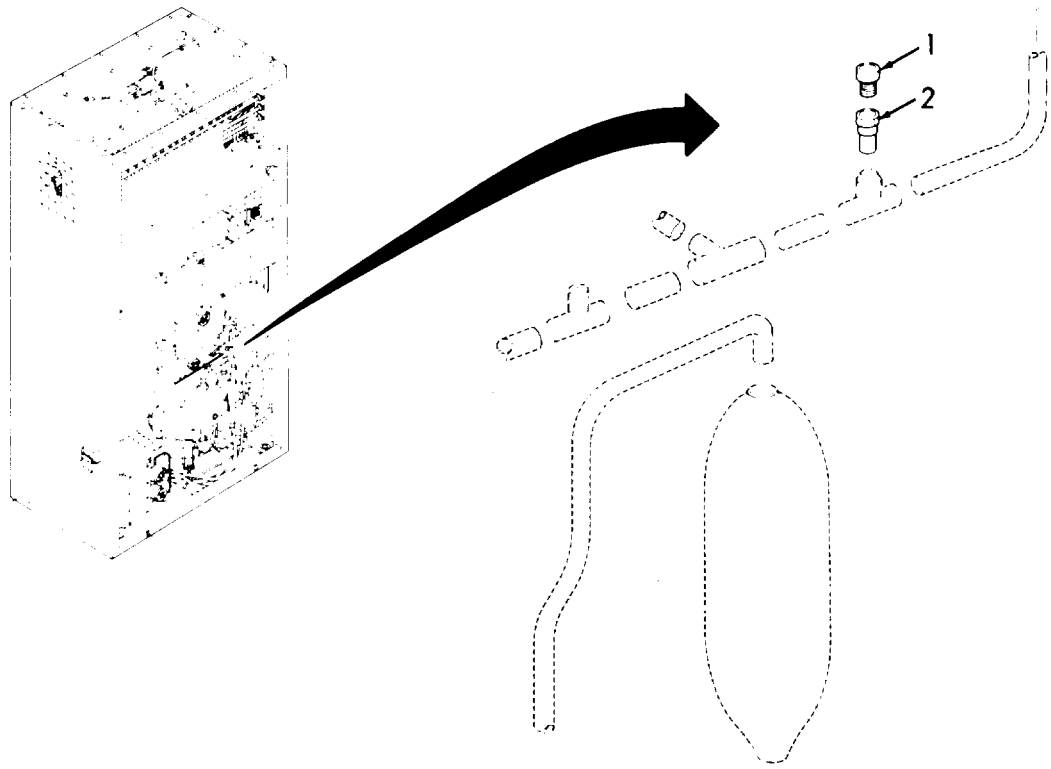

Figure 5-4. Fusible Plug.

5-18. DAMPER ACTUATOR.

This Task Covers:

a. Removal b. Installation

Initial Setup:

Tools Required

Tool kit, Refrigeration

Material's Required

None

Equipment Condition

Air conditioner shut down and cool.
Front panel removed (See para. 4-20).
Refrigerant system discharged (See para. 5-7).

a. Removal.

(1) Loosen flare nut (1) on actuator (2).

(2) Remove two nuts (3), two flat washers (4), and two lock washers (5) that secure the damper actuator (2) to the backet (6)

(3) Remove dampar actuator (2).

(4) Loosen set screw (7) on actuator arm (8).

(5) Remove actuator arm (8).

(6) Remove lock nut (9), screw (10), and lever (11) from actuator (2).

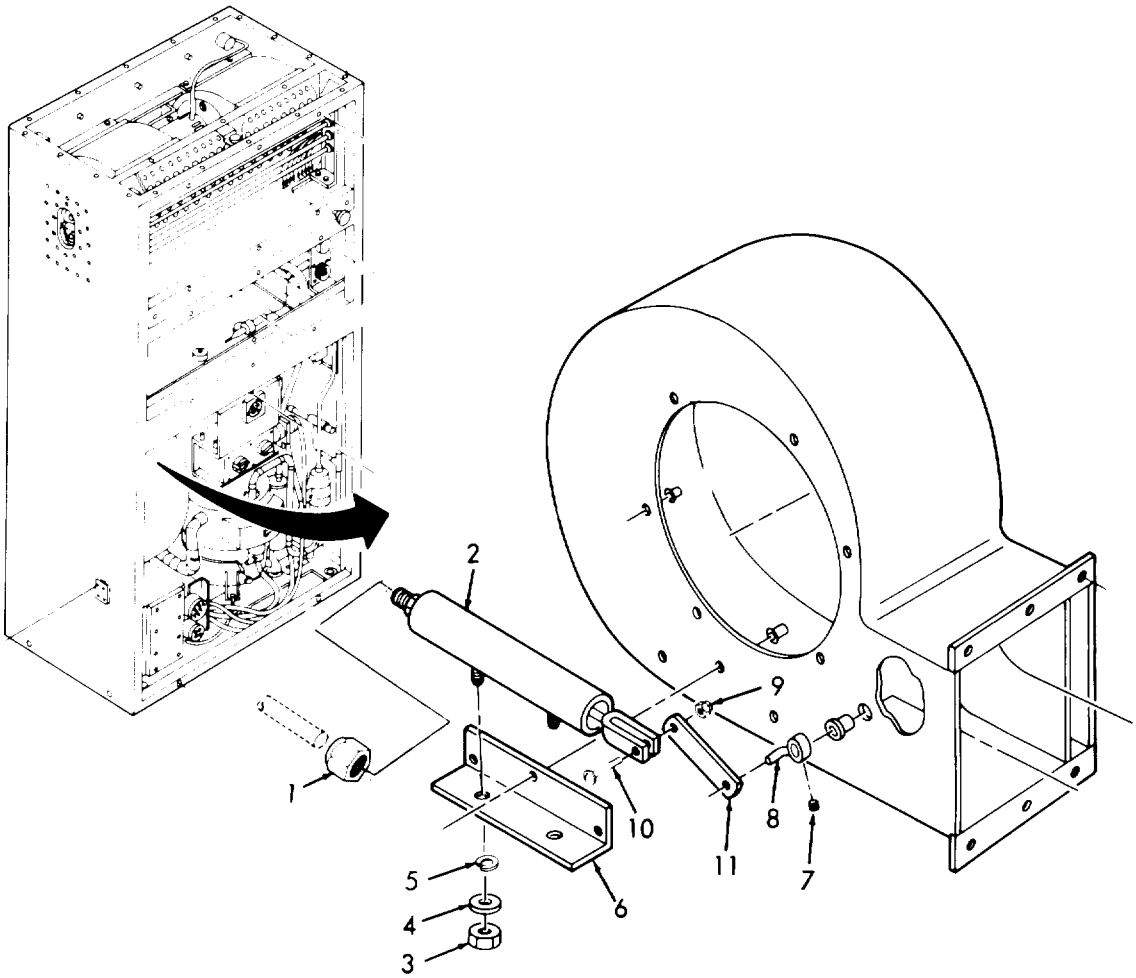

Figure 5-5. Damper Actuator.

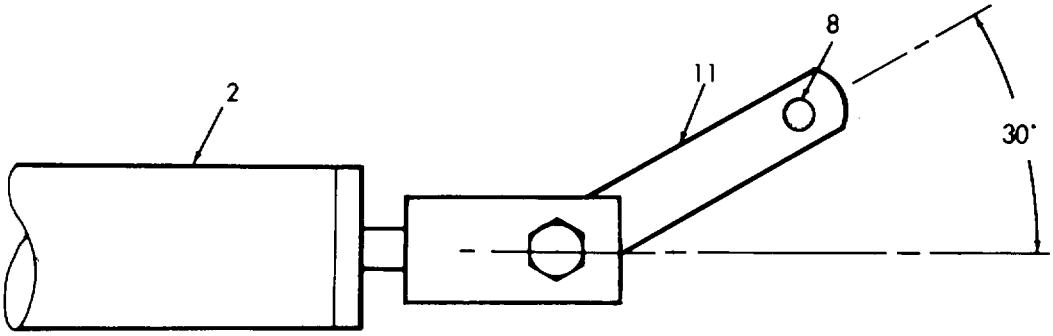

Figure 5-6. Damper Actuator Arm Positioning.

b. Installation.

(1) Install Iever (11), screw (10), and lock nut (9) onto actuator (2).

(2) Install actuator arm (8) on damper shaft and actuator (2). Refer to Figure 5-5 and position actuator arm (8) as indicated.

(3) Tighten set screw (7) on arm (8).

(4) Secure damper actuator (2) to bracket (6) with two flat washers (4), two lock washers (5), and two nuts (3) but do not tighten.

(5) Secure flare nut (1) to damper actuator (2).

(6) Move damper actuator (2) until damper is in fully closed position and then tighten actuator mounting hardware.

(7) Leak test area around flare nut (1) (See para. 5-10).

(8) Replace filter/dryer dehydrator (See para. 5-15).

(9) Evacuate the refrigeration system (See para. 5-11).

(10) Charge the refrigeration system (See para. 5-12).

(11) Replace front panel (See para. 4-20).

5-19. SOLENOID VALVE (L1).

This Task Covers:

a. Removal b. Repair c. Test d. Installation

Initial Setup:

Tools Required

Tool kit, Refrigeration

Material's Required

Heat sink (Appendix E, item 21)

Equipment Condition

Air conditioner shut down and cool.
Front panel removed (See para. 4-20).
Discharge the refrigerant system (See para. 5-7).
Remove filter/dryer dehydrator (See para. 5-15).

WARNING

HIGH VOLTAGE
is used in operation of this equipment.

DEATH ON CONTACT
may result if personnel fail to observe safety precautions.

Never work on electrical equipment unless there is another person nearby who is familiar with operation and hazards of equipment and who is competent in administering first aid. When technician is aided by operators, he must warn them about dangerous areas.

Whenever possible, input power supply to equipment must be shut off before beginning work. Take particular care to ground every capacitor likely to hold a dangerous charge. When working inside, after power has been turned off, always ground every part before touching it. Be careful not to contact high voltage connections of 208 volts ac input when installing or operating this equipment.

Whenever nature of operation permits, keep one hand away from equipment to reduce hazard to current flowing through vital organs of body. Do Not operate equipment without all guards, louvers, and covers in place and tightly secured.

5-19. SOLENOID VALVE (L1). - Continued.

WARNING
DANGEROUS CHEMICAL
(R22)

is used in this equipment

or severe injury may result if personnel fail to observe safety precautions. Use great care to avoid contact with liquid refrigerant gas being discharged under pressure. Sudden and irreversible tissue damage can result from freezing. Wear thermal protective gloves and a face protector or goggles in any situation where skin-eye-contact is possible. Prevent contact of refrigerant gas with flame or hot surfaces. Heat causes refrigerant to break down and form carbonyl chloride (phosgene), a highly poisonous and corrosive gas.

a. Removal.

(1) Remove nut (1) from valve (2).

(2) Remove and set aside nameplate (3) and coil (4) from valve (5).

(3) Remove two screws (6) that secure the plunger assembly (7) to the valve body (8).

(4) Remove the plunger assembly (7), diaphragm (9), and O-ring (10).

(5) Check valve body (8) for visible damage. Normally valve body replacement is not necessary.

(6) If valve body is in good condition, skip steps (7) through (13).

(7) Purge the system with nitrogen (See para. 5-8).

(8) Debraze tube connections (See para. 5-9)

(9) Remove four screws (11) and four lock nuts (12) that secure the bracket (13) to casing.

(10) Remove bracket (13) and valve body (8).

(11) Remove two screws (14) and lock washers (15) that secure the valve body (8) to bracket (13).

(12) Remove valve body (8).

(13) Tag and disconnect coil wires.

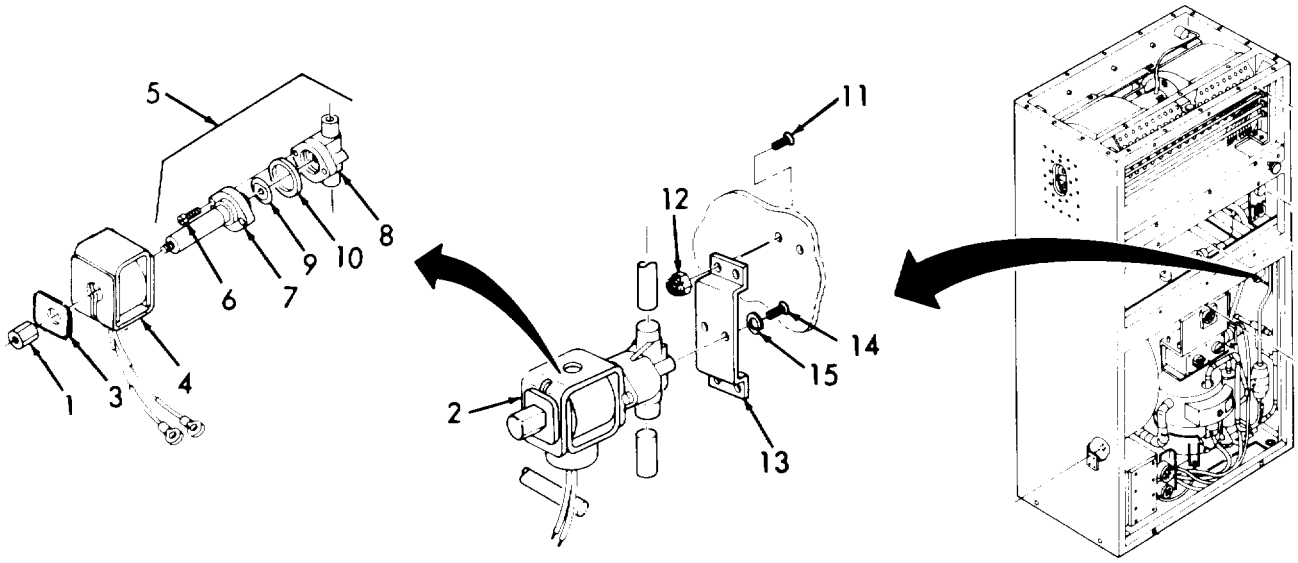

Figure 5-7. Solenoid Valve (L1).

b. Repair.

Repair is limited to replacement of coil.

c. Test.

(1) Using multimeter set on lowest OHMS scale, check for continuity between leads L1-1 and L1-2. If continuity is not found, coil is open and must be replaced.

(2) Using multimeter set on lowest OHMS scale, check for continuity between each lead and coil casing. If continuity is found between either lead and the casing, the coil is grounded and must be replaced.

(3) If continuity checks are satisfactory, power up unit and turn mode selector to COOL and temperature select to COOLER.

(4) Listen for a sharp click when the valve should change position.

(5) If a click is not heard, internal valve problems are indicated. Replace valve.

d. Installation.

(1) If valve body (8) was not removed, go to step (9).

(2) Secure valve body (8) to bracket (13) with two screws (14) and two lock washers (15).

(3) Fit tube ends to valve body (8) and align mounting hardware of bracket (13) to through holes in casing.

(4) Secure bracket (13) to casing with four screws (11) and four lock nuts (12).

(5) Purge the system with nitrogen (See para. 5-8).

(6) Apply heat sink (Appendix E, item 21) or wrap wet rags around valve body.

(7) Braze the tube connections (See para. 5-9).

(8) Remove heat sink or rags.

(9) Install diaphragm (9) in valve body (8). Be sure pin on diaphragm points toward coil (4).

(10) Install O-ring (10) in plunger assembly (7).

(11) Align through holes in plunger assembly (7) to threaded holes in valve body (8).

(12) Secure plunger assembly (7) to valve body (8) with two screws (6).

(13) Install coil (4) and nameplate (3) on valve (5).

(14) Secure coil (4) to valve (5) with nut (l).

(15) Replace filter/dryer dehydrator (See para. 5-15).

(16) Leak test all newly connected joints and those in the repair area (See para. 5-10).

(17) Evacuate the system (See para. 5-11).

(18) Charge the system (See pare. 5-12).

(19) Install front panel (See para. 4-20).

5-20. PRESSURE REGULATING VALVE.

This Task Covers:

a. Removal b. Test c. Installation

Initial Setup:

Tools Required

Tool kit, Refrigeration

Material's Required

None

Equipment Condition

Air conditioner shut down and cool.
Front panel removed (See para. 4-20).
Refrigerant system discharged (See para. 5-7).
Purge the system (See para. 5-8).

a. Test.

(1) Valves are factory set to start opening when suction pressure decreases to 58 psig. Do not adjust.

(2) Perform a refrigeration pressure check on unit in accordance with para. 5-13. Leave the service manifold attached.

NOTE

To test, ensure that unit is in bypass cycle.

(3) Set temperature control thermostat knob fully WARMER (clockwise), start air conditioner in COOL mode, and observe pressure gages. Suction pressure should drop to a minimum 35 psig (13ºF) shortly after compressor starts, and then remain constant.

(4) If suction pressure remains at 50-60 psig, replace pressure regulating valve.

b. Removal.

WARNING

Compressed air can blow particles into the eyes of personnel and cause serious injury. Always wear eye protection before puncturing valve.

(1) Puncture small hole in pressure regulating valve housing to relieve internal pressure.

(2) Debraze tube connations (See para. 5-9).

(3) Remove two screws (1), two lock washers (2), and two nuts (3) on the two clamps (4) that secure pressure regulating valve (5).

(4) Remove pressure regulating valve (5).

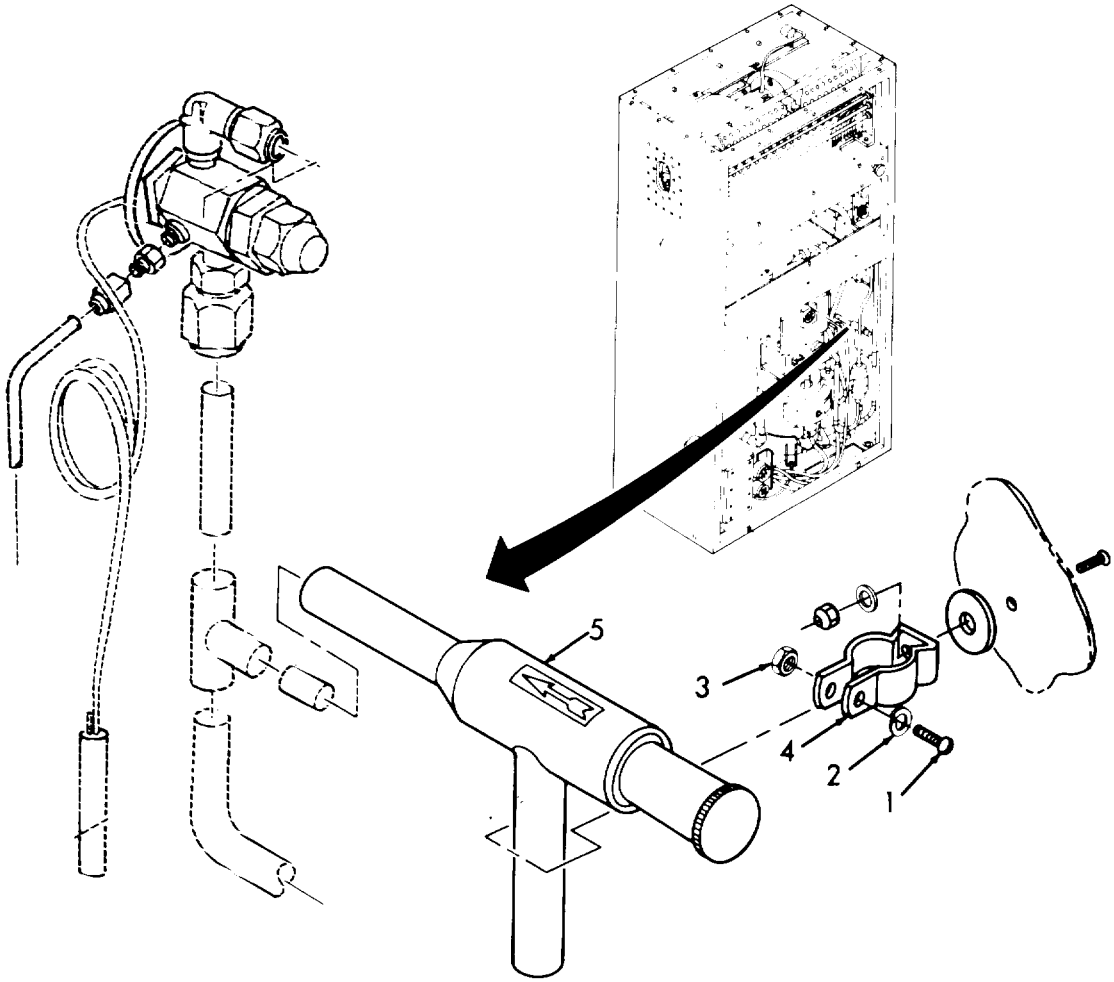

Figure 5-8. Pressure Regulating Valve.

c. **Installation.**

(1) Install pressure regulating valve (5) into two clamps (4).

CAUTION

Screen in pressure regulator valve must be installed or damage to components will occur. Be sure screen is installed before installing tube ends.

(2) Assemble pressure regulating valve (5) onto tube ends.

(3) Purge the system with nitrogen (See para. 5-8).

(4) Braze the tube connections (See para. 5-9).

(5) Install two screws (1), two lock washers (2), and two nuts (3) in two clamps (4).

(6) Replace the filter/dryer dehydrator (See para. 5-15).

(7) Leak test all newly connected joints and those in the repair area (See para. 5-10).

(8) Evacuated the system (See para. 5-11).

(9) Charge the system (See para. 5-12).

(10) Install front panel (See para. 4-20).

5-21. LIQUID QUENCHER EXPANSION VALVE.

This Task Covers:

a. Removal b. Test c. Installation

Initial Setup:

Tools Required

Tool kit, Refrigeration

Material's Required

Insulation tape (Appendix E, item 24)
Thermal mastic (Appendix E, item 23)

Equipment Condition

Air conditioner shut down and cool,
Front panel removed (See para. 4-20).
Refrigerant system discharged (See para. 5-7).

a. Test.

(1) Perform a refrigerant pressure check on unit in accordance with paragraph 5-13. Leave gages or service manifold attached.

(2) Unwrap insulation tubing from compressor suction line so that sensing bulb and an adjacent section of the suction line is exposed.

(3) Attach an accurate thermometer to an exposed surface of the suction line adjacent to the sensing bulb. Use a small amount of thermal mastic (Appendix E, Item 23) to improve conductivity.

(4) Check that gage connection to low (suction) side is open. Note pressure indicated on gage and temperature indicated on thermometer.

(5) Set the Temperature Control thermostat knob to full WARMER (clockwise). Start the air conditioner in COOL mode. Note that suction pressure drops to 58 ± 2 psig (4.0 ± 0.2 kg/cm^2). Allow compressor to run for at least 20 minutes. If pressure is not within above limits, test operation of pressure regulating valve (para. 5-20) before proceeding with liquid quencher expansion valve test.

NOTE

Except in a very hot climate, with room temperature above 90 deg. F (32.2 deg. C), the refrigeration system will be in a bypass cycle with a maximum volume of hot discharge vapor being recirculated back to suction side of compressor through pressure regulator valve and liquid quencher expansion valve.

(6) Observe that temperature indicated remains stable for a minimum of two minutes, then find saturation temperature for pressure indicated on gage, using Table 5-1. For example: The saturation temperature for a refrigerant pressure of 69 psig (4.85 kg/cm^2) is 40 deg. F (4.4 deg. C).

(7) Compare the saturation temperature with indicated temperature. The indicated temperature should be 16 ± .5 deg. F (8.9 ± .3 deg. C) higher than the saturation temperature. For example: With a 40 deg. saturation temperature, the thermometer should read 65 ± 5 deg. F (18 ± 2.7 deg. C). If indicated temperature is not within above limits, liquid quencher expansion valve is not functioning properly and must be replaced.

b. Removal

(1) Unwrap insulation from suction line (13) to expose sensing bulb (12).

(2) Loosen three flare nuts (1), (2), and (3) that secure tubing to liquid quencher expansion valve (4).

(3) Remove screw (5), lock washer (6), and nut (7) from clamp (8).

(4) Remove two screws (9) and two nuts (10) from clamps (11) that secure sensing bulb (12). Discard clamps (9).

(5) Note position of sensing bulb (12) on suction line (13).

(6) Remove liquid quencher expansion valve (4) from clamp (8).

c. Installation.

(1) Install liquid quencher expansion valve (4) to clamp (8).

(2) Tighten three flare nuts (1), (2), and (3) on the liquid quencher expansion valve (4).

(3) Secure liquid quencher expansion valve (4) to clamp (8) with screw (5), lock washer (6), and nut (7).

(4) Coil sensing bulb (12) capillary into two loops.

(5) Place the sensing bulb (12) on suction line (13) such that bulb is in contact with clean, bare tubing.

(6) Secure sensing bulb (12) to suction line (13) with two clamps (11) supplied with liquid quencher expansion valve (4) and with two screws (9) and two nuts (10) (also supplied with valve).

(7) Wrap sensing bulb (12) and capillary with insulating tape (Appendix E, Item 24).

(8) Replace the filter/dryer dehydrator (See para. 5-15).

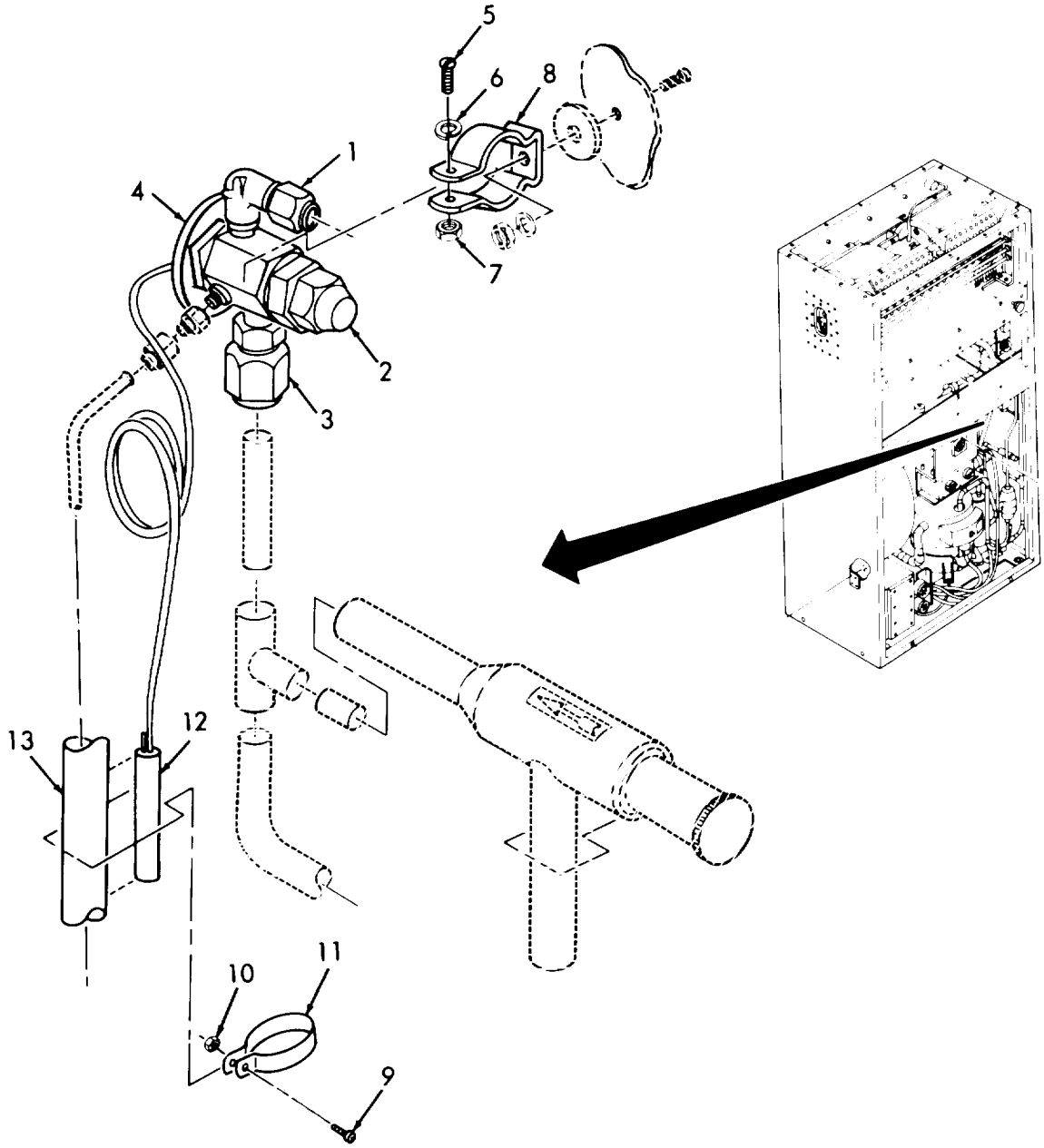

Figure 5-9. Liquid Quencher Expansion Valve.

(9) Leak check all newly connected joints and those in the repair area (See para. 5-10).

(10) Evacuate the system (See para. 5-11).

(11) Charge the system (See para. 5-12).

(12) Install insulation tape (Appendix E, item 24) onto tubing.

(13) Install front panel (See para. 4-20).

5-22. LIQUID SIGHT INDICATOR (SIGHT GLASS).

This Task Covers:

a. Removal b. Installation

Initial Setup:

Tools Required

Tool kit, Refrigeration

Material's Rewired

None

Equipment Condition

Air conditioner shut down and cool.
Intake (return air) guard removed (See para. 3-5).
Refrigerant system discharged (See para. 5-7).
Purge the system (See para. 5-8).
Debraze the tube connections (See para. 5-9).

Removal.

(1) Remove two screws (1), two flat washers (2), and two lock washers (3) that secure liquid sight indicator (4) and mounting plate (5) to casing (6).

(2) Remove liquid sight indicator (4) and mounting plate (5) from casing (6).

b. Installation.

NOTE

Do not disassemble liquid sight indicator.

(1) Position liquid sight indicator (4) on tubing.

(2) Purge the system (See para. 5-8).

(3) Braze the tube connections (See para. 5-9).

(4) Replace the dehydrator (See para. 5-15).

(5) Leak test all newly connected joints and those in the repair area (See para. 5-10).

(6) Evacuate the refrigerant system (See para. 5-11).

(7) Charge the system (See para. 5-12).

(8) Secure mounting plate (5) and liquid sight indicator (4) to casing (6) with two screws (1), two flat washers (2), and two lock washers (3).

(9) Install intake (return air) guard (See para. 3-5).

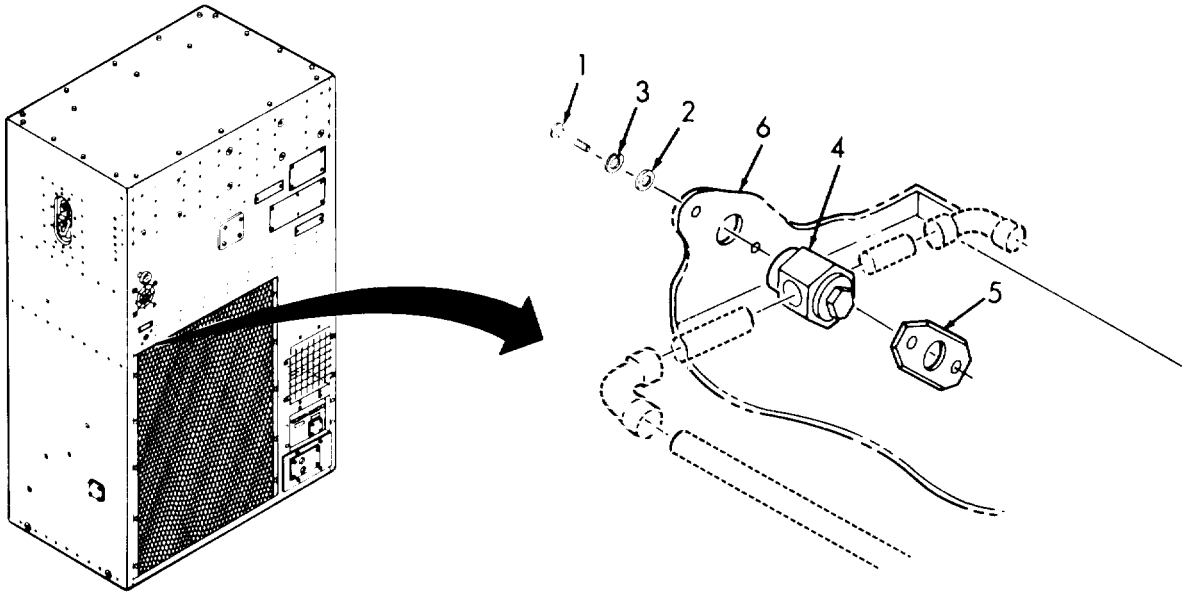

Figure 5-10. Liquid Sight Indicator (Sight Glass).

5-23. EXPANSION VALVE.

This Task Covers:

a. Testing b. Removal c. Installation

Initial Setup:

Tools Required

Tool kit, Refrigeration

Material's Rewired

Insulating tape (Appendix E, item 24)

Equipment Condition

Air conditioner shut down and cool.
Intake (return air) guard removed (See para. 3-5).
Discharge the refrigeration system (See para. 5-7).

a. Testing. The expansion valve as supplied with the unit is preset at the factory. This valve cannot be adjusted.

(1) Perform a refrigerant pressure check on unit in accordance with para. 5-13. Leave gages or service manifold attached.

(2) Remove the suction line insulation from the area of the sensing bulb (12). Observe location and position of bulb for reinstallation.

(3) Remove two screws (9) and two nuts (10) from two clamps (11) on sensing bulb (12).

WARNING

High voltages can kill or seriously injure personnel. Exercise extreme caution since the following test must be conducted with the power on.

CAUTION

Damage to the capillary tube will cause the unit to malfunction. Use care not to damage or kink the capillary.

(4) Place the sensing bulb (12) in a container of ice water or crushed ice so that it is reduced to a temperature near 32 deg. F(0 deg. C).

(5) Set the temperature control thermostat knob to fully COOLER (counterclockwise), place one hand on the exposed suction return line, and start the air conditioner in COOL mode. If a drop in temperature is felt on the suction return line, the expansion valve is not closing fully and should be replaced. If the return line temperature remains constant, check the pressure gage;

it should indicate approximately 58 ± 2 psig (4.0 ± kg/cm^2). If the pressure is not within the above limits, test the operation of the quench valve (para. 5-21) and the pressure regulating valve (para. 5-20).

CAUTION

If the test conditions are continued more than a few seconds, the expansion valve will fully open and an excessive flood-back of liquid refrigerant may damage or destroy the compressor. When performing the next test, turn the air conditioner to OFF as soon as a definite drop in temperature is felt on the suction return line.

(6) With one hand still on the suction return line, remove the sensing bulb from the container and warm it in the other palm. If a temperature drop is not felt in the suction return line by the time the sensing bulb no longer feels cold to the hand, the expansion valve is not opening and should be replaced. As soon as a temperature drop is felt, turn the air conditioner to OFF.

NOTE

The optimum superheat setting for the evaporator expansion valve is 12 deg. F(35 psig) above the saturation temperature of the refrigerant at operating suction line pressure. This setting will provide maximum efficiency of the evaporator coil.

5-23. EXPANSION VALVE. - Continued.

b. Removal.

(1) Restrain valve (1).

(2) Loosen three flare nuts (2), (3), and (4) on valve (1).

(3) Remove screw (5), lock washer (6), and nut (7) from clamp (8).

(4) Remove valve (1) from clamp (8).

(5) Unwrap existing suction line insulation from around sensing bulb (12) and remove screw (9) and nut (10) from clamp (11) holding sensing bulb to suction line (13).

c. Installation.

CAUTION

Damaged capillary will cause unit to malfunction. Use care not to damage or kink capillary.

(1) Coil sensing bulb (12) capillary into two loops.

(2) Secure sensing bulb (12) to suction line (13) with two clamps (11), two nuts (10), and two screws (9) (supplied with valve).

(3) Place valve (1) in clamp (8).

(4) Restrain valve (1).

(5) Tighten three flare nuts (4), (3), and (2) on valve (1).

(6) Install screw (5), lock washer (6), and nut (7) in clamp (8).

(7) Rewrap existing suction line insulation around sensing bulb (12).

(8) Replace filter/dryer dehydrator (See para. 5-15).

(9) Leak test newly connected joints and those in the repair area. (See para. 5-10).

(10) Evacuate the system (See para. 5-11).

(11) Charge the system (See para. 5-12).

(12) Install intake (return air) guard (See para. 3-5).

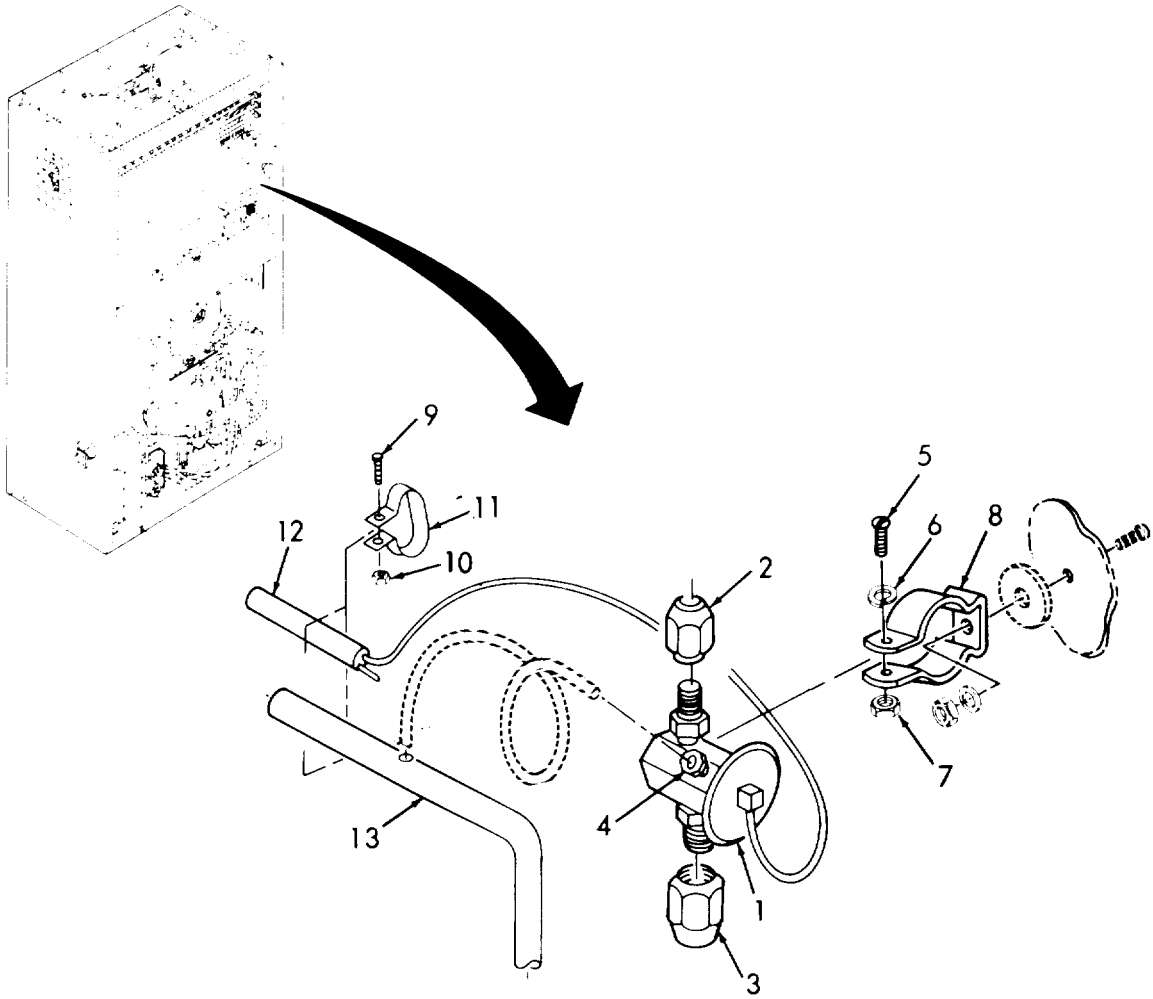

Figure 5-11. Expansion Valve Removal/Replacement.

5-24. EVAPORATOR COIL STRUCTURE.

This Task Covers:

a. Removal b. Test c. Installation

Initial Setup:

Tools Required

Tool kit, Refrigeration

Material's Rewired

None

Equipment Condition

Air conditioner shut down and cool.
Top panel removed (See para. 4-20)
Intake (return air) guard removed (See para. 3-5).
Conditioned air discharge guard removed (See para. 4-22).
Filter, air conditioning removed (See para. 4-23).
Heater diffuser removed (See para. 4-25).
Thermostat cutout removed (See para. 4-26).
Heating elements removed (See para. 4-27).
Terminal board removed (See para. 4-28).
Evaporator fan assembly removed (See para. 4-29).
Fresh air damper removed (See para. 5-14).

a. Removal.

WARNING

HIGH VOLTAGE
is used in operation of this equipment.
DEATH ON CONTACT
may result if personnel fail to observe safety precautions.
Never work on electrical equipment unless there is another person nearby who is familiar with operation and hazards of equipment and who is competent in administering first aid. When technician is aided by operators, he must warn them about dangerous areas.

Whenever possible, input power supply to equipment must be shut off before beginning work. Take particular care to ground every capacitor likely to hold a dangerous charge. When working inside, after power has been turned off, always ground every part before touching it. Be careful not to contact high voltage connections of 208 volts ac input when installing or operating this equipment.

Whenever nature of operation permits, keep one hand away from equipment to reduce hazard to current flowing through vital organs of body. Do Not operate equipment without all guards, louvers, and covers in place and tightly secured.

(1) Tag and disconnect all wires.

(2) Remove two screws (1), two lock washers (2), and two flat washers (3).

(3) Remove five screws (4), five flat washers (5), five lock washers (6), and brace (7).

(4) Remove five screws (8), five flat washers (9), and five lock washers (10) from closure angle (11).

(5) Remove six rivets (12) from right side, nine rivets (13) from left side, and remove evaporator fan assembly bracket (14) and closure angle.

(6) Remove twelve rivets (15) and fresh air damper mounting bracket (16).

(7) Remove three screws (17), three lock washers (18), three flat washers (19), and lower evaporator coil bracket (20).

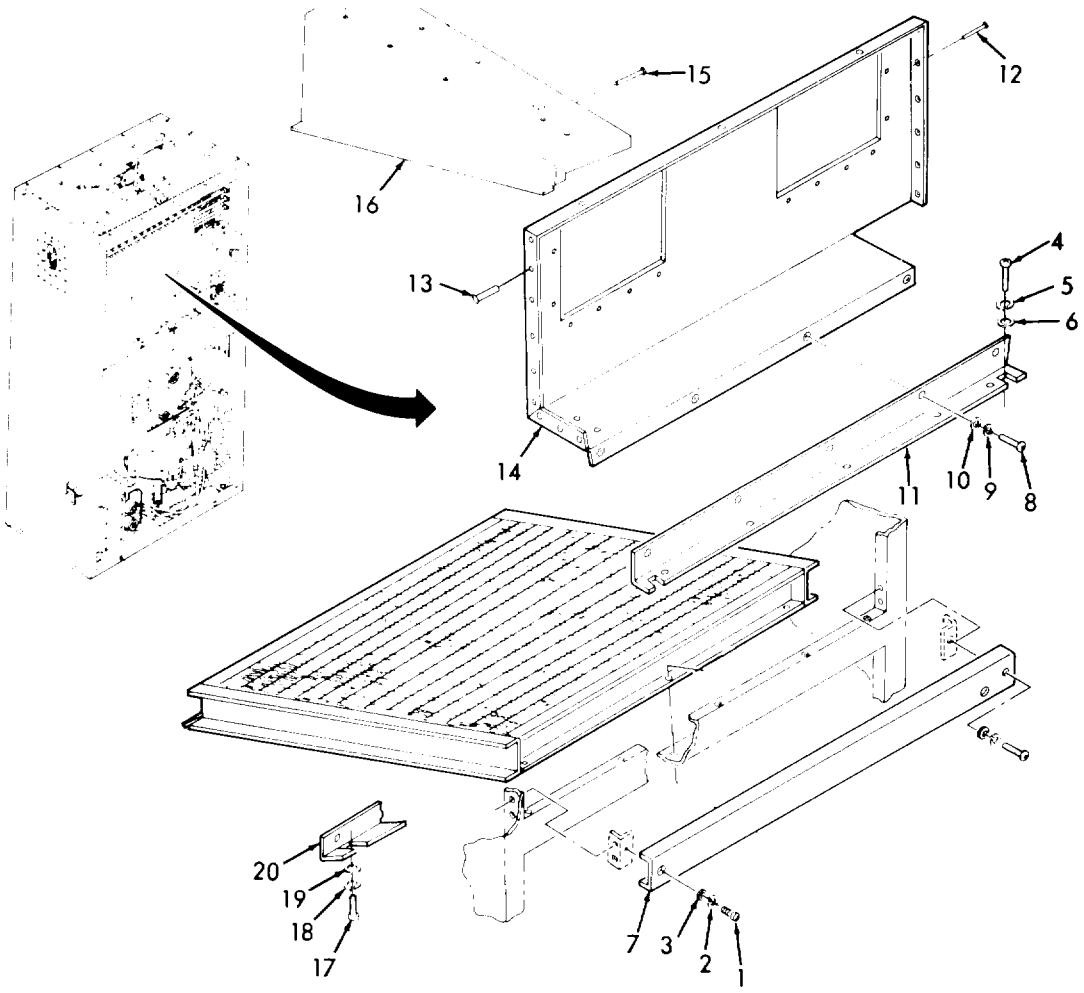

Figure 5-12. Evaporator Coil Structure.

5-24. EVAPORATOR COIL STRUCTURE. - Continued.

b. Installation.

(1) Install lower evaporator coil bracket (20), three flat washers (19), three lock washers (18), and three screws (17).

(2) Install fresh air damper mounting bracket (16), and twelve rivets (15).

(3) Install evaporator fan assembly bracket (14) and closure angle, nine rivets (13) to left side, and six rivets (12) to right side.

(4) Install five lock washers (10), five flat washers (9), and five screws (8) to closure angle (11).

(5) install brace (7), five lock washers (6), five flat washers (5), and five screws (4).

(6) Install two flat washers (3), two lock washers (2), and two screws (1).

(7) Connect all wires and remove tags.

(8) Replace filter/dryer dehydrator.

(9) Leak test newly connected joints and those in the repair area.

(10) Evacuate the system (See para 5-11).

(11) Charge the System (See para. 5-12).

(12) Install fresh air damper (See para. 5-14).

(13) Install evaporator fan assembly (See para. 4-29).

(14) Install terminal board (See para. 4-28).

(15) Install heating elements (See para. 4-27).

(16) Install thermostat cutout (See para. 4-26).

(17) Install heater diffuser (See para. 4-25).

(18) Install filter, air conditioning (See para. 4-23).

(19) Install conditioned air discharge guard (See para. 4-22).

(20) Install intake (return air) guard (See para. 3-5).

(21) Install top panel (See para. 4-20).

5-25. EVAPORATOR COIL REPLACEMENT.

This Task Covers:

a. Removal b. Installation

Initial Setup:

Tools Required

Tool kit, Refrigeration

Material's Rewired

None

Equipment Condition

Air conditioner shut down and cool.
Top panel removed (See para. 4-20)
Intake (return air) guard removed (See para. 3-5).
Conditioned air discharge guard removed (See para. 4-22).
Filter, air conditioning removed (See para. 4-23).
Heater diffuser removed (See para. 4-25).
Thermostat cutout removed (See para. 4-26).
Heating elements removed (See para. 4-27).
Terminal board removed (See para. 4-28).
Evaporator fan assembly removed (See para. 4-29).
Fresh air damper removed (See para. 5-14).
Evaporator coil structure removed (See para. 5-24).
Refrigerant system discharged (See para. 5-7).
Purge the system with nitrogen (See para. 5-8).

a. Removal.

(1) Debraze the distributor (1) from expansion valve (2) (See para. 5-9).

(2) Repeat steps (2) and (3) to debraze suction return line (3) from evaporator coil (4).

(3) Remove the evaporator coil (4).

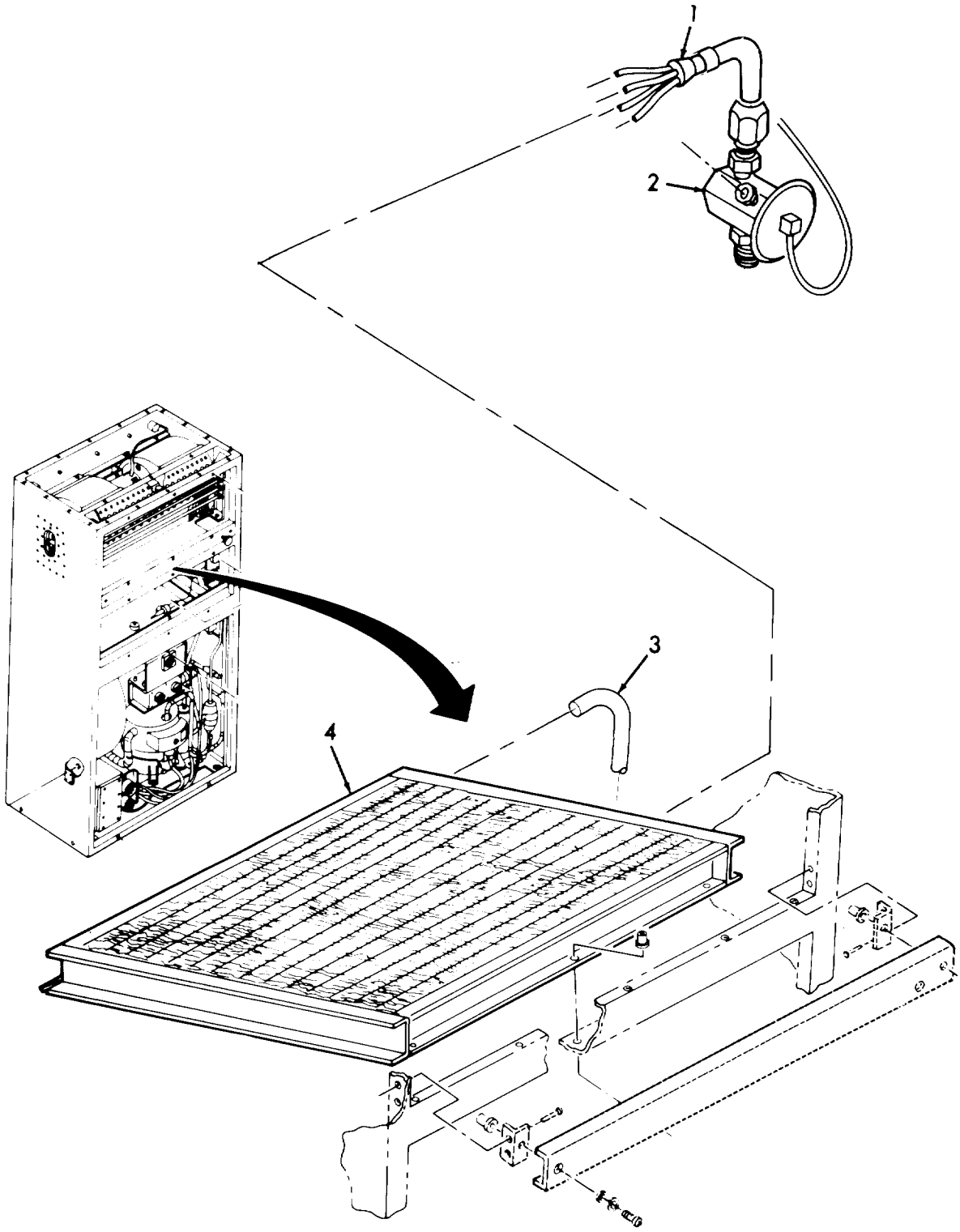

Figure 5-13. Evaporator Coil.

b. Installation.

(1) Place evaporator coil (4) in unit (5).

(2) Purge the system with nitrogen (See para. 5-8).

(3) Braze distributor (1) to expansion valve (2) and suction return line (3) to evaporator coil (4) (See para. 5-9).

(4) Replace filter/dryer dehydrator (See para. 5-11).

(5) Leak test all new connected joints and those in the repair area (See para. 5-10).

(6) Evacuate the system (See para. 5-11).

(7) Charge the system (See para. 5-12).

(8) Install evaporator coil structure (See para. 5-24).

(9) Install fresh air damper (See para. 5-14).

(10) Install evaporator fan assembly (See para. 4-29).

(11) Install terminal board (See para. 4-28).

(12) Install heating elements (See para. 4-27).

(13) Install thermostat cutout (See para. 4-26).

(14) Install heater diffuser (See para. 4-25).

(15) Install air conditioning filter (See para. 4-23).

(16) Install conditioned air discharge guard (See para. 4-22).

(17) Install intake (return air) guard (See para. 3-5).

(18) Install top panel (See para. 4-20).

5-26. PRESSURE SWITCHES (S5 AND S6).

This Task Covers:

a. Test b. Removal c. Installation

Initial Setup:

Tools Required
Tool kit, Refrigeration

Material's Required
None

Equipment Condition
Air conditioner shut down and cool.
Pressure switch cover removed (See para. 3-4).
Refrigeration system discharged (See para. 5-7).

a. Test.

(1) Press and release reset button to be sure that switch is not tripped.

(2) Tag and disconnect leads on pressure switch.

(3) Using multimeter set on lowest OHMS scale, check for continuity between terminals 1 and 2 on each pressure switch. Be sure reset is pressed in.

(4) If there is no continuity, replace pressure switch.

5-26. PRESSURE SWITCHES (S5 AND S6). – Continued.

b. Removal.

(1) Tag and remove jumper lead (1) between pressure switch S5 (2) and pressure switch S6 (3).

(2) Restrain tube (4) and fitting (5) and loosen flare nut (6).

(3) Restrain tube (7) and fitting (8) and loosen flare nut (9).

(4) Remove two screws (10) and lift mounting bracket (11) from unit (12).

(5) Remove four screws (13), four lock washers (14), and pressure switches S5 (2) and S6 (3).

c. Installation.

(1) Coil capillary tube of replacement pressure switch.

(2) Install four screws (13), four lock washers (14), and pressure switches S5 (2) and S6 (3) to bracket (11).

(3) Install bracket (11) and two screws (10).

(4) Restrain tube (7) and fitting (8) and tighten flare nut (9).

(5) Restrain tube (4) and fitting (5) and tighten flare nut (6).

(6) See tags and wiring diagram Figure 1-4 and connect wire leads (1) to pressure switch S5 (2) and S6 (3). Remove tags.

(7) Replace filter/dryer dehydrator (See para. 5-15).

(8) Leak check the flare nut connection (See para. 5-10).

(9) Evacuate the system (See para. 5-11).

(10) Charge the system (See para. 5-12).

(11) Install pressure switch cover (See para. 3-4).

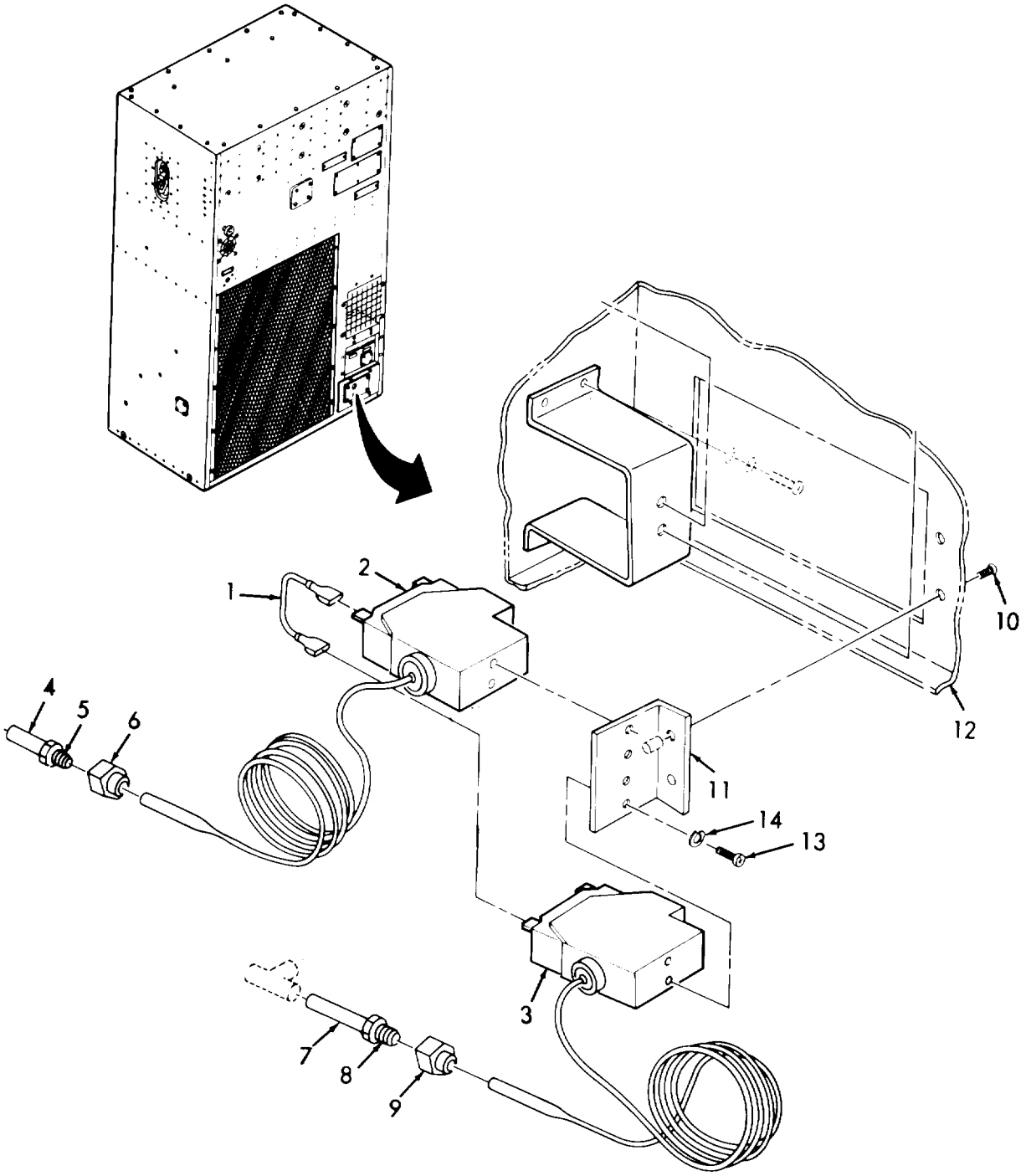

Figure 5-14. Pressure Switches (S5 and S6).

5-27. SERVICE VALVES.

This Task Covers:

a. Removal b. Installation

Initiai Setup:

Tools Required
Tool kit, Refrigeration

Material's Required
None

Equipment Condition
Air conditioner shut down and cool.
Pressure switch cover removed (See para. 3-4).
Refrigeration system discharged (See para. 5-7).
Purge the system with nitrogen (See para. 5-8).

a. Removal.

(1) Remove two caps (1) and (2).

(2) Remove two screws (3), two flat washers (4), two lock washers (5), and two clamps (6).

(3) Remove valve stems (7) and (8) from valves (9) and (10).

(4) Debraze the valves (9) and (10) (See para. 5-9).

(5) Remove valves (9) and (10) from tube connection.

b. Installation.

(1) Remove valve stems (7) and (8) from replacement valves (9) and (10).

(2) Place replacement valves (9) and (10) on tube connection.

(3) Braze valves (9) and (10) to tube connection (See para. 5-9).

(4) Install stems (7) and (8) in valves (9) and (10).

(5) Install caps (1) and (2).

(6) Install two clamps (6), two lock washers (5), two flat washers (4), and two screws (3).

(7) Replace filter/dryer dehydrator (See para. 5-15).

(8) Leak test newly connected joints and the repair area (See para. 5-10).

(9) Evacuate the system (See para. 5-11).

(10) Charge the system (See para. 5-12).

(11) Install pressure valve cover (See para 3-4).

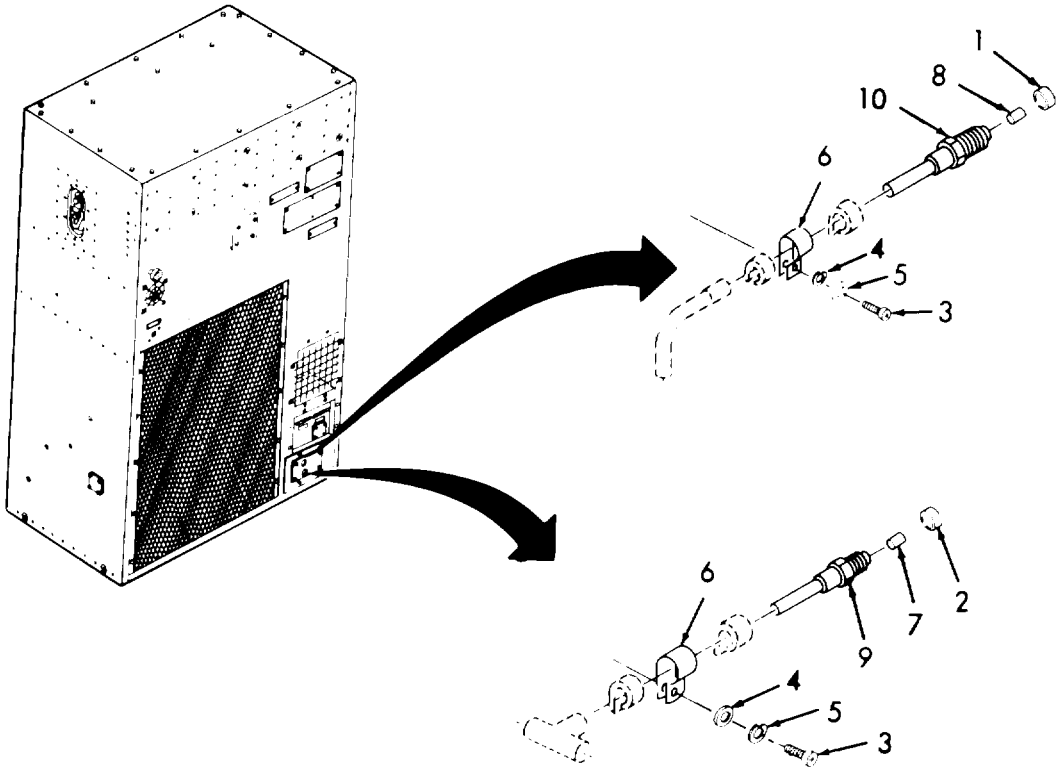

Figure 5-15. Service Valves.

5-28. COMPRESSOR (B1).

This Task Covers:

a. Removal b. Test c. Installation

Initial Setup:

Tools Required

Tool kit, Refrigeration

Material's Required

Dry nitrogen cylinder (Appendix E, item 2)
R-11, Refrigerant (Appendix E, item 19)
Insulation (Appendix E, item 24)

Equipment Condition

Air conditioner shut down and cool.
Front panel removed (See para. 3-4).

The compressor and motor assembly are hermetically sealed in a metal canister and are not repairable. The following items may be replaced without opening the refrigerant system.

- Connector (J3)
- Heater (HR7)
- Heater (HR8)

WARNING

HIGH VOLTAGE
is used in operation of this equipment.
DEATH ON CONTACT
may result if personnel fail to observe safety precautions.

Never work on electrical equipment unless there is another person nearby who is familiar with operation and hazards of equipment and who is competent in administering first aid. When technician is aided by operators, he must warn them about dangerous areas.

Whenever possible, input power supply to equipment must be shut off before beginning work. Take particular care to ground every capacitor likely to hold a dangerous charge. When working inside, after power has been turned off, always ground every part before touching it. Be careful not to contact high voltage connections of 208 volts ac input when installing or operating this equipment.

Whenever nature of operation permits, keep one hand away from equipment to reduce hazard to current flowing through vital organs of body. Do Not operate equipment without all guards, louvers, and covers in place and tightly secured.

a. Test.

(1) Allow heaters to cool before touching.

(2) Check quick warm up heater (HR8) and thermostat as follows:

(a) Using a multimeter, check continuity between contacts D and E on P3 connector. Continuity should be indicated. If continuity was indicated, skip steps (b) through (d).

(b) Check that jumper between heater halves is secure. Check jumper for continuity. If continuity is not indicated, repair or replace jumper.

(c) Check continuity between P3 contact D and heater terminal A and contact E and terminal B. If continuity is not indicated, repair or replace wire leads.

(d) Check continuity between heater half terminals. If continuity is not indicated, replace heater.

(e) Check heater (HR8) for visible damage, missing terminals or terminal *covers,* and secure attachment of clamping hardware.

(f) Continuity check thermostat at connector P3 in per following Table 5-4.

Table 5-4. Compressor Continuity Check.

TEMPERATURE AT S10 THERMOSTAT	CONTINUITY SHOULD BE INDICATED		
	Contact A to B	Contact B to C	Contact A to C
Above 70 ±8°F (21.1 ±4.4°c)	YES	NO	NO
Below 50 ±5°F (10 ±2.8°C)	NO	NO	YES

NOTE

Thermostat actuates at 70 ±8°F (21.1 ±4.4°C) and resets at 50 ±5°F (10 ±2.8°C).

If the thermostat fails any of the above tests, check that splices are properly installed. Repeat above test. Replace compressor if thermostat is bad.

5-28. COMPRESSOR (B1). (Continued).

a. Test. - Continued.

(4) Check compressor (B1), motor protector, heater (HR7), and thermostat as follows:

(a) Disconnect P3 connector and harness from J3 connector located on compressor junction box (3).

(b) Remove wing nut (1) from compressor junction box cover (2) and gasket (3) and pull junction box cover from compressor

(c) Check that all wire connections are secure and in good condition.

(d) Using multimeter, check continuity between connector J3 contacts D to E, D to F, and E to F. Continuity should be indicated. If continuity is not indicated, check that wires are properly connected. If wires are properly connected and continuity is still not indicated, replace compressor.

(e) Check continuity between P3 contacts A and B. If there is no continuity and wires are properly connected, the motor protector (internal thermostat) is open. Replace the compressor.

(f) Check continuity between P3 contacts A, B, D, E, and F, and compressor canister. If wires are properly connected and there is continuity indicated, there is an internal short. Replace the compressor.

(g) Check continuity between P3 contacts G and H. If there is continuity between these pins, both the heater element and thermostat are all right. If there is no continuity between the pins, bare the splice between the heater lead and thermostat lead, and separately check for continuity between pin G and the splice, and pin H, and the splice. If there is continuity between pin G and the splice, but not between pin H and the splice, the heater element is all right and the thermostat is bad. If there is continuity between pin H and the splice, but not between pin G and the splice, the thermostat is all right and the heater element is bad. If there is no continuity between either pin the splice, both the element and the thermostat are bad. If thermostat is bad, replace compressor. If heater is bad, replace heater.

b. Connector J3 Replacement. (Refrigerant system discharge is not required.)

(1) Removal.

WARNING

Be sure that the power has been disconnected at the power source.

(a) Remove wing nut (1), cover (2), and gasket (3).

(b) Remove four nuts (4), four lock washers (5), and four screws (6) from connector J3 (7). Pull the connector out of the box to gain access to the solder connections.

(c) Tag and unsolder wires.

(2) Installation.

(a) Using tags and wiring diagram Figure 1-4, solder wires to new connector. Remove the tags.

(b) Secure the connector (7) with four screws (6), four lock washers (5), and four nuts (4).

(c) Install gasket (3), cover (2), and wing nut (1).

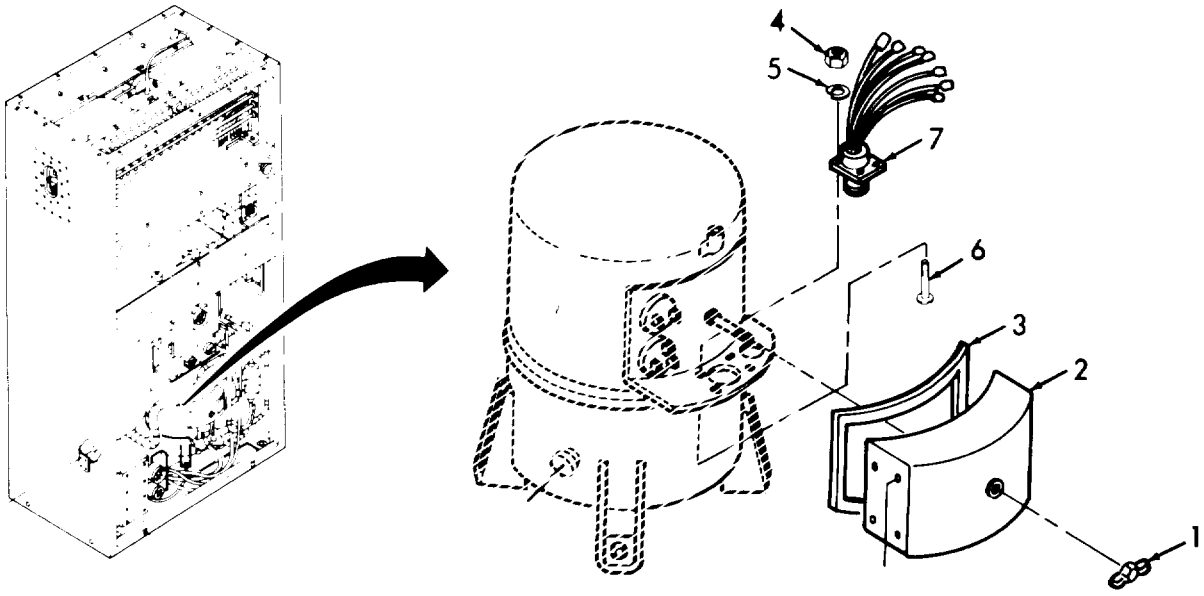

Figure 5-16. Connector J3 Replacement

5-28. COMPRESSOR (B1). (Continued).

c. Heater (HR7) Replacement. (Refrigerant system discharge is not required.)

(1) Removal.

WARNING

Severe burns can result from touching hot heater. Allow heater to cool before touching.

(a) Tag and disconnect two heater leads (1).

(b) Remove retaining spring (2) on heater (3).

(c) Lift heater up and off compressor crankcase (4).

(2) Installation.

(a) Spread heater ends apart and place heater (3) down and around compressor in position on crankcase (4).

(b) Secure heater on crankcase with retaining spring (2).

(c) Connect two heater leads (1) to heater (3).

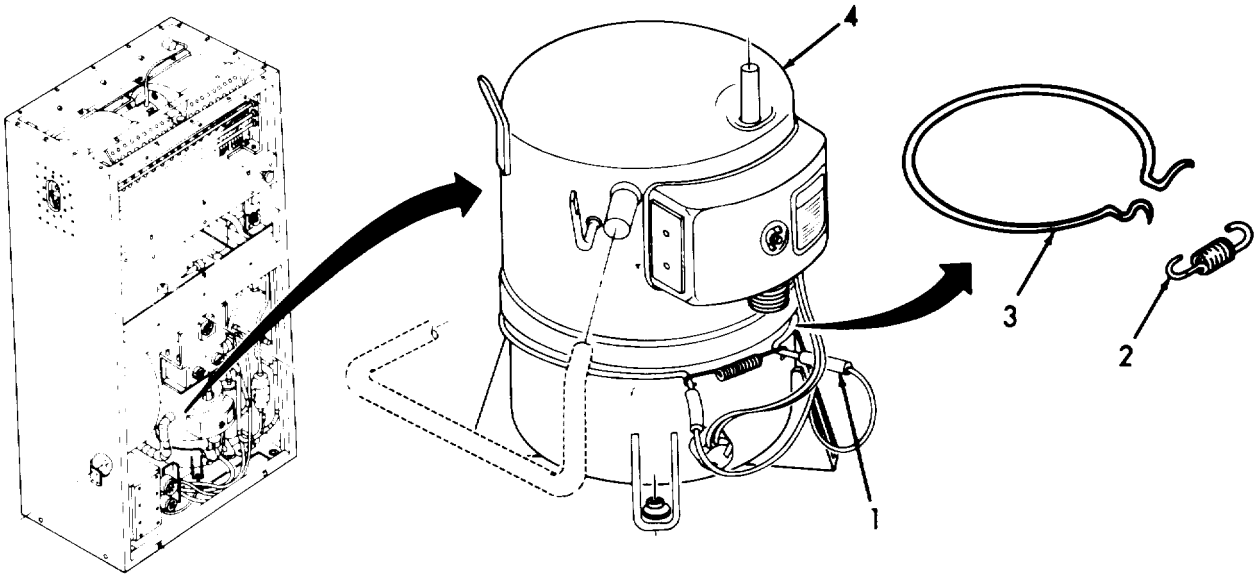

Figure 5-17. Compressor Heater Replacement.

d. Thermostat (S8) Replacement. (Refrigerant system discharge is not required)

(1) Removal.

(a) Tag and disconnect two thermostat leads.

(b) Bend back retaining tabs on connector (1).

(c) Remove thermostat (2).

(2) Installation.

(a) Insert thermostat (2) and carefully bend in retaining tabs on connector (1) to secure thermostat.

(b) See tags on removed thermostat and connect new thermostat leads.

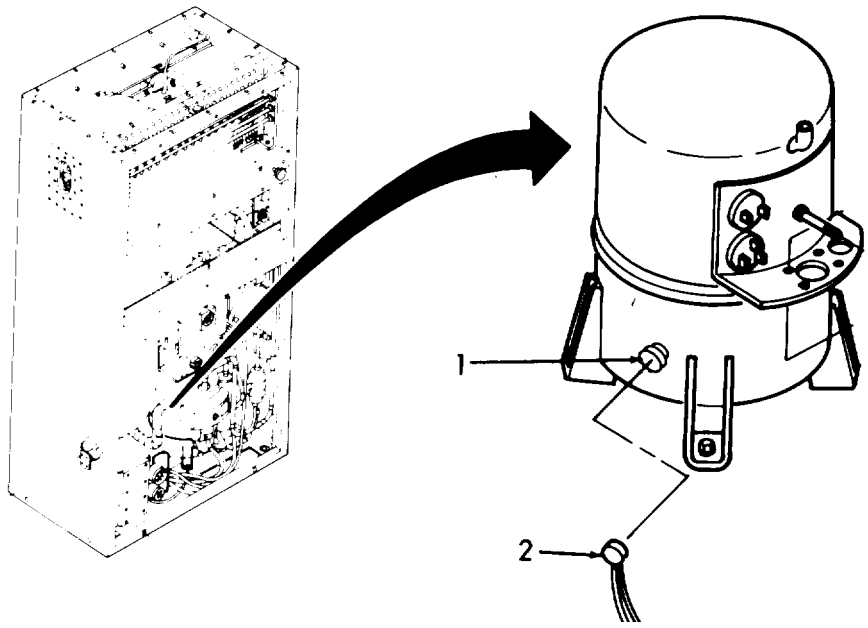

Figure 5-18. Thermostat (S8) Replacement.

5-28. COMPRESSOR (B1). (Continued).

e. Compressor Replacement.

NOTE

The compressor is mounted to the cabinet base by four bolts that are inserted from the underside of the base. In order to remove the compressor, it is necessary that the entire air conditioner be raised and placed on blocks of sufficient height to allow for removal of these bolts from below the base.

(1) Attach an overhead hoist to the lifting fitting (1) on each side of the cabinet, using a sling and spreader bar.

(2) Raise the cabinet and place it on blocks at least four inches high. Be sure the blocks do not obstruct the holes in the base through which the compressor mounting bolts must be removed.

(3) Unwrap the insulation from the suction line so that the joint on the compressor is exposed.

(4) Discharge the refrigerant system (See paragraph 5-7).

(5) While purging the system with nitrogen (See para. 5-8), debraze the tubing (See para. 5-9).

(6) Remove four nut/washers (2) from top of mounting foot (3) and four shoulder bolts (4), four flat washers (5), and four rubber washers (6) from underneath cabinet.

(7) Lift or tilt the compressor (7) and remove rubber washer (8) from under each of the four mounting feet (3).

WARNING

Acid in sludge can cause burns. If compressor bum out is suspected, use cm-e when handling compressor to avoid touching compressor sludge.

(8) Carefully slide compressor (7) from air conditioner

(9) Check the compressor to see if a motor bum out is indicated.

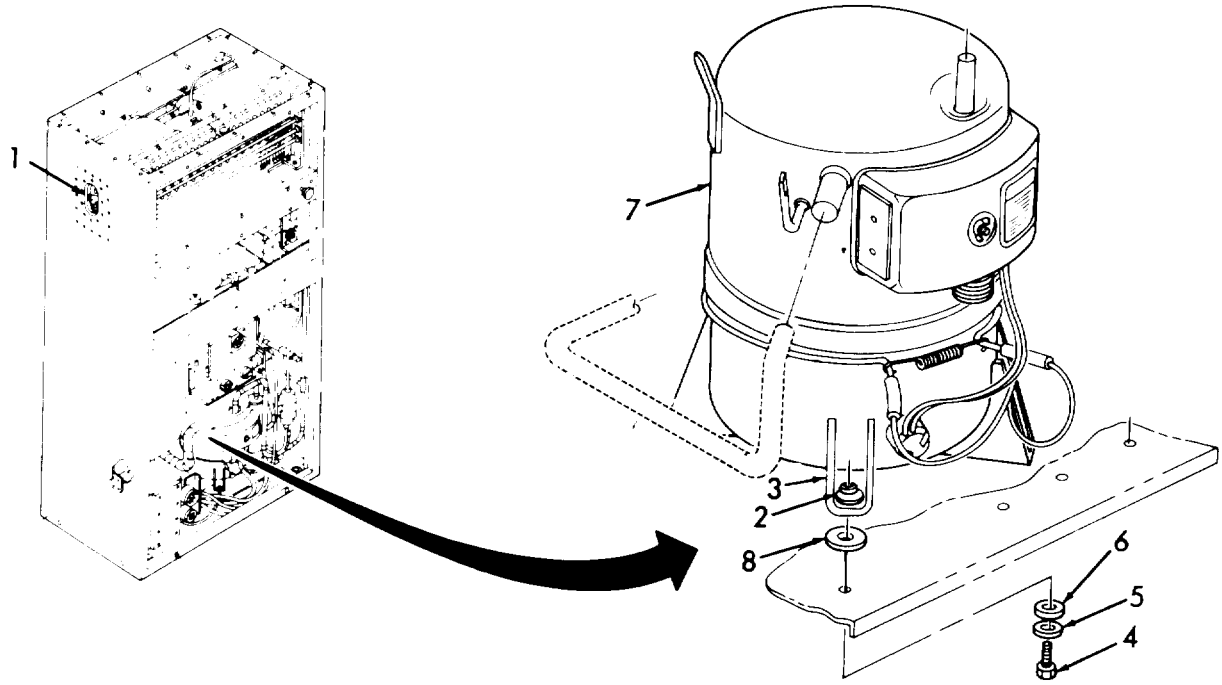

Figure 5-19. Compressor Replacement.

f. Compressor Motor Burn Out.

(1) After removal of a bad compressor from the refrigeration system remove all external tubing and tip the compressor toward the discharge port to drain sample of oil into a clear glass container.

WARNING

Avoid skin contact or inhaling fumes from any acid formed by burn out of oil and refrigerant.

(2) If the oil is clean and clear, and does not have a burnt acid smell, the compressor did not fail because of motor burn out. If a burn out is not indicated, proceed to g.

(3) If the oil is black, contains sludge, and has a burnt acid odor, the compressor failed because of motor bum out.

5-28. COMPRESSOR (B1). - Continued.

f. Compressor Motor Burn Out. - Continued.

(4) You must clean the entire refrigeration system after a burn out has occurred, since contaminants will have been carried to many comers and restrictions in the piping and fittings. These contaminants will soon mix with new refrigerant gas and compressor oil to cause repeated bum outs.

(5) Remove the filter/dryer dehydrator (see para. 5-15), and blow down each leg of the refrigeration system. To do this, connect a cylinder of dry nitrogen (Appendix E,item 2) to each filter/dryer connection in turn and open the cylinder shut off valve for at least 30 seconds at 50 psig (3.5 kg/cm²) pressure.

(6) Connect the two filter/dryer fittings with a jumper locally manufactured from refrigerant tubing and fittings.

(7) Clean system by back-flushing with liquid R-11 (Appendix E, item 19) from pressurized cylinder or circulating pump and reservoir with pressure of at least 100 psig.

(8) If pump is used, connect the discharge line of the refrigerant system to the discharge side of pump.

(9) Connect a line containing a filter to the suction line in the unit.

NOTE

An unused filter/dryer or other suitable medium may be used as a filter.

(10) The other end of the temporary suction line should be connected to small drum or suitable reservoir.

(11) A line should be run from the bottom of the reservoir to the inlet of the pump.

WARNING

Avoid skin contact or inhaling fumes from any acid formed by burn out of oil and refrigerant. Wear a gas mask if area is not thoroughly ventilated. Wear protective goggles or glasses to protect eyes. Wear rubber gloves to protect hands.

(12) Fill reservoir with fluorocarbon refrigerant R-11 (Appendix E, item 19) and start the pump. Continue filling the reservoir with refrigerant R-11 (Appendix E, item 19) until it begins to pour out of the return line. Continue flushing for at least 15 minutes.

(13) Reverse the pump connections, replace the filter with a new filtering medium, and backflush the system for an additional 15 minutes.

(14) Remove the pump, reservoir, filter, and filter-dryer dehydrator jumper. Place an empty container below the compressor connections, and connect a cylinder of dry nitrogen to each filter/dryer dehydrator connection in turn. Blow down each leg of the system at 50 psig (3.5 kg/cm^2) for at least 30 seconds.

(15) Disconnect the dry nitrogen cylinder. Cap or plug open connections if compressor and filter/dryer dehydrator are not to be installed immediately.

g. Compressor Installation. (Refer to Figure 5-19).

CAUTION

Running unit with improper oil level will damage unit. The compressor is supplied with a complete charge of oil. Take care that oil is not lost when handling and installing compressor.

(1) Lift compressor (7) through the lower front panel opening and position it on base pan.

(2) Lift or tilt the compressor (7) and install the four rubber washers (8) between each of the four compressor mounting feet (3) and the base pan.

(3) Install a flat washer (5) and a rubber washer (6) on each of the four mounting bolts (4).

(4) Install the four bolts (4) from beneath the base pan and install the four nut/washers (2) on the bolts.

CAUTION

Heat from brazing can damage compressor. Wrap wet rags around compressor at connection points and while brazing direct flame away from compressor during brazing.

(5) While purging the system with nitrogen, braze the tubing joints (See para. 5-8 and 5-9).

(6) Replace filter/dryer dehydrator (See para. 5-15).

(7) Connectelectrical connector plug (P3) to connector (J3) on compressor terminal box.

(8) Leak test all newly connected joints and those in the repair area (See para. 5-10).

(9) Install and tape in place tubing insulation that was removed from suction line tubing. If it was damaged, replace with tubing insulation (Appendix E, item 24).

(10) Evacuate the refrigerant system (See para. 5-11).

(11) Charge the refrigerant system (See para. 5-12).

(12) Install front panel (See para. 3-4).

5-29. ACCUMULATOR.

This Task Covers:

a. Removal b. Installation

Initial Setup:

Tools Required
Tool kit, Refrigeration

Material's Required
Insulation (Appendix E, item 24)

Equipment Condition
Air conditioner shut down and cool.
Front panel removed (See para. 4-20).
Refrigeration system discharged (See para. 5-7).
Purge the system with nitrogen (See para. 5-8).

a. **Removal.**

(1) Remove insulation sufficient to debraze tube connections.

(2) Debraze tube connections (See para 5-9).

(3) Remove four screws (1), four lock washers (2), four flat washers (3) and remove accumulator (4) and bracket (5) from unit.

(4) Remove nut (6) and lock washer (7) form accumulator stud.

(5) Remove accumulator (4) from bracket (5).

b. **Installation.**

(1) Place accumulator (4) on bracket (5).

(2) Install nut (6) and lock washer (7) onto accumulator stud.

(3) Install bracket (5), four screws (l), four lock washers (2), and four flat washers (3) into unit.

(4) Purge the system with nitrogen (See para. 5-8).

(5) Braze the tube connections (See para. 5-9).

(6) Replace the filter/dryer dehydrator (See para. 5-15).

(7) Leak check all newly connected joints and those in the repair area (See para. 5-10).

(8) Evacuate the refrigeration system (See para. 5-11).

(9) Charge the refrigeration system (See para. 5-12).

(10) Install insulation (Appendix E, item 24) on accumulator (2) and tubing.

(11) Install front panel (See para. 4-20).

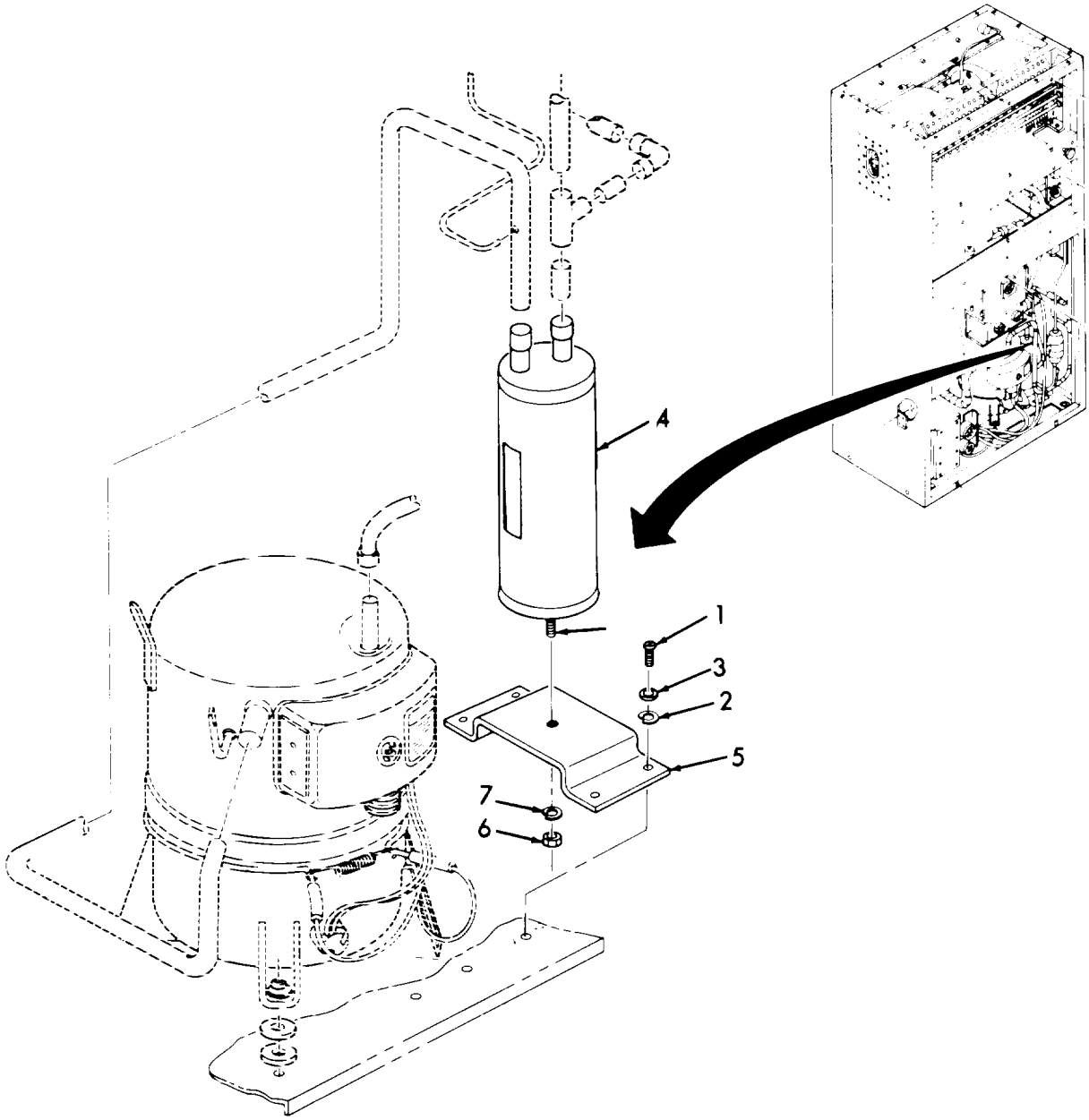

Figure 5-20. Accumulator.

5-30. CONDENSER COIL REPLACEMENT.

This Task Covers:

a. Removal b. Installation

Initial Setup:

Tools Required

Tool kit, Refrigeration

Material's Required

None

Equipment Condition

Air conditioner shut down and cool.
Front panel removed (See para. 4-20).
Junction box assembly removed. (See para. 4-33).
Pressure switches removed. (See para. 5-26).
Condenser fan motor removed. (See para. 4-45).
Control module removed. (See 4-43).
Condenser scroll removed. (See para. 4-46).
Compressor removed. (See para. 5-28).
Accumulator removed. (See para. 5-29).
Receiver removed. (See para. 5-16).
Condenser guard removed. (See para. 5-31).
Fusible plug removed. (See para. 5-17).
Condensate drain removed. (See para. 4-42).
Refrigeration system discharged (See para. 5-7).
Purge the system (See para. 5-8).
Debraze the tube connections (See para. 5-9).

a. Removal.

(1) Remove four screws (1), four lock nuts (2) and drain tube (3).

(2) Remove condenser coil (4) from unit.

b. Installation.

(1) Place condenser coil (4) in unit.

(2) Align condenser guard with clearance holes in casing and mounting hardware of coil.

(3) Install condenser guard (See para. 5-31).

(4) Install drain tube (3), four lock nuts (2), and four screws (1).

(5) Purge the system with nitrogen (See para. 5-8).

(6) Braze the tube connections (See para. 5-9).

(7) Install receiver (See para. 5-16).

(8) Install accumulator (See para. 5-29).

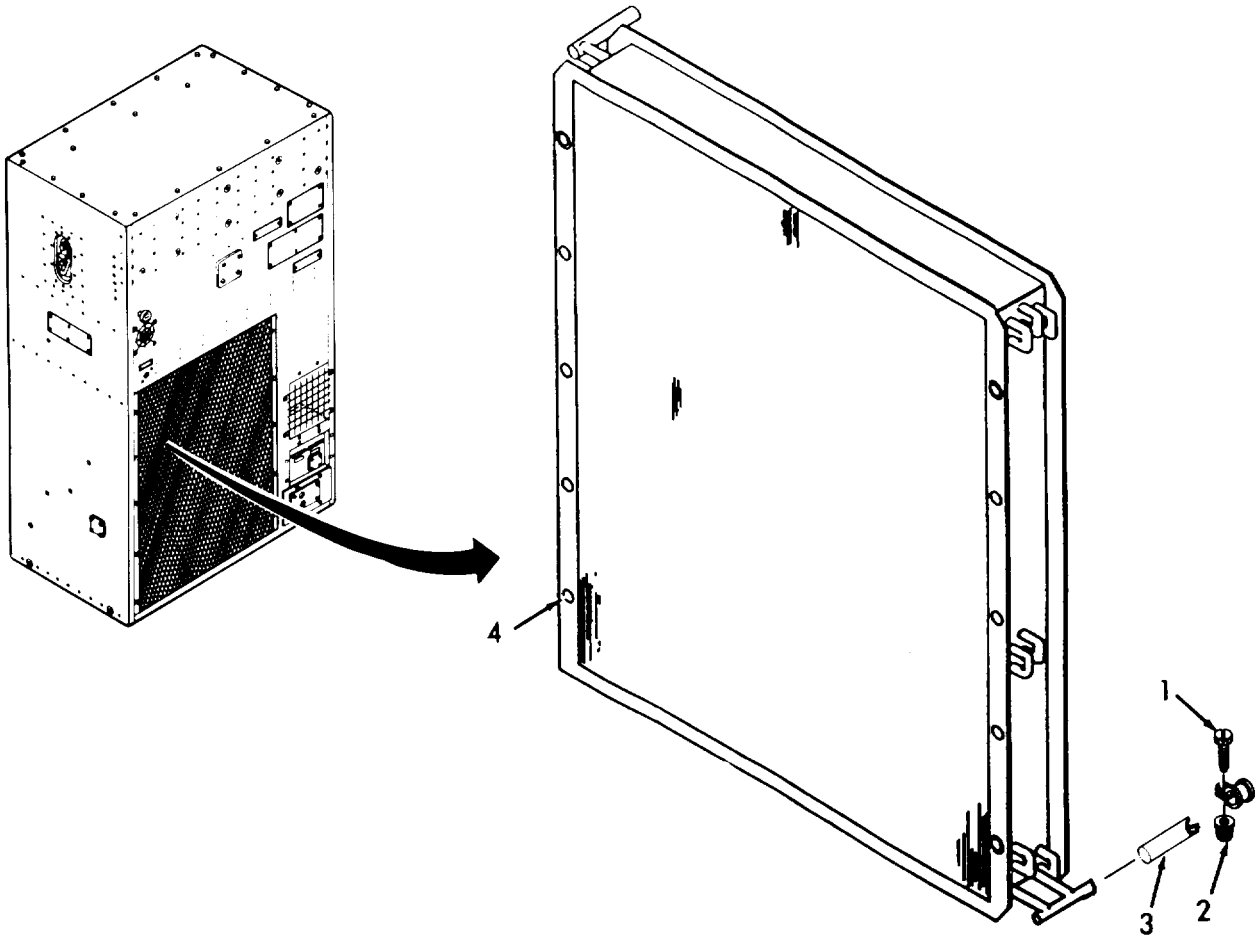

Figure 5-21. Condenser Coil.

5-30. CONDENSER COIL REPLACEMENT. - Continued.

b. Installation. - Continued.

(9) Install compressor (See para. 5-28).

(10) Install fusible plug (See para. 5-17).

(11) Replace filter/dryer dehydrator (See para. 5-15).

(12) Leak test all newly connected joints and those in the repair area (See para 5-10).

(13) Evacuate the refrigeration system (See para. 5-11).

(14) Charge the refrigeration system (See para. 5-12).

(15) Install condensate drain (See para. 4-42).

(16) Install condenser guard (See para. 5-31).

(17) Install condenser scroll (See para. 4-46).

(18) Install control module (See para. 4-43).

(19) Install condenser fan motor (See para. 4-45).

(20) Install pressure switches (See para. 5-26).

(21) Install junction box assembly (See para. 4-33).

(22) Install front panel (See para. 4-20).

5-31. CONDENSER COIL GUARD.

This Task Covers:

a. Removal b. Installation

Initial Setup:

Tools Required
Tool kit, Refrigeration

Material's Required
None

Equipment Condition
Air conditioner shut down and cool.

a. Removal.

(1) Remove ten screws (1), ten lock washers (2), and ten flat washers (3).

(2) Remove two condenser outlet guard retainers (4).

(3) Remove condenser guard (5) from unit by pulling outward on the center of the guard to disengage it at the top and bottom of the unit.

b. Installation.

(1) Place bottom of condenser guard (5) into unit and bend guard slightly to install top of guard into unit.

(2) Install two condenser outlet guard retainers (4).

(3) Install ten flat washers (3), ten lock washers (2), and ten screws (1).

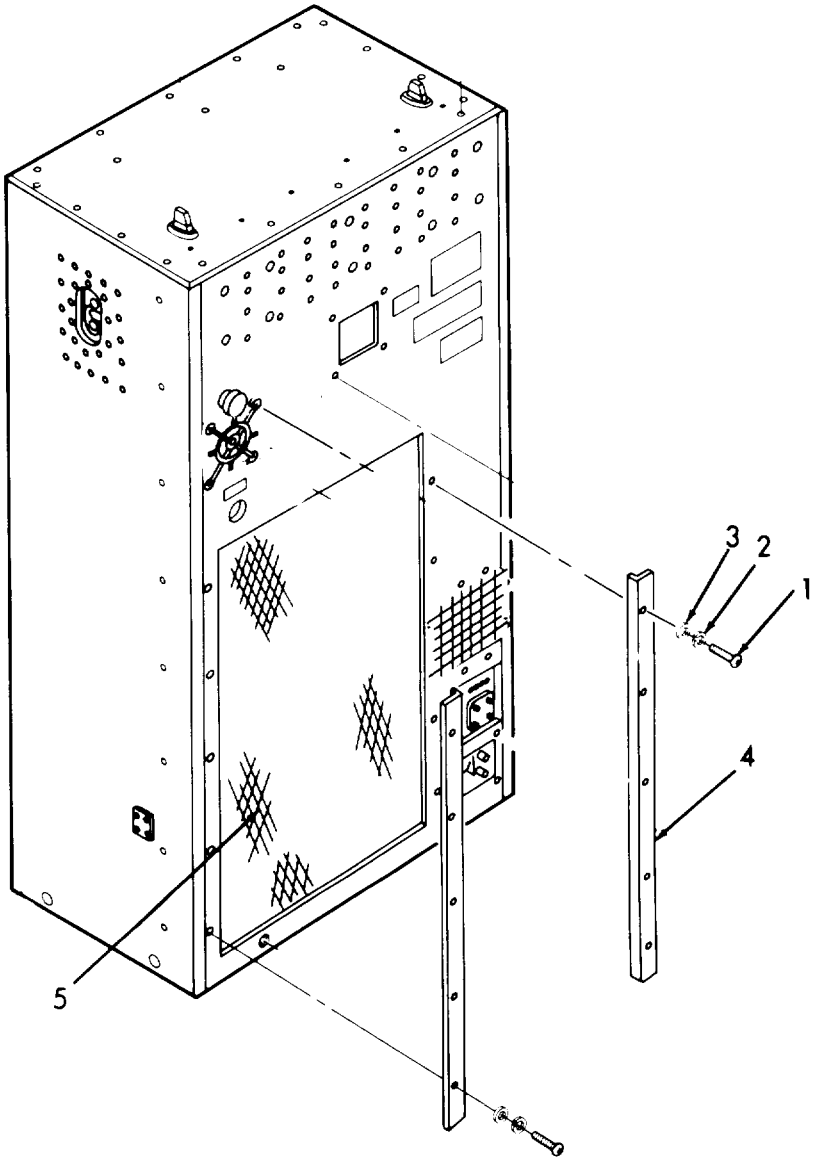

Figure 5-22. Condenser Coil Guard.

5-32. TUBING AND FITTINGS.

This Task Covers:

a. Removal

b. Installation

Initial Setup:

Tools Required

Tool kit, Refrigeration

Material's Required

None

Equipment Condition

Air conditioner shut down and cool.
Covers and panels removed as necessary to have access to repair area (See para. 4-20).
Refrigeration system discharged (See para. 5-7).
Purge the system with nitrogen (See para. 5-8).
Debraze the tube connections (See para. 5-9).

NOTE

The refrigeration system contains a number of pieces of copper tubing in a variety of material grades, sizes, lengths, and shapes, and a number of elbows, tees, and adapters in several sizes. Observe the following when replacing any piece of tubing or fitting in the system.

a. Removal.

NOTE

Any debrazing near the fusible will require the fusible to be removed before debrazing.

After completion of the debrazing process, remove the part.

b. Installation.

(1) Install replacement part onto tube ends.

(2) Purge the system (See para. 5-8).

NOTE

Any debrazing near the fusible will require the fusible to be removed before brazing.

(3) Braze the tube connections (See para. 5-9).

(4) Replace the filter/dryer dehydrator (See para. 5-15).

(5) Leak test all newly connected joints and those in the repair area (See para. 5-10).

(6) Evacuate the refrigerant system (See para. 5-11).

(7) Charge the system (See para. 5-12).

CHAPTER 6

GENERAL SUPPORT MAINTENANCE INSTRUCTIONS

Section I. REPAIR PARTS, SPECIAL TOOLS; TMDE, AND SUPPORT EQUIPMENT

6-1. GENERAL. Repair parts are listed and illustrated in TM 9-4120-399-24P. No special tools are required for general support maintenance of the air conditioner. Test, Maintenance, and diagnostic Equipment (TMDE), and support equipment, includes standard electrical test equipment, and standard pressure and vacuum gages, vacuum pumps, and servicing manifolds found in any general support maintenance refrigeration facility.

Section II. GENERAL SUPPORT MAINTENANCE PROCEDURES

6-2. GENERAL. The procedures in this section cover all items which appear in the general support maintenance level on the Maintenance Allocation Chart (MAC) which is provided in Appendix B.

6-3. CASING, REPAIR.

a. Blind Nuts and Nut Plates.

(1) To replace blind nuts (rivnuts) use a drill slightly smaller than the body of the blind nut.

(a) Carefully drill the old blind nut out.

(b) Install replacement part.

(2) To replace nut plates, use a drill slightly smaller than the body of the rivets securing the nut plate.

(a) Carefully drill the rivets loose.

(b) Remove the old nut plate.

(c) Install new nut plate with properly sized rivets.

b. Insulation, Casing.

(1) Inspection.

Check that insulation is not loose, missing, burnt or otherwise damaged. Replace if missing or damaged. Reglue if loose.

6-3. CASING, REPAIR. (Continued).

(2) Removal.

NOTE

Prior to removal of old insulation, cut the new replacement material to size using the old item as a sample.

(a) Remove as much old insulation material as possible, by pulling or scraping it away from the metal surface.

WARNING

Methyl-ethyl ketone (MEK) is flammable, and its vapors can be explosive. Repeated or prolonged skin contact or inhalation of vapors can be toxic. Use a well ventilated area, wear gloves, and keep away from sparks or flame.

(b) Soften and remove old adhesive and insulation residue, using methyl-ethyl ketone (MEK) (Appendix E, item 25) and a stiff brush.

(3) Installation.

NOTE

Prior to removal of old insulation, cut the new replacement material to size using the old item as a sample.

(a) Cut to size.

(b) Be sure that the surface to which the insulation is to be applied is clean and free of paint and old adhesive material.

(c) Coat the mating surfaces of the metal and the insulation with adhesive (Appendix E, item 16). Let both surfaces air dry until the adhesive is tacky, but will not stick to the fingers.

(d) Starting with an end, carefully attach the insulation to the metal. Press into firm contact all over.

6-4. CASING, REPLACE

Replacement consists of removing all attaching hardware and reinstalling it on new casing.

APPENDIX A
REFERENCES

A-1. SCOPE.

This appendix lists all forms, field manuals, technical manuals, and miscellaneous publications referenced in this manual.

A-2. FORMS.

Equipment Inspection and Maintenance Worksheet . . . . . DA Form 2404
Maintenance Request . . . . DA Form 2407
Quality Deficiency Report . . . . . SF 368
Recommended Changes to Equipment Technical
Publications . . . . DA Form 2028-2
Recommended Changes to Publications and Blank Forms . . . . . DA Form 2028

A-3. FIELD MANUALS.

First Aid For Soldiers . . . . . FM 21-11

A-4. TECHNICAL MANUALS.

Administrative Storage of Equipment . . . . . TM 740-90-1
Organizational, Direct Support, and General Support
Repair Parts and Special Tools List . . . . . TM 9-4120-399-24P
Procedure for Destruction of Equipment to Prevent
Enemy Use (Mobility Equipment Command) . . . . . TM 750-244-3
Leak Detector, Refrigerant Gas.. . . . . TM 9-4940-435-14_
Solder and Soldering . . . . TB SIG 222

A-5. MISCELLANEOUS PUBLICATIONS.

The Army Maintenance Management System . . . . . DA PAM 738-750
Abbreviations for Use on Drawings, Standards, Specifications
and Technical Documents.. . . . . MIL-STD-12
Army Medical Department Expendable/Durable Items . . . . . CTA 8-100
Consolidated Index of Army Publications and
Blank Forms . . . . . DA PAM 25-30
Expendable Items (Except Medical Class V, Repair Parts
and Heraldic Items) . . . . . CTA 50-970
Environmental Control of Small Shelters MIL-HDBK-116

APPENDIX B

MAINTENANCE ALLOCATION CHART

Section I. INTRODUCTION

B-1 . GENERAL.

a. This section provides a general explanation of all maintenance and repair functions authorized at various maintenance categories.

b. The Maintenance Allocation Chart (MAC) in section II designates overall authority and responsibility for the performance of maintenance functions on the identified end item or component. The application of the maintenance functions to the end item or component will be consistent with the capacities and capabilities of the designated maintenance categories.

c. Section III lists the tools and test equipment (both special tools and common tool sets) required for each maintenance function as referenced from section II.

d. Section IV contains supplemental instructions and explanatory notes for a particular maintenance function.

B-2. MAINTENANCE FUNCTIONS.

Maintenance functions will be limited to and defined as follows:

a. Inspect. To determine the serviceability of an item by comparing its physical mechanical, and/or electrical characteristics with established standards through examination (e.g., by sight, sound, or feel).

b. Test. To verify serviceability by measuring the mechanical, pneumatic, hydraulic, or electrical characteristics of an item and comparing those characteristics with prescribed standards.

c. Service. Operations required periodically to keep an item in proper operating condition, i.e., to clean (includes decontaminate, when required), to preserve, to drain, to paint, or to replenish fuel, lubricants, chemical fluids, or gases.

d. Adjust. To maintain or regulate, within prescribed limits, by bringing into proper or exact position, or by setting the operating characteristics to specified parameters.

e. Align. To adjust specified variable elements of an item to bring about optimum or desired performance.

f. Calibrate. To determine and cause corrections to be made or to be adjusted on instruments or test, measuring, and diagnostic equipments used in precision measurement. Consists of comparisons of two instruments, one of which is a certified standard of known accuracy, to detect and adjust any discrepancy in the accuracy of the instrument being compared.

g. Remove / Install. To remove and install the same item when required to perform service or other maintenance functions. Install may be the act of emplacing, seating, or fixing into position a spare, repair part, or module (component or assembly) in a manner to allow the proper functioning of an equipment or system.

h. Replace. To remove an unserviceable item and install a serviceable counterpart in its place. "Replace" is authorized by the MAC and is shown as the 3rd position code of the SMR code.

i. Repair. The application of maintenance services, including fault location/trouble-shooting, removal/installation, and disassembly/assembly procedures, and maintenance actions to identify troubles and restore serviceability to an item by correcting specific damage, fault, malfunction, or failure in a part, subassembly, module (component or assembly), end item, or system.

j. Overhaul. That maintenance effort (service/action) prescribed to restore an item to a completely serviceable/operational condition as required by maintenance standards in appropriate technical publications (i.e., DMWR). Overhaul is normally the highest degree of maintenance performed by the Army. Overhaul does not normally return an item to like new condition.

k. Rebuild. Consists of those service/sections necessary for the restoration of unserviceable equipment to a like new condition in accordance with original manufacturing standards. Rebuild is the highest degree of material maintenance applied to Army equipment. The rebuild operation includes the act of returning to zero those age measurements (hours/miles, etc.) considered in classifying Army equipment/components.

B-3. EXPLANATION OF COLUMNS IN THE MAC, SECTION II.

a. Column 1, Group Number. Column 1 lists functional group code numbers, the purpose of which is to identify maintenance significant components, assemblies, subassemblies, and modules with the next highest assembly. End item group number shall be "00."

b. Column 2, Component/Assembly. Column 2 contains the names of components, assemblies, subassemblies, and modules for which maintenance is authorized.

c. Column 3, Maintenance Function. Column 3 lists the functions to be performed on the item listed in Column 2. (For detailed explanation of these functions, see paragraph B-2.)

d. Column 4, Maintenance Category. Column 4 specifies, by the listing of a work time figure in the appropriate subcolumn(s), the category of maintenance authorized to perform the function listed in Column 3. This figure represents the active time required to perform that maintenance function at the indicated category of maintenance. If the number or complexity of the tasks within the listed maintenance function vary at different maintenance categories, appropriate work time figures will be shown for each category. The work time figure represents the average time required to restore an item (assembly, subassembly, component, module, end item, or system) to a serviceable condition under typical field operating conditions. This time includes preparation time (including any necessary disassembly/assembly time), troubleshooting/fault location time, and quality assurance/quaility control time in addition to the

time required to perform the specific tasks identified for the maintenance functions authorized in the maintenance allocation chart. The symbol designations for the various maintenance categories are as follows:

C . . . . . Operator or crew
O . . . . . .Unit Maintenance
F . . . . . Direct Support Maintenance
H . . .. General Support Maintenance
D ... . Depot Maintenance

e. Column 5, Tools and Equipment. Column 5 specifies, by code, those common tool sets (not individual tools) and special tools, TMDE, and support equipment required to perform the designated function.

f. Column 6, Remarks. This column shall, when applicable, contain a letter code, in alphabetic order, which shall be keyed to the remarks contained in Section IV.

B-4. EXPLANATION OF COLUMNS IN TOOL AND TEST EQUIPMENT REQUIREMENTS, SECTION III.

a. Column 1, Reference Code. The tool and test equipment reference code correlates with a code used in the MAC, Section II, Column 5.

b. Column 2, Maintenance Category. The lowest category of maintenance authorized to use the tool or test equipment.

c. Column 3, Nomenclature. Name or identification of the tool or test equipment.

d. Column 4, National Stock Number. The National stock number of the tool or test equipment.

e. Column 5, Tool Number. The manufacturer's part number.

B-5. EXPLANATION OF COLUMNS IN REMARKS, SECTION IV.

a. Column 1, Reference Code. The code recorded in column 6, Section II.

b. Column 2, Remarks. This column lists information pertinent to the maintenance function being performed as indicated in the MAC, Section II.

Section II. MAINTENANCE ALLOCATION CHART FOR AIR CONDITIONER, VERTICAL, 36,000 Btu/hr

(1) GRP NO.	(2) COMPONENT/ ASSEMBLY	(3) MAINT. FUNCTION	(4) MAINTENANCE CATEGORY C	O	F	H	D	(5) TOOLS & EQUIP	(6) REMARKS
01	Fabric Cover, Guards, Covers, Filters, Panels and Information Plates								
	Fabric Cover	Inspect	.1						
		Repair		.1					
		Replace		.4					
	Metal Covers	Inspect	.1						
		Repair		.2					
		Replace	.1						
	Panels	Inspect	.1						
		Repair		.2					
		Replace		.2					
	Condenser Air Outlet Guard	Inspect	.1						
		Service	.1						
		Replace		.2					
	Fresh Air Guard	Inspect	.1						
		Service	.1						
		Replace		.1					
	Fresh Air Filter	Inspect	.1						
		Service		.2					
		Replace		.2					
	Intake (return air) Guard and Conditioned Air Discharge Guard	Inspect	.1						
		Service		.1					
		Adjust	.1						
		Replace	.2						
	Filter, Air Conditioning	Inspect	.1						
		Service		.2					
		Replace		.3					
	Information Plates	Inspect		.1					
		Replace		.2					

Section II. MAINTENANCE ALLOCATION CHART FOR AIR CONDITIONER, VERTICAL, 36,000 Btu/hr

(1) GRP NO.	(2) COMPONENT/ ASSEMBLY	(3) MAINT. FUNCTION	(4) MAINTENANCE CATEGORY C	O	F	H	D	(5) TOOLS & EQUIP	(6) REMARKS
02	Heater Diffuser, Thermostat Switch, and Terminal Boards								
	Heater Diffuser	Inspect		.1					
		Replace		1.0					
	Thermostat Cutout	Inspect		.1					
		Test		2.5					
		Replace		1.0					
	Heating Elements	Inspect		.1					
		Test		2.5					
		Replace		1.0					
	Terminal Board	Inspect		.3					
		Replace		1.0					
03	Evaporator Fan Assembly								
	Evaporator Fan Assembly	Inspect		.3					
		Replace		2.0					
	Evaporator Impeller Fan	Inspect		.2					
		Repair		.5					
		Replace		2.0					
	Evaporator Scrolls	Inspect		.4					
		Repair		.5					
		Replace		1.5					
	Evaporator Fan Motor and Bracket	Inspect		.2					
		Test		.5					
		Repair		1.0					
		Replace		1.5					
04	Fresh Air Damper	Inspect		.1					
		Service		.2					
		Replace			3.0				
05	Junction Box Assembly	Inspect		.1					
		Replace		2.0					
		Repair		2.0					

Section II. MAINTENANCE ALLOCATION CHART FOR AIR CONDITIONER, VERTICAL, 36,000 Btu/hr

(1) GRP NO.	(2) COMPONENT/ ASSEMBLY	(3) MAINT. FUNCTION	(4) MAINTENANCE CATEGORY C	O	F	H	D	(5) TOOLS & EQUIP	(6) REMARKS
	Components	Test		1.5					
		Replace		2.0					
06	Wire Harnesses	Inspect		1.0					
		Test		2.0					
		Repair		2.0					
		Replace		1.5					
07	Condensate Drain Assembly	Inspect		.2					
		Service		1.5					
		Replace		2.0					
		Repair		1.5					
08	Control Module	Inspect		.3					
		Test		.1					
		Repair		.5					
		Replace		.5					
09	Condenser Damper, Condenser Fan Motor, Condenser Fan, and Condenser Scroll								
	Condenser Damper Assembly	Inspect		.5					
		Replace		1.0					
		Adjust		.3					
	Condenser Motor	Inspect		.5					
		Test		.5					
		Replace		1.0					
	Condenser Scroll	Inspect		.5					
		Repair		3.0					
		Replace		1.0					
	Condenser Fan	Inspect		.2					
		Replace		.5					

Section II. MAINTENANCE ALLOCATION CHART FOR AIR CONDITIONER, VERTICAL, 36,000 Btu/hr

(1) GRP NO.	(2) COMPONENT ASSEMBLY	(3) MAINT. FUNCTION	(4) MAINTENANCE CATEGORY C	O	F	H	D	(5) TOOLS & EQUIP	(6) REMARKS
10	Refrigeration Valves, and Components								
	Filter/Dryer Dehydrator Receiver	Inspect			.5				
		Replace			1.0				A
		Inspect			.5				
		Replace			4.0				A
	Fusible Plug	Inspect			.2				
		Replace			1.0				A
	Damper Actuator	Inspect			.2				
		Replace			1.5				A
	Solenoid Valve	Inspect		.5	.5				
		Test			.5				
		Repair			2.0				B
		Replace			2.0				A
	Pressure Regulating Valve	Inspect			.2				
		Test			1.0				
		Replace			4.0				
	Liquid Quench Valve	Inspect			.4				
		Test			1.0				
		Replace			4.0				
	Sight Glass	Inspect			1.0				
		Replace			2.0				
	Expansion Valve	Inspect			.5				
		Test			1.0				
		Replace			3.0				
11	Evaporator Coil and Structure								
	Structure	Inspect			.5				
		Replace			1.5				
	Evaporator Coil	Inspect		.5	1.0				
		Service		1.0					
		Replace			4.0				A

Section II. MAINTENANCE ALLOCATION CHART FOR AIR CONDITIONER, VERTICAL, 36,000 Btu/hr

(1) GRP NO.	(2) COMPONENT/ ASSEMBLY	(3) MAINT. FUNCTION	(4) MAINTENANCE CATEGORY C	O	F	H	D	(5) TOOLS & EQUIP	(6) REMARKS
12	Pressure Switches and Service Valves								
	Pressure Switches	Inspect			.5				
		Test			.5				
		Replace			2.0				A
	Service Valves	Inspect			.5				
		Replace			1.5				A
13	Compressor, Accumulator								
	Compressor	Inspect		.5					
		Test			1.0				
		Repair			1.0				
		Replace			3.0				A
	Accumulator	Inspect			.5				
		Replace			2.0				A
14	Condenser Coil and Guard								
	Condenser Coil	Inspect		1.5					
		Service		.5					
		Replace			8.0				A
	Condenser Guard	Inspect		.1					
		Replace			.4				
15	Tubing and Fittings	Replace			4.0				
16	Casing	Repair				8.0			B
		Replace				24.0			C

Section III. SPECIAL TOOLS AND TEST EQUIPMENT REQUIREMENTS

(1) REFERENCE TOOL CODE	(2) MAINTE-NANCE LEVEL	(3) NOMENCLATURE	(4) NATIONAL/NATO STOCK NUMBER	(5) TOOL NUMBER
		Standard tools and test equipment contained in the following kits are adequate to perform the maintenance functions listed in Section II.		
1	O, F, H	Tool Kit, Service Unit	5180-00-596-1474	SC5180-90-CL-N18 (19099)
2	F, H	Pump, Vacuum	4310-00-098-5272	1400B (64484)
3	F, H	Soldering Gun Kit	3439-00-930-1638	450K4 (11103)
		SPECIAL TOOLS		
4	O	Heat Gun	4940-01-042-4855	
5	F	Regulator Assembly (Nitrogen)	6680-00-503-1327	
6	O, F, H	Riveter, Blind, Hand	5120-00-017-2849	
7	O	Straightener, Fin	5120-00-157-2180	
8	O	Screwdriver, Offset Crosstip	5120-00-256-9014	
9	F, H	Recovery and Recycling Unit, Refrigerant	4130-01-338-2707	17500B (07295)

Section IV. REMARKS.

REFERENCE CODE	REMARKS
A	Includes refrigerant charging and vacuuming lines.
B	Replace coil only.
C	Replace blind nuts, plate nuts, and lifting handles only.

☆ U.S. GOVERNMENT PRINTING OFFICE: 1992 554-123/40010

PIN:049178-002

APPENDIX C
COMPONENTS OF END ITEM AND BASIC ISSUE ITEMS LISTS

Section I. INTRODUCTION

C-1. SCOPE.

This appendix lists components of end item and basic issue items for the Applied Companies Model 3863 Air Conditioner to help you inventory items required for safe and efficient operation.

C-2. GENERAL.

The Components of End Item and Basic Issue Items Lists are divided into the following sections:

a. Section II. Components of End Item. This listing is for informational purposes only, and not authority to requisition replacements. These items are part of the end item, but are removed and separately packaged for transportation or shipment. As part of the end item, these items must be with the end item whenever it is issued or transferred between property accounts. Illustrations are furnished to assist you in identifying the items.

b. Section III. Basic Issue Items. These are the minimum essential items required to place the air conditioner in operation, to operate it, and to perform emergency repairs. Although shipped separately packaged, BII must be with the air conditioner during operation and whenever it is transferred between property accounts. The illustrations will assist you with hard-to-identify items. This manual is your authority to request/requisition replacement BII, based on TOE/MTOE authorization of the end item.

C-3. EXPLANATION OF COLUMNS.

The following provides an explanation of columns found in the tabular listings:

a. Column (1) - Illustration Number (Illus. Number). This column indicates the number of the illustration in which the item is shown.

b. Column (2) - National Stock Number. Indicates the National stock number assigned to the item and will be used for requisitioning purposes.

c. Column (3) - Description. Indicates the Federal item name and, if required, a minimum description to identify and locate the item. The last line for each item indicates the CAGEC (in parentheses) followed by the part number.

d. Column (4) - Unit of Measure (U/M). Indicates the measure used in performing the actual operational/maintenance function. This measure is expressed by a two-character alphabetical abbreviation (e.g., ea, in, pr).

e. Column (5) - Quantity required (Qty rqr). Indicates the quantity of the item authorized to be used with/on the equipment.

Section II. COMPONENTS OF END ITEM

(1) Illus Number	(2) National Stock Number	(3) Description CAGEC and Part Number	Usable On Code	(4) U/M	(5) Qty. Rqr
1		Cover, Electrical Connector (96906) MS25043-24DA		EA	
2		Cover, Air Conditioner (97403) 13229E6550		EA	1
3		Guard Assembly, Discharge (97403) 13229E6537		EA	1
4		Guard Assembly, Intake (97403) 13229E6172		EA	1
5		Panel, Lower (97403) 13229E6508		EA	1
6		Screen, Fresh Air (97403) 13229E6173		EA	1
7		Cover, CBR Duct (97403) 13229E6530		EA	1
8		Guard, Condenser Coil (97403) 13229E6485		EA	1
9		Filter, Air Conditioning (97403) 13229E6562		EA	1
10		Control Module (97403) 13225E8073		EA	1
11		Plug, Pipe (97403) 13211E8178		EA	1

Section Ill. BASIC ISSUE ITEMS

(1) Illus Number	(2) National Stock Number	(3) Description CAGEC and Part Number	Usable On Code	(4) U/M	(5) Qty. Rqr
		TM9-4120-399-14		ea	1
		TB9-4120-399-24		ea	1

APPENDIX D
ADDITIONAL AUTHORIZATION LIST

SECTION I. INTRODUCTION

D-1 . SCOPE.

This appendix lists additional items you are authorized for the support of the Applied Companies Model 3684 Air Conditioner.

D-2. GENERAL.

This list identifies items that do not have to accompany the air conditioner and that do not have to be turned in with it. These items are all authorized to you by CTA, MTOE, TDA, or JTA.

D-3. EXPLANATION OF LISTING.

National stock numbers, descriptions, and quantities are provided to help you identify and request the additional items you require to support this equipment. The items are listed in alphabetical sequence by item name under the type document (i.e., CTA, MTOE, TDA, or JTA) which authorizes the item(s) to you.

Section II. ADDITIONAL AUTHORIZATION LIST

(1) NATIONAL STOCK NUMBER	(2) DESCRIPTION CAGEC & PART NUMBER	USABLE ON CODE	(3) U/M	(4) QTY. AUTH
	MTOE AUTHORIZED ITEMS			
	Cable Connector, 9-Pin		EA	1
	Cable Connector, 12-Pin		EA	1
4130-00-550-2995	Block-Off Ass'y (97403) 13215E9885		EA	1

APPENDIX E
EXPENDABLE / DURABLE SUPPLIES AND MATERIALS LIST

Section I. INTRODUCTION

E-1. SCOPE.

This appendix lists expendable supplies and materials you will need to operate and maintain the air conditioner. This listing is for informational purposes only and is not authority to requisition the listed items. These items are authorized to you by CTA 50-970, Expendable Items (Except Medical, Class V, Repair Parts, and Heraldic Items).

E-2. EXPLANATION OF COLUMNS.

a. Column (1) - Item number. This number is assigned to the entry in the listing and is referenced in the narrative instructions to identify the material (e.g., "Use cleaning compound, item 5, App. E").

b. Column (2) - Level. This column identifies the lowest level of maintenance that requires the listed item.

C - Operator/Crew
O - Unit Maintenance
F - Direct Support Maintenance
H - General Support Maintenance

c. Column (3) - National Stock Number. This is the National stock number assigned to the item; use it to request or requisition the item.

d. Column (4) - Description. Indicates the Federal item name and, if required, a description to identify the item. The last line for each item indicates the Commercial and Government Entity Code (CAGEC) in parentheses followed by the part number.

e. Column (5) - Unit of Measure (U/M). Indicates the measure used in performing the actual maintenance function. This measure is expressed by a two-character alphabetical abbreviation (e.g., ea, in, pr). If the unit of measure differs from the unit of issue, requisition the lowest unit of issue that will satisfy your requirements.

Section II. EXPENDABLE / DURABLE SUPPLIES AND MATERIALS LIST

(1) ITEM NUMBER	(2) LEVEL	(3) NATIONAL STOCK NUMBER	(4) DESCRIPTION	(9 U/M
1	F		Solder, Lead-Tin, QQ-S-571 Type Sb5	oz
2	F	6830-00-292-0732	Nitrogen Cylinder	cy
3	F		Brazing Alloy, Silver QQ-B-654 Grade VII	rod
4	F		Brazing Alloy, Silver QQ-B-654 Grade Bcup5	oz
5	F	3439-00-640-3713	Flux, Brazing, O-F-499, Type B	qt
6	F		Flux, Soldering, O-F-506, Type I	qt
7	F	5350-00-174-1001	Abrasive Cloth A-A-1200 (58536)	ea
8	O,F	7920-00-205-1711	Rags	bl
9	O,F	6850-00-274-5421	Dry Cleaning Solvent, P-D-680 (81348)	gl
10	F	8030-00-889-3534	Tape, Antisieze, Polytetra-fluorethylene MIL-T-27730, Size I	roll
11	F	9150-00-065-0029	Grease, Automotive and Artillery MIL-G-10924 (81349)	tube
12	F	9150-00-181-9858	Oil, Lubricating MIL-L-2104	gl
13	O,F	7920-00-205-1711	Cloth, Lint-Free	ea
14	O,F	8020-00-207-6658	Brush, Medium, Oval	ea
15	O	7930-00-068-1669	Soap, Mild	gl
16	O	3040-00-664-0439	Adhesive, General Purpose	ea

Section II. EXPENDABLE / DURABLE SUPPLIES AND MATERIALS LIST

(1) ITEM NUMBER	(2) LEVEL	(3) NATIONAL STOCK NUMBER	(4) DESCRIPTION	(5) U/M
17	O	6850-00-837-9927	Monochlorodifluoromethane, Technical (Refrigerant R-22) BB-F-1421, Type 22 (81348)	cy
18	O	8030-00-251-3980	Antisieze Compound MIL-A-907 (81349)	lb
19	F	6830-00-872-5120	Trichloromonofluoromethane, Technical; w/cylinder 50 lb. (Refrigerant-11) BB-F-1421, Type 11 (81348)	cy
20	O		Loctite, MIL-L-46163, Type I Grade L	oz
21	F		Heat Sink	roll
22	C,O	5640-00-103-2254	Tape, Duct	roll
23	F	5610-01-042-2456	Thermal Mastic	qt.
24	F	5970-00-419-4291	Tape, Insulation	roll
25	H	--------	Cleaning Solvent, Methyl-ethyl Ketone (MEK)	cn

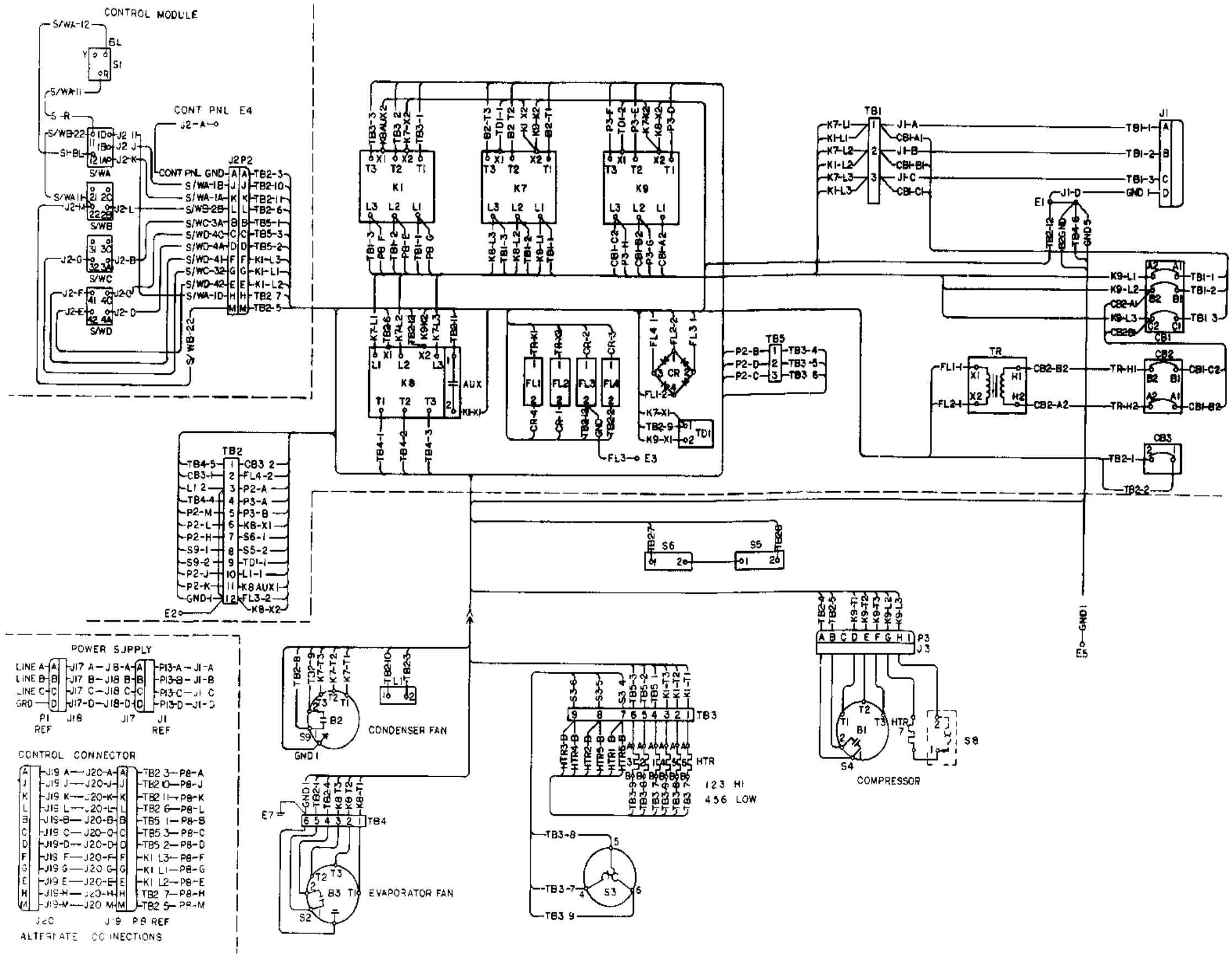

FO-1 Wiring Schematic

ALPHABETICAL INDEX

ALPHABETICAL INDEX - Continued

ALPHABETICAL INDEX

ALPHABETICAL INDEX - Continued

ALPHABETICAL INDEX

By Order of the Secretary of the Army :

CARL E. VUONO
General, United States Army
Chief of Staff

Official:

THOMAS F. SIKORA
Brigadier General, United States Army
The Adjutant General

DISTRIBUTION:

To be distributed in accordance with DA Form 12-25E, (Qty rqr blk no. 0154)

☆ U.S. GOVERNMENT PRINTING OFFICE: 1991 554-123/20177

RECOMMENDED CHANGES TO EQUIPMENT TECHNICAL PUBLICATIONS

SOMETHING WRONG WITH THIS PUBLICATION?

FROM (PRINT YOUR UNIT'S COMPLETE ADDRESS)
PFC JOHN DOE
COA, 3d ENGINEER BN
FT. LEONARDWOOD, MO 63108

DATE SENT

PUBLICATION NUMBER	PUBLICATION DATE	PUBLICATION TITLE
TM 9-4120-399-14	18 January 1991	AIR CONDITIONER, VERTICAL, COMPACT

BE EXACT PIN-POINT WHERE IT IS

PAGE NO	PARA-GRAPH	FIGURE NO	TABLE NO	IN THIS SPACE TELL WHAT IS WRONG AND WHAT SHOULD BE DONE ABOUT IT:
6	2-1 a			In line 6 of paragraph 2-1a the manual states the engine has 6 Cylinders. The engine on my set only has 4 Cylinders. Change the manual to show 4 Cylinders.
81		4-3		Callout 16 on figure 4-3 is pointing at a bolt. In key to figure 4-3, item 16 is called a shim - Please correct one or the other.
125	line		20	I ordered a gasket, item 19 on figure B-16 by NSN 2910-00-762-3001. I got a gasket but it doesn't fit. Supply says I got what I ordered, so the NSN is wrong. Please give me a good NSN

PRINTED NAME GRADE OR TITLE AND TELEPHONE NUMBER
JOHN DOE, PFC (268) 317-7111

SIGN HERE John Doe
JOHN DOE

DA FORM 1 JUL 79 2028-2

PREVIOUS EDITIONS ARE OBSOLETE.

DRSTS-M Overprint 1, 1 Nov 80

P.S.--IF YOUR OUTFIT WANTS TO KNOW ABOUT YOUR RECOMMENDATION MAKE A CARBON COPY OF THIS AND GIVE IT TO YOUR HEADQUARTERS

TEAR ALONG PERFORATED LINE

RECOMMENDED CHANGES TO EQUIPMENT TECHNICAL PUBLICATIONS

THEN . . JOT DOWN THE DOPE ABOUT IT ON THIS FORM. CAREFULLY TEAR IT OUT. FOLD IT AND DROP IT IN THE MAIL!

SOMETHING WRONG WITH THIS PUBLICATION?

FROM: (PRINT YOUR UNIT'S COMPLETE ADDRESS)

DATE SENT

PUBLICATION NUMBER	PUBLICATION DATE	PUBLICATION TITLE
TM 9-4120-399-14	18 January 1991	AIR CONDITIONER, VERTICAL, COMPACT

BE EXACT PIN-POINT WHERE IT IS

PAGE NO	PARA-GRAPH	FIGURE NO	TABLE NO

IN THIS SPACE TELL WHAT IS WRONG AND WHAT SHOULD BE DONE ABOUT IT:

PRINTED NAME, GRADE OR TITLE, AND TELEPHONE NUMBER

SIGN HERE:

DA FORM 1 JUL 79 2028-2

PREVIOUS EDITIONS ARE OBSOLETE.

DRSTS-M Overprint 2, 1 Nov 80.

P.S.--IF YOUR OUTFIT WANTS TO KNOW ABOUT YOUR RECOMMENDATION MAKE A CARBON COPY OF THIS AND GIVE IT TO YOUR HEADQUARTERS.

TEAR ALONG PERFORATED LINE

REVERSE OF DA FORM 2028-2 Reverse of DRSTS-M Overprint 2, 1 Nov 80

TEAR ALONG PERFORATED LINE

FILL IN YOUR UNIT'S ADDRESS

FOLD BACK

DEPARTMENT OF THE ARMY

_____

_____

OFFICIAL BUSINESS

COMMANDER
U.S. ARMY TROOP SUPPORT COMMAND
ATTN: AMSTR-MMTS
4300 GOODFELLOW BOULEVARD
ST. LOUIS, MO 63120-1798

The Metric System and Equivalents

Linear Measure

1 centimeter = 10 millimeters = .39 inch
1 decimeter = 10 centimeters = 3.94 inches
1 meter = 10 decimeters = 39.37 inches
1 dekameter = 10 meters = 32.8 feet
1 hectometer = 10 dekameters = 328.08 feet
1 kilometer = 10 hectometers = 3,280.8 feet

Weights

1 centigram = 10 milligrams = .15 grain
1 decigram = 10 centigrams = 1.54 grains
1 gram = 10 decigram = .035 ounce
1 dekagram = 10 grams = .35 ounce
1 hectogram = 10 dekagrams = 3.52 ounces
1 kilogram = 10 hectograms = 2.2 pounds
1 quintal = 100 kilograms = 220.46 pounds
1 metric ton = 10 quintals = 1.1 short tons

Liquid Measure

1 centiliter = 10 milliters = .34 fl. ounce
1 deciliter = 10 centiliters = 3.38 fl. ounces
1 liter = 10 deciliters = 33.81 fl. ounces
1 dekaliter = 10 liters = 2.64 gallons
1 hectoliter = 10 dekaliters = 26.42 gallons
1 kiloliter = 10 hectoliters = 264.18 gallons

Square Measure

1 sq. centimeter = 100 sq. millimeters = .155 sq. inch
1 sq. decimeter = 100 sq. centimeters = 15.5 sq. inches
1 sq. meter (centare) = 100 sq. decimeters = 10.76 sq. feet
1 sq. dekameter (are) = 100 sq. meters = 1,076.4 sq. feet
1 sq. hectometer (hectare) = 100 sq. dekameters = 2.47 acres
1 sq. kilometer = 100 sq. hectometers = .386 sq. mile

Cubic Measure

1 cu. centimeter = 1000 cu. millimeters = .06 cu. inch
1 cu. decimeter = 1000 cu. centimeters = 61.02 cu. inches
1 cu. meter = 1000 cu. decimeters = 35.31 cu. feet

Approximate Conversion Factors

To change	*To*	*Multiply by*	*To change*	*To*	*Multiply by*
inches	centimeters	2.540	ounce-inches	newton-meters	.007062
feet	meters	.305	centimeters	inches	.394
yards	meters	.914	meters	feet	3.280
miles	kilometers	1.609	meters	yards	1.094
square inches	square centimeters	6.451	kilometers	miles	.621
square feet	square meters	.093	square centimeters	square inches	.155
square yards	square meters	.836	square meters	square feet	10.764
square miles	square kilometers	2.590	square meters	square yards	1.196
acres	square hectometers	.405	square kilometers	square miles	.386
cubic feet	cubic meters	.028	square hectometers	acres	2.471
cubic yards	cubic meters	.765	cubic meters	cubic feet	35.315
fluid ounces	milliliters	29,573	cubic meters	cubic yards	1.308
pints	liters	.473	milliliters	fluid ounces	.034
quarts	liters	.946	liters	pints	2.113
gallons	liters	3.785	liters	quarts	1.057
ounces	grams	28.349	liters	gallons	.264
pounds	kilograms	.454	grams	ounces	.035
short tons	metric tons	.907	kilograms	pounds	2.205
pound-feet	newton-meters	1.356	metric tons	short tons	1.102
pound-inches	newton-meters	.11296			

Temperature (Exact)

°F	Fahrenheit temperature	5/9 (after subtracting 32)	Celsius temperature	°C

PIN: 049178-005

This fine document...

Was brought to you by me:

Liberated Manuals -- free army and government manuals

Why do I do it? I am tired of sleazy CD-ROM sellers, who take publicly available information, slap “watermarks” and other junk on it, and sell it. Those masters of search engine manipulation make sure that their sites that sell free information, come up first in search engines. They did not create it... They did not even scan it... Why should they get your money? Why are not letting you give those free manuals to your friends?

I am setting this document FREE. This document was made by the US Government and is NOT protected by Copyright. Feel free to share, republish, sell and so on.

I am not asking you for donations, fees or handouts. If you can, please provide a link to liberatedmanuals.com, so that free manuals come up first in search engines:

<A HREF=http://www.liberatedmanuals.com/>Free Military and Government Manuals</A>

- Sincerely
  Igor Chudov
  http://igor.chudov.com/
- Chicago Machinery Movers