TECHNICAL MANUAL

OPERATOR'S, UNIT, DIRECT SUPPORT, AND GENERAL SUPPORT MAINTENANCE MANUAL INCLUDING REPAIR PARTS AND SPECIAL TOOLS LIST

FOR

AIR CONDITIONER,
24, 000 BTUH COOLING,
23, 600 BTUH HEATING,
WALL MOUNTED, VERTICAL,
MODEL AVP24HPA-08
NSN 4120-01-279-5659

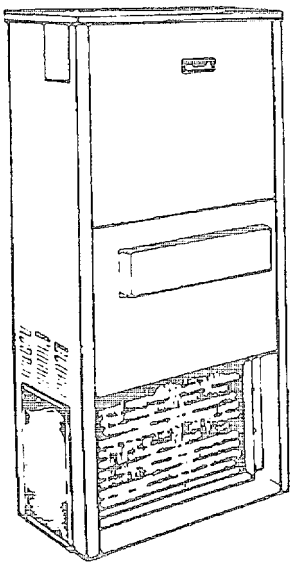

DISTRIBUTION STATEMENT A
Approved for public release
Distribution Is unlimited.

* This manual supersedes TM 5-4120-395-14&P, dated 15 March 90

HEADQUARTERS, DEPARTMENT OF THE ARMY
28 MAY 1993

WARNING

HIGH VOLTAGE
is used in the operation of this equipment.

DEATH ON CONTACT
may result if personnel fail to observe safety precautions.

Never work on electrical equipment unless there is another person nearby who is familiar with the operation and hazards of the equipment and who is competent in administering first aid. When the technician is aided by operators, he must warn them about dangerous areas.

Whenever possible, the input power supply to the equipment must be shut off before beginning work on the equipment. Take particular care to ground every capacitor likely to hold a dangerous potential. When working inside the equipment, after the power has been turned off, always ground every part before touching it.

Be careful not to touch high-voltage connections when installing or operating this equipment.

Whenever the nature of the operation permits, keep one hand away from the equipment to reduce the hazard of current flowing through vital organs of the body.

Do not operate the equipment without all doors, panels, and guards in place and tightly secured.

Do not be misled by the term "low voltage." Potentials as low as 50 volts may cause death under adverse conditions.

Shutting the unit off at the control panel does not disconnect power to the various components of the air conditioner.

For artificial respiration: See FM5-21-11.

DANGEROUS CHEMICAL
(Refrigerant-22)
is used in this equipment.

Prevent contact of liquid refrigerant, or refrigerant gas discharged under pressure, with any part of the body. The extremely low temperature resulting from the rapid expansion of liquid refrigerant, or refrigerant gas released under pressure, can cause sudden and irreversible tissue damage through freezing. As a minimum, all personnel must wear thermal protective gloves and face shield or goggles when working in any situation where refrigerant contact with the skin or eyes is possible. Application of excessive heat to any component in a charged system will cause extreme pressure that may result in a rupture, possibly explosive in nature. Exposure of refrigerant - 22 to an open flame or very hot surface will cause a chemical reaction in the gas to form carbonyl chloride (phosgene), a highly poisonous and corrosive gas. In its natural state, refrigerant - 22 is a colorless, odorless vapor with no toxic characteristics. It is heavier than air and in a well ventilated area will disperse rapidly. However, in an unventilated area it presents danger as a suffocant.

WARNING

Be sure the refrigeration system is fully discharged and purged and that dry nitrogen is flowing through the system at the rate of 1 to 2 cfm (0.028 to 0.057 m^3/minute) before all brazing or debrazing operations.

Wear gas mask if area is not thoroughly ventilated. Wear protective goggles or glasses to protect eyes. Wear rubber gloves to protect hands. Use care to avoid spilling compressor burnout sludge. Ii sludge is spilled clean area thoroughly.

Dry cleaning solvent (Fed. Spec. P-D- 80) is potentially dangerous to personnel and property. Do not use near open flame or excessive heat. Clean parts in a well ventilated area. Avoid inhalation of solvent fumes and prolonged exposure of skin to cleaning solvent. Wash exposed skin thoroughly.

Wear eye protection when using solvents or compressed air. Air pressure should not exceed 30 psig (2.1 kg/cm^2) except as specifically noted.

Assure the industrial process has been evaluated by the Medical Service Bioenvironmental Engineer.

Waste treatment/disposal must be approved by the Medical Service Bioenvironmental Engineer and Civil Engineer.

Solutions will be disposed of in accordance with local State Water Pollution Control Laws. Consult local Medical Services for guidance.

Do not direct compressed air against the skin. use goggles or full face shield.

Allow heaters to cool before touching. Severe burns can result from touching hot heaters.

Do not allow anyone under equipment suspended from a lifting device.

Do not allow the unit to swing while suspended from a lifting device.

Avoid injury by using adequate equipment and personnel to remove compressor from frame. The compressor weighs 62 pounds (28.086 kg).

The burning of polyurethane foam is dangerous. Toxic fumes are released when it is burned or heated. If it is burned or heated indoors, such as during a welding operation, ventilate the area thoroughly. An exhaust system like that of a paint spray booth should be used.

Air-supplied respirators, approved by the National institute for Occupational Safety and Health Agency or the United States Bureau of Mines, should be used for all welding in confined spaces and where ventilation is inadequate. Persons who have chronic or recurrent respiratory conditions, including allergies and asthma, should not work in these areas.

TECHNICAL MANUAL
No. TM 9-4120-395-14&P

HEADQUARTERS
DEPARTMENT OF THE ARMY
WASHINGTON D.C., 28 May 1993

OPERATOR'S, UNIT, DIRECT SUPPORT, AND GENERAL SUPPORT MAINTENANCE MANUAL INCLUDING REPAIR PARTS AND SPECIAL TOOLS LIST FOR AIR CONDITIONER, 24,000 BTUH COOLING, 23, 600 BTUH HEATING, WALL MOUNTED, VERTICAL, MODEL AVP24HPA-08 NSN 4120-01-279-5659

REPORTING ERRORS AND RECOMMENDING IMPROVEMENTS

You can help improve this manual. If you find any mistakes or if you know of a way to improve the procedures, please let us know. Mail your letter, DA Form 2028 (Recommended Changes to Publications and Blank Forms), or DA Form 2028-2 located in the back of this manual direct to: Commander, U.S. Army Aviation and Troop Command, ATTN: AMSAT-I-MP, 4300 Goodfellow Blvd., St. Louis, MO 63120-1798. A reply will be furnished directly to you.

DISTRIBUTION STATEMENT A: **Approved for public release; distribution is unlimited.**

TABLE OF CONTENTS

- This manual supersedes TM 5-4120-395-14&P, 15 March 1990, including all changes.

TABLE OF CONTENTS - Continued

LIST OF ILLUSTRATIONS

LIST OF ILLUSTRATIONS - Continued

LIST OF TABLES

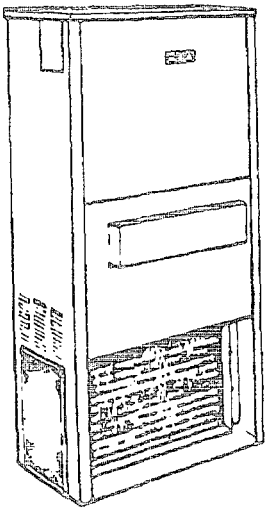

LEFT SIDE/FRONT VIEW

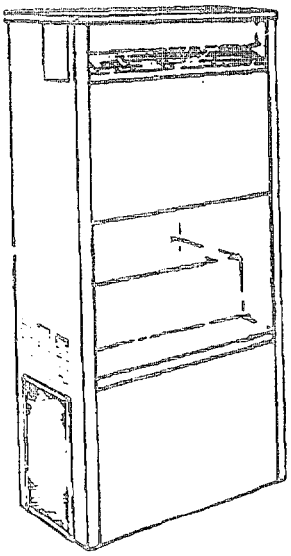

RIGHT SIDE/REAR VIEW

Figure 1-1. Air Conditioner, 24,00 BTUH Cooling, 23,600 BTUH Heating, Wall Mounted, Vertical Model AVP24HPA-08

CHAPTER 1

INTRODUCTION

Section I. GENERAL INFORMATION

1-1. SCOPE.

a. Type of Manual. This manual is an Operator's, Unit, Direct Support, and (General Support maintenance manual including Repair Parts and Special Tools List.

b. Model Number and Equipment Name. The official equipment name is Air Conditioner, 24, 000 BTUH Cooling, 23, 600 BTUH Heating, Wall Mounted, Vertical, Model AVP24HPA-08. Hereafter it will be referred to as the air conditioner.

1-2. MAINTENANCE FORMS AND RECORDS. Department of the Army forms and procedures used for equipment maintenance will be those prescribed by DA PAM 738-750, The Army Maintenance Management System (TAMMS).

1-3. REPORTING EQUIPMENT IMPROVEMENT RECOMMENDATIONS (EIR's). Ii your air conditioner needs improvement, let us know. Send us an EIR. You the user, are the only one who can tell us what you don't like about your equipment. Let us know why you don't like the design or performance. Put it on an SF 368 (Quality Deficiency Report). Mall it to: Commander, U.S. Army Aviation and Troop Command, ATTN: AMSAT-I-MDO, 4300 Goodfellow Boulevard, St. Louis, Missouri 631201798. We'll send you a reply.

1-4. WARRANTY INFORMATION. The air conditioner is warranted by the Marvair Company for a period of one year from date of shipment when properly installed. Warranty starts on the date found on DA Form 2410 or DA Form 2408-16

1-5. LIST OF ABBREVIATIONS.

ac.....Alternating Current
BTUH.....British Thermal Units Per Hour
CFM..... Cubic Feet Per Minute
EIR ..... Equipment Improvement Recommendation
FLA.....Full Load Amps
HP ..... Horse Power
Hz .....Hertz
LRA.....Locked Rotor Amps
MAC.....Maintenance Allocation Chart
MEK.....Methyl Ethyl Ketone (Solvent)

1-5. LIST OF ABBREVIATIONS - Continued.

MTOE ..... Modified Table of Organization and Equipment
Ph ..... Phase
PMCS ..... Preventive Maintenance Checks and Services
RLA ..... Rated Load Amps
RPM ..... Revolutions Per Minute
TMDE ..... Test, Measurement and Diagnostic Equipment
Vac ..... Volts ac

1-6. DESTRUCTION OF ARMY MATERIEL TO PREVENT ENEMY USE. Command decisions, according to tactical situation, will determine when destruction of the air conditioner will be accomplished. A destruction plan will be prepared by the user organization unless one has been prepared by higher authority. For general destruction procedures for this equipment refer to TM 750--244-3, Procedures for Destruction of Equipment to Prevent Enemy Use.

1-7. PREPARATION FOR STORAGE OR SHIPMENT. Contact unit maintenance for air conditioner preparation for storage or shipment. See para 4.-51 for instructions.

1-8. QUALITY ASSURANCE/QUALITY CONTROL (OA/QC). See appropriate QA/QC technical manual for further information.

Section II. EQUIPMENT DESCRIPTION AND DATA

1-9. EQUIPMENT CHARACTERISTICS, CAPABILITIES, AND FEATURES. The air conditioner is designed to cool, heat, and circulate air in enclosures. It provides a maximum of 24, 000 BTUH of cooling and 23, 600 BTUH of heating.

1-10. LOCATION AND DESCRIPTION OF MAJOR COMPONENTS. See Figure 1--2.

a. Top Duct Assembly (1). Outlet for conditioned air.
b. Bottom Duct Assembly (2). Return air opening.
c. Indoor Coil (3) Serves as a heat exchanger by transferring heat to/from the air passing over the tubing and fins to the refrigerant passing through the tubing.
d. Heater Element (4). Heats air.
e. Drain Pan Assembly (5). The drain pan is located directly below the Indoor coil (3) and is built into the casing. It collects condensate that drips off the indoor c(oil during cooling operations. Condensate water then flows through tubing to the drain , rap.
f. Filter (6). Filters air passing through the system.
g. Front Door Assembly-Top (7). Provides access to drain pan assembly(5) and indoor fans assembly (15).

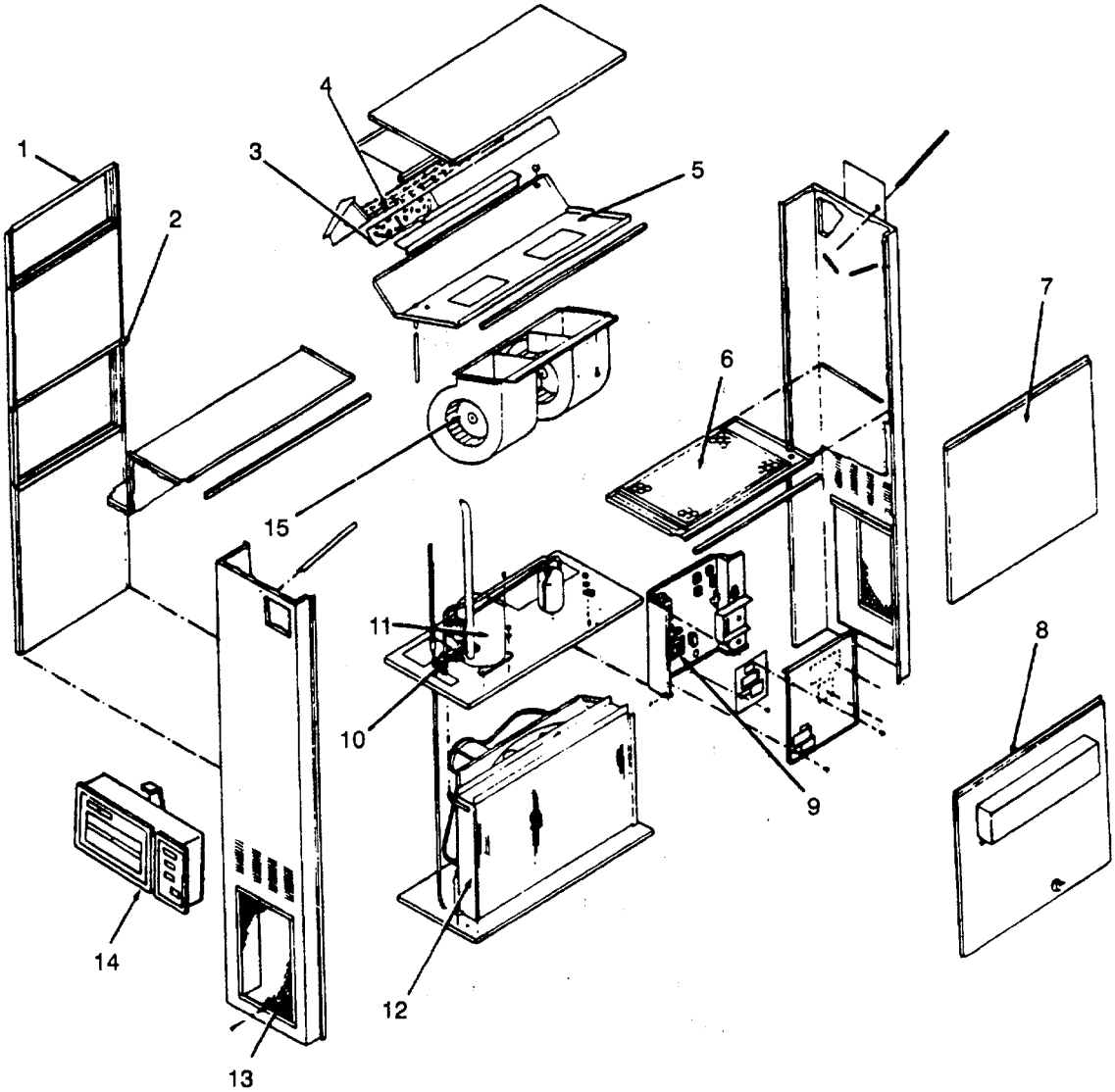

1. TOP DUCT ASSEMBLY
2. BOTTOM DUCT ASSEMBLY
3. INDOOR COIL
4. HEATER ELEMENTS
5. DRAIN PAN ASSEMBLY
6. FILTER
7. FRONT DOOR ASSEMBLY - TOP
8. FRONT DOOR ASSEMBLY - BOTTOM
9. CONTROL BOX ASSEMBLY
10. REVERSING VALVE ASSEMBLY
11. COMPRESSOR
12. VENTURI, OUTDOOR COIL, FAN AND MOTOR ASSEMBLY
13. SIDE DOOR ASSEMBLY
14. THERMOSTAT
15. (BLOWER MOTOR) (INDOOR FANS) ASSEMBLY

Figure 1-2. Component Location

1-10. LOCATION AND DESCRIPTION OF MAJOR COMPONENTS-Continued.

h. Front Door Assembly-Bottom (8). Provides access to air filter (6), control box, (9), and compressor (11).
i. Control Box Assembly (9). Contains electrical components.
j. Reversing Valve Assembly (10). Routes refrigerant for heating and cooling operations.
k. Compressor (11). Pumps refrigerant through the system.
l. Venturi, Outdoor Coil, Fan And Motor Assembly (12). Draws air through the outdoor coil and discharges the heated air back to the outside. The outdoor coil serves as a heat exchanger by transferring heat to/from the refrigerant passing through the tubing to the air passing over the tubing.
m. Side Door Assembly (13). Provides access to venturi, outdoor coil, motor assembly (12).
n. Thermostat (14). A low voltage (30 Vac) control of 2 stage heat, 1 stage cool, and manual changeover in the air conditioner system. The subbase system switch provides settings for OFF (cooling/heating off), and HEAT (heating only), and COOL (cooling only). The fan switch provides settings for AUTO (fan is coupled to the system in heating and cooling) and ON (the fan stays on until turned off by operator). The normal switch provides settings for NORM. (compressor and heater element operate normally) and EMERG. HEAT (heater element and fans operate; compressor is inoperative).
o. (Blower Motor) (Indoor Fans) Assembly (15). Draws air into the evaporator section and exhausts It through the indoor coil (3) and heater element (4) into the enclosure.

1-11. EQUIPMENT DATA.

Rating Summary:

COOLING BTUH	HEATING HI TEMP BTUH	HEATING LO TEMP BTUH	RATED CFM
24, 000	23, 600	13, 800	800

Performance:

Outdoor Ambient Degrees		Heating	Cooling
Fahrenheit	Centigrade	BTUH	BTUH
10	- 12.2	11,200	-
20	- 6.7	14,000	-
30	- 1.1	16,300	-
40	4.4	19, 800	-
50	10.0	24,200	-
60	15.6	25,600	-
70	21.1	27,300	26,900
75	23.9	-	26,200
80	26.7	-	25,700
85	29.4	-	25,000
90	32.2	-	24,400
95	35.0	-	24,000
100	37.8	-	22,900
105	40.5	-	21,700
110	43.0	-	20,600
115	46.1	-	19,400

Physical Electrical Data:

NOTE
See para 1--5 for explanation of' abbreviations.

COMPRESSOR				
VOLTS	HZ/Ph	RLA	LRA	
208/230	60/1	13.1	61.0	
OUTDOOR FAN MOTOR				
VOLTS	-i./Ph	RPM	FLA	HP
208/230	6)/1	1075	1.5	1/5
INDOOR FAN MOTOR				
VOLTS	HZ/Ph	RPM	FLA	HP
208/230	60/1	1075	1.4	1/5

Unit Dimensions/Weight:

Width ..... 32.5 inches (82.55 centimeters)
Depth ..... 14.5 inches (36.83 centimeters)
Height ..... 9.5 inches (176 53 centimeters)
Weight ..... 330 pounds (149.5 kilograms)

Refrigerant:

Type.....R-22
Charge ..... 4.63 pounds (2.10 kilograms)

Compressor Weight: 62 pounds (28.08S kilograms)

Filter Size: 14 x 25 inches (35.6 x , 63.5 centimeters)

Center of Gravity: Unit center of gravity is located 28 inches (71 .1 2 centimeters) from the bottom, 11 inches (27.94 centimeters) in from the left front, and 5 inches (12.7 centimeters) towards the rear.

1-12 SAFETY-CARE, and HANDLING. Read and understand all instructions relating to the specific function you are to perform before starting task.

a. Carefully read and understand all notes, cautions, and warnings contained in this manual that pertain to the task you are to perform.
b. Carefully read and understand all WARNING and CAUTION plates located on the air conditioner.
c. Never operate the air conditioner with a screen or pane! removed unless the instructions specifically instruct you to do so. Then do so only with extreme caution.
d. Carefully plan all maintenance tasks and never take unnecessary risks.

Section III. PRINCIPLES OF OPERATION

1-13. COOLING CYCLE. See Figure 1-3.

a. When the thermostat lever Is set to about 10 degrees Fahrenheit (5.6 degrees Centigrade) below room temperature and system switch is set to COOL, the compressor starts up. If the fan switch is set to AUTO, fans start up too. Fans run continuously when fan switch is set to ON.

b. To prevent compressor overload and damage during startup, a check valve (opens prior to start of cooling cycle to equalize pressure on both sides of the compressor.

c. The compressor takes low pressure refrigerant gas and compresses it to a high temperature, high pressure gas. This gas flows through the metal tubing to the outdoor coil.

d. The fan draws outside ambient air over and through the coil. The high temperature, high pressure gas from the compressor is cooled by the flow of air and is condensed into a high pressure liquid.

e. The liquid refrigerant passes through a capillary tube, which reduces pressure. The low pressure liquid then enters the indoor coil. The reduction In pressure and the warmer air being forced across the tubes of the coil cause the refrigerant to boil and change to a gas (vapor). The blowers circulate the warm air from the conditioned space over and through the coil. Refrigerant absorbs heat when it changes from a liquid to a gas. As the air from the conditioned space comes in contact with the indoor coil, the air is cooled.

f. The refrigerant gas is then drawn back to the compressor through the accumulator and the cycle is repeated.

1-14. HEATING CYCLE. See Figure 1-4.

a. The heat cycle operates the same as the cooling cycle except the refrigerant flow and heat transfer is reversed. When the normal switch is set to NORM; the system switch on the thermostat is set for HEAT, and the thermostat lever is set at about 1 0 degrees Fahrenheit (5.6 degrees Centigrade) above room temperature, the compressor and heater element start up. If the fan switch is set to AUTO, fans start up, too; fans run continuously when fan switch is set to ON. Air is heated as it passes through the indoor coil and further heated as it passes through the heater element.

NOTE

Only one stage of the heater element will operate if the temperature is within 1 to 21/2 degrees Fahrenheit (0.55 to 1.39 degrees Centigrade) of the thermostat setting.

b. When the normal switch is set to EM ERG. HEAT (Emergency Heat), the compressor is bypassed and only the heater element provides heat

1-15. FAN CYCLE. When the fan switch is turned to ON, the fan should run continuously. When the fan switch is in the AUTO position, fan operation is controlled by the heating or cooling system.

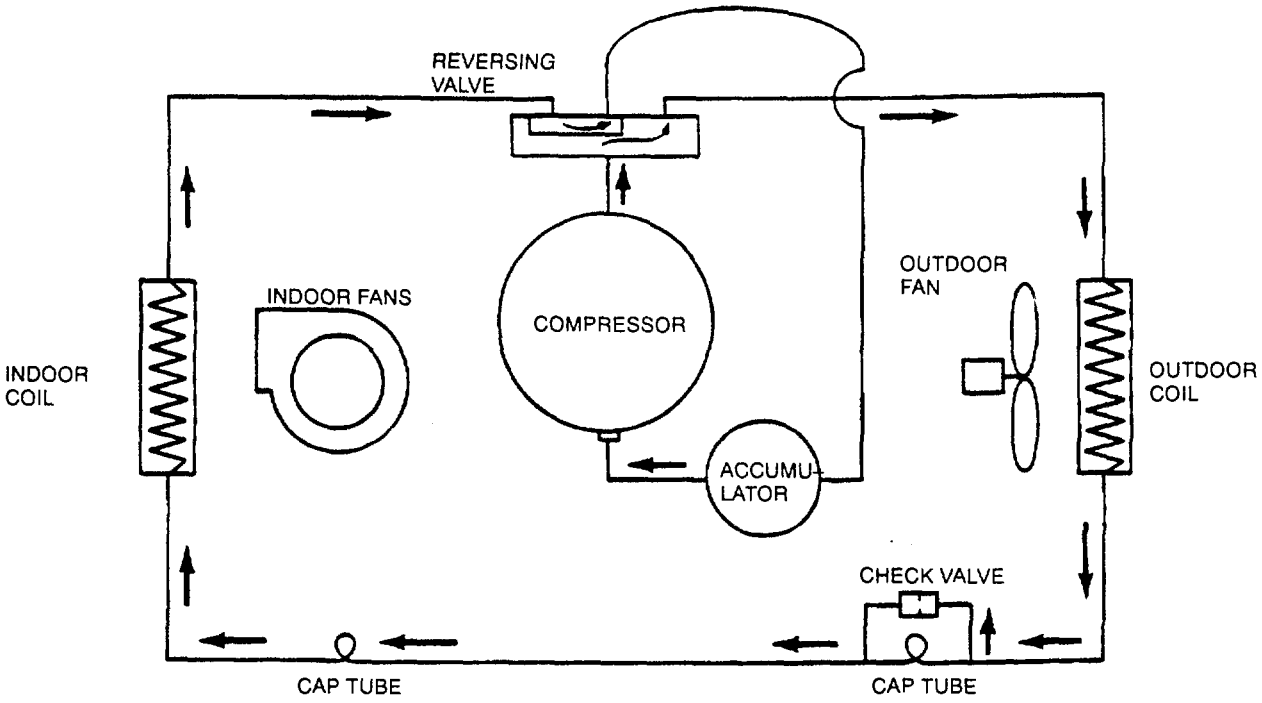

Figure 1-3. Cooling Cycle

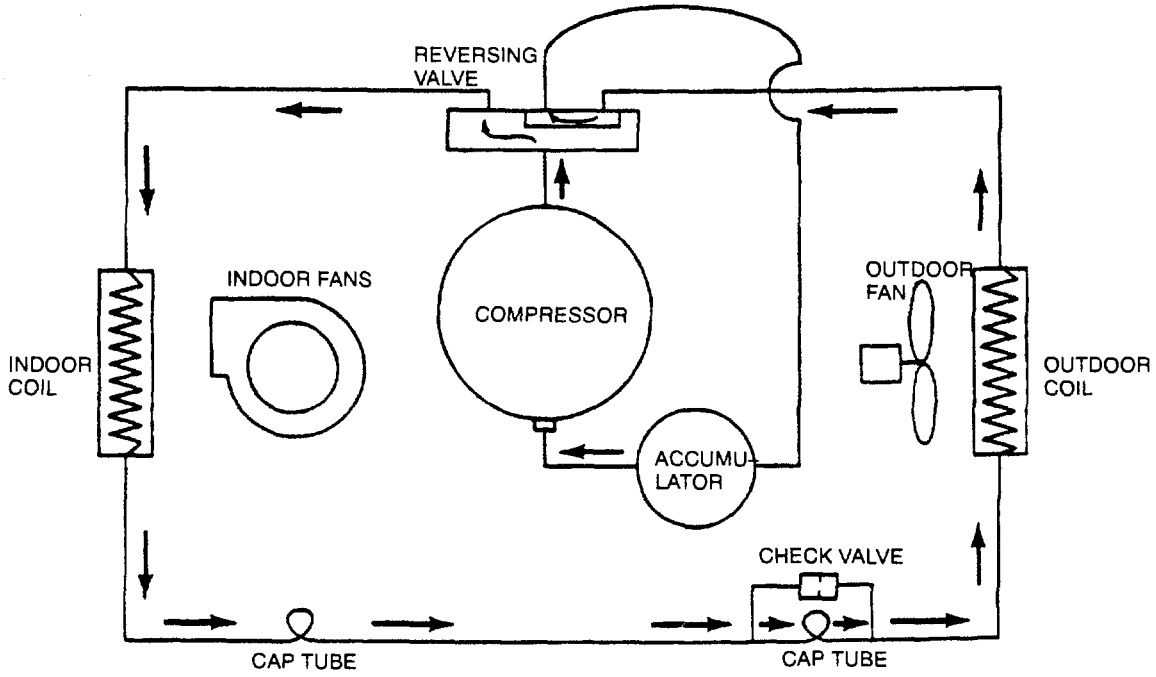

Figure 1-4. Heating Cycle

CHAPTER 2

OPERATING INSTRUCTIONS

Section I. DESCRIPTION AND USE OF OPERATOR'S CONTROLS AND INDICATORS

2-1. GENERAL. The air conditioner is designed for a variety of installations and for operation under a wide variety of climatic conditions. It is also designed for continuous or intermittent operation as well as a self contained unit. Operators must be aware of any peculiarities or operational limitations for the specific installation. See the appropriate manual for instructions peculiar to your specific installation.

2-2. OPERATOR'S CONTROLS. The operator's controls consist of a wall mounted thermostat (Figure 2-1) with a lever and three switches.

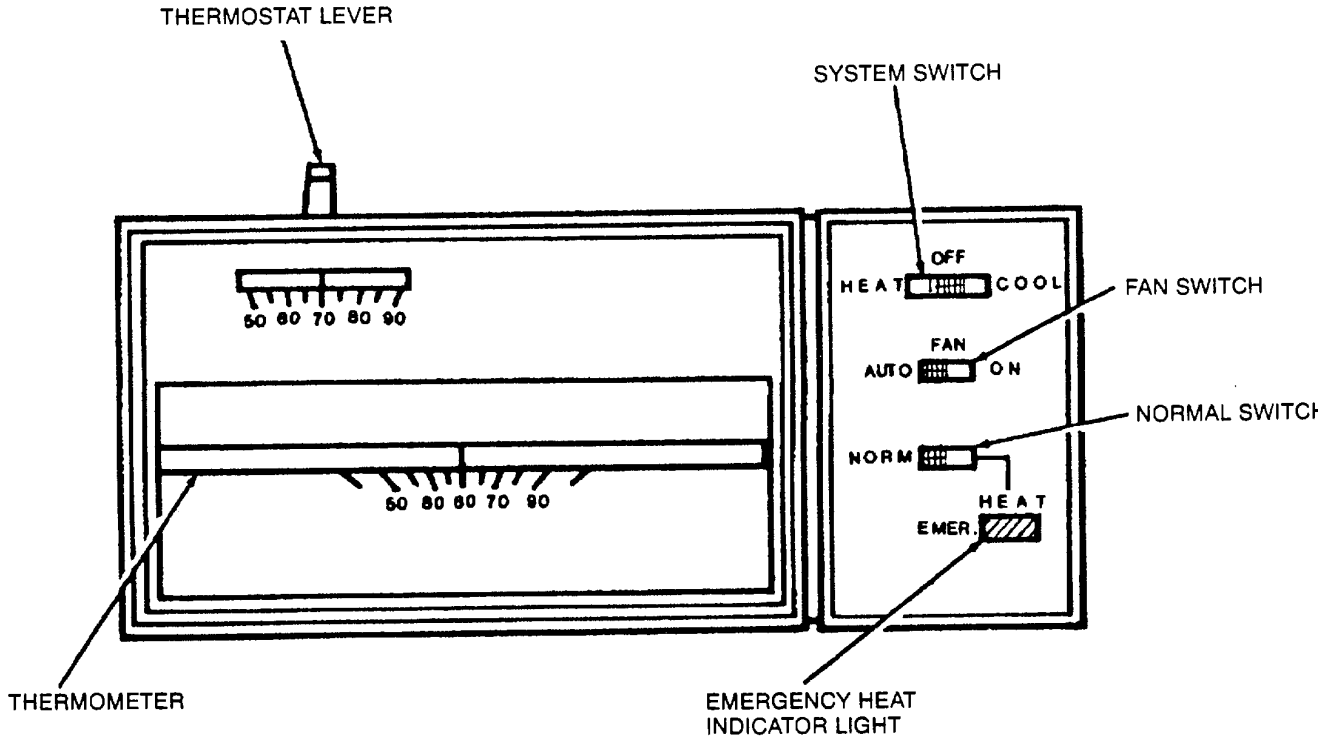

Figure 2-1. Thermostat

2-2. OPERATOR'S CONTROLS - Continued.

a. System switch can be set to:
   (1) HEAT - System will only heat.
   (2) OFF - Heating/cooling is turned off.
   (3) COOL - System will only cool.

b. Fan switch can be set to:
   (1) AUTO - Fan comes on when system is cooling or heating.
   (2) ON - Fan is on all of the time.

c. Normal switch can be set to:
   (1) NORM - Compressor and heater element operate normally.
   (2) EMERG. HEAT - Compressor is bypassed, allowing only electrical heat. Indicator light illuminates.

d. Thermostat lever: set to desired temperatures.

2-3. INDICATORS.

a. EMERG. HEAT Light. An indicator light on the thermostat cover illuminates when the thermostat normal switch is set to EMERG. HEAT. See Figure 2--1.

b. Thermometer. A thermometer on the front of the thermostat cover provides an indication of the current temperature of the surrounding air. See Figure 2-1.

Section II. OPERATOR PREVENTIVE MAINTENANCE CHECKS AND SERVICES (PMCS)

2-4. INTRODUCTION.

a. General. Your Preventive Maintenance Checks and Services table lists the inspections and care of your equipment required to keep it in good operating condition.
   (1) Before you operate. Always keep in mind the CAUTIONS and WARNINGS. Perform your before (B) PMCS.
   (2) While you operate. Always keep in mind the CAUTIONS and WARNINGS. Perform your during (D) PMCS.
   (3) After you operate. Be sure to perform your after (A) PMCS.
   (4) If your equipment falls to operate. if your equipment does not perform as required, refer to Chapter 3 under Troubleshooting for possible problems. Report any malfunctions or failures on the proper DA Form 2404, or refer to DA PAM 738-750.

b. PMCS Columnar Entries.
   (1) Item number column. This is the order in which you perform checks and services on the air conditioner. The entry in this column will also be used as a source of item numbers for the "TM Item Number" column on DA Form 2404, Equipment Inspection and Maintenance Worksheet, in recording results of PMCS.
   (2) Interval columns. The interval column of your PMCS table tells you when to do a certain check or service.
   (3) Item to Check/Service. Identification of item to be inspected.
   (4) Procedures column. The procedures column of your PMCS table tells you how to do the required checks and services. Carefully follow these instructions. If you do not have the tools, or if the procedure tells you to, have the next higher level of maintenance do the work.

(5) Not fully mission capable if column. Entries in this column will be keyed specifically to checks listed in the “procedures" column for the purpose of identifying, for the check, the criteria that will cause the equipment to be classified as not ready/available because of inability to perform its primary Combat Mission An entry in this column will:
- Identify conditions that make the equipment not ready/available for readiness reporting.
- Deny use of the equipment until corrective maintenance has been performed.

c. - Special Instructions.

(1) Perform weekly as well as before operations PMCS if:
- You are the assigned operator and have not operated the item since the last weekly.
- You are operating the item for the first lime.

(2) Leakage definitions for operator/crew PMCS shall be classified as follows:
- Class I - Seepage of fluid (as indicated by wetness or discoloration) not great enough to form drops.
- Class II - Leakage of fluid great enough to form drops but not enough to cause drops to drip from item being checked/inspected.
- Class III - Leakage of fluid great enough to form drops that fall from the item being checked/ inspected.

CAUTION

If any leaks are detected, DO NOT operate the air conditioner. Doing so may damage it. Contact your supervisor.

NOTE

If the equipment must be kept in continuous operation, check and service only those items that can be checked and serviced without disturbing operation. Make the complete checks and services when the equipment can be shutdown.

Table 2-1. Operator Preventive Maintenance Checks and Services

Item No.	Interval	Location Item to Check/ Service	Procedure	Not Fully Mission Capable If:
1	Before	Front and Side Door Assemblies and Information Decals	Check that they are in place. Check panels for cracks, dents, and missing hardware. Check information decals for illegibility.	Front or side door assembly is missing. There is damage that would cause operating hazard.
2	Before	Air Inlets and Outlets	Check fresh air damper and grilles for obstructions, damage, and missing hardware.	
3	Before	Casing and Base	Check for loose, cracked, or broken parts.	Casing and base damage could cause operating hazard.
4	During	Condensate Drain System	Check that condensate drain is clear by ensuring water drips from clear drain tube on the bottom of the air conditioner.	
5	Monthly	Air Filter	Check that filter is clean. Replace if dirty.	

Section III. OPERATION UNDER USUAL CONDITIONS

2-5. ASSEMBLY AND PREPARATION FOR USE. Unit Maintenance should be employed for original unpacking, installation, and preparation for use.

2-6. INITIAL ADJUSTMENTS AND CHECKS.

a. Inspect front and side door assemblies and information decals for loose mounting, obstructions, or shipping damage. Report any deficiencies to unit maintenance.

b. Perform the operator preventive maintenance checks and services listed in Table 2-1.

2-7. OPERATING PROCEDURE.

a. Daily Checks.

(1) Check to see that the air conditioner is connected to a 208/230 volt, 1 phase, 60 hertz power source.

(2) Check that all air inlet and outlet openings are clear.

(3) Make sure the drain is either open or piped to a satisfactory location with a proper drain system.

(4) Make sure the thermostat normal switch is set to NORM.

b. General information. Table 2-2 lists the recommended control settings for the desired mode of operation. To increase comfort and save energy observe the following guidelines:

NOTE

The fresh air damper should normally be slightly open. This will create a slight over-pressure, provide replacement oxygen, and reduce room odors. The damper should be closed during extreme weather conditions and during periods when fast warm up or cool down is necessary. If adjustment is required contact unit maintenance.

(1) Limit traffic through doors as much as possible.

(2) Keep doors and windows tightly closed.

(3) Do not adjust controls unnecessarily. Properly set the controls and the unit will automatically control the temperature The wall mounted thermostat operates like a conventional room thermostat and has a control range of 50 to 90 degrees Fahrenheit (10 to 32 degrees Centigrade).

(4) Adjust shades, blinds, etc., when heating, to admit sunlight during the day. Close them at night.

Table 2-2. Operator Control Settings

Mode	System Switch	Fan Switch	Temperature Setting Lever
Fan	OFF	ON	Nonoperational
Heating	HEAT	AUTO	Desired temperature
Cooling	COOL	AUTO	Desired temperature

NOTE

Whenever the compressor shuts down, fan should continue to run about 90 seconds.

2-8. OPERATION IN FAN MODE. Turn the thermostat system switch to OFF and the fan switch ON. See Figure 2-1.

NOTE

When using fresh air for ventilation, a window, door, or vent should be opened. If the room or enclosure is tightly closed, an over-pressure will build up and decrease the volume of fresh air drawn in.

2-9. OPERATION IN HEAT. In the HEAT mode the compressor and heater element are activated.

a. Turn system switch to HEAT and fan switch to AUTO. See Figure 2-1.
b. Turn thermostat lever to the desired temperature.
c. When room or enclosure temperature reaches the desired level, cooling will stop.

2-10. OPERATION IN COOL MODE. In the COOL mode only the compressor (not the heater element) is operational.

a. Turn the system to COOL and the fan switch to AUTO. See Figure 2-1.
b. Set the thermostat lever to the desired temperature.
c. When room or enclosure temperature reaches the desired level, cooling will stop.

2-11. SHUTDOWN (OFF).

NOTE

Due to warm up period of compressor heaters, DO NOT- disconnect or turn off power to the air conditioner during periods of normal shutdown. Power should be disconnected only when unit is to be serviced, during emergency conditions, or during periods of extended shutdown.

Turn thermostat system and fan switches to OFF. See Figure 2-1.

2-12. PREPARATION FOR MOVEMENT. When the air conditioner is to be moved, the services of unit maintenance shall be employed for the necessary preparations.

2-13. INFORMATION DECAL. A number or instruction and identification decals are provided with the air conditioner. See Figure 2-2 and Figure 2-3. A terminal board has been installed where Figure 2-3 shows optional circuit breakers.

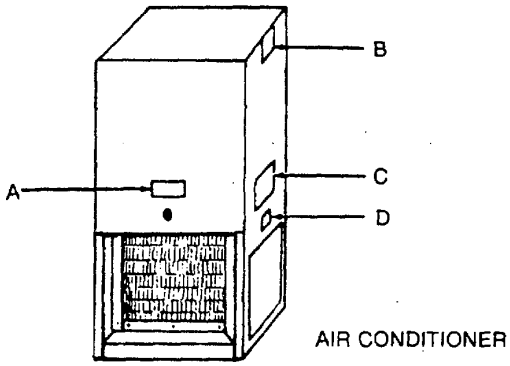

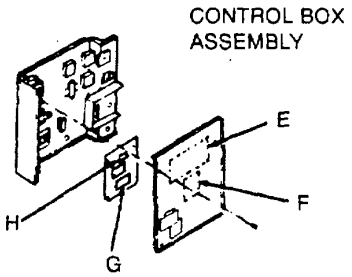

NOTE: SCHEMATIC DECAL E SHOWN IN FIGURE 2–3.

A

- NOTICE -

ACCESS TO DISCONNECT

LIFT BAIL - TURN & PULL

91543

B

CAUTION

ELECTRIC SHOCK HAZARD

DISCONNECT HEATER FROM SUPPLY CIRCUIT BEFORE SERVICING

REPLACEMENT FUSE LINK ASSEMBLY USE MICROTEMP # 4K4208AH ONLY

C

MODEL _____ SERIAL _____

-SUITABLE FOR OUTDOOR USE-

SUITABLE FOR USE ON SUPPLY CIRCUITS W TH 120 VOLTS TO GROUND-

VOLTAGE RANGE _____ TO _____ VAC _____ HZ _____ PH

CIRCU T #1 COMPRESSOR-	OUTDOOR MOTOR	INDOOR MOTOR	HEAT STRIP
VAC _____	VAC _____	_____	VAC _____
RLA _____	FLA _____	_____	KW _____
LRA _____	HP _____	_____	AMP _____
HZ _____	HZ _____	_____	HZ. _____
PH. _____	PH. _____	_____	PH. _____

CIRCUIT	# 1	# 2	# 3
MINIMUM CIRCUIT AMPACITY			
MAX FUSE/HACR TYPE CKT BREAKER			

FACTORY CHARGED WITH _____ OZS R-22

FACTORY TEST PRESSURE _____ PSIG

CLEARANCE FROM UNIT CASING TO COMBUSTIBLE MATERIAL = _____ INCH.

CLEARANCE FROM OUTLET DUCT TO COMBUSTIBLE MATERIAL = _____ INCH.

OUTLET DUCT CLEARANCE APPLIES ONLY TO THE FIRST _____ FOOT.

P/N 81063 MARVAIR CO. P O BOX 400 CORDELE GEORGIA 31015

D

CIRCUIT # 2		CIRCUIT # 3	
HEAT STRIP DATA	VAC _____		VAC _____
	KW _____		KW. _____
	AMP _____		AMP _____
	HZ. _____		HZ. _____
	PH. _____		PH. _____

MARVAIR CO
P.O. BOX 400
CORDELE, GEORGIA 31015

F

THERMOSTAT/SUBBASE

MARVAIR PART # HPM-5 MANUAL CHANGE OVER

MARVAIR PART # HPM-5A AUTOMATIC CHANGE OVER

X O Y G A H W2 E R

— FIELD SUPPLIED — SEVEN (7) CONDUCTOR, COLOR CODED, 18 GAUGE THERMOSTAT CABLE

R Y A O G W2 C

HEAT PUMP LOW VOLTAGE SECTION

Marvair Co. Cordele, Ga. DATE 1-9-85

Low Voltage/ Field Connection (Heat Pumps) DWG NO 94809

G

L3	L4	L1	L2
CIRCUIT # 2		CIRCUIT # 1	

CAUTION

ELECTRIC SHOCK HAZARD

LIVE ELECTRICAL PARTS UNDER THIS SHIELD

H

USE COPPER CONDUCTORS ONLY

Figure 2-2. Decals

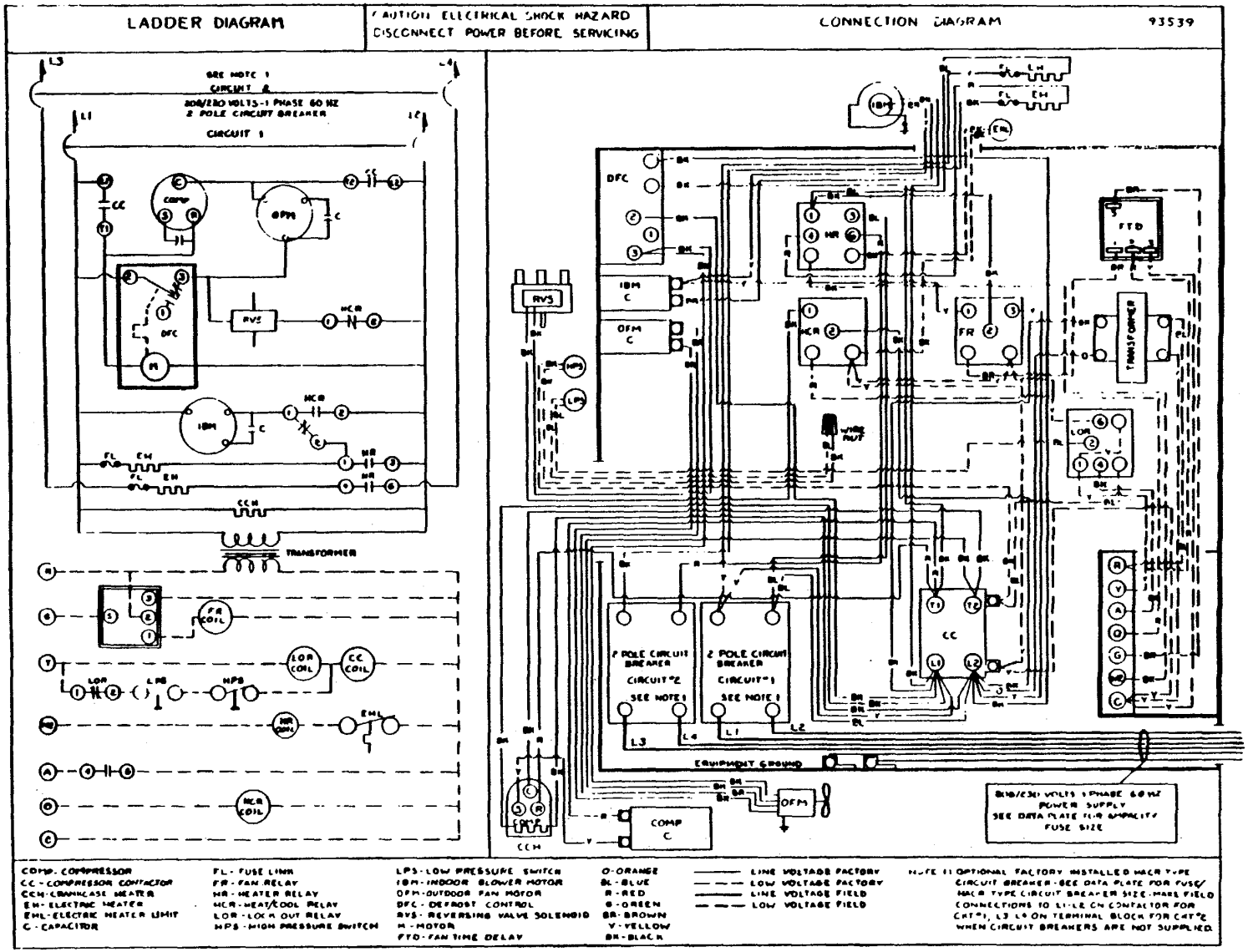

Figure 2-3. Schematic

Section IV. OPERATION UNDER UNUSUAL CONDITIONS

2-14. GENERAL. The air conditioner is designed to operate normally within a wide range of climatic conditions. However, some extreme conditions require special operating and servicing procedures to prevent undue loading and excessive wear on the equipment.

2-15. OPERATION IN EXTREME HEAT. The air conditioner is designed to operate in temperatures up to 120 degrees Fahrenheit (49 degrees Centigrade). Extra care should be taken to minimize the cooling load when operating in high temperatures. Some of the steps that may be taken are:

a. Check all openings in the shelter or enclosure, especially doors and windows, to be sure they are tightly closed. Limit in and out traffic, if possible.
b. When possible, use shades or awnings to shut out direct rays of the sun.
c. Limit the use of electric lights and other heat producing equipment.

NOTE

Weather stripping, the installation of storm doors and windows (if appropriate), and insulation of surfaces exposed to the outside are recommended when operating in higher temperatures for extended periods.

2-16. OPERATION IN EXTREME COLD. Extra care should be taken to minimize the heating load when operating in lower temperatures. Some of the steps that may be taken are:

CAUTION

Do not disturb electrical wiring that has been exposed to extremely low temperatures. Both the wire and insulation become brittle when cold and are easily broken.

a. Check all openings in the enclosure, especially doors and windows, to be sure they are tightly closed. Limit in and out traffic, if possible.
b. Open shades and awnings to permit entry of direct rays of the sun, if appropriate.

NOTE

Weather stripping, the installation of storm doors and windows (if appropriate), and insulation of surfaces exposed to the outside are recommended when operating in lower temperatures for extended periods.

2-17. OPERATION IN DUSTY OR SANDY CONDITIONS. Dusty and sandy conditions can seriously reduce the efficiency of the air conditioner by clogging the air filter and thereby causing a restriction of the volume of airflow. Accumulation of dust or sand in the condenser coil and/or in the compressor compartment may cause overheating of the refrigeration system. Dust or sand may also clog the drain pan and water drain line. Some of the steps that may be taken are:

a. Frequent cleaning of filter and cleaning all other areas of dust and sand accumulation. In extreme conditions, daily replacement of the filter may be necessary.
b. Contact unit maintenance to adjust the fresh air damper to limit the amount of dusty or sandy outside air entering the system.

2-18. OPERATION IN UNUSUALLY WET CONDITIONS. The air conditioner is designed for normal exposure to the elements, so it is reasonably waterproof. However, in an extremely wet climate, more frequent inspection and cleaning of the drain pan and drain line may be required to insure proper drainage and prevent accumulation of water inside the cabinet.

2-19. OPERATION IN SALT AIR OR SEA SPRAY. Salt air or sea spray may cause many of the same clogging problems encountered when operating in a dusty or sandy environment. In addition, salt presents serious corrosion problems and requires frequent cleaning of the air conditioner. All exposed surfaces should be thoroughly spray rinsed or sponged with fresh water to remove salt.

2-20. OPERATION UNDER EMERGENCY CONDITIONS.

a. During periods when full electrical power is in critically short supply, if the air conditioner cannot be turned off completely, it should be operated in FAN mode only.

b. In the event of compressor failure, electrical heat only can still be produced until the failure can be corrected by setting the normal switch to EMERG. HEAT. See para 2-2.

CHAPTER 3

OPERATOR MAINTENANCE

Section I. LUBRICATION INSTRUCTIONS

3-1. GENERAL. This unit and Its major components are designed so that no lubrication Is required during their serviceable lifetimes. The refrigerant compressor and its drive motor are hermetically sealed; sealed bearings are incorporated in the drive motor, and the compressor crankcase contains a lifetime charge of oil. Sealed bearings are also incorporated in the fan motors.

Section II. TROUBLESHOOTING PROCEDURES

3-2. USE OF TABLE. Table 3-1 contains operator troubleshooting information designed to be useful in diagnosing and correcting common malfunctions which may develop.

a. The table lists the common malfunctions which you may find during the operation or maintenance of this unit and Its components. You should perform the tests/inspections and corrective actions in the order listed.

b. This manual cannot list all malfunctions that may occur, nor all tests or inspections and corrective actions. If a malfunction is not listed or is not corrected by listed corrective actions, notify your supervisor

3-3. TROUBLESHOOTING. (Refer to Table 3-1.)

Table 3-1. Operator Troubleshooting

MALFUNCTION
TEST OR INSPECTION
CORRECTIVE ACTION

1. UNIT DOES NOT START IN ANY MODE.
Check if power to the unit has been disconnected.
Connect power.

2. UNIT STARTS BUT DOES NOT COOL.
Step 1. Check that thermostat is set at proper temperature. See Figure 2-1.
Set thermostat to proper temperature.
Step 2. Check system switch setting. See Figure 2-1.
Set system switch to COOL.
Step 3. If system does not cool, contact unit maintenance.

3-3. TROUBLESHOOTING - Continued.

Table 3-1. Operator Troubleshooting - Continued

MALFUNCTION
TEST OR INSPECTION
CORRECTIVE ACTION

3. REDUCED COOLING CAPACITY.

Step 1. Check that all doors, windows, and other openings In the enclosure are tightly closed.
Tightly close all openings.

Step 2. Check setting of thermostat. See Figure 2-1.
Reset thermostat to desired temperature.

Step 3. Check system switch setting. See Figure 2-1.
Set system switch to COOL.

Step 4. Check that the indoor louvers in the conditioned air inlet and outlet grilles are open and not blocked.
Open or clear louvers.

Step 5. Check that outside air inlet and outlets are riot obstructed.
Remove obstructions.

Step 6. Check(that excessive hot air is not being introduced through the fresh air damper.
Contact unit maintenance to adjust the damper.

4. REDUCED HEATING CAPACITY

Step-1. Check that all doors, window, and other openings in the enclosure are tightly closed.
Tightly close all openings.

Step 2. Check setting of thermostat. See Figure 2-1.
Reset thermostat to desired temperature.

Step 3. Check system switch setting. See Figure 2-1.
Ensure system switch is set to HEAT.

Step 4. Check that the louvers in the conditioned air inlet and outlet grilles are open and not blocked.
Open or clear louvers.

Step 5 Check to be sure that excessively cold air Is not being introduced through the fresh air damper.
Contact unit maintenance to adjust the damper.

CHAPTER 4

UNIT MAINTENANCE

Section I. REPAIR PARTS, SPECIAL TOOLS, AND SUPPORT EQUIPMENT

4-1. GENERAL.

a. Common Tools and Equipment. For authorized common tools and equipment, refer to the Modified Table of Organization and Equipment (MTOE) applicable to your unit.

b. Special Tools and Support Equipment. No special tools are required for maintenance of the equipment. Support equipment includes standard equipment found in any unit maintenance shop. Appendix B, Section Ill contains a list of the tools.

c. Repair Parts. Repair parts listed and illustrated in the Repair Parts and Special Tools List (RPSTL) in Appendix C of this manual cover unit, direct support, and general support maintenance.

Section II. SERVICE UPON RECEIPT'

4-2. INSTALLATION SITE PREPARATION. This unit is designed so that It is adaptable to a variety of Installation arrangements. Most typical installations are made by preparing an opening in an exterior wall of the enclosure to be conditioned and positioning the unit so that the ducting is inside the enclosure and the unit is mounted on the outside wall in a vertical position. The following are minimum requirements for all installations.

a. Flat Surface. A relatively flat surface capable of bearing unit weight and size. See Figure 4-1.

b. Air Flow. An unobstructed flow of air from outside the conditioned area to Inside the enclosure. No obstruction should be within 18 Inches (45.72 centimeters) of any opening on the unit.

4-2. INSTALLATION SITE PREPARATION - Continued.

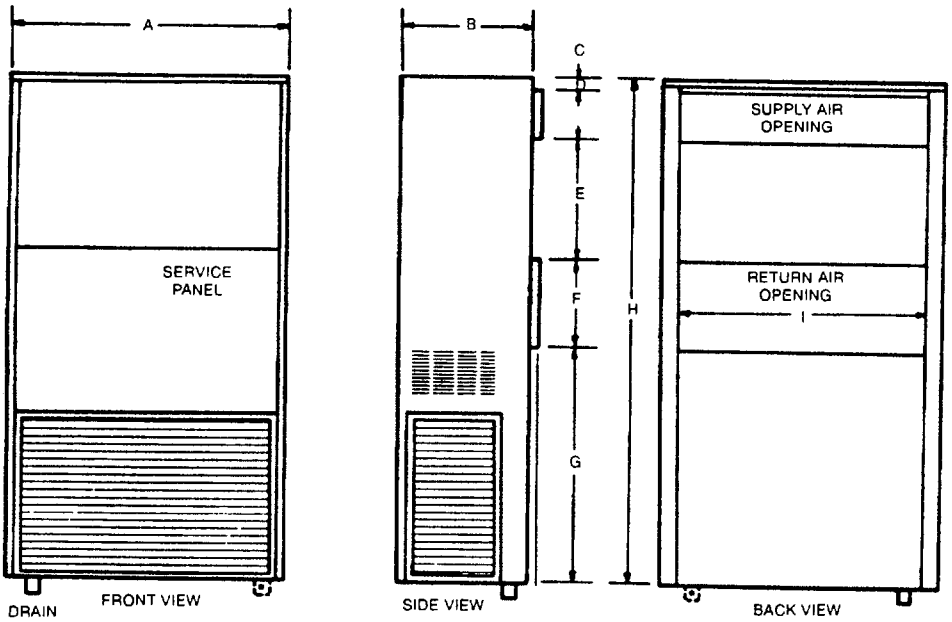

	INCHES	CENTIMETERS
A.	32 1/2	81.79
B.	14 1/2	36.83
C.	1 1/2	3.81
D.	8	20.32
E.	20 1/2	52.07
F.	12	30.48
G.	27 3/4	70.49
H.	69 1/2	176.53
I.	20	50.80

WEIGHT: 330 POUNDS (149.5 KILOGRAMS)

Figure 4-1. Installation Dimensions

c. Access. Access to the unit for routine operation and servicing and for necessary maintenance action. See Figure 4--2.

d. Power Source. A source of 208/230 volt, 1 phase. 60 Hertz input power. The power source outlet should be located as near as possible to the installed location. The power source must include a disconnect switch. However, provisions should be made to ensure that power is not disconnected during normal operation and that the disconnect is not used to turn the unit off for normal shutdown.

e. Ground. An earth ground.

f. Fumes. Check that no source of dangerous or objectionable fumes is located near the fresh air intake.

g. Terrain Features. If possible, make use of terrain features such as trees and buildings to provide a shaded location. This will minimize the cooling load on the air conditioner.

h. Avoid Problem Areas. If possible, avoid locations where the condenser and fresh air intakes will be laden with dust, dirt, soot, smoke, and/or other debris

NOTE

Applicable installation codes may limit this cabinet to Installation only in a single story residence.

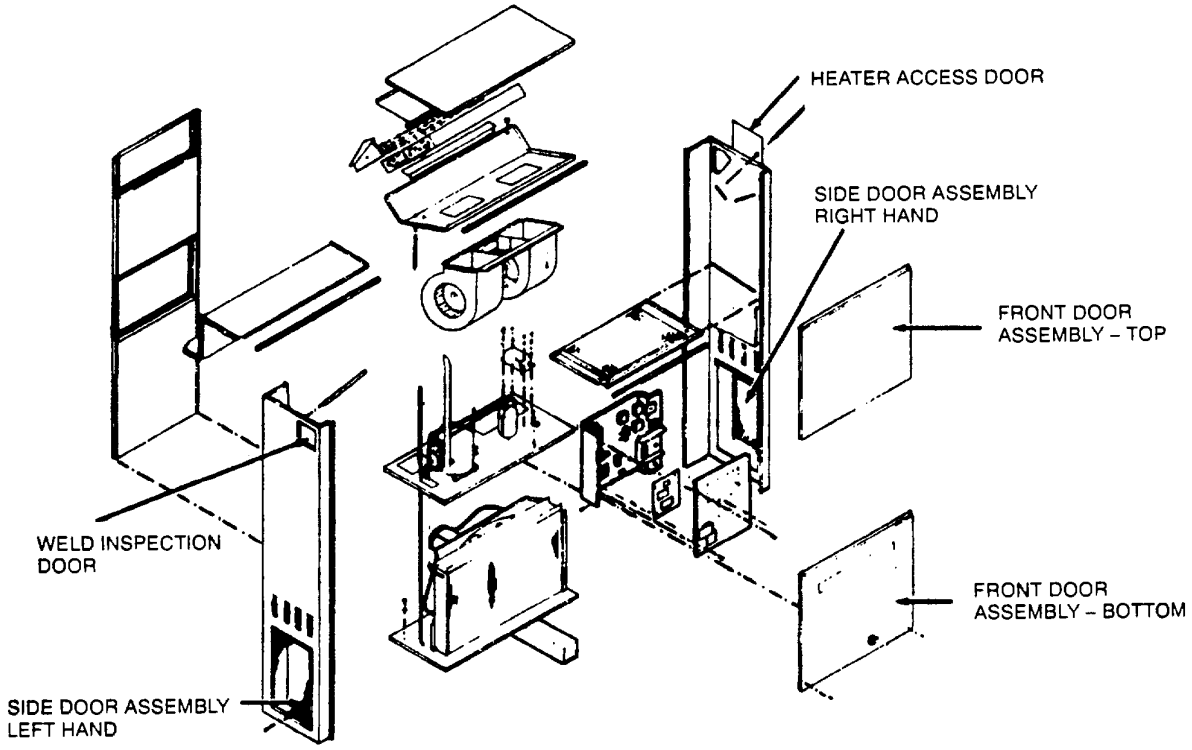

4-3. UNLOADING. This unit is shipped in a container designed for handling the unit in an upright position.

a. Remove all blocking and tie downs that may have been used to secure the container to the carrier.

WARNING

Do not allow anyone under equipment suspended from a lifting device. Do not allow the unit to swing while suspended from a lifting device. Failure to observe this warning may result in injury to personnel and damage to the equipment.

CAUTION

Use care in handling to avoid damage to the unit. If an overhead device must be used, use an appropriate sling so that the weight of the unit is supported by the base of the shipping container.

b. Use a forklift truck or other suitable material handling equipment to remove the unit from the carrier. Normally, the packaged unit should be moved into the immediate area in which it is to be installed before It is unpacked.

4-4. UNPACKING.

NOTE

The shipping container is of such a design that it may be retained for reuse if frequent relocation of the unit is anticipated.

a. Remove shipping container by lifting the container vertically and removing it From the unit. See Figure 4-3.
b. Remove cushioning and wrapping around the unit and retain if reuse is anticipated.

NOTE

It is recommended that the cabinet be left bolted to the shipping base until it is time to place the unit in its installed position. All receiving inspection actions can be conducted without removal from the shipping base.

4-5. RECEIVING INSPECTION. Perform receiving inspection of the unit as follows.

a. Inspect the unit For damage incurred during shipment. If the equipment has been damaged, report the damage on DD Form 6, Packaging Improvement Report.

NOTE

Compressor units that have been turned on their side or top may have damage to the oil system or motor mounts. Since there may be concealed damage, follow these steps:

(1) Set unit in upright position and allow to stand for 24 hours.
(2) Attempt to start compressor.
(3) If compressor will not start, makes excessive noise, or will not pump, replace unit.

b. Check the unit against the packing slip to see if shipment is complete. Report all discrepancies in accordance with the instructions of DA Pam 738-750.

c. Check to see whether the equipment has been modified.

Section III. INSTALLATION

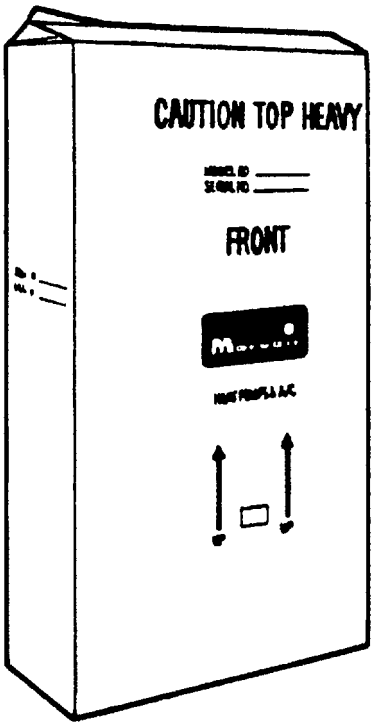

Figure 4-3. Boxed Air Conditioner

4-6. AIR CONDITIONER.

a. Preparing Unit at the Installation Site.
   (1) Remove both side door assemblies (1, Figure 4-4) from unit. See para 4-19.
   (2) Remove the four lag bolts (2) holding the base pan of the unit to the shipping base (3). Retain for reuse.
   (3) Replace side door assemblies (para 4-19).

b. Mounting the Unit.
   (1) Prepare the wall.
   (a) On concrete block walls, knock out two holes. See Figure 4-5.
   (b) On frame walls, cut away the outside siding to the depth of the sheathing and make two holes through the inside wall and the sheathing for the duct extensions. See Figure 4-6.

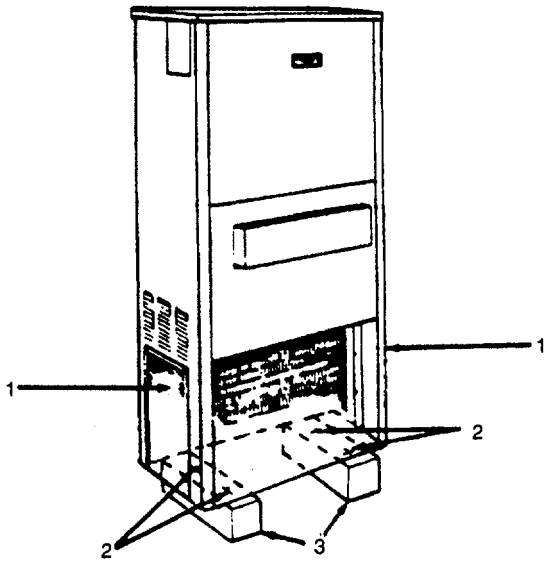

Figure 4-4. Removing Shipping Base

CAUTION

Brackets cannot be located within 15 inches (38.1 centimeters) of the top of the air conditioner. Drilling or screws inserted within this area may puncture the refrigerant coil. Use only the holes provided in the air conditioner casing. If there is need to vary the location of side brackets, several sets of holes are provided in the bracket.

NOTE

Brackets, fresh air damper, and thermostat are located In the return air duct.

(2) Drill 3/8 inch holes using the brackets as guides.
  (a) Mount on concrete walls using 3/8 inch expansion bolts. See Figure 4-5.
  (b) Mount on frame walk using 3/8 inch lag bolts. See Figure 4-6.
(3) On frame walls only.
  (a) Install metal weather stripping and seal joints between siding and sheathing.
  (b) Frame in openings for ducts between the wall studs using the same material as the studs. The bottom of frame must be strong enough to support the weight of the unit.

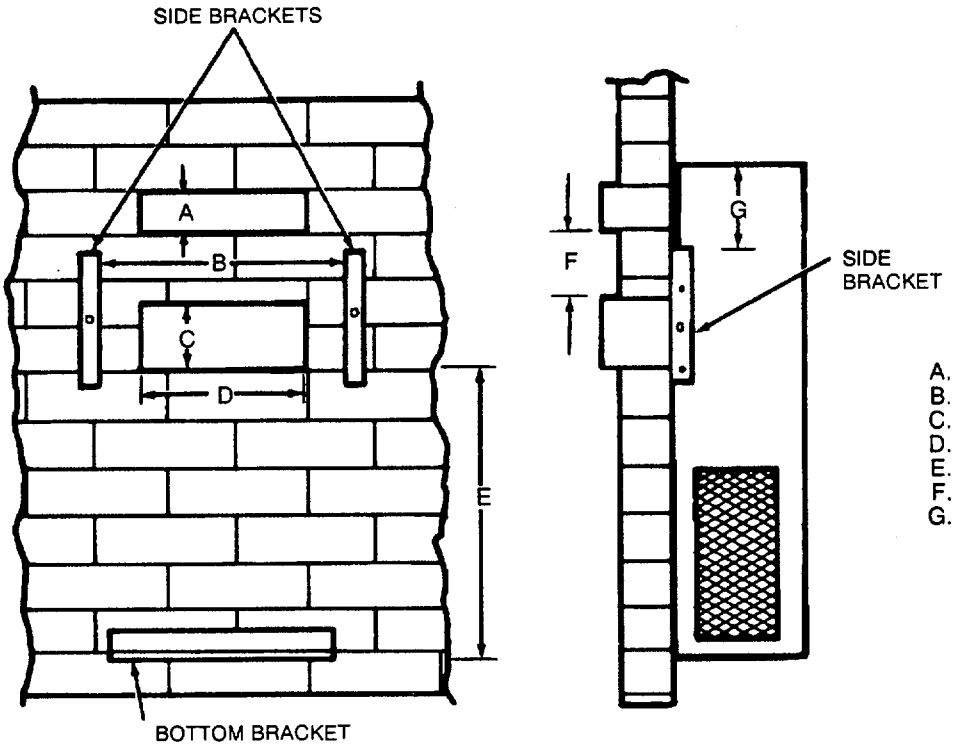

	INCHES	CENTIMETERS
A.	8	20.32
B.	32 1/2	81.79
C.	12	30.48
D.	20	50.80
E.	27 3/4	70.49
F.	20 1/4	51.44
G.	15	38.10

Figure 4-5. Installation on Concrete Block Walls

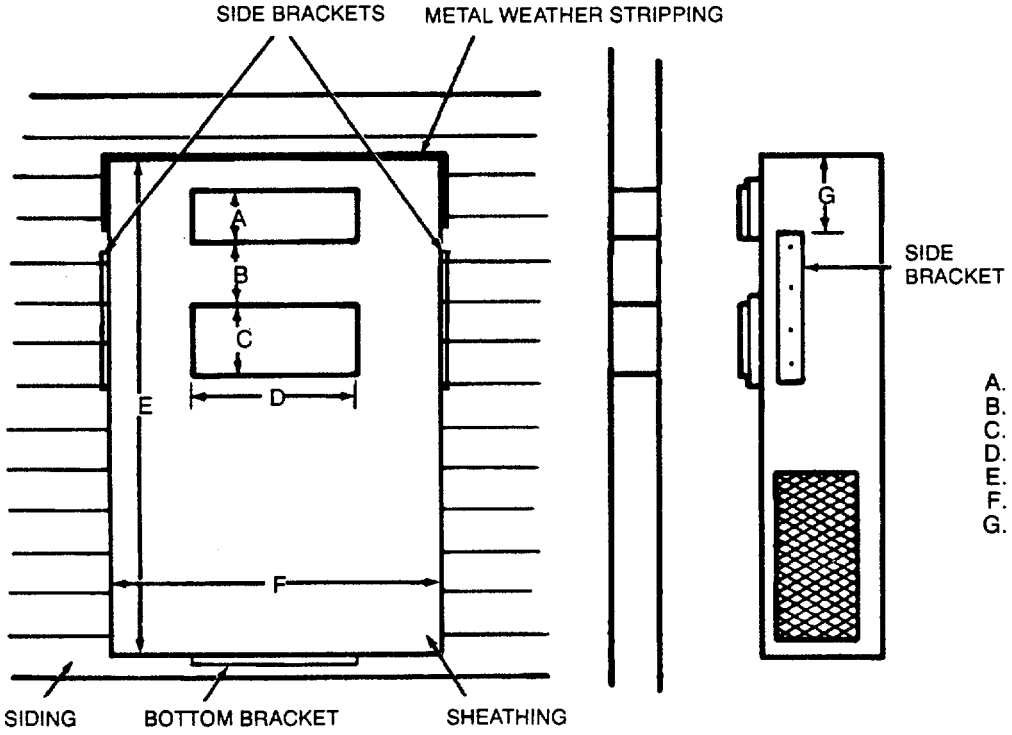

	INCHES	CENTIMETERS
A.	8	20.32
B.	20 1/4	51.44
C.	12	30.48
D.	20	50.80
E.	69 1/2	176.53
F.	32 1/2	81.79
G.	15	38.10

Figure 4-6. Installation on Frame Walls

4-6. AIR CONDITIONER - Continued.

NOTE

For ease of connections to duct work and grilles, galvanized metal duct extensions should be attached. They should be fabricated to the same size as the air openings. See Figure 4-1 They should extend through the wall far enough to make connections. For applications with no duct work, extension should be cut flush with the inside wall. All connections should be secured with screws and sealed airtight before insulating.

(4) Install duct extensions to the unit with sheet metal screws and seal around the seams with silicone adhesive or pressure sensitive tape where the duct extensions meet the unit.

WARNING

Use a forklift or other heavy lifting device to lift the air conditioner. The unit is heavy and has a high center of gravity.

(5) Lift the unit off the shipping base and onto the wall-mounted brackets. Retain shipping base for reuse.
(6) Secure the unit to the wall with the attaching hardware.
(7) Install metal weather stripping at the top of the unit and seal with silicone adhesive so it is water-tight.

4-7. FRESH AIR DAMPER.

a. Blank Off Plate Removal
   (1) Remove the two screws ('1, Figure 4-7) securing the blank off plate (2) to the bottom front door assembly (3) and retain.
   (2) Pull the blank off plate (2) down and away from the bottom front door assembly (3).

b. Fresh Air Damper Installation.
   (3) Remove the two screws (4, Figure 4-7) from the bottom front door assembly (3) and retain.
   (4) Turn the 1/4 turn fastener (5) on the bottom front door assembly (3) and pull the door open
   (5) Cut the insulation away from the opening In the bottom front door assembly (3) that was covered by the blank off plate (2) and close the door.
   (6) Insert the lip on the top of the fresh air damper (6) Into the top of the slot on the bottom front door assembly (3).

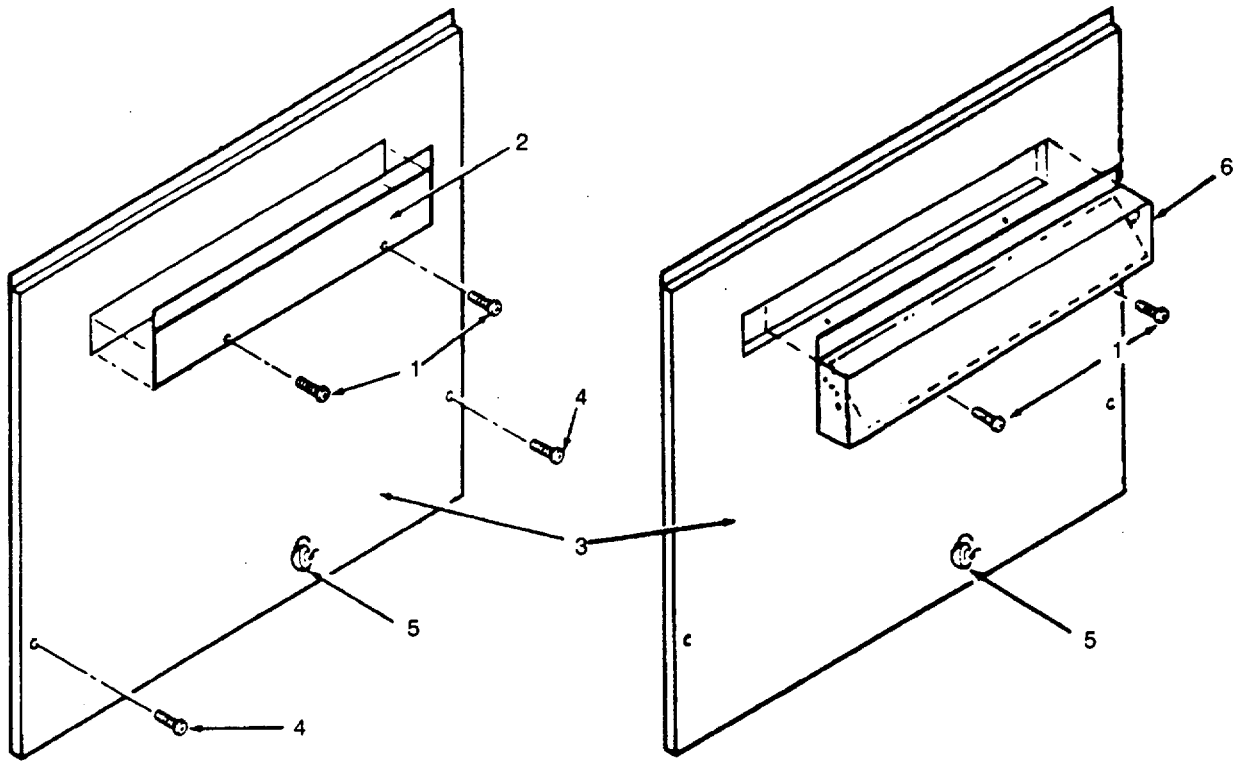

Figure 4-7. Fresh Air Damper

(7) Install the two retained screws (1) into the holes at the bottom of the fresh air damper so that it is secured to the bottom front door assembly (3).

(8) Secure the bottom front door assembly with 1/4 turn fastener. Retain the two remaining screws for future use.

4-8. DUCTING.

WARNING

Duct liner in supply duct may ignite if placed closer than 4 feet (1.22 meters) from the air conditioner.

a. Duct work is optional depending upon application. If used, duct work should be designed and installed in accordance with the National Board of Fire Underwriters, Pamphlets 90A and 90B and insulated with a minimum 1 inch vapor-barrier insulation. See Figure 4-8 for examples of duct work.

b. A flex boot should be used to prevent transmission of vibration and noise to the duct system. The fabric must be Underwriters Laboratory rated to a minimum of 197 degrees Fahrenheit (92 degrees Centigrade).

4-8. DUCTING - Continued.

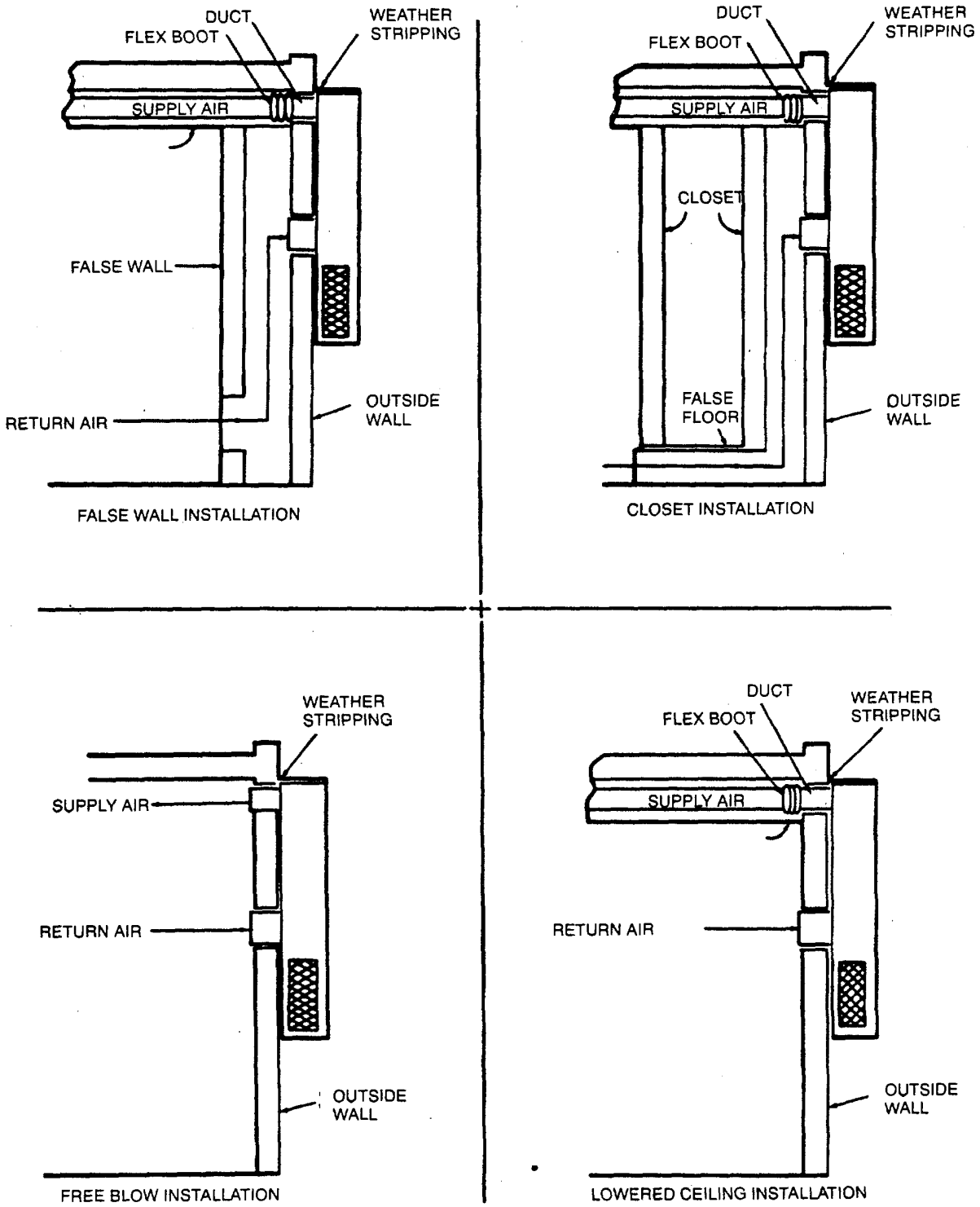

Figure 4-8. Ducting

4-9. HIGH VOLTAGE FIELD CONNECTIONS.

WARNING

High voltage is used in the operation of this equipment. Power to circuit must be disconnected before beginning installation. Death on contact or severe injury may result if personnel fail to observe safety precautions.

a. Specification. Check data decals on the air conditioner. See Figure 2-2 and Figure 2-3. The decals are stamped at the factory and provide information on phasing, minimum circuit capacity, and voltage required to operate the unit.

b. Installation.

(1) Remove both front door assemblies. See para 4-17.

(2) Remove the control box cover (1, Figure 4-9) by removing the two screws (2).

CAUTION

Contact an electrician prior to installing wiring. Gage of wire required for installation will vary with length of wire used. Using the wrong gage wire could cause the wire to overheat and ignite combustible materials.

NOTE

Holes are provided in the control box for connection of power lines.

(3) Connect power lines to the terminals as shown on the wiring diagram decal inside the control box cover. See Figure 2-3.

4-10. THERMOSTAT.

a. Unpacking.

(1) Remove the thermostat cover (6, Figure 4-10) by pulling the bottom edge of the cover upward until it snaps free.

NOTE

The cover is hinged at the top and must be removed by pulling up at the bottom.

(2) Carefully remove the polystyrene packing insert which protects the mercury switch during shipment. Retain the insert and packaging for future use.

(3) Remove subbase (1) from thermostat (4) by loosening three captive screws (5).

4.10. THERMOSTAT-Continued.

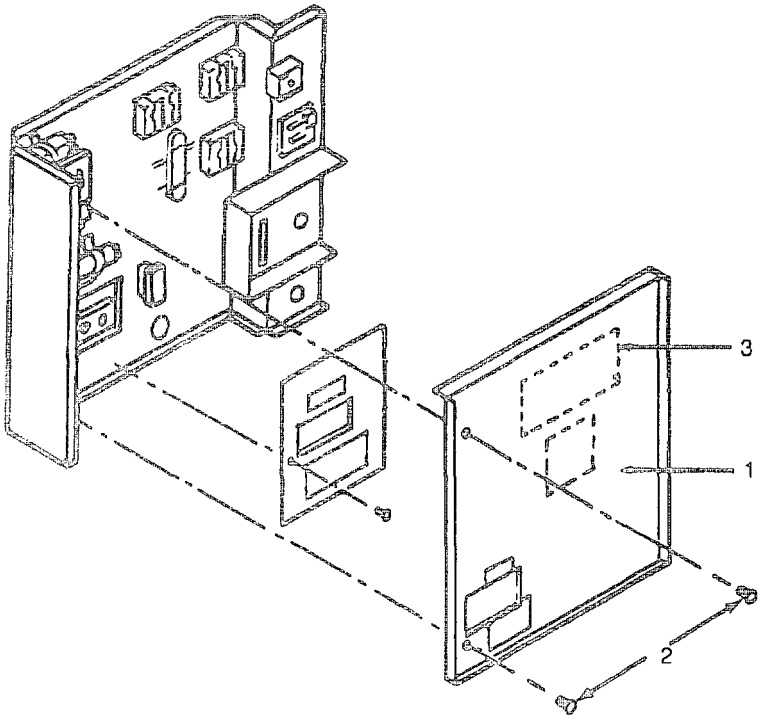

Figure 4-9. Control Box Cover

b. Installation.

NOTE

Thermostat should be installed 5 feet (1.5 meters) above the floor in an area of average temperature away from:

- drafts or dead spots behind doors or In corners
- hot or cold air from ducts
- radiant heat from sun, appliances, concealed pipes, or chimneys
- unheated (cool) areas behind thermostat such as an outside wall

(1) Prepare a hole for the thermostat wire at the chosen mounting location.

(2) Loosely mount the subbase (1, Figure 4-10) at the chosen location with the two mounting screws (2).

NOTE

Use only 18 gage, color-coded thermostat wire for thermostat installation.

(3) Run wires from control box in the unit through the hole (3) in the subbase (1).

(4) Pull about 6 inches (15.24 centimeters) of wire through the hole (3).

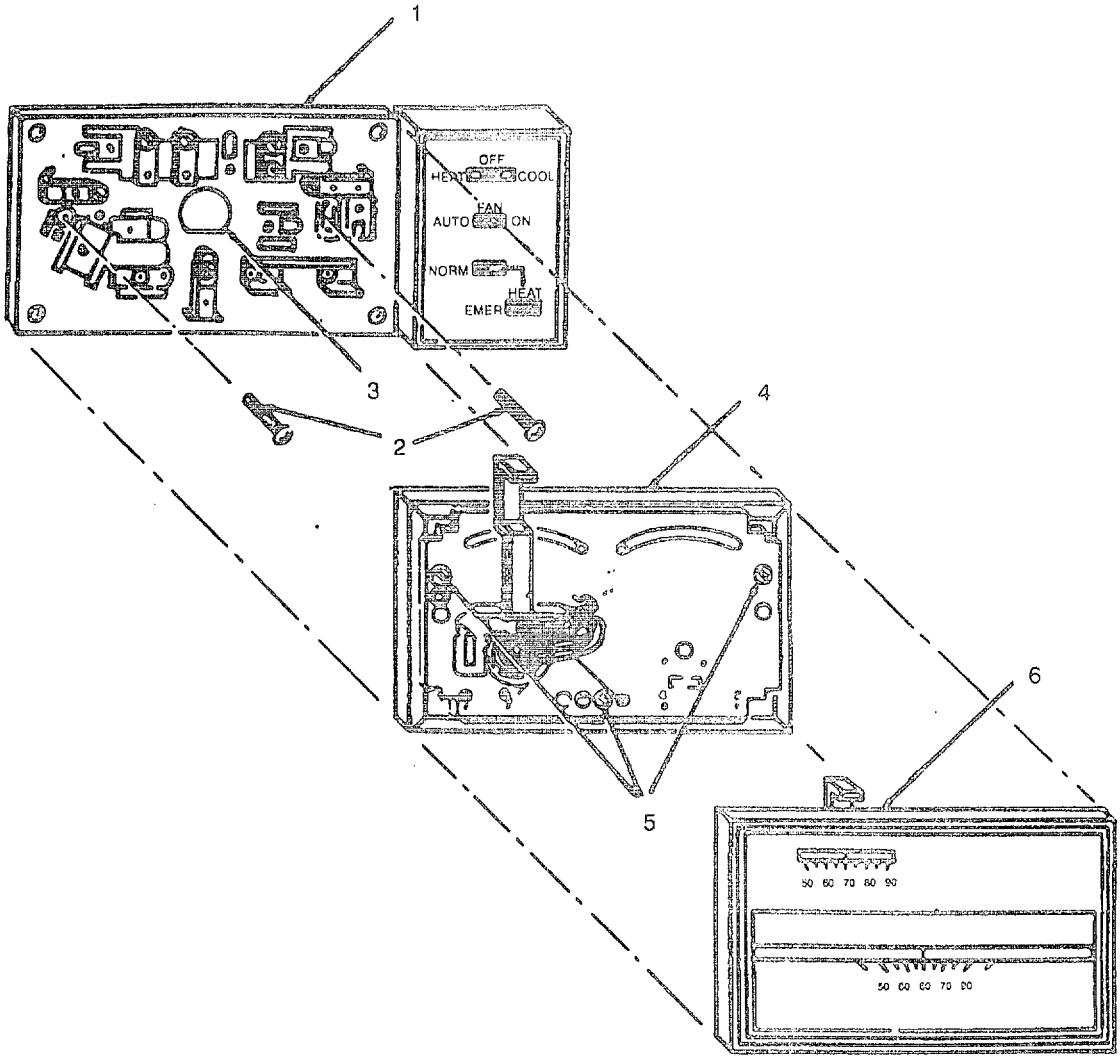

Figure 4-10. Thermostat Assembly.

(5) Level the subbase (1) using a spirit level as shown in figure 4-11 and tighten the mounting screws (2, Figure 4-10).

(6) Connect the system wires to the subbase (1) and to the low voltage terminal block in the control box. See Figure 2-2.

(7) Push excess wire back into the hole and plug the hole to prevent drafts.

(8) Turn the thermostat over and note the spring fingers which engage the subbase contacts. Make sure the spring fingers are not bent flat, preventing proper electrical contact with the subbase.

(9) Mount the thermostat (4, Figure 4-10) on the subbase (1) and tighten the captive mounting screws (5).

(10) Place the upper edge of thermostat cover (6) on thermostat (4) and swing cover downward until it snaps onto the thermostat.

4-10. Thermostat-Continued.

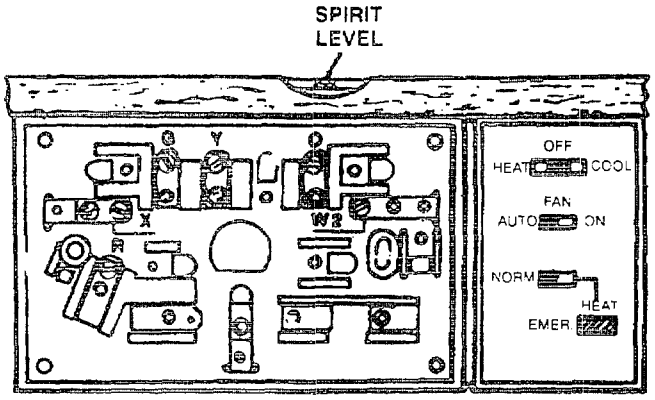

Figure 4-11. Subbase Leveling

Section IV. LUBRICATION

4-11. GENERAL. The air conditioner requires no lubrication The refrigerant compressor and its drive motor are hermetically sealed in a canister. The compressor crankcase has a lifetime supply of oil and the drive motor has permanently lubricated, sealed bearings. The fan motors also have permanently lubricated, sealed bearings.

Section V. UNIT PREVENTIVE MAINTENANCE CHECKS AND SERVICES (PMCS)

4-12. GENERAL.

a. Systematic, periodic, Preventive Maintenance Checks and Services (PMCS)are essential to ensure unit is ready for operation at all times. The purpose of a preventive maintenance program is to discover and correct defects and deficiencies before they can cause serious damage to or complete failure of the equipment.

Any effective preventive maintenance program must begin with the indoctrination of operators to report all unusual conditions noted during daily checks or actual operation to unit maintenance. All defects and deficiencies discovered during maintenance inspections, together with corrective action taken, must be recorded on DA FORM 2404 (Equipment Inspection and Maintenance Worksheets).

b. A schedule for unit preventive maintenance inspection and service should be established immediately after installation of unit. A quarterly Interval, equal to three calendar months or 250 hours of operation (whichever occurs first). is recommended for usual operating conditions. When operating under unusual conditions, such as a very dusty or sandy environment, it may be necessary to reduce the interval to monthly or even less If conditions are extreme.

4-13. UNIT PMCS TABLE. Table 4-1 lists the unit preventive maintenance checks and services that should be performed at quarterly (or otherwise established) intervals. The PMCS items in the table have been arranged and numbered in a logical sequence to provide for greater personnel efficiency and the least amount of required maintenance downtime.

WARNING

- **Disconnect input power before disassembly of unit for PMCS to prevent dangerous, possibly fatal, electrical shock. Compressed air used for cleaning purposes with not exceed 30 psi (2.1 kg/cm^2).**
- **Do not direct compressed air against the skin. Use goggles or full face shield.**

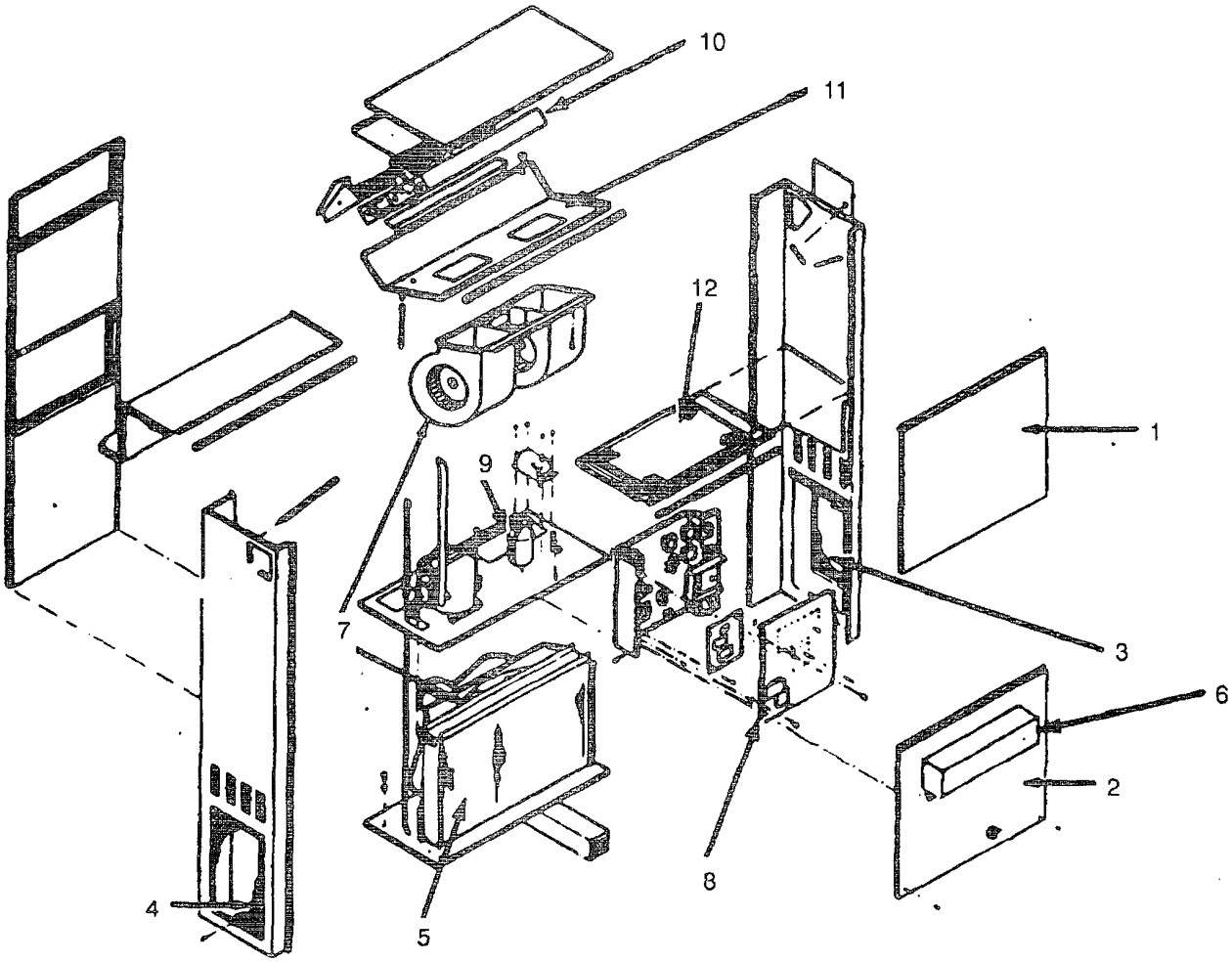

Figure 4-12. Unit PMCS

4-13. Unit PMCS Table-Continued.

Table 4-1. Unit PMCS Quarterly Schedule

Item No.	Item To Be Inspected/Serviced	Procedures
1.	Side Door Assemblies	a. Remove front door assembly-top (1, Figure 4-12) and bottom (2). See para 4--17. b. Remove side door assembly-right (3) and left (4). See para 4-19. **NOTE** Do not replace door assemblies until PMCS is completed. c. Clean and inspect side door assemblies (3 and 4) See para 4-19.
2.	Outdoor Coil	WARNING **Compressed air used for cleaning purposes will not exceed 30 psi (2.1 kg/cm^2). Do not direct compressed air against skin. Use goggles or full face shield.** a. Blow dust and dirt out of the air passages in the coil (5) using compressed air or discharge side of a portable vacuum cleaner. Blow from front to back in the opposite direction from operational airflow. b. Inspect coil from obvious damage, and all mounting hardware for tightness and security
3.	Fresh Air Damper	Inspect damper (6) for corrosion, and mounting hardware for tightness and security. Check for proper adjustment.
4.	Indoor and Outdoor Fans and	a. Wipe or vacuum all dust and dirt from fans and motors Motors (7), and all other components and surfaces in the immediate area. b. Inspect the fans for damage or bent blades, the venturi panel for damage, and all mounting hardware for tightness and security.
5.	Control Box Components and	a. Remove control box cover (8). See para 4-9,b.(2). Wiring b. Inspect all wiring and electrical components for damage and all electrical connections for tightness c. Replace cover and secure with two screws.
6.	Accumulator	Inspect the accumulator (9) mounting for tightness and security.

Table 4-1. Unit PMCS Quarterly Schedule

Item No.	Item To Be Inspected/Serviced	Procedures
7	Indoor Coil .	**WARNING** **Compressed air used for cleaning purposes will not exceed 30 psi (2.1 kg/cm^2). Do not direct compressed air against skin. Use goggles or full face shield** a. Blow accumulated dust and dirt out of the air passages in the indoor coil (10) using compressed air or the discharge side of a portable vacuum cleaner b. Inspect ind6or coil for obvious damage and all mounting hardware for tightness and security.
8	Condensate Drain	a. Wipe any dust or dirt out of the condensate pan (11). b. Pour about two cups off clean fresh water into the condensate pan and watch for it to flow through the tube extending from the bottom of the air conditioner. c. If the water does not flow out, or if it has a muddy appearance, thoroughly flush the tube. If the tube is clogged, insert a flexible wire from either the top or bottom end and agitate until the clog is removed. Pour additional water in the condensate drain pan until an unrestricted flow of clean water is achieved.
9.	Air Filter	a. Inspect air filter (12). b. Discard filter and install new filter if dirty or damaged. c. Install both front door assemblies See para 4-17. d. Install both side door assemblies See para 4-19. e. Connect power to the unit.
10	Operational Check	**WARNING** **High voltage is used in the operation of this equipment. Death on contact or severe injury may result if personnel fail to observe safety precautions. Do not operate unit without front and side door assemblies in place and tightly secured.** a. HEATING (1) Move the system switch on thermostat to HEAT, and fan switch to AUTO. See Figure 2-1. (2) Move thermostat lever about 10 degrees F (5.6 depress C) above room temperature. Both stages of heating and fan should start, providing there is no external time delay or outdoor temperature limiting system.

Table 4-1. Unit PMCS Quarterly Schedule-Continued

Item No.	Item To Be Inspected/Service	Procedure
		(3) Move thermostat lever about 10 degrees F (5.6 degrees C) below room temperature. Heating equipment and fan should shut off. b. COOLING **CAUTION** **Do not operate cooling ii outdoor temperature is below 50 degrees F (10 degrees C).** (1) Move the system switch on thermostat to COOL. See Figure 2-1. (2) Move thermostat lever about 10 degrees F (5.6 degrees C) below room temperature. Compressor and fan should start. (3) Move thermostat lever about 10 degrees F (5.6 degrees C) above room temperature Compressor should stop and fan should continue to run about 90 seconds after the compressor shuts down. c. FAN (1) Move thermostat system switch to OFF and fan switch to ON. See Figure 2-1. Fan should run continuously. (2) Move fan switch to the AUTO position. Fan operation is controlled by heating or cooling system.

Section VI. TROUBLESHOOTING

4-14. GENERAL. This section contains unit troubleshooting information for locating and correcting most of the operating troubles which may develop with this unit.

4-15. TROUBLESHOOTING. Each malfunction of an individual component is listed in Table 4-2. The malfunction is followed by a list of tests or inspections which help to determine probable causes and corrective actions to take. The tests or inspections and corrective actions are to be performed in the order listed In the table. All malfunctions that may occur and all tests or inspections and corrective actions may not be listed. If a malfunction is not listed or is not corrected by corrective action, notify your supervisor.

Before performing troubleshooting, refer to the warnings inside the front cover.

NOTE

Before you use the table, be sure you have performed applicable operating checks (Table 4-1, item 10).

Table 4-2. Unit Maintenance Troubleshooting

MALFUNCTION
TEST OT INSPECTED
CORRECTIVE ACTION

1. UNIT DOES NOT START IN ANY MODE.

High voltage is used in the operation of this equipment. Death on contact or severe injury may result if personnel fail to observe safety precautions.

Step 1. Check to see if input power has been disconnected.
Connect input power.

Step 2. Make sure that power is 208/230 volt, 1 phase, 60 Hertz.
Connect correct input power.

Step 3. Check for loose or damaged electrical connectors or wires. See para 4-23.
Tighten or replace connectors, or repair damaged wires. See para 4-23.

Step 4. Test transformer for open. See para 4-31.
Replace transformer if defective. See para 4-31.

Step 5. Test relays for operation and contacts. See para 4-28 through 4-34.
Replace any defective relays. See para 4-28 through 4-34.

Step 6. Inspect thermostat. See para 4-50.
Replace thermostat if defective. See para 4-50.

2. INDOOR FAN STARTS IN COOL MODE, OUTDOOR FAN DOES NOT START, COMPRESSOR DOES NOT START.

NOTE

After power has been connected to unit, a short (30 minute maximum during very cold weather) warm up period is required. When compressor reaches a safe operating temperature, it will come on automatically if the thermostat is set for cooling and the cooling lever is set to about 10 degrees F (5.6 degrees C) below the ambient indoor temperature.

Disconnect input power before performing internal electrical troubleshooting. Voltages used can be deadly.

Step 1 Check for loose or damaged electrical connectors or wires.
Tighten or replace connectors or repair damaged wires. See para 4-23.

Step 2 Listen for operation of compressor.
If not operating, contact Direct Support Maintenance.

4-15. TRUBLESHOOTING - Continued

Table 4-2. Unit Maintenance Troubleshooting- Continued

MALFUNCTION
TEST OT INSPECTED
CORRECTIVE ACTION

3. INDOOR AND OUTDOOR RFANS BOTH RUN, BUIT COMIPRESSOR DOES NOT START.

WARNING

High voltage is used in the operation ,of this equipment. Death on contact or severe injury may result if personnel fail to observe safety precautions.

Step 1. Check for loose or damaged electrical connectors or wires, See para 4-23.

Tighten or replace connectors, or repair damaged wires See para 4-23.

Step 2. Test operation of lockout relay. See para 4-28.

Replace relay if defective. See para 4-28.

Step 3. Test operation of compressor contractor. See para 4-32.

Replace contractor if defective. See pare 4-32.

Step 4. Listen for operation of compressor.

If not operating, contact Direct Support Maintenance.

4. AIR CONDITIONER STOPS COMIPLETELY DURING COOL MODE OPERATION.

WARNING

High voltage is used in the operation of this equipment. Death on contact or severe injury may result if personnel fail to observe safety precautions.

Step 1. Check to be sure indoor fans and outdoor fan (15 and 12, Figure 1-2) start immediately when a restart in COOL mode is made. If fans do not start, test as follows:

WARNING

Disconnect input power before performing internal electrical troubleshooting.

a. Test fan relay. See para 4-33.

Replace if defective. See para 4-33.

b. Test fan motors. See para 4-38 (indoor fans motor) and para 4-45 (outdoor fan motor).

Replace if defective. See para 4-38 and 4-45.

Step 2. Check to be sure there is no restriction to airflow. See para 4-2b.

Remove restriction from air path.

MALFUNCTION
TEST OT INSPECTED
CORRECTIVE ACTION

5. EXCESSIVELY NOISY OPERATION.

High voltage is used in the operation of this equipment. Death on contact or severe injury may result if personnel fail to observe safety precautions.

Step 1. Isolate source of noise as near as possible, both by ear and touch. Listen and feel at both front and back of cabinet. Check all internal components for looseness, vibration, and security.

Tighten, adjust, and secure as necessary.

Step 2. Check fans for looseness or damage. See para 4-37 and 4-44.

Tighten loose fans or replace if damaged. See para 4-37 and 4-44.

6. NO HEAT IN HEHEAT OR EMERGENCY HEAT SETTINGS.

Disconnect input power before performing internal electrical troubleshooting. Voltages used can be deadly.

Step 1. Check for loose or damaged electrical connectors, or damaged wires in wiring harness. See para 4-23.

Tighten or replace loose or damaged connectors, or repair damaged wires. See para 4-23.

Step 2. Test heater thermostat. See para 4-40.

Replace heater thermostat if defective. See para 4-40.

Step 3. Test heater element. See para 4-41.

Replace if defective. See para 4-41.

Step 4. Test fuse links. See para 4-42.

Replace if defective. See para 4-42.

Table 4-2. Unit Maintenance Troubleshooting- Continued

MALFUNCTION
TEST OT INSPECTED
CORRECTIVE ACTION

7. REDUCED HEATING CAPACITY.

Step 1. Check airflow out of conditioned air discharge grille. If airflow volume is low:

a. Replace air filter. See para 4-20.

b. Clean coils. See para 4-48 and 4-49.

Step 2. Check adjustment of fresh air damper. See para 4-21.

Adjust properly. See para 4-21.

Disconnect input power before performing internal electrical troubleshooting. Voltages can be deadly.

Step 3. Test heater element. See para 4-41.

Replace It defective. See para 4-41.

8. REDUCED COOLING CAPACITY.

High voltage is used in the operation of this equipment. Death on contact or severe injury may result if personnel fail to observe safety precautions.

Step 1. Check air flow out of conditioned air discharge grille. If air flow volume is low:

a. Replace air filter. See para 4-20.

b. Clean coils. See para 4-48 and 4-49.

Step 2. Check adjustment of fresh air damper. See para 4-21.

Adjust properly. See para 4-21.

Step 3. Inspect thermostat. See para 4-50.

Replace If defective. See para 4-50.

Section VII. MAINTENANCE PROCEDURES

4-16. GENERAL. The procedures in this section have been arranged in the order in which the Items appear in the unit (O) Maintenance level column on the Maintenance Allocation Chart (MAC) which is provided in Appendix B Step by step procedures have been provided for all actions authorized to be performed by Unit Maintenance In the order in which they appear on the MAC.

- **High voltage is used in the operation of this equipment. Death on contact or severe injury may result if personnel fail to observe safety precautions.**
- **Front and side door assemblies on the unit are there for a purpose. Do not operate unit with them off or open unless instructions tell you to. When necessary, do so with care.**

4-17. FRONT DOOR ASSEMBLIES.

This task covers: a. Removal b. Installation

INITIAL SETUP:
Tools:
Tool Kit, service, refrigeration unit
Equipment Conditions:
Power off at power source.
General Safety Instructions:

Disconnect input power to the unit before performing any internal maintenance. Voltages used can kill. Shutting the unit off at the thermostat does not disconnect unit power.

4.17 FRONT DOOR ASSEMBLIES-Continued.

a. Removal.

(1) Remove the two screws (1, Figure 4-13) from the top front door assembly (2).

(2) Pull the top front door assembly forward from the bottom and lift it away, down from the air conditioner.

(3) Turn the 1/4 turn fastener (3) on the bottom front door assembly (4) and pull the door away from the air conditioner.

b. Installation.

(1) Place the bottom front door assembly (4, Figure 4-13) on the air conditioner and turn the 1/4 turn fastener (3) 1/4 turn to secure the door.

(2) Place the top front door assembly (2) on the air conditioner by sliding the upper lip of the door into the top of the air conditioner.

(3) Secure the top front door assembly with two screws (1).

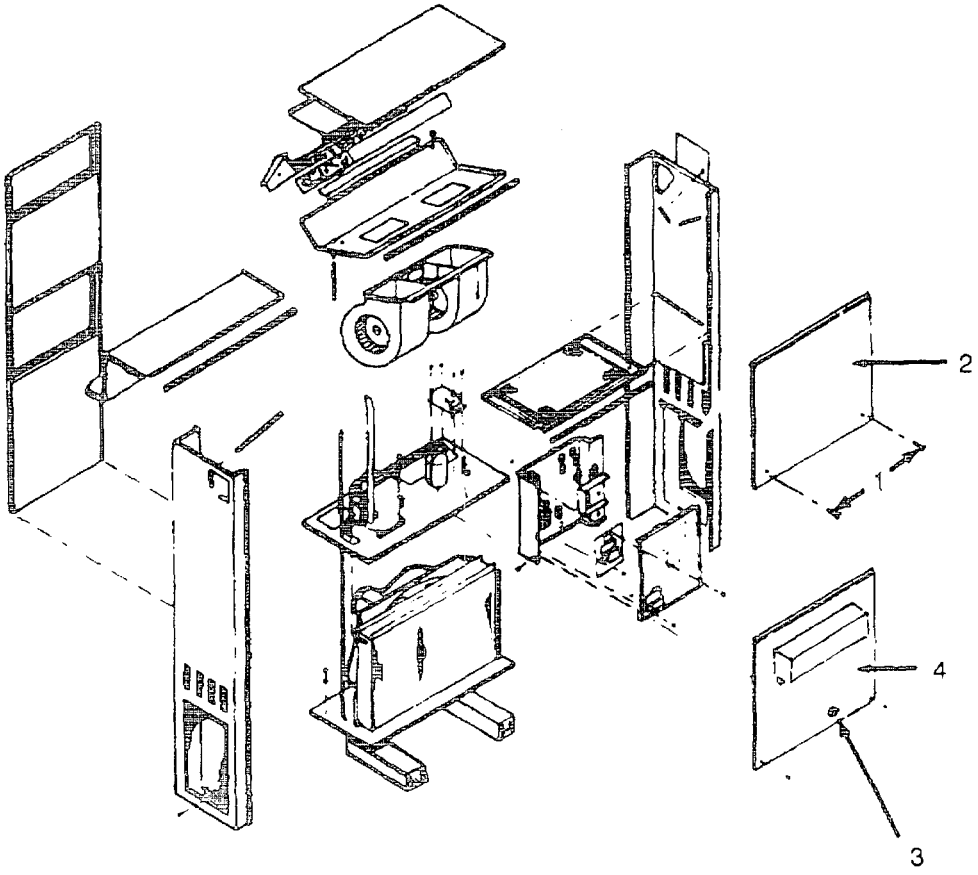

Figure 4-13. Front Door Assemblies

4-18. INFORMATION DECALS.

This task covers: a. Removal b. Installation

INITIAL SETUP:
Tools:
Tool Kit, service, refrigeration unit
Equipment Conditions:
Power off at power source.
Both front door assemblies removed. See para 4-17.
General Safety Instructions'

WARNING

Disconnect input power to the unit before performing any internal maintenance. Voltages used can kill. Shutting the unit off at the thermostat does not disconnect unit power.

a. Removal.

(1) Remove decals by peeling them off of the air conditioner.

(2) Scrape any excess adhesive off with a scraper.

b. Installation.

(1) Select the proper replacement decal. See Figure 2-2, Figure 2-3 and refer to Appendix C, Repair Parts and Special Tools List.

(2) Peel the backing off of the decal and place it exactly where the other decal was located.

(3) Smooth the decal so that all air bubbles are forced out.

(4) Install both front door assemblies. See para 4-17.

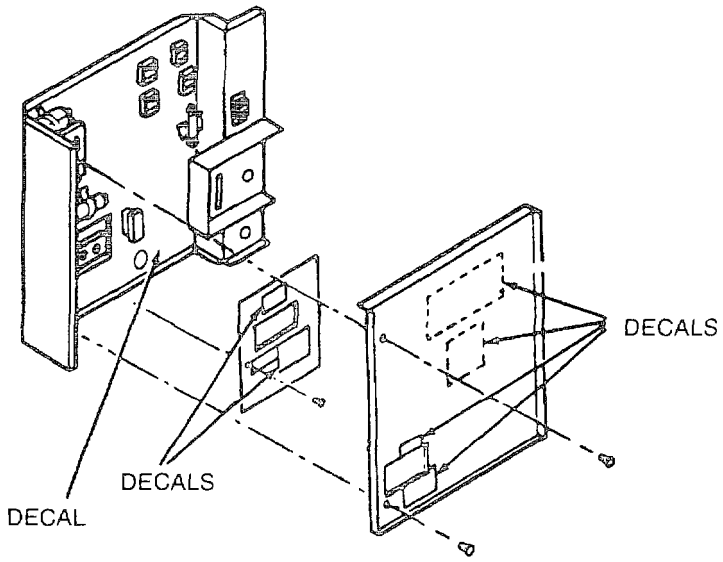

Figure 4-14. Information Decals

4-19. SIDE DOOR ASSEMBLIES.

This task covers:	a. Removal	b. Services	c. Installation

INITIAL SETUP:
Tools:
Tool Kit, service, refrigeration unit
Equipment Conditions:
Power off at power source.
General Safety Instructions'

WARNING

Disconnect input power to the unit before performing any internal maintenance. Voltages used can kill. Shutting the unit off at the thermostat does not disconnect unit power.

a. Removal. Remove the side door assemblies (1, Figure 4-15) by removing the one screw (2) on each, lifting the doors from the bottom, and pulling down and away from the air conditioner.

b. Service Spray water to remove any dust on the screens of the side door assemblies (1).

c. Installation. Install the side door assemblies (1) by slipping the upper lip into the top of the opening, closing the door, and securing with one screw (2) each.

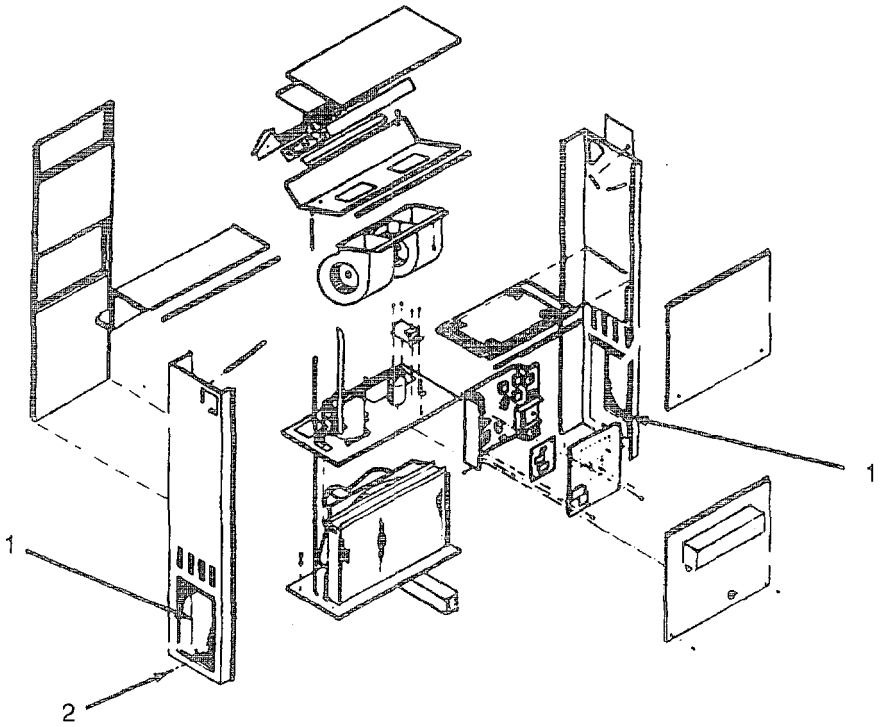

Figure 4-15. Side Door Assemblies

4-20. AIR FILTER.

This task covers: a. Removal b. Installation

INITIAL SETUP:
Tools:
None
Equipment Conditions:
Power off at power source.

General Safety Instructions'

WARNING

Disconnect input power to the unit before performing any internal maintenance. Voltages used can kill. Shutting the unit off at the thermostat does not disconnect unit power.

a. Removal.

(1) Turn the 1/4 turn fastener (1, Figure 4-16) on the bottom front door assembly (2) and open the door by swinging the door forward from the bottom.

(2) Reach into the air conditioner and lift the air filter (3) up and out of the filter rack (4) and away from the unit.

CAUTION

Do not operate the air conditioner without a filter in place. Foreign matter may damage or reduce the performance of the air conditioner.

b. Installation.

(1) Place the filter (3, Figure 4-16) into the filter rack (4).

(2) Close the bottom front door assembly (2) and secure by turning the 1/4 turn fastener (1).

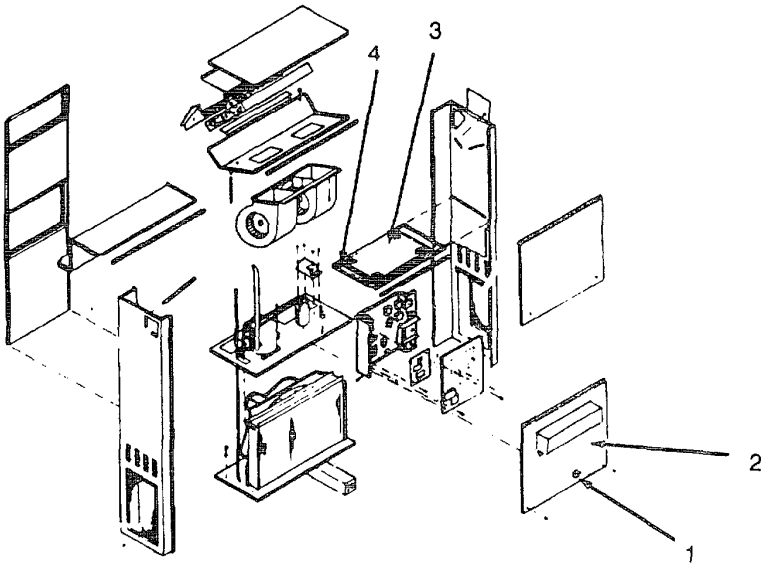

Figure 4-16. Air Filter

4-21. FRESH AIR DAMPERS.

This task covers: a. Adjustment b. Removal c. Installation

INITIAL SETUP:

Tools:

Tool Kit, service, refrigeration unit

Materials:

None

Equipment Conditions:

Power off at power source.

Both front door assemblies removed. See para 4-17.

General Safety Instructions:

WARNING

Disconnect input power to the unit before performing any internal maintenance. Voltages used can kill. Shutting the unit off at the thermostat does not disconnect unit power.

a. Adjustment.

(1) Remove setscrew (1, Figure 4-17) on the right side of the fresh air damper (2) and slide the blade (3) to the desired position, aligning hole in blade with one of the holes in the side of the damper.

(2) Install setscrew in new hole.

(3) Install both front door assemblies. See para 4-17.

b. Removal.

(1) Remove the two screws (4, Figure 4-17) at the bottom of the fresh air damper (2).

(2) Pull the fresh air damper down and away from the bottom front door assembly.

c. Installation.

(1) Slide the top lid on the fresh air damper (2, Figure 4-17) up into the slot on the bottom front door assembly.

(2) Secure the fresh air damper to the bottom front door assembly with the two screws (4).

(3) Install both front door assemblies. See para 4-17.

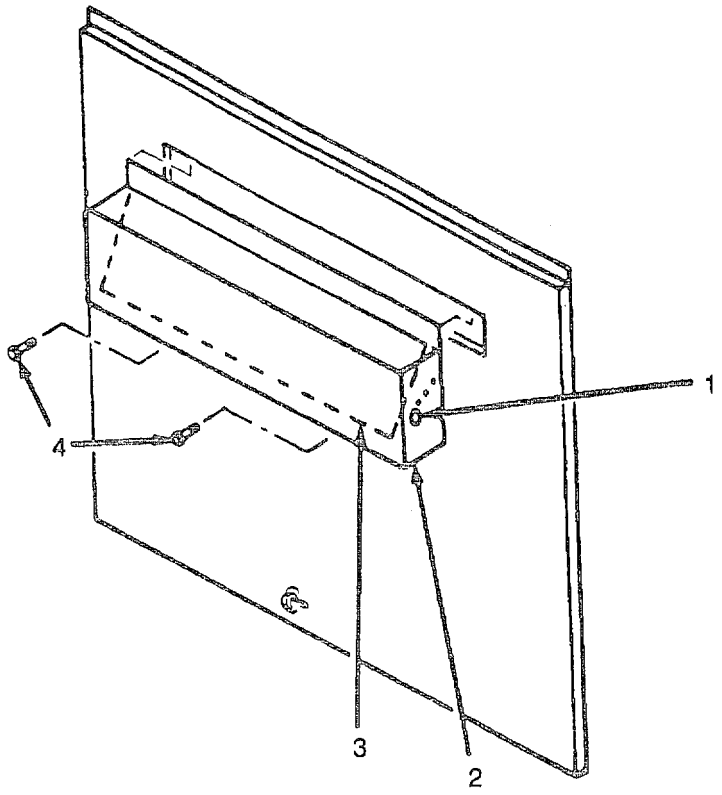

Figure 4-17. Fresh Air Damper

4-22. CONDENSATE DRAIN.

This task covers: a. Inspection b. Service c. Removal d. Installation

INITIAL SETUP:

Tools:

Tool Kit, service, refrigeration unit

Materials:

Rags (Appendix F, Item 7)

Equipment Conditions:

Power off at power source.
Both front door assemblies removed. See para 4-17.
Left side door assembly removed. See para 4-19.

General Safety Instructions:

WARNING

Disconnect input power to the unit before performing any internal maintenance. Voltages used can kill. Shutting the unit off at the thermostat does not disconnect unit power.

a. Inspection.

(1) Pour one cup of water into the condensate drain pan (1, Figure 4-18). Water should flow out of the pan through the condensate drain line (2).

(2) Install both front door assemblies. See para 4-17.

b. Service.

(1) Flush the drain pan (1, Figure 4-18) with water and wipe dry with clean rags.

(2) Clean condensate drain line (2) and ensure there are no obstructions.

(3) Install both front door assemblies. See para 4-17.

c. Removal.

(1) Slide the condensate drain line (2, Figure 4-18) off of the fittings on the bottom of the drain pan (1) and at the base of the air conditioner.

(2) Remove the condensate drain line from the air conditioner.

d. Installation.

(1) Place new condensate drain line (2, Figure 4-18) in the air conditioner.

(2) Connect one end to the fitting on the bottom of the drain pan (1) and feed the other out the bottom of the air conditioner.

(3) Install both front door assemblies and left side door assembly. See para 4-17 and 4-19.

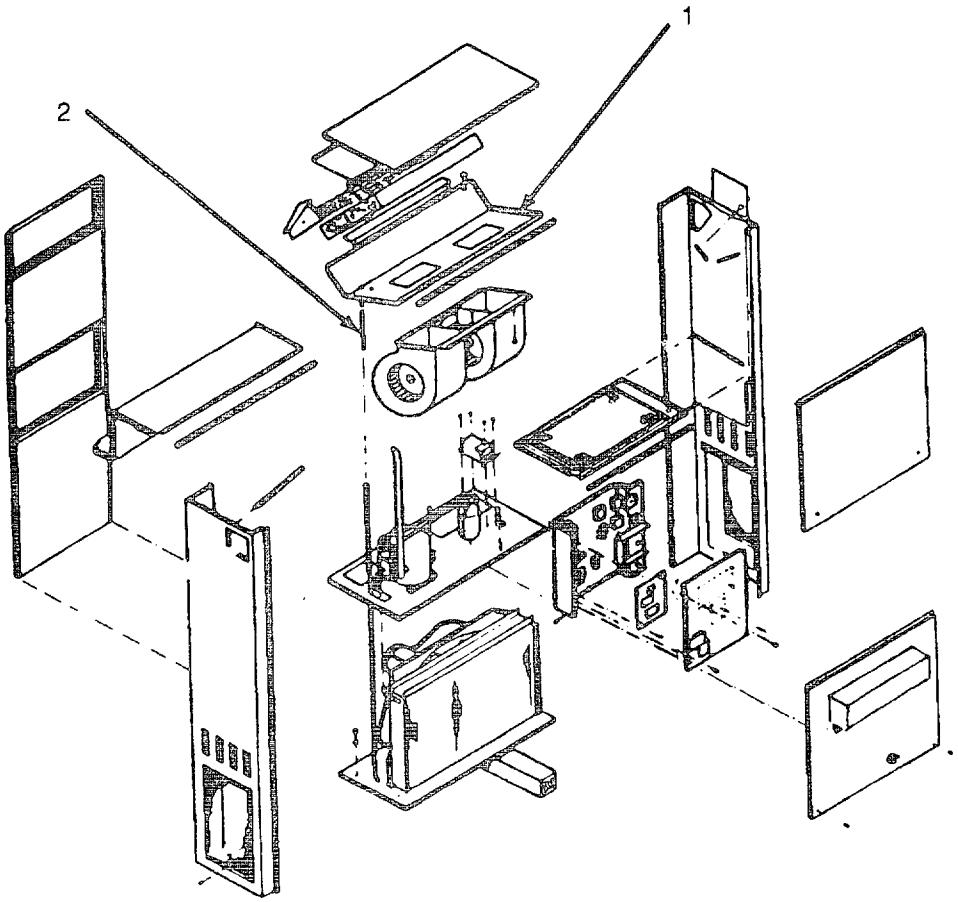

Figure 4-18. Condensate Drain

4-23. CONTROL BOX WIRING.

This task covers: a. Inspection b. Testing c. Repair d. Removal e. Installation

INITIAL SETUP:
Tools:
Tool Kit, service, refrigeration unit
Materials:
Tape, Pressure Sensitive (Appendix F, Item 13)
Equipment Conditions:
Power off at power source.
Both front door assemblies removed. See para 4-17.

General Safety Instructions:

WARNING

Disconnect input power to the unit before performing any internal maintenance. Voltages used can kill. Shutting the unit off at the thermostat does not disconnect unit power.

a. Inspection.

(1) Remove the control box cover (1, Figure 4-19) from the control box (2) by removing the two screws (3).

(2) Check that all wiring is attached and secure.

(3) Attach the control box cover to the control box by installing the two screws.

(4) Install both front door assemblies. See para 4--17.

b. Testing.

(1) Remove the control box cover (1, Figure 4-19) from the control box (2) by removing the two screws (3).

(2) Check any suspect wiring for continuity with a multimeter. If no continuity is indicated, replace defective wiring.

(3) Attach the control box cover to the control box by installing the two screws.

(4) Install both front door assemblies. See para 4-17.

c. Repair.

(1) Remove the control box cover (1, Figure 4-19) from the control box (2) by removing the two screws (3).

(2) Wrap any bare wire with pressure sensitive tape.

(3) Install control box cover on control box with two screws.

(4) Install both front door assemblies. See para 4-17.

d. Removal.

(1) Remove the control box cover (1, Figure 4-19) from the control box (2) by removing the two screws (3).

NOTE

Mark wiring connection points so replacement wiring can be connected in the same way.

(2) Remove any damaged wire by loosening securing screws.

e. Installation.

(1) Install wiring following the marked connection points.

(2) Secure wiring by slipping bare wire end under securing screws and tightening the wire securing screws.

(3) Install control box cover (1) on the control box (2) with two screws (3).

(4) Install both front door assemblies. See para 4-17.

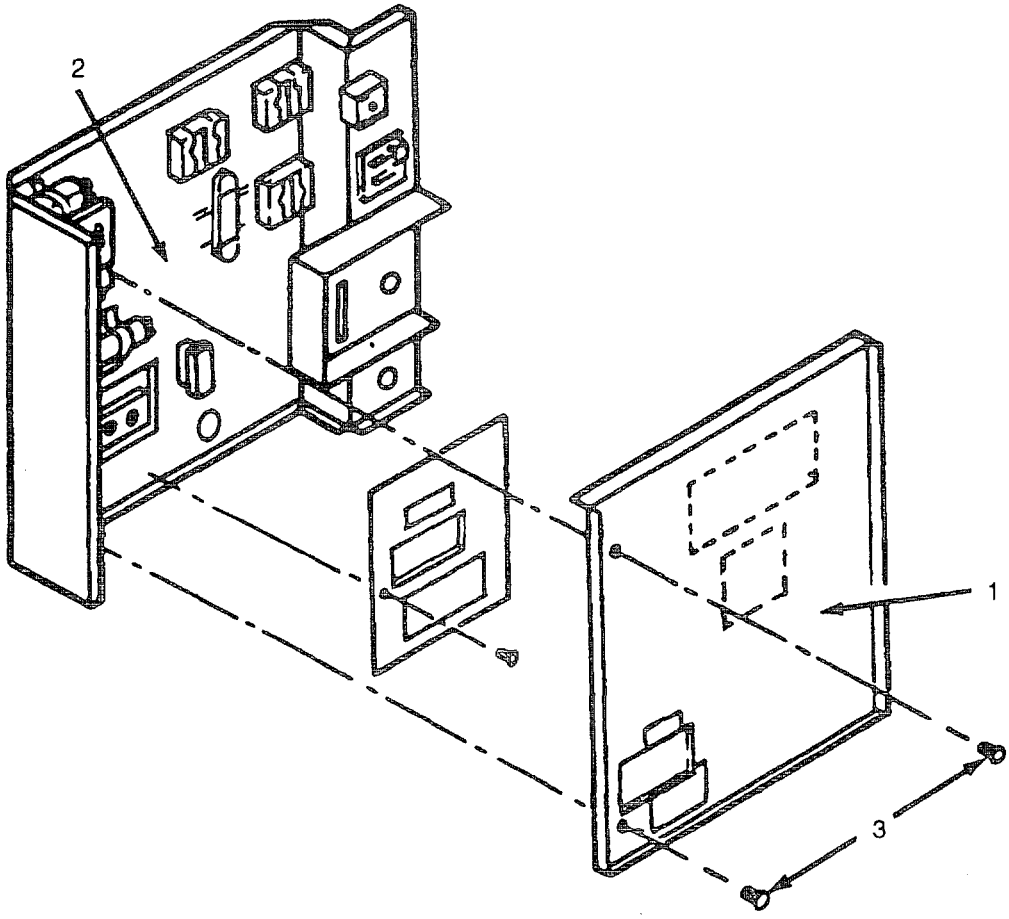

Figure 4-19. Control Box Wiring

4-24. LOW VOLTAGE TERMINAL BLOCK.

This task covers: a. Inspection b. Removal c. Installation

INITIAL SETUP:

Tools:

Tool Kit, service, refrigeration unit

Equipment Conditions:

Power off at power source.
Both front door assemblies removed. See para 4-17.
Control box cover removed. See para 4-23.

General Safety Instructions:

Disconnect input power to the unit before performing any internal maintenance. Voltages used can kill. Shutting the unit off at the thermostat does not disconnect unit power.

a. Inspection.

(1) Check mounting screws (1, Figure 4-20) of low voltage terminal block (2) for security.

(2) Install control box cover. See para 4-23

(3) Install both front door assembles. See para 4-17.

b. Removal.

(1) Remove the two screws (1, Figure 4-20) holding the low voltage terminal block (2) to the control box (3).

(2) Tag and remove all wires by loosening the screws (4) securing the wires.

c. Installation

(1) Install the low voltage terminal block (2, Figure 4-20) in the control box (3) with the two screws (1).

(2) Install the wires as tagged and secure with screws (4).

(3) Remove tags from the wires.

(4) Install the control box cover. See para 4-23.

(5) Install both front door assemblies. See para 4-17.

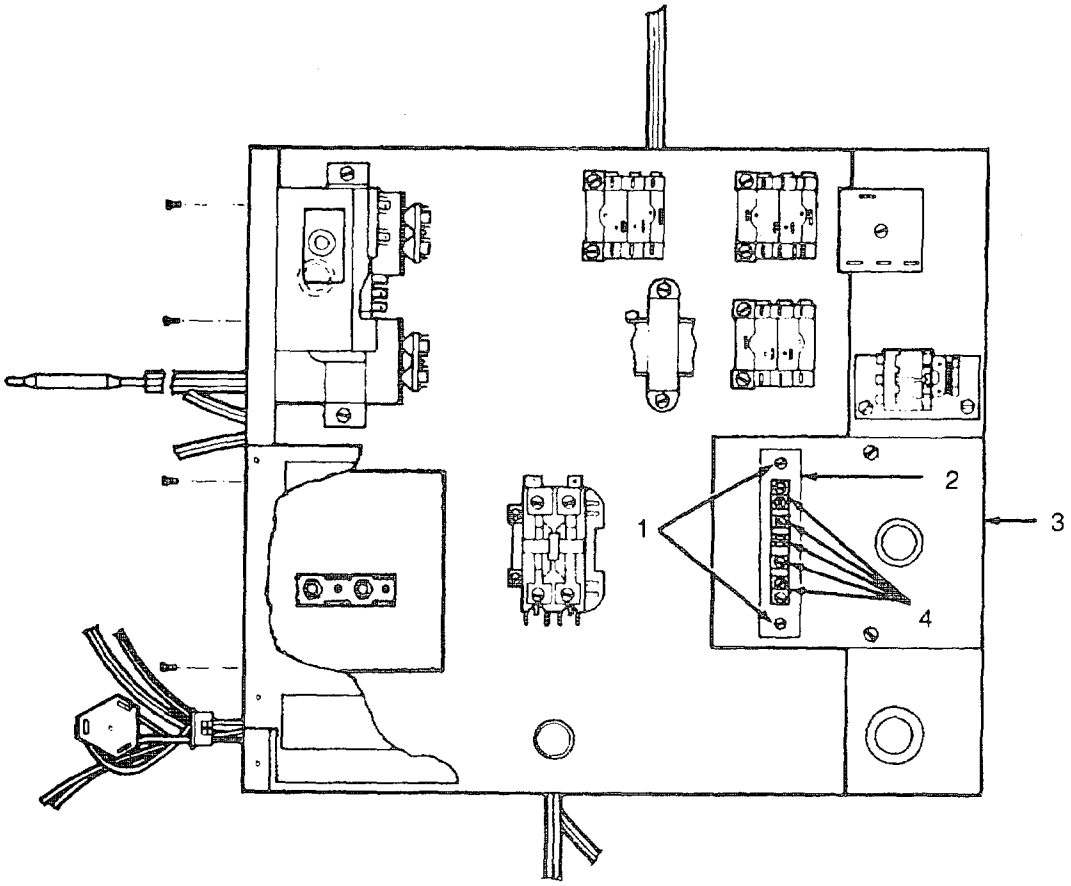

Figure 4-20. Low Voltage Terminal Block

4-25. FAN CAPACITORSM.

This task covers: a. Inspection b. Testing c. Removal d. Installation

INITIAL SETUP:

Tools:

Tool Kit, service, refrigeration unit

Materials

None

Equipment Conditions:

Power off at power source.

Both front door assemblies removed. See para 4-17.

Control box cover removed. See para 4-23.

General Safety Instructions:

Disconnect input power to the unit before performing any internal maintenance. Voltages used can kill. Shutting the unit off at the thermostat does not disconnect unit power.

a. Inspection.

(1) Check the two screws (1, Figure 4-21) and strap (2) attaching the fan capacitor (3) to the control box (4). Tighten if required.

(2) Install the control box cover. See para 4-23.

(3) Install both front door assemblies. See para 4-17.

b. Testing.

(1) Check the fan capacitor (3, Figure 4-21) with a multimeter. Replace capacitor if it shows a direct short.

(2) Install the control box cover. See para 4-23.

(3) Install both Front door assemblies. See para 4-17.

c. Removal.

(1) Tag and disconnect all wires to the fan capacitor (3, Figure 4-21).

(2) Remove the two screws (1) and strap (2) from the fan capacitor(3) and pull the fan capacitor out of the control box (4).

d. Installation.

(1) Install the Fan capacitor (3, Figure 4-21) in the control box (4) with the two screws (1) and strap (2).

(2) Connect the wires as tagged and remove the tags.

(3) Install the control box cover. See para 4-23.

(4) Install both front door assemblies. See para 4-17.

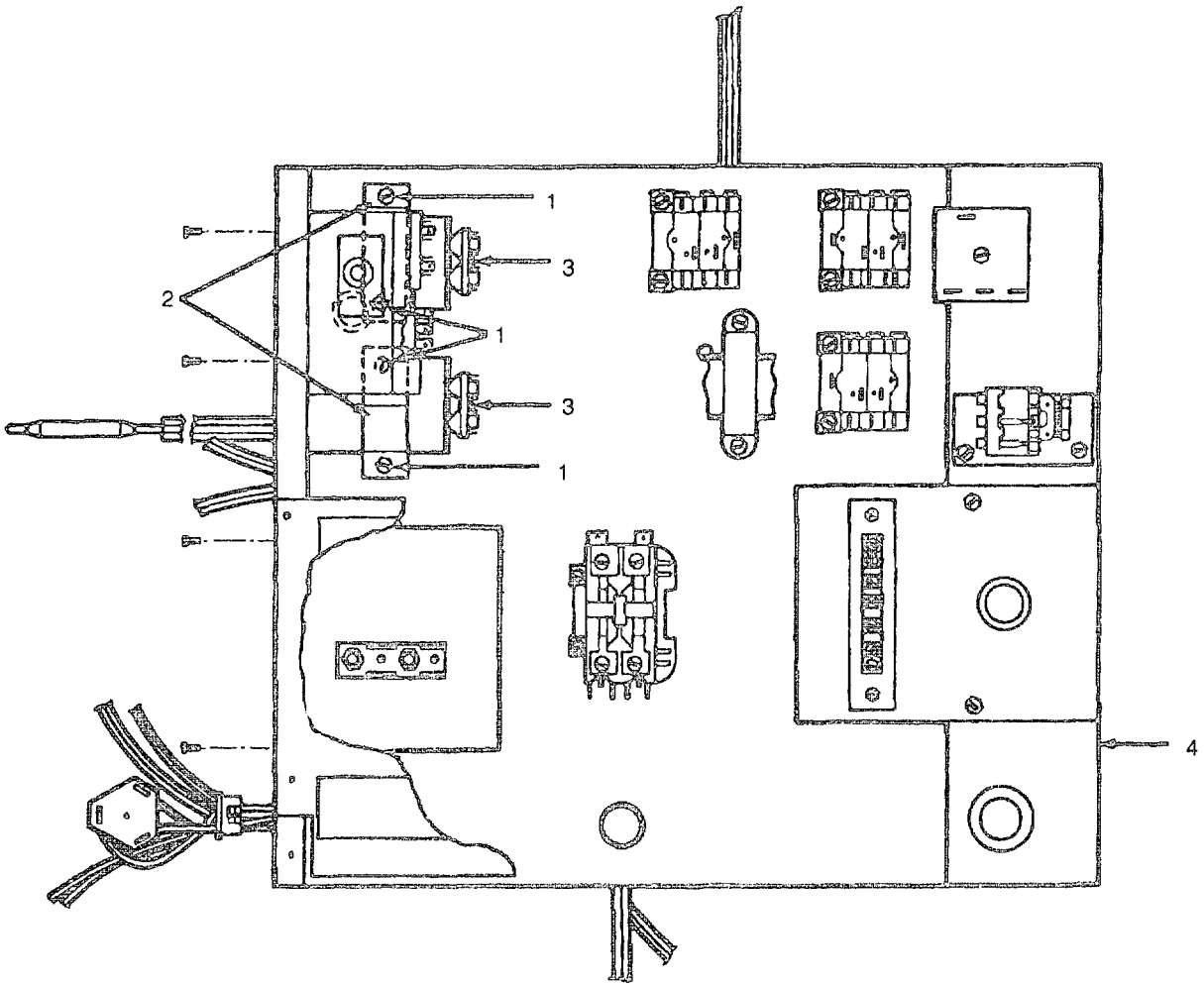

Figure 4-21. Fan Capacitors

4-26. COMPRESSOR CAPACITOR.

This task covers: a. Inspection b. Testing c. Removal d. Installation

INITIAL SETUP:
Tools:
Tool Kit, service, refrigeration unit
Equipment Conditions:
Power off at power source.
Bot,1 front door assemblies removed. See para 4-17.
General Safety Instructions:

WARNING

Disconnect input power to the unit before performing any internal maintenance. Voltages used can kill. Shutting the unit off at the thermostat does not disconnect unit power.

a. Inspection.

(1) Check the two screws (1, Figure 4-22) and strap (2) attaching the compressor capacitor (3) to the dividing wall assembly (4). Tighten if required.

(2) Install both front door assemblies. See para 4-17.

b. Testing.

(1) Check the compressor capacitor (3, Figure 4-22) with a multimeter. Replace it if it shows a direct short.

(2) Install both front door assemblies. See para 4-17.

c. Removal.

(1) Remove rubber boot and tag and disconnect all wires to the compressor capacitor (3, Figure 4-22).

(2) Loosen the two screws (1) holding the strap (2) to the dividing wall assembly (4).

(3) Remove the compressor capacitor (3) from the air conditioner.

d. Installation.

(1) Slide the compressor capacitor (3, Figure 4-22) under the retaining strap (2) on the dividing wall assembly (4).

(2) Tighten the two retaining screws (1) on the retaining strap (2).

(3) Connect the wires as tagged and remove the tags. Place rubber boot back over capacitor (3).

(4) Install both front door assemblies. See para. 4-17.

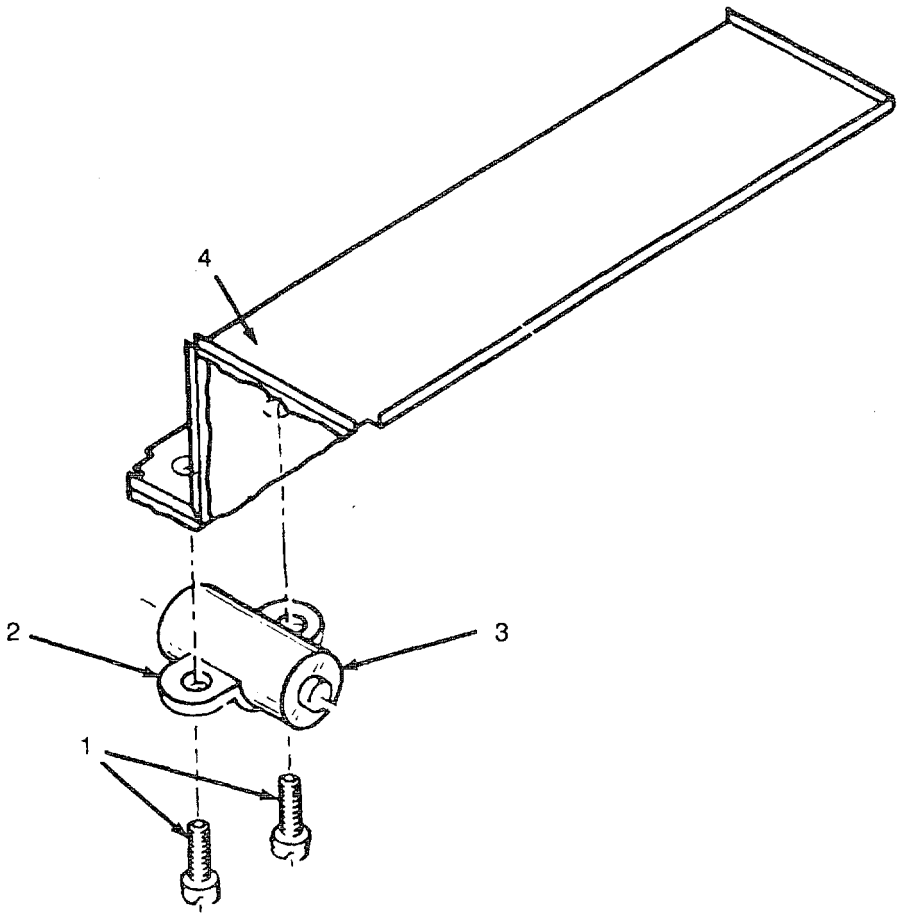

Figure 4-22. Compressor Capacitor

4-26. COMPRESSOR CAPACITOR.

This task covers: a. Inspection b. Testing c. Removal d. Installation

INITIAL SETUP:
Tools:
Tool Kit, service, refrigeration unit
Drill Set
Riveter
Materials:
Blind rivets (Appendix F, Item 14)
Control box cover removed. See para 4-23.

Equipment Conditions:
Power off at power source.
Bot,1 front door assemblies removed. See para 4-17.
General Safety Instructions:

WARNING

Disconnect input power to the unit before performing any internal maintenance. Voltages used can kill. Shutting the unit off at the thermostat does not disconnect unit power.

a. Removal.

(1) Drill out both rivets securing terminal board cover (1, Figure 4-23) in control box; remove cover.

(2) Tag wires to and from terminal board. Remove terminal lugs (2), nuts (3), lockwashers (4), and flatwashers(5) securing wires to terminal board (6). Remove wires.

(3) Remove four screws (7) securing terminal board bracket (8) to control box.

(4) Remove hexnuts (9), lockwashers (10), flatwashers (11), and screws (12) securing terminal board (6) to bracket (8).

(5) Remove terminal board (6) from bracket (8).

b. Installation.

NOTE

If installing new terminal board bracket in control box, use terminal board as template to drill two holes in bracket.

(1) Secure terminal board (6) to terminal board bracket (8) with screws (12), flatwashers (11), lockwashers (10), and hexnuts (9).

(2) Secure terminal board bracket (8) to control box with four screws (7).

(3) Replace wires as tagged. Secure with flatwashers (5), lockwashers (4), nuts (3) and terminal lugs (2).

(4) Secure terminal board cover (1) to control box by installing two new rivets.

(5) Install the control box cover. See para 4-23.

(6) Install both front door assemblies. See para 4-17.

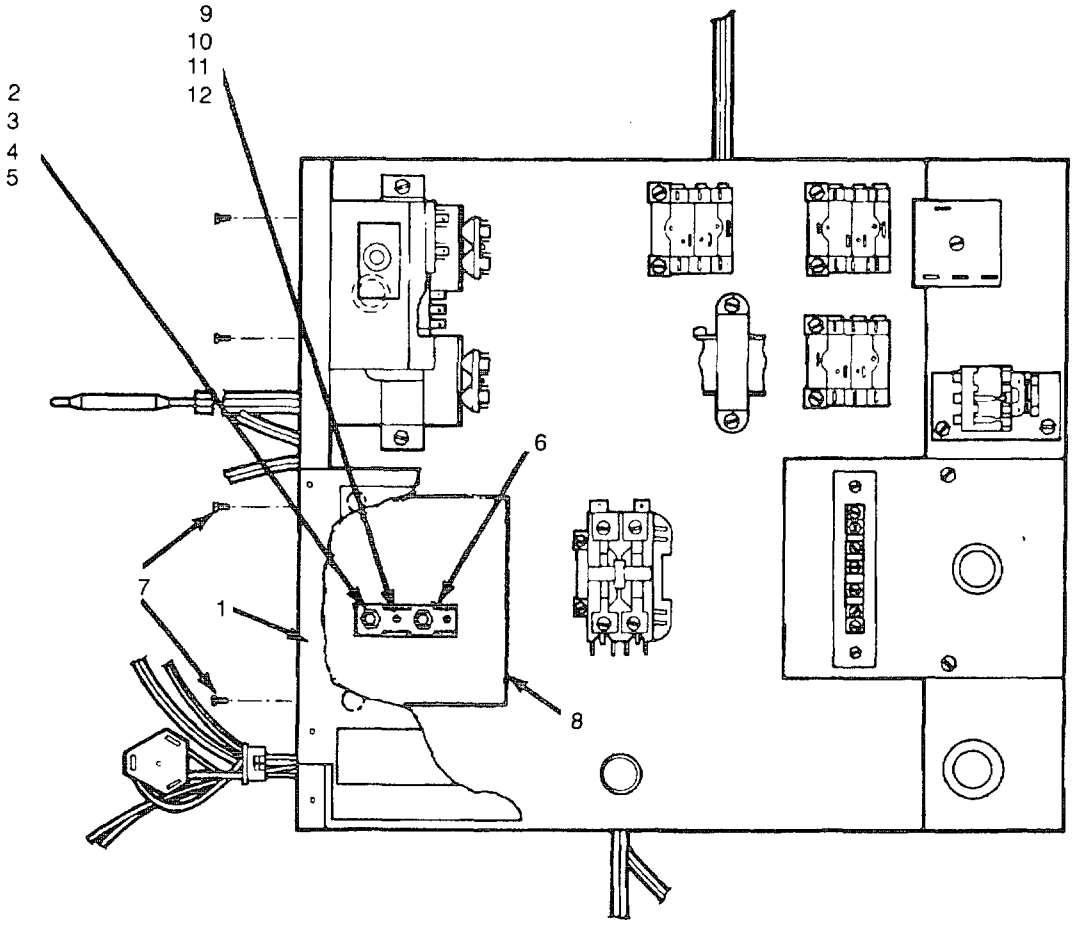

Figure 4-23. Terminal Board

4-28. LOCKOUT RELAY.

This task covers: a. Inspection b. Testing c. Removal d. Installation

INITIAL SETUP:

Tools:
Tool Kit, service, refrigeration unit

Equipment Conditions:
Power off at power source.
Both front door assemblies removed. See para 4-17.
Control box cover removed. See para 4-23.

General Safety Instructions:

WARNING

Disconnect input power to the unit before performing any internal maintenance. Voltages used can kill. Shutting the unit off at the thermostat does not disconnect unit power.

a. Inspection.

(1) Check the two screws (1, Figure 4-24) attaching the lockout relay (2) to the control box (3). Tighten if required.
(2) Install the control box cover. See para 4-23.
(3) Install both front door assemblies. See para 4-17.

b. Testing.

(1) Check the lockout relay (2, Figure 4-24) with a multimeter. The multimeter should show the relay opening and closing as you manually open and close the contact points.
(2) Install the control box cover. See para 4-23.
(3) Install both front door assemblies. See para 4-17.

c. Removal.

(1) Tag and disconnect all wires to the lockout relay (2, Figure 4-24).
(2) Remove the two screws (1) from the lockout relay (2) and pull the lockout relay out of the control box (3).

d. Installation.

(1) Install the lockout relay (2, Figure 4-24) In the control box (3) with the two screws (1).
(2) Install the control box cover. See para 4-23.
(3) Install both front door assemblies. See para 4-17.

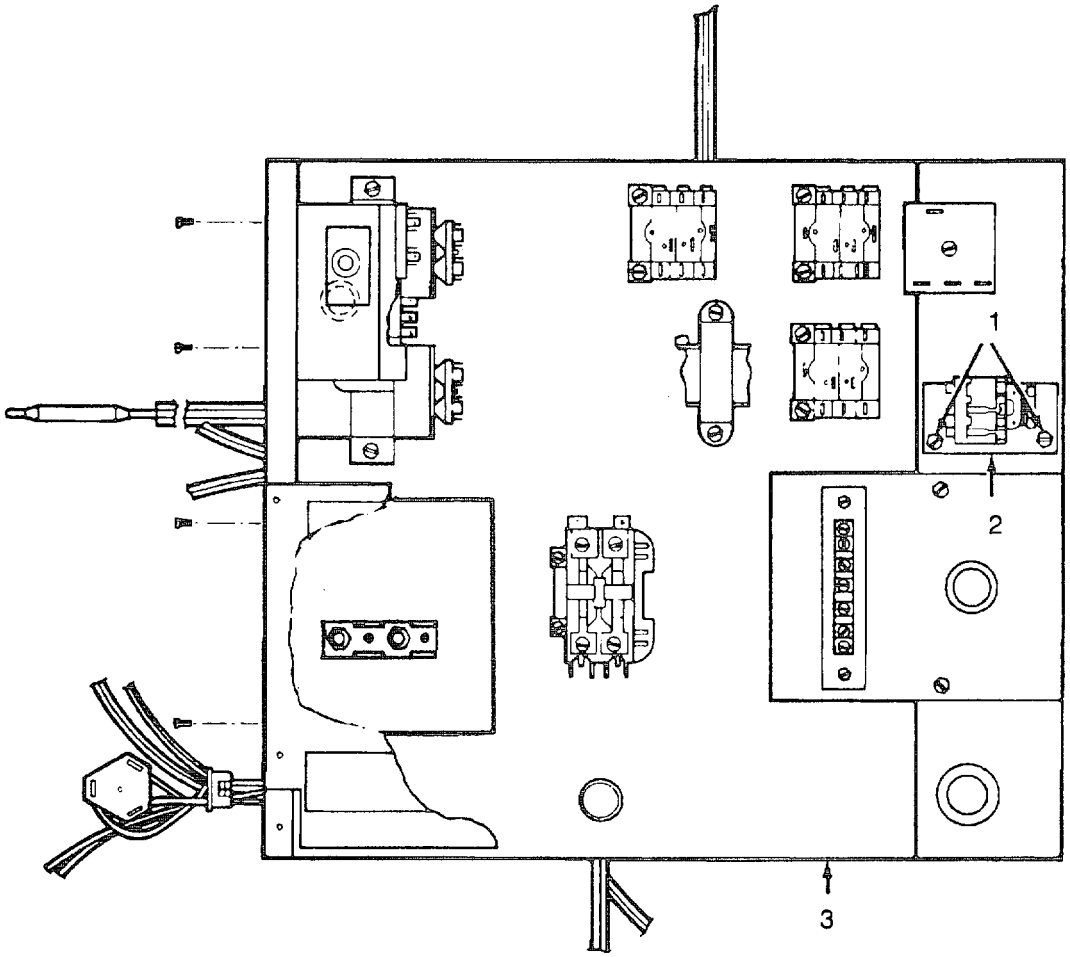

Figure 4-24. Lockout Relay

4-29. HEAT RELAY.

This task covers: a. Inspection b. Testing c. Removal d. Installation

INITIAL SETUP:

Tools:
Tool Kit, service, refrigeration unit

Equipment Conditions:
Power off at power source.
Both front door assemblies removed. See para 4-17.
Control box cover removed. See para 4-23.

General Safety Instructions:

WARNING

Disconnect input power to the unit before performing any internal maintenance. Voltages used can kill. Shutting the unit off at the thermostat does not disconnect unit power.

a. Inspection.

(1) Check the two screws (1, Figure 4-25) attaching the heat relay (2) to the control box (3). Tighten if required.
(2) Install the control box cover. See para 4-23.
(3) Install both front door assemblies. See para 4-17.

b. Testing.

(1) Check the heat relay (2, Figure 4-25) with a multimeter. The multimeter should show the relay opening and closing as you manually open and close the contact points.
(2) Install the control box cover. See para 4-23.
(3) Install both front door assemblies. See para 4-17.

c. Removal.

(1) Tag and disconnect all wires to the heat relay (2, Figure 4-25).
(2) Remove the two screws (1) from the heat relay (2) and pull the heat relay out of the control box (3).

d. Installation

(1) Install the heat relay (2, Figure 4-25) In the control box (3) with the two screws (1).
(2) Connect the wires as tagged and remove the tags.
(3) Install the control box cover. See para 4-23.
(4) Install both front door assemblies. See para 4-17.

4-29. HEAT RELAY - Continued.

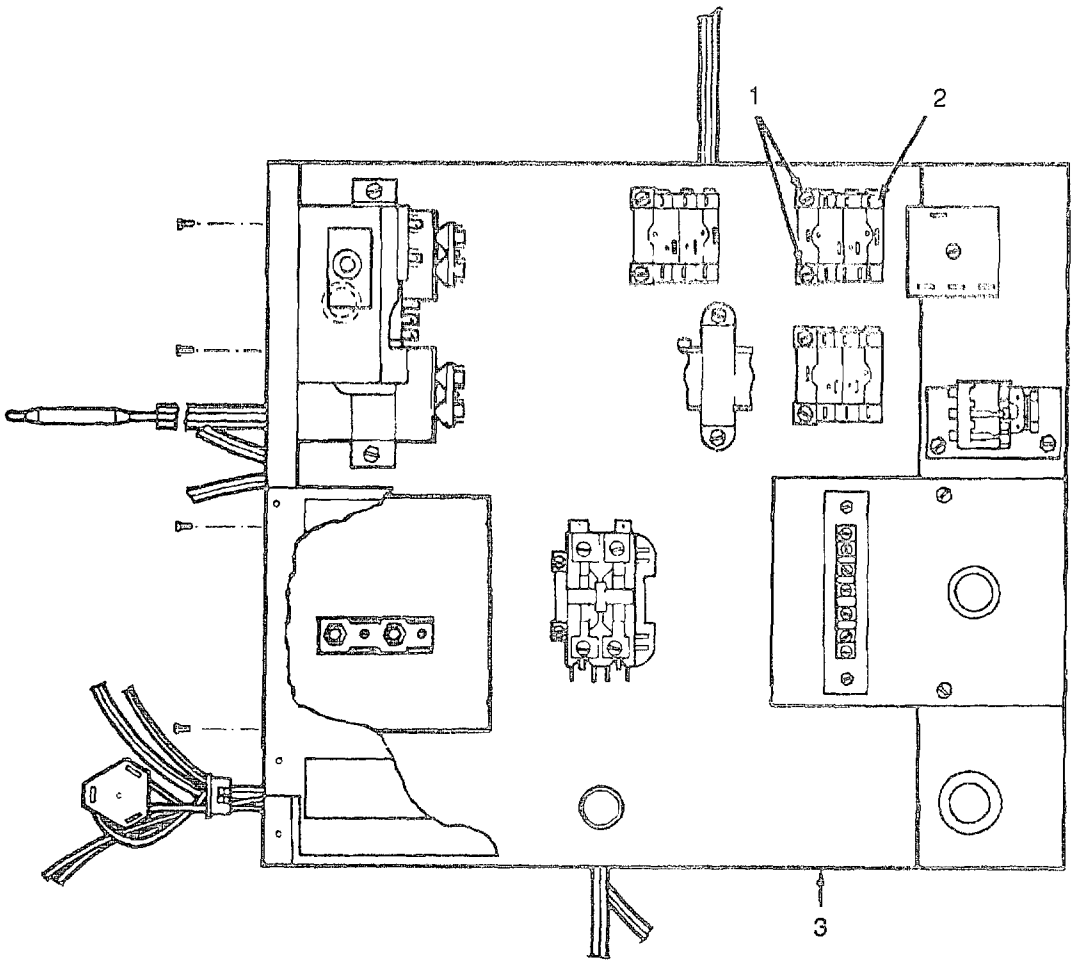

Figure 4-25. Heat Relay

4-30. HEAT/COOL RELAY.

This task covers: a. Inspection b. Testing c. Removal d. Installation

INITIAL SETUP:

Tools:
Tool Kit, service, refrigeration unit

Equipment Conditions:
Power off at power source.
Both front door assemblies removed. See para 4-17.
Control box cover removed. See para 4-23.

General Safety Instructions:

WARNING

Disconnect input power to the unit before performing any internal maintenance. Voltages used can kill. Shutting the unit off at the thermostat does not disconnect unit power.

a. Inspection.

(1) Check the two screws (1, Figure 4-26) attaching the heat/cool relay (2) to the control box (3). Tighten if required.
(2) Install the control box cover. See para 4-23.
(3) Install both front door assemblies. See para 4-17.

b. Testing

(1) Check the heat/cool relay (2, Figure 4-26) with a multimeter. The multimeter should show the relay opening and closing as you manually open and close the contact points.
(2) Install the control box cover. See para 4-23.
(3) Install both front door assemblies. See para 4-17.

c. Removal.

(1) Tag and disconnect all wires to the heat/cool relay (2, Figure 4-26).
(2) Remove the two screws (1) from the heat/cool relay (2) and pull the heat/cool relay out of the control box (3).

d. Installation

(1) Install the heat/cool relay (2, Figure 4-26) In the control box (3) with the two screws (1).
(2) Connect the wires as tagged and remove the tags.
(3) Install the control box cover. See para 4-23.
(4) Install both front door assemblies. See para 4-17.

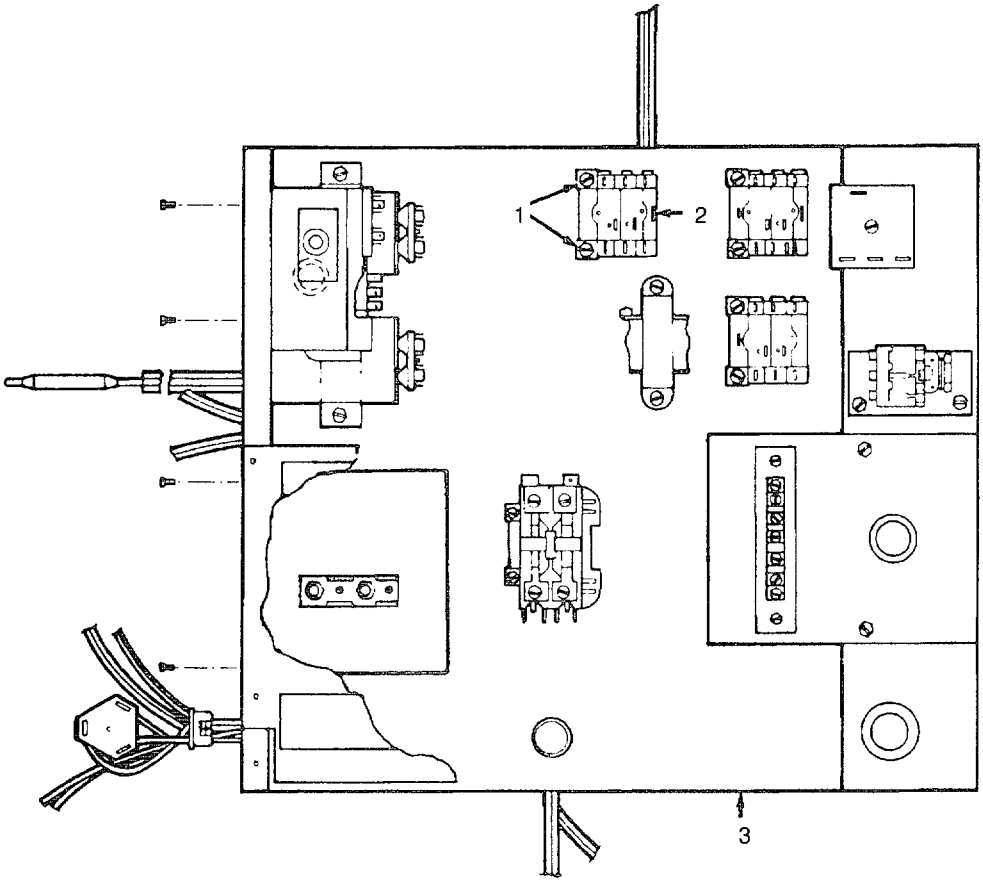

Figure 4-26. Heat/Cool Relay

4-31. LOW VOLTAGE TRANSFORMER.

This task covers: a. Inspection b. Testing c. Removal d. Installation

INITIAL SETUP:

Tools:
Tool Kit, service, refrigeration unit

Equipment Conditions:
Power off at power source.
Both front door assemblies removed. See para 4-17.
Control box cover removed. See para 4-23.

General Safety Instructions:

WARNING

Disconnect input power to the unit before performing any internal maintenance. Voltages used can kill. Shutting the unit off at the thermostat does not disconnect unit power.

a. Inspection.

(1) Check the two screws (1, Figure 4-27) attaching the low voltage transformer relay (2) to the control box (3). Tighten if required.
(2) Install the control box cover. See para 4-23.
(3) Install both front door assemblies. See para 4-17.

b. Testing.

(1) Check the low voltage transformer (2, Figure 4-27) with a multimeter. Replace if the multimeter shows an open circuit..
(2) Install the control box cover. See para 4-23.
(3) Install both front door assemblies. See para 4-17.

c. Removal.

(1) Tag and disconnect all wires to the low voltage transformer. See Figure 4-27).
(2) Remove the two screws (1) from the low voltage transformer (2) and pull the low voltage transformer out of the control box (3).

d. Installation

(1) Install the low voltage transformer (2, Figure 4-27) In the control box (3) with the two screws (1).
(2) Connect the wires as tagged and remove the tags.
(3) Install the control box cover. See para 4-23.
(4) Install both front door assemblies. See para 4-17.

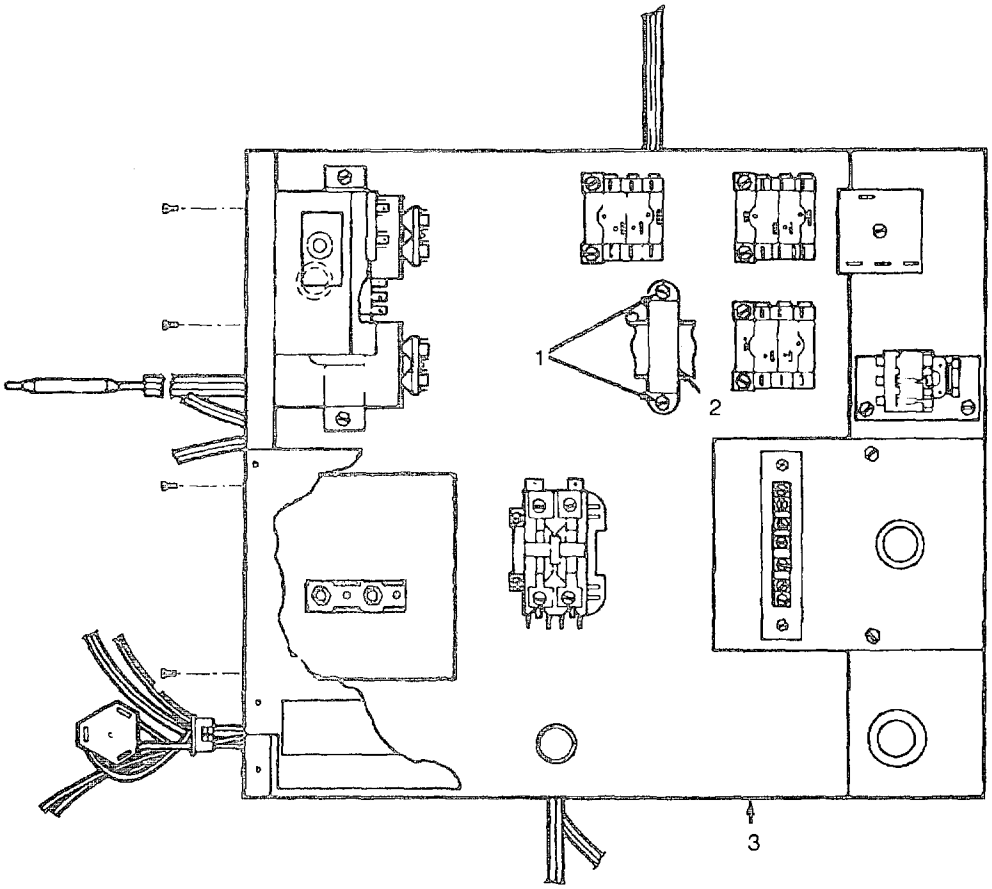

Figure 4-27. Low Voltage Transformer

4-32. COMPRESSOR CONTACTOR.

This task covers: a. Inspection b. Testing c. Removal d. Installation

INITIAL SETUP:

Tools:
Tool Kit, service, refrigeration unit

Equipment Conditions:
Power off at power source.
Both front door assemblies removed. See para 4-17.
Control box cover removed. See para 4-23.

General Safety Instructions:

WARNING

Disconnect input power to the unit before performing any internal maintenance. Voltages used can kill. Shutting the unit off at the thermostat does not disconnect unit power.

a. Inspection.
(1) Check the two screws (1, Figure 4-28) attaching the compressor contactor (2) to the control box (3). Tighten if required.
(2) Install the control box cover. See para 4-23.
(3) Install both front door assemblies. See para 4-17.

b. Testing.
(1) Check the compressor contactor (2, Figure 4-28) with a multimeter. If it shows a short to ground, replace it.
(2) Install the control box cover. See para 4-23.
(3) Install both front door assemblies. See para 4-17,

c. Removal.
(1) Tag and disconnect all wires to the compressor contactor (2, Figure 4-28).
(2) Remove the two screws (1) from the compressor contactor (2) and pull the compressor contactor out of the control box (3).

d. Installation.
(1) Install the compressor contactor (2, Figure 4-28) in the control box (3) with the two screws (1).
(2) Connect the wires as tagged and remove the tags.
(3) Install the control box cover. See para 4-23.
(4) Install both front door assemblies. See para 4-17.

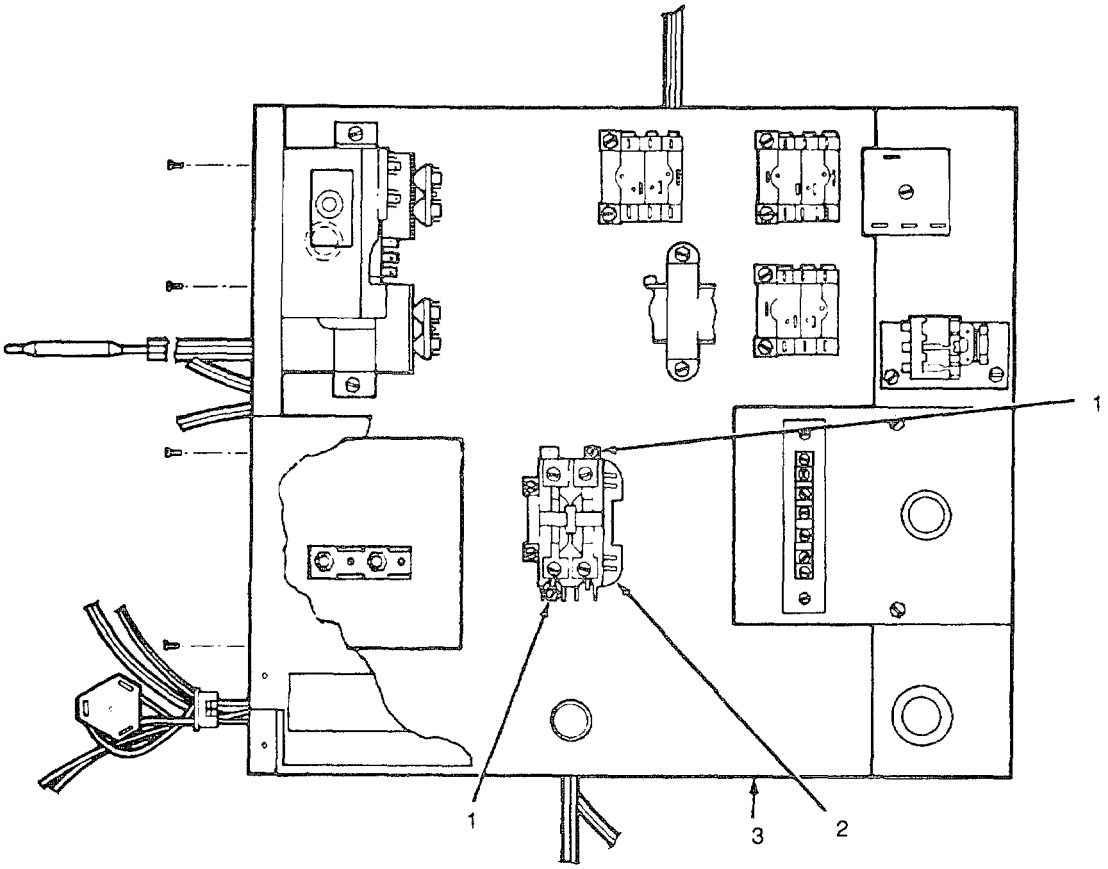

Figure 4-28. Compressor Contactor

4-33. FAN RELAY.

This task covers: a. Inspection b. Testing c. Removal d. Installation

INITIAL SETUP:

Tools:
Tool Kit, service, refrigeration unit
Multimeter

Equipment Conditions:
Power off at power source.
Both front door assemblies removed. See para 4-17.
Control box cover removed. See para 4-23.

General Safety Instructions:

WARNING

Disconnect input power to the unit before performing any internal maintenance. Voltages used can kill. Shutting the unit off at the thermostat does not disconnect unit power.

a. Inspection.
(1) Check the two screws (1, Figure 4-28) attaching the fan relay (2) to the control box (3). Tighten if required.
(2) Install the control box cover. See para 4-23.
(3) Install both front door assemblies. See para 4-17.

b. Testing.
(1) Check the fan relay (2, Figure 4-29) with a multimeter. The multimeter should show the relay opening and closing as you manually open and close the contacts.
(2) Install the control box cover. See para 4-23.
(3) Install both front door assemblies. See para 4-17,

c. Removal.
(1) Tag and disconnect all wires to the fan relay (2, Figure 4-29).
(2) Remove the two screws (1) from the fan relay (2) and pull the fan relay out of the control box (3).

d. Installation.
(1) Install the fan relay (2, Figure 4-28) in the control box (3) with the two screws (1).
(2) Connect the wires as tagged and remove the tags.
(3) Install the control box cover. See para 4-23.
(4) Install both front door assemblies. See para 4-17.

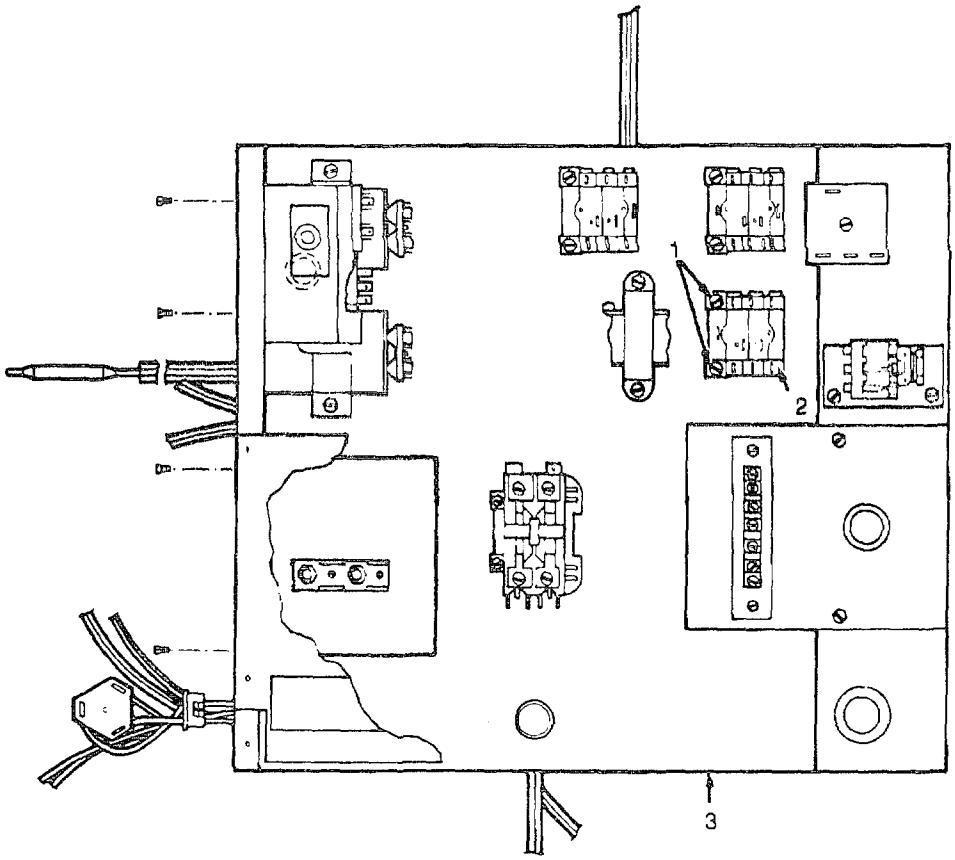

Figure 4-29. Fan Relay

4-34. FAN DELAY RELAY.

This task covers: a. Inspection b. Testing c. Removal d. Installation

INITIAL SETUP:

Tools:
Tool Kit, service, refrigeration unit
Multimeter

Equipment Conditions:
Power off at power source.
Both front door assemblies removed. See para 4-17.
Control box cover removed. See para 4-23.

General Safety Instructions:

WARNING

Disconnect input power to the unit before performing any internal maintenance. Voltages used can kill. Shutting the unit off at the thermostat does not disconnect unit power.

a. Inspection.
(1) Check the screws (1, Figure 4-30) attaching the fan delay relay (2) to the control box (3).Tighten If required.
(2) Install the control box cover. See para 4-23.
(3) Install both front door assemblies. See para 4-17.

b. Testing.
(1) Check the fan delay relay with power on. The fan should continue to run 60 to 120 seconds after the compressor stops running In the cool mode. If it does not, replace defective relay.
(2) Install the control box cover. See para 4-23.
(3) Install both front door assemblies. See para 4-17.

c. Removal.
(1) Tag and disconnect all wires to the fan delay relay (2, Figure 4-3()).
(2) Remove the two screws (1) from the fan delay relay (2) and pull the fan delay relay out of the control box (3).

d. Installation.
(1) Install the fan delay relay (2, Figure 4-30) in the control box (3) with the screw (1).
(2) Connect the wires as tagged and remove the tags.
(3) Install the control box cover. See para 4-23.
(4) Install both front door assemblies. See para 4-17.

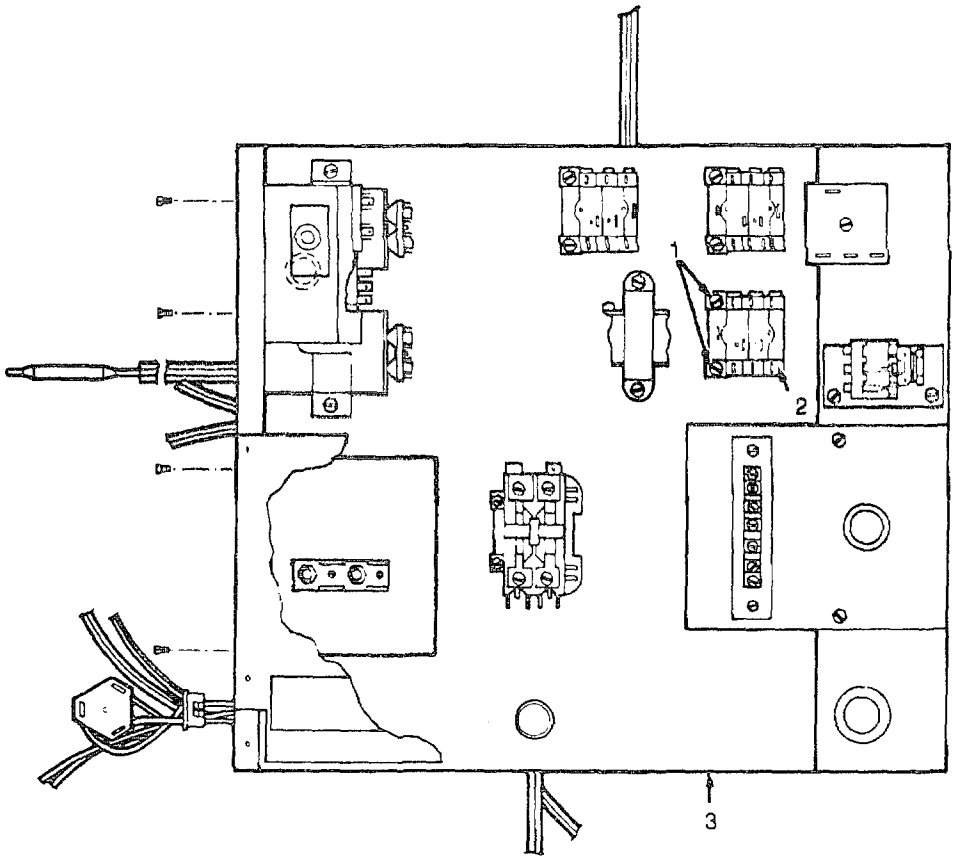

Figure 4-30. Fan Delay Relay

4-35. REVERSING VALVE SOLENOID.

This task covers: a. Inspection b. Testing c. Removal d. Installation

INITIAL SETUP:

Tools:
Tool Kit, service, refrigeration unit

Equipment Conditions:
Power off at power source.
Both front door assemblies removed. See para 4-17.

General Safety Instructions:

WARNING

Disconnect input power to the unit before performing any internal maintenance. Voltages used can kill. Shutting the unit off at the thermostat does not disconnect unit power.

a. Inspection.
(1) Check reversing valve solenoid (1, Figure 4-31) for loose or missing wires or hardware.
(2) Install both front door assemblies. See para 4-17.

b. Testing.
(1) Connect power with the panels removed.
(2) Switch the thermostat from COOL to HEAT, wait one minute, and switch back to COOL. The solenoid (1, Figure 4-31) should position the reversing valve (2) from cool to heat and back to cool. If not, replace the solenoid.
(3) Install both front door assemblies. See para 4-17.

c. Removal.
(1) Tag and removing all wiring on the reversing valve solenoid (1, Figure 4-31).
(2) Remove the two screws (3) and pull the reversing valve solenoid out of the air conditioner.

d. Installation.
(1) Place the reversing valve solenoid (1, Figure 4-31) on the reversing valve (2) In the air conditioner. Secure the reversing valve solenoid to the reversing valve with two screws (3).
(2) Connect the wires as tagged and remove the tags.
(3) Install both front door assemblies See para 4-17.

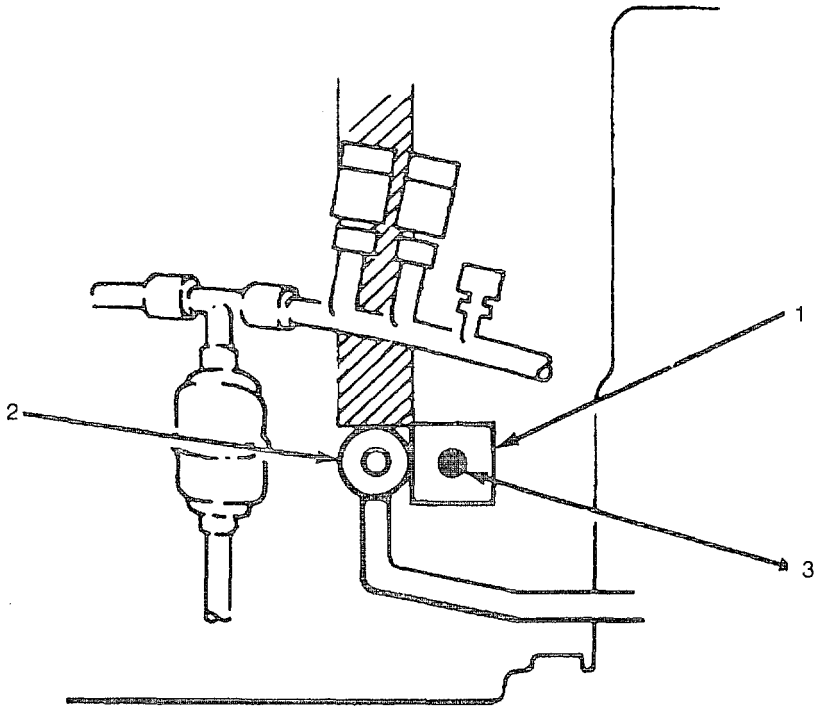

Figure 4-31. Reversing Valve Solenoid

4-36. DEFROST CONTROL.

This task covers: a. Inspection b. Testing c. Removal d. Installation

INITIAL SETUP:

Tools:
Tool Kit, service, refrigeration unit

Materials:
Rock Salt (Appendix F, Item 15)
Ice
Insulated Container (Appendix E)

Equipment Conditions:
Power off at power source.
Both front door assemblies removed. See para 4-17.
Control box cover removed. See para 4-23.
Left side door assembly removed. See para 4-19.

General Safety Instructions:

WARNING

Disconnect input power to the unit before performing any internal maintenance. Voltages used can kill. Shutting the unit off at the thermostat does not disconnect unit power.

a. Inspection.
(1) Check the two screws (1, Figure 4-32) attaching the defrost control (2) to the control box (3). Tighten if required.
(2) Install the control box cover. See para 4-23.
(3) Install both front door assemblies. See para 4-17.
(4) Install left side door assembly. See para 4-19.

b. Testing.
(1) Mix rock salt, Ice, and water in Insulated container to form brine solution. Bring temperature of brine solution below 26 degrees Fahrenheit (-3 degrees Centigrade).
(2) Remove sensing bulb (4, Figure 4-32) from mounting bracket on left side of the outdoor coil assembly. Submerge sensing bulb in brine solution.
(3) Apply power to system. Set thermostat to heat.

WARNING

HIGH VOLTAGE is used in the operation of this equipment. DEATH ON CONTACT or severe injury may result if personnel fail to observe safety precautions.

(4) Rotate clock motor shaft (5), observing cam position in window (8) below shaft. Stop switch lever (9) just before deep slot (7).

(5) Allow the clock motor to drive the cam for two minutes or so and allow the lever to drop into the slot. The control (SPDT switch) should de-energize the outdoor fan motor and the reversing valve solenoid The outdoor fan motor should stop and a "swooch" sound will indicate the switching of the reversing valve to the cooling mode. The outdoor coil should begin to get hot. If not, replace defective defrost control.

(6) Remove the sensing bulb from the brine solution and bring temperature up to a min of 56 degrees Fahrenheit (12 degrees Centigrade). When the sensing bulb temperature reaches 56 degrees Fahrenheit (12 degrees Centigrade) the control (SPDT switch) should energize the outdoor motor and solenoid coil, putting the system back in the normal heating mode. If not, replace defective defrost control.

c. Removal.

(1) Tag and disconnect all wires to the defrost control. See Figure 4-32.

(2) Remove the two screws (1) from the defrost control (2) and pull the defrost control out of the control box (3). Feed the sensing bulb (4) up out of bracket on left side of outdoor coil, through the compressor base pan.

d. Installation.

(1) Install the defrost control (2, Figure 4-32) in the control box (3) with two screws (1).

(2) Connect the wires as tagged and remove tags.

(3) Feed the sensing bulb (4) down through the compressor base pan and slip it into the clip on the left side of the outdoor coil.

(4) Install the control box cover. See para 4-23.

(5) Install both front door assemblies. See para 4-17.

(6) Install left side door assembly. See para 4-19.

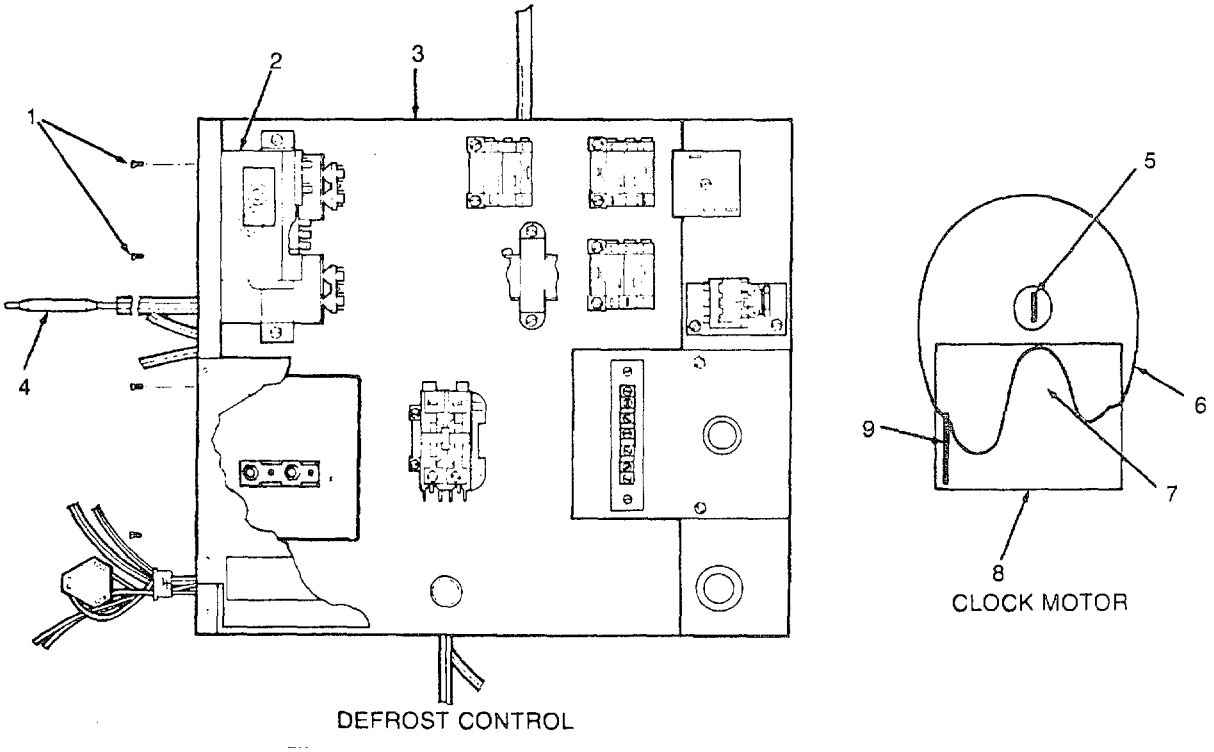

Figure 4-32. Defrost Control and Clock Motor.

4-37. INDOOR FANS.

This task covers: a. Inspection b. Testing c. Removal d. Installation

INITIAL SETUP:

Tools:
Tool Kit, service, refrigeration unit
Drill Set (only if installing new indoor fan)

Materials:
Rags (Appendix F, Item 7)
Silicone Adhesive (Appendix F, Item 12)

Equipment Conditions:
Power off at power source.
Both front door assemblies removed. See para 4-17.
Control box cover removed. See para 4-23.

General Safety Instructions:

WARNING

Disconnect input power to the unit before performing any internal maintenance. Voltages used can kill. Shutting the unit off at the thermostat does not disconnect unit power.

a. Inspection.
(1) Check the Indoor fans (1, Figure 4-33) for loose or missing hardware.
(2) Install control box cover and both front door assemblies. See paras 4-23 and 4-17.

b. Service.
(1) Wipe the indoor Fans (i, Figure 4-33) with clean rags to remove dust.
(2) Install control box cover and both front door assemblies. See paras 4-23 and 4-17.

c. Removal.
(1) Tag and remove wiring to indoor fan motor (2, Figure 4-33) from control box connections.
(2) Remove five screws (3) holding indoor fan assembly in place and retain.
(3) Cut foam (4) and silicone seals (5) around indoor fan assembly and pull the indoor fan assembly forward and out from the air conditioner.

NOTE

The removal procedure is the same for either the left or the right indoor fan.

(4) Loosen the 5/16 set bolt (6) holding the indoor fan (1) to the fan motor shaft.
(5) Remove the four screws (7) that secure the fan to the front and rear brackets (8).
(6) Remove the three (1) screws (9) that secure the indoor fan motor bracket (10) to the indoor fan (1).
(7) Pull the indoor fan (i) away from the indoor fan rnotor bracket (10) and remove the three screws (1 i) holding the fan side bracket (12) to the indoor fan.

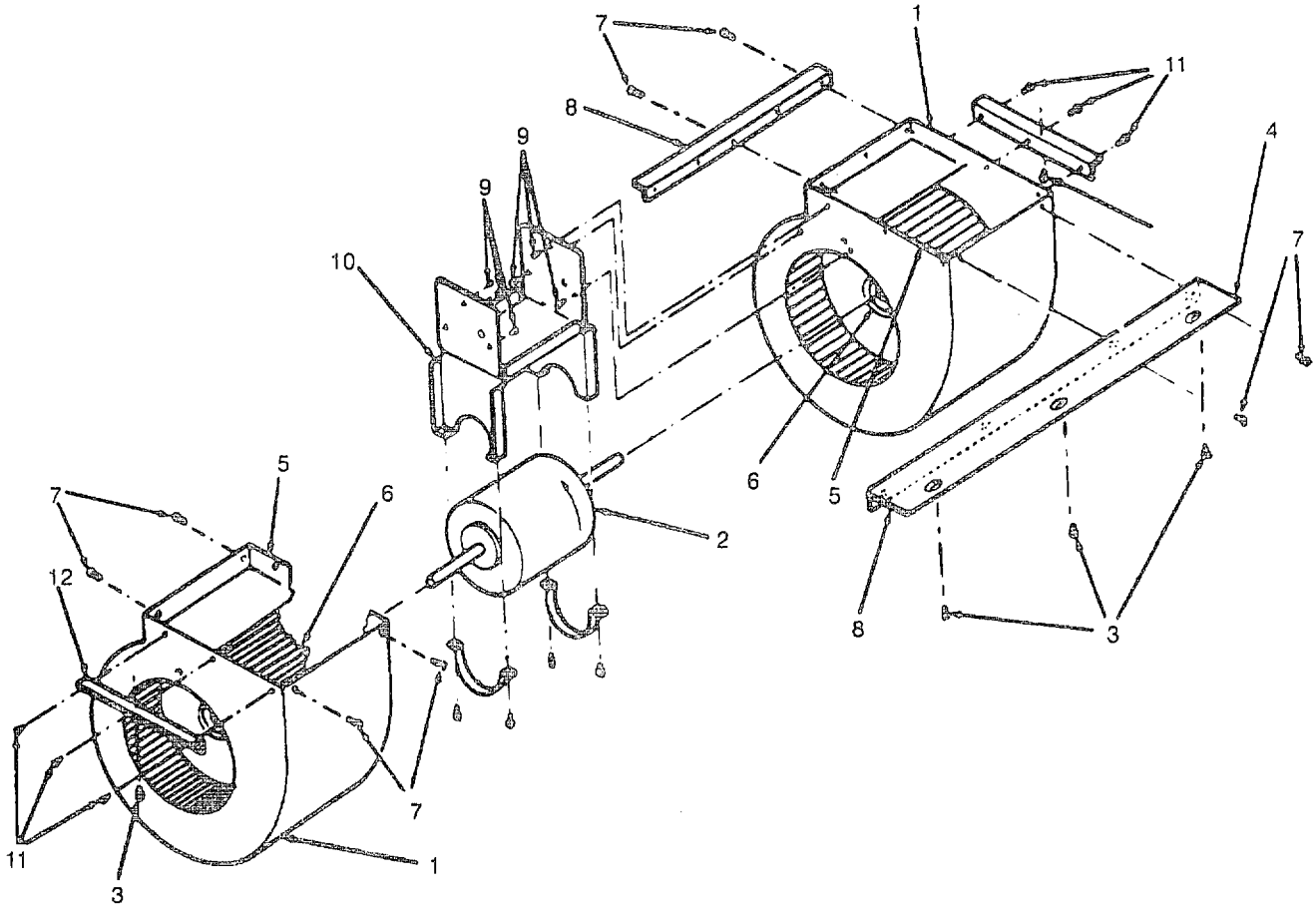

Figure 4-33. Indoor Fans

4-37. INDOOR FANS - Continued.

d. Installation.

NOTE

If a new indoor fan is to be installed, use the fan side bracket as a template to drill holes.

(1) Drill mounting holes, if required, for fan side bracket.
(2) Mount the fan side bracket (12) to the indoor fan (1) with the three screws (11).
(3) Slide fan onto motor shaft and secure the indoor fan to the front and rear brackets (8) with the four screws (7).
(4) Align the shaft of the fan motor (2) so that the flat spot on the shaft is below the 5/16 set bolt (6) and tighten the 5/16 set bolt.
(5) Secure the indoor fan to the fan motor bracket (10) with the three screws (9).
(6) Slide the indoor fan assembly into the air conditioner and secure with the five screws (3).
(7) Use silicone to seal any gaps where the top of the fans (1) meet the drain pan assembly. See Figure 1-2. Connect the wires as tagged and remove the tags.
(8) Install control box cover and both front door assemblies. See paras 4-23 and 4-17.

4-38. INDOOR FANS MOTOR.

This task covers: a. Inspection b. Testing c. Removal d. Installation

---

INITIAL SETUP:

Tools:
Tool Kit, service, refrigeration unit

Materials:
Rags (Appendix F, Item 7)
Silicone Adhesive (Appendix F, Item 12)

Equipment Conditions:
Power off at power source.
Both front door assemblies removed. See para 4-17.
Control box cover removed. See para 4-23.

General Safety Instructions:

WARNING

Disconnect input power to the unit before performing any internal maintenance. Voltages used can kill. Shutting the unit off at the thermostat does not disconnect unit power.

---

a. Inspection.
(1) Check the indoor fans motor (1, Figure 4-34) for loose or missing hardware.
(2) Install both front door assemblies. See para 4-17.

b. Service.
   (1) Wipe the indoor fans motor (1, Figure 4-34) with clean rags to remove dust.
   (2) Install both front door assemblies. See para 4-17.

c. Testing.
   (1) Use the multimeter to check the windings of the indoor fans motor (1, Figure 4-34). An open or short to ground indicates the motor must be replaced.
   (2) Install both front door assemblies. See para 4-17.

d. Removal.
   (1) Tag and remove wiring to indoor fan motor (1, Figure 4-34) from control box connections.
   (2) Remove five screws (2) holding indoor fan assembly in place and retain.
   (3) Cut foam (3) and silicone seals (4) around indoor fan assembly and pull the indoor fan assembly forward and out from the air conditioner.
   (4) Loosen the 5/16 set bolts (5) holding both the indoor fans (6) to the fan motor shaft.
   (5) Remove the four screws (7) that secure the left fan to the front and rear brackets (8).
   (6) Remove the six screws (9) that secure the fan motor bracket (10) to the indoor fans.
   (7) Slide the indoor fans (6) off the motor (1) shaft.
   (8) Remove the four screws (11) holding the motor clamps (12) and remove.
   (9) Remove the fan motor from the fan motor bracket.
   (10) Remove ground screw and wire from the indoor fan motor bracket (10).

e. Installation.

CAUTION

Motor oiler must be up and rotation arrow must appear as shown in Figure 4-34. Mounting the motor any other way could cause damage to the motor.

   (1) Install the fan motor (1) on the fan motor bracket (1 0) and secure with the motor clamps (1 2) and four screws (11).
   (2) Slide the indoor fans (6) onto the indoor fan motor (1) shaft.
   (3) Secure both indoor fans to the fan motor bracket with the six screws (9).
   (4) Mount the Left indoor fan to the front and rear brackets with the four screws (7).
   (5) Align the shaft of the fan motor so that the flat spots on the shaft are below the 5/16 set bolts (5) and tighten the 5/16 set bolts.
   (6) Slide the indoor fan assembly into the air conditioner and secure with the five screws (2).
   (7) Use silicone to seal any gaps where the top of the fans meet the drain pan assembly See Figure 1-2. Connect the wires as tagged and remove the tags.
   (8) Install control box cover (para 4-23) and both front door assemblies (para 4-17).

4-38. INDOOR FANS MOTOR - Continued.

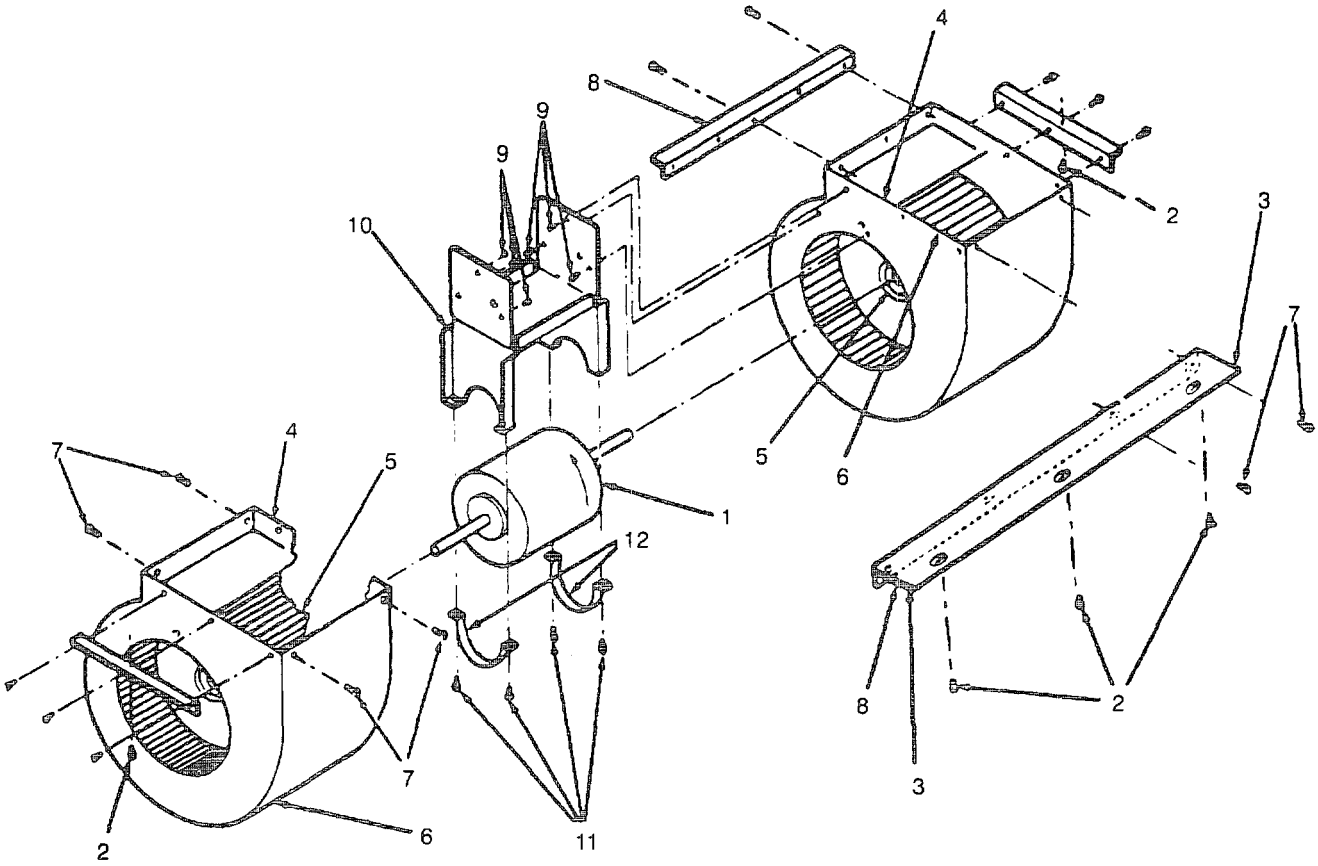

Figure 4-34. Indoor Fans Motor

4-39. INDOOR FANS MOTOR BRACKET.

This task covers: a. Inspection b. Testing c. Removal d. Installation

INITIAL SETUP:

Tools:
Tool Kit, service, refrigeration unit

Materials:
Silicone Adhesive (Appendix F, Item 12)

Equipment Conditions:
Power off at power source.
Both front door assemblies removed. See para 4-17.
Control box cover removed. See para 4-23.

General Safety Instructions:

WARNING

Disconnect input power to the unit before performing any internal maintenance. Voltages used can kill. Shutting the unit off at the thermostat does not disconnect unit power.

a. Inspection.
(1) Check the indoor fans motor bracket (1, Figure 4-35) for loose or missing hardware.
(2) Install both front door assemblies. See para 4-17.

b. Removal.
(1) Tag and remove wiring to indoor fan motor (2, Figure 4-35) at control box connections.
(2) Remove five screws (3) holding indoor fan assembly in place and retain.
(3) Cut foam (4) and silicone seals (5) around indoor fan assembly and pull the indoor fan assembly forward and out from the air conditioner.
(4) Loosen the 5/16 set bolts (6) holding both indoor fans (7) to the shaft of the indoor fan motor.
(5) Remove the four screws (8) that secure the left fan to the front and rear brackets (9).
(6) Remove the six screws (10) that secure the indoor fans motor bracket (1) to the Indoor fans.
(7) Slide indoor fans (7) off of indoor fan motor (2) shaft.
(8) Remove the four screws (11) holding the motor clamps (12) and remove the clamps.
(9) Remove the indoor fan motor from the indoor fan motor bracket.

4-39. INDOOR FANS MOTOR BRACKET- Continued.

c. Installation.

CAUTION

Motor oiler must be up and rotation arrow must appear as shown in Figure 4-35. Mounting the motor any other way could cause damage to the motor.

(1) Install the fan motor (2) on the fan motor bracket (1) and secure wi*th* the motor clamps (12) and four screws (11).
(2) Slide the indoor fans (7) onto the indoor fan motor (2) shaft.
(3) Secure both Indoor fans to the fan motor bracket with the six screws (10).
(4) Secure the left indoor fan to the front and rear brackets (9) with the four screws (8).
(5) Align the shaft of the fan motor so that the flat spots on the shaft are below the 5/16 set bolts (6) and tighten the 5/16 set bolt.
(6) Slide the indoor fan assembly into the air conditioner and secure with the five screws (3).
(7) Use silicone to seal any gaps where the top of the fans meet the drain pan assembly. See Figure 1-2. Connect the wires as tagged and remove the tags.
(8) Install control box cover (para 4-23) and both front door assemblies (para 4-17).

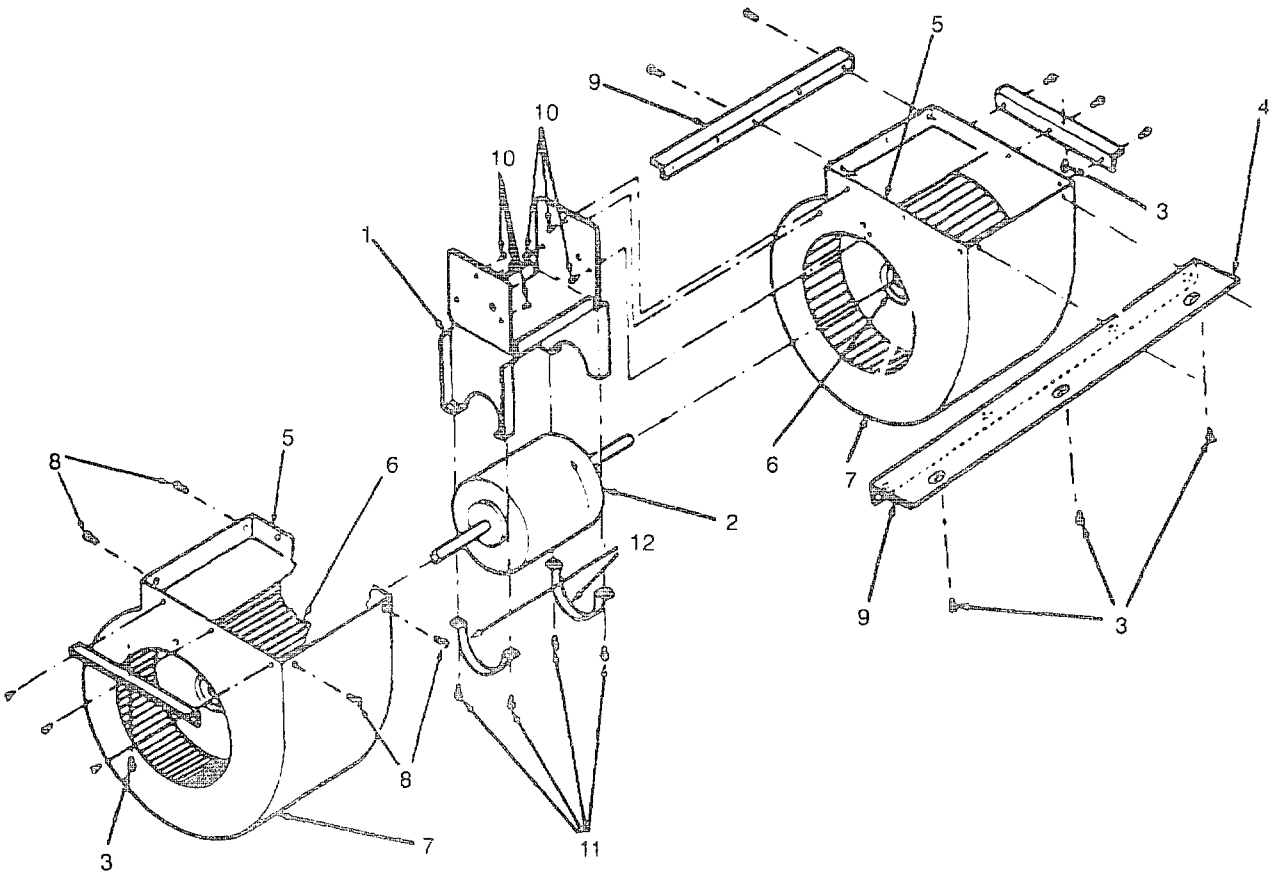

Figure 4-35. INDOOR FANS MOTOR BRACKET

4-40. HEATER THERMOSTAT.

This task covers: a. Inspection b. Testing c. Removal d. Installation

INITIAL SETUP:

Tools:
Tool Kit, service, refrigeration unit

Equipment Conditions:
Power off at power source.

General Safety Instructions:

WARNING

Disconnect input power to the unit before performing any internal maintenance. Voltages used can kill. Shutting the unit off at the thermostat does not disconnect unit power.

a. Inspection.
(1) Remove the three screws (1, Figure 4-36) and lift off the heater access door (2) on the upper right side of the air conditioner.
(2) Check the wiring and heater thermostat (3) for damage and loose mounting screws (4).
(3) Replace the heater access door (2) and secure with the three screws (1).

b. Testing.
(1) Remove the three screws (1, Figure 4-36) and lift off the heater access door (2) on the upper right side of the air conditioner.
(2) Use the multimeter to check the thermostat (3). An open or direct short to ground indicates a defective thermostat which must be replaced.
(3) Install the heater access door (2) and secure with the three screws (1).

c. Removal.
(1) Remove the three screws (1, Figure 4-36) and lift off the heater access door (2) on the upper right side of the air conditioner.
(2) Tag and remove the wires on the heater thermostat (3).
(3) Remove the two screws (4) and lift out the heater thermostat.

d. Installation.
(1) Place the heater thermostat (3, Figure 4-36) Into position in the heater assembly (5) and secure with the two mounting screws (4).
(2) Connect the wires as marked and remove the tags.
(3) Install the heater access door (2) and secure with the three screws (1).

4-40. HEATER THERMOSTAT - Continued.

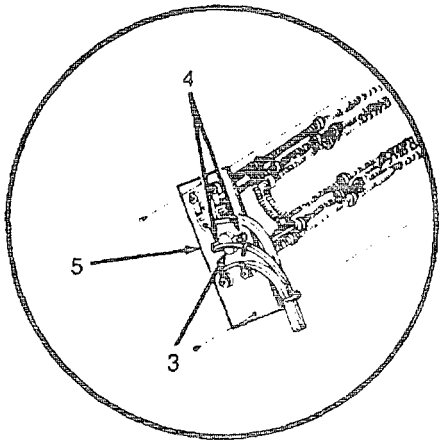

VIEW FROM RIGHT REAR
CORNER OF AIR CONDITIONER

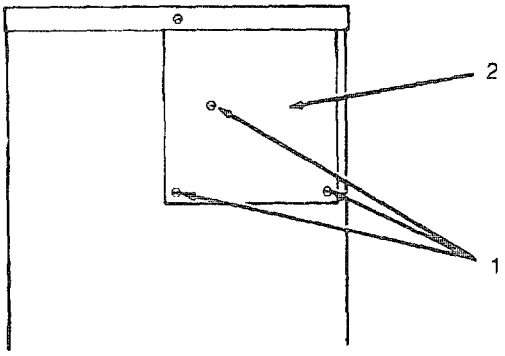

TOP RIGHT SIDE
OF AIR CONDITIONER

Figure 4-36. Heater Thermostat

4-41. HEATER ELEMENT.

This task covers: a. Inspection b. Testing c. Removal d. Installation

INITIAL SETUP:

Tools:
Tool Kit, service, refrigeration unit

Equipment Conditions:
Power off at power source.

General Safety Instructions:

WARNING

Disconnect input power to the unit before performing any internal maintenance. Voltages used can kill. Shutting the unit off at the thermostat does not disconnect unit power.

a. Inspection.
(1) Remove the three screws (1, Figure 4-37) and lift off the heater access door (2) on the upper right side of the air conditioner.
(2) Check the wiring and heater element (3) for damage and loose mounting screws (4).
(3) Replace the heater access door (2) and secure with the three screws.

b. Testing.
(1) Remove the three screws (1, Figure 4-37) and lift off the heater access door (2) on the upper right side of the air conditioner.
(2) Use the multimeter to check the element (3). Place rnultimeter probes on red and black wires connected to heater element. An open or direct short to ground indicates a defective heater element which must be replaced.
(3) Install the heater access door (2) and secure with the three screws.

c. Removal.
(1) Remove the three screws (1, Figure 4-37) and lift o-f the heater access door (2) on the upper right side of the air conditioner.
(2) Tag and remove the wires on the heater element (3).
(3) Remove the two screws (4) and lift out the heater element.

d. Installation.

CAUTION

The rod on the end of the heater element must be inserted in the proper hole on the left side of the air conditioner. To be properly mounted the heater element must be parallel to the other components in the air conditioner. Mismounting the heater element can cause the heater element to malfunction.

(1) Place the heater element (3, Figure 4-37) into position in the heater assembly (2) and secure with the two mounting screws (4).
(2) Connect the wires as marked and remove the tags.
(3) Install the heater access door (2) and secure with the three screws (1).

4-41. HEATER ELEMENT - Continued.

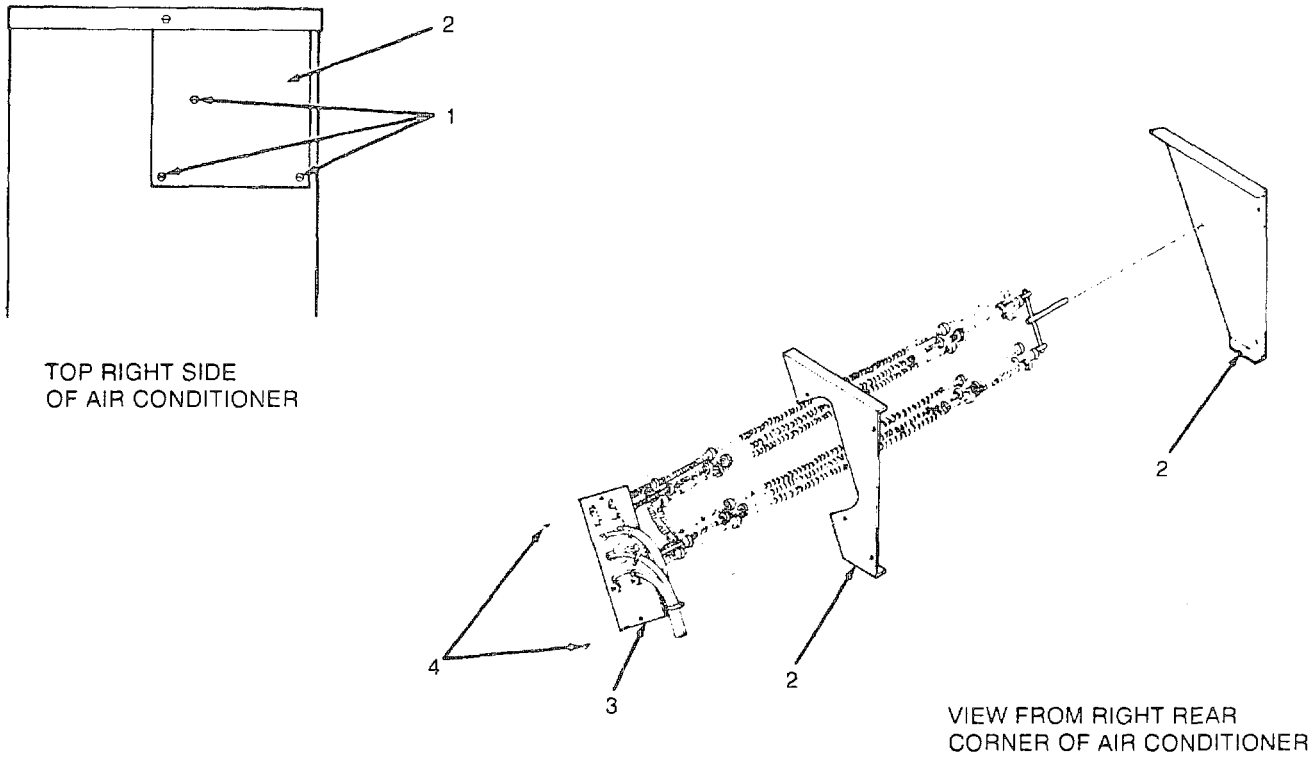

Figure 4-37. Heater Element

4-42. FUSE LINKS.

This task covers: a. Inspection b. Testing c. Removal d. Installation

INITIAL SETUP:

Tools:
Tool Kit, service, refrigeration unit

Equipment Conditions:
Power off at power source.

General Safety Instructions:

Disconnect input power to the unit before performing any internal maintenance. Voltages used can kill. Shutting the unit off at the thermostat does not disconnect unit power.

a. Inspection.
   (1) Remove the three screws (1, Figure 4-38) and lift off the heater access door (2) on the upper right side of the air conditioner.
   (2) Check the wiring and fuse links (3) for damage and loose mounting nuts (4).
   (3) Replace the heater access door and secure with the three screws.

b. Testing.
   (1) Remove the three screws (1, Figure 4-38) and lift off the heater access door (2) on the upper right side of the air conditioner.
   (2) Use the multimeter to check the fuse links (3) An open or direct short to ground indicates a defective fuse link which must be replaced.
   (3) Install the heater access door and secure with the three screws.

c. Removal.
   (1) Remove the three screws (1, Figure 4-38) and lift off the heater access door (2) on the upper right side of the air conditioner.
   (2) Tag and remove the wire fuse links (3).
   (3) Remove the mounting nuts (4) using nutdriver and lift out the fuse links.

d. Installation.
   (1) Place the fuse links (3, Figure 4-38) into position in the heater assembly (2) and secure with the mounting nuts (4).
   (2) Connect the wires as marked and remove the tags.
   (3) Install the heater access door (2) and secure with the three screws (1).

4-42. FUSE LINKS - Continued.

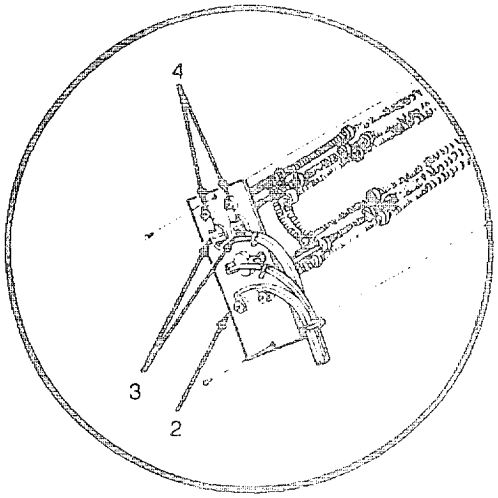

VIEW FROM RIGHT REAR
CORNER OF AIR CONDITIONER

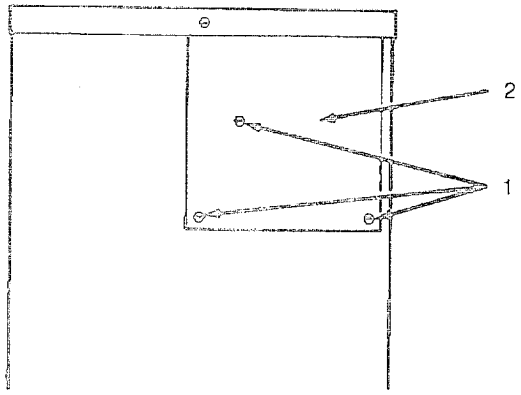

TOP RIGHT SIDE OF
AIR CONDITIONER

Figure 4-38. Fuse Links

4-43. VENTURI PANEL.

This task covers: a. Inspection b. Service

INITIAL SETUP:

Tools:
Tool Kit, service, refrigeration unit

Materials:
Rags (Appendix F, Item 7)

Equipment Conditions:
Power off at power source.
Both sides of door assemblies removed. See para. 4-19.

General Safety Instructions:

Disconnect input power to the unit before performing any internal maintenance. Voltages used can kill. Shutting the unit off at the thermostat does not disconnect unit power.

a. Inspection

(1) Inspect venturi panel (1, Figure 4-39) for loose mounting and corrosion Tighten any loose screws (2) If corrosion is present contact Direct Support Maintenance.

(2) Install both side door assemblies. See para 4-19.

b. Service.

(1) Clean venturi panel (1, Figure 4-39) with water and wipe dry with clean rags.

(2) Remove the 10 screws (2) securing the venturi panel (1).

(3) Mark the position of the outdoor fan motor bracket (3) on the outdoor fan motor (4)

34

4-43. VENTURI PANEL - Continued.

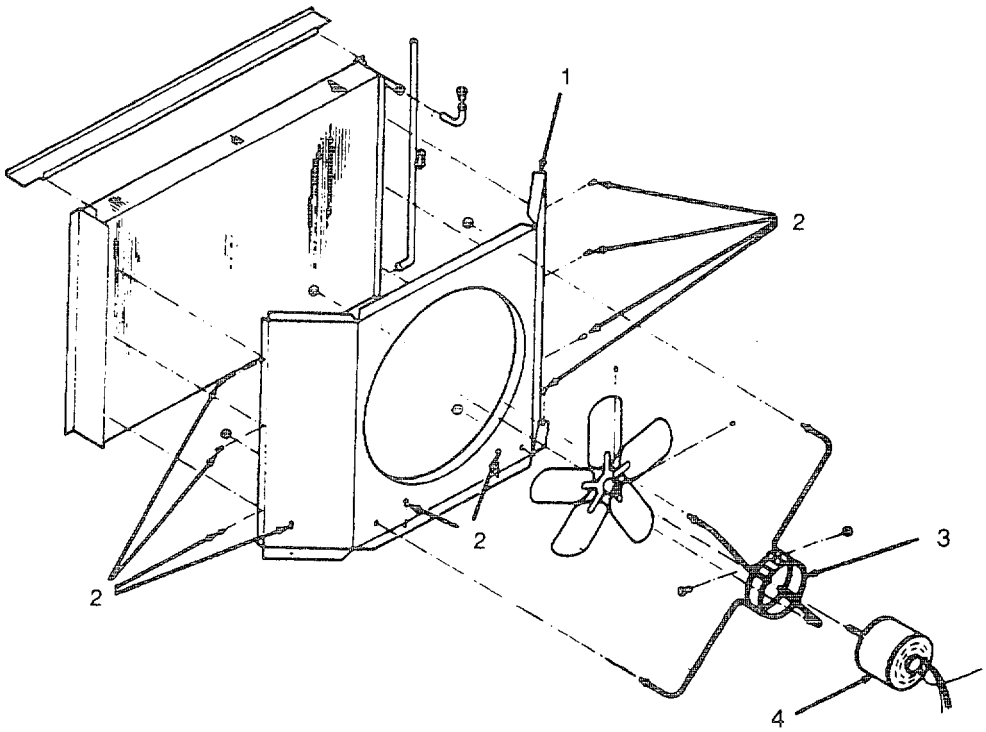

Figure 4-39. Venturi Panel

4-44. OUTDOOR FAN.

This task covers: a. Inspection b. Service

INITIAL SETUP:

Tools:
Tool Kit, service, refrigeration unit

Material
Rags (Appendix F, Item 7)

Equipment Conditions:
Power off at power source.
Both side door assemblies removed. See para 4-19.

General Safety Instructions:

Disconnect input power to the unit before performing any internal maintenance. Voltages used can kill. Shutting the unit off at the thermostat does not disconnect unit power.

a. Inspection.

(1) Inspect outdoor fan (1, Figure 4-40) for bent or missing blades. Replace any damaged outdoor fan.

(2) Install *both* side door assemblies. *See* para 4-19.

b. Service.

(1) Wipe outdoor fan (1, Figure 4-40) with clean rags.

(2) Install both side door assemblies. See para 4-19.

c. Removal.

(1) Remove the nut (2, Figure 4-40) on the accumulator stud (3) at the right top of the compartment between the venturi panel (4) and the lower back panel (See Figure 1-1). Push the stud up and flush with the upper panel.

(2) Remove the 10 screws (5) securing the venturi panel (4).

(3) Mark the position of the outside fan motor bracket (6) on the outdoor fan motor (7).

(4) Loosen the nut and bolt (8) that hold the outdoor fan motor in place in the outdoor fan motor bracket and push the motor towards the outdoor coil (9) as you are pulling back the venturi panel right side.

(5) Reach in the right side door assembly and loosen the two allen set screws (10) that secure the fan (1) to the outdoor fan motor shaft (11).

CAUTION

Take extreme care when removing the fan. The fins on the outdoor coil and the fan blades can be easily damaged.

(6) Carefully slide the fan off the outdoor fan motor shaft and out of the air conditioner.

4-44. OUTDOOR FAN-Continued.

d. Installation.

CAUTION

Take extreme care when removing the fan. The fins on the outdoor coil and the fan blades can be easily damaged.

(1) Slide the fan (1, Figure 4-40) through the right side door assembly between the venturi panel (4) and the outdoor coil (9) and mount on the outdoor fan motor shaft (ii) so that the fan is flush with the shaft end.

NOTE

Set screws must be aligned to the flat spots on the outdoor fan motor shaft and the outdoor fan motor shaft must be flush with the fan.

(2) Tighten the two allen set screws (10) against the outdoor fan motor shaft.

(3) Slide the venturi panel towards the outdoor coil until it is flush while moving the outdoor fan motor (7) back in its premarked position.

(4) Tighten the nut and bolt (8) on the outdoor fan motor bracket (6) to secure the outdoor fan motor (7).

(5) Install the ten screws (5) to secure the venturi panel.

(6) Install the nut (2) on the accumulator stud (3).

(7) Install both side door assemblies. See para 4-i9.

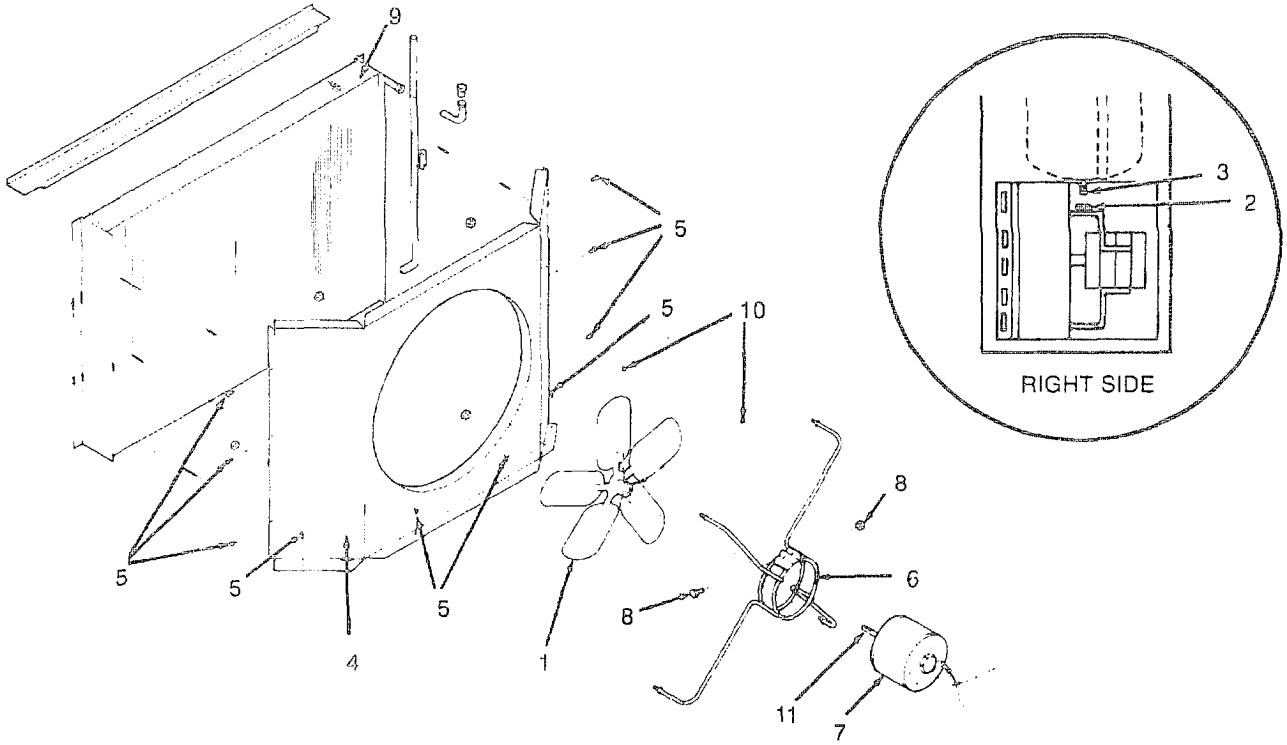

Figure 4-40. Outdoor Fan

4-45. OUTDOOR FAN MOTOR.

This task covers: a. Inspection b. Testing c. Removal d. Installation

INITIAL SETUP:

Tools:
Tool Kit, service, refrigeration unit

Equipment Conditions:
Power off at power source.
Both side door assemblies removed. See para 4--19.
Both front door assemblies removed. See para 4-17.
Control box cover removed. See para 4-23.

General Safety Instructions:

Disconnect input power to the unit before performing any internal maintenance. Voltages used can kill. Shutting the unit off at the thermostat does not disconnect unit power.

a. Inspection.

(1) Inspect outdoor fan motor (1, Figure 4-41). Repair/replace loose, damaged, or missing wires and hard ware.

(2) Install both side door assemblies. See para 4-19.

b. Testing.

(1) Use multimeter to check the outdoor fan motor (1, Figure 4-41) wiring. A direct short to ground or an open will require replacement of the motor.

(2) Install both side door assemblies. See para 4-19.

c. Removal.

(1) Remove the nut (2, Figure 4-41) on the accumulator stud (3) at the right top of the compartment between the venturi panel (4) and the lower back panel. Push the stud up and flush with the upper panel.

(2) Remove the ten screws (5) securing the venturi panel.

(3) Mark the position of the outdoor fan motor (1) in the outdoor fan motor bracket (6).

(4) Loosen the nut and bolt (7) that hold the outdoor fan motor in place in the outdoor fan motor bracket and push the motor towards the outdoor coil (8) as you are pulling back the venturi panel right side.

(5) Reach in the right side door assembly and loosen the two allen set screws (9) that secure the fan (10) to the outdoor fan motor shaft (11).

CAUTION

The outdoor coil fins and the fan blades can easily be damaged. Take care not to bend them.

(6) Carefully slide the fan off the outdoor fan motor shaft and carefully pull it out between the outdoor coil (8) and the venturi panel (4).

4-45. OUTDOOR FAN MOTOR-Continued.

(7) Push the venturi panel back toward the outdoor coil.

(8) Tag and disconnect the outdoor fan motor wiring.

(9) Slide the outdoor fan motor out of the rear of the air conditioner.

d. Installation.

CAUTION

The outdoor coil fins and the fan blades can easily be damaged. Take care not to bend them.

(1) Place the outdoor fan motor (1, Figure 4-41) into the air conditioner between the venturi panel and the rear panel.

(2) Slide the outdoor fan motor into the outdoor fan motor bracket (6).

(3) Push the venturi panel (4) toward the rear panel and carefully work the fan (10) between the outdoor coil (8) and venturi panel (4).

(4) Mount the fan (10) on the outdoor fan motor shaft (11) so that the fan is flush with the shaft end.

CAUTION

Set screws must be aligned to the flat spots on the outdoor motor shaft and the outdoor fan motor shaft must be flush with the fan.

(5) Tighten the .two allen set screws (9) against the outdoor fan motor shaft.

(6) Slide the venturi panel towards the coil (8) until it is flush while moving the outdoor fan motor (1) back into its premarked position In the bracket Connect the wires as tagged and remove the tags.

(7) Tighter the nut and bolt (7) on the outdoor fan motor bracket to secure the outdoor fan motor

(8) Install the ten screws (5) to secure the venturi panel.

(9) Install the nut (2) on the accumulator stud (3)

(10) Install both side door assemblies. See para 4-19.

(11) Install the control box cover. See para 4-23

(12) Install both front door assemblies. See para 4-17.

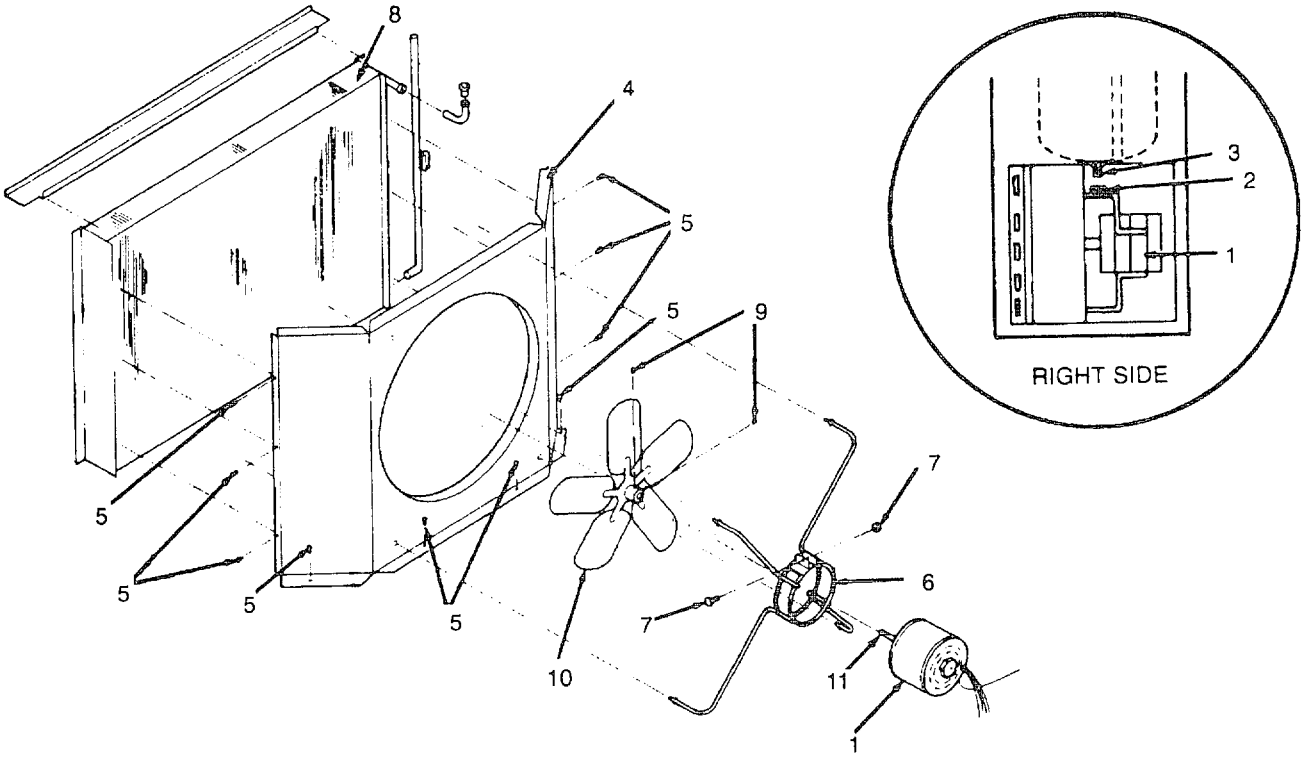

Figure 4-41. Outdoor Fan Motor

4-46. OUTDOOR FAN MOTOR BRACKET.

This task covers: a. Inspection b. Removal c. Installation

INITIAL SETUP:

Tools:
Tool Kit, service, refrigeration unit

Equipment Conditions:
Power off at power source.
Both side door assemblies removed. See para 4-19.
Control box cover removed See para 4-23.
Outdoor fan and motor removed. See para 4-45.

General Safety Instructions:

Disconnect input power to the unit before performing any internal maintenance. Voltages used can kill. Shutting the unit off at the thermostat does not disconnect unit power.

a. Inspection.

(1) Inspect outdoor fan motor bracket (1, Figure 4-42). Check for loose or missing hardware.

(2) Install both side door assemblies. See para 4-19.

b. Removal.

(1) Push venturi panel (2, Figure 4-42) back toward the outdoor coil (3).

(2) Remove the four nuts (4) from the outdoor fan motor bracket (1).

(3) Slide the outdoor fan motor bracket out of the air conditioner.

c. Installation.

(1) Slide the outdoor fan motor bracket (1, Figure 4-42) through the right side door assembly opening and mount the bracket on the venturi panel (2).

(2) Secure the outdoor fan motor bracket to the venturi panel with four nuts (4).

(3) Push the venturi panel (2) toward the rear panel.

(4) Install outdoor fan and motor. See para 4-45.

(5) Install control box cover (para 4-23) and side door assemblies (para 4-19).

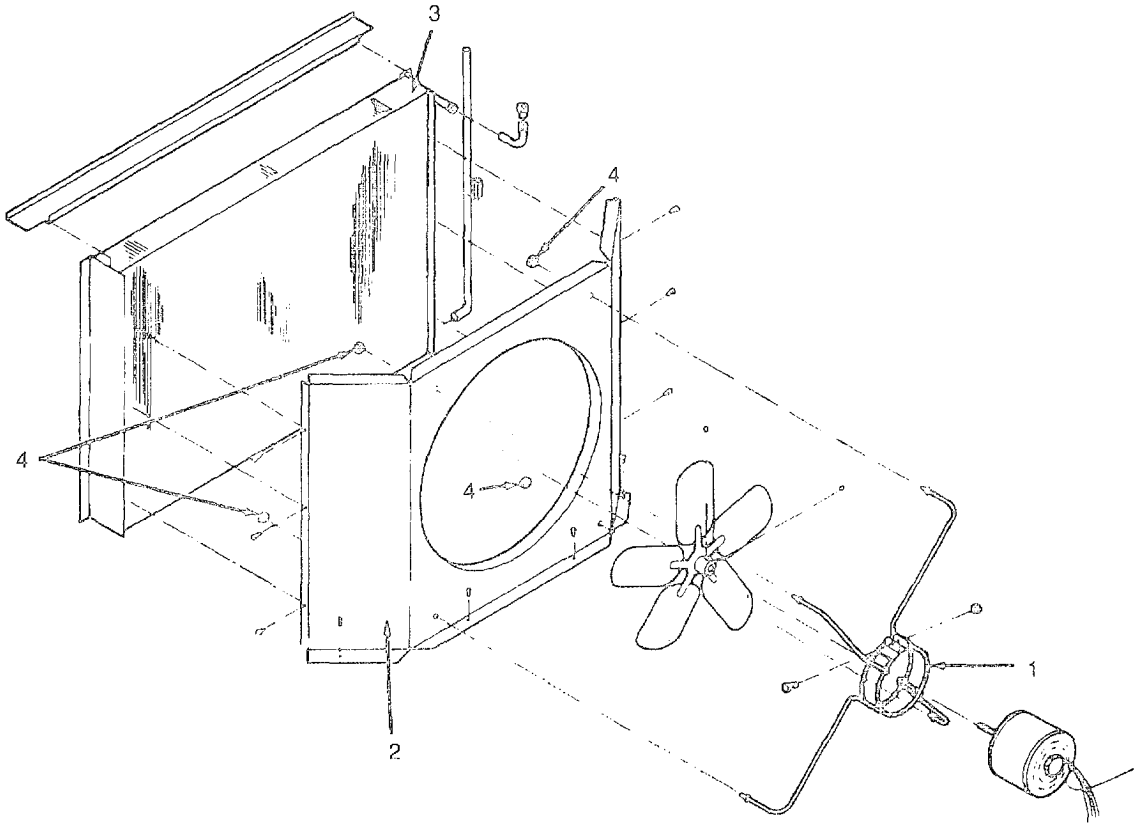

Figure 4-42. Outdoor Fan Motor Bracket

4-47. ACCUMULATOR

This task covers: Inspection

INITIAL SETUP:

Tools:
Tool Kit, service, refrigeration unit

Equipment Conditions:
Power off at power source.
Both front door assemblies removed. See para 4-17.
Both side door assemblies removed See para 4-19.

General Safety Instructions:

Disconnect input power to the unit before performing any internal maintenance. Voltages used can kill. Shutting the unit off at the thermostat does not disconnect unit power.

a. Look in right side door assembly at the top of the compartment and ensure nut (1, Figure 4-43) is rnounted on accumulator stud (2)

b. Check the fittings (3) on the accumulator (4) for leaks. If leaks are present. contact Direct Support Maintenance.

c. Install both side door assemblies. See para 4-19.

d. Install both front door assemblies. See para 4--17.

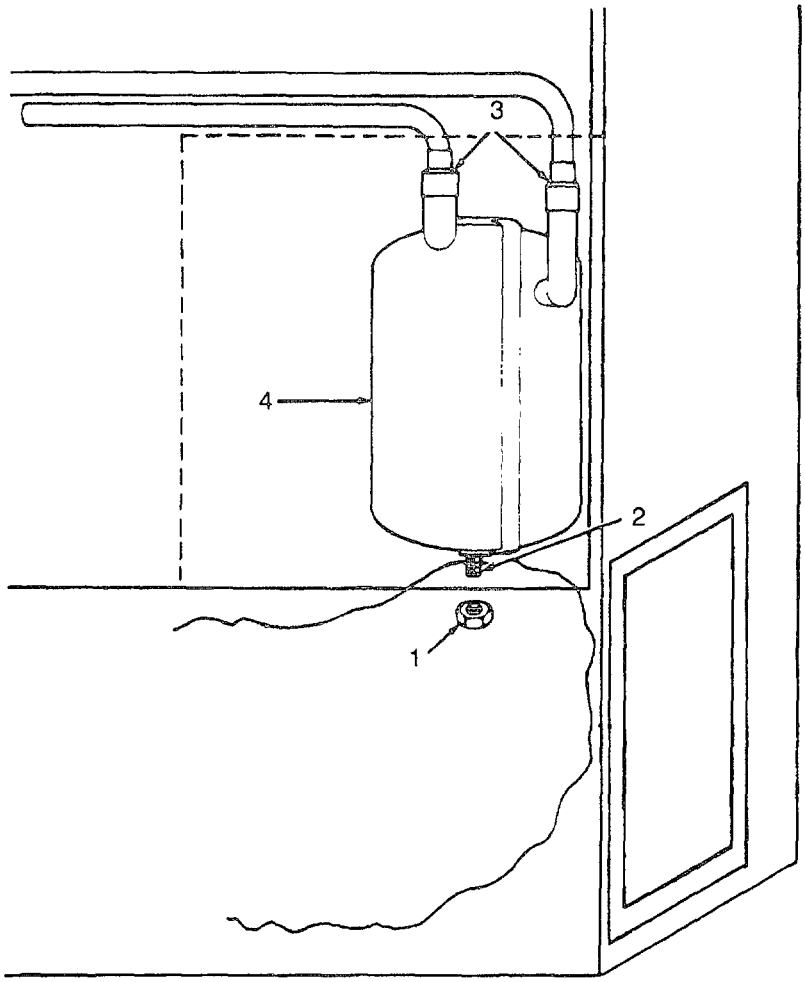

Figure 4-43. Accumulator

4-48. INDOOR COIL.

This task covers: a. Inspection b. Service

INITIAL SETUP:

Tools:
Tool Kit, service, refrigeration unit

Equipment Conditions:
Power off at power source.
Both front door assemblies removed. See para 4--i 7.

General Safety Instructions:

Disconnect input power to the unit before performing any internal maintenance. Voltages used can kill. Shutting the unit off at the thermostat does not disconnect unit power.

a. Inspection.

(1) Inspect indoor coil for proper mounting, cleanliness, and leaks. See Figure 4-44. If coil requires cleaning, service the coil. If the coil mount is loose or the coil is leaking contact Direct Support Maintenance

(2) Install both front door assemblies. See para *4-1*-7.

b. Service.

Compressed air used for cleaning purposes will not exceed 30 psi (2.1 kg/cm2). Do not direct compressed air against skin. Use goggles or full face shield.

(1) Blow dust and dirt out of the air passages in the indoor coil using compressed air or the discharge side of a portable vacuum cleaner. Blow from back to front in the opposite direction from operational airflow. See Figure 4-44.

(2) Install both front door assemblies. See para 4-17.

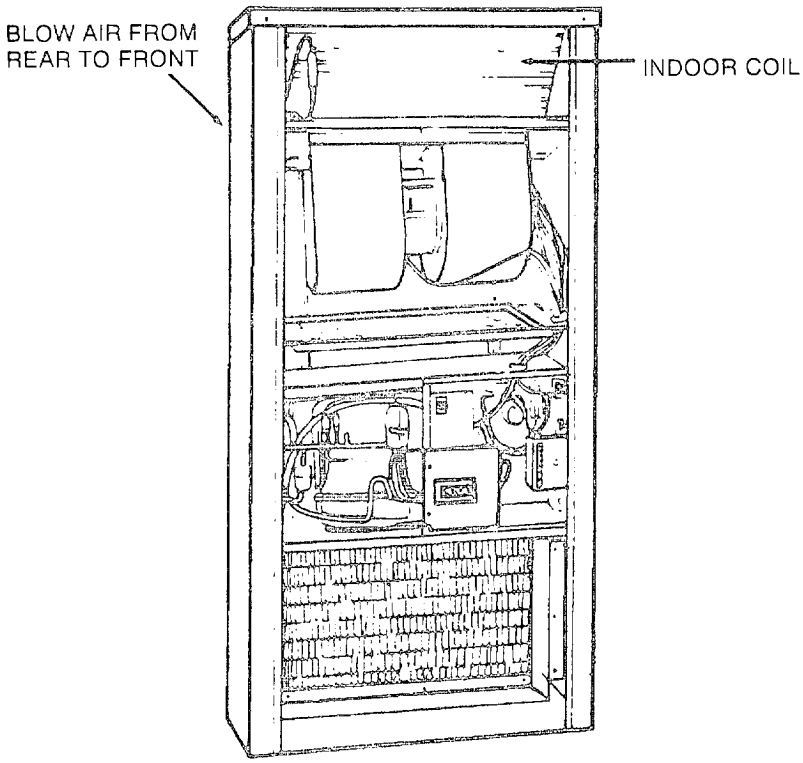

Figure 4-44. Indoor Coil

4-49. OUTDOOR COIL.

This task covers: a. Inspection b. Service

INITIAL SETUP:

Tools:
Tool Kit, service, refrigeration unit

Equipment Conditions:
Power off at power source.
Both front door assemblies removed. See para 4-19.

General Safety Instructions:

Disconnect input power to the unit before performing any internal maintenance. Voltages used can kill. Shutting the unit off at the thermostat does not disconnect unit power.

a. Inspection.

(1) Inspect outdoor coil for proper mounting, cleanliness, and leaks. See Figure 4-45. If coil requires cleaning, service the coil If the coil mounting is loose or the coil is leaking. contact Direct Support Maintenance.

(2) Install both side door assemblies. See para 4-19.

b. Service.

Compressed air used for cleaning purposes will not exceed 30 psi (2.1 kg/cm2). Do not direct compressed air against skin. Use goggles or full face shield.

(1) Blow dust and dirt out of the air passages in the outdoor coil using compressed air or the discharge side of a portable vacuum cleaner. See Figure 4-45. Blow from front to back In the opposite direction from operational airflow,

(2) Install both side door assemblies. See para 4-19.

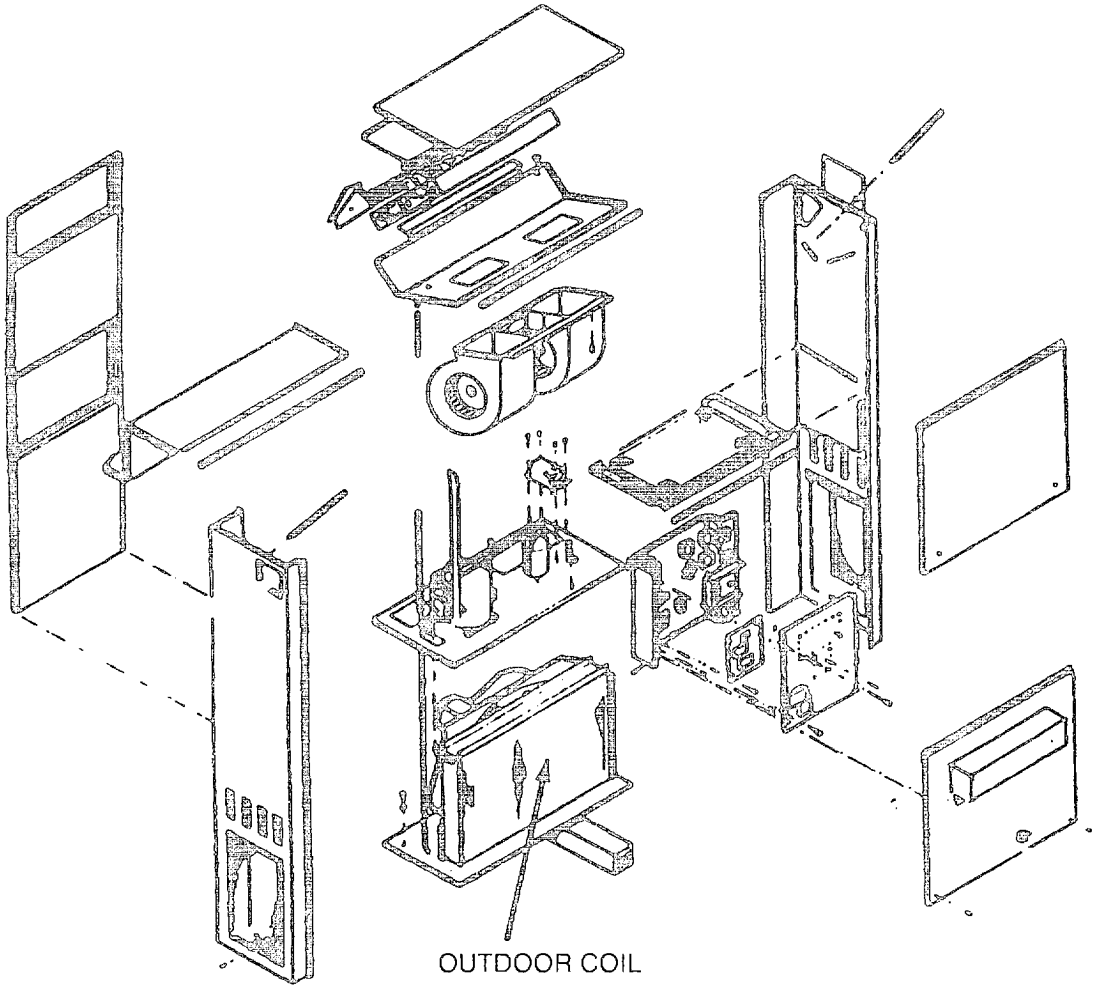

Figure 4-45. Outdoor Coil

4-50. THERMOSTAT

This task covers: a. Inspection b. Removal c. Installation

INITIAL SETUP:

Tools:
Tool Kit, service, refrigeration unit

Equipment Conditions:
Power off at power source.

General Safety Instructions:

Disconnect input power to the unit before performing any internal maintenance. Voltages used can kill. Shutting the unit off at the thermostat does not disconnect unit power.

a. Inspection

NOTE

The cover Is hinged at the top and must be removed by pulling up at the bottom.

(1) Remove thermostat cover (1, Figure 4-46) by pulling bottom upward until it snaps free.

(2) Inspect thermostat (2) for loose or missing hardware and damage. Replace or tighten loose or missing hardware. Replace damaged thermostat.

b. Removal.

(1) Pull thermostat cover (1, Figure 4-46) from the bottom and swing it up and forward until it snaps free

(2) Unscrew the three captive mounting screws (3) until the thermostat is loose.

(3) Pull the thermostat away from the subbase (4).

(4) Tag and remove the thermostat subbase wiring.

(5) Remove the two subbase mounting screws (5) and remove the thermostat subbase

c. Installation.

(1) Feed the thermostat wire through the hole (6, Figure 4-46) in the subbase (4)

(2) Loosely mount the subbase (4)with the two subbase mounting screws (5).

(3) Level the subbase (4) with a spirit level See Figure 4-11.

(4) Tighten the two subbase mounting screws (5, Figure 4-46)

(5) Connect the thermostat wires to the subbase wiring terminals as tagged and remove the tags.

(6) Push excess wire back Into the hole and plug the hole to prevent drafts.

(7) Mount the thermostat (2) on the subbase (4) so that the captive screws (3) aline with the holes in subbase (4).

(8) Tighten the captive mounting screws (3).

(9) Place the upper edge of the thermostat cover (1) on the thermostat (2) and swing the cover downward until it snaps securely onto the thermostat (2).

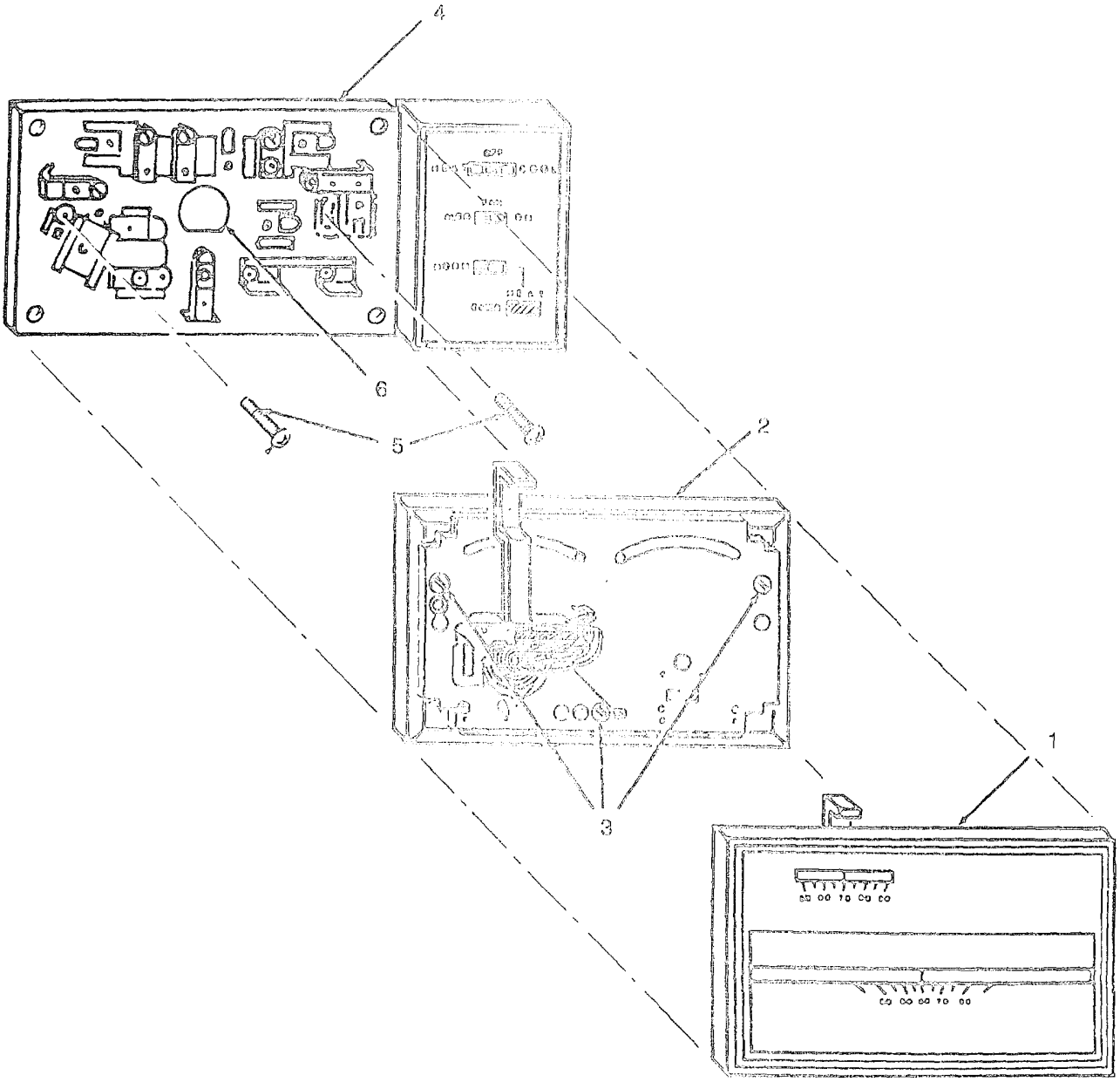

Figure 4-46. Thermostat

Section VIII. PREPARATION FOR STORAGE OR SHIPMENT

4-51. PREPARATION FOR STORAGE OR SHIPMENT.

a. Administrative Storage of Equipment-1 to 45_Days. Administrative storage is shortterm storage It covers storage of equipment which can be readied for mission performance within 24 hours. Before placing an item In administrative storage, the next scheduled preventive maintenance checks and services should be performed, all known deficiencies corrected, and all current modification work orders applied. The administrative storage site should provide protection from the elements and allow access for visual inspection when applicable.

b. Intermediate Storage-46 to 180 Days. No special handling is required other than that required for administrative storage

c. Long Term or Flyable Storage. There is no time limit for this type of storage

(1) Remove thermostat cover and thermostat from subbase (para 4--50). Disconnect wires from thermostat terminals and from control box (para 4-23).

(2) Place retained polystyrene insert over thermostat mercury switch and place subbase, thermostat. and cover in retained original package.

(3) Remove fresh air damper (para 4-21)

(4) Bolt the unit to the shipping base. See Figure 4-4.

(5) Place thermostat, fresh air damper, and mounting brackets in the bottom duct assembly on the air conditioner. See Figure 1-2.

(6) Wrap the unit with two layers of heavy plastic sheet or barrier paper.

(7) Tape and strap the wrapping .n place

(8) Mark the unit per standard Army procedures.

CAUTION

When storing or shipping air conditioners, bind units together in pairs. This will help ensure units remain upright; tilting can damage equipment.

CHAPTER 5

DIRECT SUPPORT MAINTENANCE

Section I. TROUBLESHOOTING PROCEDURES

5-1. GENERAL. This section contains unit troubleshooting information for locating and correcting most of the operating troubles which may develop with this unit.

5-2. TROUBLESHOOTING. Each malfunction for an individual component is listed in Table 5-1. The malfunction is followed by a list of tests or inspections which help to determine probable causes and corrective actions to take. The tests or inspections and corrective actions are to be performed in the order listed in the table. All malfunctions that may occur and all tests or inspections and corrective actions may not be listed. If a malfunction is not listed or is not corrected by corrective action, notify your supervisor.

Before attempting troubleshooting, refer to warnings inside front cover of this manual.

NOTE

Before you use the table, be sure you have performed applicable operating checks (Table 4-1, Item 10).

Table 5-1. Direct Support Troubleshooting

MALFUNCTION
TEST OR INSPECTION
CORRECTIVE ACTION

1. UNIT DOES NOT START IN ANY MODE.

HIGH VOLTAGE is used in the operation of this equipment. DEATH ON CONTACT or severe injury may result if personnel fail to observe safety precautions.

Step 1. Make sure 208/230 volt, 1 phase, 60 Hertz power is connected.

Connect correct input power.

Step 2. Check for loose or damaged electrical connectors or wires. See para 4-23.

Tighten or replace connectors or repair damaged wires.

Step 3. Inspect thermostat. See para 4-50.

Replace if defective. See para 4-50.

5-2. TROUBLESHOOTING - Continued.

Table 5-1. Direct Support Troubleshooting - Continued.

MALFUNCTION
TEST OR INSPECTION
CORRECTIVE ACTION

2. INDOOR FAN STARTS IN COOL MODE, BUT OUTDOOR FAN DOES NOT START AND COMPRESSOR DOES NOT START.

Disconnect input power before performing internal electrical troubleshooting. Voltages used can be deadly.

NOTE

If power has been connected to unit, a short (30 minute maximum during very cold weather) warm up period is required. When compressor reaches a safe operating temperature, it will come on automatically if the thermostat is set for cooling and the thermostat lever is set to about 10 degrees F (5.6 degrees C) below the ambient indoor temperature.

Step 1. Check for loose or damaged electrical connectors and wires. See para 4-23.
Tighten or replace connectors or repair damaged wires.
Step 2. Test compressor. See para 5-20.
Replace compressor.

3. AIR CONDITIONER STOPS COMPLETELY DURI NG OPERATION.

HIGH VOLTAGE is used in' the operation of this equipment. DEATH ON CONTACT or severe injury may result if personnel fail to observe safety precautions.

Step 1. Check that indoor fans (15, Figure 1-2) and outdoor fan (i2) start immediately when a restart in COOL mode is made. If fans do not start, test as follows:

Disconnect input power before performing internal electrical troubleshooting. Voltages used can be deadly.

a. Test fan relay. See para 4-33.
Replace If defective.
b. Test fan motors. See para 4-38 and 4-45.
Replace if defective.
Step 2. Perform a refrigerant pressure check. See para 5-i i,
Replace defective components.
Step 3. Test compressor. See para 5-20,
Replace if defective.

Table 5-1. Direct Support Troubleshooting - Continued.

MALFUNCTION
TEST OR INSPECTION
CORRECTIVE ACTION

4. REDUCED HEATING CAPACITY.

Disconnect input power before performing internal electrical troubleshooting. Voltages used can be deadly.

Step 1. Check airflow out of conditioned air outlet. If airflow volume is low:

a. Replace air filter. See para 4-20.

b. Clean coils. See Table 4-1, Items 2 and 7.

Step 2. Check adjustment of fresh air damper. See para 4-21.

Adjust properly.

Step 3. Test heater element. See para 4-41.

Replace if defective.

Step 4. Test reversing valve. See para 5-19.

Replace defective components.

Step 5. Test compressor. See para 5-20.

Replace compressor if defective.

Step 6. Check refrigerant charge in air conditioner. See para 5-11.

If pressure is low, charge system. See para 5--i 0.

5. REDUCED COOLING CAPACITY.

Step 1. Check airflow out of conditioned air outlet. If airflow is low:

a. Check air inlets for blockage. See para 4-2b.

b. Replace air Filter. See para 4-20.

c. Clean coils. See Table 4-1, items 2 and 7.

Step 2. Check setting of fresh air damper. See para 4-21.

Adjust fresh air damper.

Step 3. Check refrigerant charge of the air conditioner. See para 5-11.

If pressure is low, charge the system. See para 5-10.

Section II. MAINTENANCE PROCEDURES

5-3. FRONT AND SIDE DOOR ASSEMBLIES AND VENTURI PANEL. See paras 4-17, 4-19, and 4-43. Repairs are limited to the following:

a. Straighten minor dents using standard sheet metal repair practices.

b. Repair broken welds using standard weld repair practices.

c. Replace or repair gasket or insulation.

(1) Remove as much old gasket or insulation material as possible by pulling or scraping it away from the metal surface.

Solvents are flammable and their vapors can be explosive. Repeated or prolonged skin contact or inhalation of vapors can be toxic. Use in a well ventilated area, wear gloves and eye protection, and keep away from sparks or flame.

(2) Soften and remove old adhesive and gasket insulation residue, using solvent (Appendix F, Item 10) and a stiff brush.

(3) Coat the mating surfaces of the metal and gasket or insulation (if applicable) with adhesive (Appendix F, item 1). Let both surfaces dry until the adhesive is tacky but will not stick to fingers.

(4) Starting with an end, carefully attach to the metal. Press into firm contact all over.

d. Should touch up or refinishing be necessary, see TM 43-0139, Painting Instructions for Army Materiel.

5-4. REFRIGERATION SYSTEM, GENERAL REPAIRS.

DANGEROUS CHEMICAL (R-22) refrigerant under pressure is used in this equipment. DEATH or severe damage may result if personnel fail to observe safety precautions. Use great care to avoid contact with liquid refrigerant or refrigerant gas being discharged under pressure. Sudden and irreversible tissue damage can result from freezing. Wear thermal protective gloves and a face protector or goggles in any situation when, skin/eye contact is possible. Do not inhale refrigerant gas. Ensure work area is well ventilated. Prevent contact of refrigerant gas with flame or hot surfaces. Heat causes the refrigerant to break down and form carbonyl chloride (phosgene), a highly poisonous and corrosive gas.

NOTE

The refrigeration system must be totally discharged before performing maintenance that requires opening of the pressurized system. Leak testing and drier replacement are required any time the pressurized system has been opened. The system must be evacuated before it is charged. The system must be properly charged to function properly.

5-5. DISCHARGING REFRIGERATION SYSTEM.

NOTE

In accordance with Environmental Protection Agency regulations, refrigerants cannot bed is charged into the atmosphere. A refrigerant recovery and recycling unit must be used whenever discharging the refrigerant system.

Operation of the recovery/recycling unit must be by AUTHORIZED PERSONNEL ONLY.

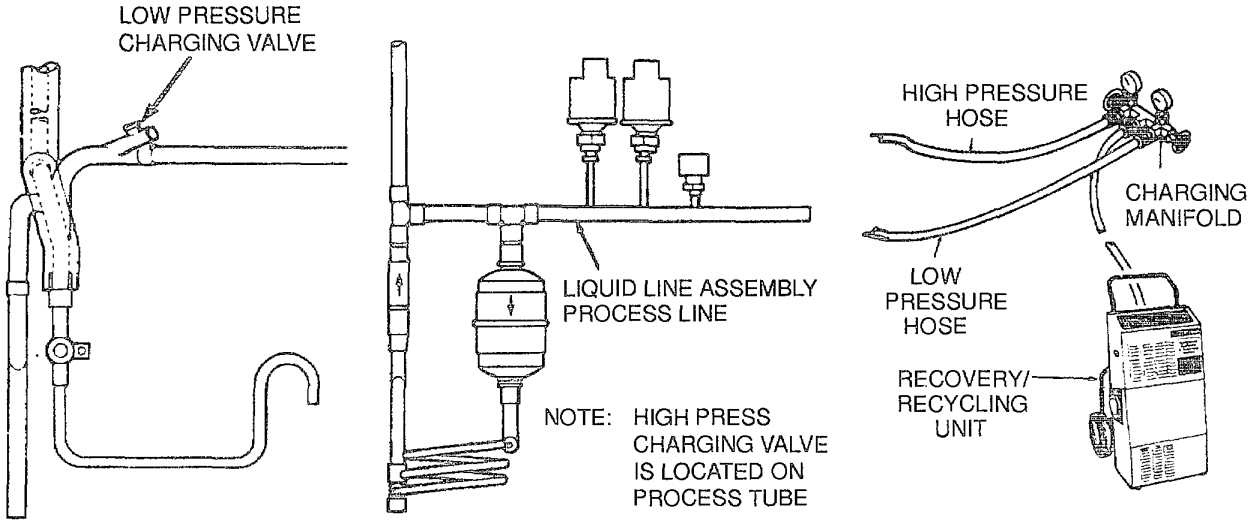

Figure 5-1. Charging Valve Locations

This task covers: Service

INITIAL SETUP:

Tools:
- Tool Kit, service, refrigeration unit
- Recovery and recycling unit, refrigeration
- Rubber gloves
- Safety goggles

Equipment Conditions:
- Power off at power source.
- Remove both front door assemblies. See para 4-17.

5-5. DISCHARGING REFRIGERATION SYSTEM -Continued

General Safety Instructions:

WARNING

- **HIGH VOLTAGE is used in the operation of this equipment. DEATH ON CONTACT or severe injury may result if personnel fail to observe safety precautions. Do no operate unit without panels and screens in place and tightly secured.**

- **Death or serious injury may result if personnel fail to observe safety precautions. Use great care to avoid contact with liquid refrigerant or refrigerant gas being discharged under pressure. Sudden and irreversible tissue damage can result from freezing. Wear thermal protective gloves and a face protector of goggles in any situation where skin/eye contact is possible. Prevent contact of refrigerant gas with flame or hot surfaces. Heat causes the refrigerant to break down and form carbonyl chloride (phosgene), a highly poisonous and corrosive gas.**

NOTE

Operation of the recovery/recycling unit must be by AUTHORIZED PERSONNEL ONLY.

a. Remove valve stem protective caps from high and low pressure service valve stem. See Figure 5-1. Take car that they are not lost.

b. Ensure service valves are closed, then remove caps from service ports.

c. Remove blue and red hosed from service manifold hose rack.

d. Connect and operate a recycling/recovery nit in accordance with manufacturer's instructions.

CAUTION

- **Do not permit the oil to escape from the unit. If oil is escaping, close the valve(s) slightly.**

- **Do not permit the refrigerant to escape fast enough to form ice or frost on either the lines or the valve.**

CAUTION

Do not open high pressure valve until low pressure discharge is near completion to prevent possible oil loss.

5-6. PURGING REFRIGERATION SYSTEM.

This task covers: Service

INITIAL SETUP:

Tools:
Tool Kit, service, refrigeration unit
Safety goggles
Materials:
Nitrogen (Appendix F, Item 2)
Equipment Conditions:
Power off at power source.
Both front door assemblies removed. See para 4-17.
Refrigerant system discharged. See para 5-5.
General Safety Instructions:

WARNING

- HIGH VOLTAGE is used in the operation of this equipment, DEATIH- ON CONTACT or severe injury may result if personnel fail to observe safety precautions. Always disconnect the air conditioner from power source before performing maintenance on this equipment. if power must remain on for troubleshooting, exercise extreme care to avoid contact with any electrical component, fan, fan motor, etc. Do not operate the air conditioner without louvers, top controls, and guards in place and tightly secured.

- REFRIGERANT UNDER PRESSURE is used in the operation of this system.
  Death or serious injury may result if personnel fail to observe safety precautions. Use great care to avoid contact with liquid refrigerant or refrigerant gas being discharged under pressure. Sudden and irreversible tissue damage can result from freezing. Wear thermal protective gloves and a face protector or goggles in any situation where skin/eye contact is possible. Prevent contact of refrigerant gas with flame or hot surfaces. Heat causes he refrigerant to break down and form carbonyl chloride (phosgene) a highly poisonous and corrosive gas.

- Nitrogen is an inert gas. However, it can cause death or bodily harm by replacing the oxygen in the air. Ensure your work area is well ventilated and the nitrogen is discharged away from you.

CAUTION

- Nitrogen cylinders are pressurized containers. The pressure in ,the cylinder can exceed 2000 psi. A nitrogen pressure regulator should be used at all times when nitrogen is used for leak-test or purge operations. Do not allow nitrogen pressure regulator setting to exceed 200 psig during purging.

5-6. PURGING REFRIGERATION SYSTEM-Continued.

NOTE

The refrigeration system must be purged with dry nitrogen, Appendix F, Item 2, before any brazing or brazing is performed on any component. A flow of dry nitrogen at the rate of. 1 to 2 cfm (O 028 to 0.057 m3/rninute) should be continued during all brazing or debrazing operations to minimize internal oxidation and scaling.

a. Be sure that refrigerant has been discharged. See para 5---5

b. Connect the charging nose (yellow) 3/8" from charge port to nitrogen regulator and dry nitrogen tank

c. Loosen low pressure hose (blue) at compound gage port oil service manifold.

d. Open pressure gage on valve on service manifold

e. Open charging valve on service man fold.

f. Open the nitrogen cylinder valve and adjust the regulator so that 1 to 2 cfm (0.028 to 0.57 m3rnminute) of nitrogen flow rate is established.

g. Check to ensure that nitrogen is flowing from loosened hose at compound gage port of the service manifold.

h. Allow nitrogen to sweep through ,'he system for a minimum of 5 minutes before brazing or debrazing operations are started Continues sweep during the operation, and for 5 minutes alter completion.

i. Close nitrogen cylinder valve, service manifold valves, and high and low pressure service valves on the unit.

j. Disconnect hose from nitrogen regulator and return it to the hose rack

5-7. BRAZING/DEBRAZING PROCEDURES.

This task covers: Service

INITIAL SETUP:

Tools:
- Tool kit, service, refrigeration unit
- Safety goggles

Materials:
- Rags (Appendix F, Item 7)
- Nitrogen (Appendix F, Item 2)
- Brazing alloy, silver, (Appendix F, Items 3 and 4)
- Brazing flux (Appendix F, Item 5)
- Abrasive cloth (Appendix F, Item 6)

Equipment Condition:
- Power off at power source.
- Refrigerant system discharged. See para 5-5.
- Both front door assemblies removed. See para 4-17.

General Safety Instructions:

WARNING

- HIGH VOLTAGE is used in the operation of this equipment. DEATH ON CONTACT or severe injury may result if personnel fail to observe safety precautions. Always disconnect the air conditioner from power source before per- forming maintenance on this equipment. If power must remain on for troubleshooting, exercise extreme care to avoid contact with any electrical component, fan, fan motor, etc. Do not operate the air conditioner without Louvers, top controls, and guards in place and tightly secured.

- All refrigerant-22 must be discharged from the system and the entire system must be purged with dry nitrogen before beginning any debrazing operation.

- The polyurethane foam used as insulation in the air conditioner will break down to form toxic gases if exposed to the flame of a torch at brazing temperature.

5-7. BRAZING, DEBRAZING PROCEDURES-Continued.

NOTE

Grade IV or VI brazing alloy and Type B flux, as specified in MIL-B-7883, must be used for all copper to brass joints Grade III brazing alloy may be substituted for Grade IV or VI for copper joints; flux is not required for copper to copper joints. All tubing in the refrigeration system is seamless copper with bright internal finish that permits thorough cleaning and prevents entrapment of moisture and other impurities. Rigid grade copper is used for straight sections and soft grade for sections that must be bent. All interconnecting fittings, such as elbows, tees, etc., are also copper. The bodies of all valves and all connections on other components are brass. All joints, except those provided with Flare fittings, are made by brazing in accordance with MIL-B-7883, except that radiographic examination is not required.

a. Debrazing.

(1) Determine which joints are to be debrazed. Due to the limited work space Inside the air conditioner, it may be more convenient to remove a part of the interconnecting tubing with the component rather than debrazing the joint on the component itself.

(2) Before debrazing a joint on a valve, disassemble the valve as much as possible, then wrap all but the joint with a wet rag to act as a heat sink.

(3) Protect insulation, wiring harnesses, cabinet, and other surrounding components with appropriate shields.

(4) Be sure the work area is well ventilated and that dry nitrogen is flowing through the refrigeration system at a rate of 1 to 2 cfm (0.028 to 0.057 rn3 or cubic meters/minute). See para 5-6.

(5) Apply sufficient heat uniformly around the joint to quickly melt the filler alloy. If heat is applied slowly, or only on one side, the entire component or length of tubing will be heated and filler alloy in adjacent joints may also be melted. Remove heat as soon as the joint separates.

b. Cleaning Debrazed Joints. All filler alloy must be cleaned from debrazed joints before reassembly. Heat each piece of the joint until the filler alloy is melted and then wipe it away with a damp cloth. Be sure no filler alloy or other debris is left inside any tubing, filling, or component.

c. Reassembly If tubing sections or fittings were removed with a component, debraze them from the component, clean the joints, and braze them to the new component before installation.

d. Brazing.

(1) Position the component to be installed.

(2) To prepare a joint on a valve for brazing, disassemble the valve as much as possible, then wrap all but the joint with a wet rag to act as a heat sink.

(3) Protect insulation, wiring harnesses, and surrounding components with appropriate shields.

(4) Be sure the work area is well ventilated and that dry nitrogen is flowing through the refrigeration system at a rate of 1 to 2 cfm (0.028 to 0.057 m3 or cubic meters/minute). See para 5-6.

(5) Apply sufficient heat uniformly around the joint to quickly raise It to a temperature that will melt the filler alloy. Remove the heat as soon as brazing is completed.

(6) Leak test the new joints. See para 5-8.

5-8. LEAK TESTING REFRIGERATION SYSTEM.

This task covers: Service

INITIAL SETUP:

Tools:
- Tool Kit, service, refrigeration unit
- Rubber gloves
- Safety goggles

Materials:
- Rags (Appendix F, Item 7)
- Monochlorodifluoromethane (R22) (Appendix F, Item 8)

Equipment Conditions:
- Power off at power source.
- All panels and screens removed. See para 4-17 and 4-19.

General Safety Instructions:

WARNING

HIGH VOLTAGE is used in the operation of this equipment. DEATH ON CONTACT or severe injury may result if personnel fail to observe safety precautions. Do not operate unit without panels and screens in place and tightly secured.

Death or serious Injury may result if personnel fail to observe safety precautions. Use great care to avoid contact with liquid refrigerant or refrigerant gas being discharged under pressure. Sudden and irreversible tissue damage can result from freezing. Wear thermal protective gloves and a face protector or goggles in any situation where skin/eye contact is possible. Prevent contact of refrigerant gas with flame or hot surfaces. Heat causes the refrigerant to break down and form carbon chloride (phosgene), a highly poisonous and corrosive gas.

NOTE

The entire repaired area should be thoroughly leak tested after repair or replacement of any component before it is recharged with refrigerant-22. Leak testing is also the method for troubleshooting when a system has lost all or part of its refrigerant charge through an undetermined cause.

a. Testing Method. There are two acceptable methods for leak testing the refrigeration system.

NOTE

The electronic gas leak detector is highly sensitive to the presence of a minute quantity of gas in the air, and due to this factor is quite effective in the detection of small leaks. However, due to the rapid dispersion oil refrigerant gas into the surrounding air, difficulty may be encountered in pinpointing large leaks. The detector must be used in a well ventilated but draft-free area.

5-8. LEAK TESTING REFRIGERATION SYSTEM-Continued.

(1) Refrigerant gas leak detector. If an electronic refrigerant gas leak detector is available, it should be used in accordance with the procedures contained in TM 9-4940-435--14, "Leak Detector, Refrigerant Gas".

CAUTION

If the soap solution testing method is used, thoroughly rinse with fresh water after testing is complete. A residual soap film will attr**act and accumulate an excessive amount of dust and dirt during operation.**

(2) Soap solutions. In this method, a strong solution of a liquid detergent and water is brushed onto all points of possible leakage while closely watching for the formation of bubbles.

b. Testing Procedures.

NOTE

To perform leak testing with soap solution method, the system may be pressurized with dry nitrogen alone.

(1) Install service manifold in accordance with installation instruction. See para 4-6.

(2) Observe compound and pressure gages. If system pressure is 50 psig or higher, proceed to step (7); if not, continue with step (3).

(3) Remove 1/4" yellow hose from hose rack and connect to a cylinder of refrigerant-22.

(4) Open refrigerant-22 cylinder valve and loosen hose at charge port, allowing refrigerant to purge for 3-5 seconds, then tighten.

(5) Open charging valve and pressure gage valve and allow refrigerant to enter system until compound and pressure gages indicate a minimum pressure of 50 psig, then close charging valve.

(6) Close refrigerant-22 cylinder valve and remove yellow hose.

(7) Connect 1/4" yellow hose to a regulated dry nitrogen cylinder.

(8) Open nitrogen cylinder valve and adjust regulator to a pressure 10 psi greater than system pressure.

(9) Loosen 1/4" yellow hose at charge port and purge for 3-5 seconds, then tighten.

(10) Open charging valve and adjust nitrogen regulator to slowly raise compound and pressure gage reading to 300 psig.

(11) Using a halon leak detector or soap solution, check all fittings, connections and components for leaks. Ensure pressure remains at 300 psi; add more nitrogen if necessary.

(12) Close charging valve and nitrogen cylinder valve and remove yellow hose from nitrogen regulator and connect to service manifold hose rack.

(13) Evacuate refrigerant system. See para 5-9.

5-9. EVACUATING REFRIGERATION SYSTEM.

This task covers: Service

INITIAL SETUP:

Tools:
Tool kit, service, refrigeration unit
Pump, vacuum
Materials:
Refrigerant-22 (Appendix F, Item 8)
Equipment Condition:
Power off at power source.
Both front door assemblies removed. See para 4-17.
General Safety Instructions:

WARNING

- HIGH VOLTAGE is used in the operation of this equipment. DEATH ON CONTACT or severe injury may result if personnel fail to observe safety precautions. Do not operate unit without panels and screens in place and tightly se- cured.

- Death or serious injury may result if personnel fail to observe safety precautions. Use great care to avoid contact with liquid refrigerant or refrigerant gas being discharged under pressure. Sudden and irreversible tissue damage can result from freezing. Wear thermal protective gloves and a face protector or goggles in any situation where skin/eye contact is possible. Prevent contact of refrigerant gas with flame or hot surfaces. Heat causes the refrigerant to break down and form carbonyl chloride (phosgene), a highly poisonous and corrosive gas.

CAUTION

Do not evacuate a leaking system. The vacuum created can cause air, moisture, and dirt to enter the system.

NOTE

The refrigeration system must be evacuated to remove all moisture before it is charged with refrigerant-22. Check that system was leak tested and has NO LEAKS. If the compressor was replaced as a result of a burn out, check that compressor burn out procedures were followed. See para 5-20.

a. Discharge system. See para 5-5.

b. Check that new drier was installed. If not, install one per para 5-12.

c. Remove yellow 3/8" hose from hose rack and connect to vacuum pump.

d. Remove 1/4" yellow hose from hose rack and connect to refrigerant-22 cylinder positioned for dispensing gas.

e. Open refrigerant-22 cylinder and loosen 1/4" yellow hose at charge port and purge for 3-5 seconds, then tighten.

f. Open vacuum/purge valve, compound gage valve, and pressure gage valve.

5-9. EVACUATING REFRIGERATION SYSTEM-Continued.

g. Start vacuum pump and open ballast valve (on vacuum pump) one turn.

h. Compound gage should read 29 to 30 inches hg of vacuum.

i. Close vacuum/purge valve.

j. Open charging valve and add refrigerant until compound and pressure gages read approximately 2 psig, then close.

k. Stop vacuum pump and close ballast valve.

l. Allow refrigerant to remain in system for one hour.

NOTE

Refrigerant will act as a blotter for moisture. One hour is recommended time for maximum moisture removal. Shorter blotting period could be used if it is known that system is relatively dry.

m. Open vacuum/purge valve.

n. Repeat steps "g" thru "i" one time.

o. Open vacuum/purge valve.

p. Start vacuum pump and open ballast valve (on vacuum pump) one turn. Compound gage should read 29 to 30 inches hg of vacuum.

q. Close vacuum/purge valve and compound gage valve.

r. Stop vacuum pump and close ballast valve.

s. Charge refrigeration system. See para 5-10.

5-10. CHARGING REFRIGERATION SYSTEM.

This task covers: Service

INITIAL SETUP:

Tools:
- Tool kit, service, refrigeration unit
- Rubber gloves
- Safety goggles

Materials:
- Refrigerant-22 cylinder (Appendix F, Item 8)
- Rags (Appendix F, Item 7)

Equipment Condition:
- Power off at power source.
- Both front door assemblies removed. See para 4-17.

General Safety Instructions:

WARNING

- HIGH VOLTAGE is used in the operation of this equipment. DEATH ON CONTACT or severe injury may result if personnel fall to observe safety precautions.

- Death or serious injury may result if personnel fail to observe safety precautions. Use great care to avoid contact with liquid refrigerant gas being discharged under pressure. Sudden and irreversible tissue damage can result from freezing. Wear thermal protective gloves and a face protector or goggles in any situation where skin/eye contact is possible. Prevent contact of refrigerant gas with flame or hot surfaces. Heat causes the refrigerant break down and form carbonyl chloride (phosgene), a highly poisonous and corrosive gas.

CAUTION

Application of liquid refrigerant into the low pressure (suction) service valve may cause system failure.

NOTE

The system must be evacuated before charging. Use only refrigerant-22 to charge the unit.

Whenever available, use recycled refrigerant for charging the refrigeration system.

5-10. CHARGING REFRIGERATION SYSTEM-Continued.

a. Connect the hose from the low pressure service valve to the compound gage side of the charging manifold.

b. Connect the hose from the high pressure service valve to the pressure gage side of the charging manifold.

c. Connect the center hose From the charging manifold to a well charged drum of refrigerant-22.

d. Loosen the hose connections to the two air conditioner service valves slightly.

e. Open the two charging manifold valves.

f. Open the refrigerant-22 drum valve slightly to allow a small amount of refrigerant to purge air from the hoses.

g. Tighten the hose connections at the air conditioner service valves.

h. Close the low pressure (suction) charging manifold valve.

i. Position the refngerant-22 drum so that liquid will be used for charging. (Some drums must be Inverted and some are equipped with a selector valve.)

j. Using accurate scales, measure and record the weight of the refrigerant-22 drum.

k. Open the refrigerant-22 drum valve.

I. Open charging valve. Allow liquid refrigerant to enter the system until cylinder weight has decreased by amount
of required charge, or until system pressure equalizes.

m. Close pressure gage valve.

NOTE

if the system took the required charge, proceed to step "q." If the system pressure equalized continue with step "n".

n. Position refrigerant cylinder so that gas only will be dispensed.

HIGH VOLTAGE is used in the operation of this equipment. DEATH ON CONTACT or severe injury may result if personnel fail to observe safety precautions.

o. Connect power and turn unit on. Adjust thermostat so compressor is operating.

p. Open compound gage valve. Monitor the weight of the refrigerant cylinder as the unit compressor draws additional refrigerant into the system. Close compound gage valve when the complete charge weight has been admitted.

q. Perform pressure check. See para 5-11.

r. Close all manifold valves, cylinder valve, and high and low pressure service valves.

s. Remove service manifold hoses from service valves and refrigerant cylinder and attach them to hose rack.

t. Replace valve stem and hose connection protective caps on service valves. Tighten securely.

u. Turn system off.

v. Replace both front door assemblies. See para 4-17.

5-11. REFRIGERATION PRESSURE CHECK

This task covers: Service

INITIAL SETUP:

Tools:
- Tool kit, service, refrigeration unit
- Rubber gloves
- Safety goggles

Equipment Condition:
- Power off at power source.
- Both front door assemblies removed. See para 4-17.

General Safety Instructions:

WARNING

HIGH VOLTAGE is used in the operation of this equipment. DEATH ON CONTACT or severe injury may result if personnel fail to observe safety precautions.

Death or serious injury may result if personnel fail to observe safety precautions. Use great care to avoid contact with liquid refrigerant gas being discharged under pressure. Sudden and irreversible tissue damage can result from freezing. Wear thermal protective gloves and a face protector or goggles in any situation where skin/eye contact is possible. Prevent contact of refrigerant gas with flame or hot surfaces. Heat causes the refrigerant to break down and form carbonyl chloride (phosgene), a highly poisonous and corrosive gas.

NOTE

Except in cases where it is obvious that the refrigerant charge has been lost, the first step in troubleshooting problems in the refrigeration system should be to check discharge and suction pressures under operating conditions.

a. Turn the thermostat system switch to OFF.

b. Remove valve stem and hose connection protective caps from service valves. Take care that valve stem caps are not lost.

c. Connect individual pressure gages, or a refrigeration charging manifold and hoses to the high (discharge) and low (suction) service valves.

CAUTION

Take care that only a very small amount of refrigerant is allowed to escape during hose purging.

d. Loosen hose connections at gages or charging manifold.

e. Open high (discharge) pressure service valve slightly to purge air from hose. Tighten high pressure hose connection at gage fitting as soon as a hissing sound is heard. Repeat procedure with low (suction) pressure service valve.

f. Open the low (suction) and high (discharge) service valves.

5-11. REFRIGERANT PRESSURE CHECK - Continued.

NOTE

Both gages should read the same. Check the reading with the appropriate column in Table 5---2. if the system is even partially charged, the pressure should be approximately equal to that shown in the table for the appropriate ambient temperature. If the pressure is considerably less than shown in the table perform a leak test per para 5-8.

g. Turn the thermostat system switch to (COOL with the thermostat cooling lever at the lowest setting and allow the system to stabilize (about 3 minutes).

h. Check the gages.

If the discharge and suction pressures are at, or near, the same value, a reversing valve malfunction or an internal compressor failure is indicated. See para 5-19 and 5 -20.

discharge pressure is low and suction pressure is normal, a low refrigerant charge Indicates(: See: para 5-10.

If discharge pressure is normal and suction pressure is either high or low, failure of the ;check valve is Indicated. See para 5-17.

discharge pressure is high and suction pressure is normal', a malfunction of a fan (see para 4-37 and 4-4t). refrigerant overcharge, or clogged drier (see para 5--1 2) is indicated

i. Turn the thermostats system switch to OFF.

j. Close both service valves on unit.

k. Remove gages or service manifold hoses from service valves.

1. Install the valve stem .and hose connection protective caps.

m. Proceed with ;any required maintenance action.

n. Replace both front door assemblies. e para 4--17.

Table 5-2. Pressure Temperature Relationship of Saturated Refrigerant-22

Temperature		Pressure		Temperature		Pressure	
Deg F	Deg C	Psig	kg/cm^2	Deg F	Deg C	Psig	kg/cm^2
10	–12.3	32.93	2.315	66	18.9	114.2	8.029
12	–11.1	34.68	2.439	68	20.0	118.3	8.318
14	– 10.0	36.89	2.593				
16	–8.9	38.96	2.739	70	21.1	122.5	8.612
18	–7.8	41.09	2.889	74	22.2	126.8	8.915
				74	23.3	131.2	9.225
20	–6.6	43.28	3.043	76	24.4	135.7	9.541
22	–5.5	45.23	3.180	78	25.6	140.3	9.864
24	–4.3	47.85	3.364				
26	–3.4	50.24	3.532	80	26.7	145.0	10.195
28	–2.2	52.70	3.705	82	27.8	149.8	10.522
				84	28.9	154.7	10.877
30	–1.1	55.23	3.883	86	30.0	159.8	11.236
32	0.0	57.83	4.066	88	31.1	164.9	11.594
34	1.1	60.51	4.254				
36	2.2	63.27	4.448	90	32.2	170.1	11.960
38	3.3	66.11	4.648	92	33.3	175.4	12.332
				94	34.5	180.9	12.719
40	4.4	69.02	4.853	96	35.6	186.5	13.113
42	5.5	71.99	5.062	98	36.7	192.1	13.506
44	6.6	75.04	5.276				
46	7.7	78.18	5.497	100	37.8	197.9	13.914
48	8.8	81.40	5.723	102	38.9	203.8	14.329
				104	40.0	209.9	14.758
50	10.0	84.70	5.955	106	41.1	216.0	15.187
52	11.1	88.10	6.257	108	42.2	222.3	15.630
54	12.2	91.50	6.443				
56	13.3	95.10	6.686	110	43.3	228.7	16.080
58	14.5	98.80	6.947	112	44.4	235.2	16.537
				114	45.6	241.9	17.008
60	15.6	102.5	7.206	116	46.7	248.7	17.486
62	16.7	106.3	7.474	118	47.8	255.6	17.971
64	17.8	110.2	7.748				

5-12. DRIER.

This task covers:	a. Inspection	b. Removal	c. Installation

INITIAL SETUP:

Tools:
Tool kit, service, refrigeration unit
Materials:
Rags (Appendix F. Item 7)
Equipment Condition:
Power off at power source.
Both front door assemblies removed. See para 4-17.
General Safety Instructions:

WARNING

Disconnect input power to the unit before performing any internal maintenance. Voltages used can kill. Shutting the unit off at the thermostat does not disconnect unit power.

NOTE

The drier must be replaced each time the refrigeration system has been opened. It should be installed just before unit is leak tested.

a. Inspection.

(1) Check drier for general condition and signs of leakage. See Figure 5-2.

(2) If leakage is suspected, perform a leak test. See para 5-8.

(3) Install both front door assemblies. See para 4-17.

b. Removal.

(1) Discharge the refrigerant system. See para 5-5.

(2) Purge the system and debraze the joints to the drier. See para 5-6 and 5-7 and Figure 5-2.

(3) Remove drier.

c. Installation.

CAUTION

Replacement driers are packed with sealing caps on the flare fittings to prevent moisture contamination of the desiccant filtering media. Remove these caps immediately prior to installation. Never install a drier from which caps have been removed for an extended or unknown period of time.

(1) Position drier in unit. See Figure 5-2.

CAUTION

Flow arrow on drier must point down.

(2) Braze fitting on the drier. See para 5--7.

(3) Leak test all newly connected joints and those in the repair area. See para 5-8.

(4) Evacuate and charge the refrigerant system. See para 5-9 and 5-10.

(5) Install both front door assemblies. See para 4-17.

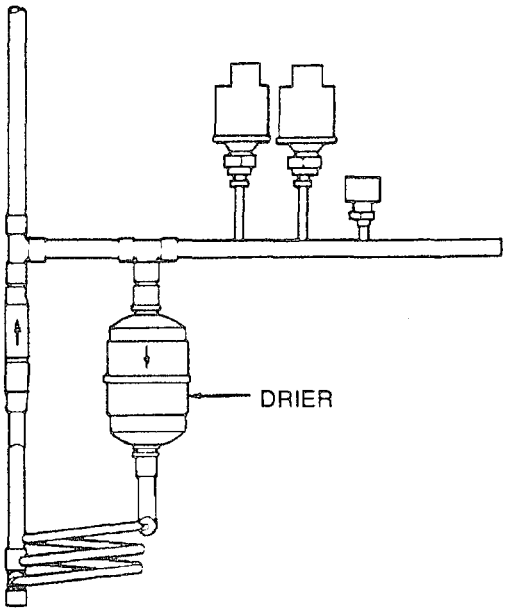

Figure 5-2. Drier

5-13. CAPILLARY TUBES.

This task covers: a. Removal b. Installation

INITIAL SETUP:

Tools:
Tool kit, service, refrigeration unit
Materials:
Rags (Appendix F, Item 7)
Equipment Conditions:
Power off at power source.
Both front door assemblies removed. See para 4-17.
General Safety Instructions:

Disconnect input power to the air conditioner before performing any internal maintenance. Voltages used can kill. Shutting the unit off at the control panel does not disconnect unit power.

a. Removal.

(1) Discharge the refrigerant system. See para 5-5.

(2) Purge the system and debraze the fittings on the heating (1, Figure 5-3)/cooling (2) capillary tubes as required. See para 5-6 and 5-7.

NOTE

Replacement cooling capillary tubes include refrigerant screen .

(3) Remove capillary tubes.

b. Installation.

NOTE

Replacement cooling capillary tubes include refrigerant screen .

(1) Place new capillary tubes in unit.

(2) Braze the fittings onto the heating (I)/cooling (2) capillary tubes as required. See para 5-7.

(3) Replace the drier. See para 5-12.

(4) Leak test all newly connected joints and those in the repair area per para 5-8.

(5) Evacuate and charge the refrigerant system. See para 5-9 and 5-10.

(6) Install both front door assemblies. See para 4-17.

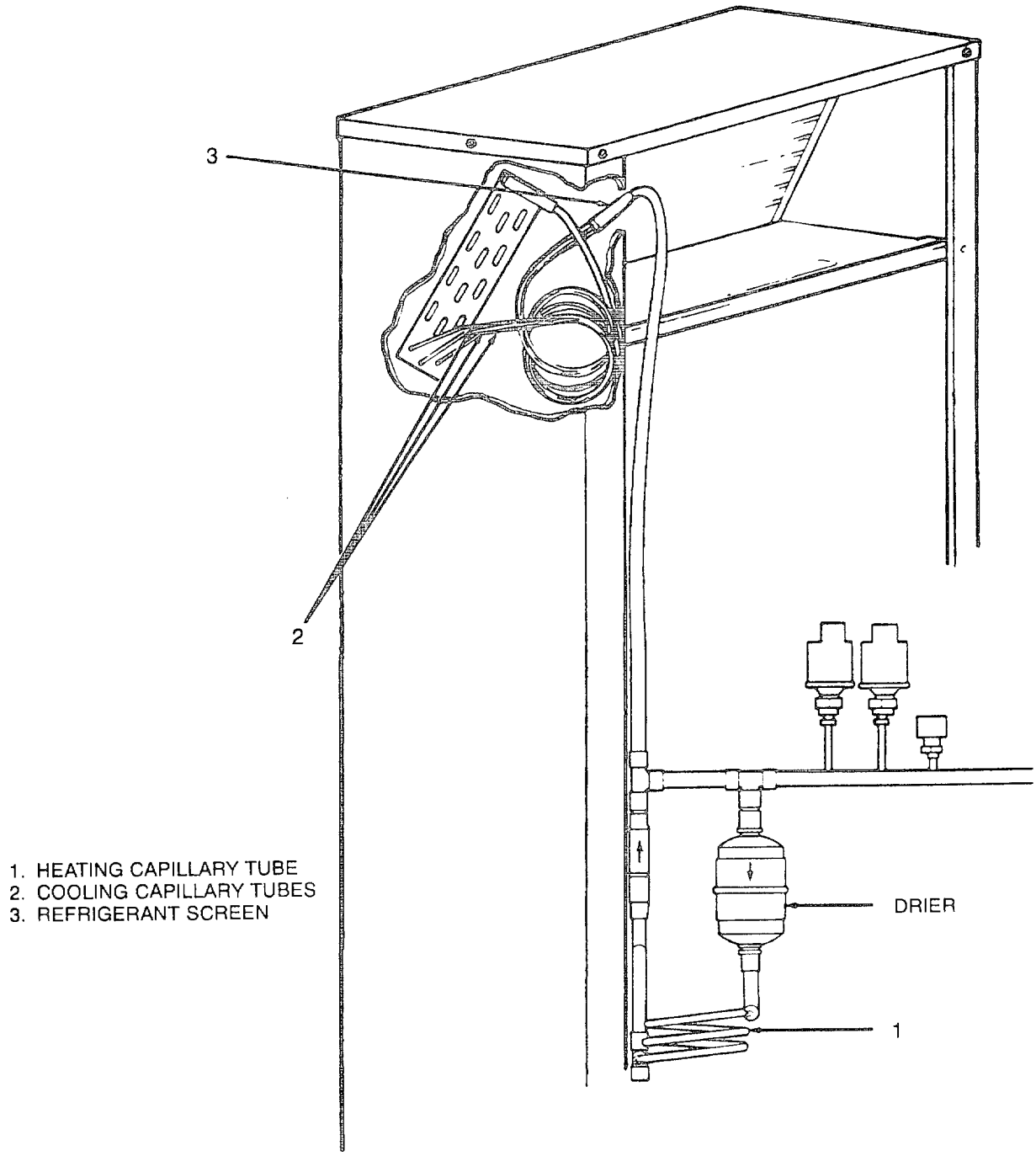

Figure 5-3. Capillary Tubes

5-14. Accumulator.

This task covers: a. Removal b. Installation

INITIAL SETUP:

Tools:
Tool kit, service, refrigeration unit
Materials:
Rags (Appendix F, Item 7)
Equipment Conditions:
Power off at power source.
Both front door assemblies removed. See para 4-17.
Right side door assembly removed. See para 4-19.
General Safety Instructions:

WARNING

Disconnect input power to the unit before performing any internal maintenance. Voltages used can kill. Shutting the unit off at the control panel does not disconnect unit power.

a. Removal.

(1) Discharge the refrigerant system. See para 5-5.

(2) Tag and remove wiring at the compressor (1, Figure 5-4).

(3) Remove the two screws (2) holding the dividing wall (3). Lift out filter brackets (4) and pull the dividing wall (3) up.

(4) Remove the control box (5) cover. See para 4-23.

(5) Remove the two screws (6) securing the control box (5), and slide the box forward.

(6) Reach into the right side door assembly and remove the nut (7) on the accumulator stud (8) on the bottom of the base pan (9).

NOTE

It is easier to remove tubing at some point between the compressor and the accumulator. If a fitting is not available, the tubing can be cut.

(7) Purge the system and debraze the fittings to the accumulator (10).

(8) Remove the accumulator (10).

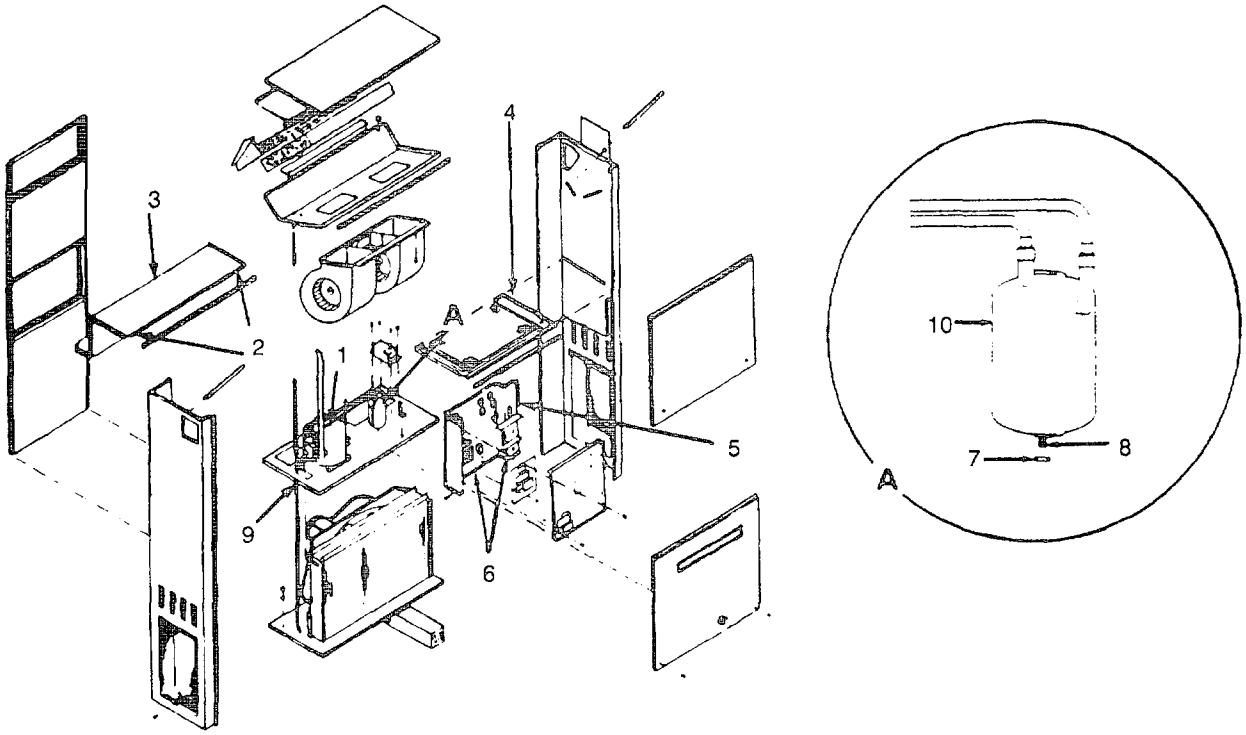

Figure 5-4. Accumulator

b. Installation.

NOTE

All tubing removed with the accumulator must be reinstalled on the new accumulator. This must be done while the accumulator is out of the unit. See para 5-7.

(1) Place accumulator (10) into unit.

(2) Purge the system while brazing the tubing together. See para 5-6 and 5-7.

(3) Look into the right side door assembly and ensure the accumulator stud (8) is through the hole in the base pan (9) and then install the nut (7) on the stud (8).

(4) Replace the drier. See para 5-12.

(5) Leak test the system. See para 5-8.

(6) Evacuate and charge the system. See para 5-9 and 5-10.

(7) Perform a pressure check. See para 5-11.

(8) Slide the control box (5) back and secure it with the two screws (6).

(9) Replace the cover on the control box. See para 4-23.

(10) Slide the dividing wall (3) down and secure with the two screws (2).

11) Slide in the filter brackets (4) and filter.

(12) Reconnect wiring to the compressor (1) and remove tags.

(13) Install both front door assemblies and the right side door assembly. See para 4-17 and 4-19.

5-15. INDOOR COIL.

This task covers: a. Removal b. Installation

INITIAL SETUP:
Tools:
Tool Kit, service, refrigeration unit
Materials:
Rags (Appendix F, item 7)
Equipment Conditions:
Power off at power source.
Both front door assemblies removed. See para 4-17.
General Safety Instructions:

WARNING

Disconnect input power to the unit before performing any internal maintenance. Voltages used can kill. Shutting the unit off at the control panel does not disconnect unit power.

a. Removal.

(1) Remove the four screws (1I, Figure 5-5) from the top panel (2) and pull it up.

(2) Remove the two screws (3) holding the indoor coil clips (4).

(3) Remove the access door (5) by removing the two remaining screws (6) and pulling the door down and away from the air conditioner.

(4) Use pliers to pull the clips (4) up and away from the indoor coil (7).

(5) Discharge the refrigerant system. See para 5-5.

NOTE
The tubing should be removed below the refrigerant screen.

(6) Purge the system with nitrogen and debraze the tubing (8). See para 5-6 and 5-7.

WARNING

When handling coils, wear gloves to avoid cuts and to reduce fin damage on the coil.

(7) Carefully lift the indoor coil (7) up and away from the unit.

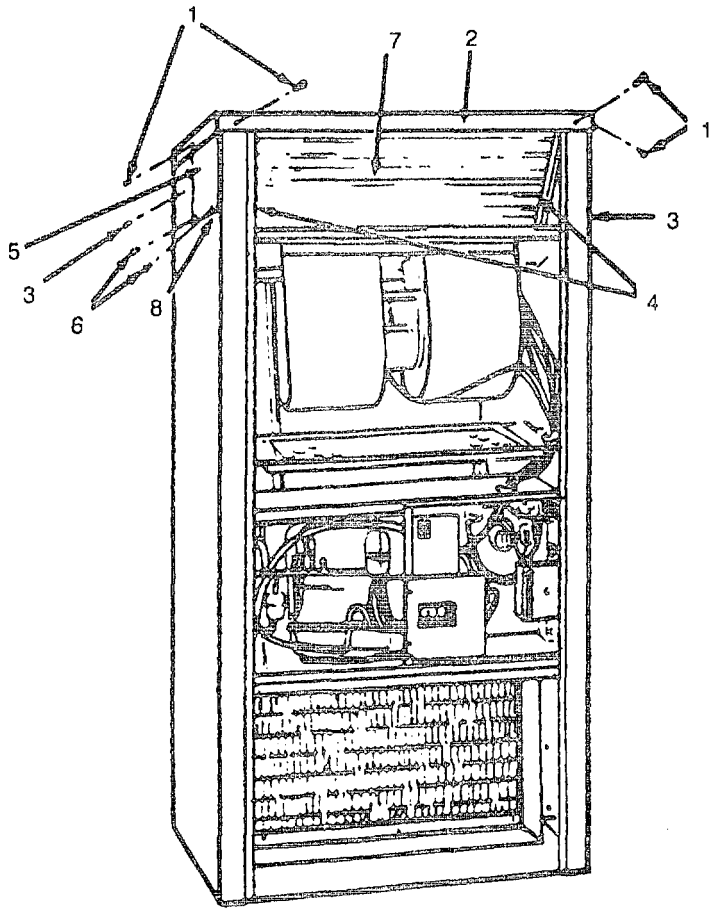

b. Installation.

(1) Slide the indoor coil (7) into the unit so that it is sitting on the rack.

(2) Slide the indoor coil clips (4) into both sides of the coil (7) so that it is secured.

(3) Align the tubing, purge the system, and braze the tubing in place. See para 5-6 and 5-7.

(4) Replace the drier. See para 5-12.

(5) Leak test the system. See para 58.

(6) Evacuate and charge the system. See para 5-9 and 5-10.

(7) Install the access door (5) and secure it with two screws (6).

(8) Slide the top panel (2) down and secure with the four screws (1).

(9) Secure the indoor coil clips (4) with the two screws (3).

(10) Install both front door assemblies. See para 4-17.

5-16. OUTDOOR COIL.

This task covers: a. Removal b. Installation

INITIAL SETUP:
Tools:
Tool Kit, service, refrigeration unit
Materials:
Rags (Appendix F, Item 7)
Equipment Conditions:
Power off at power source.
Both front door assemblies removed See para 4-17.
Both side door assembly and coil guard removed. See para 4-19.
General Safety Instructions:

WARNING

- Disconnect input power to the unit before performing any internal maintenance. Voltages used can kill. Shutting the unit off at the control panel does not disconnect unit power.
- When handling coils wear gloves to avoid cuts and to reduce fin damage on the coil,.

a. Removal.

(1) Discharge the refrigerant system. See para 5-5.

(2) Move the defrost control bulb (1, Figure 5-6) out of its holder (2) away from the outdoor coil (3).

(3) Remove the ten screws (4) securing the venturi panel (5).

(4) Purge the system with nitrogen and debraze the tube joints (6) at the outdoor coil (3). See para 5-6 and 5-7.

WARNING

When handling coils, wear gloves to avoid cuts and to reduce fin damage on the coil.

(5) Carefully slide the outdoor coil to the side and pull it out of the air conditioner.

5-16. OUITDOOR COIL-Continued.

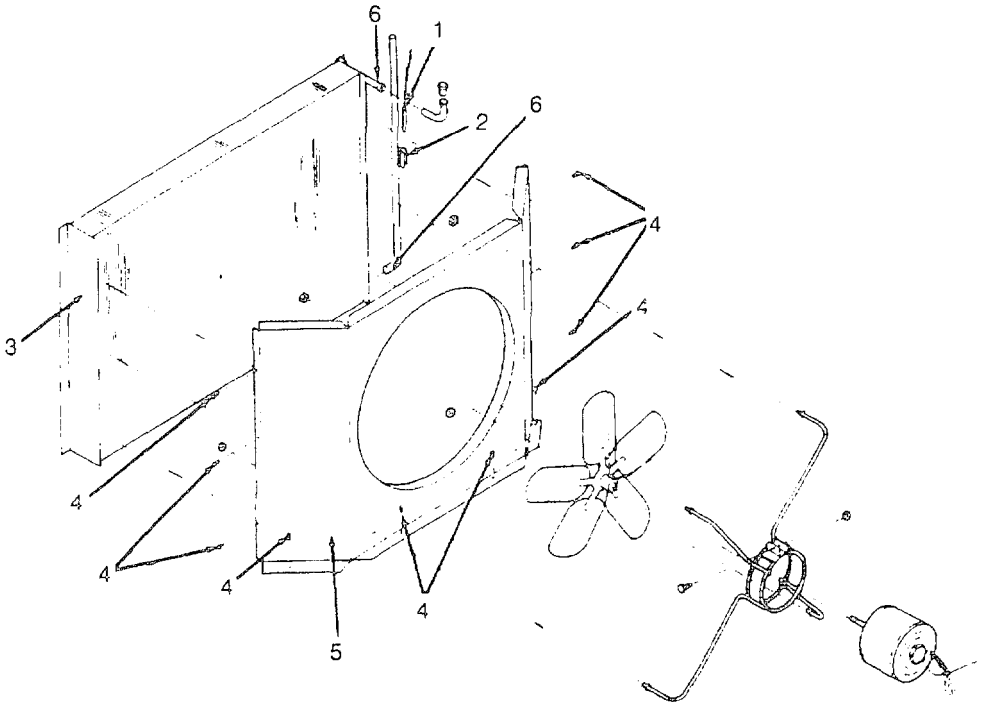

Figure 5-6. Outdoor Coil

WARNING

When handling coils, wear gloves to avoid cuts and to reduce fin damage on the coil.

b. Installation.

(1) Carefully slide outdoor coil (3) into the unit.

(2) Align refrigerant tubing at joints (6) with outdoor coil.

(3) Purge the system with nitrogen and braze the tube joints (6) at the outdoor coil. See para 5-6 and 5-7.

(4) Replace the drier. See para 5-12.

(5) Leak test all newly connected joints and those in the repair area. See para 5-8.

(6) Evacuate and charge the refrigeration system. See para 5-9 and 5-10.

(7) Secure the venturi panel (5) with the ten screws (4).

(8) Place the defrost control bulb (1) in its holder (2) on the coil (3).

(9) Replace both front door assembly and the coil guard and side door assemblies. See para 4-17 and 4-19.

5-17. CHECK VALVE.

This task covers: a. Removal b. Testing c. Installation

INITIAL SETUP:

Tools:
Tool kit, service, refrigeration unit
Materials:

Rags (Appendix F, Item 7)
Equipment Conditions:
Power off at power source.
Both front door assemblies removed. See para 4-17.
General Safety Instructions:

WARNING

Disconnect input power to the unit before performing any internal maintenance. Voltages used can kill. Shutting the unit off at the control panel does not disconnect unit power.

a. Removal.

(1) discharge the refrigerant system. See para 5-5.

NOTE

The complete liquid line assembly may be removed if required for access.

(2) Purge system with nitrogen and debraze the tubing at the check valve. See Figure 5-7 and para 5-6 and 5-7.

(3) Remove the check valve from the unit.

b. Testing.

Blow into the valve on both sides. Air should only pass through the valve one way.

NOTE

If air passes through valve both ways or if air will not pass either way, the valve is defective and must be replaced.

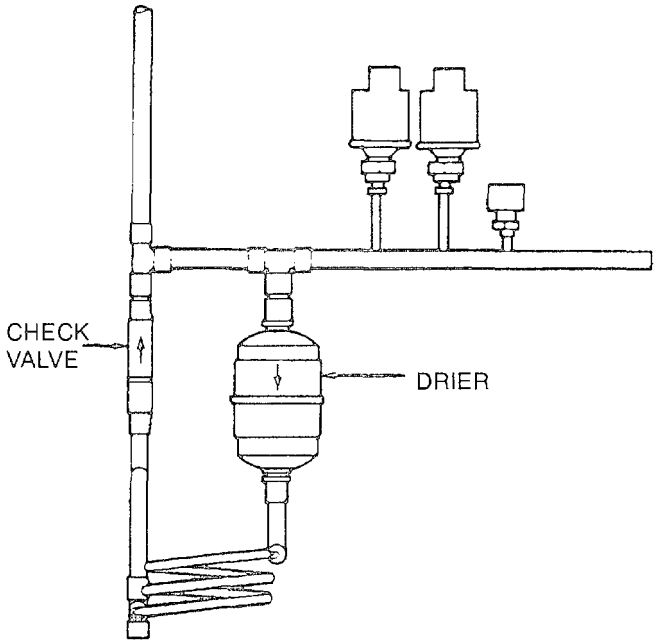

Figure 5-7. Check Valve

c. Installation.

(1) Place check valve in the unit.

(2) Wrap wet rags around valve near connection points.

CAUTION
Direct flame away from the check valve.

(3) Purge system with nitrogen and braze the tubing joints. See para 5-6 and 5-7.

(4) Replace drier. See para 5-12.

(5) Leak test the system. See para 5-8.

(6) Evacuate and charge the system. See para 5-9 and 5-10.

(7) Install both front door assemblies. See para 4-17.

5-18. PRESSURE SWITCHES.

This task covers: a. Testing b. Removal c. Installation

INITIAL SETUP:
Tools:
Tool kit, service, refrigeration unit
Materials:
Rags (Appendix F, Item 7)
Equipment Conditions.
Power off at power source.
Both front door assemblies removed See para 4-17.
General Safety Instructions:

WARNING

Disconnect input power to the unit before performing any internal maintenance. Voltages used can kill. Shutting the unit off at the control panel does not disconnect unit power.

a. Testing.

(1) Disconnect wiring on the high (1, Figure 5-8) and low (2) pressure switches.

NOTE

Blue leads are connected to the low pressure switch.

(2) Connect an ohmmeter to the low pressure switch.

(3) Discharge the system per para 5-5 and watch the ohmmeter. The low pressure switch should open at 35 psig.

(4) Charge the system per para 5-10 and watch the ohmmeter. The low pressure switch should reset at 60 psig.

NOTE

Black leads are connected to the high pressure switch.

(5) Stop charging the system and connect the ohmmeter to the high pressure switch.

(6) Continue charging the system and watch the ohrnmeter. The high pressure switch should open at 400 psig.

(7) Discharge the system and watch the ohmmeter. The high pressure switch should reset and close at 300 psig.

(8) Replace any switch failing the test. If both switches passed the test, connect wires.

(9) Charge the system. See para 5-10.

(10) Install both front door assemblies. See para 4-17.

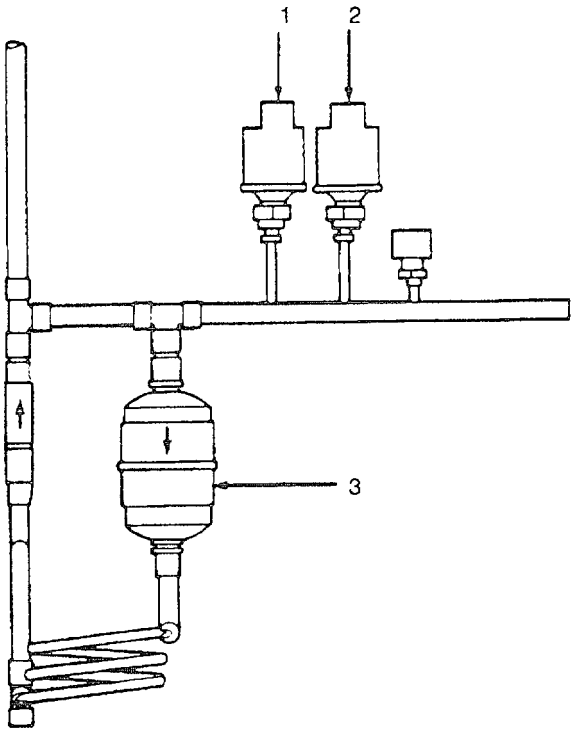

Figure 5-8. Pressure Switches

b. Removal.

(1) Discharge the refrigerant system. See para 5-5.

(2) Tag and disconnect wire leads at switches. See Figure 5-8.

(3) Purge and debraze fitting on high (1)/low (2) pressure switches. See para 5-6 and 5-7.

(4) Remove high (1)/low (2) pressure switches.

c. Installation.

(1) Install high (1, Figure 5-8)/low (2) pressure switches in unit and braze in place. See para 5-6 and 5-7.

(2) Replace drier (3). See para 5-12.

(3) Connect wire leads and remove the tags.

(4) Leak test all newly connected joints and those in the repaired area. See para 5-8.

(5) Evacuate and charge refrigerant system. See para 5-9 and 5-10.

(6) Install both front door assemblies. See para 4-17.

This task covers: a. Testing b. Removal c. Installation

INITIAL SETUP:

Tools:
Tool kit, service, refrigeration unit
Materials:
Rags (Appendix F, Item 7)
Equipment Conditions:
Power off at power source.
Both front door assemblies removed. See para 4-17.
General Safety Instructions:

WARNING

Disconnect input power to the unit before performing any internal maintenance. Voltages used can kill. Shutting the unit off at the control panel does not disconnect unit power.

a. Testing

(1) With power on, run the system in both heating and cooling modes. See para 2-7.

(2) If unit will not change modes, check the reversing valve solenoid. See para 4-35. If the solenoid is operational, replace the reversing valve.

b. Removal.

(1) Disconnect the solenoid (1, Figure 5-9) from the reversing valve (2) by removing the two screws (3) holding the solenoid.

(2) Discharge the refrigerant system. See para 5-5.

CAUTION

If brazed connections are hard to reach or closer than 3 to 4 inches away from the reversing valve, cut the tubing at least 3 inches away from the valve.

(3) Purge system with nitrogen and debraze the tubing. See para 5-6 and 5-7.

(4) Remove the reversing valve (2) from the unit.

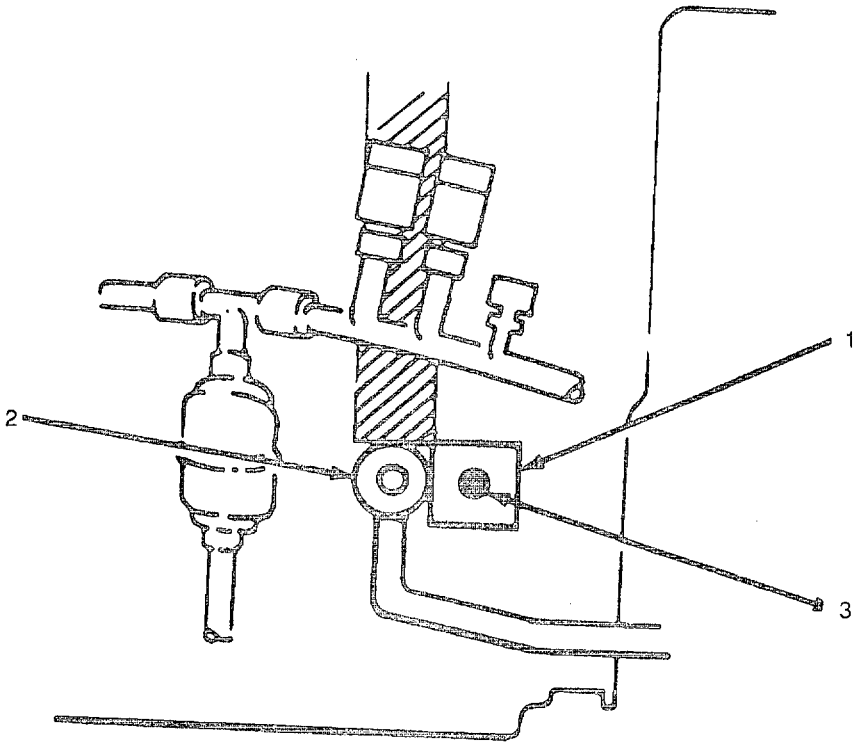

Figure 5-9. Reversing Valve

c. Installation.

(1) Place the reversing valve (2, Figure 5-9) into the unit.

(2) Wrap wet rags around reversing valve (2) at connection points.

CAUTION

Direct flame away from tile reversing valve.

(3) Purge system with nitrogen and braze the tubing joints. See paras 5-6 and 5-7.

(4) Remove the wet rags.

(5) Replace drier. See para 5-12.

(6) Leak test the system. See paras 5-9 and 5-10.

(7) Evacuate and charge the refrigerant system. See paras 5-9 and 5-10.

(8) Install the reversing valve solenoid (1) on the reversing valve (2) with the two screws (3).

(9) Install both front door assemblies. See para 4-17.

5-20. COMPRESSOR.

This task covers: a. Testing b. Removal c. Installation

INITIAL SETUP:

Tools:

Tool kit, service, refrigeration unit

Materials:

Tubing Insulation (Appendix F, Item 9)

Equipment Conditions:

Power off at power source.

Both front door assemblies removed. See para 4-17.

General Safety Instructions:

WARNING

Disconnect input power to the air conditioner before performing any internal maintenance. Voltages used can kill. Shutting the unit off at the control panel does not disconnect unit power.

a. Testing.

WARNING

Avoid skin contact or inhaling fumes from any acid formed by burnout of oil and refrigerant. Wear a gas mask if area is not thoroughly ventilated. Wear protective goggles or glasses to protect eyes. Wear rubber gloves to protect hands.

(1) Tag and remove the wiring from the compressor terminals (1, Figure 5-10) and check for ground between each terminal and the compressor housing.

(2) Check for continuity between the common terminal (C) and the run terminal (R) and between common terminal (C) and start terminal (S). (Make sure the compressor is cool to the touch; the internal overload may be open.)

(3) Check the shorts/opens between winding turns with a multimeter.

- Common to Start should read 1 to 5 ohms.
- Start to Run should read 1 to 5 ohms.

WARNING

Smell cautiously; the gas could be toxic and highly acid.

(4) Sample the smell of the refrigerant gas at the suction port for the characteristic acrid odor of a burnout. If the system has a burnout, go to step (6). If there is no odor of a burnout, go to step (5).

(5) If the above steps check OK, look elsewhere for the trouble. The external electrical components are a good place to start. See para 4-26, Compressor Capacitor and para 4-32, Compressor Contractor.

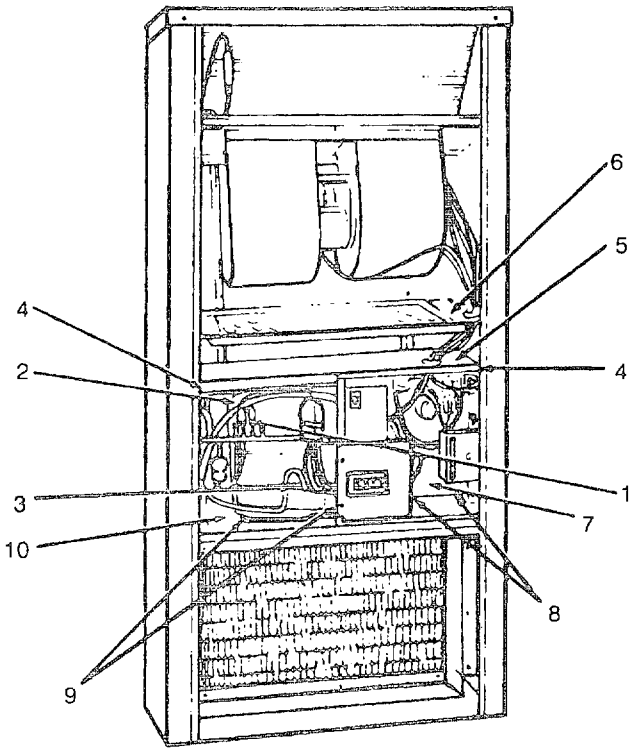

Figure 5-10. Compressor

WARNING

Avoid getting the refrigerant in the eyes or on the skin.

(6) Discharge the system charge. See para 5-5.

(7) Replace the compressor and correct the system fault that caused the burnout.

NOTE

If the discharge line shows no evidence of sludge and the suction stub is also clean, or perhaps has some light carbon deposits, the burnout occurred while the compressor was not rotating. Contaminants should be largely confined to the compressor housing and a single installation of liquid and suction line driers will probably suffice to clean up the system. If the sludge is found In the discharge line (and also found in the suction line) the compressor motor burned out while running Sludge and acid have been pumped throughout the system and several changes of the driers will probably be necessary to cleanse the system See para 5-12. Systems suffering running burnouts will also need the reversing valve replaced. See para 5-19.

b. Removal.

(1) Unwrap the insulation from the suction line (2, Figure 5-10) so that the joint on the compressor (3) is exposed.

(2) Tag and remove wiring (1) at the compressor (3).

(3) Remove the two screws (4) holding the dividing wall (5).

(4) Lift out filter brackets (6) and lift dividing wall (5).

(5) Remove the control box (7) cover. See para 4-23.

5-20. COMPRESSOR-Continued.

(6) Remove the two screws (8) securing the control box (7).

(7) Remove the four bolts (9) securing the base of the compressor (3) to the base pan (10).

(8) Purge the system with nitrogen and debraze the tubing at the compressor. See paras 5-6 and 5-7.

WARNING

If compressor burnout is suspected, use care when handling compressor to avoid touching compressor sludge. Acid in sludge can cause burns.

(9) Remove the compressor from the unit.

c. Installation.

CAUTION

The compressor is supplied with a complete charge of oil. Take care that oil is not lost when handling an installing compressor.

NOTE

If any refrigeration piping was disconnected with the compressor being replaced, transfer the piping to the replacement compressor before Installing it in the air conditioner.

(1) Lift new compressor (3, Figure 5-10) through the lower front door assembly opening and position it on base pan (10).

(2) Install the four bolts (9) to secure the compressor (11) to the panbase (12).

CAUTION

Replacement compressor must have a new capacitor and contactor if system had a running burnout. In all other cases check contacts of the capacitor and contactor. See para 4-26 and 4-32.

NOTE

The suction line accumulator must be thoroughly flushed after a running burnout to remove any trapped sludge to prevent plugging the oil return hole. The drier should be installed between the accumulator and the compressor. In the case of a standing burn, the drier may be installed upstream of the suction line accumulator, if desired.

(3) If system had a running burnout, go to step (4). If system did not have a running burnout, go to step (6).

(4) Install a second drier immediately upstream of the compressor. The drier, when permanently installed in a clean system, or as initially installed in a dirty system, must have a pressure drop not more than that of Table 5-2. Pressure taps must be Installed before and after the second drier to measure the pressure drops. See para 5-12.

(5) Install an oil trap In the suction line immediately downstream from the drier if the old compressor has suffered running burnout.

NOTE

The oil trap port can be used to make pressure drop checks across the drier.

(6) Purge the system with nitrogen and braze the tubing at the compressor (3). See paras 5-6 and 5-7.

(7) Replace drier. See para 5-12.

(8) Connect all wiring to the compressor terminals (1) and remove tags.

(9) Leak test all newly connected joints and those in the repair area. See para 5-8.

(10) Reinstall and tape in place tubing insulation that was removed. If it was damaged, replace with tubing insulation.

(11) Evacuate and charge the refrigerant system. See paras 5-9 and 5-10.

(12) Secure the control box (7) with the two screws (8).

(13) Replace the cover on the control box and secure with two screws See para 4-23

(14) Slide the dividing wall (5) down, replace filter brackets (6), and secure dividing wall with two screws (4).

(15) Test the system per para 5-11. Then continue with step (16) below if system had a running burnout. Otherwise go to step (19).

NOTE

If the system has suffered rotating burnout, it is advisable that the oil of the replacement compressor be tested and judged acid free before the system is considered satisfactorily cleaned.

(16) Make pressure drop check across the drier. See Figure 5-11. When the trapped oil level appears in the sight glass (less than an ounce is needed), the oil may be slowly transferred to the beaker of the acid test kit.

NOTE

Where a severe running burnout has occurred, an Increased pressure drop will be measured.

(17) Change driers per para 5-12 whenever pressure drop approaches or exceeds that allowed for temporary operation during cleanup or acid reading is above 0.05. See Table 5-4.

(18) Keep changing both the driers until the pressure drop stabilizes at a figure equal to or below that permitted for permanent operation in a system. See Table 5-3.

NOTE

At this point, it is the technician's option to leave the second drier in the system or remove it from operation. If the system is to be opened to permit the permanent removal of the second drier, then the remaining, drier should be changed once more. See para 5-12.

(19) Install both front door assemblies. See para 4-17.

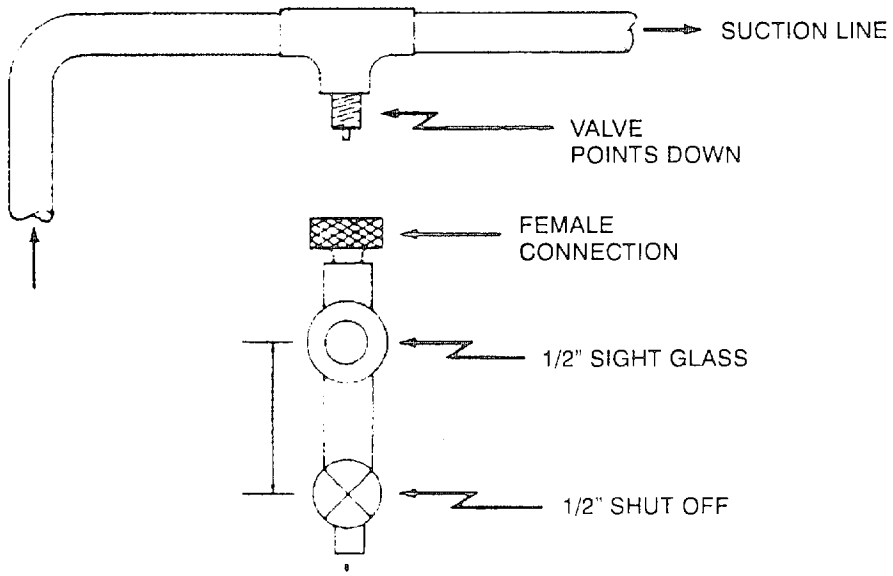

Figure 5-11. Oil Trap Valve Connection For Oil Samples

5-20. COMPRESSOR-Continued.

Table 5-3. Maximum Pressure Drop For Permanent Drier

	Air Conditioning	Heating
Evaporator Temperature Maximum Pressure Drop	55 to 32 degrees F (12.8 to 0 0 degrees C) 3 PSI	55 to 30 degrees F (12, 8 to-1.1 degrees C) 3 PSI
Evaporator Temperature Maximum Pressure Drop		30 to-10 degrees F (-1.1 to-23 0 degrees C) 2 PSI

Table 5-4. Maximum Pressure Drop For Temporary Drier During Cleanup

	Air Conditioning	Heating
Evaporator Temperature Maximum Pressure Drop	55 to 32 degrees F (12.8 to 0.0 degrees C) 3 PSI	55 to 30 degrees F (12.8 to-1.1 degrees C) 3 PSI
Evaporator Temperature Maximum Pressure Drop		30 to-10 degrees F (-1.1 to-23 0 degrees C) 2 PSI

5-21. TUBING AND FITTING S.

This task covers: a. Testing b. Removal c. Installation

INITIAL SETUP:

Tools:

Tool kit, service, refrigeration unit

Materials:

Tubing Insulation (Appendix F, Item 9)

Equipment Conditions:

Power off at power source.
All panels and doors on unit removed. See paras 4-17 and 4-19.

General Safety Instructions:

WARNING

Disconnect input power to the air conditioner before performing any internal maintenance. Voltages used can kill. Shutting the unit off at the control panel does not disconnect unit power.

NOTE

The refrigeration system contains a number of pieces of copper tubing in a variety of material grades, sizes, lengths, and shapes; and a number of elbows, tees, and adapters in several sizes. Observe the following when replacing any piece of tubing or any fitting in the system.

a. Testing.

(1) Check tubing and fittings for signs of leakage. If leakage is suspected, perform a leak test. See para 5-8.

(2) Check that tubing is not kinked or mashed closed.

(3) Install all panels and doors. See paras 4-17 and 4-19.

5-21. TUBING AND FITTINGS-Continued.

b. Removal.
   (1) Discharge the refrigeration system. See para 5-6.
   (2) Remove tubing Insulation if required.
   (3) Purge the system with nitrogen and debraze the tube connections. See paras 5-6 and 5-7.
   (4) Remove the tubing.

c. Installation.
   (1) Align the replacement tubing.
   (2) Purge the system with nitrogen and braze the tube joints. See paras 5-6 and 5-7.
   (3) Replace the drier. See para 5-12.
   (4) Leak test all newly connected joints and those in the repair area. See para 5-8.
   (5) Evacuate and charge the refrigerant system. See paras 5-9 and 5-10.
   (6) Replace tubing insulation as required.
   (7) Install all panels and doors. See paras 4--17 and 4-19.

CHAPTER 6

GENERAL SUPPORT MAINTENANCE

Section I. REPAIR PARTS, SPECIAL TOOLS, TMDE AND SUPPORT EQUIPMENT

6-1. GENERAL. Repair parts are listed and illustrated in this manual. No special tools are required for General Support Maintenance of the air conditioner. Test, Measurement, and Diagnostic Equipment (TMDE) and support equipment include standard electrical test equipment, and standard pressure and vacuum gages, vacuum pumps, and servicing manifolds found in any General Support Maintenance refrigeration facility.

Section II. MAINTENANCE PROCEDURES

6-2. GENERAL. The only item restricted to General Support Maintenance level by the Maintenance Allocation Chart (MAC) Is repair of the air conditioner casing and base. However, General Support Maintenance may be called upon. At times, to perform any or all of the MAC items listed for Unit and Direct Support Maintenance.

6-3. CASING AND BASE.

This task covers: a. Testing b. Removal c. Installation

INITIAL SETUP:

Tools:
Tool kit, service, refrigeration unit

Materials:
Adhesive, General Purpose (Appendix F, Item 1)
Solvent, Dry Cleaning (Appendix F, Item 10)

Equipment Conditions:
Power off at power source.
Front and side door assemblies removed. See paras 4-17 and 4-19.

6-3. CASING AND BASE-Continued.

General Safety Instructions:

WARNING

Disconnect input power to the air conditioner before performing any internal maintenance. Voltages used can kill. Shutting the unit off at the control panel does not disconnect unit power.

Repair:

a. Straighten minor dents and bent edges using common sheet metal repair procedures

b. Replace loose or missing rivets by drilling old rivet out with a drill bit slightly smaller than the diameter of old rivet body and Installing replacement rivet.

c. Touch up or refinish as required. See TM 43--0'139.

d. Replace gaskets and Insulation.

CAUTION

Use only gaskets or insulation identified in this manual. Use of the wrong gaskets or insulation could present a fire hazard.

(1) Remove as much old gasket or Insulation material as possible by puling or scraping It away from the metal surface.

WARNING

Use care when using solvents. Solvents are toxic and anesthetic in nature when vapors are allowed to concentrate. Do not use near hot materials or flames as corrosive fumes may form or fire and explosion may result. Use solvents in well ventilated areas. Avoid prolonged breathing of vapors and contact with clothing, skin or eyes. Wear rubber gloves and facie shield when applying solvents.

(2) Soften and remove old adhesive and gasket or insulation residue using solvent and a stiff brush.

(3) Coat the mating surfaces of the metal and gasket or insulation with adhesive. Let both surfaces air dry until the adhesive Is tacky but will not stick to fingers.

(4) Starting with an end, carefully attach the gasket or insulation to the metal. Press into firm contact all over.

e. Install panels and side door assemblies. See paras 4-17 and 4-19.

APPENDIX A

REFERENCES

A-1. SCOPE. This appendix lists all forms, pamphlets, technical manuals, and miscellaneous publications referenced in this manual.

A-2. FORMS.

Recommended Changes to Publications and Blank Forms ..... DA FORM 2028
Recommended Changes to Equipment Technical Publications ..... DA FORM 2028-2
Equipment Inspection and Maintenance Worksheet ..... DA FORM 2404
Quality Deficiency Report ..... SF 368
Packaging Improvement Report ..... DD FORM

A-3. PAMPHLETS.

The Army Maintenance Management System (TAMMS) ..... DA PAM 738-750
National Board of Fire Underwriters 90A
National Board of Fire Underwriters 90B

A-4. TECHNICAL MANUALS.

Destruction of Equipment to Prevent Enemy Use ..... TM 750-244-3
Painting Instructions for Army Materiel ..... TM 43-0139
Leak Detector, Refrigerant Gas ..... TM 9-4940-435-14

A-5. MISCELLANEOUS PUBLICATIONS.

None

APPENDIX B

MAINTENANCE ALLOCATION CHART (MAC)

Section I. INTRODUCTION

B-1. INTRODUCTION.

a. This section provides a general explanation of all maintenance and repair functions authorized at various maintenance categories.

b. The Maintenance Allocation Chart (MAC) in Section II designates overall authority and responsibility for the performance o[maintenance functions on the Identified item or component. The application of the maintenance functions to the end item or component will be consistent with the capacities and capabilities of the designated maintenance categories.

c. Section III lists the tools and test equipment (both special tools and common tool sets) required for each maintenance function as referred from Section II.

d. Section IV contains supplemental instructions and explanatory notes for a particular maintenance function.

B-2. MAINTENANCE FUNCTIONS. Maintenance functions will be limited to and defined as follows.

a. Inspect. To determine the serviceability of an item by comparing its physical, mechanical and/or electrical characteristics with established standards through examination (e.g., by sight, sound, or feel).

b. Test. To verify serviceability by measuring the mechanical, pneumatic, hydraulic, or electrical characteristics of an Item and comparing those characteristics with prescribed standards.

c. Service. Operations required periodically to keep an item in proper operating condition, i.e., to clean (includes decontaminate when required), to preserve, to drain, to paint, or to replenish fuel, lubricants, chemical fluids, or gases.

d. Adjust. To maintain or regulate, within prescribed limits, by bringing into proper or exact position, or by setting the operating characteristics to specific parameters.

e. Align. To adjust specified variable elements of an item to bring about optimum or desired performance.

f. Calibrate. To determine and cause corrections to be made or to be adjusted on instruments or test, measuring and diagnostic equipments used In precision measurement. Consists of comparisons of two instruments, one of which is a certified standard of known accuracy, to delect and adjust any discrepancy In the accuracy of the Instrument being compared.

g. Remove/Install. To remove and install the same Item when required to perform service or other maintenance functions Install may be the act of emplacing, seating, or fixing into position a spare, repair part, or module (component or assembly) in a manner to allow the proper functioning of equipment or a system.

B-2. MAINTENANCE FUNCTIONS-CONTINUED.

h. Replace. To remove an unserviceable item and install a serviceable counterpart in its place. "Replace" is authorized by the MAC and is shown as the third position code of the SMR code.

i. Repair. The application of maintenance services[1]. including fault location/troubleshooting[2], removal/installation, and dtsassembly/assemby[3] procedures, and maintenance actions[4]to identify troubles and restore serviceability to an item by correcting specific damage. fault, malfunction, or failure in a part, subassembly, module (component or assembly). end item, or system.

B-3. EXPLANATION OF COLUMNS IN THE MAC, SECTION II.

a. Column 1 Group Number. Column 1 lists functional group code numbers. the purpose of which is to identify maintenance significant components, assemblies, subassemblies, and modules with the next higher assembly. End Item group number shall be "00"'

b. Column 2 *C*omponent/Assembly. Column 2 contains the names of components. assemblies, subassemblies, and modules for which maintenance is authorized.

c. Column 3, Maintenance Function. . Column 3 lists the functions to be performed on the item listed in column 2. (For detailed explanation of these functions, see paragraph B-2.)

d. Column 4, Maintenance Level. Column 4 specifies, by the listing of a work time figure in the appropriate subcolumn(s), the level of maintenance authorized to perform the function listed in Column 3. This figure represents the active time required to perform the maintenance function at the indicated level of maintenance. If the number or complexity of the tasks within the listed maintenance function vary at different maintenance categories, appropriate work time figures will' be shown for each category. The work time figure represents the average time required to restore an Item (assembly, subassembly, component., nodule, end item, or system) to a serviceable condition under typical field operating conditions. This time includes preparation time (including any necessary disassembly/assembly time), troubleshooting/fault location time, and quality assurance/quality control .time in addition to the time required to perform the special tasks identified for the maintenance functions authorized in the maintenance allocation chart. The symbol designations for the various maintenance categories are C, O, F, H. and D.

C .....Operator or crew maintenance
O .....Unit maintenance
F.....Direct support maintenance
H. .....General support maintenance
D .....Depot maintenance

e. Columns 5, Tools and Equipment. Column 5 specifies, by code, those common tool sets (not individual tools) and special tools, TMDE, and support equipment required to perform the designated function

f. Column 6. Remarks. This column shall, when applicable, contain a letter code in alphabetical order which shall be keyed to the remarks contained In Section IV.

---

[1] Services-Inspect, test, service, adjust, align, calibrate, and/or replace.

[2] Fault locate/troubleshoot-The process of investigating and detecting the cause of equipment malfunctioning, the act of isolating a fault within a system-or unit under test (UUT)

[3] Disassemble/assemble-. Enc*omp*asses the step-by-step taking apart (or breakdown) of a spare/functional group coded item to the level of its least componency identified as maintenance significant (i.e.. assigned an SMR code) for the category of maintenance under consideration.

[4] Actions-Welding, grinding, riveting, straightening, facing, remachinery, and/or resurfacing

B-4. EXPLANATION OF COLUMNS IN TOOL AND TEST EQUIPMENT REQUIREMENTS, SECTION III.

a. Column 1, Reference Code. The tool and test equipment reference code correlates with a code used in the MAC, Section II, Column 5.

b. Column 2, Maintenance Category. The lowest category of maintenance authorized to use the tool or test equipment.

c. Column 3, Nomenclature. Name or identification of the tool or test equipment.

d. Column 4, National Stock Number. The national stock number of the tool or test equipment

e. Column 5, Tool Number. The manufacturer's part number.

B-5. EXPLANATION OF COLUMNS IN REMARKS, SECTION IV.

a. Column 1, Reference Code. The code recorded in column 6, Section II.

b. Column 2, Remarks. This column lists information pertinent to the maintenance function being performed as indicated in the MAC. Section II.

Section II. MAINTENANCE ALLOCATION CHART

(1) GROUP NUMBER	(2) COMPONENT ASSEMBLY	(3) MAINTENANCE FUNCTION	(4) MAINTENANCE LEVEL					(5) TOOLS AND EQUIP	(6) REMARKS
			C	O	F	H	D		
01	FRONT DOOR ASSEMBLIES, INFORMATION DECALS, AND SIDE DOOR ASSEMBLIES								
	Front Door Assemblies	Inspect	0 1						
		Repair			2 0			1	
		Replace		0 5				1	
	Information Decals	Inspect	01						
		Replace		0.2				1	
	Side Door Assemblies	Inspect	0.1						
		Service		0.1				1	
		Replace		0.5				1	
02	AIR CIRCULATING AND CONDENSATE DRAIN SYSTEM								
	Air Filter	Inspect	0 1						
		Replace		0 5					
	Fresh Air Damper	Inspect	0.1						
		Adjust		0.1				1	
		Replace		1.0				1	
	Condensate Drain	Inspect	0.1	0 5				1	
		Service		1.0				1	
		Replace		1.5				1	
03	ELECTRICAL								
	Control Box Wiring	Inspect		0.2				1	
		Test		1.0				1	
		Repair		2.0				1	
		Replace		1.0				1	
	Low Voltage Terminal Block	Inspect		0.2				4	
		Replace		1 0				1	

Section II. MAINTENANCE ALLOCATION CHART-Continued

(1) GROUP NUMBER	(2) COMPONENT ASSEMBLY	(3) MAINTENANCE FUNCTION	(4) MAINTENANCE LEVEL					(5) TOOLS AND EQUIP	(6) REMARKS
			C	O	F	H	D		
	Fan Capacitor	Inspect	0.2					1	
		Test	1.0					1	
		Replace	1.0					1	
	Terminal Board	Replace	1.0					1, 3, 4	
	Lock-out Relay	Inspect	0.2					1	
		Test	1.0					1	
		Replace	1.0					1	
	Heat Relay	Inspect	0.2					1	
		Test	1.0					1	
		Replace	1.0					1	
	Heat/Cool Relay	Inspect	0.2					1	
		Test	1.0					1	
		Replace	1.0						
	Low Voltage Transformer	Inspect	0.2					1	
		Test	1 0					1	
		Replace	10					1	
	Compressor Contactor	Inspect	0 2					1	
		Test	1 0					1	
		Replace	10					1	
	Fan Relay	Inspect	0 2					1	
		Test	1 0					1	
		Replace	1.0						
	Fan Delay Relay	Inspect	0.2					1	
		Test	1 0					1	
		Replace	1.0					1	
	Reversing Valve Solenoid	Inspect	0 2						
		Test	1					1	
		Replace	1.0					1	
	Defrost Control	Inspect	0 2					1	
		Test	1 0					1	
		Replace	1.0					1	
04	INDOOR FANS. MOTORS. AND HEATERS								
	Indoor Fans	Inspect	0.1					1	
		Service	0.3					1	
		Replace	1.0					1	
	Indoor Fans Motor	Inspect	0 1					1	
		Service	0.1					1	
		Test	0.2					1	
		Replace	1.0						
	Indoor Fans Motor Bracket	Inspect	0.1					1	
		Replace	1.0					1	

Section II. MAINTENANCE ALLOCATION CHART-Continued

(1) GROUP NUMBER	(2) COMPONENT ASSEMBLY	(3) MAINTENANCE FUNCTION	(4) MAINTENANCE LEVEL					(5) TOOLS AND EQUIP	(6) REMARKS
			C	O	F	H	D		
	Heater Thermostat	Inspect	0.1					1	
		Test	0.3						
	Replace	0 5							
	Heater Element	Inspect	0.1					1	
		Test	0.3					1	
		Replace	1.0					1	
	Fuse Links	Inspect	01					1	
		Test	0 3					1	
		Replace	0.5					1	
05	OUTDOOR FAN MOTOR BRACKET ASSEMBLY								
	Venturi Panel	Inspect	0.1					1	
		Service	0.1					1	
		Repair		05				1	
	Outdoor Fan	Inspect	01					1	
		Service	0.3					1	
		Replace	2.0					1	
	Outdoor Fan Motor	Inspect	1.0					1	
		Test	02					1	
		Replace	3.0					1	
	Outdoor Fan Motor Bracket	Inspect	0.5					1	
		Replace	3.0					1	
06	REFRIGERATION SYSTEM								
	Drier	Inspect		0 5				1	
		Replace		6 0				1, 2	
	Capillary Tubes	Replace		7.0				1, 2	
	Accumulator	Inspect	0.2					1	
		Replace		7.0				1, 2	
	Indoor Coil	Inspect	1.0					1	
		Service	2.0					1	
		Replace		8 0				1, 2	
	Outdoor Coil	Inspect	0.5					1	
		Service	2.0					1	
		Replace		8 0				1, 2	
	Check Valve	Test		1 5				1	
		Replace		70				1, 2	
	Pressure Switches	Test		1 0				1	
		Replace		7.0				1, 2	
	Reversing Valve	Test		0.5				1	
	Replace			7.0				1, 2	

Section II. MAINTENANCE ALLOCATION CHART-Continued

(1) GROUP NUMBER	(2) COMPONENT ASSEMBLY	(3) MAINTENANCE FUNCTION	(4) MAINTENANCE LEVEL C	O	F	H	D	(5) TOOLS AND EQUIP	(6) REMARKS
	Compressor	Test			1 0			1	
		Replace			12 0			1, 2	
	Tubing and Fittings	Test			2.0			1	
		Replace			7.0			1, 2	
07	CASING AND BASE								
	Casing	Inspect	0.1						
		Repair					2.0	1, 3, 4	
	Base	Inspect	0.1						
		Repair					1.0	1.3, 4	
08	THERMOSTAT								
		Inspect			0 1				
		Replace			1 0			1	

Section III. TOOL AND TEST EQUIPMENT REQUIREMENTS

NOTE

No special tools and test equipment required. Standard tools and test equipment In the following kits are adequate to accomplish the maintenance functions listed In Section II

(1) REFERENCE CODE	(2) MAINTENANCE CATEGORY	(3) NOMENCLATURE	(4) NATIONAL/NATO STOCK NUMBER	(5) TOOL NUMBER
1	O	Tool kit, service. refrigeration unit	5180-00-596-1474 (50980) SC 5180-90--CL N18	
2	F	Pump, vacuum	4310-00-289-5967 (64484) 1400B	
3	O	Drill set		
4	O	Riveter, blind, hand	5120-00--017-2247	
5	F-H	Recovery and recycling unit, refrigerant	4130-01-338-2707	17500B (07295)

Section IV. REMARKS

REFERENCE CODE	REMARKS
	NOT APPLICABLE

APPENDIX C

REPAIR PARTS AND SPECIAL TOOLS LIST

Section I. INTRODUCTION

C-1. SCOPE. Section II of this appendix contains a complete illustrated parts breakdown of the unit plus part numbers and manufacturers' codes for each individual part.

C-2. EXPLANATION OF COLUMNS IN SECTION II.

a. Index Number. This column reflects the index number of the item on the figure where it is illustrated.

b. Part Number. This column has applicable vendor, prime contractor, Military Standard, or service part numbers for the components listed. Other components that do not have part numbers are identified in this column by the word "Commercial." This indicates the component is a common item and can be obtained from a commercial source.

c. Description. The description column contains the major assembly in column one with name and descriptive data for all subordinate components listed in order of disassembly. All components are indented to the first entry in one of six columns to show assembly relationship. When applicable, vendor's codes and additional part numbers are included after component listings. Refer to catalog handbook H4-1 and H4-2, Commercial and Government Entity Code (CAGE), for names, addresses, and codes of all manufacturers. Parenthetical notes and figure references may also be included after applicable entries.

d. Units per Assembly. This column contains the number of units for one next higher assembly. When a major assembly is referenced from a higher assembly, the abbreviation REF is used in the units per assembly column.

Section II. REPAIR PARTS

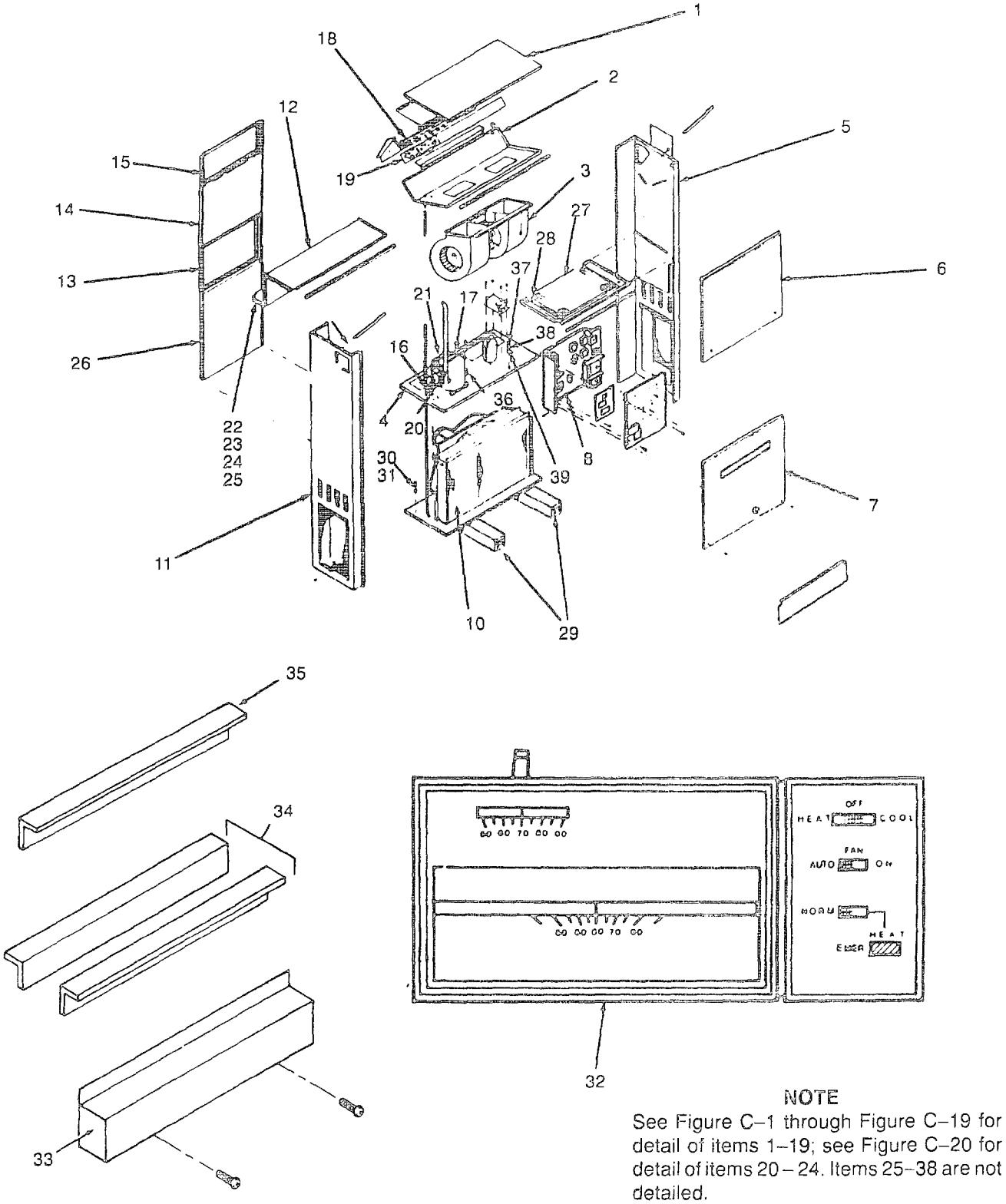

NOTE

See Figure C–1 through Figure C–19 for detail of items 1–19; see Figure C–20 for detail of items 20 – 24. Items 25–38 are not detailed.

Figure C-0. Air Conditioner

Index No	Part No.	Description	Units per Assy
	93576	AIR CONDITIONER	1
1	96903	TOP PANEL ASSEMBLY (OABN9)	1
2	96972	DRAIN PAN ASSEMBLY (OABN9)	1
3	91418	BLOWER MOTOR (INDOOR FANS) ASSY (OABN9)	
4	96902	COMPRESSOR BASE ASSY. (OABN9)	1
5	96976	SIDE PANEL ASSY. -RH (OABN9)	1
6	96901	FRONT DOOR ASSY.-TOP (OABN9)	1
7	96900	FRONT DOOR ASSY.-BOTTOM (OABN9)	1
8	93526	CONTROL BOX ASSY. (OABN9)	1
9	95826	COIL GUARD ASSY.	1
10	91419	VENTURI/COIL/MOTOR ASSY. (OABN9)	1
11	96979	SIDE PANEL ASSY.-LH. (OABN9)	1
12	96905	DIVIDING WALL ASSY. (OABN9)	1
13	95906	BOTTOM DUCT FLANGE ASSY. (OABN9)	1
14	96904	BACK PANEL ASSY.-TOP (OABN9)	1
15	95904	TOP DUCT FLANGE ASSY. (OABN9)	1
16	99230	LIQUID LINE ASSY (OABN9)	1
17	99234	REVERSING VALVE ASSY. (OABN9)	1
18	96917	HEATER MOUNT ASSY. (OABN9)	1
19	99261	INDOOR COIL ASSY (OABN9)	1
20	L27-2121-MR	SOLENOID COIL (50992)	1
21	AW105ET-001-A4 AW5524P	COMPRESSOR AND MOUNTING KIT (59431)	1
22	COMMERCIAL	1/2 INCH, NO. 10, HEX HEAD, STEEL SHEET METAL SCREWS, THREAD-CUTTING, ZINC FINISH	2
23	Z23P3725M	COMPRESSOR CAPACITOR (01002)	1
24	91433	CAPACITOR STRAP (OABN9)	1
25	50270	CAPACITOR BOOT (OABN9)	1
26	95922	BACK PANEL-BOTTOM(OABN9)	1
27	14x25x1	AIR FILTER (52133)	1
28	95985	FILTER RACK (OABN9)	2
29	COMMERCIAL	4 x 4 x 18 INCH SHIPPING BASE CUT TO LENGTH AND SECURE TO BASE OF UNIT WITH LAG BOLTS (para G-3)	2
30	COMMERCIAL	1/4 x 1-1/2 INCH HEX HEAD STEEL LAG BOLT	4
31	90640	5/16 FLAT WASHER (OABN9)	4
32	HP11-51	THERMOSTAT (4R884)	1
33	VFTA-2	FRESH AIR DAMPER ASSY (4R884)	1
34	95927	SIDE MOUNTING BRACKET (OABN9)	2
35	95926	BOTTOM MOUNTING BRACKET (OABN9)	1
36	80370	STRAIN RELIEF BUSHING (OABN9)	4
37	90580	1/4 INCH FLEX NIT (OABN9)	1
38	90630	¼ INCH LOCK WASHER (OABN9)	1
39	80270	TERMINAL LUG (OABN9)	1

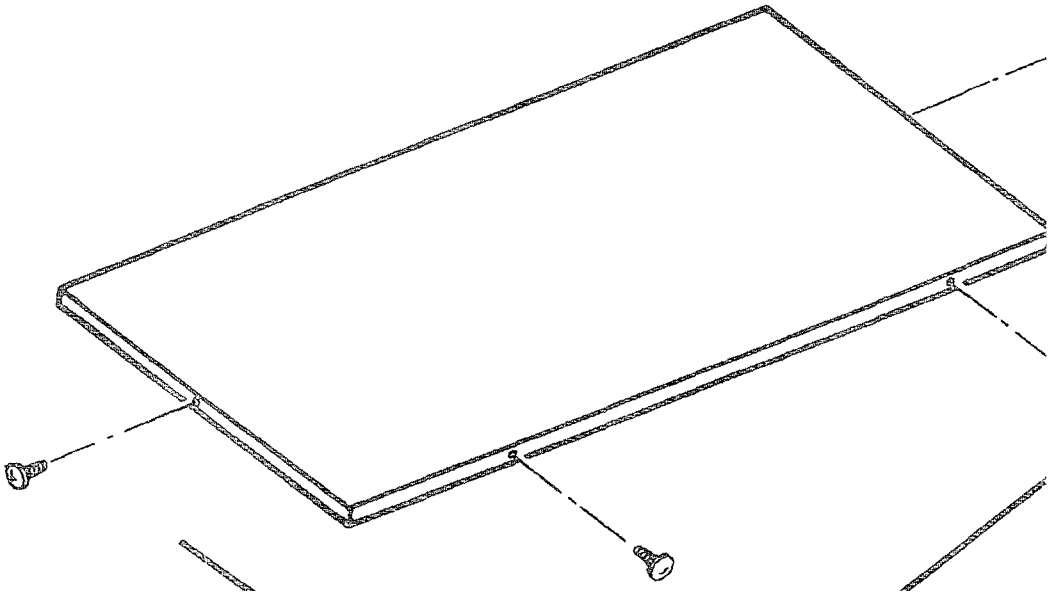

Figure C-1. Top Panel Assembly

Index No	Part No.	Description	Units per Assy
1	96903	TOP PANEL ASSEMBLY (OABN9)	1

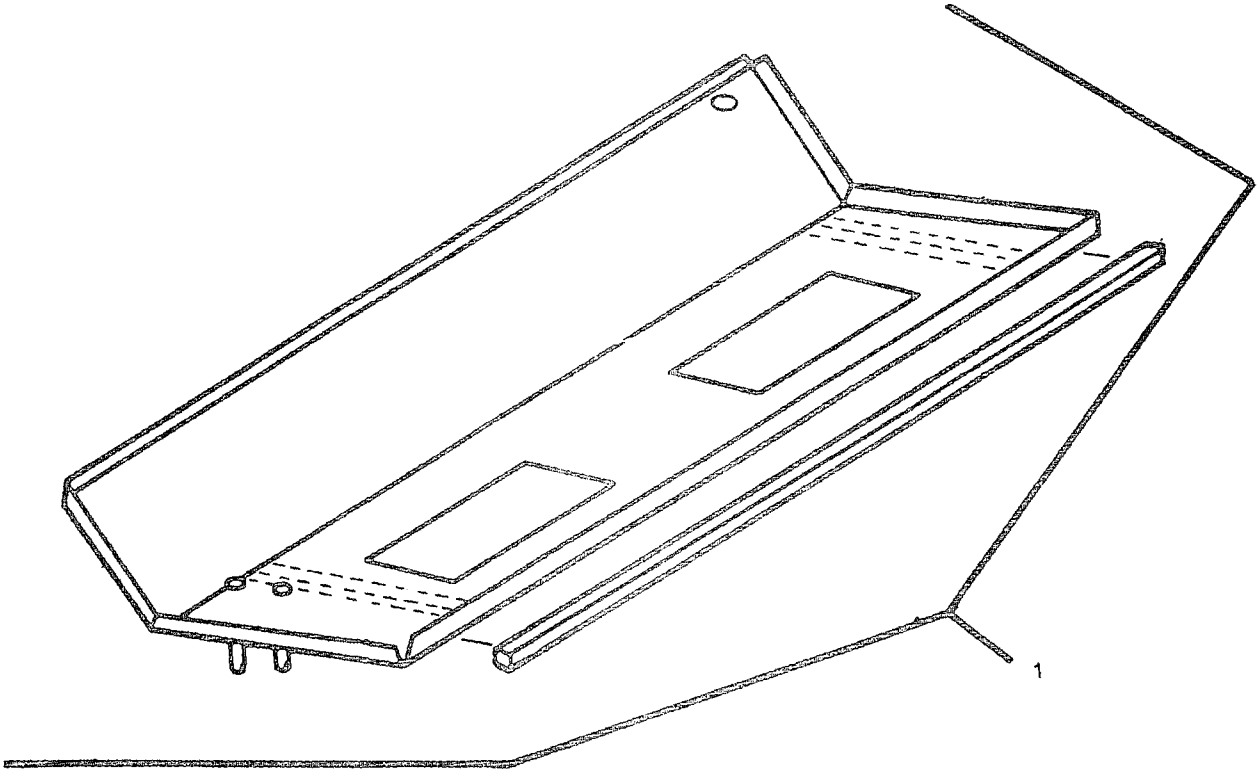

Figure C-2. Drain Pan Assembly

Index No	Part No.	Description	Units per Assy
1	96972	DRAIN PAN ASSEMBLY (OABN9)	1

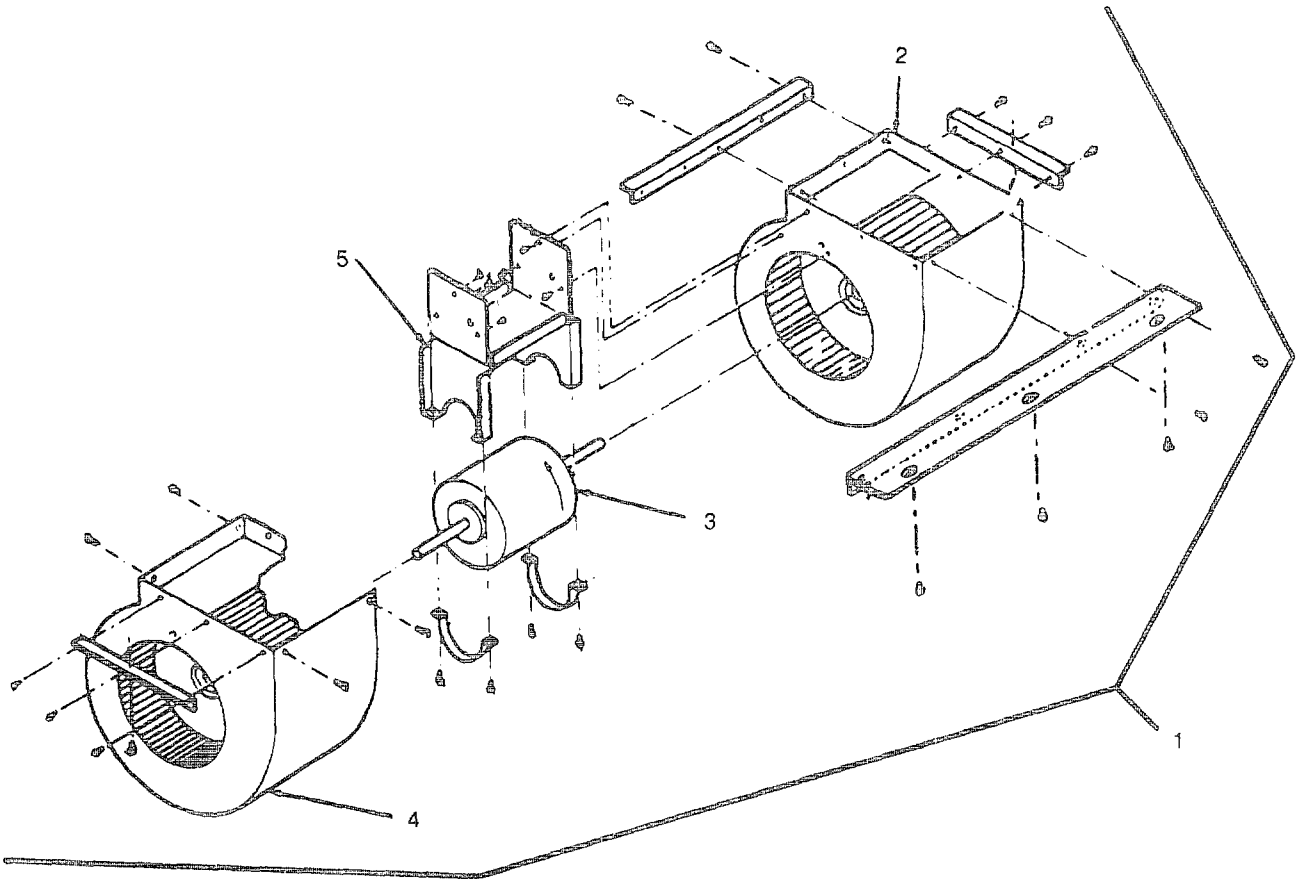

Figure C-3. Blower Motor (Indoor Fans) Assembly

Index No	Part No.	Description	Units per Assy
1	91418	BLOWER MOTOR ASSEMBLY (OABN9)	1
2	30032	BLOWER (INDOOR FANS), RIGHT HAND (OABN9)	1
3	K55HXJRP	BLOWER (INDOOR FANS) MOTOR (19116)	1
4	30031	BLOWER, LEFT HAND (OABN9)	1
5	96504	MOTOR BRACKET ASSEMBLY (OABN9	1

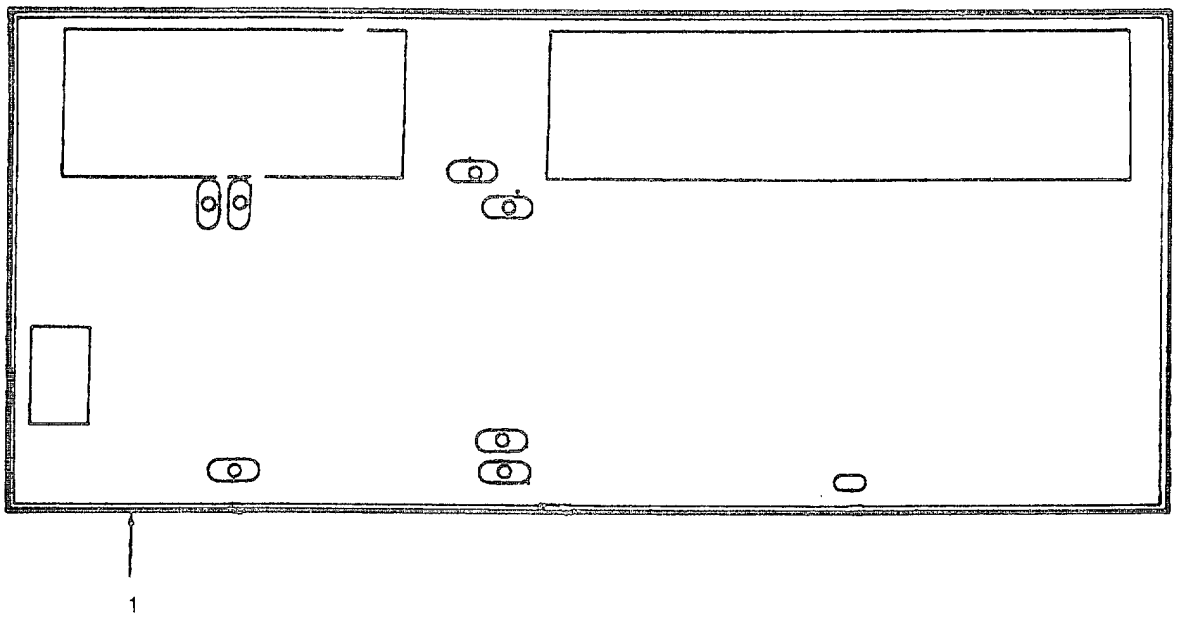

Figure C-4. Compressor Base Assembly

Index No	Part No,	Description	Units per Assy
1	96902	COMPRESSOR BASE ASSEMBLY (OABN9)	1

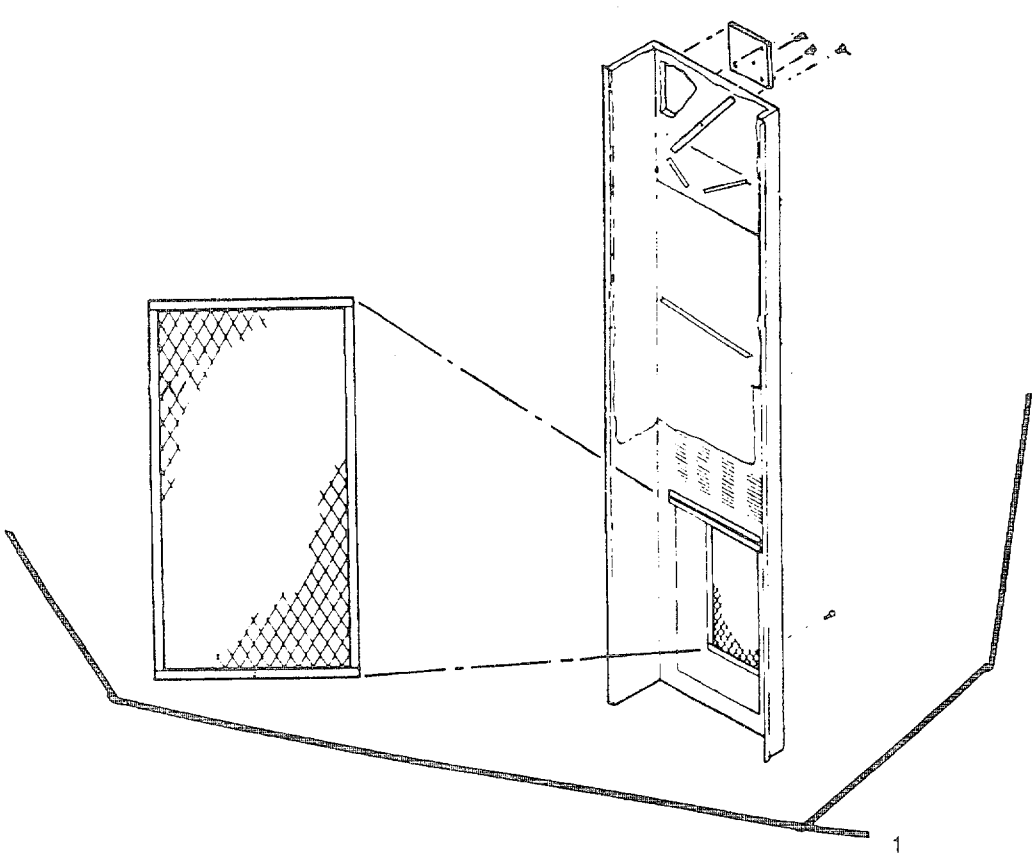

Figure C-5. Side Panel Assembly - Right Hand

Index No	Part No,	Description	Units per Assy
1	96976	SIDE PANEL ASSEMBLY-R.H. (OABN9)	1

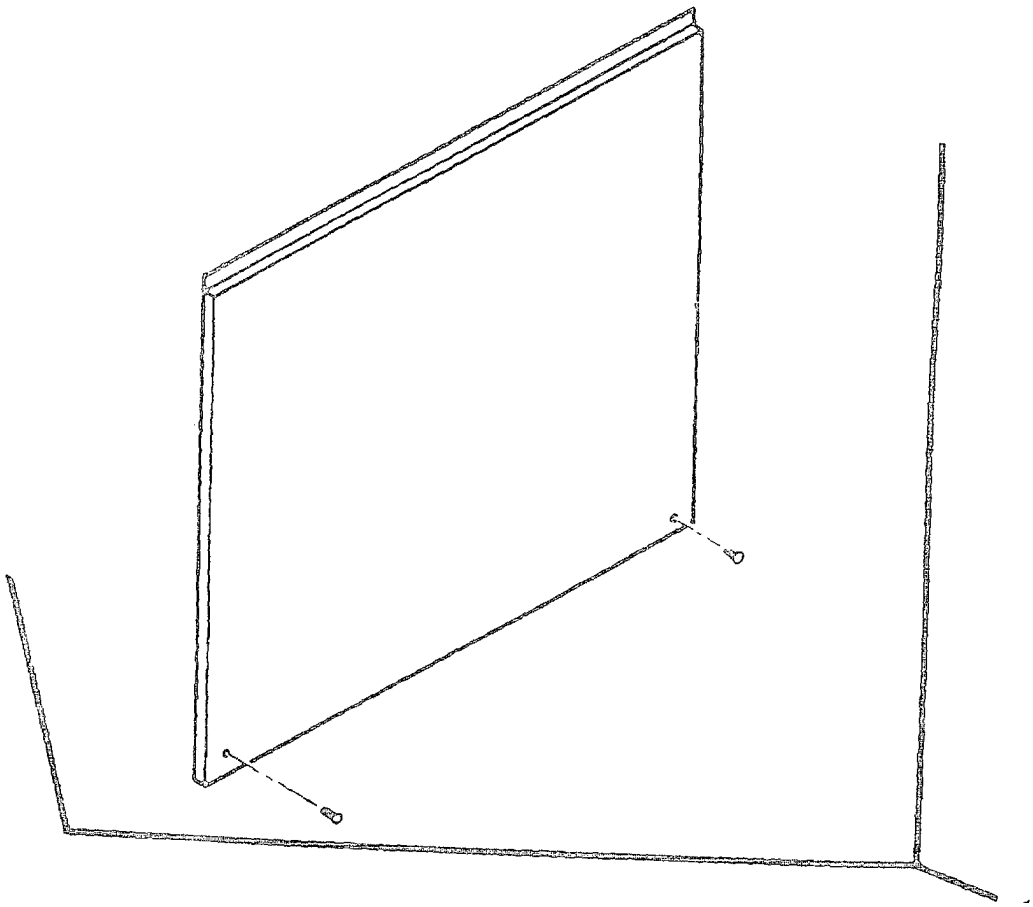

Figure C-6. Front Door Assembly-Top

Index No	Part No,	Description	Units per Assy
1	96909	FRONT DOOR ASSEMBLY-TOP (OABN9)	1

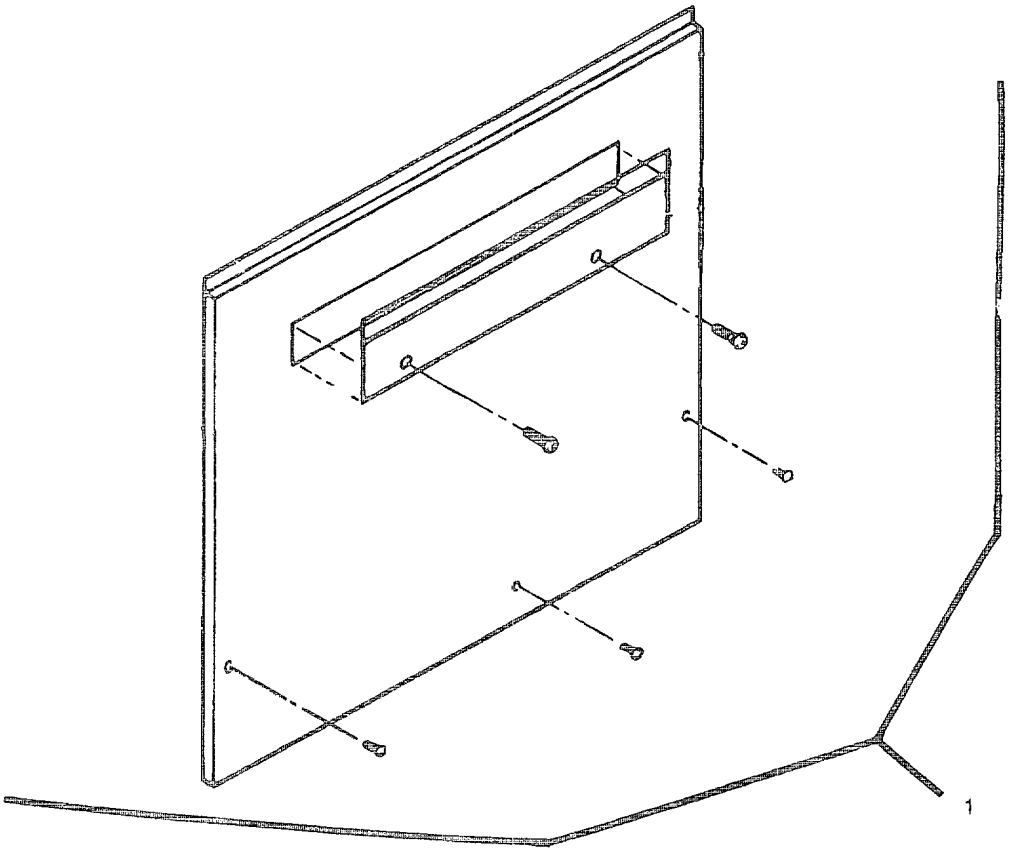

Figure C-7. Front Door Assembly-Bottom

Index No	Part No,	Description	Units per Assy
1	96900	FRONT DOOR ASSEMBLY-BOTTOM (OABN9	1

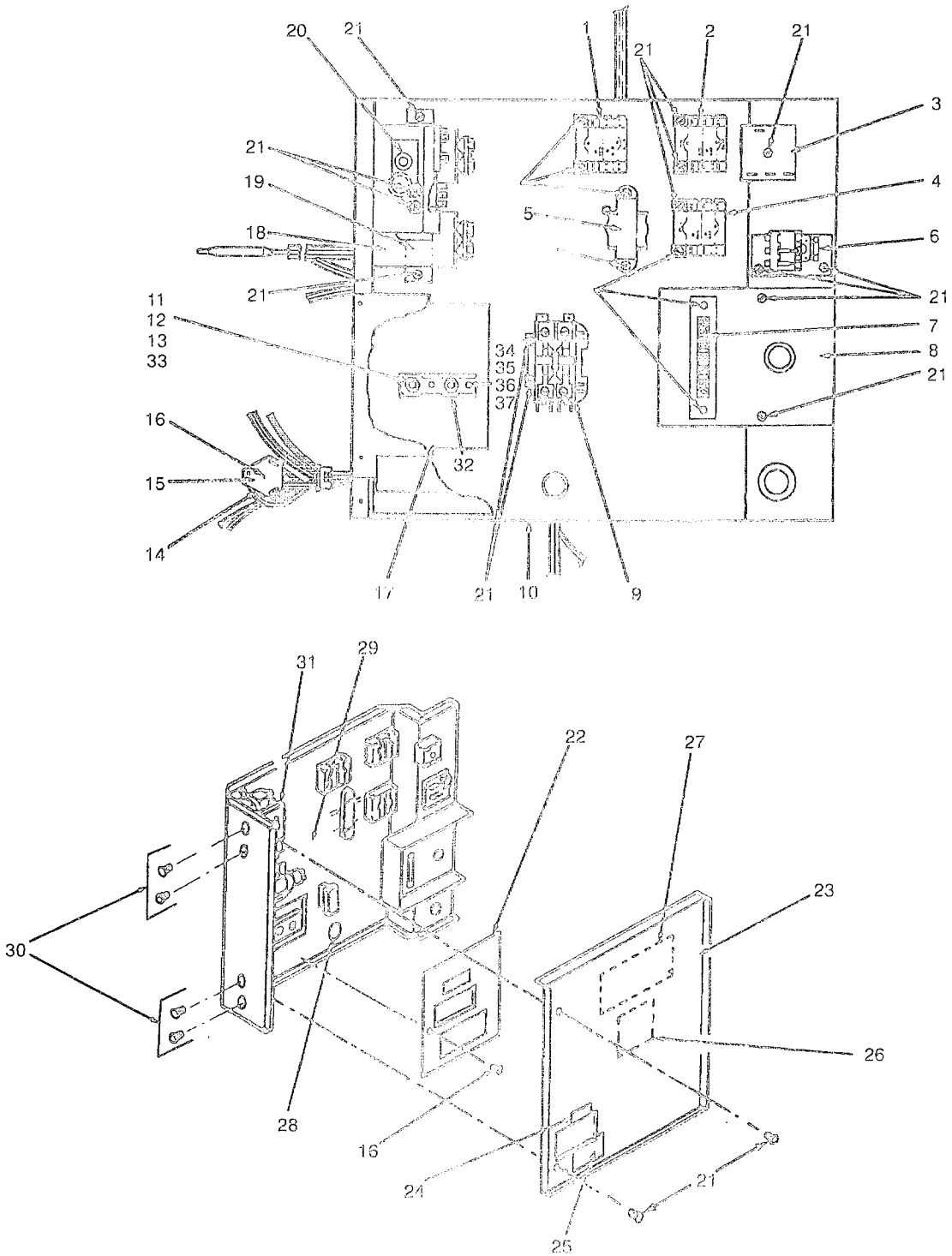

Figure C-8. Control Box Assembly

Index No	Part No,	Description	Units per Assy
1	R8222E-1003	HEAT/COOL RELAY (17479)	1
2	R8222C-1008	HEAT RELAY (17479)	1
3	CT1S90	FAN TIME DELAY (53010	1
4	R822B-1018	FAN RELAY (17479)	1
5	591-14108-10601	CONTROL TRANSFORMER (73617	1
6	R8231C-1007	LOCKOUT RELAY (17479)	1
7	80825	LOW VOLTAGE TERMINAL BOARD (OABN9)	1
8	96999	LOW VOLTAGE SHIELD (OABN9)	1
9	R8242B-1048	COMPRESSOR CONTACTOR (17479)	1
10	9117	WASHER, LOCK (96906)	1
11	MS353338-140	CONTROL BOX (OABN9)	1
12	MS15795-812	WASHER, FLAT (96906)	1
13	MS35650-5	NUT, PLAIN, 5/16 - 24 UNF (96906)	2
14	80230	RECEPTACLE HOUSING (OABN9)	1
15	80240	HOUSING COVER (OABN9)	1
16	COMMERCIAL	3/32 INCH, ALUMINUM POP RIVET, 1/4 INCH LENGTH	2
17	96186	BREAKER (TERMINAL BOARD) BRACKET (OABN9)	1
18	GE97F5339	MOTOR CAPACITOR (01002)	2
19	96666	CAPACITOR STRAP (OABN9)	2
20	E-15-2217-00	DEFROSTER CONTROL (50992)	1
21	COMMERCIAL	1/2 INCH, NO 8, HEX HEAD, SELF-TAPPING STEEL SHEET METAL SCREW ZINC FINISH	23
22	91432	BREAKER (TERMINAL BOARD) COVER (OABN9)	1
23	91145	CONTROL BOX COVER (OABN9)	1
24	91500	LABEL (OABN9)	1
25	91501	LABEL (OABN9)	1
26	93539	WIRING DIAGRAM LABEL (OABN9)	1
27	94889	WIRING DIAGRAM LABEL (OABN9)	1
28	COMMERCIAL	7/8 INCH, THERMOPLASTIC SWAY BUSHING	1
29	97322	WIRING HARNESS (OABN9)	1
30	COMMERCIAL	1/4 INCH, NO. 10, STEEL ROUNDHEAD SCREW, ZINC FINISH, 24 THREADS PER INCH	4
31	96286	DEFROST CONTROL COVER (OABN9)	1
32	5-13-5031-2	TERMINAL BOARD, TWO-STUD (81337)	1
33	MIL-T-7928	TERMINAL LUG, (E81349) 5940-00-1'i5-5007	2
34	MS35338-136	WASHER, LOCK, NO. 6, CRES (96906)	2
35	MS51957-30	SCREW, MACHINE, PAN-HEAD CRES, 6x32 (96906)	2
36	MS15795-805	WASHER, FLAT, NO. 6, CRES (96906)	2
37	MS35649-264	NUT, PLAIN, HEX, MACHINE, 6-32, CRES (96906)	2

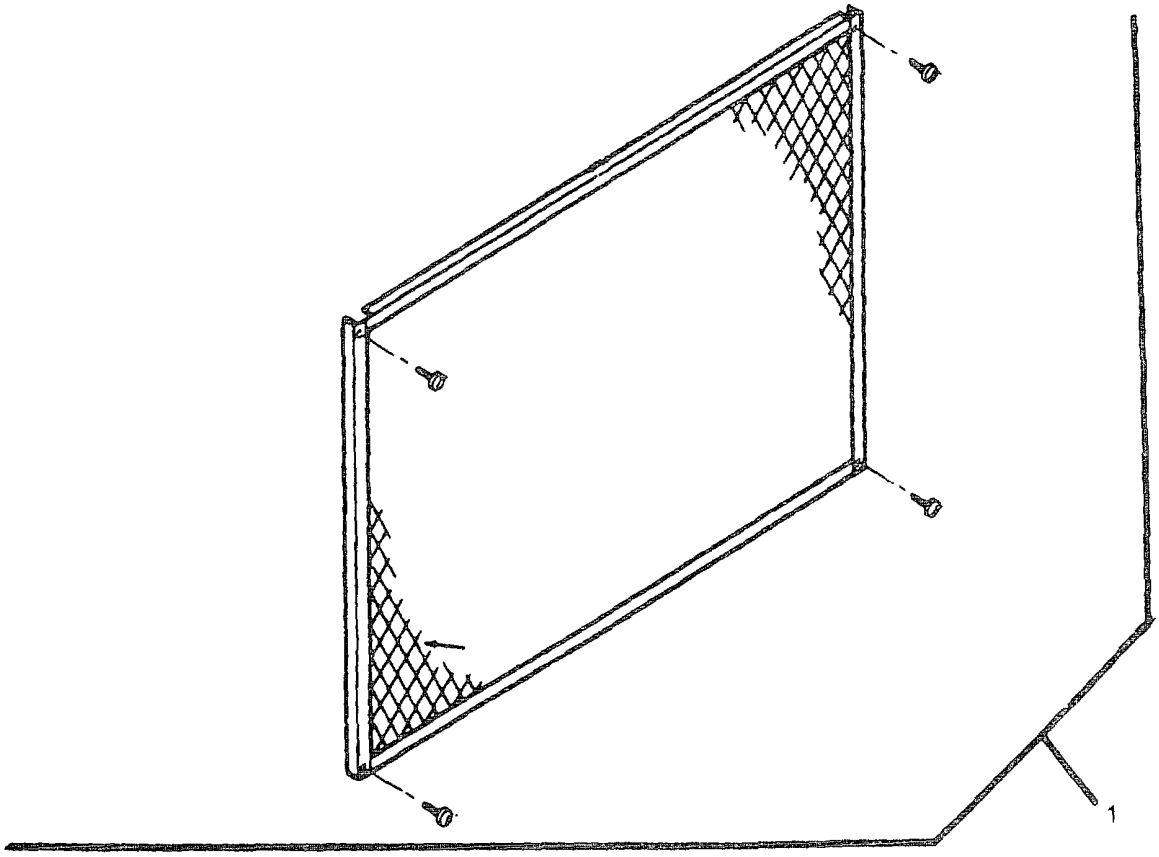

Figure C-9. Coil Guard Assembly

Index No	Part No,	Description	Units per Assy
1	95826	COIL GUARD ASSEMBLY	1

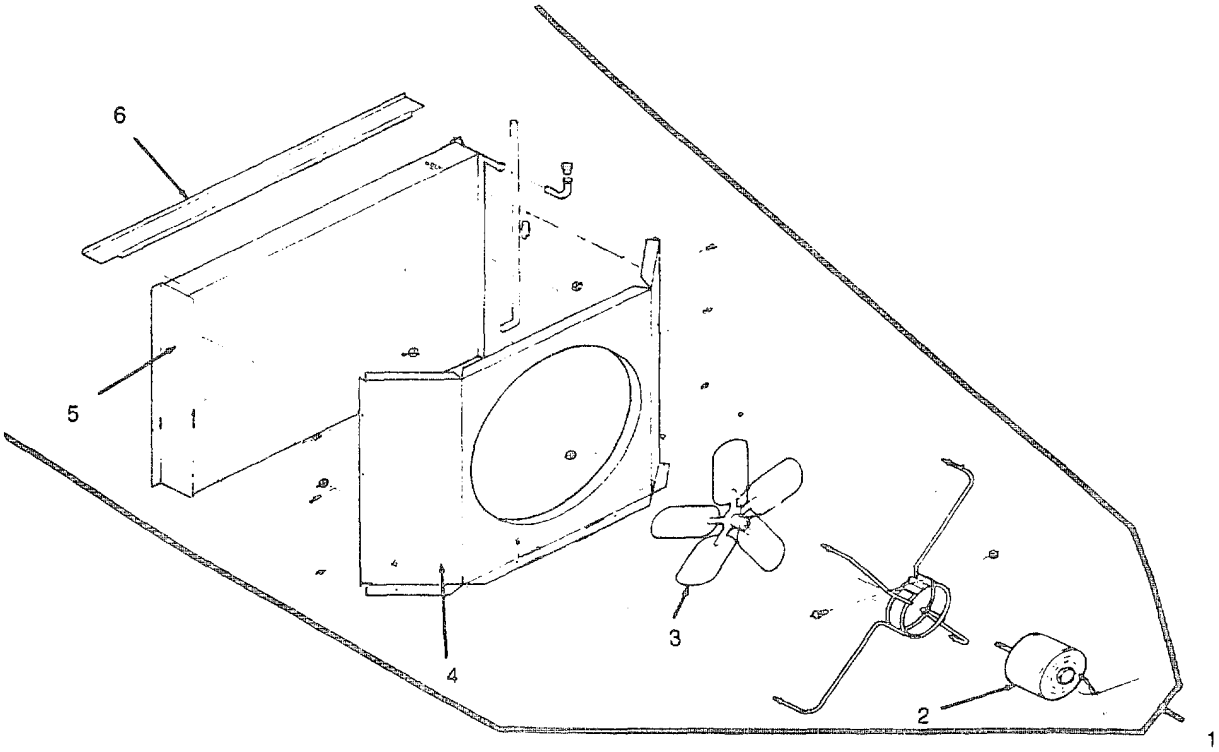

Figure C-10. Venturi/Coil/Motor Assembly

Index No	Part No,	Description	Units per Assy
1	91419	VENTURI/COIL/MOTOR ASSEMBLY (OABN9)	
2	K55HXJRP3023	FAN MOTOR (19116)	
3	601595	FAN BLADE (28555)	
4	96284	VENTURI PANEL (OABN9)	
5	60D84	OUTDOOR COIL(OABN9)	
6	95913	OUTDOOR COIL TOP CHANNEL (OABN9)	

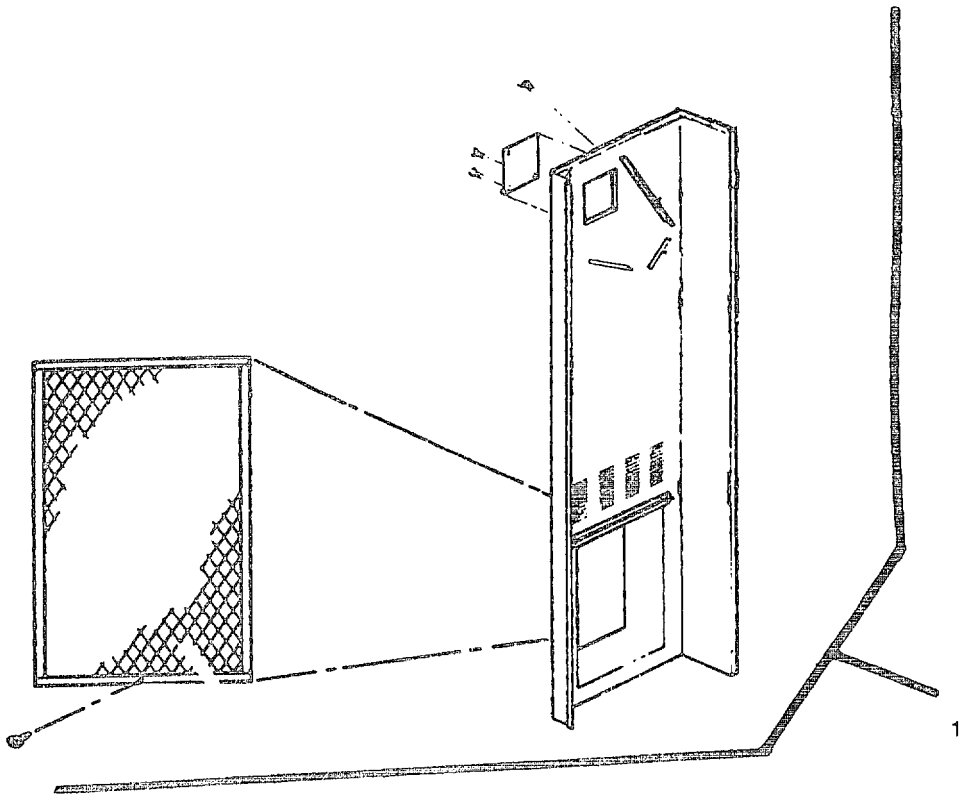

Figure C-11. Side Panel Assembly - Left Hand

Index No	Part No,	Description	Units per Assy
1	96979	SIDE PANEL ASSEMBLY (OABN9)	

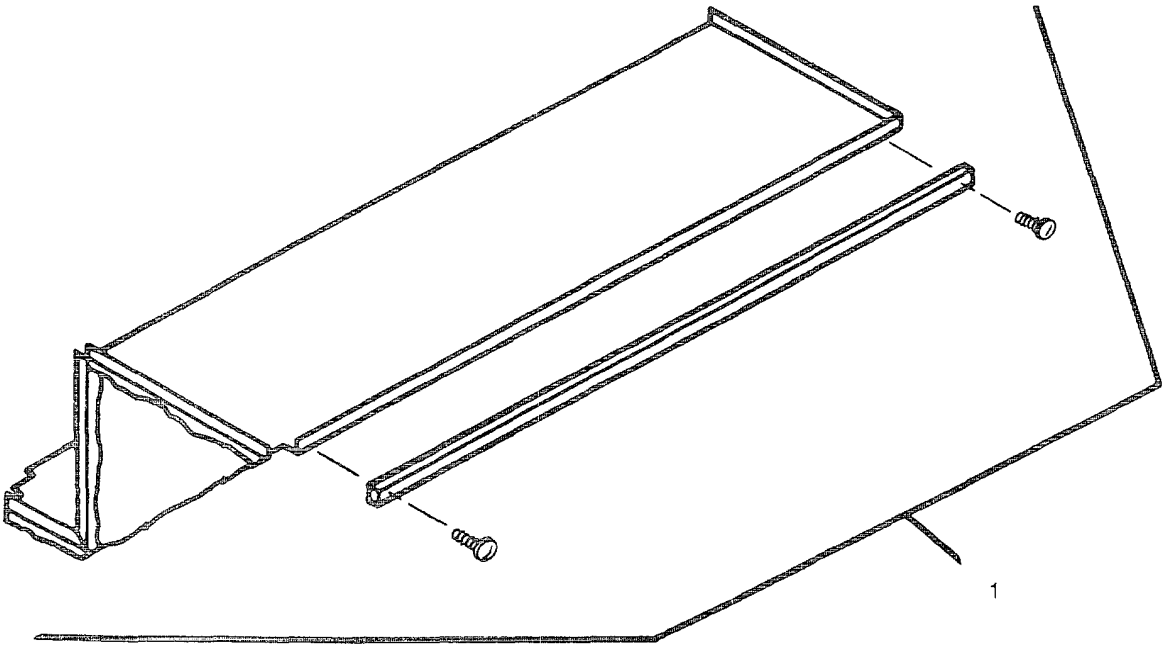

Figure C-12. Dividing Wall Assembly

Index No	Part No,	Description	Units per Assy
1	96974	DIVIDING WALL ASSEMBLY (OABN9)	1

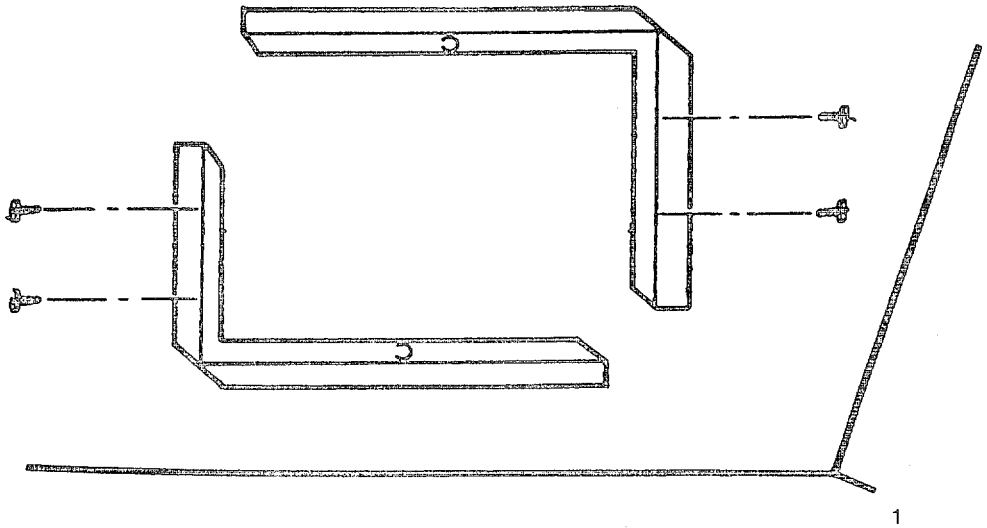

Figure C-13. Bottom Duct Flange Assembly

Index No	Part No.	Description	Units per Assy
1	95906	BOTTOM DUCT FLANGE ASSEMBLY (OABN9)	1

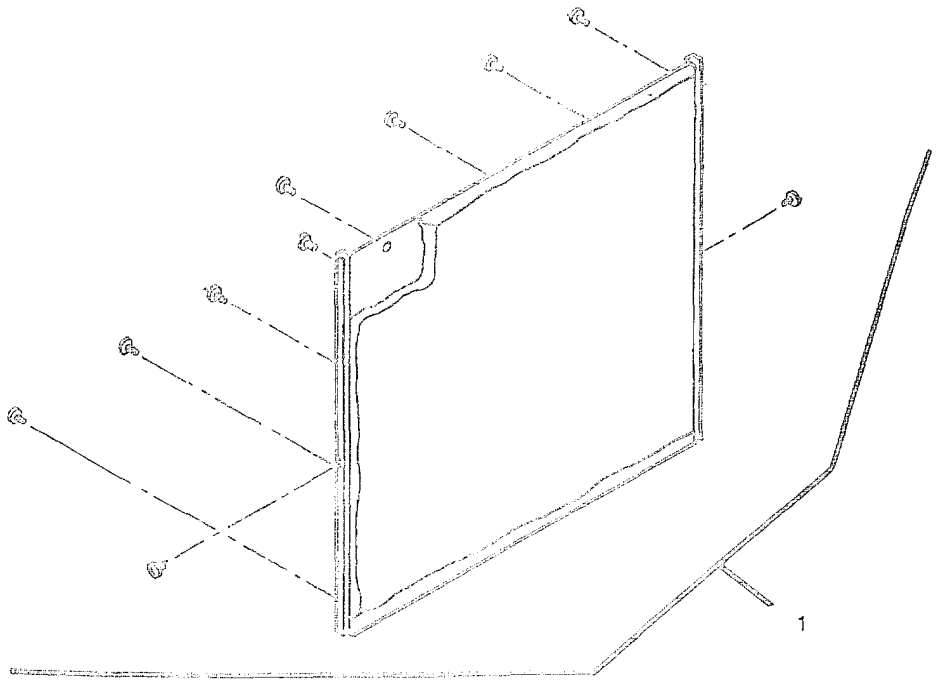

Figure C-14.Back Panel Assembly-Top

Index No	Part No,	Description	Units per Assy
1	96904	BACK PANEL ASSEMBLY - TOP (OABN9)	1

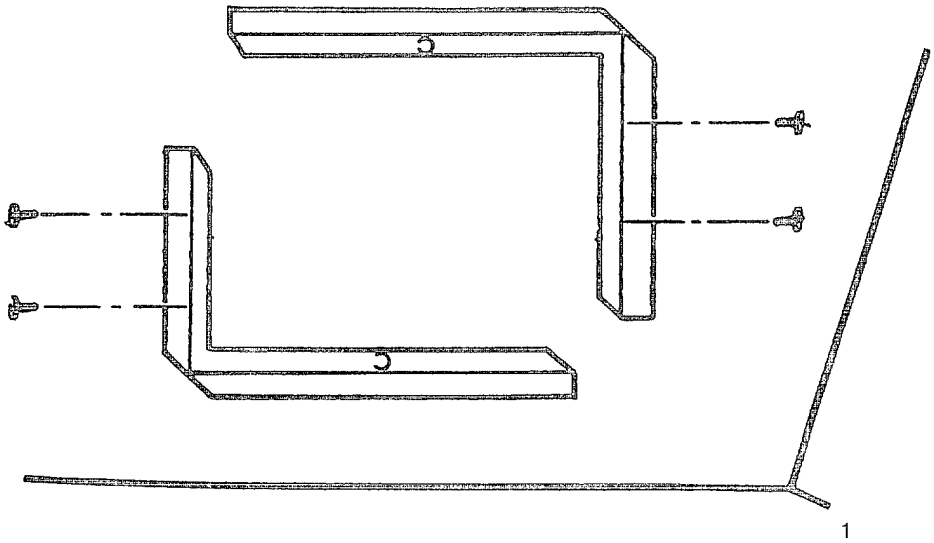

Figure C-15. Top Duct Flange Assembly

Index No	Part No,	Description	Units per Assy
1	95904	TOP DUCT FLANGE ASSEMBLY (OABN9)	1

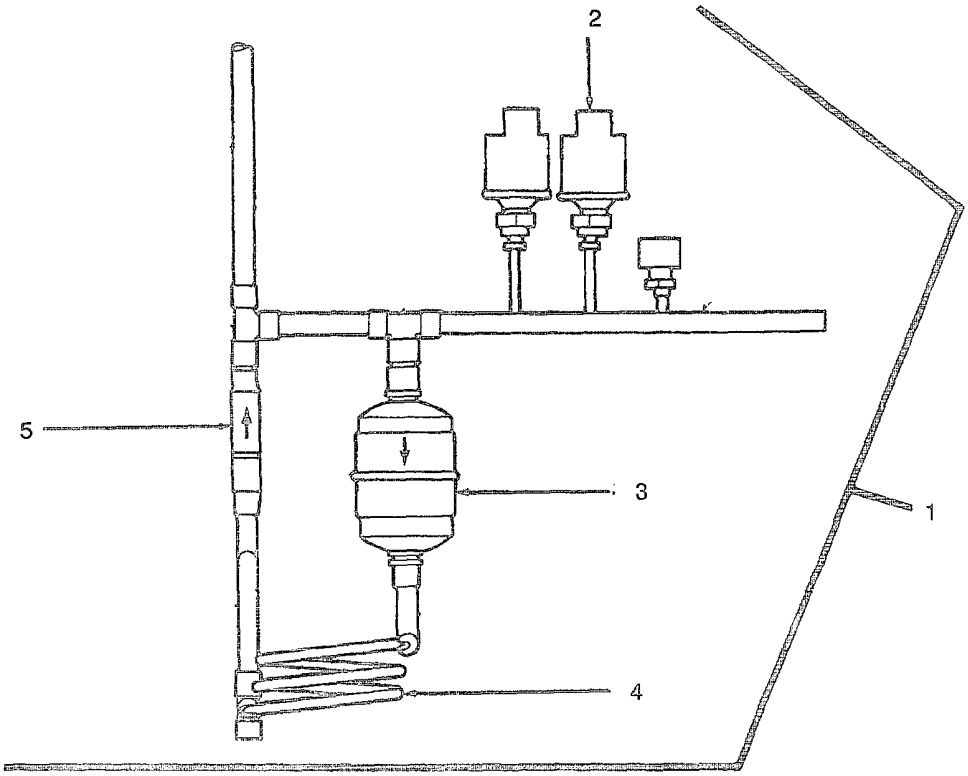

Figure C-16. Liquid Line Assembly

Index No	Part No,	Description	Units per Assy
1	99230	LIQUID LINE ASSEMBLY	1
2	20PS030DA0 60K035E	LOW PRESSURE SWITCH (14859)	1
3	CG-033-S	FILTER DRIER (78462)	1
4	80925	CAP. TUBE-HEATING (OABN9)	1
5	274000-00	CHECK VALVE (82106)	1

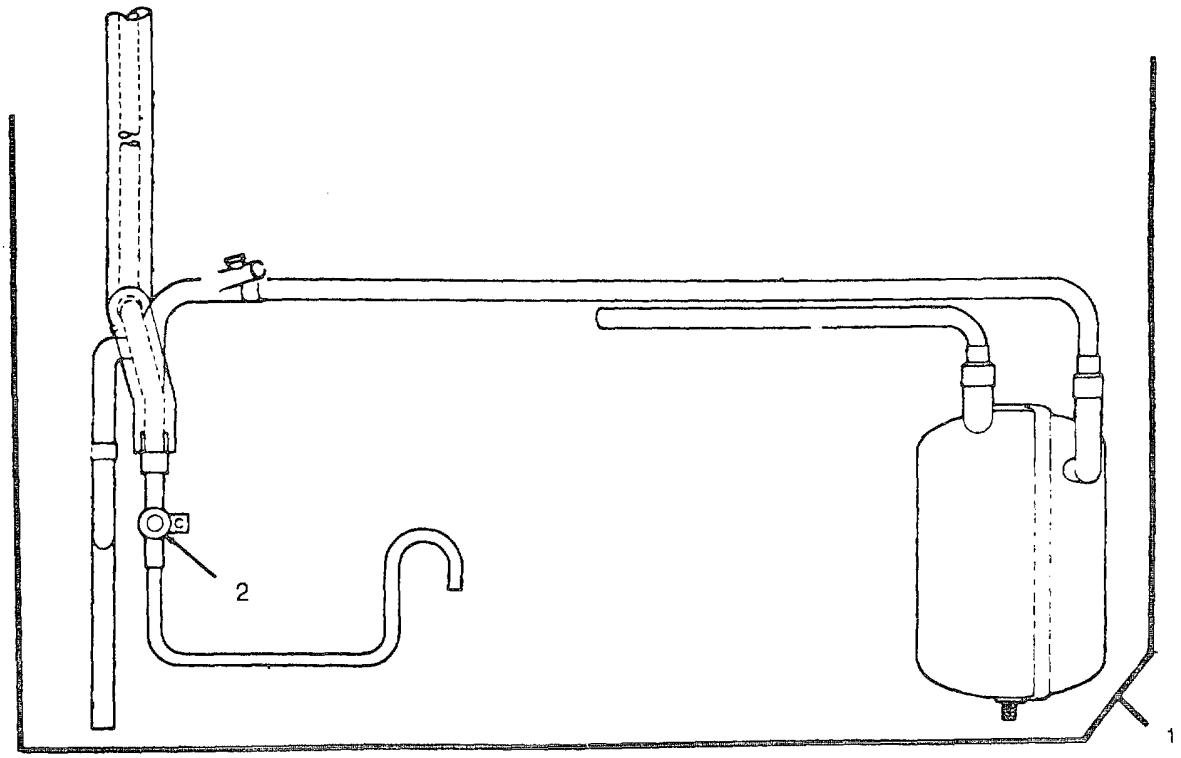

Figure C-17. Reversing Valve Assembly

Index No	Part No,	Description	Units per Assy
1	99234	REVERSING VALVE ASSEMBLY (OABN9)	1
2	V26141-46	REVERSING VALVE (50992)	1

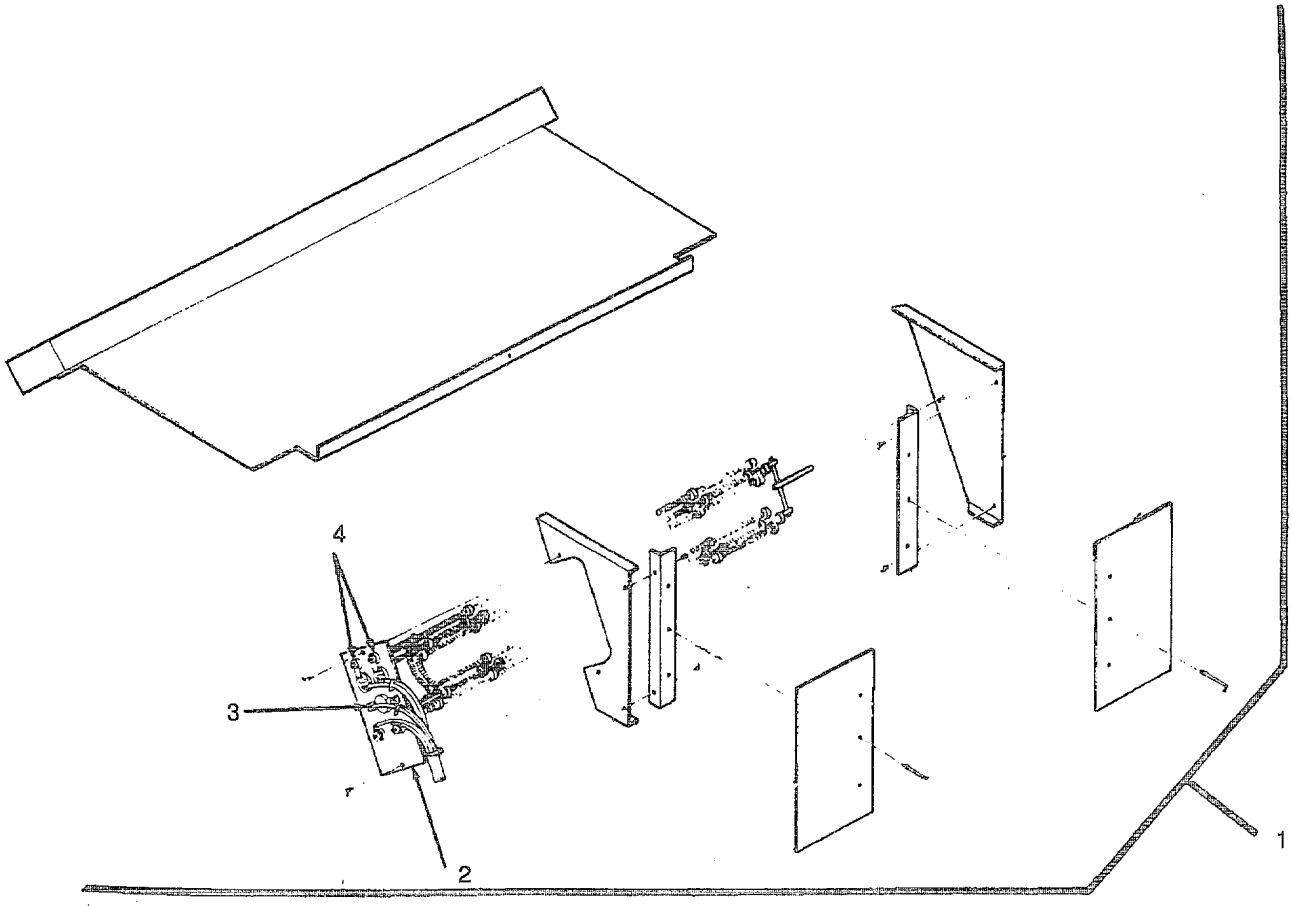

Figure C-18. Heater Mount Assembly

Index No	Part No,	Description	Units per Assy
1	96917	HEATER MOUNT ASSEMBLY (OABN9)	
2	21-2307	HEATER ELEMENT (11111)	
3	20604L31	ELECTRIC HEAT LIMIT (14859)	
4	4K4208AH	FUSE LINK (27012)	

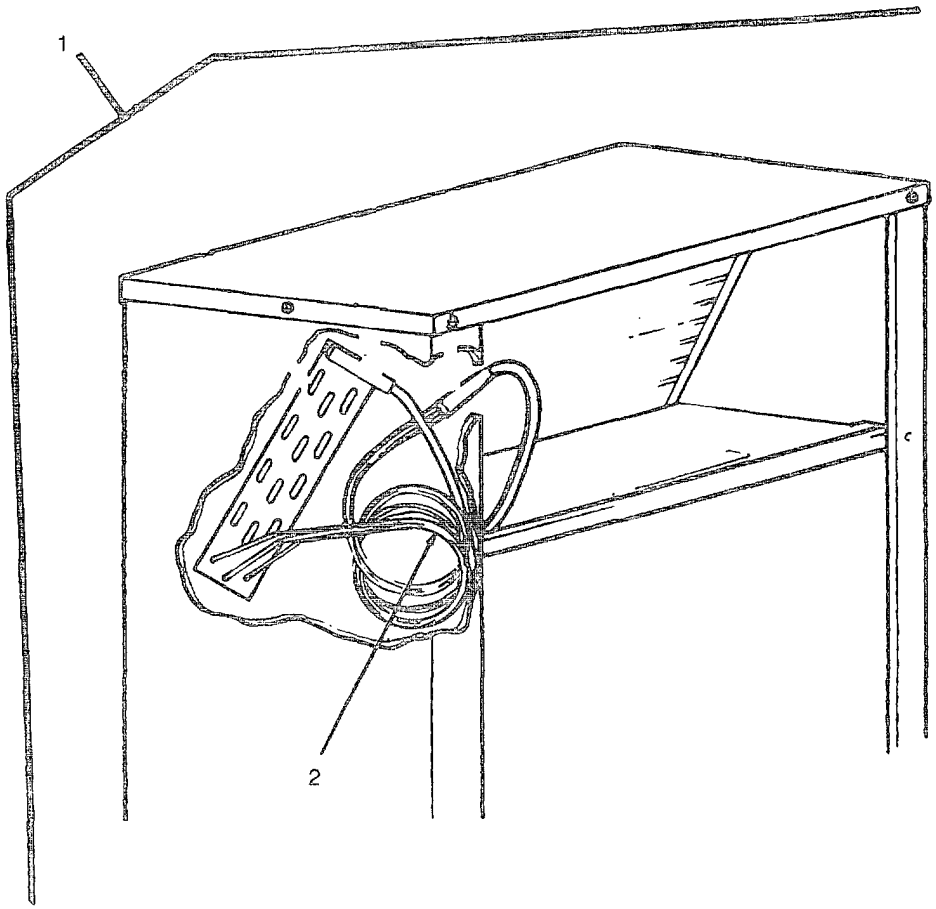

Figure C-19. Indoor Coil Assembly

Index No	Part No,	Description	Units per Assy
1	99261	INDOOR COIL ASSEMBLY (OABN9)	1
2	80925	CAP TUBES (OABN9)	1

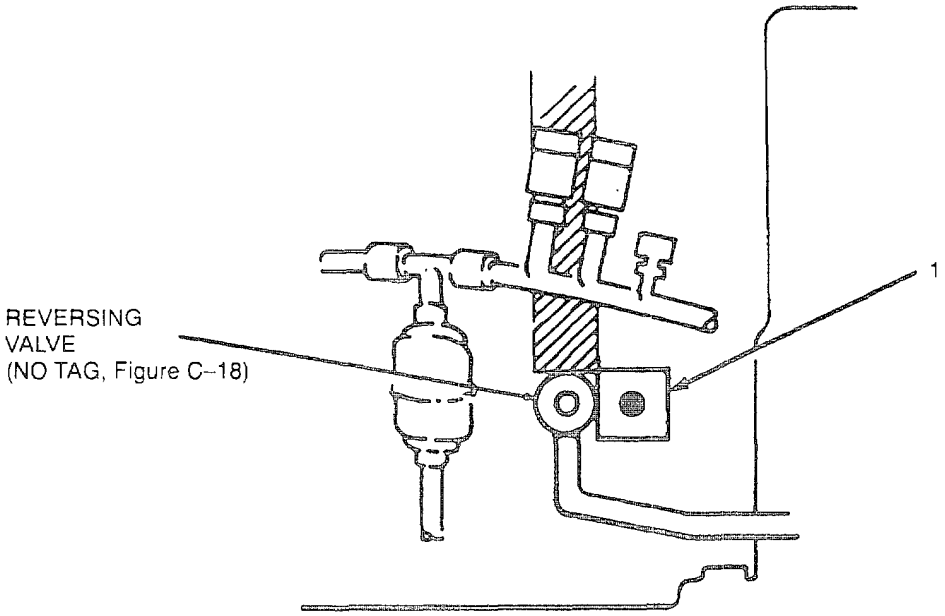

Figure C-20. Solenoid Coil

Index No	Part No,	Description	Units per Assy
1	L27-2121-MR	SOLENOID COIL (50992)	1

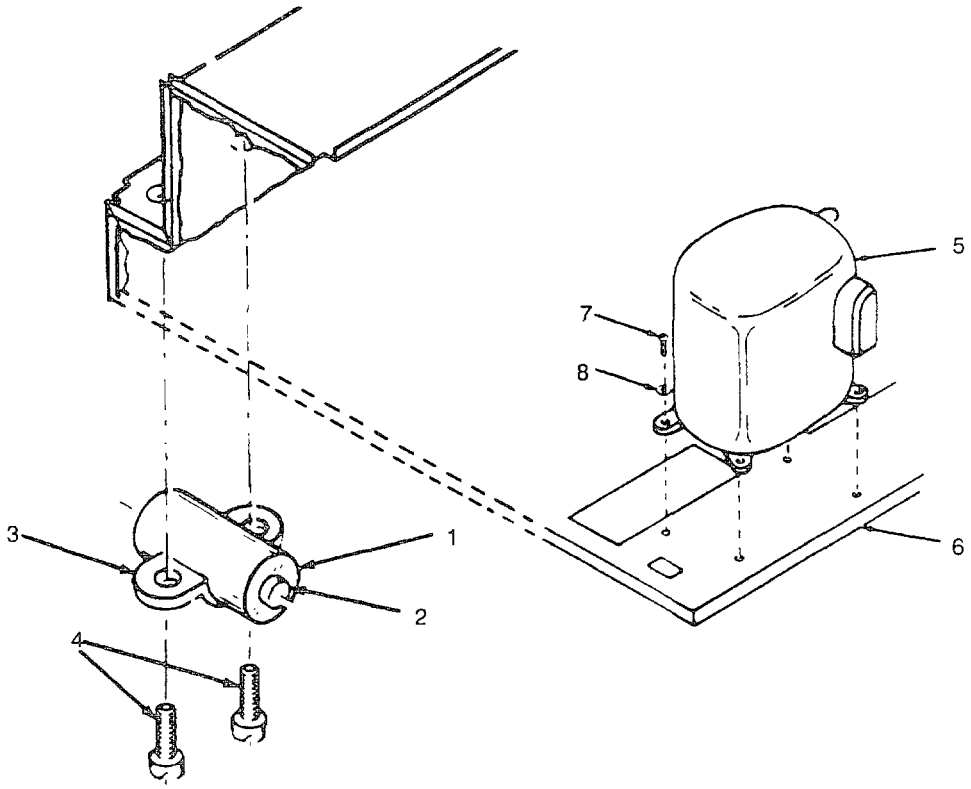

Figure C-21. Compressor and Capacitor

Index No.	Part No.	Description	Units per Assy
1	50260	CAPACITOR, COMPRESSOR	1
2	50270	CAPACITOR BOOT	1
3	91433	CAPACITOR STRAP	1
4	COMMERCIAL	SCREW, SHEET METAL, 1/2 INCH, NO. 10, HEXHEAD, THREAD CUTTING, ZINC FINISH	2
5	AW105ET-001-A4	COMPRESSOR (59431)	1
6	96902	COMPRESSOR BASE ASSY	1
7	90550	COMP, BOLT	4
8	90640	FLAT WASHER	4

APPENDIX D

COMPONENTS OF END ITEM AND BASIC ISSUE ITEMS LIST

Section I. INTRODUCTION

D-1. SCOPE. This Appendix lists components of end item and basic items for the air conditioner to help you inventory items required for safe and efficient operation.

D-2. GENERAL. The Components of End Item List and Basic Issue List are divided into the following sections:

a. Section II. Components of End Item. This listing is for informational purposes only, and is not authority to requisition replacements. These items are part of the end item, but are removed and separately packaged for transportation or shipment. As part of the end item, these items must be with the end item whenever it is issued or transferred between property accounts.

b. Section III. Basic Issue Items. These are the minimum essential items required to place the air conditioner in operation, to operate it, and to perform emergency repairs. Although shipped separately, Basic Issue Items must be with the air conditioner during operation and whenever it Is transferred between property accounts. This manual is your authority to request/requisition replacement Basic Issue Items, based on TOE/MTOE authorization of the end Item.

D-3. EXPLANATION OF COLUMNS. The following provides an explanation of columns found in the tabular listings

a. Column (1) - Item Number. This column indicates the index number on Figure C-0 corresponding to the item.

b. Column (2) - National Stock Number. This column indicates the national stock number assigned to the item and will be used for requisitioning purposes.

c. Column (3) - Description. Indicates the Federal item name and, if required, a minimum description to identify and locate the item. The last line for each item indicates the CAGE (in parentheses) followed by the part number.

d. Column (4) - Unit of Measure (U/M). Indicates the measure used in performing the actual function. This measure is expressed by a two character alphabetical abbreviation (e.g., ea, in, pr).

e. Column (5) - Quantity required (Qty rqr). Indicates the quantity of the item authorized to be used with/on the equipment.

Section II. COMPONENT OF END ITEM

(1) *Item Number	(2) National Stock Number	(3) Description CAGE and Part Number	Usable On Code	(4) U/M	(5) Qty rqr
32		THERMOSTAT, (4R884) HP11-51		EA	1
33		FRESH AIR DAMPER ASSY, (4R884) VTFA-2		EA	1
34		SIDE MOUNTING BRACKET (OABN9) 95927		EA	2
35		BOTTOM MOUNTING BRACKET (OABN9) 95926		EA	1

*Refer to Figure C-0.

Section III. BASIC ISSUE ITEMS

(1) Illus Number	(2) National Stock Number	(3) Description CAGE and Part Number	Usable On Code	(4) U/M	(5) Qty rqr
		TM 9-4120-395-14&P OPERATOR'S UNIT, DIRECT SUPPORT, AND GENERAL SUPPORT MAINTENANCE MANUAL INCLUDING REPAIR PARTS AND SPECIAL TOOLS LIST		EA	1

APPENDIX E

ADDITIONAL AUTHORIZATION LISR (AAL) ITEMS

Section I. INTRODUCTION

E-1. Scope. Appendix lists additional items you are authorized for the support of the air conditioner.

E-2. GENERAL. This list identifies items that do not have to accompany the air conditioner and that do not have to be turned in with it. These items are all authorized to you by CTA, MTOE, TDA, or JTA.

E-3. EXPLANATION OF LISTINGS. National stock numbers, descriptions, and quantities are provided to help you identify and request the additional items you require to support this equipment. The items are listed in alphabetical sequence by item name under the type document (i.e., CTA, MTOE, TDA, or JTA) which authorized the item(s) to you.

Section II. ADDITIONAL AUTHORIZATION LIST

(1) National Stock Number	(2) Description CAGE and Part Number	Usable On Code	(3) U/M	(4) Qty rqr
7240-00-137-1609	Bucket		EA	1
-	Container, Insulated		EA	1
8415-00-266-8677	Rubber Gloves		PR	1
4240-00-052-3776	Safety Goggles		EA	1

APPENDIX F

EXPENDABLE/DURABLE SUPPLIES AND MATERIALS LIST (EDSML)

Section I. INTRODUCTION

F-1. SCOPE.
Section II of this appendix lists expendable/durable supplies and materials you will need to operate and maintain the air conditioner.

F-2. EXPLANATION OF COLUMNS IN SECTION II.

a. Column (1), Item Number. This number is assigned to the entry in the listing and is reference in the narrative instruction to identify the material.

b. Column (2), Level. This column identifies the lowest level of maintenance that requires the listed item.

C - Operator/Crew

O - Unit Maintenance

F- Direct Support Maintenance

H - General Support Maintenance

c. Column (3), National Stock Number. This is the National Stock Number assigned to the items; use it to requisition or request the item.

d. Column (4), Description. Indicates the federal item name and, if required, a description to identify the item. The last line for each item indicates the Commercial and Government Entity Code (CAGEC) In parentheses followed by the part number.

e. Column (5), Unit of Measure (U/M). Indicates the measure used in performing the actual maintenance function. This measure is expressed by a two character alphabetical abbreviation (e.g., ea, In pr). If the unit of measure differs from the unit of issue, requisition the lowest unit of issue that will satisfy your requirements.

Section II. EXPENDABLE/DURABLE SUPPLIES AND MATERIALS LIST

(1) Item Number	(2) Level	(3) National Stock Number	(4) Description	(5) U/M
1	F	3040-00-664-0439	Adhesive, General Purpose, 1 pint container	EA
2	F	6830-00-292-0732	Nitrogen	CY
3	F	3439-00-224-3573	Brazing Alloy, silver, QQ-B-654, grade 0, I, or II	OZ
4	F	3439-00-853-9276	Brazing Alloy, silver, QQ-B-654, grade III	OZ
5	F	3439-00-640-3713	Flux, Brazing, O-F-499, type B	OZ
6	F	5350-00-192-5047	Abrasive Cloth	PG
7	F	7920-00-205-1711	Rags	PG
8	F	6850-00-837-9927	Monochlorodifluoromethane, Technical: w/cylinder 22 lb (Refrigerant- 22) BB-F-1421 Type 22 (81348)	CY
9	F		Plastic Material, Form T, 3/4 ID x 1/2 Wall (Tubing Insulation) MIL-P-15280	FT
10	O	6850-00-274-5421	Solvent, Cleaning	EA
11	F		Paint, Satin Beige Acrylic	QT
12	O		Adhesive, Silicone	TU
13	O		Tape, Pressure Sensitive, PPP-T-66	RL
14	O	5320-00-882-8385	Rivet, Blind, .18, Aluminum (81349)	LB
15	O		Rock Salt	LB

NOTE

When available, use recycled refrigerant for charging the refrigeration system.

APPENDIX G

ILLUSTRATED LIST OF MANUFACTURED ITEMS

Section I. INTRODUCTION

G-1. SCOPE. This appendix includes complete instructions for making items authorized to be manufactured or fabricated by Unit Maintenance.

G-2. GENERAL. This list identifies items that Unit Maintenance is authorized to manufacture or fabricate.

Section II. ILLUSTRATED LIST OF MANUFACTURED ITEMS

G-3. BASE FABRICATION. Shipping base (29, Figure C-0) is constructed of two 4x4x20 boards secured to the base of the unit with four 1/4 x 1 1/2 inch hexhead steel lagbolts and four 5/16 flatwashers.

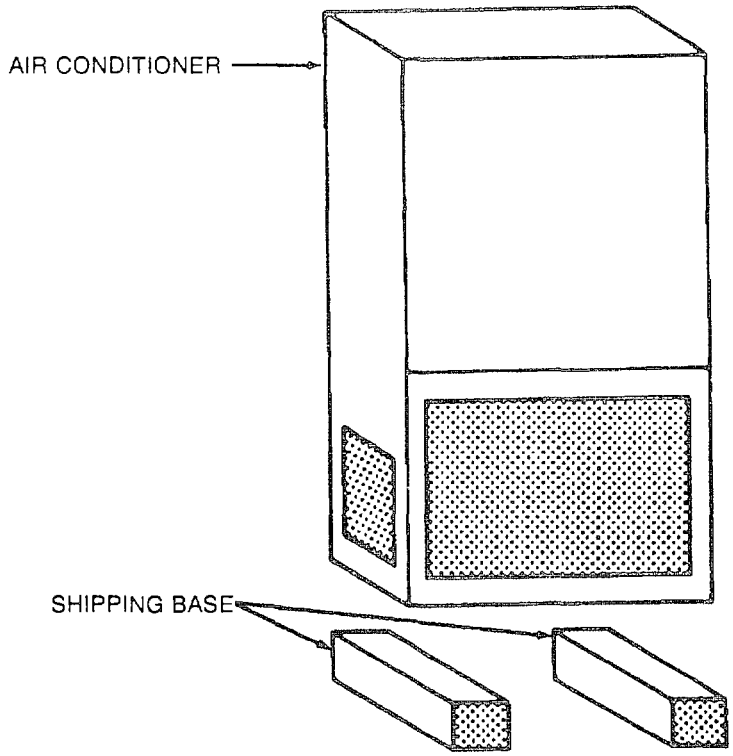

Figure G-1. Shipping Base.

GLOSSARY

Ambient	Surrounding on all sides (environment).
Compressor	A device used for Increasing the pressure of a gas or a vapor
Hermetically Sealed	Sealed airtight
Preventive Maintenance	Maintenance that Is performed on operational equipment to prevent equipment failure in the future.
Refrigerant	A substance such as freon that by undergoing a change in phase (liquid to gas, gas to liquid) releases or absorbs a large latent heat in relation to Its volume, and thus effects a considerable cooling effect.
Thermostat	An instrument which measures changes in temperature and directly or indirectly controls sources of heating and cooling to maintain a desired temperature.
Toxic	Poisonous.

ALPHABETICAL INDEX

ALPHABETICAL INDEX - CONTINUED

ALPHABETICAL INDEX - CONTINUED

ALPHABETICAL INDEX - CONTINUED

ALPHABETICAL INDEX - CONTINUED

ALPHABETICAL INDEX - CONTINUED

ALPHABETICAL INDEX - CONTINUED

By Order of the Secretary of the Army:

GORDON R. SULLIVAN
General, United States Army
Chief of Staff

Official:

MILTON H. HAMILTON
Administrative Assistant to the
Secretary of the Army
04214

DISTRIBUTION:
To be distributed in accordance with DA Form 12-25-E, block no. 6055, requirements for TM 9-4120-395-14&P.

*U. S. GOVERNMENT PRINTING OFFICE 1993-755-120/60200

RECOMMENDED CHANGES TO EQUIPMENT TECHNICAL PUBLICATIONS

SOMETHING WRONG WITH PUBLICATION

FROM: (PRINT YOUR UNIT'S COMPLETE ADDRESS)

DATE SENT

PUBLICATION NUMBER	PUBLICATION DATE	PUBLICATION TITLE

BE EXACT PIN-POINT WHERE IT IS

PAGE NO.	PARA-GRAPH	FIGURE NO.	TABLE NO.

IN THIS SPACE, TELL WHAT IS WRONG AND WHAT SHOULD BE DONE ABOUT IT.

PRINTED NAME, GRADE OR TITLE AND TELEPHONE NUMBER	SIGN HERE

DA FORM 1 JUL 79 2028-2

PREVIOUS EDITIONS ARE OBSOLETE.

P.S.--IF YOUR OUTFIT WANTS TO KNOW ABOUT YOUR RECOMMENDATION MAKE A CARBON COPY OF THIS AND GIVE IT TO YOUR HEADQUARTERS.

The Metric System and Equivalents

Linear Measure

1 centimeter = 10 millimeters = .39 inch
1 decimeter = 10 centimeters = 3.94 inches
1 meter = 10 decimeters = 39.37 inches
1 dekameter = 10 meters = 32.8 feet
1 hectometer = 10 dekameters = 328.08 feet
1 kilometer = 10 hectometers = 3, 280.8 feet

Weights

1 centigram = 10 milligrams = .15 grain
1 decigram = 10 centigrams = 1.54 grains
1 gram = 10 decigram = .035 ounce
1 dekagram = 10 grams = .35 ounce
1 hectogram = 10 dekagrams = 3.52 ounces
1 kilogram = 10 hectograms = 2.2 pounds
1 quintal = 100 kilograms = 220.46 pounds
1 metric ton = 10 quintals = 1.1 short tons

Liquid Measure

1 centiliter = 10 milliters = .34 fl. ounce
1 deciliter = 10 centiliters = 3.38 fl. ounces
1 liter = 10 deciliters = 33.81 fl. ounces
1 dekaliter = 10 liters = 2.64 gallons
1 hectoliter = 10 dekaliters = 26.42 gallons
1 kiloliter = 10 hectoliters = 264.18 gallons

Square Measure

1 sq. centimeter = 100 sq. millimeters = .155 sq. inch
1 sq. decimeter = 100 sq. centimeters = 15.5 sq. inches
1 sq. meter (centare) = 100 sq. decimeters = 10.76 sq. feet
1 sq. dekameter (are) = 100 sq. meters = 1, 076.4 sq. feet
1 sq. hectometer (hectare) = 100 sq. dekameters = 2.47 acres
1 sq. kilometer = 100 sq. hectometers = .386 sq. mile

Cubic Measure

1 cu. centimeter = 1000 cu. millimeters = .06 cu. inch
1 cu. decimeter = 1000 cu. centimeters = 61.02 cu. inches
1 cu. meter = 1000 cu. decimeters = 35.31 cu. feet

Approximate Conversion Factors

To change	*To*	*Multiply by*	*To change*	*To*	*Multiply by*
inches	centimeters	2.540	ounce-inches	newton-meters	.007062
feet	meters	.305	centimeters	inches	.394
yards	meters	.914	meters	feet	3.280
miles	kilometers	1.609	meters	yards	1.094
square inches	square centimeters	6.451	kilometers	miles	.621
square feet	square meters	.093	square centimeters	square inches	.155
square yards	square meters	.836	square meters	square feet	10.764
square miles	square kilometers	2.590	square meters	square yards	1.196
acres	square hectometers	.405	square kilometers	square miles	.386
cubic feet	cubic meters	.028	square hectometers	acres	2.471
cubic yards	cubic meters	.765	cubic meters	cubic feet	35.315
fluid ounces	milliliters	29, 573	cubic meters	cubic yards	1.308
pints	liters	.473	milliliters	fluid ounces	.034
quarts	liters	.946	liters	pints	2.113
gallons	liters	3.785	liters	quarts	1.057
ounces	grams	28.349	liters	gallons	.264
pounds	kilograms	.454	grams	ounces	.035
short tons	metric tons	.907	kilograms	pounds	2.205
pound-feet	newton-meters	1.356	metric tons	short tons	1.102
pound-inches	newton-meters	.11296			

Temperature (Exact)

°F	Fahrenheit temperature	5/9 (after subtracting 32)	Celsius temperature	°C

PIN: 071367-000

This fine document...

Was brought to you by me:

Liberated Manuals -- free army and government manuals

Why do I do it? I am tired of sleazy CD-ROM sellers, who take publicly available information, slap “watermarks” and other junk on it, and sell it. Those masters of search engine manipulation make sure that their sites that sell free information, come up first in search engines. They did not create it... They did not even scan it... Why should they get your money? Why are not letting you give those free manuals to your friends?

I am setting this document FREE. This document was made by the US Government and is NOT protected by Copyright. Feel free to share, republish, sell and so on.

I am not asking you for donations, fees or handouts. If you can, please provide a link to liberatedmanuals.com, so that free manuals come up first in search engines:

<A HREF=http://www.liberatedmanuals.com/>Free Military and Government Manuals</A>

- Sincerely
  Igor Chudov
  http://igor.chudov.com/
- Chicago Machinery Movers