TECHNICAL MANUAL

Operator's, Unit and Direct Support Maintenance Manual

REFRIGERATOR, PANEL TYPE, PREFABRICATED ASSEMBLIES

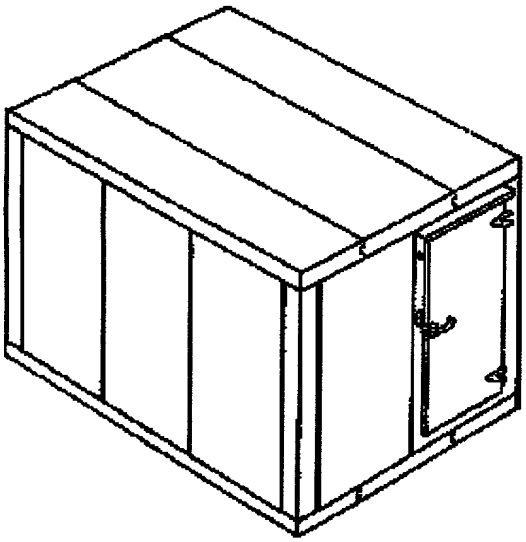

INTRODUCTION 1

OPERATING INSTRUCTIONS 2

OPERATOR'S MAINTENANCE INSTRUCTIONS 3

UNIT MAINTENANCE INSTRUCTIONS 4

DIRECT SUPPORT MAINTENANCE INSTRUCTIONS 5

REFERENCES A

MAINTENANCE ALLOCATION CHART B

COMPONENTS OF END ITEM AND BASIC ISSUE ITEMS LIST C

ADDITIONAL AUTHORIZATION LIST D

EXPENDABLE/DURABLE SUPPLIES AND MATERIAL LIST E

INDEX I

600 CU.FT. MODEL TKR-600C	(NSN 4110-01-264-2101)
600 CU.FT. MODEL AAR-600PF	(NSN 4110-01-166-3579)
1200 CU.FT. MODEL AA1200PFA	(NSN 4110-01-167-5320)
4000 CU.FT. MODEL AA4000PF	(NSN 4110-01-166-3580)
4000 CU.FT. MODEL TKR-4000C	(NSN 4110-01-315-9329)

Approved for public release; distribution is unlimited.

*** This manual supersedes TM 5-4110-241-13, dated 15 November 1984, including all changes**

HEADQUARTERS, DEPARTMENT OF THE ARMY
1 JULY 1992

WARNING

**HIGH VOLTAGE
IS USED IN THE OPERATION OF THIS EQUIPMENT**

DEATH ON CONTACT may result if personnel fail to observe safety precautions

Never work on electronic equipment unless there is another person nearby who is familiar with the operation and hazards of the equipment and who is competent in administering first aid. When the technician is aided by operators, he must warn them about dangerous areas.

Whenever possible, the power supply to the equipment must be shut off before beginning work on the equipment. Take particular care to ground every capacitor likely to hold a dangerous potential. When working inside the equipment, after the power has been turned off, always ground every part before touching it.

Be careful not to contact high-voltage connections of 115-volt ac input connections when installing or operating this equipment.

Whenever the nature of the operation permits, keep one hand away from the equipment to reduce the hazard of current flowing through vital organs of the body.

WARNING

DO NOT be misled by the term "low voltage". Potentials as low as 50 volts may cause death under adverse conditions.

For Artificial Respiration, refer to FM 21-11.

WARNING

The burning of polyurethane foam is dangerous. Due to the chemical composition of a polyurethane foam, toxic fumes are released when it is burned or heated. If it is burned or heated indoors, such as during a welding operation in its proximity, precautions should be taken to adequately ventilate the area. An exhaust system equivalent to that of a paint spray booth should be used. Air supply respirators, approved by the National Institute for Occupational Safety and Heath or U.S. Bureau of Mines should be used for all welding in confined spaces and when ventilation is inadequate. Individuals who have chronic or recurrent respiratory conditions, including allergies and asthma, should not be employed in this type of environment.

TM 9-4410-241-13
T.O. 35E9-274-1

CHANGE NO. 2

HEADQUARTERS, DEPARTMENT OF THE ARMY
WASHINGTON, DC, 31 AUGUST 2005

TECHNICAL MANUAL

OPERATOR'S, UNIT AND DIRECT SUPPORT MAINTENANCE MANUAL

FOR
REFRIGERATOR, PANEL TYPE, PREFABRICATED ASSEMBLIES

600 CU.FT	MODEL MDS1600N	(NSN: 4110-01-461-3891)
600 CU.FT	MODEL TKR-600C	(NSN: 4110-01-264-2101)
600 CU.FT	MODEL AA600PF	(NSN: 4110-01-166-3579)
1200 CU.FT	MODEL AA1200PFA	(NSN: 4110-01-167-5320)
4000 CU.FT	MODEL AA4000PF	(NSN: 4110-01-166-3580)
4000 CU.FT	MODEL TKR-4000C	(NSN: 4110-01-315-9329)

DISTRIBUTION STATEMENT A: Approved for public release; distribution is unlimited.

TM 9-4110-241-13, 1 July 1992, is updated as follows:

1. File this sheet in front of the manual for reference.

2. This change implements Army Maintenance Transformation and changes the Maintenance Allocation Chart (MAC) to support Field and Sustainment Maintenance.

3. New or updated change information is indicated by a vertical bar in the outer margin of the page.

4. Remove old pages and insert new pages as indicated below:

Remove Pages	**Insert Pages**	**Remove Pages**	**Insert Pages**
	A/(B Blank)		
B-1 through B-6	B-1 through B-6		
DA 2028/ Envelope	Electronic 2028 Instructions/ Blank		
	2028 Sample Front/Back		
	2028 Front/2028 Back		
	2028 Front/2028 Back		

By Order of the Secretary of the Army:

PETER J. SCHOOMAKER
General, United States Army
Chief of Staff

Official:

SANDRA R. RILEY
Administrative Assistant to the
Secretary of the Army
0516410

MICHAEL E. RYAN
GENERAL, USAF
Chief of Staff

Official:
GEORGE T. BABBETT
General, USAF
Commander, Air Force Materiel Command

Distribution: To be distributed in accordance with initial distribution number (IDN) 255794 requirements for TM 9-4110-241-13.

CHANGE

NO. 1

HEADQUARTERS
DEPARTMENTS OF THE ARMY AND AIR FORCE
WASHINGTON, D.C., 30 DECEMBER 1992

Operators, Unit and Direct Support
Maintenance Manual

REFRIGERATOR, PANEL TYPE,
PREFABRICATED ASSEMBLIES

600	CU.FT. MODEL MDS1600N	(NSN 4110-01-461-3891)
600	CU.FT. MODEL TKR-600C	(NSN 4110-01-264-2101)
600	CU.FT. MODEL AA600PF	(NSN 4110-01-166-3579)
1200	CU.FT. MODEL AA1200PFA	(NSN 4110-01-167-5320)
4000	CU.FT. MODEL AA4000PF	(NSN 4110-01-166-3580)
4000	CU.FT. MODEL TKR-4000C	(NSN 4110-01-315-9329)

DISTRIBUTION STATEMENT A: Approved for public release; distribution is unlimited.

TM 9-4110-241-13, 1 July 1992, is changed as follows:

1. Title is changed as above.

2. Remove and insert pages as indicated below. New or changed text material is indicated by a vertical bar in the margin. An illustration change is indicated by a miniature pointing hand.

Remove pages	Insert pages
i though iv	i through iv
1-1 and 1-2	1-1 and 1-2
1-5 through 1-8	1-5 through 1-8
2-7 through 2-10	2-7 through 2-10
3-1 through 3-4	3-1 through 3-4
3-7 through 3-10	3-7 through 3-10
4-11 through 4-23/(4-24 blank)	4-11 through 4-23(4-24 blank)
4-33 through 4-36	4-33 through 4-36
4-39/(4-40 blank)	4-39/(4-40 blank)
4-41 through 4-43/(4-44 blank)	4-41 through 4-43/(4-44 blank)
4-45 and 4-46	4-45 and 4-46
C-1 and C-2	C-1 and C-2

3. Retain this sheet in front of manual for reference purposes.

By Order of the Secretaries of the Army and the Air Force:

GORDON R. SULLIVAN
General, United States Army
Chief of Staff

Official:

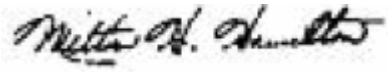

MILTON H. HAMILTON
Administrative Assistant to the
Secretary of the Army
03482

MERRILL A. MCPEAK
General, USAF
Chief of Staff

RONALD W. YATES
General, USAF
Commander, Air Force Materiel Command

DISTRIBUTION:
To be distributed in accordance with DA Form-12-25-E, block no. 5794, requirements for TM 9-4110-241-13.

INSERT LATEST CHANGED PAGES. DESTROY SUPERSEDED PAGES.

LIST OF EFFECTIVE PAGES

NOTE: The portion of text affected by the update is indicated by a vertical line in the outer margins of the page. Updates to illustrations are indicated by shaded or screened areas, or by miniature pointing hands. Zero in the "Change No." column indicates an original page or work package.

Dates of issue for original and changed pages / work packages are:

Original .. 0 .. 1 July 1992
Change .. 1 .. 30 December 1992
Change .. 2 .. 31 August 2005

TOTAL NUMBER OF PAGES FOR THIS PUBLICATION IS 136, CONSISTING OF THE FOLLOWING:

Page No.	Change No.	Page No.	Change No.	Page No.	Change No.
Cover	**0**	4-1 through 4-10	**0**	E-1 through E-2	**0**
a/(b Blank)	**0**	4-11 through 4-12	**1**	Glossary-1/(Glossary-2 Blank)	**0**
i	**1**	4-13	**0**	I-1 through I-2	**0**
ii-iii	**0**	4-14	**1**	Back Cover	**0**
iv	**1**	4-15	**0**		
v	**0**	4-16 through 4-19	**1**		
1-0	**0**	4-20	**0**		
1-1	**1**	4-21 through 4-23/(24 Blank)	**1**		
1-2 through 1-5	**0**	4-25 through 4-32	**0**		
1-6	**1**	4-33 through 4-36	**1**		
1-7	**0**	4-37 through 4-38	**0**		
1-8	**1**	4-39 through 4-41	**1**		
2-1 through 2-6	**0**	4-42	**0**		
2-7	**1**	4-43/(44 Blank)	**1**		
2-8 through 2-9	**0**	4-45	**0**		
2-10	**1**	4-46	**1**		
2-11 through 3-1	**0**	4-47 through A-1/(A-2 Blank)	**0**		
3-2 through 3-3	**1**	B-1 through B-8	**2**		
3-4 through 3-6	**0**	C-1 through C-2	**1**		
3-7 through 3-10	**1**	D-1/(D-2 Blank)	**0**		

TECHNICAL MANUAL

NO. 9-4110-241-13

HEADQUARTERS
DEPARTMENTS OF THE ARMY AND AIR FORCE
WASHINGTON D.C., 1 JULY 1992

TECHNICAL MANUAL

Operators, Unit and Direct Support
Maintenance Manual

REFRIGERATOR, PANEL TYPE, PREFABRICATED ASSEMBLIES

600	CU. FT. MODEL MDS1600N	(NSN 4110-01-361-3891)
600	CU. FT. MODEL TKR-600C	(NSN 4110-01-264-2101)
600	CU. FT. MODEL AA600PF	(NSN 4110-01-166-3579)
1200	CU. FT. MODEL AA1200PFA	(NSN 4110-01-167-5320)
4000	CU. FT. MODEL AA4000PF	(NSN 4110-01-166-3580)
4000	CU. FT. MODEL TKR-4000C	(NSN 4110-01-315-9329)

REPORTING ERRORS AND RECOMMENDING IMPROVEMENTS

You can help improve this manual. If you find any mistakes or if you know of a way to improve these procedures, please let us know. Mail your letter or DA Form 2028 (Recommended Changes to Publications and Blank Forms), or DA Form 2028-2 located in the back of this manual directly to: Commander, US Army Aviation and Troop Command, ATTN: AMSATI-MTS, 4300 Goodfellow Blvd., St. Louis, MO 63120-1798. A reply will be furnished directly to you.

For Air Force, submit AFTO Form 22 (Technical Order System Publication Improvement Report and Reply) and forward to the address prescribed above for the Army. An information copy of the prepared AFTO Form 22 shall be furnished to SA-ALC/MMDDA, Kelly AFB, TX 78241-5000.

DISTRIBUTION STATEMENT A: Approved for public release; distribution is unlimited.

TABLE OF CONTENTS

PAGE

CHAPTER 1 INTRODUCTION
Section I General Information 1-1
Section II Equipment Description and Data.....1-2
Section III Technical Principles of Operation 1-1
CHAPTER 2 OPERATING INSTRUCTIONS
Section I Description and Use of Operator's Controls and Instruments 2-1
Section II Preventive Maintenance Checks and Services (PMCS) 2-3

*This manual supersedes TM 5-4110-241-13,15 November 1984, including all changes.

TABLE OF CONTENTS (CONT)

		Page
Section III	Operation Under Usual Conditions	2-14
Section IV	Operation Under Unusual Conditions	2-14
CHAPTER 3	OPERATOR'S MAINTENANCE INSTRUCTIONS	
Section I	Lubrication Instructions	3-1
Section II	Troubleshooting	3-2
Section III	Operator Maintenance Procedures	3-4
CHAPTER 4	UNIT MAINTENANCE INSTRUCTIONS	
Section I	Repair Parts, Special Tools, TMDE, and Support Equipment	4-1
Section II	Service Upon Receipt of Equipment	4-3
Section III	Preventive Maintenance Checks and Services (PMCS)	4-13
Section IV	Troubleshooting	4-17
Section V	Unit Maintenance Procedures	4-25
Section VI	Preparation for Storage or Shipment	4-52
CHAPTER 5	DIRECT SUPPORT MAINTENANCE INSTRUCTIONS	
Section I	Troubleshooting	5-1
Section II	Direct Support Maintenance Procedures	5-1
APPENDIX A	REFERENCES	A-1
APPENDIX B	MAINTENANCE ALLOCATION CHART	B-1
APPENDIX C	COMPONENTS OF END ITEM AND BASIC ISSUE ITEMS LIST	C-1
APPENDIX D	ADDITIONAL AUTHORIZATION LIST	D-1
APPENDIX E	EXPENDABLE/DURABLE SUPPLIES AND MATERIALS	E-1
	GLOSSARY	GLOSSARY-1/2
	INDEX	I-1

LIST OF ILLUSTRATIONS

FIGURE	TITLE	PAGE
1-1	Refrigerator, Panel Type, Prefabricated Assemblies, 600 Cubic Feet Units, Front and Rear Views	1-0
1-2	Refrigerator, Panel Type, Prefabricated Assemblies, 600 and 1200 Cubic Feet Units (Sheet 1 of 2)	1-4
	4000 Cubic Feet Units (Sheet 2 of 2)	1-5
1-3	Wiring Diagram	1-8
3-1	Lubrication Points	3-1
3-1	Panels	3-4
3-3	Door Assembly	3-4
3-4	Latch Assembly	3-5
3-5	Padlock and Chain	3-5
3-6	Hinge	3-6
3-7	Door Gasket	3-6
3-8	Switch Cover	3-7
3-9	Pilot Light Cover	3-7
3-10	Light Assembly and Globe	3-7
3-11	Light Bulb	3-8
3-12	Power Receptacle	3-8
3-13	Electrical Plug	3-9
3-14	Plug Seal Cover	3-9
3-15	Thermometer	3-10
3-16	Refrigerator Prefabricated Panels	3-10
4-1	Typical Installation of Prefabricated Refrigerator Panels	4-2
4-2	Clamp Assembly	4-4
4-3	Panel Schedule:	
	Sheet 1 of 5 (600 Cubic Feet Refrigerator Units)	4-5
	Sheet 2 of 5 (1200 Cubic Feet Refrigerator Units)	4-6
	Sheet 3 of 5 (4000 Cubic Feet Refrigerator Units)	4-7
	Sheet 4 of 5 Panel Schedule	4-8
	Sheet 5 of 5 (Layout of Floor Racks, Typical)	4-9
4-4	Blocking and Tie Downs	4-10
4-5	Door Repairs	4-25
4-6	Door Assembly	4-26
4-7	Handle Release	4-27
4-8	Latch Strike	4-28
4-9	Latch Assembly	4-29
4-10	Padlock and Chain	4-30
4-11	Hinge	4-31
4-12	Door Gasket	4-32
4-13	Test/Repair Wires	4-34

LIST OF ILLUSTRATIONS (CONT)

FIGURE	TITLE	PAGE
4-14	Switch Cover	4-35
4-15	Switch	4-36
4-16	Pilot Light Cover and Bulb (Models M600PF, M1200PFA, and M4000PF)	4-37
4-17	Pilot Light Socket (Models AA600PF, AA1200PFA, and M4000PF)	4-38
4-18	Pilot Light Housing Assembly (Models MDS1600N, TKR-600C and TKR-4000C)	4-39
4-19	Light Assembly and Globe	4-41
4-20	Electrical Plug and Cover (Models AA600PF, M1200PFA, and M4000PF)	4-42
4-21	Female Receptacle (Models MDS1600N, TKR-600C and TKR-4000C)	4-43
4-22	Power Receptacle (Models M600PF, AA1200PFA, and AA4000PF)	4-45
4-23	Male Receptacle (Models MDS1600N, TKR-600C and TKR-4000C)	4-46
4-24	Thermometer	4-47
4-25	Drains	4-47
4-26	Barrel Bolt	4-49
4-27	Wrench Clips	4-49
4-28	Repair of Panels	4-50
4-29	Gasket and Clamp Assembly	4-51
4-30	Blocking and Tie-Downs	4-52
5-1	600 Cubic Feet Refrigerator	5-1

LIST OF TABLES

Table		Page
2-1	Preventive Maintenance Checks and Services (PMCS)	2-4
3-1	Troubleshooting	3-2
4-1	Preventive Maintenance Checks and Services (PMCS)	4-14
4-2	Troubleshooting	4-17

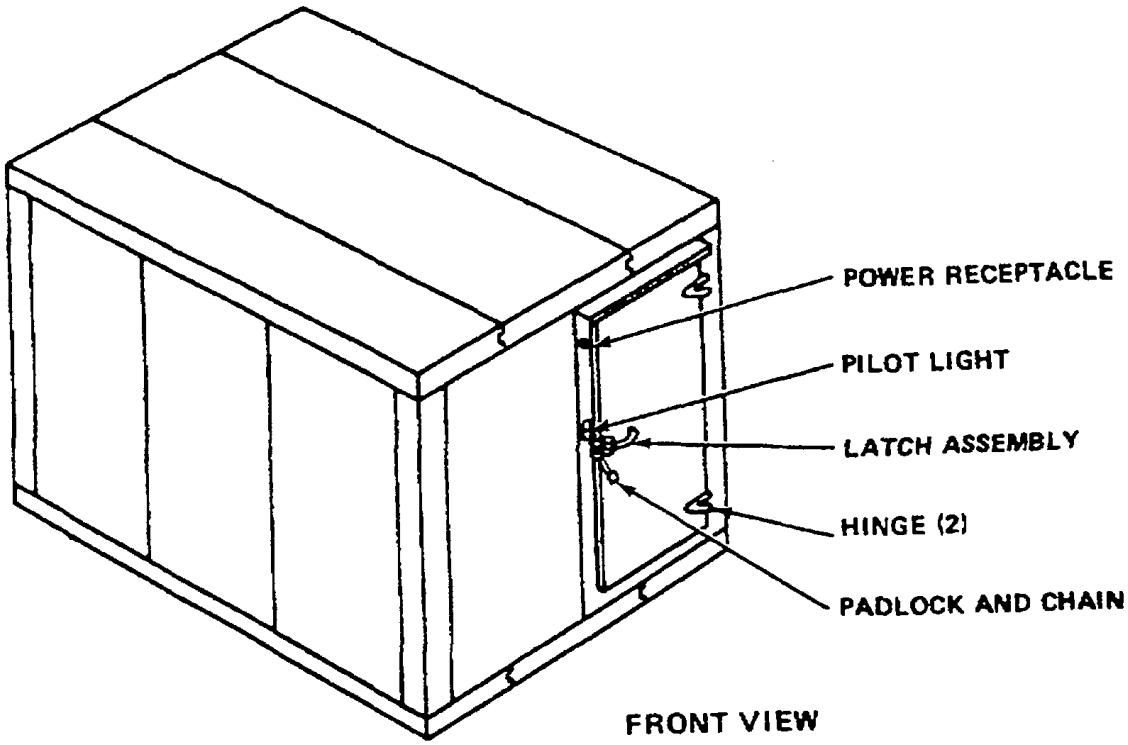

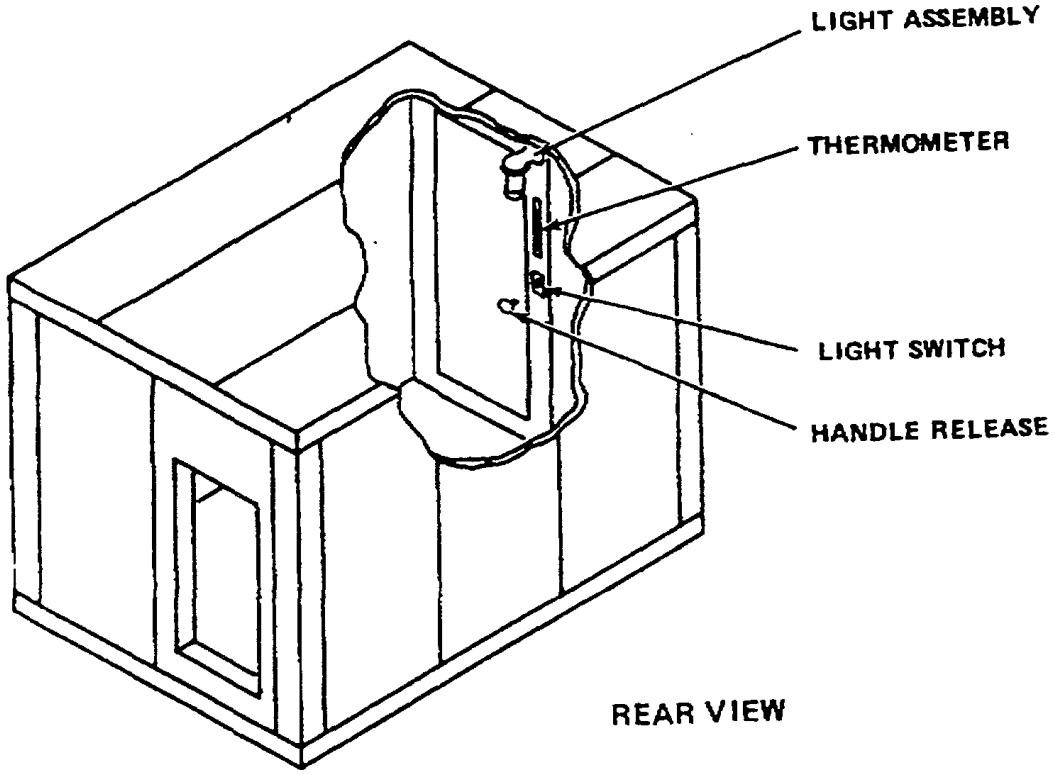

Figure 1-1. Refrigerator, Panel Type, Prefabricated Assemblies, 600 Cubic Feet Units Front and Rear Views

CHAPTER 1

INTRODUCTION

Page

General Information 1-1
Equipment Description and Data 1-2
Technical Principles of Operation..... 1-8

Section I. GENERAL INFORMATION

1-1. SCOPE.

a. Type of Manual: Operator's, Unit and Direct Support Maintenance Manual.

b. Model Number and Equipment Name: This manual applies to the following configurations of the Refrigerator, Panel Type, Prefabricated Assemblies:

600 cubic feet	Model MDS1600N
600 cubic feet	Model AA600PF
600 cubic feet	Model TKR-600C
1200 cubic feet	Model Ml 200PFA
4000 cubic feet	Model AA4000PF
4000 cubic feet	Model TKR-4000C

c. Purpose of Equipment. These units are prefabricated walk-in, portable type refrigerators supplied without refrigeration equipment. Mechanical refrigeration equipment can be installed to provide cold storage for perishable items.

NOTE

Order refrigeration units by the following NSN: Gas operated unit, 4110-00-274-718 or electric operated unit, 4110-01-101-4202.

1-2. MAINTENANCE FORMS AND RECORDS.

Department of the Army forms and procedures used for equipment maintenance will be those prescribed by DA PAM 738-750, The Army Maintenance Management System (TAMMS).

1-3. DESTRUCTION OF ARMY MATERIEL TO PREVENT ENEMY USE.

1-4. REPORTING EQUIPMENT IMPROVEMENT RECOMMENDATIONS (EIR'S).

If your refrigerator needs improvement, let us know. Send us an EIR. You, the use are the only one who can tell us what you don't like about your equipment. Let us know why you don't like the design. Tell us why a procedure is hard to perform. Put it on a SF 368 (Quality Deficiency Report). Mail it to us at Headquarters Commander, US Army Aviation and Troop Command, ATTN: AMSAT-I-MDO, 4300 Goodfellow Blvd., St. Louis, MO 63120-1798. We'll send you a reply.

Section II. EQUIPMENT DESCRIPTION AND DATA

1-5. EQUIPMENT CHARACTERISTICS, CAPABILITIES, AND FEATURES.

a. General. The prefabricated panel type walk-in refrigerators (figures 1-1 and 1-2) are assembled from interchangeable panels. The refrigerators are 600, 1200 and 4000 cubic feet units. The units are three-panel or 12 ft. 9-5/8 in. wide. The 600 and 1200 cubic feet units are single-unit installations; the 4000 cubic feet units are divided into four compartments.

(1) All wall panels (B), door panels (C) and evaporator panels (D) can be exchanged one for-the other within a single refrigerator unit and/or between all three refrigerator units.

(2) Center ceiling panels (CC) are interchangeable and center floor panels (FC) are interchangeable between all three refrigerator units. In an emergency, the floor and ceiling panels can be exchanged one for the other. The floor-panels have drains.

(3) Left (CL) and right (CR) ceiling panels are not interchangeable.

(4) Left (FL) and right (FR) floor panels are not interchangeable.

(5) All corner panels are interchangeable.

(6) The three different partitions (H1, H2, H3) are not interchangeable.

b. 600 Cubic Feet Units.

- One Walk-in Door Panel
- One Door Canopy
- One Evaporator Panel
- Eight Wall Panels
- Four Corner Panels
- Three Ceiling and Three
- Floor Panels
- Roof and Floor Panels
- Interchangeable
- Six Floor Racks (2 Lg., 4 Small)
- Thermometer (One)
- Outside Power Receptacle
- Inside Light
- Outside Indicating Light
- Two Floor Drains

c. 1200 Cubic Feet Units.

- One Walk-in Door Panel
- One Door Canopy
- Two Evaporator Panels
- Eleven Wall Panels
- Four Corner Panels
- Five Roof & Five Floor Panels
- Roof and Floor Panels
- Interchangeable
- Fourteen Floor Racks (10 Lg., 4 Small)
- Thermometer (One)
- Outside Power Receptacle
- Inside Light
- Outside Indicating Light
- Two Floor Drains

1-5. EQUIPMENT CHARACTERISTICS, CAPABILITIES, AND FEATURES. (Cont) -

d. 4000 Cubic Feet Units.

- Four Walk-in Door Panels
- Four Door Canopies
- Four Evaporator Panels
- Twenty-Six Wall Panels
- Nine Partition Panels
- Fifteen Ceiling Panels and Fifteen Floor Panels
- Roof and Floor Panels Interchangeable
- Thirty Floor Racks (26 Lg, 4 Small)
- Thermometers (Four)
- Outside Power Receptacles (Four)
- Inside Lights (Four)
- Outside Indicating Light
- Floor Drains (Four)

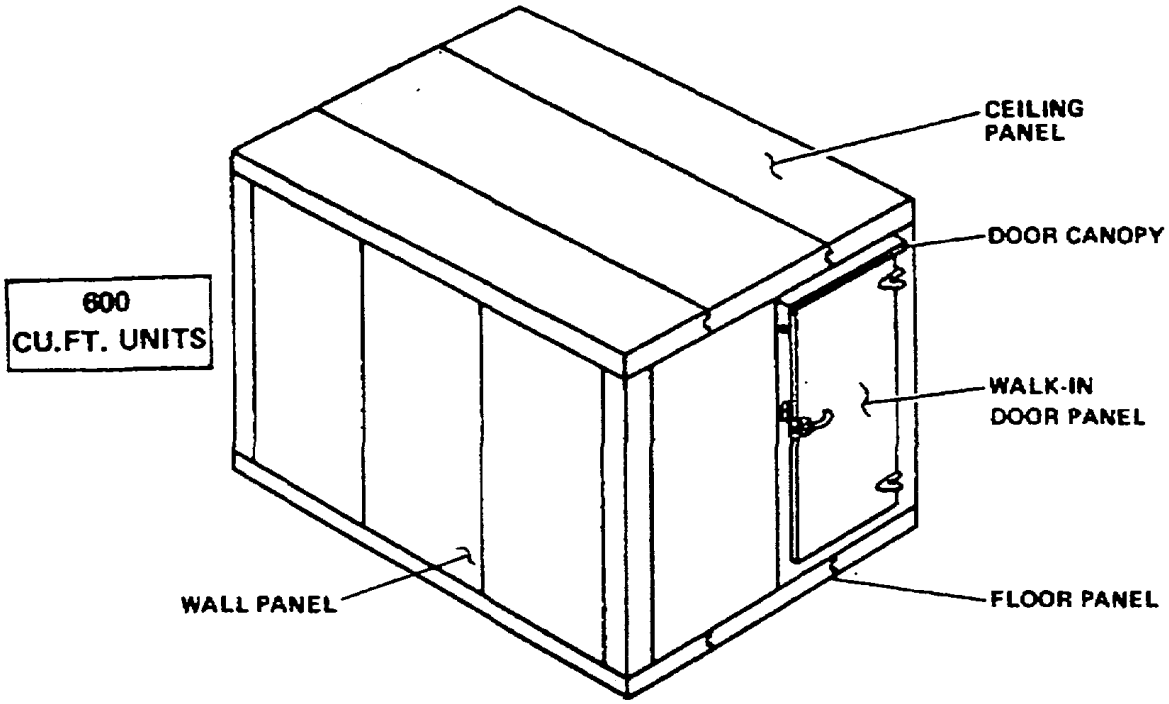

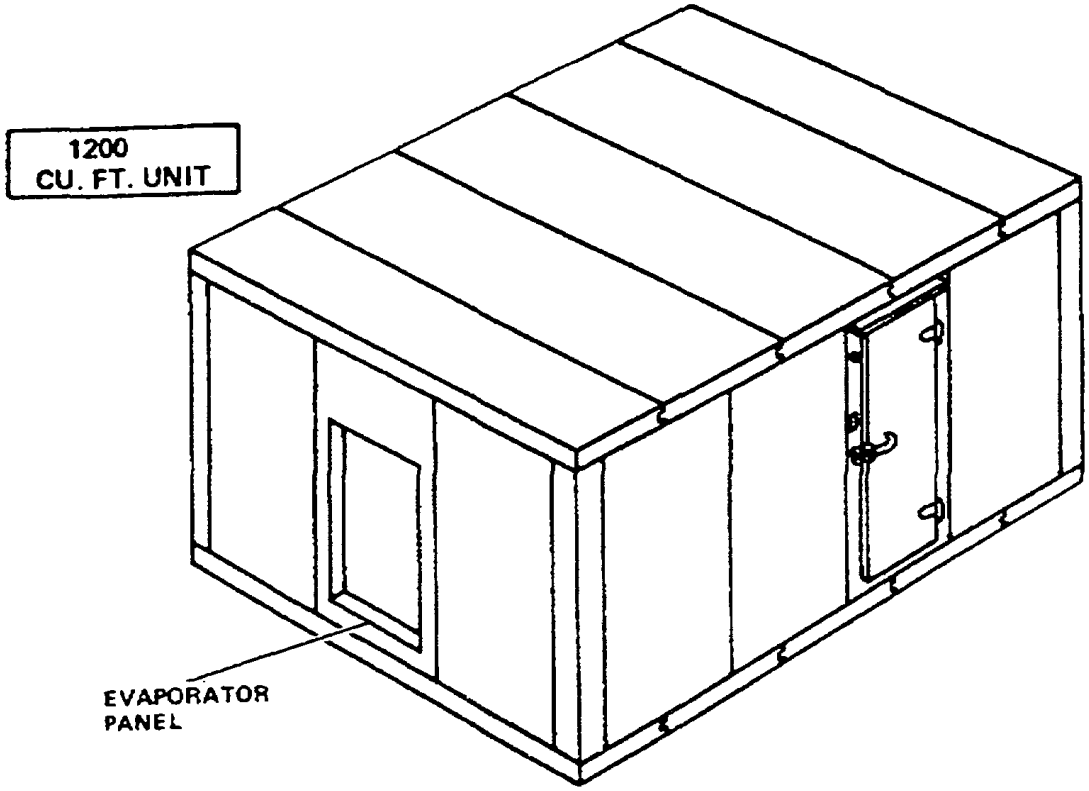

Figure 1-2. Refrigerator, Panel Type, Prefabricated Assemblies, 600 and 1200 Cubic Feet Units (Sheet 1 of 2)

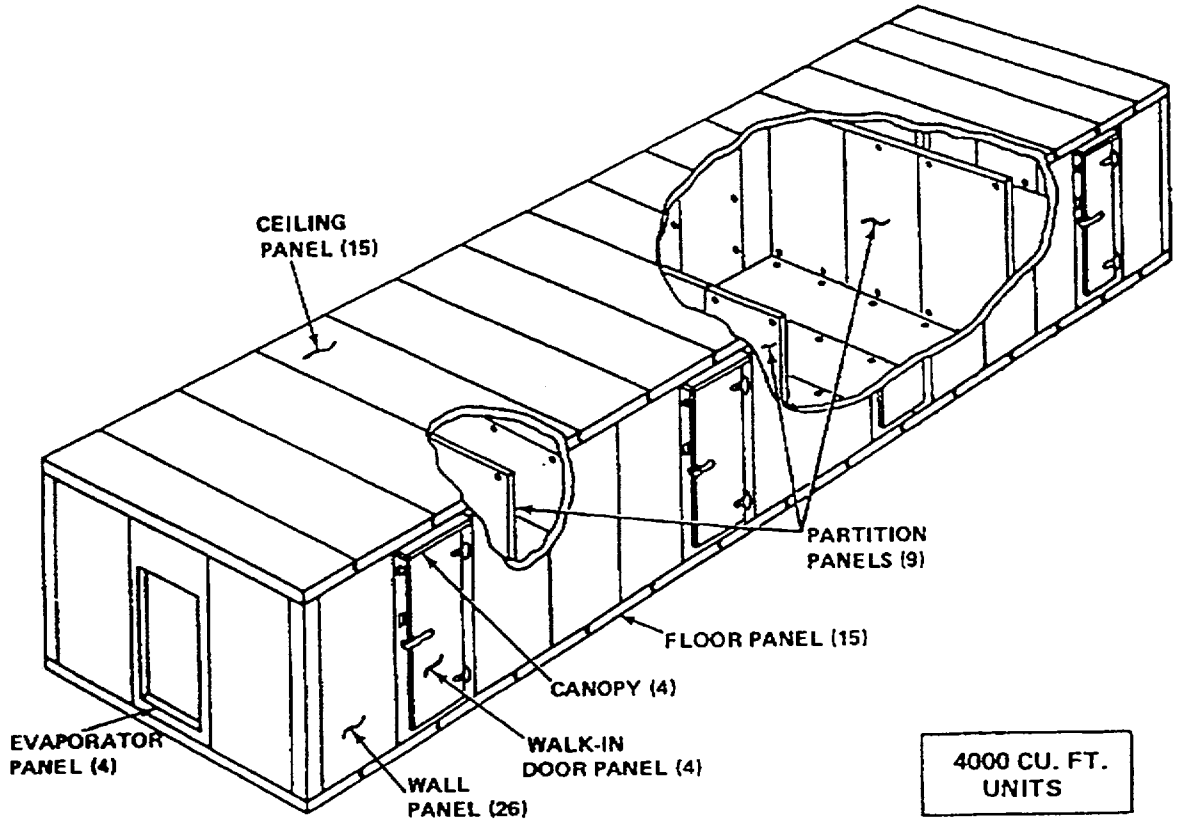

Figure 1-2. Refrigerator, Panel Type, Prefabricated Assemblies, 4,000 Cubic Feet Units (Sheet 2 of 2)

1-6. EQUIPMENT IDENTIFICATION.

Identification data is marked on the door of each walk-in door panel. There is one door panel each on the 600 cubic feet and 1200 models and four door panels on the 4000 cubic feet models. The identification data specifies the nomenclature, manufacturer, class, model number and serial number. Additionally, each panel is labeled with an alphabetical character.

1-7. DIFFERENCES BETWEEN MODELS.

Differences between models for floor layout and panel schedule are illustrated and listed in figure 4-3. Table 1-1 lists component differences that affects maintenance actions for the different models.

Table 1-1. Differences Between Models

Component/Part Number (FSCM)	M600PF	TKR-600C	MDS1600N	AA1200PFA	M4000PF	TKR-4000C
Light Switch Cover						
DS128 (15235)	X			X	X	
1750 (72765)		X	X			X
Light Globe						
GL10OPG (08176)	X			X	X	
VBB-10OPC (87518)	_	X	X			X
Pilot Light Cover						
25-1-SGS (72765)	X			X	X	
6063-001-534 (71744)		X	X			X
Power Receptacle						
7600 (74545)	X			X	X	
7486 (74545)		X	X			X
Connector Plug						
7314-C (74545)	X			X	X	
7484(74545)		X	X			X
Plug Seal Cover						
6031 (74545)	X			X	X	
7440 (74545)		X	X			X

1-8. EQUIPMENT DATA.

*Length:	
600 cubic feet units	8 feet, 11 inches
1200 cubic feet unit	16 feet, 7 inches
4000 cubic feet unit	54 feet, 9 inches
*Width (All Models)	12 feet, 9-5/8 inches
*Height (All Models)	7 feet, 5-3/4 inches
Actual Cubic Feet:	
600 cubic feet units	625
1200 cubic feet unit	1220
4000 cubic feet units	4114
Crating Data:	
600 Units	Approx. Crated Wt.
(1) "A" crate	900 lbs
(1) "B" crate	650 lbs
(1) "C" crate	1,650 lbs
	3,200 lbs Total
1200 Unit	Approx. Crated Wt.
(1) "A" crate	900 lbs
(1) "B" crate	650 lbs
(1) "C" crate	1,650 lbs
(1) "D" crate	550 lbs
(1) "H" crate	1,300 lbs
	5,050 lbs Total
4000 Units	Approx. Crated Wt.
(1) "A" crate	900 lbs
(1) "B" crate	650 lbs
(1) "C" crate	1,650 lbs
(1) "D" crate	550 lbs
(1) "E" crate	750 lbs
(2) "F" crate	1,100 lbs
(2) "G" crate	1,500 lbs
(6) "H" crate	7,800 lbs
	11,900 lbs Total
Electrical Requirements	125 VAC, 50/60 Hz (interior light and exterior pilot light) input at electrical power receptacle.

* Approximate erected dimensions.

Section III. TECHNICAL PRINCIPLES OF OPERATION

1-9. GENERAL.

a. The walls, floor, and ceiling of the refrigerators are assembled from panels filled with densely packed insulating foam, and covered with sheet metal. This provides an insulating barrier which helps maintain temperatures inside the refrigerator.

b. A thermometer, mounted outside the refrigerator, displays the inside temperature.

c. The external power receptacle, mounted outside the refrigerators, is connected to a light switch, light and pilot light. The light switch is mounted inside the refrigerator and controls the inside light. The pilot light is outside the refrigerator and indicates when the inside light is on. This circuit requires a 125 VAC input to power the lights. (See figure 1-3.)

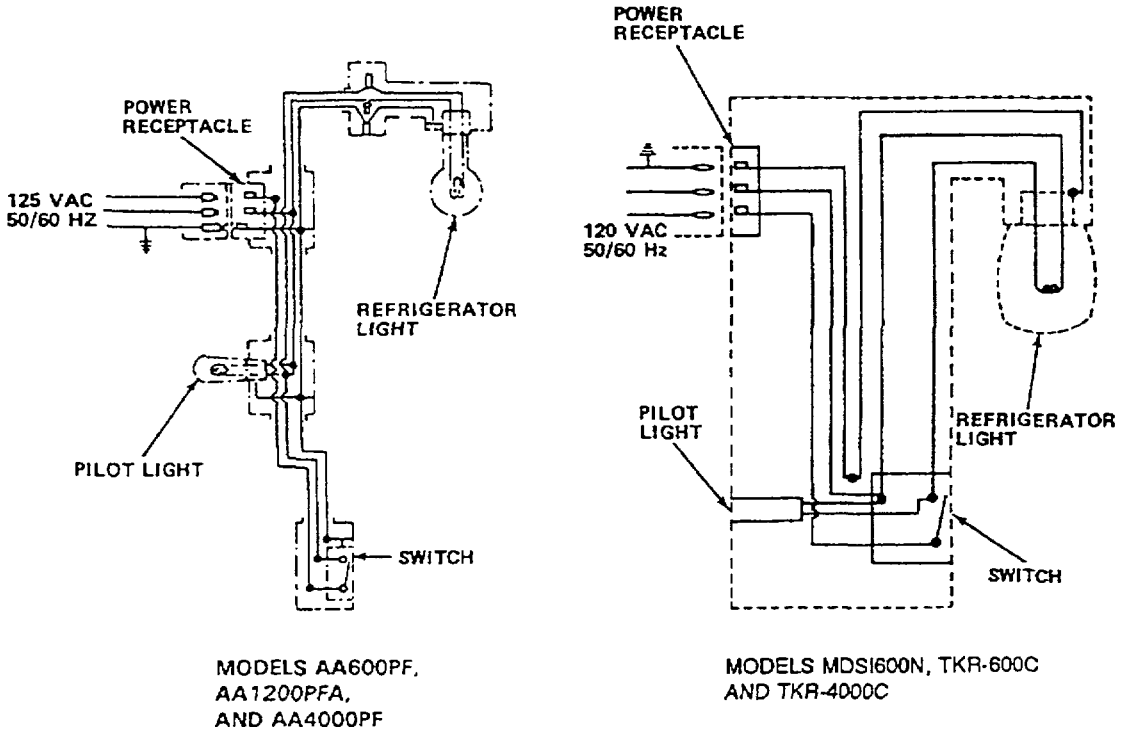

Figure 1-3. Wiring Diagram

CHAPTER 2

OPERATING INSTRUCTIONS

	Page
Description and Use of Operator's controls and indicators	2-1
Preventive Maintenance Checks and Services (PMCS)	2-3
Operation Under Usual Conditions	2-14
Operation Under Unusual Conditions	2-14

Section I. DESCRIPTION AND USE OF OPERATOR'S CONTROLS AND INSTRUMENTS

2-1. CONTROLS AND INDICATORS.

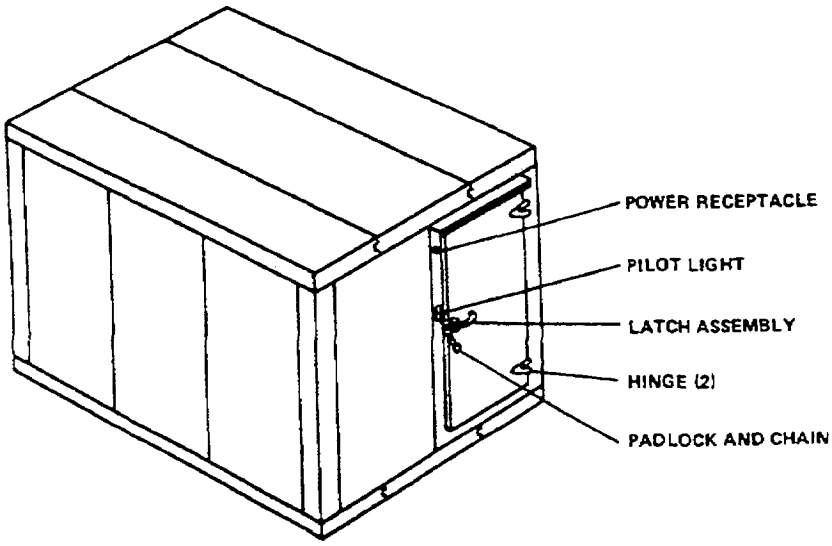

1. **POWER RECEPTACLE** - Used to connect 125 VAC input to inside light and outside pilot light.

2. **PILOT LIGHT** - Glows to indicate that light inside refrigerator is on.

3. **LATCH ASSEMBLY** - Provides outside handle for opening and closing door; latches to secure door in closed position. Supplied with handle release used to open door from inside refrigerator.

4. **HINGE** - Mounts door to box and allows opening and closing of door.

5. **PADLOCK AND CHAIN** - Provides means of positively locking refrigerator to prevent theft.

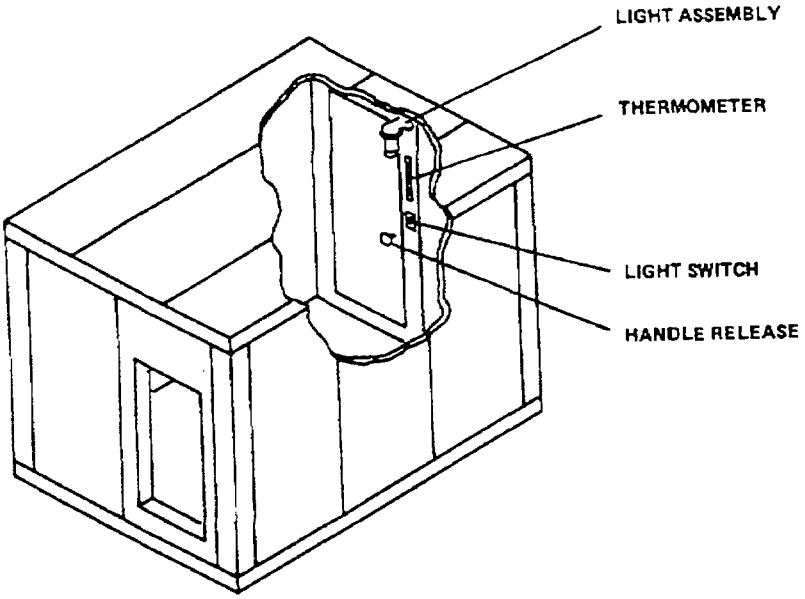

6. **LIGHT ASSEMBLY** - Provides interior light.

7. **THERMOMETER** - Thermometer indicates inside temperature in degrees Fahrenheit.

8. **LIGHT SWITCH** - When pressed, turns inside light on or off.

9. **HANDLE RELEASE** - Provides means of unlatching door from inside.

Section II. PREVENTIVE MAINTENANCE CHECKS AND SERVICES (PMCS)

2-2. GENERAL.

- **Before you operate**. Always keep in mind the CAUTIONS and WARNINGS. Perform your before (B) PMCS.
- **While you operate**. Always keep in mind the CAUTIONS and WARNINGS. Perform your during (D) PMCS.
- **Each week**. Be sure to perform your weekly (W) PMCS.
- **Once a month**. Be sure to perform your monthly (M) PMCS.
- **If your equipment fails to operate**. Troubleshoot with proper equipment. Report any deficiencies using the proper forms. See DA PAM 738-750.
- **Why perform PMCS?** PMCS check procedures are to see that the unit is working properly. PMCS service procedures are to help keep the unit working properly.
- **When to perform PMCS?** PMCS procedures shall be performed at the times indicated in the INTERVAL column of the PMCS table. The PMCS intervals are before operation (B), during operation (D), weekly (W), and monthly (M). The item numbers indicate the sequence of procedures to be performed.
- **Equipment is Not Ready/Available If.** Guidelines which identify the refrigerator as "not ready/ available" for use appear in the EQUIPMENT IS NOT READY/AVAILABLE IF column of the table. If the refrigerator is identified as not ready for use, the problem must be corrected before the unit can be used.
- **Reporting Deficiencies.** Report any deficiencies found during PMCS. Department of the Army forms and procedures used for equipment maintenance will be those prescribed by DA PAM 738-750, The Army Maintenance Management System (TAMMS).

2-3. PREVENTIVE MAINTENANCE CHECKS AND SERVICES TABLE.

NOTE

If the equipment must be kept in continuous operation, check and service only those items that can be checked and serviced without disturbing operation. Make the complete checks and services when the equipment can be shut down.

- **Perform weekly (W) as well as before operation (B) PMCS if: You are the assigned operator and have not operated the item since the last weekly PMCS.**
- **You are operating the item for the first time.**

Item numbers which appear on this table are to be used in the "TM Number" column on DA Form 2404, Equipment Inspection and Maintenance Workshop, in recording the results of PMCS.

Table 2-1. Preventive Maintenance Checks and Services (PMCS)

B - Before Operation **D - During Operation** **W - Weekly** **M - Monthly**

Item No.	Interval				Item To Be Inspected.	Equipment is not Ready/Available if:
	B	D	W	M	Procedures	
1					**Refrigerator Panels and Door Assembly**.	Any holes or cracks through unit are visible.
					Visually inspect refrigerator panels and door assembly for cracking or visible holes.	
					Wash interior with baking soda and water.	Wash and dry thoroughly.
					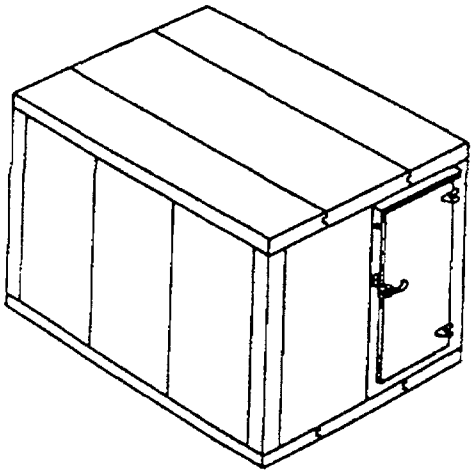	
2					**Door Assembly**	Door fails to open properly
					Check for proper mounting. Door must open and close easily and latch shall close with its strike.	

Table 2-1. Preventive Maintenance Checks and Services (PMCS) (Cont)

B - Before Operation **D - During Operation** **W - Weekly** **M - Monthly**

Item No.	Interval				Item To Be Inspected.	Equipment is not Ready/Available if:
	B	D	W	M	Procedures	
3					**Latch-Strike Assembly** Check for cracks, breaks, excessive wear, and loose or missing hardware. Operate handle release to ensure it opens latch. Lubricate with low viscosity SAE oil once a month.	Latch is damaged, mounting hardware is loose or missing, or handle release fails to open latch. Latch sticks.

Table 2-1. Preventive Maintenance Checks and Services (PMCS) (Cont)

B - Before Operation **D - During Operation** **W - Weekly** **M - Monthly**

Item No.	Interval				Item To Be Inspected.	Equipment is not Ready/Available if:
	B	D	W	M	Procedures	
4					**Padlock and Chain** Inspect padlock for cracks, breaks, and operability. chain for distorted or damaged links. Undamaged portion of chain must be long enough to secure door. 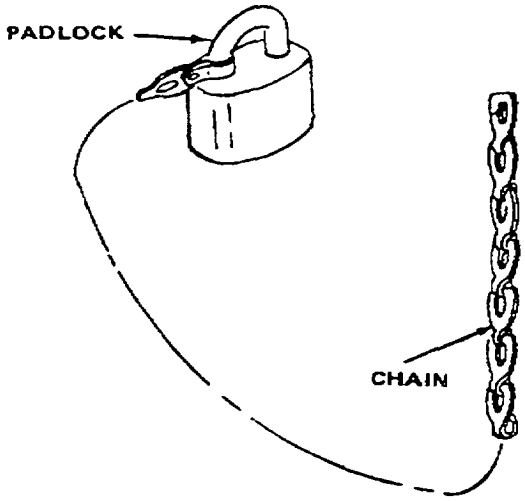 	Padlock is inoperable or undamaged portion Check of chain is too short.
5					**Hinge** Check for cracks, breaks. excessive wear and loose or missing hardware. Open and close door to be sure hinge works. 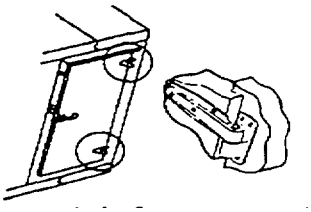 Lubricate with low viscosity SAE oil once a month.	Hinge is damaged, insecurely mounted, or does not work. Hinges stick.

Table 2-1. Preventive Maintenance Checks and Services (PMCS) (Cont)

B - Before Operation **D - During Operation** **W - Weekly** **M - Monthly**

Item No.	Interval				Item To Be Inspected.	Equipment is not Ready/Available if:
	B	D	W	M	Procedures	
6					**Door Gasket and Retainer** With interior light switched on, close door. There shall be no light visible around door. Visually check gasket for team, loose mounting, wear or aging. 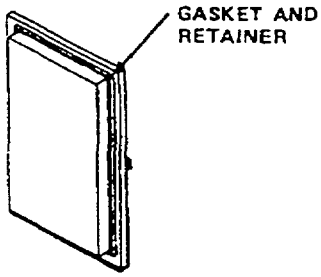 	Gasket is worn or damaged.
7					**Switch and Cover** Check for cracks or breaks. (Models AA60OPF, AA120OPFA, and AA400OPF). Push switch to turn on or off to make sure its working. (Models MDS1600N, TKR-600C, and TKR-4000C) Toggle switch to turn on or off to make sure its working. 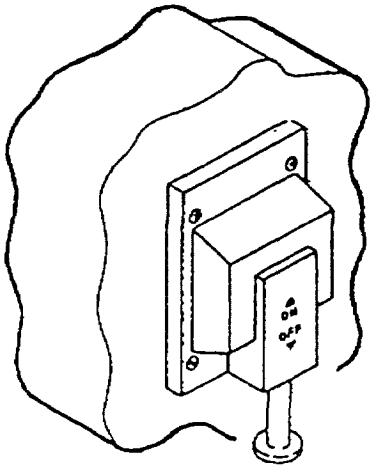	Switch cover is damaged or doesn't trip switch.

Table 2-1. Preventive Maintenance Checks and Services (PMCS) (Cont)

B - Before Operation **D - During Operation** **W - Weekly** **M - Monthly**

Item No.	Interval				Item To Be Inspected.	Equipment is not Ready/Available if:
	B	D	W	M	Procedures	
8					**Pilot Light Cover** Check for cracks, breaks, and loose or missing hardware. 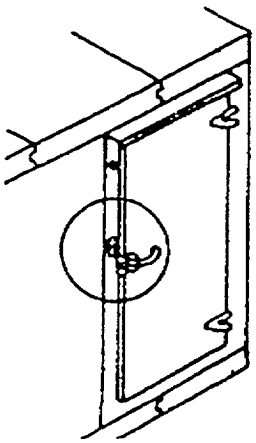 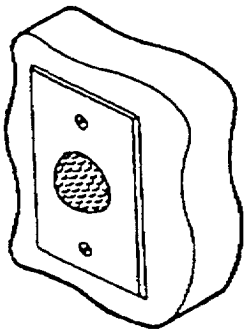	Pilot light cover is damaged.

Table 2-1. Preventive Maintenance Checks and Services (PMCS) (Cont)

B - Before Operation **D - During Operation** **W - Weekly** **M - Monthly**

Item No.	Interval				Item To Be Inspected.	Equipment is not Ready/Available if:
	B	D	W	M	Procedures	
9					**Light Assembly and Bulb** Check for cracks, breaks, and loose or-missing hardware. 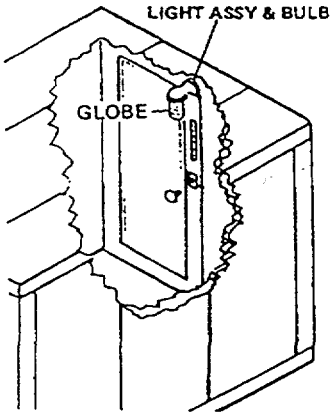 Unscrew globe to expose bulb. Inspect bulb for serviceability.	Light assembly or globe are damaged. Light bulb is unusable.

Table 2-1. Preventive Maintenance Checks and Services (PMCS) (Cont)

B - Before Operation **D - During Operation** **W - Weekly** **M - Monthly**

Item No.	Interval				Item To Be Inspected. Procedures	Equipment is not Ready/Available if:
	B	D	W	M		
10					**Power Receptacle (Models AA600PF, AA1200PFA, and AA4000PF).** Check for cracks, damaged pins or cover, and loose or missing hardware. 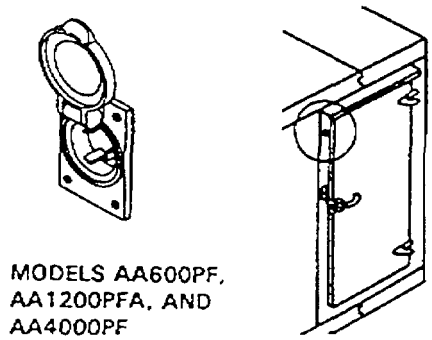 MODELS AA600PF, AA1200PFA, AND AA4000PF	Power receptacle is damaged.
11					**Male Receptacle, Cap and Chain (Models MDS1600N, TKR400C, and TKR4000C).** Check for missing cap and chain. Unplug cap and check male receptacle for dust and dirt accumulation, bent or damaged terminals, and signs of scorching or shorts. 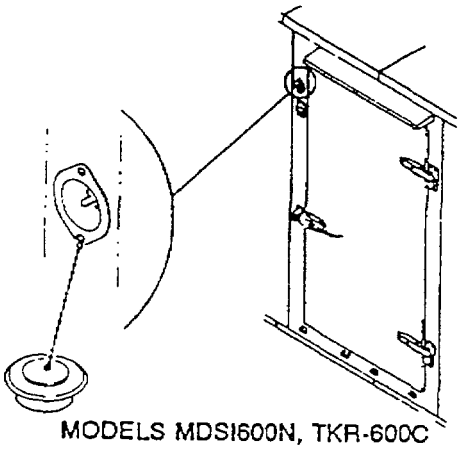 MODELS MDSI600N, TKR-600C AND TKR-4000C	Cap and chain are missing; male receptacle terminals are damaged or signs of scorching and shorts are evident.

Table 2-1. Preventive Maintenance Checks and Services (PMCS) (Cont)

B - Before Operation **D - During Operation** **W - Weekly** **M - Monthly**

Item No.	Interval				Item To Be Inspected.	Equipment is not Ready/Available if:
	B	D	W	M	Procedures	
12					**Electrical Plug** **WARNING** **This plug is used to connect 125 VAC to the refrigerator. Disconnect the wire from the power source or shut off power-at switch before inspecting this plug.** Check for cracks, breaks, and loose or missing hardware. 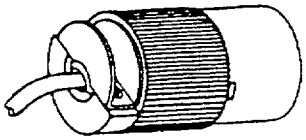	Electrical plug is damaged.
13					**Plug Seal Cover** Visually inspect for cracks, scorching, or signs of excessive wear. 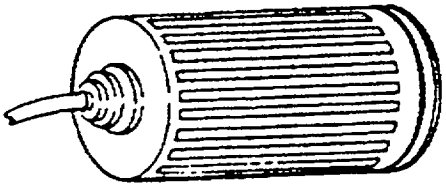	Cover is damaged.

Table 2-1. Preventive Maintenance Checks and Services (PMCS) (Cont)

B - Before Operation **D - During Operation** **W - Weekly** **M - Monthly**

Item No.	Interval				Item To Be Inspected.	Equipment is not Ready/Available if:
	B	D	W	M	Procedures	
14					**Thermometer** Check for cracked or broken face. Check that reading is within range specified by your supervisor. 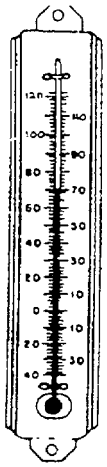	Thermometer face is damaged. Thermometer reading is outside proper operating range.
15					**Prefabricated Panels** Inspect the panels for damage such as holes in the skin, root or floor. Check for loose hardware. Check gasket for 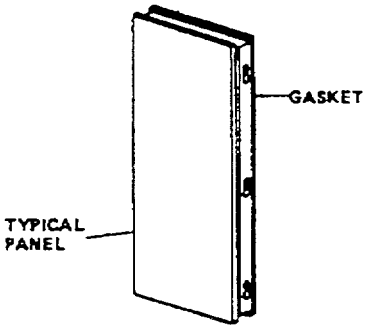	Panels are damaged.

Table 2-1. Preventive Maintenance Checks and Services (PMCS) (Cont)

B - Before Operation **D - During Operation** **W - Weekly** **M - Monthly**

Item No.	Interval				Item To Be Inspected.	Equipment is not Ready/Available if:
	B	D	W	M	Procedures	
16					**Drain Plug Gasket, Strainer and Plug.**	
	•				Inspect strainer for clogged holes.	
	•				Inspect drains and gaskets for damage.	

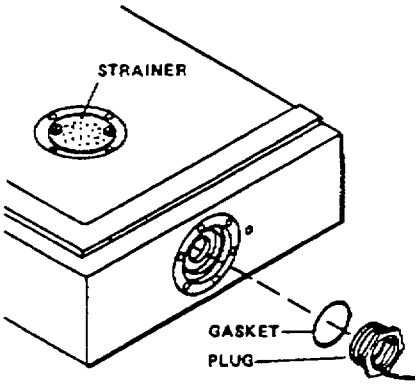

Section III. OPERATION UNDER USUAL CONDITIONS

2-4. GENERAL.

In normal operation, mechanical refrigeration equipment will be used with the refrigerators. After installation, refer to the technical manual covering the cooling unit used in your refrigerator and operate the unit as instructed.

NOTE

Be sure door is closed securely when not in use to prevent heat from entering refrigerator.

Observe the thermometer regularly to be sure the temperature range established by your supervisor is maintained.

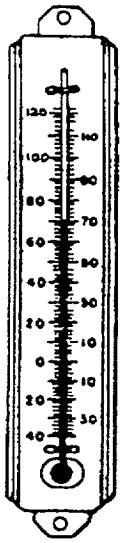

Section IV. OPERATION UNDER UNUSUAL CONDITIONS

2-5. OPERATION UNDER RAINY OR HUMID CONDITIONS.

If the refrigerator is installed outdoors, protect the hinges and latches by coating them with a waterproof substance such as grease (MIL-G-23549C) or heavy oil (MIL-C-40084B or MIL-C-22235A(2)) to prevent rust or corrosion. Use canvas or other waterproof material to protect the unit as much as possible in order to reduce the rusting and corrosion action.

2-6. OPERATION IN SALT-WATER AREAS.

a. Wash the outside of the refrigerator with clean, fresh water, every other day if possible.

b. Coat exposed surfaces with rust proofing compound (MIL-C-23050).

c. Remove any rust or corrosion immediately; apply rust arresting coating (MIL-R-10036D) and repaint area.

CHAPTER 3

OPERATOR'S MAINTENANCE INSTRUCTIONS

	Page
Lubrication Instructions	3-1
Troubleshooting	3-2
Operator Maintenance Procedures	3-4

Section I. LUBRICATION INSTRUCTIONS

3-1. GENERAL.

The door hinges and latches are the only parts of the refrigerator which require lubrication. Use a low viscosity SAE oil on these parts once a month.

LUBE IT!

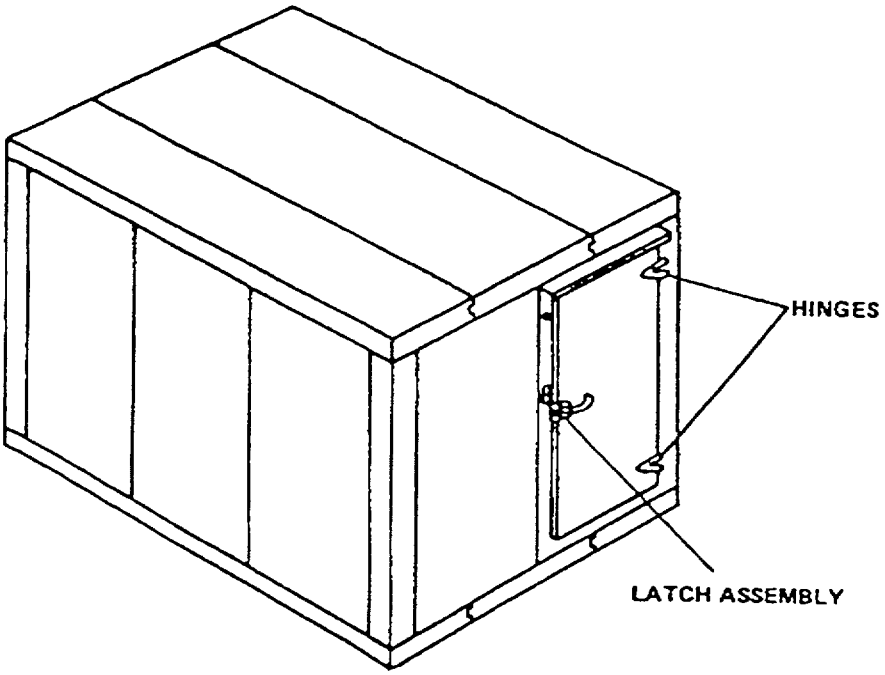

Figure 3-1. Lubrication Points

NOTE:
THESE LUBRICATION INSTRUCTIONS ARE MANDATORY.

Section II. TROUBLESHOOTING

3-2. GENERAL.

This manual cannot list all malfunctions that may occur, nor all tests or inspections and corrective actions. If a malfunction is not listed or is not corrected by listed corrective actions, notify your supervisor. Only those checks and corrective actions which are authorized for the operator are included.

3-3. TROUBLESHOOTING TABLE.

This table lists the common malfunctions which you may find during the operation or maintenance of the refrigerator or its components You should perform the tests/inspections and corrective actions in the order listed.

Table 3-1. Troubleshooting

MALFUNCTION
TEST OR INSPECTION
CORRECTIVE ACTION

1. PILOT LIGHT FAILS TO LIGHT WHEN SWITCH INSIDE REFRIGERATOR IS ON.

Step 1. Visually check that power cord is connected to power receptacle.

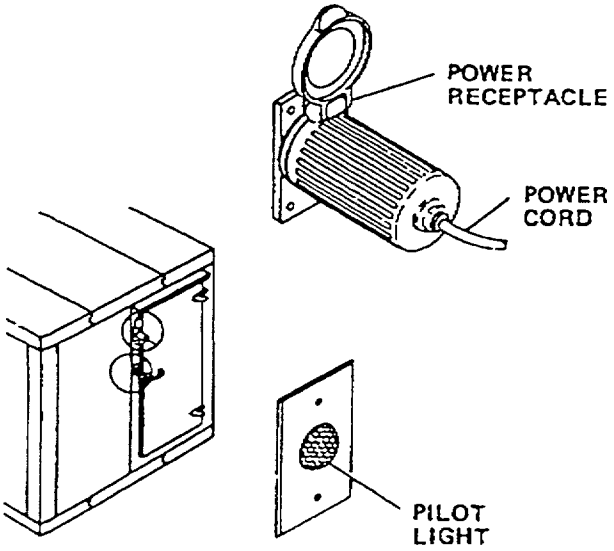

MODELS M60OPF, MA120OPFA, AND AA400OPF

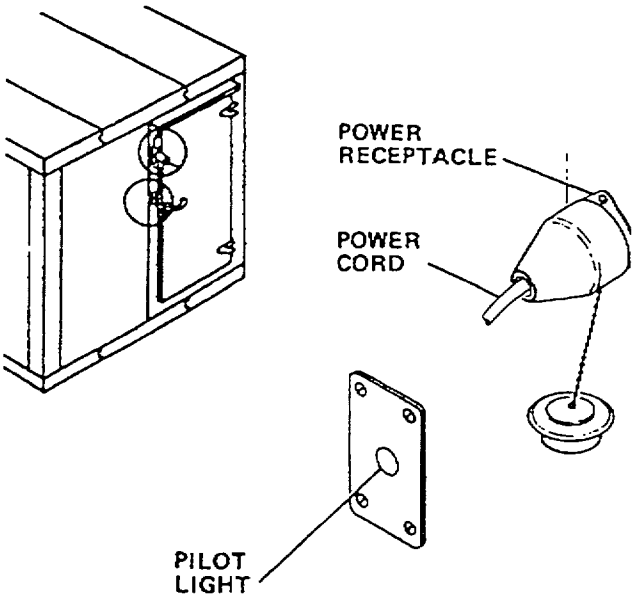

MODELS MDS1600N, TKR-600C AND TKR-4000C

If power cord is not connected, connect power cord.

Step 2. Refer to Unit Maintenance.

Table 3-1. Troubleshooting (Cont)

MALFUNCTION TEST OR INSPECTION CORRECTIVE ACTION

2. LIGHT FAILS TO LIGHT WHEN SWITCH INSIDE REFRIGERATOR IS ON.

Step 1. Visually check that power cord is connected to power receptacle.

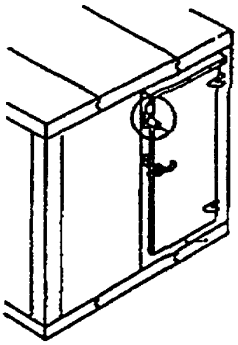

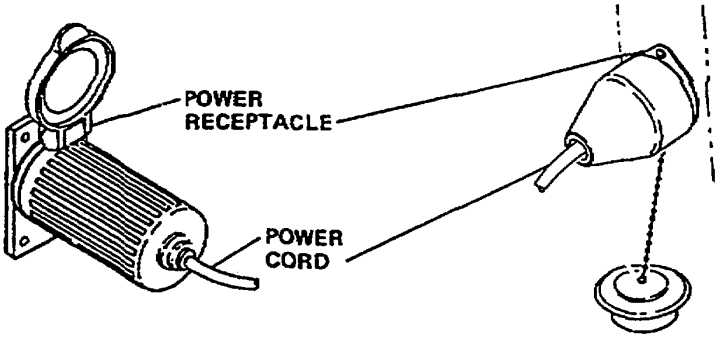

MODELS AA600PF, AA1200PFA, AND AA4000PF

MODELS MDS1600N, TKR-600C AND TKR-4000C

If power cord is not connected, connect power cord.

WARNING

Set switch to OFF before starting this procedure.

Step 2. Remove globe and visually inspect bulb.

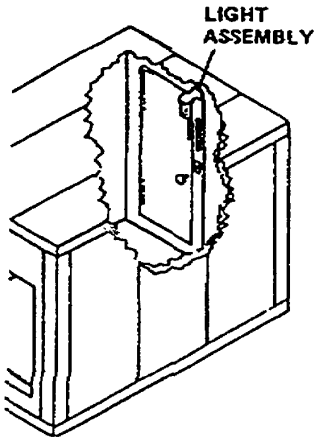

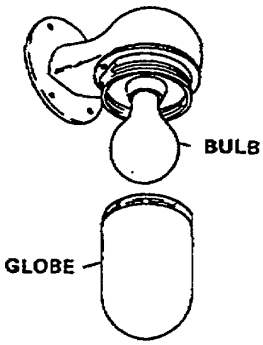

MODELS AA600PF, AA1200PFA, AND AA4000PF

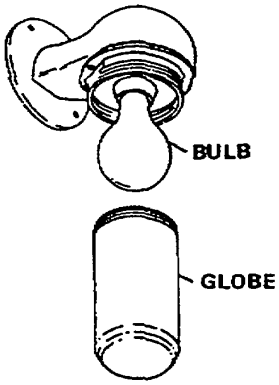

MODELS MDS1600N, TKR-600C AND TKR-4000C

If bulb is burned out, remove and replace bulb. Remount globe. If bulb is not burned out, refer problem to next higher level of maintenance.

Section III. OPERATOR MAINTENANCE PROCEDURES

3-4. GENERAL.

The instructions and procedures in this section are for the information and guidance of the operator in maintaining the refrigerator. Only those actions which are to be performed by the operator are listed.

3-5. REFRIGERATOR PANELS.

a. Inspection. Visually inspect the inside and the outside of the refrigerator panels for cracking or visible holes.

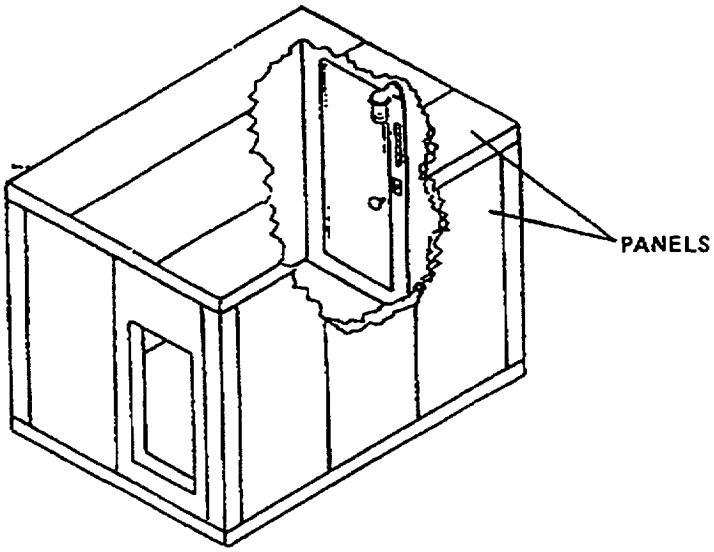

b. Service. Using a sponge and a solution of baking soda and water, was the inside walls of the refrigerator. Use a mop to wash floor and ceiling. Rinse and dry thoroughly.

3-6. REFRIGERATOR DOOR ASSEMBLY.

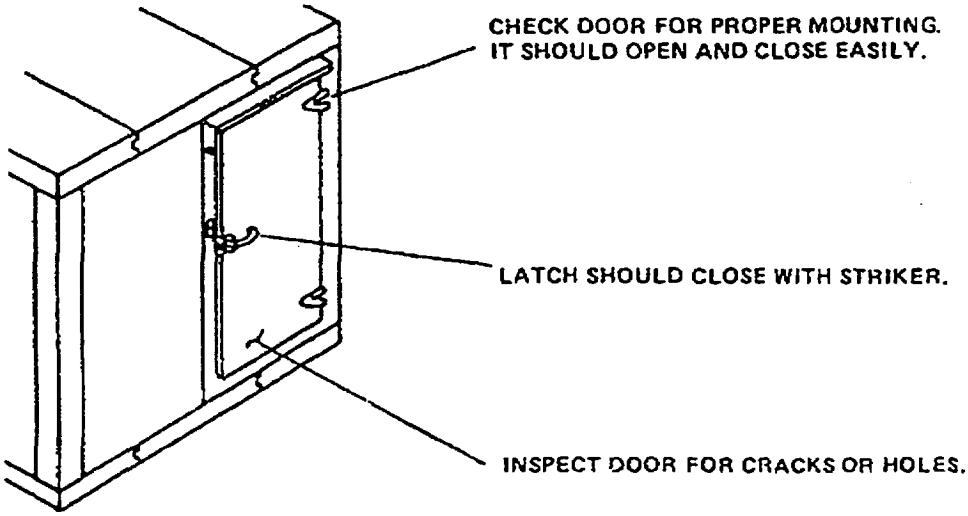

Figure 3-3. Door Assembly

3-7. LATCH ASSEMBLY.

a. Inspection. Check for crack, breaks, excessive wear, and loose or missing hardware.

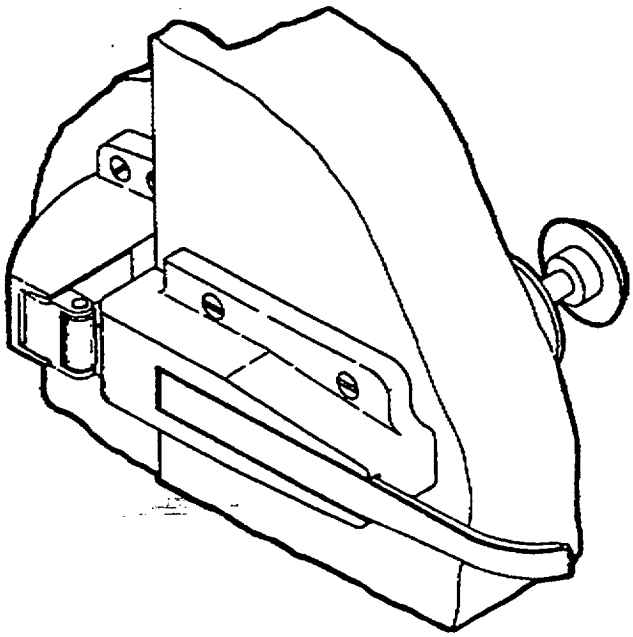

Figure 3-4. Latch

b. Service. Lubricate latch assembly with low viscosity SAE oil once a month.

3-8. PADLOCK AND CHAIN.

a. Inspect padlock for cracks or breaks. Use key to operate lock to be sure it works.

b. Check chain for distorted or damaged links. Undamaged portion of chain must be long enough to secure door.

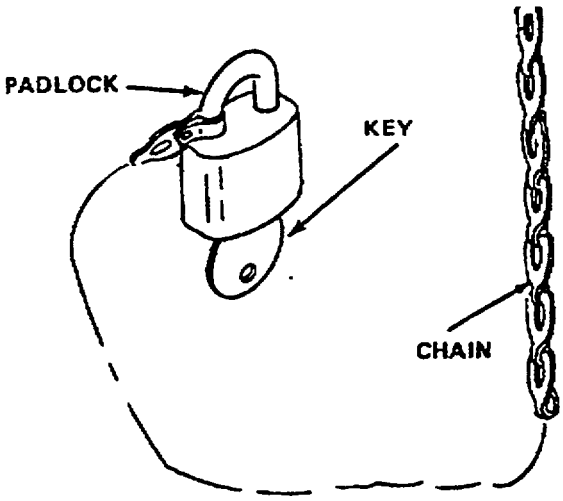

Figure 3-5. Padlock and Chain

3-9. HINGE.

a. Inspect. Check for cracks, break, excessive wear, and loose or missing hardware. Open and close door to be sure hinges work.

b. Service. Lubricate hinges with low viscosity SAE oil once a month.

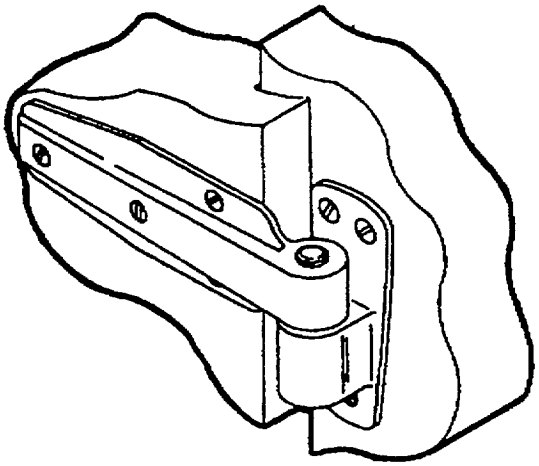

Figure 3-6. Hinge

3-10. DOOR GASKET.

a. Visually check gasket for tears, loose mounting, wear or rot.

b. With light switched on, close door. There must be no light visible around door.

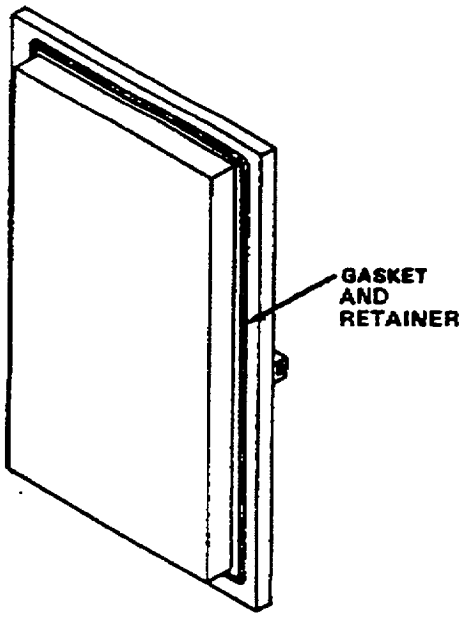

Figure 3-7. Door Gasket

3-11. SWITCH COVER.

Check cover for cracks or breaks. Set switch cover on and off to be sure it is working.

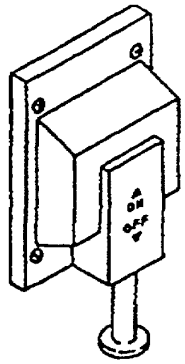

MODELS AA600PF, AA1200PFA, AND AA4000PF

MODELS MDS1600N, TKR-600C AND TKR-4000C

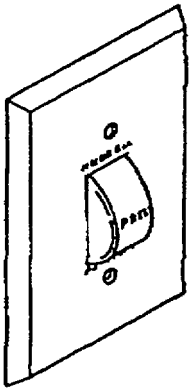

Figure 3-8. Switch Cover

3-12. PILOT LIGHT COVER.

Check for cracks in the cover plat and the red jewel. Check for loose or missing hardware.

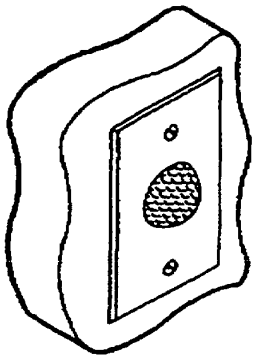

MODELS AA600PF, AA1200PFA, AND AA4000PF

MODELS MDS1600N, TKR-600C AND TKR-4000C

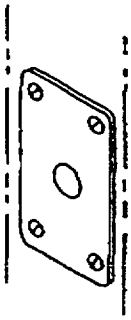

Figure 3-9. Pilot Light Cover

3-13. LIGHT ASSEMBLY AND GLOBE.

a. Inspect. Check for cracks or breaks, and loose or missing hardware.

b. Service. Unscrew globe and wash with cool, clean water. Dry thoroughly and remount.

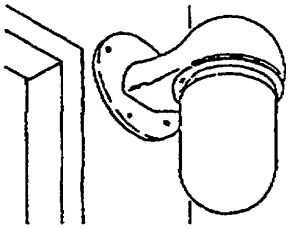

MODELS AA600PF, AA1200PFA, AND AA4000PF

MODELS MDS1600N, TKR-600C AND TKR-4000C

Figure 3-10. Light Assembly and Globe

3-14. LIGHT BULB.

a. Inspect. Unscrew globe and check to see if bulb is burned out. Remount the globe.

b. Replace. Unscrew and remove globe. Unscrew old bulb and screw in replacement bulb. Remount the globe.

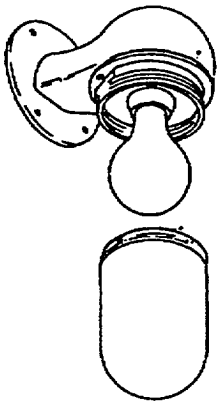

**MODELS AA600PF,
AA1200PFA.
AND AA4000PF**

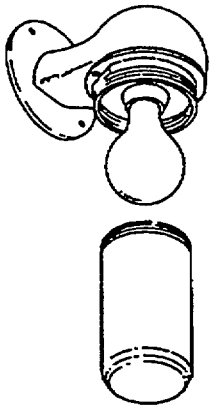

**MODELS MDS1600N, TKR-600C
AND TKR-4000C**

Figure 3-11. Light Bulb

3-15. POWER RECEPTACLE.

Check receptacle for cracks, breaks, damaged pins or cover, and loose or missing hardware.

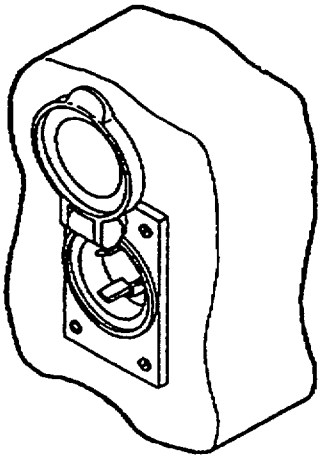

**MODELS AA600PF,
AA1200PFA.
AND AA4000PF**

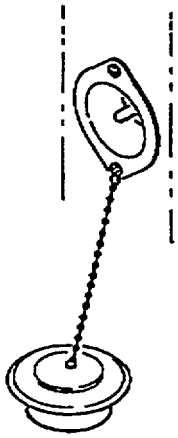

**MODELS MDS1600N, TKR-600C
AND TKR-4000C**

Figure 3-12. Power Receptacle

3-16. ELECTRICAL PLUG.

WARNING

This plug is used to connect 125 VAC to the refrigerator. Disconnect the wire from the power source or shut off incoming power at the power source switch before inspecting this plug.

Check plug for cracks, breaks and loose or missing hardware.

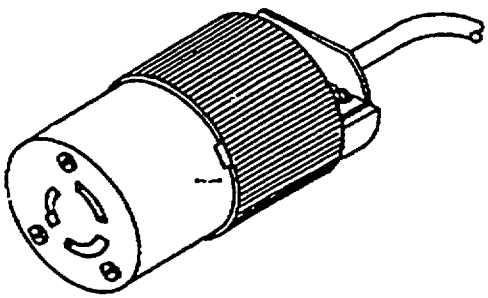

MODELS AA600PF, AA1200PFA, AND AA4000PF

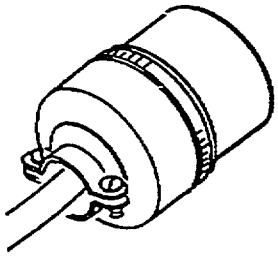

MODELS MDS1600N, TKR-600C AND TKR-4000C

Figure 3-13. Electrical Plug

3-17. PLUG SEAL COVER.

Visually inspect for cracking, scorching, or signs of age or excessive wear.

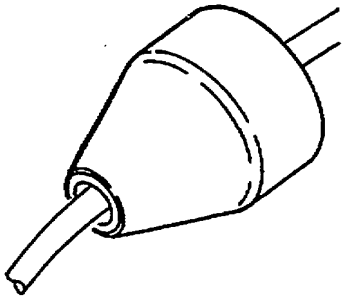

MODELS MDS1600N, TKR-600C AND TKR-4000C

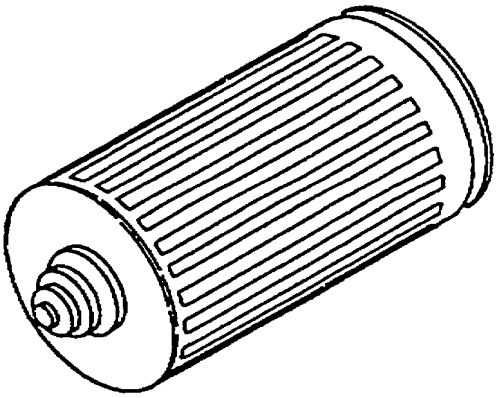

MODELS AA600PF, AA1200PFA, AND AA4000PF

Figure 3-14. Plug Seal Cover

3-18. THERMOMETER.

Check for cracked or damaged face.

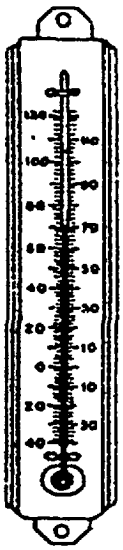

Figure 3-15. Thermometer

3-19. REFRIGERATOR PREFABRICATED PANELS.

Inspect the panels for damage such as holes in the outer skin, roof or floor. Check for loose or missing hardware.

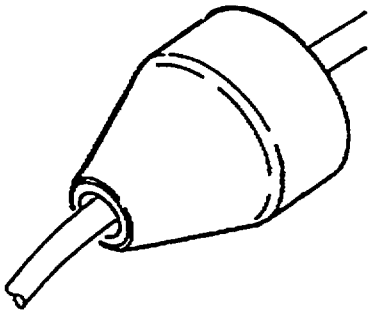

MODELS MDS1600N, TKR-600C, AND TKR-4000C

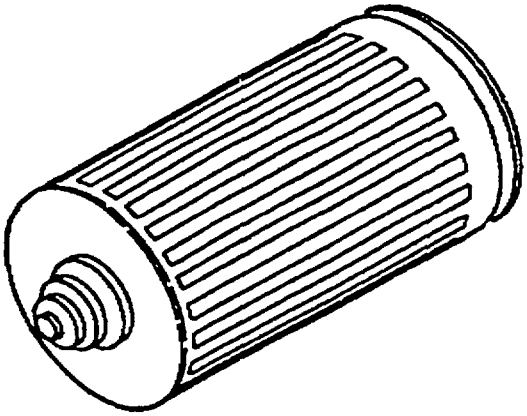

MODELS AA600PF, AA1200PFA, AND A4000PF

Figure 3-14. Plug Seal Cover

CHAPTER 4
UNIT MAINTENANCE INSTRUCTIONS

	Page
Repair Parts, Special Tools, TMDE, and Support Equipment	4-1
Service Upon Receipt of Equipment	4-3
Preventive Maintenance Checks and Services (PMCS)	4-12
Troubleshooting	4-14
Unit Maintenance Procedures	4-22
Preparation for Storage or Shipment	4-50

Section I. REPAIR PARTS, SPECIAL TOOLS, TMDE, AND SUPPORT EQUIPMENT

4-1. COMMON TOOLS AND EQUIPMENT.

For authorized common tools and equipment, refer to the Modified Table of Organization and Equipment (MTOE) applicable to your unit.

4-2. SPECIAL TOOLS, TMDE, AND SUPPORT EQUIPMENT.

No special tools, TMDE (Test, Measurement, and Diagnostic Equipment) or support equipment are required by organizational maintenance personnel for the maintenance of the refrigerator.

4-3. REPAIR PARTS.

Repair parts are listed and illustrated TM 9-4110-241-23P of this manual.

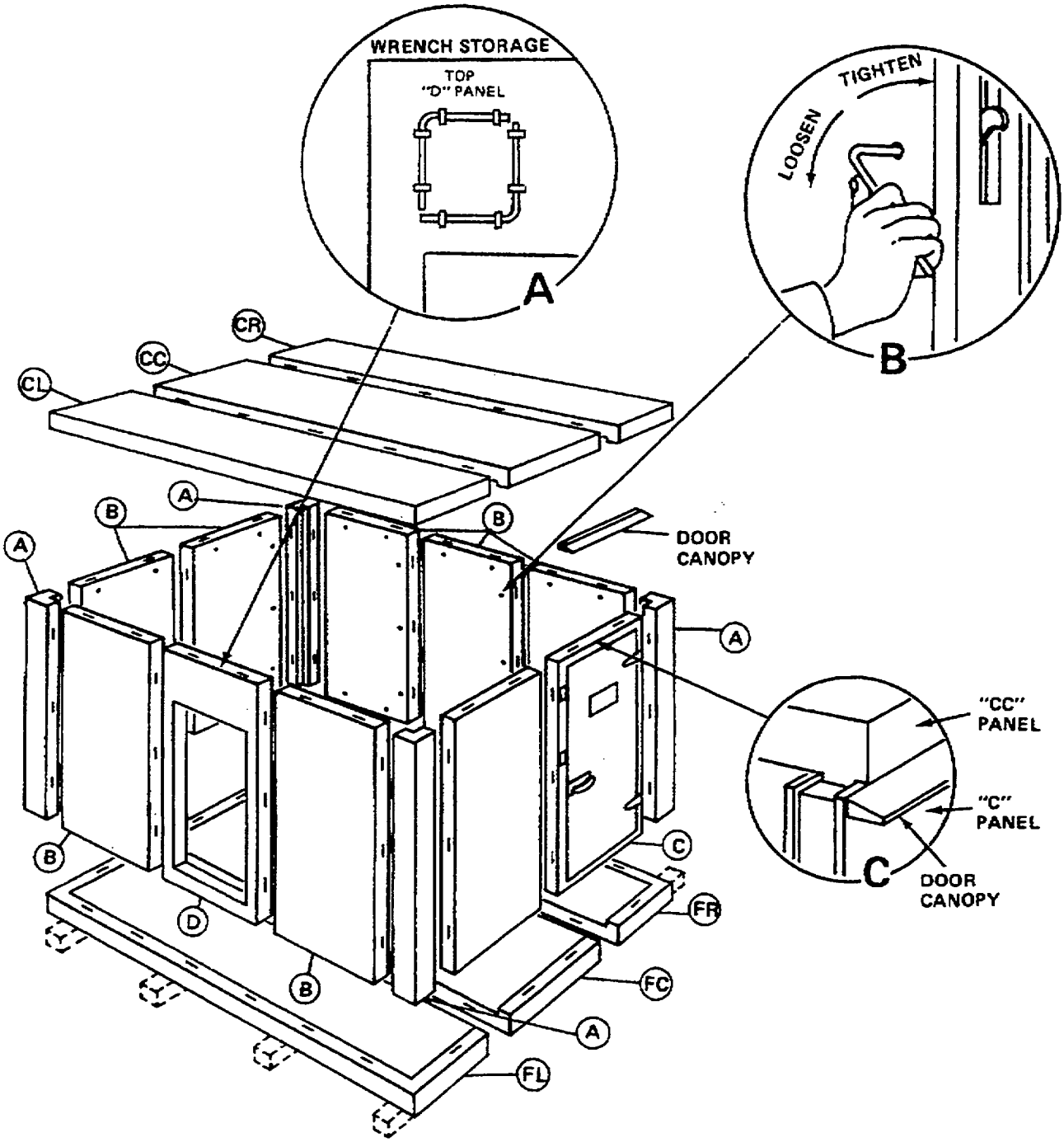

Figure 4-1. Typical Installation of Prefabricated Refrigerator Panel

Section II. SERVICE UPON RECEIPT OF EQUIPMENT

4-4. SITE AND SHELTER REQUIREMENTS.

a. Installation and Setting-Up Instructions.

(1) Preparation of Ground. The ground area where the refrigerator is to be erected should be level to prevent misalignment of floor panels and be able to withstand 250 pounds per square foot. For proper ventilation of underneath surface of floor panels, a completely level and structurally sound sub-base (to support the entire refrigerator) should be built on the site from requisitioned dunnage and/or crating lumber.

(2) To increase the efficiency of the refrigerator, select an erection site with a shaded area. The refrigerator may be se up inside or outside a shed or building.

NOTE

A typical installation of a 600 cubic feet unit is shown in figure 4-1. The 1200 and 4000 cubic feet sizes are erected in a similar manner. All wall panels are interchangeable to produce any arrangement of walk-in doors and evaporator panels. Refer to Figure 4-3 for panel schedule.

(3) Fasteners. Before placing any panel in position, use the wrench supplied to make certain all clamp assembly hooks are rotated counter-clockwise as for as possible. See figure 4-1 (detail A) and figure 4-2. Panels are locked together by rotating clamp assembly hooks as far as possible.

CAUTION

Care must be exercised to see that all matching corner are flush during erection.

(4) Erecting Panels (See figure 4-1.)

(a) Place floor panels in position and lock together.

NOTE

Do not lock wall panels to floor panels until all wall panels have been locked together.

(b) Place wall panels in position, then beginning with any corner of panel "A", continue around to the beginning point attaching and locking wall panels to each other.

(c) Lock wall panels to floor panels starting in any corner and continuing around to the beginning point.

(d) Hang door canopy over top of walk-in door panel "C". (See figure 4-1, detail C.)

(e) To divide the 4000 cubic feet refrigerator into compartments, install partition panel "H" (H-1, H-2 and H-3) by inserting bolts into place into floor panels before installing ceiling panels.

NOTE

Do not lock wall panels to ceiling panels until all ceiling panels have been locked together.

(f) Place ceiling panels in position and lock together.

(g) Lock wall panels to ceiling panels starting in any corner and continuing around to the beginning point. Lock the barrel bolts of the partition walls to ceiling.

(h) Cover all wrench holes with plugs.

(i) Seal exterior ceiling joints and exterior joint between ceiling and wall panels with four inch tape, specification number PPP-T-60, Type IV, Class 1 (App E Item 9), furnished with each refrigerator.

(j) Replace wrenches on to clips in "D" panels (figure 4-1, detail A).

b. Installation of Separately Packed Components.

(1) Install the floor racks in their proper position in the refrigerator.

(2) Refer to para. 4-24 and install the light as instructed.

(3) Refer to para. 4-27 and install the thermometer as instructed.

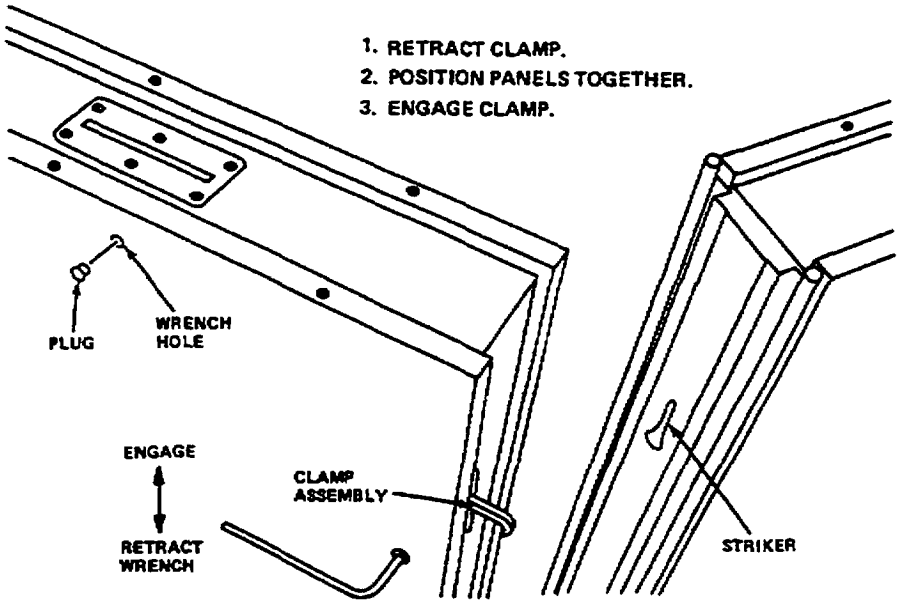

NOTE:

CONNECT THE REMAINING PANELS IN THE SAME MANNER.

NOTE:
INSTALL METAL PLUG IN CLAMP ASSEMBLY HOLE.

Figure 4-2. Clamp Assembly

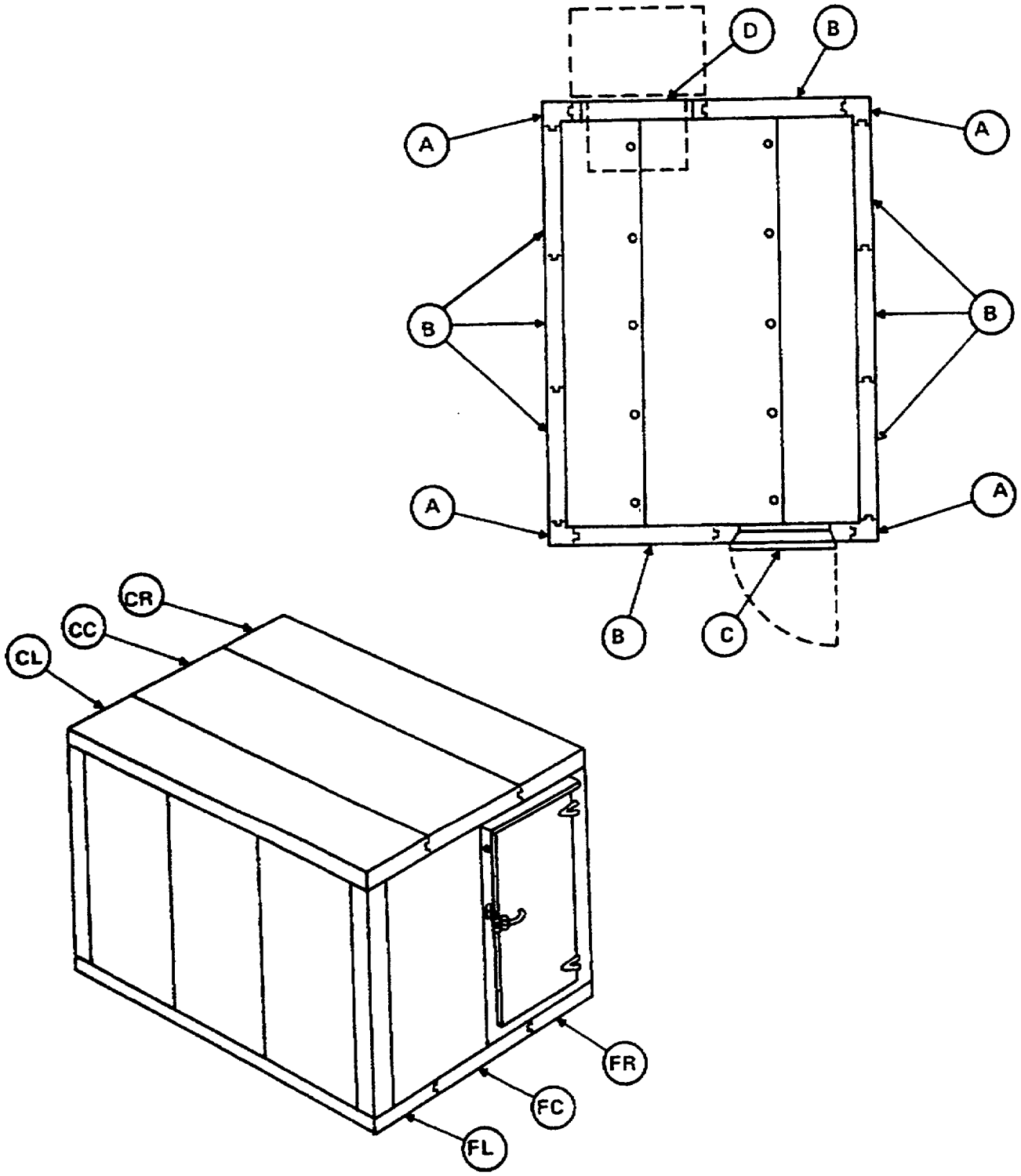

Figure 4-3. Panel Schedule (600 Cubic Feet Refrigerator Unit) (Sheet 1 of 5)

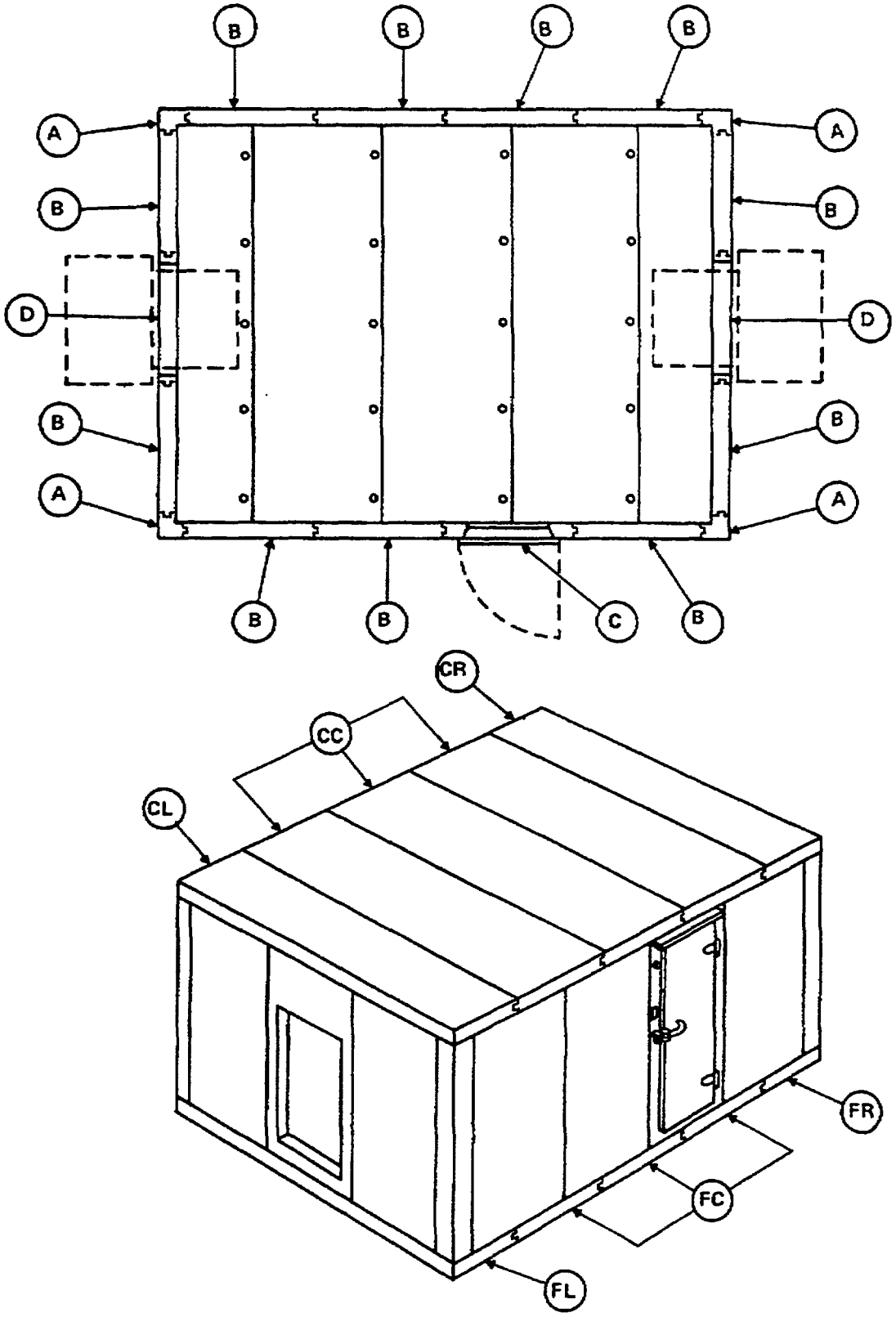

Figure 4-3. Panel Schedule (1200 Cubic Feet Refrigerator Unit) (Sheet 2 of 5)

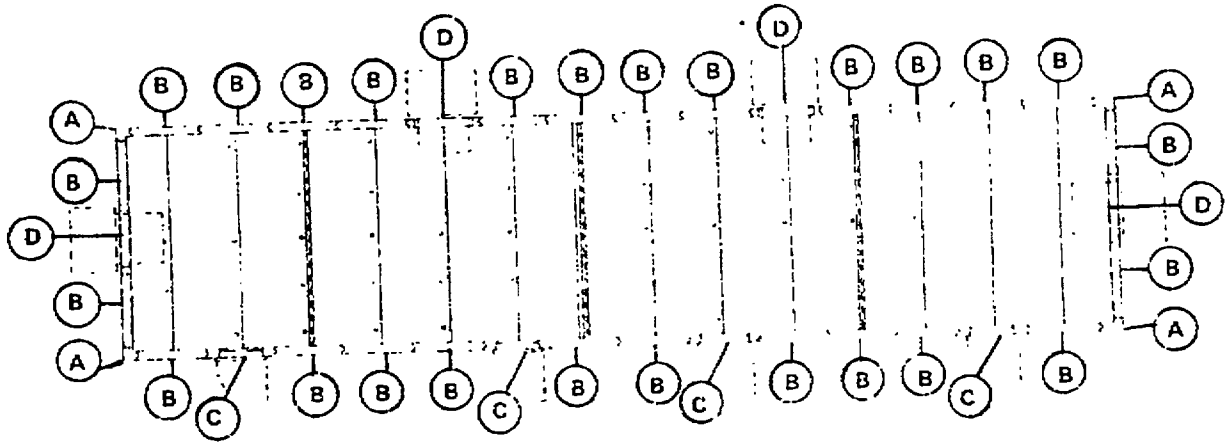

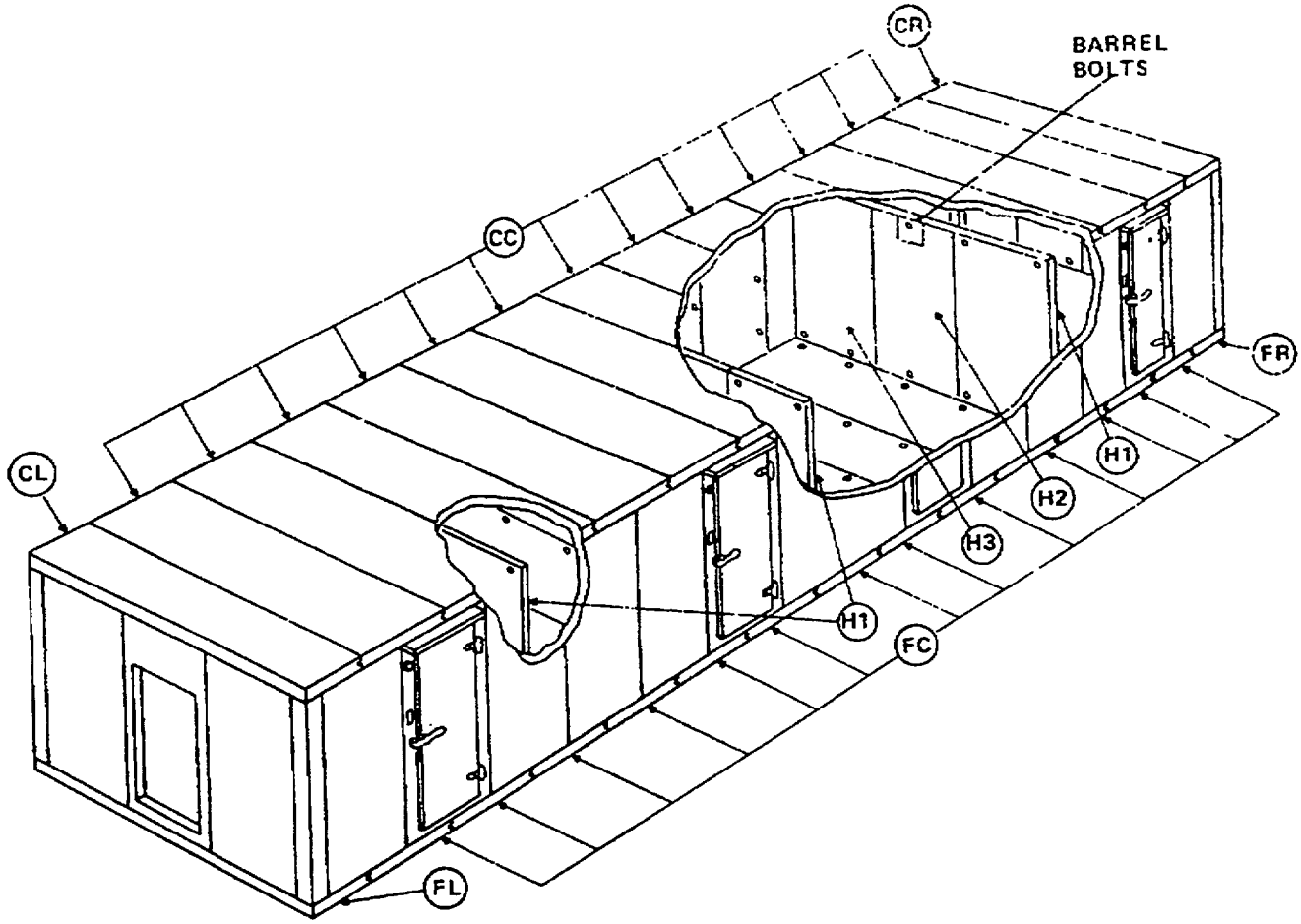

Figure 4-3. Panel Schedule (4000 Cubic Feet Refrigerator Units) (Sheet 3 of 5)

PANEL IDENT	NOMENCLATURE
A	CORNER PANEL
B	STD WALL PANEL
C	WALK-IN DOOR PANEL WALK-IN DOOR
CC	CEILING PANEL (CENTER)
CL	CEILING PANEL (LEFT)
CR	CEILING PANEL (RIGHT)
D	EVAPORATOR PANEL
FC	FLOOR PANEL (CENTER)
FL	FLOOR PANEL (LEFT)
FR	FLOOR PANEL (RIGHT)
H1,2,3	PARTITION PANEL

NOMINAL SIZE	CU. FT.	PANEL FASTENERS NO. REQ'D	PANEL DESIGNATION AND NO. REQUIRED														FLOOR RACK	
			A	B	C	CC	CL	CR	D	FC	FL	FR	H1	H2	H3	TOTAL	LARGE SIZE	SMALL SIZE
600	625	102	4	8	1	1	1	1	1	1	1	1	0	0	0	20	2	4
1200	1220	150	4	11	1	3	1	1	2	3	1	1	0	0	0	28	6	4
4000	4114	390	4	26	4	13	1	1	4	13	1	1	3	3	3	77	26	4

Figure 4-3. Panel Schedule (Sheet 4 or 5)

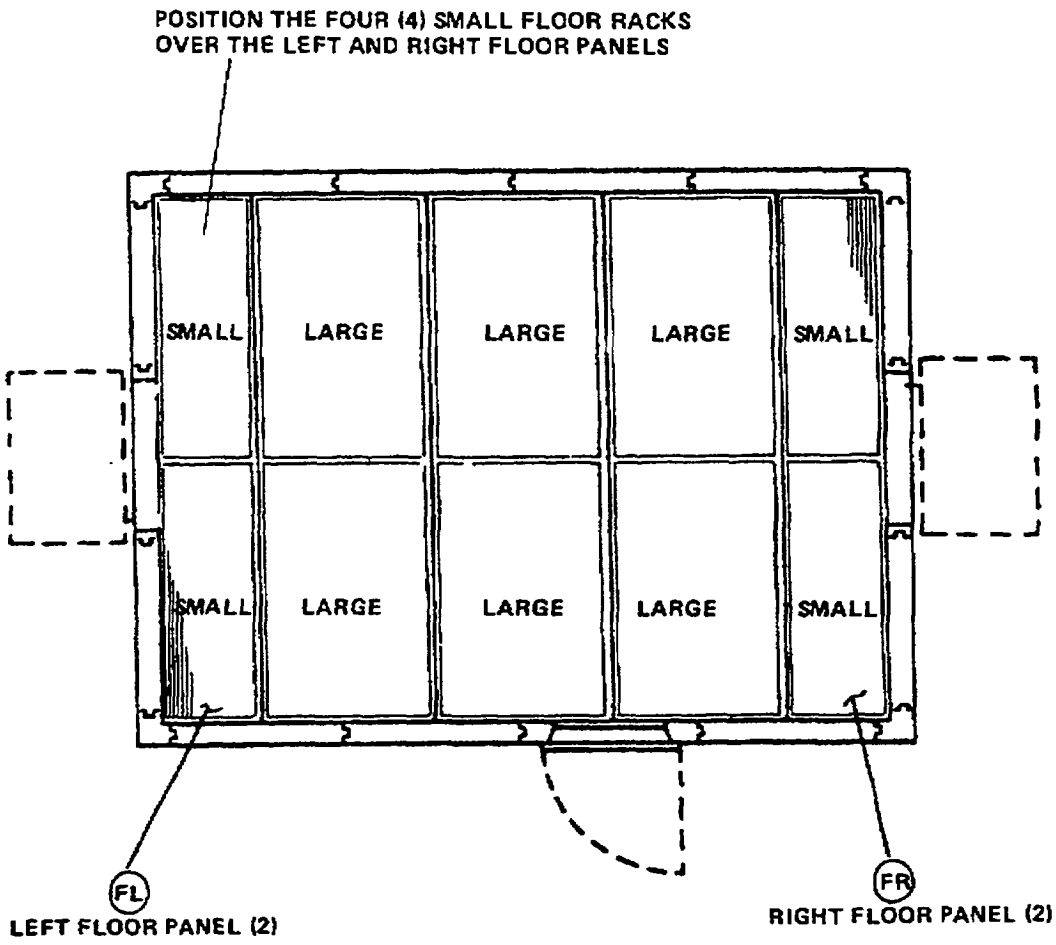

Figure 4-3. Panel Schedule, Layout of Floor Racks, 1200 Unit Layout (Typical) (Sheet 5 of 5)

4-5. SERVICE UPON RECEIPT OF EQUIPMENT.

a. Unloading the Equipment.

(1) The crated panels and components of the prefabricated refrigerators may be shipped either by tractor-trailer or rail. The operator and organizational maintenance personnel will remove all tie-down cables, strapping, blocking, and the like, which secure the crated or skid-mounted components to the bed of the carrier. Remove all tie-downs and blocking (fig. 4-4).

(2) Use a suitable lifting device of sufficient capacity, and remove the crated or skid-mounted components from the bed of the carrier.

(3) Remove banding, crating, and blocking, being extremely careful not to damage the panels. If skidmounted, cut the strapping and remove cushioning and spacers. Unpack separately packed component from the container. Remove tape from drains, switches, and power receptacles.

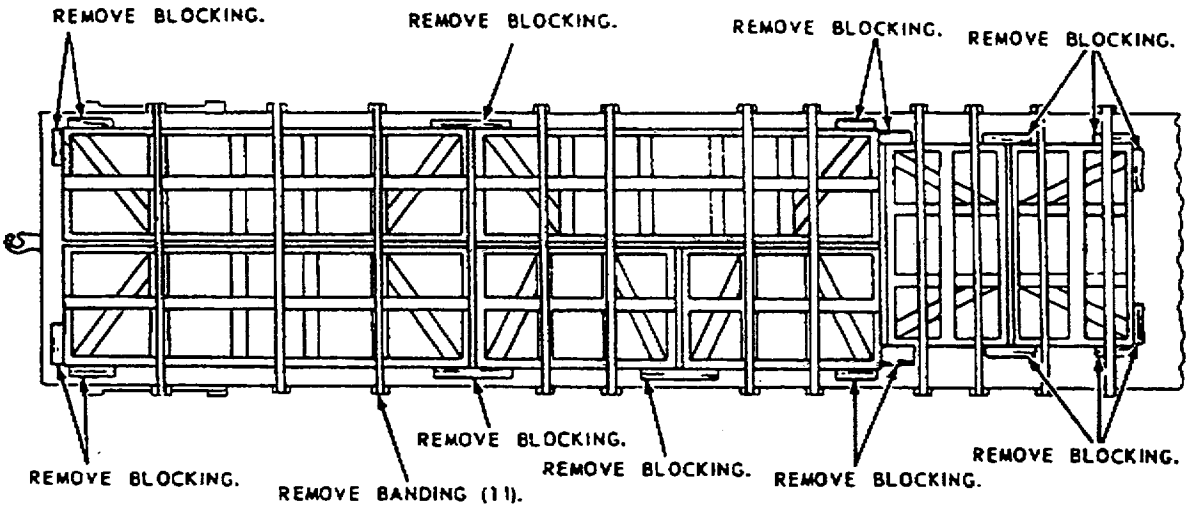

Figure 4-4. Blocking and Tie-Downs

b. Checking Unpacked Equipment.

(1) Inspect the equipment for damage incurred during shipment. If the equipment has been damaged, report the damage on DA Form 368 Quality Deficiency Report (QDR).

(2) Check the equipment against the packing slip to see if the shipment is complete. Report all discrepancies in accordance with the instructions of DA PAM 738-750.

(3) Check to see whether the equipment has been modified.

4-6. INSTALLATION INSTRUCTIONS.

a. Tools, Test Equipment, and Materials Required for installation.

ITEM	DESCRIPTION	IDENTIFYING NUMBER
Wire, bulk	3-lead	6440 1413SJ Cord (53853)
Strippers, wire		
Screwdriver	Flat Tip	
Knife, pocket		

b. Installation Instructions.

1. Cut tip of plug seal cover to fit POWER SUPPLY CORD.

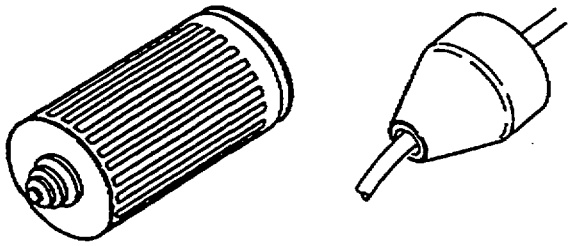

MODELS M600PF MODELS MDS1600N, TKR-600C, M1200PFA, AND TKR-4000C AND M4000PF

2. Slide plug seal cover on to cord. Strip about 1/2 inch teach of the three leads.

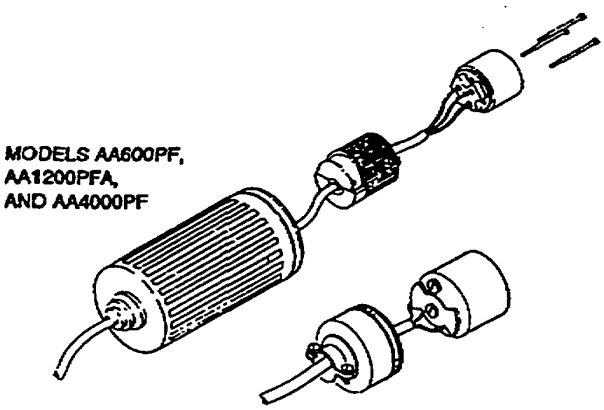

MODELS MDS1600N, TKR-600C, AND TKR4000C

3. Loosen two screws to loosen cord grip. Remove three screws from front of plug to separate cap from plug body.

4. Slide cap from twist lock plug over cord.

5. Trim the outer covering back about 1 inch.

6. Connect wires to terminals of electrical plug.

7. Use the three screws to attach cap to body of electrical plug.

8. Tighten screws to secure wire to electrical plug.

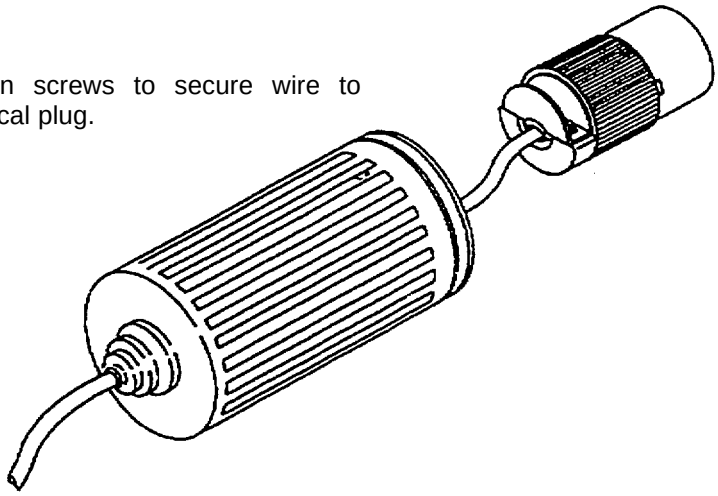

MODELS AA600PF, AA1200PFA, AND AA4000PF

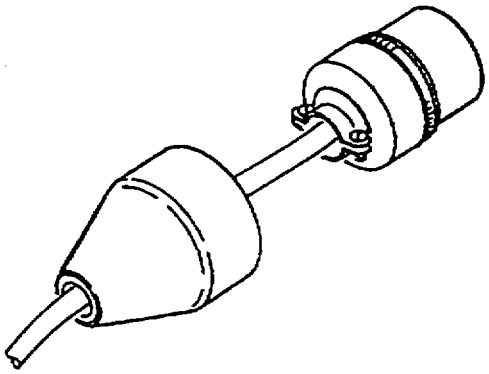

MODELS MDS1600N, TKR-600C, AND TKR-4000C

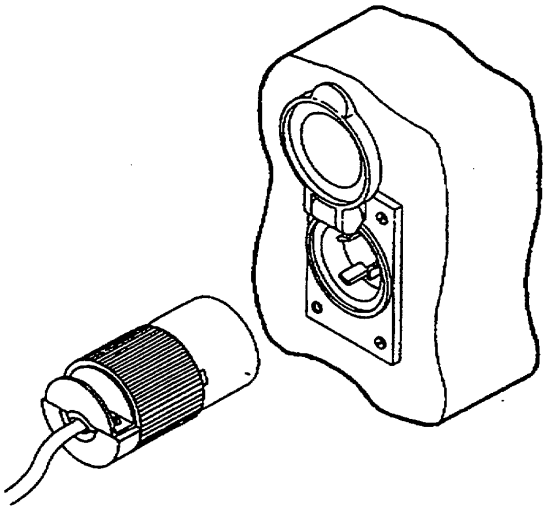

MODELS AA600PF, AA1200PFA, AND AA4000PF

9. Slide plug seal cover over electrical plug.

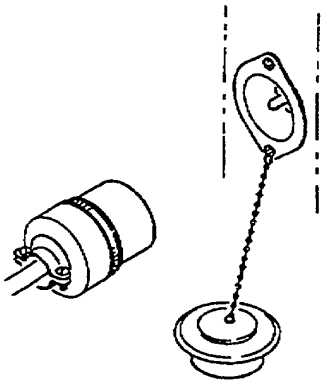

MODELS MDS1600N, TKR-600C, AND TKR4000C

10. Connect electrical plug to power receptacle.

Section III. PREVENTIVE MAINTENANCE CHECKS AND SERVICES (PMCS)

4-7. GENERAL.

- **Before you operate**. Always keep in mind the CAUTIONS and WARNINGS. Perform your before (B) PMCS.
- **While you operate**. Always keep in mind the CAUTIONS and WARNINGS. Perform your during (D) PMCS.
- **Each week**. Be sure to perform your weekly (W) PMCS.
- **Once a month**. Be sure to perform your monthly (M) PMCS.
- **If your equipment fails to operate**. Troubleshoot with proper equipment Report any deficiencies using the proper forms. See DA PAM 738-750.
- **Why perform PMCS?** PMCS check procedures are to see that the unit is working properly. PMCS service procedures are to help keep the unit working properly.
- **When to perform PMCS?** PMCS procedures shall be performed at the times indicated in the INTERVAL column of the PMCS table. The PMCS intervals are before operation (B), during operation (D), Weekly (W), and monthly (M). The item numbers indicate the sequence of procedures to be performed.
- **Equipment is Not Ready/Available If.** Guidelines which identify the refrigerator as "not ready/available" for use appear in the EQUIPMENT IS NOT READY/AVAILABLE IF column of the table. If the refrigerator is identified as not ready for use, the problem must be corrected-before the unit can be used.
- **Reporting Deficiencies.** Report any deficiencies found during PMCS. Department of the Army forms and procedures used for equipment maintenance will be those prescribed by DA PAM 738-750, The Army Maintenance Management System (TAMMS).

4-8. PREVENTIVE MAINTENANCE CHECKS AND SERVICES TABLE.

NOTE

If the equipment must be kept in continuous operation, check and service only those items that can be checked and serviced without disturbing operation. Make the complete checks and services when the equipment can be shut down.

Perform weekly (W) as well as before operation (B) PMCS if:

You are the assigned operator and have not operated the item since the last weekly PMCS.

You are operating the item for the first time.

Item numbers which appear on this table are to be used in the TM Number column on DA Form 2404, Equipment Inspection and Maintenance Workshop, in recording the results of PMCS.

Table 4-1. Preventive Maintenance Checks and Services (PMCS) (Cont)

B - Before Operation **D - During Operation** **W - Weekly** **M - Monthly**

Item No.	Interval				Item To Be Inspected.	Equipment is not Ready/Available if:
	B	D	W	M	Procedures	
					WARNING **Disconnect power supply before doing maintenance work on the electrical system.**	
1				•	**Switch**. Remove screws and remove switch cover to check switch. Check for cracking, scorching, or other damage. 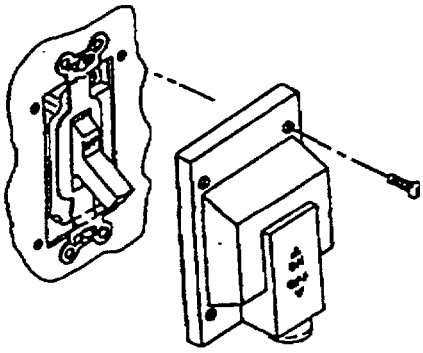 **MODELS AA600PF, AA1200PFA, AND AA4000PF** 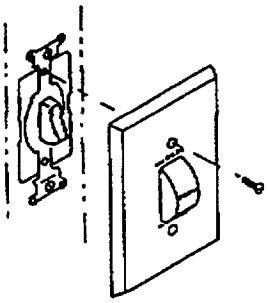 **MODELS MDS1600N, TKR-600C, AND TKR-4000C**	Switch is damaged

Table 4-1. Preventive Maintenance Checks and Services (PMCS) (Cont)

B - Before Operation **D - During Operation** **W - Weekly** **M - Monthly**

Item No.	Interval				Item To Be Inspected.	Equipment is not Ready/Available if:
	B	D	W	M	Procedures	
2				•	**Pilot Light Cover. (Models MA600PF, MA1200PFA, and MA4000P.** Remove screws to remove pilot light cover. Wipe red jewel with clean cloth. Use a brush to remove stubborn dirt. 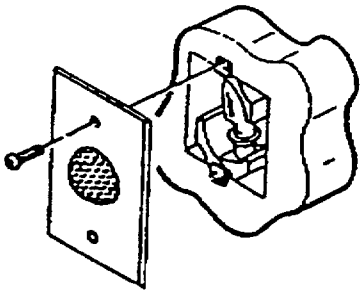	
3					**Pilot Light Socket and Bulb. (Models MA600PF, MA1200PFA, and MA4000PF).** **Pilot Light Socket and Bulb.** Remove screws and remove pilot light cover. Inspect socket for cracking, breaks, scorching, and loose or missing hardware. Check bulb (lamp) for serviceability.	Pilot light socket is damaged or bulb is unusable.

Table 4-1. Preventive Maintenance Checks and Services (PMCS) (Cont)

B - Before Operation **D - During Operation** **W - Weekly** **M - Monthly**

Item No.	Interval				Item To Be Inspected. Procedures	Equipment is not Ready/Available if:
	B	D	W	M		
4				•	**Pilot Light Housing Assembly (Models MDS1600N, TKR-600C, and TKR-4000C.)** Remove screws to remove pilot light cover. Inspect pilot light housing assembly for cracks, breaks, signs of scorching, and dirt accumulation. Clean with brush to remove dirt. 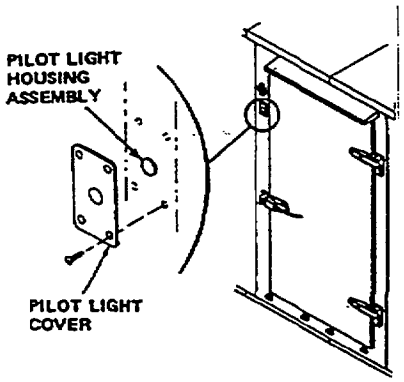 **MODELS MDS1600N, TKR-600C, AND TKR-4000C**	Pilot light housing assembly is damaged or signs of scorching are evident.

Section IV. TROUBLESHOOTING

4-9. TROUBLESHOOTING TABLE.

This table lists the common malfunctions which you may find during the operation or maintenance of the refrigerator or Its components. You should perform the test/inspections and corrective actions in the order listed. This manual cannot list all malfunctions that may occur; nor all tests and inspections or corrective actions. If a malfunction is not listed or is not corrected by listed corrective actions, notify your supervisor. Only those checks and corrective actions which are authorized for unit maintenance are listed.

WARNING

Disconnect power supply before doing maintenance work on the electrical system.

Table 4-2. Troubleshooting

MALFUNCTION
TEST OR INSPECTION
CORRECTIVE ACTION

1. LIGHT WORKS, PILOT LIGHT FAILS, WHEN SWITCH IS ON.

Step 1. (Models M60OPF, MI 20OPFA, and AA4000F). Visually check and replace bulb if required.

Step 2. (Models MDS1600N, TKR-600C, and TKR-4000C). Check that wire connections are connected at switch.

Replace pilot housing assembly, if connected.

MODELS MDS1600N, TKR-600C. AND TKR-4000C

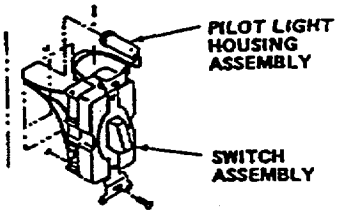

Step 3. (Models AA6010F, MI 200PFA, and AA4000PF). Use an ohmmeter to check continuity of wire between pilot light socket and receptacle.

MODELS AA600PF, AA1200PFA, AND AA4000PF

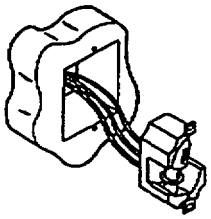

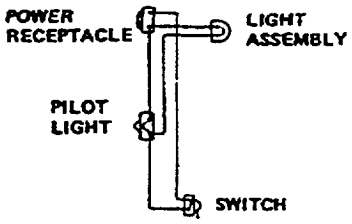

Step 4. (Models M60OPF, M1200PFA, and AA4000PF). Test pilot light socket using instructions in paragraph 4-23.

Replace pilot light socket, if defective.

Table 4-2. Troubleshooting (Cont)

MALFUNCTION TEST OR INSPECTION CORRECTIVE ACTION

2. PILOT LIGHT WORKS, LIGHT ASSEMBLY LIGHT FAILS WHEN SWITCH IS ON.

Step 1. (Models AA60OPF, AA1200PFA, and AA400OPF). Use a multimeter to check continuity of wire between pilot light socket and light assembly socket.

Step 2. (Models MDS1600N, TKR-600C, and TKR-4000C). Use a multimeter to check continuity of wire between isolated connection on switch and light assembly socket.

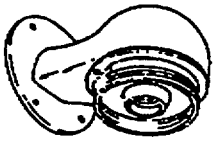

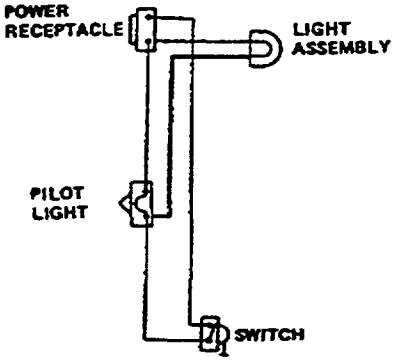

MODELS AA600PF, AA1200PFA, AND AA4000PF

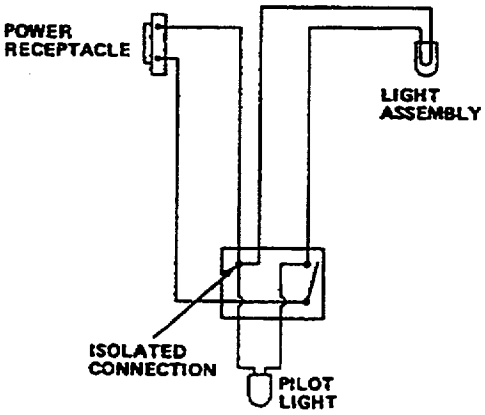

MODELS MDS1600N, TKR-600C, AND TKR-4000C

Table 4-2. Troubleshooting (Cont)

MALFUNCTION TEST OR INSPECTION CORRECTIVE ACTION

2. PILOT LIGHT WORKS, LIGHT ASSEMBLY LIGHT FAILS WHEN SWITCH IS ON (CONT)

Step 3. (Models AA600PF, AA1200PFA, and AA4000PF). Use a multimeter to check continuity of wire between light socket and receptacle.

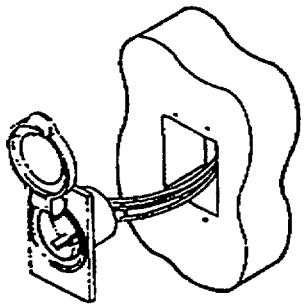

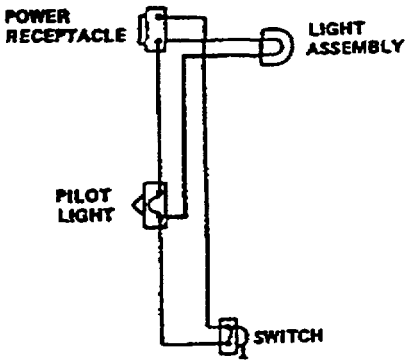

MODELS AA600PF, AA1200PFA, AND AA4000PF

Step 4. (Models MDS1600N, TKR-600C, and TKR-4000C). Use a multimeter to check continuity of wire between light socket and switch.

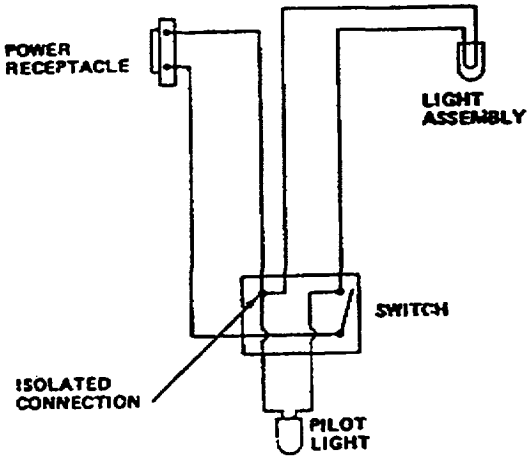

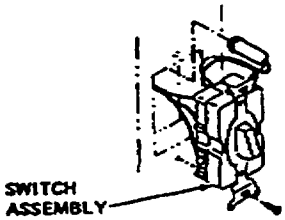

MODELS MDS1600N, TKR-600C, AND TKR-4000C ONLY

Table 4-2. Troubleshooting (Cont)

MALFUNCTION TEST OR INSPECTION CORRECTIVE ACTION
2. PILOT LIGHT WORKS, LIGHT-ASSEMBLY LIGHT FAILS WHEN SWITCH IS ON (CONT).
Step 5. Test light assembly socket using instructions in paragraph 4-24.
Replace light assembly socket, if defective.

Table 4-2. Troubleshooting (Cont)

MALFUNCTION TEST OR INSPECTION CORRECTIVE ACTION

3. NEITHER PILOT LIGHT NOR LIGHT ASSEMBLY LIGHT WORKS WHEN SWITCH IS ON.

Step 1. (Models AA6000PF, AA1200PFA, and AA4000PF). Check for voltage coming in pilot light socket.

Step 2. (Models MDS1600N, TKR-600C, and TKR-4000C). Check for voltage coming into pilot light assembly.

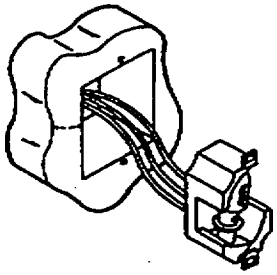

MODELS AA600PF, AA1200PFA, AND AA4000PF

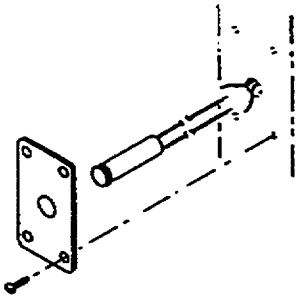

MODELS MDS1600N, TKR-600C, AND TKR-4000C

Step 3. (Models M600PF, M1200PFA, and AA4000PF). If voltage is present, test pilot light socket using instructions in paragraph 4-23.

Replace pilot light socket, if defective.

Step 4. (Models MDS1600N, TKR-600C, and TKR-4000C). If voltage is present, check wire connection on switch.

Replace pilot light assembly, if connection correct.

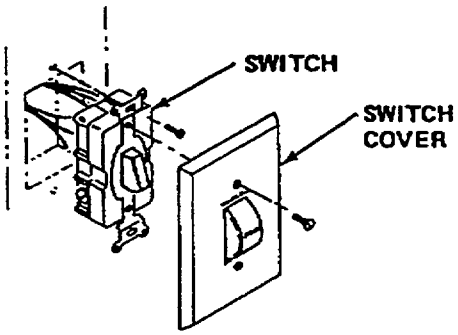

MODELS MDS1600N, TKR-600C AND TKR-4000C

Table 4-2. Troubleshooting (Cont)

MALFUNCTION TEST OR INSPECTION CORRECTIVE ACTION

3. NEITHER PILOT LIGHT NOR LIGHT ASSEMBLY LIGHT WORKS WHEN SWITCH IS ON. (Cont)

Step 5. If voltage is not present, use a multimeter to check continuity of wire between switch and receptacle.

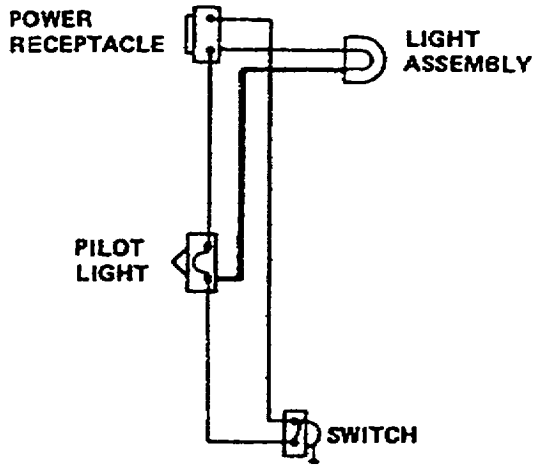

**MODELS AA600PF,
AA1200PFA,
AND AA4000PF**

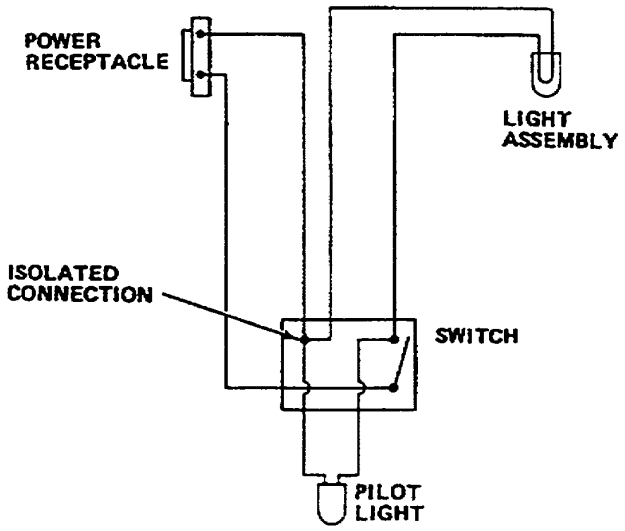

**MODELS MDSI600N, TKR-600C
AND TKR-4000C**

Step 6. (Models AA600PF, MA1200PFA, and M4000PF). Test receptacle using the instructions in paragraph 4-26.

Replace receptacle, if defective.

Step 7. (Models MDS1600N, TKR-600C, and TKR-4000C). Test male receptacle using the instructions in paragraph 4-26.1.

Replace male receptacle, if defective.

Step 8. (Models AA600PF, M1200PFA, and AA4000PF). Test the electrical plug using the instructions in paragraph 4-25.

Replace electrical plug, if defective.

Step 9. (Models MDS1600N, TKR-600C, and TKR-4000C). Test the female receptacle using the instructions in paragraph 4-25.1.

Replace the female receptacle, if defective.

Table 4-2. Troubleshooting (Cont)

MALFUNCTION TEST OR INSPECTION CORRECTIVE ACTION

3. NEITHER PILOT LIGHT NOR LIGHT ASSEMBLY LIGHT WORKS WHEN SWITCH IS ON. (CONT)

Step 10. If voltage is not present, use a multimeter to check continuity of wire between pilot light socket and switch.

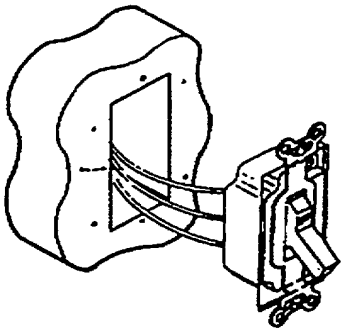

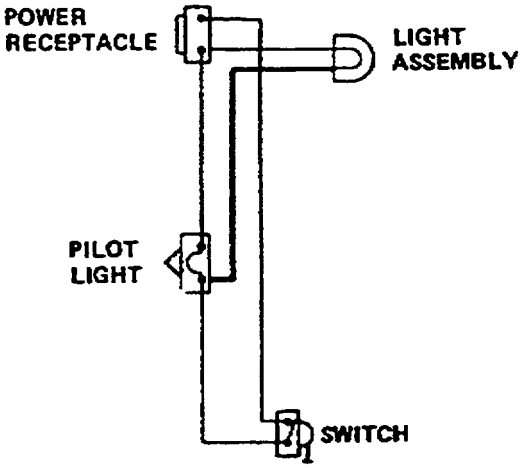

MODELS AA600PF, AA1200PFA, AND AA4000PF

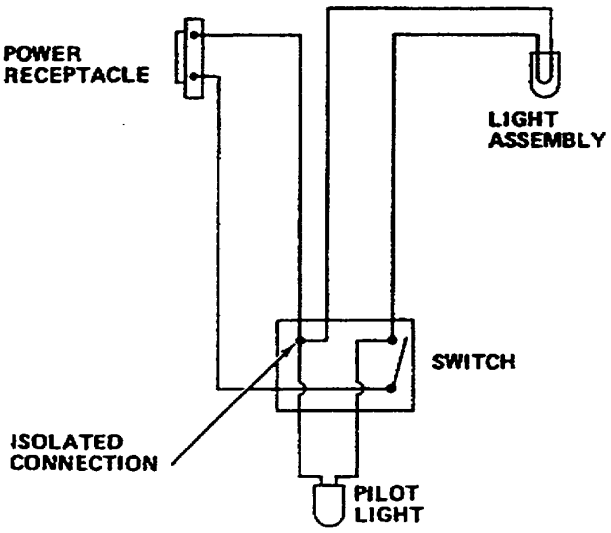

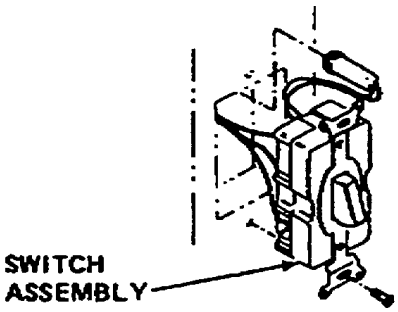

MODELS MDSI600N, TKR-600C AND TKR-4000C

Step 11. Check for voltage coming into switch.

Step 12. If voltage is present, test switch using instructions in paragraph 4-20.

Replace switch, if defective.

Section V. UNIT MAINTENANCE PROCEDURES

REFRIGERATOR DOOR ASSEMBLY REPAIR PROCEDURES INDEX

	Page
Door	4-25
Door Assembly	4-26
Handle Release	4-27
Safety Latch Strike	4-28
Latch Assembly	4-29
Padlock and Chain	4-30
Hinge	4-31
Door Gasket	4-32

4-10. REPAIR REFRIGERATOR DOOR.

TOOLS: Sealing Compound, TT-S-230, Gum Grade (8030-965-2397) (App. E, Item 3) Repair Kit, MIL-2-58047(CE) or MIL-R-19907C(2090-372-6064)(App. E, Item 4)

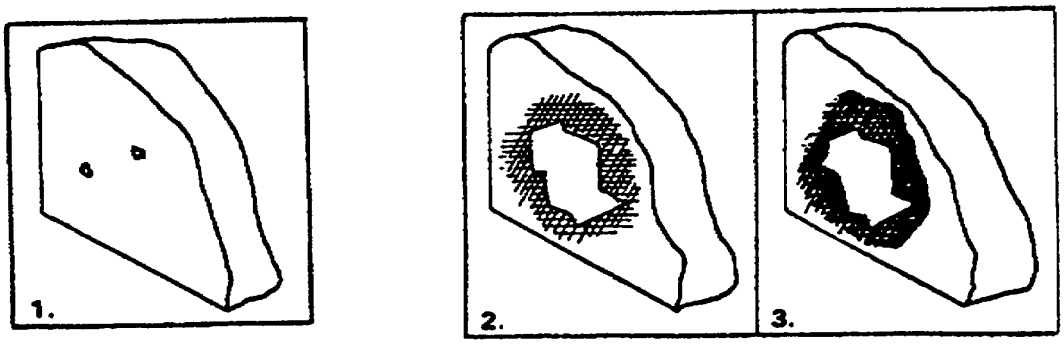

1. Seal minor holes and punctures with sealing compound (App. E, Item 3).
2. To repair minor rips or tears, roughen metal around damaged area to remove paint and increase adhesion of patch.
3. Apply epoxy mixture in accordance with instructions in kit (App. E, Item 4).
4. Apply patch material in accordance with instructions in kit (App. E, Item 4).
5. Apply tape over entire patch area.

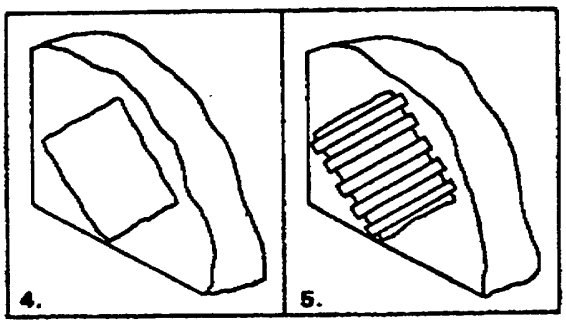

Figure 4-5. Door Repairs

4-11. REMOVE/INSTALL DOOR ASSEMBLY.

a. Tools: Screwdriver, cross-tip.

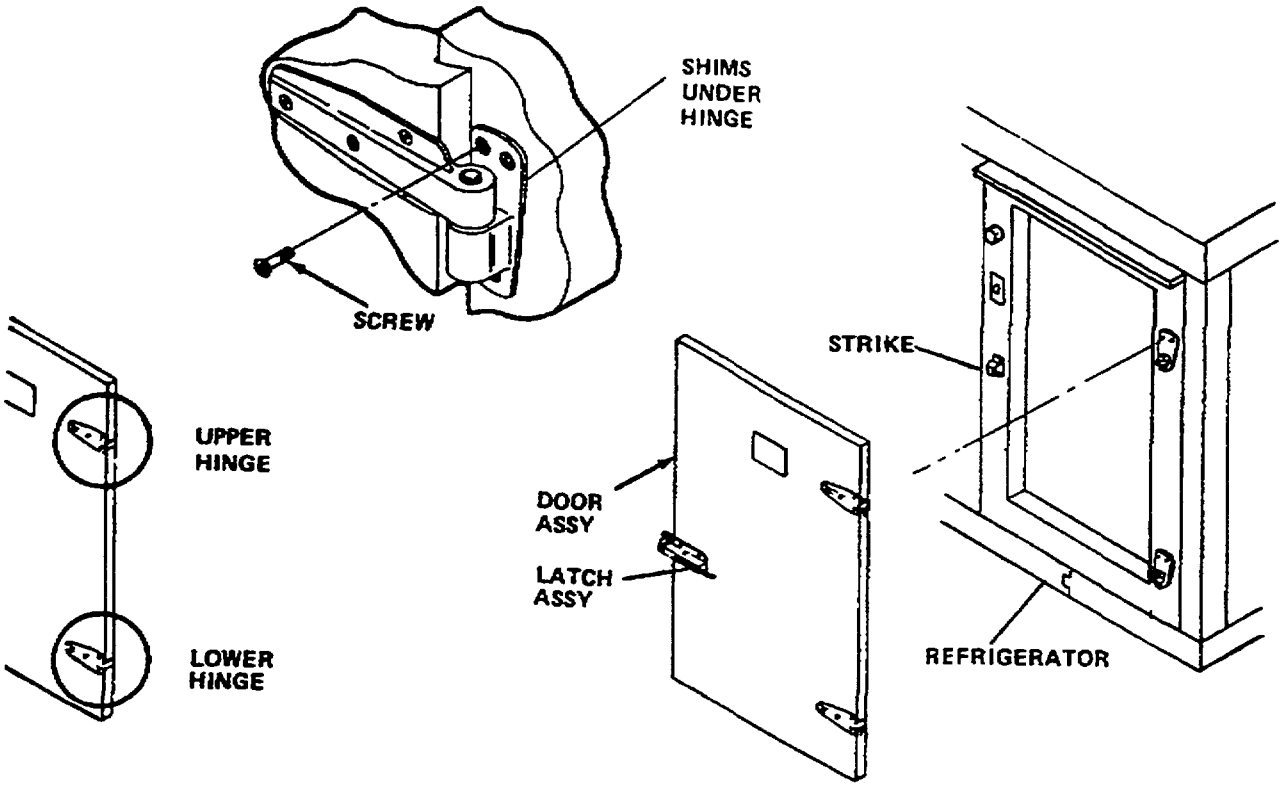

Figure 4-6. Door Assembly

b. Removal:

(1) Open the door fully.
(2) Lift door assembly from hinge body.
(3) Remove door assembly.

c. Installation:

(1) Position door assembly against refrigerator. Place pivots of hinges over the center of the pivot holes of the hinge body.
(2) Lower the door assembly so that hinge pivots slide into hinge body.
(3) Adjust strike (para. 4-13). Remove shims from the hinge (para. 4-16) as necessary for proper gasket seal.

4-12. REMOVE/INSTALL HANDLE RELEASE

a. Tools: Screwdriver, cross-tip.

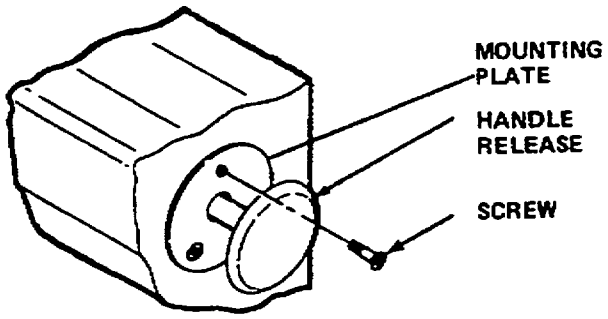

Figure 4-7. Handle Release

b. Removal:

(1) Remove screws.
(2) Remove handle release.

c. Installation:

(1) Position handle release inside of refrigerator door.
(2) Insert screws through mounting plate and into refrigerator door.
(3) Tighten screws.

4-13. REMOVE/INSTALL ADJUST SAFETY LATCH STRIKE.

a. Tools: Screwdriver, cross-tip.

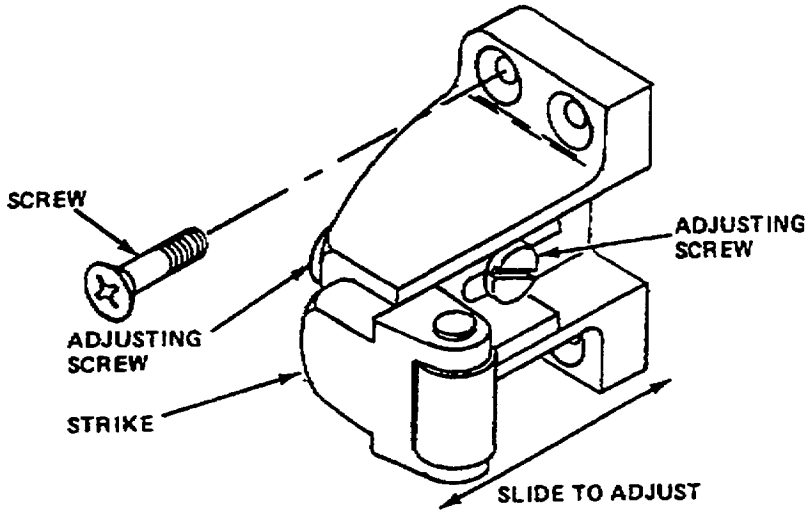

Figure 4-8. Latch Strike

b. Removal:

(1) Remove screws.
(2) Remove strike.

c. Installation:

(1) Position strike on refrigerator.
(2) Insert screws through strike and into refrigerator. Do no tighten.
(3) Close door to ensure that latch engages properly.
(4) Tighten screws.
(5) Check gasket around door to be sure it is sealing properly.

d. Adjust:

(1) Loosen two adjusting screws.
(2) Slide to adjust.
(3) Tighten two adjusting screws.

4-14. REMOVE/INSTALL LATCH ASSEMBLY.

a. Tools: Screwdriver, cross-tip.

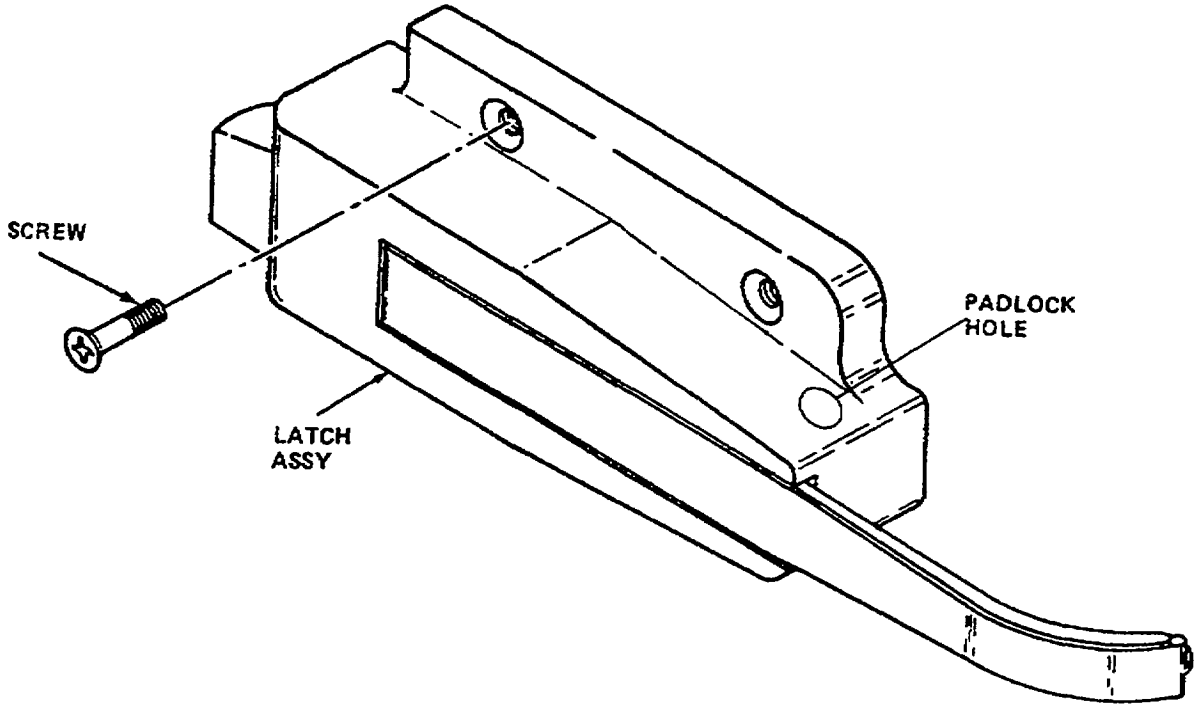

Figure 4-9. Latch Assembly

b. Removal:

(1) Remove screws.
(2) Remove latch assembly.

c. Installation:

(1) Position latch assembly on refrigerator door.
(2) Insert screws through latch and into refrigerator door.
(3) Tighten screws.

4-15. REMOVE/INSTALL PADLOCK AND CHAIN.

a. Tools: Screwdriver, cross-tip.

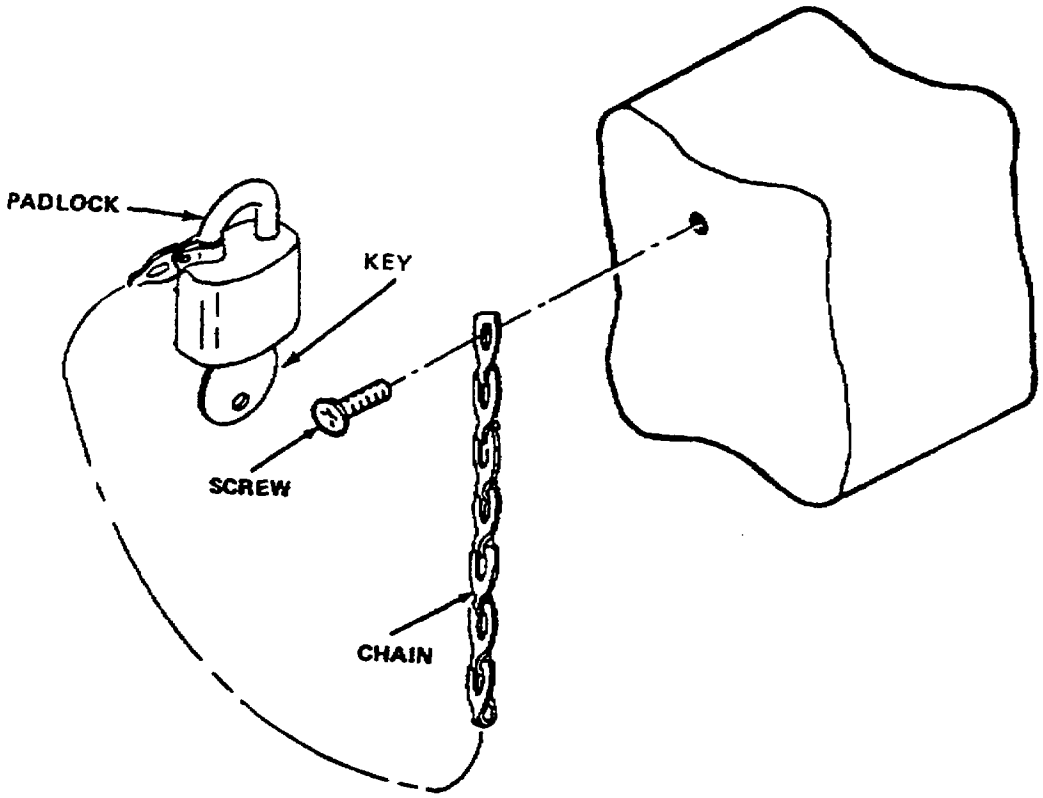

Figure 4-10. Padlock and Chain

b. Removal:

(1) Unlock and remove padlock.
(2) Remove crew.
(3) Remove chain.

c. Installation:

(1) Position chain on door and secure with screw.
(2) Attach padlock.

4-16. REMOVE/INSTALL HINGE.

a. Tools: Screwdriver, cross-tip.

NOTE

If both hinges are damaged, perform PRELIMINARY PROCEDURE: door removal (para. 4-11).

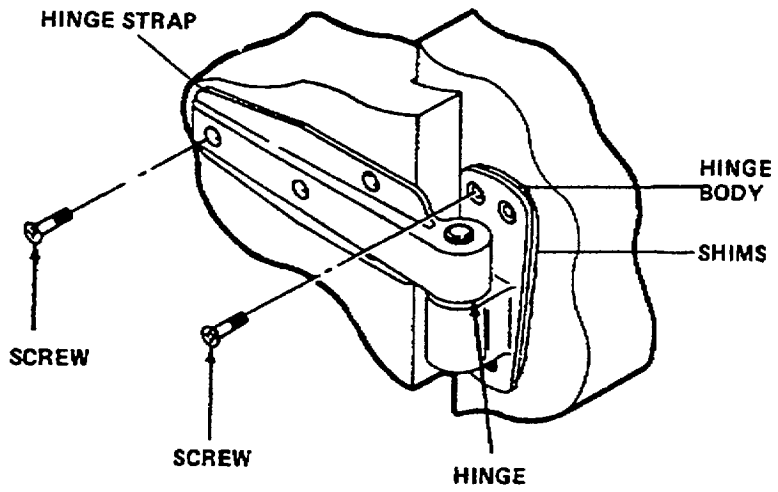

Figure 4-11. Hinge

b. Removal:

(1) Remove screws.
(2) Remove hinge.

c. Installation:

(1) Position hinge strap on door and secure with screws.

NOTE

If both hinges are being replaced perform FOLLOW-ON MAINTENANCE: install door (para. 4-11).

(2) Insert screws through hinge body and shims and into refrigerator. Do not tighten.
(3) Install door assembly (para. 4-11).

4-17. REMOVE/INSTALL DOOR GASKET.

a. Tools and Material:

Pocket Knife
Screwdriver, cross-tip
Tacks (App.E, Item 6)

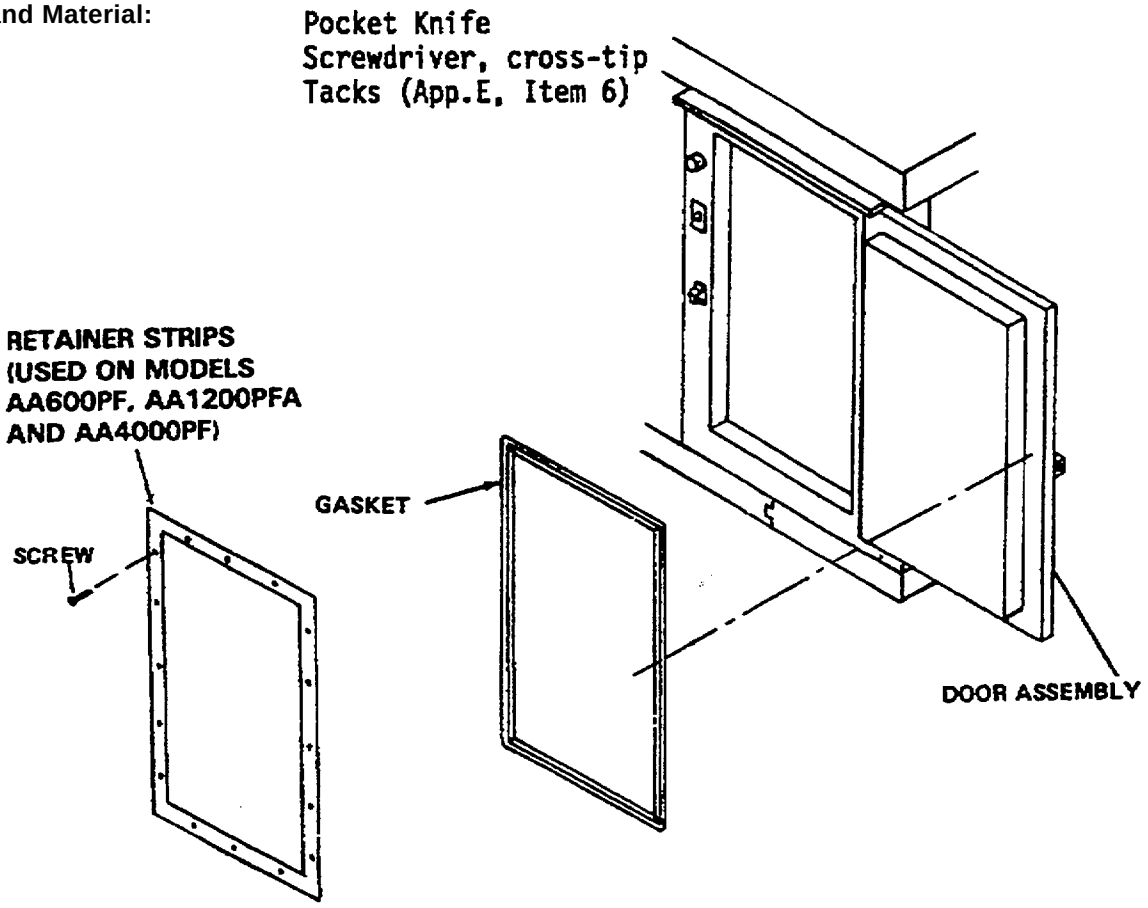

Figure 4-12. Door Gasket

b. Removal:

(1) (Models M600PF, M1200PFA, and M4000PF). Remove screws holding retainer strips and remove retainer strips.
(2) Remove and discard damaged gasket.
(3) Remove all staples from gasket mounting area around door.

c. Installation:

(1) Begin installing new gasket on the bottom, hinge side of the door using tacks (App. E, Item 6) to mount the gasket.
(2) Gasket must be installed as a continuous strip around door and end at the bottom hinge side of the door. Cut excess after tacking end into place.
(3) (Models AA600PF, M1200PFA, and AA4000PF). Install retainer strips back in place with screws. Replace retainer strips if damaged.

WIRING TESTING AND REPAIR PROCEDURES INDEX

	Page
Wires	4-33
Switch	4-36
Pilot Light Socket	4-38
Pilot Light Housing Assembly	4-39
Light Assembly and Globe	4-41
Power Receptacle	4-45

4-18. TEST/REPAIR WIRES.

a. Tools and Materials: Multimeter; Pocket Knife; Electrical Insulation Tape (App. E, Item 7).

b. Removal:

(1) Remove pilot light socket and pilot light housing assembly (para. 4-23 and 4-23.1).

(2) Remove power receptacle (para. 4-26 and 4-26.1).

(3) Remove light assembly (para. 4-24).

(4) Remove switch (para. 4-20).

c. Testing: (See figure 4-13). (Steps (1)-(4) are for Models MDS1600N, TKR600C, and TKR-4000C).

(1) Use multimeter to check continuity between power receptacle and switch (wire 1).

(2) Use multimeter to check continuity between power receptacle and isolated connection on switch (wire 2).

(3) Use multimeter to check continuity between isolated connection on switch and light assembly (wire 3).

(4) Use multimeter to check continuity between switch and light assembly (wire 4).

(5) Use a multimeter to check continuity between pilot light socket and power receptacle (wire 5).

(6) Use a multimeter to check continuity between pilot light socket and light assembly (wire 6).

(7) Use a multimeter to check continuity between light assembly and power receptacle (wire 7).

(8) Use a multimeter to check continuity between pilot light socket and switch (wire 8).

(9) Use a multimeter to check continuity between switch and receptacle (wire 9).

d. Repair:

(1) If damaged portion of the wire is accessible, cut back wire to an undamaged point on either side of the break and spice the wire together. If necessary, splice a short piece of wire into the gap created by removing the damaged portion.

(2) Insulate connections with electrical insulation tape (App. E, Item 7).

e. Installation:

(1) Install light assembly (para. 4-24).

(2) (Models AA600PF, MI 200PFA, and M4000PF). Install pilot light socket (para. 4-23). (Models MDS1600N, TKR-600C, and TKR-4000C). Install pilot light housing assembly (para. 4-23.1).

(3) (Models AA600PF, MA1200PFA, and AA4000PF). Install power receptacle (para. 4-26). (Models MDSI600N, TKR-600C, and TKR-4000C). Install power receptacle (para. 4-26.1).

(4) Install switch (para. 4-20).

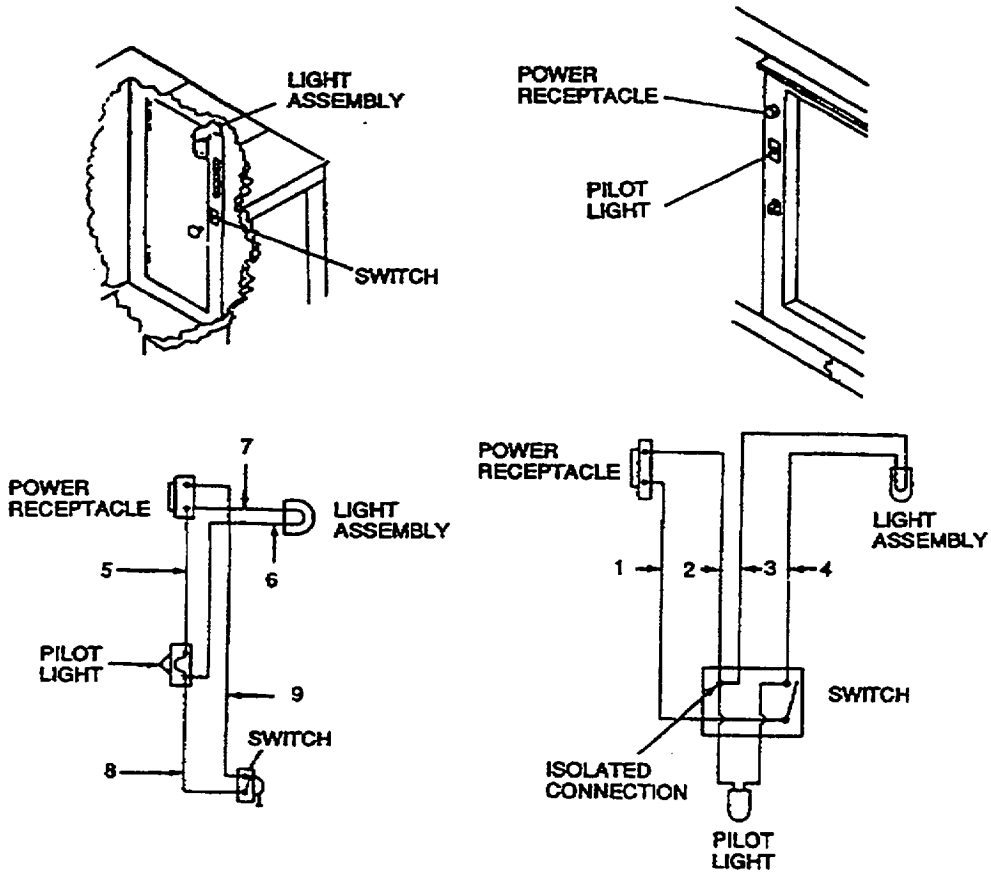

MODELS AA600PF, AA1200PFA, AND AA4000PF

MODELS MDSI600N, TKR-600C AND TKR-4000C

Figure 4-13. Test/Repair Wires

4-19. REMOVE/INSTALL SWITCH COVER.

a. Tools: (Models AA600PF, AA1 200PFA, and AA4000PF) Screwdriver, cross-tip (Models MDSI600N, TKR-600C, and TKR-4000C) Screwdriver, flat-tip.

b. Removal: Remove screws to remove switch cover.

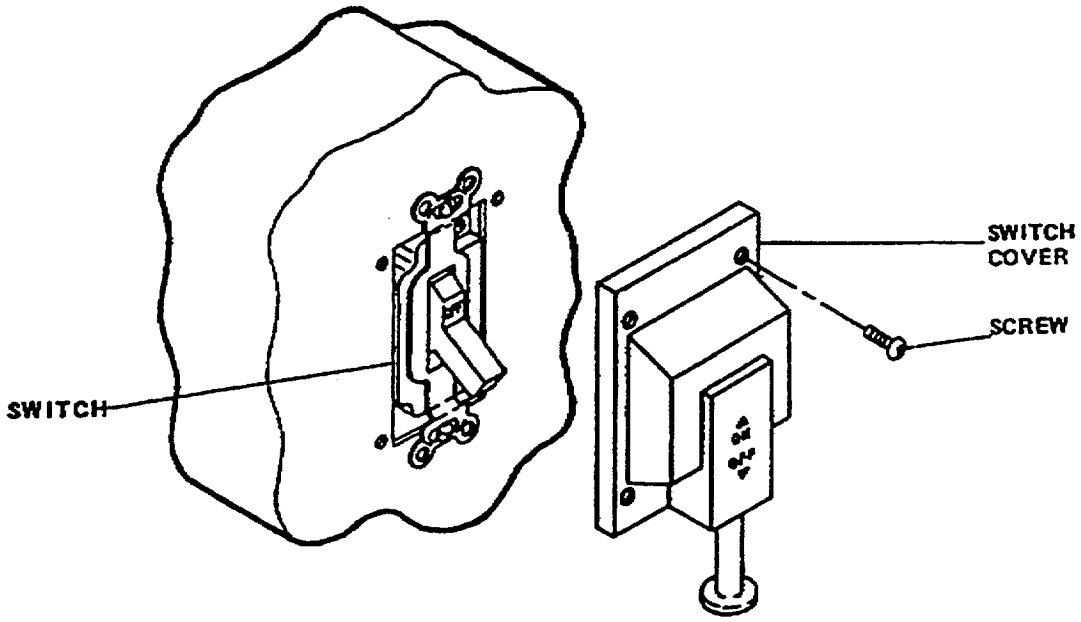

Figure 4-14. Switch Cover

c. Inspect Switch. Visually inspect switch for cracking, scorching, or damage.

d. Installation:

(1) Ensure that switch is off.
(2) Mount switch cover using screws.

4-20. REMOVE/TEST/INSTALL SWITCH.

a. Tools: (Models AA60OPF, MI 200PFA, and AA4000PF) Screwdriver, cross-tip; (Models MDS1600N, TKR-600C, and TKR-4000C) Screwdriver, flat-tip.

b. Removal:

WARNING
Disconnect power to power receptacle before beginning this procedure.

(1) Remove two screws and gently pull switch away from wall.
(2) Tag and disconnect switch wires.

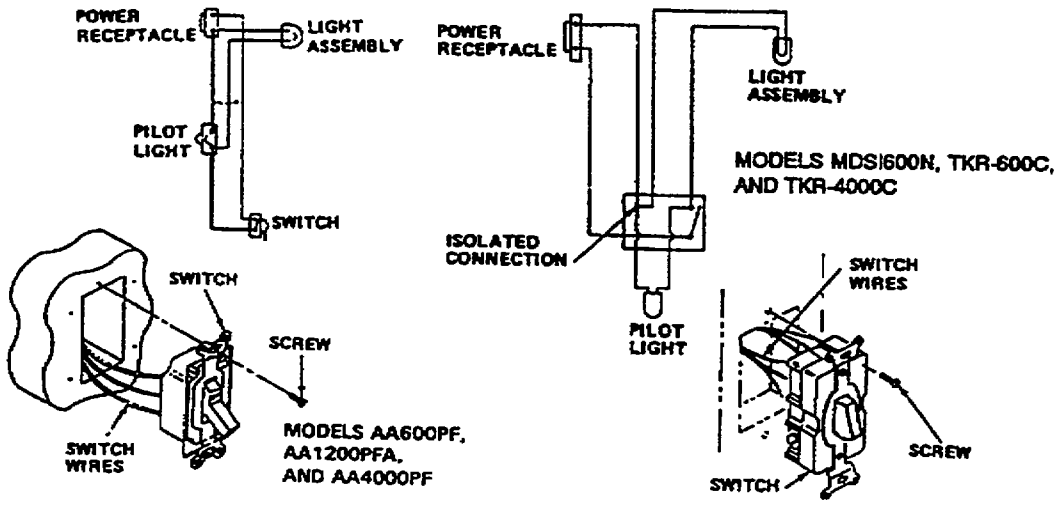

Figure 4-15. Switch

c. Test:

(1) Attach leads of multimeter to switch terminals.

NOTE
On Modes MDS1600N, TKR-600C, and TKR-4000C, the two screws on right are switch screws. The left screw is for isolated connection only.

(2) With switch set to OFF, check for continuity across switch. If there is continuity, switch is defective.
(3) Set switch to ON and check for continuity. There must be continuity or switch is defective.
(4) Set switch to OFF again and verify that continuity is interrupted.

d. Installation:

(1) Connect wires to switch and remove wire tags.
(2) Position switch into wall and secure with screws.
(3) Reconnect power to power receptacle.

4-21. REMOVE/SERVICE/INSTALL PILOT LIGHT COVER.

a. **Tools:** Screwdriver, cross-tip.

b. **Removal:** Remove screws and remove pilot light cover.

c. **Service:** Wipe red jewel with a clean cloth. Use a brush to remove stubborn dirt.

d. **Inspect socket:** Visually inspect socket for cracking, breaks, or scorching. Inspect for loose or missing hardware.

e. **Installation:** Position pilot light cover over pilot light socket and mount with screws.

4-22. (MODELS M600PF, M1200PFA, AND AA4000PF). INSPECT/REPLACE PILOT LIGHT BULB.

NOTE
PRELIMINARY PROCEDURE: Pilot light cover removal (para. 4-21).

a. **Inspect:** Visually check to see if bulb is burned out.

b. **Replace:** Unscrew old bulb from socket and screw in replacement bulb.

NOTE
FOLLOW-ON MAINTENANCE: Install pilot light cover (para. 4-21.)

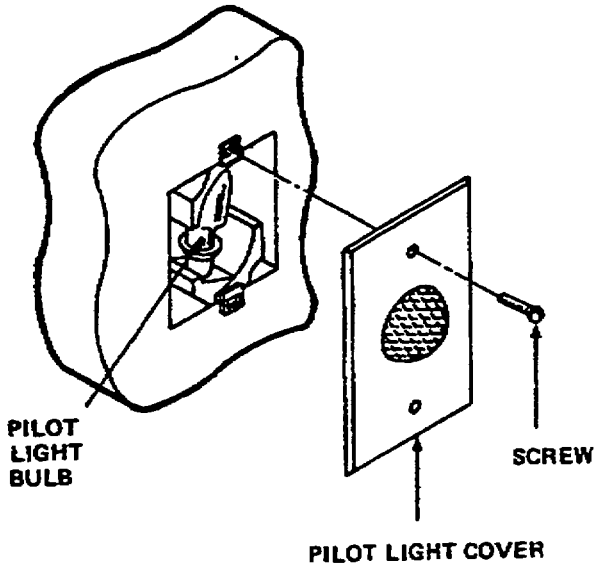

Figure 4-16. Pilot Light Cover and Bulb (Models AA600PF, AA1200PFA, and AA4000PF)

4-23. (MODELS M600PF, AA1200PFA, AND M4000PF). REMOVE/TEST/INSTALL PILOT LIGHT SOCKET.

a. Tools: Screwdriver, cross-tip.

NOTE
PRELIMINARY PROCEDURE: Pilot light cover removal (para. 4-21).

b. Removal:

WARNING
Disconnect power to power receptacle before beginning this procedure.

(1) Remove two screws and gently pull socket away from wall.
(2) Tag and disconnect wires to socket.

c. Test:

(1) Install a known good bulb in the pilot light socket.
(2) Connect a 125VAC power source to the socket.
(3) Bulb must light or socket is defective.

d. Installation:

(1) Connect wires to socket and remove wire tags.
(2) Position socket into wall and secure with screws.
(3) Reconnect power to power receptacle.

NOTE
FOLLOW-ON MAINTENANCE: Install pilot light cover (para. 4-21).

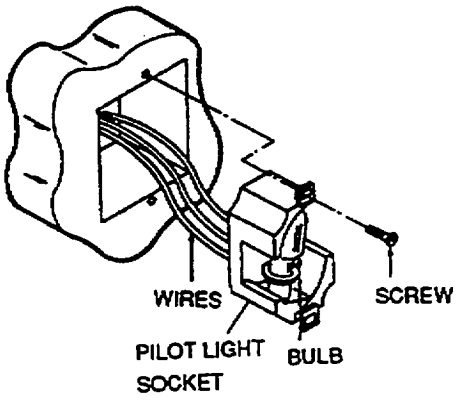

Figure 4-17. Pilot Light Socket (Models AA600PF, AA1 200PFA, and AA4000PF)

4-24. (MODELS MDS1600N, TKR6OOC0, AND TKR4000C). REMOVE/INSTALL PILOT LIGHT HOUSING ASSEMBLY

a. Tools: Screwdriver, flat-tip; Multimeter.

b. Removal:

WARNING
Disconnect power to power receptacle before beginning this procedure.

(1) Remove switch cover and switch assembly.
(2) Carefully pull out switch assembly from door frame panel assembly.
(3) Tag and disconnect wires from switch assembly; remove pilot light housing assembly.

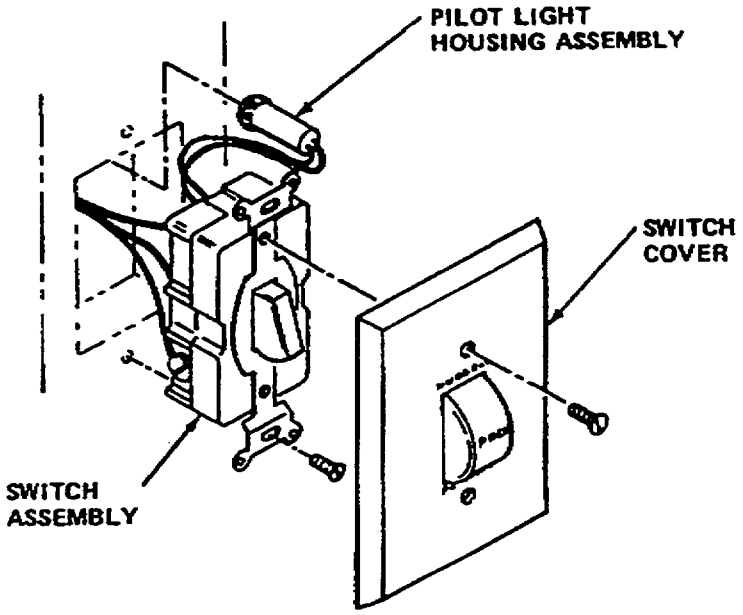

Figure 4-18. Pilot Light Housing Assembly (Models MDSI600N, TKR-600C, and TKR-4000C)

c. Installation:

(1) Connect replacement pilot light housing assembly wires.
(2) Position switch and switch plate assembly onto door frame panel assembly.
(3) Reconnect power supply cord to power receptacle.

4-25. REMOVE/TEST/INSTALL LIGHT ASSEMBLY AND GLOBE.

a. Tools: Screwdriver, cross-tip; Multimeter.

b. Removal:

WARNING
Disconnect power to power receptacle before beginning this procedure.

(1) Remove screws and gently pull light assembly away from wall.
(2) Tag and disconnect wires to light assembly.

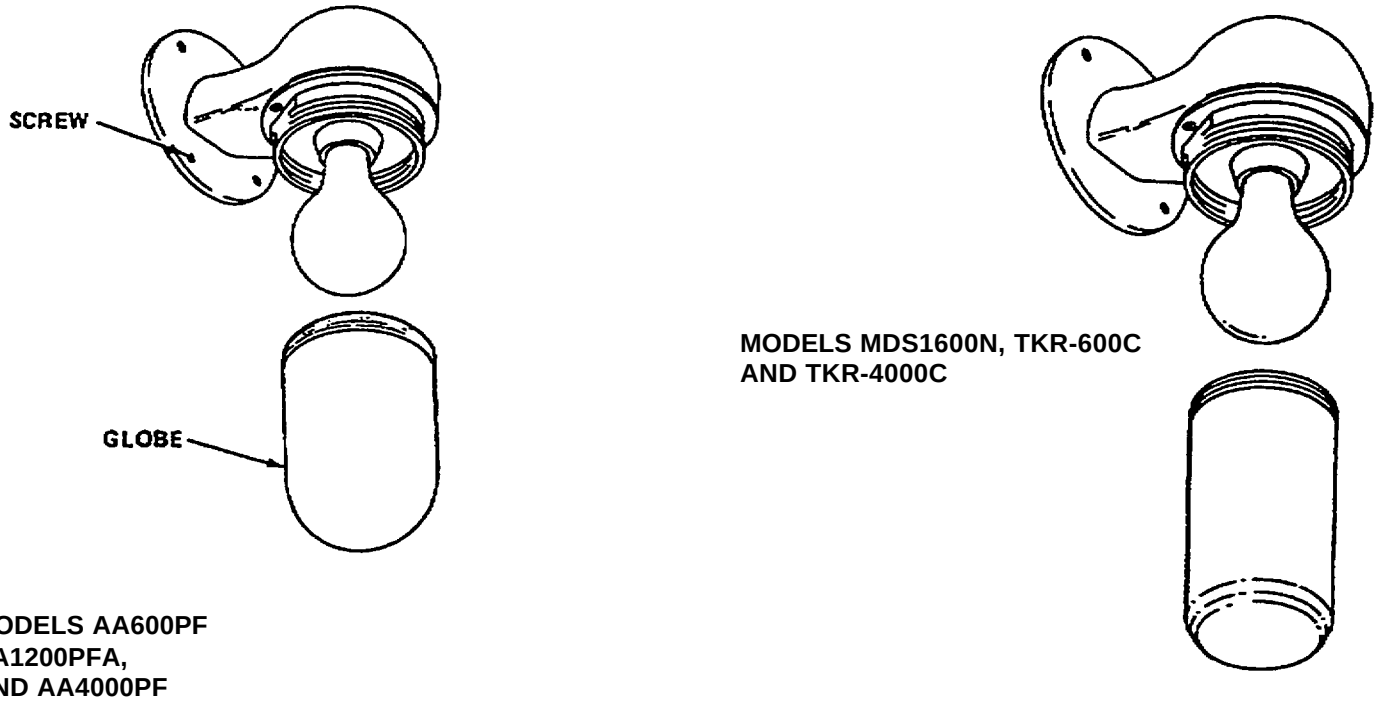

Figure 4-19. Light Assembly and Globe

c. Test:

(1) Attach a 125 VAC power source to vapor proof socket.
(2) Use a multimeter to check voltage across socket.

d. Installation:

(1) Connect wires to light assembly and remove wire tags.
(2) Mount socket onto wall using screws.
(3) Reconnect power to power receptacle.

4-26. (MODELS AA600PF, M1200PFA, AND M4000PF) REMOVE/TEST/INSTALL ELECTRICAL PLUG AND COVER.

a. Tools: Screwdriver, cross-tip; Pocket Knife; Multimeter.

b. Removal:

WARNING
Shut off power supply at its source before beginning this procedure.

(1) Slide plug seal cover off electrical plug.
(2) Loosen retaining clamp screws.
(3) Separate halves of electrical plug by removing screws.
(4) Tag and disconnect wires to electrical plug.
(5) Slide off plug seal cover.

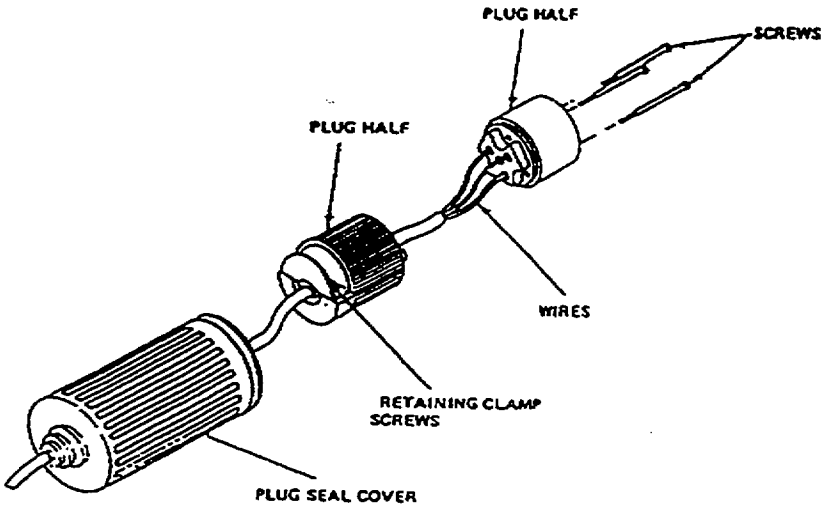

Figure 4-20. Electrical Plug and Cover (Models AA600PF, M1200PFA, and AA4000PF)

c. Test:

(1) Attach a 125VAC power source to electrical plug.
(2) Use a multimeter to check for current flow.

d. Installation:

(1) Slide cover on to power supply cord.
(2) Slide cap of electrical plug over cord.
(3) Connect wires to terminals of electrical plug connector.
(4) Attach halves of electrical plug with screws.
(5) Tighten screws to secure clamp.
(6) Slide plug seal cover over plug.

4-27. (MODELS MDS1600N, TKR400C, TKR4000C). REMOVE/TEST/INSTALL FEMALE ELECTRICAL.

a. Tools: Screwdriver, flat-tip; Pocket Knife; Multimeter.

WARNING
Shut off power supply at its source before beginning this procedure.

b. Removal:

(1) Slide boot off female receptacle.
(2) Loosen retaining damp screws with screwdriver.
(3) Separate halves of female receptacle.
(4) Tag and disconnect wires to female receptacle.

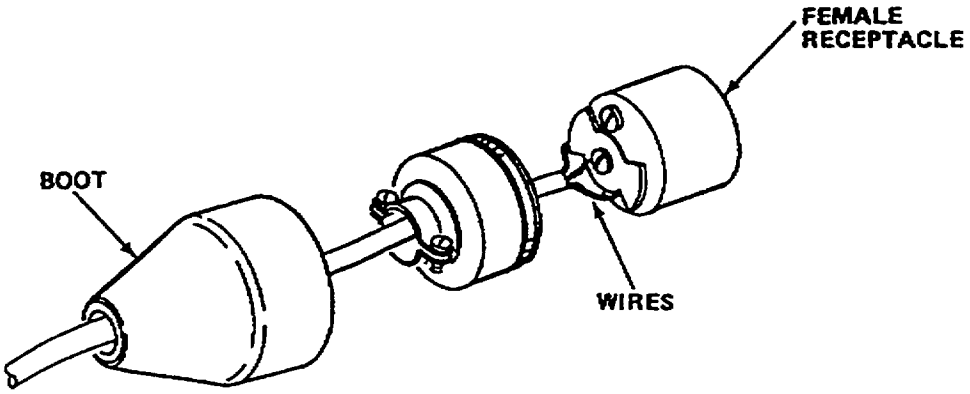

Figure 4-21. Female Receptacle (Models MDS1600N, TKR-600C, and TKR-4000C Only)

c. Test:

(1) With multimeter, check for isolation across both receptacle wire terminals and across each wire terminal and the ground terminal. Multimeter shall indicate infinite resistance. Otherwise receptacle is damaged and shall be replaced.
(2) With multimeter check for continuity across each wire terminal at rear of connector and its corresponding plug terminal at the font end. Multimeter shall indicate continuity.

d. Installation:

(1) Slide cap of female receptacle onto the power cord.
(2) Connect wires to terminals of female receptacle.
(3) Snap halves of female receptacle together.
(4) Using screwdriver, tighten screws to secure power supply cord to clamp.
(5) Side boot over female receptacle.

4-28. (MODELS AA600PF, AA1200PFA, AND AA4000PF). REMOVE/TEST/INSTALL POWER RECEPTACLE.

a. Tools: Screwdriver, cross-tip; Multimeter.

b. Removal:

WARNING
Disconnect power to power receptacle before beginning this procedure.

(1) Remove screws and gently pull power receptacle away from wall.
(2) Tag and disconnect wires to rear of receptacle.

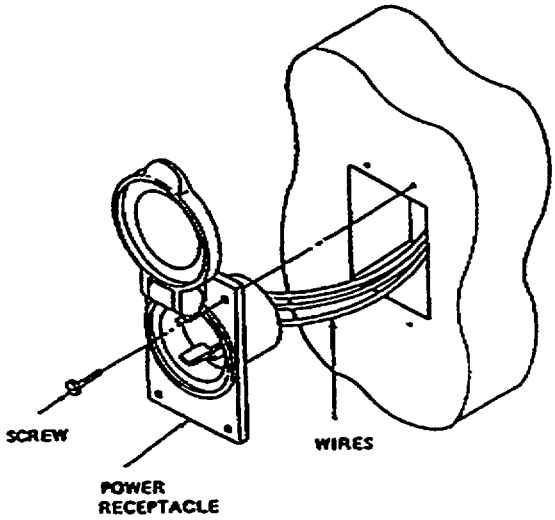

Figure 4-22. Power Receptacle (Models AA600PF, AA1200PFA, and AA4000PF)

c. Test:

(1) Attach a 125VAC power source to terminals of receptacle.
(2) Use a multimeter to check for current flow through receptacle.

d. Installation:

(1) Connect wires to rear of receptacle and remove wire tags.
(2) Position receptacle into wall and secure with screws.
(3) Reconnect power to power receptacle.

4-29. (MODELS MDS1600N, TKR400C AND TKR4000OC). REMOVE/TEST/INSTALL MALE RECEPTACLE, CAP AND CHAIN.

a. Tools: Screwdriver, cross-tip; Multimeter.

b. Removal:

WARNING
Disconnect male power receptacle before beginning this procedure.

(1) Loosen and remove screws with screwdriver.
(2) Gently pull male receptacle and cap and chain away from door frame to gain access to using panel assembly.
(3) Tag and disconnect wires at rear of receptacle.

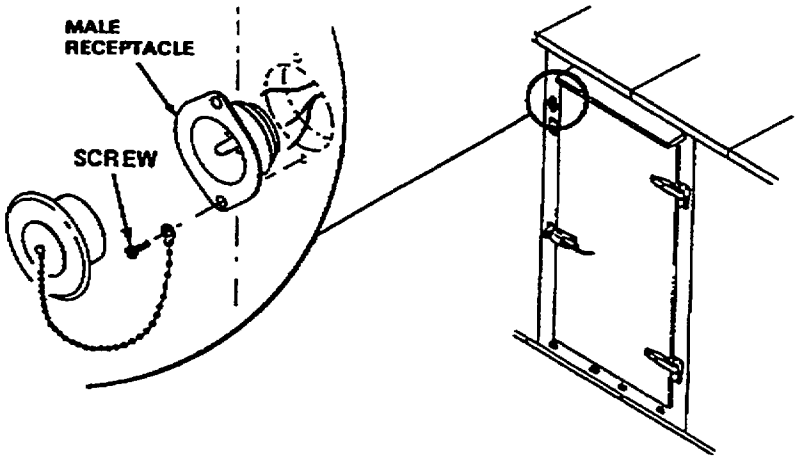

Figure 4-23. Male Receptacle (Models MDS1600N, TKR-600C, and TKR-4000C)

c. Test:

(1) With multimeter, perform isolation testing across the two plug terminals, and across each plug terminal and the ground terminal or receptacle case. Multimeter shall indicate infinite resistance across both plug terminals and across each plug terminal and the ground terminal. Otherwise, receptacle is defective and shall be replaced.

d. Installation

(1) Connect wires to receptacle terminals as tagged and remove wire tags.
(2) Position receptacle and cap and chain onto door frame panel assembly. Secure with screws using screwdriver.
(3) Reconnect power to power receptacle.

4-30. REMOVE/INSTALL THERMOMETER.

a. Tools: Screwdriver, cross-tip.

b. Removal:

(1) Remove two screws to remove thermometer.
(2) Remove thermometer from refrigerator.

c. Installation:

(1) Position thermometer on refrigerator wall.
(2) Attach thermometer using two screws.

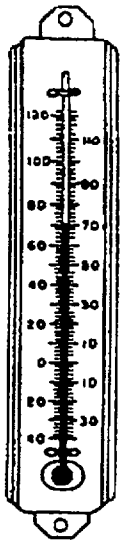

Figure 4-24. Thermometer

4-31. REPAIR OF DRAINS.

a. Tools: Screwdriver, cross-tip.

b. Removal: Unscrew plug and remove all screws to dismantle drains.

c. Inspect:

(1) Inspect strainer for clogged holes and clean.
(2) Inspect drains and gaskets for damage.
(3) Replace damaged parts and reassemble.

Figure 4-25. Drains

4-32. REMOVE/INSTALL PARTITION BARREL BOLT.

a. Tools: Screwdriver, cross-tip.

b. Removal: Remove four screws to remove barrel bolt.

c. Installation: Attach barrel bolt with four screws.

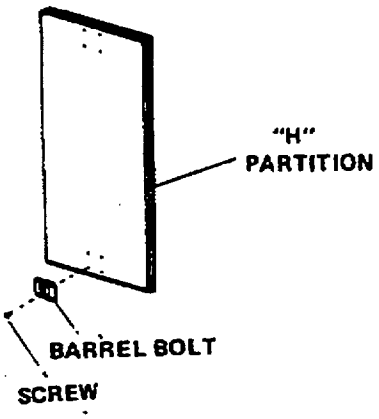

Figure 4-26. Barrel Bolt

4-33. REMOVE/INSTALL WRENCH CLIPS.

a. Tools: Screwdriver, cross-tip.

b. Removal:

(1) Remove wrenches from clips.
(2) Remove eight screws to remove clips.

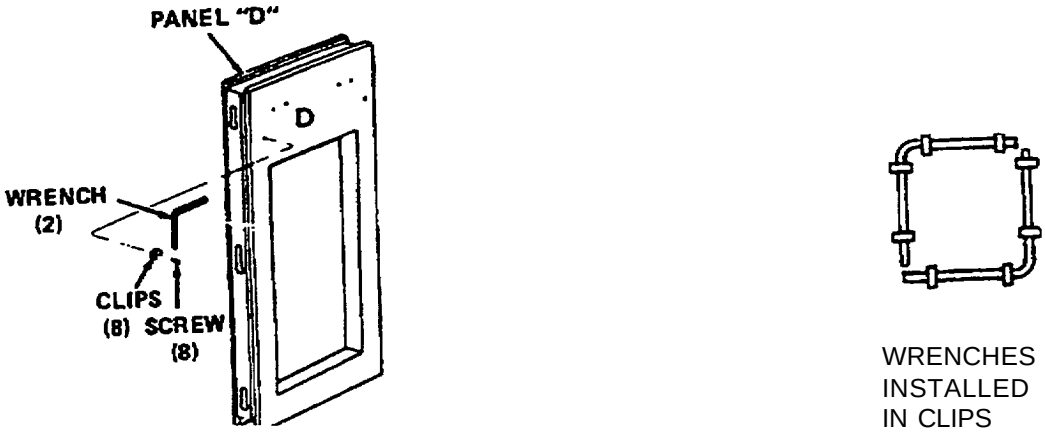

Figure 4-27. Wrench Clips

c. Installation:

(1) Install clips with eight screws.
(2) Press-in wrenches into clips.

4-34. REPAIR REFRIGERATOR PREFABRICATED PANELS.

Tools and Materials: Sealing Compound, TT-S-230, Gum Grade (8030-965-2397) (App. E, Item 3) Repair Kit, MIL-2-58047(CE) or MIL-R-19907C(2090-372-6064) (App. E, Item 4)

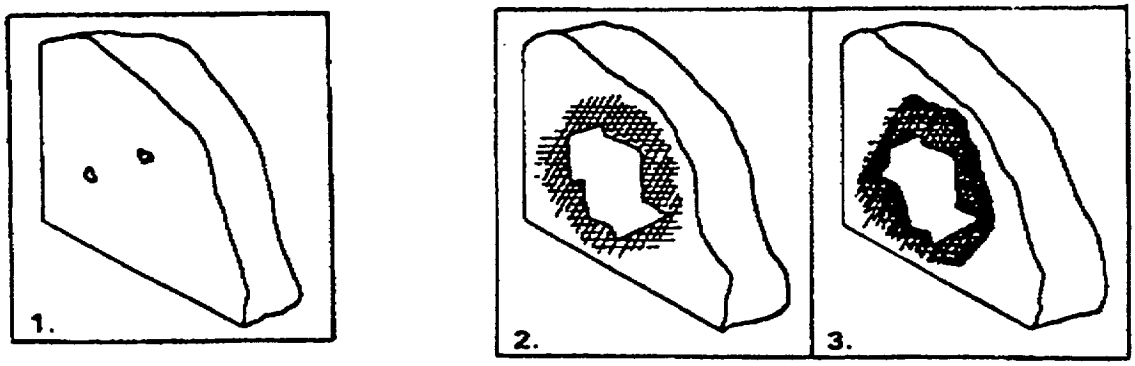

1. Seal minor holes and punctures, with sealing compound (App. E, Item 3).
2. To repair minor rips or tears roughen metal around damaged area to remove paint and increase adhesion of path.
3. Apply epoxy mixture in accordance with instructions in kit (App. E, Item 4).
4. Apply patch material in accordance with instructions in kit (App. E, Item 4).
5. Apply tape over entire patch area.

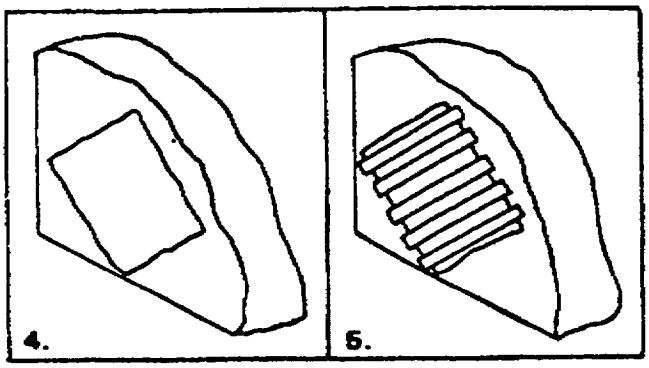

Figure 4-28. Repair of Panels

4-35. REMOVE/INSTALL GASKET AND CLAMP ASSEMBLY (TYPICAL).

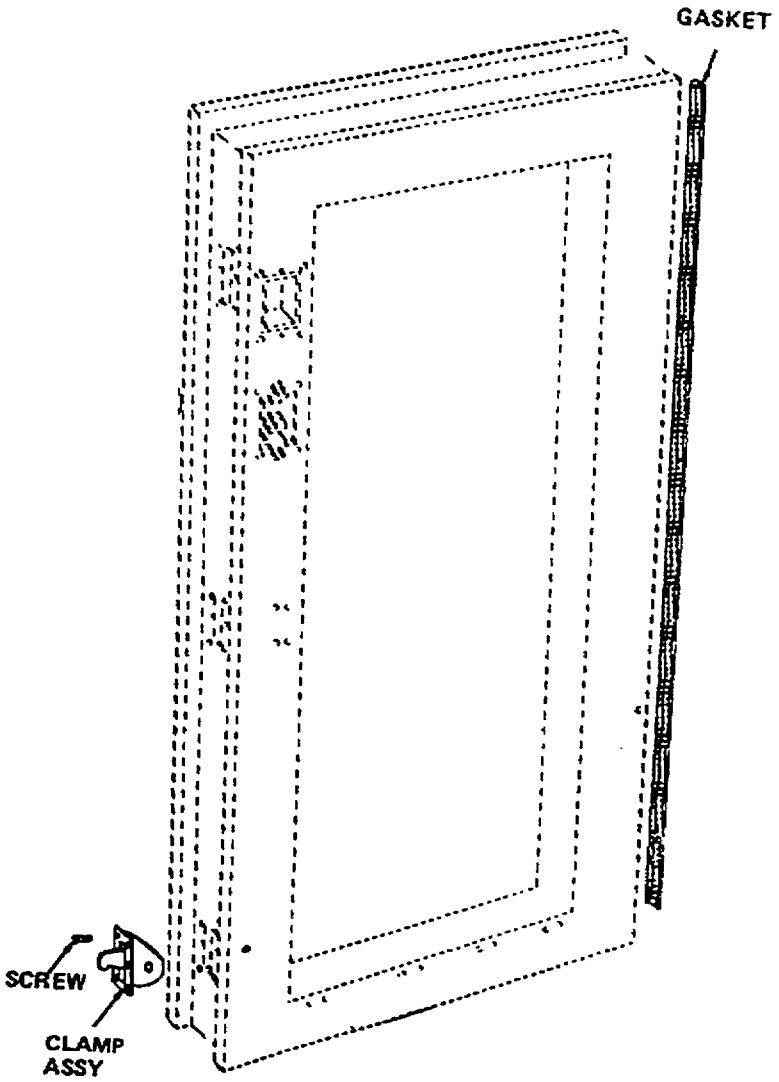

Figure 4-29. Gasket and Clamp Assembly

a. Tools. Screwdriver.

b. Removal.

(1) Remove six screws to remove clamp assembly.
(2) Pry off gasket with screwdriver and remove all staples.

c. Installation.

(1) Attach clamp assembly with six screws.
(2) Attach gaskets with 3/4" tacks (Appendix E, Item 6).

Section VI. PREPARATION FOR STORAGE OR SHIPMENT

4-36. PREPARATION FOR STORAGE.

a. Empty refrigerator completely.

b. Remove any auxiliary equipment in accordance with the manuals covering those items.

c. Wash unit and dry thoroughly.

4-37. PREPARATION FOR SHIPMENT.

a. Empty refrigerator completely.

b. Wash unit and dry thoroughly.

c. Disconnect the external power supply cable.

NOTE
Remove tape from all joints before disassembly of panels.

d. Refer to para. 4-24 and remove the light assembly in the reverse order of installation.
e. Refer to para. 4-27 and remove the thermometer in the reverse order of installation.
f. Refer to figures 4-1 and 4-2 and disconnect the refrigerator panels.
g. Refer to figure 4-3 and disassemble the refrigerator.
h. Crate the components in the original shipping crates, if available. For short distance, or if original shipping crates are not available, place the components in easily handled loads on skids. Place cushioning material and wooden spacers between surfaces that are easily damaged. Secure the skids with meal banding. Cushion the thermometers with cellulose wadding or other cushioning material. Pack the cushioned items with basic issue items in a suitable fiberboard container.
i. Refer to para. 4-5 and load and secure the refrigerator crates to the bed of the carrier.

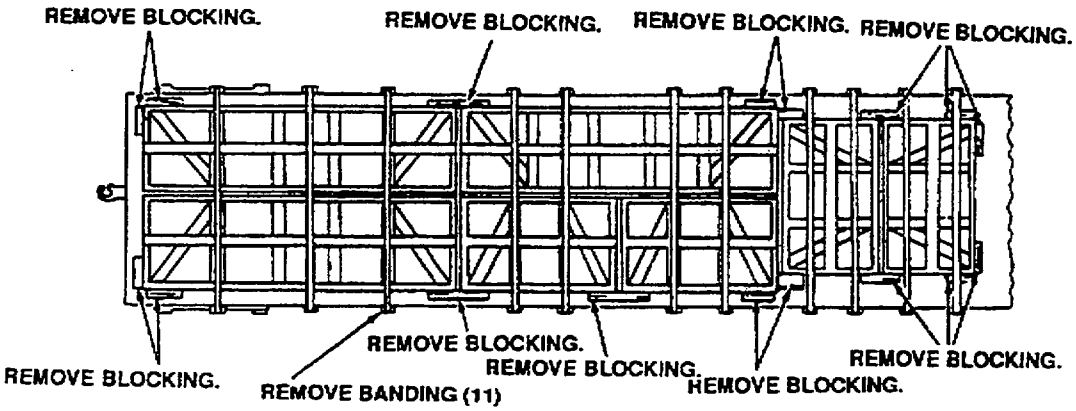

Figure 4-30. Blocking and Tie-Downs

CHAPTER 5

DIRECT SUPPORT MAINTENANCE INSTRUCTIONS

	Page
Troubleshooting	5-1
Direct Support Maintenance Procedures	5-1

Section I. TROUBLESHOOTING

5-1. GENERAL.

There is no direct support troubleshooting. All troubleshooting actions can be performed at the operator or unit level of maintenance.

Section II. DIRECT SUPPORT MAINTENANCE PROCEDURES

5-2. REPAIR REFRIGERATOR PANELS.

a. Tools and Materials: Polyurethane Foam Kit, MIL-P-39500 (App. E, Item 5); Rivets (App. E, item 8).

b. Procedure:

(1) Sheet mal patches may be fabricated from 0.040 inch sheet metal to cover hole extending more than 6 inches in any direction. Fasten with pop rivets (App. E, Item 8).

(2) Fill cavity in panel (behind patch area) using polyurethane foam in accordance with instructions in kit (App. E, Item 5).

(3) Rivet patch into place. Determine rivet size at assembly (Appendix E, Item 8).

APPENDIX A

REFERENCES

A-1. SCOPE.

This appendix list all forms, field manuals, technical manuals, and miscellaneous publications referenced in this manual.

A-2. FORMS.

Recommended Changes to Equipment Technical Publications .....DA Form 2028-2
Equipment Inspection and Maintenance Work Sheet .....DA Form 2404
Quality Deficiency Report .....DA Form 368

A-3. TECHNICAL MANUALS.

Hand Portable Fire Extinguishers Approved For Army Users .....TB 5-4200-200-10
The Army Material Management System .....DA PAM 738-750
Painting Instructions for Army Materiel .....TM 403-0139
Operator, Unit, and Direct Support Maintenance Manual .....TM 9-4110-241-13
Unit and Direct Support Maintenance Repair Parts and
Special Tools List .....TM 9-4110-241-23P
Procedures for Destruction of Equipment to Prevent Enemy Use .....TM 750-244-3

A-4. MISCELLANEOUS PUBLICATIONS.

Fuels, Lubricants, Oils and Waxes C91001L

APPENDIX B

MAINTENANCE ALLOCATION CHART (MAC)

SECTION I. INTRODUCTION

B-1. The Army Maintenance System MAC

This introduction provides a general explanation of all maintenance and repair functions authorized at the two maintenance levels under the Two-Level Maintenance System concept.

This MAC (immediately following the introduction) designates overall authority and responsibility for the performance of maintenance functions on the identified end item or component. The application of the maintenance functions to the end item or component shall be consistent with the capacities and capabilities of the designated maintenance levels, which are shown on the MAC in column (4) as:

Field - includes two columns, Unit Maintenance and Direct Support maintenance. The Unit maintenance column is divided again into two more subcolumns, C for Operator or Crew and O for Unit maintenance.

Sustainment – includes two subcolumns, General Support (H) and Depot (D).

The tools and test equipment requirements (immediately following the MAC) list the tools and test equipment (both special tools and common tool sets) required for each maintenance function as referenced from the MAC.

The remarks (immediately following the tools and test equipment requirements) contain supplemental instructions and explanatory notes for a particular maintenance function.

B-2. Maintenance Functions

Maintenance functions are limited to and defined as follows:

1. Inspect. To determine the serviceability of an item by comparing its physical, mechanical, and/or electrical characteristics with established standards through examination (e.g., by sight, sound, or feel.) This includes scheduled inspection and gagings and evaluation of cannon tubes.

2. Test. To verify serviceability by measuring the mechanical, pneumatic, hydraulic, or electrical characteristics of an item and comparing those characteristics with prescribed standards on a scheduled basis, i.e., load testing of lift devices and hydrostatic testing of pressure hoses.

3. Service. Operations required periodically to keep an item in proper operating condition; e.g., to clean (includes decontaminate, when required), to preserve, to drain, to paint, or to replenish fuel, lubricants, chemical fluids, or gases. This includes scheduled exercising and purging of recoil mechanisms. The following are examples of service functions:

   a. Unpack. To remove from packing box for service or when required for the performance of maintenance operations.

   b. Repack. To return item to packing box after service and other maintenance operations.

   c. Clean. To rid the item of contamination.

d. Touch up. To spot paint scratched or blistered surfaces.

e. Mark. To restore obliterated identification.

4. Adjust. To maintain or regulate, within prescribed limits, by bringing into proper position, or by setting the operating characteristics to specified parameters.

5. Align. To adjust specified variable elements of an item to bring about optimum or desired performance

6. Calibrate. To determine and cause corrections to be made or to be adjusted on instruments of test, measuring, and diagnostic equipment used in precision measurement. Consists of comparisons of two instruments, one of which is a certified standard of known accuracy, to detect and adjust any discrepancy in the accuracy of the instrument being compared.

7. Remove/Install. To remove and install the same item when required to perform service or other maintenance functions. Install may be the act of emplacing, seating, or fixing into position a spare, repair part, or module (component or assembly) in a manner to allow the proper functioning of an equipment or system.

8. Paint. To prepare and spray color coats of paint so that the ammunition can be identified and protected. The color indicating primary use is applied, preferably, to the entire exterior surface as the background color of the item. Other markings are to be repainted as original so as to retain proper ammunition identification.

9. Replace. To remove an unserviceable item and install a serviceable counterpart in its place. “Replace” is authorized by the MAC and assigned maintenance level is shown as the third position code of the Source, Maintenance and Recoverability (SMR) code.

10. Repair. The application of maintenance services, including fault location/troubleshooting, removal/installation, disassembly/assembly procedures and maintenance actions to identify troubles and restore serviceability to an item by correcting specific damage, fault, malfunction, or failure in a part, subassembly, module (component or assembly), end item, or system.

NOTE

The following definitions are applicable to the “repair” maintenance function:

Services. Inspect, test, service, adjust, align, calibrate, and/or replace.

Fault location/troubleshooting. The process of investigating and detecting the cause of equipment malfunctioning; the act of isolating a fault within a system or Unit Under Test (UUT).

Disassembly/assembly. The step-by-step breakdown (taking apart) of a spare/functional group coded item to the level of its least component, that is assigned an SMR code for the level of maintenance under consideration (i.e. identified as maintenance significant).

Actions. Welding, grinding, riveting, straightening, facing, machining, and/or resurfacing.

11. Overhaul. That maintenance effort (service/action) prescribed to restore an item to a completely serviceable/operational condition as required by maintenance standards in appropriate technical publications. Overhaul is normally the highest degree of maintenance performed by the Army. Overhaul does not normally return an item to like new condition.

12. Rebuild. Consists of those services/actions necessary for the restoration of unserviceable equipment to a like new condition in accordance with original manufacturing standards. Rebuild is the highest degree of material maintenance applied to Army equipment. The rebuild operation includes the act of returning to zero those age measurements (e.g., hours/miles) considered in classifying Army equipment/components.

B-3. Explanation of Columns in the MAC, Section II.

Column (1) Group Number. Column (1) lists Functional Group Code (FGC) numbers, the purpose of which is to identify maintenance significant components, assemblies, subassemblies, and modules with the Next Higher Assembly (NHA).

Column (2) Component/Assembly. Column (2) contains the names of components, assemblies, subassemblies, and modules for which maintenance is authorized.

Column (3) Maintenance Function. Column (3) lists the functions to be performed on the item listed in Column (2). (For a detailed explanation of these functions refer to “Maintenance Functions” outlined above).

Column (4) Maintenance Level. Column (4) specifies each level of maintenance authorized to perform each function listed in column (3), by indicating work time required (expressed as manhours in whole hours or decimals) in the appropriate subcolumn. This work time figure represents the active time required to perform that maintenance function at the indicated level of maintenance. If the number or complexity of the tasks within the listed maintenance function varies at different maintenance levels, appropriate work time figures are to be shown for each level. The work time figure represents the average time required to restore an item (assembly, subassembly, component, module, end item, or system) to a serviceable condition under typical field operating conditions. This time includes preparation time (including any necessary disassembly/assembly time), troubleshooting/fault location time, and quality assurance time in addition to the time required to perform the specific tasks identified for the maintenance functions authorized in the MAC. The system designations for the various maintenance levels are as follows:

Field:

C Operator or crew maintenance
O Unit maintenance
F Direct Support maintenance

Sustainment:

L Specialized Repair Activity
H General Support maintenance
D Depot maintenance

NOTE

The “L” maintenance level is not included in column (4) of the MAC. Functions to this level of maintenance are identified by work time figure in the “H” column of column (4), and an associated reference code is used in the REMARKS column (6). This code is keyed to the remarks and the SRA complete repair application is explained there.

Column (5) Tools and Equipment Reference Code. Column (5) specifies, by code, those common tool sets (not individual tools), common Test, Measurement and Diagnostic Equipment (TMDE), and special tools, special TMDE and special support equipment required to perform the designated function. Codes are keyed to the entries in the tools and test equipment table.

Column (6) Remarks Code. When applicable, this column contains a letter code, in alphabetic order, which is keyed to the remarks table entries.

B-4. Explanation of Columns in the Tools and Test Equipment Requirements, Section III.

Column (1) - Tool or Test Equipment Reference Code. The tool or test equipment reference code correlates with a code used in column (5) of the MAC.

Column (2) - Maintenance Level. The lowest level of maintenance authorized to use the tool or test equipment.

Column (3) - Nomenclature. Name or identification of tool or test equipment.

Column (4) - National Stock Number (NSN). The NSN of the tool or test equipment.

Column (5) - Tool Number. The manufacturer’s part number.

B-5. Explanation of Columns in Remarks, Section IV.

Column (1) - Remarks Code. The code recorded in column (6) of the MAC.

Column (2) - Remarks. This column lists information pertinent to the maintenance function being performed as indicated in the MAC.

SECTION II. MAINTENANCE ALLOCATION CHART

(1) GROUP NUMBER	(2) COMPONENT/ ASSEMBLY	(3) MAINTENANCE FUNCTION	(4) MAINTENANCE LEVEL					(5) TOOLS AND EQUIPMENT REFERENCE CODE	(6) REMARKS CODE
			FIELD			SUSTAINMENT			
			UNIT		DIRECT SUPPORT	GENERAL SUPPORT	DEPOT		
			C	O	F	H	D		
01	REFRIGERATOR	Inspect	0.2						
		Service	1.0						
		Repair			0.5				
		Replace			4.0				
	GASKET, PANEL	Inspect	0.1						
		Replace		0.3					
	CLAMP ASSEMBLY	Inspect		0.1					
		Replace		0.3					
	PANELS, REFRIGERATOR	Inspect	0.1						
		Service	0.1						
		Repair			0.5				
		Replace		3.0					
	DOOR ASSEMBLY DOOR	Inspect	0.1						
		Service	0.1						
		Repair		0.5					
		Replace		1.0					
	LATCH, SAFETY LOCK	Inspect	0.1						
		Service		0.1					
		Repair		0.2					
		Replace		0.3					
		Adjust		0.2					
	PADLOCK	Inspect	0.1						
		Replace		0.1					
	HINGE	Inspect	0.1						
		Service	0.1						
		Replace		0.1					
	GASKET, DOOR	Inspect	0.2						
		Replace		0.3					
	RETAINER	Inspect	0.1						
		Replace		0.3					

SECTION II. MAINTENANCE ALLOCATION CHART - continued

(1) GROUP NUMBER	(2) COMPONENT/ ASSEMBLY	(3) MAINTENANCE FUNCTION	(4) MAINTENANCE LEVEL					(5) TOOLS AND EQUIPMENT REFERENCE CODE	(6) REMARKS CODE
			FIELD			SUSTAINMENT			
			UNIT		DIRECT SUPPORT	GENERAL SUPPORT	DEPOT		
			C	O	F	H	D		
02	ELECTRICAL WIRING, SWITCH, LIGHT ASSY								
	WIRES AND CABLES	Test			1.0				
		Repair			1.5				
	SWITCH COVER	Inspect	1.0						
		Replace		0.1					
	SWITCH	Inspect	0.2	0.2					
		Test		0.7					
		Replace		0.5					
	HOUSING, PILOT LIGHT	Inspect		0.1					
		Replace		0.5					
	COVER, PILOT	Inspect	0.1						
		Test		0.1					
		Replace		0.2					
	BULB (LAMP)	Inspect	0.1						
		Replace		0.1					
	VAPOR PROOF LIGHT AND GLOBE	Inspect	0.1						
		Test		0.1					
		Replace		0.1					
	BULB (LAMP)	Inspect	0.1						
		Replace	0.1						
	SOCKET, PILOT LIGHT	Inspect		0.2					
		Test		0.2					
		Replace		0.2					
	RECEPTACLE, POWER	Inspect	0.1						
		Test		0.5					
		Replace		0.4					
	PLUG, TWIST LOCK	Inspect	0.2						
		Test		0.5					
		Replace		0.4					

SECTION II. MAINTENANCE ALLOCATION CHART - continued

(1) GROUP NUMBER	(2) COMPONENT/ ASSEMBLY	(3) MAINTENANCE FUNCTION	(4) MAINTENANCE LEVEL					(5) TOOLS AND EQUIPMENT REFERENCE CODE	(6) REMARKS CODE
			FIELD			SUSTAINMENT			
			UNIT		DIRECT SUPPORT	GENERAL SUPPORT	DEPOT		
			C	O	F	H	D		
	COVER, PLUG SEAL	Inspect	0.1						
		Test		0.1					
		Replace		0.1					
03	INTERIOR COMPONENTS								
	THERMOMETER	Inspect	0.1	0.2					
		Replace		0.3					
	FLOOR DRAIN COMPONENTS	Inspect		0.2					
		Replace		0.2					
	GASKETS	Inspect		0.2					
		Replace		0.2					
	STRAINER	Inspect		0.2					
		Replace		0.2					
	PLUG	Inspect		0.2					
		Replace		0.2					
	BARREL BOLT	Inspect		0.2					
		Replace		0.2					
	WRENCH CLIPS	Inspect		0.2					
		Replace		0.2					
	PRE-FABRICATED **PANELS**	Inspect	0.1						
		Repair		0.5					
		Replace		0.3					
	CLAMP ASSEMBLY	Inspect		0.2					
		Replace		0.3					

SECTION III. TOOLS AND TEST EQUIPMENT

(1) TOOL OR TEST EQUIPMENT	(2) MAINTENANCE LEVEL	(3) NOMENCLATURE	(4) NATIONAL STOCK NUMBER	(5) TOOL NUMBER

SECTION IV. REMARKS

(1) REMARK CODES	(2) REMARKS

APPENDIX C

COMPONENTS OF END ITEM AND BASIC ISSUE ITEMS LIST

Section I. INTRODUCTION

C-1. SCOPE.

This appendix lists components of end item and basic issue items for the refrigerator to help you inventory items required for safe and efficient operation.

C-2. GENERAL.

The Components of End Item and Basic Issue Items Lists are divided into the following sections.

a. Section II, Components of End Item. This listing is for informational purposes only, and is not authority to requisition replacements. These items are part of the end item, but are removed and separately packaged for transportation or shipment. As part of the end item, these items must be with the end item whenever it is issued or transferred between property accounts. Illustrations are furnished to assist you in identifying the items.

b. Section III, Basic Issue Items. These are the minimum essential items required to place the refrigerator in operation, to operate it, and to perform emergency repairs. Although shipped separately packaged, BII must be with the refrigerator during operation and whenever it is transferred between property accounts. The illustrations will assist you with hard-to-identify items. This manual is your authority to request/requisition replacement BII, based on TOE/MTOE authorization of the end item.

C-3. EXPLANATION OF COLUMNS.

The following provides an explanation of the columns found in the tabular listings:

a. Column (1) Illustration Number (Illus. Number). This column indicates the number of the illustration in which the item is shown.

b. Column (2) National Stock Number. Indicates the National stock number assigned to the item and will be used for requisitioning purposes.

c. Column (3) Description. Indicates the Federal item name and, if required, a minimum description to identify and locate the item. The last line for each item indicates the FSCM (in parentheses) followed by the part number. Usable on codes are listed to the right of the items. Identification of the usable on codes are:

Code	Used On
FGE	Model MDS1600N
DST	Model M60OPF
DSU	Model MI 200PFA
DSV	Model AA4000PF
EKN	Model TKR600C
EVB	Model TKR4000C

d. Column (4) - Unit of Measure (U/M). Indicates the measure used in performing the actual operational/maintenance function. This measure is expressed by a two-character alphabetical abbreviation (e.g., ea, in., pr).

e. Column (5) - Quantity required (Qty rqr). Indicates the quantity of the item authorized to be used with/on the equipment.

Section II. COMPONENTS OF END ITEM

(1) Illus. Number	(2) National Stock Number	(3) Description FSCM and Part Number	Usable On Code	(4) U/M	(5) Qty Rqr
		LIGHT ASSEMBLY	DST	EA	1
		(57519) R2310410	DSU	EA	1
			DSV	EA	4
		LIGHT, VAPOR PROOF	EKN	EA	1
		(87518) VBB-100-PC	EVB	EA	4
			FGE	EA	1
		THERMOMETER	DST	EA	1
		(64467) 269	DSU	EA	1
			DSV	EA	4

Section III. BASIC ISSUE ITEMS

(1) Illus. Number	(2) National Stock Number	(3) Description FSCM and Part Number	Usable On Code	(4) U/M	(5) Qty Rqr
		Department of the Army Technical Manual;			
		Operator's Unit, and Direct Support			
		Maintenance Manual TM 54110-241-13			
		Wrench	DST	EA	2
		(15436) P/N 250	DSU	EA	4
			DSV	EA	8
		Wrench	EKN	EA	2
		(32761) P/N 1145	EVB	EA	8
		U	FGE	EA	2

☆U.S. GOVERNMENT PRINTING OFFICE: 1993 - 755-028/80110

APPENDIX D
ADDITIONAL AUTHORIZATION LIST

Section . INTRODUCTION

D-1. SCOPE.

This appendix lists additional items you are authorized for the support of the refrigerator.

D-2. GENERAL.

This list identifies items that do not have to accompany the refrigerator and that do not have to be turned in with it. These items are all authorized to you by CTA, MTOE, TDA, or JTA.

D-3. EXPLANATION OF LISTING.

National stock numbers, descriptions, and quantities are provided to help you identify and request the additional items you require to support this equipment. The items are listed in alphabetical sequence by item name under the type document (i.e., CTA, MTOE, TDA or JTA) which authorizes the item(s) to you.

Section II. ADDITIONAL AUTHORIZATION LIST (NONE)

(1) National Stock Number	(2) Description FSCM & Part Number	Usable on Code	(3) U/M	(4) Qty Auth

APPENDIX E

EXPENDABLE/DURABLE SUPPLIES AND MATERIALS LIST

Section I. INTRODUCTION

E-1. SCOPE.

This appendix list expendable supplies and materials you will need to operate and maintain the refrigerator. These items are authorized to you by CTA 50-970, Expendable Items (except Medical, Class V, Repair Parts, and Heraldic Items).

E-2. EXPLANATION OF COLUMNS.

a. Column (1) - Item Number. This number is assigned to the entry in the listing and is referenced in the narrative instructions to identify the material (e.g., "Use sealing compound, Appendix E, Item 3").

b. Column (2) - Level. This column identifies the lowest level of maintenance that requires the listed item.

C - OPERATOR CREW
O - UNIT MAINTENANCE
F - DIRECT SUPPORT MAINTENANCE
H - GENERAL SUPPORT MAINTENANCE

c. Column (3) - National Stock Number. This is the National stock number assigned to the item; use it to request or requisition the tem.

d. Column (4) - Description. Indicate the Federal item name and, if required, a description to identify the item. The last line for each item indicates the Federal Supply Code for Manufacturer (FSCM) in parentheses followed by the part number.

e. Column (5) - Unit of Measure (U/M). Indicates the measure used in performing the actual maintenance function. This measure is expressed by a two-character alphabetical abbreviation (e.g., ea, in., pr). If the unit of measure differs from the unit of issue, requisition the lowest unit of issue that will satisfy your requirements.

(1) Item Number	(2) Level	(3) National Stock Number	(4) Description	(5) U/M
1	C		Lubricating Oil, SE or SC/CC, SAE 30, 10W, 20 and 5W-30, MIL-L-2140	GL
2	O	3040-00-664-0439	Adhesive, General Purpose, 1 pint	EA
3	O	8030-00-965-2397	Sealing Compound, TT-S-230, Gum Grade	EA
4	O	2090-00-372-6064	Repair Kit, MIL-2-58047(CE) or MIL-R-19907C	EA
5	F		Polyurethane Foam Kit, Rigid, MIL-P-39500	EA
6	O		Tacks, 3/4"	LB
7	O		Electrical Tape	EA
8	F		Rivet, Pop	LB
9			Tape, PPT-T-60, Type IV Class 1	EA

GLOSSARY

Section I. ABBREVIATIONS

AC ..... Alternating current
Hz ..... Hertz
SAE ..... Society of Automotive Engineers

Section II. DEFINITION OF UNUSUAL TERMS

NONE

ALPHABETICAL INDEX

Subj/Para

A

B

Barrel Bolt, Partition, 4-29

C

Capabilities and Features, 1-6
Common Tools and Equipment, 4-1
Controls and Indicators, 2-1

D

Destruction to Prevent Enemy Use, 1-3
Door Assembly, 3-6; 4-11
Door Gasket, 3-10; 4-17
Drains, 4-28

E

Electrical Plug, 3-16
Electrical Plug and Cover, 4-25
Equipment
- Capabilities and Features, 14
- Data, 1-8
- Identification, 1-7
- Improvement Recommendations, 1-5
- Purpose, 1-1

F

G

Gasket, Door, 3-10; 4-17

H

Hand Release, 4-12
Hand Receipt Manual, 1-4
Hinge 3-9; 4-16

I

Installation Instructions, 4-6

J

K

L

Latch Assembly, 3-7; 4-14
Light Assembly and Globe, 3-13; 4-24
Light Bulb, 3-14
Lubrication Instructions, 3-1

M

Maintenance Forms and Records, 1-2

N

O

P

Padlock and Chain, 3-8; 4-15
Panels, 3-5; 5-2
Partition Barrel Bolt, 4-29
Pilot Light:
- Bulb, 4-22
- Cover, 3-12; 4-21
- Socket, 4-23

Plug, Electrical, 3-16; 4-25
Plug Seal Cover, 3-17

ALPHABETICAL INDEX (CONT)

Subj/Para

Power Receptacle. 3-15; 4-26
Prefabricated Panels, 3-19; 4-31
Preventive Maintenance Checks & Services:
Operator, 2-2
Unit, 4-7

Thermometer 3-18; 4-27

Q

R

Refrigerated Door Repair of, 4-10
Refrigerator Panels, 3-5; 5-2
Repair Parts, 4-3
Reporting Equipment Improvement
Recommendations (EIR's), 1-5

S

Safety Latch Strike, 4-13
Scope of Manual, 1-1
Service Upon Receipt of Equipment, 4-5
Shipment, 4-33
Site and Shelter Requirements, 4-4
Special Tools, TMDE & Support Equipment, 4-2
Storage, 4-32

Subj/Para

Switch, 4-20
Switch Cover, 3-11; 4-19

T

Troubleshooting:
Operator, 3-2
Unit, 4-9

U

Unusual Conditions, 2-5; 2-6
Usual Conditions, 2-4

V

W

Wires, Testing and Repair, 4-18
Wrench Clips, 4-30

X,Y,Z

By Order of the Secretaries of the Army and Air Force:

GORDON R. SULLIVAN
General, United States Army
Chief of Staff

Official:

MILTON H. HAMILTON
Administrative Assistant to the
Secretary of the Army
01698

MERRILL A. McPEAK,
General USAF
Chief of Staff

Official:

EDWARD A. PARDINI, Colonel, USAF
Director of Information Management

DISTRIBUTION:

To be distributed in accordance with DA Form 12-25-E, block 5794, Operator, Unit, Direct and General Support Maintenance requirements for TM 9-4110-241-13.

☆U.S. GOVERNMENT PRINTING OFFICE: 1992 654-122/40039

These are the instructions for sending an electronic 2028

The following format must be used if submitting an electronic 2028. The subject line must be exactly the same and all fields must be included; however only the following fields are mandatory: 1, 3, 4, 5, 6, 7, 8, 9, 10, 13, 15, 16, 17, and 27.

From: "Whomever" <whomever@avma27.army.mil>
To: amssbriml@natick.army.mil

Subject: DA Form 2028

1. From: Joe Smith
2. Unit: home
3. Address: 4300 Park
4. City: Hometown
5. St: MO
6. Zip: 77777
7. Date Sent: 19-OCT-93
8. Pub no: 55-2840-229-23
9. Pub Title: TM
10. Publication Date: 04-JUL-85
11. Change Number: 7
12. Submitter Rank: MSG
13. Submitter FName: Joe
14. Submitter MName: T
15. Submitter LName: Smith
16. Submitter Phone: 123-123-1234
17. Problem: 1
18. Page: 2
19. Paragraph: 3
20. Line: 4
21. NSN: 5
22. Reference: 6
23. Figure: 7
24. Table: 8
25. Item: 9
26. Total: 123
27. Text:

This is the text for the problem below line 27.

RECOMMENDED CHANGES TO PUBLICATIONS AND BLANK FORMS For use of this form, see AR 25-30; the proponent agency is ODISC4.	Use Part II *(reverse)* for Repair Parts and Special Tool Lists (RPSTL) and Supply Catalogs/Supply Manuals (SC/SM).	**DATE** *21 October 2003*

TO: *(Forward to proponent of publication or form) (Include ZIP Code)* COMMANDER U.S. ARMY TANK-AUTOMOTIVE AND ARMAMENT COMMAND ATTN: AMSTA-LC-CECT 15 KANSAS STREET NATICK, MA 01760-5052	**FROM:** *(Activity and location) (Include ZIP Code)* *PFC Jane Doe* *CO A 3rd Engineer BR* *Ft. Leonardwood, MO 63108*

PART I – ALL PUBLICATIONS (EXCEPT RPSTL AND SC/SM) AND BLANK FORMS

PUBLICATION/FORM NUMBER	DATE	TITLE
TM 10-1670-296-23&P	30 October 2002	Unit Manual for Ancillary Equipment for Low Velocity Air Drop Systems

ITEM NO.	PAGE NO.	PARA-GRAPH	LINE NO. *	FIGURE NO.	TABLE NO.	RECOMMENDED CHANGES AND REASON *(Provide exact wording of recommended changes, if possible).*
	0036 00-2				*1*	*In table 1, Sewing Machine Code Symbols, the second sewing machine code symbol should be MD ZZ not MD 22.* *Change the manual to show Sewing Machine, Industrial: Zig-Zag; 308 stitch; medium-duty; NSN 3530-01-181-1421 as a MD ZZ code symbol.*

**Reference to line numbers within the paragraph or subparagraph.*

TYPED NAME, GRADE OR TITLE	TELEPHONE EXCHANGE/AUTOVON, PLUS EXTENSION	SIGNATURE
Jane Doe, PFC	508-233-4141	Jane Doe *Jane Doe*

SAMPLE

TO: (*Forward direct to addressee listed in publication*)	FROM: (*Activity and location*) (*Include ZIP Code*)	DATE
COMMANDER U.S. ARMY TANK-AUTOMOTIVE AND ARMAMENT COMMAND ATTN: AMSTA-LC-CECT 15 KANSAS STREET NATICK, MA 01760-5052	*PFC Jane Doe* *CO A 3rd Engineer BR* *Ft. Leonardwood, MO 63108*	*21 October 2003*

PART II – REPAIR PARTS AND SPECIAL TOOL LISTS AND SUPPLY CATALOGS/SUPPLY MANUALS

PUBLICATION NUMBER	DATE	TITLE
TM 10-1670-296-23&P	30 October 2002	Unit Manual for Ancillary Equipment for Low Velocity Air Drop Systems

PAGE NO.	COLM NO.	LINE NO.	NATIONAL STOCK NUMBER	REFERENCE NO.	FIGURE NO.	ITEM NO.	TOTAL NO. OF MAJOR ITEMS SUPPORTED	RECOMMENDED ACTION
0066 00-1					*4*			*Callout 16 in figure 4 is pointed to a D-Ring. In the Repair Parts List key for figure 4, item 16 is called a Snap Hook. Please correct one or the other.*

PART III – REMARKS (*Any general remarks or recommendations, or suggestions for improvement of publications and blank forms. Additional blank sheets may be used if more space is needed.*)

TYPED NAME, GRADE OR TITLE	TELEPHONE EXCHANGE/AUTOVON, PLUS EXTENSION	SIGNATURE

SAMPLE

RECOMMENDED CHANGES TO PUBLICATIONS AND BLANK FORMS For use of this form, see AR 25-30; the proponent agency is ODISC4.	Use Part II *(reverse)* for Repair Parts and Special Tool Lists (RPSTL) and Supply Catalogs/Supply Manuals (SC/SM).	DATE

TO: *(Forward to proponent of publication or form) (Include ZIP Code)* COMMANDER U.S. ARMYTANK-AUTOMOTIVE AND ARMAMENT COMMAND ATTN: AMSTA-LC-CECT 15 KANSAS STREET NATICK, MA 01760-5052	**FROM:** *(Activity and location) (Include ZIP Code)*

PART I – ALL PUBLICATIONS (EXCEPT RPSTL AND SC/SM) AND BLANK FORMS

PUBLICATION/FORM NUMBER	DATE	TITLE
TM 9-4110-241-13	1 July 1992	Refrigerator, Panel Type, Prefabricated Assemblies

ITEM NO.	PAGE NO.	PARA-GRAPH	LINE NO. *	FIGURE NO.	TABLE NO.	RECOMMENDED CHANGES AND REASON *(Provide exact wording of recommended changes, if possible).*

**Reference to line numbers within the paragraph or subparagraph.*

TYPED NAME, GRADE OR TITLE	TELEPHONE EXCHANGE/AUTOVON, PLUS EXTENSION	SIGNATURE

TO: (*Forward direct to addressee listed in publication*) COMMANDER U.S. ARMYTANK-AUTOMOTIVE AND ARMAMENT COMMAND ATTN: AMSTA-LC-CECT 15 KANSAS STREET NATICK, MA 01760-5052	FROM: (*Activity and location) (Include ZIP Code)*	DATE

PART II – REPAIR PARTS AND SPECIAL TOOL LISTS AND SUPPLY CATALOGS/SUPPLY MANUALS

PUBLICATION NUMBER	DATE	TITLE
TM 9-4110-241-13	1 July 1992	Refrigerator, Panel Type, Prefabricated Assemblies

PAGE NO.	COLM NO.	LINE NO.	NATIONAL STOCK NUMBER	REFERENCE NO.	FIGURE NO.	ITEM NO.	TOTAL NO. OF MAJOR ITEMS SUPPORTED	RECOMMENDED ACTION

PART III – REMARKS (*Any general remarks or recommendations, or suggestions for improvement of publications and blank forms. Additional blank sheets may be used if more space is needed.)*

TYPED NAME, GRADE OR TITLE	TELEPHONE EXCHANGE/AUTOVON, PLUS EXTENSION	SIGNATURE

RECOMMENDED CHANGES TO PUBLICATIONS AND BLANK FORMS For use of this form, see AR 25-30; the proponent agency is ODISC4.	Use Part II *(reverse)* for Repair Parts and Special Tool Lists (RPSTL) and Supply Catalogs/Supply Manuals (SC/SM).	DATE

TO: *(Forward to proponent of publication or form) (Include ZIP Code)* COMMANDER U.S. ARMYTANK-AUTOMOTIVE AND ARMAMENT COMMAND ATTN: AMSTA-LC-CECT 15 KANSAS STREET NATICK, MA 01760-5052	**FROM:** *(Activity and location) (Include ZIP Code)*

PART I – ALL PUBLICATIONS (EXCEPT RPSTL AND SC/SM) AND BLANK FORMS

PUBLICATION/FORM NUMBER	DATE	TITLE
TM 9-4110-241-13	1 July 1992	Refrigerator, Panel Type, Prefabricated Assemblies

ITEM NO.	PAGE NO.	PARA-GRAPH	LINE NO. *	FIGURE NO.	TABLE NO.	RECOMMENDED CHANGES AND REASON *(Provide exact wording of recommended changes, if possible).*

**Reference to line numbers within the paragraph or subparagraph.*

TYPED NAME, GRADE OR TITLE	TELEPHONE EXCHANGE/AUTOVON, PLUS EXTENSION	SIGNATURE

TO: (*Forward direct to addressee listed in publication*) COMMANDER U.S. ARMYTANK-AUTOMOTIVE AND ARMAMENT COMMAND ATTN: AMSTA-LC-CECT 15 KANSAS STREET NATICK, MA 01760-5052	FROM: (*Activity and location) (Include ZIP Code)*	DATE

PART II – REPAIR PARTS AND SPECIAL TOOL LISTS AND SUPPLY CATALOGS/SUPPLY MANUALS

PUBLICATION NUMBER	DATE	TITLE
TM 9-4110-241-13	1 July 1992	Refrigerator, Panel Type, Prefabricated Assemblies

PAGE NO.	COLM NO.	LINE NO.	NATIONAL STOCK NUMBER	REFERENCE NO.	FIGURE NO.	ITEM NO.	TOTAL NO. OF MAJOR ITEMS SUPPORTED	RECOMMENDED ACTION

PART III – REMARKS (*Any general remarks or recommendations, or suggestions for improvement of publications and blank forms. Additional blank sheets may be used if more space is needed.)*

TYPED NAME, GRADE OR TITLE	TELEPHONE EXCHANGE/AUTOVON, PLUS EXTENSION	SIGNATURE

RECOMMENDED CHANGES TO PUBLICATIONS AND BLANK FORMS For use of this form, see AR 25-30; the proponent agency is ODISC4.	Use Part II *(reverse)* for Repair Parts and Special Tool Lists (RPSTL) and Supply Catalogs/Supply Manuals (SC/SM).	DATE

TO: *(Forward to proponent of publication or form) (Include ZIP Code)* COMMANDER U.S. ARMYTANK-AUTOMOTIVE AND ARMAMENT COMMAND ATTN: AMSTA-LC-CECT 15 KANSAS STREET NATICK, MA 01760-5052	**FROM:** *(Activity and location) (Include ZIP Code)*

PART I – ALL PUBLICATIONS (EXCEPT RPSTL AND SC/SM) AND BLANK FORMS

PUBLICATION/FORM NUMBER	DATE	TITLE
TM 9-4110-241-13	1 July 1992	Refrigerator, Panel Type, Prefabricated Assemblies

ITEM NO.	PAGE NO.	PARA-GRAPH	LINE NO. *	FIGURE NO.	TABLE NO.	RECOMMENDED CHANGES AND REASON *(Provide exact wording of recommended changes, if possible).*

**Reference to line numbers within the paragraph or subparagraph.*

TYPED NAME, GRADE OR TITLE	TELEPHONE EXCHANGE/AUTOVON, PLUS EXTENSION	SIGNATURE

TO: (*Forward direct to addressee listed in publication*) COMMANDER U.S. ARMYTANK-AUTOMOTIVE AND ARMAMENT COMMAND ATTN: AMSTA-LC-CECT 15 KANSAS STREET NATICK, MA 01760-5052	FROM: (*Activity and location) (Include ZIP Code)*	DATE

PART II – REPAIR PARTS AND SPECIAL TOOL LISTS AND SUPPLY CATALOGS/SUPPLY MANUALS

PUBLICATION NUMBER	DATE	TITLE
TM 9-4110-241-13	1 July 1992	Refrigerator, Panel Type, Prefabricated Assemblies

PAGE NO.	COLM NO.	LINE NO.	NATIONAL STOCK NUMBER	REFERENCE NO.	FIGURE NO.	ITEM NO.	TOTAL NO. OF MAJOR ITEMS SUPPORTED	RECOMMENDED ACTION

PART III – REMARKS (*Any general remarks or recommendations, or suggestions for improvement of publications and blank forms. Additional blank sheets may be used if more space is needed.)*

TYPED NAME, GRADE OR TITLE	TELEPHONE EXCHANGE/AUTOVON, PLUS EXTENSION	SIGNATURE

The Metric System and Equivalents

Linear Measure

1 centimeter = 10 millimeters = .39 inch
1 decimeter= 10 centimeters = 3.94 inches
1 meter = 10 decimeters = 39.37 inches
1 dekameter = 10 Meters = 32.8 feet
1 hectometer = 10 dekameters = 328.08 feet
1 kilometer = 10 hectometers = 3,280.8 feet

Weights

1 centigram = 10 milligrams = .15 grain
1 decigram = 10 centigrams = 1.54 grains
1 gram = 10 decigram = 0.35 ounce
1 dekagram = 10 Grams = .35 ounce
1 hectogram = 10 dekagrams = 3.52 ounces
1 kilogram = 10 hectograms = 2.2 pounds
1 quintal = 100 kilograms = 220.46 pounds
1 metric ton = 10 quintals = 1.1 short tons

Liquid Measure

1 centiliter = 10 milliliters = .34 fluid ounce
1 deciliter = 10 centiliters = 3.38 fluid ounces
1 liter = 10 deciliters = 33.81 fluid ounces
1 dekaliter = 10 liters = 2.64 gallons
1 hectoliter = 10 dekaliters = 27.42 gallons
1 kiloliter = 10 hectoliters = 264.18 gallons

Square Measure

1 sq. centimeter = 100 sq millimeters = .155 sq. inch
1 sq. decimeter= 100 sq centimeters = 125.5 sq. inches
1 sq. meter (centare) = 100 sq decimeters = 10.76 sq. feet
1 sq. dekameter (are) = 1,076.4 sq. feet
1 sq. hectometer (hectare) = 100 sq. dekameters = 2.47 acres
1 sq. kilometer = 100 sq. hectometers = .386 sq. mile

Cubic Measure

1 cu. centimeter = 1000 cu. millimeters = .06 cu. inch
1 cu. decimeter = 1000 cu. decimeters = 61.02 cu. inches
1 cu. meter = 1000 cu. decimeters = 35.31 cu. feet

Approximate Conversion Factors

To change	*To*	*Multiply by*	*To change*	*To*	*Multiply by*
inches	centimeters	2.540			
feet	meters	.305	ounce-inches	Newton-meters	.007062
yards	meters	.914	centimeters	inches	.394
miles	kilometers	1.609	meters	feet	3.280
square inches	square centimeters	6.451	meters	yards	1.094
square feet	square meters	.093	kilometers	miles	.621
square yards	square meters	.836	square centimeters	square inches	.155
square miles	square kilometers	2.590	square meters	square feet	10.764
acres	square hectometers	.405	square meters	square yards	1.196
cubic feet	cubic meters	.028	square kilometers	square miles	.386
cubic yards	cubic meters	.765	square hectometers	acres	2.471
fluid ounces	milliliters	29.573	cubic meters	cubic feet	35.315
pints	liters	.473	cubic meters	cubic yards	1.308
quarts	liters	.946	milliliters	fluid ounces	.034
gallons	liters	3.785	liters	pints	2.113
ounces	grams	28.349	liters	quarts	1.057
pounds	kilograms	.454	liters	gallons	.264
short tons	metric tons	.907	grams	ounces	.035
pound-feet	newton-meters	1.356	kilograms	pounds	2.205
pounds-inches	newton-meters	.11296	metric tons	short tons	1.102

Temperature (Exact)

°F Fahrenheit Temperature 5/9 (after subtracting 32) Celsius Temperature °C

PIN: 069963-000

This fine document...

Was brought to you by me:

Liberated Manuals -- free army and government manuals

Why do I do it? I am tired of sleazy CD-ROM sellers, who take publicly available information, slap “watermarks” and other junk on it, and sell it. Those masters of search engine manipulation make sure that their sites that sell free information, come up first in search engines. They did not create it... They did not even scan it... Why should they get your money? Why are not letting you give those free manuals to your friends?

I am setting this document FREE. This document was made by the US Government and is NOT protected by Copyright. Feel free to share, republish, sell and so on.

I am not asking you for donations, fees or handouts. If you can, please provide a link to liberatedmanuals.com, so that free manuals come up first in search engines:

<A HREF=http://www.liberatedmanuals.com/>Free Military and Government Manuals</A>

- Sincerely
  Igor Chudov
  http://igor.chudov.com/
- Chicago Machinery Movers