TM9-2330-374-14&P

TECHNICAL MANUAL

OPERATOR'S, ORGANIZATIONAL, DIRECT SUPPORT AND GENERAL SUPPORT MAINTENANCE MANUAL (INCLUDING REPAIR PARTS AND SPECIAL TOOLS LISTS)

FOR

SEMITRAILER, VAN: SUPPLY, 12-TON, 4-WHEEL M129A3 (2330-01-175-7379)

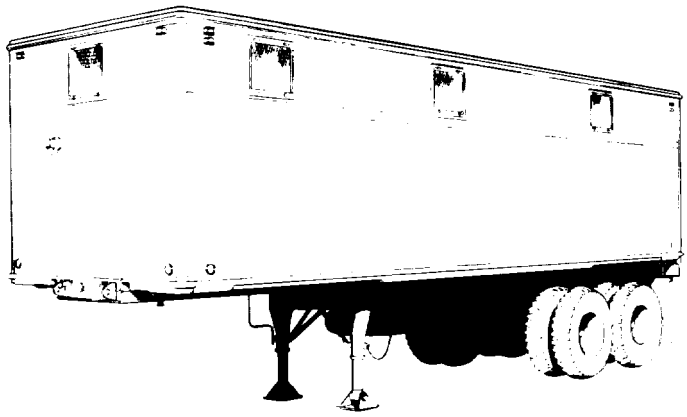

M129A3

INTRODUCTION 1-1

OPERATING INSTRUCTIONS 2-1

OPERATOR MAINTENANCE INSTRUCTIONS 3-1

ORGANIZATIONAL MAINTENANCE INSTRUCTIONS 4-1

DIRECT SUPPORT AND GENERAL SUPPORT MAINTENANCE INSTRUCTIONS 5-1

HEADQUARTERS, DEPARTMENT OF THE ARMY

JULY 1986

WARNING

Deflate tire completely before trying to remove tire from wheel. Failure to do so could result in bodily injury from the tire ring.

WARNING

Maintain a firm grip on wrench when lowering spare tire to prevent injury.

WARNING

Place pawl on ratchet when lifting spare tire to prevent injury.

WARNING

Make sure semitrailer will not roll or shift when jacking. Secure with chock blocks.

WARNING

Wear protective goggles when opening the air reservoir drain cock and avoid contact with the air stream.

WARNING

Be sure all personnel stand clear of the tractor and semitrailer during coupling and uncoupling operations.

WARNING

Disconnect 110 volt AC electrical power cable from the 110 volt outside receptacle before attempting to remove or replace fuses.

WARNING

Remove all power from vehicle prior to making any repairs on electrical system.

WARNING

Dry cleaning solvent (PD-680) is toxic and flammable. Use solvent only in a well ventilated area. Avoid prolonged breathing of solvent vapors. Keep solvent away from flame. Flash point of solvent is 138°F (59°C).

WARNING

Adhesive MIL-A-5092B, Type 1 is toxic and flammable. Use chemical goggles, gloves and good ventilation. Keep container closed; keep sparks, flames and heat away. Keep adhesive off skin, eyes and clothes. Do not breathe vapors.

WARNING

Do not grind rivet heads off due to asbestos hazard.

wARNING

Whenever possible, use a cage for protection and observe caution when inflating tires. Make sure tires are properly seated on rims before inflating. Improperly seated tires can burst with explosive force sufficient to cause death. If a cage is not available, lay tire down with tire ring side toward ground before inflating.

WARNING

Do not attempt to operate the semitrailer with the spring brakes caged except to move the vehicle out of the traveled portion of the highway in the event of an air system failure.

CAUTION

Do not walk on top of van. Leaks may occur at seams.

TECHNICAL MANUAL
No. 9-2330-374-14&P

HEADQUARTERS
DEPARTMENT OF THE ARMY
\Vashington, D.C., 18 .Ju/y, 1986

OPERATOR'S, ORGANIZATIONAL, DIRECT SUPPORT AND GENERAL SUPPORT MAINTENANCE MANUAL (INCLUDING REPAIR PARTS AND SPECIAL TOOLS LISTS)

FOR

SEMITRAILER, VAN: SUPPLY, 12-TON, 4-WHEEL, M129A3 (2330-01-175-7379)

Current as of 20 June 1986

REPORTING ERRORS AND RECOMMENDING IMPROVEMENTS

You can help improve this manual. If you find any mistakes or if you know of a way to improve the procedures, please let us know. Mail your letter DA Form 2028 (Recommended Changes to Publications and Blank Forms), or DA Form 2028-2, located in the back of this manual, direct to: Commander, US Army Tank-Automotive Command, ATTN: AMSTA-MB, Warren, MI 48397-5000. A reply will be furnished to you.

Page

CHAPTER 1. INTRODUCTION

Section I. General Information 1-1
Section II. Equipment Description 1-2
Section III. Technical Principles of Operation 1-5

CHAPTER 2. OPERATING INSTRUCTIONS

Section I. Description and Use of Operator's Controls and Indicators 2-1
Section II. Operator/Crew Preventive Maintenance Checks and Services 2-9
Section III. Operation Under Usual Conditions 2-17
Section IV. Operation Under Unusual Conditions 2-26

CHAPTER 3. OPERATOR MAINTENANCE INSTRUCTIONS

Section I. Lubrication Instructions 3-1
Section II. Operator Troubleshooting Procedures 3-5
Section III. Maintenance Procedures 3-9

			Page
CHAPTER	**4.**	**ORGANIZATIONAL MAINTENANCE INSTRUCTIONS**	
Section	I.	Repair Parts, Special Tools, TMDE and Support Equipment	4-1
Section	II.	Service Upon Receipt of Materiel	4-2
Section	III.	Organizational Preventive Maintenance Checks and Services (PMCS)	4-3
Section	IV.	Organizational Troubleshooting Procedures	4-6
Section	V.	Maintenance of Electrical System	4-14
Section	VI.	Maintenance of Brakes	4-44
Section	VII.	Maintenance of Wheels, Hubs and Drums	4-65
Section	VIII.	Maintenance of Spare Tire Carrier	4-71
Section	IX.	Maintenance of Landing Legs	4-74
Section	X.	Maintenance of Body	4-79
Section	XI.	Maintenance of Miscellaneous Body Accessories	4-91
Section	XII.	Preparation for Storage and Shipment	4-95
Section	XIII.	Maintenance Under Unusual Conditions	4-97
CHAPTER	**5.**	**DIRECT SUPPORT AND GENERAL SUPPORT MAINTENANCE INSTRUCTIONS**	
Section	I.	Repair Parts, Special Tools, TMDE and Support Equipment	5-1
Section	II.	Maintenance of Axle Assembly	5-1
Section	III.	Maintenance of Brakes	5-6
Section	IV.	Maintenance of Frame	5-7
Section	V.	Maintenance of Suspension	5-9
Section	VI.	Rebuild of the Deck	5-13
APPENDIX	**A.**	**REFERENCES**	A-1
APPENDIX	**B.**	**MAINTENANCE ALLOCATION CHART**	B-1
APPENDIX	**C.**	**COMPONENTS OF END ITEM AND BASIC ISSUE ITEMS LIST**	C-1
APPENDIX	**D.**	**ADDITIONAL AUTHORIZATION LIST**	D-1
APPENDIX	**E.**	**EXPENDABLE/DURABLE SUPPLIES AND MATERIALS LIST.**	E-1
APPENDIX	**F.**	**REPAIR PARTS AND SPECIAL TOOLS LIST**	F-1
Section	I.	Introduction	F-1
Section	II.	Repair Parts List	

			Illus/Figure
Group	06	ELECTRICAL SYSTEM	
		0608 Electrical System	1
		0608 Van Electrical System (sheet 1 of 3)	2
		0608 Van Electrical System (sheet 2 of 3)	2
		0608 Van Electrical System (sheet 3 of 3)	2
		0608 Electrical Plates	3
		0608 Circuit Breaker and Switch Box	4
		0608 Dome Light Switches	5
		0608 Ventilating Fan	6
		0609 Clearance Light	7
		0609 12 Volt Taillight	8
		0609 24 Volt Composite Taillight	9
		0609 110 Volt Dome Light	10
		0609 24 Volt Dome Light	11
		0613 Chassis Electrical System Components (sheet 1 of 2)	12

		Illus/Figure
	0613 Chassis Electrical System Components (sheet 2 of 2)	12
Group 11	REAR AXLE	
	1100 Axle Assembly (serial numbers 1HzV2920XE1007033 to 1HZV29201E1007439)	13
	1100 Axle Assembly (serial numbers 1HZV29201E1007440 to 1HzV29208E1007709)	14
Group 12	BRAKES	
	1202 Brake Shoes (serial numbers 1HZV2920XE1007033 to 1HZV29201E1007439)	15
	1202 Brake Shoes (serial numbers 1HzV29201E1007440 to 1HZV29208E1007709)	16
	1206 Slack Adjuster	17
	1208 Air Brake Chamber	18
	1208 Brake System (sheet 1 of 2)	19
	1208 Brake System (sheet 2 of 2)	19
Group 13	WHEELS	
	1311 Hub and Brake Drum....	20
	1311 Tire and Wheel Assembly	21
Group 15	FRAME, TOWING ATTACHMENTS AND DRAWBARS	
	1501 Mud Flap	22
	1501 Chock Block	23
	1501 Step	24
	1501 Ladder Assembly	25
	1501 Float Pad Assembly (Ground Board)	26
	1504 Spare Tire Carrier Assembly	27
	1507 Landing Legs	28
Group 16	SPRINGS AND SHOCK ABSORBERS	
	1607 Suspension	29
Group 18	BODY ASSEMBLY	
	1800 Van Fasteners	30
	1801 Right Door Assembly	31
	1801 Left Door Assembly	32
	1801 Door Holdbacks	33
	1801 Retractable Sash	34
	1801 Stationary Sash	35
	1805 Floor	36
Group 22	BODY CHASSIS AND ACCESSORY ITEMS	
	2202 Reflectors	37
	2210 Data Plate	38

			Page
APPENDIX	**G.**	**MANUFACTURED ITEMS**	G-1
APPENDIX	**H.**	**TORQUE LIMITS**	H-1

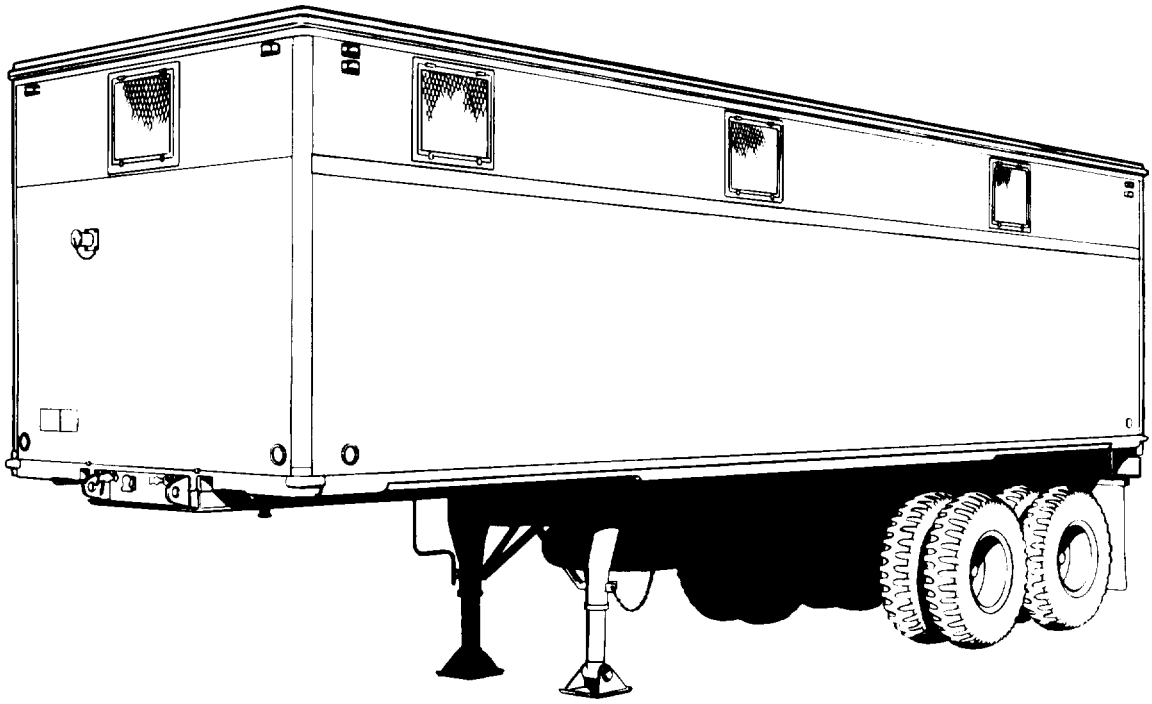

Figure 1-1. Semitrailer, M129A3, left front view

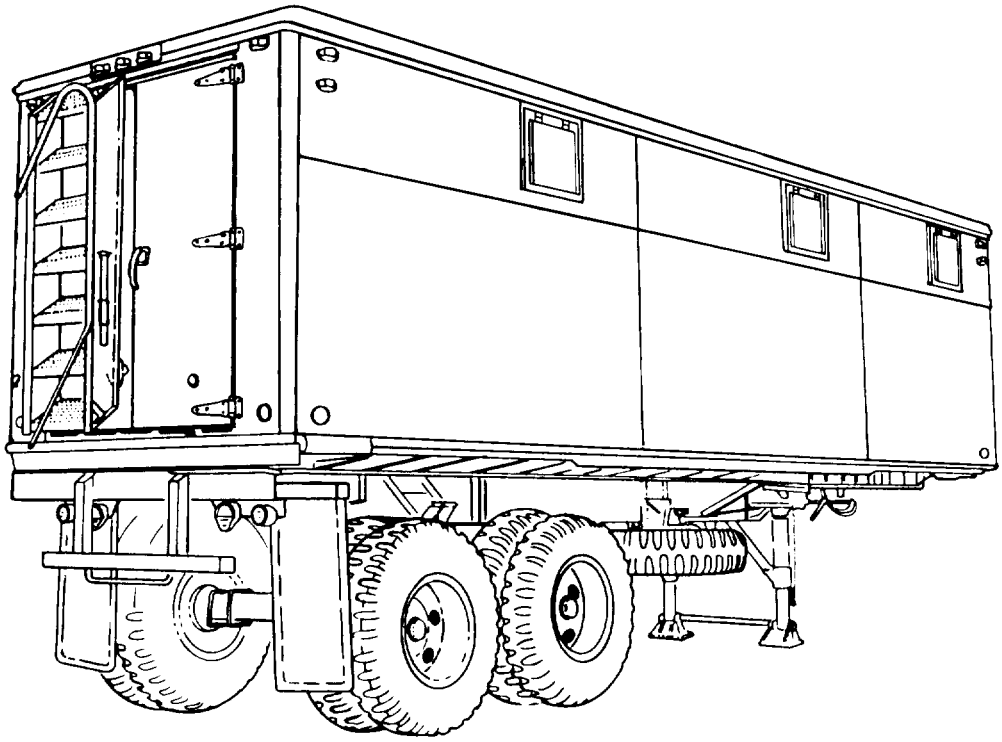

Figure 1-2. Semitrailer, M129A3, right rear view

CHAPTER 1

INTRODUTION

SECTION 1. GENERAL INFORMATION

1-1. SCOPE

a. Type of Manual. Operator's, Organizational, Direct Support and General Support Maintenance Manual (including Repair Parts and Special Tools Lists).

b. Model Number and Equipment Name.

M129A3 Semitrailer, Van: Supply, 12-ton, 4-wheel

c. Purpose of Equipment. The semitrailers are intended for use in transporting military supplies.

d. Special Limitations on Equipment. Do not exceed the load and speed limitation of the semitrailer. The semitrailer is designed to be towed over smooth, hard-surfaced roads with loads UP to 12-tons (10,900 kg) at speeds as high as 50 mph (80 km/h). It can also be towed-over unimproved roads, trails and open rolling terrain with loads up to 12-tons (10,900 kg) at a sustained speed of 20 mph (32 km/h). The semitrailer should be operated only after being serviced and equipped for existing climatic conditions.

1-2. MAINTENANCE FORMS AND RECORDS

Department of the Army forms and procedures used for equipment maintenance will be those prescribed by DA Pam 738-750, The Army Maintenance Management System (TAMMS).

1-3. DESTRUCTION OF ARMY MATERIEL TO PREVENT ENEMY USE

Refer to TM 750-244-6, Procedures for Destruction of Equipment to Prevent Enemy Use (Us. Army Tank-Automotive Command).

1-4. PREPARATION FOR STORAGE OR SHIPMENT

See Chapter 4 for storage and shipment information.

1-5. REPORTING EQUIPMENT RECOMMENDATIONS (EIRS)

If your semitrailer needs improvement, let us know. Send us an EIR. You, the user, are the only one who can tell us what you don't like about your equipment. Let us know why you don't like the design or performance. Put it on an SF368 (Quality Deficiency Report). Mail it to Commander, U.S. Army Tank-Automotive Command, Attn: AMSTA-MP, Warren, MI 48397-5000. We'll send you a reply.

SECTION II. EQUIPMENT DESCRIPTION

Page
Equipment Capabilities and Features 1-2
Equipment Data 1-3
Location and Description of Major Components 1-3

1-6. EQUIPMENT CAPABILITIES AND FEATURES

a. Capabilities.

(1) Each semitrailer is to be towed by a 5-ton, 6 X 6 truck tractor M52 or similar vehicle equipped with fifth wheel, air supply and a 24 volt electrical system.

(2) If a towing vehicle with a 24 volt electrical system is not available, an alternate towing vehicle with a 12 volt electrical system may be used.

b. Features.

(1) 12 ton, 4-wheel supply van semitrailer.

(2) Cross-country payload 24,000 lbs at 20 mph (10,900 kilograms at 32 km/h).

(3) Highway payload 24,000 lbs at 50 mph (10,900 kilograms at 80 km/h).

(4) Fifth wheel plate and kingpin coupling.

(5) Two rear axles on leaf-spring suspension.

(6) Foot-type retractable landing legs, for front end support.

(7) Spare tire on winch-type spare tire carrier.

(8) Chock blocks for parking, chained to chassis.

(9) Two float pads, for landing leg use on soft ground.

(10) Towing vehicle supplies brake air pressure and control of brakes.

(11) Chassis frame welded into single integral unit.

(12) Body has seven windows with blackout covers.

(13) Front window is stationary. Six windows (three each side of trailer) are retractable.

(14) Additional 110V AC electrical system for dome lights, wall receptacles, circuit breakers and switch box.

1-7. LOCATION AND DESCRIPTION OF MAJOR COMPONENTS

(1) CHASSIS FRAME AND BODY FRAME. Constructed of steel. It includes the welded upper fifth wheel plate and kingpin.

(2) SUSPENSION SYSTEM. Consists of trunnion tube, springs and axle assembly.

(3) VAN BODY. Has two doors in rear. Stepladder hangs on left door. Equipped with windows.

(4) LANDING LEG. Manually extended when semitrailer is unhooked from towing vehicle and manually retracted when truck tractor is hooked up. Two-speed gearbox for ease of handling.

(5) KINGPIN. Connects semitrailer to fifth wheel of truck tractor.

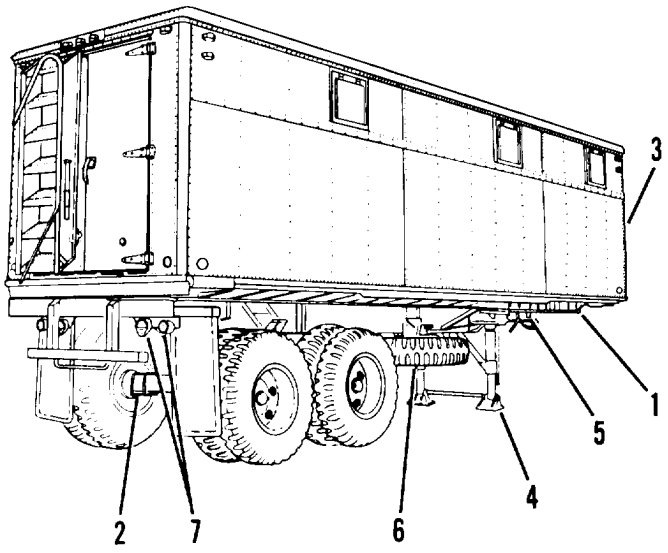

Figure 1-3. Semitrailer, M129A3, right rear view

(6) SPARE WHEEL AND TIRE CARRIER. Can be lowered or raised by using spare tire carrier operating shaft.

(7) 12 VOLT AND 24 VOLT LIGHTS. Contain back-up, stop, blackout and clearance lights.

1-8. EQUIPMENT DATA

a. Semitrailer.

Towing vehicle	5 ton 6x6
Towing facilities	King pin
Kingpin to front of chassis	2 ft 6 in. (76cm)
Kingpin to landing leg	6 ft 5-1/2 in. (197 cm)
Dimensions overall:	
Length	28 ft 8-1/4 in. (874 cm)
Width	7 ft 4-1/2 in. (225 cm)
Height	12 ft (366 cm)
Floor height (empty)	4 ft 10-1/2 in. (149 cm)
Floor height (loaded)	4 ft 7-1/4 in. (140 cm)
Upper fifth wheel plate height (loaded)	3 ft 10 in. (117 cm)
Track (tread center-to-center of tires)	6 ft (183 cm)
Empty weight	15,400 lbs (7,000 kg)

Payload:
- Hard surface roads ..... 24,000 lbs (10,900 kg)
- Cross country ..... 24,000 lbs (10,900 kg)

Center of gravity from ground (empty) ..... 4 ft (122 cm)

Center of gravity forward of suspension:
- Loaded ..... 8 ft 1 in. (246 cm)
- Empty ..... 6 ft 2-1/2 in. (189 cm)

Angle of departure (loaded) ..... 50 deg

b. Electrical System.

Voltage ..... 12, 24 and 110

Dome Lights:
- 24 volt (four) ..... 21 cp
- 110 volt AC (eight) ..... 60 watt

Lamps:
- Right and left taillight assemblies-12 volt:
  - Service taillight lamp ..... 15 cp
  - Service stop light lamp ..... 32 cp
  - Turn light lamp ..... 32 cp
- Right and left composite light assemblies - 24 volt:
  - Blackout marker and stop light lamps ..... 3 cp
  - Stop and turn signal light lamp ..... 32 cp
  - Service taillight lamp ..... 3 cp

c. Axles.

Type ..... Tubular

Quantity 2

Manufacturer ..... Standard Forge & Axle Co.
(Serial Numbers 1HZV2920XE1007033 through 1HZV29201E1007439)

Manufacturer ..... Dana Co.
(Serial Numbers 1HZV29201E1007440 through 1HZV29208E1007709)

d. Brakes.

Actuation ..... Air

Internal brakes ..... S-cam, two-shoe, double anchor, expanding, self-centering

e. Wheels.

Type ..... Dual, military disk

Manufacturer ..... Budd Co.

Rim Size ..... 20 x 7.5

Wheel bearings:
- Type ..... Tapered roller
- Manufacturer ..... Timken

f. Tires.

Quantity	8
Size	11.00 X 20
Type	NDCC military
Ply	12
Tire inflation:	
Highway driving	60 psi
Cross-country driving	40 psi

g. Spare Tire Carrier.

Type	One man, cable lift
Make	Nash
Operated by	Wheel nut wrench

h. Landing Leg.

Type	Vertical, two legs with feet
Manufacturer	Westran
Length to top of floor:	
Retracted	3 ft 9 in. (114 cm)
Extended	5 ft (152.4 cm)
operation	Handcrank, two-speed
Width at feet (center to center)	4 ft 2-5/16 in. (128 cm)

Section III. TECHNICAL PRINCIPLES OF OPERATION

1-9. SYSTEMS OF THE M129A3 SEMITRAILER

(1) ELECTRICAL SYSTEM. Connects to towing vehicle electrical system to activate the 12 or 24 volt system. Includes 12 volt, 24 volt and 110 volt wiring for operating taillights, clearance lights, dome lights, and van receptacles. The 110 volt service is connected to an external power supply.

(2) BRAKE SYSTEM. Air brake system for service, emergency and parking brake operation. Includes air reservoir, gladhands, drain cock, and emergency relay valve, air chambers, lines and fittings.

(3) SERVICE BRAKE SYSTEM. Air pressure activates the air chambers, which push the slack adjusters. The slack adjusters turn the camshafts causing the brake shoes to expand against the brake drum.

(4) SUSPENSION SYSTEM. Includes springs, u-bolts, axles and trunnion tube for ease of travel on improved and unimproved roads.

CHAPTER 2

OPERATING INSTRUCTIONS

Section I. DESCRIPTION AND USE OF OPERATOR's CONTROLS AND INDICATORS

Page

Air Reservoir Drain Cock 2-3
Brake Air Hose Couplings 2-3
Chock Blocks 2-5
Dome Light Switches 2-2
Dummy Couplings 2-3
Float Pads (Ground Board Assemblies) 2-5
Intervehicular Cable Receptacles 2-2
Kingpin 2-6
Landing Leg Handcrank 2-4
Service Lights and Chassis Electrical Wiring 2-7
Spare Tire Carrier Operating Shaft 2-4
Stepladder and Retractable Step 2-6
Van Body 2-8
110 Volt AC Body Lights and Wiring 2-8
110 Volt AC External Receptacles 2-2
12 Volt Body Lights and Wiring 2-7
24 Volt Body Lights and Wiring 2-8
110 Volt Switch Box and Circuit Breaker Load Center 2-1
24 Volt Ventilating Fan 2-7
Windows 2-9

2-1. 110 VOLT SWITCH BOX AND CIRCUIT BREAKER LOAD CENTER

a. Purpose. Protects 110 volt electrical circuits.

b. Location. One mounted above the other inside of van on right side of front window (figure 2-1).

c. Switch Box (1). Contains double-pole, single-throw knife switch (2) and two 60 amp fuses (3).

d. Circuit Breaker Load Center (4). Contains four 20 amp switch type circuit breakers (5).

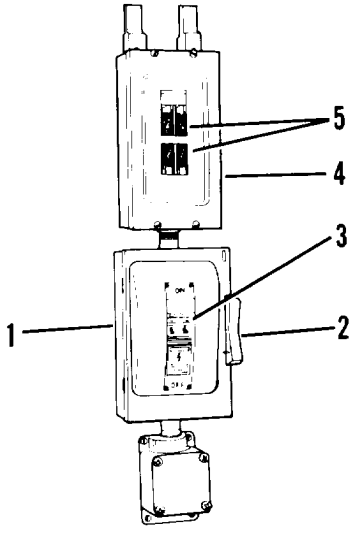

Figure 2-1. 110 volt switch box and circuit breaker load center

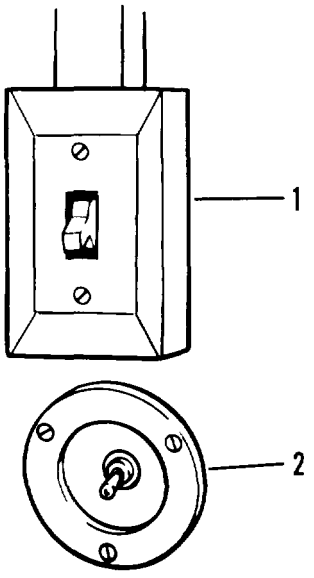

Figure 2-2. Dome light switches

2-2. DOME LIGHT SWITCHES

a. 110 Volt Dome Light Switch (1). Controls eight dome lights in semitrailer body (figure 2-2).

b. 24 Volt Dome Light Switch (2). Controls four dome lights in semitrailer body .

c. Location. Inside of van on the rear wall.

d. Switch Positions. Both switches have "ON" and "OFF" positions.

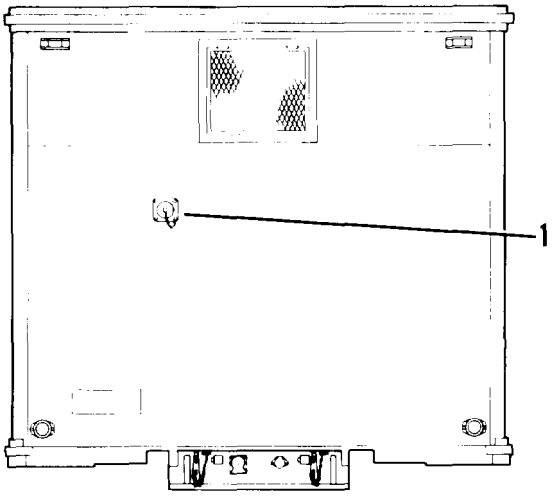

Figure 2-3. 110 volt external receptacle

2-3. 110 VOLT AC EXTERNAL RECEPTACLE

a. Used for connecting an external 110-volt AC electrical supply to semitrailer (1, figure 2-3).

b. Two-pin type.

c. Mounted on the front of semitrailer body approximately midway up.

d. Includes dust cover on chain.

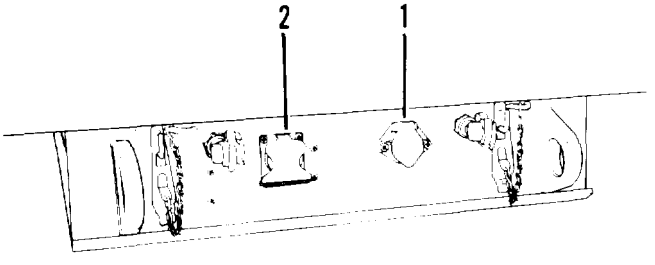

Figure 2-4. Intervehicular cable receptacles

2 4 . INTERVEHICULAR CABLE RECEPTACLES

a. Used for connecting 12 volt (1, figure 2-4) or 24 volt (2) electrical power from towing vehicle to semitrailer.

b. Located on front chassis crossmember.

2-5. BRAKE AIR HOSE COUPLINGS

a. Two air hose couplings tagged SERVICE (1, figure 2-5) and EMERGENCY (2).

b. Used for connecting the intervehicular hoses from the towing vehicle to the semitrailer.

c. After connection of hoses, the service brakes on the semitrailer can be controlled by the brake controls on the towing vehicle.

d. Located on front crossmember of the chassis frame.

2-6. DUMMY COUPLINGS

a. TWO dummy couplings (3, figure 2-5) to be fitted to the SERVICE and EMERGENCY air hose couplings.

b. Connect when brake air hose couplings are not connected to the towing vehicle.

c. Used to prevent dirt and moisture from entering the braking system.

d. Chained to brackets welded to the front crossmember of the chassis frame.

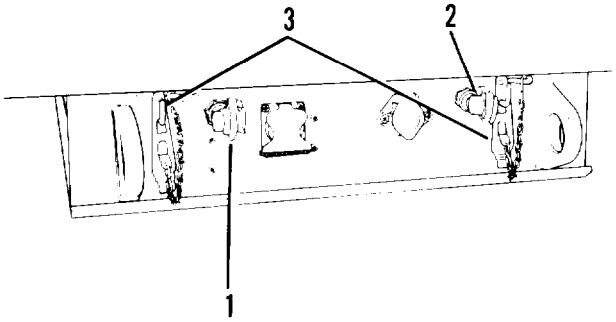

Figure 2-5. Brake air hose couplings

2-7. AIR RESERVOIR DRAIN COCK

WARNING

Wear protective goggles when opening air reservoir drain cock (1, figure 2-6) and avoid contact with the air stream.

a. Used to relieve air pressure in the semitrailer braking system.

b. Used for drainage of moisture collected in air reservoir.

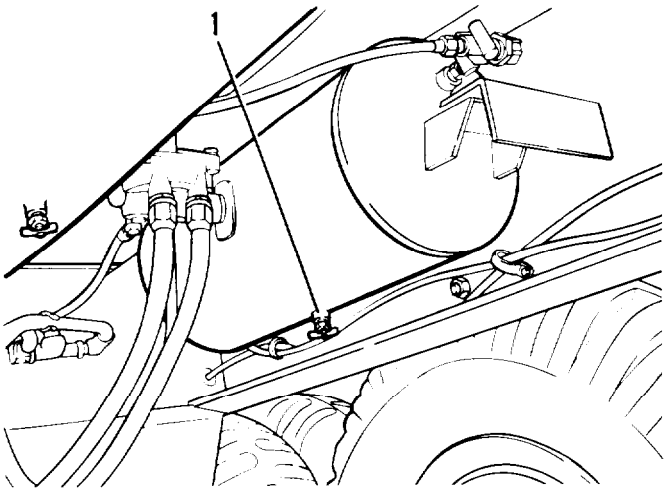

Figure 2-6. Air reservoir drain cock

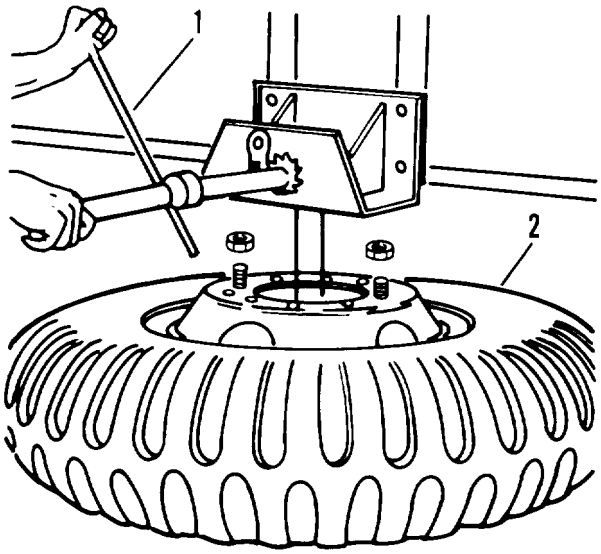

Figure 2-7. Operating spare tire

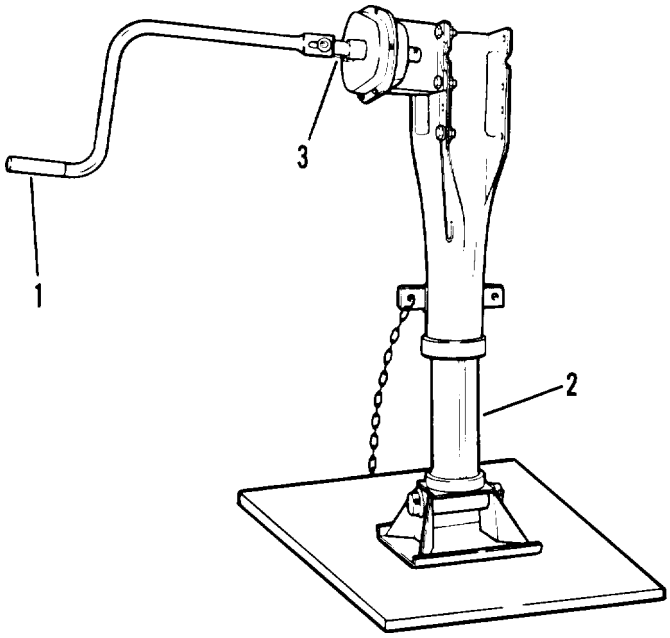

Figure 2-8. Landing leg handcrank

2-8. SPARE TIRE CARRIER OPERATING SHAFT

a. Used for raising and lowering spare tire.

b. Operated with lug nut wrench (1, figure 2-7).

c. A metal cable is wound on an operating shaft to lift the tire to carrying position.

d. Rotating shaft clockwise raises spare tire (2) to the carrying position.

e. Counterclockwise rotation lowers spare tire (2) to the ground.

f. Located on right hand side of semitrailer and attached to the main member of the tire carrier.

2-9. LANDING LEG HANDCRANK

a. Used to raise and lower landing legs.

b. Rotating handcrank (1, figure 2-8) clockwise lowers landing legs (2) for parking semitrailer.

c. Counterclockwise rotation raises legs to towing position.

d. Pushing operating shaft (3) in engages low speed gear for ease and speed in raising or lowering legs between ground and full up position.

e. Pulling operating shaft (3) out engages high speed gear for raising or lowering legs (2) when semitrailer is under load.

f. Located on right side of semitrailer.

2-10. FLOAT PADS (GROUND BOARD ASSEMBLIES)

a. Two float pads (1, figure 2-9) are provided for placing under landing leg feet to keep them from sinking into soft ground.

b. Stored in brackets (2) welded to frame.

c. Secured to landing leg bracket with chains (3).

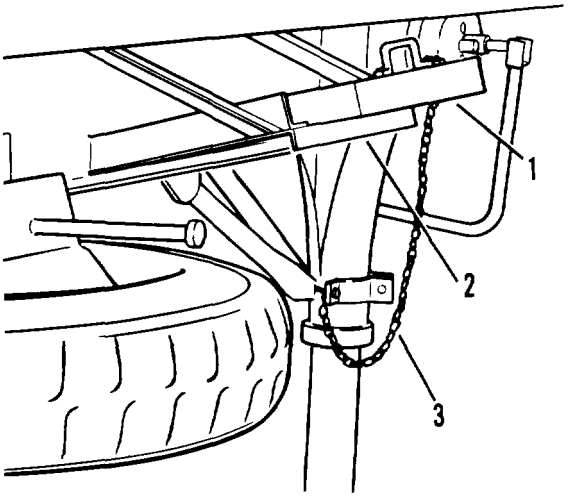

Figure 2-9. Float pad (board assembly)

2-11. CHOCK BLOCKS

a. One chock block (1, figure 2-10) located on each side of semitrailer.

b. Depending upon the terrain, place chock blocks (1) firmly behind or forward of wheels on each side of semitrailer.

c. Helps keep semitrailer from moving when truck tractor is unhooked or when the unit is parked on a hill.

d. Chain (2) holds chock block (1) to semitrailer to keep it from being lost.

e. Stowage bracket (3) stows chock block (1) when not in use.

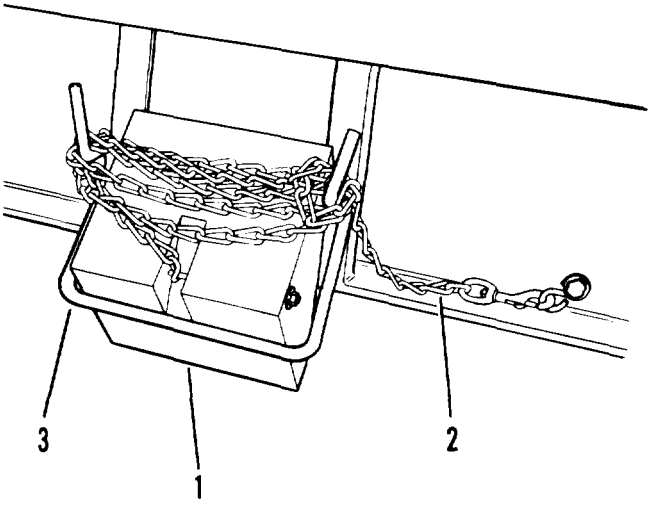

Figure 2-10. Chock block

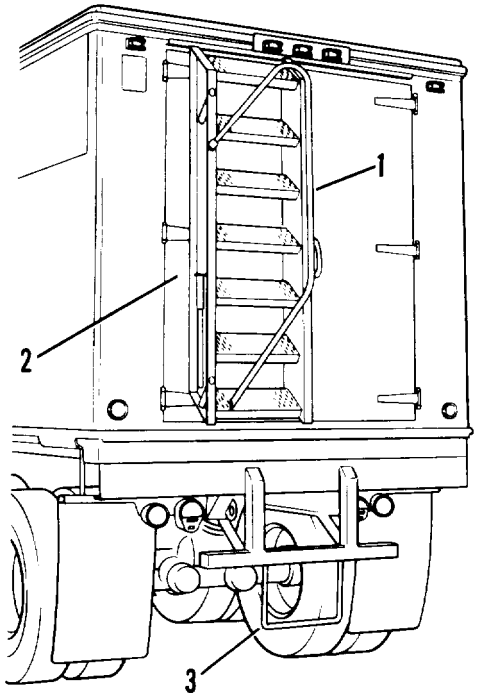

Figure 2-11. Stepladder and retractable step

2-12. STEPLADDER AND RETRACTABLE STEP

a. The M129A3 semitrailer van has a stepladder (1, figure 2-11) to aid in climbing in and out of van body.

b. The stepladder (1) hangs on left rear door (2) when not in use. It is held in place by removable pins fastened on a chain to the body.

c. A chain holds up retractable step (3) when not in use.

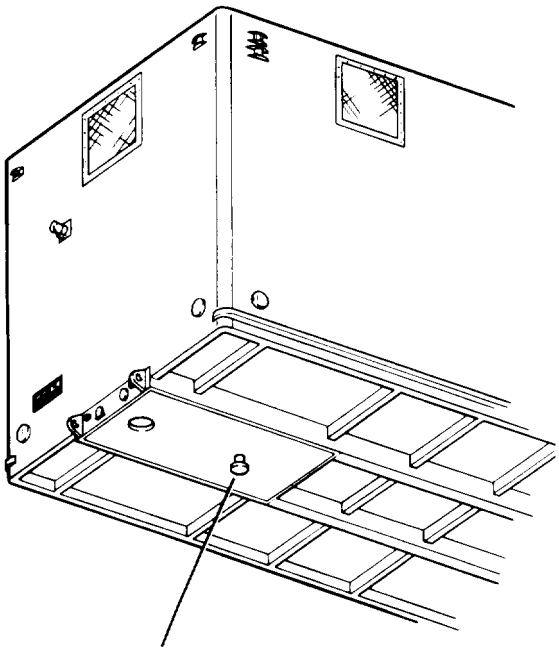

Figure 2-12. Kingpin

2-13. KINGPIN

a. Used to couple semitrailer to towing vehicle.

b. Protrudes from the center of the fifth wheel upper plate of the semitrailer (1, figure 2-12).

2-14. 24 VOLT VENITLATING FAN

a. The fan (1, figure 2-13) provides ventilation for the van.

b. Toggle switch (2) above fan controls operation.

c. Located in rear upper left corner of van.

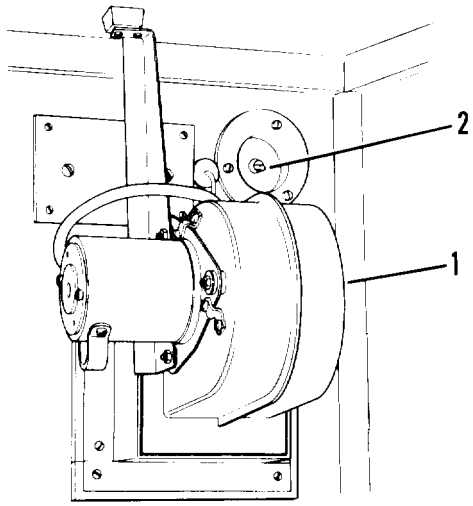

Figure 2-13. 24 volt ventilating fan

2-15. SERVICE LIGHTS AND CHASSIS ELECTRICAL WIRING

a. 12 volt and 24 volt chassis lights as follows:

- 12 volt stop, turn and taillight (two used)
- 24 volt stop and turn signal, tail blackout marker and blackout stop, composite light assembly (two used)

b. A 12 volt receptacle and a 24 volt receptacle on front crossmember supplies current to chassis wiring from towing vehicle.

c. Current is routed to van body wiring 12 volt and 24 volt body receptacle located on right longitudinal frame rail.

2-16. 12 VOLT BODY LIGHTS AND WIRING

a. Circuit receives power through 12 volt receptacle on right frame rail.

b. Eleven 12 volt body clearance lights consisting of:

- Two amber service clearance lights (front)
- Two amber service clearance lights (front-side)
- Two red service clearance lights (rear)
- Two red service clearance lights (rear-side)
- Three red triple lamp cluster (rear)

2-17. 24 VOLT BODY LIGHTS AND WIRING

a. Circuit receives power through 24 volt receptacle on right frame rail.

b. 24 volt body electrical system consists of:

- Four dome lights with switch
- Ventilating fan with switch
- Four 24 volt clearance lights

c. 24 volt clearance lights consist of:

- Two amber service clearance lights (top front sides)
- Two red service clearance lights (top rear sides)

2-18. 110 VOLT AC BODY LIGHT8 AND WIRING

a. 110 volt is from external source.

b. Circuit receives power through 110 volt receptacle located approximately midway up on front of van body.

c. 110 volt body electrical system consists of:

- Circuit breaker load center with four 20 amp breakers
- Switch box with two 60 amp fuses
- Eight 110 volt dome lights (van ceiling)
- Dome light switch (rear inside van wall)
- Sixteen 110 volt body wall receptacles; eight on each side (next to ceiling)

2-19. VAN BODY

a. Two doors (1, figure 2-14) at rear of body.

b. Door lock, latch and handle (2) on right rear door.

c. Detachable step ladder (3) with adjustable legs mounted on left rear door. Used in entering and leaving semitrailer.

d. Floor is made of hardwood boards bolted to body chassis.

e. Eight reflectors (4) are located on body as follows:

- One each corner of front
- One each corner of rear

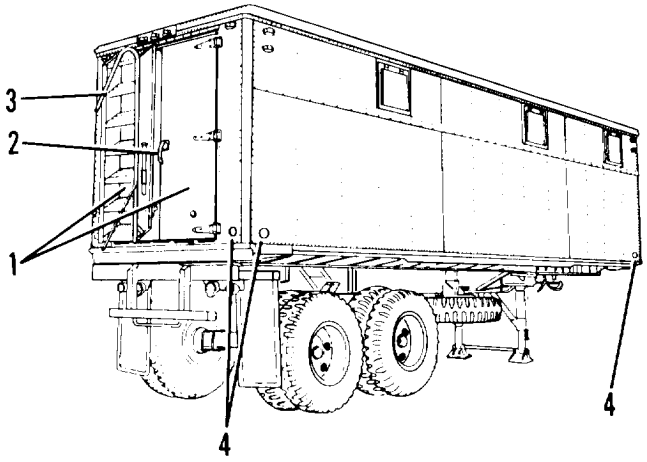

Figure 2-14. Van body

2-20. WINDOWS

a. The M129A3 semitrailer van has seven windows consisting of:

- Three retractable windows (right side) (figure 2-15)
- Three retractable windows (left side)
- One stationary window (front) (figure 2-16).

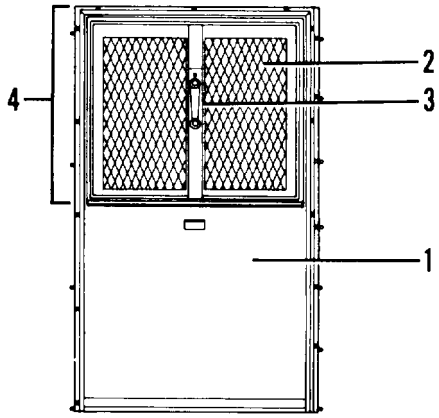

Figure 2-15. Retractable window

b. Blackout covers (1, figure 2-15) that slide up inside of the semitrailer.

c. Brush guards (2).

d. A lever (3) is used to open and close retractable window sash (4).

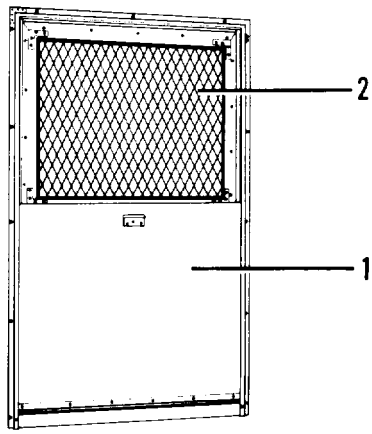

Figure 2-16. Stationary window

Section II. OPERATOR/CREW PREVENTIVE MAINTENANCE CHECKS AND SERVICES (PMCS)

	Page
Maintenance Forms and Records	2-9
Operator/Crew Preventive Maintenance Checks and Services	2-9

2-21. MAINTENANCE FORMS AND RECORDS

The forms and records you fill out have several uses. They are a permanent record of the services, repairs and modifications made on your vehicle. They are reports to organizational maintenance and to your commander. They are also a checklist for you when you want to know what is wrong with vehicle after its last use and whether those faults have been fixed. For information on forms and records, see DA Pam 738-750.

2-22. OPERATOR/CREW PREVENTIVE MAINTENANCE CHECKS AND SERVICES

a. Do your before (B) PREVENTIVE MAINTENANCE just before you operate the vehicle. Pay attention to CAUTIONS and WARNINGS.

b. Do your during (D) PREVENTIVE MAINTENANCE during operation. (During operation means to monitor the vehicle and its related components while they are actually being operated.)

c. Do your after (A) PREVENTIVE MAINTENANCE right after operating the vehicle. Pay attention to CAUTIONS and WARNINGS.

d. DO your weekly (W) PREVENTIVE MAINTENANCE once a week.

e. If something does not work, troubleshoot it with the instructions in this manual and notify your supervisor.

f. Always do your PREVENTIVE MAINTENANCE in the same order so it gets to be a habit. Once you have had some practice, you'll spot anything wrong in a hurry.

g. If anything looks wrong and you can't fix it, write it on your DA Form 2404. If something is seriously wrong, report it to organizational maintenance RIGHT NOW!

h. When you do your PREVENTIVE MAINTENANCE, take the proper tools needed to make all checks. Always take clean rags with you.

WARNING

Dry cleaning solvent (PD-680) is both toxic and flammable. Avoid prolonged breathing of vapors. Avoid skin contact. Use only in a well ventilated area. Keep away from open flame. Flash point of solvent is 138°F (59°C).

(1) Keep working area and tools clean. Dirt, grease, oil and debris only get in the way and may cover up a serious problem. Clean as you work and as needed. Use dry cleaning solvent (PD-680) to clean metal surfaces. Use soap and water to clean rubber and plastic material.

(2) Check for loose, missing, bent or broken bolts, nuts, and screws. Check for chipped paint, bare metal or rust around bolt heads. Tighten loose bolts or report it to organizational maintenance if you are unable to tighten it.

(3) Check for loose or chipped paint, rust or gaps where parts are welded together. Report bad welds to organizational maintenance.

(4) Check for cracked or broken insulation, bare wires and loose or broken connectors. Tighten loose connectors. Make sure wires are in good shape.

Table 2-1. Operator/Crew Preventive Maintenance Checks and Services (PMCS)

B-Before D-During A-After W-Weekly

NOTE: Within designated interval, these checks are to be performed in the order listed.

Item No.	Interval B	Interval D	Interval A	Interval W	Item To Be Inspected Procedures: Check for and have rerquired, filled, or adjusted as needed	Equipment is Not Ready/ Available if:
					NOTE	
					Perform weekly as well as before PMCS if:	
					a. You are the assigned operator but have not operated the vehicle since the last weekly.	
					b. You are operating the vehicle for the first time.	
1					TIRES	
				●	a. Check tire pressure (60 psi-hard road, 40 psi cross-country) when tires are cool.	Two or more tires have cuts or abrasions that would result in tire failure during operation. Two or more tires missing or unserviceable.
	●				b. Check tires for cuts, foreign objects or unusual tread wear. Remove any stones from between tires.	
2					WHEELS	
					NOTE	
					Left wheel nuts are turned counterclockwise to tighten and clockwise to loosen. Right wheel nuts are turned clockwise to tighten and counterclockwise to loosen.	
	●				Check wheels for damage and wheel nuts for tightness and presence.	Two or more wheel nuts missing from any wheel.
3					AIR HOSES AND CABLES	
	●				Check intervehicular air hoses and cables for cuts and breaks.	Air hoses or inter-vehicular cables are broken or missing.

Table 2-1. Operator/Crew Preventive Maintenance Checks and Services (PMCS)

B-Before D-During A-After W-Weekly

NOTE: Within designated interval, these checks are to be performed in the order listed.

Item No.	Interval B	Interval D	Interval A	Interval W	Item To Be Inspected Procedures: Check for and have required, filled, or adjusted as needed	Equipment is Not Ready/ Available if:
4					BRAKE SYSTEM	
	●				a. Test brake system by connecting semitrailer to towing vehicle. Check hose connections and make sure the towing vehicle air service line valve is turned on. Actuate the service brakes.	Service brakes fail to operate
					NOTE Service brakes can be heard to actuate at the semitrailer. Air chamber push rods will compress.	
		●			b. With semitrailer connected to the towing vehicle, have an assistant actuate the service brakes and listen for air leaks at the gladhands, at the relay valve and at the air reservoir.	Air leaks are found.
		●			c. Be alert for unusual difficulty in stopping that would indicate that the semitrailer service brakes are malfunctioning.	
		●			d. Push parking brake control in. Air chamber push rods should extend to release brakes.	
		●			e. Pull parking brake control. Air chamber push rods should compress to apply brakes.	

Table 2-1. Operator/Crew Preventive Maintenance Checks and Services (PMCS)

B-Before **D-During** **A-After** **W-Weekly**

NOTE: **Within designated interval, these checks are to be performed in the order listed.**

Item No.	Interval B	D	A	W	Item To Be Inspected Procedures: Check for and have required, filled, or adjusted as needed	Equipment is Not Ready/ Available if:
					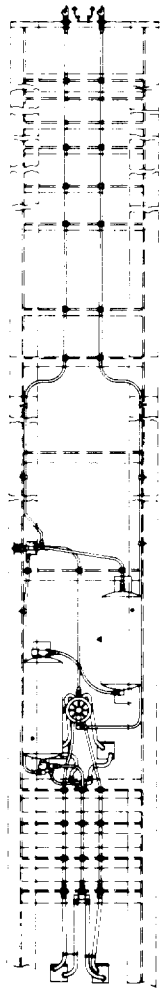	
					Schematic diagram of brake system	
5					AIR RESERVOIR	
					WARNING	
					Wear protective goggles when opening air reservoir drain cock and avoid contact with air stream.	

Table 2-1. Operator/Crew Preventive Maintenance Checks and Services (PMCS)

B-Before D-During A-After W-Weekly

NOTE: Within designated interval, these checks are to be performed in the order listed.

Item No.	Interval B	Interval D	Interval A	Interval W	Item To Be Inspected Procedures: Check for and have required, filled, or adjusted as needed	Equipment is Not Ready/ Available if:
			●		a. Open drain cocks (1) on air reservoirs (2) to drain condensation. Close drain cocks.	
				●	b. Inspect air reservoirs (2) for damages. 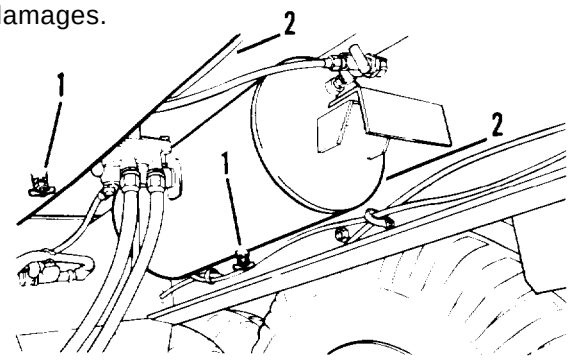	
6					LIGHTS AND REFLECTORS	
					NOTE An assistant is required while checking the brake lights.	
		●			a. If tactical situation permits, connect intervehicular cable to the towing vehicle. Operate the vehicle light switch through all settings and check the lights.	
				●	b. Check for damage and presence of reflectors.	
7					LANDING LEG	
	●				a. Inspect handcrank (1), gearbox (2) and landing leg foot (3) for secure mounting. Check that handcrank holder (4) stows handcrank (1) securely.	
		●			b. When cranking landing leg (5), check that each leg moves smoothly and does not bind. Pull out handcrank and check for high speed operation. Push in for low speed operation.	

Table 2-1. Operator/Crew Preventive Maintenance Checks and Services (PMCS)

B-Before D-During A-After W-Weekly

NOTE: Within designated interval, these checks are to be performed in the order listed.

Item No.	Interval B	D	A	W	Item To Be Inspected Procedures: Check for and have required, filled, or adjusted as needed	Equipment is Not Ready/ Available if:
					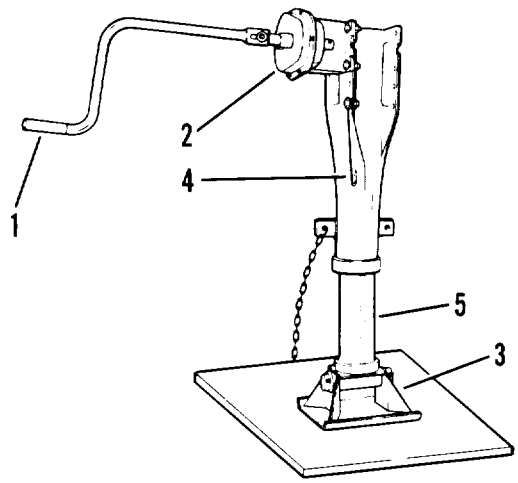	
8					KINGPIN	
	●				a. Inspect kingpin for cracks and bends.	Damaged or missing kingpin.
	●				b. Inspect upper fifth wheel plate for cracks and dents.	
9					SUSPENSION	
				●	a. Inspect springs for abnormal sag, broken or shifted leaves, loose or missing leaf clips or U-bolt.	
				●	b. Inspect axles for obvious damage.	
10					FUSES AND CIRCUIT BREAKERS	
	●				Check for blown fuses and tripped circuit breakers in 110 volt switch box and circuit breaker load center.	
11				●	ELECTRICAL WIRING	
					Visually inspect chassis electrical wiring and receptacles.	

Table 2-1. Operator/Crew Preventive Maintenance Checks and Services (PMCS)

B-Before D-During A-After W-Weekly

NOTE: Within designated interval, these checks are to be performed in the order listed.

Item No.	Interval B	D	A	W	Item To Be Inspected Procedures: Check for and have required, filled, or adjusted as needed	Equipment is Not Ready/ Available if:
12					BODY	
	●				a. Visually inspect windows for broken glass.	
	●				b. Check doors and panels for proper operation and security.	
	●				c. Check for any tampering or damage that may have occurred since last operation.	
13					ACCESSORIES	
	●				Visually inspect assemblies such as spare tire carrier, rear step, stepladder and chock blocks for looseness of mountings or connections.	
14					OPERATION	
		●			a. Be alert for any unusual noises when towing semitrailer. Stop and investigate any unusual noises.	
		●			b. Ensure that semitrailer is tracking correctly with no side pull.	

Section III. OPERATION UNDER USUAL CONDITIONS

Page

Data Plate 2-25
Operating Spare Tire Carrier 2-24
Operating Towing Vehicle and Semitrailer 2-20
Preparing Semitrailer for Stationary Use 2-22
Preparation for Use 2-17
Uncoupling Semitrailer from Towing Vehicle 2-21

2-23. PREPARATION FOR USE

Perform the preventive maintenance checks and services (B- Before Operation Column) listed in Table 2-1 before doing the following procedures. These checks and services will determine that semitrailer is ready for operation.

a. Positioning the Chock Blocks.

(1) Remove chock blocks from stowage brackets.

(2) Place chock blocks behind tires on level ground or uphill slope. On downhill slope, place chock blocks in front of tires.

b. Coupling Semitrailer to Towing Vehicle.

WARNING

Be sure all personnel stand clear of the tractor and semitrailer during coupling operations or personal injury may result.

(1) Align towing vehicle with semitrailer.

(2) Slowly back towing vehicle into position. Be sure kingpin (1, figure 2-17) is in line with fifth wheel coupler jaws (2).

(3) Stop the towing vehicle just before the kingpin plate of the semitrailer starts to ride up the fifth wheel (3) of the towing vehicle.

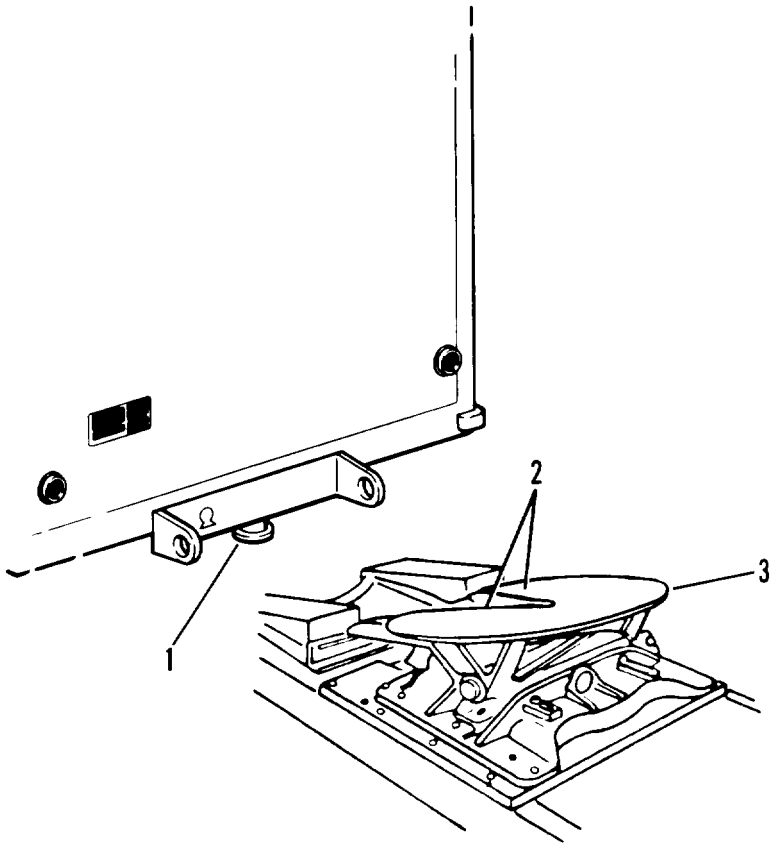

Figure 2-17. Coupling semitrailer to towing vehicle

c. Connect Intervehicular Hoses.

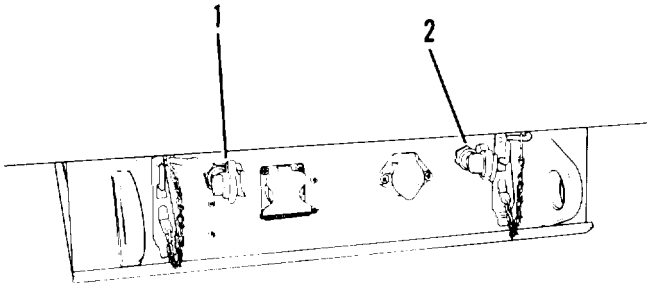

Figure 2-18. Connecting intervehicular hoses

CAUTION

This operation is performed to lock the brakes and prevent movement of the semitrailer. Landing legs may be damaged if the semitrailer moves.

(1) Connect the two air hoses marked SERVICE (1, figure 2-18) and EMERGENCY (2) on towing vehicle to corresponding air hose couplings on the semitrailer.

(2) Open air lines shutoff valves on towing vehicle.

(3) If no air leakage is detected, apply the brakes on the semitrailer from the towing vehicle.

d. Completing Coupling Semitrailer to Towing Vehicle.

(1) Before kingpin plate (1, figure 2-19) starts to ride approach ramps (2), check that the kingpin plate (1) is above approach ramps (2). Adjust height as needed by using landing gear. Make sure towing vehicle fifth wheel coupler jaws (3) are open.

(2) Slowly back the towing vehicle until coupler jaws (3) engage the kingpin (4).

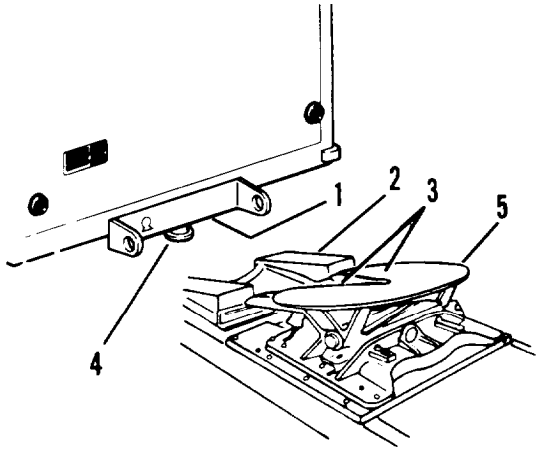

Figure 2-19. Completing coupling semitrailer to towing vehicle

CAUTION

Visually check the coupling. You should not be able to see daylight between the fifth wheel and the kingpin plate.

(3) Make sure coupling is secure by inching truck tractor forward. If coupling is not locked, rock truck tractor back and forth slowly until kingpin (1) is locked in fifth wheel (5).

(4) Connect intervehicular cable by opening the cover on the receptacle. Align slot on plug with aligning key of receptacle. Release cover. Operate lights from towing vehicle to make certain lights are in working order.

NOTE

The 12 volt receptacle is located on the left side and the 24 volt receptacle is located on the right side of semitrailer front crossmember.

CAUTION

If coupling operation is not completed and another attempt is to be made, pull towing vehicle forward carefully. Do not exceed the limits of air hoses and electrical cable.

(5) Check the air lines and electrical cable to be sure that they are supported and will not catch or chafe.

(6) Recheck fifth wheel/kingpin locking by trying to move truck tractor and semitrailer forward.

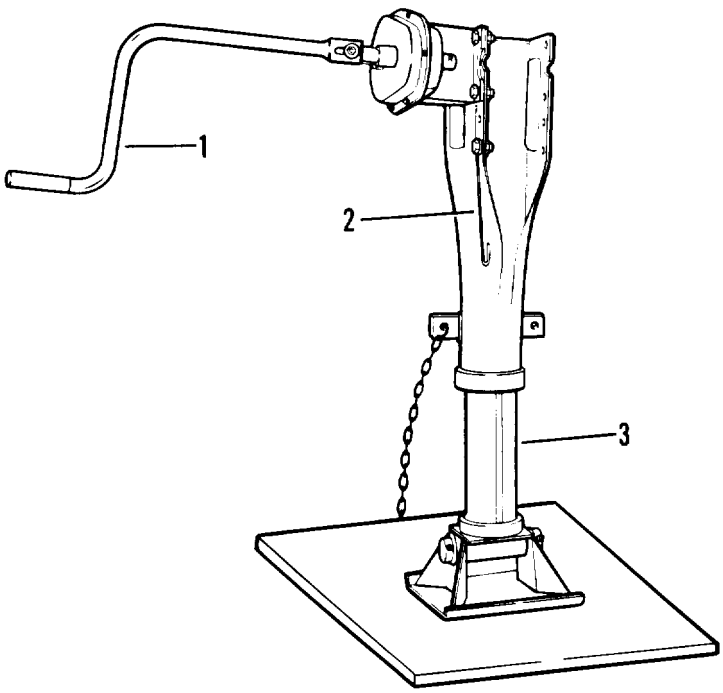

Figure 2-20. Landing gear

e. Raising The Landing Gear.

(1) Unhook crank (1, figure 2-20) from crank holder (2).

(2) Raise crank (1).

NOTE

Pull out on crank for high speed operation.

(3) Turn crank (1) counterclockwise until legs (3) have been retracted.

(4) Lower crank (1) and secure in crank holder (2).

(5) Remove and stow chock block and chains. Remove and stow float pads, if used.

2-24. OPERATING TOWING VEHICLE AND SEMITRAILER

a. Driving. When driving the truck tractor and semitrailer, the overall length of the unit must be kept in mind when passing other vehicles and when turning. Because the unit is hinged in the middle, turning and backing are also affected.

b. Turning. When turning corner, allow for the fact that the semitrailer wheels turn inside the turning radius of the truck tractor. To make a right turn at a road intersection, drive the towing vehicle about halfway into the intersection and then cut sharply to the right. This will allow for the shorter turning radius of the semitrailer and will keep it off the curb.

c. Stopping. In normal operation, the brakes of the truck tractor and the semitrailer are applied at the same time when the driver steps on the brake pedal. Brake pressure must be applied gradually and smoothly. The semitrailer brakes may be applied separately by using the brake control lever on the truck tractor steering column. On steep down grades or slippery surfaces, the semitrailer brakes must be applied before the truck tractor brakes. This will reduce the possibility of jack-knifing the semitrailer.

d. Parking. When the truck tractor and the semitrailer are to be parked and left unattended, set the parking brake on the truck tractor and apply the brakes on the semitrailer. Turn off the truck tractor engine before leaving the cab. Block the semitrailer wheels with chock blocks.

e. Backing. Whenever possible, the assistant driver or another person will act as a ground guide to assist and direct the driver. Adjust all rear view mirrors before backing. When backing, the rear of the semitrailer will always move in the opposite direction of that in which the front wheels are turned. When the wheels of

the truck tractor are turned to the right, the rear of the semitrailer will go to the left. When the semitrailer has turned and backing in a straight line is required, turn the truck tractor wheels in the direction the semitrailer is moving. this will slowly bring the truck tractor and the semitrailer into a straight line.

2-25. UNCOUPLING SEMITRAILER FROM TOWING VEHICLE

a. Positioning Chock Blocks.

(1) Remove chock blocks from stowage brackets.

(2) Place chock blocks behind tires on level ground or uphill slope. On downhill slope, place chock blocks in front of tires.

b. Lowering Landing Gear.

(1) Unhook crank (1, figure 2-21) from crank holder (2).

(2) Raise the crank (1).

NOTE

To prevent landing legs from sinking in soft ground, place float pads (ground board assemblies) (4) under landing shoes (5).

NOTE

Push crank in for low speed operation.

(3) Turn crank (1) clockwise until legs (3) are extended.

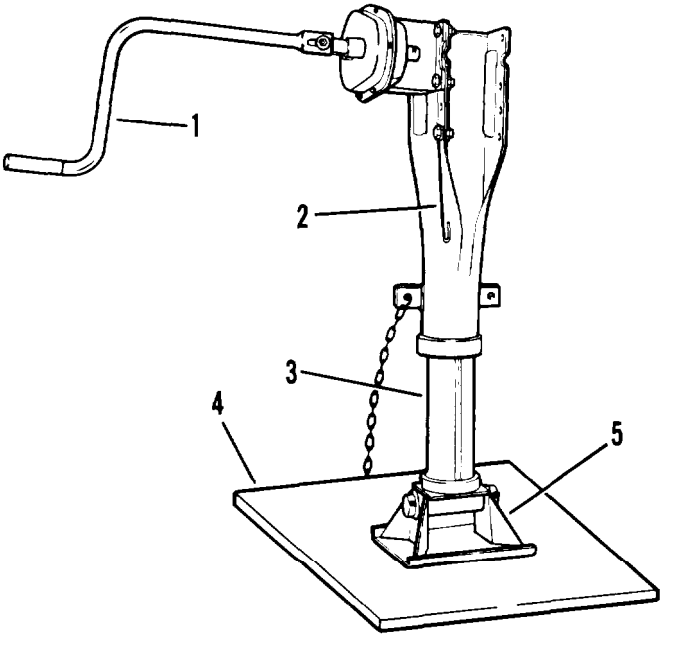

Figure 2-21. Lowering landing gear

c. Uncoupling Semitrailer From Towing Vehicle.

(1) Close shutoff valves for service and emergency air supply located on the towing vehicle.

(2) Disconnect both the service air hose and emergency air hose from air hose couplings (1 and 2, figure 2-22).

(3) Disconnect electrical cable from connector (3).

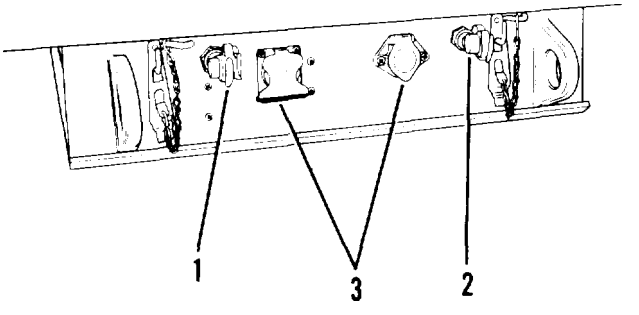

Figure 2-22. Uncoupling semitrailer from towing vehicle

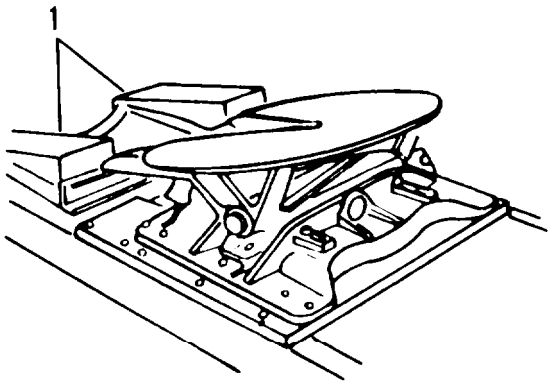

Figure 2-23. Fifth wheel and approach ramps

(4) Release semitrailer kingpin from towing vehicle fifth wheel.

(5) Slowly drive towing vehicle forward until semitrailer is clear of approach ramps (1, figure 2-23).

2-26. PREPARING SEMITRAILER FOR STATIONARY USE

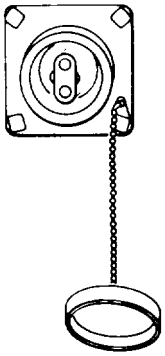

Figure 2-24. 110 volt external receptacle

a. Connecting 110 Volt AC External Power Source (figure 2-24).

(1) Unscrew dust cover from 110 volt AC external receptacle.

(2) Connect external 110 volt power supply to receptacle.

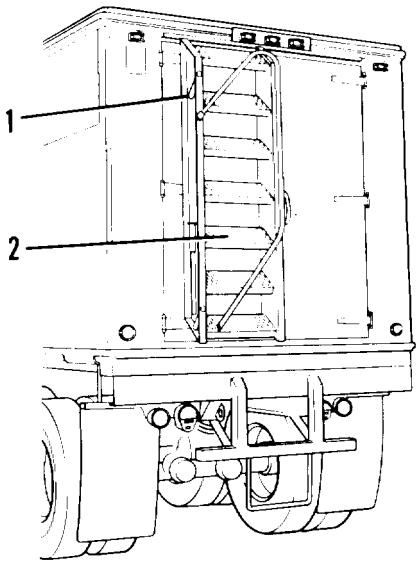

Figure 2-25. Removing ladder

b. Positioning Ladder.

(1) Remove pins (1, figure 2-25) from ladder (2). Remove ladder (2) from semitrailer.

(2) With van body doors (2, figure 2-26) open, hook ladder (1) in mounting holes (3) on van.

(3) Remove pins (4) from adjustable legs (5). Remove adjustable legs (5) from mounting brackets (6).

(4) Install adjustable legs (5) on lower ladder (1). Secure with lower pins (4).

(5) Install handrail (7) on adjustable leg (5).

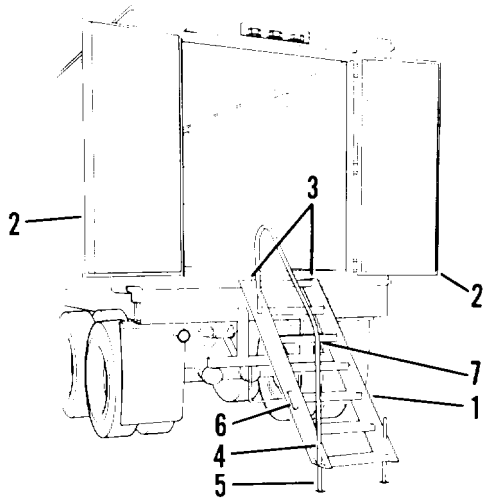

Figure 2-26. Positioning ladder

c. Turning Dome Lights On.

(1) Move switch handle (1, figure 2-27) up on 110 volt switch box to ON.

(2) Check ON-OFF position of circuit breakers (2). An overload may have caused circuit breakers to be in OFF position. The circuit breakers may be placed in operating condition by moving switches to ON position.

(3) Place 110 volt dome light switch (1, figure 2-28) on rear wall to ON position.

NOTE

The 24 volt dome light switch (2) can be used when semitrailer is coupled to towing vehicle with a 24 volt system.

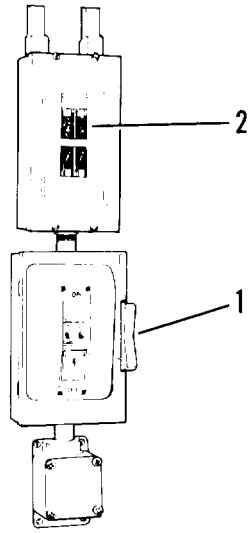

Figure 2-27. Circuit breaker and switch box

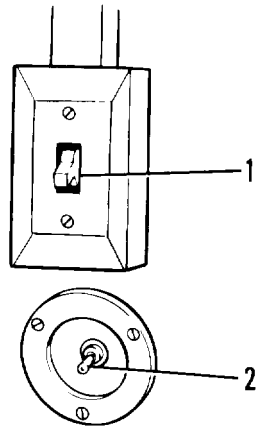

Figure 2-28. Dome light switches

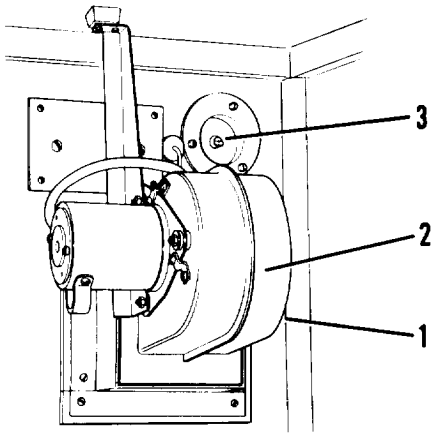

Figure 2-29. Vent fan

d. Vent Fan Operation.

(1) Open vent lever (1, figure 2-29) on right side of vent fan (2).

(2) Turn vent fan switch (3) to ON position.

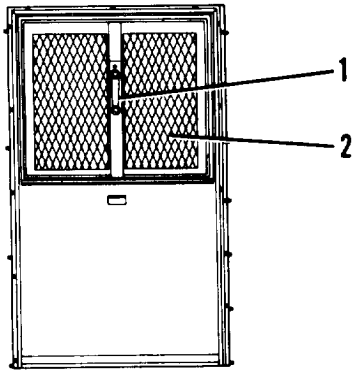

Figure 2-30. Window

e. Window Operation.

(1) Turn crank (1, figure 2-30) clockwise to open window (2).

NOTE

This procedure is for the six retractable windows only.

2-27. OPERATING SPARE TIRE CARRIER

a. Removing Spare Tire.

(1) With lug nut wrench from towing vehicle, loosen two safety nuts (3, figure 2-31) securing studs (7) of wheel support (1) in the bracket assembly (2).

(2) Rotate tire (4) slightly to free studs from slots.

WARNING

Weight of tire will cause it to free fall to ground. Maintain a firm grip on wrench when lowering tire to prevent injury.

(3) Fit lug nut wrench on operating shaft (5), and hold wrench firmly. Lift pawl (6) and lower tire (4) to the ground.

(4) Remove safety nuts (3) and release wheel support (1) from hub opening in the wheel.

b. Installing Tire.

(1) Insert wheel support (1, figure 2-31) in hub opening and fit securing studs in two stud holes in the wheel.

(2) Screw safety nuts (3) loosely on studs (7).

WARNING

Place pawl on ratchet when lifting spare tire to prevent injury.

(3) With lug nut wrench, rotate operating shaft (5) clockwise to lift wheel (4) and wheel support (1) until studs (7) and nuts (3) pass through holes in the bracket assembly (2).

(4) Rotate studs in slots and anchor in place by tightening safety nuts (3).

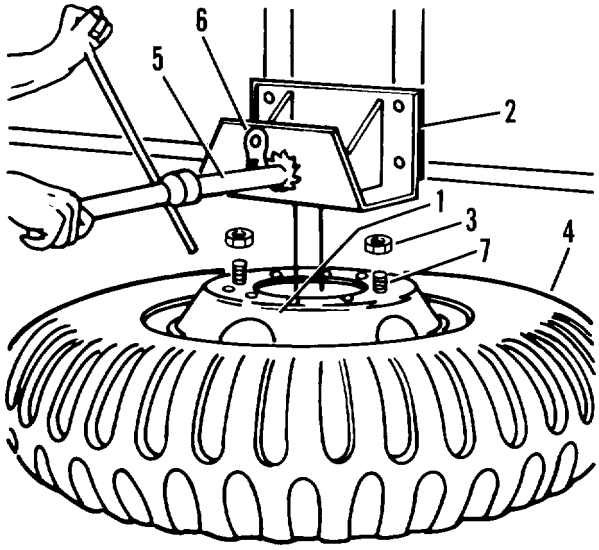

Figure 2-31. Spare tire carrier

2-28. DATA PLATE

The data plate (figure 2-32) is located on the front lower right hand corner of the van. The data plate furnishes the ordnance stock number, manufacturer's name and serial number, weight and dimension data, shipping cubage, publications pertaining to the vehicle, delivery date and inspector's initials.

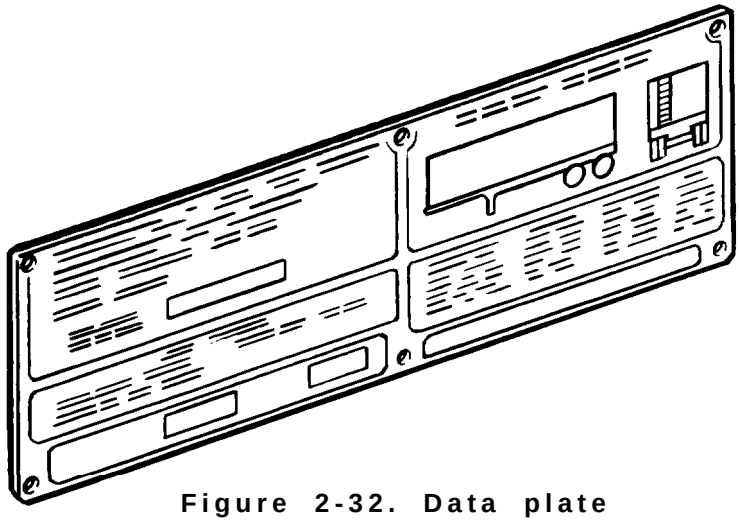

Figure 2-32. Data plate

Section IV. OPERATION UNDER UNUSUAL CONDITIONS

	Page
Fording Operations	2-27
Operation in Dusty or Sandy Areas	2-27
Operation in Extreme Cold	2-26
Operation in Extreme Heat	2-26
Operation in Mud	2-27
Operation in Rainy or Humid Conditions	2-26
Operation in Salt Water Areas	2-27
Operation in Snow	2-27
Parking Brake	2-28

2-29. OPERATION IN ExTREME COLD

a. Operation.

(1) Be careful when placing the semitrailer in motion after a shutdown. Congealed lubricants can cause part failure.

(2) Tires may be frozen to the ground or with a flat spot if they were under-inflated.

(3) Brakeshoes may be frozen to the brake drums and will require preheating by using a torch to avoid damage.

(4) Refer to FM9-207 and FM21-305 for special instructions on driving hazards in snow and ice that may be encountered during extremely cold weather conditions.

b. At-Halt Parking.

(1) For short shutdown periods, park in a sheltered spot out of the wind.

(2) For long shutdown periods, if high dry ground is not available, prepare a footing of planks or brush.

(3) Remove all built-up ice and snow as soon as possible after shutdown.

2-30. OPERATION IN EXTREME HEAT

a. Do not park the semitrailer in the sun for long periods of time as heat and sunlight will shorten the life of the tires.

b. Park the semitrailer where it will get maximum protection from heat, sun and dust.

2-31. OPERATION IN RAINY OR HUMID CONDITIONS

Frequently inspect, clean and lubricate inactive equipment to prevent rust and fungus accumulation.

2-32. OPERATION IN SALT WATER AREAS

Salt water will cause metal parts to rust and corrode. Clean, inspect and lubricate frequently.

2-33. OPERATION IN SNOW

Refer to FM21-305 for special instructions on operations in snow.

2-34. OPERATION IN MUD

CAUTION

Under no circumstances will the semitrailer be towed, pulled or pushed by the rear bumper.

a. If one or more wheels sink into the mud, it may be necessary to jack up the mired wheel and insert planking or matting beneath it.

b. Clean off all mud as soon after operation as possible.

2-35. OPERATION IN DUSTY OR SANDY AREAS

CAUTION

Under no circumstances will the semitrailer be towed, pulled or pushed by the rear bumper.

Frequently clean, inspect and lubricate the semitrailer.

2-36. FORDING OPERATIONS

a. Wheel bearings should be cleaned and repacked with lubricant as specified on the lubrication chart after each submersion.

b. Cables and terminals must be protected by spraying with ignition insulation compound.

c. Do not drive the semitrailer through water deeper than 30 inches (76 cm).

2-37. PARKING BRAKE

The parking brake is used to release air from the air reservoirs to engage the brake system.

a. Pull parking brake handle (2, figure 2-33), located on left side of semitrailer under the air charging valve (1), to apply brake system.

b. To release parking brake, push handle (2) in.

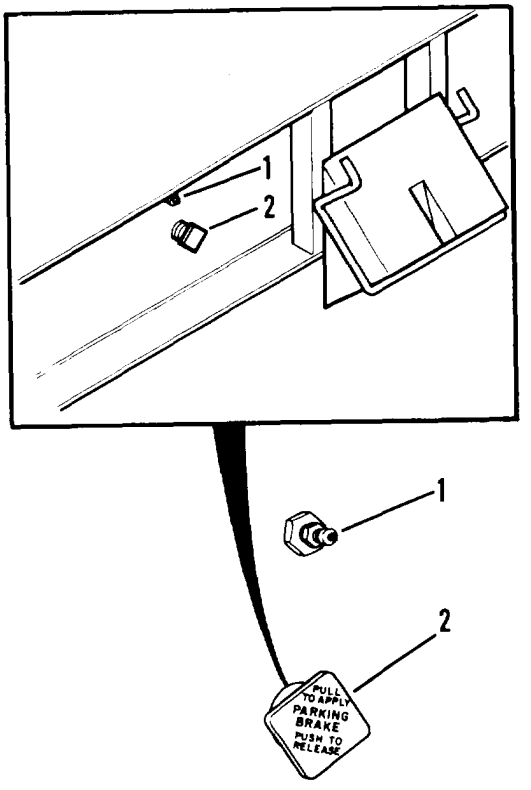

Figure 2-33. Parking brake

CHAPTER 3

OPERATOR MAINTENANCE INSTRUCTIONS

Section I. LUBRICATIONI INSTRUCTIONS

Page
Lubrication Chart 3-1
Lubrication Instructions 3-1

3-1. LUBRICATION INSTRUCTIONS

NOTE

These instructions are mandatory.

a. General. Keep all lubricants in closed containers and store in a clean, dry place away from external heat. Keep container covers clean and allow no dust, dirt, or other foreign material to mix with lubricants. Keep all lubrication equipment clean and ready for use.

b. Cleaning. Keep all external parts, not requiring lubrication, free of lubricants. Before lubricating equipment, wipe all lubrication points free of dirt and grease. Clean all lubrication points after servicing to prevent accumulation of foreign matter.

c. Lubrication Points. Service lubrication points at the proper intervals as specified in lubrication chart. The intervals specified are based on operation under normal conditions. Modification of recommended intervals may be required under unusual operating conditions.

3-2. LUBRICATION CHART

a. For lubrication under normal conditions, refer to the lubrication chart on the following page.

b. For instructions on lubrication in weather below 0°F (-18°C), refer to FM9-207.

c. For lubrication before and after fording, refer to TM 9-238.

d. After operating in mud, dust, sand or other unusual conditions, clean and inspect all lubrication points. Lubricate semitrailer in accordance with the lubrication chart.

LUBRICATION CHART

SEMITRAILER, VAN, 12-TON, 4-WHEEL, M129A3

Intervals are based on normal operation. Reduce to compensate for abnormal operation and severe conditions or contaminated lubricants. During inactive periods, intervals may be extended commensurate with adequate preservation. Relubricate after washing or fording.

Clean fittings before lubricating. Clean parts with PD-680, SD-2 SOLVENT, dry cleaning. Dry before lubricating. Lubricate dotted arrow points on both sides of the equipment.

LUBRICANT • INTERVAL

A, Fig. 3-2	Slack Adjuster (O)	GAA	S
B, Fig. 3-2	Brake Camshaft (O)	GAA	S
B, Fig. 3-2	Brake Camshaft (O)	GAA	S
C, Fig. 3-2	Brake Roller (O)	OE/HDO	Q
D, Fig. 3-2	Brake Anchor Pins (O)	OE/HDO	Q
A, Fig. 3-2	Slack Adjuster (O)	GAA	S
I, Fig. 3-2	Spare Tire Carrier Cable (O)	GAA	Q
E, Fig. 3-2	Landing Gear Legs and Foot (O)	OE/HDO	Q
F, Fig. 3-2	Landing Gear Crank (O)	OE/HDO	Q

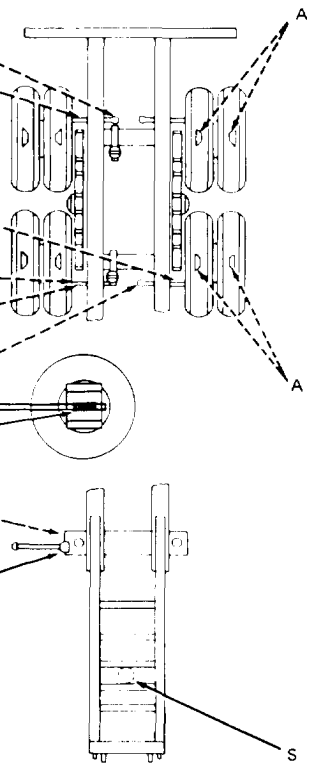

INTERVAL • LUBRICANT

A	GAA	(O) Wheel Bearings (Remove, clean, dry and repack)	G, Fig. 3-2
A	GAA	(O) Wheel Bearings (Remove, clean, dry, and repack)	G, Fig. 3-2
S	GAA	(O) Pick Up Plate and Kingpin	H, Fig. 3-2

Figure 3-1. Lubrication chart (Sheet 1 of 2)

–KEY–

LUBRICANT	CAPACITIES	EXPECTED TEMPERATURE				INTERVALS
		Above +15F (Above -9C)	+40F to -15F (+4C to -26C)	+40F to -65F (+4C to -54C)		
OE/HDO Lubricating Oil, ICE, Tactical (MIL-L-2104) OEA Lubricating Oil, ICE, Arctic (MIL-L-46167)					FOR ARCTIC OPERATION REFER TO FM 9-207	Q-Quarterly S-Semiannually A-Annual (Every 2nd "S" P.M. service)
Brake Roller	As Req	OE/HDO-15/40 OR OE/HDO-30 (0-238) SEE NOTE 1	OE/HDO-15/40 OR OE/HDO-10 (0-237) SEE NOTE 1&2	OEA (0-183)		
Brake Anchor	As Req					
Landing Gear Legs	As Req					
Landing Gear Crank	As Req					
GAA Grease, Automotive and (MIL-L-10924) Artillery		GAA (G-403) ALL TEMPERATURES				
Slack Adjuster	As Req					
Brake Camshaft	As Req					
Spare Tire Carrier Cable	As Req					
Wheel Bearings	As Req					
Pick Up Plate and Kingpin	As Req					

NOTES:

1. Grade 15W-40 (OE/HDO-15/40) is the preferred lubricant when temperatures are above +5°F (-15°C).

2. If OEA lubricant is required to meet the low expected-temperature range, OEA lubricant is to be used in lieu of OE/HDO-10 lubricant for all expected-temperature ranges where OE/HDO-10 is specified in the KEY.

3. **OIL CAN POINTS**
   Quarterly lubricate door hinges and latches, landing gear foot and crank assembly, spare wheel and tire carrier with OE/HDO-30.

4. **LUBRICATION INTERVALS**
   Points requiring lubrication at 6 months will be lubricated at time of the "S" P.M. service.

5. **DO NOT LUBRICATE**
   Springs.

Figure 3-1. Lubrication chart (Sheet 2 of 2)

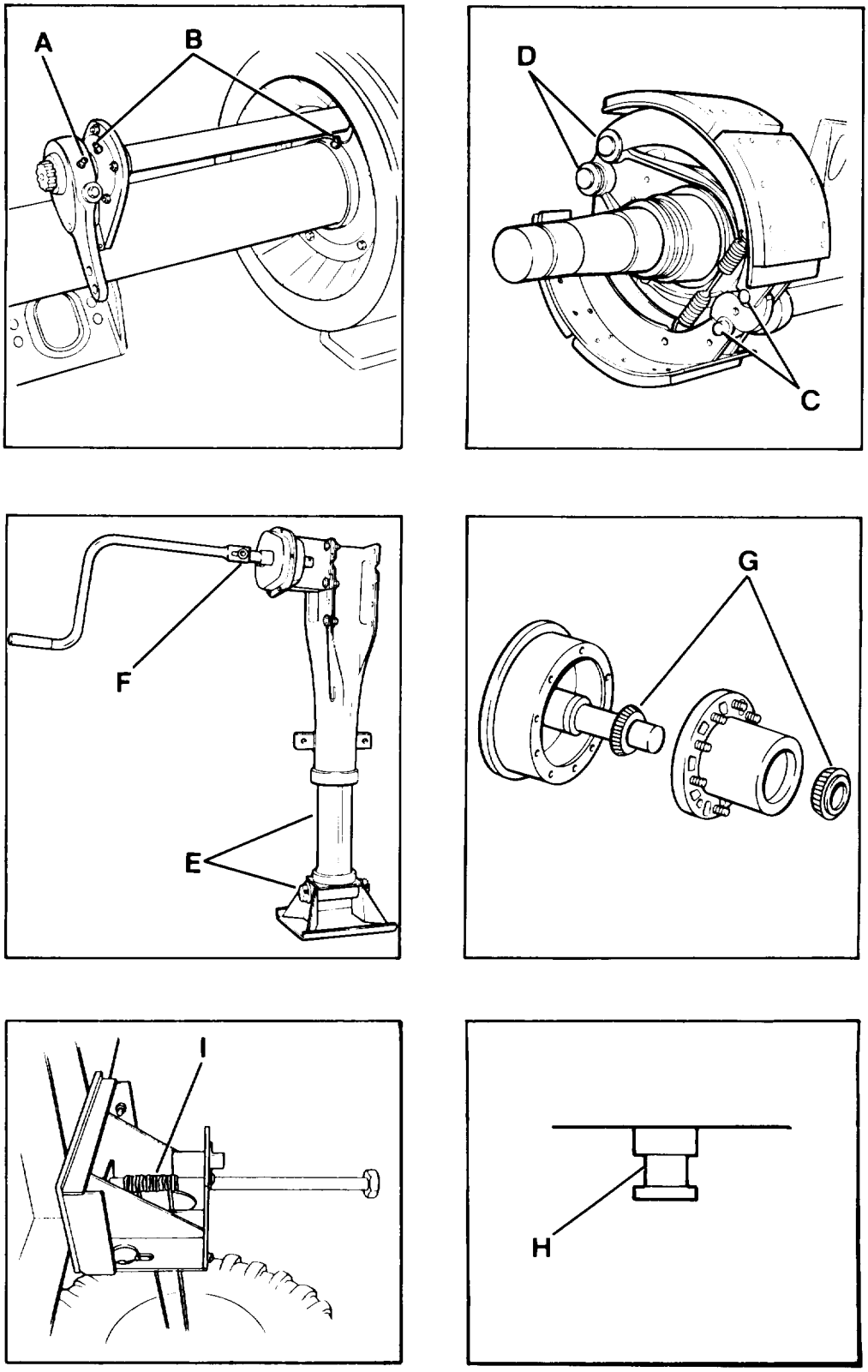

Figure 3-2. Localized lubrication points (A through I)

Section II. OPERATOR TROUBLESHOOTING PROCEDURES

Page
General 3-5
Symptom Index 3-5
Troubleshooting Table 3-6

3-3. GENERAL

a. The table in this section lists the common malfunctions which you may find during the operation or maintenance of the semitrailer or its components. You should perform the tests or inspections and corrective maintenance in the order listed.

b. This manual cannot list all malfunctions that may occur, or all tests, inspections and corrective actions. If a malfunction is not listed or it is not corrected by the listed corrective actions, notify Organizational Maintenance.

3-4. SYMPTOM INDEX

Page

ELECTRICAL SYSTEM:

All lamps do not light 3-6
Dim or flickering lights 3-7
One or more (but not all) lights will not light 3-6

BRAKES:

Brakes will not release 3-7
Grabbing brakes 3-8

LANDING GEAR:

Landing gear is difficult to raise or lower 3-8

TIRES:

Excessively worn, scuffed or cupped tires 3-8

Table 3-1. Operator Troubleshooting Table

MALFUNCTION TEST OR INSPECTION CORRECTIVE ACTION
ELECTRICAL SYSTEM
WARNING Disconnect electrical power source before performing troubleshooting on wiring harness, connectors or lights.
1. ALL LAMPS DO NOT LIGHT.
Step 1. Check lights on truck tractor including turn signals and stop lights. If truck tractor lights do not light, notify Organizational Maintenance. If truck tractor lights come on, go to step 2.
Step 2. Check electrical connection at intervehicular cable receptacle. If cable is not properly connected, reconnect electrical cables. If cable is properly connected, go to step 3.
Step 3. Check intervehicular connectors for dirty or corroded pins. Check for damaged pins. If pins are dirty or corroded, clean the pins (see para. 3-6). If pins are damaged, notify Organizational Maintenance. If the above steps do not correct the malfunction, notify Organizational Maintenance.
2. ONE OR MORE (BUT NOT ALL) LAMPS WILL NOT LIGHT.
Step 1. Check for burned out or defective bulbs. If bulbs are burned out or defective, notify Organizational Maintenance. If bulbs are not burned out or defective, go to step 2.
Step 2. Check for broken lead wires or loose connections. If lead wires are broken, notify Organizational Maintenance. If connections are not loose or broken, go to step 3.
Step 3. Check light assembly for damage. If light assembly is damaged, notify Organizational Maintenance. If light assembly is not damaged, go to step 4.

Table 3-1. Operator Troubleshooting Table - continued

MALFUNCTION TEST OR INSPECTION CORRECTIVE ACTION	
Step 4.	Check for dirty or corroded connectors at back of light. If connectors are dirty or corroded, clean (para. 3-6). If cleaning does not correct the malfunction, notify Organizational Maintenance.
3. DIM OR FLICKERING LIGHTS.	
Step 1.	Check electrical connectors at light for loose, dirty or corroded pins. If connections are loose, tighten. If connector pins are dirty or corroded, clean pins (para. 3-6). If connections are tight and clean, go to step 2.
Step 2.	Check for defective bulb. If bulb is defective, notify Organizational Maintenance. If bulb is not defective, and malfunction is not corrected, notify Organizational Maintenance.
BRAKES	
1. BRAKES WILL NOT RELEASE.	
Step 1.	Check that tractor to semitrailer air supply is turned on. If air is shut off, turn on air supply. If air supply is on, go to step 2.
Step 2.	Check air pressure of truck tractor. If pressure is low, build up air pressure to normal level. If pressure is normal, go to step 3.
Step 3.	Check air line connections at gladhands. If air lines are not properly connected (Emergency to Emergency, Service to Service), reconnect air lines. If air lines are connected properly, go to step 4.
Step 4.	Check for dirty or damaged packing in gladhands. If packing is dirty, clean packing (para. 3-8). If packing is leaking, notify Organizational Maintenance. If coupling is clean and not damaged, go to step 5.
Step 5.	Inspect air line connections for leaks. If leaks are evident, notify Organizational Maintenance. If no leaks are evident, go to step 6.
Step 6.	Check for open drain cock on each reservoir. If either drain cock is open, close it. If drain cocks are closed, notify Organizational Maintenance.

Table 3-1. Operator Troubleshooting Table - continued

MALFUNCTION TEST OR INSPECTION	CORRECTIVE ACTION
2. GRABBING BRAKES.	
Check for moisture in air reservoir by opening each drain cock (para. 3-9).	If moisture is present allow to drain. If reservoirs are dry and malfunction is not corrected, notify Organizational Maintenance.
LANDING GEAR	
LANDING GEAR IS DIFFICULT TO RAISE/OR LOWER.	
Step 1. Check for misalined or broken crank handle.	If handle is misalined or broken, notify Organizational Maintenance. If handle is not misalined or broken, go to step 2.
Step 2. Check for dirt on lower landing gear leg.	If lower landing gear leg is dirty, clean leg (para. 3-7). If lower landing gear leg is clean, go to step 3.
Step 3. Check for misalined, damaged or bent landing gear legs.	If legs are misalined, damaged or bent, notify Organizational Maintenance.
TIRES	
EXCESSIVELY WORN, SCUFFED OR CUPPED TIRES.	
Step 1. Check tire pressure.	If tire pressure is not 60 psi, inflate tires to 60 psi. If tire pressure is 60 psi, go to step 2.
Step 2. Check for loose, cracked or broken wheels.	If wheels are loose, tighten nuts. If wheel is cracked or broken, notify Organizational Maintenance. If wheel is secure and not cracked or broken, go to step 3.
Step 3. Check suspension system for damaged springs and loose or missing bolts and nuts.	If. suspension is damaged or has loose or missing bolts and nuts, notify Organizational Maintenance. If suspension system is not damaged and all hardware is complete and secure, go to step 4.
Step 4. Check tracking for indication of axle misalinement.	If axle appears to be misalined, notify Organizational Maintenance. If the above steps do not correct the malfunction, notify Organizational Maintenance.

Section III. MAINTENANCE PROCEDURES

	Page
Caging Failsafes	3-11
Cleaning Air Hose Couplings (Gladhands)	3-10
Cleaning Electrical Connectors	3-9
Cleaning Landing Gear Legs	3-10
Jacking Procedure	3-12
Servicing Air Reservoir	3-10

3-6. CLEANING ELECTRICAL CONNECTORS

WARNING

Disconnect electrical power from vehicle prior to making any repairs on electrical

a. Use a soft cloth to remove any buildup of grease and dirt (figure 3-3).

WARNING

Dry cleaning solvent (PD-680) is both toxic and flanmable. Avoid prolonged breathing of vapors. Avoid skin contact. Use only in a well ventilated area. Keep away from open flame. Flash point of solvent is 138°F (59°C).

b. Use a small brush and cleaning solvent (PD-680) to thoroughly clean connector.

c. Allow to dry.

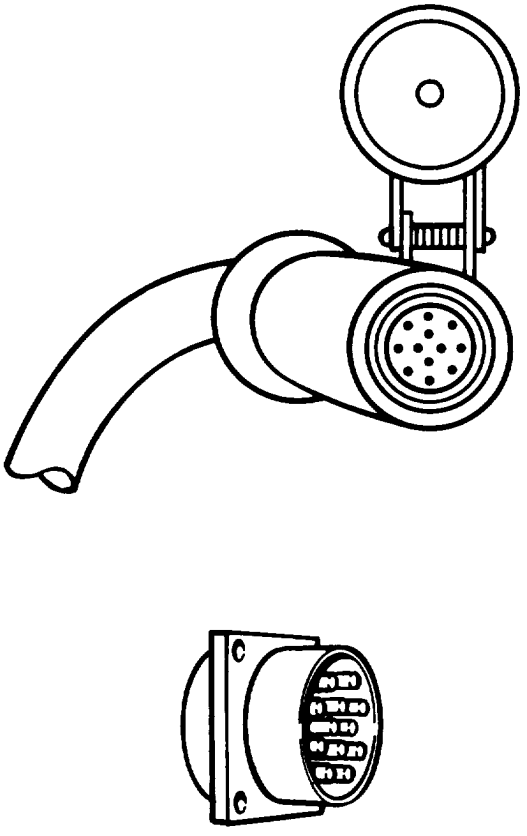

Figure 3-3. Electrical connectors

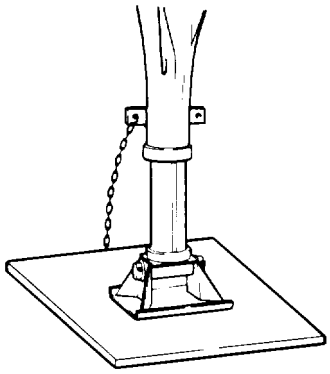

Figure 3-4. Landing gear

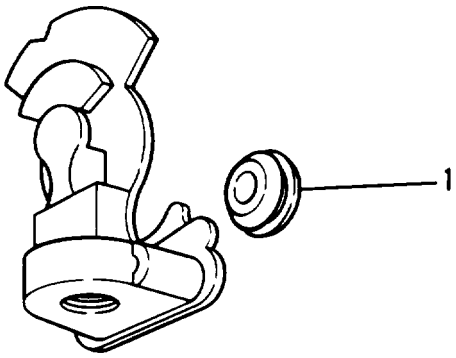

Figure 3-5. Gladhand

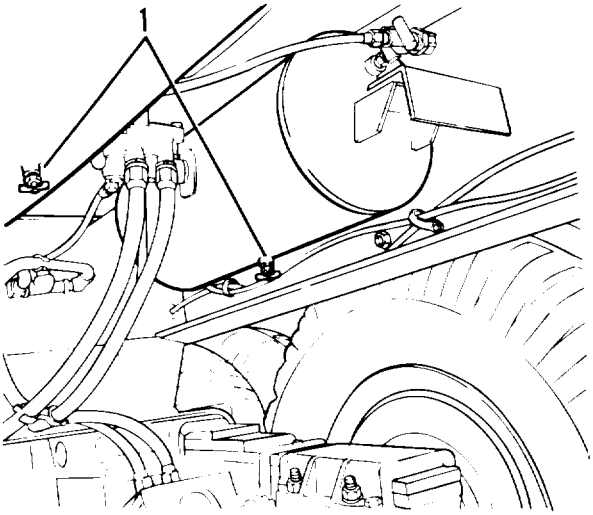

Figure 3-6. Air reservoir

3-7. CLEANING LANDING GEAR LEGS

a. Use a soft cloth to remove any buildup of grease and dirt (figure 3-4).

WARNING

Dry cleaning solvent (PD-680) is both toxic and flammable. Avoid prolonged breathing of vapors. Avoid skin contact. Use only in a well ventilated area. Keep away from open flame. Flash point of solvent is 138°F (50°C).

b. Use a small brush and cleaning solvent (PD-680) to thoroughly clean landing gear leg.

c. Allow to dry.

3-8. CLEANING AIR HOSE COUPLINGS GLADHANDS)

a. Use a soft cloth to remove any buildup of grease and dirt (figure 3-5).

b. Use a soft cloth and soap and water to thoroughly clean gladhand packing (1, figure 3-5).

c. Allow to dry.

3-9. SERVICING AIR RESERVOIR

a. Disconnect air hoses from couplings.

WARNING

Wear protective goggles when opening drain cock and avoid the air stream.

b. Open drain cock (1, figure 3-6) and allow pressure to drain.

c. Close drain cock (1).

d. Connect air hoses to couplings

3-10. CAGING FAILSAFES

NOTE

This procedure is used to move semitrailer when a brake line or other parts fail.

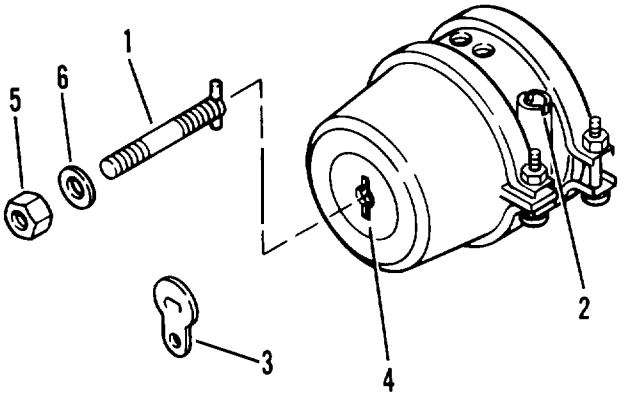

Figure 3-7. Caging failsafe

a. Block semitrailer with chock blocks to prevent movement.

b. Remove plug (3, figure 3-7). from air brake chamber.

c. Remove nut (5) and washer (6). Remove release tool (1) from mounting hole (2) in spring brake.

d. Insert release tool (1) through opening (4) in brake chamber. Turn release tool (1) 1/4 turn clockwise to lock in manual release position.

e. Install washer (6) and nut (5) on release tool (1). Tighten until 2 1/2 to 2 3/4 inches of release tool (1) is exposed.

f. Repeat steps b. through e. for remaining brake chambers.

g. Remove and stow chock blocks. Move semitrailer.

h. Re-chock wheels to prevent semitrailer movement.

i. Notify Organizational Maintenance.

3-11. JACKING PROCEDURE

a. Set chock blocks opposite the tire(s) being removed.

b. Remove jack from towing vehicle.

c. Position jack under axle closest to where tire(s) will be removed (figure 3-8).

d. Loosen, but do not remove ten lug nuts (1).

e. Jack up the axle until tires (2 and 3) are clear of the ground.

f. Remove ten lug nuts (1) and tire (2).

NOTE

If only the outer tire is being changed, disregard step g.

g. Remove ten lugs (4) and tire (3).

CAUTION

The valve stem must be in the groove of the drum to prevent damage.

h. Install new tire (see spare tire carrier para. 2-27). Tighten lug nuts.

i. If inner tire was changed, install outer wheel (2) and ten lugs (1). The valve stem must be 180 degrees from the valve stem of the inner wheel.

j. Lower and remove jack. Be certain lug nuts are tightened.

k. Remove chock blocks and stow in brackets.

l. Notify Organizational Maintenance to torque lug nuts.

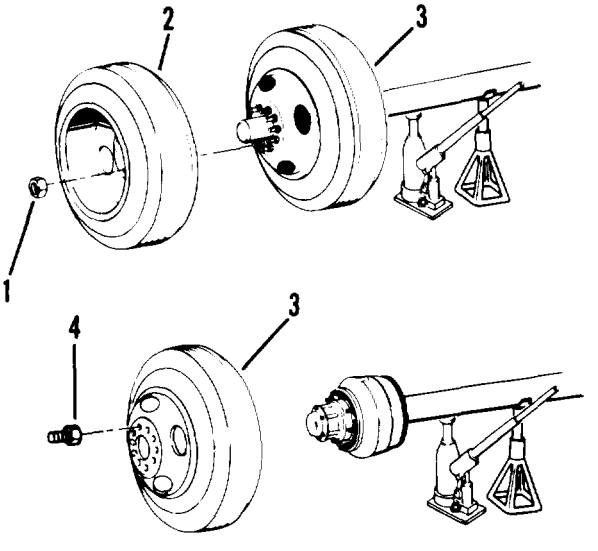

Figure 3-8. Jacking and tire removal

CHAPTER 4

ORGANIZATIONAL MAINTENANCE INSTRUCTIONS

Section I. REPAIR PARTS, SPECIAL TOOLS, TMDE AND SUPPORT EQUIPMENT

	Page
Common Tools and Equipment	4-1
General Cleaning Instructions	4-1
General Inspection Instructions	4-2
Repair Parts	4-1
Special Tools, TMDEand Support Equipment	4-1

4-1. COMMON TOOIS AND EQUIPMENT

For authorized common tools and equipment, refer to the Modified Table of organization and Equipment (MTOE) applicable to Your unit.

4-2. SPECIAL TOOLS, TMDE AND SUPPORT EQUIPMENT

No special tools, TMDE or support equipment are required for maintenance of the M129A3 semitrailer.

4-3. REPAIR PARTS

See Appendix F for repair parts information.

4-4. GENERAL CLEANING INSTRUCTIONS

a. Remove all buildup of dirt and grease by wiping with a soft cloth.

WARNING

Dry cleaning solvent (PD-680) is both toxic and flammable. Avoid prolonged breathing of vapors. Avoid skin contact. Use only in a well ventilated area. Keep away from open flame. Flash point of solvent is 138°F (59°C).

b. Using a clean, soft cloth or medium bristle brush and cleaning solvent (PD-680), thoroughly clean all metal parts.

c. Allow to dry.

4-5. GENERAL INSPECTION INSTRUCTIONS

a. Inspect for loose, missing or damaged parts.

b. Inspect wiring for damaged, deteriorated insulation and broken or frayed conductor, if applicable.

c. Inspect parts for dents, holes, worn spots, scratches, marred finish, cracks, rust and corrosion.

Section II. SERVICE UPON RECEIPT OF MATERIEL

Page
Servicing the Equipment 4-2
Unpacking and Checking the Equipment 4-2

4-6. UNPACKING AND CHECKING THE EQUIPMENR

a. Remove any metal strapping, plywood, tapes, seals, wrapping paper or any other shipping and protective items.

WARNING

Dry cleaning solvent (PD-680) is both toxic and flammable. Avoid prolonged breathing of vapors. Avoid skin contact. Use only in a well ventilated area. Keep away from open flame. Flash point of solvent is 138°F (59°C).

b. If any exterior parts are coated with rust preventive compound, remove it with cleaning solvent (PD-680).

c. Read and follow all instructions contained in DD Form 1397, which is attached to a conspicuous part of the semitrailer.

d. Inspect equipment for damage incurred during shipping. If equipment has been damaged, report the damage on DD Form 6, Packing Improvement Report.

e. Check the equipment against the packing slip to see if the shipment is complete. Report all discrepancies in accordance with DA Pam 738-750.

4-7. SERVICING THE EQUIPMENT

a. Perform the preventive maintenance checks and services contained in tables 2-1 and 4-1.

b. Lubricate all points as shown in the lubrication chart (figure 3-1), regardless of interval.

c. Schedule the next preventive maintenance checks and services on DD Form 314, Preventive Maintenance Schedule and Record.

d. Report all deficiencies on DA Form 2407 if the deficiencies appear to involve unsatisfactory design.

e. Perform a break-in road test of 25 miles (40 km) at a maximum speed of 50 miles per hour (80 km/h).

Section III. ORGANIZATIONAL PREVENTIVE MAINTENANCE CHECKS AND SERVICES (PMCS)

Page
General 4-3
Organizational Preventive Maintenance Checks and Services 4-3

4-8. GENERAL

To ensure that the semitrailer is ready for operation at all times, it must be inspected systematically so that defects may be discovered and corrected before they result in serious damage or failure. Table 4-1 contains a tabulated listing of preventive maintenance checks and services to be performed by organizational maintenance personnel. All deficiencies and shortcomings will be recorded as well as the corrective action taken on DA Form 2404 at the earliest possible opportunity.

4-9. ORGANIZATIONAL PREVENTIVE MAINTENANCE CHECKS AND SERVICES

a. The item numbers of table 4-1 indicate the sequence of the PMCS. Perform at intervals shown below:

(1) Do your (S) PREVENTIVE MAINTENANCE once each 6 months.
(2) Do your (A) PREVENTIVE MAINTENANCE once each year.

b. If something doesn't work, troubleshoot it with the instructions in this manual or notify your supervisor.

c. Always do your preventive maintenance in the same order, so it gets to be a habit. Once you've had some practice, you'll spot anything wrong in a hurry.

d. If anything looks wrong and you can't fix it, write it down on your DA Form 2404. If you find something seriously wrong, report it to Direct Support as soon as possible.

WARNING

Dry cleaning solvent (PD-680) is both toxic and flammable. Avoid prolonged breathing of vapors. Avoid skin contact. Use only in a well ventilated area. Keep away from open flame. Flash point of solvent is 138°F (59°C).

(1) Keep it clean: Dirt, grease, oil and debris only get in the way and may cover up a serious problem. Clean as you work and as needed. Use dry cleaning solvent (PD-680) to clean metal surfaces. Use soap and water when you clean rubber or plastic material.

(2) Bolts, nuts and screws: Check that they are not loose, missing, bent or broken. Look for chipped paint, bare metal, or rust around bolt heads. Tighten any that are loose.

(3) Welds: Look for loose or chipped paint, rust, or gaps where parts are welded together. If you find a bad weld, report it to Direct Support.

(4) Electric wires and connectors. Look for cracked or broken insulation, bare wires, and loose or broken connectors. Tighten loose connections and make sure wires are in good condition.

Table 4-1. Organizational Preventive Maintenance Checks and Services

S-Semiannually A-Annually

Item No.	S	A	Item To Be Inspected Procedure: Check for and have repaired, filled, or adjusted as needed.
			NOTE Perform operator/crew PMCS prior to or in conjunction with Organizational PMCS if: a. There is a delay between daily operation of equipment and Organizational PMCS. b. Regular operator is not assisting/participating.
1			LIGHTS AND REFLECTORS
	●		a. Check for any broken, cracked lenses, or unserviceable lights and replace if necessary (paras. 4-17 through 4-21).
	●		b. Check for cracked or broken reflectors. Replace as necessary (para. 4-55).
2			AIR RESERVOIR AND LINES
	●		Check air reservoir and air lines for damage and tight connections.
3			WHEELS
	●		a. Check for missing lug nuts.
	●		b. Check lug nuts for tightness. Torque to 400-450 lb ft (542-612 Nm).
	●		c. Check wheels for damage. Replace wheels if found to be defective (para. 4-43).
		●	d. Check wheel bearings. Clean, repack, install and adjust (para. 4-45).
	●		e. Check brakes. Replace damaged or worn parts (para. 4-40).

Table 4-1. Organizational Preventive Maintenance Checks and Services

S-Semiannually A-Annually

Item No.	S	A	Item To Be Inspected Procedure: Check for and have repaired, filled, or adjusted as needed.
			SPRINGS
4	●		a. Check springs for any evidence of damage or sagging.
	●		b. Check for shifted leaves.
5			DATA PLATES
	●		Assure legibility and condition of data plate. Replace damaged or disfigured plate (para. 4-56).
6			BODY
	●		a. Check windows for damage. Replace broken window glass. Replace window assembly, if damaged (para. 4-50).
	●		b. Check doors and latches for damage. Replace defective latches and doors (para. 4-52, 4-53).
	●		c. Check overall body condition for evidence of rotted wood, gouges and other damage. Repair body as necessary.
7			ROAD TEST
	●		a. Perform road test. Give special attention to items that were repaired or adjusted. **WARNING** Overheated brake drums and hubs can cause severe burns if not touched carefully.
	●		b. Check brake drums and hubs immediately after road test; cautiously feel brake drums and hubs. **NOTE** An overheated wheel hub and brake drum indicates an improperly adjusted or defective brake or dry wheel bearing. An abnormally cool condition indicates an inoperative brake.
	●		c. Be alert during road tests for any unusual noises that may indicate damage or looseness in springs.

Section IV. ORGANIZATIONAL TROUBLESHOOTING PROCEDURES

	Page
General	4-6
Symptom Index	4-6

4-10. GENERAL

a. The table in this section lists common malfunctions which may be found during operation or maintenance of semitrailer or components. You should perform test inspections and corrective actions in the order listed.

b. This manual cannot list all malfunctions that may occur, nor all tests or inspections and corrective actions. If a malfunction is not listed, or it is not corrected by listed corrective actions, notify your Organizational Maintenance.

4-11. SYMPTOM INDEX

ELECTRICAL SYSTEM:

	Page
All 12 or 24 volt lamps do not light and taillights operate normally	4-8
All 24 volt dome lamps do not light but clearance lamps operate normally	4-8
All 110 volt dome lamps do not light and 110 volts AC not present at wall receptacle	4-8
Dim or flickering lights	4-9
One or more lamps on chassis or body will not light	4-7
12 or 24 volt lamps do not light	4-7
110 volts AC not present at wall receptacles but 110 volt dome lamps light	4-9
110 volt dome lamps do not light and 110 volts AC not present at wall receptacle	4-8

BRAKE SYSTEM:

Brakes drag and one or more brake drums running hot	4-12
Brakes will not release	4-9
Grabbing brakes	4-11
No brakes or weak brakes	4-10
Slow brake application or release	4-11

LANDING LEG:

Difficulty in turning handcrank	4-12

SPRINGS AND SUSPENSION:

Excessively worn, scuffed, or cupped tires	4-13
Hard pulling	4-13
Improper spring action	4-13

Table 4-2. Organizational Troubleshooting Table

MALFUNCTION TEST OR INSPECTION	CORRECTIVE ACTION

ELECTRICAL SYSTEM (See schematics as follows:)

Figure Number

4-18 Chassis wiring diagram
4-19 12 volt body wiring diagram
4-20 24 volt body wiring diagram
4-21 110 volt AC body

1. 12 or 24 VOLT LAMPS DO NOT LIGHT.

Step 1. Check intervehicular cable receptacles for proper connections.
Pull plug out and reinsert fully.
If receptacles not defective, go to step 2.

Step 2. Check setting of light switch on towing vehicle.
Set light switch properly.
If light switch is set properly, go to step 3.

Step 3. Check circuit breaker on towing vehicle.
If circuit breaker open, reset circuit breaker.
If circuit breaker not open, go to step 4.

Step 4. Check wiring for bare spots in insulation.
Repair wiring if defective (para. 4-25).
If wiring not defective, go to step 5.

Step 5. Check ground connector for loose or broken connections.
Repair or tighten ground connector (para. 4-28).

2. ONE OR MORE LAMPS ON CHASSIS OR BODY WILL NOT LIGHT.

Step 1. Check for burned out lamp.
Replace lamp if defective (paras. 4-17 through 4-21).
If lamp does not light, go to step 2.

Step 2. Check for broken or shorted wire in cable or loose connection in plug or receptacle.
Tighten, repair or replace as necessary (para. 4-25).
If wiring and connections not damaged, go to step 3.

Step 3. Check for damaged light assembly.
Replace light assembly, if damaged (paras. 4-17 through 4-21).
If light assembly is not damaged, go to step 4.

Table 4-2. organizational Troubleshooting Table - continued

MALFUNCTION TEST OR INSPECTION CORRECTIVE ACTION
Step 4. Check lamp socket for dirt and corrosion. Remove lamp and clean sockets if dirty or corroded. If lamp socket is clean, go to step 5.
Step 5. Check plug and/or receptacle for dirty or corroded contacts. Clean contacts if dirty or corroded. If contacts are not dirty or corroded, go to step 6.
Step 6. Check for loose or broken ground wire at light assembly. Repair or tighten ground wire, if defective.
3. ALL 12 OR 24 VOLT LAMPS DO NOT LIGHT AND TAILLIGHTS OPERATE NORMALLY.
Step 1. Check that body cables are properly plugged into chassis receptacle. Pull plug out and reinsert it fully. If plug is secure, go to step 2.
Step 2. Check for broken or loose ground wire at chassis receptacle. If ground wire is broken or loose, repair or tighten ground wire. If ground wire not broken or loose, go to step 3.
Step 3. Check wiring for bare spots in insulation. Repair wiring if defective (para. 4-25).
4. ALL 24 VOLT DOME LAMPS DO NOT LIGHT BUT CLEARANCE LAMPS OPERATE NORMALLY.
Check for improperly positioned or defective dome light switch. Properly position or replace dome light switch, if defective (para. 4-22).
5. 110 VOLT DOME LAMPS DO NOT LIGHT AND 110 VOLTS AC NOT PRESENT AT WALL RECEPTACLE.
Step 1. Check for defective external power source. Replace or repair external power source. If external power source not defective, go to step 2.
Step 2. Check that plug is properly seated in external 110 volt receptacle. Pull plug out and reinsert it fully. If plug is properly seated, go to step 3.
Step 3. Check fuse box for blown 60 amp fuse (one or both). Replace fuse(s), if defective (para. 4-13).

Table 4-2. Organizational Troubleshooting Table - continued

MALFUNCTION TEST OR INSPECTION CORRECTIVE ACTION
6. ALL 110 VOLT DOME LAMPS DO NOT LIGHT BUT 110 VOLTS AC IS PRESENT AT WALL RECEPTACLE.
Step 1. Check for improperly positioned or defective dome light switch. Properly position or replace dome light switch (para. 4-23). If dome light switch properly positioned, go to step 2.
Step 2. Check for tripped dome light circuit breaker. Place dome light circuit breaker in ON position.
7. 110 VOLTS AC NOT PRESENT AT WALL RECEPTACLES BUT 110 VOLT DOME LAMPS LIGHT.
Check for tripped wall receptacle circuit breaker. Place wall receptacle circuit breaker in ON position.
8. DIM OR FLICKERING LIGHTS.
Step 1. Check for loose, dirty or corroded terminals. Clean and tighten terminals if loose, dirty or corroded. If clean and tight, go to step 2.
Step 2. Check ground cables for poor or loose ground. Clean and tighten terminals on all short ground cables.
BRAKE SYSTEM
1. BRAKES WILL NOT RELEASE.
Step 1. Check for defective emergency relay valve. Build up pressure in semitrailer brake system if semitrailer is coupled. Open drain cock on semitrailer air reservoir if semitrailer is uncoupled. Replace defective relay valve (para. 4-38). If emergency relay valve operating, go to step 2.
Step 2. Check intervehicular air hose connections to towing vehicle. Connect intervehicular air hoses properly. If air hoses are connected properly, go to step 3.
Step 3. Check position of brake valve on towing vehicle. Move brake valve to release position. If brake valve is correctly positioned, go to step 4.
Step 4. Check for restriction in service air and emergency air lines. If air lines or hoses are restricted, replace or repair as required (para. 4-33). If air lines or hoses are free of restriction, go to step 5.

Table 4-2. Organizational Troubleshooting Table - continued

MALFUNCTION
TEST OR INSPECTION
CORRECTIVE ACTION

Step 5. Check for closed shutoff valves on towing vehicle.
Open valves if closed.
If valves are open, go to step 6.

Step 6. Check for weak or broken brake shoe tension spring.
If brake shoe tension spring is broken, replace (para. 4-40).

2. NO BRAKES OR WEAK BRAKES.

Step 1. Check for closed shutoff valves on towing vehicle.
open valves if closed.
If valves are open, go to step 2.

Step 2. Check intervehicular air hoses for proper connection to towing vehicle.
Connect hoses properly.
If hoses are properly connected, go to step 3.

Step 3. Check for open drain cocks in semitrailer air reservoirs.
Close drain cocks if open.
If drain cocks are closed, go to step 4.

Step 4. Check air pressure gage on towing vehicle for low air pressure indication. Check air lines/connectors for restrictions.
Tighten connections; remove any restrictions from hoses. Repair or replace as necessary.
If air pressure gage indicates normal, go to step 5.

Step 5. Check for defective emergency relay valve.
If emergency relay valve is defective, replace (para. 4-38).
If emergency relay valve is not defective, go to step 6.

Step 6. Check for grease on brake lining.
If brake lining has grease on it, replace brake shoes (para 4-40).
If brake lining shows no grease, go to step 7.

Step 7. Check for worn/worn out brake lining.
If brake lining is worn, adjust brakes (para. 4-30).
If brake lining is worn out, replace brake shoes (para. 4-40).
If brake lining is not worn, go to step 8.

Step 8. Check for air leakage in air chamber (para. 4-30).
If air chamber is leaking, tighten connections.
If air chamber is not defective, go to step 9.

Table 4-2. Organizational Troubleshooting Table - continued

MALFUNCTION	TEST OR INSPECTION	CORRECTIVE ACTION
	Step 9. Visually check for broken or frozen camshaft roller.	If camshaft roller is broken or frozen, replace (para. 4-40).
3. SLOW BRAKE APPLICATION OR RELEASE.		
	Step 1. Check for low air pressure indication on air pressure gage in towing vehicle. Check air lines/connectors for restrictions.	Tighten connections; remove any restrictions from hoses and repair or replace as necessary. If air pressure gage indicates normal, go to step 2.
	Step 2. Check operation of emergency relay valve (para. 4-30).	If-emergency relay valve is defective, replace valve (para. 4-38). If emergency relay valve is not defective, go to step 3.
	Step 3. Check for weak or broken brake shoe tension spring.	If spring is weak or broken, replace (para. 4-40). If spring is not defective, go to step 4.
	Step 4. Check for defective air chamber.	If air chamber is defective, replace air chamber (para. 4-37). If air chamber is not defective, go to step 5.
	Step 5. Visually check for broken or frozen camshaft roller.	If camshaft roller is broken or frozen, replace (para. 4-40).
4. GRABBING BRAKES.		
	Step 1. Check for moisture in air reservoirs.	Open drain cocks for drainage of moisture from air reservoirs. If no moisture is present, go to step 2.
	Step 2. Check brake adjustment (para. 4-30).	If brakes are out of adjustment, adjust brakes (para. 4-30). If brakes are not out of adjustment, go to step 3.
	Step 3. Check for grease on brake lining.	If grease is present, replace brake shoes (para. 4-40). If grease is not present, go to step 4.
	Step 4. Check for loose or worn wheel bearings (para. 4-45).	If wheel bearings are loose, adjust bearings (para. 4-45). If wheel bearings cannot be adjusted, replace bearings (para. 4-45). If wheel bearings are not loose or worn, go to step S.

Table 4-2. Organizational Troubleshooting Table - continued

MALFUNCTION TEST OR INSPECTION	CORRECTIVE ACTION
Step 5. Check for cracked, scored, or deformed brake drum (para. 4-45).	If brake drum is cracked or deformed, replace drum (para. 4-45). If brake drum is scored, notify Direct Support/General Support Maintenance. If brake drum is not defective, go to step 6.
Step 6. Check for loose or worn brake lining.	If brake lining is loose or worn, replace brake shoes (para. 4-40). If brake lining is not loose or worn, go to step 7.
Step 7. Visually check for broken or frozen camshaft roller.	If camshaft roller is broken or frozen, replace (para. 4-40).
5. BRAKES DRAG AND ONE OR MORE BRAKE DRUMS RUNNING HOT.	
Step 1. Check brake adjustment (para. 4-30).	If brakes are out of adjustment or adjusted too tightly, correctly adjust brakes (para. 4-30). If brakes are not out of adjustment, go to step 2.
Step 2. Check for weak or broken brake shoe tension spring.	If tension spring is defective, replace (para. 4-40). If tension spring is not defective, go to step 3.
Step 3. Visually check for broken or frozen camshaft roller.	If camshaft roller is broken or frozen, replace (para. 4-40). If camshaft roller is not defective, go to step 4.
Step 4. Check for cracked, scored or deformed brake drum.	If brake drum is cracked or deformed, replace brake drum (para. 4-45) . If brake drum is scored, notify Direct Support/General Support Maintenance.
	LANDING LEG
DIFFICULTY IN TURNING HANDCRANK.	
Step 1. Check for bent lower leg.	If lower leg is bent, replace landing leg (para. 4-48). If lower leg is not bent, go to step 2.
Step 2. Check for worn gears or bearings in landing leg gear box.	If gears or bearings are worn, replace complete gear box (para. 4-48).

Table 4-2. Organizational Troubleshooting Table - continued

MALFUNCTION
TEST OR INSPECTION
CORRECTIVE ACTION

SPRINGS AND SUSPENSION

1. HARD PULLING.

Step 1. Check for dragging brakes (side pull or hot drum).
If brakes are dragging, adjust brakes (para. 4-30).
If brakes are not dragging, go to step 2.

Step. 2 Check wheel bearing adjustment (para. 4-45).
If wheel bearings are out of adjustment, adjust wheel bearings (para. 4-45).
If wheel bearings are not out of adjustment, go to step 3.

Step 3. Check for loose trunnion tube bracket bolts.
If trunnion tube bracket bolts are loose, torque to 300 lb ft (408 Nm).
If trunnion tube bracket bolts are secure, go to step 4.

Step 4. Check for loose springs.
If springs are loose, notify Direct Support/General Support Maintenance.

2. IMPROPER SPRING ACTION.

Step 1. Check for loose u-bolts.
If u-bolts are loose, torque u-bolt nuts to 730 lb ft (990 Nm).

If u-bolts are secure, go to step 2.

Step 2. Check spring for broken or weak spring leaves.
If leaves are broken or weak, notify Direct Support/General Support Maintenance.

3. EXCESSIVELY WORN, SCUFFED, OR CUPPED TIRES.

Step 1. Check tire pressure.
If tire pressure is not 60 psi, inflate tires to 60 psi.
If tire pressure is 60 psi, go to step 2.

Step 2. Check for loose wheels.
If wheels are loose, tighten wheel lug nuts and torque to 400 to 450 lb ft (542-612 Nm).
If wheels are not loose, go to step 3.

Step 3. Check for loose wheel bearings.
If wheel bearings are loose, adjust wheel bearings (para. 4-45).
If wheel bearings are not loose, go to step 4.

Table 4-2. Organizational Troubleshooting Table - continued

MALFUNCTION TEST OR INSPECTION CORRECTIVE ACTION
Step 4. Check for bent wheel. Replace wheel if bent (para. 4-43). If wheel is not bent, go to step 5.
Step 5. Check for deformed, cracked or scored brake drum. If brake drum is cracked or deformed, replace brake drum (para. 4-45) . If brake drum is scored, notify Direct Support/General Support Maintenance.

Section V. MAINTENANCE OF THE ELECTRICAL SYSTEM

	Page
Circuit Breaker Load Center and Switch Box	4-17
Circuit Breaker Replacement	4-16
Clearance Light Assembly	4-24
Contact Adjustments	4-14
Fuse Replacement	4-15
24 Volt Composite Marker Light Assembly	4-22
24 Volt Dome Light Assembly	4-27
110 Volt Dome Light Assembly	4-28
24 Volt Dome Light Switch Replacement	4-29
110 Volt Dome Light Switch Replacement	4-31
12 Volt Receptacle	4-35
24 Volt Receptacle	4-36
12 Volt Taillight Assembly	4-19
24 Volt Ventilating Fan Replacement	4-32
110 Volt Wall Receptacle Replacement	4-18
Wire Connectors	4-38
Wiring Harness	4-34

4-12. CONTACT ADJUSTMENTS

INITIAL SETUP

Tools

General mechanics tool kit

WARNING

Disconnect all outside power before performing any maintenance on the electrical system. Failure to do so could result in serious injury or death.

Good connectors are essential for satisfactory operation of lights. If a single lamp does not function properly, determine if contact in receptacles and contacts in plugs are in proper positions. If not, remove all electrical power from semitrailer, then carefully grasp contact with pliers and pull it to the proper position. Do not deform contact of sleeves. Check terminals in connector of cable and individual lamp wire. Check ground cable connection which must make clean contact with frame.

4-13. FUSE REPLACEMENT

INITIAL SETUP

Tools

General mechanics tool kit

Materials/Parts

Fuses, 60 amp

WARNING

Disconnect 110 volt AC electrical power cable from the 110 volt outside receptacle before attempting to remove or replace fuses. Failure to do so could result in serious injury or death.

a. Place switch handle (1, figure 4-1) in OFF (down) position.

b. Release pressure of snap fastener holding switch box cover closed. Open cover (2).

c. Grasp fuse (3) firmly in the center and pull from clips.

d. Holding new fuse (3) in the center, press into clips.

e. Close cover (2) and place switch handle (1) in the ON (up) position.

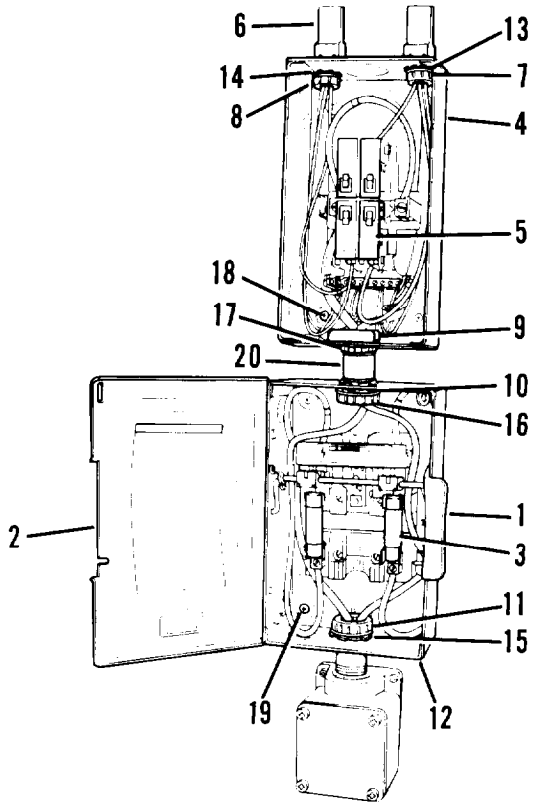

Figure 4-1. Switch box and circuit breaker load center, covers open.

4-14. CIRCUIT BREAKER REPLACENT

INITIAL SETUP

Tools

General mechanics tool kit

Materials/Parts

Circuit breakers

WARNING

Disconnect all outside power before performing any maintenance on the electrical system. Failure to do so could result in serious injury or death.

a. Removal.

(1) Remove door (already removed in figure) on circuit breaker load center (4, figure 4-1).

(2) Pull defective circuit breaker (5) out of load center (4).

b. Installation.

(1) Snap new circuit breaker (5, figure 4-1) in load center (4).

(2) Check switch (1) for loose contact. press contacts closer together.

(3) Install door on circuit breaker load center (4).

4-15. CIRCUIT BREAKER LOAD CENTER AND SWITCH BOX

INITIAL SETUP

Tools

General mechanics tool kit

WARNING

Disconnect all outside power before performing any maintenance on the electrical system. Failure to do so could result in serious injury or death.

a. Removal.

(1) Remove door on circuit breaker load center (4, figure 4-1). Open door (2) on switch box (12).

(2) Disconnect all internal wiring and tag for ease of installation.

(3) Remove wire run covers (6) at top of load center (4).

(4) Remove caps (7,8 and 9) in the circuit breaker load center (4). Slide off of wiring.

(5) Remove caps (10 and 11) in the switch box (12). Slide off of wiring.

(6) Remove close nipples (13 and 14) from top of load center (4).

(7) Remove locknut (17) at bottom of load center (4). Slide off of wiring.

(8) Remove two locknuts (15 and 16) in the switch box (12). Slide off of wiring.

(9) Remove rigid coupling (20).

(10) Remove four screws (18) securing circuit breaker load center (4). Remove circuit breaker load center (4).

(11) Remove four screws (19) securing switch box (12). Remove switch box (12).

b. Installation.

(1) Position circuit breaker load center (4, figure 4-1) on wall and insert wiring through holes in top. Secure with four screws (18).

(2) Position switch box (12) on wall and insert wiring. Secure with four screws (19).

(3) Slide rigid coupling (20) over wiring.

(4) Thread wiring through bottom of load center (4). Slide locknut (17) over wiring. Tighten locknut (17).

(5) Install and tighten two locknuts (15 and 16) in switch box (12).

(6) Install close nipples (13 and 14) at top of load center (4).

(7) Install caps (10 and 11) in switch box (12).

(8) Install caps (7, 8 and 9) in circuit breaker load center (4).

(9) Remove tags and connect all internal wiring in switch box (12) and circuit breaker load center (4).

(10) Install wire run covers (6) at top of load center (4).

(11) Close door (2) on switch box (12). Install cover on circuit breaker load center (4).

4-16. 110 VOLT WALL RECEPTACLE REPLACEMENT

INITIAL SETUP

Tools

General mechanics tool kit

Materials/Parts

110 volt receptacle

WARNING

Disconnect all outside power before performing any maintenance on the electrical system. Failure to do so could result in serious injury or death.

a. Removal.

(1) Turn locking screw (1, figure 4-2) one quarter turn to unlock receptacle (2) in wire run (3).

(2) Pull receptacle (2) from wire run (3). Loosen two captive screws (4) securing two wires (5). Remove receptacle (2) from wire run (3).

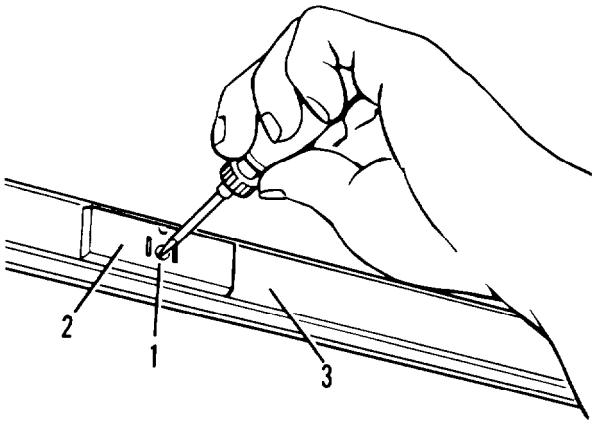

Unlocking or locking receptacle

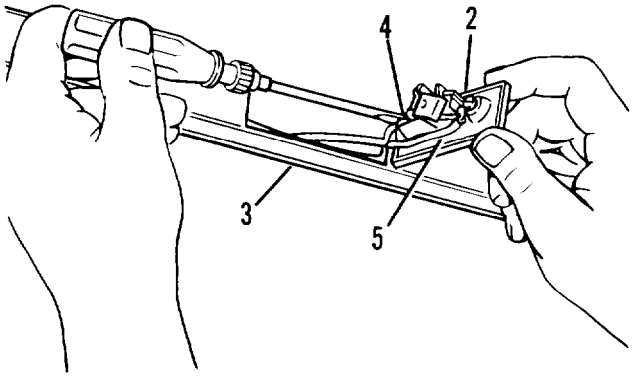

Disconnecting or connecting wires

Figure 4-2. 110 volt wall receptacle replacement

b. Installation.

(1) Connect two wires (5, figure 4-2) to receptacle (2). Secure with two captive screws (4) .

(2) Place receptacle (2) in wire run (3) opening. Lock in place by turning locking screw (1) one quarter turn.

4-17. 12 VOLT TAILLIGHT ASSEMBLY

INITIAL SETUP

Tools

General mechanics tool kit

Materials/Parts

12 volt taillight assembly

NOTE

Tag wires to aid in installation. If wire connectors are to be repaired or replaced, go to wire connector procedure (para. 4-28).

Removal is not necessary for lamp, lens, or door assembly replacement. If circuit marker bands are missing or not readable, replace (para. 4-28).

a. Removal.

WARNING

Disconnect all outside power before performing any maintenance on the electrical system. Failure to do so could result in serious injury or death.

CAUTION

Do not pull on wires, only pull connectors apart. Pulling on wires could damage them.

(1) Pull connectors (1, figure 4-3) apart.

(2) Remove two screws (2) and lockwashers (3) that hold 12 volt taillight assembly (4) to bracket (5).

(3) Remove 12 volt taillight assembly (4).

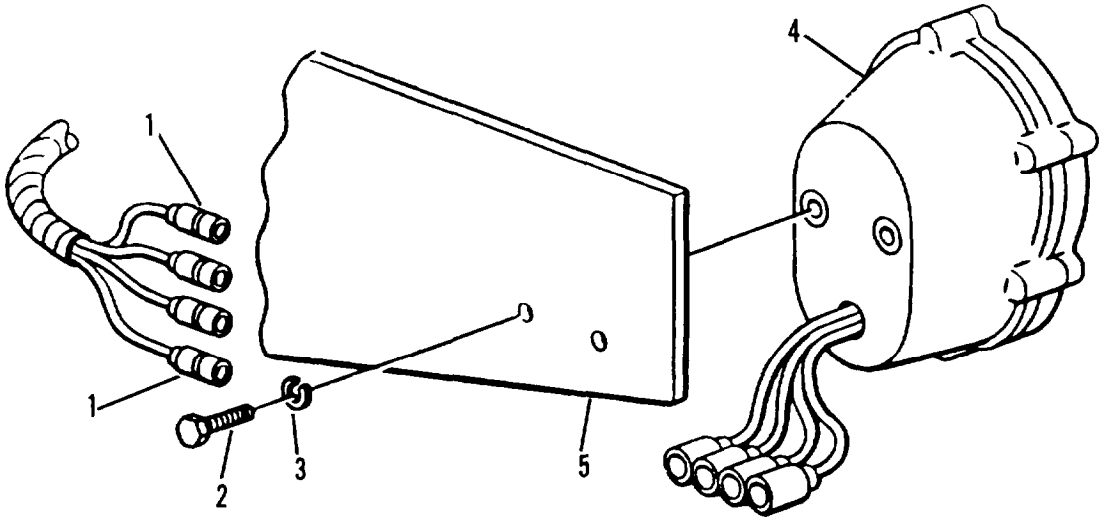

Figure 4-3. 12 volt taillight assembly.

b. Disassembly.

(1) Remove six captive screws (1, figure 4-4) on lens (3).

(2) Remove lens (3) and gasket (4). Captive screws (1) are fitted with retaining rings (2) and will remain in lens (3).

NOTE

Do not remove gasket (4) unless it is damaged or deteriorated.

(3) To remove lamps (5 and 6), push in and turn counterclockwise. Remove lamps (5 and 6) from socket assembly (10).

(4) Remove slotted washers (8) from ends of cables.

(5) Remove shells (9) from ends of cables.

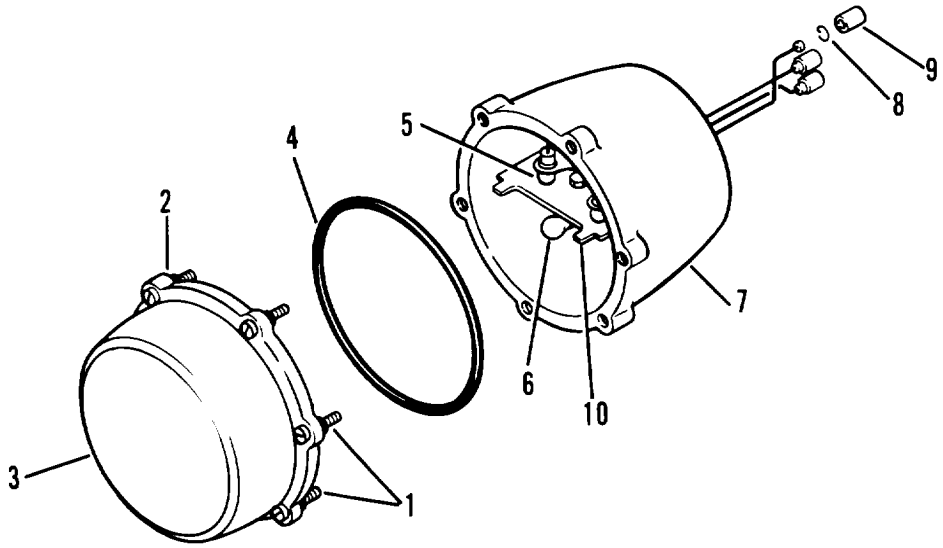

1. Screw
2. Retaining ring
3. Lens
4. Gasket
5. Lamp
6. Lamp
7. Body
8. Slotted washer
9. Shell
10. Socket and wiring assembly

Figure 4-4. 12 volt taillight

c. Cleaning. See para. 4-4 for general cleaning instructions.

d. Inspection. See para. 4-5 for general inspection instructions.

e. Repair. Repair is limited to the replacement of unserviceable parts.

f. Assembly.

(1) Install shells (9, figure 4-4) on ends of cables.

(3) Install slotted washers (8) on ends of cables.

(4) Install lamps (5 and 6) in socket (10).

(5) Install lens (3) and gasket (4).

(6) Secure lens (3) with six captive screws (1).

g. Installation.

(1) Install taillight assembly (4, figure 4-3) on bracket (5) and secure with two lockwashers (3) and capscrews (2).

(2) Connect cable connectors (1).

4-18. 24 VOLT COMPOSITE MARKER LIGHT ASSEMBLY

INITIAL SETUP

Tools

General mechanics tool kit

Materials/Parts

24 volt composite marker light lamps

NOTE

Tag wires to aid in installation. If wire connectors are to be repaired or replaced, go to wire connector procedure (para. 4-28).

Removal is not necessary for lamp, lens, or door assembly replacement. If circuit marker bands are missing or not readable, replace (para. 4-28).

a. Removal.

WARNING

Disconnect all outside power before performing any maintenance on the electrical system. Failure to do so could result in serious injury or death.

CAUTION

Do not pull on wires, only pull connectors apart. Pulling on wires could damage them.

(1) Pull connectors (1, figure 4-5) apart.

(2) Remove two screws (2) and lockwashers (3) that hold 24 volt composite light assembly (4) to bracket (5).

(3) Remove 24 volt composite light assembly (4).

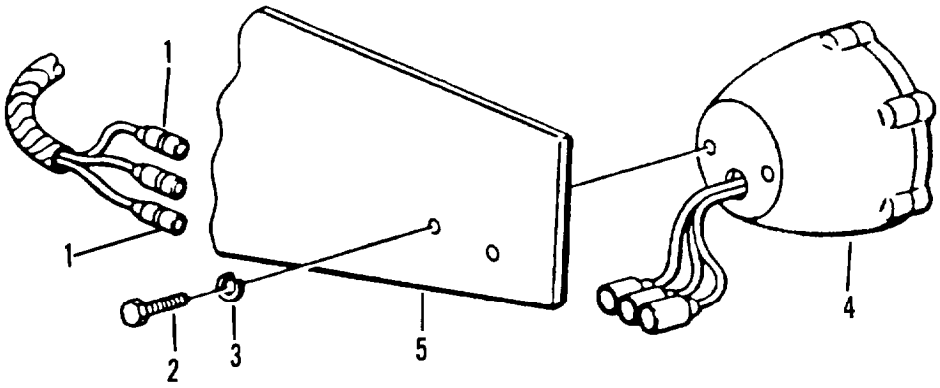

Figure 4-5. 24 volt composite light assembly

b. Disassembly

(1) Unscrew six captive screws (10, figure 4-6) on door (8).

(2) Remove door (8) and gasket (7). Captive screws (10) are fitted with retaining rings (11) and will remain in door. Do not remove gasket (7) from door (8) unless gasket is damaged.

(3) Remove lamps (4, 5, and 6) from sockets.

(4) Remove C-washers (12) and shells (13) from end of cables.

c. Cleaning. See para. 4-4 for general cleaning instructions.

d. Inspection. See para. 4-5 for general inspection instructions.

e. Repair. Repair is limited to the replacement of unserviceable parts.

f. Assembly.

(1) Install shells (13) and C-washers (12) on end of cables.

(2) Install lamps (4, 5, and 6, figure 4-6) in sockets.

(3) Install door (8) and gasket (7) if removed.

(4) Secure door (8) with six captive screws (10).

g. Installation.

(1) Install 24 volt composite light assembly (4, figure 4-5) on bracket (5) and secure with two lockwashers (3) and screws (2).

(2) Connect cable connectors (1).

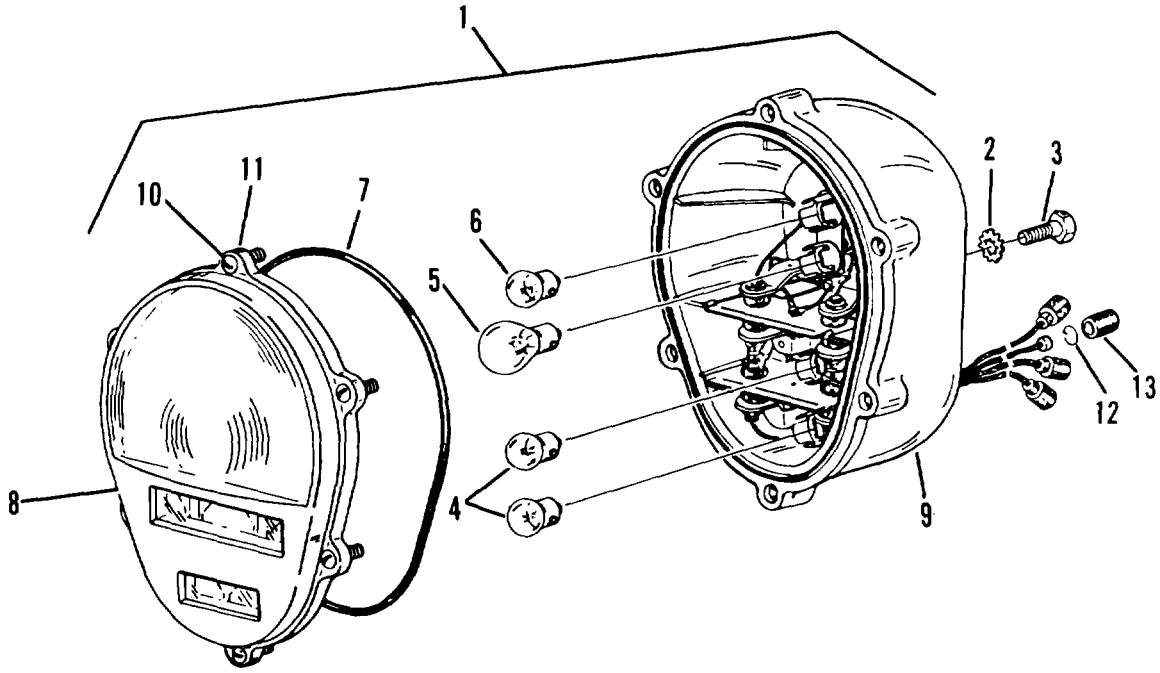

1. Composite marker light
2. Lockwasher
3. Screw
4. Lamp
5. Lamp (stop and turn signal)
6. Lamp (tail)
7. Gasket
8. Door
9. Body
10. Captive screw
11. Retaining ring
12. C-washer
13. Shell

Figure 4-6. Composite marker light assembly, 24 volt

4-19. CLEARANCE LIGHT ASSEMBLY

INITIAL SETUP

Tools

General mechanics tool kit

Materials/Parts

Clearance light lamp

NOTE

Tag wires to aid in installation. If wire connectors are to be repaired or replaced; go to wire connector procedure (para. 4-28).

If circuit marker bands are missing or not readable, replace (para. 4-28).

a. Removal.

WARNING

Disconnect all outside power before performing any maintenance on the electrical system. Failure to do so could result in serious injury or death.

(1) Remove two screws (1, figure 4-7) securing door (2). Remove door (2).

(2) Remove four screws (3) securing plate (4) to semitrailer body.

CAUTION

Do not pull on wires, only pull connectors apart. Pulling on wires could damage them.

(3) Lift off plate (4) and gasket (5). Disconnect light cable (6) connector. Withdraw cable (6) from semitrailer.

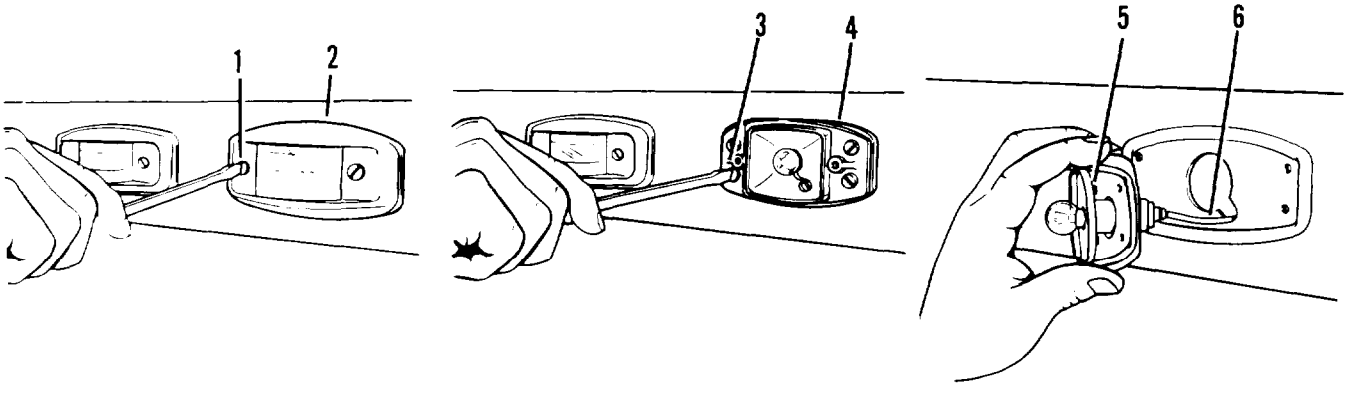

Removing or installing clearance light door

Removing or installing clearance light assembly

Removing or installing clearance light cable

Figure 4-7. Clearance light assembly

b. Disassembly.

(1) Remove two screws (1, figure 4-8) securing door 2).

(2) Lens (3) is clipped to door (2) by push-on nuts 4). Pry off nuts to remove lens from door.

(3) Remove lamp (5) from lampholder (6).

(4) Pry out gasket (7) from lampholder (6).

(5) Remove C-washer (9) and shell (8) from end of cable.

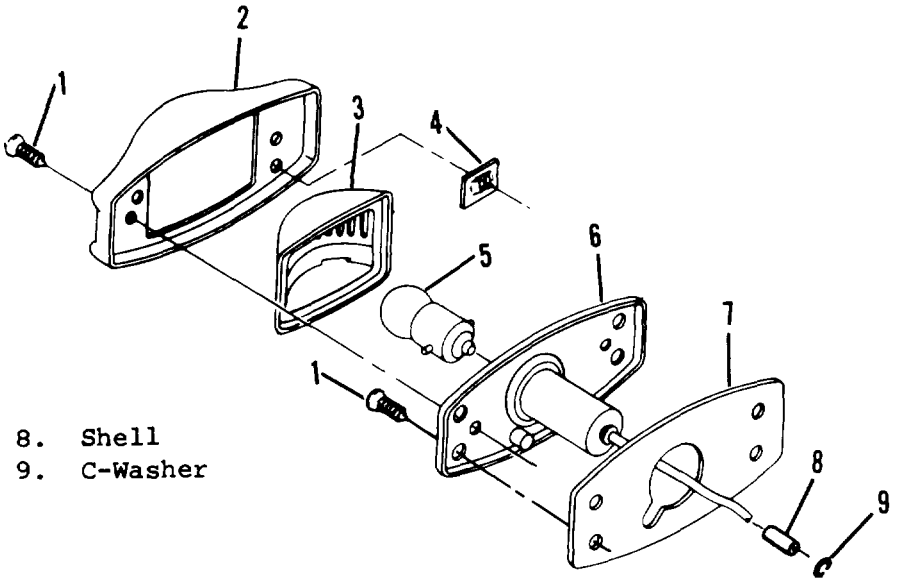

1. Screw
2. Door
3. Lens
4. Push-on nut
5. Lamp
6. Lampholder
7. Gasket
8. Shell
9. C-Washer

Figure 4-8. Clearance light

c. Cleaning. See para. 4-4 for general cleaning instructions

d. Inspection. See para. 4-5 for general inspection instructions.

e. Repair. Repair is limited to the replacement of unserviceable parts.

f. Assembly.

(1) Install shell (8) and C-washer (9) on end of cable.

(2) Install gasket (7, figure 4-8) in lampholder (6).

(3) Install lamp (5) in lampholder (6).

(4) Install lens (3) on door (2). Secure with push-on nuts (4).

(5) Secure door (2) with two screws (1).

g. Installation.

(1) Insert light cable (6, figure 4-7) through hole. Join connectors.

(2) position plate (4) and gasket (5) on semitrailer. Secure with four screws (3).

(3) position door (2) on light assembly (5). Secure with two screws (1).

4-20. 24 VOLT DOME LIGHT ASSEMBLY

INITIAL SETUP

Tools

General mechanics tool kit

Materials/Parts

24 volt dome light lamp

WARNING

Disconnect all outside power before performing any maintenance on the electrical system. Failure to do so could result in serious injury or death.

a. Removal.

(1) Loosen captive screw (1, figure 4-9) securing door (2). Swing door (2) down .

(2) To remove lamp, push in and turn counterclockwise.

(3) Remove four screws (3) securing light assembly to shim (4).

(4) Remove light assembly (5) from shim (4). Disconnect positive wire (6). Ground wire was secured by screw removed in step 3.

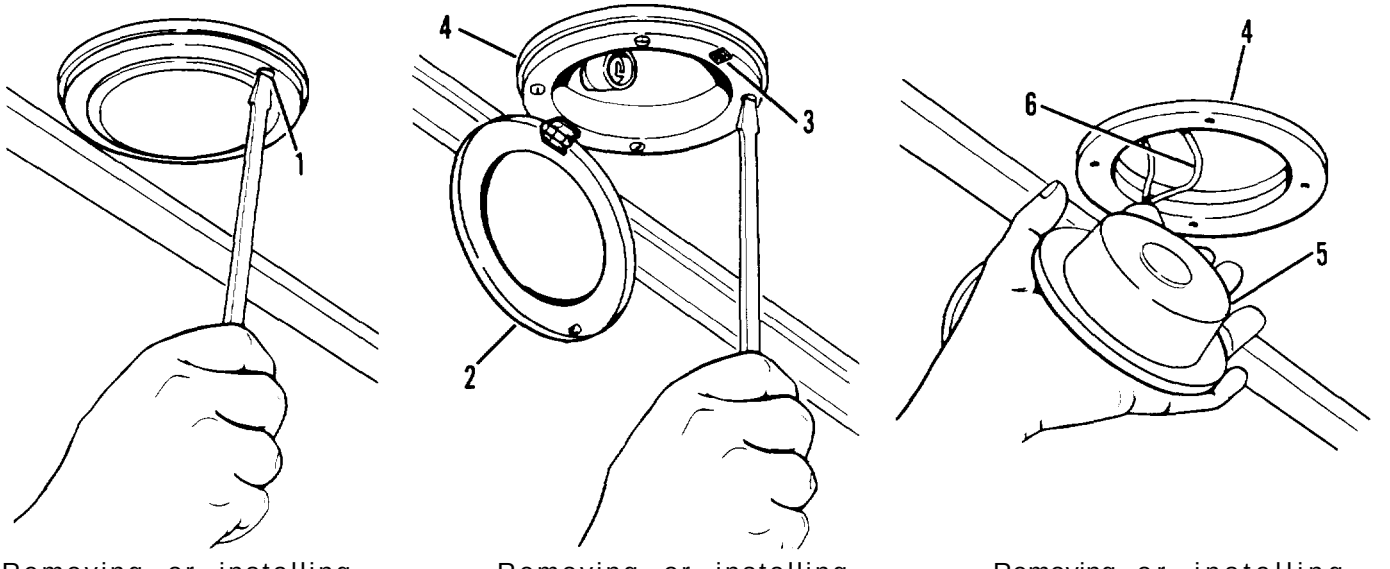

Removing or installing door

Removing or installing dome light assembly

Removing or installing wires

Figure 4-9. 24 volt dome light assembly replacement

b. Installation.

(1) Connect positive wire (6, figure 4-9).

(2) Position light assembly (5) on shim (4). Secure ground wire with screw (3). Secure light assembly with three remaining screws (3).

(3) Install dome light lamp. Swing door (2) up and secure with captive screw (1).

4-21. 110 VOLT DOME LIGHT ASSEMBLY

INITIAL SETUP

Tools

General mechanics tool kit

Materials/Parts

110 volt dome light lamp

WARNING

Disconnect all outside power before performing any maintenance on the electrical system. Failure to do so could result in serious injury or death.

a. Removal.

(1) Loosen captive screw (1, figure 4-10) securing door (2). Swing door (2) down .

(2) Remove lamp (3) to prevent damage. Remove four screws (4) securing light assembly (5) to ceiling.

(3) Remove light assembly (5) and shim (7) from ceiling. Disconnect wire (6).

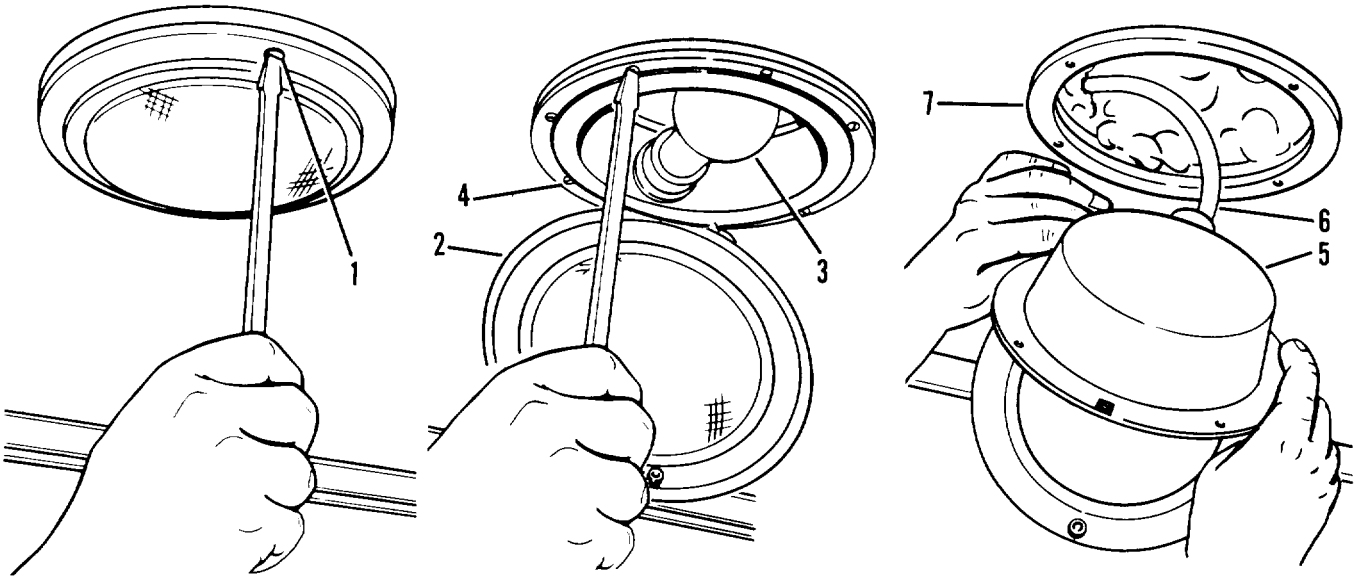

Removing or installing door

Removing or installing dome light assembly

Removing or installing wire

Figure 4-10. 110 volt dome light assembly replacement

(1) Connect wire (6, figure 4-10).

NOTE

Make sure that shim is installed with the light assembly to prevent shorting of electrical system.

(2) position light assembly (5) and shim (7) in ceiling. Secure with four screws (4). Install lamp (3).

(3) Swing door (2) up and secure with captive screw (l).

4-22. 24 VOLT DOME LIGHT SWITCH REPLACEMENT

INITIAL SETUP

Tools

General mechanics tool kit

Materials/Parts

24 volt dome light switch

WARNING

Disconnect all outside power before performing any maintenance on the electrical system. Failure to do so could result in serious injury or death.

a. Removal.

(1) Remove three screws (1, figure 4-11) securing switch plate (2) to wall.

(2) Pull switch plate (2) away from wall. Tag and disconnect two wires (3) from switch (4).

(3) Remove retainer ring (5) securing switch (4) to switch plate (2). Separate switch (4) and plate (2).

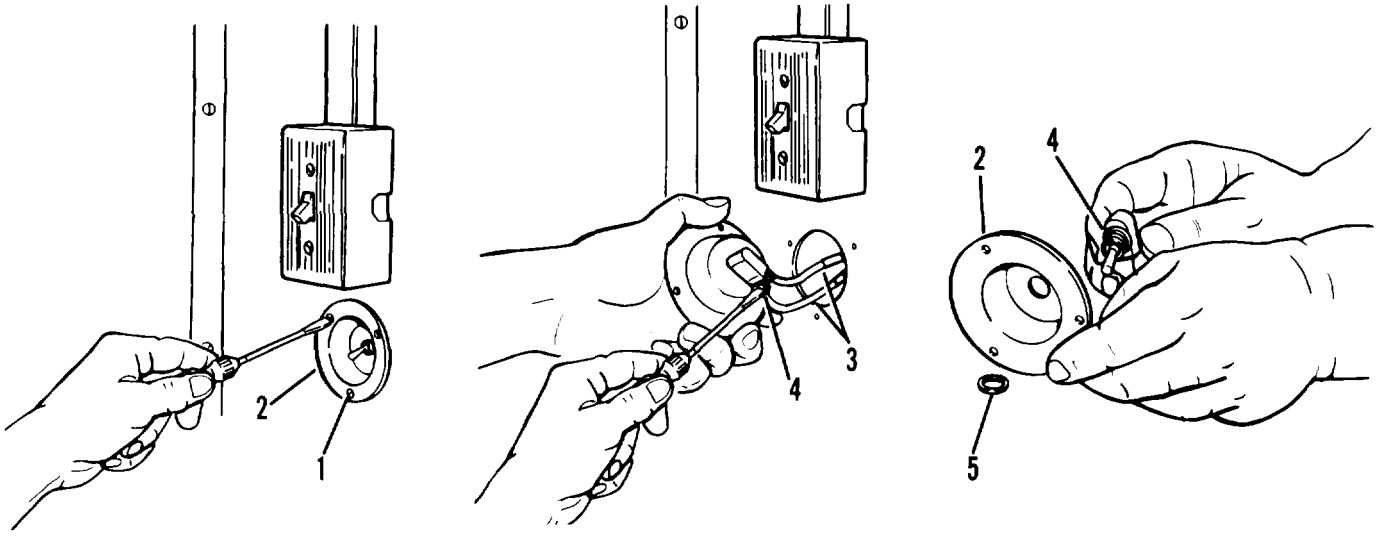

Removing or installing dome light switch

Removing or installing wires

Separating or securing switch and switch plate

Figure 4-11. 24 volt dome light switch replacement

b. Installation.

(1) Secure switch (4, figure 4-11) and switch plate (2) together with retainer ring (5).

(2) Install two wires (3) on switch (4).

(3) Secure switch plate (2) to wall with three screws (1).

4-23. 110 VOLT DOME LIGHT SWITCH REPLACEMENT

INITIAL SETUP

Tools

General mechanics tool kit

Materials/Parts

110 volt dome light switch

WARNING

Disconnect all outside power before performing any maintenance on the electrical system. Failure to do so could result in serious injury or death.

a. Removal.

(1) Remove two screws (1, figure 4-12) securing switch face plate (2). Remove face plate (2).

(2) Remove two screws (3) securing switch (4) to wall box (5).

(3) Pull switch (4) from wall box (5). Loosen two captive screws (6) securing two wires (7) to switch (4). Tag and disconnect wires (7), then remove switch (4).

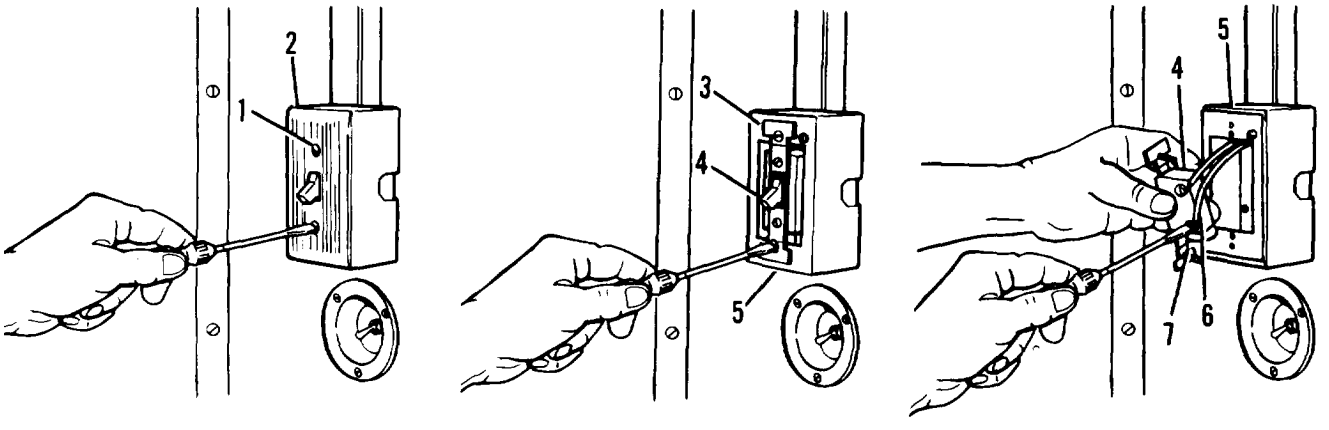

Removing or installing switch face plate

Removing or installing switch

Removing or installing wires

Figure 4-12. 110 volt dome light switch replacement

b. Installation.

(1) Install two wires (7, figure 4-12) to switch (4).

(2) Install switch (4) in wall box (5). Secure with two screws (6).

(3) Install switch face plate (2). Secure with two screws (1).

4-24. 24 VOLT VENTILATING FAN

INITIAL SETUP

Tools

General mechanics tool kit

Materials/Parts

24 volt ventilating fan

WARNING

Disconnect all outside power before performing any maintenance on the electrical system. Failure to do so could result in serious injury or death.

a. Removal.

CAUTION

Do not pull on wires, only pull connectors apart. Pulling on wires could damage them.

(1) Pull connectors (1, figure 4-13) apart.

(2) Remove four screws (2) securing fan (3) to duct (4).

(3) Remove ground wire (5) from fan (3). Remove two screws (6) securing mounting bracket (7) to ceiling.

(4) Lift off mounting bracket (7) and fan (3) as a unit.

(5) Remove two hex nuts (8) securing mounting bracket (7) to fan (3). Separate mounting bracket (7) and fan (3).

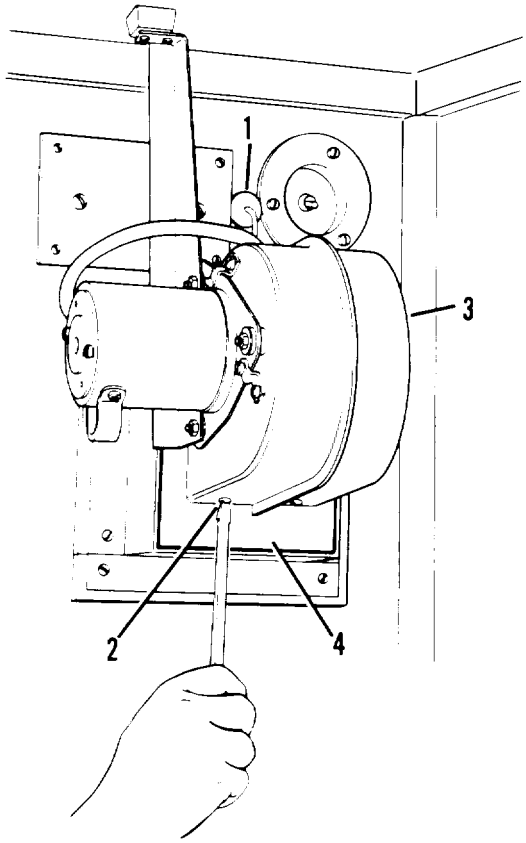

Removing or installing fan on duct

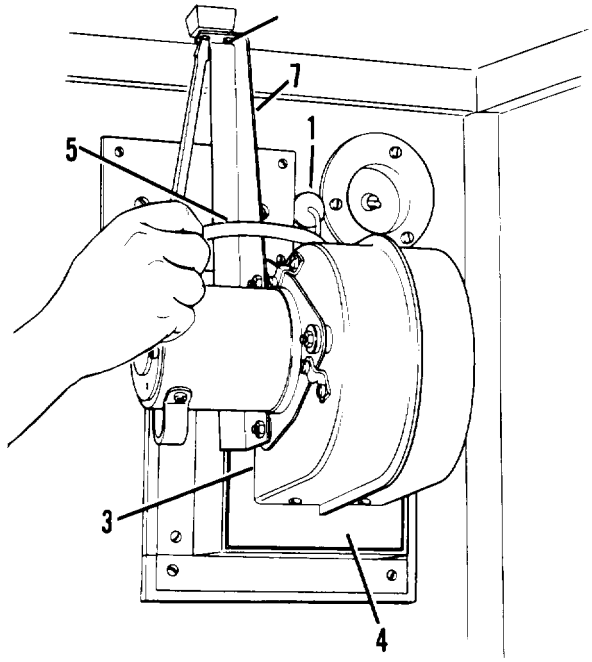

Removing or installing mounting bracket on ceiling

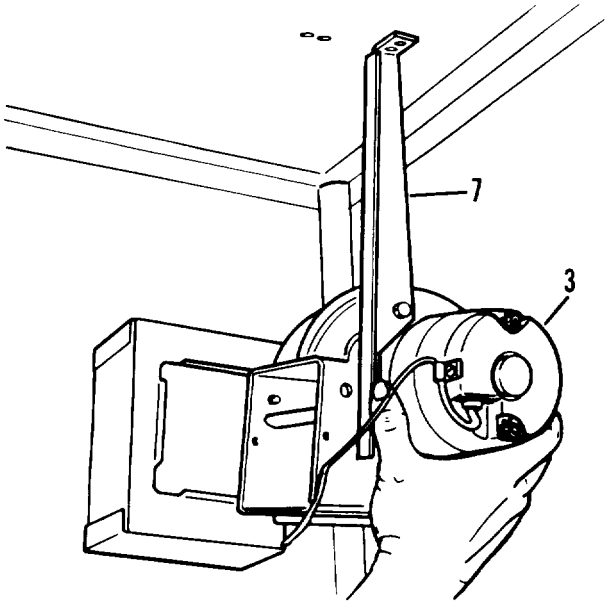

Removing or installing mounting bracket and fan

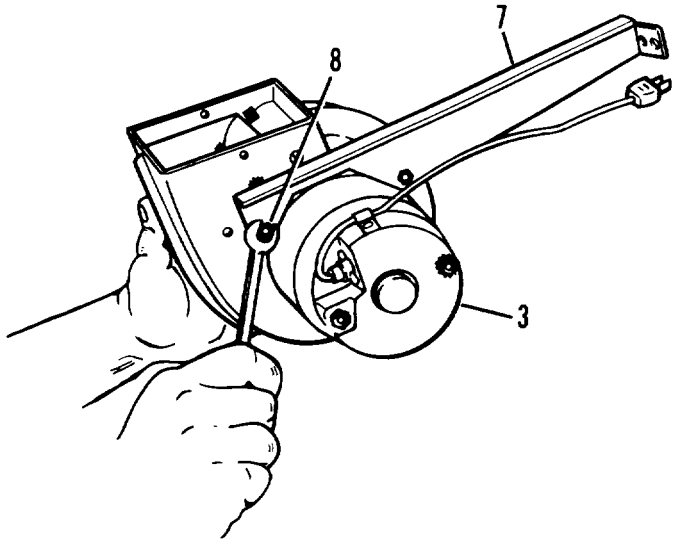

Removing or installing mounting bracket on fan

Figure 4-13. 24 volt ventilating fan replacement

b. Installation.

(1) Position mounting bracket (7, figure 4-13) on fan (3). Secure with two hex nuts (8).

(2) Secure mounting bracket (7) to ceiling with two screws (6). Connect wiring.

(3) Secure fan (3) to duct (4) with four screws (2).

(4) Join connectors (1).

(5) Connect outside power and test vent fan.

4-25. WIRING HARNESS

INITIAL SETUP

Tools

General mechanics tool kit

WARNING

Disconnect all outside power before performing any maintenance on the electrical system. Failure to do so could result in serious injury or death.

NOTE

Refer to wiring diagrams (figures 4-18 through 4-21).

a. Removal.

(1) Tag and disconnect taillight and front receptacle connectors.

(2) Draw wire through crossmember.

(3) Remove wire clips from inside of frame rail.

(4) Remove wire through grommets. It may be necessary to remove grommets.

(5) Remove wiring harness. For ease of installation, attach a wire or string to harness in the kingpin plate area.

b. Installation.

CAUTION

Be sure all grommets are present when installing wiring harness. If grommets are missing, the wiring harness may be damaged when threading through crossmember.

(1) Install wiring harness by threading through crossmember and grommets. Remove wire or string used to pull harness through crossmembers.

(2) Connect 12 and 24 volt light connectors and front receptacles. Make sure band marker numbers match.

(3) Check wiring harness for continuity.

(4) Install seven wire clips on either side of frame rail.

4-26. 12 VOLT RECEPTACLE

INITIAL SETUP

Tools

General mechanics tool kit

Materials/Parts

12 volt receptacle

WARNING

Disconnect all outside power before performing any maintenance on the electrical system. Failure to do so could result in serious injury or death.

a. Removal.

(1) Remove two nuts, washers and screws that secure 12 volt receptacle to front crossmember (1, figure 2-4).

(2) Withdraw receptacle.

b. Repair.

(1) Slide clear plastic sleeves (1, figure 4-14) back on wires (2). Remove screws (3) from back of receptacle (4). Tag and disconnect wires (2).

(2) Replace receptacle assembly (4).

(3) Install wires (2) on new 12 volt receptacle (4). Secure wires with screws (3).

(4) Slide plastic sleeves (1) over wires (2) to protect connections.

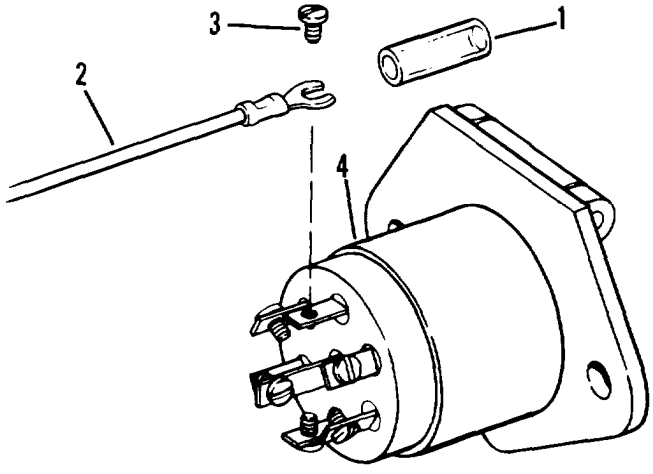

Figure 4-14. 12 volt receptacle

b. Installation.

(1) Install receptacle (figure 2-4).

(2) Secure receptacle with two screws, washers and nuts. Test receptacle.

4-27. 24 VOLT RECEPTACLE

INITIAL SETUP

Tools

General mechanics tool kit

Materials/Parts

24 volt receptacle

WARNING

Disconnect all outside power before performing any maintenance on the electrical system. Failure to do so could result in serious injury or death.

a. Removal.

(1) Remove four nuts, washers and screws that secure 24 volt receptacle to front crossmember (2, figure 2-4)

(2) Withdraw receptacle.

b. Disassembly.

(1) Unscrew grommet retaining nut 1, figure 4-15 and slide back on cable assembly (2).

(2) Slide grommet (3) on cable assembly (2).

(3) Using pliers, pull inserts (4) forward out of grommet (7).

(4) Using soldering gun, heat solder well and remove pins (4) from wire end (5).

(5) Pull wire (6) out of grommet (3) and nut (1).

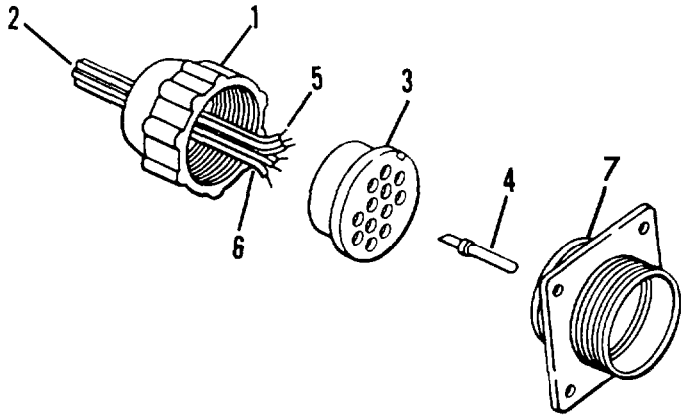

Figure 4-15. 24 volt receptacle assembly

c. Assembly.

(1) Coat grommet (7, figure 4-15) in the receptacle assembly with a light film of petroleum.

(2) Install each pin (4) in the rear of the receptacle assembly grommet (7). Make sure that the identifying letters are matched with the identical letters on the grommet (3).

(3) Slide retaining nut (1) on wire threads (6) facing outward.

(4) Put wire ends (6) into back of grommet (3). Make sure that the wires (6) are matched with the proper pins (4).

(5) Strip insulation on wire ends (6) equal to depth of solder well in pins (4). Place solder well on wire ends and solder.

(6) Push solder wells into grommet (3) until seated. Push grommet (3) in receptacle assembly.

(7) Screw retaining nut (1) on grommet (3) and tighten hand tight.

d. Installation.

(1) Install receptacle (2, figure 2-4).

(2) Secure receptacle with four screws, washers and nuts. Test receptacle.

4-28. WIRE CONNECTORS

INITIAL SETUP

Tools

General mechanics tool kit

Materials/Parts

Band marker
Contact
Shell
Sleeve
Terminal

WARNING

Disconnect all outside power before performing any maintenance on the electrical system. Failure to do so could result in serious injury or death.

a. Male Connector Repair.

(1) Separate halves of connector (2, figure 4-16).

(2) Slide shell (3) up wire lead (1) until clear of contact (4) and retaining washer (5).

(3) Remove retaining washer (5).

(4) Slide shell (3) off over contact (4).

NOTE

If replacing only connector, skip steps 5, 6, and 8.

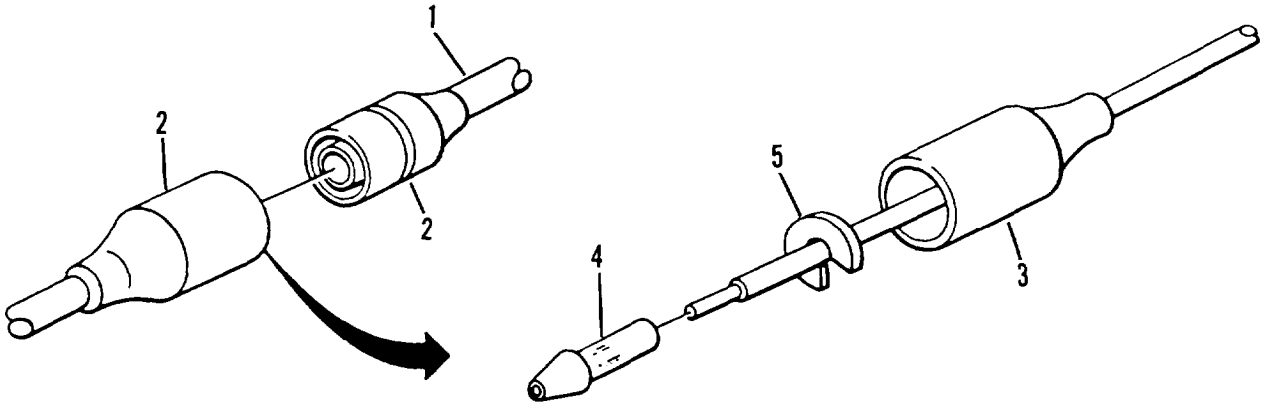

Figure 4-16. Male connector repair

(5) Using cutting pliers, cut contact (4) off lead (1).

(6) Strip insulation from wire lead (1) equal to depth of new contact (4).

(7) Slide new shell (3) on wire lead (1). Apply insulating compound to wire lead (1).

(8) Slide wire lead end (1) into new contact (4), and using crimping tool, crimp.

(9) Place retaining washer (5) on lead (1) at contact (4).

(10) Slide shell (3) down wire lead (1) until retaining washer (5) seats.

(11) Apply insulating compound to outside of connector (2). Push connector (2) halves together until seated.

(12) Connect power. Turn on semitrailer lights and check for proper operation.

b. Female Connector Repair.

(1) Separate connector halves (1 and 2, figure 4-17).

(2) Slide shell (4) up wire lead (3) until clear of terminal (5).

(3) Using diagonal cutting pliers, cut terminal (5) off wire lead (3). Be sure to leave enough lead for connection after repair.

(4) Slide shell (4) and sleeve (6) off wire lead (3). Discard shell (4) and sleeve (6).

(5) Using wire stripper, strip insulation from wire lead (3) 1/8-inch (3.2 mm) from end.

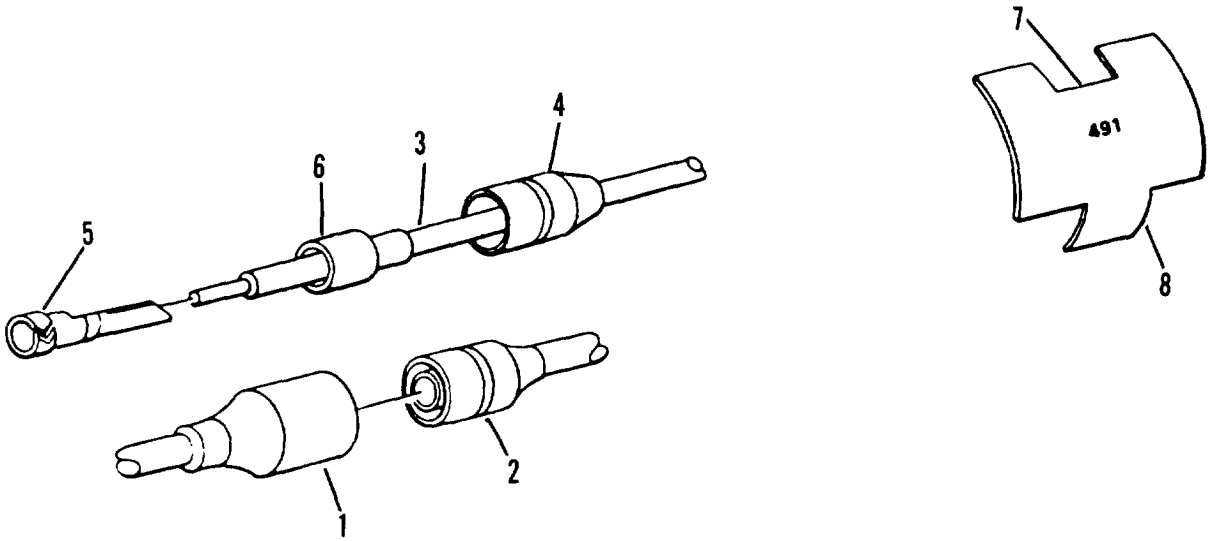

Figure 4-17. Female connector repair

(6) Slide new shell (4) and sleeve (6) on wire lead (3). Apply insulation compound to end of wire lead (3).

(7) Slide new terminal (5) on wire lead (3), and using crimping tool, crimp end.

(8) Slide shell (4) and sleeve (6) down over terminal (5) until seated.

(9) Apply insulation compound to outside of female connector (1). Push connectors (1 and 2) together until seated.

(10) Connect power. Turn on semitrailer lights and check for proper operation.

c. Circuit Marker Band Replacement.

(1) Open tab ends of marker band (7, figure 4-17) and remove. Discard marker band (7).

(2) Using etching tool, etch proper number on new marker band (7).

NOTE

See electrical schematics (figure 4-18 through 4-21).

(3) Place marker band (7) on wire lead (3). Using crimping tool, bend tab ends (8) over wire (3).

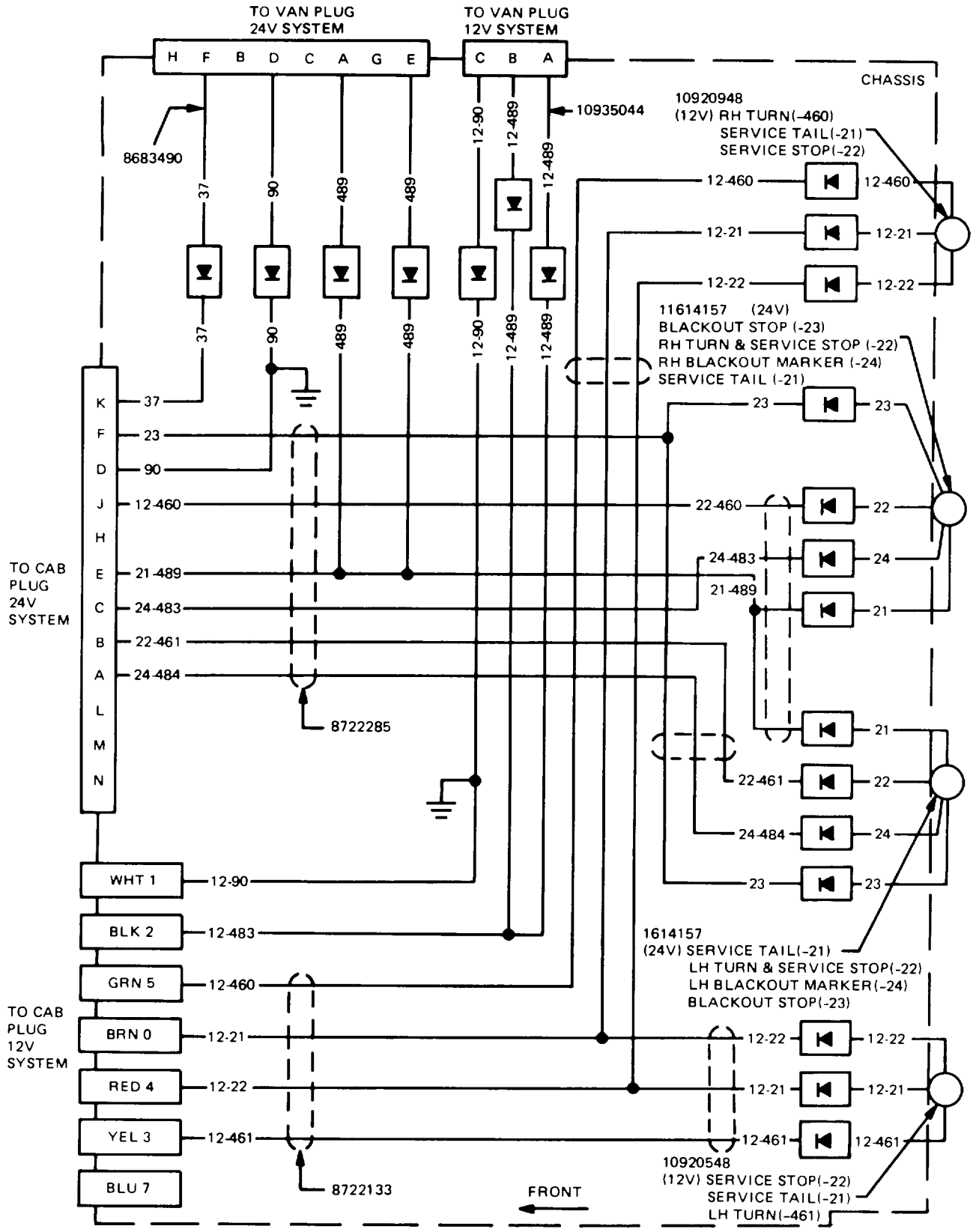

Figure 4-18. Chassis wiring diagram

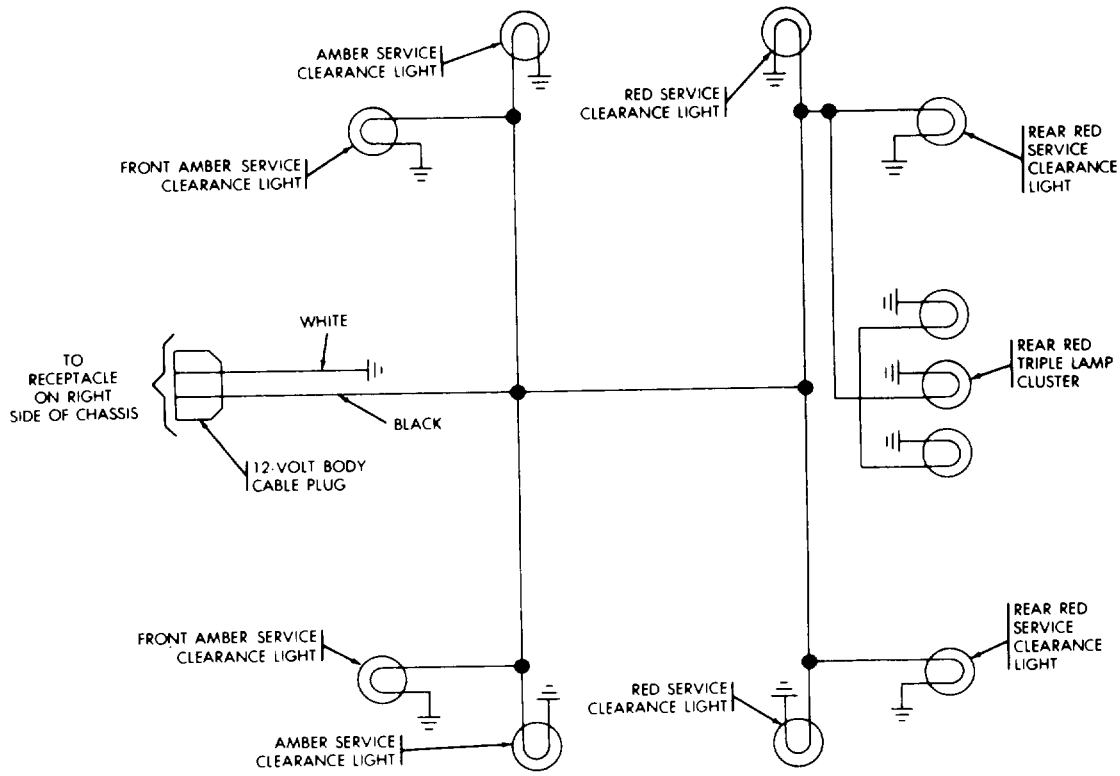

Figure 4-19. 12 volt body wiring diagram

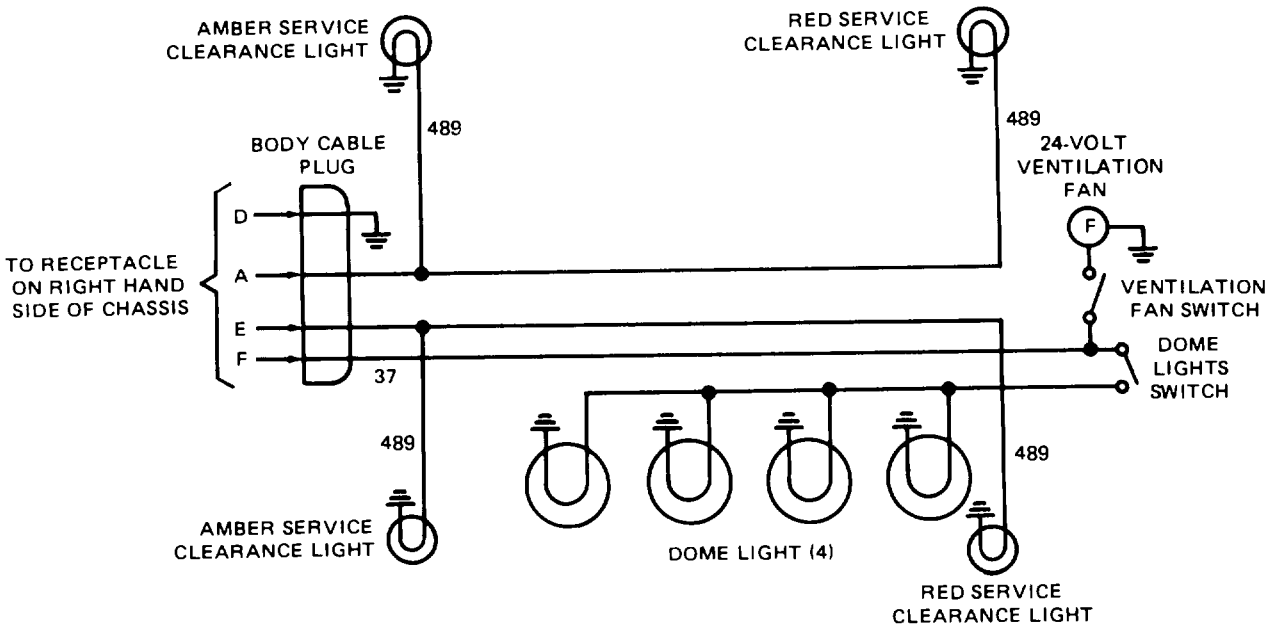

Figure 4-20. 24 volt body wiring diagram

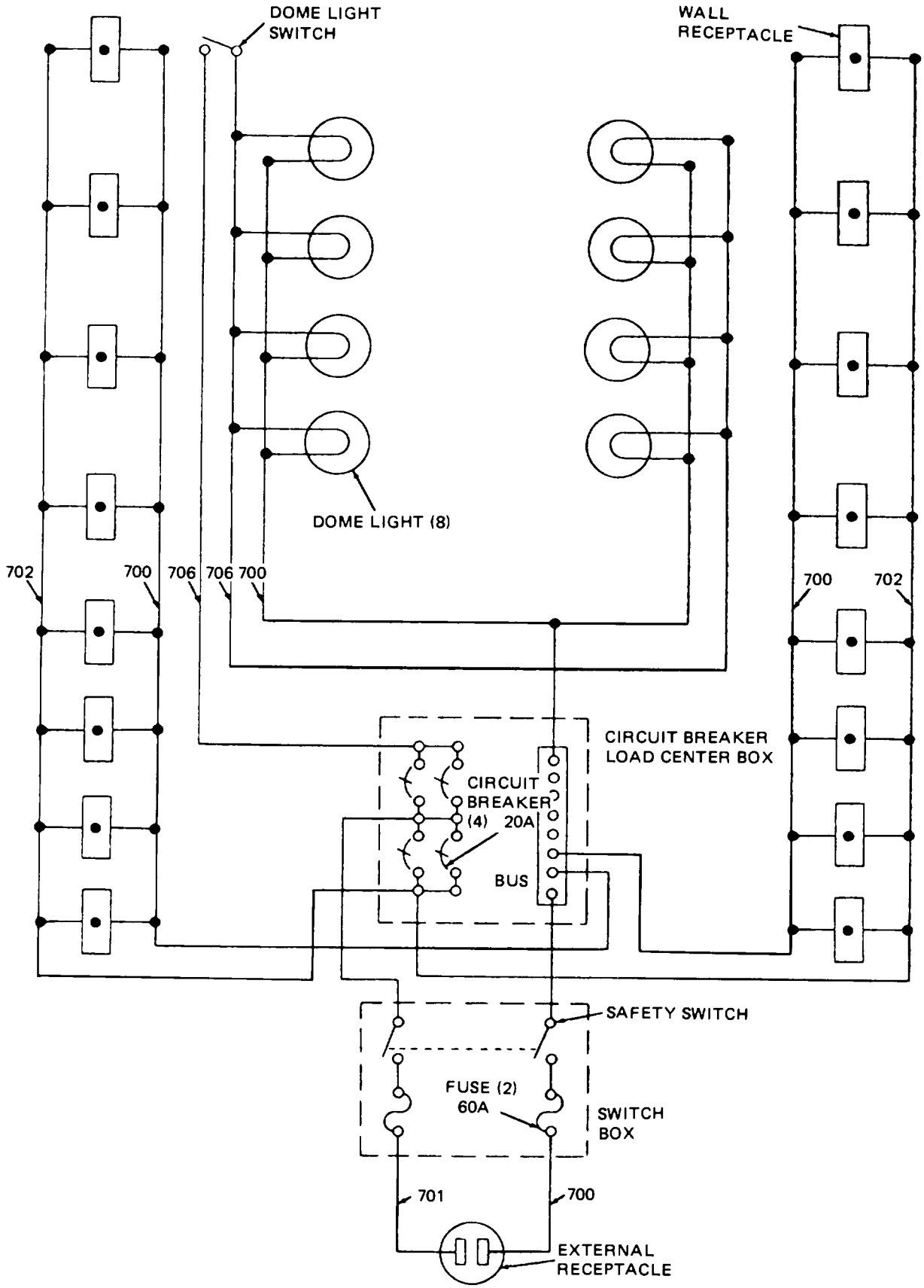

Figure 4-21. 110 volt AC body wiring diagram

Section VI. MAINTENANCE OF THE BRAKES

	Page
Air Brake Chamber	4-56
Air Charging System Control Valve	4-54
Air Hose Couplings	4-50
Air Lines and Fittings	4-52
Air Reservoirs	4-59
Brake Camshafts	4-62
Brake Shoes	4-60
Description of Brakes	4-44
Emergency Relay Valve	4-58
Maintenance and Adjustments	4-47
Parking Brake Control Valve	4-52
Slack Adjusters	4-49
Uncaging Failsafes	4-55

4-29. DESCRIPTION OF BRAKES

a. General. When the brake system of the semitrailer is properly connected to the service brake system of the towing vehicle, the service brake pedal on the towing vehicle controls the brakes on both vehicles. All units needed to produce and maintain a constant supply of compressed air are located on the towing vehicle and must operate effectively to insure proper performance of the semitrailer brakes.

b. Type of Brakes. The brakes are the air actuated type (figure 4-22). Air pressure is used to operate the mechanical internal brakes at the semitrailer wheels. The brakes are applied in proportion to the foot pressure applied to the brake pedal of the towing vehicle.

c. Brake System. The brake system consists of internal brakes, slack adjusters, service air line (1), emergency air line (2), emergency relay valve (3), air reservoirs (4), brake chambers (5) and connections.

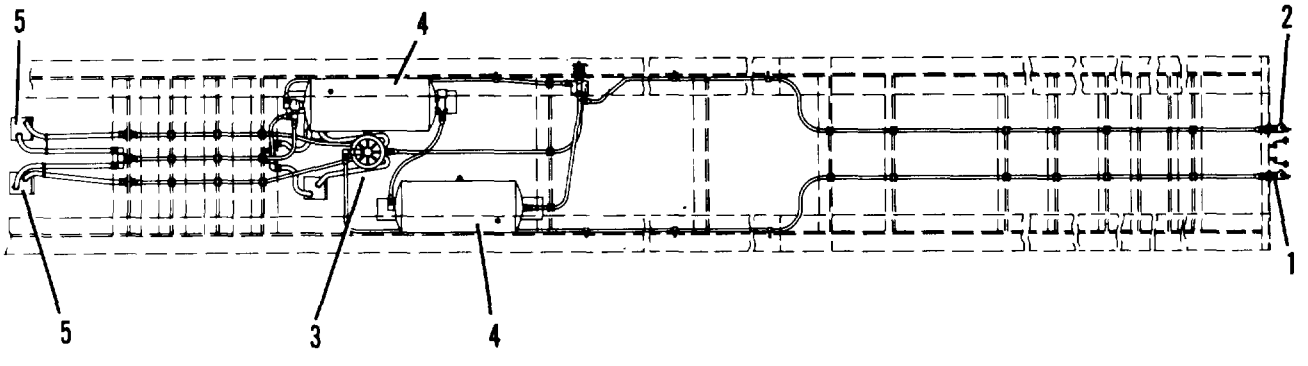

Figure 4-22. Schematic diagram of brake air system

d. Internal Brakes.

(1) The internal brakes are located within the brake drums. Each internal brake has two brake shoes (1, figure 4-23). The outer surfaces of the brake shoes are fitted with brake linings. Each shoe is anchored at one end on an anchor pin on which it pivots. The other end of each shoe is free to be pushed out or pulled.

(2) An S-shaped cam (2) on the end of the camshaft is mounted between the free ends of the two shoes (1). Rotation of the cam (2) forces the shoes (1) out causing the brake linings to contact the drum.

(3) A brake shoe tension spring (3), near the free ends of the brake shoes, retracts the brake shoes (1) from the drum and holds them in a retracted position until the brakes are applied.

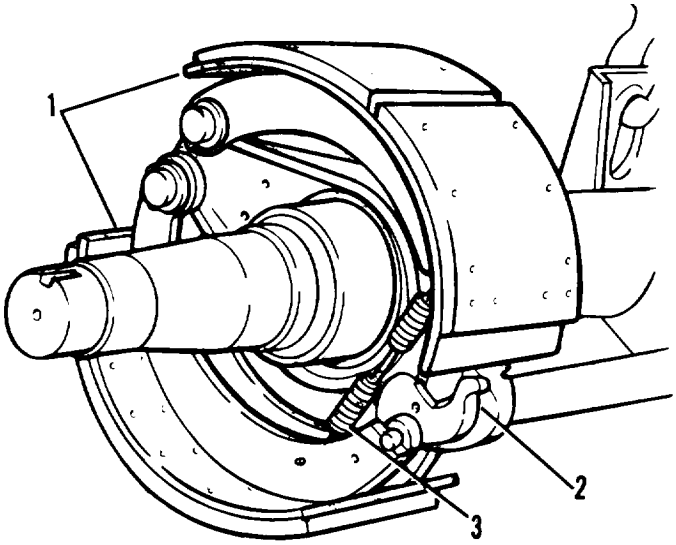

Figure 4-23. Internal brakes

e. Slack Adjusters. The slack adjusters (1, figure 4-24) are levers mounted on the brake camshafts (2). Push rods (3) of the air chambers (4) operate the slack adjusters (1) which in turn rotate the camshafts (2) causing the cams to press the brake shoes against the brake drums.

f. Air Brake Chamber. The air brake chambers (4, figure 4-24) are mounted adjacent to the internal wheel brakes. The air brake chambers convert air pressure into mechanical motion to operate the slack adjusters when applying brakes. The spring in the air brake chamber may be caged in case of air loss or brake failure to move the semitrailer.

g. Service Air Line. The service air line (7, figure 4-25) on the semitrailer extends from the air hose coupling (tagged SERVICE), on the right side of the front crossmember, along the right frame rail to the emergency relay valve. Its purpose is to transmit changes in air pressure originated in the towing vehicle, which causes the emergency relay valve to function.

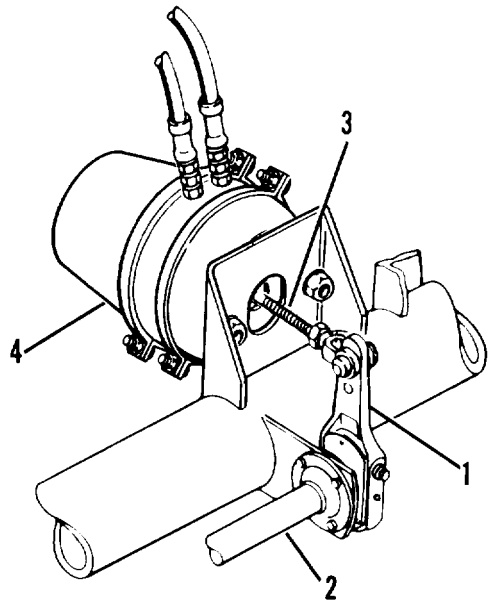

Figure 4-24. Slack adjuster and air brake chamber

h. Emergency Air Line. The emergency air line (8, figure 4-25) on the semitrailer extends from the air hose coupling (tagged EMERGENCY), on the left side of the front crossmember, along the left frame rail to the emergency relay valve. This air line transmits compressed air to fill the semitrailer reservoir and maintain proper air pressure, under control of the emergency relay valve, to apply the brakes on the semitrailer.

i. Emergency Relay Valve. The emergency relay valve (4, figure 4-25) is mounted on the semitrailer air reservoir by a connecting pipe nipple (5). The valve directly controls the service brakes on the semitrailer. It speeds brake action by releasing air from the air reservoir, on the semitrailer, directly to the air brake chambers. This valve controls the flow of air to and from the semitrailer air reservoir and automatically applies the brakes if the semitrailer breaks away from the towing vehicle or if there is a serious leak in the emergency air line.

j. Air Reservoirs. The air reservoirs (1 and 2, figure 4-25) are attached to the chassis frame. The reservoirs are connected by tubing (3) and provide a supply of air through the emergency relay valve (4) for applying the brakes. The emergency relay valve (4) is mounted directly to the left air reservoir by a pipe nipple (5). The air reservoirs are equipped with drain cocks (6) for draining accumulations of moisture and for releasing air pressure in the semitrailer brake system.

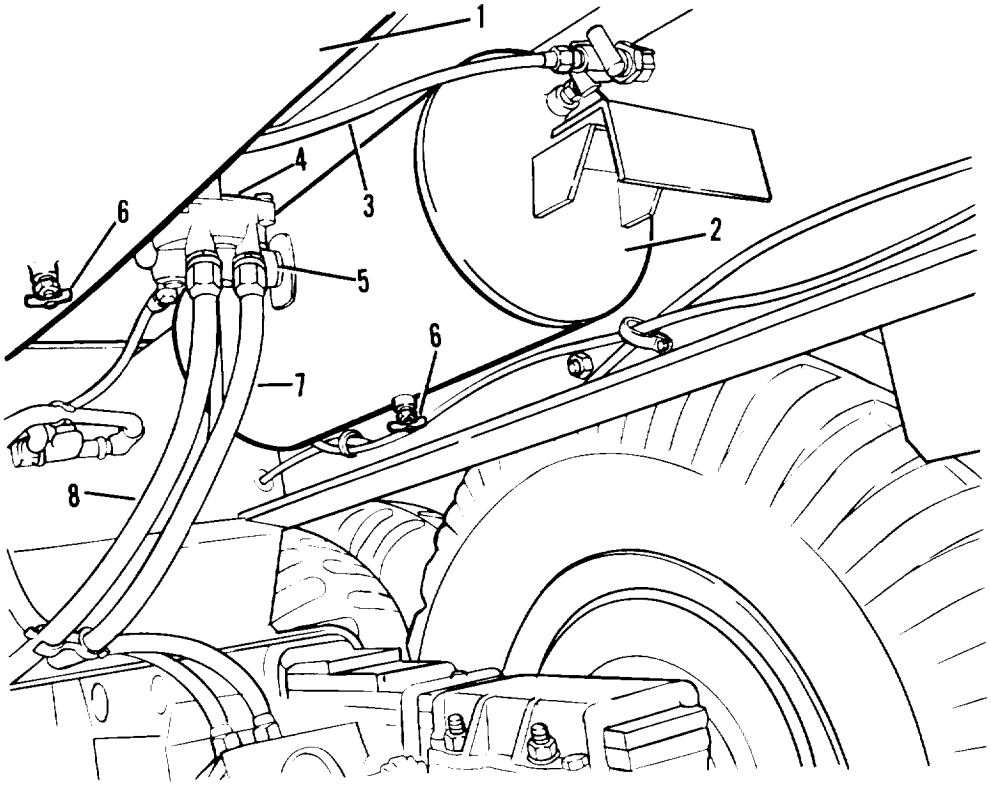

Figure 4-25. Air reservior, emergency relay valve and lines

4-30. MAINTENANCE AND ADJUSTMENTS

INITIAL SETUP

Tools

Jack
General mechanics tool kit

---

a. Slack Adjuster Adjustment.

(1) To release failsafe spring forces from slack adjuster and camshaft, apply air to air brake chamber. Do not apply the brakes. This procedure is to release failsafe spring.

(2) Jack up the axle to be adjusted. Check that wheels rotate freely.

(3) Check clevis rod (1, figure 4-26) adjustment. Dimension from outside of nonpressure housing to center of clevis pin must be 6-7/8 ± 1/32 inches (17.5 cm). Slack adjuster (3) may have to be moved or adjusted to center hole in air brake chamber with clevis rod (1). If dimensions of clevis rod are not correct, remove cotter pin, clevis pin and loosen locknut. Adjust clevis rod (1) to correct length. Tighten nut. Install clevis pin and new cotter pin.

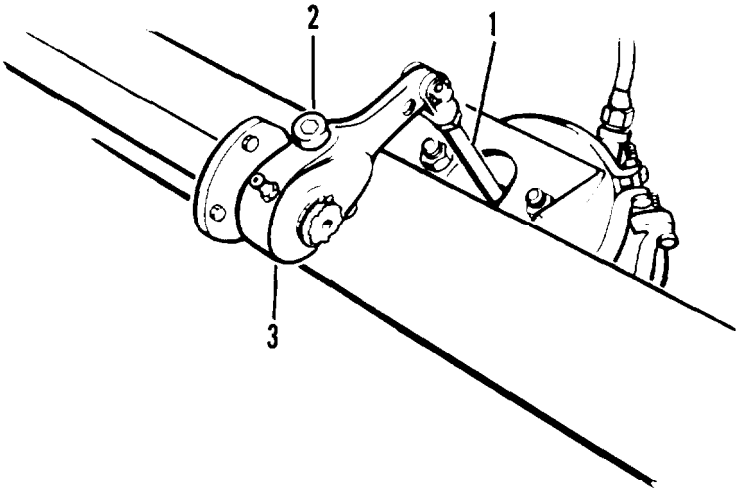

Figure 4-26. Slack adjuster adjustment

(4) Apply a 9/16 wrench to worm shaft hex head (2). Push in against slack adjuster (3) to unlock worm shaft.

(5) Turn hex head of worm shaft (2) clockwise on slack adjuster until wheel cannot be turned.

(6) Back off the worm shaft until wheel turns freely.

(7) Repeat steps 1 through 6 for other slack adjuster, if required.

(8) Lower jack and remove from axle.

b. Emergency Relay Valve, Drainage of Moisture and Tests.

(1) Operating tests.

(a) With air hose couplings connected to towing vehicle, apply brakes. Check that brakes of all semitrailer wheels apply properly.

(b) Release brakes. Check that each brake releases promptly.

(c) With brake system fully charged, close shutoff cock in emergency line on towing vehicle. Disconnect air hose coupling tagged EMERGENCY. Make sure semitrailer brakes apply automatically.

(d) Connect air hose coupling tagged EMERGENCY. Open shutoff cock on towing vehicle. Check that brakes release automatically.

(2) Leakage tests.

(a) With air brake system connected, apply soapy water to relay valve flanges and to service air line coupling. No leakage is permitted. Tighten nuts on flanges and tighten coupling as required.

(b) With emergency relay valve in emergency position (see 1c above), coat exhaust port with soapsuds.

(c) Leakage tests must not exceed a one inch bubble in three seconds. If excess leakage is found, replace emergency relay valve.

c. Air Reservoir, Drainaue of Moisture and Tests.

WARNING

Wear protective goggles when opening the air reservoir drain cock. Avoid contact with the air stream.

(1) Drainage of moisture. Open drain cocks (6, figure 4-25) on each air reservoir. Close drain cocks after drainage.

(2) Test and check for serviceability. With air brake system connected to towing vehicle, coat drain cocks, pipe plugs and connections with soapsuds" No leakage is permissible. Tighten any leaking connections. Inspect for damage or corrosion. Replace reservoir if it leaks or if any damage or corrosion is found that would weaken reservoir.

4-31. SLACK ADJUSTERS

INITIAL SETUP

Tools

General mechanics tool kit

Equipment Condition

Drain cocks open (para. 3-9)

Materials/Parts

Slack adjuster
Cotton rags (Item 6, Appendix E)

a. Removal.

(1) Remove cotter pin (1, figure 4-27) and clevis pin (2). Remove clevis (3) from slack adjuster (6).

(2) Remove retaining ring (4) from end of camshaft (5).

(3) Using hammer and suitable drift, tap slack adjuster (6) lightly until it comes off camshaft (5).

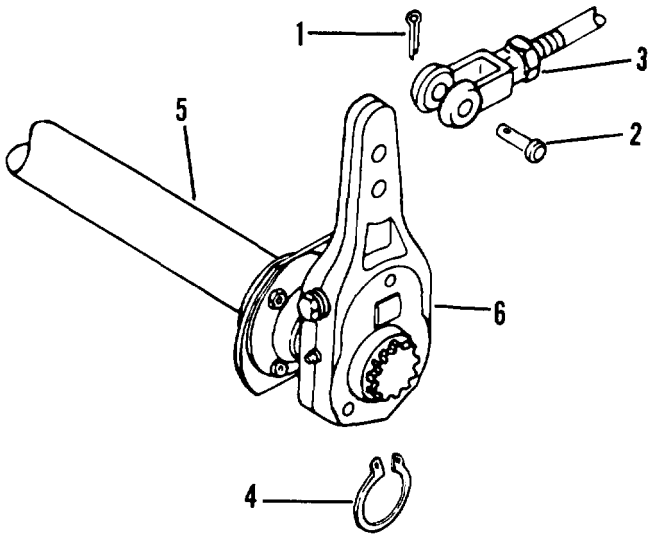

Figure 4-27. Slack adjuster

b. Installation.

(1) Clean splines of camshaft (5, figure 4-27).

(2) Place slack adjuster (6) in position on camshaft and tap in place using a hammer.

(3) Install retaining ring (4).

(4) Install clevis (3), clevis pin (2) and cotter pin (1).

(5) Adjust slack adjuster (para 4-30).

(6) Close drain cocks (para. 3-9).

4-32. AIR HOSE COUPLINGS (GLADHANDS)

INITIAL SETUP

Tools

General mechanics tool kit

Equipment Condition

Drain cocks open (para. 3-9)

Materials/Parts

Air hose coupling
Cleaning solvent (PD-680) (Item 7, Appendix E)
Cotton rags (Item 6, Appendix E)
Teflon tape (Item 17, Appendix E)

---

a. Removal.

(1) Unscrew connector nut at rear of air hose coupling (figure 2-5) and slide nut back on air line tubing.

(2) Unscrew nut at front of crossmember, until pressure has been relieved on lockwasher.

(3) Unscrew nut (back of crossmember) on nipple connecting air line tubing to coupling.

(4) Withdraw air hose coupling, with nipple, from front crossmember.

(5) Remove nut, lockwasher and identification plate from nipple. Separate coupling and nipple.

b. Cleaning and Inspection.

WARNING

Dry cleaning solvent (PD-680) is both toxic and flammable. Avoid prolonged breathing of vapors. Avoid skin contact. Use only in a well ventilated area. Keep away from open flame. Flashpoint of solvent is 138°F (59°C).

(1) Clean metal parts of air hose coupling with dry cleaning solvent (PD-680). Check for damage to air hose coupling.

(2) Allow to dry.

(3) If gladhand packing is damaged, pry out of air hose coupling. Install new gladhand packing.

c. Installation.

(1) Apply teflon tape to threads at ends of nipple. Screw nipple into air hose coupling. Install nut and lockwasher on nipple.

CAUTION

Make certain identification plates are on proper air lines. The plate marked SERVICE must be on right side coupling. The plate marked EMERGENCY must be on left side coupling.

(2) Position identification plate over opening in front crossmember. Insert assembled coupling and nipple through plate and opening.

(3) Position air line tubing against nipple in coupling and tighten nut.

(4) Slide connector nut off tubing on connector. Tighten nut until it is snug against rear of front crossmember. Tighten nut at front of crossmember until coupling is secure.

(5) The open side of each air hose coupling should be in a vertical position facing the center of the trailer. Cover opening with dummy coupling unless connection to air supply is to be made immediately.

4-33. AIR LINES AND FITTINGS

INITIAL SETUP

Tools

General mechanics tool kit

Equipment Condition

Drain cocks open (para. 3-9)

Materials/Parts

Air lines and fittings

Air lines and air line fittings are not ordinarily removed except for replacement. Bent, kinked or damaged lines and fittings must be replaced. Lines must be kept tightly attached and connected. See brake system schematic.

4-34. PARKING BRAKE CONTROL VALVE

INITIAL SETUP

Tools

General mechanics tool kit

Equipment Condition

Drain cocks open (para. 3-9)

Materials/Parts

Parking brake control valve

---

a. Removal.

(1) Tag and disconnect air line (1, figure 4-28) between parking brake control valve (2) and air charging system control valve (3).

(2) Tag and disconnect air lines (4 and 5) on parking brake control valve (2).

(3) On the outside of the semitrailer, pull boot (1, figure 4-29) away from frame rail until roll pin (2) is visible. Remove roll pin (2).

(4) Remove control valve handle (3) and boot (1).

(5) Remove locknut (4).

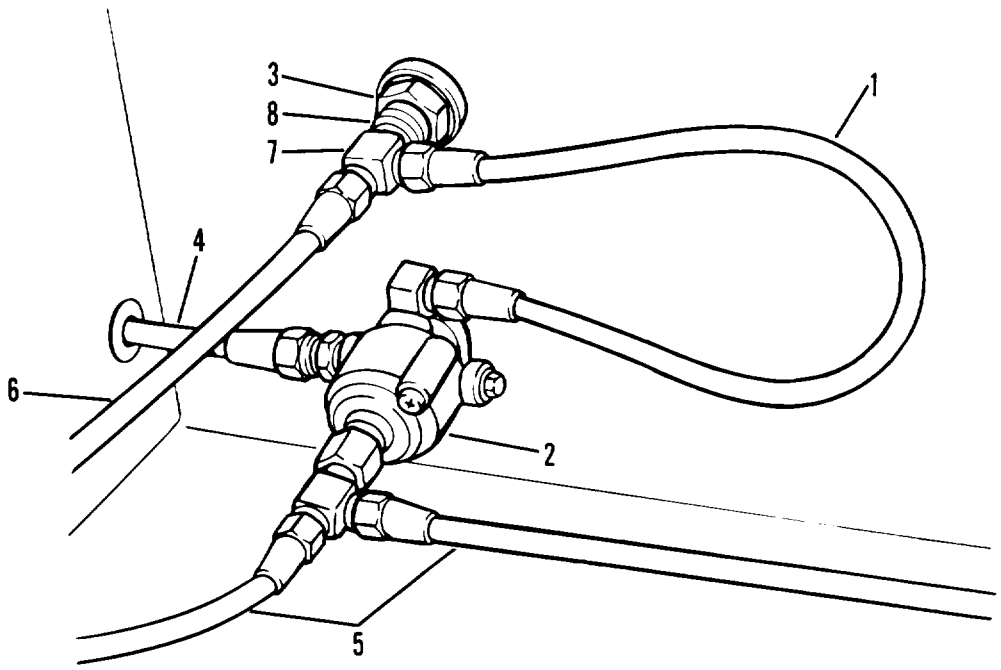

Figure 4-28. Parking brake and air charging system control valves

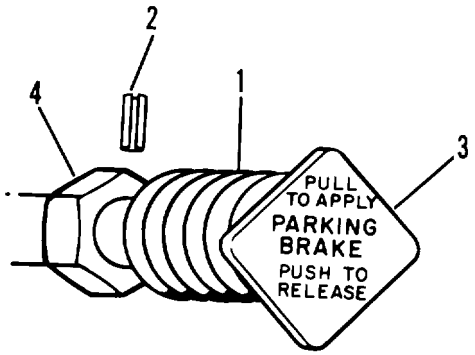

Figure 4-29. Parking brake control valve

(7) Remove parking brake control valve assembly (2, figure 4-28) from behind frame rail.

b. Installation.

(1) Install parking brake control valve assembly (2, figure 4-28) from behind frame rail.

(2) Install locknut (4, figure 4-29) from outside of frame rail.

(3) Install boot (1) and control valve handle (3).

(4) Align holes in control valve handle (3) and install roll pin (2). Make sure roll pin (2) is centered.

(5) Pull end of boot (1) on the flange of locknut (4).

(6) Connect air line (4 and 5, figure 4-28) on parking brake control valve (2).

(7) Connect air line (1) between parking brake control valve (2) and air charging system control valve (3).

(8) Close drain cocks on air reservoirs.

(9) Charge air system (para. 4-35).

4-35. AIR CHARGING SYSTEM CONTROL VALVE

INITIAL SETUP

Tools

General mechanics tool kit

Equipment Condition

Drain cocks open (para. 3-9)

Materials/Parts

Air charging system control valve

---

a. Removal.

(1) Tag and disconnect air line (1, figure 4-28) between parking brake control valve (2) and air charging system control valve (3).

(2) Tag and disconnect air line (6) from air charging system control valve (3).

(3) Remove tee (7) and lockwasher (8).

(4) Remove air charging system control valve (3).

b. Installation.

(1) Position air charging system control valve (3, figure 4-28) on frame. Install lockwasher (8) and tee (7).

(2) Connect air line (6) to air charging system control valve (3).

(3) Connect air line (1) between parking brake control valve (2) and air charging system control valve (3).

(4) Close drain cocks on air reservoirs.

c. Charging Air System.

NOTE

This procedure may also be used when there is no air in the air reservoirs of the semitrailer and the towing vehicle is not equipped with air.

(1) Remove cap on valve (1, figure 4-30) above parking brake control valve handle (2) on left side of semitrailer.

WARNING

Do not charge system over 110 psi to prevent injury to personnel and damage to equipment.

(2) Connect air compressor with air hose to valve. Charge air system to 60 psi to release brakes.

(3) Remove air compressor and replace cap on valve (1).

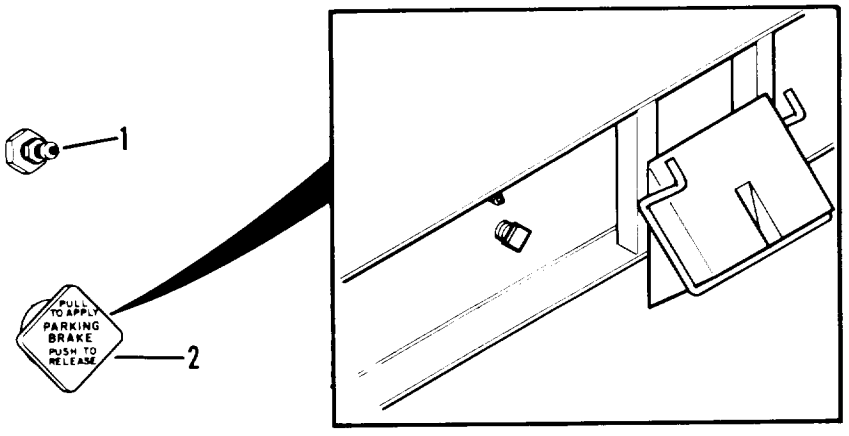

Figure 4-30. Charging air system

4-36. UNCAGING FAILSAFERS

INITIAL SETUP

Tools	Equipment Condition
General mechanics tool kit	Failsafes caged (para. 3-10)

a. Block semitrailer with chock blocks to prevent movement.

b. Slowly loosen nut (1, figure 4-31) and washer (2) on release tool (3). Remove nut (1) and washer (2).

c. Turn release tool (3) 1/4 turn counterclockwise to unlock from manual release position. Remove release tool (3).

d. Install plug (4) on air brake chamber (5).

e. Insert release tool (3) in mounting hole (6) in air brake chamber (5). Secure release tool (3) with washer (2) and nut (1).

f. Repeat steps b. through e. for remaining air brake chambers.

g. Remove and stow chock blocks.

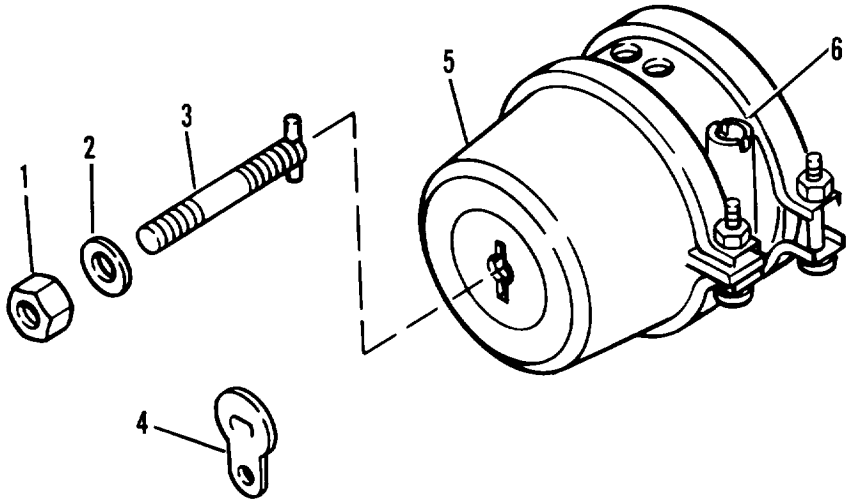

Figure 4-31. Uncaging failsafe

4-37. AIR BRAKE CHAMBER

INITIAL SETUP

Tools

General mechanics tool kit

Equipment Condition

Drain cocks open (para. 3-9)

Materials/Parts

Air brake chamber
Cleaning solvent (PD-680) (Item 7, Appendix E)
Cotton rags (Item 6, Appendix E)

---

a. Removal.

(1) Tag and disconnect two air lines (1, figure 4-32) from air chamber (6).

(2) Remove cotter pin (2) and clevis pin (3). Remove clevis from slack adjuster.

(3) Remove two nuts (4) and two washers (5).

(4) Remove air brake chamber (6).

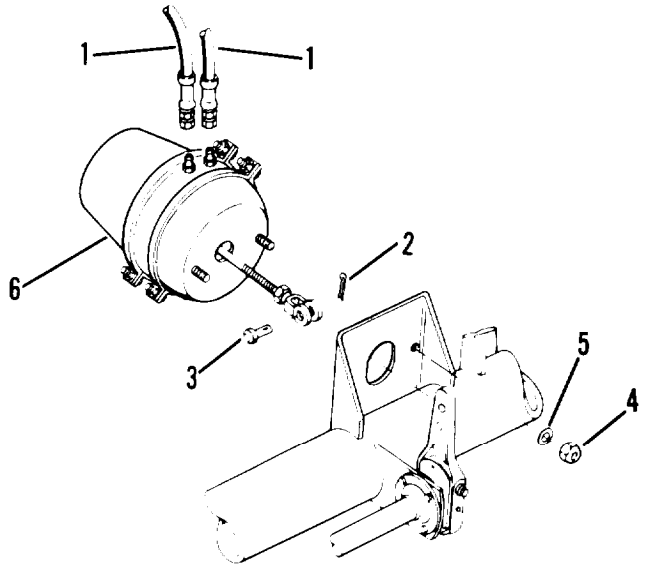

Figure 4-32. Air brake chamber

b. Cleaning. Refer to para. 4-4 for general cleaning instructions.

c. Inspection. Refer to para. 4-5 for general inspection instructions.

d. Installation.

(1) Install air brake chamber (6, figure 4-32) in position.

(2) Install two washers (5) and two nuts (4).

(3) Position clevis on slack adjuster and install clevis pin (3) and cotter pin (2). Check slack adjuster adjustment (para. 4-30).

(4) Connect air lines (1).

(5) Close drain cock on air reservoirs and pressurize air brake system.

4-38. EMERGENCY RELAY VALVE

INITIAL SETUP

Tools

General mechanics tool kit

Equipment Condition

Drain cocks open (para. 3-9)

Materials/Parts

Emergency relay valve

Pipe locking compound (Item 14, Appendix E)

a. Removal.

(1) Tag and disconnect air lines (1, figure 4-33) from emergency relay valve (2).

(2) Remove relay valve (2) with nipple (4) from air reservoir (3).

(3) Remove nipple (4) from emergency relay valve (2).

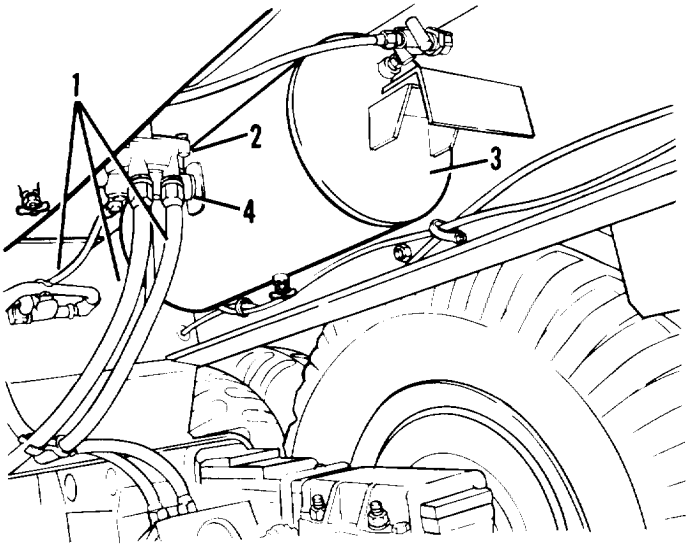

Figure 4-33. Emergency relay valve

b. Installation.

(1) Install nipple (4, figure 4-33) in emergency relay valve (2).

(2) Put pipe locking compound on nipple (4). Install relay valve (2) with nipple (4) on air reservoir (3).

(3) Connect air lines (1) to emergency relay valve (2).

(4) Close drain cocks.

(5) Perform operating and leakage tests (para. 4-30).

4-39. AIR RESERVOIRS

INITIAL SETUP

Tools

General mechanics tool kit

Equipment Condition

Drain cocks open (para. 3-9)
Emergency relay valve removed (if applicable) (para. 4-38)

Materials/Parts

Air reservoir

a. Removal.

(1) Remove emergency relay valve (para. 4-38).

NOTE

If removing air reservoir that does not have the emergency relay valve, omit step 1.

(2) Tag and disconnect all air lines connected to reservoir being removed.

(3) Remove four nuts (3, figure 4-34), washers (4) and bolts (5) from bracket (6) (welded to air reservoir).

(4) Remove air reservoir (2).

(5) Remove fittings from air reservoir (2).

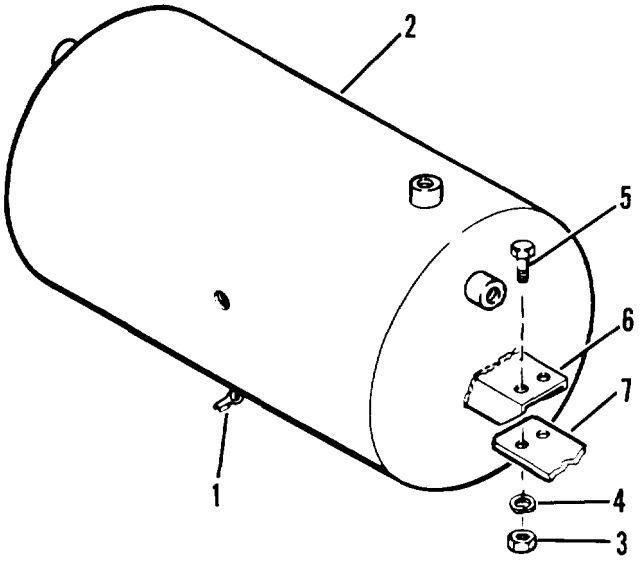

Figure 4-34. Air reservior

b. Installation.

(1) Install fittings on air reservoir (2, figure 4-34).

(2) Line up holes in air reservoir brackets (6) with holes in frame (7).

(3) Secure air reservoir (2) with four bolts (5), washers (4) and nuts (3).

(4) Install all air lines.

(5) Install emergency relay valve (para. 4-38).

NOTE

If installing air reservoir that does not have the emergency relay valve, omit step 5.

(6) Close drain cocks (1) and pressurize air system when both air reservoirs are installed.

(8) Check for leaks (para. 4-30).

4-40. BRAKE SHOES

INITIAL SETUP

Tools

Jack stands
General mechanics tool kit

Materials/Parts

Brake shoes

Equipment Condition

Drain cocks open (para. 3-9)
Tires and wheels removed (para. 4-43)
Brake drum and hub removed (para. 4-45)

a. Removal.

WARNING

The semitrailer frame and both axles must be firmly supported to prevent shifting of the semitrailer. Shifting may cause serious injury to personnel and damage to equipment.

(1) Support both axles each side and frame.

(2) Loosen spider bolt (1, figure 4-35) when working on Standard Forge and Axle brake shoes.

NOTE

Disregard step 2 if working with the Dana axle brake shoe. The Dana axle brake shoe does not have a spider bolt.

(3) Remove anchor pin retaining rings (2) and anchor pin washers (3).

(4) Drive out anchor pins (4 and 5).

(5) Remove spring (6) from upper shoe (7) and lower shoe (8).

(6) Remove spring pin (9) from both shoes (7 and 8).

(7) Remove rollers (10) and roller retainers (11).

(8) Remove spider nut (12), washer (13) and bolt (1).

NOTE

Omit step 8 when removing the Dana axle brake shoe.

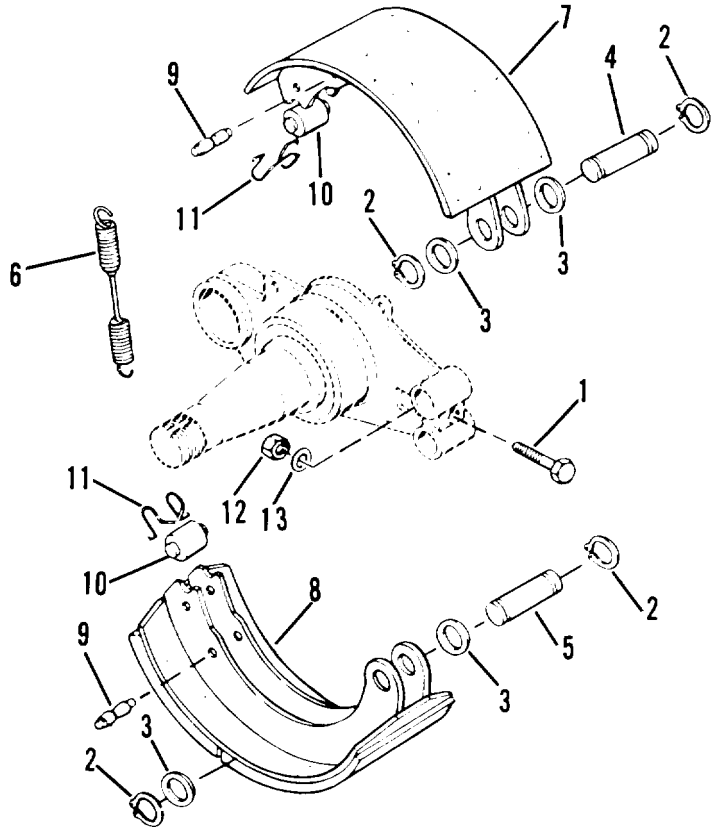

1. Spider bolt
2. Retaining ring
3. Washer
4. Anchor pin
5. Anchor pin
6. Spring
7. Shoe, top
8. Shoe, bottom
9. Spring pin
10. Roller
11. Retainer
12. Spider nut
13. Washer

Figure 4-35. Brake shoe

b. Installation.

(1) Install spider bolt (1, figure 4-35), washer (13) and spider nut (12). Do not tighten.

NOTE

Omit step 1 when installing the Dana axle brake shoes.

(2) Install rollers (10) and roller retainers (11).

(3) Install spring pins (9) to both shoes (7 and 8).

(4) Place shoes (7 and 8) in position. Install anchor pins (4 and 5).

(5) Install anchor pin washers (3) and anchor pin retaining rings (2).

(6) Install spring (6).

(7) Torque spider nut (12) and bolt (1) to 100-120 lb ft (136-163 Nm).

NOTE

Omit step 7 when installing the Dana axle brake shoes.

(8) Install brake drum and hub (para. 4-45).

(9) Install wheels on axle (para. 4-43).

(10) Close drain cocks.

(10) Adjust slack adjusters (para. 4-30).

(11) Remove frame and axle supports.

4-41. BRAKE CAMSHAFTS

INITIAL SETUP

Tools	Equipment Condition
Jack stands	Drain cocks open (para. 3-9)
General mechanics tool kit	Tires and wheels removed (para. 4-43)
Materials/Parts	Slack adjusters removed (para. 4-31)
Brake camshaft	Brake drum and hub removed (para. 4-45)
	Brake shoes removed (para. 4-40)

WARNING

The semitrailer frame and both axles must be firmly supported to prevent shifting of the semitrailer. Shifting may cause serious injury to personnel and damage to equipment.

a. Removal.

(1) Support both axles on each side and frame.

(2) Remove snap ring (2, figure 4-36, 4-37) and washer (3) from camshaft (1).

NOTE

If removing a Standard Forge and Axle camshaft, refer to figure 4-36. If removing a Dana axle camshaft, refer to figure 4-37.

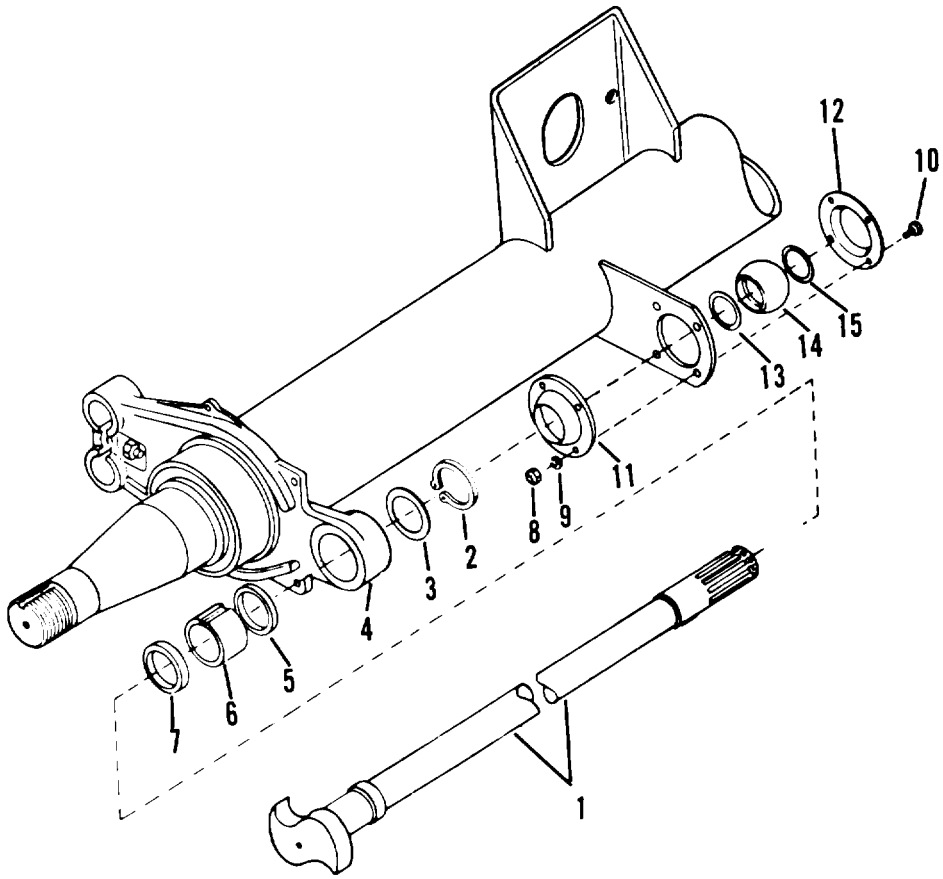

1. Camshaft
2. Snap ring
3. Washer
4. Spider
5. Seal
6. Bushing
7. Seal
8. Nut
9. Washer
10. Screw
11. Retainer
12. Retainer
13. Preformed packing
14. Bushing
15. Preformed packing

Figure 4-36. Standard Forge and Axle brake camshaft

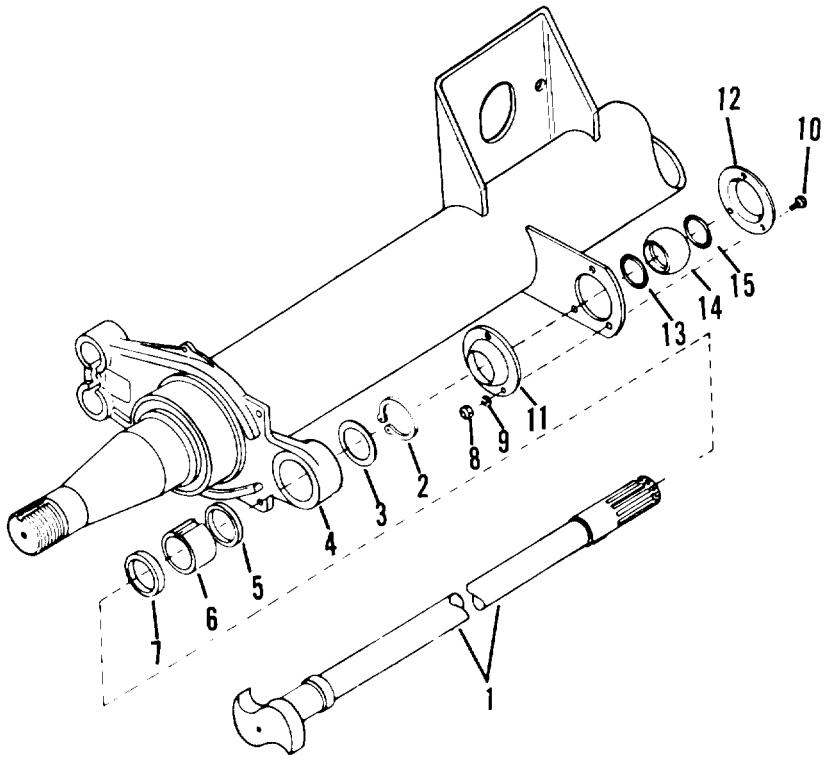

1. Camshaft	5. Seal	9. Washer	13. O-ring
2. Snap ring	6. Bushing	10. Screw	14. Bushing
3. Washer	7. Seal	11. Retainer	15. O-ring
4. Spider	8. Nut	12. Retainer	

Figure 4-37. Dana axle brake camshaft

(3) Remove seal (5), bushing (6) and seal (7).

(4) Remove four nuts (8), washers (9) and screws (10). Remove three nuts (8), washers (9) and screws (10) when removing a Dana axle brake camshaft.

(5) Remove retainer (11), retainer (12), preformed packing (13), bushing (14) and preformed packing (15). For Dana axle brake camshaft, remove retainer (11), retainer (12), o-ring (13), bushing (14) and o-ring (15).

(6) Remove camshaft (1).

b. Installation.

(1) Install preformed packing (15, figure 4-36), bushing (14), preformed packing (13), retainer (12) and retainer (11) for Standard Forge and Axle camshaft. For Dana axle brake camshaft, install o-ring (15, figure 4-37), bushing (14), o-ring (13, retainer (12) and retainer (11).

(2) Install four screws (10), washers (9) and nuts (8) for Standard Forge and Axle brake camshaft. For Dana axle brake camshaft, install three screws (10), washers (9) and nuts (8).

(3) Install seal (7), bushing (6) and seal (5).

(4) Slide camshaft (1) halfway through spider (4). Install washer (3) and snap ring (2), then slide camshaft (1) the rest of the way through spider (4).

(5) Install snap ring (2) to proper position.

(6) Install slack adjuster (para. 4-31).

(7) Install brake shoes (para. 4-40).

(8) Install brake drum and hub (para. 4-45).

(9) Install tires and wheels (para 4-43).

(10) Close drain cocks on air reservoirs.

(11) Adjust slack adjusters (para. 4-30).

(12) Remove axle and frame supports.

Section VII. MAINTENANCE OF THE WEHHLS, HUBS AND DRUMS

	Page
Brake Drum and Hub	4-68
Description	4-65
Tires	4-68
Wheels	4-66

4-42. DESCRIPTION

a. General. The brake drums and wheels are mounted on the hubs. Each hub is mounted on the spindle of its axle on two tapered roller bearings. The wheels are mounted on the hub with ten wheel studs and lug nuts. Lug nuts must be turned in the opposite direction to the normal rotation of the wheel to be loosened or removed. The wheel bearings are removable for cleaning, inspection and lubrication. A grease seal is fitted behind the inner bearing to protect brake linings from lubricant.

b. Brake Drums. The brake drum (1, figure 4-38) is attached to the hub with ten nuts and studs. A hub cap (2) and gasket, fastened by six screws and washers over the center of the hub, excludes moisture and dirt.

c. Tires. Tires are military pneumatic type, cross country non-directional tread design, size 11.00 x 20, 12-ply rating with controlled bead. The tires are equipped with tubes and continuous flaps.

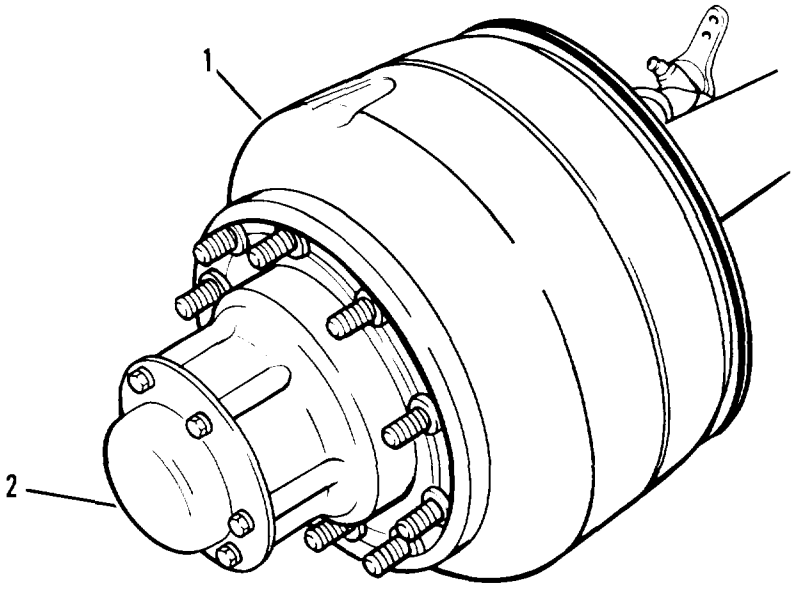

Figure 4-38. Hub and brake drum

4-43. WHEELS

INITIAL SETUP

Tools

Jack stands
General mechanics tool kit and common supplement II

Materials/Parts

Wheel

---

a. Removal.

(1) Set chock blocks opposite the set of wheels being removed.

(2) Loosen, but do not remove ten lug nuts (1, figure 4-39).

(3) Jack up axle until wheels (2 and 3) are clear of the ground.

WARNING

The semitrailer frame and both axles must be firmly supported to prevent shifting of the semitrailer. Shifting may cause serious injury to personnel and damage to equipment.

(4) Support the semitrailer axles and frame with jack stands.

(5) Remove ten lug nuts (1) and outer wheel (2).

NOTE

If only the outer tire and wheel is being removed, disregard step 6.

(6) Remove ten lugs (4) and inner wheel (3).

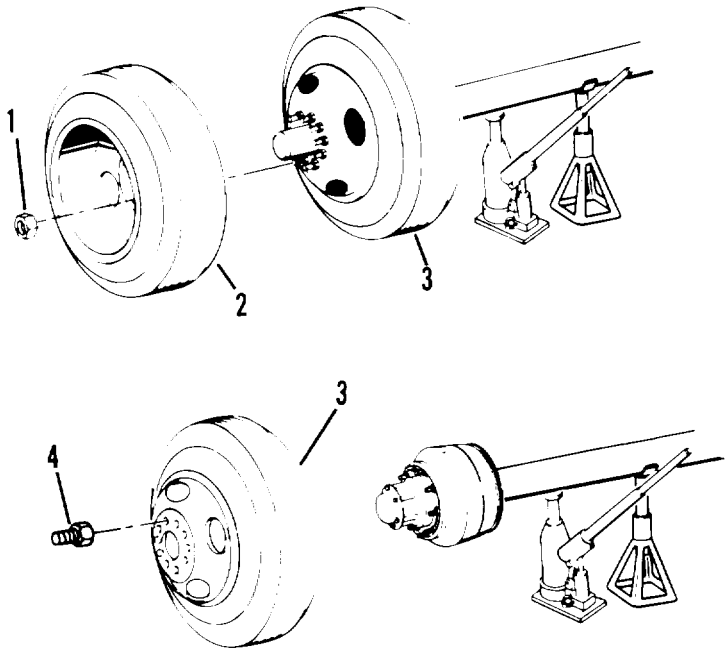

Figure 4-39. Tire and wheel removal.

b. Cleaning and Inspection.

(1) Remove tire from wheel (para. 4-44) before proceeding with cleaning, inspection and repair.

(2) Clean wheel with soap and water. Dry thoroughly.

(3) Inspect wheel for distortion. Replace wheel if damaged.

(4) Check condition of paint. Repaint wheel if chipped or cracked paint or bare metal is found.

(5) Inspect mounting stud holes for wear due to loose mounting. Replace wheel if worn.

(6) Replace tire on wheel (para. 4-44).

c. Installation.

CAUTION

The valve stem must be in the groove of the drum to prevent damage.

(1) Install inner wheel (3, figure 4-39) and ten lugs (4).

(2) Install wheel (2) and ten lug nuts (1). The valve stem must be 180 degrees from the valve stem of the inner wheel. Torque lug nuts to 400-450 lb ft (542-612 Nm).

(3) Remove jack stands and lower semitrailer.

(4) Remove chock blocks and stow in brackets.

4-44. TIRES

Refer to TM9-2610-200-24 for tire removal, repair and installation.

4-45. BRAKE DRUM HUB

INITIAL SETUP

Tools

General mechanics tool kit and common supplement II

Equipment Condition

Tires and wheels removed (para. 4-43)

Materials/Parts

Gasket
Grease (Item 1, Appendix E)
Cleaning solvent (PD-680) (Item 7, Appendix E)
Cotton rags (Item 6, Appendix E)
Bristle brush (Item 5, Appendix E)

a. Removal.

(1) Remove six screws (1, figure 4-40), six washers (2), hub cap (3) and gasket (4).

(2) Straighten tabs on tongue washer (6). Remove axle nut (5), tongue washer (6), lockwasher (7) and inner nut (8).

(3) Remove outer bearing cone (9).

(4) Remove hub (11) and brake drum (12).

(5) Remove inner bearing cone (14) and grease seal (13) from spindle.

(6) Remove inner bearing cup (15) and outer bearing cup (10) from hub (11).

(7) Remove ten nuts (16) and lockwashers (17).

(8) Separate hub (11) from brake drum (12).

(9) Remove ten studs (18) from hub (11).

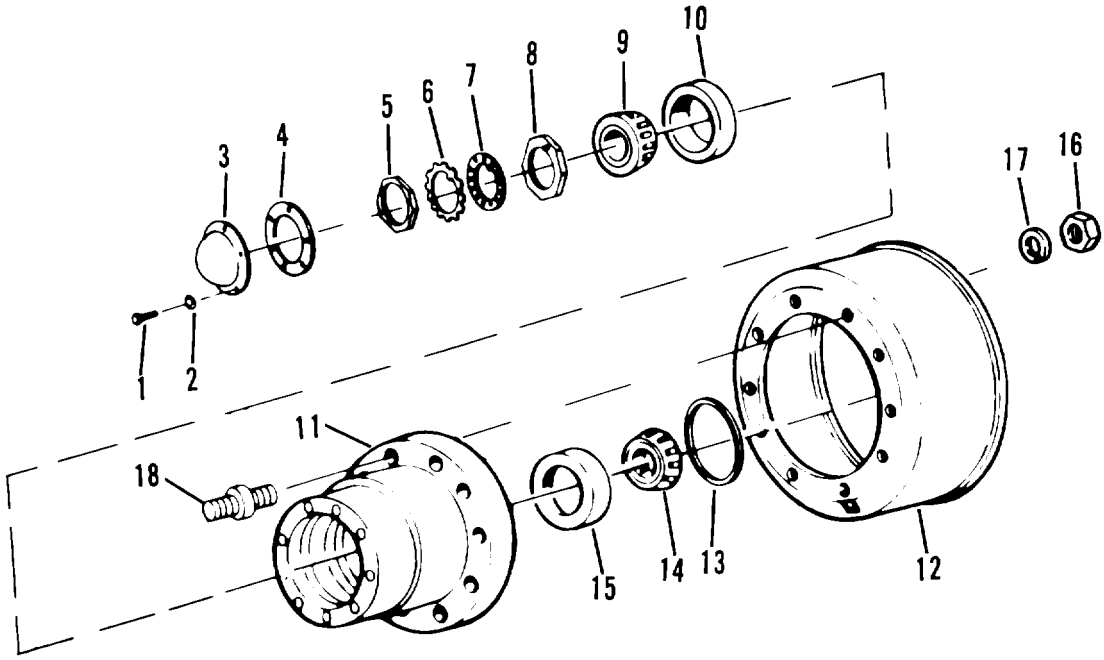

1. Screw
2. Washer
3. Hub cap
4. Gasket
5. Axle nut
6. Tongue washer
7. Lockwasher
8. Inner nut
9. Outer bearing cone
10. Outer bearing cup
11. Hub
12. Brake drum
13. Grease seal
14. Inner bearing cone
15. Inner bearing cup
16. Nut
17. Lockwasher
18. Stud

Figure 4-40. Brake drum and hub

b. Cleaning.

(1) Remove all buildup of dirt and grease by wiping with a soft cloth.

WARNING

Dry cleaning solvent (PD-680) is both toxic and flammable. Avoid prolonged breathing of vapors. Avoid skin contact. Use only in a well ventilated area. Keep away from open flame. Flashpoint of solvent is 138°F (59°C).

(2) Using a clean, soft cloth or medium bristle brush, thoroughly clean all parts with cleaning solvent (PD-680).

(3) Allow to dry.

c. Inspection.

(1) Inspect all parts for cracks, dents, holes, warps and burrs.

(2) Inspect all parts for rust, corrosion or marred finish.

(3) Inspect brake drum for out-of-roundness and scoring.

d. Installation.

(1) Install ten studs (18, figure 4-40) with short side from shoulder facing out in the hub (11).

(2) Install hub (11) to brake drum (12).

(3) Secure hub (11) and brake drum (12) with ten lockwashers (17) and nuts (16).

(4) Pack inner and outer bearing cups (10 and 15) with grease per lubrication chart (figure 3-1).

(5) Using a soft durable item, install inner bearing cup (15) and outer bearing cup (10) in hub (11).

(6) Install grease seal (13). Pack inner bearing cone (14) and install on spindle.

(7) Install assembled hub (11) and brake drum (12) on axle spindle.

(8) Pack outer bearing cone (9) with grease per lubrication chart (figure 3-1). Install outer bearing cone (9).

(9) Install inner nut (8) with locking guide pin out, tighten snug, then back off 1/4 turn (wheel bearing adjustment). Install lockwasher (7), tongue washer (6) and axle nut (5). Tighten outer nut to 200-225 lb ft (272-306 Nm).

NOTE

Be sure lockwasher hole and the locking guide pin on the inner nut mate. The lockwasher may have to be turned over or the inner nut moved slightly to fit properly. Be sure to bend tabs down on tongue washer.

(10) Install new gasket (4).

(11) Install hub cap (3). Secure with six washers (2) and six screws (1).

(12) Install wheels on axle (para. 4-43).

(13) Remove axle and frame supports.

Section VIII. MAINTENANCE OF THE SPARE TIRE CARRIER

	Page
Cable Replacement	4-71
Spare Tire Carrier	4-72

4-46. CABLE REPIACEMENT

INITIAL SETUP

Tools

General mechanics tool kit

Equipment Condition

Spare tire and wheel removed from carrier (para. 2-8)

Materials/Parts

3/16-inch diameter, 7 X 19 aircraft-type preformed cable

The following instructions pertain to replacing an old cable on the spare tire carrier with a new cable. This maintenance is performed without removing the spare tire carrier from the semitrailer.

a. Release cable assembly (1, figure 4-41) from wheel support (7) by removing hex nuts (11) and lockwashers (10) from u-bolts (9).

b. Draw cable assembly (1) from holes in operating shaft (15).

c. Make a wire cable, with ferrules (1B) to prevent unraveling, from six feet of 3/16-inch diameter, 7 X 19 aircraft-type, preformed cable.

d. Thread new cable assembly through holes in operating shaft (15) until both ends are of equal length.

e. Thread ends of cable assembly through holes in wheel support (7).

f. Twist ends of cable assembly in loose, single knot across wheel support (7) in such a manner that both ends may be clamped with u-bolts (9).

g. Secure cable assembly to wheel support (7) with u-bolt (9), two lockwashers (10) and hex nuts (11).

h. Secure wheel support (7) to spare tire and wheel. Raise spare tire and wheel to carry position (para. 2-8).

4-47. SPARE TIRE CARRIER

INITIAL SETUP

Tools

General mechanics tool kit

Materials/Parts

Cleaning solvent (PD-680) (Item 7, Appendix E)
Medium bristle brush (Item 5, Appendix E)
Cotton rags (Item 6, Appendix E)

Equipment Condition

Spare tire and wheel lowered to ground (para. 2-8)

a. Removal.

(1) Remove six hex nuts (5, figure 4-41), lockwashers (4) and screws (2) attaching bracket assembly (3) to right frame rail.

(2) Remove spare tire carrier.

b. Disassembly.

(1) Remove two safety nuts (6, figure 4-41) and square neck bolts (8) from wheel support (7).

(2) Remove two hex nuts (11) and lockwashers (10) from each u-bolt (9), which secures cable assembly (1) to wheel support (7).

(3) Draw cable assembly (1) from holes in operating shaft (15).

(4) Remove cotter pin (14) from operating shaft (15). Remove operating shaft (15) from bracket assembly.

c. Cleaning.

WARNING

Dry cleaning solvent (PD-680) is both toxic and flammable. Avoid prolonged breathing of vapors. Avoid skin contact. Use only in a well ventilated area. Keep away from open flame. Flashpoint of solvent is 138°F (59°C).

Use steam or water with a stiff brush to remove dirt. Use dry cleaning solvent (PD-680) to remove grease.

d. Inspection. Inspect for frayed cable and loose u-bolt. Check bracket assembly for bends, cracks and damaged paint. Check operating shaft for straightness. Make sure pawl swings freely on its mounting rivet. Check threads on bolts and nuts of wheel support.

1. Cable assembly
   A. Cable
   B. Ferrule
2. Screw
3. Bracket assembly
4. Lockwasher
5. Hex nut
6. Nut
7. Wheel support
8. Square neck bolt
9. U-bolt
10. Lockwasher
11. Hex nut
12. Pawl
13. Rivet
14. Cotter pin
15. Operating shaft

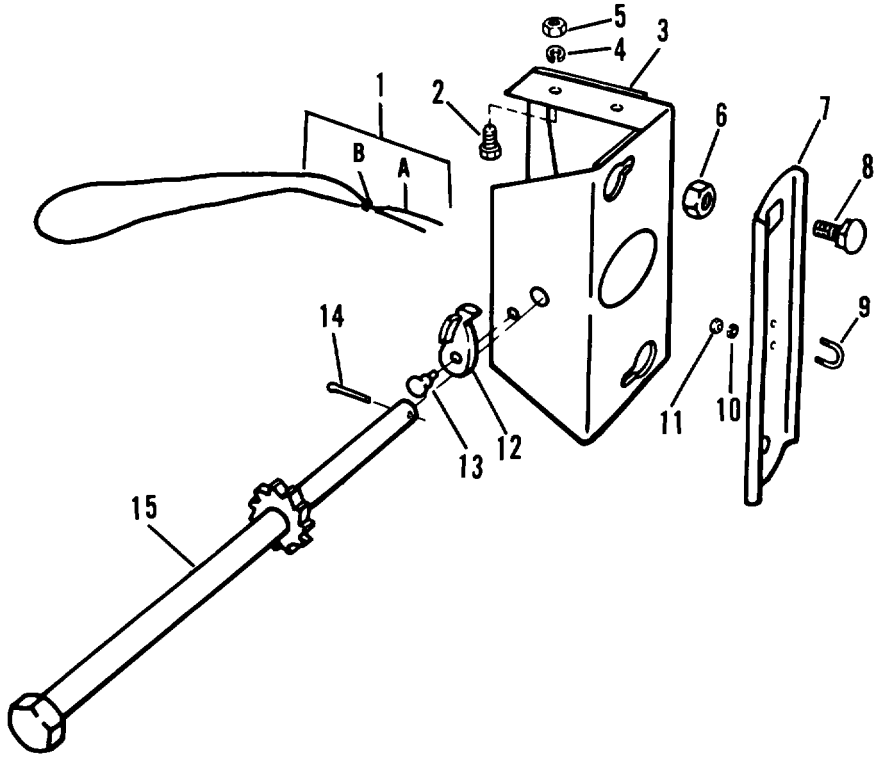

Figure 4-41. Spare tire carrier, exploded view

e. Repair. Replace cable (para. 4-46) if there are any broken strands. Tighten u-bolt if loose. Bracket assembly can be reshaped if bent, but should be replaced if it cannot be returned to proper working condition. If ratchet on operating shaft is broken or damaged, replace operating shaft. If shaft pawl does not swing freely, replace pawl. Replace any bolts or nuts that have seriously damaged threads.

f. Assembly.

(1) Position shaft pawl (12, figure 4-41) on bracket assembly (3) and secure with rivet (13).

(2) Insert operating shaft (15) through bracket assembly (3) and secure with cotter pin (14).

(3) Replace cable assembly (1) in operating shaft (15) and secure to wheel support (7) with u-bolt (9), lockwashers (10) and hex nuts (11).

(4) Install two square neck bolts (8) and safety nuts (6) on wheel support (7).

g. Installation.

(1) Attach bracket assembly (3, figure 4-41) to right frame rail with six screws (2), lockwashers (4) and hex nuts (5).

(2) Install spare tire and raise to carry position (para. 2-8).

Section IX. MAINTANCE OF THE LANDING LEGS

448. LANDING LEGS AND GEAR BOX

INITIAL SETUP

Tools

Jack stands
General mechanics tool kit

Materials/Parts

Cleaning solvent (PD-680) (Item 7, Appendix E)
Cotton rags (Item 6, Appendix E)
Bristle brush (Item 5, Appendix E)
Grease (Item 1, Appendix E)

---

a. Crank Removal.

WARNING

The semitrailer frame must be firmly supported to prevent shifting of the semitrailer. Shifting may cause serious injury to personnel and damage to equipment.

(1) Block semitrailer on jack stands.

(2) Block wheels with chock blocks to prevent movement of semitrailer.

(3) Lower landing legs for greater stability.

(4) Remove float pad from bracket for easier access to landing leg.

(5) Remove nut (1, figure 4-42), washers (2) and bolt (3).

(6) Remove crank (4).

b. Gear Box Removal.

(1) Remove nut (6, figure 4-43), washer (7) and bolt (8) from coupling.

(2) Remove four nuts (1), eight washers (2) and four bolts (3).

(3) Remove gear box (4) from leg (5). If required, remove additional nut (6), washer (7) and bolt (8) to remove coupling.

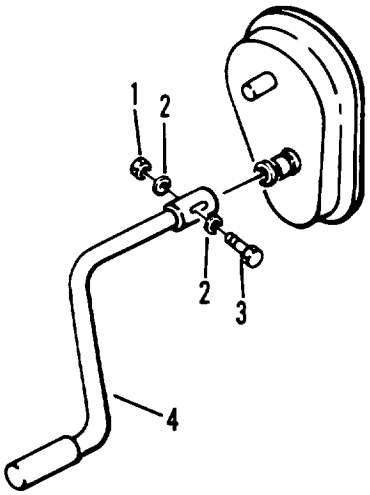

Figure 4-42. Crank

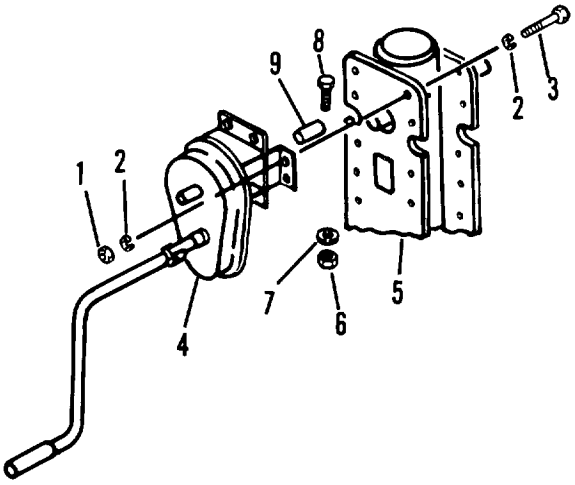

Figure 4-43. Gear box

c. Landing Leg Removal.

(1) Remove four nuts (5, figure 4-45), eight flat washers (4) and four bolts (6) holding braces (7 and 8).

(2) Remove nut 1, figure 4-44), washer (2) and bolt (3) from coupling (4).

If removing left landing leg, remove nut (9), washer (10) and bolt (11).

(3) Remove eight nuts (5, figure 4-45), sixteen flat washers (4) and eight bolts (3) holding landing leg (1) to frame. Remove landing leg and coupling.

(4) Remove nut (5, figure 4-44), washer (6) and bolt (7) from coupling (4). Remove coupling.

If removing coupling from left landing leg, remove nut (13), washer (14) and bolt (15). The drive shaft (8) may be removed after both couplings (4 and 12) are removed.

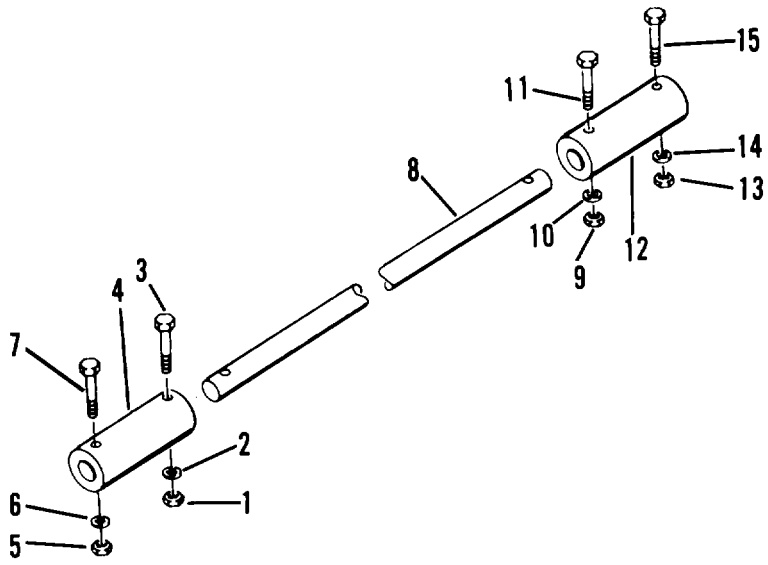

1. Nut
2. Washer
3. Bolt
4. Coupling
5. Nut
6. Washer
7. Bolt
8. Drive shaft
9. Nut
10. Washer
11. Bolt
12. Coupling
13. Nut
14. Washer
15. Bolt

Figure 4-44. Drive shaft and couplings

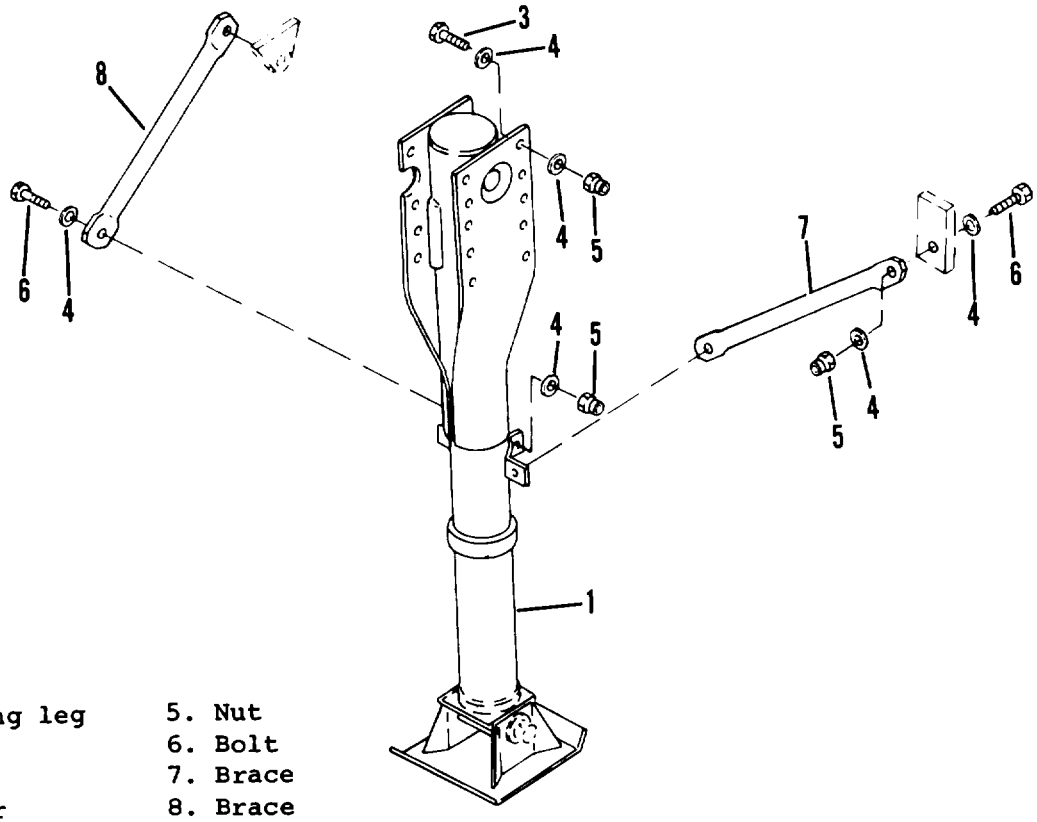

1. Landing leg
2. Shoe
3. Bolt
4. Washer
5. Nut
6. Bolt
7. Brace
8. Brace

Figure 4-45. Land leg

d. Landing Leg Disassembly.

(1) Remove nut (1, figure 4-46), washer (2) and bolt (3) to release holder (4).

(2) Remove two pins (5) holding two washers (6). Remove washers (6) from axle (7).

(3) Pull out axle (7) to remove shoe (8).

e. Cleaning.

Refer to para. 4-4 for general cleaning instructions.

f. Inspection.

Refer to para. 4-5 for general inspection instructions.

g. Landing Leg Assembly.

(1) Install shoe (8, figure 4-46) and axle (7) to landing leg.

(2) Secure shoe (8) with two washers (6) and pins (5).

(3) Install holder (4). Secure with bolt (3), washer (2) and nut (1).

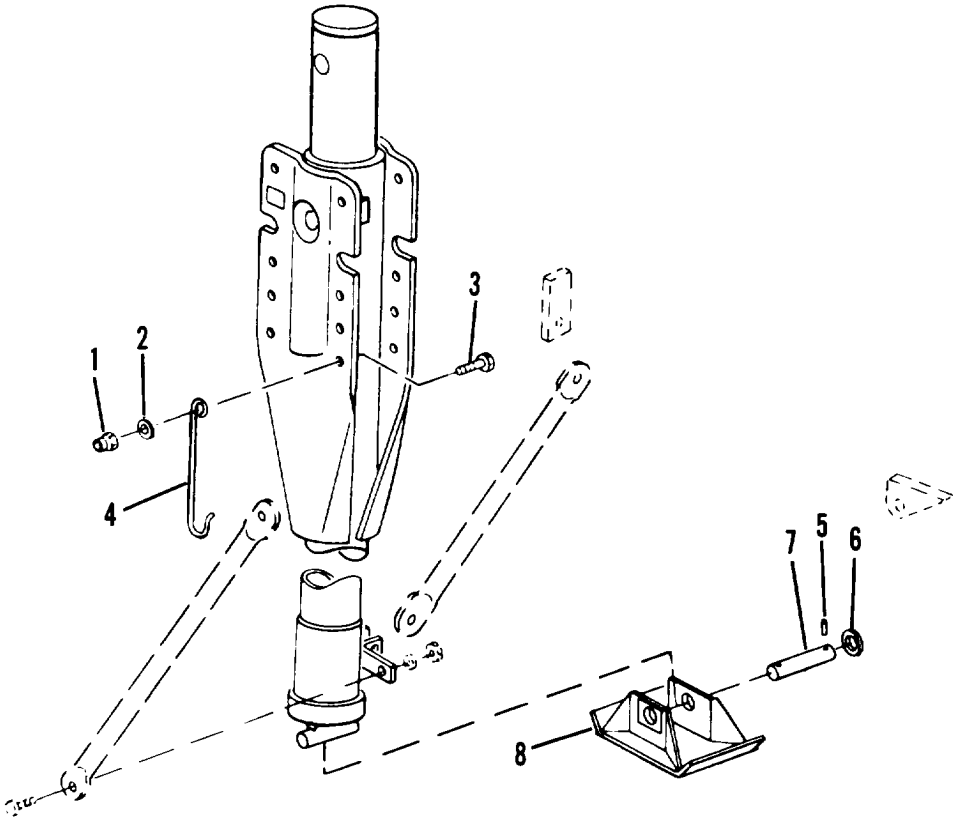

1. Nut
2. Washer
3. Bolt
4. Holder
5. Pin
6. Washer
7. Axle
8. Shoe

Figure 4-46. Landing leg disassembly and assembly

h. Landing Leg Installation.

(2) Install coupling (4) on landing leg. Secure with bolt (7), washer (6) and nut (5).

NOTE

If installing coupling (12) on left landing leg, secure with bolt (15), washer (14) and nut (13).

(3) Position landing leg (1, figure 4-45) and coupling on frame. Secure landing leg (1) with eight bolts (3), sixteen flat washers (4) and eight nuts (5). Torque nuts to 150-160 lb ft (204-218 Nm).

(4) Install bolt (3, figure 4-44), washer (2) and nut (1) on coupling (4).

NOTE

Secure left landing leg coupling with bolt (11), washer (10) and nut (9).

(5) Install braces (7 and 8, figure 4-45) and secure with four bolts (6), eight flat washers (4) and four nuts (5). Torque brace nuts to 150-160 lb ft (204-218 Nm).

i. Gear Box Installation.

(1) Install gear box (4, figure 4-43) on leg (5).

(2) Secure gear box (4) with four bolts (3), eight washers (2) and four nuts (1). Torque nuts to 150-160 lb ft (204-218 Nm).

(3) Secure gear box coupling (9) with screw (8), washer (7) and nut (6).

j. Crank Installation.

(1) Install crank (4, figure 4-42).

(2) Secure crank (4) with bolt (3), washers (2) and nut (1).

(3) Install float pad in bracket.

(4) Crank down lower landing leg and grease per lubrication chart (figure 3-1).

(5) Perform operation checks on landing gear (table 2-1, para. 2-22).

Section X. MAINTENANCE OF THE BODY

	Page
Blackout Covers	4-79
Floor Repair	4-90
Left Door Assembly	4-87
Right Door Assembly	4-83
Windows	4-80
Window Shim	4-81

4-49. BLAKOUT COVERS

INITIAL SETUP

Tools

General mechanics tool kit

a. Removal.

(1) Remove 15 screws (1, figure 4-47) around outside of blackout cover (2) frame. Remove blackout cover frame.

(2) Lift off blackout cover (2).

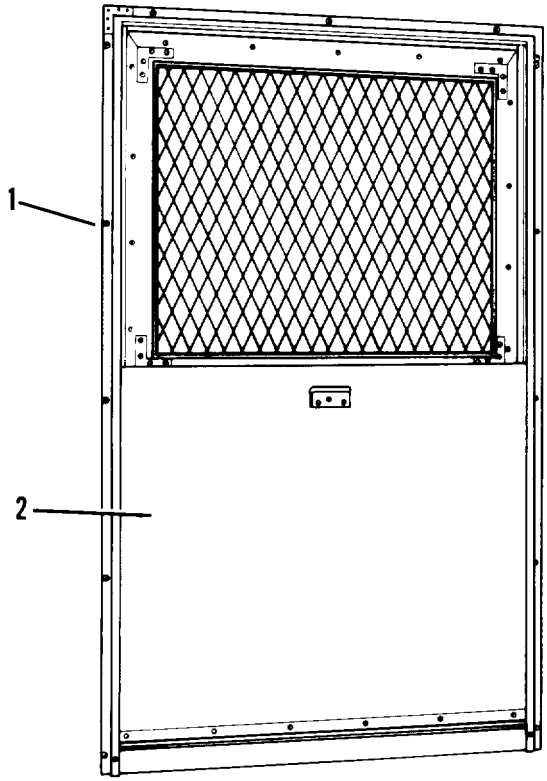

Figure 4-47. Blackout cover and window

b. Installation.

(1) Position blackout cover (2, figure 4-47) over window and match holes. Install blackout cover frame.

(2) Secure blackout cover (2) with 15 screws inserted around outside of blackout cover frame.

4-50. WINDOWS

INITIAL SETUP

Tools

General mechanics tool kit

Equipment Condition

Blackout covers removed (para. 4-49)

Materials/Parts

Cleaning solvent (PD-680) (Item 7, Appendix E)
Adhesive sealant (Item 9, Appendix E)

---

a. Removal.

NOTE

This procedure applies to the retractable window and the stationary window.

(1) Remove 18 screws (1, figure 4-48) from around outside of sash.

(2) Pry off window (2) and gasket (3) from outside of the van.

a. Installation.

WARNING

Dry cleaning solvent (PD-680) is both toxic and flammable. Avoid prolonged breathing of vapors. Avoid skin contact. Use only in a well ventilated area. Keep away from open flame. Flashpoint of solvent is 138°F (59°C).

(1) Thoroughly clean the window (2, figure 4-48) and window area of the van with cleaning solvent (PD-680).

WARNING

Adhesive MIL-A-5092B, type I is toxic and flammable. Use chemical goggles, gloves and good ventilation. Keep container closed; keep sparks, flames and heat away. Keep adhesive off skin, eyes and clothes. Do not breathe vapors.

(2) Apply adhesive sealant (MIL-A-5092B, type I) to window (2) and new gasket (3).

(3) Position window (2) and gasket (3) from the outside and match with holes in the semitrailer van.

(4) Insert 18 screws (1) around outside of sash and tighten.

(5) Install blackout covers (para. 4-49).

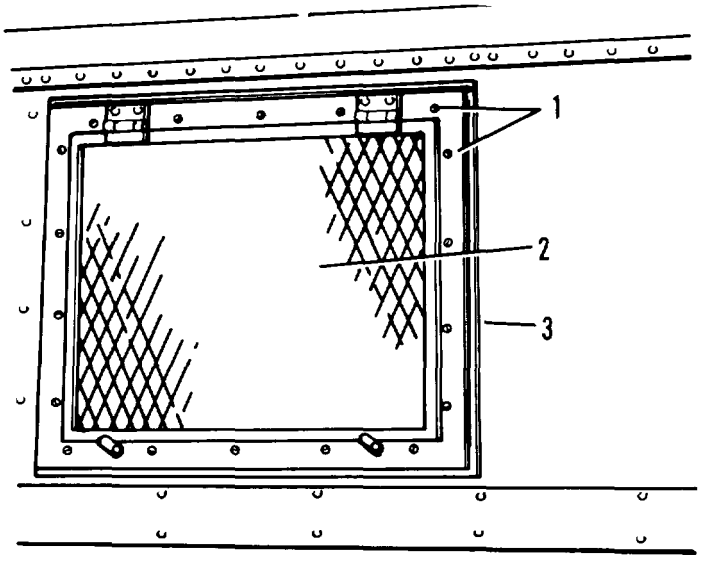

Figure 4-48. Window - outside view

4-51. WINDOW SHIM

INITIAL SETUP

Tools

General mechanics tool kit

Equipment Condition

Blackout covers removed (para. 4-49)

Materials/Parts

Cleaning solvent (PD-680) (Item 7, Appendix E)
Adhesive (MIL-A-5092B, type I) (Item 9, Appendix E)

a. Removal.

(1) Remove eight screws (1, figure 4-49) from shim (2).

(2) Remove shim (2) and gasket (3).

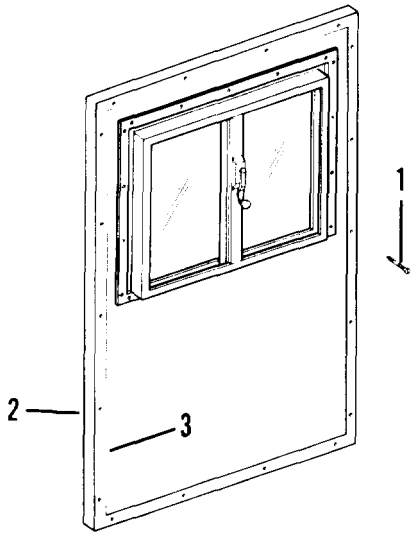

Figure 4-49. Window shim

b. Installation.

WARNING

Dry cleaning solvent (PD-680) is both toxic and flammable. Avoid prolonged breathing of vapors. Avoid skin contact. Use only in a well ventilated area. Keep away from open flame. Flashpoint of solvent is 138°F (59°C).

(1) Thoroughly clean the shim (2, figure 4-49) with cleaning solvent (PD-680).

WARNING

Adhesive MIL-A-5092B, type I is toxic and flammable. Use chemical goggles, gloves and good ventilation. Keep container closed; keep sparks, flames and heat away. Keep adhesive off skin, eyes and clothes. Do not breathe vapors.

(2) Apply adhesive sealant (MIL-A-5092B, type I) to shim (2).

(3) Install new gasket (3) on shim (2).

(4) Position shim (2) with gasket (3) and secure with eight screws (1).

(5) Install blackout cover (para. 4-49).

4-52. RIGHT DOOR

INITIAL SETUP

Tools

General mechanics tool kit

Materials/Parts

Adhesive (MIL-A-5092B, type I) (Item 9, Appendix E)

---

a. Removal.

(1) Support door and remove three cotter pins (37, figure 4-50) and hinge pins (38).

(2) Remove door.

b. Repair. Repair is limited to the replacement of defective parts.

NOTE

The right door does not have to be removed for any repair procedure.

(1) Door handle and lock plate assembly replacement.

(a) Remove roll pin (16, figure 4-50) from door handle (17). Slide handle (17) off shaft.

(b) Remove three screws (30) that secure door handle (31). Slide off door handle (31).

(c) Remove 24 screws (12) from around edge of lock cover (11) (narrow panel) on inside of door. Remove lock cover (11).

(d) Remove 33 screws (14) from panel (15). Remove panel (15).

(e) Remove four screws (8) from plate (21). Remove plate (21).

(f) Remove two cotter pins and washers from center case (20). Remove center case (20).

(g) Remove rods (22) and (23).

NOTE

It is not necessary to remove screws (13) or plate (24) to remove main lock.

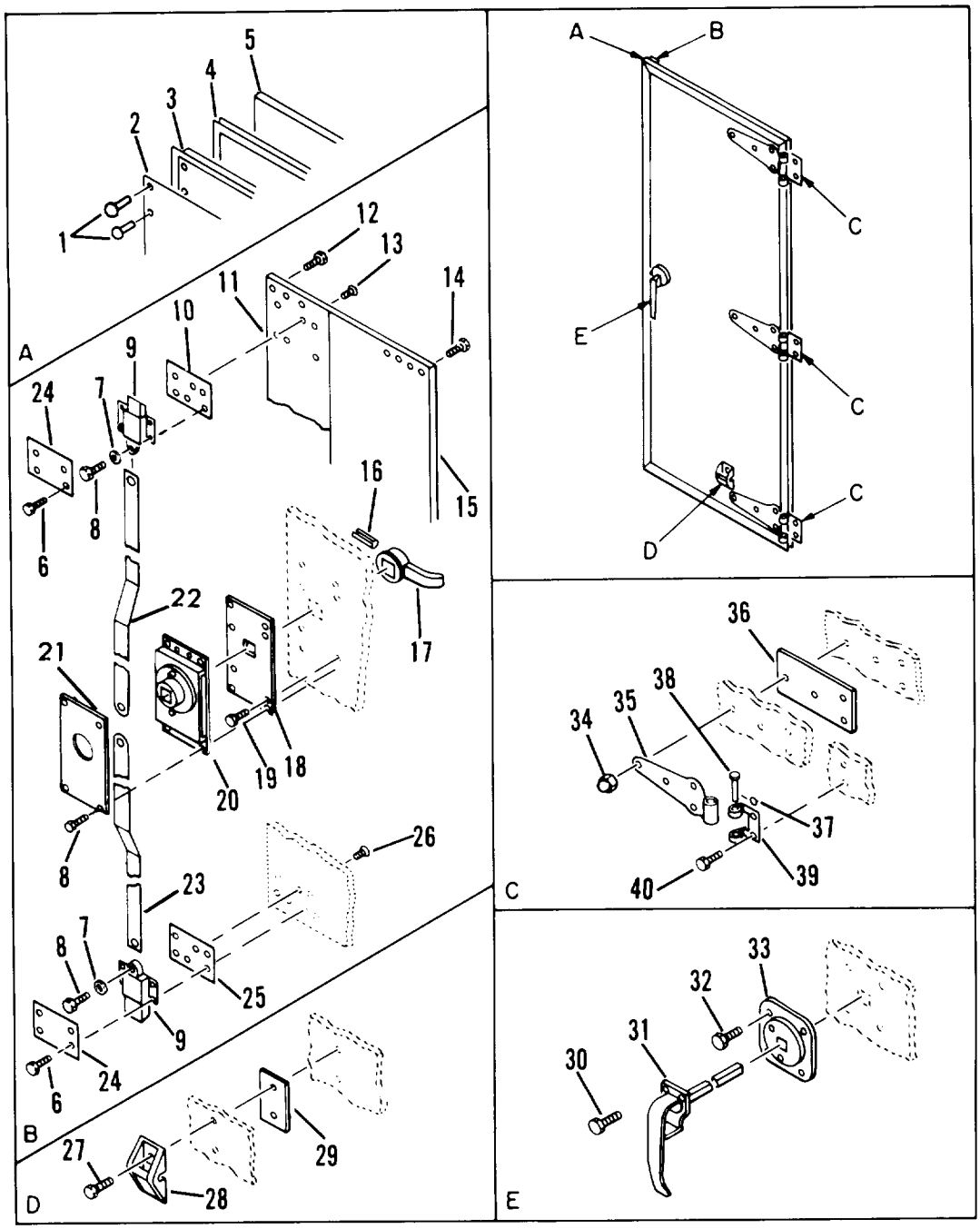

1. Rivet
2. Skin
3. Frame
4. Seal
5. Insulation
6. Screw
7. Washer
8. Screw
9. Case assembly
10. Plate
11. Lock cover
12. Screw
13. Screw
14. Screw
15. Panel
16. Rollpin
17. Handle
18. Plate
19. Screw
20. RH center case
21. Plate
22. Rod
23. Rod
24. Plate
25. Plate
26. Screw
27. Screw
28. Bracket
29. Spacer
30. Screw
31. Door handle
32. Screw
33. Adapter
34. Cap nut
35. Hinge
36. Spacer
37. Cotter pin
38. Hinge pin
39. Hinge butt
40. Screw

Figure 4-50. Right door assembly

(h) Install rods (22) and (23).

(i) Install center case (20) and secure with two washers and cotter pins.

(j) Install plate (21) and secure with four screws (8).

(k) Install panel (15) and secure with 33 screws (14).

(l) Install lock cover (11) (narrow panel) on inside of door. Install 24 screws (12) around edge of lock cover (11).

(m) Slide door handle (31) in position and secure with three screws (30).

(n) Slide handle (17) on shaft and install rollpin (16).

(2) Door holdback bracket replacement.

(a) Remove two screws (27, figure 4-50).

(b) Remove door holdback bracket (28).

(c) Position new door holdback bracket (28) in place and secure with two screws (27).

(3) Ladder mount replacement.

(a) Remove two cap nuts and ladder mount.

(b) Install new ladder mount and secure with two cap nuts.

NOTE

The cap nuts attach to screws that are welded to the door.

(4) Hinge pin replacement.

(a) Remove cotter pin (37, figure 4-50) and hinge pin (38).

(b) Install new hinge pin (38) and secure with cotter pin (37).

(5) Hinge replacement.

(a) Remove four cap nuts (34, figure 4-50).

(b) Remove defective hinge (35).

(c) Install new hinge (35) and secure with four cap nuts (34).

NOTE

The cap nuts attach to screws that are welded to the door.

(6) Hinge butt replacement.

(a) Remove two cap nuts (40, figure 4-50).

(b) Remove defective hinge butt (39).

(c) Position new hinge butt (39) and secure with two cap nuts (40).

NOTE

The cap nuts attach to screws that are welded to the door.

(7) Door seal replacement.

(a) Remove door seal (4, figure 4-50), if defective.

WARNING

Adhesive MIL-A-5092B, type I is toxic and flammable. Use chemical goggles, gloves and good ventilation. Keep container closed; keep sparks, flames and heat away. Keep adhesive off skin, eyes and clothes. Do not breathe vapors.

(b) Replace seal (4) with adhesive (MIL-A-5092B, type I).

c. Inspection.

(1) Inspect for dented or torn panels.

(2) Inspect all parts for defects.

(3) Check for warping or uneven fit around edges.

d. Installation.

(1) Position door by aligning hinges 35, figure 4-50 and hinge butts (39).

(2) Secure door with three hinge pins (38) and cotter pins (37).

4-53. LEFT DOOR

INITIAL SETUP

Tools

General mechanics tool kit

Materials/Parts

Adhesive (MIL-A-5092B, type I) (Item 9, Appendix E)

---

a. Removal.

(1) Support door and remove three cotter pins (24, figure 4-51) and hinge pins (25).

(2) Remove door.

b. Repair. Repair is limited to the replacement of defective parts.

NOTE

The left door does not have to be removed for any repair procedure.

(1) Keeper, housing and chain replacement.

(a) Remove two screws (10, figure 4-51). Remove keeper (13).

(b) Remove twenty screws (10) to loosen housing (11) from door assembly.

(c) Remove four screws (8) to loosen chain bolt (16).

(d) Remove chain bolt components (14, 15, 16) from door.

(e) Install new housing (11) and secure with twenty screws (10).

(f) Drop chain (15) through housing (11).

(g) Install chain bolt (16) with four screws (8).

(h) Install keeper (13) around chain (15) and secure with two screws (10).

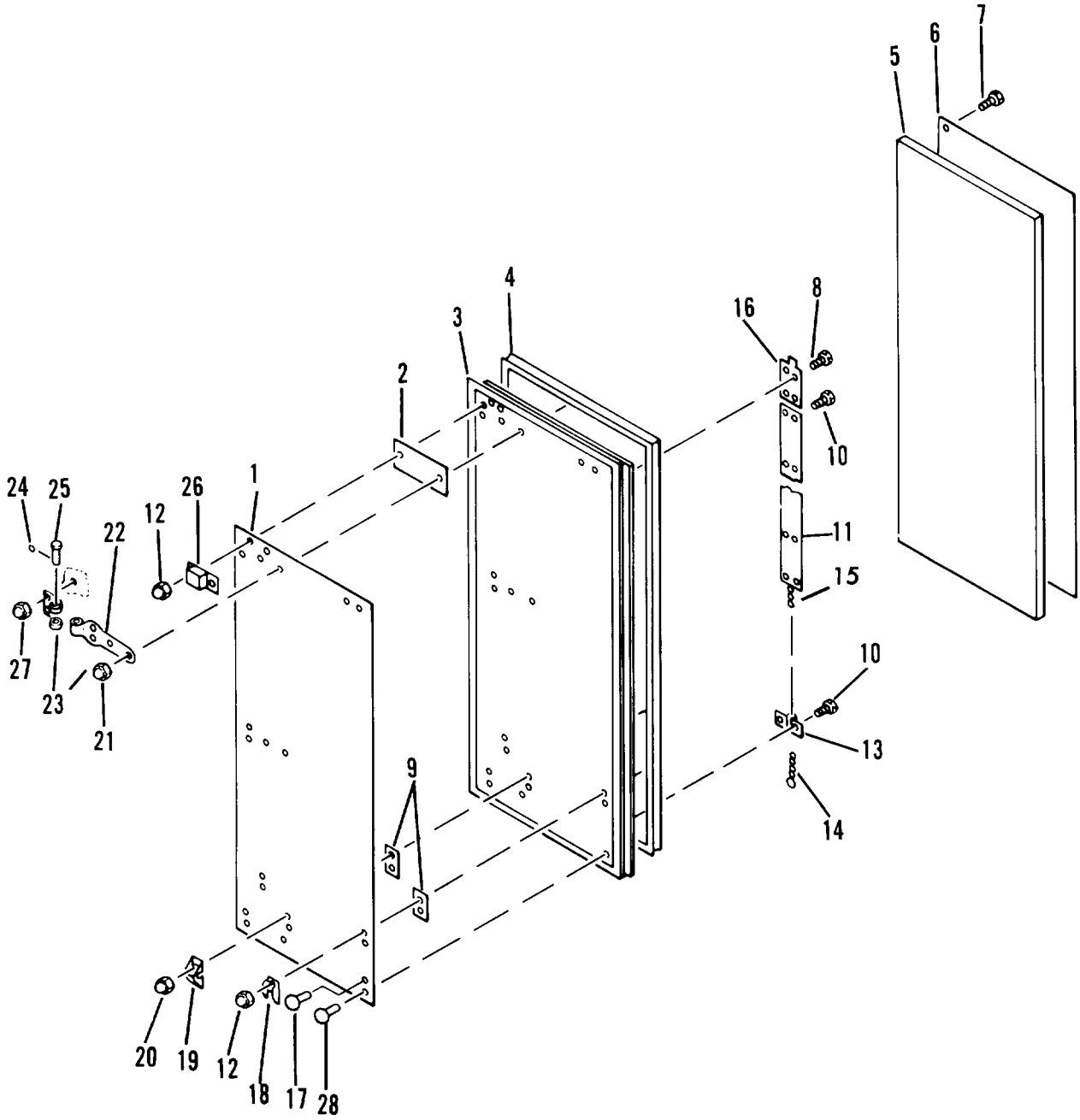

1. Skin
2. Spacer
3. Frame
4. Seal
5. Insulation
6. Panel
7. Screw
8. Screw
9. Spacer
10. Screw
11. Housing
12. Cap nut
13. Keeper
14. Hook
15. Chain
16. Chain bolt
17. Rivet
18. Bracket
19. Bracket
20. Cap nut
21. Cap nut
22. Hinge
23. Hinge butt
24. Cotter pin
25. Hinge pin
26. Bracket
27. Cap nut
28. Rivet

Figure 4-51. Left door assembly

(2) Door holdback bracket replacement.

(a) Remove two cap nuts (20, figure 4-51).

(b) Remove defective door holdback bracket (19).

(c) Position new door holdback bracket (19) in place. Sucure with two cap nuts (20).

NOTE

The cap nuts attach to screws that are welded to the door.

(3) Hinge pin replacement.

(a) Remove cotter pin (24, figure 4-51) and hinge pin (25).

(b) Install new hinge pin (25) and secure with cotter Pin (24).

(4) Hinge replacement.

(a) Remove four cap nuts (21, figure 4-51).

(b) Remove defective hinge (22).

(c) Position new hinge (22) and secure with four cap nuts (21).

NOTE

The cap nuts attach to screws that are welded to the door.

(5) Hinge butt replacement.

(a) Remove two cap nuts (27, figure 4-51).

(b) Remove defective hinge butt (23).

(c) Position new hinge butt (23) and secure with two cap nuts (27).

NOTE

The cap nuts attach to screws that are welded to the door.

(6) Door seal replacement.

(a) Remove door seal (4, figure 4-51), if defective.

WARNING

Adhesive MIL-A-5092B, type I is toxic and flammable. Use chemical goggles, gloves and good ventilation. Keep container closed; keep sparks, flames and heat away. Keep adhesive off skin, eyes and clothes. Do not breathe vapors.

(b) Replace seal (4) with adhesive (MIL-A-5092B, type I).

c. Inspection.

(1) Inspect for dented or torn panels.

(2) Inspect all parts for defects.

(3) Check for warping or uneven fit around edges.

d. Installation.

(1) Position door by aligning hinges (22, figure 4-51) and hinge butts (23).

(2) Secure door with three hinge pins (25) and cotter pins (24).

4-54. FLOOR REPAIR

INITIAL SETUP

Tools

General mechanics tool kit
Sander

Floor repair at the organizational maintenance level is limited to filling gouges and cracks and sanding the surface. Replacement of boards and strips must be done at direct support maintenance.

Section XI . MAINTENANCE OF MISCELLANEOUS BODY ACCESSORIES

	Page
Float Pad (Ground Board Assembly)	4-93
Reflectors	4-91
Splash Guard	4-92
Taillight Bracket	4-94
Vehicle Data Plate	4-92

4-55. REFLECTORS

INITIAL SETUP

Tools

General mechanics tool kit

Materials/Parts

Reflector

a. Removal. Remove screws securing reflector (1, figure 4-52). Remove reflector (1).

b. Installation. Position reflector (1). Secure with two screws.

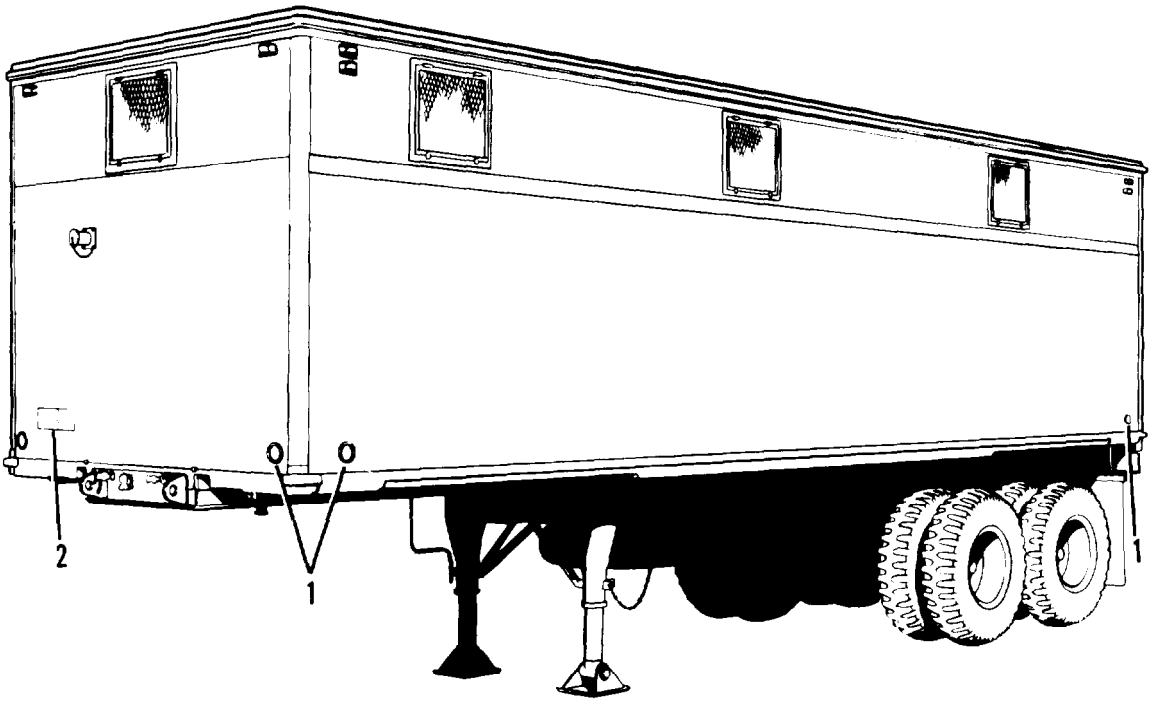

Figure 4-52. Vehicle data plate and reflectors

4-56. VEHICLE DATA PLATE

INITIAL SETUP

Tools

General mechanics tool kit

Materials/Parts

Data plate

a. Removal. Remove six rivets securing data plate (2, figure 4-52). Remove data plate (2).

b. Installation. Position data plate (2). Secure with six rivets.

4-57. SPLASH GUARD

INITIAL SETUP

Tools

General mechanics tool kit

Materials/Parts

Splash guard

a. Removal.

(1) Remove four nuts (1, figure 4-53), washers (2) and screws (3) from splash guard (4).

(2) Remove backing strip (5) and splash guard (4).

b. Installation.

(1) Position splash guard (4, figure 4-53) and backing strip (5).

(2) Secure splash guard (4) with four screws (3), washers (2) and nuts (1).

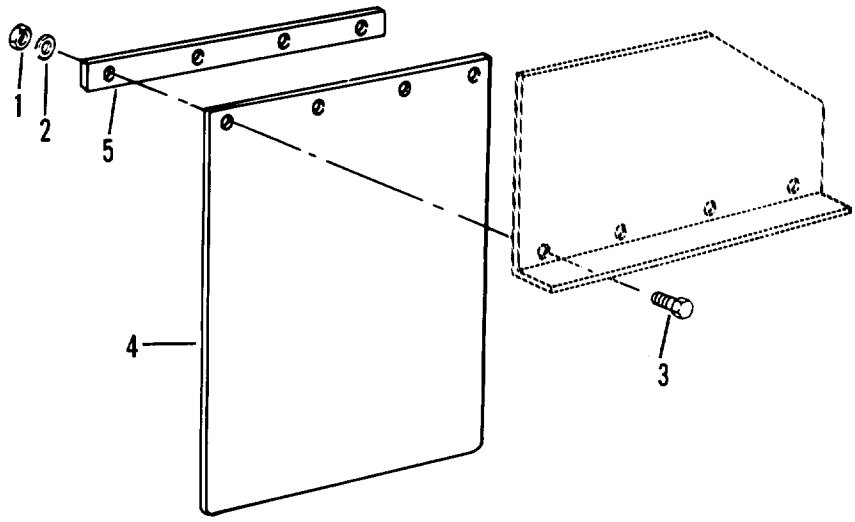

Figure 4-53. Splash guard

4-58. FLOAT PAD (GROUND BOARD ASSEMBLY)

INITIAL SETUP

Tools

General mechanics tool kit

Materials/Parts

Float pad

---

a. Removal.

(1) Remove nut (1, figure 4-54), washer (2) and screw (3) from end of chain (4) attached to landing leg (5).

(2) Remove nut (6), washer (7) and screw (8) from float pad (9). Remove chain (4).

(3) Remove float pad (9) from bracket (10).

b. Installation.

(1) Install float pad (9, figure 4-54) in bracket (10).

(2) Position chain (4) on float pad (9) and secure with screw (8), washer (7) and nut (6).

(3) Position other end of chain (4) on landing leg (5). Secure chain (4) with screw (3), washer (2) and nut (1).

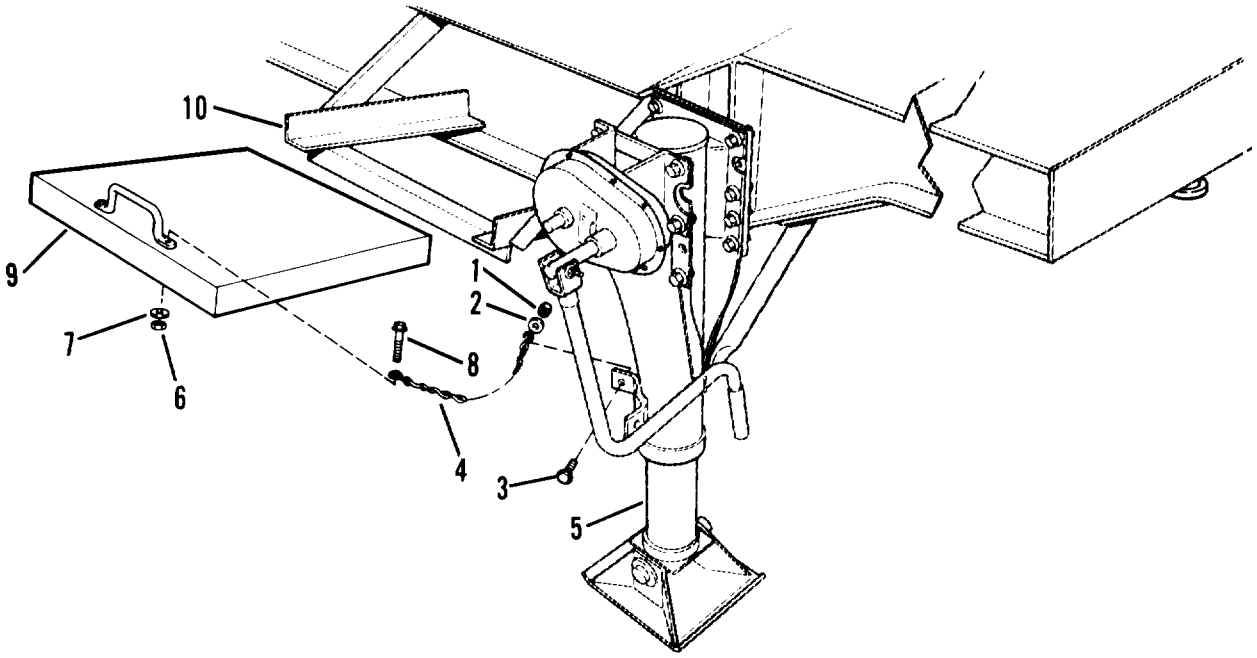

Figure 4-54. Float pad

4-59. TAILLIGHT BRACKET

INITIAL SETUP

Tools

General mechanics tool kit

Materials/Parts

Taillight bracket

Equipment Condition

12 and 24 volt taillights removed (paras. 4-17 and 4-18)
Splash guard removed (para. 4-57)

---

a. Removal.

(1) Remove two nuts (1, figure 4-55), washers (2) and bolts (3).

(2) Remove taillight bracket (4).

b. Installation.

(1) Install taillight bracket (4, figure 4-55) and secure with two bolts (3), washers (2) and nuts (1).

(2) Install splash guard (para. 4-57).

(3) Install 12 and 24 volt taillights (paras. 4-17 and 4-18).

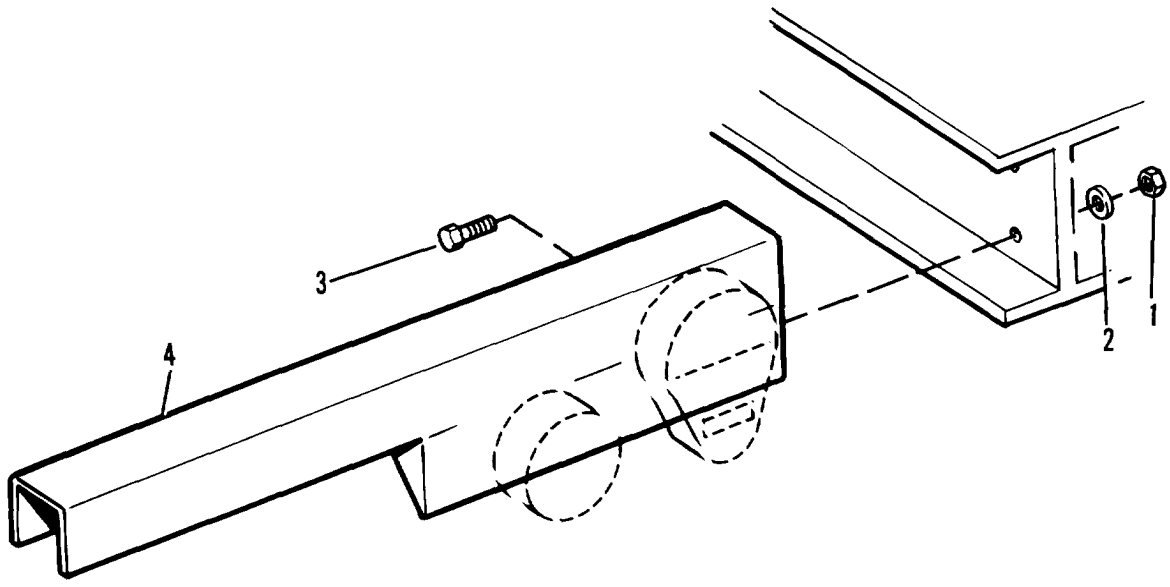

Figure 4-55. Taillight bracket

Section XII. PREPARATICRl FOR STORAGE AND SHIPMENT

	Page
Administrative Storage Instructions	4-95
General	4-95
Shipping Instructions	4-96

4-60. GENERAL

Commanders are responsible for insuring that all materiel issued or assigned to their command is maintained in a serviceable condition, properly cared for and that personnel under their command comply with technical instructions. Lack of time, lack of trained personnel or lack of proper tools may result in a unit being incapable of performing maintenance for which it is responsible. In such cases, unit commanders, with approval of major commanders, may place material that is beyond the maintenance capability of the unit, in administrative storage or return it to supply agencies. When preparing the semitrailer for administrative storage, the unit commander will be responsible for processing the materiel, including all tools and equipment, in such a manner as to protect it against corrosion, deterioration and physical damage during shipment or periods of administrative storage.

4-61. ADMINISTRATIVE STORAGE INSTRUCTIONS

Refer to TM 740-90-1.

4-62. SHIPPING INSTRUCTIONS

a. Preparation for Shipment. Preservation and other protective measures taken in the preparation of materiel and accompanying tools and equipment for shipment must be sufficient to protect the materiel against deterioration and physical damage during shipment.

WARNING

Cleaning solvent (PD-680) is both toxic and flammable, Avoid prolonged breathing of vapors. Avoid skin contact. Use only in a well ventilated area. Keep away from open flame. Flashpoint of solvent is 138°F (59°C).

(1) Cleaning. Use dry cleaning solvent (PD-680) to clean or wash grease or oil from all metal parts. All exposed machined surfaces must be cleaned to insure removal of corrosion, soil, grease, residues, perspiration or other acid or alkali residues.

(2) Drying. After cleaning, use cold water to rinse all parts. Use a clean cloth to dry all parts thoroughly.

(3) Lubrication. Lubricate items specified on lubrication chart (figure 3-1).

(4) Preservation.

(a) All critical unpainted metal surfaces must be protected during shipment. Oil or grease covered in the lubrication section (para. 3-1) may be used for this purpose but it is effective for only a few days. Equipment protected in this manner must be watched for signs of corrosion. Preservatives selection will be such that their application, use or removal will not damage the surface to which they are applied.

(b) Coat lower landing leg assembly, chassis, frame, exterior hardware and suspension system with corrosion preventive compound.

(c) Spray data plates with a thin coating of ignition insulation compound. Control overspray to avoid coating adjacent surfaces.

(d) Cover all exterior reflectors and lights with tape.

(e) Coat rubber door seals with powdered talc. Coat doors operating mechanism and hinges with automotive and artillery grease (GAA). Apply sparingly.

(6) Marking. Refer to AR 746-80 for Marking of Supplies for Shipment.

b. Army Shipping Documents. Prepare all Army shipping documents accompanying freight in accordance with AR 725-5.

Section XIII. MAINTENANCE UNDER UNUSUAL CONDITIONS

	Page
Extreme Cold Weather Maintenance	4-97
Extreme Hot Weather Maintenance	4-97
Maintenance After Fording	4-98
Maintenance After Operation on Unusual Terrain	4-98

4-63. EXTREME COLD WEATHER MAINTENANCE

a. The importance of maintenance must be impressed on all concerned. Maintenance of mechanical equipment in extreme cold is exceptionally difficult in the field. Even shop maintenance cannot be completed with normal speed because equipment must be allowed to thaw out and warm up before the mechanic can make satisfactory repairs. In the field, maintenance must be undertaken under the most difficult of conditions. Bare hands stick to cold metal. Fuel in contact with the hands results in supercooling due to evaporation, and hands can be painfully frozen in a matter of minutes. Engine oils, except subzero grade, are unpourable at temperatures below -400 F. Ordinary greases become as solid as cold butter.

b. These difficulties increase time required to perform maintenance. At temperatures below -40° F. maintenance requires up to five times the normal amount of time. Complete winterization, diligent maintenance, and well-trained crews are the key to efficient Arctic winter operation.

CAUTION

It is imperative that approved maintenance procedures be followed. FM 9-207 contains general information which is specifically applicable to this materiel as well as all other materiel. It must be considered an essential part of this technical manual, not merely an explanatory supplement to it.

c. Refer to FM 9-207 for general information on extreme cold weather maintenance procedures.

4-64. EXTREME HOT WEATHER MAINTENANCE

a. Corrosion. In hot, damp climates, corrosive action will occur on all parts of the materiel and will be accelerated during rainy seasons. Evidence will appear in the form of rust, paint blisters, mildew, mold and fungus growth.

b. Protective Action. Remove the corrosion from exterior metal surfaces with abrasive paper or cloth and apply a protective coating of paint, or touch up existing paint. Keep a film of preservative oil on unfinished exposed metal surfaces. Cables and terminals should be protected by spraying with ignition insulation compound.

4-65. MAINTENANCE AFTER FORDING

a. General. Although materiel unit housings are sealed to prevent the free flow of water into the housings, it must be realized that due to the necessary design of these assemblies, some water may enter, especially during submersion. The following services should be accomplished on all materiel which has been exposed to some depth of water or completely submerged, especially in salt water. Precautions should be taken as soon as practicable to halt deterioration and avoid damage before the materiel is driven extensively in regular service.

b. Lubricate. Clean and lubricate all parts as specified on the lubrication chart. Remove wheels; clean and repack bearings. Make sure that lubricant is generously forced into each lubrication fitting to force out any water present.

c. Electrical Connections. Check all electrical connections for corrosion.

d. Paint. Clean all exposed painted surfaces and touch up paint where necessary. Coat unpainted metal parts with preservative oil.

e. Aluminum or Magnesium If vehicle remains in salt water for any appreciable length of time, aluminum or magnesium parts which were exposed to water will probably be unfit for further use and must be replaced.

4-66. MAINTENANCE AFTER OPERATION ON UNUSUAL TERRIAN

a. Mud. Thorough cleaning and lubrication of all parts affected must be accomplished as soon as possible after operation in mud, particularly when a sea of liquid mud has been traversed. Clean all suspension components and lubricate as specified on the lubrication order. Repack wheel bearings, if necessary.

b. Sand or Dust. Touch up all painted surfaces damaged by sand. Lubricate completely to force out lubricants contaminated by sand or dust.

CHAPTER 5

DIRECT SUPPORT AND GENRAL SUPPORT MAINTENANCE INSTRUCTIONS

Section I. REPAIR PARTS, SPECIAL TOOLS, TMDE AND SUPPORT EQUIPMENT

	Page
Common Tools and Equipment	5-1
Repair Parts	5-1
Special Tools, TMDE, and Support Equipment	5-1

5-1. COMMON TOOLS AND EQUIPMENT

For authorized common tools and equipment, refer to the Modified Table of Organization and Equipment (MTOE) applicable to your unit.

5-2. SPECIAL TOOLS, TMDE, AND SUPPORT EQUIPMENT

No special tools, TMDE or equipment are required to maintain the semitrailer.

5-3. REPAIR PARTS

Repair parts are listed and illustrated in Appendix F of this manual.

Section II. MAINTENANCE OF AXLE ASSEMBLY

	Page
Axle Replacement	5-1
Repair.	5-5

5-4. AXLE REPLACEMENT

INITIAL SETUP

Tools

Lifting device
Jack stands
Front lifting device (for removal of front axle only)
General mechanics tool kit and common supplement II

Materials/Parts	Personnel Required
Axle	Two maintenance personnel

a. Rear Axle Removal.

WARNING

The semitrailer frame and both axles must be firmly supported to prevent shifting of the semitrailer. Shifting may cause serious injury to personnel and damage to equipment.

(1) Support both axles on each side and frame.

(2) Cage failsafes (para. 3-10).

(3) Tag and disconnect air brake chamber air hoses (para. 4-37).

(4) Remove four nuts (1, figure 5-1), washers (2) and bolts (3). Repeat for other side of axle.

(5) Remove four nuts (4), washers (5) and two u-bolts (6). Repeat for other side of axle.

(6) Remove spring cap (7) from each side of axle. Slowly remove axle.

NOTE

If both axles are being removed, follow steps 1 through 6 to remove front axle.

(7) Rernove tires, wheels, air brake chambers and slack adjusters (see Chapter 4).

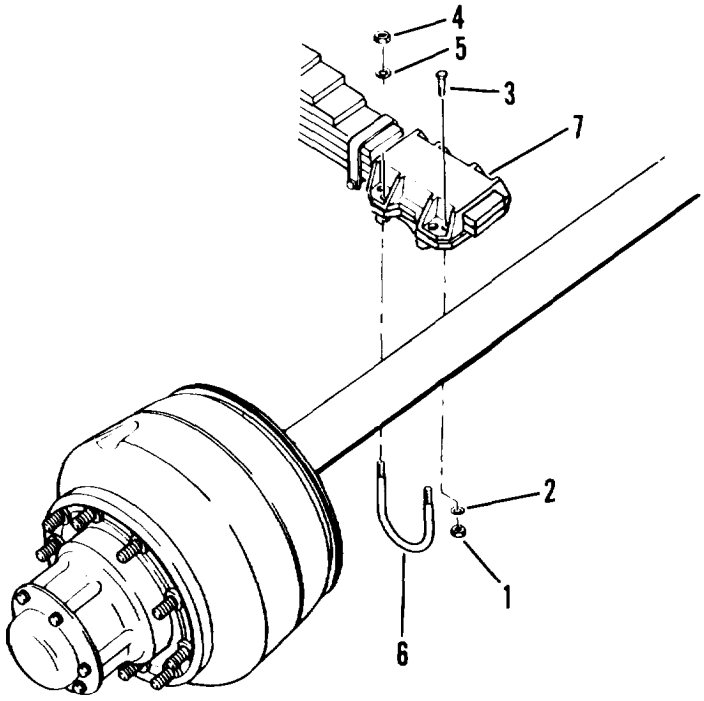

Figure 5-1. Axle replacement

b. Front Axle Removal.

WARNING

The semitrailer frame and both axles must be firmly supported to prevent shifting of the semitrailer. Shifting may cause serious injury to personnel and damage to equipment.

(1) Support both axles on each side and frame.

(2) Cage failsafes (para. 3-10).

(3) Tag and disconnect air brake chamber air hoses (para. 4-37).

(4) Remove four nuts (1, figure 5-1), washers (2) and bolts (3). Repeat for other side of axle.

(5) Remove four nuts (4), washers (5) and two u-bolts (6). Repeat for other side of axle.

(6) Remove spring cap (7) from each side of axle.

(7) Lift front of semitrailer using suitable lifting device. Slowly remove axle from the front.

(8) Remove tires, wheels, air brake chambers and slack adjusters (see Chapter 4).

c. Front Axle Installation.

(1) Align front axle with the kingpin (figure 5-2).

(2) There is one prewelded adjustment plate and one that is not welded on each side of the axle. After alignment is complete, weld the unwelded adjustment plates. Welds are per Class 2, MIL-STD-1261.

NOTE

If the old axle is being reinstalled, alignment is not required. Plates are already welded to the axle.

(3) Install wheels, tires, slack adjusters and air brake chambers (see Chapter 4).

(4) Install axle from the front of the semitrailer.

(5) On both sides of the axle, align raised surface of adjustment plate (1, figure 5-3) with recessed area on the underside of spring assembly (2).

(6) Install spring cap (7, figure 5-1) on each side of axle.

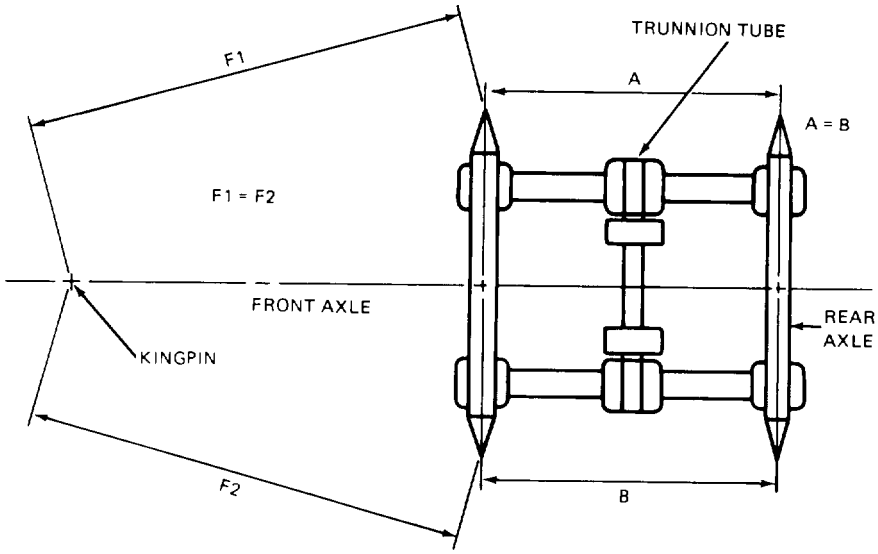

Figure 5-2. Axle alignment

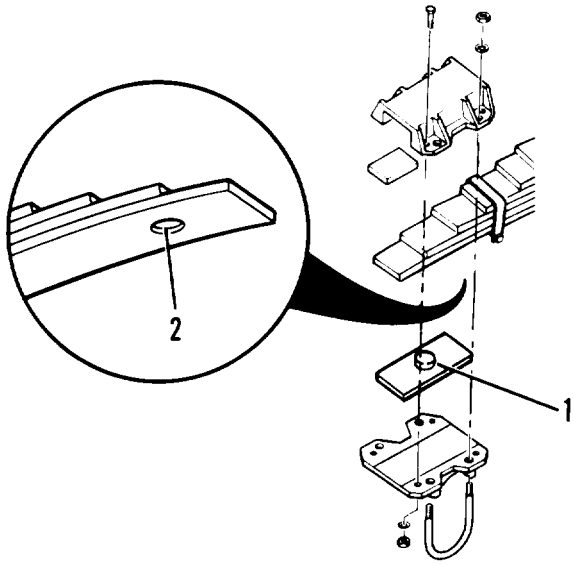

Figure 5-3. Adjustment plate

(7) Install two u-bolts (6), four washers (5) and nuts (4). Torque to 730 lb ft (990 Nm). Repeat for other side of axle.

(8) Install four bolts (3), washers (2) and nuts (l). Torque to 300 lb ft (408 Nm). Repeat for other side of axle.

NOTE

Inspect flange on spring seat cap to determine if socket will fit on bolt. It may be necessary to grind only enough flange so socket will fit over the head of the bolt properly.

(9) Connect air brake chamber air hoses.

(10) Uncage failsafes (para. 4-36).

(11) Remove axle and frame supports.

d. Rear Axle Installation.

(1) Align rear axle with front axle (figure 5-2).

(2) There is one prewelded adjustment plate and one that is not welded on each side of the axle. After alignment is complete, weld the unwelded adjustment plates. Welds are per Class 2, MIL-STD-1261.

NOTE

If the old axle is being reinstalled, alignment is not required. Plates are already welded to the axle.

(3) Install wheels, tires, slack adjusters and air brake chambers (see Chapter 4).

(4) Install axle from rear of the semitrailer.

(5) On both sides of axle, align raised surface of adjustment plate (1, figure 5-3) with recessed area on the underside of spring assembly (2).

(6) Install spring cap (7, figure 5-1) on each side of axle.

(7) Install two u-bolts (6), four washers (5) and nuts (4). Torque to 730 lb ft (990 Nm). Repeat for other side of axle.

(8) Install four bolts (3), washers (2) and nuts (1). Torque to 300 lb ft (408 Nm). Repeat for other side of axle.

NOTE

Inspect flange on spring seat cap to determine if socket will fit on bolt. It may be necessary to grind only enough flange so socket will fit over the head of the bolt properly.

(9) Connect air brake chamber air hoses.

(10) Uncage failsafes (para. 4-36).

(11) Remove axle and frame supports.

5-5. AXLE REPAIR

Repair of the axle is limited to chasing spindle threads.

Section III. MAINTENANCE OF BRAKES

5-6. BRAKE LINING REPLACEMENT

INITIAL SETUP

Tools

0.010 inch feeler gage
General mechanics tool kit and common supplement II

Materials/Parts

Brake linings

Equipment Condition

Tires and wheels removed (para. 4-43)
Brake hub and drum removed (para. 4-45)
Brake shoes removed (para. 4-40)

a. Removal.

WARNING

Do not grind rivet heads off due to asbestos hazard.

(1) Remove 12 rivets (1, figure 5-4) from each lining (2 and 3).

(2) Strip linings (2 and 3) from brake shoes (4).

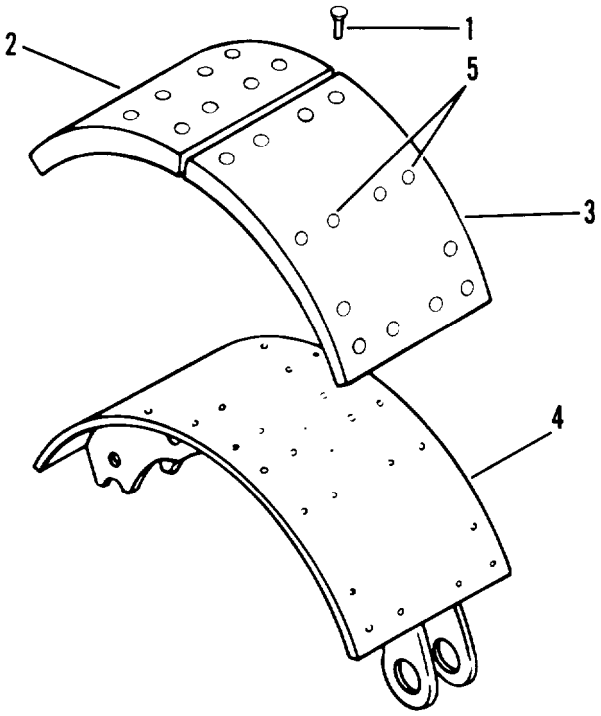

Figure 5-4. Brake lining replacement

b. Installation.

(1) Install new lining (2, figure 5-4) on brake shoes (4).

(2) Align rivet holes (5) in brake shoe (4) and lining (2 and 3). Clamp linings in place.

(3) Install end rivets (1) in lining (2 and 3). Remove clamp and install remaining rivets (1).

(4) Check contact of linings (2 and 3) with brake shoe (4) after riveting. A 0.010 inch feeler gage should not enter between brake shoe (4) and lining (2 and 3) at any point.

(5) Install brake shoes (para. 4-40).

(6) Install brake drum and hub (para. 4-45).

(7) Install tires and wheels (para. 4-43).

Section IV. MAINTENANCE OF FRAME

5-7. KINGPIN REPLACEMENT

INITIAL SETUP

Tools

300 amp welder
General mechanics tool kit and common supplement II

Materials/Parts

Kingpin
Dye penetrant
Paint (Item 15, Appendix E)

Personnel Required

Two maintenance personnel

---

a. Remove the amount of trailer deck required to gain access to the top surface of the kingpin (para. 5-10) (figure 5-5).

b. Using the air-arc process, remove the welds securing the kingpin upper surface and plug welds from the kingpin “mushroom”. A 300 amp welder is required along with a “shop air” supply of 90 psi. Care must be taken to minimize damage to the bolster plate. Damage to the kingpin being removed is of no consequence.

c. Remove the kingpin.

d. Grind the area of the bolster plate under the kingpin “mushroom” flush so that the new kingpin will lie flat on the bolster plate.

e. Install the new kingpin. Locate the holes in the kingpin top in the same manner as the one removed.

f. Preheat kingpin and bolster plate to 150°F (66°C), and maintain temperature throughout the welding process.

g. Weld the kingpin “mushroom” to the bolster plate with 1/4 inch fillet weld - two inches long at four equally spaced points on the edge of the flange and plug weld the holes in the “mushroom”. Welds are to be in accordance with MIL-STD-1261, class 3. Use 100,000 psi electrode or wire of the following specification: electrodes, mineral coated, low hydrogen, MIL-E-2200/6 type MIL-10015 or MIL-10016. Wire, use bare solid wire, low alloy steel, MIL-E-23765/2 type 100S-1, 100S-2 or 110S-1.

h. Inspect weld with dye penetrant or magnetic particle inspection. No cracks are allowable and any cracks found must be repaired.

i. Prime and paint the top of the kingpin and bolster plate as follows: Prime, per TT-P-636 or TT-P-664. Paint with enamel per MIL-E-52798 (color: forest green).

j. Replace trailer deck that was removed to gain access to the top of the kingpin.

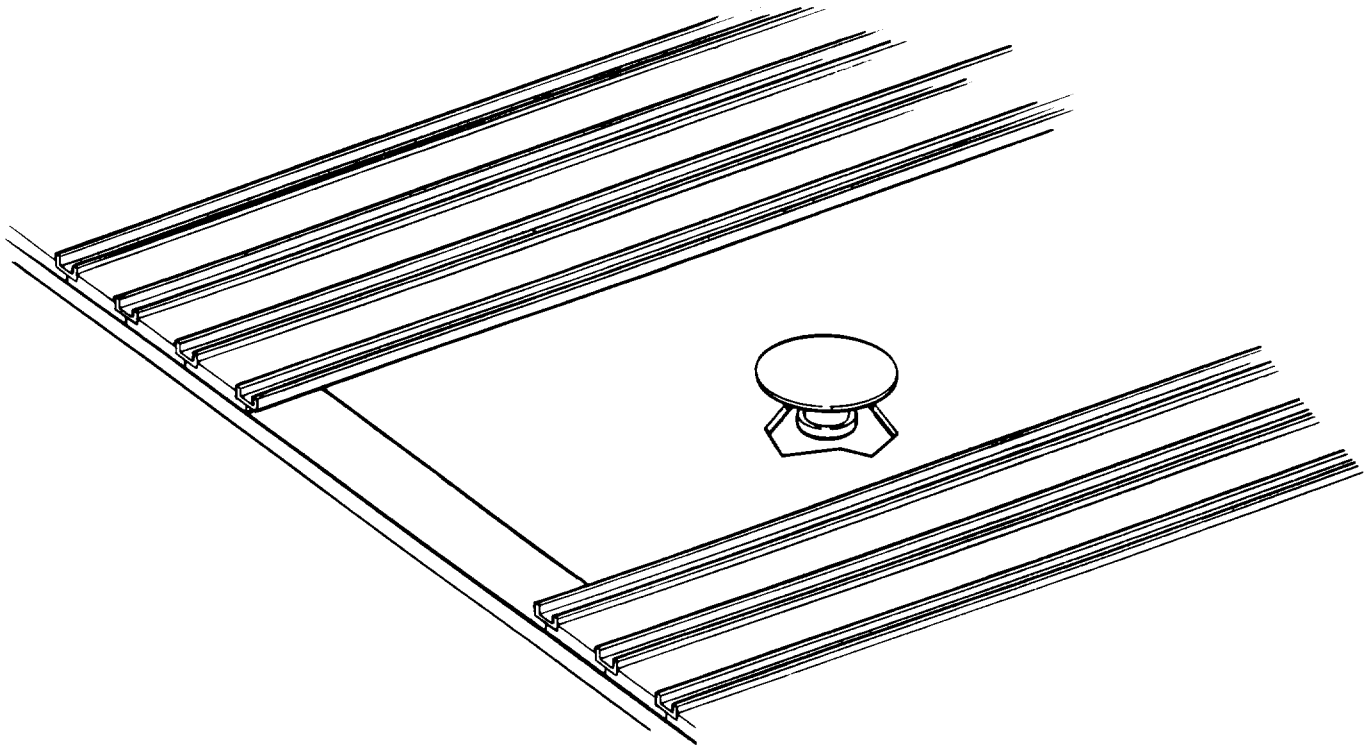

Figure 5-5. Trailer deck and kingpin

Section V. MAINTENANCE OF THE SUSPENSION

Page
Spring Replacement. 5-9
Trunnion Tube Replacement. 5-11

5-8. SPRING REPLACEMENT

INITIAL SETUP

Tools

Jack stands
General mechanics tool kit and common supplement II

Personnel Required

Two maintenance personnel

Materials/Parts

Spring assembly

a. Removal.

WARNING

The semitrailer frame and both axles must be firmly supported to prevent shifting of the semitrailer. Shifting may cause serious injury to personnel and damage to equipment.

(1) Support both axles on each side and frame.

(2) Remove four nuts (1, figure 5-6), washers (2) and bolts (3) from each side of spring assembly (4).

(3) Remove four nuts (5), washers (6) and two u-bolts (7) from each side of spring (4).

(4) Remove spring cap (8) from each side of spring (4).

(5) Remove four nuts (9), washers (10) and two large u-bolts (11) that secure spring (4) to trunnion tube.

(6) Remove spring (4).

b. Installation.

(1) Position spring (4, figure 5-6).

(2) Install two large u-bolts (11), four washers (10) and nuts (9) to secure spring (4) to trunnion tube. Torque to 880 lb ft (1192 Nm).

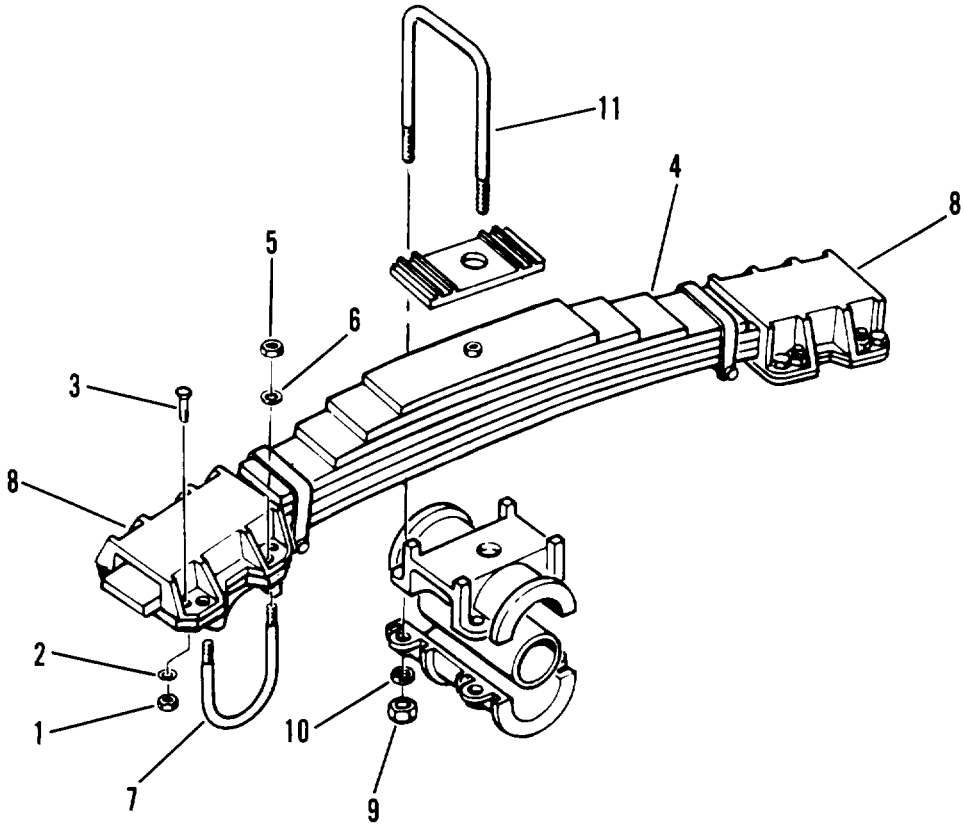

Figure 5-6. Spring assembly

(3) Install spring cap (8) on each side of spring (4).

(4) Install two u-bolts (7), four washers (6) and nuts (5) on each side of spring (4). Torque to 730 lb ft (990 Nm).

(5) Install four bolts (3), washers (2) and nuts (1) to each side of spring (4). Torque to 300 lb ft (408 Nm).

NOTE

Inspect flange on spring seat cap to determine if socket will fit on bolt. It may be necessary to grind only enough flange so socket will fit over the head of the bolt properly.

(6) Remove axle and frame supports.

5-9. TRUNNION TUBE REPLACEMENT

INITIAL SETUP

Tools	Materials/Parts
Lifting device Jack stands General mechanics tool kit and common supplement II	Trunnion tube

a. Removal.

WARNING

The semitrailer frame must be firmly supported to prevent shifting of the semitrailer. Shifting may cause serious injury to personnel and damage to equipment.

(1) Support both sides of frame.

(2) Using a suitable lifting device, raise semitrailer slightly.

(3) Remove four nuts (1, figure 5-7), washers (2) and two large u-bolts (3) from each set of springs (4).

(4) Lower semitrailer slightly.

(5) Remove upper trunnion caps (5) and lower trunnion caps (6).

NOTE

Axles will support spring assemblies.

(6) Remove two nuts (7), washers (8) and bolts (9) from each trunnion hanger (10) (welded to frame).

(7) Remove teflon bushing (11) and washer (12) from each side of trunnion tube (13). Clean teflon bushing (11) and washer (12).

(8) Clean trunnion tube (13). It may be necessary to use sandpaper to remove rust. Thoroughly lubricate trunnion tube after cleaning.

(9) Remove trunnion tube (13).

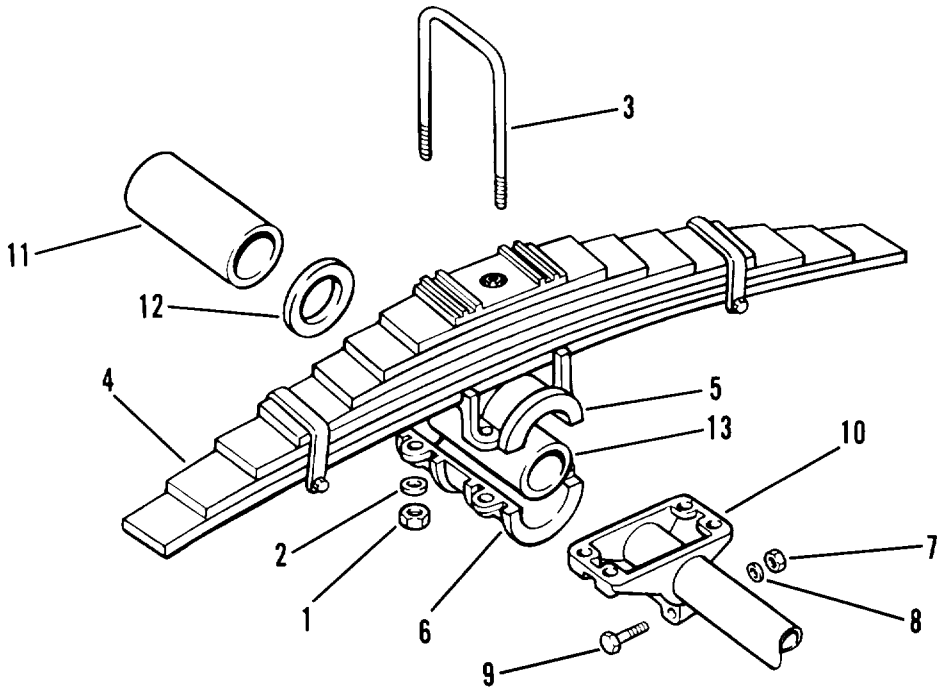

Figure 5-7. Trunnion tube

b. Installation.

(1) Clean and lubricate new trunnion tube (13, figure 5-7).

(2) Install trunnion tube (13). Be certain trunnion tube is centered evenly.

(3) Install washer (12) and teflon bushing (11) on each side of trunnion tube (13). Be certain teflon bushings (11) are evenly centered on trunnion tube (13).

(4) Install two bolts (9), washers (8) and nuts (7) on each trunnion hanger (10) (welded to frame).

NOTE

Before tightening bolts, make sure trunnion tube is centered.

(5) Install upper trunnion caps (5) and lower trunnion caps (6) on each side.

(6) Install two large u-bolts (3), four washers (2) and nuts (1) on each set of springs (4). Torque to 880 lb ft (1192 Nm).

NOTE

Before tightening bolts, make sure teflon bushings are properly centered in trunnion caps.

(7) Lower semitrailer.

(8) Remove lifting device and frame supports.

Section VI. REBUILD OF DECK

5-10. REBUILD OF THE DECK

INITIAL SETUP

Tools

General mechanics tool kit and common supplement II

Materials/Parts

261 linear feet of wood decking boards
Metal wear strips

a. **Materials Required.**

(1) Approximately 261 linear feet of wood decking boards are required for complete deck replacement. The metal wear strips are available in 30 foot lengths and may be cut to size.

(2) All items for repair and redecking of the vehicle are available through normal supply channels.

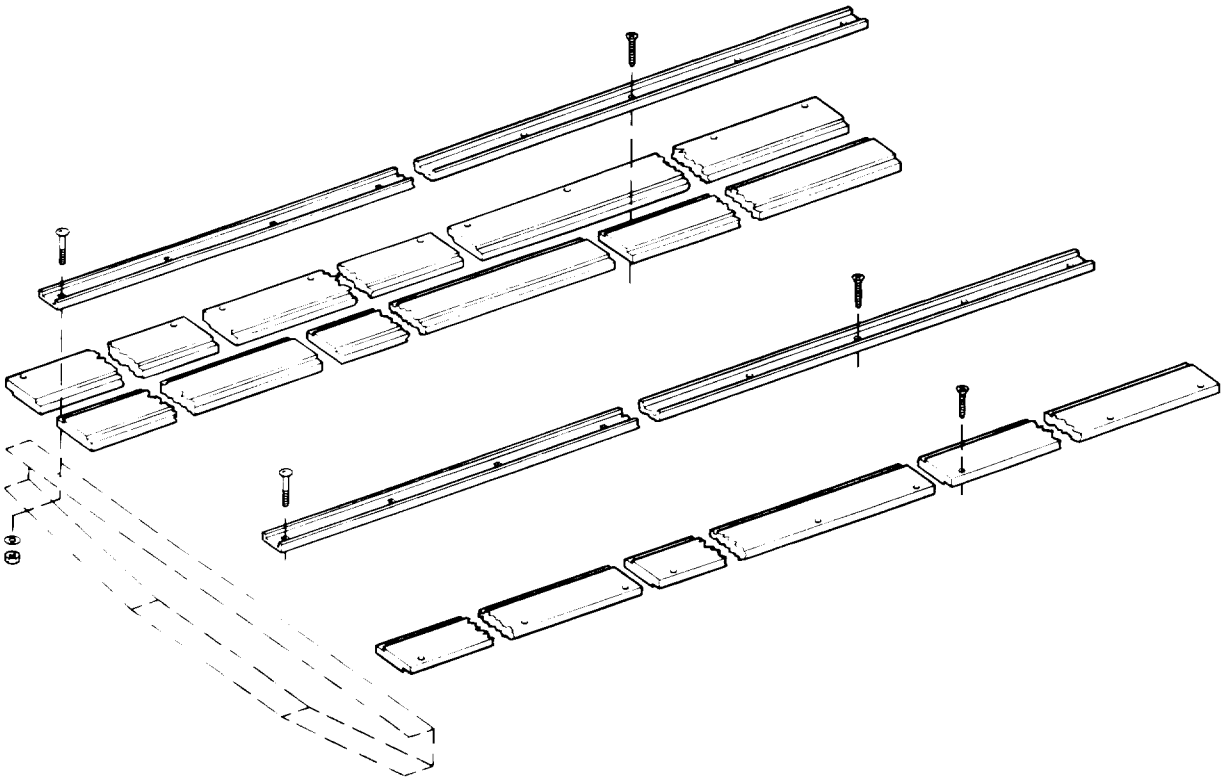

Figure 5-8. Wood deck

b. Rebuild.

(1) Groove replacement board to accept metal strip.

(2) Lay board in place with end resting on crossmember. Make sure adjacent boards do not end on same crossmember. Staggering boards will increase overall deck strength.

(3) Fit metal strip into grooved edge of board. Be sure to line up the holes in the metal strip and the crossmembers.

(4) Insert bolts from above, through recess in strip channel and hole in crossmember.

(5) Attach washers and nuts from underneath crossmembers.

APPENDIX A

REFERENCES

A-1. PUBLICATION INDEXES AND GENERAL REFERENCES

Indexes should be consulted frequently for latest changes or revisions of references given in this appendix and for new publications relating to material covered in this publication.

Military Publication Indexes.

Consolidated Index of Army Publications and Forms . . . . . .DA PAM 310-1

A-2. FORMS

Refer to DA PAM 738-750, the Army Maintenance Management System (TAMMS), for instructions on the use of maintenance forms pertaining to the material.

A-3. OTHER PUBLICATIONS

The following publications contain information pertinent to the major item material and associated equipment.

a. Camouflage.

Camouflage FM5-20

b. Decontamination.

Chemical, Biological, and Radiological (CBR) Decontamination. TM3-220
Nuclear, Biological, and Chemical Defense FM21-40
Nuclear, Biological, and Chemical (NBC) Reconnaissance and Decontamination Operations (How to Fight) . . . . . .FM3-87(HTF)

c. General.

Basic Cold Weather Manual. FM31-70
Manual for Wheeled Vehicle Driver FM21-305
Army Motor Transport Units and Operations FM55-30
Northern Operations FM31-71
Operation and Maintenance of Ordnance Materiel in Cold Weather (0 Deg to Minus 65 Deg F.) FM9-207
Procedures for Destruction of Tank Automotive Equipment to Prevent Enemy Use (U.S. Army Tank-Automotive Command) TM750-244-6

d. Maintenance and Repair.

Care, Maintenance and Repair of Pneumatic Tires and Inner Tubes TM9-2610-200-24
Description, Use, Bonding Techniques, and Properties of Adhesives. .TB ORD1032
Inspection, Care, and Maintenance of Antifriction Bearings TM9-214
Materials Used for Cleaning, Preserving, Abrading, and Cementing Ordnance Materiel and Related Materials Including Chemicals TM9-247
Deepwater Fording of Ordnance Materiel. TM9-238
Operator's Manual for Welding Theory and Application TM9-237

e. Administrative Storage.

Administrative Storage of Equipment TM740-90-1

APPENDIX B

MAINTENANCE ALLOCATION CHART

Section I. INTRODUCTION

B-1. General.

a. This section provides a general explanation of all maintenance and repair functions authorized at various maintenance categories.

b. The Maintenance Allocation Chart (MAC) in section II designates overall authority and responsibility for the performance of maintenance functions on the identified end item or component. The application of the maintenance functions to the end item or component will be consistent with the capacities and capabilities of the designated maintenance categories.

c. Section III lists the tools and test equipment (both special tools and common tool sets) required for each maintenance function as referenced from section II.

d. Section IV contains supplemental instructions and explanatory notes for a particular maintenance function.

B-2. Maintenance Functions. Maintenance functions will be limited to and defined as follows:

a. Inspect. To determine the serviceability of an item by comparing its physical, mechanical, and/or electrical characteristics with established standards through examination (e.g., by sight, sound, or feel).

b. Test. To verify serviceability by measuring the mechanical, pneumatic, hydraulic, or electrical characteristics of an item and comparing those characteristics with prescribed standards.

c. Service. Operations required periodically to keep an item in proper operating condition, i.e., to clean (includes decontaminate, when required), to preserve, to drain, to paint, or to replenish fuel, lubricants, chemical fluids, or gases.

d. Adjust. To maintain or regulate, within prescribed limits, by bringing into proper or exact position, or by setting the operating characteristics to specified parameters.

e. Align. To adjust specified variable elements of an item to bring about optimum or desired performance.

f. Calibrate. To determine and cause corrections to be made or to be adjusted on instruments or test, measuring, and diagnostic equipment used in precision measurement. Consists of comparisons of two instruments, one of which is a certified standard of known accuracy, to detect and adjust any discrepancy in the accuracy of the instrument being compared.

g. Remove/Install. To remove and install the same item when required to perform service or other maintenance functions. Install may be the act of emplacing, seating, or fixing into position a spare, repair part, or module (component or assembly) in a manner to allow the proper functioning of an equipment or system.

h. Replace. To remove an unserviceable item and install a serviceable counterpart in its place. "Replace" is authorized by the MAC and is shown as the 3d position code of the SMR code.

i. Repair. The application of maintenance services including fault location/troubleshooting, removal/installation, and disassembly/assembly procedures, and maintenance actions to identify troubles and restore serviceability to an item by correcting specific damage, fault, malfunction, or failure in a part, subassembly, module (component or assembly), end item, or system.

j. Overhaul. That maintenance effort (service/action) prescribed to restore an item to a completely serviceable/operational condition as required by maintenance standards in appropriate technical publications (i.e., DMWR). Overhaul is normally the highest degree of maintenance performed by the Army. Overhaul does not normally return an item to like new condition.

k. Rebuild. Consists of those services/actions necessary for the restoration of unserviceable equipment to a like new condition in accordance with original manufacturing standards. Rebuild is the highest degree of materiel maintenance applied to Army equipment. The rebuild operation includes the act of returning to zero those age measurements (hours/miles, etc.) considered in classifying Army equipment/components.

B-3. Explanation of Columns in the MAC, Section II.

a. Column 1, Group Number. Column 1 lists functional group code numbers, the purpose of which is to identify maintenance significant components, assemblies, subassemblies, and modules with the next higher assembly. End item group number shall be "00".

b. Column 2, Component/Assembly. Column 2 contains the names of components, assemblies, subassemblies and modules for which maintenance is authorized.

c. Column 3, Maintenance Function. Column 3 lists the functions to be performed on the item listed in Column 2. (For detailed explanation of these functions, See paragraph B-2.)

d. Column 4, Maintenance Level. Column 4 specifies by the listing of a work time figure in the appropriate subcolumn(s), the category of maintenance authorized to perform the function listed in Column 3. This figure represents the active time required to perform that maintenance function at the indicated category of maintenance. If the number or complexity of the tasks within the listed maintenance function vary at different maintenance categories, appropriate work time figures will be shown for each category. The work time figure represents the average time required to restore an item (assembly, subassembly, component, module, end item or system) to a serviceable condition under typical field operating conditions. This time includes preparation time (including any necessary disassembly/assembly time), troubleshooting/fault location time, and quality assurance/quality control time in addition to the time required to perform the specific tasks identified for the maintenance functions authorized in the maintenance allocation chart. The symbol designations for the various maintenance categories are as follows:

C. . . . . Operator or crew

O . . . . . Organizational maintenance

F. . . . . Direct Support maintenance

H . . . . . General Support maintenance

D. . . . . Depot maintenance

e. Column 5, Tools and Equipment. Column 5 specifies by code, those common tool sets (not individual tools) and special tools, TMDE, and support equipment required to perform the designated function.

f. Column 6, Remarks. This column shall, when applicable, contain a letter code, in alphabetic order, which shall be keyed to the remarks contained in Section IV.

B-4. Explanation of Columns in Tool and Test Equipment Requirements, Section III.

a. Column 1, Reference Code. The tool and test equipment reference code correlates with a code used in the MAC, Section II, Column 5.

b. Column 2, Level Maintenance. The lowest category of maintenance authorized to use the tool or test equipment.

c. Column 3, Nomenclature. Name or identification of the tool or test equipment.

d. Column 4, National Stock Number. The National Stock Number of the tool or test equipment.

e. Column 5, Tool Number. The manufacturer's part number.

B-5. Explanation of Columns in Remarks, Section IV.

a. Column 1, Reference Code. The code recorded in column 6, Section II.

b. Column 2, Remarks. This column lists information pertinent to the maintenance function being performed as indicated in the MAC, Section II.

SECTION II. MAINTENANCE ALLOCATION CHART FOR SEMITRAILER, VAN: M129A3

(1) GROUP NUMBER	(2) COMPONENT/ASSEMBLY	(3) MAINTENANCE FUNCTION	(4) MAINTENANCE CATEGORY					(5) TOOLS AND EQPT.	(6) REMARKS
			c	o	F	H	D		
06	ELECTRICAL SYSTEM							1,2,3	A
0608	Body Wiring	Replace Repair		 1.0	3.0				
	Blower	Replace		1.0					
0609	Lights	Replace Repair		0.3 0.2					
0613	Chassis Wiring Harness	Replace Repair		3.0 1.0					
	Cable Assemblies, 12 volt and 24 volt	Replace Repair		3.0 3.5					
	Receptacle Assemblies, 12 volt and 24 volt	Replace		1.0					
11	REAR AXLE							1,2, 3,4	
1100	Rear Axle	Replace Repair			5.0 3.0				
12	BRAKES							1,2,3,	A
1202	Service Brakes	Replace		2.0					
	Shoe Assembly	Replace		2.0					
	Brake Lining	Replace			1.0				
1206	Slack Adjuster	Adjust Replace		0.2 1.0					
1208	Air Brakes System	Test	0.1						
	Air Lines and Fittings	Replace		0.2					
	Air Couplings	Replace Repair		0.2 0.1					
	Air Reservoir	Service Replace	0.1	 2.0					

SECTION II. MAINTENANCE ALLOCATION CHART FOR SEMITRAILER, VAN: M129A3

(1) GROUP NUMBER	(2) COMPONENT/ASSEMBLY	(3) MAINTENANCE FUNCTION	(4) MAINTENANCE CATEGORY					(5) TOOLS AND EQPT.	(6) REMARKS
			c	o	F	H	D		
12	BRAKES(CONT)								
	Drain Cock	Replace		0.2					
	Air Chamber	Replace		1.0					
	Emergency Relay Valve	Replace		1.0					
13	WHEELS							1,2,3	A, B
1311	Wheel Assembly	Replace		0.5					
	Bearing, Wheel	Adjust Replace		0.2 1.5					
	Drum, Brake	Replace Repair		0,5	 1.5				
	Hub	Replace		0.5					
	Seal Grease	Replace		1.0					
	Wheel	Replace		0,5					
1313	Tires, Tubes	Service	0.1						
	Tires	Replace		0.5					
	Tubes	Replace Repair		0.5 0.7					
15	FRAME							1,2,3	At B
1501	Frame Assembly	Repair				8.0			
1503	Kingpin	Service Replace	0,2			 3.0			
1504	Tire Carrier Assembly	Replace Repair		0.3 0.5					
1507	Landing Leg	Service Replace Repair	0.2	 4.0 6.0					
	Gear Box, Landing Leg	Replace		0.5					

SECTION II. MAINTENANCE ALLOCATION CHART FOR SEMITRAILER, VAN: M129A3

(1) GROUP NUMBER	(2) COMPONENT/ASSEMBLY	(3) MAINTENANCE FUNCTION	(4) MAINTENANCE CATEGORY					(5) TOOLS AND EQPT.	(6) REMARKS
			C	O	F	H	D		
16	SPRINGS AND SHOCK ABSORBERS								
	Springs	Replace			4,0				
	U-Bolts	Replace			2.0				
	Tube, Trunnion	Replace			4.0				
18	BODY							1,2,3	A, B
1801	Body Assembly	Repair				10.0			
	Door Assembly	Replace Repair		1.0 2.0					
	Door Hinges, Handles, Brackets	Replace		1.0					
	Sash Installation	Replace Repair		2.0 1.5					
	Blackout Panel	Replace		0.5					
1805	Floors	Replace Repair		4.0	5.0				
22	BODY ACCESSORIES							1,2,3	
2202	Reflectors	Replace		0.2					
2210	Data Plates	Replace		0.2					

SECTION III. TOOL AND TEST EQUIPMENT REQUIREMENTS FOR SEMITRAILER, VAN: M129A3

TOOL OR TEST EQUIPMENT REF CODE	MAINTENANCE CATEGORY	NOMENCLATURE	NATIONAL/ NATO STOCK NUMBER	TOO L NUMBER
		COMMON TOOLS:		
1	0, F, H	Tool Kit, Mechanics Gen	5180-00-177-7033	
2	0. F. H	Shop Equipment, Common Set No. 1	4910-00-754-0654	
3	0, F, H	Shop Equipment, Supplement Set No. 1	4910-00-754-0653	
		SPECIAL TOOLS:		
		(None Required)		

SECTION IV. REMARKS

REFERENCE CODE	REMARKS
A	Direct Support (F) maintenance includes replacement of repairable assemblies, repair of components of assemblies considered uneconomical to evacuate further. Performs adjustments of systems for which organizational maintenance does not possess skills or test equipment.
B	General Support (H) maintenance includes repair of most replaceable assemblies, Overhaul of assemblies which require extensive work in terms of man hours, skills and testing of overhauled assemblies will be accomplished at depots.

APPENDIX C

COMPONENTS OF END ITEM AND BASIC ISSUE ITEMS LISTS

Section I. INTORDUCTION

C-1. Scope.

This appendix lists components of end item and basic issue items for the semitrailer to help you inventory items required for safe and efficient operation.

C-2. General.

The Components of End Item and Basic Issue Items Lists are divided into the following sections:

a. Section II. Components of End Item. This listing is for information purposes only, and is not authority to requisition replacements. These items are part of the end item, but are removed and separately packaged for transportation or shipment. As part of the end item, these items must be with the end item whenever it is issued or transferred between property accounts. Illustrations are furnished to assist you in identifying the items.

b. Section III. Basic Issue Items. These are the minimum essential items required to place the semitrailers in operation, to operate it, and to perform emergency repairs. Although shipped separately packaged, BII must be with the semitrailers during operation and whenever it is transferred between property accounts. The illustrations will assist you with hard to identify items. This manual is your authority to request/requisition replacement BII, based on TOE/MTOE authorization of the end item.

C-3. Explanation of Columns.

The following provides an explanation of columns found in the tabular listings.

a. Column (1) Illustration Number (Illus Number). This column indicates the number of the illustration on which the item is shown.

b. Column (2) National Stock Number. Indicates the National Stock Number assigned to the item and will be used for requisitioning purposes.

c. Column (3) Description. Indicates the Federal item name and, if required, a minimum description to identify and locate the item. The last line for each item indicates the FSCM (in parentheses) followed by the part number. The “Usable On Code” heading is not applicable for this manual.

d. Column (4) Unit of Measure (U/M). Indicates the measure used in performing the actual operational/maintenance function. This measure is expressed by a two-character alphabetical abbreviation (e.g., ea, in, pr).

e. Column (5) Quantity required (qty rqr). Indicates the quantity of the item authorized to be used with/on the equipment.

Section II. COMPONENTS OF END ITEM

(None Authorized)

Section III. BASIC ISSUE ITEMS

(1) Illus Number	(2) National Stock Number	(3) Description FSCM and Part Number	Usable On Code	(4) U/M	(5) Qty rqr
1	2540-00-854-4445	LADDER, VEHICLE BOARDING (stowed on left rear door) (19207) 8722222		EA	1

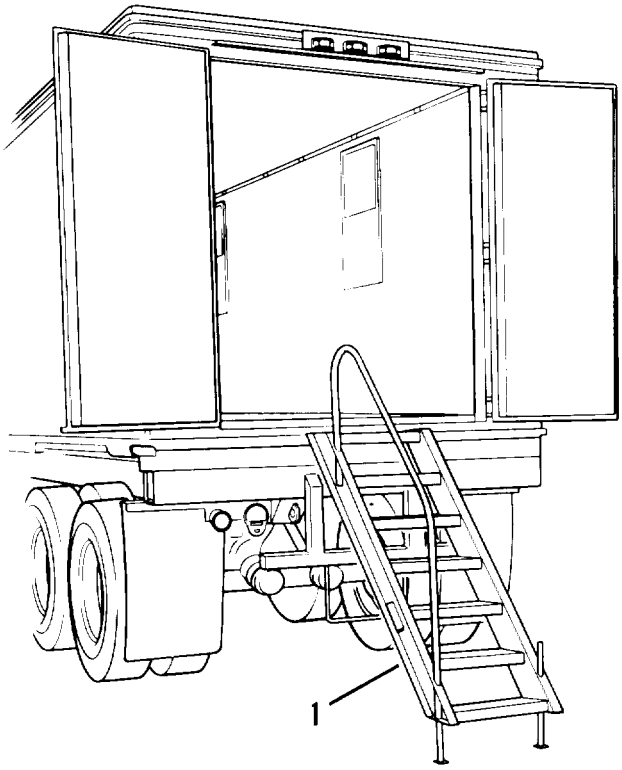

Figure C-1. Basic Issue Items

APPENDIX D

ADDITIONAL AUTHORIZATION LIST

Section I. INTRODUCTION

D-1. scope .

This appendix lists additional items you are authorized for the support of the semitrailer.

D-2 . General.

This list identifies items that do not have to accompany the semitrailer and that do not have to be turned in with it. These items are all authorized to you by CTA, MTOE, TDA, or JTA.

D-3. Explanation of Listing.

National stock numbers, descriptions, and quantities are provided to help you identify and request the additional items you require to support this equipment. The items are listed in alphabetical sequence by item name under the type document (i.e., CTA, MTOE, TDA, or JTA) which authorizes the item(s) to you. If item required differs for different models of this equipment, the model is shown under the “Usable on” heading in the description column.

Section II. ADDITIONAL AUTHORIZATION LIST

(None Authorized)

APPENDIX E

EXPENDABLE/DURABLE SUPPLIES AND MATERIALS LIST

E-1. Scope.

This appendix lists expendable supplies and materials you will need to operate and maintain the semitrailers. These items are authorized to you by CTA 50-970, Expendable Items (Except Medical, Class V, Repair Parts, and Heraldic Items), or CTA 8-100, Army Medical Department Expendable/Durable Items.

E-2. Explanation of Columns.

a. Column (1) Item Number. This number is assigned to the entry in the listing.

b. Column (2) Level. This column identifies the lowest level of maintenance that requires the listed item. Enter as applicable:

C - Operator/Crew
O - organizational Maintenance
F - Direct Support Maintenance
H - General Support Maintenance

c. Column (3) National Stock Number. This is the National stock number assigned to the item; use it to request or requisition the item.

d. column (4) Description. Indicates the Federal item name and, if required, a description to identify the item. The last line for each item indicates the Federal Supply Code for Manufacturer (FSCM) in parentheses followed by the part number.

e. Column (5) Unit of Measure (U/M). Indicates the measure used in performing the actual maintenance function. This measure is expressed by a two character alphabetical abbreviation (e.g., ea, in, pr). If the unit of measure differs from the unit of issue, requisition the lowest unit of issue that will satisfy your requirements.

(1) ITEM NO	(2) LEVEL	(3) NATIONAL STOCK NUMBER	(4) DESCRIPTION	(5) U/M
1			GAA, GREASE, AUTOMOTIVE AND ARTILLERY MIL-G-10924 (81349)	
	O	9150-00-190-0904	1 LB CAN	EA
	O	9150-00-190-0905	5 LB CAN	EA
	O	9150-00-190-0907	35 LB PAIL	EA
2			OIL, LUBRICATING, ENGINE MIL-L-2104, IE/HDO-30-(81349)	
	O	9159-00-186-6681	1 QT CAN, TYPE I	EA
	O	9150-00-188-9858	5 GAL CAN	EA
3			LUBRICATING OIL, INTERNAL COMBUSTION ENGINE, APD PD NO. 1 SUB ZERO	
	O	9150-00-402-4478	1 QT CAN, TYPE I	EA
	O	9150-00-402-2372	5 GAL CAN	EA
	O	9150-00-407-0972	55 GAL DRUM (16 GA)	EA
	O	9150-00-491-7197	55 GAL DRUM (18 GA)	EA
4			PRESERVATIVE, LUBRICATING, LIGHT OIL	
	O	9150-00-231-6689	1 QT CAN	EA
	O	9150-00-231-9062	1 GAL CAN	EA
			CLEANING EQUIPMENT	
5	C	7920-00-291-5815	BRUSH, WIRE: SCRATCH, S-WIRE, CURVED HANDLE, WIRE LG OUTSIDE BLOCK: 1-1/8 TO 1-1/4 IN. 4 ROWS WIDE, 18 ROWS LONG, 14 IN. LONG	EA
6	C	7920-00-205-1711	RAGS, COTTON: WIPING	BL
7	C	6850-00-264-9038	SOLVENT: DRY CLEANING, FED SPEC PD-680, 1 GAL CAN	EA

(1) ITEM NO	(2) LEVEL	(3) NATIONAL STOCK NUMBER	(4) DESCRIPTION	(5) U/M
8	O	6850-00-285-6056	COMPOUND, CLEANING: PC444A, 1 GAL CAN	EA
			MAINTENANCE SUPPLIES	
9	O		ADHESIVE, RUBBER BASE, GENERAL PURPOSE MIL-A-5092B, TYPE I	EA
	O	8040-00-262-9025	4 OZ TUBE	EA
	O	8040-00-262-9028	1 PT CAN	EA
	O	8040-00-262-9031	1 QT CAN	EA
10	O	8020-00-207-6658	BRUSH, PAINT: OVAL, 1-1/8 IN. WIDE	EA
11	O	8020-00-559-0389	BRUSH, PAINT: 2 IN. WIDE	EA
12	O	5350-00-192-5052	CLOTH, ABRASIVE: CROCUS, FERRIC OXIDE AND QUARTZ, JEAN-CLOTH BACKING, EXPOSED COAT, 9 X 11 SH, 50-SH SHEAVE (81349) P-C-458A, 42-C-20420-50	EA
13			CLOTH, ABRASIVE: AL-OXIDE, JEAN-CLOTH BACKING, CLOSED COAT, 9 X 11 SH, 50-SH SHEAVE, P-C-451A, TYPE 1, CLASS 1	
	O	5350-00-192-5047	GRIT NO. 80 (GR 1/0)	EA
	O	5050-00-192-5049	GRIT NO. 120 (GR 3/0)	EA
	O	5050-00-192-5051	GRIT NO. 180 (GR 5/0)	EA
14	O	8030-00-833-9116	COMPOUND, LOCKING: GRADE AV RED (MIL-S-22473) 6 OZ TUBE	EA
15	O	8010-00-297-2124	ENAMEL: GREEN COLOR NO. 2430 (81340) FED STD NO. 595 BRUSH AND SPRAY APPLICATION (81348) TT-3-485, TYPE II, 1 GAL CAN	EA
16	F	3439-00-853-2718	ELECTRODE, WELDING: 5/32 MIL-E-22-200-1 (81349)	EA
17	O	8030-00-889-3535	TAPE, ANTI-SEIZING, 1/2 IN., P5025-2R (81755)	EA

APPENDIX F

ORGANIZATIONAL AND DIRECT SUPPORT MAINTENANCE

REPAIR PARTS AND SPECIAL TOOLS LIST

SECTION I. INTRODUCTION

F-1. SCOPE.

This RPSTL lists and authorized spares and repair parts; special tools; special test, measurement, and diagnosic equipment (TMDE); and other special support equipment required for performance of organizational, direct support, and general support maintenance of the semitrailer. It authorizes the requisitioning, issue, and disposition of spares, repair parts and special tools as indicated by the source, maintenance and recoverability (SMR) codes.

F-2. GENERAL.

In addition to Section I, Introduction, this Repair Parts and Special Tools List is divided into the following sections:

a. Section II. Repair Parts Lists. A list of spares and repair parts authorized by this RPSTL for use in the performance of maintenance. The lists also include parts which must be removed for replacement of the authorized parts. Parts lists are composed of functional groups in ascending alphanumeric sequence, with the parts in each group listed in ascending figure and item number sequence. Bulk materials are listed by item name in FIG BULK at the end of the section. Repair parts kits or sets are listed separately in their own functional group within Section II. Repair parts for repairable special tools are also listed in the section.

b. Section III. Special Tools List. A list of special tools, special TMDE, and other special support equipment authorized by this RPSTL (as indicated by Basis of Issue (BOI) information in DESCRIPTION AND USABLE ON CODE (UOC) column) for the performance of maintenance.

c. Section IV. National Stock Number and Part Number Index. A list, in National item identification number (NIIN) sequence, of all National stock numbered items appearing in the listings, followed by a list in alphanumeric sequence of all part numbers appearing in the listing. National stock numbers and part numbers are cross-referenced to each illustration figure and item number appearance.

F-3. EXPLANATION OF COMMONS. (Section II and III).

a. Item Number (Column 1). Indicates the number used to identify items called out in the illustration.

b. SMR Code (Column 2). The Source, Maintenance, and Recoverability (SMR) code is a 5-position code containing supply/requisitioning information, maintenance category authorization criteria, and disposition instruction, as shown in the following breakout:

Source Code	Maintenance Code		Recoverability Code
xx	xx		x
1st two positions	3rd position	4th position	5th position
How you get an item	Who can install, replace or use the item	Who can do complete repair* on the item	Who determines disposition action on an unserviceable item

*Complete Repair: Maintenance capacity, capability, and authority to perform all the corrective maintenance tasks of the "Repair" function in a use/user environment in order to restore serviceability to a failed item.

(1) Source Code. The source code tells you how you get an item needed for maintenance, repair, or overhaul of an end item/equipment. Source codes are always the first two positions of the SMR code. Explanations of source codes follow:

Code	Explanation
PA, PB, PC, PD, PE, PF, PG >	Stock items; use the applicable NSN to request/requisition items with these source codes. They are authorized to the indicated by the code entered in the 3rd position of the SMR code.
KD, KF, KB }	Items with these codes are not to be requested/requisitioned individually. They are part of a kit which is authorized to the maintenance category indicated in the 3rd position of the SMR code. The complete kit must be requisitioned and applied.
MO-(Made at org Category) MF-(Made at DS Category) MD-(Made at Depot)	Items with these codes are not to be requested/requisitioned individually. They must be made from bulk material which is identified by NSN in the Description column and listed in the Bulk Material group in the repair parts list in this manual. If the item is authorized to you by the 3rd position code of the SMR code, but the source code from the higher category of maintenance.

Code	Explanation
AO-(Assembled by org Category) AF-(Assembled by DS Category) AD-(Assembled by Depot)	Items with these codes are not to be requested/requisitioned individually. The parts that make up the assembled item must be requisitioned or fabricated and assembled at the category of maintenance indicated by the source indicates the item is assembled at a higher category, order the item from the higher category of maintenance.

XA - Do not requisition an "XA''-coded item. Order its next higher assembly. (Also, refer to the NOTE below.)

XB - If an "XB" item is not available from salvage, order it using the FSCM and part number given.

XC - Installation drawing, diagram, instruction sheet, field service drawing, that is identified by manufacturer's part number.

XD - Item is not stock. Order an "XD''-coded item through normal supply channels using the FSCM and part number given, if no NSN is available.

NOTE

Cannibalization or controlled exchange, when authorized, may be used as a source of supply for items with the above source codes, except for those source coded "XA" or those aircraft support items restricted by requirements of AR 700-42.

(2) Maintenance Code. Maintenance codes tell you the category(s) of maintenance authorized to USE and REPAIR support items. The maintenance codes are entered in the third and fourth positions of the SMR Code as follows:

(a) The maintenance code entered in the third position tells you the lowest maintenance category authorized to remove, replace, and use an item. The maintenance code entered in the third position will indicate authorization to one of the following categories of maintenance.

Code	Application/Explanation
C	- Crew or operator maintenance done within organizational unit maintenance.
O	- Organizational category can remove, replace, and use the item.
F	- Direct support category can remove, replace, and use the item.
D	- Depot category can remove, replace, and use the item.

(b) The maintenance code entered in the fourth position tells you whether or not the item is to be repaired and identifies the lowest maintenance category with the capability to do complete repair (i.e., perform all authorized repair functions). (NOTE: Some limited repair may be done on the item at a lower categories of maintenance, if authorized by the Maintenance Allocation Chart (MAC) and SMR codes.) This position will contain one of the following maintenance codes.

Code	Application/Explanation
O	Organizational is the lowest category that can do complete repair of the item.
F	- Direct support is the lowest category that can do complete repair of the item.
D	- Depot is the lowest category that can do complete repair of the item.
Z	- Nonreparable. No repair is authorized.

(3) Recoverability Code. Recoverability codes are assigned to items to indicate the disposition action on unserviceable items. The recoverability code is entered in the fifth position of the SMR Code as follows:

Code	Definition
Z	- Nonreparable item. When unserviceable, condemn and dispose of the item at the category of maintenance shown in 3rd position of SMR Code.
o	- Reparable item. When uneconomically reparable, condemn and dispose of the item at organizational category.
F	- Reparable item. When uneconomically reparable, condemn and dispose of the item at the direct support category.
D	- Reparable item. When beyond lower category repair capability, return to depot. Condemnation and disposal of item not authorized below deport category.

c. FSCM (Column 3). The Federal Supply Code for Manufacturer (FSMC) is a 5-digit number code which is used to identify the manufacturer, distributor, or Government agency, etc., that supplies the item.

d. Part Number (Column 4). Indicates the primary number used by the manufacturer (individual, company, firm, corporation, or Government activity), which controls the design and characteristics of the item by means of its engineering drawings, specifications standards, and inspection requirements to identify an item or range of items.

NOTE

When you use an NSN to requisition an item, the item you receive may have a different part number from the part ordered. Use or furnish this item as the replacement part.

e. Description (Column 5). This column includes the following information:

(1) The Federal item name and, when required, a minimum description to identify the item.

(2) Items that are included in kits and sets are listed below the name of the kit or set.

(3) Spare/repair parts that make up an assembled item are listed immediately following the assembled item line entry.

(4) NSN for bulk materials are referenced in the description column in the line item entry for the item to be manufactured/fabricated.

(5) In the Special Tools List section, the basis of issue (BOI) appears as the last line(s) in the entry for each special tool, special TMDE, and other special support equipment. When density of equipments supported exceeds density spread indicated in the basis of issue, the total authorization is increased proportionately.

f. QTY (Column 6). The QTY (quantity per figure column) indicates the quantity of the item used in the breakout shown on the illustration figure, which is prepared for a functional group, subfunctional group, or an assembly. A "V" appearing in this column in lieu of a quantity indicates that the quantity is variable and the quantity may vary from application to application.

F-4 . EXPLANATION OF COLUMNS (Section IV).

a. NATIONAL STOCK NUMBER (NSN) INDEX.

(1) Stock Number column. This column lists the NSN by National item identification number (NIIN) sequence.

*The NIIN consists of the last 9 digits of the NSN (i.e., 5305-01-674-1467). (NSN: 5305-01-674-1467; NIIN: 01-674-1467)

When using this column to locate an item, ignore the first 4 digits of the NSN. However, the complete NSN should be used when ordering items by stock number.

(2) Fig. column. This column lists the number of the figure where the item is identified/located. The figures are in numerical order in Section II and Section III.

(3) Item column. The item number identifies the item associated with the figure listed in the adjacent FIG. column This item is also identified by the NSN listed on the same line.

b. PART NUMBER INDEX. Part numbers in this index are listed by part number in ascending alphanumeric sequence (i.e., vertical arrangement of letter and number combination which places the first letter or digit of each group in order A through Z, followed by the numbers O through 9 and each following letter or digit in like order).

(1) FSCM COLUMN. The Federal Supply Code for Manufacturer (FSCM) is a 5-digit numeric code used to identify the manufacturer, distributor, or Government agency, etc., that supplies the item.

(2) Part Number column. Indicates the primary number used by the manufacturer (individual, firm, corporation, or Government activity), which controls the design and characteristics of the item by means of its engineering drawings, specifications standards, and inspection requirements to identify an item or range of items.

(3) Stock Number column. This column lists the NSN for the associated part number and manufacturer identified in the PART NUMBER AND FSCM columns to the left.

(4) Fig. column. This column lists the number of the figure where the item is identified/located in Section II and III.

(5) Item column. The item number is that number assigned to the item as it appears in the figure referenced in the adjacent figure number column.

F-5. SPECIAL INFORMATION

a. The "USABLE ON CODE" title appears in the lower right corner of column (6), Description. Usable on codes are shown in the right-hand margin of the description column. Uncoded items are applicable to all models.

b. Bulk materials required to manufacture items are listed in the Bulk Material Group of this manual. NSN's for bulk materials are also referenced in the description column of the line item entry for the item to be manufactured/fabricated.

c. Items which have the word BULK in the figure number column will have an index number shown in the item number column. This index number is furnished for use as a cross-reference between the National Stock Number/Part Number index and the bulk material list in Section II.

d. Detailed manufacturing instructions for items to be manufactured or fabricated are found in Appendix G of this manual.

F-5. HOW TO LOCATE REPAIR PARTS.

a. When National Stock Number Or Part Number Is Not Known:

(1) First. Using the table of contents, determine the functional group or subfunctional group to which the item belongs. This is necessary since figures are prepared for functional groups and subfunctional groups, and listings are divided into the same groups.

(2) Second. Find the figure covering the functional group or subfunctional group to which the item belongs.

(3) Third. Identify the item on the figure and note the item number of the item.

(4) Fourth. Refer to the Repair Parts List for the figure to find the line item entry for the item number noted on the figure.

b. When National Stock Number Or Part Number Is Known:

(1) First. Using the Index of National Stock Numbers and Part Numbers, find the pertinent National stock number or part number. The NSN index is the National Item Identification Number (NIIN)* sequence. the part numbers in the Part Number index are listed in ascending alphanumeric sequence. Both indexes cross--reference you to the illustration figure and item number of the item you are looking for.

*The NIIN consists of the last 9 digits of the NSN (i.e., 5305-$\underbrace{\overbrace{01\text{-}674\text{-}1467}^{\text{NSN}}}_{\text{NIIN}}$).

(2) Second. After finding the figure and item number, verify that the item is the one you're looking for, then locate the item number in the repair parts list for the figure.

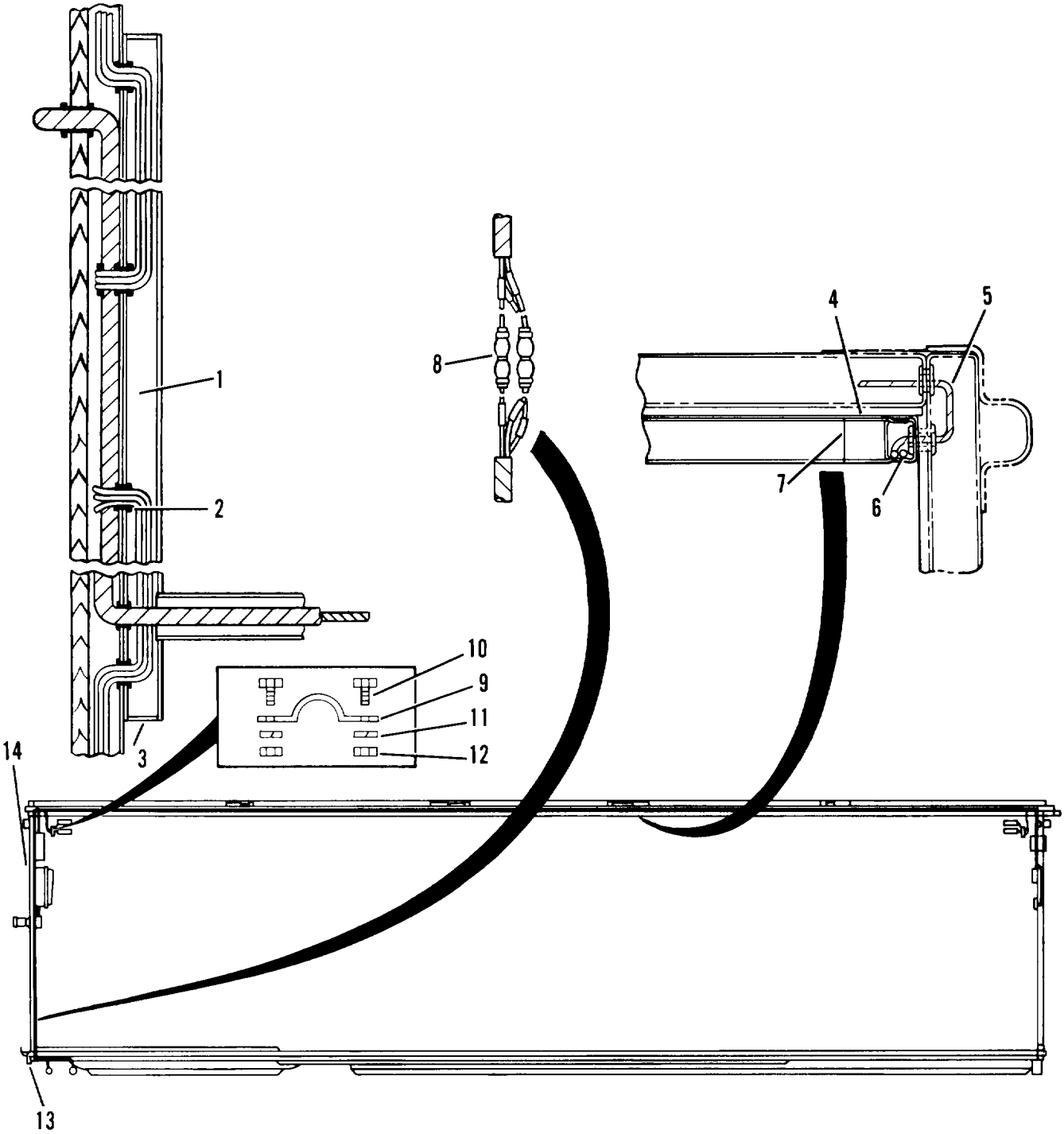

Figure 1. Electrical System

(1) ITEM NO	(2) SMR CODE	(3) FSCM	(4) PART NUMBER	(5) DESCRIPTION AND USABLE ON CODE (UOC)	(6) QTY
				GROUP 06 ELECTRICAL SYSTEM	
				GROUP 06 ELECTRICAL SYSTEM	
				FIG. 1 ELECTRICAL SYSTEM	
1	PFOZO	19207	11625034	CONDUIT,RACEWAY,MET	1
2	PAOZZ	96906	MS35489-46	GROMMET,NONMETALLIC	5
3	PFOZZ	18876	7092456	FITTING,BLANK END	2
4	PFOZZ	19207	10065592	ANGLE PLATE	4
5	PFOZZ	18349	J-C-580S6CF3/12R NJ	CABLE,POWER,ELECTRI	1
6	XDOZZ	79725	2100B	CONDUIT,RACEWAY,MET	1
7	XDOZZ	19207	10935079	COVER	1
8	PFOZZ	19207	7737497	SPLICE,CONDUCTOR	5
9	PAOZZ	19207	8742392	CLIP ASSEMBLY	4
10	PAOZZ	96906	MS35206-281	SCREW,MACHINE	14
11	PAOZZ	96906	MS35338-44	WASHER,LOCK	18
12	PAOZZ	96906	MS51967-2	NUT,PLAIN,HEXAGON	10
13	PAOZZ	96906	MS35489-107	GROMMET,NONMETALLIC	1
14	PAOZZ	82815	D53-3	GROMMET,NONMETALLIC	7
				END OF FIGURE	

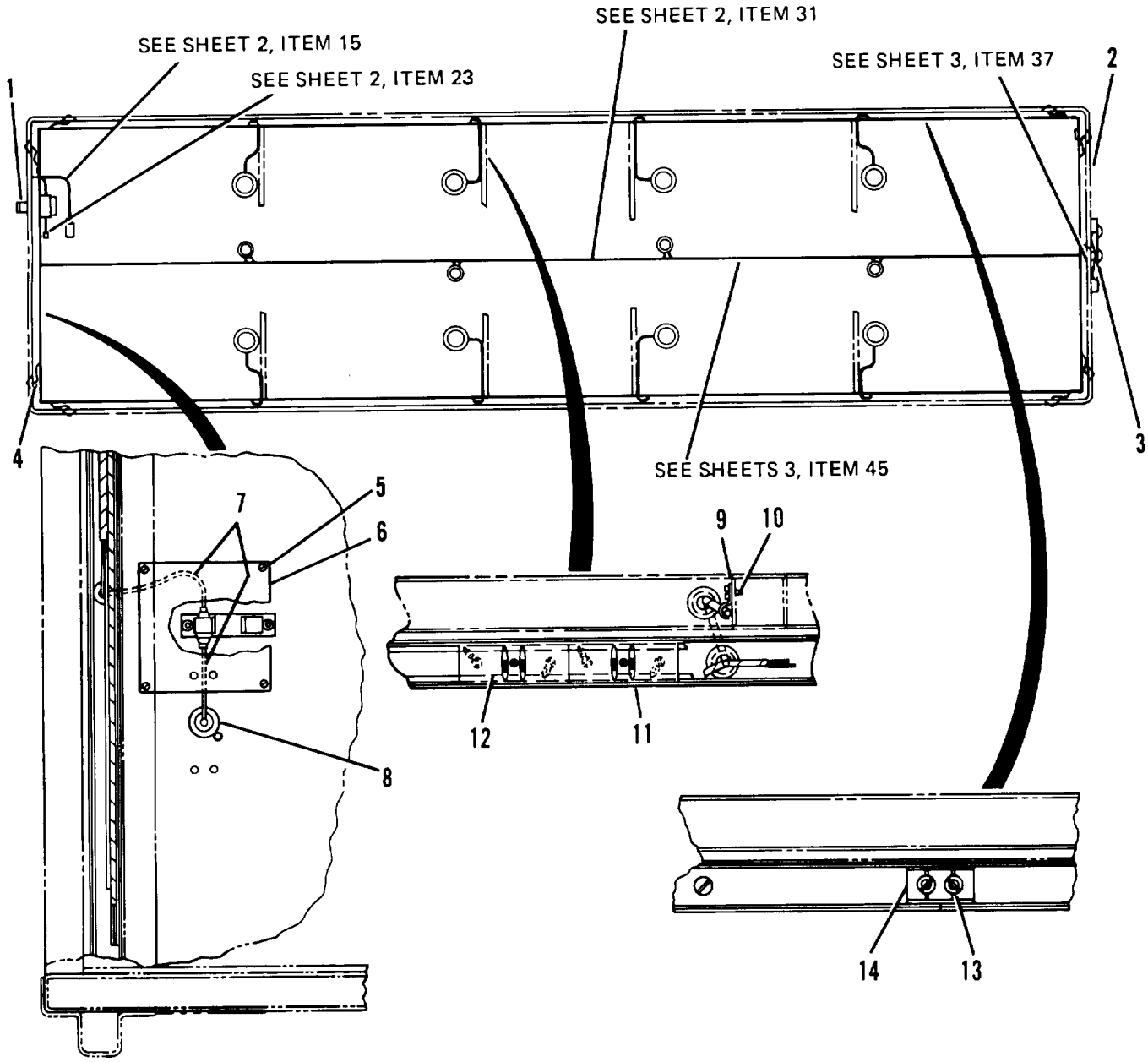

Figure 2. Van Electrical System (Sheet 1 of 3)

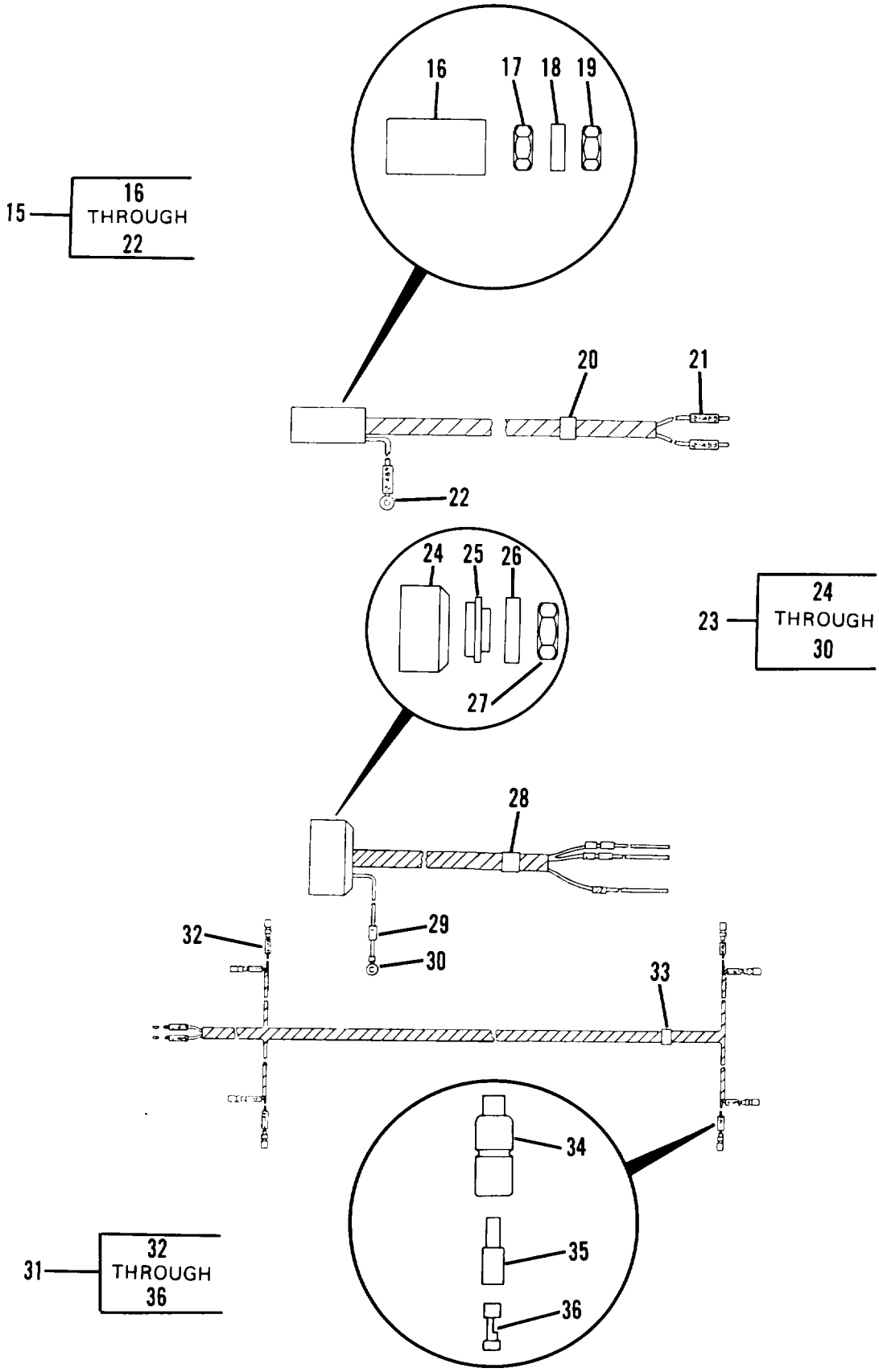

Figure 2. Van Electrical System (Sheet 2 of 3)

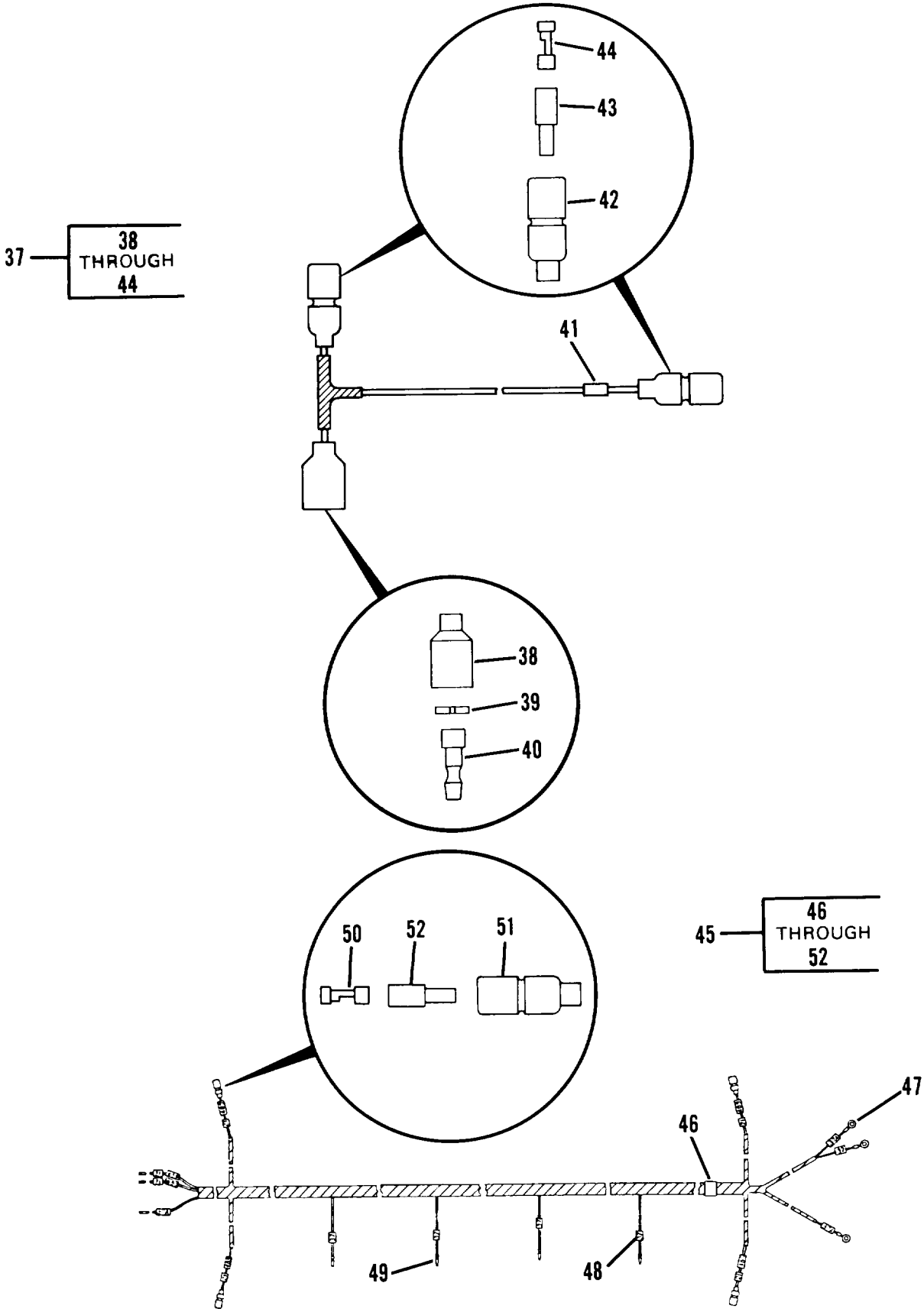

Figure 2. Van Electrical System (Sheet 3 of 3)

(1) ITEM NO	(2) SMR CODE	(3) FSCM	(4) PART NUMBER	(5) DESCRIPTION AND USABLE ON CODE (UOC)	(6) QTY
				GROUP 0608 MISCELLANEOUS ITEMS	
				FIG. 2 VAN ELECTRICAL SYSTEM	
1	PFOZZ	19207	8328355	CONNECTOR,RECEPTACL	1
2	PFOZZ	19207	8722248	WIRING HARNESS,BRAN	1
3	PAOZZ	19207	8742391	CLIP ASSEMBLY	1
4	PAOZZ	19207	10935075	GROMMET,NONMETALLIC	34
5	PAOZZ	96906	MS35493-51	SCREW,WOOD	32
6	XDOZZ	19207	11625035-2	COVER,ACCESS	6
7	PFOZZ	19207	11625035-1	COVER,ACCESS	2
8	PFOZZ	19207	7979252	GROMMET,NONMETALLIC	5
9	PAOZZ	19207	10905840	STRAP,TIEDOWN,ELECT	1
10	PAOZZ	96906	MS24629-45	SCREW,TAPPING,THREA	12
11	PAOZZ	19207	10605389	CONNECTOR,RECEPTACL	16
12	PFOZZ	81349	HW-C6(133)UO	WIRE,ELECTRICAL	1
13	PAOZZ	96906	MS24615-27	SCREW,TAPPING,THREA	220
14	PFOZZ	19207	10336614	COUPLING,PLUGMOLD,O	6
15	MOOOO	19207	10935060	WIRING HARNESS,BRAN MAKE FROM M13486/1-5	1
16	PFOZZ	81996	B8005-16-003FN12	.CONNECTOR,PLUG,ELEC	1
17	PAOZZ	19207	7527645	.NUT,COUPLING,ELECTR	1
18	PFOZZ	19207	7722344	.INSERT,ELECTRICAL C	1
19	PAOZZ	19207	7723307	.NUT,BUSHING RETAINE	1
20	PAOZZ	83194	1628	.BAND,MARKER	1
21	PAOZZ	81349	M43436/1-1	.BAND,MARKER	3
22	PAOZZ	21450	506209	.TERMINAL,LUG	1
23	MOOOO	19207	10935061	WIRING HARNESS,BRAN MAKE FROM M13486/1-5	3
24	PAOZZ	77820	10-42622-23P	.CONNECTOR,PLUG,ELEC	1
25	PAOZZ	19207	8701325	.NUT,SLEEVE	1
26	PAOZZ	19207	7722322	.BUSHING,RUBBER	1
27	PAOZZ	19207	7723308	.NUT,BUSHING RETAINE	1
28	PAOZZ	81349	M43436/1-2	.BAND,MARKER	1
29	PAOZZ	81349	M43436/1-1	.BAND,MARKER	6
30	PAOZZ	21450	506209	.TERMINAL,LUG	1
31	MOOOO	19207	10944623	WIRING HARNESS,BRAN MAKE FROM M13434/1-5	1
32	PAOZZ	81349	M43436/1-1	.BAND,MARKER	10
33	PAOZZ	81349	M43436/1-2	.BAND,MARKER	1
34	PAOZZ	19207	8338561	.SHELL,ELECTRICAL CO	8
35	PAOZZ	19207	8338562	.INSULATOR,BUSHING	8
36	PAOZZ	19207	8338564	.TERMINAL ASSEMBLY	8
37	MOOOZ	19207	8722234	WIRING HARNESS,BRAN MAKE FROM M13436/1-5	1
38	PAOZZ	19207	8338566	.SHELL,ELECTRICAL CO	1
39	PAOZZ	19207	8338567	.WASHER,SLOTTED	1
40	PFOZZ	19204	572929	.CONTACT,ELECTRICAL	1
41	PFOZZ	81349	M43436/1-2	.BAND,MARKER	1
42	PAOZZ	19207	8338561	.SHELL,ELECTRICAL CO	2
43	PAOZZ	19207	8338562	.INSULATOR,BUSHING	2
44	PAOZZ	19207	8338564	.TERMINAL ASSEMBLY	2

(1) ITEM NO	(2) SMR CODE	(3) FSCM	(4) PART NUMBER	(5) DESCRIPTION AND USABLE ON CODE (UOC)	(6) QTY
45	MOOOO	19207	10944622	WIRING HARNESS,BRAN MAKE FROM M13486/1-5	1
46	PAOZZ	81349	M43436/1-2	.BAND,MARKER	1
47	PAOZZ	21450	506209	.TERMINAL,LUG	3
48	PAOZZ	81349	M43436/1-1	.BAND,MARKER	1
49	PFOZZ	96906	MS27148-2	.CONTACT,ELECTRICAL	4
50	PAOZZ	19207	8338561	.SHELL,ELECTRICAL CO	4
51	PAOZZ	19207	8338562	.INSULATOR,BUSHING	4
52	PAOZZ	19207	7982997	.TERMINAL,SOLDERED F	4

END OF FIGURE

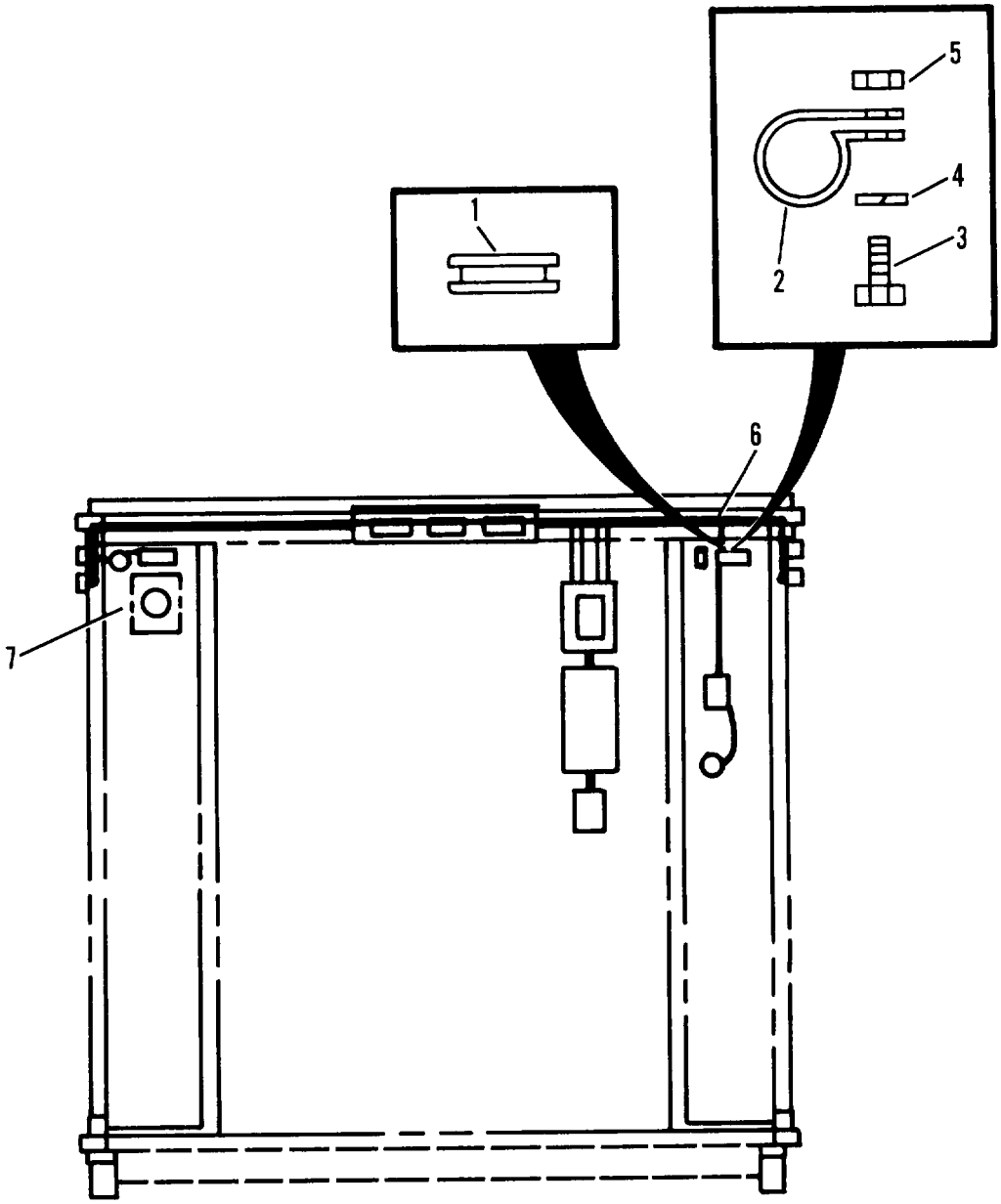

Figure 3. Electrical Plates

(1) ITEM NO	(2) SMR CODE	(3) FSCM	(4) PART NUMBER	(5) DESCRIPTION AND USABLE ON CODE (UOC)	(6) QTY
				GROUP 0608 MISCELLANEOUS ITEMS	
				FIG. 3 ELECTRICAL PLATES	
1	PAOZZ	96906	MS35490-34	GROMMET,NONMETALLIC	2
2	PAOZZ	19207	10900665	CLIP,ASSEMBLY	4
3	PAOZZ	96906	MS35206-281	SCREW,MACHINE	8
4	PAOZZ	96906	MS35338-44	WASHER,LOCK	8
5	PAOZZ	96906	MS51967-2	NUT,PLAIN,HEXAGON	8
6	PFOZZ	79725	2115	TEE	3
7	PAOZZ	10001	33G1726-25	GROMMET,NONMETALLIC	1
				END OF FIGURE	

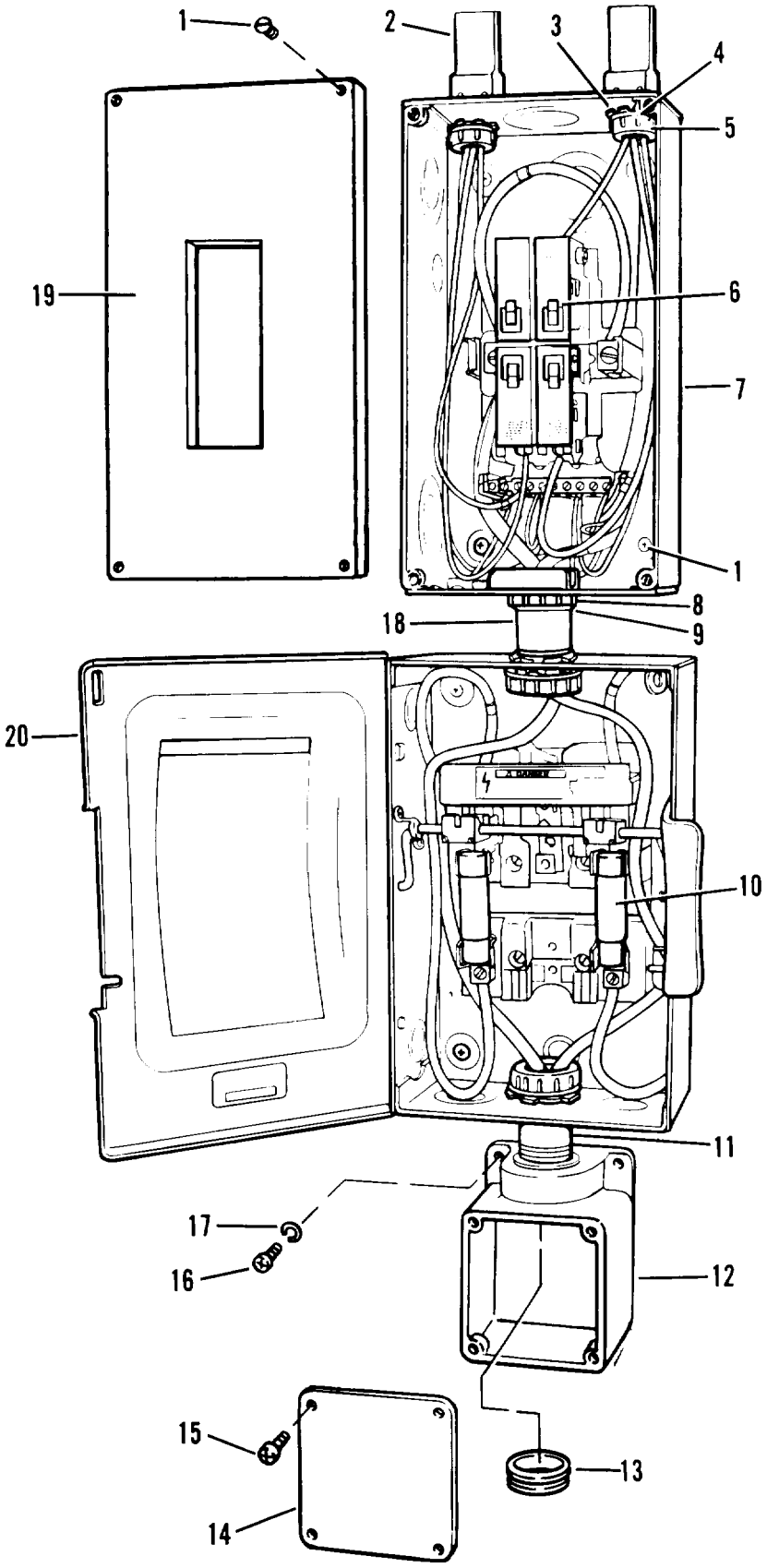

Figure 4. Circuit Breaker and Switch Box

(1) ITEM NO	(2) SMR CODE	(3) FSCM	(4) PART NUMBER	(5) DESCRIPTION AND USABLE ON CODE (UOC)	(6) QTY
				GROUP 0608 MISCELLANEOUS ITEMS	
				FIG.4 CIRCUIT BREAKER & SWITCH BOX	
1	PAOZZ	96906	MS35492-90	SCREW,WOOD	8
2	PFOZZ	79725	2110A	END FITTING,RACEWAY	2
3	XDOZZ	21450	503056	LOCKNUT,ELECTRICAL	2
4	PFOZZ	21450	192074	NIPPLE,PIPE	2
5	XDOZZ	21450	501703	BUSHING, CONDUIT	2
6	PFOZZ	19207	7748662	CIRCUIT BREAKER	4
7	PFOZZ	81348	NDSCL2DN2SNBX1-6 0A240VAC250VDC	SWITCH,BOX	1
8	PFOZZ	21450	190752	NIPPLE,PIPE	2
9	XDOZZ	21450	503066	LOCKNUT,ELECTRICAL	3
10	PAOZZ	81349	F16B250V60A	FUSE,CARTRIDGE	2
11	PFOZZ	19207	7748612	BUSHING,RUBBER	1
12	PFOZZ	15235	ARRH56	CONDUIT OUTLET	1
13	PAOZZ	96906	MS35489-110	GROMMET,NONMETALLIC	1
14	PFOZZ	19207	8722256	COVER,ACCESS	1
15	PAOZZ	96906	MS51861-68	SCREW,TAPPING,THREA	4
16	PAOZZ	96906	MS35206-265	SCREW,MACHINE	12
17	PAOZZ	96906	MS35335-33	WASHER,LOCK	4
18	XDOZZ	21450	504880	BUSHING, CONDUIT	3
19	PFOZZ	19207	7748661	DISTRIBUTION BOX	1
20	PFOZZ	79725	2141	BOX,RECEPTACLE	1
				END OF FIGURE	

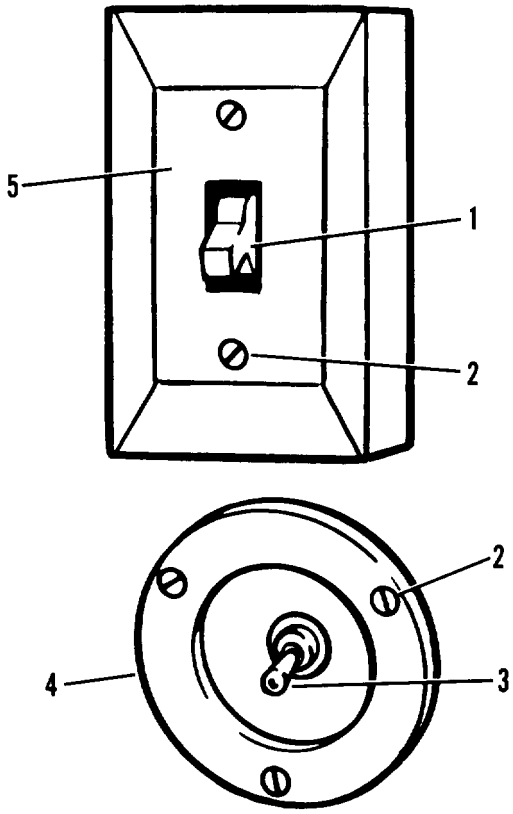

Figure 5. Dome Light Switches

(1) ITEM NO	(2) SMR CODE	(3) FSCM	(4) PART NUMBER	(5) DESCRIPTION AND USABLE ON CODE (UOC)	(6) QTY
				GROUP 0608 MISCELLANEOUS ITEMS	
				FIG.5 DOME LIGHT SWITCHES	
1	PFOZZ	81349	WS896/2-03A	SWITCH,TOGGLE	1
2	PAOZZ	96906	MS35495-92	SCREW,WOOD	6
3	PAOZZ	96906	MS35058-22	SWITCH,TOGGLE	2
4	PAOZZ	19207	8722276	PLATE,WALL,ELECTRIC	2
5	PAOZZ	19207	7532464	PLATE,WALL,ELECTRIC	1
				END OF FIGURE	

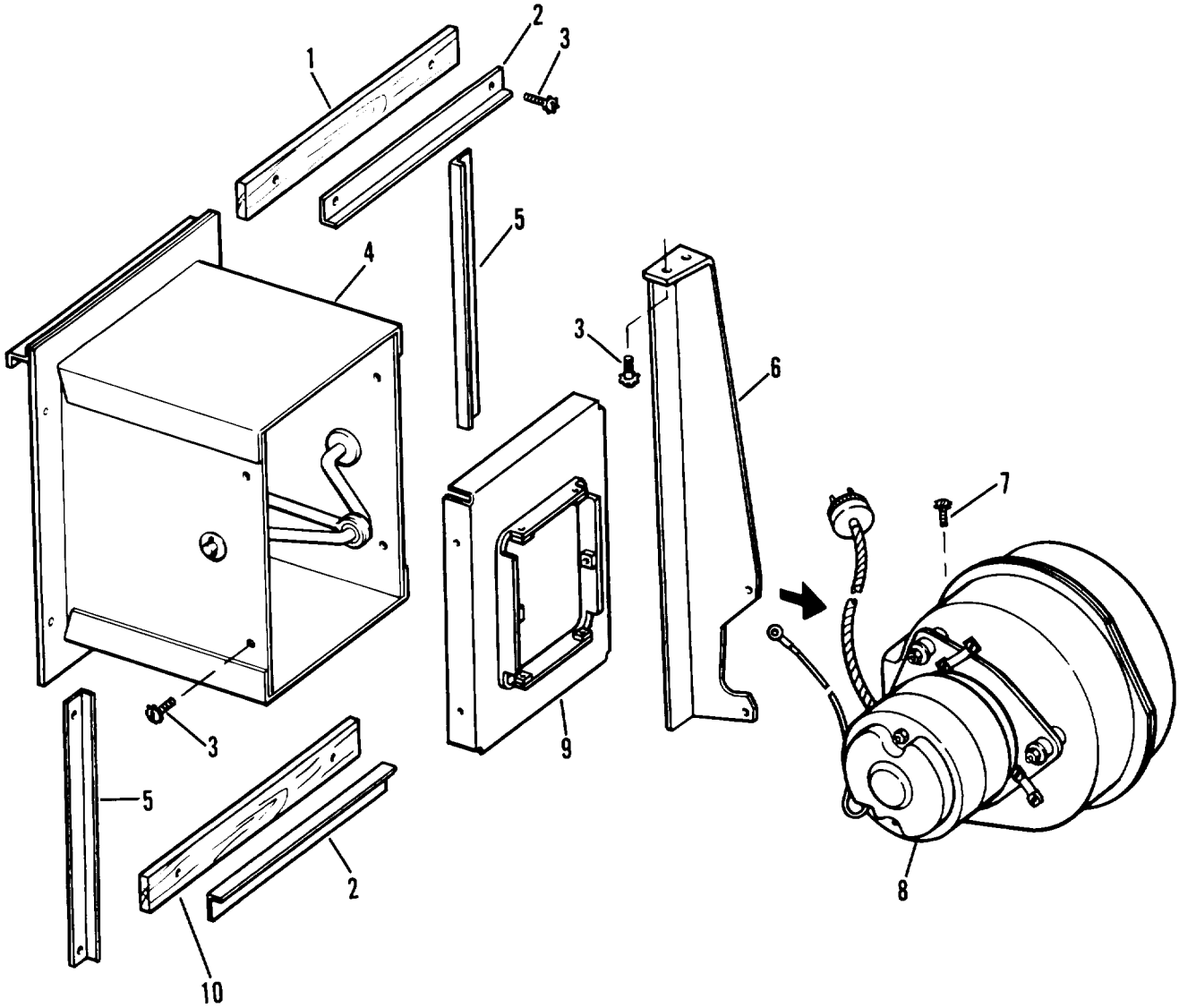

Figure 6. Ventilating Fan

(1) ITEM NO	(2) SMR CODE	(3) FSCM	(4) PART NUMBER	(5) DESCRIPTION AND USABLE ON CODE (UOC)	(6) QTY
				GROUP 0608 MISCELLANEOUS ITEMS	
				FIG.6 VENTILATING FAN	
1	PFOZZ	19207	8722261	BLOCK,FILLER,WOOD	2
2	PFOZZ	19207	7092354	BRACKET,ASSMEBLED WAS	2
3	PAOZZ	19207	455174	SCREW,ASSEMBLED WAS	14
4	PFOZZ	19207	7092352	DUCT ASSEMBLY,EXHAU	1
5	PFOZZ	19207	7092353	BRACKET,ANGLE	2
6	PFOZZ	19207	10935055	BRACKET,ANGLE	1
7	PAOZZ	23452	C6056CR	SCREW,ASSEMBLED WAS	6
8	PAOZZ	19207	7092511	BLOWER ASSEMBLY,EXH	1
9	PFOZZ	19207	10910296	ADAPTER,BLOWER VAN	1
10	PFOZZ	19207	8722260	BLOCK,FILLER,WOOD	2
				END OF FIGURE	

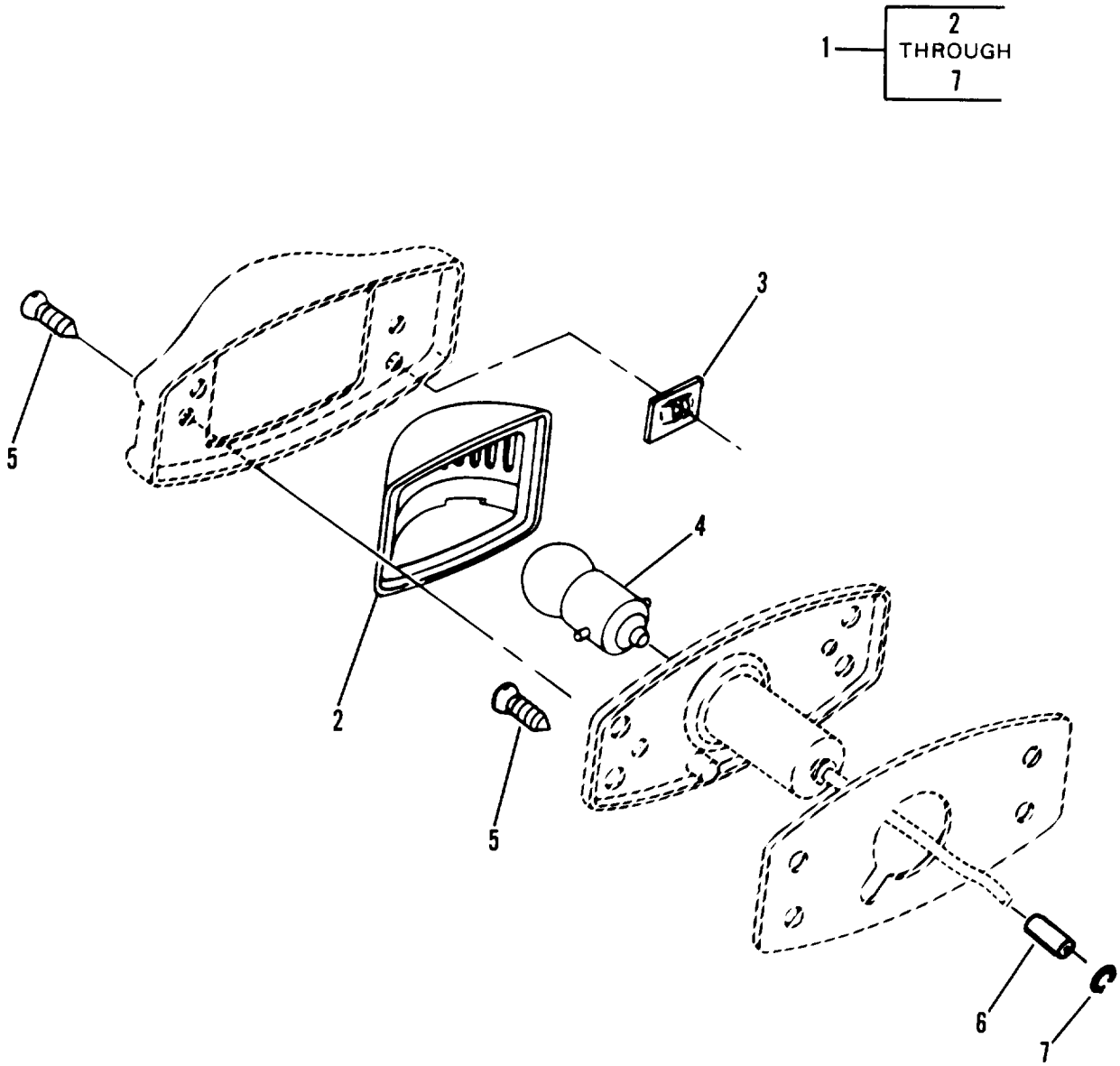

Figure 7. Clearance Light, 12 Volt and 24 Volt, Red or Amber

(1) ITEM NO	(2) SMR CODE	(3) FSCM	(4) PART NUMBER	(5) DESCRIPTION AND USABLE ON CODE (UOC)	(6) QTY
				GROUP 0609 LIGHTS	
				FIG.7 CLEARANCE LIGHTS 12/24 VOLT,	
				RED/AMBER	
1	PAOOO	96906	MS35423-1	LIGHT,MARKER,CLEARA 24 VOLT AMBER CLEARANCE LIGHT	10
1	PAOOO	96906	MS35423-2	LIGHT,MARKER,CLEARA 24 VOLT RED CLEARANCE LIGHT	2
1	PAOZZ	96906	MS35423-3	LIGHT,MARKER,CLEARA 12 VOLT AMBER CLEARANCE LIGHT	4
1	PAOZZ	96906	MS35423-4	LIGHT,MARKER,CLEARA 12 VOLT RED CLEARANCE LIGHT	7
2	PAOZZ	96906	MS35421-2	.LENS,LIGHT,RED	1
2	PAOZZ	96906	MS35421-1	.LENS,LIGHT , AMBER	1
3	PAOZZ	19207	7526796	.PUSH ON NUT	2
4	PAOZZ	08108	312	.LAMP,INCANDESCENT 12 VOLT	1
4	PAOZZ	96906	MS15570-1251	.LAMP,INCANDESCENT 24 VOLT	1
5	PAOZZ	96906	MS24615-36	.SCREW,TAPPING,THREA	2
6	PFOZZ	19207	8338566	.SHELL,ELECTRICAL CO	1
7	PFOZZ	19207	8338567	.WASHER,SLOTTED	1

END OF FIGURE

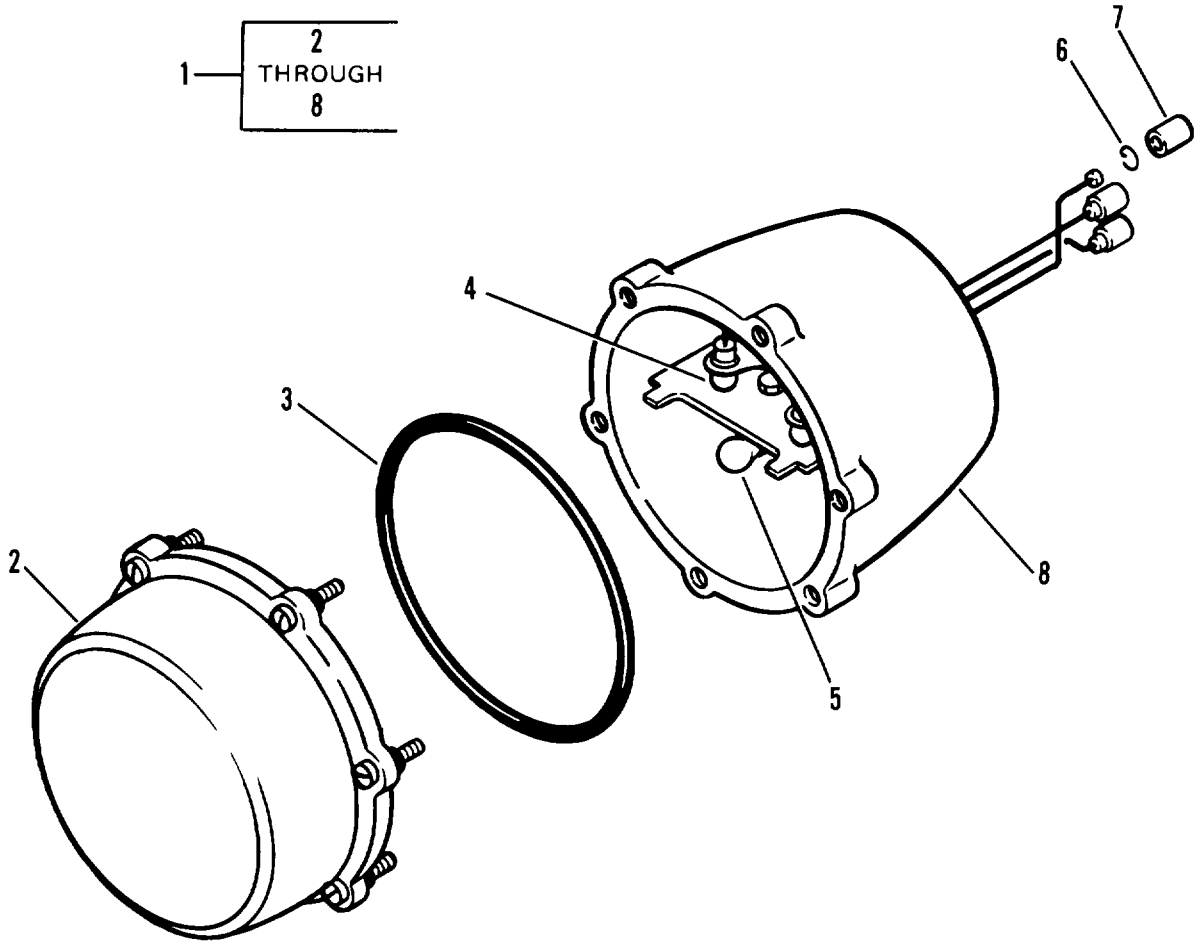

Figure 8. 12 Volt Taillight

(1) ITEM NO	(2) SMR CODE	(3) FSCM	(4) PART NUMBER	(5) DESCRIPTION AND USABLE ON CODE (UOC)	(6) QTY
				GROUP 0609 LIGHTS	
				FIG.8 12 VOLT TAILLIGHT	
1	PAOZZ	19207	10920548	STOP LIGHT-TAILLIGH	2
2	PAOZZ	19207	10920506	.LENS,LIGHT	1
3	PAOZZ	19207	7320658	.PACKING,PREFORMED	1
4	PAOZZ	96906	MS35478-93	.LAMP,INCANDESCENT	1
5	PAOZZ	96906	MS35478-1073	.LAMP,INCANDESCENT	1
6	PFOZZ	19207	8338567	.WASHER,SLOTTED	3
7	PAOZZ	19207	8338566	.SHELL,ELECTRICAL CO	3
8	XAOZZ	19207	7525997	.BODY	1
				END OF FIGURE	

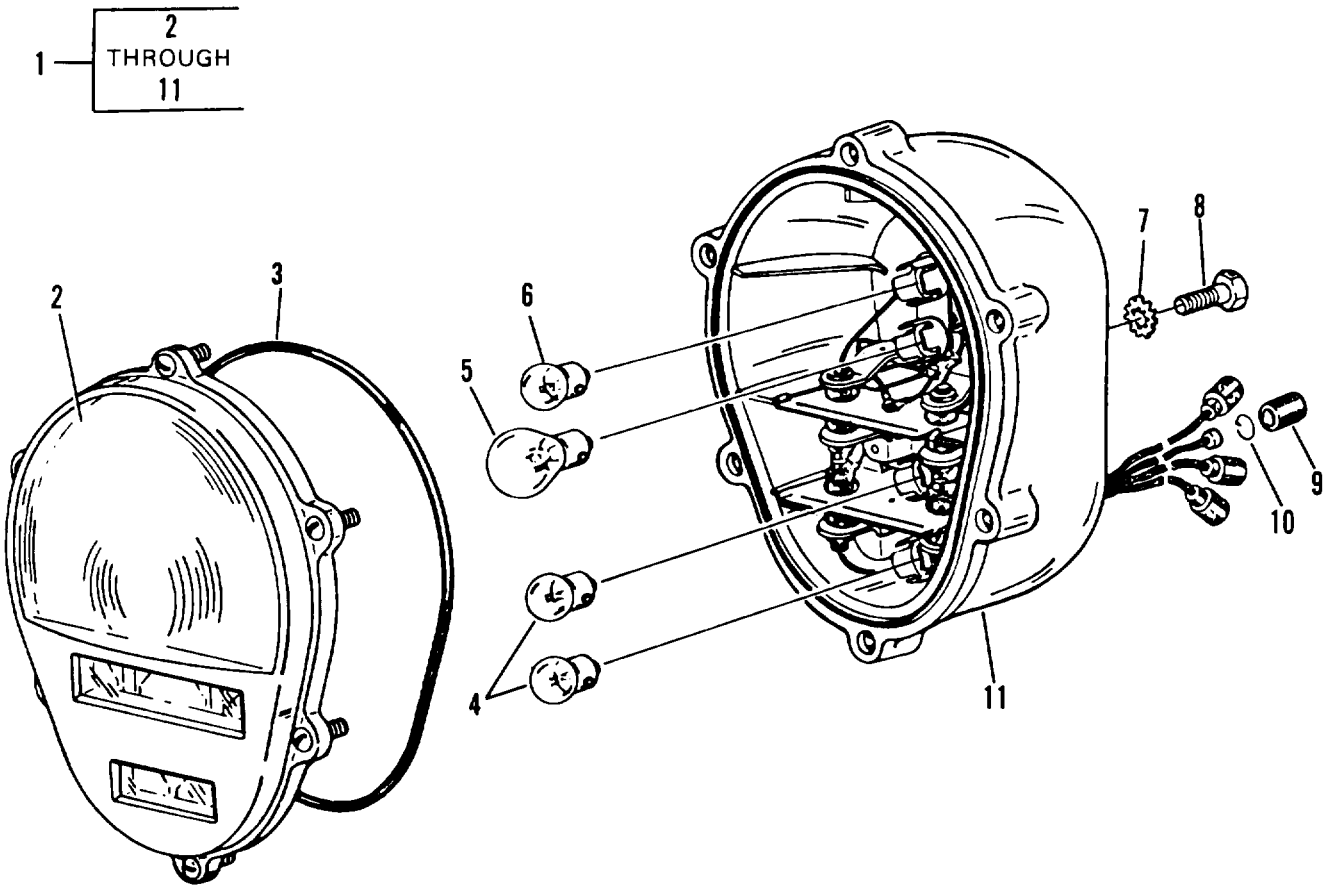

Figure 9.24 Volt Composite Taillight

(1) ITEM NO	(2) SMR CODE	(3) FSCM	(4) PART NUMBER	(5) DESCRIPTION AND USABLE ON CODE (UOC)	(6) QTY
				GROUP 0609 LIGHTS	
				FIG.9 24 VOLT COMPOSITE TAILLIGHT	
1	PAOOO	19207	11614157	STOP LIGHT-TAILLIGH	2
2	PAOZZ	19207	11639535	.LENS,LIGHT	1
3	PAOZZ	19207	11639519-2	.PACKING,PREFORMED	1
4	PAOZZ	96906	MS15570-1251	.LAMP,INCANDESCENT	2
5	PAOZZ	96906	MS35478-1683	.LAMP,INCANDESCENT	1
6	PAOZZ	96906	MS15570-623	.LAMP,INCANDESCENT	1
7	PAOZZ	96906	MS35333-42	.WASHER,LOCK	2
8	PAOZZ	96906	MS51861-35	.SCREW,TAPPING,THREA	2
9	PAOZZ	19207	8338566	.SHELL,ELECTRICAL CO	4
10	PAOZZ	19207	8338567	.WASHER,SLOTTED	4
11	XAOZZ	19207	11639520	.BODY ASSEMBLY	1

END OF FIGURE

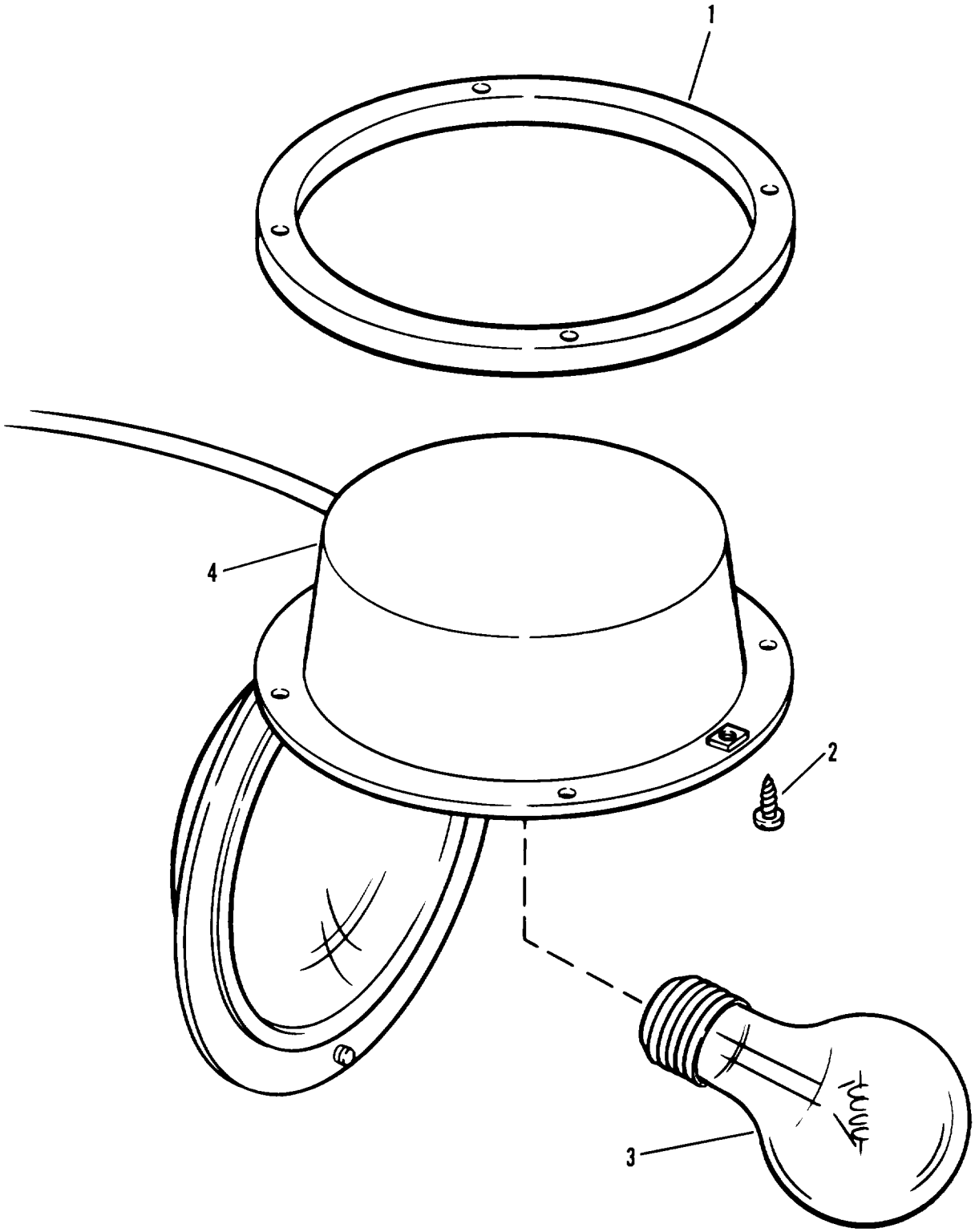

Figure 10. 110 Volt Dome Light

(1) ITEM NO	(2) SMR CODE	(3) FSCM	(4) PART NUMBER	(5) DESCRIPTION AND USABLE ON CODE (UOC)	(6) QTY
				GROUP 0609 LIGHTS	
					FIG.10 110 VOLT DOME LIGHT
1	PAOZZ	19207	8722247	SHIM	8
2	PAOZZ	96906	MS35494-61	SCREW,WOOD	32
3	PAOZZ	96906	MS15586-1	LAMP,INCANDESCENT	8
4	PAOZZ	19207	7092279	LIGHT,DOME	8

END OF FIGURE

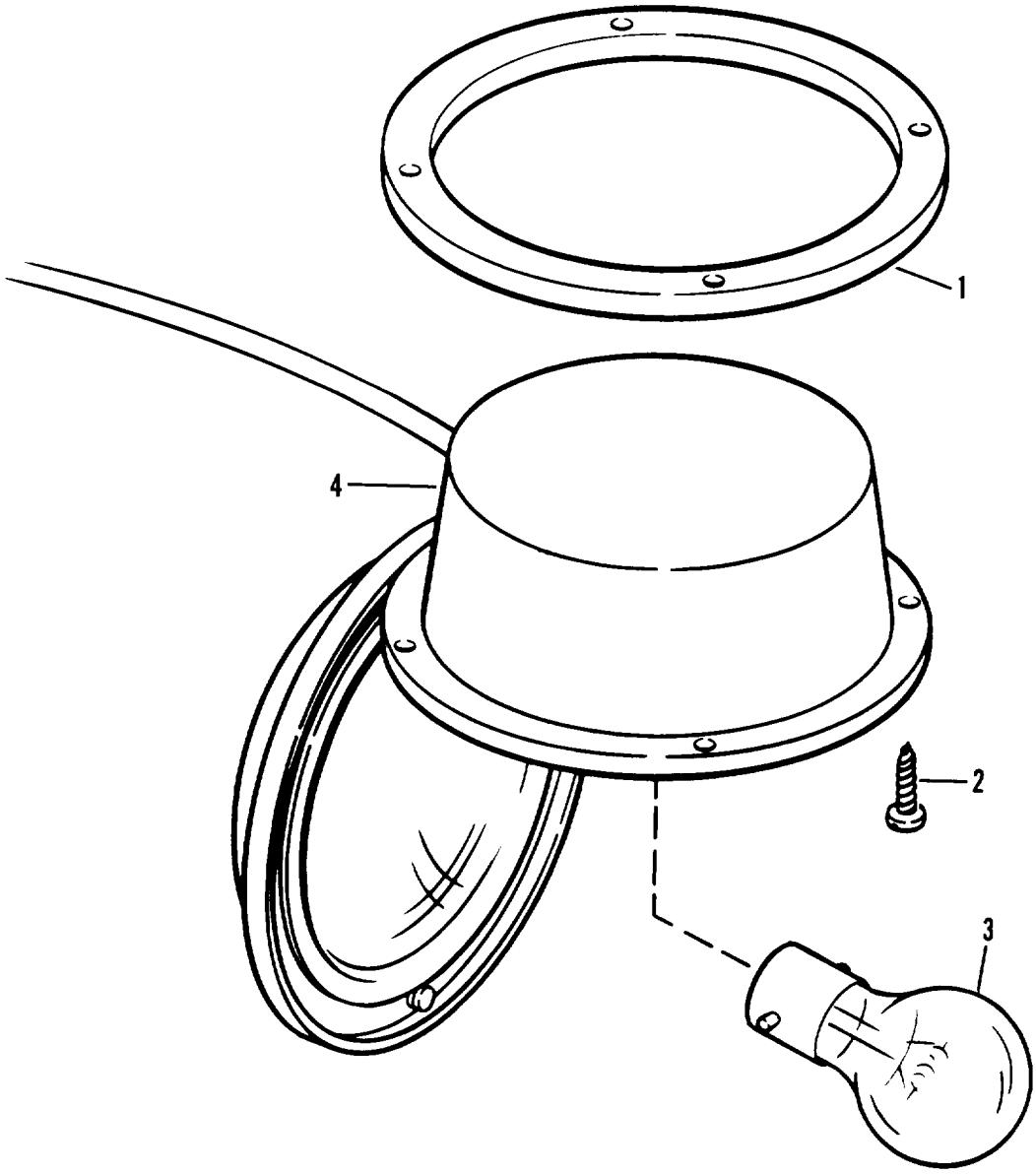

Figure 11. 24 Volt Dome Light

(1) ITEM NO	(2) SMR CODE	(3) FSCM	(4) PART NUMBER	(5) DESCRIPTION AND USABLE ON CODE (UOC)	(6) QTY
				GROUP 0609 LIGHTS	
				FIG.11 24 VOLT DOME LIGHT	
1	XAOZZ	19207	8722129	SHIM	4
2	PAOZZ	96906	MS35494-61	SCREW,WOOD	16
3	PAOZZ	96906	MS35478-1683	LAMP,INCANDESCENT	4
4	PAOZZ	19207	10923539	LIGHT,DOME	4
				END OF FIGURE	

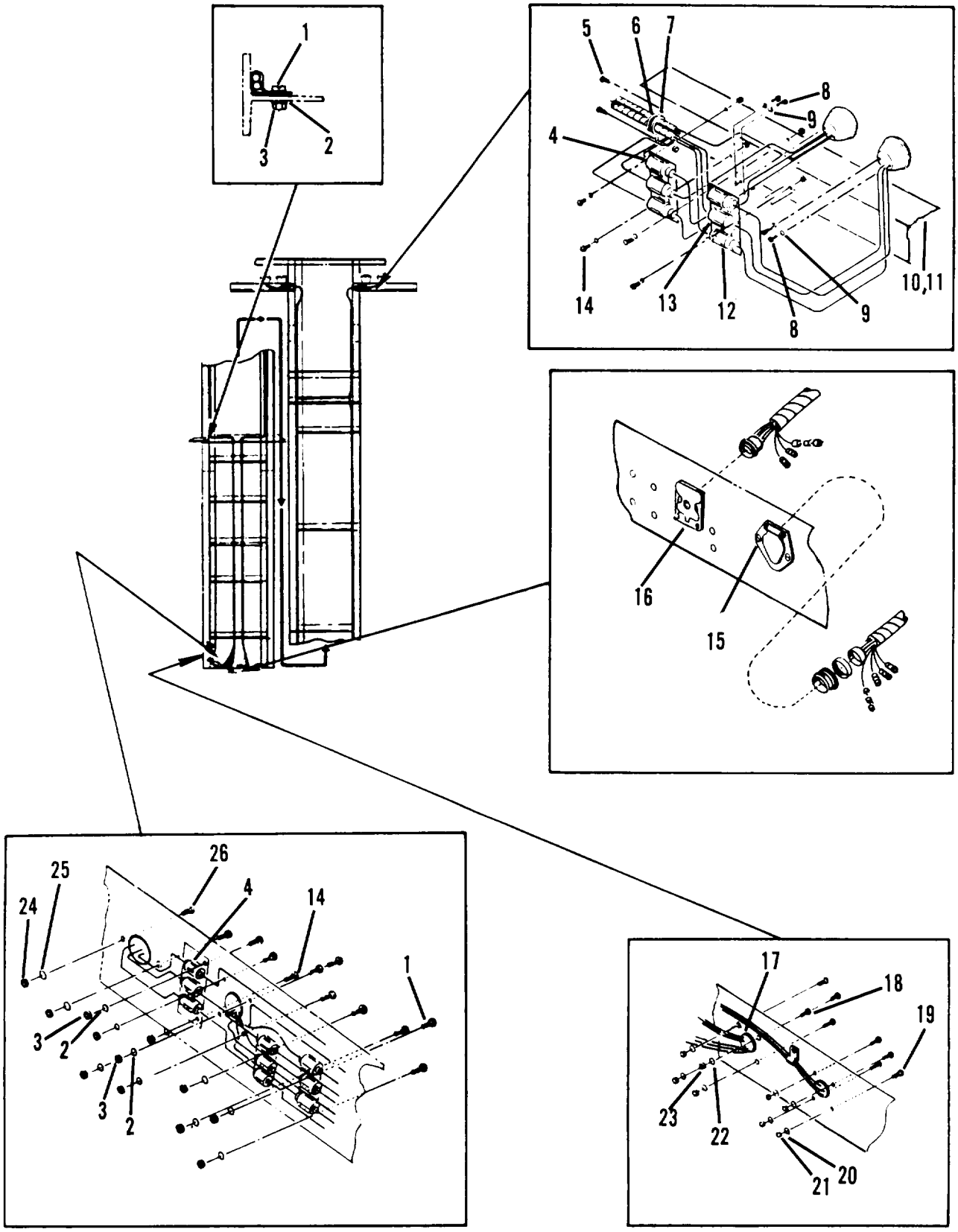

Figure 12. Chassis Electrical System Components (Sheet 1 of 2)

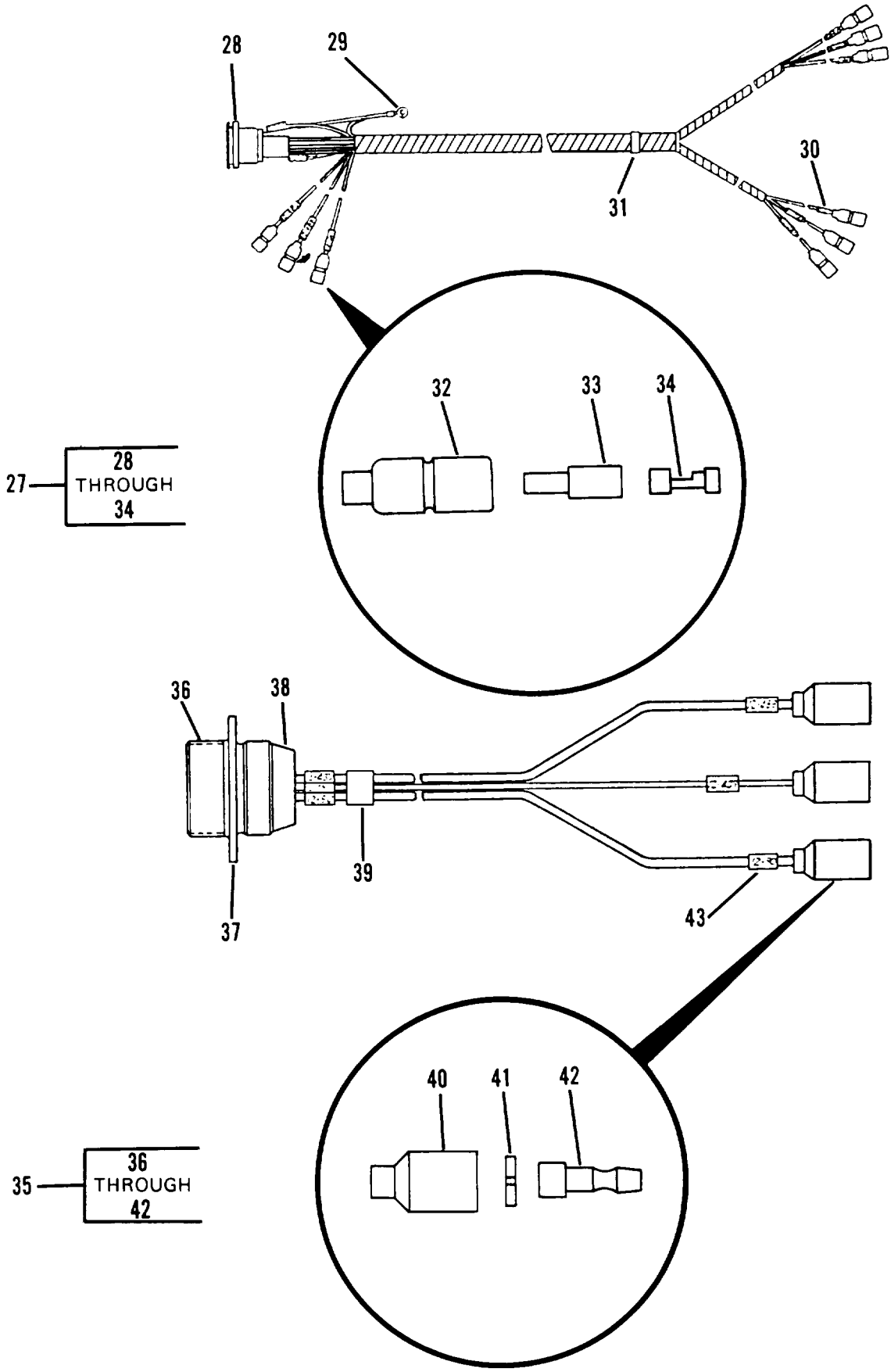

Figure 12. Chassis Electrical System Components (Sheet 2 of 2)

GROUP 0613 CAHSSIS WIRING HARNESS

FIG.12 CHASSIS ELECTRICAL SYSTEM

COMPONENTS

(1) ITEM NO	(2) SMR CODE	(3) FSCM	(4) PART NUMBER	(5) DESCRIPTION AND USABLE ON CODE (UOC)	(6) QTY
1	PAOZZ	96906	MS35206-281	SCREW,MACHINE	25
2	PAOZZ	96906	MS35338-44	WASHER,LOCK	41
3	PAOZZ	96906	MS51967-2	NUT,PLAIN,HEXAGN	41
4	PFOZZ	19207	10935126	CLIP ASSEMBLY,SPRIN	2
5	PAOZZ	96906	MS90726-34	BOLT,MACHINE	4
6	PAOZZ	96906	MS35489-110	GROMMET,NONMETALLIC	16
7	PAOZZ	96906	MS51922-13	NUT,SELF-LOCKING,HE	4
8	PAOZZ	96906	MS90725-58	SCREW	8
9	PAOZZ	96906	MS35338-46	WASHER,LOCK	8
10	PFOZZ	19207	10920586-2	SUPPORT,TAILLIGHT	1
11	PFOZZ	19207	10920586-1	SUPPORT ASSY,RIGHT	1
12	PAOZZ	19207	8338567	WASHER,SLOTTED	14
13	PAOZZ	19207	8338566	SHELL,ELECTRICAL CO	14
14	PAOZZ	96906	MS35206-280	SCREW,MACHINE	12
15	PAOZZ	96906	MS35206-296	SCREW,MACHINE	2
16	PAOZZ	19207	7731428	COVER,ELECTRICAL CO	1
17	PFOZZ	19207	8683490	RECEPTACLE ASSEMBLY	1
18	PAOZZ	96906	MS35206-247	SCREW,MACHINE	4
19	PAOZZ	96906	MS35206-219	SCREW,MACHINE	4
20	PAOZZ	96906	MS35338-40	WASHER,LOCK	4
21	PAOZZ	96906	MS35649-242	NUT,PLAIN,HEXAGON	4
22	PAOZZ	96906	MS35338-42	WASHER,LOCK	4
23	PAOZZ	96906	MS35649-282	NUT,PLAIN,HEXAGON	4
24	PAOZZ	96906	MS51967-5	NUT,PLAIN,HEXAGON	2
25	PAOZZ	96906	MS35338-45	WASHER,LOCK	2
26	PAOZZ	96906	MS35206-283	SCREW,MACHINE	4
27	MOOOO	19207	8722133	WIRING HARNESS MAKE FROM WIRE P/N M13486-1-5 (FSCM 81349)	1
28	PAOZZ	12339	76D05086	.CONNECTOR,RECEPTACL	1
29	PAOZZ	21450	506209	.TERMINAL,LUG	1
30	PAOZZ	96906	MS39020-1	.BAND,MARKER	1
31	PAOZZ	96906	MS39020-2	.BAND,MARKER	1
32	PAOZZ	19207	8338561	.SHELL,ELECTRICAL CO	1
33	PAOZZ	19207	8338562	.INSULATOR,BUSHING	1
34	PAOZZ	19207	8338564	.TERMINAL ASSMEBLY	1
35	MOOOO	19207	10935044	WIRING HARNESS MAKE FROM M13486/1-5	2
36	PAOZZ	19207	7720485	.CONNECTOR,RECEPTACL	1
37	PAOZZ	77820	10-40817-10	.INSERT,ELECTRICAL C	1
38	PAOZZ	19207	7723307	.NUT,BUSHING RETAINE	1
39	PAOZZ	81349	M43436/1-2	.BAND,MARKER	1
40	PAOZA	96906	MS27148-2	.CONTACT,ELECTRICAL	3
41	PAOZZ	19207	8338566	.SHELL,ELECTRICAL CO	3
42	PFOZZ	19207	8338567	.WASHER,SLOTTED	3
43	PAOZZ	81349	M43436/1-1	BAND MARKER	1

END OF FIGURE

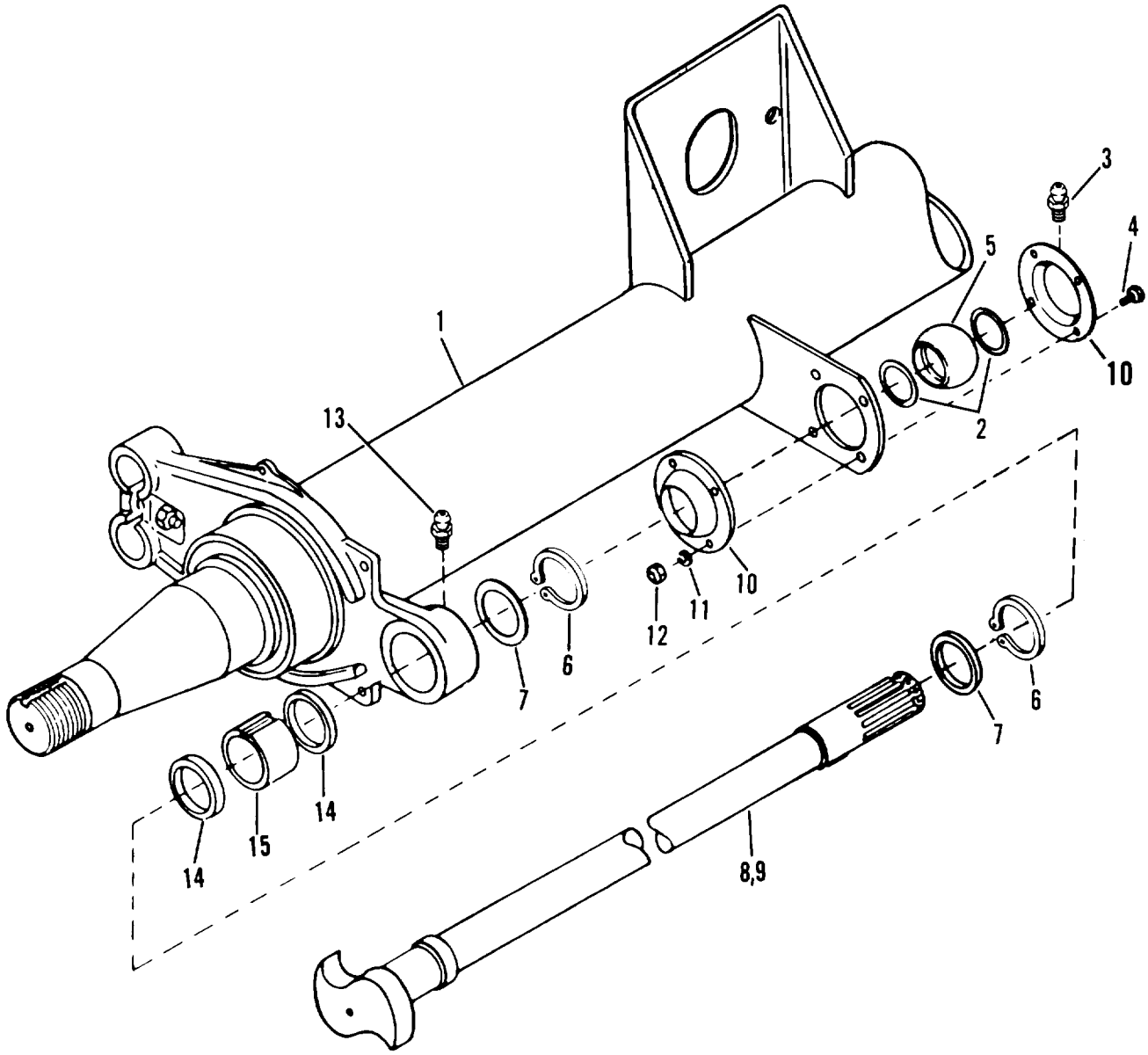

Figure 13. Axle Assembly
Serial Numbers 1HZV2920XE1007033 to 1HZV29201E1007439

(1) ITEM NO	(2) SMR CODE	(3) FSCM	(4) PART NUMBER	(5) DESCRIPTION AND USABLE ON CODE (UOC)	(6) QTY
				GROUP 1100 REAR AXLE ASSEMBLY	
				FIG.13 AXLE ASSEMBLY	
1	XBFZZ	56697	100103	AXLE TUBE ASSEMBLY SERIAL NUMBERS 1HZV2920XE1007033 TO 1HZV29201E1007439	2
2	XAOZZ	56697	408106	PACKING, PREFORMED SERIAL NUMBERS 1HZV2920XE1007033 TO 1HZV29201E1007439	4
3	PAOZZ	96906	MS15001-1	FITTING,LUBRICATION SERIAL NUMBERS 1HZV2920XE1007033 TO 1HZV29201E1007439	2
4	XDOZZ	56697	400146	BOLT SERIAL NUMBERS 1HZV2920XE1007033 TO 1HZV29201E1007439	8
5	PAOZZ	56697	405128	CAM BUSHING SERIAL NUMBERS 1HZV2920XE1007033 TO 1HZV29201E1007439	2
6	PAOZZ	56697	214104	RING,RETAINING SERIAL NUMBERS 1HZV2920XE1007033 TO 1HZV29201E1997439	4
7	PAOZZ	56697	403149	WASHER,FLAT SERIAL NUMBERS 1HZV2920XE1007033 TO 1HZV29201E1007439	4
8	PFOZZ	56697	202100-205R	CAMSHAFT,RIGHT SERIAL NUMBERS 1HZV2920XE1007033 TO 1HZV29201E1007439	1
9	PFOZZ	56697	202100-205L	CAMSHAFT,LEFT SERIAL NUMBERS 1HZV2920XE1007033 TO 1HZV29201E1007439	1
10	XDOZZ	56697	209108-001	COVER, CAM BUSH SERIAL NUMBERS 1HZV2920XE1007033 TO 1HZV29201E1007439	4
11	XDOZZ	56697	403114	WASHER LOCK SERIAL NUMBERS 1HZV2920XE1007033 TO 1HZV29201E1007439	8
12	XDOZZ	56697	402137	NUT, HEX SERIAL NUMBERS 1HZV2920XE1007033 TO 1HZV29201E1007439	8
13	PAOZZ	56697	407101	FITTING,LUBRICATION SERIAL NUMBERS 1HZV2920XE1007033 TO 1HZV29201E1007439	2
14	PAOZZ	56697	408101-001	SEAL,PLAIN ENCASED SERIAL NUMBERS 1HZV2920XE1007033 TO 1HZV29201E1007439	4
15	PAOZZ	56697	405129	BUSHING,SPIDER SERIAL NUMBERS 1HZV2920XE1007033 TO 1HZV29201E1007439	2

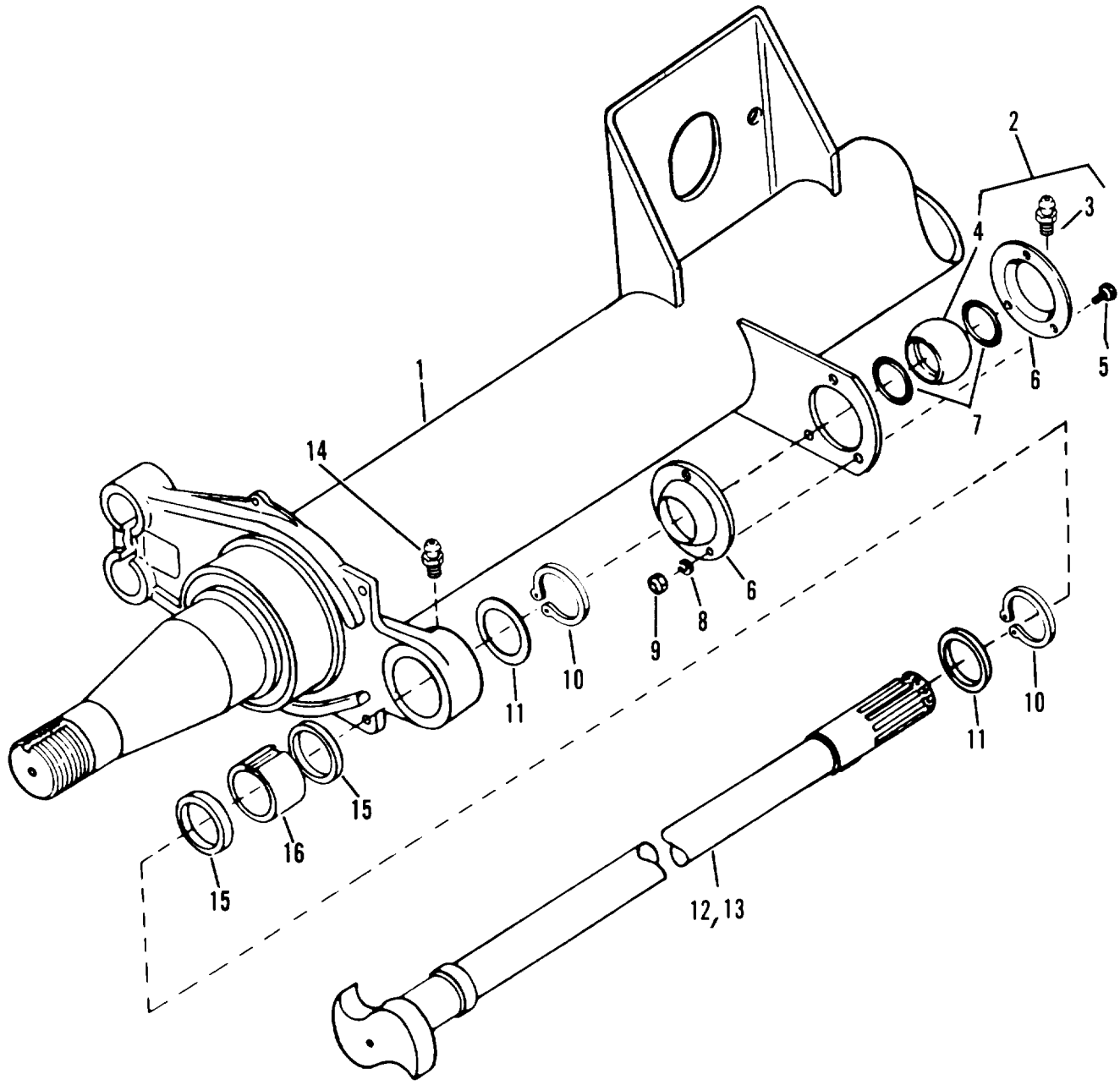

Figure 14. Axle Assembly
Serial Numbers 1HZV29201E1007440 to 1HZV29208E1007709

(1) ITEM NO	(2) SMR CODE	(3) FSCM	(4) PART NUMBER	(5) DESCRIPTION AND USABLE ON CODE (UOC)	(6) QTY
				GROUP 1100 REAR AXLE ASSEMBLY	
				FIG.14 AXLE ASSEMBLY	
1	PBFZZ	62707	K22-FT-167W	AXLE TUBE ASSY	2
2	PFOZZ	50492	M10WH100-2	BUSHING COVER W/FTG SERIAL NUMBERS 1HZV29201E1007440 TO 1HZV29208E1007709	4
3	PAOZZ	96906	MS15001-1	.FITTING,LUBRICATION SERIAL NUMBERS 1HZV29201E1007440 TO 1HZV29208E1007709	2
4	PFOZZ	50492	M10WJ100	BUSHING SERIAL NUMBERS 1HZV29201E1007440 TO 1HZV29208E1007709	4
5	PAOZZ	96906	MS90725-33	BOLT,MACHINE SERIAL NUMBERS 1HZV29201E1007440 TO 1HZV29208E1007709	12
6	PFOZZ	50492	M10WH100-1	BUSHING COVER SERIAL NUMBERS 1HZV29201E1007440 TO 1HZV29208E1007709	4
7	PAOZZ	62707	10056	PACKING,PREFORMED SERIAL NUMBERS 1HZV29201E1007440 TO 1HZV29208E1007709	4
8	PAOZZ	96906	MS35338-45	WASHER,LOCK SERIAL NUMBERS 1HZV29201E1007440 TO 1HZV29208E1007709	12
9	PAOZZ	96906	MS51967-5	NUT,PLAIN,HEXAGON SERIAL NUMBERS 1HZV29201E1007440 TO 1HZV29208E1007709	12
10	PAOZZ	96906	MS16624-1150	RING,RETAINING SERIAL NUMBERS 1HZV29201E1007440 TO 1HZV29208E1007709	4
11	PAOZZ	62707	M10HS113	WASHER,FLAT SERIAL NUMBERS 1HZV29201E1007440 TO 1HZV29208E1007709	4
12	PFOZZ	62707	M16WK103-17	CAMSHAFT,RH SERIAL NUMBERS 1HZV29201E1007440 TO 1HZV29208E1007709	1
13	PFOZZ	62707	M16WK102-17	CAMSHAFT, LH SERIAL NUMBERS 1HZV29201E1007440 TO 1HZV29208E1007709	1
14	PAOZZ	56697	407101	FITTING,LUBRICATION SERIAL NUMBERS 1HZV29201E1007440 TO 1HZV29208E1007709	2
15	PAOZZ	62707	M16HH100	GREASE SEAL SERIAL NUMBERS 1HZV29201E1007440 TO 1HZV29208E1007709	4
16	PAOZZ	62707	M16HD100	SPIDER BUSHING	2

END OF FIGURE

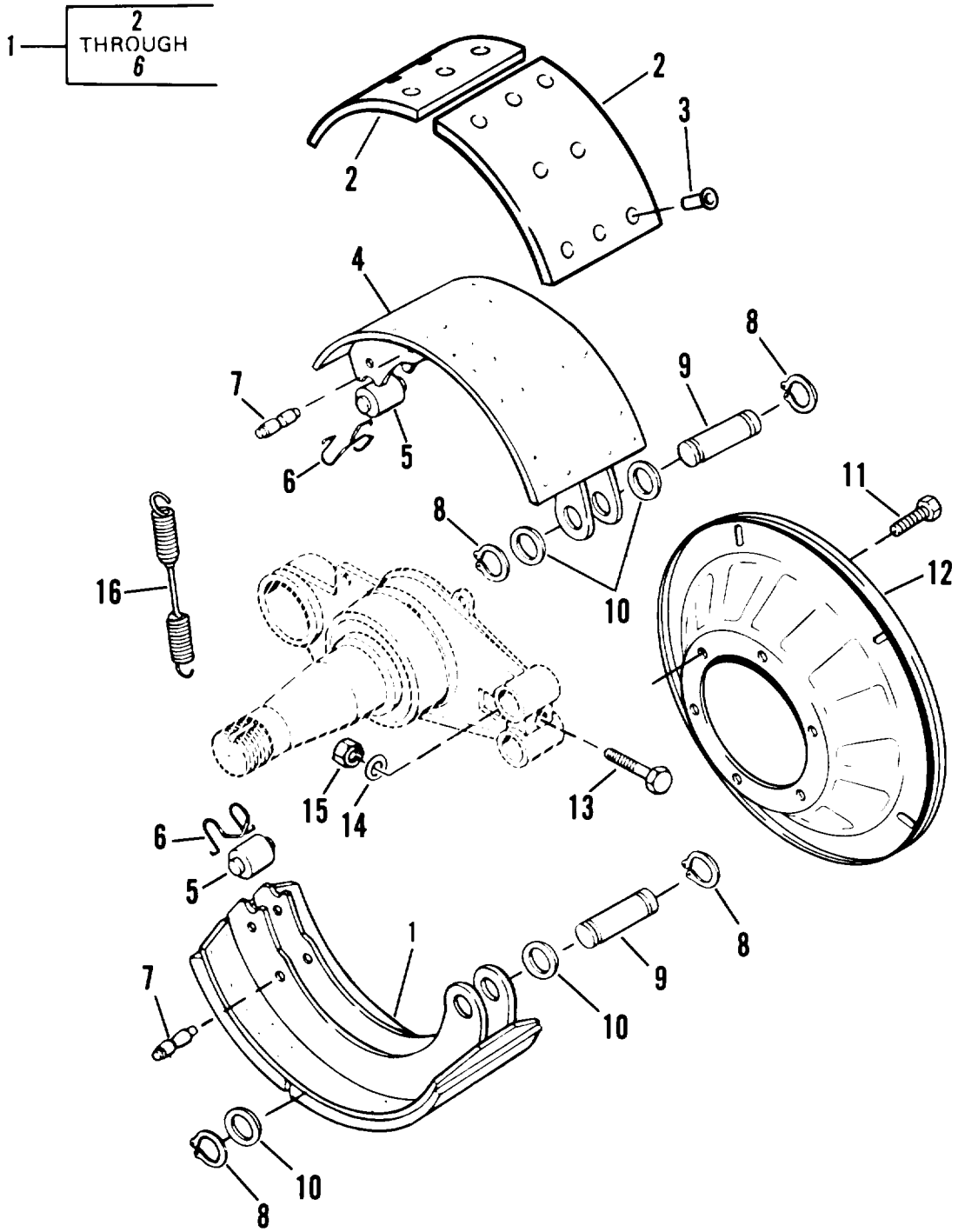

Figure 15. Service Brakes
Serial Numbers 1HZV2920XE1007033 to 1HZV29201E1007439

(1) ITEM NO	(2) SMR CODE	(3) FSCM	(4) PART NUMBER	(5) DESCRIPTION AND USABLE ON CODE (UOC)	(6) QTY
				GROUP 12 BRAKES	
				GROUP 1202 SERVICE BRAKES	
				FIG.15 SERVICE BRAKES	
1	PAOFF	56697	201999-020-2	BRAKE SHOE SERIAL NUMBERS 1HZV2920XE1007033 TO 1HZV29201E1007439	4
2	PAFZZ	89346	93931R92	.BRAKE LINING KIT	2
3	PAFZZ	56697	404101-001	.RIVET	12
4	XAFZZ	56697	201116-001	.BRAKE SHOE	4
5	PFFZZ	56697	204101-001	ROLLER,BEARING	4
6	PFFZZ	56697	214103	SPRING SPECIAL	4
7	PFOZZ	56697	207100	PIN,BRAKE SPRING SERIAL NUMBERS 1HZV2920XE1007033 TO 1HZV29201E1007439	4
8	PAOZZ	56697	214108	RING,RETAINING SERIAL NUMBERS 1HZV2920XE1007033 TO 1HZV29201E1007439	8
9	PFOZZ	56697	203109-001	PIN,GROOVED,HEADLES SERIAL NUMBERS 1HZV2920XE1007033 TO 1HZV29201E1007439	4
10	PAOZZ	56697	403145	WASHER,FLAT SERIAL NUMBERS 1HZV2920XE1007033 TO 1HZV29201E1007439	8
11	PAOZZ	96906	MS51851-106	SCREW,TAPPING,THREA SERIAL NUMBERS 1HZV2920XE1007033 TO 1HZV29201E1007439	12
12	PFOZZ	56697	211102-001	COVER, DUST SERIAL NUMBERS 1HZV2920XE1007033 TO 1HZV29201E1007439	2
13	PAOZZ	56697	401101	SCREW,CAP,HEXAGON H SERIAL NUMBERS 1HZV2920XE1007033 TO 1HZV29201E1007439	2
14	PAOZZ	56697	403113	WASHER SERIAL NUMBERS 1HZV2920XE1007033 TO 1HZV29201E1007439	2
15	PAOZZ	56697	402102	NUT SERIAL NUMBERS 1HZV2920XE1007033 TO 1HZV29201E1007439	2
16	PFOZZ	56697	208102	SPRING,HELICAL,EXTE SERIAL NUMBERS 1HZV2920XE1007033 TO 1HZV29201E1007439	2
				END OF FIGURE	

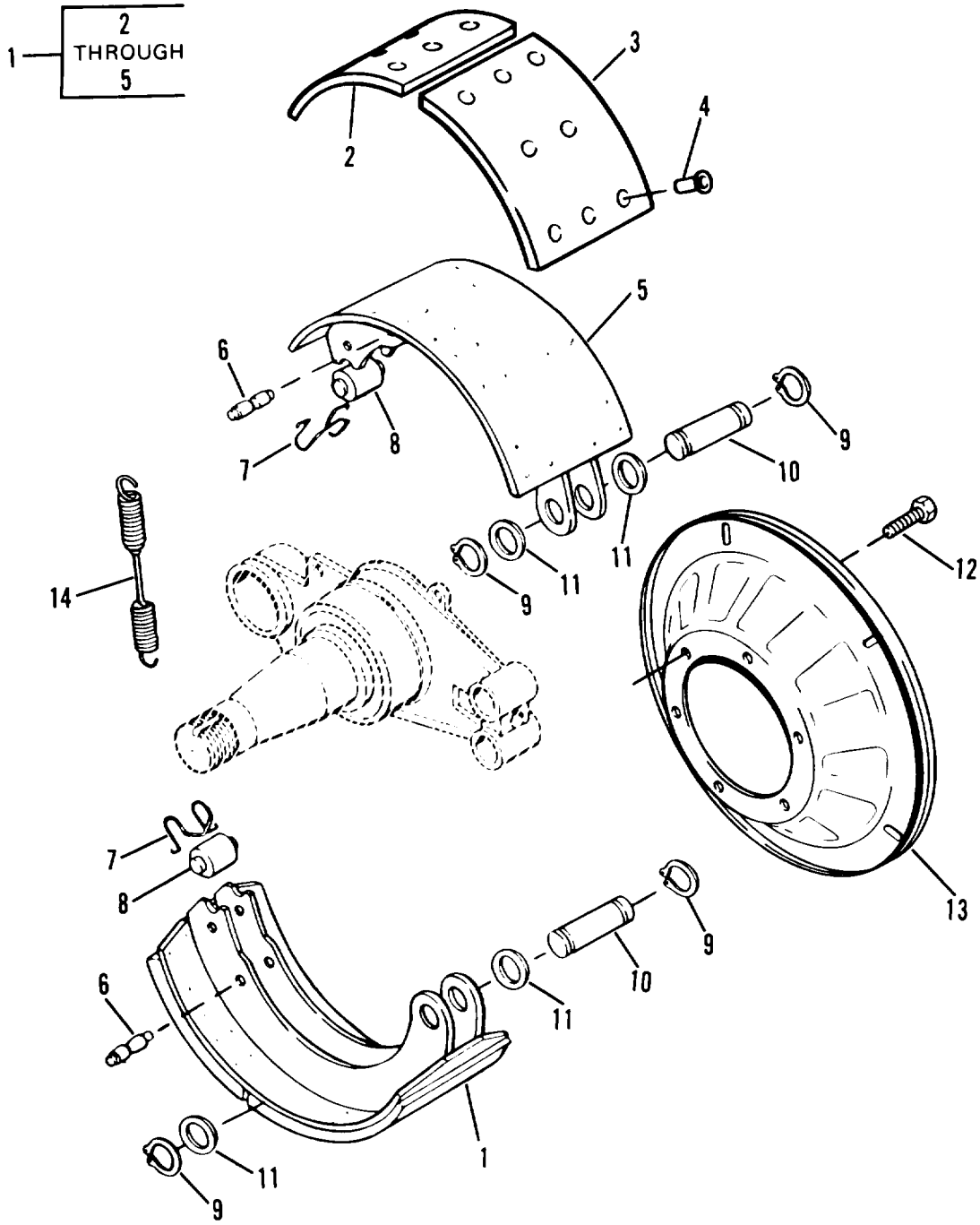

Figure 16. Service Brakes
Serial Numbers 1HZV29201E1007440 to 1HZV29208E1007709

(1) ITEM NO	(2) SMR CODE	(3) FSCM	(4) PART NUMBER	(5) DESCRIPTION AND USABLE ON CODE (UOC)	(6) QTY
				GROUP 1202 SERVICE BRAKES	
				FIG.16 SERVICE BRAKES	
1	PAOFF	62707	M16WN101X	SHOE&LINER ASSY	2
2	PAFZZ	62707	M16WL100-2	.LINING,FRICTION	4
3	PAFZZ	62707	M16WL100-1	.LINING,FRICTION	2
4	PAFZZ	06625	M10HM100	.RIVET,TUBULAR	12
5	PAFZZ	62707	M16WS104X	.BRAKE SHOE	2
6	PFOZZ	06625	16361	RETRACT SPRING PIN SERIAL NUMBERS 1HZV29201E1007440 TO 1HZV29208E1007709	4
7	PFOZZ	62707	M16WJ103	SPRING,HELICAL,TORS SERIAL NUMBERS 1HZV29201E1007440 TO 1HZV29208E1007709	4
8	PFOZZ	62707	M16WJ104	PIN,SHOULDER,HEADLE SERIAL NUMBERS 1HZV29201E1007440 TO 1HZV29208E1007709	4
9	PAOZZ	96906	MS16624-125	RING,RETAINING SERIAL NUMBERS 1HZV29201E1007440 TO 1HZV29208E1007709	8
10	PFOZZ	62707	M10HP102	PIN,GROOVED,HEADLES SERIAL NUMBERS 1HZV29201E1007440 TO 1HZV29208E1007709	4
11	PAOZZ	62707	M10HN103	WASHER,FLAT SERIAL NUMBERS 1HZV29201E1007440 TO 1HZV29208E1007709	8
12	PAOZZ	96906	MS51851-106	SCREW,TAPPING,THREA SERIAL NUMBERS 1HZV29201E1007440 TO 1HZV29208E1007709	12
13	PFOZZ	62707	M16WB100	SHIELD,BRAKE DISK SERIAL NUMBERS 1HZV29201E1007440 TO 1HZV29208E1007709	2
14	PFOZZ	62707	M16WJ100	SPRING,HELICAL,EXTE SERIAL NUMBERS 1HZV29201E1007440 TO 1HZV29208E1007709	2
				END OF FIGURE	

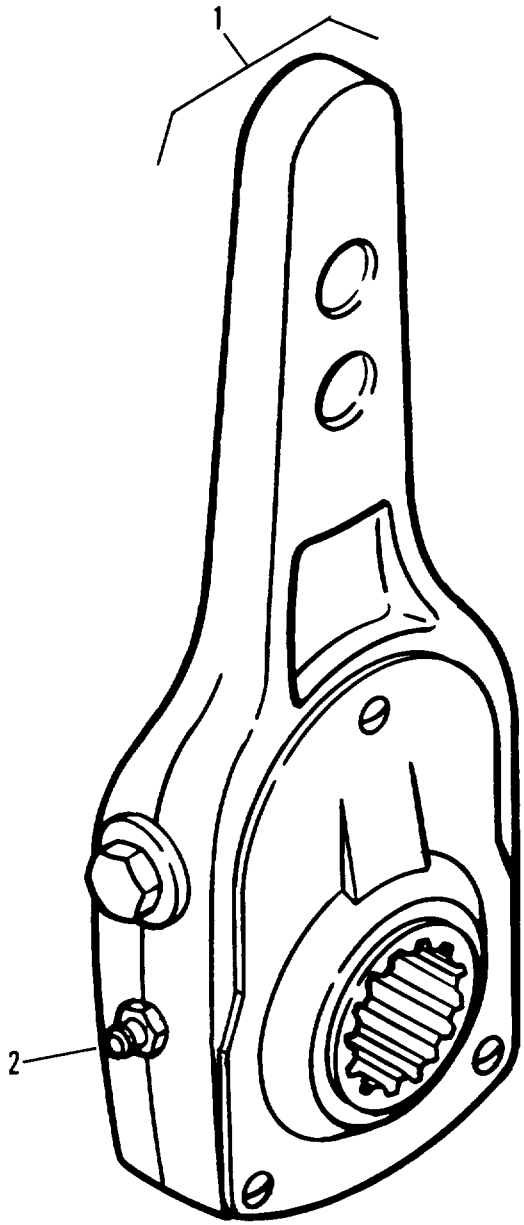

Figure 17. Slack Adjuster

(1) ITEM NO	(2) SMR CODE	(3) FSCM	(4) PART NUMBER	(5) DESCRIPTION AND USABLE ON CODE (UOC)	(6) QTY
				GROUP 1206 MECHANICAL BRAKE SYSTEM	
				FIG.17 SLACK ADJUSTER	
1	PAOOO	56697	212128	ADJUSTER,SLACK,BRAK	2
2	PAOZZ	96906	MS15001-1	.FITTING,LUBRICATION	1

END OF FIGURE

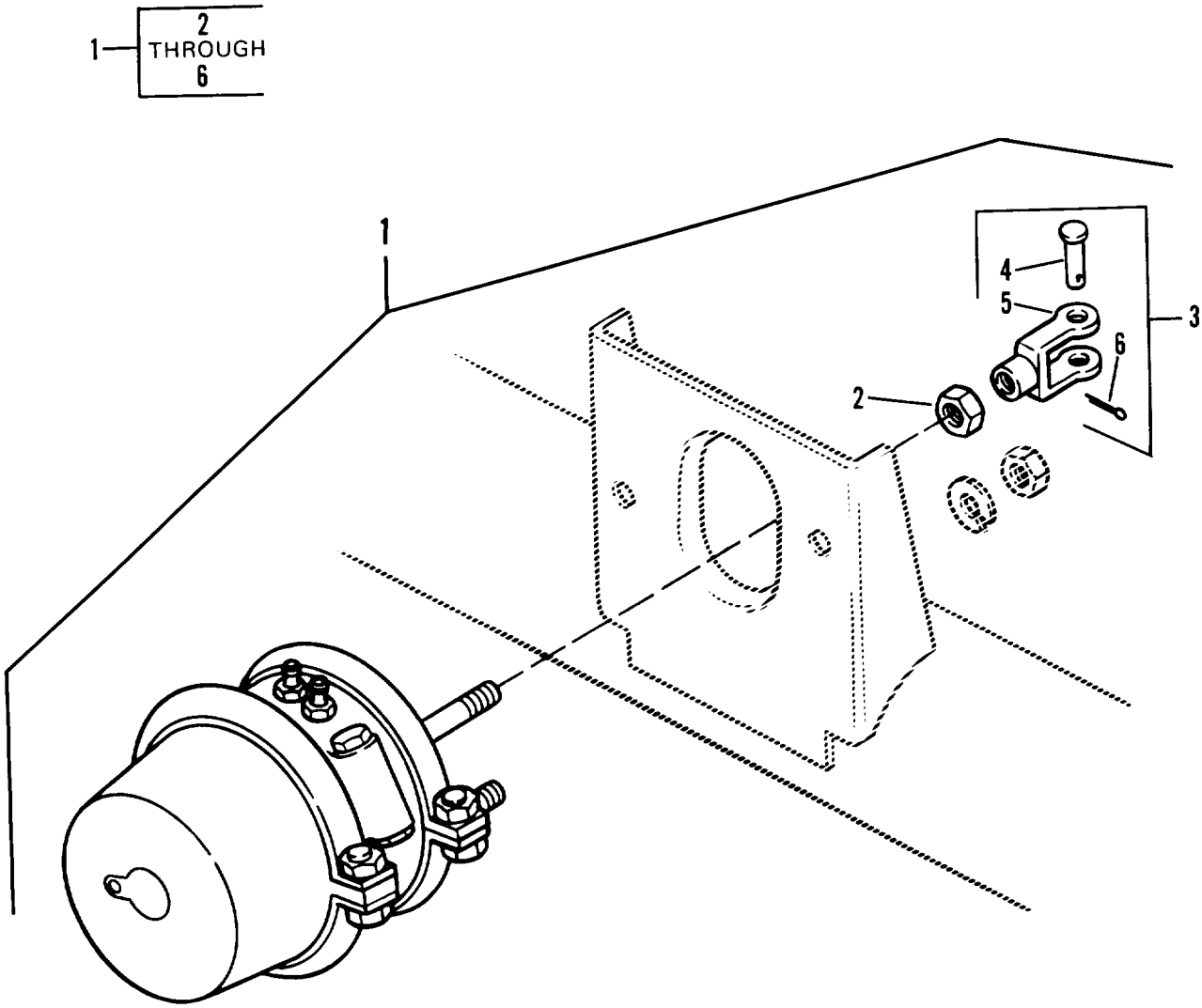

Figure 18. Air Brake Chamber

(1) ITEM NO	(2) SMR CODE	(3) FSCM	(4) PART NUMBER	(5) DESCRIPTION AND USABLE ON CODE (UOC)	(6) QTY
				GROUP 1208 AIR BRAKE SYSTEM	
				FIG.18 AIR BTAKE CHAMBER	
1	PFOOZ	50153	162429	CHAMBER,AIR BRAKE	2
2	PAOZZ	50553	11M050	.NUT,PLAIN,HEXAGON	1
3	PFOZZ	50153	11M018-1	.CLEVIS ASSEMBLY	1
4	PAOZZ	50153	11M061	..PIN,STRAIGHT,HEADED	1
5	XAOZZ	50153	11M059	..CLEVIS,ROD END	1
6	PAOZZ	50153	11M063	..PIN,COTTER	1
				END OF FIGURE	

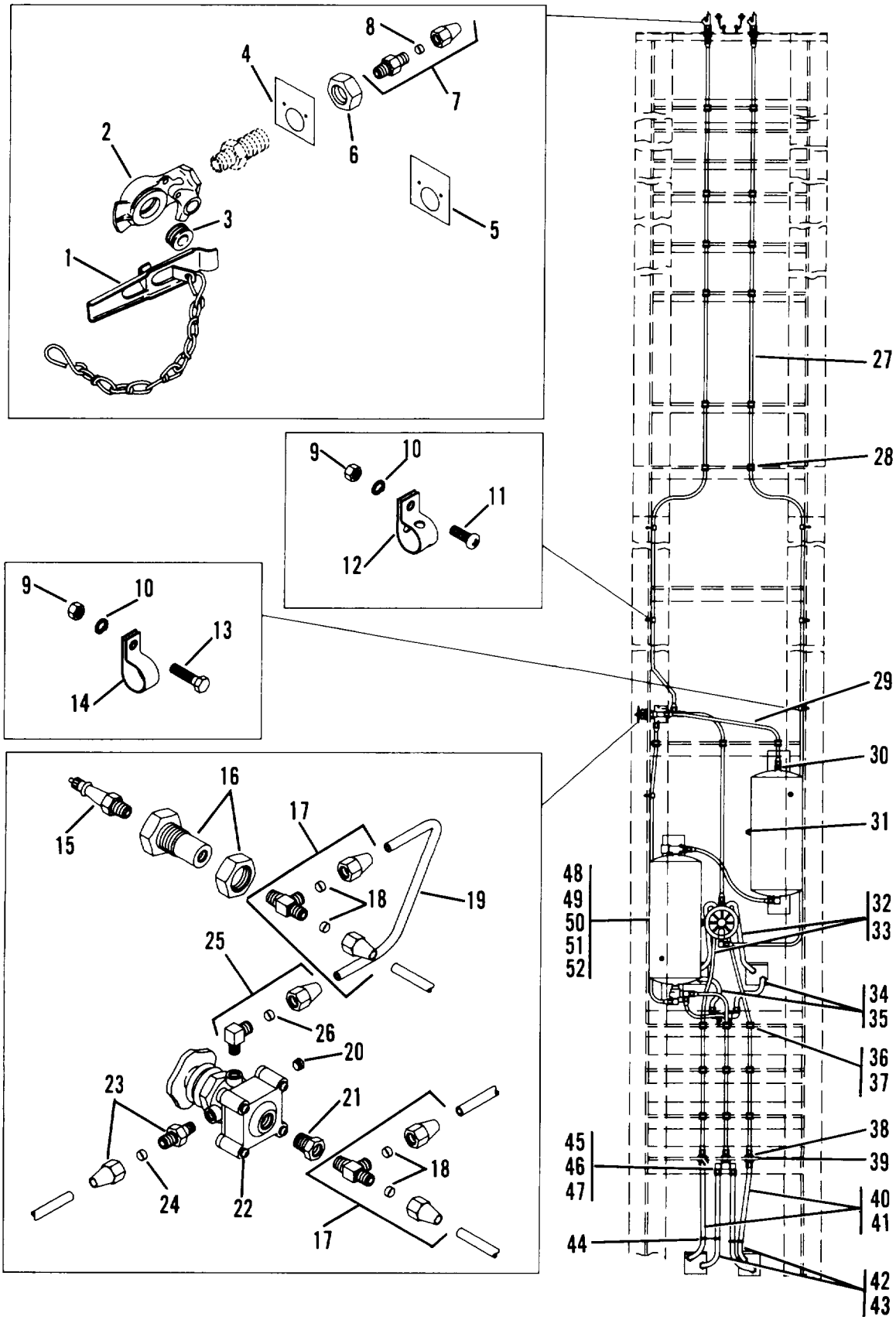

Figure 19. Brake System (Sheet 1 of 2)

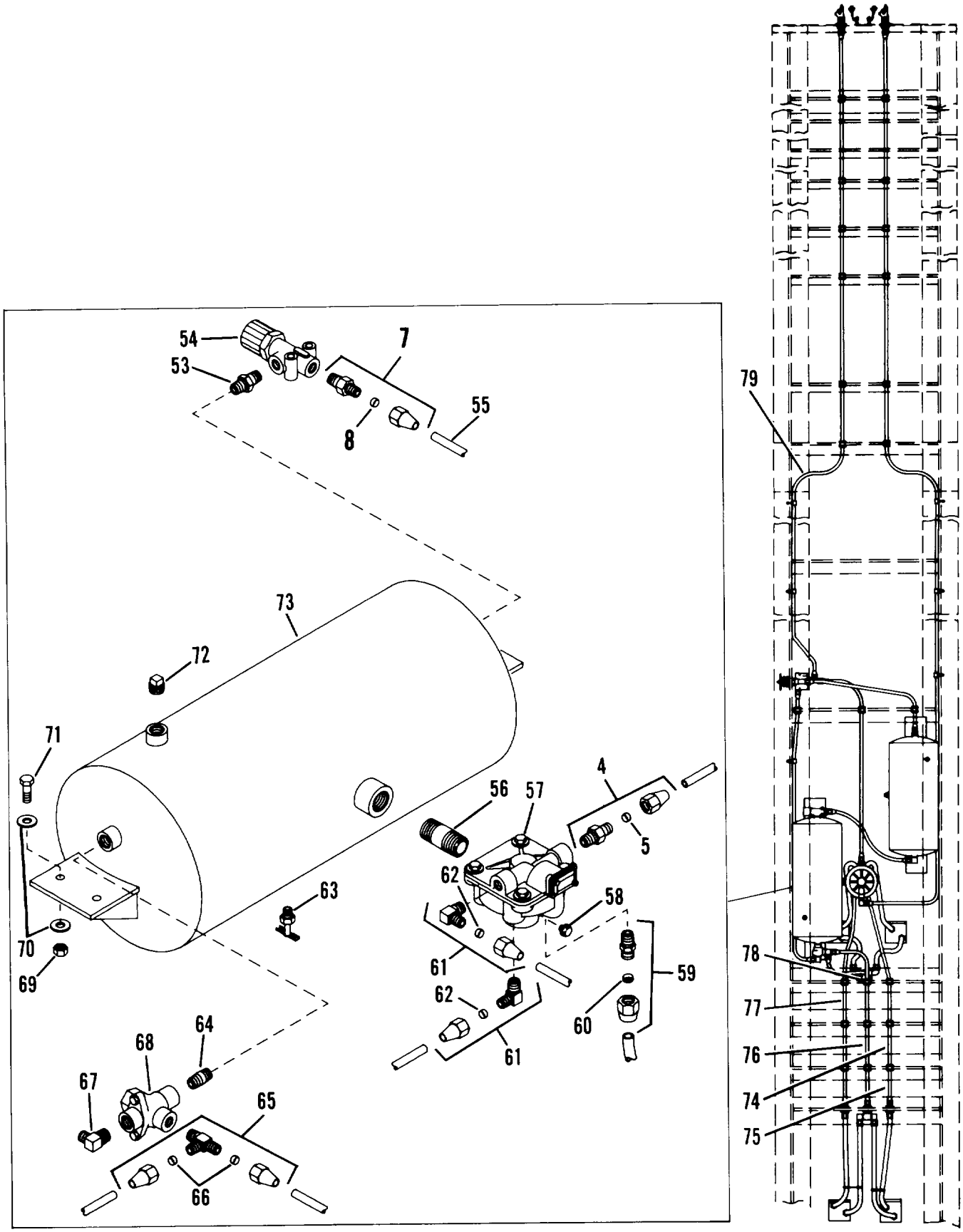

Figure 19. Brake System (Sheet 2 of 2)

GROUP 1208 AIR BRAKE SYSTEM

FIG.19 BRAKE SYSTEM

(1) ITEM NO	(2) SMR CODE	(3) FSCM	(4) PART NUMBER	(5) DESCRIPTION AND USABLE ON CODE (UOC)	(6) QTY
1	PAOZZ	19207	7411021	DUMMY COUPLING,AUTO	2
2	PFOZZ	96906	MS51846-20	NIPPLE,PIPE	1
2	PAOZZ	96906	MS35746-1	COUPLING HALF,QUICK	2
3	PAOZZ	96906	MS35748-1	PACKING,PREFORMED	2
4	PAOZZ	96906	MS53007-1	PLATE, SERVICE	1
5	PFOZZ	19207	CPR102321-1	INSERT,TUBE FITTING	1
5	PAOZZ	96906	MS53007-2	PLATE, EMERGENCY	1
6	PFOZZ	19207	8330281	NUT	2
7	PFOZZ	96906	MS39179-5	ADAPTER,STRAIGHT,PI	7
9	PAOZZ	96906	MS51968-2	NUT,PLAIN,HEXAGON	10
10	PAOZZ	96906	MS35338-44	WASHER,LOCK	10
11	PAOZZ	96906	MS35206-281	SCREW,MACHINE	6
12	PAOZZ	19207	10905840	STRAP,TIEDOWN,ELECT	6
13	PAOZZ	96906	MS90726-8	SCREW,CAP,HEXAGON H	4
14	PAOZZ	96906	MS21333-36	CLAMP,LOOP	4
15	PFOZZ	19207	8376442	VALVE,PNEUMATIC TAN	1
16	PFOZZ	19207	5232954	COUPLING,PIPE	3
17	PFOZZ	96906	MS39191-2	TEE,PIPE TO TUBE	2
18	PAOZZ	19207	CPR102321-1	.INSERT,TUBE FITTING	2
19	MOOZZ	9W125	CPR104420-2-19	TUBING MAKE FROM CPR104420-2	1
20	PFOZZ	66640	9112001	PLUG,PIPE	1
21	PFOZZ	79470	3200X4X2	REDUCER,PIPE	1
22	PFOZZ	19207	12275337	BRAKE,CONTROL,VALVE	1
23	PFOZZ	96906	MS39179-4	ADAPTER,STRAIGHT,PI	1
24	PAOZZ	19207	CPR102321-1	.INSERT,TUBE FITTING	1
25	PFOZZ	96906	MS39182-2	ELBOW,PIPE TO TUBE	1
26	PAOZZ	19207	CPR102321-1	.INSERT,TUBE FITTING	1
27	MOOZZ	9W125	CPR104420-2-270	TUBING MAKE FROM CPR104420-2	1
28	PFOZZ	96906	MS35489-101	GROMMET,NONMETALLIC	23
29	MOOZZ	9W125	CPR104420-2-28	TUBING MAKE FROM CPR104420-2	1
30	PFOZZ	96906	MS39179-6	ADAPTER,STRAIGHT,PI	1
31	PFOZZ	96906	MS20913-6S	PLUG,PIPE	1
32	MOOZZ	9W125	MIL-H-3992-36	HOSE MAKE FROM MIL-H-3992	2
33	MFOZZ	79470	H33806-36	HOSE MAKE FROM P/N H33806 (79470)	1
34	MOOZZ	9W125	MIL-H-3992-38	HOSE MAKE FROM MIL-H-3992	2
35	MFOZZ	79470	H33806-38	HOSE NON METALIC MAKE FROM P/N H33806 (79470)	1
36	PFOZZ	96906	MS39179-6	ADAPTER,STRAIGHT,PI	1
37	PFOZZ	19207	7364214	ELBOW,PIPE	2
38	PFOZZ	96906	MS51819-7	ADAPTER,STRAIGHT,PI	4
39	PFOZZ	19207	5232954	COUPLING,PIPE	1
40	MOOZZ	9W125	MIL-H-3992-45	HOSE MAKE FROM MIL-H-3992	4
41	MOOZZ	79470	H33806-45	HOSE MAKE FROM P/N H33806 (79470)	45
42	MOOZZ	9W125	MIL-H-3992-45	HOSE MAKE FROM MIL-H-3992	45
43	MOOZZ	79470	H33806-45	HOSE NON METALIC MAKE FROM P/N H33806 (79470)	1
44	PFOZZ	19207	11669579	SEPARATOR,HOSE	4
46	PFOZZ	96906	MS14305-2UA	TEE,PIPE	1

(1) ITEM NO	(2) SMR CODE	(3) FSCM	(4) PART NUMBER	(5) DESCRIPTION AND USABLE ON CODE (UOC)	(6) QTY
47	PFOZZ	96906	MS51952-2	ELBOW,PIPE	2
48	PFOZZ	19207	12275507	MANIFOLD,EXHAUST	1
49	PAOZZ	96906	MS90725-35	BOLT,MACHINE	2
50	PAOZZ	96906	MS27183-13	WASHER,FLAT	2
51	PAOZZ	96906	MS51922-9	NUT,SELF-LOCKING,HE	2
52	MOOZZ	9W125	CPR104420-2-62	TUBING MAKE FROM CPR104420-2	1
53	PFOZZ	19207	7089777-1	REDUCER,PIPE	1
54	PFOZZ	19207	11621099	VALVE,SAFETY RELIEF	1
55	MOOZZ	9W125	CPR104420-2-23	TUBING MAKE FROM CPR104420-2	1
56	PFOZZ	96906	MS51953-101B	NIPPLE,PIPE	1
57	PAOZZ	96906	MS53004-2	VALVE,RELAY,EMERGEN	1
58	PFOZZ	19204	8409873	PLUG,PIPE	1
59	PFOZZ	96906	MS51819-10	ADAPTER,STRAIGHT,PI	10
60	PAOZZ	19207	CPR102321-1	.INSERT,TUBE FITTING	1
61	PFOZZ	96906	MS39182-3	ELBOW,PIPE TO TUBE	3
62	PAOZZ	19207	CPR102321-1	.INSERT,TUBE FITTING	1
63	PAOZZ	96906	MS35782-5	COCK,DRAIN	2
64	PFOZZ	96906	MS51846-39	NIPPLE,PIPE	1
65	PFOZZ	96906	MS39191-3	TEE,PIPE TO TUBE	1
66	PAOZZ	19207	CPR102321-1	.INSERT,TUBE FITTING	2
67	PFOZZ	96906	MS39182-5	ELBOW,PIPE TO TUBE	2
68	PFOZZ	19207	12267073	VALVE,SHUTTLE	1
69	PAOZZ	96906	MS51922-17	NUT,SELF-LOCKING,HE	8
70	PAOZZ	96906	MS27183-15	WASHER,FLAT	16
71	PAOZZ	96906	MS90728-61	SCREW,CAP,HEXAGON H	8
72	PFOZZ	96906	MS20913-3S	COUPLING HALF,QUICK	2
73	PAOZZ	19207	12267070	TANK,PRESSURE	2
74	MOOZZ	9W125	CPR104420-2-41	TUBING MAKE FROM CPR104420-2	1
75	MOOZZ	9W125	CPR104420-2-40	TUBING MAKE FROM CPR104420-2	1
76	MOOZZ	9W125	CPR104420-2-35	TUBING MAKE FROM CPR104420-2	1
77	MOOZZ	9W125	CPR104420-2-41	TUBING MAKE FROM CPR104420-2	1
78	MOOZZ	9W125	CPR104420-2-13	TUBING MAKE FROM CPR104420-2	1
79	MOOZZ	9W125	CPR104420-2-212	TUBING MAKE FROM CPR104420-2	1

END OF FIGURE

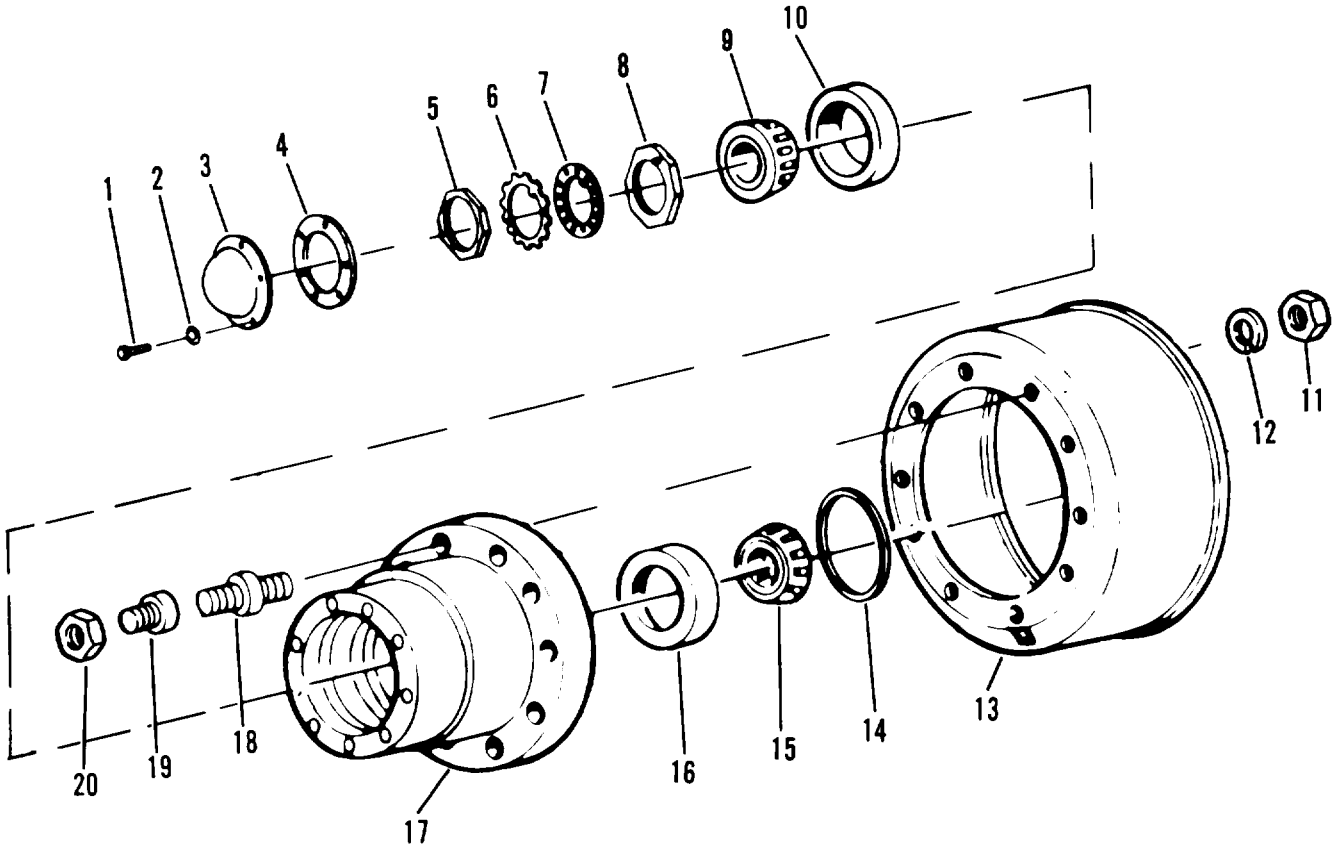

Figure 20. Hub and Brake Drum

(1) ITEM NO	(2) SMR CODE	(3) FSCM	(4) PART NUMBER	(5) DESCRIPTION AND USABLE ON CODE (UOC)	(6) QTY
				GROUP 13 WHEELS	
				GROUP 1311 WHEEL ASSEMBLY	
				FIG.20 HUB AND BRAKE DRUM	
1	PAOZZ	96906	MS90728-30	BOLT,MACHINE	24
2	PAOZZ	96906	MS35338-45	WASHER,LOCK	24
3	PFOZZ	56697	304106	COVER,ACCESS	2
4	PAOZZ	26337	305106	PACKING,PREFORMED	2
5	PAOZZ	56697	103102-001	NUT,PLAIN,OCTAGON	2
6	PAOZZ	56697	105106	WASHER	2
7	PAOZZ	56697	105107	WASHER,KEY	2
8	PAOZZ	56697	103103-002	NUT,PLAIN,OCTAGON	2
9	PAOZZ	60038	643	CONE AND ROLLERS,TA	2
10	PAOZZ	60038	632	CUP,TAPERED ROLLER	2
11	PAOZZ	56697	402109	NUT,PLAIN,HEXAGON	20
12	PAOZZ	56697	403161	WASHER,LOCK	20
13	PAOFF	56697	3060301-002	BRAKE DRUM	2
14	PAOZZ	56697	6-295	SEAL,PLAIN	2
15	PAOZZ	60038	749	CONE AND ROLLERS,TA	2
16	PAOZZ	60038	742	CUP,TAPERED ROLLER	2
17	XBOZZ	56697	300137-001	HUB,WHEEL	2
18	PAOZZ	56697	301110-003R	STUD, SHOULDERED RH	10
18	PAOZZ	56697	301110-003L	STUD, SHOULDERED LH	10
19	PAOZZ	56697	303100	NUT, WHEEL RH	10
19	PAOZZ	56697	303101	NUT, CAP LH	10
20	PAOZZ	96906	MS51983-4	NUT,PLAIN,SINGLE BA RIGHT HAND	10
20	PAOZZ	96906	MS51983-3	NUT,PLAIN,SINGLE LH LEFT HAND	10
				END OF FIGURE	

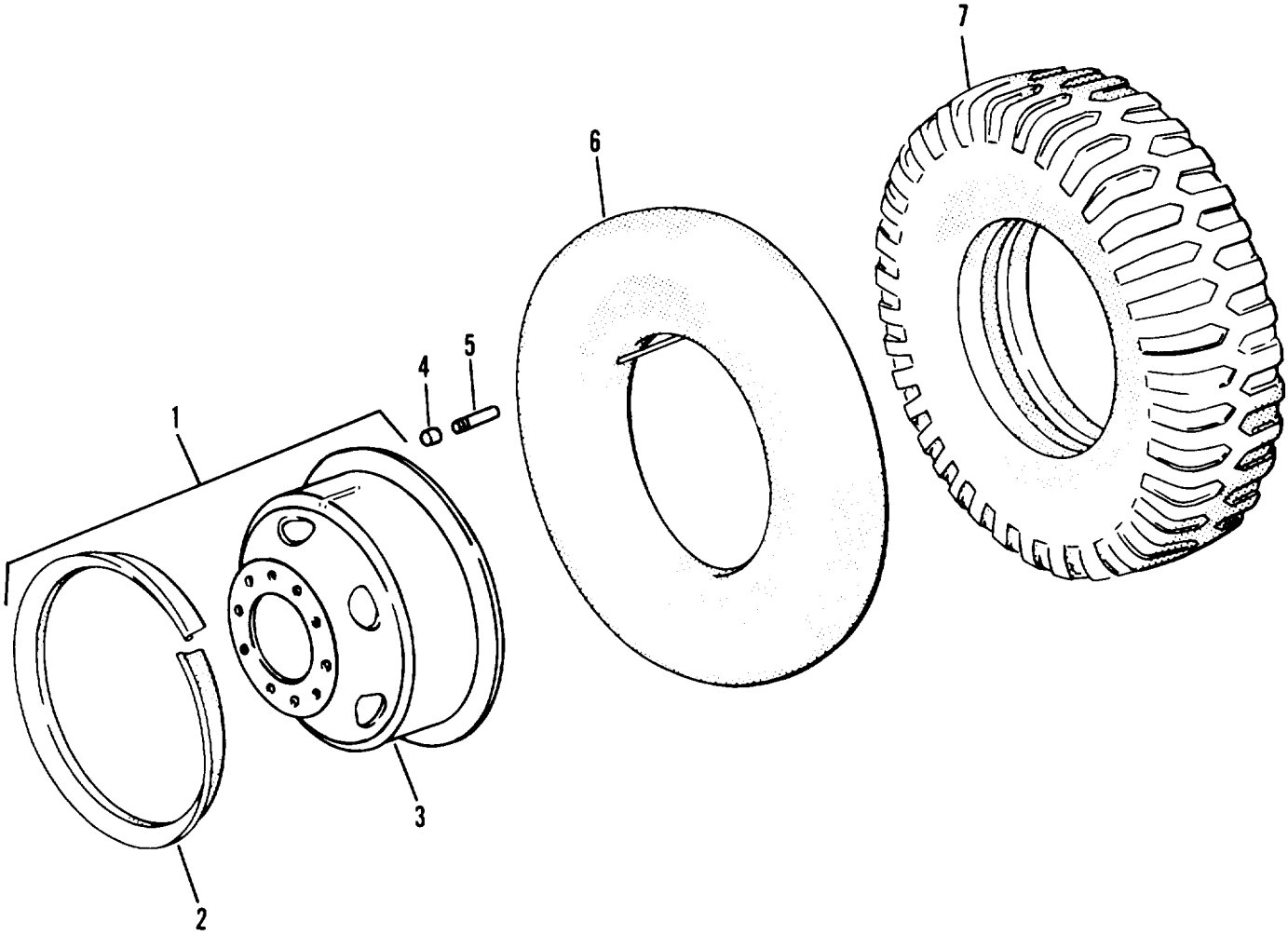

Figure 21. Tire and Wheel Assembly

(1) ITEM NO	(2) SMR CODE	(3) FSCM	(4) PART NUMBER	(5) DESCRIPTION AND USABLE ON CODE (UOC)	(6) QTY
				GROUP 1311 WHEEL ASSEMBLY	
				FIG.21 TIRE & WHEEL ASSEMBLY	
1	PFOOZ	96906	MS53044-6	WHEEL,PNEUMATIC TIR	9
2	PAOZZ	96906	MS53045-3	.RING,SIDE,AUTOMATIV	1
3	PAOZZ	19207	7389493	.BRAKE DRUM WHEEL	1
4	PAOZZ	96906	MS51375-1	CAP,VALVE	9
5	PAOZZ	79934	TR78A	VALVE,PNEUMATIC TIR	9
6	PAOZZ	81348	ZZ-I-550/G2/11.0 C-20/TR78A/ONCTR	INNER TUBE,PNEUMATI	9
7	PAOFH	81349	MIL-T-12459/CLCC /SA/1100-20/F/CC	TIRE,PNEUMATIC	9
				END OF FIGURE	

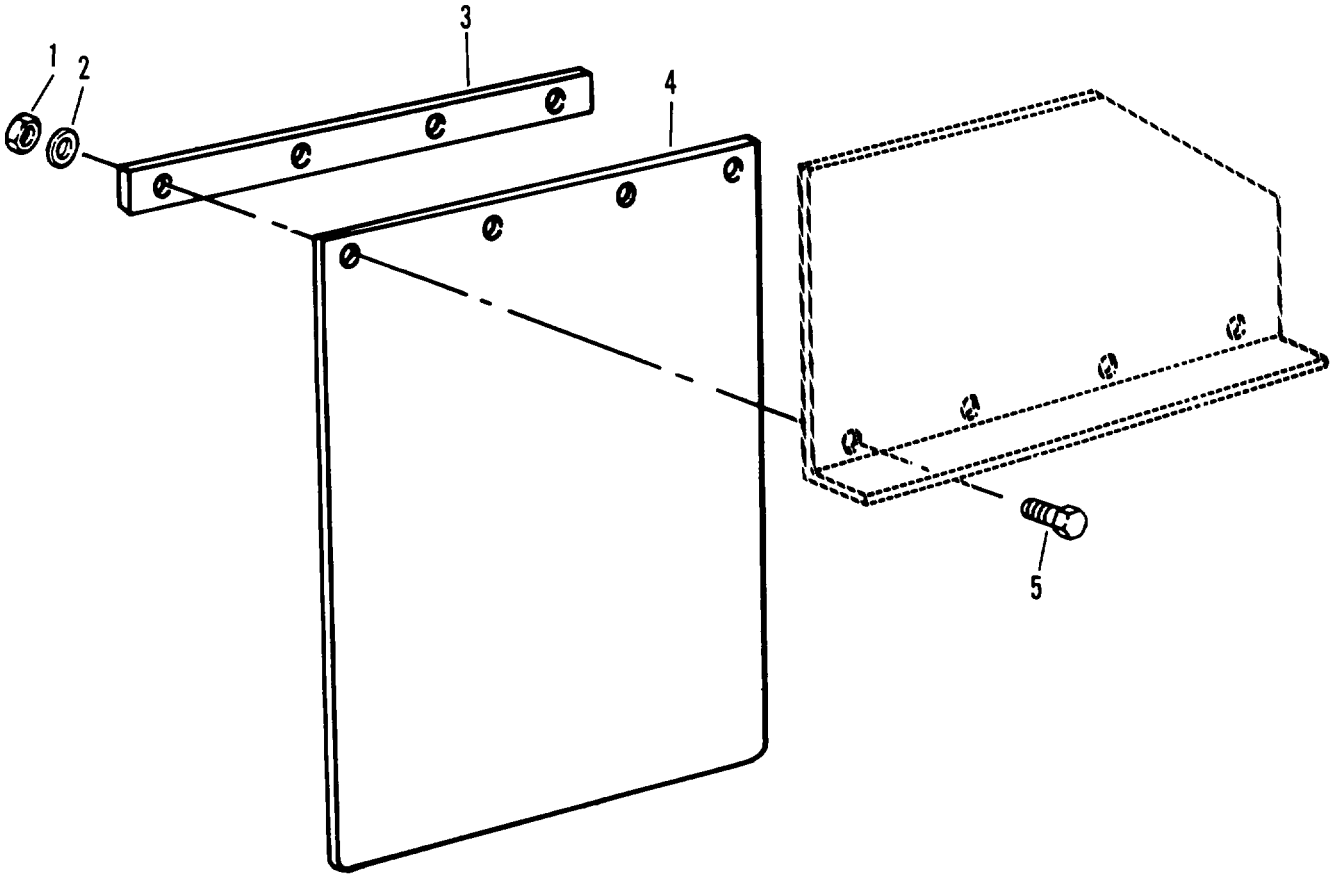

Figure 22. Mud Flap

(1) ITEM NO	(2) SMR CODE	(3) FSCM	(4) PART NUMBER	(5) DESCRIPTION AND USABLE ON CODE (UOC)	(6) QTY
				GROUP 15 FRAME,TOWING ATCHMT AND	
				DRAWBARS	
				GROUP 1501 FRAME ASSEMBLY	
				FIG.22 MUD FLAP	
1	PAOZZ	96906	MS51967-2	NUT,PLAIN,HEXAGON	8
2	PAOZZ	96906	MS35338-44	WASHER,LOCK	8
3	PFOZZ	19207	8722139	BAND,RETAINING	2
4	PCOZZ	19207	8739106	GUARD,SPLASH,VEHICU	2
5	PAOZZ	96906	MS90725-10	SCREW,CAP,HEXAGON H	8
				END OF FIGURE	

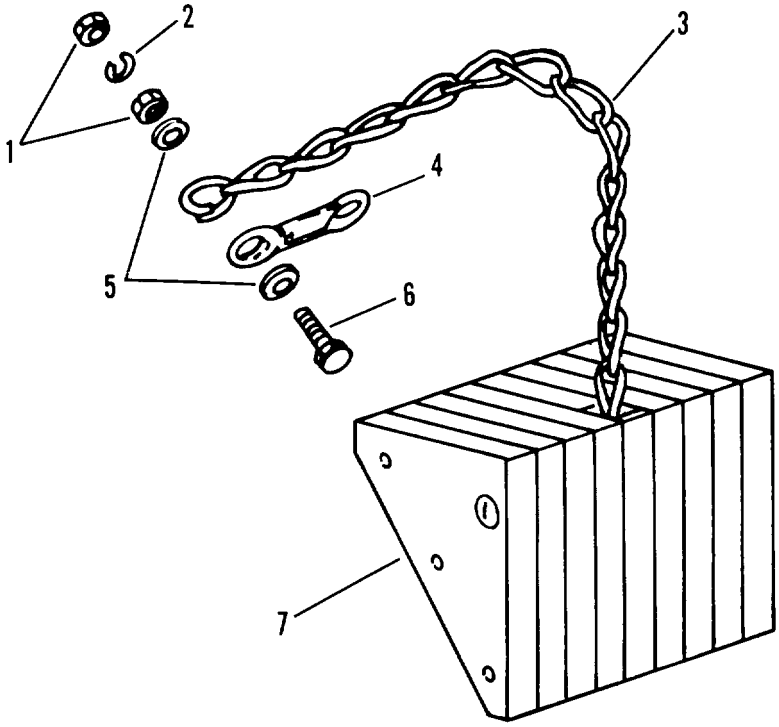

Figure 23. Chock Block

(1) ITEM NO	(2) SMR CODE	(3) FSCM	(4) PART NUMBER	(5) DESCRIPTION AND USABLE ON CODE (UOC)	(6) QTY
				GROUP 1501 FRAME ASSEMBLY	
				FIG.23 CHOCK BLOCK	
1	PAOZZ	96906	MS51968-8	NUT,PLAIN,HEXAGON	4
2	PAOZZ	96906	MS35335-35	WASHER,LOCK	2
3	PFOZZ	16003	C43974	CHAIN,WELDLESS	72
4	PFOZZ	19207	7979228	SNAP HOOK	2
5	PAOZZ	96906	MS27183-14	WASHER,FLAT	4
6	PAOZZ	96906	MS90726-115	SCREW,CAP,HEXAGON H	2
7	PFOZZ	96906	MS52127-3	CHOCK,WHEEL TRACK	2
				END OF FIGURE	

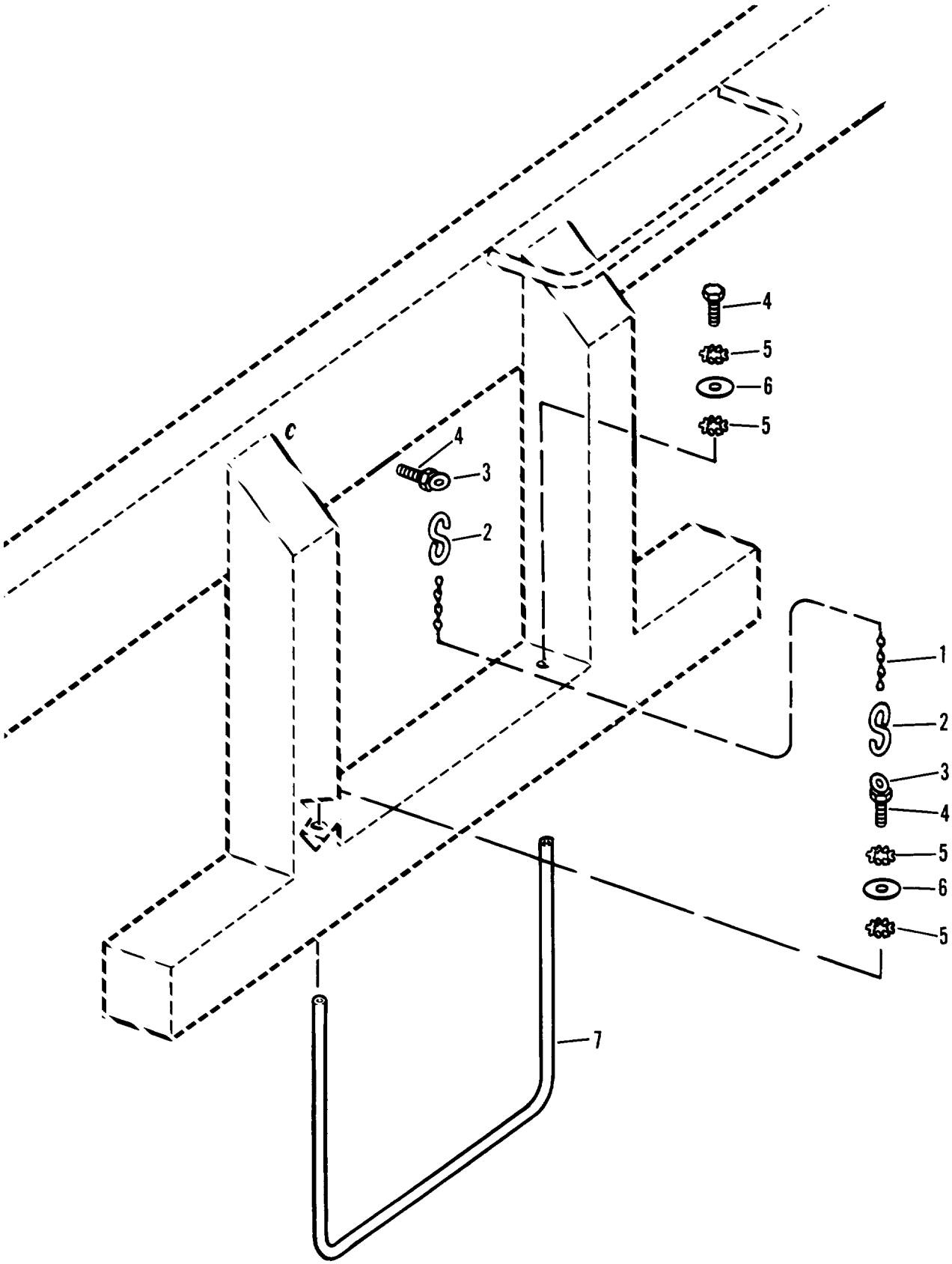

Figure 24. Step

(1) ITEM NO	(2) SMR CODE	(3) FSCM	(4) PART NUMBER	(5) DESCRIPTION AND USABLE ON CODE (UOC)	(6) QTY
				GROUP 1501 FRAME ASSEMBLY	
				FIG.24 STEP	
1	PFOZZ	16003	C43974	CHAIN,WELDLESS	8
2	PFOZZ	96906	MS87006-43	HOOK,CHAIN,S	2
3	PFOZZ	96906	MS51930-1	PAD EYE	2
4	PAOZZ	96906	MS90727-58	SCREW,CAP,HEXAGON H	2
5	PAOZZ	96906	MS35333-42	WASHER,LOCK	4
6	PAOZZ	96906	MS27183-15	WASHER,FLAT	2
7	PFOZZ	19207	10944736	LADDER,VEHICLE BOAR	1
				END OF FIGURE	

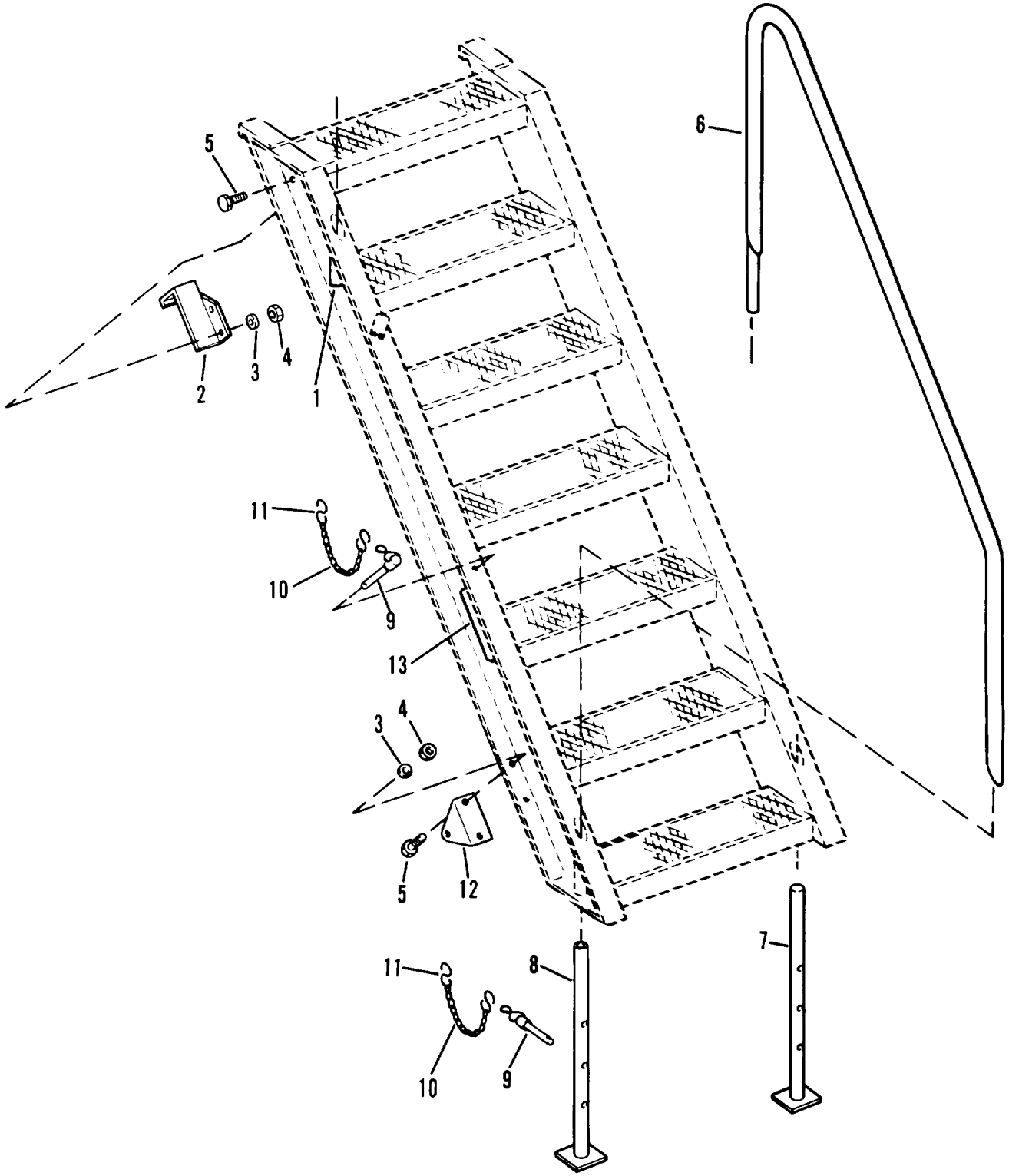

Figure 25. Ladder Assembly

(1) ITEM NO	(2) SMR CODE	(3) FSCM	(4) PART NUMBER	(5) DESCRIPTION AND USABLE ON CODE (UOC)	(6) QTY
				GROUP 1501 FRAME ASSEMBLY	
				FIG.25 LADDER ASSEMBLY	
1	PAOZZ	19207	8713389	PIN,QUICK RELEASE	1
2	PFOZZ	19207	8722175	BRACKET,MOUNTING,LA	2
3	PAOZZ	96906	MS35338-46	WASHER,LOCK	8
4	PAOZZ	96906	MS51968-8	NUT,PLAIN,HEXAGON	8
5	PAOZZ	96906	MS90727-58	SCREW,CAP,HEXAGON H	8
6	PFOZZ	19207	8722217	RAIL, HAND	1
7	PFOZZ	19207	8722220	LEG,SEMITRAILER RET	1
8	PFOZZ	19207	8722221	LEG,SEMITRAILER RET	1
9	PAOZZ	96906	MS17990-622	PIN,QUICK RELEASE	2
10	PFOZZ	80205	NAS1042-18	SHACKLE	1
11	PFOZZ	96906	MS87006-3	HOOK,CHAIN,S	10
12	PFOZZ	19207	8722172	BRACKET	2
13	PAOZZ	19207	8713390	PIN,QUICK RELEASE	2
				END OF FIGURE	

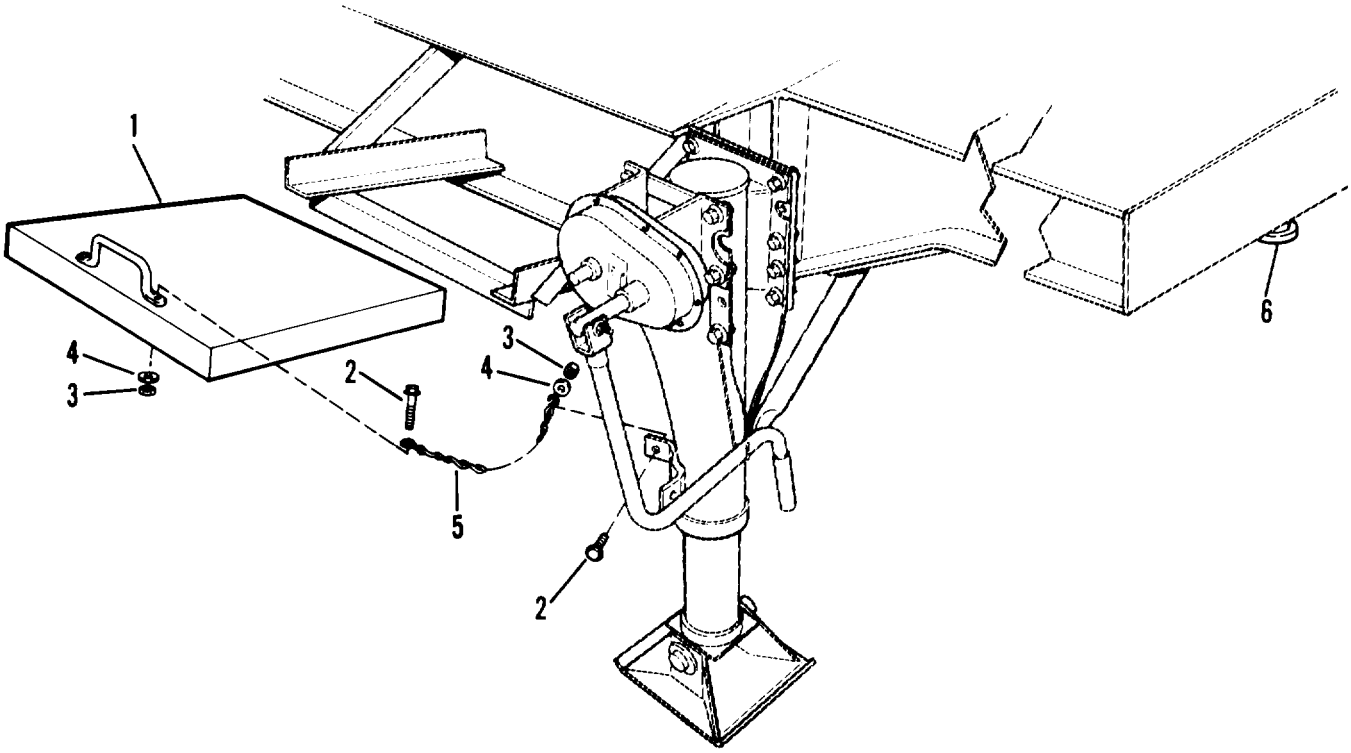

Figure 26. Float Pad Assembly (Ground Board)

(1) ITEM NO	(2) SMR CODE	(3) FSCM	(4) PART NUMBER	(5) DESCRIPTION AND USABLE ON CODE (UOC)	(6) QTY
				GROUP 1501 FRAME ASSEMBLY	
				FIG.26 FLOAT PAD ASSY(GROUND BOARD)	
1	PFOZZ	19207	7417585	BOARD GROUND JACK	2
2	PAOZZ	96906	MS90726-25	SCREW,CAP,HEXAGON H	4
3	PAOZZ	96906	MS51968-8	NUT,PLAIN,HEXAGON	4
4	PAOZZ	96906	MS35335-35	WASHER,LOCK	4
5	PFOZZ	81348	RR-C-271	CHAIN	2
6	PAOZZ	19207	7067973	KINGPIN,FIFTH WHEEL	1
				END OF FIGURE	

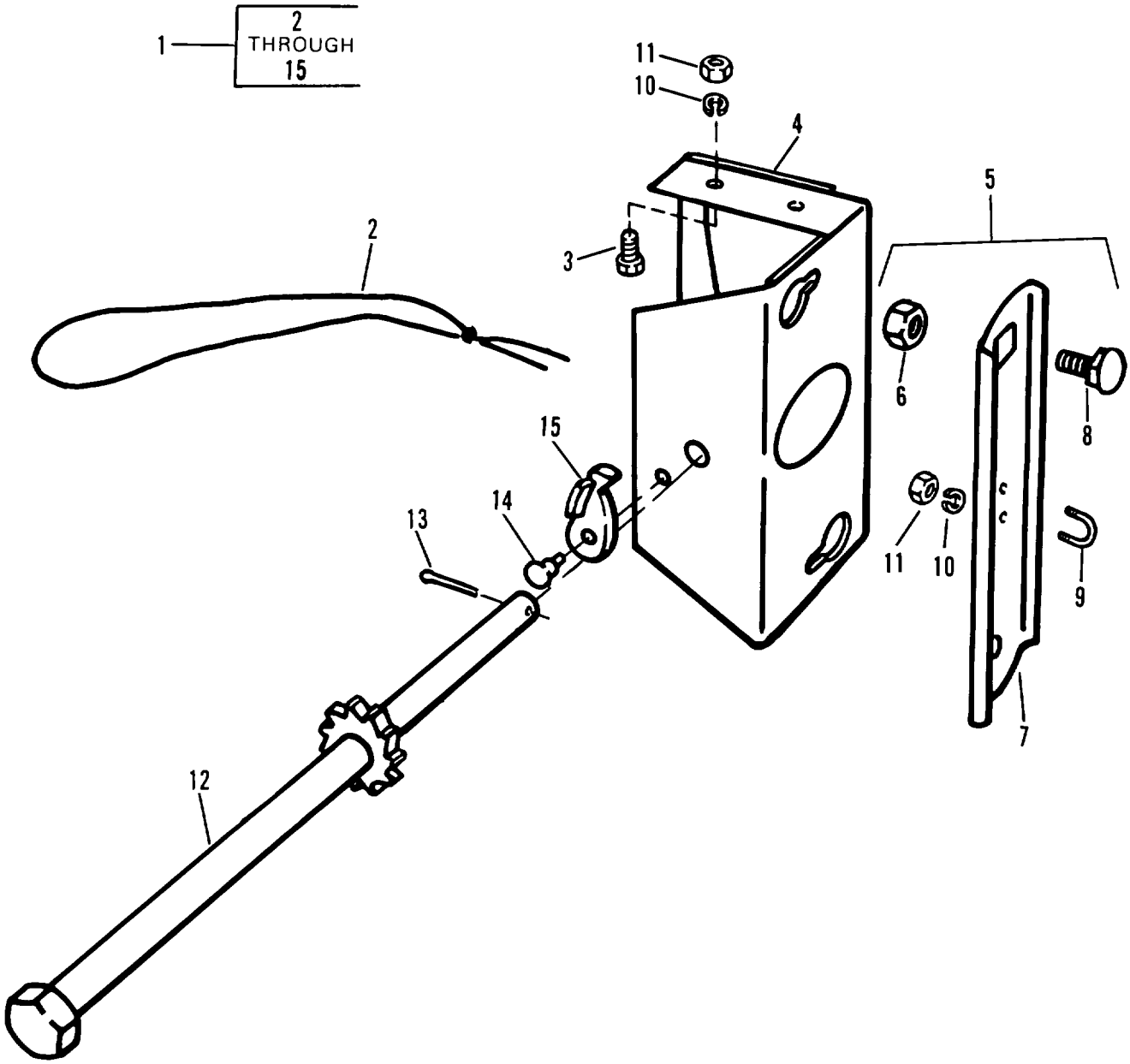

Figure 27. Spare Tire Carrier

GROUP 1504 SPARE WHEEL CARRIER

FIG.27 SPARE TIRE CARRIER

(1) ITEM NO	(2) SMR CODE	(3) FSCM	(4) PART NUMBER	(5) DESCRIPTION AND USABLE ON CODE (UOC)	(6) QTY
1	PFOZZ	19207	11625029	CARRIER ASSEMBLY,SP	1
2	PFOZZ	19207	7739705	.ROPE,WIRE	1
3	PAOZZ	96906	MS90726-113	.SCREW,CAP,HEXAGON H	6
4	PFOZZ	19207	11625335	.RACK,TIRE	1
5	PFOOO	19207	11625340	.SUPPORT ASSEMBLY	1
6	PAOZZ	19207	7418892	..NUT,PLAIN,HEXAGON	6
7	PFOZZ	19207	11625341	..SUPPORT,WHEEL	1
8	PAOZZ	19207	7418891	..BOLT,SQUARE NECK	6
9	PFOZZ	19207	7739666	..BOLT,U	1
10	PAOZZ	96906	MS35338-44	..WASHER,LOCK	6
11	PAOZZ	96906	MS51967-2	..NUT,PLAIN,HEXAGON	6
12	PFOZZ	19207	7521157	.RATCHET WHEEL	1
13	PAOZZ	96906	MS24665-495	.PIN,COTTER	1
14	PAOZZ	19207	8327759	.RIVET,SOLID	1
15	PFOZZ	19207	7521156	.PAWL	1

END OF FIGURE

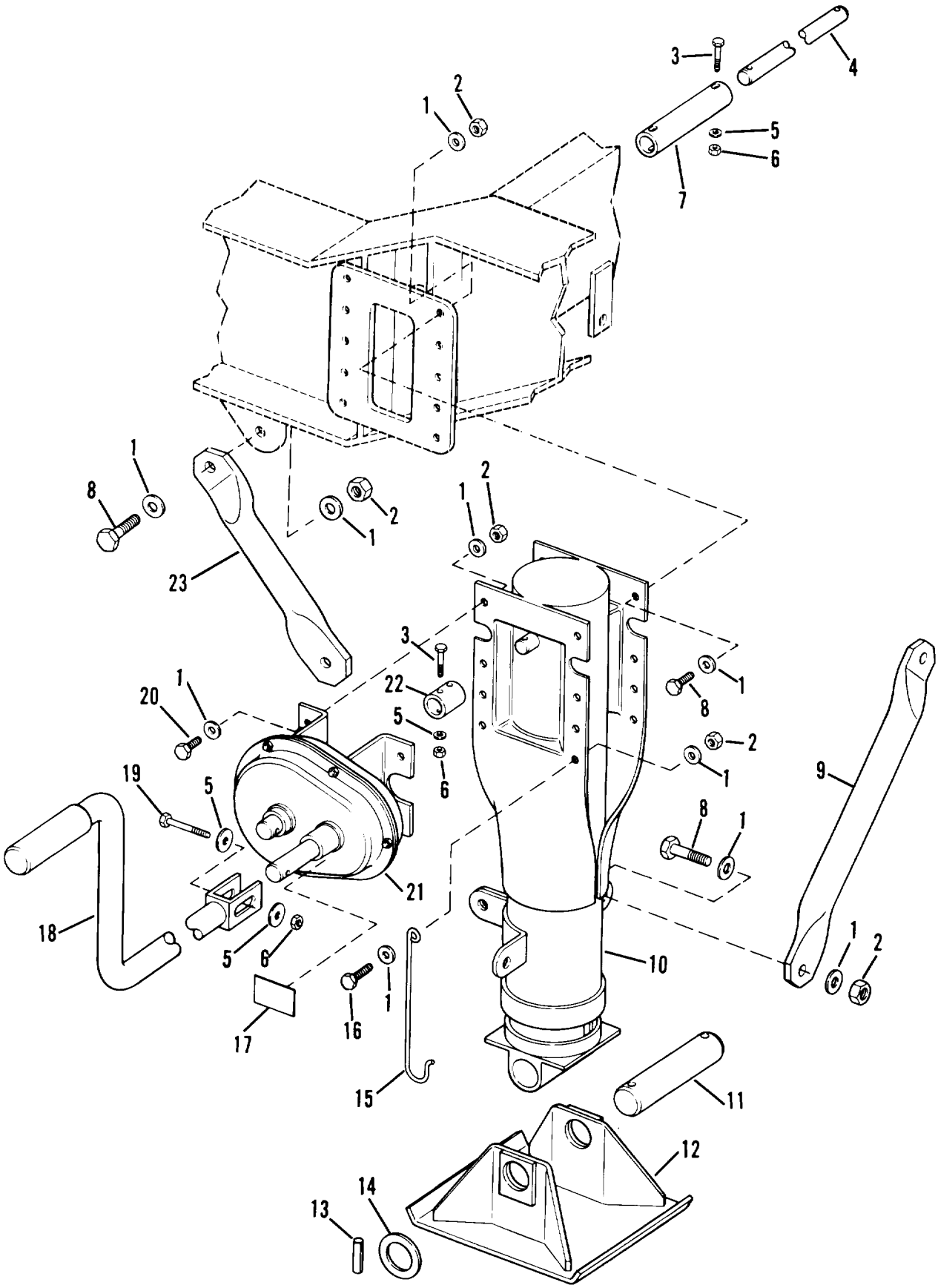

Figure 28. Landing Leg

(1) ITEM NO	(2) SMR CODE	(3) FSCM	(4) PART NUMBER	(5) DESCRIPTION AND USABLE ON CODE (UOC)	(6) QTY
				GROUP 1507 LANDING GEAR	
				FIG.28 LANDING LEG	
1	PAOZZ	96906	MS27183-21	WASHER,FLAT	57
2	PAOZZ	96906	MS51922-49	NUT,SELF-LOCKING,HE	29
3	PAOZZ	96906	MS90725-67	SCREW,CAP,HEXAGON H	6
4	PFOZZ	19207	11625071	SHAFT,STRAIGHT	1
5	PAOZZ	96906	MS27183-15	WASHER,FLAT	8
6	PAOZZ	96906	MS51922-17	NUT,SELF-LOCKING,HE	7
7	PFOZZ	19207	11625125	COUPLING,SHAFT,RIGI	2
8	PAOZZ	96906	MS90725-164	SCREW,CAP,HEXAGON H	24
9	PFOZZ	19207	11625075-1	BRACE,TUBE	2
10	PAOZZ	19207	11625119	LEG,SEMITRAILER RET	2
11	PFOZZ	19207	11625085	SHAFT,STRAIGHT	2
12	PFOZZ	19207	11625084	SHOE,JACK SUPPORT	2
13	PAOZZ	96906	MS171725	PIN,SPRING	4
14	PAOZZ	19207	11625086	WASHER,FLAT	4
15	PFOZZ	19207	11625428	HOLDER,CRANK	1
16	PAOZZ	96906	MS90725-160	SCREW,CAP,HEXAGON H	1
17	PFOZZ	19207	11625138	DECAL	1
18	PFOOZ	19207	11640134-1	CRANK,HAND	1
19	PAOZZ	96906	MS90725-68	SCREW,CAP,HEXAGON H	1
20	PAOZZ	96906	MS90725-162	SCREW,CAP,HEXAGON H	4
21	PAOZZ	19207	11625431	DRIVE UNIT,ANGLE	1
22	PFOZZ	19207	11625128	COUPLING,LANDING LE	1
23	PFOZZ	19207	11625075	BRACE,LANDING GEAR	2

END OF FIGURE

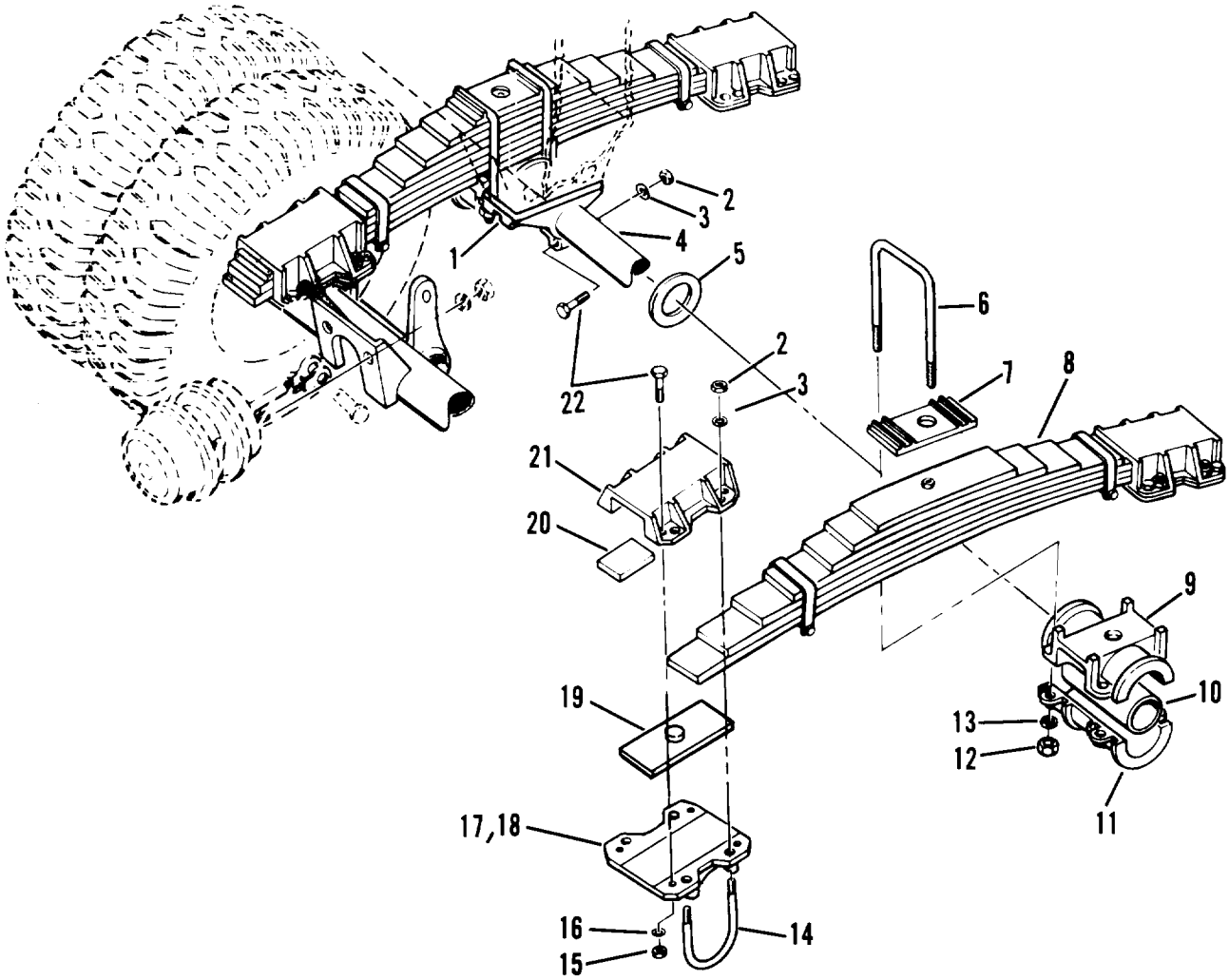

Figure 29. Suspension

(1) ITEM NO	(2) SMR CODE	(3) FSCM	(4) PART NUMBER	(5) DESCRIPTION AND USABLE ON CODE (UOC)	(6) QTY
				GROUP 16 SPRINGS & SHOCK ABSORBERS	
				GROUP 1601 SPRINGS	
				FIG.29 SUSPENSION	
1	XDFZZ	92967	10476-01	HANGER, TRUNION	2
2	PAFZZ	92967	841-00	NUT,SELF-LOCKING,HE	20
3	PAFZZ	92967	817-00	WASHER,FLAT	32
4	PFFZZ	92967	893-01	TUBE,TRUNNION	1
5	PAFZZ	92967	895-00	WASHER,FLAT	2
6	PFFZZ	92967	9639-01	BOLT,U	4
7	PFFZZ	92967	9640-00	PLATE,WEAR,LEAF SPR	2
8	PBFZZ	92967	11151-00	SPRING	2
9	PFFZZ	92967	891-00	HUB TRUNNION,UPPER	2
10	PCFZZ	92967	11357-00	BUSHING,TEFLON	2
11	PFFZZ	92967	898-00	TRUNNION,HUB,LOWER	2
12	PAFZZ	92967	836-00	NUT,PLAIN,HEXAGON	8
13	PAFZZ	92967	837-00	WASHER,FLAT	8
14	PFFZZ	92967	10060-01	BOLT,U	8
15	PAFZZ	92967	37-03	NUT,SELF-LOCKING,HE	16
16	PAFZZ	92967	10273-00	WASHER,FLAT	16
17	PFFZZ	92967	9934-02	SEAT,LEAF SPRING	2
18	PFFZZ	92967	10712-00	SEAT,LEAF SPRING NON-ADJUSTABLE	2
19	PFFZZ	92967	10608-00	PLATE,ALIGNMENT,LEA	12
20	PAFZZ	92967	814-00	PAD,CUSHIONING	8
21	PFFZZ	92967	10049-00	CAP,END SPRING	4
22	PAFZZ	96906	MS90727-164	SCREW,CAP,HEXAGON H	16

END OF FIGURE

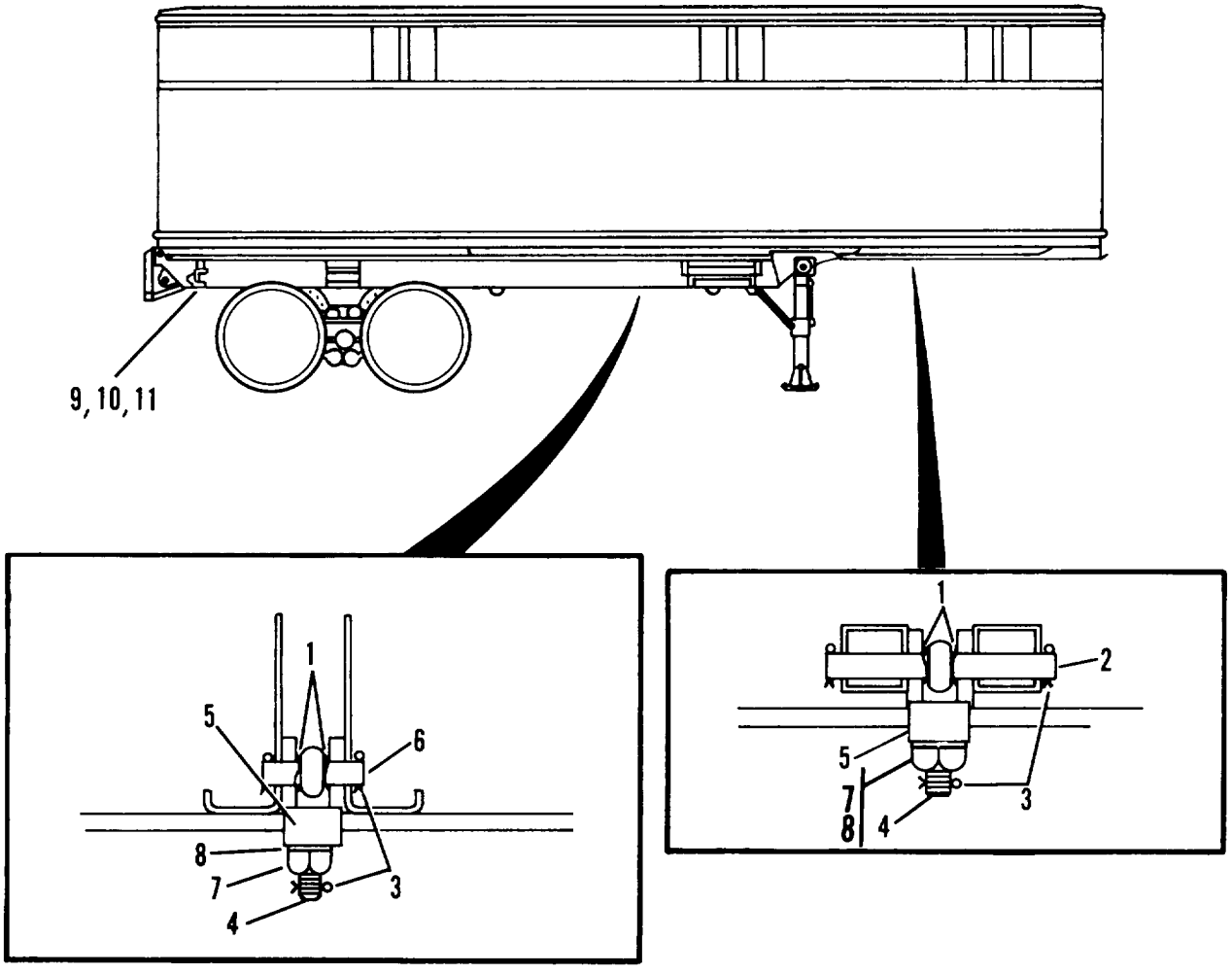

Figure 30. Van Fasteners

(1) ITEM NO	(2) SMR CODE	(3) FSCM	(4) PART NUMBER	(5) DESCRIPTION AND USABLE ON CODE (UOC)	(6) QTY
				GROUP 18 BODY	
				GROUP 1801 BODY	
				FIG.30 VAN FASTENERS	
1	PAOZZ	19207	7057360	WASHER,SPRING TENSI	32
2	PAOZZ	19207	8722119	PIN,STRAIGHT,HEADLE	6
3	PAOZZ	96906	MS24665-355	PIN,COTTER	48
4	PAOZZ	19207	8722122	BOLT EYE	16
5	PAOZZ	19207	8722013	CLAMP,BODY MOUNTING	16
6	PAOZZ	19207	8722118-1	PIN STRAIGHT HEADLE	10
7	PAOZZ	96906	MS51968-23	NUT,PLAIN,HEXAGON	16
8	PAOZZ	96906	MS35340-51	WASHER,LOCK	16
9	PAOZZ	96906	MS51922-13	NUT,SELF-LOCKING,HE	6
10	PAOZZ	96906	MS90727-32	BOLT,MACHINE	6
11	PFOZZ	19207	7018983	BRACKET,DOUBLE ANGL	2
				END OF FIGURE	

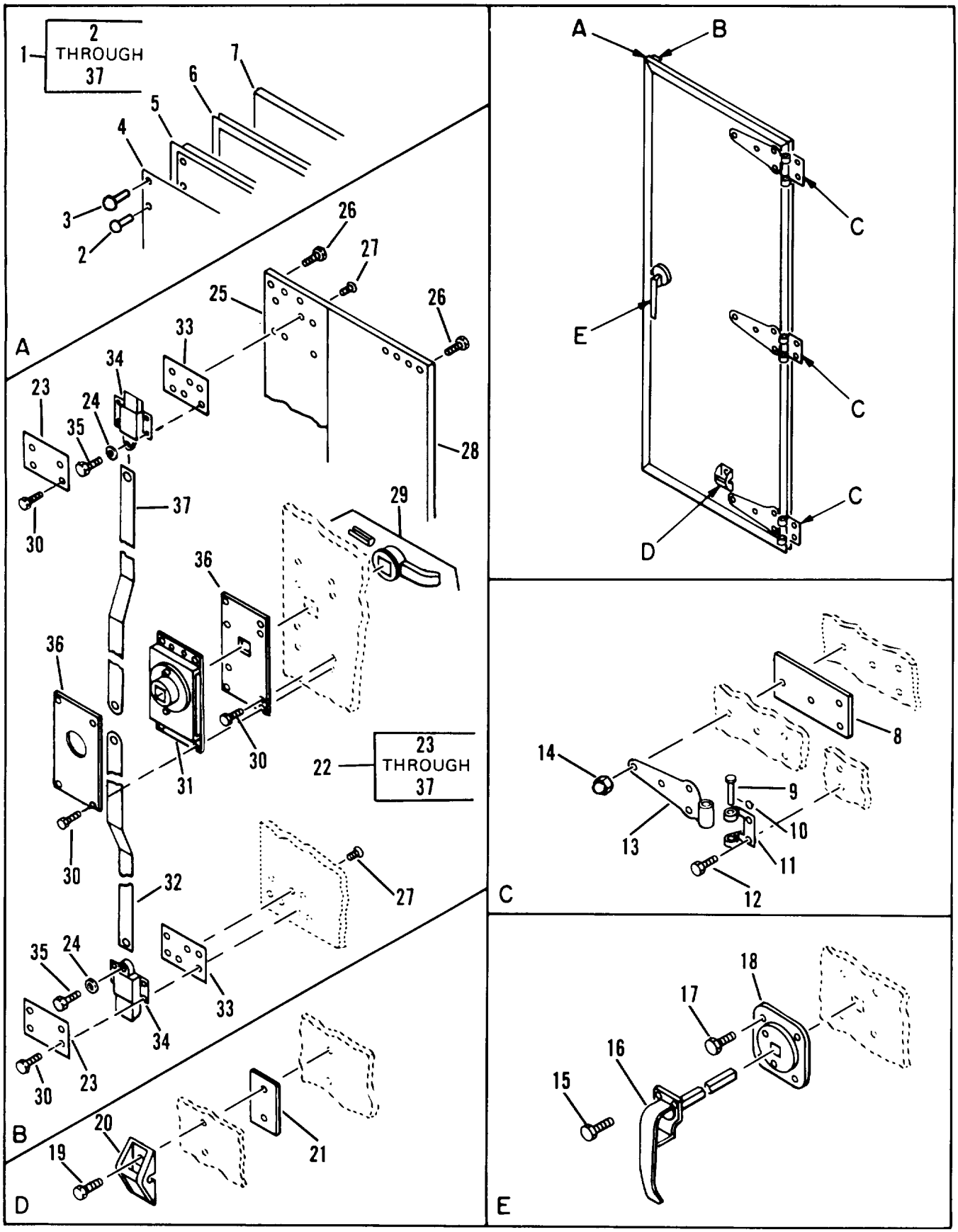

Figure 31. Right Door Assembly

(1) ITEM NO	(2) SMR CODE	(3) FSCM	(4) PART NUMBER	(5) DESCRIPTION AND USABLE ON CODE (UOC)	(6) QTY
				GROUP 1801 BODY	
				FIG.31 RIGHT DOOR ASSEMBLY	
1	PBOFF	19207	10944665	DOOR,METAL,SWINGING	1
2	PAOZZ	96906	MS24662-34	.RIVET,BLIND,.281 IN	54
3	PAOZZ	96906	MS24662-38	.RIVET,BLIND	36
4	PFOZZ	19207	11625049	.PANEL,BUILDING,PREF	1
5	PFOZZ	19207	10944674	.FRAME,ACCESS HODE	1
6	PFOZZ	19207	10944681	.SEAL,RUBBER SPECIAL	222
7	PFOZZ	19207	8383854	.INSULATION	15
8	PFOZZ	19207	10944698-2	.GASKET	3
9	PFOZZ	19207	8722225	.PIN,STRAIGHT,HEADED	3
10	PAOZZ	96906	MS24665-351	.PIN,COTTER	3
11	PFOZZ	19207	8722185	.LEAF,BUTT HINGE	3
12	PAOZZ	96906	MS24693S296	.SCREW,MACHINE	4
13	PFOZZ	19207	8722202	.HINGE,ACCESS DOOR	3
14	PAOZZ	96906	MS24679-67	.NUT,PLAIN,CAP	12
15	PAOZZ	96906	MS24629-56	.SCREW,TAPPING,THREA	3
16	PFOZZ	19207	10356032	.HANDLE,DOOR	1
17	PAOZZ	96906	MS24629-57	.SCREW,TAPPING,THREA	4
18	PFOZZ	19207	11625019	.PLATE,RETAINING,SHA	1
19	PAOZZ	96906	MS90726-59	.SCREW,CAP,HEXAGON H	12
20	PFOZZ	19207	10944682	.HOLDER,DOOR	1
21	PFOZZ	19207	10944698-1	.SPACER,PLATE	1
22	PAOOZ	19207	8747152	.LOCK,VAN DOOR	1
23	PFOZZ	19207	11625027	..PLATE,TOP LATCH	2
24	PAOZZ	96906	MS35338-46	..WASHER,LOCK	2
25	PFOZZ	19207	11625230	..PANEL,BUILDING,PREF	1
26	PAOZZ	96906	MS24627-50	..SCREW,TAPPING,THREA	57
27	PAOZZ	96906	MS21207-14-10	..SCREW,TAPPING,THREA	4
28	PFOZZ	19207	11625033	..PANEL,BUILDING,PREF	1
29	PFOZZ	19207	7264749	..HANDLE,DOOR	1
30	PAOZZ	96906	MS21207-10-10	..SCREW,TAPPING,THREA	8
31	PFOZZ	19207	10911036-2	..LATCH ASSEMBLY,DOOR	1
32	PFOZZ	19207	8722186-2	..CONNECTING LINK,RIG	1
33	PFOZZ	19207	11625028	..PLATE,LATCH,BOTTOM	2
34	PFOZZ	19207	7748911	..BOLT,FLUSH	2
35	PAOZZ	96906	MS90727-58	..SCREW,CAP,HEXAGON H	2
36	PFOZZ	19207	10944702	..COVER,ACCESS	1
37	PFOZZ	19207	8722186-22	..ROD,SIDE DOOR	1

END OF FIGURE

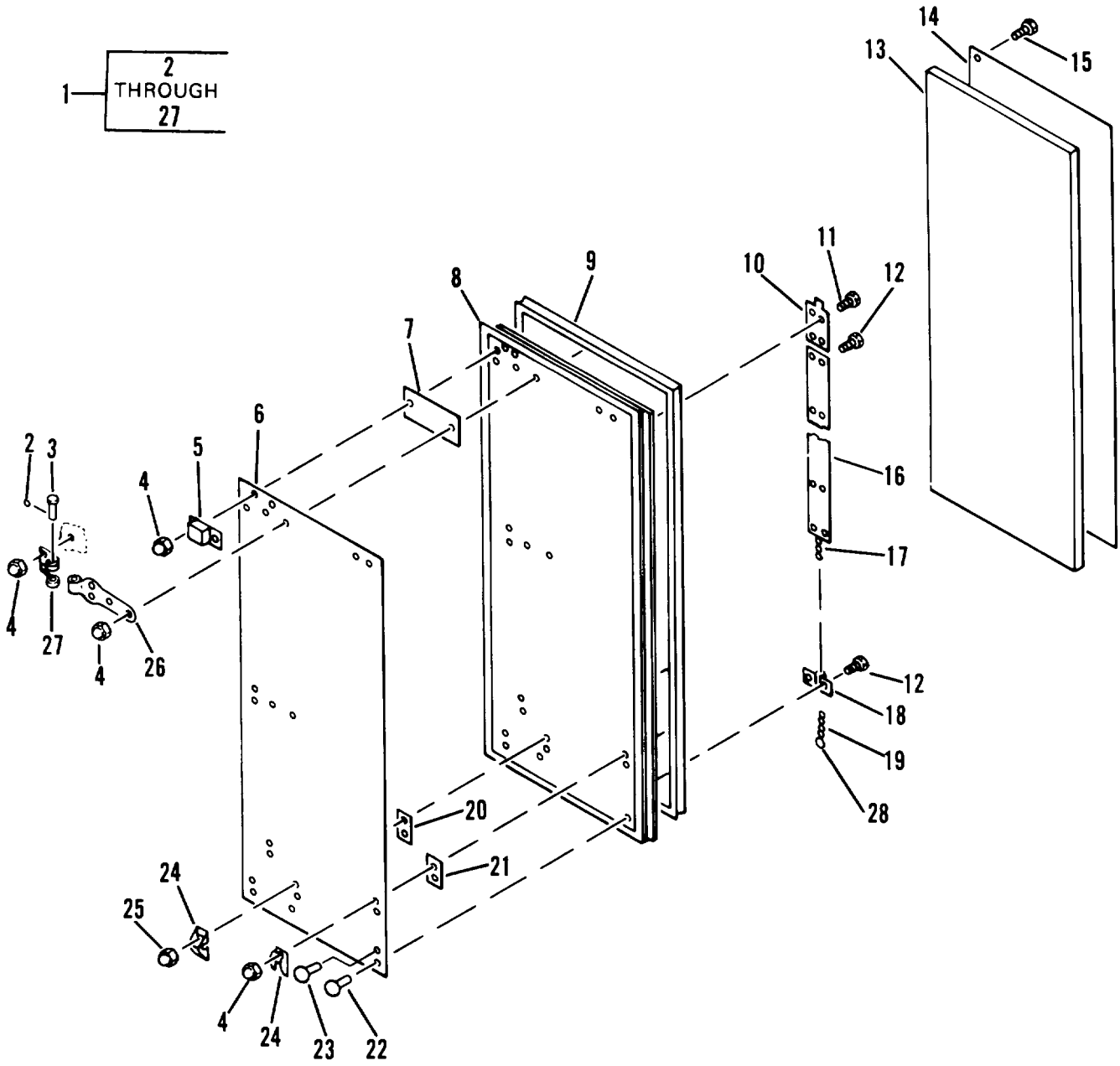

Figure 32. Left Door Assembly

(1) ITEM NO	(2) SMR CODE	(3) FSCM	(4) PART NUMBER	(5) DESCRIPTION AND USABLE ON CODE (UOC)	(6) QTY
				GROUP 1801 BODY	
				FIG.32 LEFT DOOR ASSEMBLY	
1	PBOOF	19207	10944666	DOOR,METAL,SWINGING	1
2	PAOZZ	96906	MS24665-351	.PIN,COTTER	8
3	PFOZZ	19207	8722225	.PIN,STRAIGHT,HEADED	3
4	PAOZZ	96906	MS24679-67	.NUT,PLAIN,CAP	20
5	PFOZZ	19207	8722178	.BRACKET,TRACK,SLIDI	2
6	PFOZZ	19207	11625049-1	.PANEL,BUILDING,PREF	1
7	PFOZZ	19207	12296693	.SPACER,PLATE	1
8	XAOZZ	19207	10944676	.FRAME	1
9	PFOZZ	19207	10944681	.SEAL,RUBBER SPECIAL	216
10	PFOZZ	19207	8713244	.BOLT,CHAIN	1
11	PAOZZ	96906	MS24629-48	.SCREW,TAPPING,THREA	22
12	PAOZZ	96906	MS90726-59	.SCREW, CAP, HH	12
13	PFOZZ	19207	8383854	.INSULATION	18
14	PFOZZ	19207	11625051	.PANEL,BUILDING,PREF	1
15	PAOZZ	96906	MS24627-50	.SCREW,TAPPING,THREA	34
16	XAOZZ	19207	8722129	.SHIM	1
17	XAOZZ	19207	8713244-1	.CHAIN-BOLT	1
18	XDOZZ	19207	10900688	.KEEPER	1
19	PFOZZ	81348	RR-C-271TYPE2,CL ASS2,TR6	.CHAIN-BOLT ASSEM	1
20	PFOZZ	19207	10944698-1	.SPACER,PLATE	3
21	PFOZZ	19207	10944698-2	.GASKET	3
22	PAOZZ	96906	MS24662-34	.RIVET,BLIND,.281 IN	50
23	PAOZZ	96906	MS24662-38	.RIVET,BLIND .344 IN	36
24	PFOZZ	19207	8722181	.BRACKET	2
25	PAOZZ	96906	MS35650-302	.NUT,PLAIN,HEXAGON	2
26	PFOZZ	19207	8722202	.HINGE,ACCESS DOOR	3
27	PFOZZ	19207	8722185	.LEAF,BUTT HINGE	3
28	PFOZZ	96906	MS87006-3	.HOOK,CHAIN,S	1

END OF FIGURE

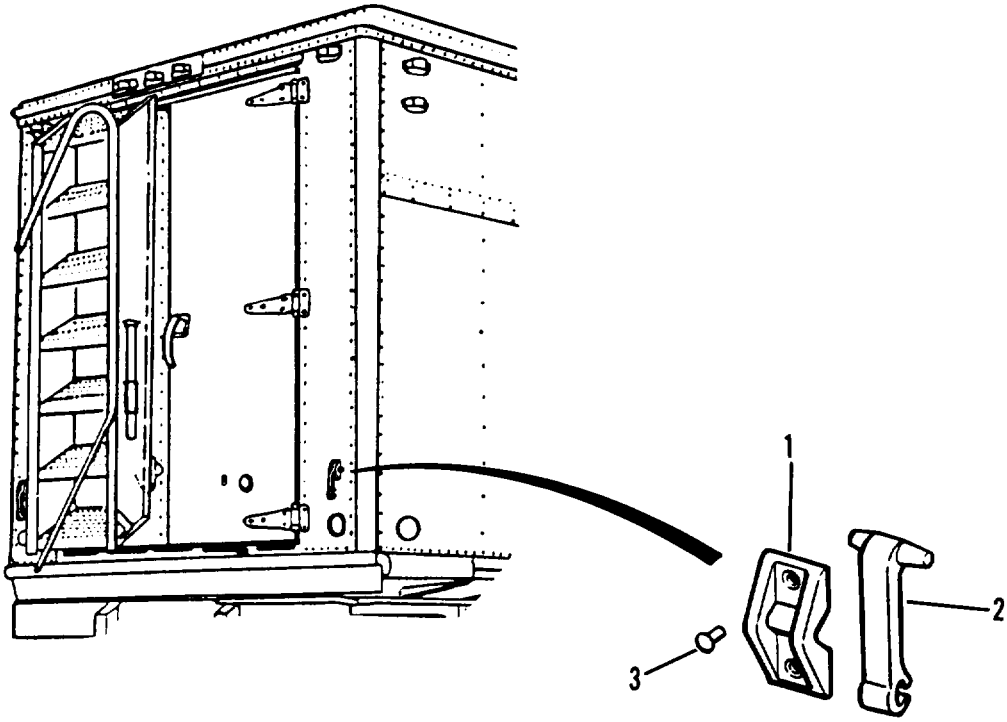

Figure 33. Door Holdbacks

(1) ITEM NO	(2) SMR CODE	(3) FSCM	(4) PART NUMBER	(5) DESCRIPTION AND USABLE ON CODE (UOC)	(6) QTY
				GROUP 1801 BODY	
				FIG.33 DOOR HOLDBACKS	
1	PFOZZ	19207	10944706	BRACKET,DOOR	2
2	PFOZZ	19207	10944697	LATCH,PINTLE HOOK	2
3	PAOZZ	96906	MS24661-215	RIVET,BLIND	4
				END OF FIGURE	

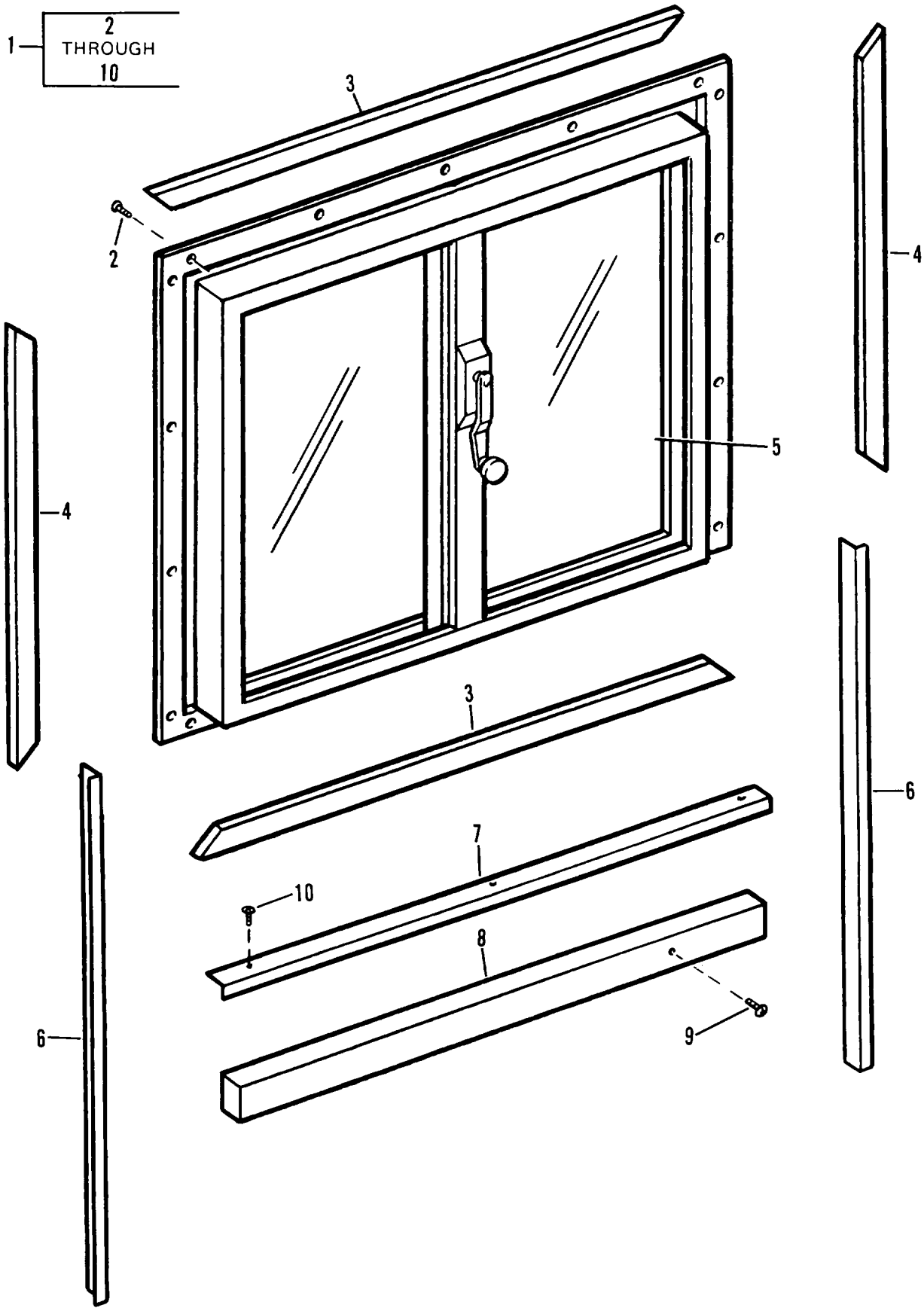

Figure 34. Retractable Sash

(1) ITEM NO	(2) SMR CODE	(3) FSCM	(4) PART NUMBER	(5) DESCRIPTION AND USABLE ON CODE (UOC)	(6) QTY
				GROUP 1801 BODY	
				FIG.34 RETRACTABLE SASH	
1	PAOOO	19207	8729078	SASH ASSEMBLY	2
2	PAOZZ	96906	MS51861-47	.SCREW,TAPPING,THREA	18
3	PFOZZ	19207	8722282	.SHIM,FLOOR,VEHICULA	2
4	PFOZZ	19207	8722281	.SHIM,FLOOR,VEHICULA	2
5	PFOZZ	19207	10896799-1	.GLASS UNIT,WINDOW S	1
6	PFOZZ	19207	7084794	.TRIM,PLYWOOD	2
7	PFOZZ	19207	7084792	.TRIM,PLYWOOD	1
8	PFOZZ	19207	10934954	.LUMBER,SOFTWOOD,BOA	1
9	PAOZZ	96906	MS24615-28	.SCREW,TAPPING,THREA	12
10	PAOZZ	96906	MS51861-37	.SCREW,TAPPING,THREA	29
				END OF FIGURE	

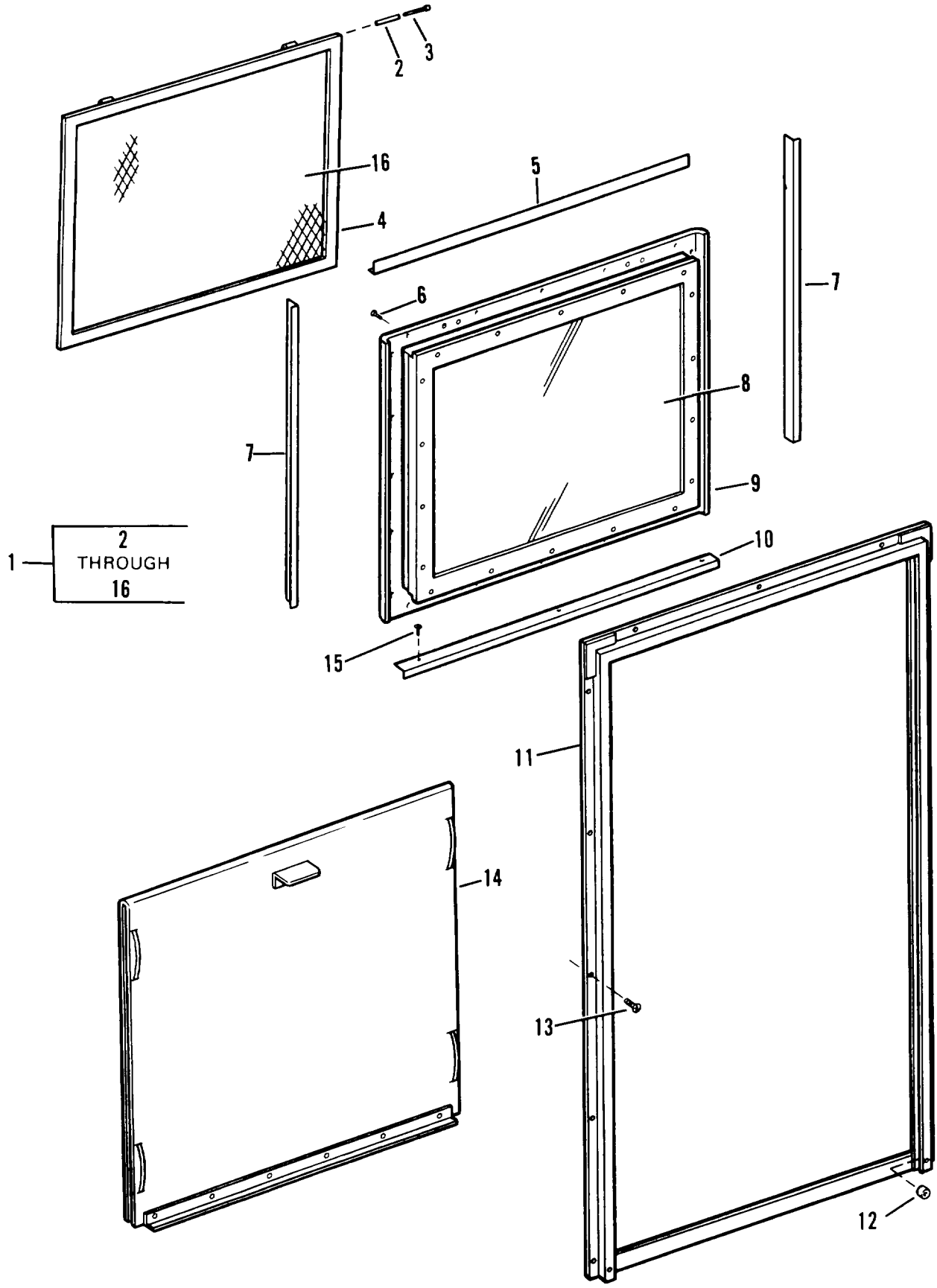

Figure 35. Stationary Sash

(1) ITEM NO	(2) SMR CODE	(3) FSCM	(4) PART NUMBER	(5) DESCRIPTION AND USABLE ON CODE (UOC)	(6) QTY
				GROUP 1801 BODY	
				FIG.35 STATIONARY SASH	
1	PFOOO	19207	8729079	SASH ASSEMBLY,VEHIC	1
2	PFOZZ	19207	10896789	.PIN,GROOVED,HEADLES	2
3	PFOZZ	19207	10921665	.PIN,STRAIGHT,HEADED	2
4	PFOZZ	19207	10921690	.GUARD,BRUSH	1
5	PFOZZ	19207	7084792	.TRIM,PLYWOOD	1
6	PAOZZ	96906	MS51861-47	.SCREW,TAPPING,THREA	21
7	PFOZZ	19207	7084794	.TRIM,PLYWOOD	2
8	PFOZZ	19207	10896799-1	.GLASS UNIT,WINDOW S	1
9	PFOOO	19207	10921692	.WINDOW,VEHICULAR	1
10	PFOZZ	19207	7084793	.TRIM,PLYWOOD	1
11	PFOZZ	19554	13521G2	.FRAME,BLACKOUT	1
12	PFOZZ	19207	10921653	.SPACER,SLEEVE	2
13	PAOZZ	96906	MS51861-35	.SCREW,TAPPING,THREA	17
14	PFOZZ	19207	10921709	.PANEL ASSMEBLY,BLAC	1
15	PAOZZ	96906	MS51861-37	.SCREW,TAPPING,THREA	3
16	PFOZZ	19207	10896813	.BRUSH SCREEN,WIND	1
				END OF FIGURE	

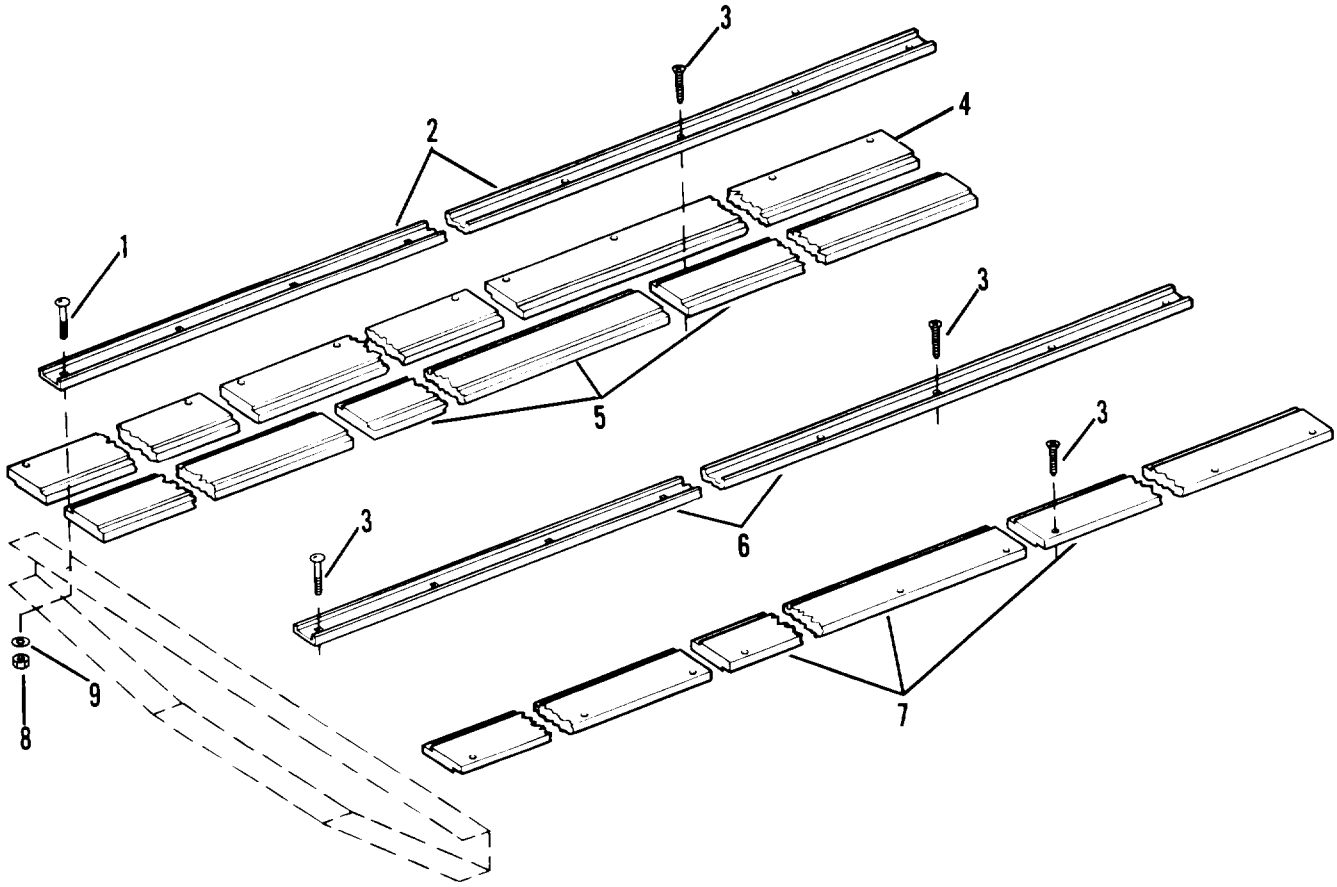

Figure 36. Floor

(1) ITEM NO	(2) SMR CODE	(3) FSCM	(4) PART NUMBER	(5) DESCRIPTION AND USABLE ON CODE (UOC)	(6) QTY
				GROUP 1805 FLOORS	
				FIG.36 FLOOR	
1	XDFZZ	96906	MS35751-45	BOLT,SQUARE NECK	143
2	PFFZZ	19207	8722226	STRIP,FLOOR	6
3	PAFZZ	96906	MS24627-69	SCREW,TAPPING,THREA	95
4	PFFZZ	19207	8722127	PANEL,BUILDING,PREF	2
5	PFFZZ	19207	8722125	PANEL,BUILDING,PREF	30
6	PFFZZ	19207	8722227	FLOOR,STRIP	5
7	PFFZZ	19207	8722126	PANEL,BUILDING,PREF	2
8	PAFZZ	96906	MS51922-9	NUT,SELF-LOCKING,HE	143
9	PAFZZ	19207	11625207	WASHER,FLAT	143
				END OF FIGURE	

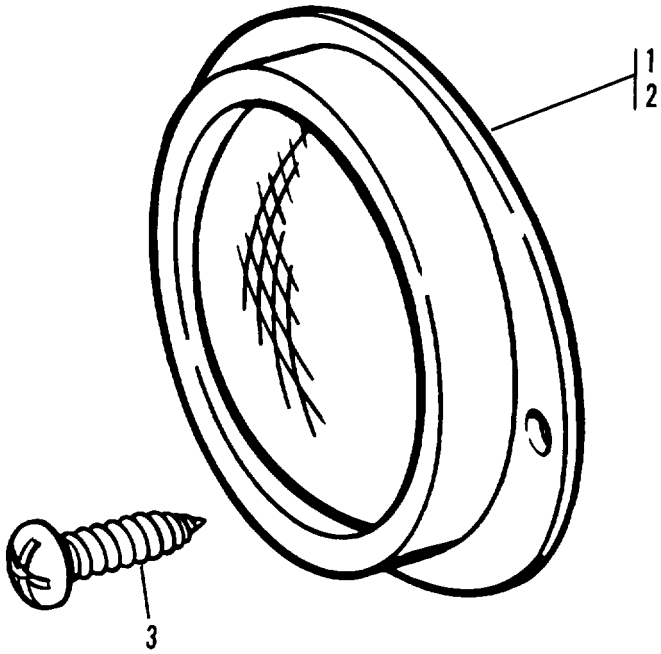

Figure 37. Reflectors

(1) ITEM NO	(2) SMR CODE	(3) FSCM	(4) PART NUMBER	(5) DESCRIPTION AND USABLE ON CODE (UOC)	(6) QTY
				GROUP 22 BODY CHASSIS & ACCESSORY	
				ITEMS	
				GROUPS 2202 ACCESSORY ITEMS	
				FIG.37 REFLECTORS	
1	PAOZZ	96906	MS35387-1	REFLECTOR, RED	4
2	PAOZZ	96906	MS35387-2	REFLECTOR, AMBER	4
3	PAOZZ	96906	MS24629-56	SCREW,TAPPING,THREA	16
				END OF FIGURE	

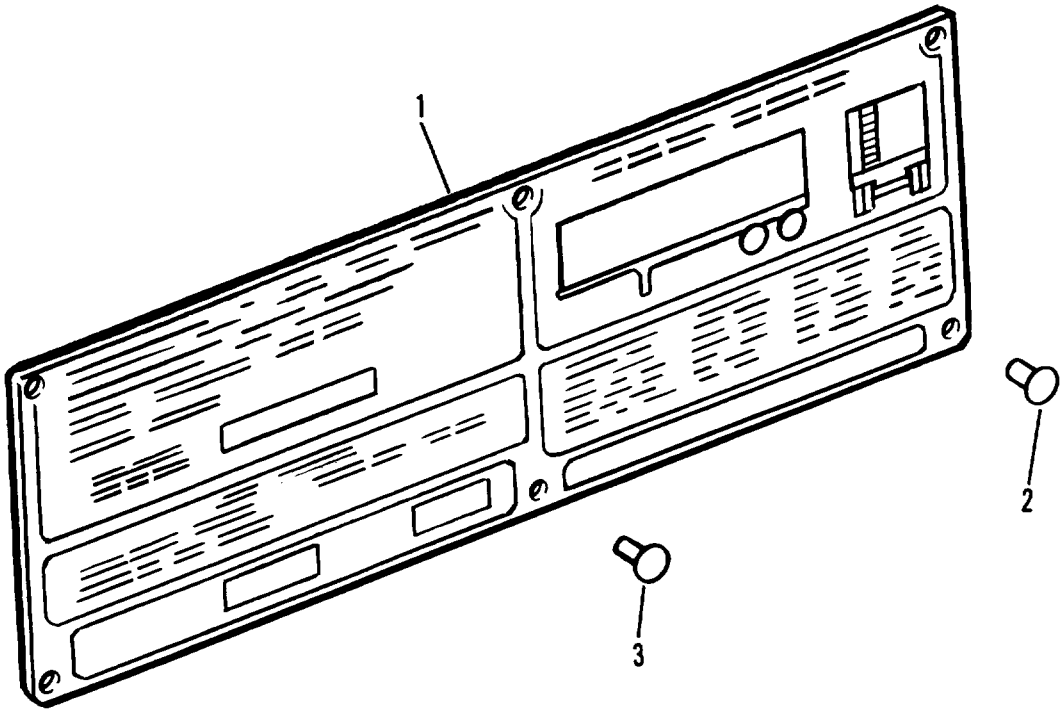

Figure 38. Data Plate

(1) ITEM NO	(2) SMR CODE	(3) FSCM	(4) PART NUMBER	(5) DESCRIPTION AND USABLE ON CODE (UOC)	(6) QTY
				GROUP 2210 DATA PLATES	
				FIG.38 DATA PLATE	
1	PAOZZ	19207	10944660	PLATE,INDENTIFICATION	1
2	PAOZZ	96906	MS24662-221	RIVET,BLIND	4
3	PAOZZ	96906	MS24662-222	RIVET,BLIND	2
				END OF FIGURE	

(1) ITEM NO	(2) SMR CODE	(3) FSCM	(4) PART NUMBER	(5) DESCRIPTION AND USABLE ON CODE (UOC)	(6) QTY
				GROUP 95 GENERAL USE & STANDARDIZED	
				PARTS	
				GROUP 9501 BULK MATERIEL	
				FIG.BULK	
1	PFOZZ	19207	CPR104420-2	HOSE,NONMETALLIC	1
2	PAFZZ	79470	H33806	HOSE,NONMETALLIC	1
3	PFOZZ	81349	M13486/1-5	WIRE,ELECTRICAL	1
				END OF FIGURE	

NATIONAL STOCK NUMBER AND PART NUMBER INDEX

NATIONAL STOCK NUMBER INDEX

STOCK NUMBER	FIG	ITEM	STOCK NUMBER	FIG	ITEM
5315-00-012-0123	30	3	3110-00-100-0663	20	9
6240-00-014-2454	8	4	3110-00-100-0683	20	15
5310-00-017-9721	27	6	6220-00-113-0986	7	1
5306-00-017-9722	27	9	3010-00-117-3413	28	21
4730-00-018-9566	19	20	2530-00-137-9235	19	1
6240-00-019-0877	7	4	4730-00-142-3075	19	23
	9	4	5340-00-143-8861	24	3
6240-00-019-3093	9	6	2530-00-146-0480	15	1
2530-00-021-2366	19	57	6145-00-152-6499	BULK	3
5305-00-022-8329	6	7	6240-00-155-7923	7	4
5975-00-035-6524	2	14	6240-00-155-8634	10	3
5305-00-044-5503	28	16	4730-00-172-0034	13	13
6240-00-044-6914	9	5		14	14
	11	3	5325-00-174-9038	1	14
5310-00-045-3299	12	22	5325-00-174-9325	1	13
5306-00-050-1238	30	10	2590-00-177-9980	28	12
4730-00-050-4203	13	3	2590-00-177-9992	28	10
	14	3	6220-00-179-4324	9	2
	17	2	2510-00-179-5569	6	4
5940-00-050-6209	2	22	2540-00-179-5674	6	9
	2	30	5325-00-185-0001	1	2
	2	47	5325-00-185-0004	3	1
	12	29	4730-00-188-1893	19	56
5305-00-051-0827	28	8	2590-00-192-9430	27	1
5930-00-051-4448	5	1	4730-00-196-1467	4	4
2610-00-051-9450	21	6	4730-00-196-1524	4	8
5310-00-052-6454	30	8	9905-00-202-3639	37	2
5305-00-052-6874	31	26	5325-00-202-4005	4	13
	32	15		12	6
5305-00-052-6920	31	15	9905-00-205-2795	37	1
	37	3	5310-00-209-4	4	17
5305-00-052-6921	31	17	4730-00-221-2138	19	72
5305-00-052-7477	36	3	4730-00-221-2140	19	31
5999-00-057-2929	2	49	4730-00-222-1837	19	2
	12	40	4730-00-222-1838	19	64
5305-00-057-7167	34	9	5306-00-225-8498	14	5
5305-00-057-9608	31	30	5306-00-225-8500	19	49
2640-00-060-3550	21	4	5306-00-225-9089	12	5
5935-00-062-7450	2	24	5306-00-226-4823	20	1
4730-00-069-1186	19	7	5305-00-226-7768	23	6
4730-00-069-1187	19	61	5940-00-232-5190	1	8
5305-00-071-2241	22	5	5315-00-234-1664	27	13
5310-00-080-6004	23	5	4820-00-242-4064	19	15
5930-00-081-3611	4	7	5975-00-243-1275	5	5
5310-00-087-4652	19	69	5975-00-244-7806	4	2
	28	6	5305-00-254-0102	10	2
5310-00-087-7493	19	50		11	2
5330-00-090-2128	19	3	4730-00-254-6243	19	46
3110-00-100-0332	20	10	5310-00-259-1485	20	19
3110-00-100-0337	20	16	2610-00-262-8653	21	7

NATIONAL STOCK NUMBER AND PART NUMBER INDEX

NATIONAL STOCK NUMBER INDEX

STOCK NUMBER	FIG	ITEM	STOCK NUMBER	FIG	ITEM
5340-00-263-3500	32	10	4820-00-435-7577	19	54
5305-00-267-8974	19	13	5330-00-462-0907	9	3
5305-00-267-9692	26	2	6940-00-467-0988	13	9
5305-00-269-2802	31	19	6940-00-467-1012	13	8
5305-00-269-3217	28	3	5305-00-477-0144	4	15
5305-00-269-3218	28	19	5315-00-492-1770	35	3
5305-00-269-3234	24	4	5935-00-518-6743	2	11
	25	5	4730-00-529-1487	19	21
	31	35	4030-00-542-3184	25	10
5310-00-269-4040	28	2	5310-00-543-2410	12	20
4730-00-270-4616	19	30	5305-00-543-2419	19	71
	19	36	4730-00-555-0592	19	58
4030-00-270-5436	25	11	5510-00-555-9081	34	8
	32	28	5310-00-572-0218	20	19
5325-00-276-6051	19	28	5935-00-572-9180	2	38
5325-00-276-6059	3	7		7	6
4730-00-277-5553	19	47		8	7
4730-00-278-4822	19	37		9	9
4730-00-278-6319	19	16		12	13
	19	39		12	41
5920-00-280-3181	4	10	6220-00-577-3434	7	1
5305-00-281-5727	2	13	5310-00-582-5965	1	11
5365-00-281-6623	16	9		3	4
5320-00-285-1025	27	14		12	2
5340-00-286-2494	19	14		19	10
2540-00-287-2571	31	29		22	2
4730-00-289-0155	19	67		27	10
5330-00-297-7106	8	3	5925-00-583-7941	4	6
6220-00-299-7425	7	2	4010-00-585-2108	23	3
6220-00-299-7426	7	2		24	1
5935-00-333-9414	2	27	4730-00-595-0083	19	2
4730-00-335-4728	19	6	5310-00-595-7237	9	7
6220-00-338-1083	10	4		24	5
5360-00-340-4745	15	6	5310-00-596-8169	7	3
5975-00-345-8055	2	9	2530-00-603-5768	21	1
	19	12	6240-00-617-0991	8	5
5320-00-365-0117	38	2	5310-00-620-2486	20	7
5940-00-399-6676	2	36	5975-00-622-2178	3	6
	2	44	5310-00-627-6128	23	2
	12	34		26	4
5310-00-407-9566	12	25	2590-00-630-1567	31	22
	14	8	5307-00-637-1084	20	18
	20	2		20	18
5975-00-408-2794	4	20	5310-00-637-9541	12	9
5305-00-432-4170	9	8		31	24
	35	13	4730-00-640-6330	19	53
5305-00-432-4172	34	10	5930-00-655-1514	5	3
	35	15	5310-00-655-9860	2	25
5305-00-432-4203	34	2	5340-00-657-9792	2	3
	35	6	2540-00-678-3469	23	7

NATIONAL STOCK NUMBER AND PART NUMBER INDEX

NATIONAL STOCK NUMBER INDEX

STOCK NUMBER	FIG	ITEM	STOCK NUMBER	FIG	ITEM
2590-00-693-4171	6	8	4720-00-817-4451	BULK	2
5305-00-696-5293	6	3	5310-00-823-8803	28	1
5975-00-697-7769	2	17	4730-00-833-0508	19	38
5310-00-705-7360	30	1	5935-00-833-8561	2	34
2530-00-706-6614	15	2		2	42
2510-00-706-7973	26	6		2	50
5305-00-724-5910	28	20		12	32
5305-00-725-4183	27	3	5970-00-833-8562	2	35
6220-00-726-1916	7	1		2	43
5305-00-726-2551	29	22		2	51
5310-00-732-0559	23	1		12	33
	25	4	5310-00-833-8567	2	39
	26	3		7	7
2530-00-738-9061	21	2		8	6
2530-00-738-9493	21	3		9	10
6220-00-741-1843	7	1		12	12
5340-00-741-4347	23	4		12	42
2510-00-741-7585	26	1	5310-00-835-2037	18	2
3040-00-752-1156	27	15	5340-00-839-0098	31	34
2510-00-752-1157	27	12	5315-00-839-5821	31	10
9905-00-752-4649	2	21		32	2
	2	29	5315-00-839-5822	18	6
	2	32	9905-00-841-4445	2	28
	2	48		2	33
	12	30		2	41
	12	43		2	46
5310-00-761-6882	1	12		12	31
	3	5		12	39
	12	3	4820-00-849-1220	19	63
	22	1	2540-00-851-2832	22	4
	27	11	5935-00-854-4447	12	17
5310-00-763-8901	30	7	5305-00-855-0958	2	10
5310-00-768-0319	19	9	5305-00-855-0964	32	11
5935-00-772-0485	12	36	5310-00-880-2004	20	20
5365-00-772-2322	2	26	5310-00-880-2005	20	20
5935-00-772-2344	2	18	5310-00-880-7744	12	24
	12	37		14	9
5935-00-772-2982	1	9	5305-00-883-0630	7	5
5935-00-772-3307	2	19	5305-00-901-2099	2	5
	12	38	5305-00-901-3141	4	1
5935-00-773-1428	12	16	6220-00-903-6647	8	2
1015-00-798-2997	2	52	6220-00-904-0156	8	1
5365-00-803-7299	14	10	9905-00-905-6384	38	1
5310-00-809-4061	19	70	2540-00-918-4184	31	31
	24	6	4730-00-930-6354	19	65
	28	5	5330-00-933-8913	31	6
4010-00-809-6431	27	2		32	9
2510-00-809-8046	34	5	5310-00-934-9739	12	21
	35	8	5310-00-934-9751	32	25
4730-00-813-7811	19	17	5310-00-934-9757	12	23

NATIONAL STOCK NUMBER AND PART NUMBER INDEX

NATIONAL STOCK NUMBER INDEX

STOCK NUMBER	FIG	ITEM	STOCK NUMBER	FIG	ITEM
4730-00-943-8051	19	25	5310-01-043-0596	20	8
4730-00-951-4385	19	59	5310-01-043-5781	20	5
4030-00-954-8801	24	2	5340-01-048-2239	12	4
5305-00-959-6643	31	12	2590-01-048-2809	28	22
9905-00-979-4458	2	20	5310-01-049-4072	28	14
5310-00-984-3806	19	51	5310-01-049-9051	20	6
	36	8	5310-01-060-7184	15	15
5310-00-984-3807	12	7	5340-01-060-8993	18	3
	30	9	2510-01-060-9683	28	9
5305-00-984-4976	12	19	5365-01-061-0710	13	6
5305-00-984-5676	12	15	5360-01-061-2941	15	16
5305-00-984-6195	12	18	5315-01-061-4971	15	9
5305-00-984-6212	4	16	2530-01-061-5723	19	73
5310-00-985-0378	31	14	5310-01-062-0358	15	14
	32	4	5365-01-062-1009	15	8
5305-00-988-1724	12	14	5310-01-062-1531	15	10
5305-00-988-1725	1	10	5310-01-062-1532	13	7
	3	3	3010-01-062-7588	28	7
	12	1	5305-01-063-1742	15	13
	19	11	2590-01-065-7220	28	23
5305-00-988-1727	12	26	6145-01-066-2523	2	12
5935-00-991-3332	2	16	3040-01-066-4240	28	4
5315-00-993-4169	28	13	5330-01-067-3440	13	14
9905-00-999-7369	19	5	2540-01-069-8785	28	15
9905-00-999-7370	19	4	2590-01-070-5968	28	11
6220-01-003-2497	11	4	2510-01-070-9499	35	1
4720-01-014-4915	BULK	1	5320-01-073-9255	31	3
2510-01-016-2028	30	5		32	23
2530-01-016-2029	15	7	4935-01-073-9486	1	3
5320-01-020-0703	15	3	7690-01-075-3332	28	17
2510-01-022-2580	34	6	4730-01-079-8821	19	5
	35	7		19	18
2510-01-024-3618	34	7		19	24
	35	5		19	26
2510-01-024-3619	35	10		19	60
5306-01-031-4839	30	4		19	62
5340-01-031-4963	31	13		19	66
	32	26	5935-01-081-5484	2	1
5315-01-031-5197	31	9	5340-01-083-3107	28	18
	32	3	2590-01-083-3160	2	2
5340-01-031-7021	31	11	2510-01-084-59887	34	3
	32	27	2510-01-087-3067	34	4
2540-01-031-9085	31	16	5305-01-090-3012	15	11
5315-01-033-2831	30	6		16	12
5315-01-037-4348	30	2	5325-01-091-9101	2	4
5935-01-038-9629	12	28	2640-01-093-2842	21	5
3120-01-042-2579	13	15	6220-01-093-4439	9	1
	14	16	2530-01-098-5123	19	22
6145-01-042-9008	1	5	5325-01-098-6304	2	8
2510-01-042-9692	34	1	5306-01-098-7197	29	14

NATIONAL STOCK NUMBER AND PART NUMBER INDEX

NATIONAL STOCK NUMBER INDEX

STOCK NUMBER	FIG	ITEM	STOCK NUMBER	FIG	ITEM
5310-01-098-7236	29	12	4710-01-203-5676	25	6
5310-01-098-7244	29	16	2590-01-203-5677	25	7
5310-01-098-7245	29	3	2590-01-203-5678	25	8
5310-01-098-7246	29	13	2510-01-203-5709	36	5
5310-01-098-7247	29	5	2510-01-203-5710	36	7
5310-01-098-7827	29	2	2510-01-203-5711	36	4
5310-01-099-6539	29	15	2510-01-203-5715	31	1
2590-01-100-9001	29	20	2510-01-203-5716	32	1
2510-01-100-9270	29	17	5975-01-203-5725	1	1
2510-01-100-9271	29	18	5340-01-203-9878	1	4
2520-01-101-0935	29	9	7125-01-203-9880	27	4
2520-01-101-2551	29	11	5670-01-203-9882	35	4
2520-01-101-2559	29	7	5365-01-204-0185	4	11
2510-01-101-2890	29	19	2510-01-204-0363	35	9
5310-01-101-4843	20	11	6110-01-205-8650	4	19
5330-01-101-4854	20	14	4940-01-207-8955	25	12
2530-01-101-5429	18	1	5410-01-210-3575	36	2
5306-01-102-7336	27	8	5410-01-210-3576	36	6
5315-01-105-3318	35	2	5510-01-210-7017	6	10
4820-01-109-5983	19	68	5510-01-210-7018	6	1
2530-01-110-1332	20	13	2510-01-210-9653	31	23
2530-01-113-1008	19	44	2510-01-210-9654	31	33
5305-01-117-5905	5	2	2510-01-210-9655	33	1
3110-01-121-0433	15	5	3040-01-210-9707	31	32
5315-01-121-1859	18	4	2510-01-210-9709	31	18
5680-01-121-9865	35	14	2540-01-210-9716	33	2
5340-01-125-0534	3	2	2540-01-210-9720	24	7
2510-01-128-5529	35	16	2510-01-211-0980	27	7
5330-01-132-2053	20	4	5365-01-212-4680	32	7
5340-01-137-5910	25	9	5340-01-212-4768	31	36
2510-01-138-9158	29	21	5310-01-212-5228	36	9
5306-01-139-1835	29	6	5330-01-212-5233	31	21
4710-01-140-6473	29	4		32	20
2590-01-149-7701	12	10	5340-01-212-5253	2	7
5999-01-159-6371	2	40	5340-01-212-6728	31	5
2805-01-168-1557	19	48	5340-01-212-9415	22	3
5340-01-175-7393	6	5	5340-01-213-5467	6	6
2590-01-178-7043	35	11	5365-01-213-5480	35	12
5340-01-178-7362	20	3	5340-01-213-5494	4	14
5340-01-179-1307	6	2	5330-01-214-7922	31	8
3120-01-183-6814	13	5		32	21
5310-01-183-6854	20	12	5305-01-215-3784	31	27
2530-01-185-6764	17	1	5320-01-215-5425	31	2
2590-01-189-0457	12	11		32	22
5330-01-190-4634	14	7	5320-01-217-2977	38	3
2510-01-197-8556	31	37	2530-01-217-8156	16	13
2510-01-203-5668	27	5		16	14
5340-01-203-5670	32	5	2530-01-218-0005	16	3
3040-01-203-5671	32	24	2530-01-218-3454	16	5
2590-01-203-5673	25	2	5410-01-218-6939	31	4

NATIONAL STOCK NUMBER AND PART NUMBER INDEX

NATIONAL STOCK NUMBER INDEX

STOCK NUMBER	FIG	ITEM	STOCK NUMBER	FIG	ITEM
5410-01-218-6940	32	6			
2530-01-219-4331	16	2			
5315-01-220-6238	16	10			
5315-01-220-6245	16	8			
5340-01-220-6292	31	20			
5360-01-220-9373	16	7			
2530-01-228-7799	10	1			
5320-01-230-9903	33	3			

PART NUMBER INDEX

FSCM	PART NUMBER	STOCK NUMBER	FIG	ITEM
15235	ARRH56		4	12
81996	B8005-16-003FN12	5935-00-991-3332	2	16
19207	CPR102321-1	4730-01-079-8821	19	5
			19	18
			19	24
			19	26
			19	60
			19	62
			19	66
19207	CPR104420-2	4720-01-014-4915	BULK	1
9W125	CPR104420-2-13		19	78
9W125	CPR104420-2-19		19	19
9W125	CPR104420-2-212		19	79
9W125	CPR104420-2-23		19	55
9W125	CPR104420-2-270		19	27
9W125	CPR104420-2-28		19	29
9W125	CPR104420-2-35		19	76
9W125	CPR104420-2-40		19	75
9W125	CPR104420-2-41		19	74
			19	77
9W125	CPR104420-2-62		19	52
16003	C43974	4010-00-585-2108	23	3
			24	1
23452	C6056CR	5305-00-022-8329	6	7
82815	D53-3	5325-00-174-9038	1	14
81349	F16B250V60A	5920-00-280-3181	4	10
81349	HW-C6(133)UO	6145-01-066-2523	2	12
79470	H33806	4720-00-817-4451	BULK	2
79470	H33806-36		19	33
79470	H33806-38		19	35
79470	H33806-45		19	41
			19	43
81349	J-C-580S6CF3/12R NJ	6145-01-042-9008	1	5
62707	K22-FT-167W		14	1
9W125	MIL-H-3992-36		19	32
9W125	MIL-H-3992-38		19	34
9W125	MIL-H-3992-45		19	40
			19	42
81349	MIL-T-12459/CLCC /SA/1100-20/F/CC	2610-00-262-8653	21	7
96906	MS14305-2UA	4730-00-254-6243	19	46
96906	MS15001-1	4730-00-050-4203	13	3
			14	3
			17	2
96906	MS15570-1251	6240-00-019-0877	7	4
			9	4
96906	MS15570-623	6240-00-019-3093	9	6
96906	MS15586-1	6240-00-155-8634	10	3
96906	MS16624-1150	5365-00-803-7299	14	10
96906	MS16624-125	5365-00-281-6623	16	9

PART NUMBER INDEX

FSCM	PART NUMBER	STOCK NUMBER	FIG	ITEM
96906	MS171725	5315-00-993-4169	28	13
96906	MS17990-662	5340-01-137-5910	25	9
96906	MS20913-3S	4730-00-221-2138	19	72
96906	MS20913-6S	4730-00-221-2140	19	31
96906	MS21207-10-10	5305-00-057-9608	31	30
96906	MS21207-14-10	5305-01-215-3784	31	27
96906	MS21333-36	5340-00-286-2494	19	14
96906	MS24615-27	5305-00-281-5727	2	13
96906	MS24615-28	5305-00-057-7167	34	9
96906	MS24615-36	5305-00-883-0630	7	5
96906	MS24627-50	5305-00-052-6874	31	26
			32	15
96906	MS24627-69	5305-00-052-7477	36	3
96906	MS24629-45	5305-00-855-0958	2	10
96906	MS24629-48	5305-00-855-0964	32	11
96906	MS24629-56	5305-00-052-6920	31	15
			37	3
96906	MS24629-57	5305-00-052-6921	31	17
96906	MS24661-215	5320-01-230-9903	33	3
96906	MS24662-221	5320-00-365-0117	38	2
96906	MS24662-222	5320-01-217-2977	38	3
96906	MS24662-34	5320-01-215-5425	31	2
			32	22
96906	MS24662-38	5320-01-073-9255	31	3
			32	23
96906	MS24665-351	5315-00-839-5821	31	10
			32	2
96906	MS24665-355	5315-00-012-0123	30	3
96906	MS24665-495	5315-00-234-1664	27	13
96906	MS24679-67	5310-00-985-0378	31	14
			32	4
96906	MS24693S296	5305-00-959-6643	31	12
96906	MS27148-2	5999-00-057-2929	2	49
			12	40
96906	MS27183-13	5310-00-087-7493	19	50
96906	MS27183-14	5310-00-080-6004	23	5
96906	MS27183-15	5310-00-809-4061	19	70
			24	6
			28	5
96906	MS27183-21	5310-00-823-8803	28	1
96906	MS35058-22	5930-00-655-1514	5	3
96906	MS35206-219	5305-00-984-4976	12	19
96906	MS35206-247	5305-00-984-6195	12	18
96906	MS35206-265	5305-00-984-6212	4	16
96906	MS35206-280	5305-00-988-1724	12	14
96906	MS35206-281	5305-00-988-1725	1	10
			3	3
			12	1
			19	11
96906	MS35206-283	5305-00-988-1727	12	26
96906	MS35206-296	5305-00-984-5676	12	15

PART NUMBER INDEX

FSCM	PART NUMBER	STOCK NUMBER	FIG	ITEM
96906	MS35333-42	5310-00-595-7237	9	7
			24	5
96906	MS35335-33	5310-00-209-0786	4	17
96906	MS35335-35	5310-00-627-6128	23	2
			26	4
96906	MS35338-40	5310-00-543-2410	12	20
96906	MS35338-42	5310-00-045-3299	12	22
96906	MS35338-44	5310-00-582-5965	1	11
			3	4
			12	2
			19	10
			22	2
			27	10
96906	MS35338-45	5310-00-407-9566	12	25
			14	8
			20	2
96906	MS35338-46	5310-00-637-9541	12	9
			25	3
			31	24
96906	MS35340-51	5310-00-052-6454	30	8
96906	MS35387-1	9905-00-205-2795	37	1
96906	MS35387-2	9905-00-202-3639	37	2
96906	MS35421-1	6220-00-299-7425	7	2
96906	MS35421-2	6220-00-299-7426	7	2
96906	MS35423-1	6220-00-577-3434	7	1
96906	MS35423-2	6220-00-726-1916	7	1
96906	MS35423-3	6220-00-113-0986	7	1
96906	MS35423-4	6220-00-741-1843	7	1
96906	MS35478-1073	6240-00-617-0991	8	5
96906	MS35478-1683	6240-00-044-6914	9	5
			11	3
96906	MS35478-93	6240-00-014-2454	8	4
96906	MS35489-101	5325-00-276-6051	19	28
96906	MS35489-107	5325-00-174-9325	1	13
96906	MS35489-110	5325-00-202-4005	4	13
			12	6
96906	MS35489-46	5325-00-185-0001	1	2
96906	MS35490-34	5325-00-185-0004	3	1
96906	MS35492-90	5305-00-901-3141	4	1
96906	MS35493-51	5305-00-901-2099	2	5
96906	MS35494-61	5305-00-254-0102	10	2
			11	2
96906	MS35495-92	5305-01-117-5905	5	2
96906	MS35649-242	5310-00-934-9739	12	21
96906	MS35649-282	5310-00-934-9757	12	23
96906	MS35650-302	5310-00-934-9751	32	25
96906	MS35746-1	4730-00-595-0083	19	2
96906	MS35748-1	5330-00-090-2128	19	3
96906	MS35751-45		36	1
96906	MS35782-5	4820-00-849-1220	19	63
96906	MS39020-1	9905-00-752-4649	12	30

PART NUMBER INDEX

FSCM	PART NUMBER	STOCK NUMBER	FIG	ITEM
96906	MS39020-2	9905-00-841-4445	12	31
96906	MS39179-4	4730-00-142-3075	19	23
96906	MS39179-5	4730-00-069-1186	19	7
96906	MS39179-6	4730-00-270-4616	19	30
			19	36
96906	MS39182-2	4730-00-943-8051	19	25
96906	MS39182-3	4730-00-069-1187	19	61
96906	MS39182-5	4730-00-289-0155	19	67
96906	MS39191-2	4730-00-813-7811	19	17
96906	MS39191-3	4730-00-930-6354	19	65
96906	MS51375-1	2640-00-060-3550	21	4
96906	MS51819-10	4730-00-951-4385	19	59
96906	MS51819-7	4730-00-833-0508	19	38
96906	MS51846-20	4730-00-222-1837	19	2
96906	MS51846-39	4730-00-222-1838	19	64
96906	MS51851-106	5305-01-090-3012	15	11
			16	12
96906	MS51861-35	5305-00-432-4170	9	8
			35	13
96906	MS51861-37	5305-00-432-4172	34	10
			35	15
96906	MS51861-47	5305-00-432-4203	34	2
			35	6
96906	MS51861-68	5305-00-477-0144	4	15
96906	MS51922-13	5310-00-984-3807	12	7
			30	9
96906	MS51922-17	5310-00-087-4652	19	69
			28	6
96906	MS51922-49	5310-00-269-4040	28	2
96906	MS51922-9	5310-00-984-3806	19	51
			36	8
96906	MS51930-1	5340-00-143-8861	24	3
96906	MS51952-2	4730-00-277-5553	19	47
96906	MS51953-101B	4730-00-188-1893	19	56
96906	MS51967-2	5310-00-761-6882	1	12
			3	5
			12	3
			22	1
			27	11
96906	MS51967-5	5310-00-880-7744	12	24
			14	9
96906	MS51968-2	5310-00-768-0319	19	9
96906	MS51968-23	5310-00-763-8901	30	7
96906	MS51968-8	5310-00-732-0559	23	1
			25	4
			26	3
96906	MS51983-3	5310-00-880-2004	20	20
96906	MS51983-4	5310-00-880-2005	20	20
96906	MS52127-3	2540-00-678-3469	23	7
96906	MS53004-2	2530-00-021-2366	19	57
96906	MS53007-1	9905-00-999-7370	19	4

PART NUMBER INDEX

FSCM	PART NUMBER	STOCK NUMBER	FIG	ITEM
96906	MS53007-2	9905-00-999-7369	19	5
96906	MS53044-6	2530-00-603-5768	21	1
96906	MS53045-3	2530-00-738-9061	21	2
96906	MS87006-3	4030-00-270-5436	25	11
			32	28
96906	MS87006-43	4030-00-954-8801	24	2
96906	MS90725-10	5305-00-071-2241	22	5
96906	MS90725-160	5305-00-044-5503	28	16
96906	MS90725-162	5305-00-724-5910	28	20
96906	MS90725-164	5305-00-051-0827	28	8
96906	MS90725-33	5306-00-225-8498	14	5
96906	MS90725-35	5306-00-225-8500	19	49
96906	MS90725-58		12	8
96906	MS90725-67	5305-00-269-3217	28	3
96906	MS90725-68	5305-00-269-3218	28	19
96906	MS90726-113	5305-00-725-4183	27	3
96906	MS90726-115	5305-00-226-7768	23	6
96906	MS90726-25	5305-00-267-9692	26	2
96906	MS90726-34	5306-00-225-9089	12	5
96906	MS90726-59	5305-00-269-2802	31	19
			32	12
96906	MS90726-8	5305-00-267-8974	19	13
96906	MS90727-164	5305-00-726-2551	29	22
96906	MS90727-32	5306-00-050-1238	30	10
96906	MS90727-58	5305-00-269-3234	24	4
			25	5
			31	35
96906	MS90728-30	5306-00-226-4823	20	1
96906	MS90728-61	5305-00-543-2419	19	71
06625	M10HM100		16	4
62707	M10HN103		16	11
62707	M10HP102	5315-01-220-6238	16	10
62707	M10HS113		14	11
50492	M10WH100-1		14	6
50492	M10WH100-2		14	2
50492	M10WJ100		14	4
81349	M13486/1-5	6145-00-152-6499	BULK	3
62707	M16HD100	3120-01-042-2579	14	16
62707	M16HH100		14	15
62707	M16WB100	2530-01-217-8156	16	13
62707	M16WJ100	5360-01-K29-6157	16	14
62707	M16WJ103	5360-01-220-9373	16	7
62707	M16WJ104	5315-01-220-6245	16	8
62707	M16WK102-17		14	13
62707	M16WK103-17		14	12
62707	M16WL100-1	2530-01-218-0005	16	3
62707	M16WL100-2	2530-01-219-4331	16	2
62707	M16WN101X		16	1
62707	M16WS104X	2530-01-218-3454	16	5
81349	M43436/1-1	9905-00-752-4649	2	21
			2	29

PART NUMBER INDEX

FSCM	PART NUMBER	STOCK NUMBER	FIG	ITEM
81349	M43436/1-1	9905-00-752-4649	2	32
			2	48
			12	43
81349	M43436/1-2	9905-00-841-4445	2	28
			2	33
			2	41
			2	46
			12	39
80205	NAS1042-18	4030-00-542-3184	25	10
81348	NDSCL2DN2SNBX1-6 OA240VAC250VDC	5930-00-081-3611	4	7
81348	RR-C-271		26	5
81348	RR-C-271TYPE2,CL ASS2,TR6		32	19
79934	TR78A	2640-01-093-2842	21	5
81348	WS896/2-03A	5930-00-051-4448	5	1
81348	ZZ-I-550/G2/11.0 0-20/TR78A/ONCTR	2610-00-051-9450	21	6
77820	10-40817-10	5935-00-772-2344	12	37
77820	10-42622-23P	5935-00-062-7450	2	24
56697	100103		13	1
92967	10049-00	2510-01-138-9158	29	21
62707	10056	5330-01-190-4634	14	7
92967	10060-01	5306-01-098-7197	29	14
19207	10065592	5340-01-203-9878	1	4
92967	10273-00	5310-01-098-7244	29	16
56697	103102-001	5310-01-043-5781	20	5
56697	103103-002	5310-01-043-0596	20	8
19207	10336614	5975-00-035-6524	2	14
19207	10356032	2540-01-031-9085	31	16
92967	10476-01		29	1
56697	105106	5310-01-049-9051	20	6
56697	105107	5310-00-620-2486	20	7
19207	10605389	5935-00-518-6743	2	11
92967	10608-00	2510-01-101-2890	29	19
92967	10712-00	2510-01-100-9271	29	18
19207	10896789	5315-01-105-3318	35	2
19207	10896799-1	2510-00-809-8046	34	5
			35	8
19207	10896813	2510-01-128-5529	35	16
19207	10900665	5340-01-125-0534	3	2
19207	10900688		32	18
19207	10905840	5975-00-345-8055	2	9
			19	12
19207	10910296	2540-00-179-5674	6	9
19207	10911036-2	2540-00-918-4184	31	31
19207	10920506	6220-00-903-6647	8	2
19207	10920548	6220-00-904-0156	8	1
19207	10920586-1	2590-01-189-0457	12	11
19207	10920586-2	2590-01-149-7701	12	10
19207	10921653	5365-01-213-5480	35	12

PART NUMBER INDEX

FSCM	PART NUMBER	STOCK NUMBER	FIG	ITEM
19207	10921665	5315-00-492-1770	35	3
19207	10921690	5670-01-203-9882	35	4
19207	10921692	2510-01-204-0363	35	9
19207	10921709	5680-01-121-9865	35	14
19207	10923539	6220-01-003-2497	11	4
19207	10934954	5510-00-555-9081	34	8
19207	10935044		12	35
19207	10935055	5340-01-213-5467	6	6
19207	10935060		2	15
19207	10935061		2	23
19207	10935075	5325-01-091-9101	2	4
19207	10935079		1	7
19207	10935126	5340-01-048-2239	12	4
19207	10944622		2	45
19207	10944623		2	31
19207	10944660	9905-00-905-6384	38	1
19207	10944665	2510-01-203-5715	31	1
19207	10944666	2510-01-203-5716	32	1
19207	10944674	5340-01-212-6728	31	5
19207	10944676		32	8
19207	10944681	5330-00-933-8913	31	6
			32	9
19207	10944682	5340-01-220-6292	31	20
19207	10944697	2540-01-210-9716	33	2
19207	10944698-1	5330-01-212-5233	31	21
			32	20
19207	10944698-2	5330-01-214-7922	31	8
			32	21
19207	10944702	5340-01-212-4768	31	36
19207	10944706	2510-01-210-9655	33	1
19207	10944736	2540-01-210-9720	24	7
50153	11M018-1	5340-01-060-8993	18	3
50153	11M050	5310-00-835-2037	18	2
50153	11M059		18	5
50153	11M061	5315-01-121-1859	18	4
50153	11M063	5315-00-839-5822	18	6
92967	11151-00		29	8
92967	11357-00		29	10
19207	11614157	6220-01-093-4439	9	1
19207	11621099	4820-00-435-7577	19	54
19207	11625019	2510-01-210-9709	31	18
19207	11625027	2510-01-210-9653	31	23
19207	11625028	2510-01-210-9654	31	33
19207	11625029	2590-00-192-9430	27	1
19207	11625033		31	28
19207	11625034	5975-01-203-5725	1	1
19207	11625035-1	5340-01-212-5253	2	7
19207	11625035-2		2	6
19207	11625049	5410-01-218-6939	31	4
19207	11625049-1	5410-01-218-6940	32	6
19207	11625051		32	14

PART NUMBER INDEX

FSCM	PART NUMBER	STOCK NUMBER	FIG	ITEM
19207	11625071	3040-01-066-4240	28	4
19207	11625075	2590-01-065-7220	28	23
19207	11625075-1	2510-01-060-9683	28	9
19207	11625084	2590-00-177-9980	28	12
19207	11625085	2590-01-070-5968	28	11
19207	11625086	5310-01-049-4072	28	14
19207	11625119	2590-00-177-9992	28	10
19207	11625125	3010-01-062-7588	28	7
19207	11625128	2590-01-048-2809	28	22
19207	11625138	7690-01-075-3332	28	17
19207	11625207	5310-01-212-5228	36	9
19207	11625230		31	25
19207	11625335	7125-01-203-9880	27	4
19207	11625340	2510-01-203-5668	27	5
19207	11625341	2510-01-211-0980	27	7
19207	11625428	2540-01-069-8785	28	15
19207	11625431	3010-00-117-3413	28	21
19207	11639519-2	5330-00-462-0907	9	3
19207	11639520		9	11
19207	11639535	6220-00-179-4324	9	2
19207	11640134-1	5340-01-083-3107	28	18
19207	11669579	2530-01-113-1008	19	44
19207	12267070	2530-01-061-5723	19	73
19207	12267073	4820-01-109-5983	19	68
19207	12275337	2530-01-098-5123	19	22
19207	12275507	2805-01-168-1557	19	48
19207	12296693	5365-01-212-4680	32	7
19554	13521G2	2590-01-178-7043	35	11
50153	162429	2530-01-101-5429	18	1
83194	1628	9905-00-979-4458	2	20
06625	16361		16	6
21450	190752	4730-00-196-1524	4	8
21450	192074	4730-00-196-1467	4	4
56697	201116-001		15	4
56697	201999-020-2	2530-00-146-0480	15	1
56697	202100-205L	6940-00-467-0988	13	9
56697	202100-205R	6940-00-467-1012	13	8
56697	203109-001	5315-01-061-4971	15	9
56697	204101-001	3110-01-121-0433	15	5
56697	207100	2530-01-016-2029	15	7
56697	208102	5360-01-061-2941	15	16
56697	209108-001		13	10
79725	2100B		1	6
79725	2110A	5975-00-244-7806	4	2
56697	211102-001		15	12
79725	2115	5975-00-622-2178	3	6
56697	212128	2530-01-185-6764	17	1
79725	2141	5975-00-408-2794	4	20
56697	214103	5360-00-340-4745	15	6
56697	214104	5365-01-061-0710	13	6
56697	214108	5365-01-062-1009	15	8

PART NUMBER INDEX

FSCM	PART NUMBER	STOCK NUMBER	FIG	ITEM
56697	300137-001		20	17
56697	301110-003L	5307-00-637-1084	20	18
56697	301110-003R	5307-00-637-1084	20	18
56697	303100	5310-00-259-1485	20	19
56697	303101	5310-00-572-0218	20	19
56697	304106	5340-01-178-7362	20	3
26337	305106	5330-01-132-2053	20	4
56697	3060301-002	2530-01-110-1332	20	13
08108	312	6240-00-155-7923	7	4
79470	3200X4X2	4730-00-529-1487	19	21
10001	33G1726-25	5325-00-276-6059	3	7
92967	37-03	5310-01-099-6539	29	15
56697	400146		13	4
56697	401101	5305-01-063-1742	15	13
56697	402102	5310-01-060-7184	15	15
56697	402109	5310-01-101-4843	20	11
56697	402137		13	12
56697	403113	5310-01-062-0358	15	14
56697	403114		13	11
56697	403145	5310-01-062-1531	15	10
56697	403149	5310-01-062-1532	13	7
56697	403161	5310-01-183-6854	20	12
56697	404101-001	5320-01-020-0703	15	3
56697	405128	3120-01-183-6814	13	5
56697	405129	3120-01-042-2579	13	15
56697	407101	4730-00-172-0034	13	13
			14	14
56697	408101-001	5330-01-067-3440	13	14
56697	408106		13	2
19207	455174	5305-00-696-5293	6	3
21450	501703		4	5
21450	503056		4	3
21450	503066		4	9
21450	504880		4	18
21450	506209	5940-00-050-6209	2	22
			2	30
			2	47
			12	29
19207	5232954	4730-00-278-6319	19	16
			19	39
19204	572929	5999-01-159-6371	2	40
56697	6-295	5330-01-101-4854	20	14
60038	632	3110-00-100-0332	20	10
60038	643	3110-00-100-0663	20	9
19207	7018983		30	11
19207	7057360	5310-00-705-7360	30	1
19207	7067973	2510-00-706-7973	26	6
19207	7084792	2510-01-024-3618	34	7
			35	5
19207	7084793	2510-01-024-3619	35	10
19207	7084794	2510-01-022-2580	34	6

PART NUMBER INDEX

FSCM	PART NUMBER	STOCK NUMBER	FIG	ITEM
19207	7084794	2510-01-022-2580	35	7
19207	7089777-1	4730-00-640-6330	19	53
19207	7092279	6220-00-338-1083	10	4
19207	7092352	2510-00-179-5569	6	4
19207	7092353	5340-01-175-7393	6	5
19207	7092354	5340-01-179-1307	6	2
18876	7092456	4935-01-073-9486	1	3
19207	7092511	2590-00-693-4171	6	8
19207	7264749	2540-00-287-2571	31	29
19207	7320658	5330-00-297-7106	8	3
19207	7364214	4730-00-278-4822	19	37
19207	7389493	2530-00-738-9493	21	3
19207	7411021	2530-00-137-9235	19	1
19207	7417585	2510-00-741-7585	26	1
19207	7418891	5306-01-102-7336	27	8
19207	7418892	5310-00-017-9721	27	6
60038	742	3110-00-100-0337	20	16
60038	749	3110-00-100-0683	20	15
19207	7521156	3040-00-752-1156	27	15
19207	7521157	2510-00-752-1157	27	12
19207	7525997		8	8
19207	7526796	5310-00-596-8169	7	3
19207	7527645	5975-00-697-7769	2	17
19207	7532464	5975-00-243-1275	5	5
12339	76D05086	5935-01-038-9629	12	28
19207	7720485	5935-00-772-0485	12	36
19207	7722322	5365-00-772-2322	2	26
19207	7722344	5935-00-772-2344	2	18
19207	7723307	5935-00-772-3307	2	19
			12	38
19207	7723308	5935-00-333-9414	2	27
19207	7731428	5935-00-773-1428	12	16
19207	7737497	5940-00-232-5190	1	8
19207	7739666	5306-00-017-9722	27	9
19207	7739705	4010-00-809-6431	27	2
19207	7748612	5365-01-204-0185	4	11
19207	7748661	6110-01-205-8650	4	19
19207	7748662	5925-00-583-7941	4	6
19207	7748911	5340-00-839-0098	31	34
19207	7979228	5340-00-741-4347	23	4
19207	7979252	5325-01-098-6304	2	8
19207	7982997	1015-00-798-2997	2	52
92967	814-00	2590-01-100-9001	29	20
92967	817-00	5310-01-098-7245	29	3
19207	8327759	5320-00-285-1025	27	14
19207	8328355	5935-01-081-5484	2	1
19207	8330281	4730-00-335-4728	19	6
19207	8338561	5935-00-833-8561	2	34
			2	42
			2	50
			12	32

PART NUMBER INDEX

FSCM	PART NUMBER	STOCK NUMBER	FIG	ITEM
19207	8338562	5970-00-833-8562	2	35
			2	43
			2	51
			12	33
19207	8338564	5940-00-399-6676	2	36
			2	44
			12	34
19207	8338566	5935-00-572-9180	2	38
			7	6
			8	7
			9	9
			12	13
			12	41
19207	8338567	5310-00-833-8567	2	39
			7	7
			8	6
			9	10
			12	12
			12	42
92967	836-00	5310-01-098-7236	29	12
92967	837-00	5310-01-098-7246	29	13
19207	8376442	4820-00-242-4064	19	15
19207	8383854		31	7
			32	13
19204	8409873	4730-00-555-0592	19	58
92967	841-00	5310-01-098-7827	29	2
19207	8683490	5935-00-854-4447	12	17
19207	8701325	5310-00-655-9860	2	25
19207	8713244	5340-00-263-3500	32	10
19207	8713244-1		32	17
19207	8713389		25	1
19207	8713390		25	13
19207	8722013	2510-01-016-2028	30	5
19207	8722118-1	5315-01-033-2831	30	6
19207	8722119	5315-01-037-4348	30	2
19207	8722122	5306-01-031-4839	30	4
19207	8722125	2510-01-203-5709	36	5
19207	8722126	2510-01-203-5710	36	7
19207	8722127	2510-01-203-5711	36	4
19207	8722129		11	1
			32	16
19207	8722133		12	27
19207	8722139	5340-01-212-9415	22	3
19207	8722172	4940-01-207-8955	25	12
19207	8722175	2590-01-203-5673	25	2
19207	8722178	5340-01-203-5670	32	5
19207	8722181	3040-01-203-5671	32	24
19207	8722185	5340-01-031-7021	31	11
			32	27
19207	8722186-2	3040-01-210-9707	31	32
19207	8722186-22	2510-01-197-8556	31	37

PART NUMBER INDEX

FSCM	PART NUMBER	STOCK NUMBER	FIG	ITEM
19207	8722202	5340-01-031-4963	31	13
			32	26
19207	8722217	4710-01-203-5676	25	6
19207	8722220	2590-01-203-5677	25	7
19207	8722221	2590-01-203-5678	25	8
19207	8722225	5315-01-031-5197	31	9
			32	3
19207	8722226	5410-01-210-3575	36	2
19207	8722227	5410-01-210-3576	36	6
19207	8722234		2	37
19207	8722247	2530-01-228-7799	10	1
19207	8722248	2590-01-083-3160	2	2
19207	8722256	5340-01-213-5494	4	14
19207	8722260	5510-01-210-7017	6	10
19207	8722261	5510-01-210-7018	6	1
19207	8722276		5	4
19207	8722281	2510-01-087-3067	34	4
19207	8722282	2510-01-084-5987	34	3
19207	8729078	2510-01-042-9692	34	1
19207	8729079	2510-01-070-9499	35	1
19207	8739106	2540-00-851-2832	22	4
19207	8742391	5340-00-657-9792	2	3
19207	8742392	5935-00-772-2982	1	9
19207	8747152	2590-00-630-1567	31	22
92967	891-00	2520-01-101-0935	29	9
92967	893-01	4710-01-140-6473	29	4
92967	895-00	5310-01-098-7247	29	5
92967	898-00	2520-01-101-2551	29	11
66640	9112001	4730-00-018-9566	19	20
89346	93931R92	2530-00-706-6614	15	2
92967	9639-01	5306-01-139-1835	29	6
92967	9640-00	2520-01-101-2559	29	7
92967	9934-02	2510-01-100-9270	29	17

APPENDIX G

MANUFACTURED ITEMS

MANUFACTURED HARNESSES

10935060 Branched Wiring Harness

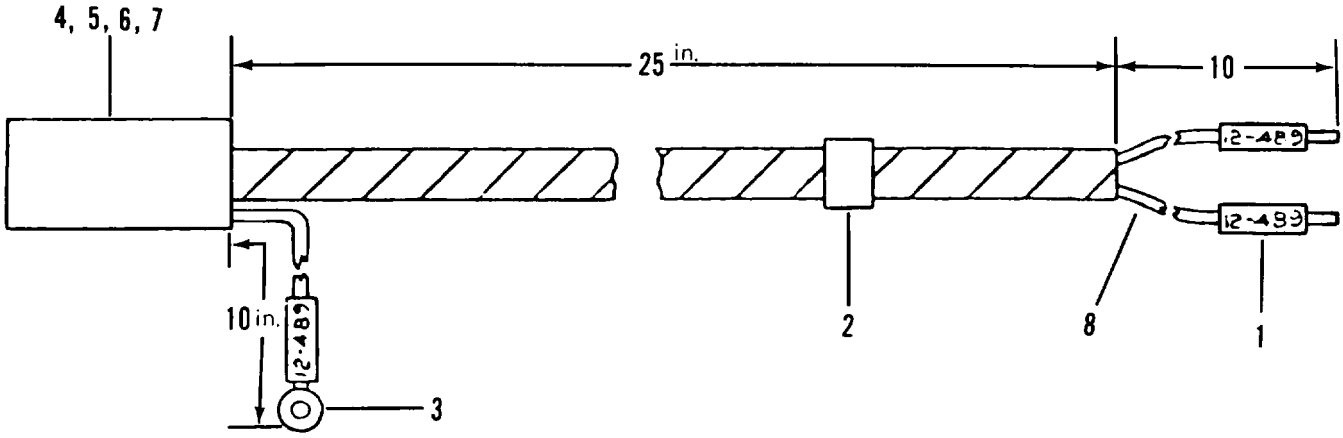

Number	Part Number	Name	Quantity
1	M43436/1-1	Marker Band	3
2	10864355	Marker Band	1
3	506209	Lug Terminal	1
4	7527645	Electrical Coupling Nut	1
5	7722344	Electrical Insert	1
6	7723307	Bushing Retainer Nut	1
7	8724230	Shell Assembly	1
8	7720853	Cable	

NOTES:

1. Crimp terminals to conductors.
2. Splice in cables shall be bound together with one half overlapping turns insulation tape, electrical, MIL-T-631C, 0.010 thick, 1" max. wide.
3. Waterproof.
4. Solder conductors to plug contacts.

MANUFACTURED HARNESSES - continued

10935061 Branched Wiring Harness

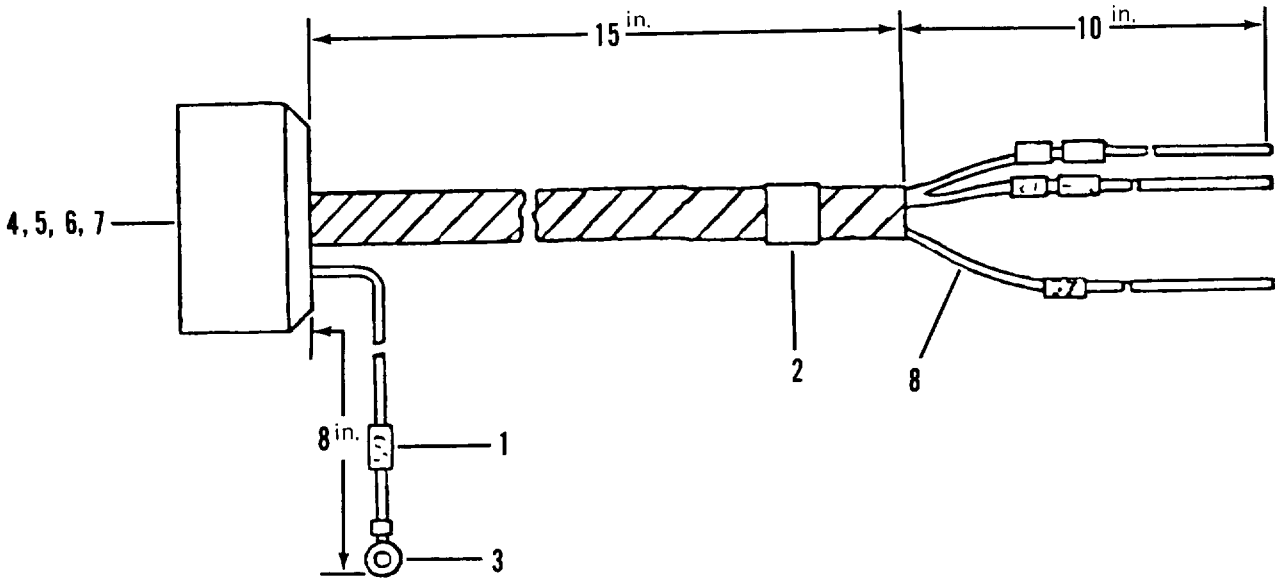

Number	Part Number	Name	Quantity
1	M43436/1-1	Marker Band	6
2	M43436/1-2	Marker Band	1
3	506209	Lug Terminal	1
4	7722322	Rubber Bushing	1
5	7723308	Bushing Retainer Nut	1
6	8701325	Sleeve Nut	1
7	8724243	Shell Assembly	1
8	M13486/1-5	Cable	V

MANUFACTURED HARNESSES - continued

10944622 Branched Wiring Harness

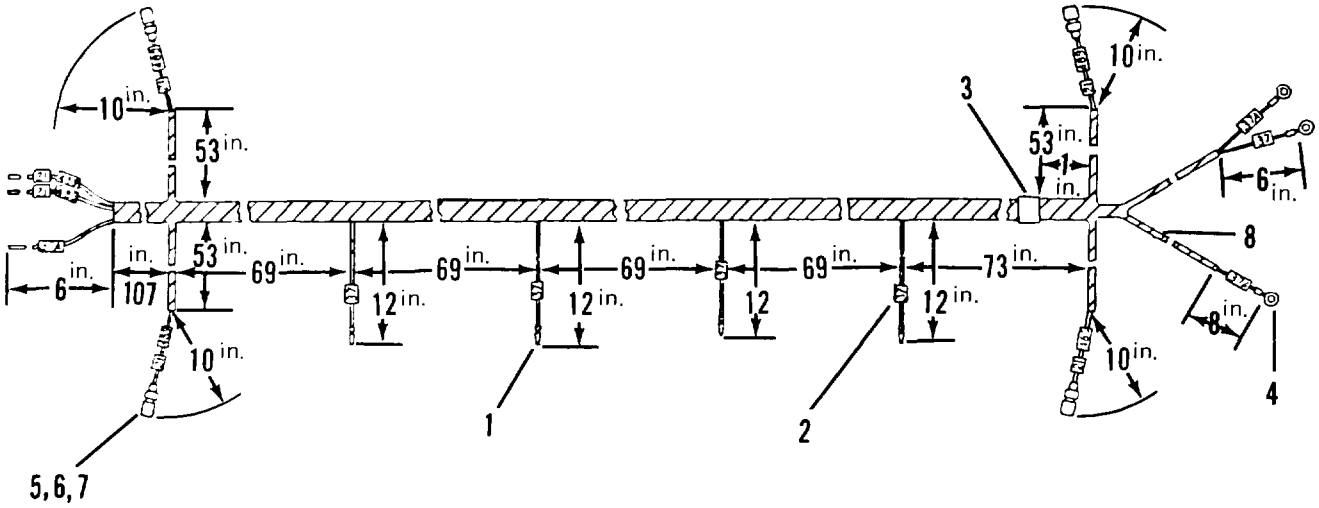

Number	Part Number	Name	Quantity
1	MS27148-2	Electrical Contact	4
2	M43436/1-1	Marker Band	1
3	M43436/1-2	Marker Band	1
4	506209	Lug Terminal	3
5	7982997	Terminal Assembly	4
6	8338561	Electrical Shell	4
7	8338562	Bushing Insulator	4
8	M13486/1-5	Cable	V

MANUFACTURED HARNESSES - continued

10944623 Branched Wiring Harness

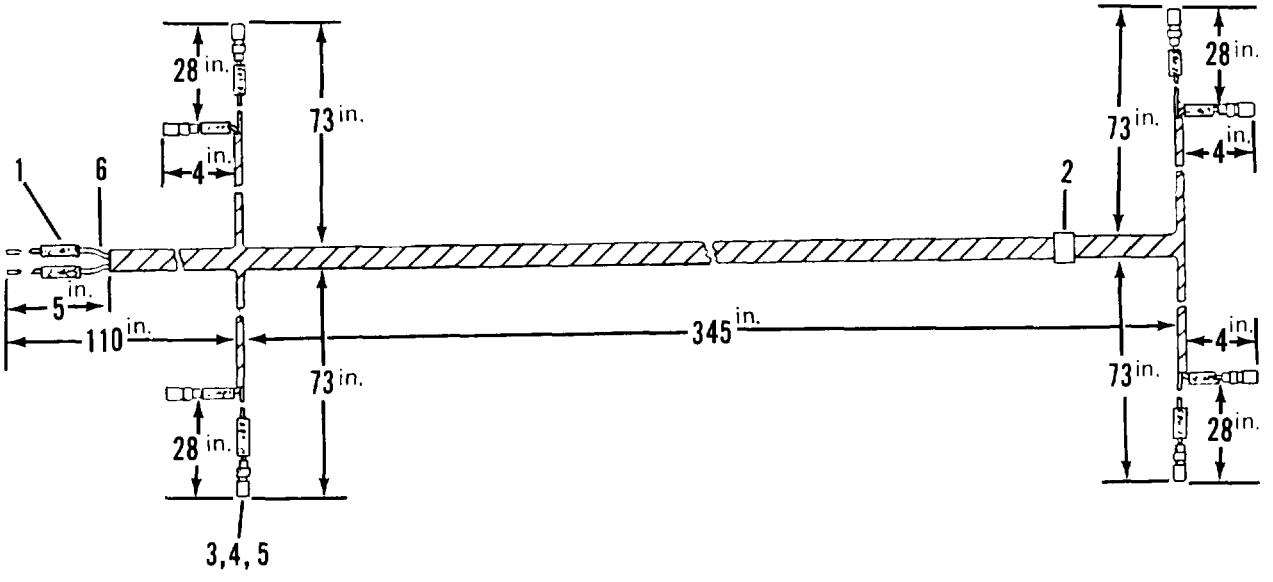

Number	Part Number	Name	Quantity
1	M43436/1-1	Marker Band	10
2	M43436/1-2	Marker Band	1
3	8338561	Electrical Shell	8
4	8338562	Bushing Insulator	8
5	8338564	Terminal Assembly	8
6	7720853	Cable	v

NOTES:

1. Crimp terminals to conductors.
2. Splice in cables shall be bound together with one half overlapping turns of insulation tape, electrical, MIL-T-631C, 0.010 thick, 1" max. wide.
3. Waterproof.

MANUFACTURED HARNESSES - continued

10935044 Wiring Harness

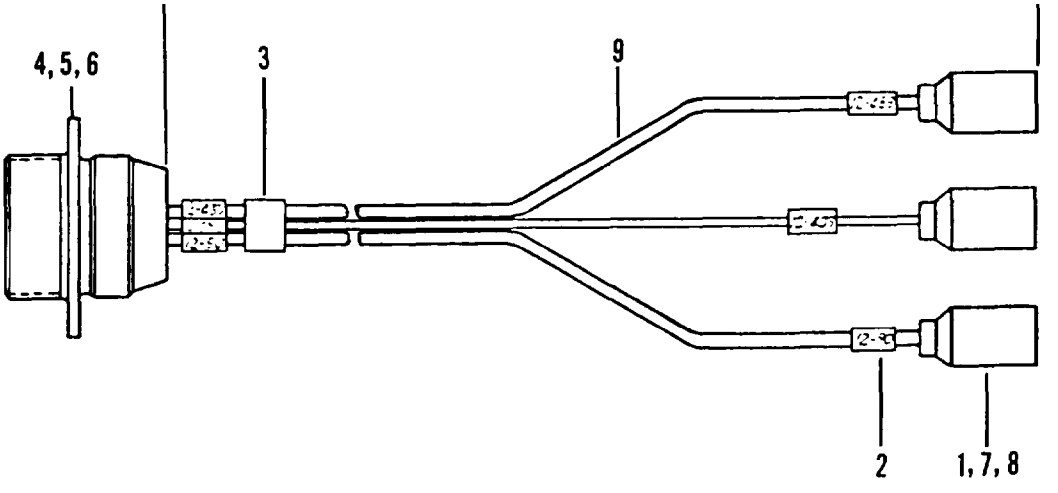

Number	Part Number	Name	Quantity
1	MS27148-2	Electrical Contact	3
2	M43436/1-1	Marker Band	6
3	M43436/1-2	Marker Band	1
4	7720485	Receptacle Connector	1
5	7722344	Electrical Insert	1
6	7723307	Bushing Retainer Nut	1
7	8338566	Electrical Shell	3
8	8338567	Slotted Washer	3
9	M13486/1-5	Cable	V

MANUFACTURED HARNESSES - continued

8722133 Branched Wiring Harness

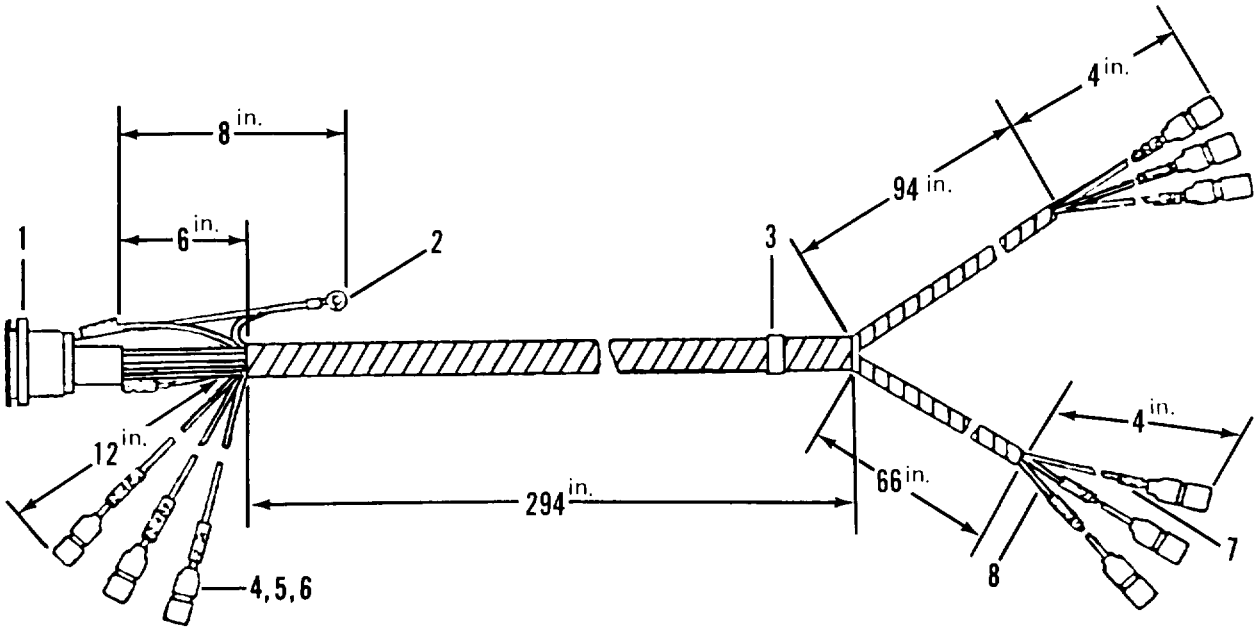

Number	Part Number	Name	Quantity
1	7748694	Connector	1
2	506209	Terminal	1
3	MS39020-2	Marker Band	1
4	8338561	Connector Shell	9
5	8338562	Insulator Sleeve	9
6	8338564	Connector Terminal	9
7	MS39020	Marker Band	15
8	7720853	Cable	V

MANUFACTURED HARNESSES - continued

8722248 Branched Wiring Harness

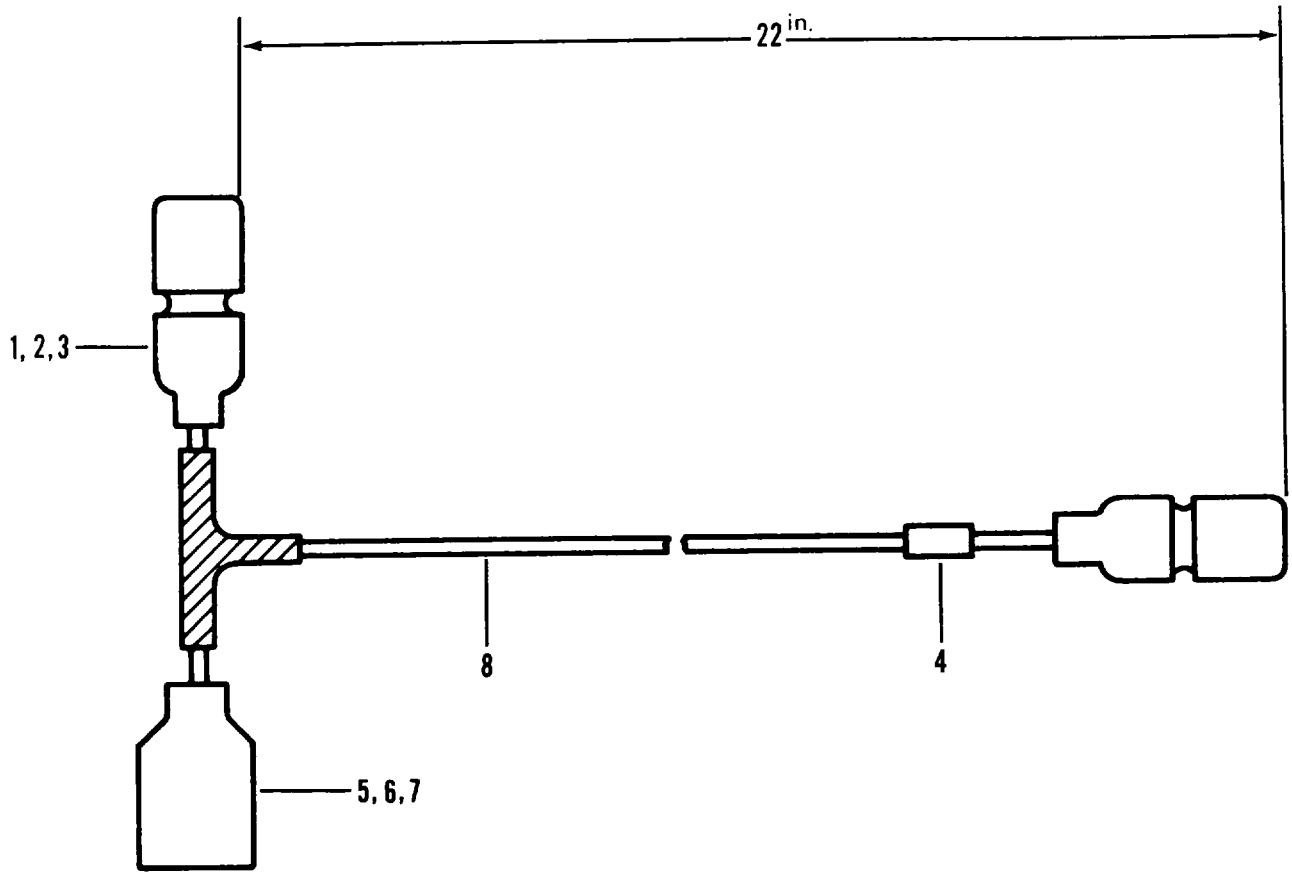

Number	Part Number	Name	Quantity
1	8338561	Shell	2
2	8338562	Sleeve	2
3	8338564	Terminal	2
4	MS39020-2	Marker Band	1
5	8338566	Shell	1
6	8338567	Washer	1
7	572929	Terminal	1
8	7720853	Cable	V

MANUFACTURED HARNESSES - continued

8722234 Branched Wiring Harness

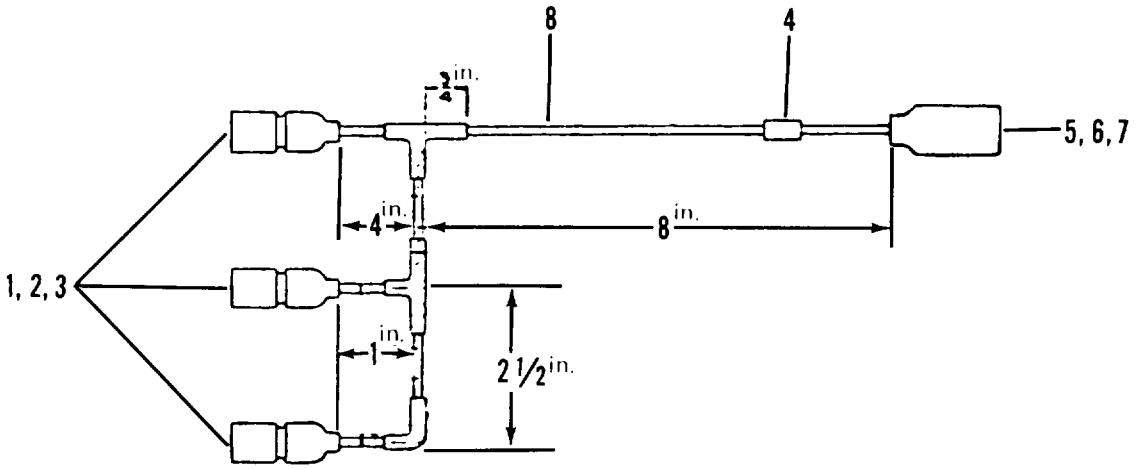

Number	Part Number	Name	Quantity
1	8338561	Shell	3
2	8338562	Sleeve	3
3	8338564	Terminal	3
4	MS39020-2	Marker Band	1
5	8338566	Shell	1
6	8338567	Washer	1
7	MS27148-2	Terminal	1
8	M13486/1-5	Cable	V

MANUFACTURED TUBING

Tubing Assembly No.	Bulk Tubing No.	Tubing Length
CPR 104420-2-270	CPR 104420-2	270 in. (686 cm)
CPR 104420-2-212	CPR 104420-2	212 in. (538 cm)
CPR 104420-2-28	CPR 104420-2	28 in. (71 cm)
CPR 104420-2-40	CPR 104420-2	40 in. (102 cm)
CPR 104420-2-23	CPR 104420-2	23 in. (58 cm)
CPR 104420-2-41	CPR 104420-2	41 in. (104 cm)
CPR 104420-2-19	CPR 104420-2	19 in. (48 cm)
CPR 104420-2-62	CPR 104420-2	62 in. (157 cm)
CPR 104420-2-35	CPR 104420-2	35 in. (89 cm)
CPR 104420-0-13	CPR 104420-2	13 in. (33 cm)

MANUFACTURED HOSES

Hose Assembly No.	Bulk Hose No.	Hose Length
MIL-H-3992-36	MIL-H-3992	36 in. (91 cm)
MIL-H-3992-38	MIL-H-3992	38 in. (97 cm)
MIL-H-3992-45	MIL-H-3992	45 in. (114 cm)

MANUFACTURED WOOD DECK

Part Number	Description	Amount
8722125	Wood board	223 linear feet (68 m)
8722126	Wood board	19 linear feet (6 m)
8722127	Wood board	19 linear feet (6 m)
8722226	Metal wear strip	30 feet (9 m)
8722227	Metal wear strip	30 feet (9 m)

APPENDIX H

TORQUE LIMITS

Action	Part	Lb ft	Nm
Brake Shoe Installation	Spider Bolt	100-120 lb ft	136-163 Nm
Brake Drum Installation	Axle Nut	200-225 lb ft	272-306 Nm
Axle Installation	U-bolt Nut	300 lb ft	408 Nm
Caging Air Brake Chamber Spring	Release Tool Assembly	50 lb ft	68 Nm
Tire Installation	Lug Nuts	400-450 lb ft	542-612 Nm
Landing Leg Installation	Brace Nut	150-160 lb ft	204-218 Nm
Landing Leg Installation	Gear Box Nut	150-160 lb ft	204-218 Nm

INDEX

A

	Para.	Page
Additional authorization list		D-1
Adjusters, slack	4-31	4-49
Adjustments, brake	4-30	4-47
Adjustments, electrical, contact	4-12	4-14
Adminstrative storage	4-61	4-95
Air brake chambers:	4-29	4-44
Installation	4-37	4-56
Removal	4-37	4-56
Air hose couplings:		
Brake	2-5	2-3
Cleaning	3-8	3-10
Removal	4-32	4-51
Installation	4-32	4-51
Air line:		
Emergency	4-33	4-52
Service	4-33	4-52
Tests	4-30	4-47
Air lines and fittings	4-33	4-52
Air reservoir:		
Drainage and tests	4-30	4-47
Installation	4-39	4-59
Removal	4-39	4-59
Servicing	3-9	3-10
Air system, charging	4-35	4-54
Angle of departure	1-8	1-3
Axle, rear	5-4	5-1
Axles:	1-7	1-3
Removal	4-32	4-51
Installation	4-32	4-51

B

Backing	2-24	2-20
Basic issue items list		C-1
Blackout covers, window	4-49	4-79
Blackout - stoplight, siassembly	4-17	4-19
Blocks, chock	2-11	2-5
Board assembly	2-10	2-5
Body lights:		
110 volt	2-18	2-8
12 volt	2-16	2-7
24 volt	2-17	2-8
Body, van	2-19	2-8
Body wiring:		
Inspection	4-25	4-34
Repair	4-24	4-34

	Para.	Page
B (cont.)		
Body wiring diagram	4-28	4-38
Brake air hose couplings	2-5	2-3
Brakes:		
Assembly	4-40	4-60
Disassembly	4-40	4-60
Brake drum:	4-45	4-68
Cleaning	4-45	4-68
Inspection	4-45	4-68
Installation	4-45	4-68
Removal	4-45	4-68
Repair	4-45	4-68
Brake drum and hub:	4-45	4-68
Installation	4-45	4-68
Removal	4-45	4-68
Brake parking:	2-37	2-28
Installation	4-34	4-52
Removal	4-34	4-52
Brake shoes	4-40	4-60
C		
Cable receptacle, intervehicular	2-4	2-2
Cable receptacles:		
Installation, 12 volt	4-26	4-35
Installation, 24 volt	4-27	4-36
Removal, 12 volt	4-26	4-35
Removal, 24 volt	4-27	4-36
Repair, 12 volt	4-26	4-35
Repair, 24 volt	4-27	4-36
Camshafts	4-41	4-62
Center of gravity	1-8	1-3
Chamber, air brake:	4-29	4-44
Installation	4-37	4-56
Removal	4-37	4-56
Charging air system	4-35	4-54
Chassis wiring diagram	4-28	4-38
Chock blocks, positioning	2-11	2-5
Circuit breaker, 110 volt	2-1	2-1
Circuit breaker load center:		
Installation	4-15	4-17
Removal	4-15	4-17
Cleaning air hose couplings	3-8	3-10
Cleaning landing gear legs'	3-7	3-10
Clearance light cables:		
Installations	4-19	4-24
Removal	4-41	4-62

	Para.	Page
C (cont.)		
Clearence lights:		
Cleaning	4-19	4-24
Inspection	4-19	4-24
Installation	4-19	4-24
Lamp replacement	4-19	4-24
Removal	4-19	4-24
Repair	4-19	4-24
Cold, operation in	2-29	2-26
Components of end item and basic issue items list		C-1
Composite marker light:		
Assembly	4-18	4-22
Cleaning	4-18	4-22
Inspection	4-18	4-22
Installation	4-18	4-22
Lamp replacement	4-18	4-22
Removal	4-18	4-22
Repair	4-18	4-22
Connecting external power	2-26	2-22
Connectors, electrical, cleaning	3-6	3-9
Connectors, wire	4-28	4-38
Couplings, brake air hose	2-5	2-3
	4-32	4-50
Couplings, dummy	2-6	2-3
Coupling semitrailer	2-23	2-17
Covers, blackout windows	4-49	4-79
Crank, landing leg	2-9	2-4
D		
Data, equipment	1-8	1-3
Data plates:	2-28	2-25
Installation	4-56	4-92
Removal	4-56	4-92
Deck, wood:		
Rebuild	5-10	5-13
Repair	4-54	4-90
Departure, angle of	1-8	1-3
Description, major components	1-7	1-3
Dimensions, vehicle	1-8	1-3
Dome lights:		
Installation, 12 volt	4-22	4-29
Installation, 110 volt	4-23	4-31
Dome light switches	2-2	2-2
Door assembly, left:		
Installation	4-53	4-87
Removal	4-53	4-87
Repair	4-53	4-87

	Para.	Page
D (cont.)		
Door assembly, right:		
Installation	4-52	4-83
Removal	4-52	4-83
Repair	4-52	4-83
Doors:		
Inspection	4-52	4-83
Installation	4-52	4-83
Removal	4-52	4-83
Repair	4-52	4-83
Drain cock, air reservoir	2-7	2-3
Driving	2-24	2-20
Drum, brake:	4-42	4-65
Cleaning	4-45	4-68
Inspection	4-45	4-68
Installation	4-45	4-68
Removal	4-45	4-68
Drum and hub:	4-42	4-65
Installation	4-45	4-68
Removal	4-45	4-68
Dummy couplings	2-6	2-3
Dust, operation in	2-35	2-27
E		
Electrical connectors, cleaning	3-6	3-9
Electrical system	1-6	1-2
	1-8	1-3
Electrical wiring	2-15	2-7
Emergency air line	4-29	4-44
Emergency relay valve:	4-29	4-44
Drainage and tests	4-30	4-47
Installation	4-38	4-58
Removal	4-38	4-58
Equipment data	1-8	1-3
Equipment improvement recommendations	1-5	1-1
Expendable/Durable supplies and materiels list		E-1
External receptacles, 110 volt	2-3	2-2
F		
Fan, ventilating:		
Inspection	4-24	4-32
Installation	4-24	4-32
Removal	4-24	4-32
Fan, ventilating, 24 volt	2-14	2-7
Felt pads (ground board assembly)	2-10	2-5
Floor boards:		
Rebuild	5-10	5-13
Repair	4-54	4-90
Fording	2-36	2-27

	Para.	Page
F (cont)		
Forms and records	1-2	1-1
	2-21	2-9
Fuse replacement	4-13	4-15
G		
Gladhands	4-32	4-51
Gravity, center of	1-8	1-3
H		
Handcrank, landing leg	2-9	2-4
Heat, operation in	2-30	2-26
Hose coupling, air	2-5	2-3
Hose couplings, air, cleaning	3-8	3-10
Hub :	4-42	4-65
Cleaning	4-45	4-68
Inspection	4-45	4-68
Installation	4-45	4-68
Removal	4-45	4-68
Repair	4-45	4-68
Hub and brake drum:	4-42	4-65
Installation	4-45	4-68
Removal	4-45	4-68
I		
Intervehicular cable receptacles	2-4	2-2
Intervehicular hoses, connecting	2-23	2-17
K		
Kingpin:		
Installation	5-7	5-7
Removal	5-7	5-7
L		
Ladder	2-12	2-6
Lamp replacement:		
Clearance light	4-19	4-24
Dome light, 24 volt	4-20	4-27
Dome light, 110 volt	4-21	4-28
Taillight, 12 volt	4-17	4-19
Taillight, 24 volt	4-18	4-22
Lamps	1-8	1-3
Landing gear legs, cleaning	3-7	3-10

	Para.	Page
L (cont)		
Landing legs:	1-8	1-3
Cleaning	4-48	4-74
Inspection	4-48	4-74
Installation	4-48	4-74
Removal	4-48	4-74
Repair	4-48	4-74
Leg handcrank	2-9	2-4
Lights	1-8	1-3
Lights, body:		
110 volt	2-18	2-8
12 volt	2-16	2-7
24 volt	2-17	2-8
Lights, clearance	4-19	4-24
Lights, service	2-15	2-7
Light switches, dome	2-2	2-2
Lights, composite, 24 volt	4-18	4-22
Lights, tail, 12 volt	4-17	4-19
Limitations:		
Load	1-6	1-2
Speed	1-6	1-2
Lines and fittings, air	4-33	4-52
Lining, brake	5-6	5-6
Load limitation	1-6	1-2
Location, major components	1-7	1-3
Lockplate replacement, door	4-52	4-83
Lowering landing gear	2-25	2-21
Lubrication:		
Chart	3-2	3-1
Instructions	3-1	3-1
M		
Maintenance allocation chart		B-1
Maintenance forms and records	1-2	1-1
	2-21	2-9
Major components	1-7	1-3
Manufactured items		G-1
Mud, operation in	2-34	2-27
O		
Operating towing vehicle and semitrailer	2-24	2-20
Operation under unusual conditions:		
Cold	2-29	2-26
Dusty or sandy areas	2-35	2-27
Fording	2-36	2-27
Heat	2-30	2-26
Mud	2-34	2-27
Rainy or humid conditions	2-31	2-26
Saltwater areas	2-32	2-27
Snow	2-33	2-27

	Para.	Page
O (cont.)		
Operator/crew PMCS	2-22	2-9
Operator troubleshooting	3-5	3-6
Organizational PMCS	4-9	4-3
Organizational troubleshooting	4-11	4-6
P		
Pads, float:	2-10	2-5
Installation	4-58	4-93
Removal	4-58	4-93
Parking	2-24	2-20
Parking, at-halt	2-24	2-20
Parking brake:	2-37	2-28
Installation	4-34	4-52
Removal	4-34	4-52
Parts, repair	4-3	4-1
Payload	1-6	1-2
	1-8	1-3
Plate, data:	2-28	2-25
Installation	4-56	4-92
Removal	4-56	4-92
PMCS, operator	2-22	2-9
PMCS, organizational	4-9	4-3
Power, external, 110 volt, connecting	2-3	2-2
Purpose, capabilities and features	1-6	1-2
Purpose of equipment	1-1	1-1
R		
Rainy conditions, operation in	2-31	2-26
Rear axle	5-4	5-1
Receptacle, intervehicular, cable	2-4	2-2
Receptacle, 12 volt	4-26	4-35
Receptacle, 24 volt	4-27	4-36
Receptacle, wall	4-16	4-18
Recommendations, equipment improvement	1-5	1-1
References		A-1
Reflectors:		
Installation	4-55	4-91
Removal	4-55	4-91
Relay valve, emergency:	4-29	4-44
Drainage and tests	4-30	4-47
Installation	4-38	4-58
Removal	4-38	4-58
Reservoir, air:	4-29	4-44
Drainage and tests	4-30	4-47
Installation	4-39	4-59
Removal	4-39	4-59
Reservoir, drain cock	2-7	2-3

	Para.	Page
S (cont.)		
Salt water, operation in	2-32	2-27
Sand, operation in	2-35	2-27
Scope of manual	1-1	1-1
Service air line	4-29	4-44
Service lights	2-15	2-7
Servicing air reservoir	3-9	3-10
Shipment, preparation for	1-4	1-1
Shoe, brake	4-40	4-60
Slack adjuster	4-31	4-49
Slack adjuster test	4-30	4-47
Snow, operation in	2-33	2-27
Spar tire:		
Installation	2-27	2-24
Removal	2-27	2-24
Spare tire carrier	1-8	1-3
	2-8	2-4
Installation	4-47	4-72
Removal	4-47	4-72
Speed limitations	1-6	1-2
Springs:	1-6	1-2
Installation	5-8	5-9
Removal	5-8	5-9
Stopping	2-24	2-20
Stop, turn and taillight:		
Installation	4-17	4-19
Lamp replacement	4-17	4-19
Removal	4-17	4-19
Storage, preparation for	1-4	1-1
Switch box:		
Installation	4-15	4-17
Removal	4-15	4-17
Switch box, 110 volt	2-1	2-1
Switches, dome light	2-2	2-2
Switch replacement, dome light, 24 volt	4-22	4-29
Switch replacement, dome light, 110 volt	4-23	4-31
T		
Tailights, 12 volt:		
Assembly	4-17	4-19
Bracket	4-17	4-19
Cleaning	4-17	4-19
Inspection	4-17	4-19
Installation	4-17	4-19
Removal	4-17	4-19
Repair	4-17	4-19
Test, slack adjuster	4-30	4-47
Tire carrier operating shaft	2-8	2-4

	Para.	Page
T (cont.)		
Tire carrier, spare:	1-8	1-3
Assembly	4-47	4-72
Cleaning	4-47	4-72
Disassembly	4-47	4-72
Inspection	4-47	4-72
Installation	4-47	4-72
Maintenance and adjustment	4-46	4-71
Removal	4-47	4-72
Repair	4-47	4-72
Tires	1-8	
	4-44	4-68
Torque limits		H-1
Towing vehicle	1-8	1-3
Troubleshooting:		
Operator	3-5	3-6
Organizational	4-11	4-6
Trunnion tube:		
Installation	5-9	5-11
Removal	5-9	5-11
Turning	2-24	2-20
U		
Uncaging failsafes	4-36	4-55
Unhooking semitrailer	2-25	2-21
Unpacking and checking the equipment	4-6	4-2
V		
Valve, emergency relay	4-38	4-58
Van body	2-19	2-8
Vehicle:		
Capabilities	1-6	1-2
Dimensions	1-8	1-3
Features	1-6	1-2
Purposes	1-6	1-2
Weights	1-8	1-3
Ventilating fan, 24 volt:	2-14	2-7
Inspection	4-24	4-32
Installation	4-24	4-32
Removal	4-24	4-32
Voltage	1-6	1-2
W		
Weights, vehicle	1-8	1-3
Wheels	1-8	1-3
	4-43	4-66

	Para.	Page
W (cont.)		
Wheels:		
Cleaning	4-43	4-66
Inspection	4-43	4-66
Installation	4-43	4-66
Removal	4-43	4-66
Repair	4-43	4-66
Window blackout covers	4-49	4-79
Windows:		
Installation	4-50	4-80
Removal	4-50	4-80
Window shim	4-51	4-81
Wire connectors	4-28	4-38
Wiring:		
110 volt	2-18	2-8
12 volt	2-16	2-7
24 volt	2-17	2-8
Wiring, body:		
Inspection	4-25	4-34
Repair	4-25	4-34
Wiring diagram, body	4-28	4-38
Wiring diagram, chassis	4-28	4-38
Wiring, electrical	4-28	4-38
Wiring harness:		
Installation	4-25	4-34
Removal	4-25	4-34
Repair	4-25	4-34
Wood decking:		
Rebuild	5-10	5-13
Repair	4-54	4-90

By Order of the Secretary of the Army:

JOHN A. WICKHAM, JR.
General, United States Army
Chief of Staff

Official:

R.L. DILWORTH
Brigadier General, United States Army
The Adjutant General

Distribution:

To be distributed in accordance with DA Form 12-39, Operator, Organizational and Direct and General Support maintenance requirements for Semitrailer Stake Van Supply, M129A1, M129A1C, M129A2C, 12-Ton, 4-Wheel.

***U.S. GOVERNMENT PRINTING OFFICE: 1986-742-267**

RECOMMENDED CHANGES TO EQUIPMENT TECHNICAL PUBLICATIONS

SOMETHING WRONG WITH THIS PUBLICATION?

FROM (PRINT YOUR UNIT'S COMPLETE ADDRESS)
Your mailing address

DATE SENT
Date you filled out form

PUBLICATION NUMBER	PUBLICATION DATE	PUBLICATION TITLE
TM 9-XXXX-XXX-XX&P	Date of TM	Title of TM

BE EXACT PIN-POINT WHERE IT IS

PAGE NO	PARA-GRAPH	FIGURE NO	TABLE NO
200	3b		3-1

IN THIS SPACE TELL WHAT IS WRONG AND WHAT SHOULD BE DONE ABOUT IT:

Change "Torque to 5000 lb. ft." to read "Torque to 50 lb. ft."

Reason: 50 lb.ft. is the correct torque for this item.

SAMPLE

PRINTED NAME GRADE OR TITLE AND TELEPHONE NUMBER
John Smith, SGT. AV XXX-XXXX

SIGN HERE

DA FORM 1 JUL 79 2028-2

PREVIOUS EDITIONS ARE OBSOLETE.

P.S.--IF YOUR OUTFIT WANTS TO KNOW ABOUT YOUR RECOMMENDATION MAKE A CARBON COPY OF THIS AND GIVE IT TO YOUR HEADQUARTERS

REVERSE OF DA FORM 2028-2

FILL IN YOUR
UNIT'S ADDRESS

FOLD BACK

DEPARTMENT OF THE ARMY

SAMPLE

OFFICIAL BUSINESS
PENALTY FOR PRIVATE USE $300

POSTAGE AND FEES PAID
DEPARTMENT OF THE ARMY
DOD 314

U.S. MAIL

TEAR ALONG PERFORATED LINE

Commander
US Army Tank-Automotive Command
ATTN: AMSTA-MB
Warren, Michigan 48397-5000

RECOMMENDED CHANGES TO EQUIPMENT TECHNICAL PUBLICATIONS

THEN. . JOT DOWN THE DOPE ABOUT IT ON THIS FORM, CAREFULLY TEAR IT OUT, FOLD IT AND DROP IT IN THE MAIL!

SOMETHING WRONG WITH THIS PUBLICATION?

FROM: (PRINT YOUR UNIT'S COMPLETE ADDRESS)

DATE SENT

PUBLICATION NUMBER	PUBLICATION DATE	PUBLICATION TITLE
TM 9-2330-374-14 & P		SEMITRAILER, VAN: SUPPLY, 4-TON, 4-WHEEL, M129A3

BE EXACT PIN-POINT WHERE IT IS

PAGE NO	PARA-GRAPH	FIGURE NO	TABLE NO

IN THIS SPACE TELL WHAT IS WRONG AND WHAT SHOULD BE DONE ABOUT IT:

PRINTED NAME, GRADE OR TITLE, AND TELEPHONE NUMBER

SIGN HERE

DA FORM 1 JUL 79 2028-2

PREVIOUS EDITIONS ARE OBSOLETE.

P.S.--IF YOUR OUTFIT WANTS TO KNOW ABOUT YOUR RECOMMENDATION MAKE A CARBON COPY OF THIS AND GIVE IT TO YOUR HEADQUARTERS

REVERSE OF DA FORM 2028-2

TEAR ALONG PERFORATED LINE

FILL IN YOUR UNIT'S ADDRESS

FOLD BACK

DEPARTMENT OF THE ARMY

OFFICIAL BUSINESS
PENALTY FOR PRIVATE USE $300

POSTAGE AND FEES PAID
DEPARTMENT OF THE ARMY
DOD 314

U.S. MAIL

Commander
US Army Tank-Automotive Command
ATTN: AMSTA-MB
Warren, Michigan 48397-5000

RECOMMENDED CHANGES TO EQUIPMENT TECHNICAL PUBLICATIONS

THEN... JOT DOWN THE DOPE ABOUT IT ON THIS FORM, CAREFULLY TEAR IT OUT, FOLD IT AND DROP IT IN THE MAIL!

SOMETHING WRONG WITH THIS PUBLICATION?

FROM: (PRINT YOUR UNIT'S COMPLETE ADDRESS)

DATE SENT

PUBLICATION NUMBER	PUBLICATION DATE	PUBLICATION TITLE
TM 9-2330-374-14 & P		SEMITRAILER, VAN: SUPPLY, 12-TON, 4-WHEEL, M129A3

BE EXACT PIN-POINT WHERE IT IS

PAGE NO	PARA-GRAPH	FIGURE NO	TABLE NO

IN THIS SPACE TELL WHAT IS WRONG AND WHAT SHOULD BE DONE ABOUT IT:

PRINTED NAME, GRADE OR TITLE, AND TELEPHONE NUMBER

SIGN HERE

DA FORM 1 JUL 79 2028-2

PREVIOUS EDITIONS ARE OBSOLETE.

P.S.--IF YOUR OUTFIT WANTS TO KNOW ABOUT YOUR RECOMMENDATION MAKE A CARBON COPY OF THIS AND GIVE IT TO YOUR HEADQUARTERS.

REVERSE OF DA FORM 2028-2

FILL IN YOUR UNIT'S ADDRESS

FOLD BACK

DEPARTMENT OF THE ARMY

_____

_____

OFFICIAL BUSINESS
PENALTY FOR PRIVATE USE $300

POSTAGE AND FEES PAID
DEPARTMENT OF THE ARMY
DOD 314

U.S. MAIL

TEAR ALONG PERFORATED LINE

Commander
US Army Tank-Automotive Command
ATTN: AMSTA-MB
Warren, Michigan 48397-5000

RECOMMENDED CHANGES TO EQUIPMENT TECHNICAL PUBLICATIONS

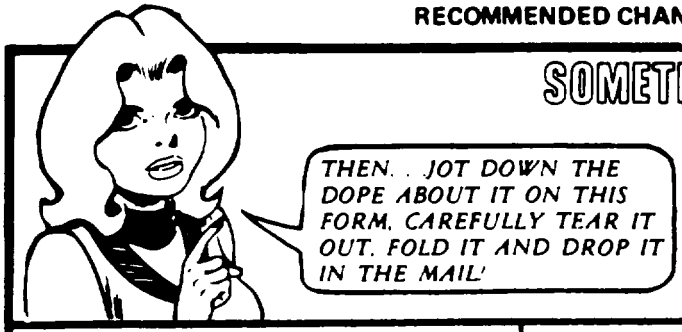

SOMETHING WRONG WITH THIS PUBLICATION?

FROM: (PRINT YOUR UNIT'S COMPLETE ADDRESS)

DATE SENT

PUBLICATION NUMBER	PUBLICATION DATE	PUBLICATION TITLE
TM 9-2330-374-14 & P		SEMITRAILER, VAN: SUPPLY, 12-TON, 4-WHEEL, M129A3

BE EXACT. PIN-POINT WHERE IT IS

PAGE NO	PARA-GRAPH	FIGURE NO	TABLE NO

IN THIS SPACE TELL WHAT IS WRONG AND WHAT SHOULD BE DONE ABOUT IT:

PRINTED NAME, GRADE OR TITLE, AND TELEPHONE NUMBER

SIGN HERE

DA FORM 1 JUL 79 2028-2

PREVIOUS EDITIONS ARE OBSOLETE.

P.S.--IF YOUR OUTFIT WANTS TO KNOW ABOUT YOUR RECOMMENDATION MAKE A CARBON COPY OF THIS AND GIVE IT TO YOUR HEADQUARTERS.

REVERSE OF DA FORM 2028-2

TEAR ALONG PERFORATED LINE

FILL IN YOUR UNIT'S ADDRESS

FOLD BACK

DEPARTMENT OF THE ARMY

OFFICIAL BUSINESS
PENALTY FOR PRIVATE USE $300

POSTAGE AND FEES PAID
DEPARTMENT OF THE ARMY
DOD 314

U.S. MAIL

Commander
US Army Tank-Automotive Command
ATTN: AMSTA-MB
Warren, Michigan 48397-5000

PIN: 060707-000

This fine document...

Was brought to you by me:

Liberated Manuals -- free army and government manuals

Why do I do it? I am tired of sleazy CD-ROM sellers, who take publicly available information, slap “watermarks” and other junk on it, and sell it. Those masters of search engine manipulation make sure that their sites that sell free information, come up first in search engines. They did not create it... They did not even scan it... Why should they get your money? Why are not letting you give those free manuals to your friends?

I am setting this document FREE. This document was made by the US Government and is NOT protected by Copyright. Feel free to share, republish, sell and so on.

I am not asking you for donations, fees or handouts. If you can, please provide a link to liberatedmanuals.com, so that free manuals come up first in search engines:

<A HREF=http://www.liberatedmanuals.com/>Free Military and Government Manuals</A>

- Sincerely
  Igor Chudov
  http://igor.chudov.com/
- Chicago Machinery Movers