TECHNICAL MANUAL

OPERATOR'S, ORGANIZATIONAL, DIRECT SUPPORT, AND GENERAL SUPPORT MAINTENANCE MANUAL (INCLUDING REPAIR PARTS AND SPECIAL TOOLS LISTS)

FOR

DOLLY, TRAILER CONVERTER: 6-TON, 2-WHEEL
M197 (NSN 2330-00-835-8615)
M197A1 (NSN 2330-00-569-0782)

AND

DOLLY, TRAILER CONVERTER: 8-TON, 2-WHEEL
M198 (NSN 2330-00-287-5203)
M198A1 (NSN 2330-00-563-7248)

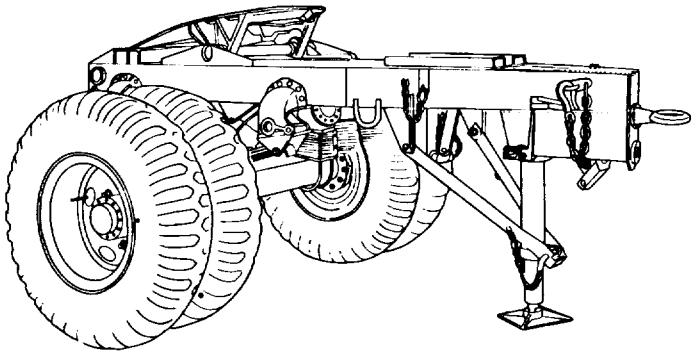

M198A1

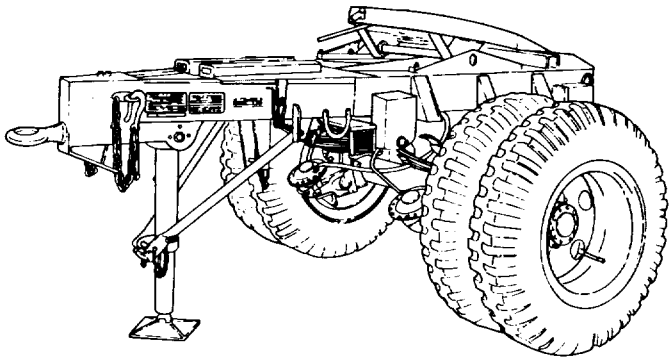

M197A1

This manual supersedes TM 9-2330-203-14, dated 8 June 1973, and all changes.
Approved for public release; distribution is unlimited.

HEADQUARTERS, DEPARTMENT OF THE ARMY JANUARY 1992

FOR INFORMATION ON FIRST AID, REFER TO FM 21-11.

WARNING

ASBESTOS HAZARD

DO NOT handle brakeshoes, brakedrums, or other brake components unless area has been properly cleaned. There may be asbestos dust on these components which can be dangerous if you touch it or breathe it. Wear an approved filter mask and gloves. Never use compressed air or a dry brush to clean brake components. Dust may be removed using an industrial-type vacuum cleaner. Clean dust or mud away from brake components with water and a wet, soft brush or cloth. Failure to follow this warning may result in serious illness or death to personnel.

WARNING

DRY CLEANING SOLVENT

Dry cleaning solvent, P-D-680, is toxic and flammable. Always wear protective goggles and gloves, and use only In a well-ventilated area. Avoid contact with skin, eyes, and clothes, and DO NOT breathe vapors. DO NOT use near open flame or excessive heat. The solvent's flash point is 100°F-138°F (38°C-590C). If you become dizzy while using cleaning solvent, Immediately get fresh air and medical help. If solvent contacts eyes, immediately wash your eyes and get medical aid.

TECHNICAL MANUAL

TM 9-2330-203-14&P

HEADQUARTERS
DEPARTMENT OF THE ARMY
Washington D.C., *24 January 1992*

OPERATOR'S, ORGANIZATIONAL, DIRECT SUPPORT, AND GENERAL SUPPORT MAINTENANCE (INCLUDING REPAIR PARTS AND SPECIAL TOOLS LISTS) FOR DOLLY, TRAILER CONVERTER: 6-TON, 2-WHEEL M197 (NSN 2330-00-835-8615) M197A1 (NSN 2330-00-569-0782) AND DOLLY, TRAILER CONVERTOR: 8-TON, 2-WHEEL M198 (NSN 2330-00-287-5203) M198A1 (NSN 2330-00-563-7248)

Current as of 12 July 1991

REPORTING ERRORS AND RECOMMENDING IMPROVEMENTS

You can help improve this manual. If you find any mistakes or if you know of a way to improve the procedures, please let us know. Mail your letter, DA Form 2028 *(Recommended Changes to Publications and Blank Forms),* or DA Form 2028-2, located in the back of this manual, direct to: Commander, U.S. Army Tank-Automotive Command, ATTN: AMSTA-MB, Warren, MI 48397-5000. A reply will be furnished to you.

TABLE OF CONTENTS

Page

Approved for public release distribution is unlimited.

* This manual supersedes TM 9-2330-203-14, dated 8 June 1973, and all changes.

TABLE OF CONTENTS (Con't)

TABLE OF CONTENTS (Con't)

TABLE OF CONTENTS (Con't)

CHAPTER 1

INTRODUCTION

Section I. GENERAL INFORMATION

1-1. SCOPE.

a. **Type of Manual.** Operator's, Organizational, Direct Support, and General Support Maintenance Manual (Including Repair Parts and Special Tools Lists).

b. **Equipment Names and Model Numbers.** Dolly, Trailer Converter: 6-Ton, 2-Wheel, M197 and M197A1; Dolly, Trailer Converter: 8-Ton, 2-Wheel, M198 and M198A1.

c. **Purpose of Equipment**. Converts semitrailers to full trailers so that semitrailers can be towed by vehicles without a fifth wheel.

1-2. MAINTENANCE FORMS, RECORDS, AND REPORTS.

Department of the Army forms and procedures used for equipment maintenance will be those prescribed by DA Pam 738-750, *The Army Maintenance Management System (TAMMS).*

1-3. DESTRUCTION OF ARMY MATERIEL TO PREVENT ENEMY USE.

For information on destruction of Army materiel to prevent enemy use, refer to TM 750-244-6.

1-4. PREPARATION FOR STORAGE OR SHIPMENT.

For information on preparing the trailer converter dollies for storage or shipment, refer to Chapter4, Section XIII.

1-5. REPORTING EQUIPMENT IMPROVEMENT RECOMMENDATIONS (EIRs).

If your trailer converter dolly needs improvement, let us know. Send us an EIR. You, the user, are the only one who can tell us what you don't like about your equipment. Let us know why you don't like the design or performance. Put it on an SF 368 *(Product Quality Deficiency Report).* Mail it to us at: Commander, U.S. Army Tank-Automotive Command, ATTN: AMSTA-MP, Warren, MI 48397-5000. We'll send you a reply.

Section II. EQUIPMENT DESCRIPTION AND DATA

1-6. EQUIPMENT CHARACTERISTICS, CAPABILITIES, AND FEATURES.

a. The trailer converter dollies allow vehicles with towing pintles to tow semitrailers,

b. Up to 12, 000 lb (5448kg) can towed using the M197 and M197A1 dollies. Up to 16, 000 lb (7264kg) can be towed using the M198 and M198A1 dollies.

c. Maximum towing speeds are 30 mi/h (48 km/h) highway and 20 mi/h (32 km/h) cross-country.

d. Major features of the dollies include:

(1) Intervehicular airbrake hoses receive air from towing vehicle for use by dolly and semitrailer brake system.

(2) Intervehicular electrical cables receive 12- or 24-volt direct current to power semitrailer lights.

(3) Landing leg supports dolly when not coupled to towing vehicle.

(4) M198 and M198A1 have a two-position lunette.

(5) Military pneumatic tires with nondirectional cross-country tread design.

1-7. LOCATION AND DESCRIPTION OF MAJOR COMPONENTS.

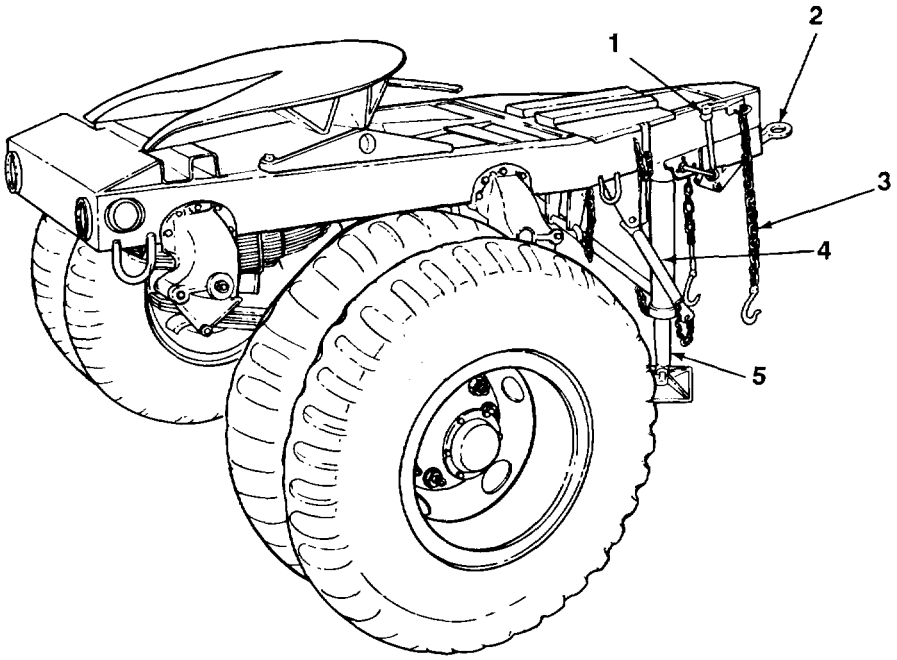

Key	Component	Description
1	Retaining Strap	Locks handcrank when not in use. Handcrank must always be locked in retaining strap when not being used.
2	Lunette	Connects to pintle on towing vehicle. M197 and M197A1 lunette has one position; M198 and M198A1 lunette has two positions.
3	Safety Chains	Connect to towing vehicle. Ensure that semitrailer will not separate from towing vehicle if pintle or lunette fails.
4	Leg Brace	Supports landing leg in vertical position. When not in use, leg brace is raised and secured to dolly frame with lockpin and safety clip.
5	Landing Leg	Supports dolly when uncoupled. When not in use, landing leg is secured with lockpin and safety clip underneath dolly frame.

TA510655

1-7. LOCATION AND DESCRIPTION OF MAJOR COMPONENTS (Con't).

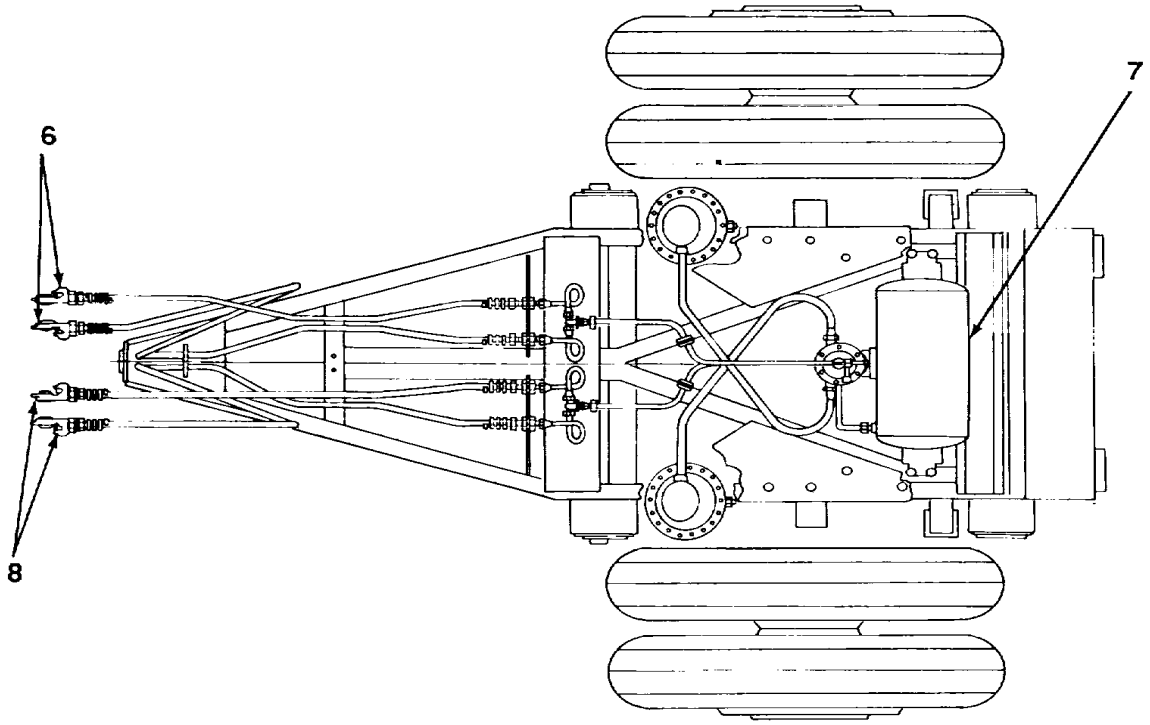

M197 AND M198

Key	Component	Description
6	Service Air Couplings	After connecting to towing vehicle, semitrailer and dolly brakes can be actuated by towing vehicle's brake controls.
7	Pressure Tank	Equipped with draincock for draining moisture and relieving air pressure in dolly airbrake system. To open draincock, turn handle counterclockwise; to close draincock, turn handle clockwise counterclockwise; to close draincock, turn handle clockwise.
8	Emergency Air Couplings	After connecting to towing vehicle, semitrailer and dolly brakes can be actuated by towing vehicle's brake controls.

TA510656

1-7. LOCATION AND DESCRIPTION OF MAJOR COMPONENTS (Con't).

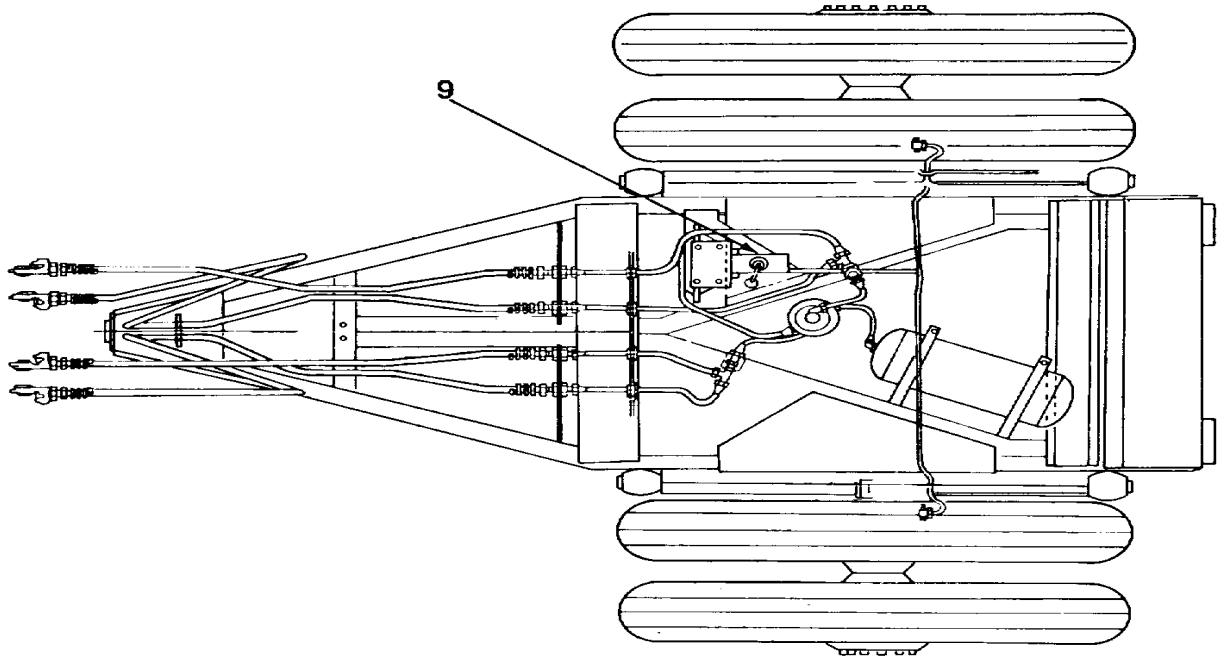

197A1 AND M198A1

Key	Component	Description
9	Master Cylinder	Converts mechanical force to hydraulic pressure to activate brakes.

TA510657

1-7. LOCATION AND DESCRIPTION OF MAJOR COMPONENTS (Con't).

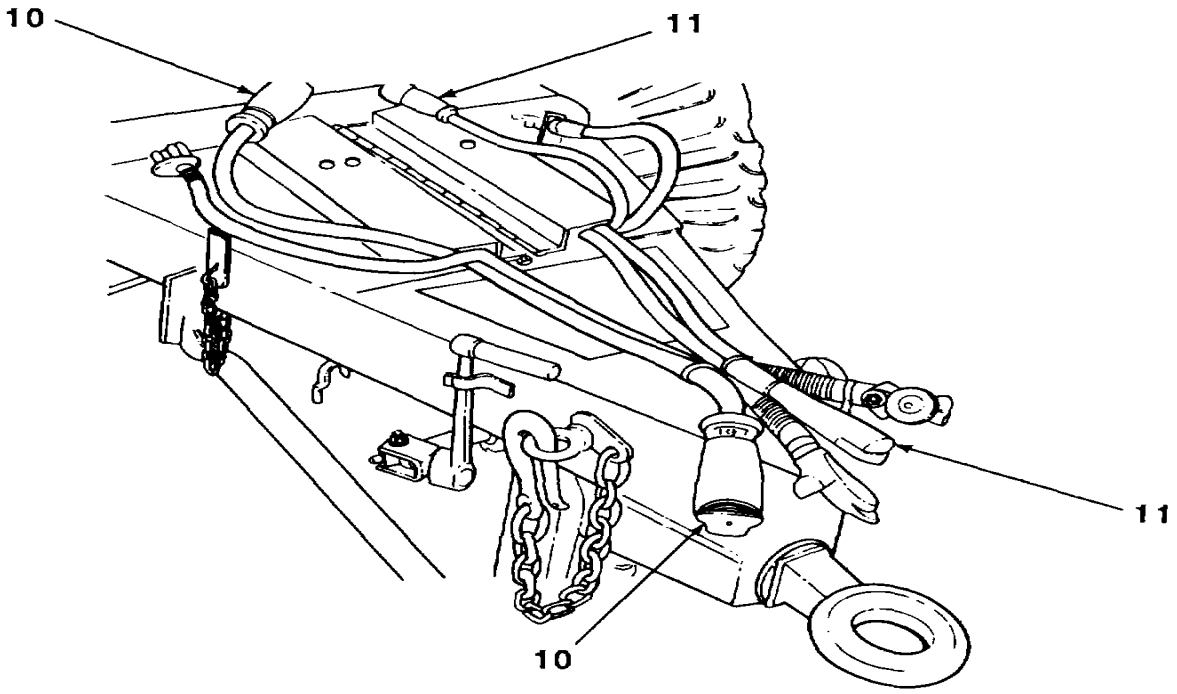

Key	Component	Description
10	24-volt Intervehicular Cable	Connects semitrailer to towing vehicle's 24-volt electrical system.
11	12-volt Intervehicular Cable	Connects semitrailer to towing vehicle's 12-volt electrical system.

TA510658

1-8. LOCATION AND CONTENTS OF DATA PLATES.

a. The following illustrations show the location and content of all data plates.

b. Maintain all data plates so that all information remains legible. If any data plate is missing or no longer legible, notify organizational maintenance.

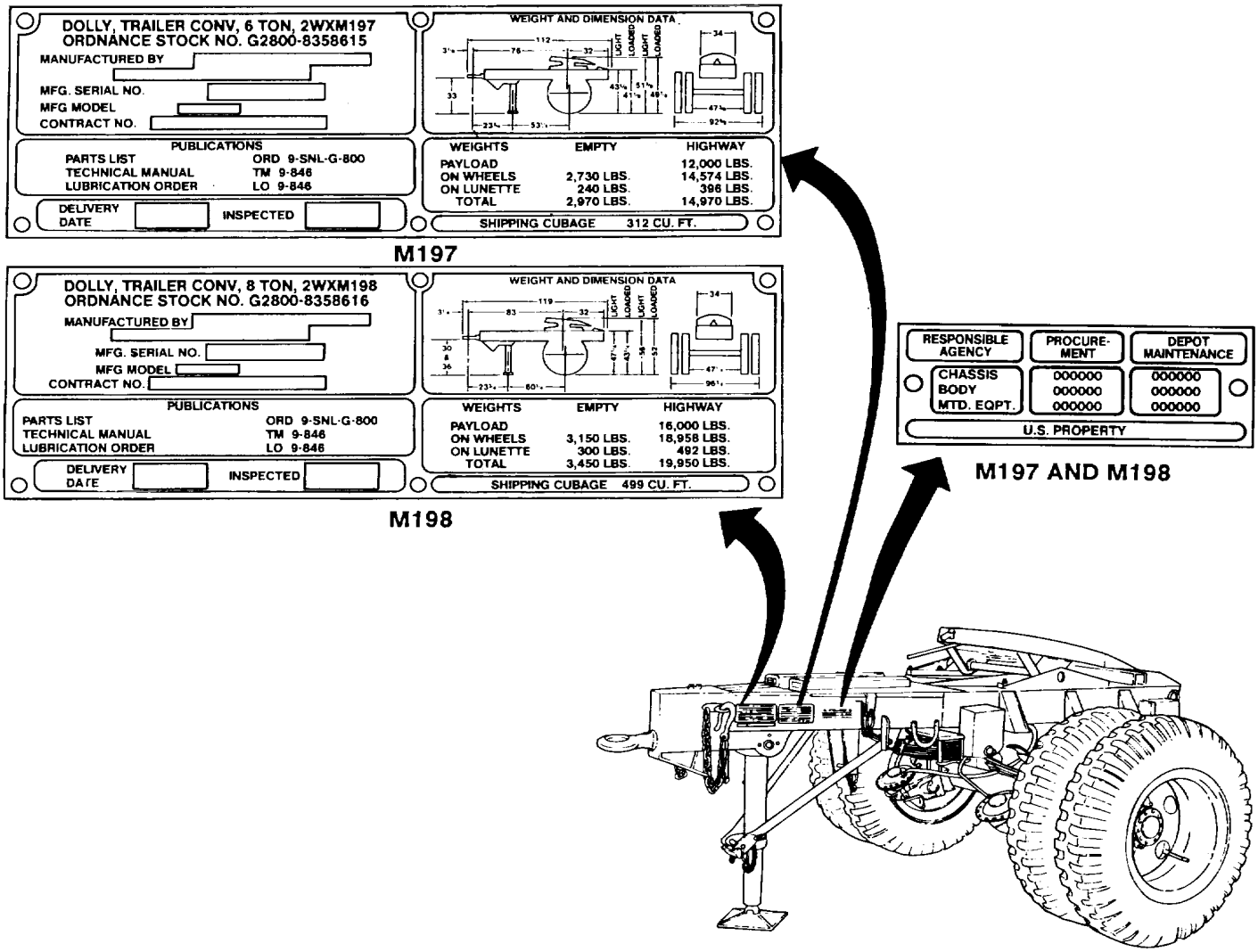

TA510659

1.8. LOCATION AND CONTENTS OF DATA PLATES (Con't).

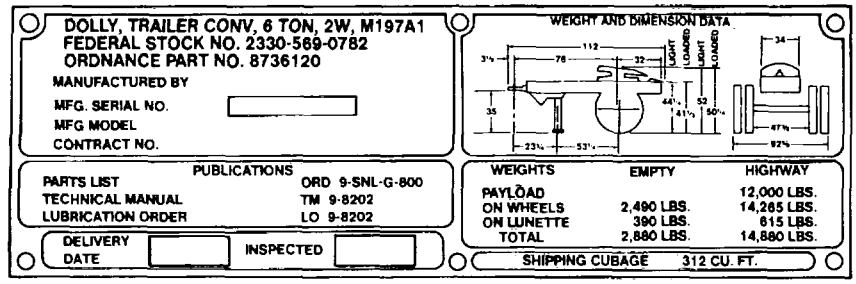

M197A1

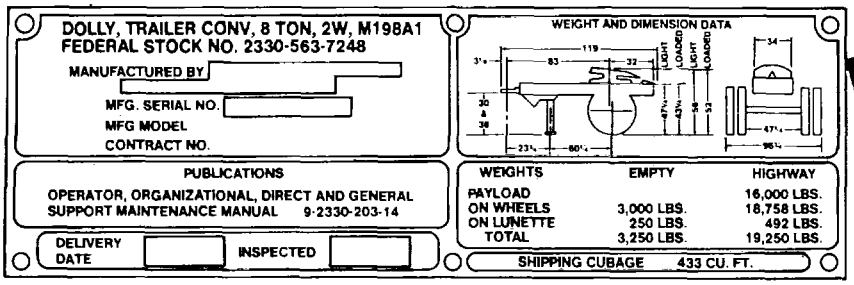

M198A1

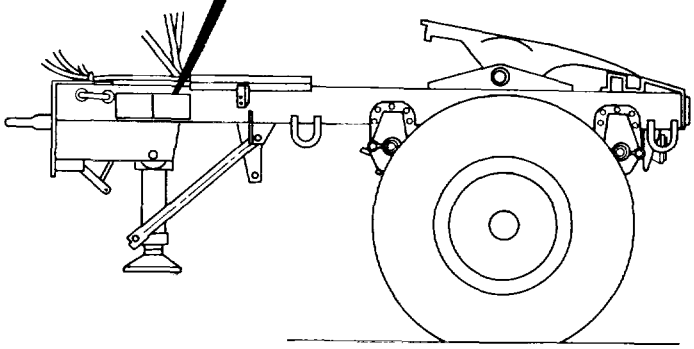

1-9. DIFFERENCES BETWEEN MODELS.

a. **General.** The following model designations are used throughout this technical manual:

(1) Late Model:

(a) M197A1 dollies serial number 31694 and above (Marine Corps)

(b) M197A1 dollies serial number USA 7D 9250 and above (Army)

(c) M198A1 dollies serial number 327198 and above (Marine Corps)

(d) M198A1 dollies serial number USA 7F 8083 and above (Army)

(2) Early Model. Dollies with serial numbers below those listed above are considered early models.

(3) When no specific reference is made, the text refers to all models.

TA510660

1-9. DIFFERENCES BETWEEN MODELS (Con't).

b. **Internal Wheel Brake Mechanism.**

(1) **Ml 97 and M 198**. Air actuated wheel brakes. Cam actuated with one end of brakeshoes anchored.

(2) **M1 97A1 and M198A1, Early Models.** Air-over-hydraulic actuated wheel brakes using free-floating brakeshoe, double-wheel cylinder mechanism.

(3) **M1 97A1 and M1 98A1, Late Models.** Air-over-hydraulic actuated wheel brakes using single wheel cylinder at the top, with bottom of brakeshoes anchored. Wheel cylinder is inclined 360 to top rear of axle center.

c. **Service Brake System.**

(1) **M197 and M198**. Air system receives air supply from towing vehicle. Intervehicular air hose supplies semitrailer air system. Airbrake chambers mounted near wheels operate brakes through mechanical linkages (slack adjusters and airbrake chamber pushrods).

(2) **M1 97A1 and Ml 98A1.** Air-over-hydraulic system receives air from towing vehicle. Intervehicular air hose supplies semitrailer air system. Airbrake chamber mounted remotely from wheels operates brakes through hydraulic linkage (master cylinder and hoses).

d. **Tires.** See paragraph 1-10 for tire sizes on different models.

e. **Wheels.**

(1) M197 and Ml 97A1. Dual wheels are mounted on six hub studs. Inner wheel is secured with six cap nuts that have internal and external threads. Internal threads engage hub stud threads; external threads receive six single ball seat nuts that secure outer wheel. Stud circle diameter is 8y4 in. (22.2 cm).

(2) Ml198 and M1 98A1. Dual wheels are mounted on ten hub studs and secured with ten cap nuts and ten single ball seat nuts in the same manner as described above. Stud circle diameter is 11% in. (28.6 cm).

f. **Hub Cap.**

(1) **M1 97 and M1 97A1.** Hub cap and gasket are secured to hub with eight hexagon head capscrews and lockwashers.

(2) **Ml 98 and M198A1**. Hub cap and gasket are secured to hub with ten hexagon head capscrews and lockwashers.

g. **Brakedrums.** All brakedrums attach in a similar manner. M197 and M198 use an oil slinger-deflector, M197A1 and M198A1 do not.

h. **Frame**. Dolly frames are basically of the same structural design. M198 and M198A1 have stronger frames due to stronger centers reinforced with a crossrail.

i. **Spring Brackets.** M197 and M198 have welded spring brackets. M197A1 has riveted spring brackets. M198A1 has bolted spring brackets.

j. **Lunette.** M197and M197A1 have affixed lunette. M198 and M198A1 have a two-position lunette, the upper position being 6 in. (15.2 cm) higher than the lower position.

k. **Springs.**

(1) **M197 and M198**. M197 semi-elliptical springs have ten leaves; M198 semi-elliptical springs have 11 leaves. Ends of first two leaves are curled at front and suspended from spring mounting bracket with a fluid passage bolt and bearing. First three leaves are suspended on a spacer and screw in rear brackets. Semi-elliptical helper springs with five leaves are secured to main spring by the same center bolt that holds main spring leaves together. U-bolts and a mounting plate attach spring to axle.

1-9. DIFFERENCES BETWEEN MODELS (Con't).

(2) **M97AI and M198A1**. Semi-elliptical springs have 12 leaves. Ends of third leaf are half-curled and rest on spring retainer bolts. Top of first leaf at each end of spring bears against roller sleeves. U-bolts and brackets secure spring to axle. Radius rods are provided for axle alignment. Length of one radius rod is adjustable and the other is fixed.

1-10. EQUIPMENT DATA.

	M197 and M197A1	M198 and M198A1
Dimensions:		
Height:		
Ground to Fifth Wheel:		
Empty	53 in. (134.6 cm)	56 in. (142.2 cm)
Loaded	50 in. (127 cm)	52 in. (132.1 cm)
Ground to Lunette:		
Permanent Position	33 in. (83.8 cm)	
Lower Position		30 in. (76.2 cm)
Upper Position		36 in. (91.4 cm)
Length	112 in. (284.5 cm)	119 in. (302.3cm)
Width	92⅝ in. (235.3 cm)	96¾ in. (245.8 cm)
Tread	70 in. (177.8 cm)	72 in. (182.9 cm)
Minimum Ground Clearance	15 in. (38.1 cm)	16½ in. (41.9 cm)
Fording Depth	43⅛ in. (109.5 cm)	43⅛ in. (109.5 cm)
Departure Angle	56°	56°
Weights:		
Curbweight	2880 lb (1307.5 kg)	3450 lb (1566.3 kg)
Payload:		
Highway	12,000 lb (5448 kg)	16,000 lb (7264 kg)
Cross-country	12,000 lb (5448 kg)	16,000 lb (7264 kg)
Gross:		
Highway	14,880 lb (6755.5 kg)	19,450 lb (8830.3 kg)
Tires:		
Size	9.00 x 20	11.00 x 20
Ply	8 ply	12 ply
Inflation :		
Highway	45 psi (310.3 kPa)	50 psi (344.8 kPa)
Cross-country	30 psi (206.9 kPa)	35 psi (241.3 kPa)
Snow, Mud, or Sand	15 psi (103.4 kPa)	20 psi (137.9 kPa)
Maximum Towing Speed:		
Highway	30 mi/h (48 km/h)	30 mi/h (48 km/h)
Cross-country	20 mi/h (32 km/h)	20 mi/h (32 km/h)
Axle:		
Outside Diameter	5 in. (12.7 cm)	5½ in. (14 cm)
Spindle Thread Diameter:		
Early Model:		
M197	2⅝ in. (6.7 cm)	
M198		3½ in. (8.9 cm)
M198A1		3 in. (7.6 cm)
Late Model:		
M197A1	3 in. (7.6 cm)	
M198A1		3½ in. (8.9 cm)

CHAPTER 2
OPERATING INSTRUCTIONS

Section I. DESCRIPTION AND USE OF OPERATOR'S CONTROLS AND INDICATORS

2-1. GENERAL.

This section shows the location and function of all operator's controls and indicators on the dolly. Read this section thoroughly before operating the dolly.

2-2. CONTROLS AND INDICATORS.

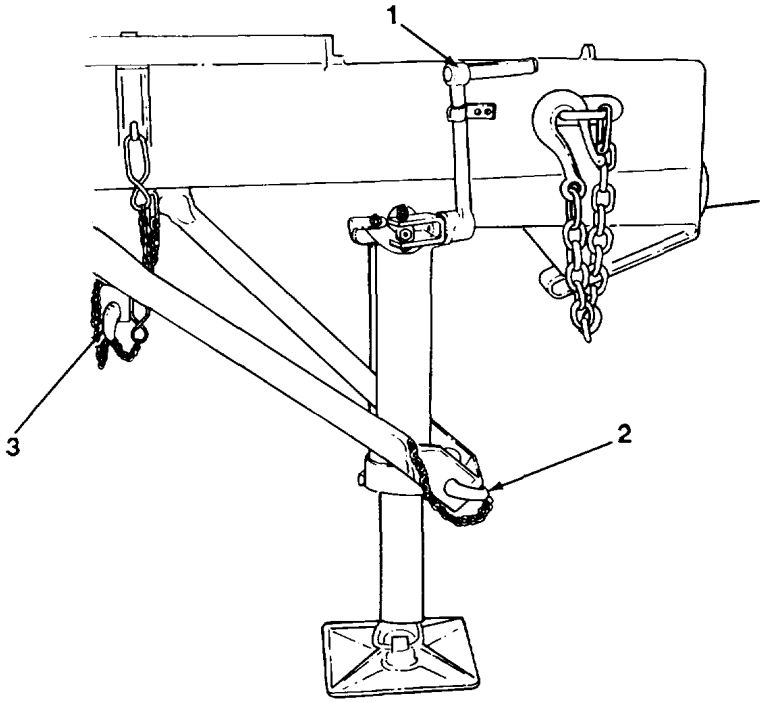

Key	Control or Indicator	Description
1	Handcrank	Used to raise and lower dolly. Turning handcrank clockwise raises dolly; turning handcrank counterclockwise lowers dolly.
2	Lockpin	Inserts through leg brace and landing leg. Secures landing leg when lowered.
3	Lockpin	Secures landing leg in horizontal stowed position.

TA510661

2.2 CONTROLS AND INDICATORS (Con't).

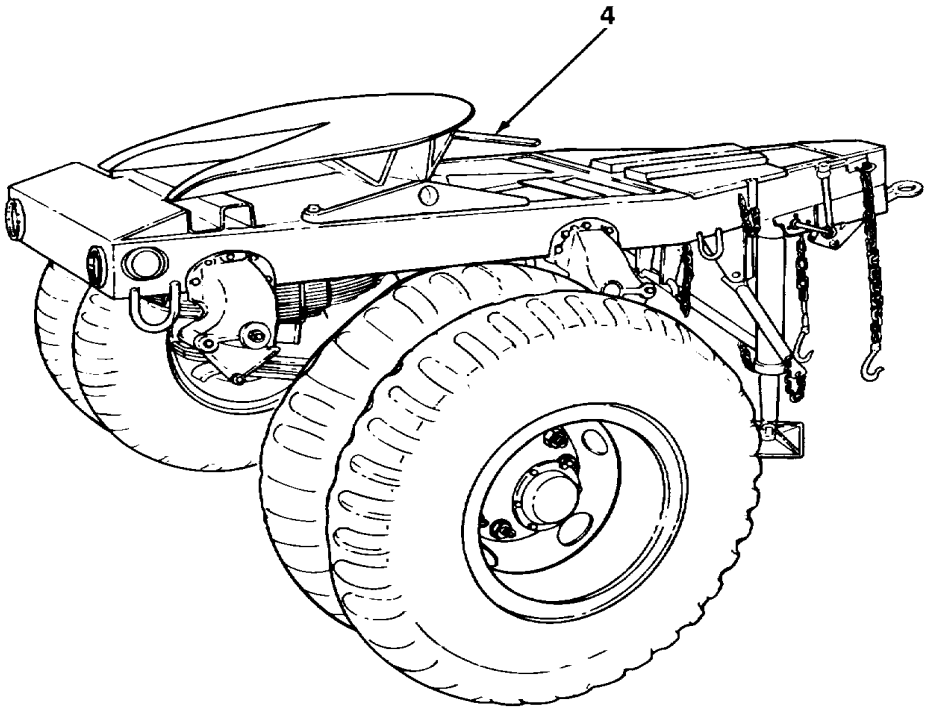

Key	Control or Indicator	Description
4	Control Lever	Releases fifth wheel coupler jaws from semitrailer kingpin. To release coupler jaws, pull control lever as far forward as possible.

TA510662

Section II. OPERATOR/CREW PREVENTIVE MAINTENANCE CHECKS AND SERVICES (PMCS)

2-3. GENERAL.

a. To ensure that the dollies are ready for operation at all times, they must be inspected on a regular basis so that defects may be found before they result in serious damage, equipment failure, or injury or death to personnel. This section contains systematic instructions on inspections, adjustments, and corrections to be performed by the operator/crew.

b. While performing PMCS, read and follow all safety instructions found in the Warning Summary at the front of this manual. Keep in mind all WARNINGs and CAUTIONs.

2-4. SERVICE INTERVALS.

Perform PMCS, found in Table 2-1, at the following intervals:

(1) Perform *Before* (B) PMCS just before operating the dolly.

(2) Perform *During* (D) PMCS while operating the dolly.

(3) Perform *After* (A) PMCS right after operating the dolly.

(4) Perform *Weekly ()* PMCS once each week.

2-5. REPORTING REPAIRS.

All defects which the operator cannot fix must be reported on a DA Form 2404, *Equipment Inspection and Maintenance Worksheet,* immediately after completing PMCS. If a serious problem is found, IMMEDIATELY report it to your supervisor.

2-6. GENERAL PMCS PROCEDURES.

WARNING

Dry cleaning solvent, P-D-680, is toxic and flammable. Always wear protective goggles and gloves, and use only in a well-ventilated area. Avoid contact with skin, eyes, and clothes, and DO NOT breathe vapors. DO NOT use near open flame or excessive heat. The solvent's flash point is 100°F-138°F (38°C-59°C). If you become dizzy while using cleaning solvent, immediately get fresh air and medical help. If solvent contacts eyes, Immediately wash your eyes and get medical aid.

a. Keep equipment clean. Dirt, oil, and debris may cover up a serious problem. Clean as you work and as needed. Use dry cleaning solvent (Item 5, Appendix E) on all metal surfaces. Use detergent (Item 4, Appendix E) and water on rubber, plastic, and painted-surfaces.

2-6. GENERAL PMCS PROCEDURES (Con't).

b. When performing specific PMCS procedures, inspect the following components:

(1) **Bolts, Nuts, and Screws.** Ensure that they are not loose, missing, bent, or broken. Report loose or missing bolts, nuts, and screws to organization maintenance.

(2) **Welds.** Inspect for gaps where parts are welded together. Check for loose or chipped paint, rust, and cracks. Report bad welds to Organizational Maintenance.

(3) **Electric Conduit, Wires, and Connectors.** Inspect for cracked or broken conduit insulation, bare wires, and loose or broken connectors. Report loose connectors and faulty wiring to Organizational Maintenance.

(4) **Hoses, Lines, and Fittings.** Inspect fors wear, damage, and leaks. Ensure that clamps and fittings are tight. Report any damage, leaks, or loose fittings to Organizational Maintenance.

c. Check that components are adequately lubricated in accordance with Chapter 3, Section I.

2-7. SPECIFIC PMCS PROCEDURES.

a. Operator/crew PMCS is provided in Table 2-1. Always perform PMCS in the order listed. Once it becomes a habit, spotting problems will become much easier.

b. Before performing PMCS, read all the checks required for the applicable interval and prepare all tools needed for the task. Have several clean rags (Item 12, Appendix E) handy. Perform ALL inspections at the applicable interval.

c. If any problems are discovered through PMCS, perform the appropriate troubleshooting task in Chapter 3, Section II. If any component or system is not serviceable, or if a given service does not correct the problem, notify our supervisor.

d. The columns in Table 2-1 are defined as follows:

(1) **Item No**. Provides a logical sequence for PMCS to be performed and is used as a source of item numbers for the "TM ITEM NO" column when recording PMCS results on DA Form 2404.

(2) **Interval.** Specifies the interval at which the PMCS is to performed.

(3) **Item To Be Inspected.** Lists the system and common name of items that are to be inspected. Included in this column are specific servicing, inspection, replacement, or adjustment procedures to be followed.

NOTE

The terms "ready/available" and "mission-capable" refer to the same status: equipment is on hand and is able to perform its combat missions (AR 700-138).

(4). **Equipment is Not Ready/Available If:** Explains when and why dolly is nonmission-capable.

2-8. LEAKAGE DEFINITIONS.

a. It is important to know how fluid leakage affects the status of the dolly. The following are types/classes of leakage an operator must know to determine whether the dolly is mission-capable. Learn these leakage definitions. When In doubt, notify your supervisor.

Leakage Definitions for Operator/Crew PMCS:

Class I	Seepage of fluid (as indicated by wetness or discoloration) not great enough to form drops.
Class II	Leakage of fluid great enough to form drops, but not great enough to cause drops to drip from the item being inspected.
Class III	Leakage of fluid great enough to form drops that fall from item being inspected.

2-8. LEAKAGE DEFINITIONS (Con't).

CAUTION

When operating with Class I or II leaks, continue to check fluid level in addition to that required in PMCS. Parts without fluid will stop working or may be damaged.

b. Equipment operation is allowed with minor (Class I or II) leakage. Fluid levels in an item/system affected by such leakage must be checked more frequently than required in PMCS. When in doubt, notify your supervisor.

c. Report Class III leaks IMMEDIATELY to your supervisor.

Table 2-1. Operator/Crew Preventive Maintenance Checks and Services (PCMS).

B–BEFORE D–DURING A–AFTER W–WEEKLY

ITEM NO.	INTERVAL B	D	A	W	ITEM TO BE INSPECTED PROCEDURE: Check for and have repaired, filled, or adjusted as needed.	Equipment Is Not Ready/Available If:
					NOTE **Perform Weekly as well as Before PMCS if:** **a. You are the assigned operator but have not operated the vehicle since the last weekly.** **b. You are operating the vehicle for the first time.**	
1					**TIRES**	
	●				a. Check tire pressure. (1) M197/M197A1: ● Highway ..... 45 psi (310 kPa) ● Cross-country ..... 30 psi (207 kPa) (1) M198/M198A1: ● Highway ..... 50 psi (345 kPa) ● Cross-country ..... 35 psi (241 kPa)	
	●				b. Check tires for cuts, foreign objects, or unusual tread wear. Remove any stones or other debris from treads.	One tire is flat, missing, or unserviceable.
2					**WHEELS**	
	●				a. Check wheels for damage.	One wheel damaged or missing.
					NOTE **Left wheel nuts are turned counter-clockwise to tighten. Right wheel nuts are turned clockwise.**	
	●				b. Check wheel nuts for presence and tightness.	Two or more wheel nuts missing per wheel.

Table 2-1. Operator/Crew Preventive Maintenance Checks and Services (PCMS) (Con't).

B—BEFORE D—DURING A—AFTER W—WEEKLY

ITEM NO.	INTERVAL B	D	A	W	ITEM TO BE INSPECTED PROCEDURE: Check for and have repaired, filled, or adjusted as needed.	Equipment Is Not Ready/Available If:
3					**SPRINGS**	
	●				Inspect springs for broken or shifted leaves, loose or missing U-bolt nuts or other hardware.	Any spring leaf broken. Loose or missing hardware.
4					**TOWING CONNECTIONS**	
	●				a. Check for obvious looseness, damage, or missing hardware to fifth wheel coupler.	Loose or missing hardware.
	●				b. Check that fifth wheel coupler jaws operate properly.	Fifth wheel coupler jaws are damaged.
	●				c. Check lunette for cracked welds, cracks, looseness, or damage.	Cracked welds or damage.
	●				d. Check safety chain mounting for damage.	Safety chain missing or loose.
5					**BRAKES**	
	●				a. Inspect air couplings and couple dolly to towing vehicle. Check for proper operation and brake leaks.	
	●				b. Inspect air coupling mountings for security.	
	●				c. Inspect air couplings for missing preformed packing or damage.	Preformed packing missing or air coupling damaged or missing.
	●				d. On the M197A1 and M198A1, check for brake fluid leaks at each wheel and at the master cylinder.	Class III leaks are evident.
					WARNING **A hot brake can cause serious burns. Exercise extreme caution before attempting to touch brakedrum after use. Slowly move hand toward brakedrum. If brakedrum is overheated, radiated heat will be felt before brakedrum is touched.**	
		●			e. Apply dolly brakes and see if they operate effectively. During operation at halts, cautiously feel brakedrums and hubs. An overheated brakedrum or hub indicates an improperly adjusted or defective brake or a dry wheel bearing.	Brakes inoperative.
	●				f. Check intervehicular air hoses for leaks or damage.	Air hose damaged or missing.

Table 2-1. Operator/Crew Preventive Maintenance Checks and Services (PCMS).

B–BEFORE D–DURING A–AFTER W–WEEKLY

ITEM NO.	INTERVAL B	D	A	W	ITEM TO BE INSPECTED PROCEDURE: Check for and have repaired, filled, or adjusted as needed.	Equipment Is Not Ready/Available If:
					WARNING **Wear protective goggles when opening draincocks and avoid air stream. Failure to follow this warning may result in injury to personnel.**	
	●				g. Check air reservoir draincock for damage or leakage.	Draincock damaged or leaking.
	●				h. Drain air reservoir and close draincock.	
	●				i. Inspect air reservoir for damage or leaks.	Air reservoir damaged or leaking.
6					**LANDING LEG**	
	●				Check operation of landing leg assembly for smooth operation and ensure that foot post does not bind. If coupled to towing vehicle, check that landing leg and brace lockpins and safety clips are secured in the "in transit" position.	Landing leg assembly foot post binding or inoperative.
7					**ELECTRICAL SYSTEM**	
	●				a. Check electrical cable for damage.	
	●				b. Check operation of lights (M197A1 and M198A1).	
8					**REFLECTORS**	
	●				Check reflectors for looseness or damage.	
9					**GENERAL OPERATION**	
		●			a. Be alert for unusual noises that may indicate insufficient lubrication or defective suspension, dolly towing connection, or braking system.	
		●			b. Be alert for any wander, shimmy, or side pull that may indicate axle misalinement or improperly adjusted brakes or wheel bearings.	

Section III. OPERATION UNDER USUAL CONDITIONS

2-9. GENERAL.

a. This section contains instructions for safely operating dolly under usual conditions. Unusual operating conditions are defined and described in Section IV of this chapter.

b. Review all towing vehicle operating instructions to prepare for coupling and uncoupling operations.

2-10. COUPLING DOLLY TO TOWING VEHICLE.

a. If dolly is to be moved to towing vehicle, and dolly brakes are locked, open draincock on pressure tank to release brakes. Close draincock.

b. Remove pintle (6), lockpin (5), and connect lunette (7) to pintle. Close pintle and install lockpin.

c. Cross two safety chains (9) under lunette (7) and connect to towing vehicle eyebolts (8).

d. Remove dummy couplings from two airbrake hose couplings on towing vehicle.

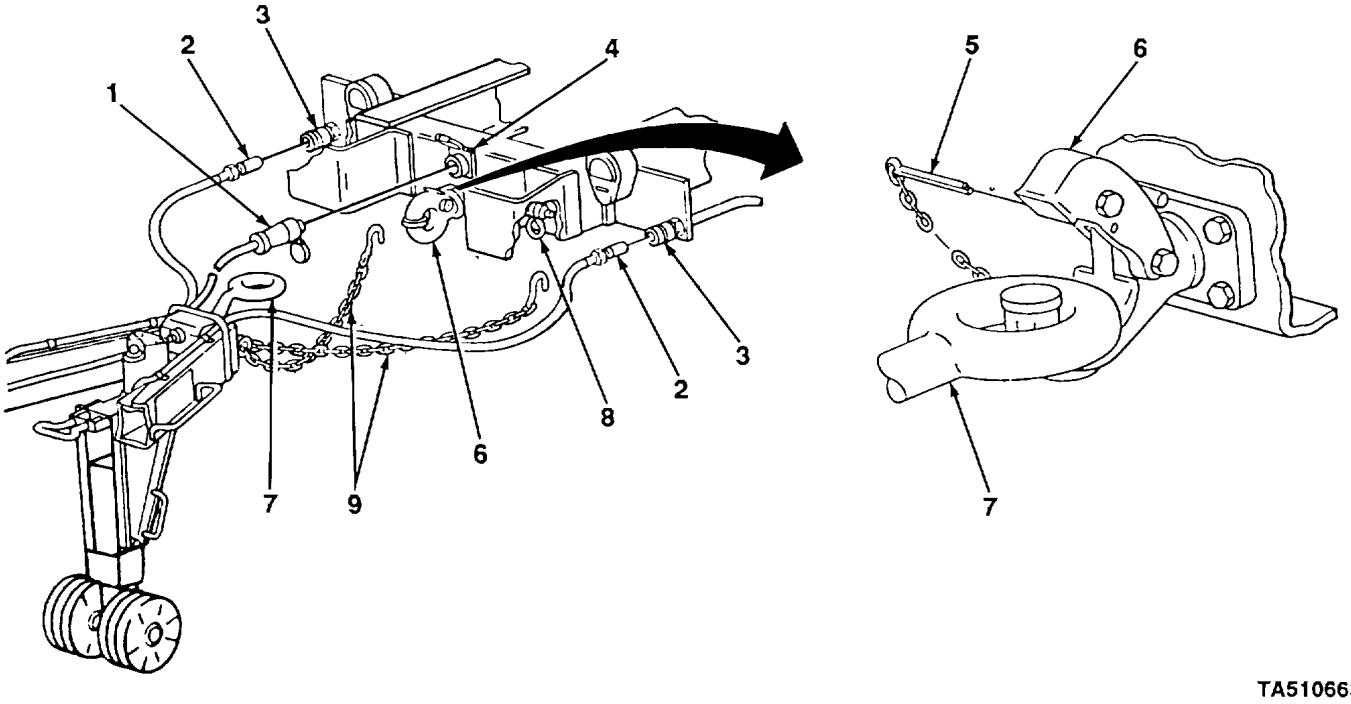

2-10. COUPLING DOLLY TO TOWING VEHICLE (Con't).

e. Connect intervehicular air hoses (2) to towing vehicle air couplings (3). Ensure that towing vehicle air coupling marked SERVICE is connected to dolly air coupling marked SERVICE and that towing vehicle air coupling marked EMERGENCY is connected to dolly air coupling marked EMERGENCY. Connect air couplings on opposite end of intervehicular air hose to dummy couplings in dolly stowage compartment until ready to connect to semitrailer.

f. Open two air shut-off valves on towing vehicle to pressurize dolly airbrake system.

g. Connect proper intervehicular cable, 12- or 24-volt (1), to towing vehicle receptacle (4).

NOTE

Step h is for M197A1 and M198A1 only.

h. If dolly is being towed without semitrailer, connect other end of intervehicular cable to rear chassis wiring harness.

i. Remove safety clip and lockpin (14) securing leg brace (13) to landing leg (12). Raise leg brace and secure it in bracket (11) on frame at front end of dolly.

j. Raise landing leg (12) by turning handcrank (10) counterclockwise until shoe (15) is off ground. Swing landing leg back and up into its bracket (16) on frame (17). Secure landing leg with lockpin and safety clip (14). Landing leg and leg brace (13) must always be raised and locked in traveling position before dolly is towed.

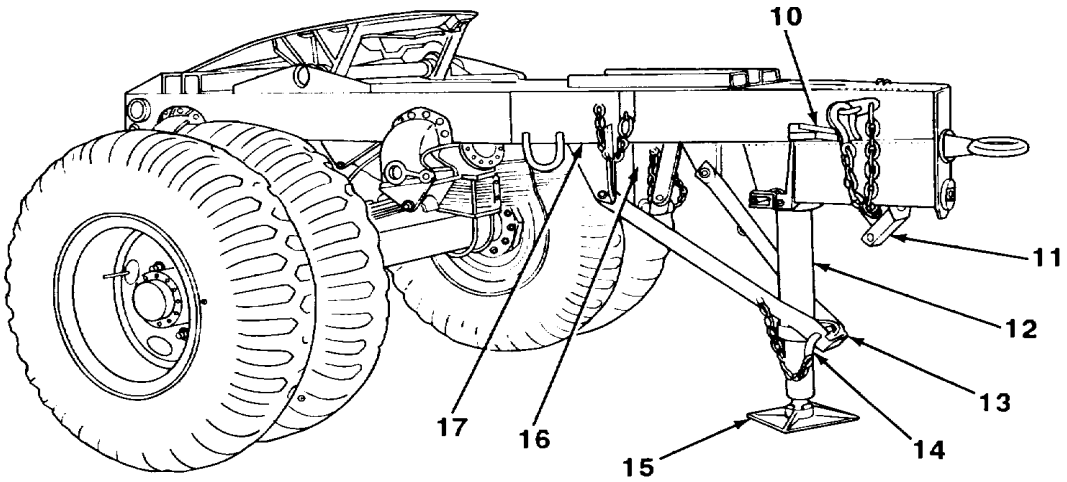

2-11. COUPLING SEMITRAILER TO DOLLY.

a. Position chock blocks behind semitrailer wheels.

b. Determine if semitrailer is at proper height for couping. If not, raise or lower front of semitrailer using its landing gear.

c. Close shut-off valves on towing vehicle. Disconnect air couplings from dummy couplings in dolly stowage compartment and connect to semitrailer air couplings. Ensure that dolly air coupling marked SERVICE is connected to semitrailer air coupling marked SERVICE and that dolly air coupling marked EMERGENCY is connected to semitrailer air coupling marked EMERGENCY.

d. Open shut-off valves on vehicle.

TA510664

2-11. COUPLING SEMITRAILER TO DOLLY (Con't).

WARNING

All personnel must stand clear of towing vehicle, dolly, and trailer during coupling operation. Failure to follow this warning may result In serious injury or death to personnel.

CAUTION

Have assistant direct you during backing operations. Damage to equipment may result if caution Is not followed.

e. Ensure that coupler jaws (2) on dolly fifth wheel (1) are open. Align center of fifth wheel with semitrailer kingpin. Slowly back dolly under semitrailer. When coupler jaws engage kingpin, jaws will automatically lock.

f. Set semitrailer brakes and check security of coupling.

CAUTION

Do not drive towing vehicle forward beyond limits of air hose length, unless air hoses have been disconnected. Failure to follow this caution will result in damage to air hoses.

g. If coupling is unsatisfactory and must be repeated, carefully drive towing vehicle forward within limits of air hose. If additional distance is required, disconnect air hose after ensuring that semitrailer brakes have been set.

h. Connect proper intervehicular cable, to 12 or 24-volt socket on semitrailer. Operate semitrailer lights from towing vehicle and ensure that all lights operate properly.

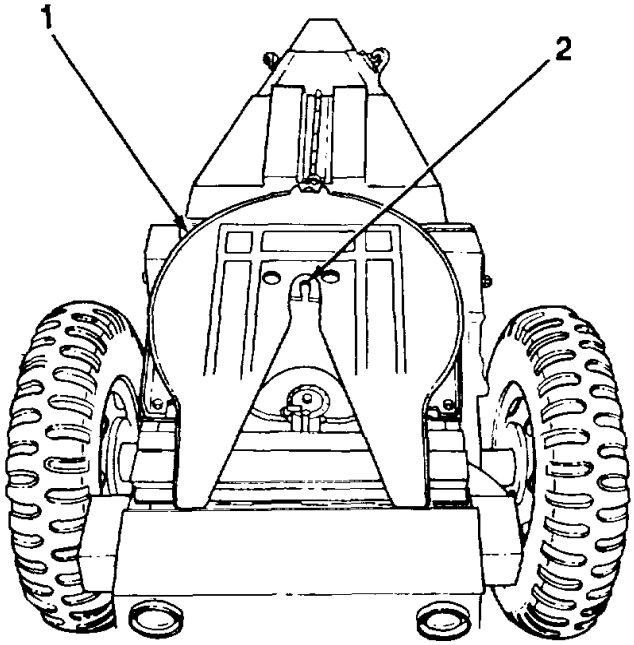

i. Raise semitrailer landing leg as high as it will go to provide maximum road clearance.

j. Remove chock blocks from behind semitrailer wheels.

2-12. TOWING INSTRUCTIONS.

a. When towing a trailer, overall length of unit must be kept in mind when passing other vehicles and when turning.

b. Turning and backing operations will be affected because towing vehicle, dolly, and trailer act as hinged unit.

c. Follow prescribed speeds at all times. Refer to towing vehicle technical manual.

d. When parking for extended periods, set handbrakes on towing vehicle and trailer.

e. If parked on hill, chock wheels.

f. Refer to FM 21-305 for further information on driving practices.

TA510665

2-13. UNCOUPLING SEMITRAILER FROM DOLLY

WARNING

All personnel must stand clear of towing vehicle, dolly, and trailer during uncoupling operation. Failure to follow this warning may result in serious injury or death to personnel.

a. Set parking brake on towing vehicle and lower semitrailer landing leg.

b. Position chock blocks in front of and behind semitrailer wheels.

CAUTION

Do not permit dirt to enter air hoses or airbrake system. Stow dolly hoses In stowage compartment and cover semitrailer connections with dummy couplings.

c. Close shut-off valves on towing vehicle. Disconnect dolly air couplings from semitrailer. Semitrailer brakes will set automatically when emergency air hose is uncoupled.

d. Disconnect 12- or 24-volt intervehicular cable and stow in dolly stowage compartment.

NOTE

Step e is for M197A1 and M198A1 only.

e. If dolly is to be towed, connect 12- or 24-volt intervehicular cable to rear chassis wiring harness.

f. Cover semitrailer and towing vehicle plugs with covers provided.

g. Pull control lever (2) as far forward as possible to release semitrailer kingpin from jaws (3) of fifth wheel (1). Slowly drive towing vehicle forward until semitrailer is disengaged from dolly.

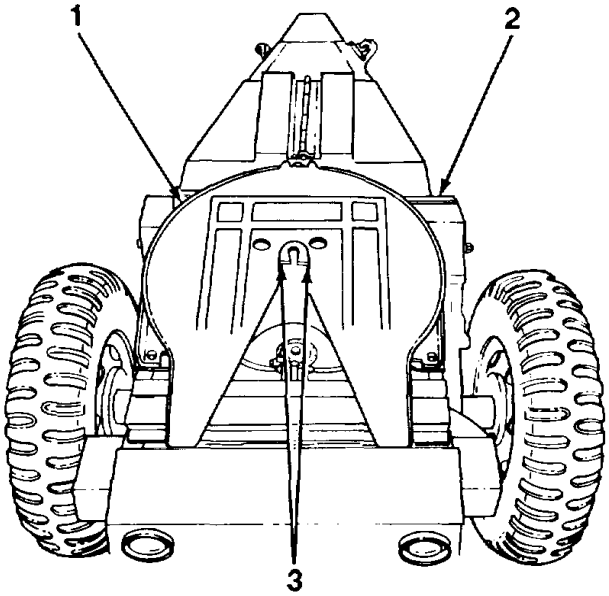

TA510666

2-14. UNCOUPLING DOLLY FROM TOWING VEHICLE.

a. Lower landing leg (5) and brace (6) and secure with lockpin and safety clip (7). Turn handcrank (1) clockwise to lower landing leg.

b. Disconnect intervehicular cable from towing vehicle and install dummy couplings on towing vehicle.

c. Place chock blocks in front of and behind dolly tires.

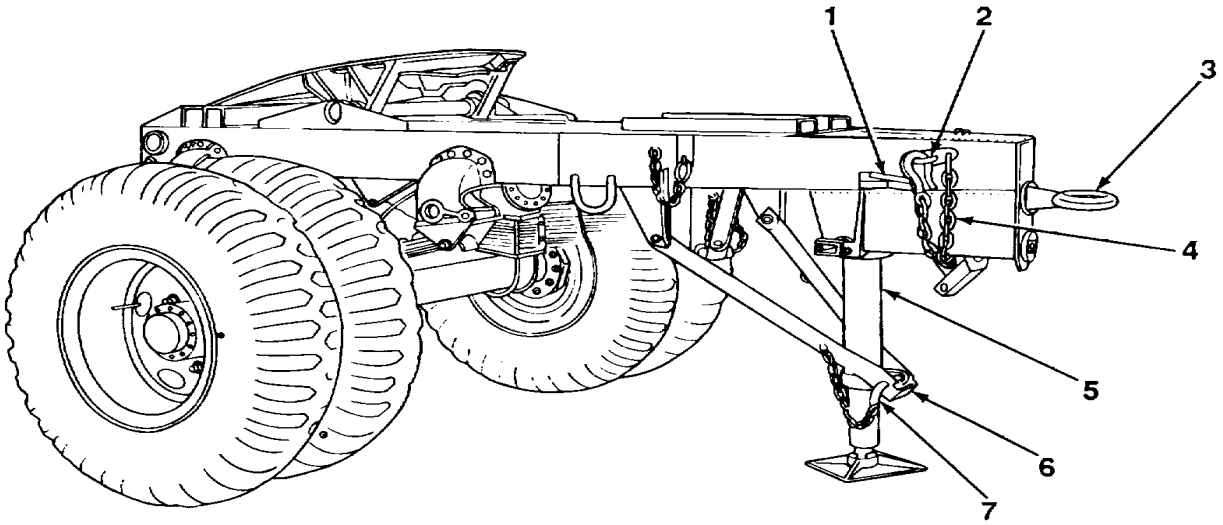

d. Unhook safety chains (4) from towing vehicle and slip hooks into eyebolts (2) on sides of dolly.

e. Disconnect lunette (3) from pintle of towing vehicle.

f. Drive towing vehicle away from dolly.

TA510667

Section IV. OPERATION UNDER UNUSUAL CONDITIONS

2-15. GENERAL.

a. This section contains instructions for safely operating the dolly under unusual conditions. In addition to normal preventive maintenance service, special care must be taken to keep the dollies mission-capable in extreme temperatures and humidity.

b. For information on special driving instructions under unusual conditions, refer to FM 21-305.

2-16. OPERATION IN EXTREME COLD.

a. For information on operation in cold weather, refer to FM 9-207.

b. Refer to Chapter 3, Section I for proper lubricants to use in extreme cold.

c. Extreme cold causes lubricants to thicken or freeze and various dolly components to become hard and brittle and easily damaged or broken.

d. Ensure that tires are inflated properly (para 1-10). Tires may freeze to the ground or have flat spots if underinflated.

e. Brakeshoes may freeze to brakedrums and will need to be heated to prevent damage (FM 9-207).

f. Remove all built-up snow or ice as soon as possible after operation.

g. When parking short term, park in a sheltered area out of the wind. When parking long term, place a footing of planks or brush under the wheels and landing leg.

2-17. OPERATION IN EXTREME HEAT

a. For information on operation in extreme heat, refer to FM 90-3.

b. Refer to Chapter 3, Section I for proper lubricants to use in extreme heat.

c. Do not park dolly in sun for long periods of time. Heat and sunlight will shorten tire life and deteriorate painted surfaces.

d. Dollies inactive for long periods in hot and humid weather are subject to rapid rusting and accumulation of fungus. Frequently inspect, clean, and lubricate to prevent deterioration (Chapter 3, Section I).

2-18. OPERATION IN DUSTY OR SANDY AREAS.

a. For information on operation in dusty or sandy conditions, refer to FM 90-3.

b. Clean, inspect, and lubricate more often in sandy or dusty areas (Chapter 3, Section 1).

c. Reduce tire pressure for emergency use on beach or desert sand (para 1-10). Return tire pressure to normal after emergency operation.

2-19. OPERATION IN SALTWATER AREAS.

Saltwater causes rapid rusting and corrosion. Clean, inspect, and lubricate as soon as possible after operation in saltwater areas. Have Organizational Maintenance pack wheel bearings contaminated by saltwater as soon as possible (Chapter 3, Section I).

2-20. OPERATION IN SNOW.

Refer to FM 21-305 for special instructions on operating in snow.

2-21. OPERATION IN MUD.

Thoroughly clean, inspect, and lubricate as soon as possible after operation in mud. Have Organizational Maintenance pack wheel bearings contaminated by mud as soon as possible (Chapter 3, Section I).

2-22. OPERATION IN ROUGH OR ROCKY TERRAIN.

a. Use care when moving dolly over rough or rocky terrain to minimize shock.

b. Ensure that tires are properly inflated (para 1-10).

2-23. FORDING.

a. **Shallow Water Fording**. No special preparations are required for shallow water fording. After shallow water fording, apply brakes a few times to help dry the linings. Ensure that brakes are operating properly before driving at normal speeds.

b. **After-fording Services.**

(1) If tactical situation permits, immediately perform the following services:

(a) Clean and dry all surfaces.

(b) Lubricate in accordance with lubrication instructions (Chapter 3, Section I).

(c) Notify Organizational Maintenance that wheel bearings must be packed, brakedrums and hubs must be cleaned, and all organizational lubrication performed.

(2) If the services listed above cannot be performed immediately, apply oil or preservative to badly splashed or submerged areas of the dolly. Notify Organizational Maintenance so that complete disassembly, cleaning, and lubrication can be performed as soon as possible.

(3) Saltwater immersion greatly increases rusting and corrosion, especially on unpainted surfaces. Remove all traces of saltwater and salt deposits. Apply oil or preservative to badly splashed or submerged areas. Notify Organizational Maintenance so that complete disassembly, cleaning, and lubrication can be performed as soon as possible.

CHAPTER 3
OPERATOR MAINTENANCE

Section I. LUBRICATION INSTRUCTIONS

3-1. GENERAL.

NOTE
These Instructions are MANDATORY.

a. The dollies must be lubricated with approved lubricants at recommended intervals in order to be mission-capable at all times.

b. The KEY lists lubricants to be used in all temperature ranges and shows the interval.

c. The lubrication chart shows lubrication points, items to be lubricated, the required lubricant, and recommended interval for lubrication. Any special lubricating instructions required for specific components are contained in the NOTES section of the chart.

d. Recommended intervals are based on normal conditions of operation, temperature, and humidity. When operating under extreme conditions, lubricants should always be changed more frequently. When in doubt, notify your supervisor.

3-2. SPECIFIC LUBRICATION INSTRUCTIONS.

a. Maintain a record of lubrication performed and report any problems noted during lubrication. Refer to DA Pam 738-750 for applicable forms and procedures to record and report any findings.

WARNING

Dry cleaning solvent, P-D-680, Is toxic and flammable. Always wear protective goggles and gloves, and use only in a well-ventilated area. Avoid contact with skin, eyes, and clothes, and DO NOT breathe vapors. DO NOT use near open flame or excessive heat. The solvent's flash point is 100°F-138°F (380C-59°C). If you become dizzy while using cleaning solvent, immediately get fresh air and medical help. If solvent contacts eyes, immediately wash your eyes and get medical aid.

b. Use dry cleaning solvent (item 5, Appendix E) to clean grease fittings, lubrication points, and surrounding areas before lubricating.

c. When lubricating at a grease fitting, apply enough grease to purge old grease from the lubricated area. When old grease oozes from the fitting, purging and lubrication are adequate.

WARNING

Wipe excess lubricant from the area of brakeshoe linings to avoid grease soaking the linings. If brakeshoe linings become soaked, have Organizational Maintenance replace them. Failure to follow this warning may cause brakes to malfunction, resulting in serious Injury or death to personnel.

d. After lubrication, wipe off excess oil or grease to prevent accumulation of foreign matter.

3-3. **LUBRICATION INSTRUCTIONS UNDER UNUSUAL CONDITIONS**.

a. Lubricate more frequently to compensate for abnormal or extreme conditions such as high or low temperatures, prolonged periods of high-speed operations, continued operation in sand or dust, immersion in water, or exposure to moisture. Any one of these conditions may cause contamination and quickly destroy protective qualities of lubricants.

b. Intervals may be extended during inactive periods commensurate with adequate preservation.

c. For lubrication instructions during continued operation below 00F (-18°C), refer to FM 9-207.

d. After operation in muddy, sandy, or dusty conditions, clean and inspect all lubrication points for fouled lubricants. Change lubricants as required.

LUBRICATION CHART

DOLLY, TRAILER CONVERTER: 6-TON, 2-WHEEL
M197 (NSN 2330-00-835-8615)
M197A1 (NSN 2330-00-569-0782)

AND

DOLLY, TRAILER CONVERTER: 8-TON, 2-WHEEL
M198 (NSN 2330-00-287-5203)
M198A1 (NSN 2330-00-563-7248)

Intervals (on-condition or hard time) and related man-hour times are based on normal operation. The man-hour time specified is the time you need to do all

services prescribed for a particular interval. De-
solvent's flash point is
crease the intervals if your lubricants are contami-
nated, or if you are operating equipment under adverse conditions, including longer-than-usual operating hours. The intervals may be extended during periods of low activity. If extended, adequate preservation precautions must be taken.
equivalent before lubricating equipment. After lubri-
Dotted leader lines indicate lubrication is required on both sides of the equipment.
both sides of the equipment.
mulation of foreign matter.

WARNING

Dry cleaning solvent, P-D-680, is toxic and flammable. Always wear protective goggles and gloves, and use only in a well-ventilated area. Avoid contact with skin, eyes, and clothes, and DO NOT breathe vapors. DO NOT use near open flame or excessive heat. The use near open flame or excessive heat. The 100°F-138°F (38°C-59°C). If you become dizzy while using cleaning solvent, immediately get fresh air and medical help. If solvent contacts eyes, immediately wash your eyes and get medical aid.

Clean all fittings and area around lubrication points with dry cleaning solvent (Item 5, Appendix E) or

equivalent before lubricating equipment. After lubrication, wipe off excess oil or grease to prevent accu-

The lowest level of maintenance authorized to lubricate a point is indicated in parentheses by use of the following: (C) Operator/Crew; or (O) Organizational Maintenance.

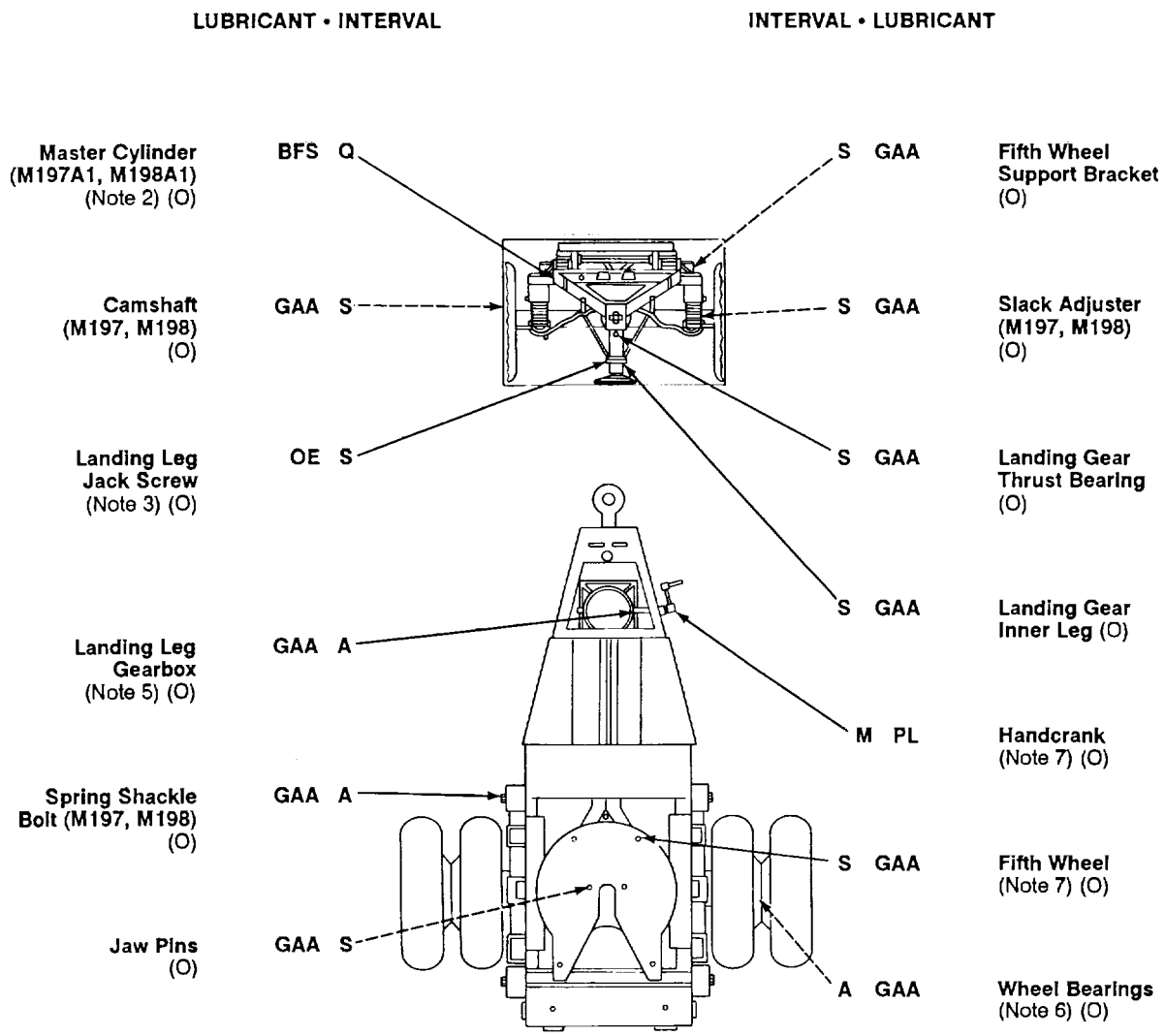

TOTAL MAN-HOURS*

INTERVAL	MAN-HOUR
M	0.1
Q	0.1
S	0.6
A	1.5

* The man-hour time specified is the time you need to do all services prescribed for a particular interval.

TA510668

– KEY –

LUBRICANTS	EXPECTED TEMPERATURES				INTERVALS
	ABOVE +32°F (ABOVE 0°C)	+40°F to -10°F (+4°C to -23°C)	0°F to -65°F (-18°C to -54°C)		
BFS (MIL-B-46167) Brake Fluid, Automotive	All Temperatures			FOR ARCTIC OPERATIONS, REFER TO FM 9-207	M – Monthly Q – Quarterly S – Semiannual A – Annually
GAA (MIL-G-10924) Grease, Automotive and Artillery	All Temperatures				
OE/HDO (MIL-L-2104) Lubricating Oil, Internal Combustion Engine, Tactical Service	OE/HDO-30	OE/HDO-10	–		
OEA (MIL-L-46167) Lubricating Oil, Internal Combustion Engine, Arctic	–	–	OEA (Note 1)		
PL (MIL-P-46002) Lubricating Oil, Preservative Corrosion Inhibited	PL (MED)	PL (SPECIAL)	PL (SPECIAL)		

NOTES:

1. FOR OPERATION OF EQUIPMENT IN PROTRACTED COLD TEMPERATURES BELOW 32°F (0°C). Remove lubricants prescribed in the key for temperatures above 32°F (0°C). Lubricate with lubricants specified in the key for temperatures below 32°F (0°C). If OEA lubricant is required to meet the temperature changes prescribed in the key, OEA lubricant is to be used in place of OE/HDO-10 lubricant for all temperature ranges where OE/HDO-10 lubricant is specified in the key.

2. MASTER CYLINDER. Fill to within ½ in. (13 mm) of top.

3. LANDING GEAR JACK SCREW. Remove plug. Fill cylinder to level of plug hole. Clean and install plug.

4. OIL CAN POINTS. Monthly, lubricate handcrank assembly and all linkages and pins with PL.

5. LANDING LEG GEARBOX. Remove coverplate, clean, dry, and pack.

6. WHEEL BEARINGS. Every 12,000 mi (19,308 km) or annually, remove, clean, dry, and pack (TM 9-214).

7. FIFTH WHEEL. Liberally coat surface of fifth wheel with GAA.

Section II. OPERATOR/CREW TROUBLESHOOTING PROCEDURES

3-4. GENERAL.

a. This section provides information for identifying and correcting malfunctions that may develop while operating your dolly.

b. The Troubleshooting Symptom Index in paragraph 3-6 lists common malfunctions that may occur and refers you to the proper in page in Table 3-1 for a troubleshooting procedure.

c. If you are unsure of the location of an item mentioned in troubleshooting, refer to paragraph 1-7 or the maintenance task where the item is replaced.

d. Before performing troubleshooting, read and follow all safety instructions found in the Warning Summary at the front of this manual.

e. When troubleshooting a malfunction:

(1) Locate the symptom or symptoms in paragraph 3-6 that best describe the malfunction.

(2) Turn to the page in Table 3-1 where the troubleshooting procedures for the malfunction in question are described. Headings at the top of the page show how each troubleshooting procedure is organized: MALFUNCTION, TEST OR INSPECTION (in step number order), and CORRECTIVE ACTION.

(3) Perform each step in the order listed until the malfunction is corrected. DO NOT perform any maintenance task unless the troubleshooting procedure tells you to do so.

f. This manual cannot list all malfunctions that may occur or all tests or inspections and corrective actions. If a malfunction is not listed or is not corrected by listed corrective actions, notify your supervisor.

3-5. EXPLANATION OF COLUMNS.

The columns in Table 3-1 are defined as follows:

(1) **MALFUNCTION.** A visual or operational indication that something is wrong with the dolly.

(2) **TEST OR INSPECTION.** A procedure to isolate the problem in a component or system.

(3) **CORRECTIVE ACTION.** A procedure to correct the problem.

3-6. TROUBLESHOOTING SYMPTOM INDEX.

Table 3-1. Operator/Crew Troubleshooting.

MALFUNCTION
TEST OR INSPECTION
CORRECTIVE ACTION

ELECTRICAL SYSTEM (M197A 1 and M198A 1)

1. DIM OR FLICKERING LAMPS.

Step 1. Check for loose, dirty, or corroded terminals at stoplight-taillight connectors.
Clean dirty or corroded terminals.
If loose, disconnect and connect properly.
If terminals are OK, proceed to step 2.

Step 2. Check stoplight-taillight for obvious defects or damage.
If stoplight-taillight is defective or damaged, notify Organizational Maintenance.
If stoplight-taillight is OK, proceed to step 3.

Table 3-1. Operator/Crew Troubleshooting (Con't).

MALFUNCTION TEST OR INSPECTION CORRECTIVE ACTION

Step 3. Check intervehicular cable for dirty or corroded pins.
Clean intervehicular cable pins.
If pins are OK, proceed to step 4.

Step 4. Check chassis wiring harness for broken wires or insulation or other damage.
Notify Organizational Maintenance.

2. TAILLIGHTS WILL NOT LIGHT.

Step 1. Check setting and operation of towing vehicle light switches.
lights do not light, notify Organizational Maintenance.
If towing vehicle lights do light, proceed to step 2.

Step 2. Check intervehicular cable.
If intervehicular cable is not properly connected, disconnect from towing vehicle and connect properly.
If intervehicular cable is connected properly, proceed to step 3.

Step 3. Check intervehicular cable for dirty, corroded, or damaged pins.
Clean intervehicular cable pins if dirty or corroded.
If intervehicular cable pins are damaged, notify Organizational Maintenance.
If intervehicular cable pins are OK, proceed to step 4.

Step 4. Check chassis wiring harness for broken wires or insulation or other damage.
Notify Organizational Maintenance.

3. ONE OR MORE LAMPS (BUT NOT ALL) DO NOT LIGHT

Step 1. Check stoplight-taillight for defects or damage.
If stoplight-taillight is defective or damaged, notify Organizational Maintenance.
If light assembly is OK, proceed to step 2.

Step 2. Check chassis wiring harness and stoplight-taillight connectors for proper connection.
If not properly connected, disconnect and connect properly.
If connected properly, proceed to step 3.

Step 3. Check chassis wiring harness for broken wires or insulation or other damage.
Notify Organizational Maintenance.

Table 3-1. Operator/Crew Troubleshooting (Con't).

MALFUNCTION TEST OR INSPECTION CORRECTIVE ACTION

BRAKES

4. BRAKES WILL NOT RELEASE.

Step 1. If dolly is uncoupled, open pressure tank draincock to release brakes. Close draincock.
If brakes do not release, notify Organizational Maintenance.

Step 2. If dolly is coupled, check air system shut-off valves on towing vehicle.
Open air system shut-off valves. If brakes do not release, proceed to step 3.

Step 3. Check intervehicular air hoses for proper connection.
Reconnect if required. If brakes do not release, proceed to step 4.

Step 4. Check intervehicular hoses for kinks or restrictions.
Remove kinks or restrictions. If brakes do not release, notify Organizational Maintenance.

5. NO BRAKES OR WEAK BRAKES.

Step 1. Check air system shut-off valves on towing vehicle.
Open air system shut-off valves if required. If brakes still do not work or are weak, proceed to step 2.

Step 2. Check intervehicular air hoses for proper connection.
Reconnect if required. If brakes still do not work or are weak, proceed to step 3.

Step 3. Check dolly pressure tank draincock.
If open, close. If brakes still do not work or are weak, notify Organizational Maintenance.

6. SLOW BRAKE APPLICATION OR SLOW RELEASE.

Notify Organizational Maintenance.

7. BRAKES GRAB.

Open pressure tank draincock and drain any moisture.
If this does not correct problem, or if there is no moisture in pressure tank, notify Organizational Maintenance.

8. BRAKES DRAG (ONE OR BOTH BRAKEDRUMS RUNNING HOT).

Notify Organizational Maintenance.

9. UNEVEN BRAKING.

Notify Organizational Maintenance.

Table 3-1. Operator/Crew Troubleshooting (Con't).

MALFUNCTION TEST OR INSPECTION CORRECTIVE ACTION
SUSPENSION
10. DOLLY SAGS TO ONE SIDE.
Step 1. Check tires for correct pressure (para 1-10). Adjust as required.
Step 2. Check for broken or damaged springs. Notify Organizational Maintenance.
11. DOLLY DOES NOT TRACK.
Check dolly for broken springs or radius rods. Notify Organizational Maintenance.
TIRES
12. EXCESSIVELY WORN, SCUFFED, OR CUPPED TIRES.
Step 1. Check tires for correct pressure (para 1-10). Adjust as required.
Step 2. Check dolly for loose wheels. Notify Organizational Maintenance.

CHAPTER 4
ORGANIZATIONAL MAINTENANCE

Section I. REPAIR PARTS; SPECIAL TOOLS; TEST, MEASUREMENT, AND DIAGNOSTIC EQUIPMENT (TMDE); AND SUPPORT EQUIPMENT

4-1. COMMON TOOLS AND EQUIPMENT.

Refer to the *Modified Table of Organization and Equipment (MTOE)* for authorized tools and equipment applicable to your unit.

4-2. SPECIAL TOOLS; TEST MEASUREMENT AND DIAGNOSTIC EQUIPMENT (TMDE); AND SUPPORT EQUIPMENT

Special tools are listed and illustrated in Appendix F of this manual. No TMDE or support equipment is required.

4-3. REPAIR PARTS.

Repair parts are listed and illustrated in Appendix F of this manual.

SECTION II. SERVICE UPON RECEIPT

4-4. GENERAL.

When a new or reconditioned dolly is first received, determined whether it has been properly prepared for service and is in condition to perform its preliminary inspections and service listed in paragraph 4-5.

4-5. PRELIMINARY INSPECTIONS AND SERVICES.

a. Refer to DD Form 1397 for procedures on unpacking the dolly.

b. Remove any protective materials used on the dolly during shipment

WARNING

Dry claening solvent, P-D-680, is toxic and flammable. Always wear protective goggles and gloves, and use only in a well-ventilated area. Avoid contact with skin , eyes, and clothes, and DO NOT use near open flames or excessive heat. The solvent's flash point is 100°F-138°F (38°C-59°C). If you become dizzy while using cleaning solvent, immediately get fresh air and medical help. If solvent contacts eyes, immediately wash your eyes and get medical aid.

c. Used dry cleaning solvent (item 5,Appendix E) and rags (item 12, Appendix E) to clean all exterior surfaces coated with rust preventive compounds. Refer to DD Form 1397 and follow all instructions carefully.

d. Make a complete visual check of the dolly to ensure that there was no damage during shipment and that all accessories and required publications are present. Check also to see if equipment has been modified.

e. Perform all Semiannual (S) PMCS as shown in Table 4-1. Correct any deficiency if authorized by the Maintenance Allocation Chart (MAC) in Appendix B.. If not authorized, notify your supervisor. Schedule the next PMCS on DD Form 314.

f. Lubricate all lubrication points regardless of interval (Chapter 3, Section I).

g. Perform a break-in road test of 25 mi (40 km) at a maximum speed of 30 mi/h (48 km/h).

Section III. ORGANIZATIONAL PREVENTIVE MAINTENANCE CHECKS AND SERVICES (PMCS)

4-6. GENERAL.

a. Preventive maintenance is detecting/correcting problems before they happen or fixing minor problems before they become major problems.

b. Table 4-1 contains a list of preventive maintenance checks and services to be performed by organizational maintenance personnel. Attention to these checks and services will increase the useful life of the equipment.

c. Every possible problem cannot be covered in the PMCS. Be alert for anything that might cause a problem. If anything looks wrong, and you can't fix it, write it on a DA Form 2404 and report it to your supervisor. Be sure to record any corrective action taken.

4-7. PMCS PROCEDURES.

a. While performing your PMCS, always keep in mind all WARNINGs and CAUTIONs.

b. Perform the checks and services at the intervals shown in Table 4-1.

(1) Perform *Semiannual* (S) PMCS once every six months.

(2) Perform *Annual* (A) PMCS once each year.

c. Always do your checks and services in the same order so it gets to be a habit. Once you've had some practice, you'll spot anything wrong in a hurry.

d. If the dolly doesn't work properly and you can't see what is wrong, refer to Section IV of this chapter for troubleshooting procedures.

WARNING

Dry cleaning solvent, P-D-680, is toxic and flammable. Always wear protective goggles and gloves, and use only in a well-ventilated area. Avoid contact with skin, eyes, and clothes, and DO NOT breathe vapors. DO NOT use near open flame or excessive heat. The solvent's flash point is 1000F-1380F (38°C-590C). If you become dizzy while using cleaning solvent, immediately get fresh air and medical help. If solvent contacts eyes, Immediately wash your eyes and get medical aid.

e. Make cleanup a part of your preventive maintenance. Dirt, grease, oil, and debris may cover up a serious problem. Wipe off any excess grease and spilled oil. Use dry cleaning solvent (Item 5, Appendix E) to clean metal surfaces. Use detergent (Item 4, Appendix E) and water to clean rubber or plastic material.

f. While performing PMCS, inspect the following components:

(1) **Bolts, Nuts, and Screws**. Ensure that they are not loose, missing, bent, or broken. Tighten any that are loose.

(2) **Welds**. Inspect for gaps where parts are welded together. Report bad welds to your supervisor.

4-7. PMCS PROCEDURES (Con't).

(3) **Electric Wires or Connectors.** Inspect for cracked or broken insulation, bare wires, and loose or broken connectors. Make repairs or replace as required.

(4) **Hoses, Lines, and Fittings.** Inspect for wear, damage, and leaks. Ensure that clamps and fittings are tight. If a leak originates from a loose fitting or connector, tighten it. If a component is broken or worn, correct problem if authorized by the Maintenance Allocation Chart (MAC) (Appendix B). If not authorized, report it to your supervisor.

g. For a classification of fluid leakage, refer to paragraph 2-8.

h. The columns in Table 4-1 are defined as follows:

(1) **Item No**. The number in this column shall be used as a source of item numbers for the "TM ITEM NO." column on DA Form 2404 in recording results of PMCS.

(2) **Interval**. Tells you when to do a certain check or service.

(3) **Item to be Inspected.** Lists system and common names of items that are to be inspected.

(4) **Procedures.** Tells you how to do a certain check or service.

TABLE 4-1. Organizational Preventive Maintenance Checks and Services (PMCS).

S – SEMIANNUAL A – ANNUAL

ITEM NO.	INTERVAL		ITEM TO BE INSPECTED	PROCEDURES
	S	A		
				NOTE **Perform Operator/Crew PMCS prior to or in conjunction with Organizational PMCS.**
1			**FRAME**	
	•			a. Inspect for cracks, bent members, or broken welds. Check condition of paint and data plates.
	•			b. Inspect data plates for damage and readability. Replace data plates if damaged or illegible (para 4-54).
2			**SUSPENSION**	
	•			Inspect springs and radius rods for looseness or damage. Replace any damaged components (para 4-49, 4-50, or 4-51).
3			**AIR AND HYDRAULIC BRAKE SYSTEM**	
	•			a. Inspect air lines for kinks and damage. Check hydraulic lines and fittings for leaks.
	•			b. Open draincock and drain condensation from pressure tank (para 1-7).
	•			c. Drain condensation from air filter (para 4-27).
4			**TIRES**	
	•			a. Rotate and match tires according to tread design and degree of wear.
	•			b. Torque wheel nuts to 450–500 lb.-ft. (610–678 N•m).

Table 4-1. Organizational Preventive Maintenance Checks and Services (PMCS) (Con't).

S–SEMIANNUAL A–ANNUAL

ITEM NO.	INTERVAL S	INTERVAL A	ITEM TO BE INSPECTED	PROCEDURES
5			LUBRICATION	
	●			Lubricate dolly in accordance with lubrication chart (Chapter 3, Section I).
6			WHEEL BEARINGS	
		●		Disassemble, clean, and pack wheel bearings (para 4-37).
7			SERVICE BRAKES	
	●			a. Remove and clean air filter element. Replace if unserviceable (para 4-27).
	●			b. Adjust brakes (para 4-18).
	●			c. Perform brake system test (para 4-31).

Section IV. ORGANIZATIONAL TROUBLESHOOTING PROCEDURES

4-8. GENERAL.

a. This section provides information for identifying and correcting malfunctions which may develop when operating or maintaining the dollies. You should perform the tests/inspections and corrective actions in the order listed.

b. This section cannot list all malfunctions that may occur or all tests or inspections and corrective actions. If a malfunction is not listed, or is not corrected by listed corrective actions, notify your supervisor.

c The Troubleshooting Symptom Index in paragraph 4-10 lists common malfunctions that may occur and refers you to the proper page in Table 4-2.

d. When troubleshooting a malfunction:

(1) Question the operator to obtain any information that might help determine the cause of the problem. Before continuing, ensure that all applicable operator troubleshooting was performed.

(2) Locate the symptom in paragraph 4-10 that best describes the malfunction. If the appropriate symptom is not listed, notify your supervisor.

(3) Turn to the appropriate page in Table 4-2 where the troubleshooting procedures for the malfunction in question are described. Headings at the top of each page show how each troubleshooting procedure is organized: MALFUNCTION, TEST OR INSPECTION (in step number order), and CORRECTIVE ACTION.

(4) Perform each step in the order listed until the malfunction is corrected. Do not perform any maintenance task unless the troubleshooting procedure tells you to do so.

4-9. EXPLANATION OF COLUMNS.

The columns in Table 4-2 are defined as follows:

(1) **MALFUNCTION.** A visual or operational indication that something is wrong with the dolly.

(2) **TEST OR INSPECTION**. A procedure to isolate the problem in a component or system.

(3) **CORRECTIVE ACTION.** A procedure to correct the problem.

4-10. TROUBLESHOOTING SYMPTOM INDEX.

Table 4-2. Organizational Troubleshooting.

MALFUNCTION TEST OR INSPECTION CORRECTIVE ACTION

ELECTRICAL SYSTEM (M197A 1 and M198A 1)

1. TAILLIGHTS WILL NOT LIGHT.

NOTE
Refer to paragraph 4-16 for dolly wiring diagram.

Step 1. Check operation of light switch in towing vehicle.
Replace defective light switch. Refer to towing vehicle technical manual.

Step 2. Check circuit breakers and fuses in towing vehicle.
Reset circuit breakers and replace defective fuses. Refer to towing vehicle technical manual.

Step 3 Check chassis wiring harness for broken insulation or contacts causing short circuits.
Repair or replace chassis wiring harness (para 4-15 or 4-14).

Step 4. Replace intervehicular cable (para 4-13).

Table 4-2. Organizational Troubleshooting (Con't).

MALFUNCTION
TEST OR INSPECTION
CORRECTIVE ACTION

2. DIM OR FLICKERING LIGHTS.

NOTE
Refer to paragraph 4-16 for dolly wiring diagram.

Step 1. Check intervehicular cable, chassis wiring harness, and light assemblies for loose, dirty, or corroded contacts.
Clean dirty or corroded contacts. Reconnect cables and check operation.
Repair or replace chassis wiring harness (para 4-15 or 4-14), or light assemblies (para 4-12).
Replace intervehicular cable (para 4-13).

Step 2. Check chassis wiring harness for proper grounding.
Remove screw, washer, and nut securing ground terminal to receptacle cover (para 4-14).
Clean ground terminal and surface of cover. Connect ground terminal to receptacle cover with screw, washer, and nut and check operation.

Step 3. Check lights for proper grounding.
Remove light assemblies (para 4-12). Clean screws and mounting surface. Install light assemblies and tighten screws securely.

Step 4. Check lamps.
Replace lamps as required (para 4-11).

3. ONE OR MORE LAMPS (BUT NOT ALL) FAIL TO LIGHT.

NOTE
Refer to paragraph 4-16 for dolly wiring diagram.

Step 1. Check lamps.
Replace lamps as required (para 4-11).

CAUTION

Before performing continuity checks disconnect intervehicular cable from towing vehicle. Failure to follow this caution will result in damage to multimeter.

Step 2. Check continuity between edge of lamp socket and light assembly housing and between center post of lamp socket and related light assembly plug.
If no continuity exists, replace light assembly (para 4-12).

Step 3. Check continuity between edge of lamp socket and dolly frame.
If no continuity exists, remove lamp and clean mating surfaces.

Table 4-2. Organizational Troubleshooting (Con't).

MALFUNCTION TEST OR INSPECTION CORRECTIVE ACTION
Step 4. Disconnect chassis wiring harness from intervehicular cable. While assistant operates lights, check voltage at intervehicular cable. If 24 volts are present at the intervehicular cable, repair or replace chassis wiring harness (para 4-15 or 4-14).
Step 5. Disconnect intervehicular cable from towing vehicle receptacle. While assistant operates lights, check voltage at towing vehicle receptacle. If voltage is present at towing vehicle receptacle, replace intervehicular cable (para 4-13). If voltage is not present at towing vehicle receptacle, troubleshoot towing vehicle electrical system. Refer to towing vehicle technical manual.
BRAKES
4. BRAKES WILL NOT RELEASE.
Step 1. Check brake adjustment. Adjust brakes (para 4-18).
Step 2. Check for weak or broken brakeshoe return spring(s) (para 4-19, 4-20, or 4-21). Replace spring(s).
Step 3. Check for separation of brakeshoes and linings (para 4-19, 4-20, or 4-21). Replace brakeshoes.
5. NO BRAKES OR WEAK BRAKES.
Step 1. Check brake adjustment. Adjust brakes (para 4-18).
Step 2. Perform brake system air leakage test (para 4-31). Tighten or replace any leaking components.
Step 3. Check for dirty or damaged air filter (Ml 97A1 and M198A1) (para 4-27). Clean or replace if required.
Step 4. Check fluid level in master cylinder (M197A1 and M198A1) (Chapter 3, Section I). Replenish fluid if required.
Step 5. Check for air in hydraulic brake system (M197A1 and M198A1). Bleed brakes (para 4-24).

Table 4-2. Organizational Troubleshooting (Con't).

MALFUNCTION TEST OR INSPECTION CORRECTIVE ACTION

Step 6 Check for grease on brakeshoe linings and loose or worn linings (para 4-19, 4-20, or 4-21).
Replace brakeshoes if linings are soaked with grease, loose, or worn. Check and replace oil seal if required (para 4-37).

Step 7. Test operation of emergency relay valve (para 4-34).
Replace emergency relay valve if required.

Step 8. Replace master cylinder (para 4-22) or airbrake chamber (para 4-32 or 4-33) if required.

Step 9. Replace wheel cylinder(s) (M197A1 and M198A1) (para 4-23).

6. SLOW BRAKE APPLICATION OR SLOW RELEASE.

Step 1. Check fluid level in master cylinder (M197A1 and M198A1) (Chapter 3, Section !).
Replenish fluid if required.

Step 2. Check for dirty of damaged air filter (M1 97A1 and M198A1) (para 4-27).
Clean or replace if required.

Step 3. Check for air in hydraulic brake system (M197A1 and M198A1).
Bleed brakes (para 4-24).

Step 4. Check for weak or broken brakeshoe return spring(s) (para 4-19, 4-20, or 4-21).
Replace spring(s).

Step 5. Test operation of emergency relay valve (para 4-34).
Replace emergency relay valve if required.

Step 6. Replace master cylinder (para 4-22) or airbrake chamber (para 4-32 or 4-33) if required.

Step 7. Replace wheel cylinder(s) (M197A1 and M198A1) (para 4-23).

7. BRAKES GRAB.

Step 1. Check for moisture in air system.
Drain moisture from air filter (para 4-27) and pressure tank (para 4-36).

Step 2. Check for grease on brakeshoe linings and loose or worn linings (para 4-19, 4-20, or 4-21).
Replace brakeshoes if linings are soaked with grease, loose, or worn. Check and replace oil seal if required (para 4-37).

Step 3. Check brake adjustment.
Adjust brakes (para 4-18).

Table 4-2. Organizational Troubleshooting (Con't).

MALFUNCTION TEST OR INSPECTION CORRECTIVE ACTION
Step 4. Check for cracked, scored, or deformed brakedrum (para 4-37). Replace brakedrum if required.
Step 5. Check for loose or worn wheel bearings. Adjust or replace wheel bearings (para 4-37).
8. BRAKES DRAG (ONE OR BOTH BRAKEDRUMS RUNNING HOT).
Step 1. Check brake adjustment. Adjust brakes (para 4-18).
Step 2.Check for weak or broken brakeshoe return spring(s) (para 4-19, 4-20, or 4-21). Replace spring(s).
Step 3. Replace wheel cylinder(s) (M197A1 and M198A1) (para 4-23).
9. UNEVEN BRAKING.
Step 1. Check brake adjustment. Adjust brakes (para 4-18).
Step 2 Replace wheel cylinder(s) (M197A1 and M198A1) (para 4-23).
TIRES
10. EXCESSIVELY WORN, SCUFFED, OR CUPPED TIRES.
Step 1. Check for loose wheels. Torque wheel nuts to 450-500 lb.-ft. (610-678 N-m).
Step 2. Check for loose or worn wheel bearings. Adjust or replace wheel bearings (para 4-37).
Step 3. Check for deformed wheel. Dismount tire and tube from wheel and replace wheel (para 4-39). Replace wheel and tire assembly (para 4-38).
Step 4. Check for deformed axle. Replace axle (para 4-17).

Table 4-2. Organizational Troubleshooting (Con't).

MALFUNCTION TEST OR INSPECTION CORRECTIVE ACTION
SUSPENSION
11. DOLLY SAGS TO ONE SIDE. Check for broken springs and mounting hardware. Replace as required (para 4-49 or 4-50).
12. DOLLY DOES NOT TRACK. Step 1. Check radius rod adjustment (M197A1 and M198A1). Adjust radius rods (para 4-51). Step 2. Check for broken radius rod (M197A1 and M198A1). Replace as required (para 4-51). Step 3. Check for broken springs and mounting hardware. Replace as required (para 4-49 or 4-50).

Section V. ELECTRICAL SYSTEM MAINTENANCE

4-11. STOPLIGHT-TAILLIGHT LAMP REPLACEMENT (M197A1 AND M198A1).

This Task Covers:

a. Removal

b. Installation

Initial Setup:

Equipment Conditions:

- Intervehicular cable disconnected from towing vehicle (para 2-14).

Tools/Test Equipment:

General mechanic's tool kit

a. REMOVALI

1. Loosen six captive screws (2) and remove lens (1) from body (5).
2. Inspect preformed packing (7) for damage. If damaged, remove and discard.
3. Remove turn signal lamp (4), taillight lamp (3), and stoplight lamp (6).

b. INSTALLATION

1. Install turn signal lamp (4), taillight lamp (3), and stoplight lamp (6).
2. If removed, install new preformed packing (7) on body (5).
3. Install lens (1) on body (5). Tighten six captive screws (2).

FOLLOW-ON TASKS:

- Connect intervehicular cable to towing vehicle (para 2-10).
- Check operation of light.

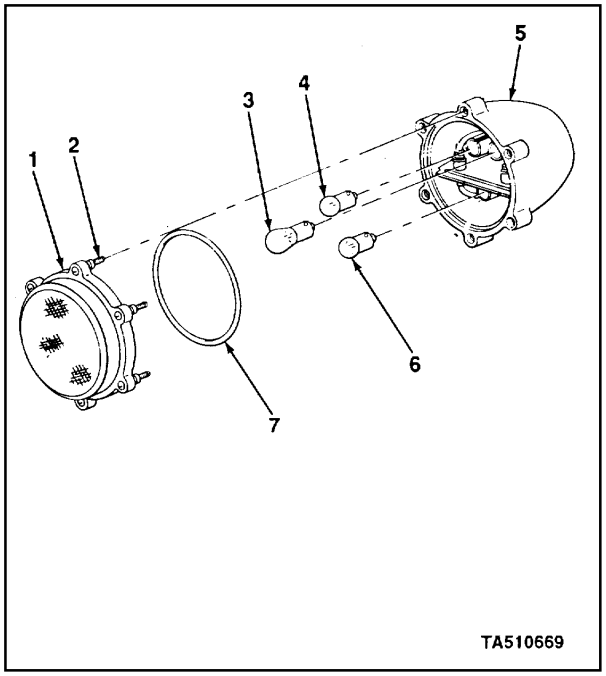

4-12. STOPLIGHT-TAILLIGHT REPLACEMENT (M197A1 AND M198A1).

This Task Covers:
a. Removal
b. Installation

Initial Setup:

Equipment Conditions:
- Intervehicular cable disconnected from towing vehicle (para 2-14).

Materials/Parts:
- Marker tags (Item 14, Appendix E)
- Tape (Item 16, Appendix E)
- Two lockwashers

Tools/Test Equipment:
- General mechanic's tool kit

a. REMOVAL

1. Tag wires if identification bands are missing or illegible.
2. Remove two chassis wiring harness connectors (1) and stoplight-taillight shells (9i from retainer (2) and disconnect.

3. Remove two screws (8) and lockwashers (7) from stoplight-taillight (3). Remove stoplight-taillight from bracket (4). Discard lockwashers.

NOTE
Perform step 4 only if shells are damaged.

4. If damaged, remove two washers (10) from shells (9). Remove shells from wires (6).

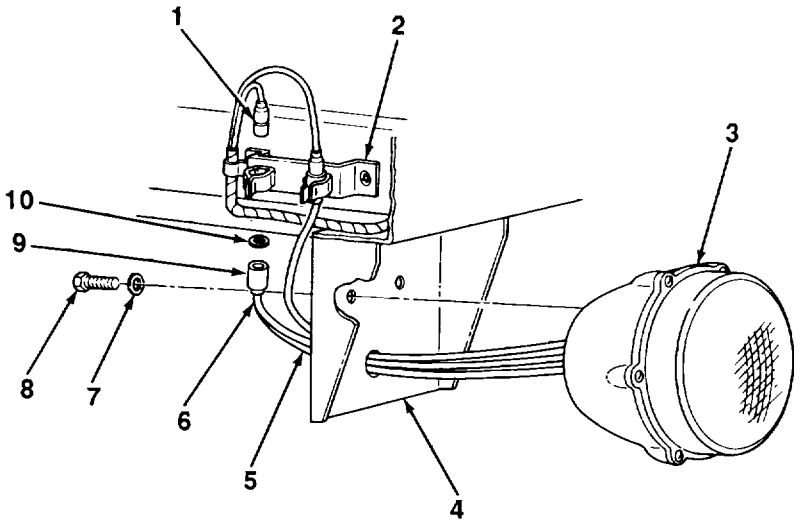

TA510670

4-12. STOPLIGHT-TAILLIGHT REPLACEMENT (M197A1 AND M198A1) (Con't).

b. INSTALLATION

NOTE

If installing new stoplight-taillight, perform steps 1 and 2. If shells were not removed, go to step 3.

1. Remove washer and shell from wire (5) marked 460 or 461. Discard washer and shell.

2. Splice wire (5) into wire (6) marked 22.

3. Install two washers (10) and shells (9) on wires (6).

4. Install stoplight-taillight (3) on bracket (4) with two screws (8) and new lockwashers (7).

5. Connect stoplight-taillight shells (9) to chassis wiring harness connectors (1) and install in retainer (2). Remove tags.

FOLLOW-ON TASKS:

- Connect intervehicular cable to towing vehicle (para 2-10).
- Check operation of light.

4-13. INTERVEHICULAR CABLE REPLACEMENT.

This Task Covers:

a. Removal b. Installation

Initial Setup:

Equipment Conditions:

- Intervehicular cable disconnected from towing vehicle (para 2-14).

Tools/Test Equipment:

- General mechanic's tool kit

a. REMOVAL

1. If working on M197A1 or M198A1, disconnect 12-volt (3) or 24-volt (4) intervehicular cable from chassis wiring harness.
2. Lift up on hook (2) and remove intervehicular cable (3 or 4) from under hook.
3. Open right (5) or left (1) stowage compartment cover of intervehicular cable to be replaced.
4. Remove two nuts (7) and screws (9) and remove clamp (8). Remove intervehicular cable (3 or 4) from dolly.
5. Remove band marker (6) if damaged.

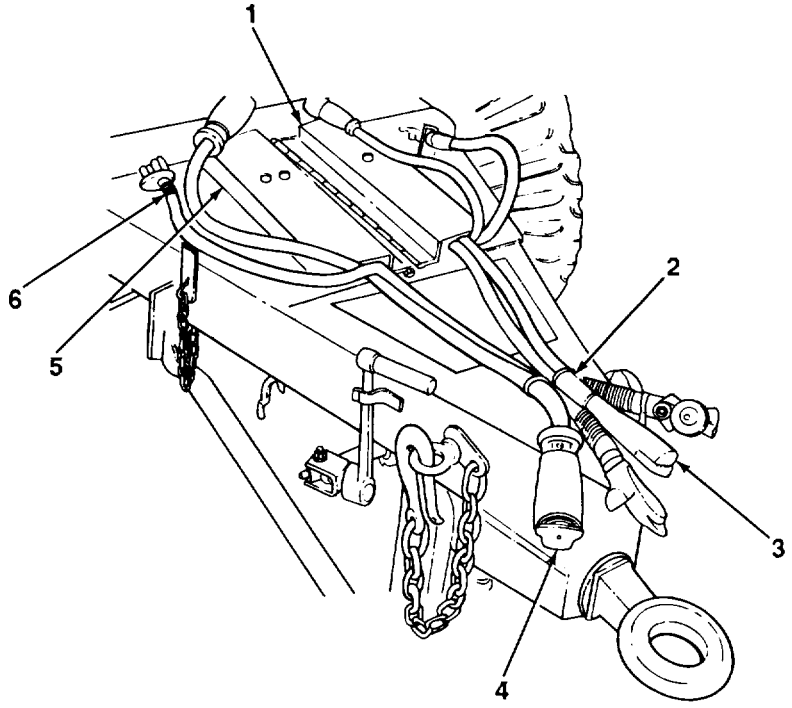

TA510671

4-13. INTERVEHICULAR CABLE REPLACEMENT (Con't).

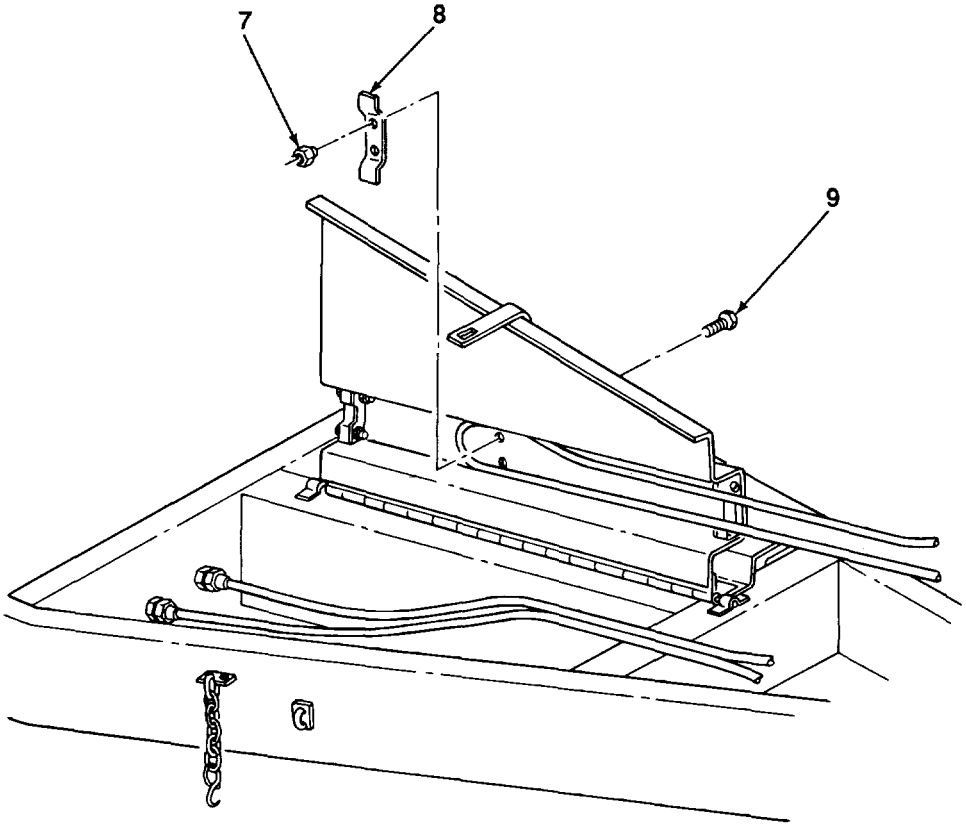

b. INSTALLATION I

1. Install band marker (6) if removed.

2. Position 12-volt (3) or 24-volt (4) intervehicular cable for installation. Install clamp (8) using two screws (9) and nuts (7).

3. Close right (5) or left (1) stowage compartment cover.

4. Lift up on hook (2) and place intervehicular cable (3 or 4) under hook. Release hook.

5. If working on M197A1 or M198A1, connect intervehicular cable (3 or 4) to chassis wiring harness.

FOLLOW-ON TASKS:

- M197and M198:
  Connect intervehicular cable to towing vehicle (para 2-10) and semitrailer (para 2-11).
  Check operation of semitrailer lights.

- M197A1 and M198A1:
  Connect intervehicular cable to towing vehicle (para 2-10).
  Check operation of dolly lights.

TA510672

4-14. CHASSIS WIRING HARNESS REPLACEMENT (M197A1 AND M198A1).

This Task Covers:

a. Removal

b. Installation

Initial Setup:

Equipment Conditions:

- Intervehicular cable disconnected from towing vehicle (para 2-14).

Materials/Parts:

- Marker tags (Item 14, Appendix E)
- Ten lockwashers

Tools/Test Equipment:

- General mechanic's tool kit

a. REMOVAL

1. Tag wires if identification bands are missing or illegible.

2. Remove two chassis wiring harness connectors (1) and stoplight-taillight connectors (3) from retainer (2) and disconnect.

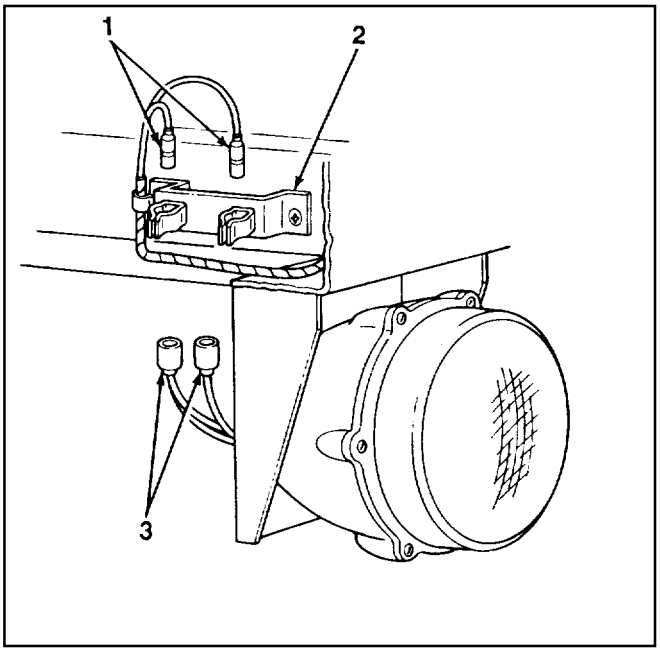

3. Remove nut (7), lockwashers (6), and screw (4) from strap (5). Discard lockwashers.

4. Remove two screws (9), lockwashers (11), and nuts (12) from strap (10) and retainer (2). Discard lockwashers.

5. Remove retainer (2) from frame. Remove two straps (5 and 10) from chassis wiring harness (8).

6. Repeat steps 1 through 5 on opposite side of frame.

TA510673

4-14. CHASSIS WIRING HARNESS REPLACEMENT (M197A1 AND M198A1) (Con't).

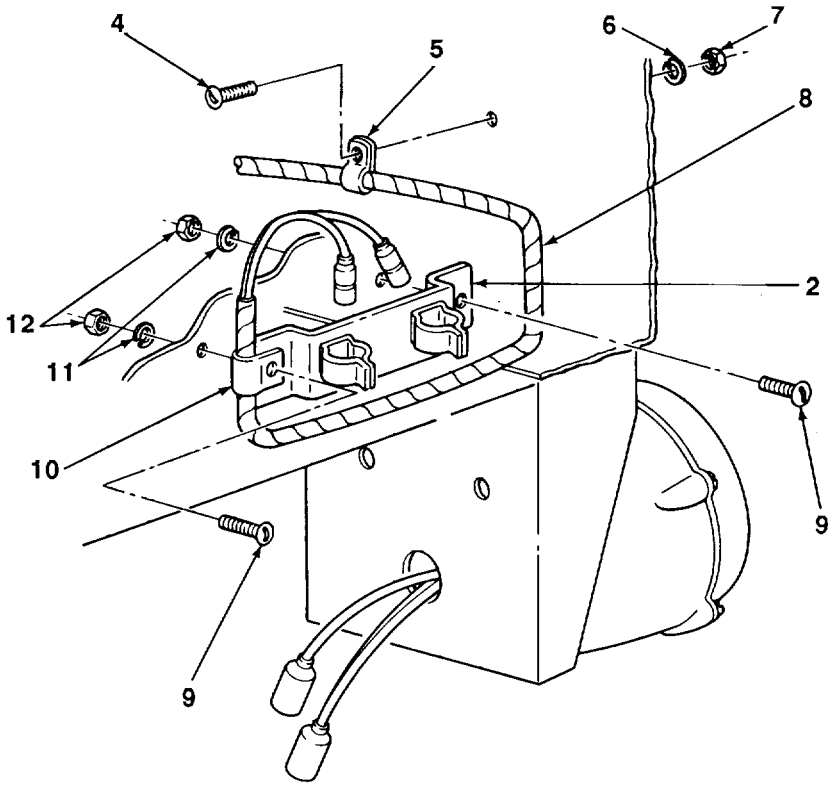

TA510674

4-14. CHASSIS WIRING HARNESS REPLACEMENT (M197A1 AND M198A1) (Con't).

7. Remove two grommets (13) from frame.

8. Remove four nuts (14), lockwashers (15), terminal (16), and four screws (18) from receptacle cover (17). Discard lockwashers.

9. Disconnect chassis wiring harness (8) from intervehicular cable (19). Remove chassis wiring harness and receptacle cover (17) from frame.

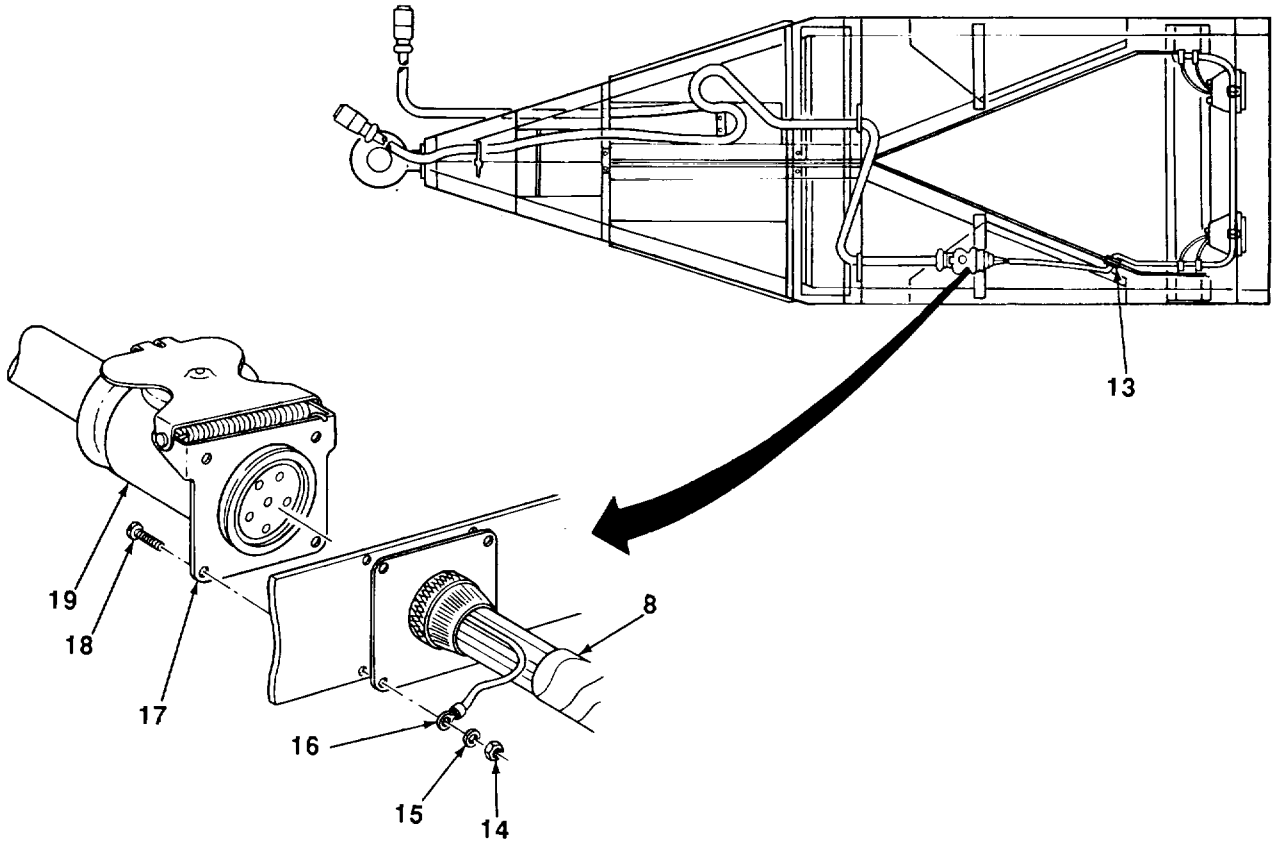

b. INSTALLATION I

1. Position chassis wiring harness (8) and receptacle cover (17) for installation. Connect chassis wiring harness to intervehicular cable (19).

2. Install terminal (16) and receptacle cover (17) using four screws (18), new lockwashers (15), and nuts (14).

3. Install two grommets (13) in frame.

4. Install two straps (5 and 10) on chassis wiring harness (8).

5. Install strap (5) on frame using screw (4), new lockwashers (6), and nut (7).

TA510675

4-14. CHASSIS WIRING HARNESS REPLACEMENT (M197A1 AND M198A1) (Con't).

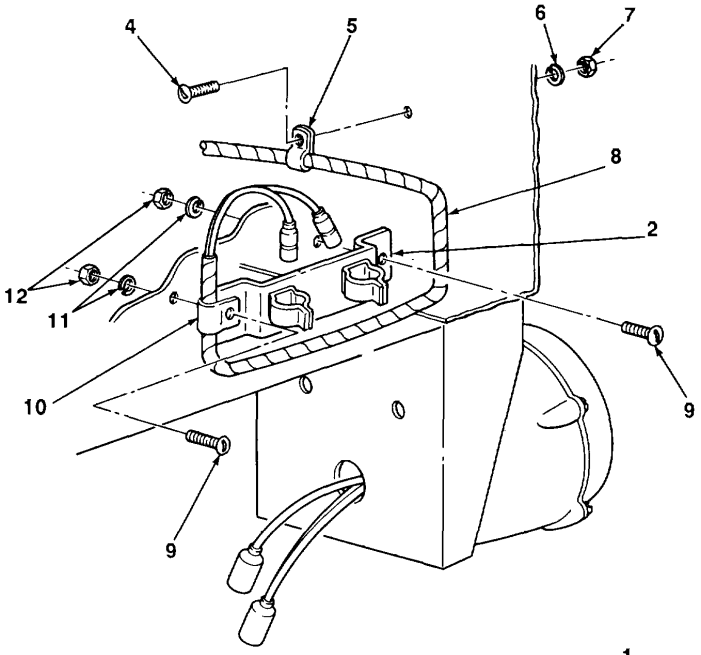

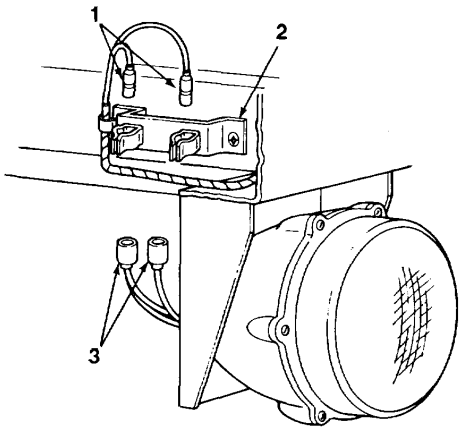

6. Install retainer (2) and strap (10) on frame using two screws (9), new lockwashers (11), and nuts (12).

7. Repeat steps 4 through 6 for opposite side of frame.

8. Connect two chassis wiring harness connectors (1) to stoplight-taillight connectors (3) and install in retainer (2). Remove tags.

FOLLOW-ON TASKS:

- Connect intervehicular cable to towing vehicle (para 2-10).
- Check operation of lights.

TA510676

4-15. CHASSIS WIRING HARNESS REPAIR (M197A1 AND M198A1).

This task covers:

a Receptacle Connector Repair
b Terminal Lug Replacement
c Terminal Replacement
d Marker Band Replacement

Initial Setup:

Equipment Conditions:

- Chassis wiring harness removed (para 4-14)

- **Tools/Test Equipment**

- General mechanic's tool kit
- Electric etcher
- Soldering Iron

Material Parts:

- Solder (Item 13, Appendix E
- Inserts (as required)
- Marker Bands (as required)
- Terminal lugs (as required)
- Terminals (as required)

- Terminals (as required

a RECEPTACLE CONNECTOR REPAIR

1 Remove receptacle connector (3) from grommet retaining nut (1).

2 Remove grommet (4) from receptacle connector (3). Push insert (5) from grommet (4) and cut insert from wire (2). Discard insert.

3 Remove grommet (4), receptacle connector (3), and grommet retaining nut (1) from cable (6).

4 Strip insulation off wire (2) equal to depth of new insert (5).

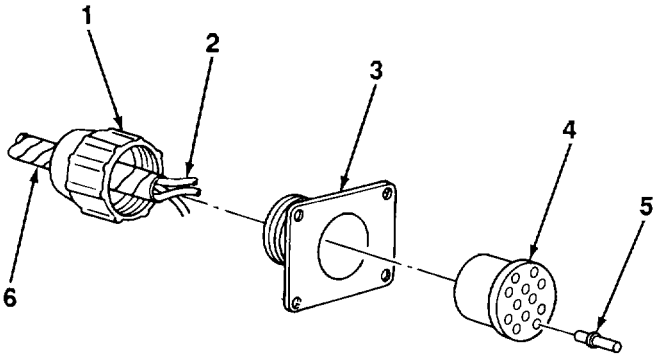

5 Thread wire (2) through grommet retaining nut (1), receptacle connector (3), and grommet (4).
6 Solder new insert (5) onto wire (2).
7 Press grommet (4) into receptacle connector (3) until seated.
8 Tighten grommet retaining nut (1) on receptacle connector (3).

TA510677

4-15. CHASSIS WIRING HARNESS REPAIR (M197A1 AND M198A1).

b TERMINAL LUG REPLACEMENT

1 Cut off and discard terminal lug (8).

2 Strip wire (7) to depth of new terminal lug (8).

3 Crimp new terminal lug (8) onto wire (7).

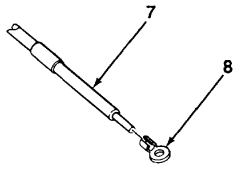

c TERMINAL REPLACEMENT

1 Slide shell (9) and insulator (10) back .
2 Cut off and discard terminal (12).
3 Slide insulator (10) and shell (9) off wire (11). Discard shell and insulator if damaged.
4 Strip wire (11) to depth of new terminal (12).
5 Slide shell (9) and insulator (10) over wire (11).
6 Crimp new terminal (12) onto wire (11).
7 Slide insulator (10) and shell (9) over terminal (12).

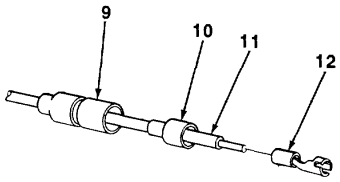

d MARKER BAND REPLACEMENT

1 Open tabs and remove marker band (13) from wire (14).

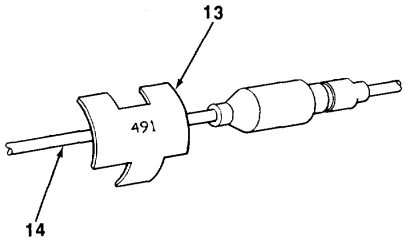

TA510678

4-15. CHASSIS WIRING HARNESSREPAIR (M197A1 AND M198A1) (Con't).

2. Etch new marker band (13) with proper Identification number. Refer to wiring diagram (para 4-16) and chart below.
3. Position new marker band (13) over wire (14) and bend over tabs.

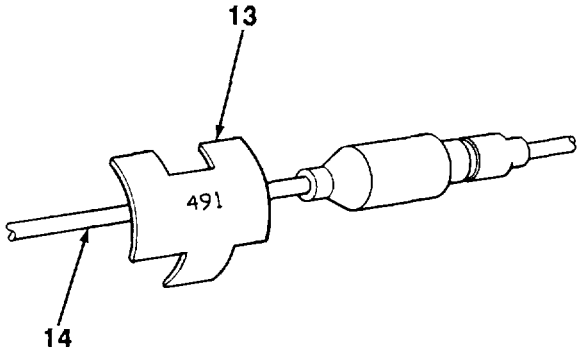

Terminal Designation	Circuit No.
B	22-461
D	90
E	21
J	22-460

- Install chassis wiring harness (para 4-14).
- Check operation of lights.

4-16. WIRING DIAGRAM (M197A1 AND M198A1).

NOTE

This paragraph contains the wiring diagram for the M1 97A1 and M1 98A1 dollies. Refer to this wiring diagram when troubleshooting or repairing electrical system.

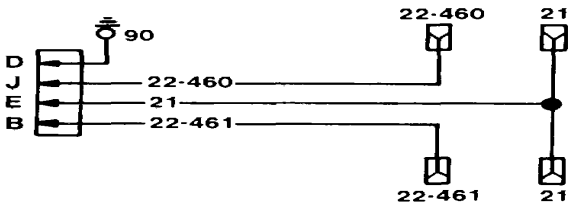

Section VI. AXLE MAINTENANCE

4-17. AXLE REPLACEMENT.

This task covers:
a Removal b Installation

Initial Setup:

Equipment Conditions:

- Service brake assembly removed (para 4-19, 4-20, or 4-21).

Materials/Parts:

- Antiseizing tape (Item 15, Appendix E)

Tools/Test Equipment:

- General mechanic's tool kit
- Jack
- Two jackstands

Personnel Required: Two
- Eight lockwashers

a. REMOVAL

WARNING

Axle is heavy and awkward to handle. Use caution, provide adequate support, and use assistance during removal. Failure to follow this warning may result in serious Injury to personnel.

1. Raise axle (2) with jack and support dolly frame with jackstands.

2. Disconnect hydraulic hose assembly (1) at axle tee (3) on M 197A1 and M 198A1. Disconnect air hose assembly (4) from each airbrake chamber (5) on M197 and M198.

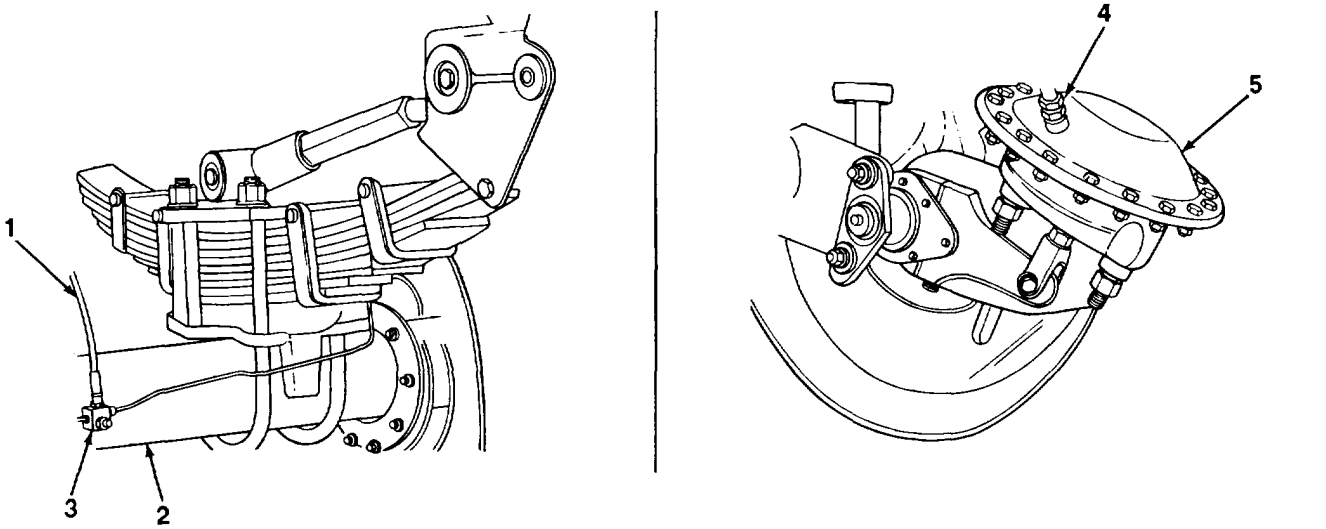

TA510680

4-17. AXLE REPLACEMENT.

3. Remove eight sleeve nuts (6), lockwashers (7), and four U-bolts (10) securing axle (2) to mounting plates (9). Discard lockwashers.

4. Carefully lower and remove axle (2) from springs (8).

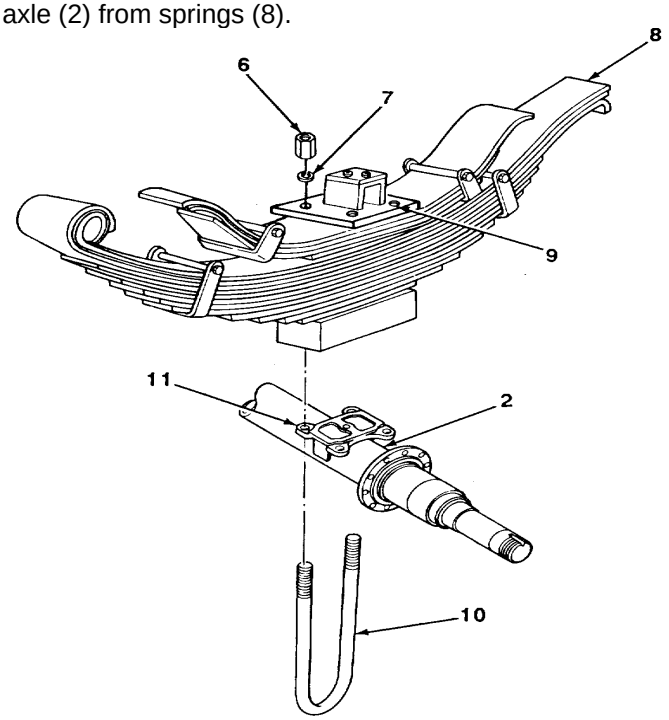

b. INSTALLATION

WARNING

Axle is heavy and awkward to handle. Use caution, provide adequate support, and use assistance during removal. Failure to follow this warning may result in serious Injury to personnel.

1. Position axle (2) under dolly and align axle spring seats (11) with mounting plates (9) on springs (8).

2. Install four U-bolts (10) around axle (2), sides of springs (8), and through mounting plates (9) with eight new lockwashers (7) and sleeve nuts (6).

TA51 0681

4-17. AXLE REPLACEMENT.

NOTE
Apply antiseizing tape to male threads of air hose assembly.

3. Connect hydraulic hose assembly (1) to axle tee (3) on M1 97A1 and M1 98A1. Connect air hose assembly (4) to each airbrake chamber (5) on M197 and M198.

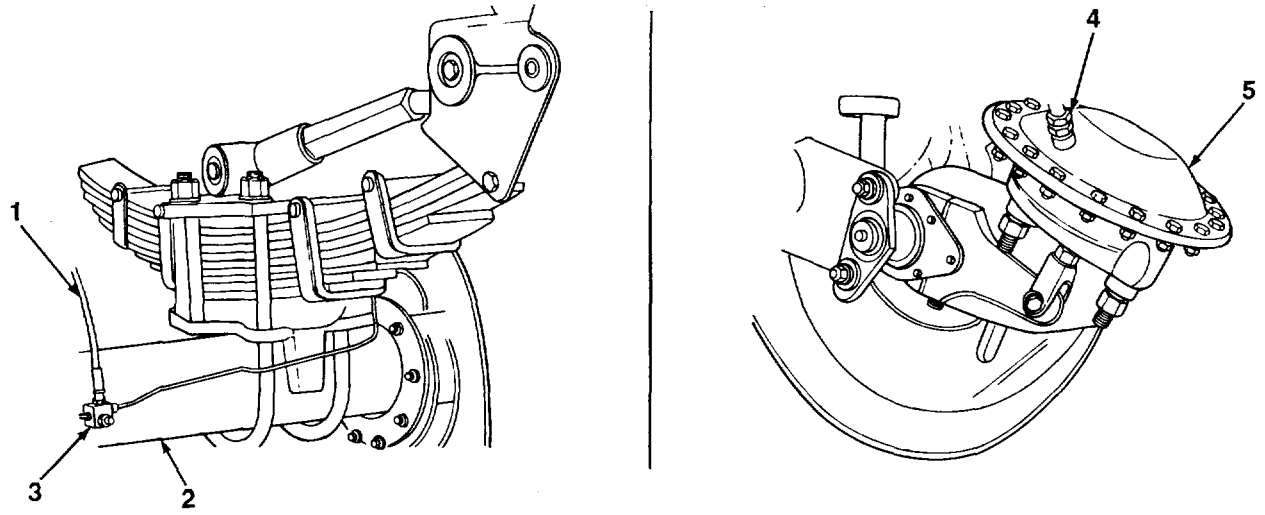

FOLLOW-ON TASKS:

- Install wheel and tire assemblies (para 4-38).
- Adjust radius rods (M197A1 and M198A1) (para 4-51).
- Bleed brakes (M197A1 and M198A1) (para 4-24).

TA510682

Section VII. BRAKE SYSTEM MAINTENANCE

4-18. SERVICE BRAKE ADJUSTMENT.

This task covers:

a Minor Adjustment b Major Adjustment

Initial Setup:

Equipment Conditions:

- Pressure released from service brake system (para 1-7).

Tools/Test Equipment:

- General mechanic's tool kit
- Jack
- Two jackstands

Materials/Parts:

- One lockwasher (major adjustment)

4-18. SERVICE BRAKE ADJUSTMENT (Con't).

NOTE
Do not adjust brakes when brake drums are hot.

a MINOR ADJUSTMENT

1. Raise one end of axle to permit wheel to rotate freely.

2. M197 and M198:

   (a) Press spring lock on slack adjuster worm shaft (1) and turn worm shaft clockwise until wheel cannot be turned freely by hand.
   (b) Back off worm shaft (1) on slack adjuster until wheel turns freely.
   (c) Repeat steps 1, 2(a), and 2(b) for other wheel. Make adjustments on each wheel as uniform as possible.

3. Early Model M197A1 and M198A1:
   (a) Turn one of two brakeshoe adjusting studs (2) on rear face of brake mounting plate spider to bring brakeshoe lining into contact with brake drum.
   (b) Turn brakeshoe adjusting stud (2) until brakeshoe lining drags slightly when wheel is turned by hand.
   (c) Back off brakeshoe adjusting stud (2) just enough to allow wheel to rotate freely.
   (d) Repeat procedure for other brakeshoe adjusting stud (2).
   (e) Repeat steps 1 and 3(a) through 3(d) for other wheel. Make adjustments on each wheel as uniform as possible.

4. Late Model M197A1 and M198A1:

   (a) Rotate wheel forward and turn one of two brakeshoe adjusting studs (2) on front brakeshoe forward until brakeshoe lining contacts brake drum.
   (b) Back off brakeshoe adjusting stud (2) enough to allow wheel to rotate freely.
   (c) Tap brakeshoe adjusting stud (2) with a light hammer to set adjusting cam and spring. Check adjustment and repeat if necessary.

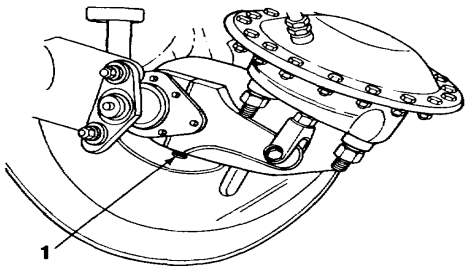

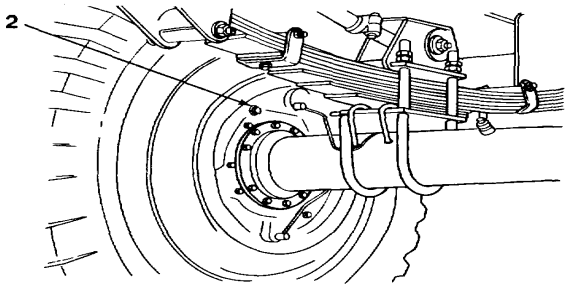

TA510683

4-18. SERVICE BRAKE ADJUSTMENT (Con't).

(d) Repeat steps (a) through (c) for rear brakeshoe, turning wheel forward and turning brakeshoe adjusting stud (2) opposite to normal forward rotation.
(e) Repeat steps 1 and 4(a) through 4(d) for other wheel. Make adjustments on both wheels as uniform as possible.

5. Lower jack and remove.

b. MAJOR ADJUSTMENT

NOTE
Brake shoes are located on top and bottom of backing plate.

1. Raise axle and support on two jackstands.

2. Remove wheel and tire assemblies (para 4-38).

3. Remove nut (7), lockwasher (6), and access cover (5) from each brake drum (4). Discard lockwasher.

4. M197 and M198:

(a) Loosen locknut (8) on brakeshoe anchor pin (9). Rotate brake drum (3) until inspection hole (4) is 1X in. (3.8 cm) from end of brakeshoe lining, nearest to anchor pin.
(b) Insert 0.005 In. feeler gage between surface of brake drum (3) and brakeshoe lining. Turn anchor pin until 0.005 in. Clearance is obtained.
(c) Hold anchor pin In place with one wrench and tighten anchor pin locknut with second wrench.
(d) Rotate brake drum (3) until inspection hole (4) is 11 in. (3.8 cm) from camshaft end of same brakeshoe.
(e) Insert 0.010 in. feeler gage and turn slack adjuster worm shaft (1) until 0.010 in. clearance Is obtained.
(f) Repeat steps (a) through (e) for other wheel. Make adjustments on both wheels as uniform as possible.

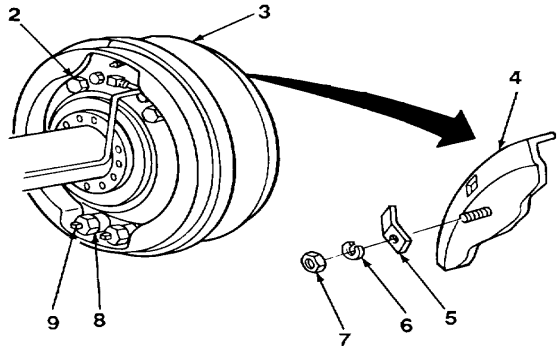

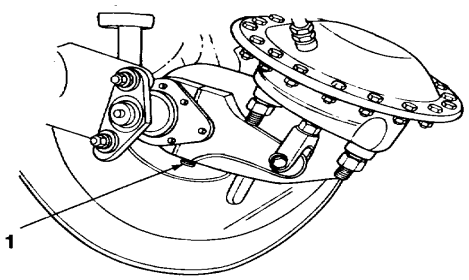

TA510684

4-18. SERVICE BRAKE ADJUSTMENT (Con't).

5. Early Model M197A1 and M198A1:

NOTE

Brake shoes are located vertically on backing plate.

(a) Rotate brake drum until inspection hole (4) is 1 in. (3.8 cm) from brakeshoe adjusting stud (2) end of rear brakeshoe.
(b) Insert 0.020 in feeler gage and turn brakeshoe adjusting stud (2) until a slight drag is felt on feeler gage.
(c) Rotate brake drum (3) until inspection hole (4) is 1/1 in (3.8 cm) from opposite end of brakeshoe and repeat step (b).
(d) Repeat steps (a) through (c) for other brakeshoe.
(e) Repeat steps (a) through (d) for other wheel Make adjustments on both wheels as uniform as possible.

6. Late Model M197A1 and M198A1:

NOTE
Brake shoes are located vertically on backing plate.

(a) Rotate brake drum (3) until inspection hole (4) is 1X in (3.8 cm) from anchor pin (9) end of rear brakeshoe.
(b) Insert 0.010 in feeler gage between brakedrum (3) and brakeshoe lining.
(c) Loosen hex nut (8) on anchor pin (9). Hold hex nut with one wrench and turn anchor pin with another wrench until a slight drag Is felt on feeler gage. Hold this adjustment and tighten hex nut.
(d) Rotate brake drum (3) until inspection hole (4) is 11 in (3.8 cm) from adjusting stud (2) end of brakeshoe.
(e) Insert 0.020 in feeler gage and turn adjusting stud (2) in opposite direction of normal forward rotation until a slight drag is felt on feeler gage.
(f) Tap head of adjusting studs (2) with a light hammer to set adjusting cam and spring. Check clearance.
(g) Repeat steps (a) through (f) for other brakeshoe. Turn adjusting stud (2) in direction of normal forward rotation.
(h) Repeat steps (a) through (g) for other wheel. Make adjustments on both wheels as uniform as possible.

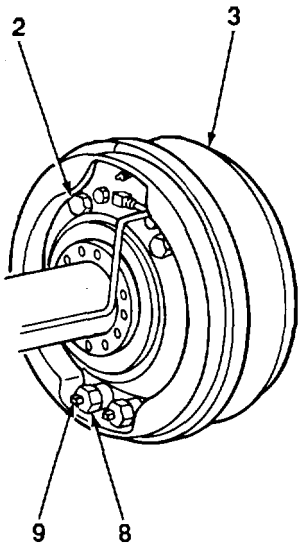

7. When adjustments are complete, install access cover (5) on each brake drum (3) using new lockwasher (6) and nut (7).
8. Install wheel and tire assemblies (para 4-38).
9. Remove jackstands and jack.

TA510685

4-19. SERVICE BRAKE ASSEMBLY REPLACEMENT (M197 AND M198).

This task covers:

a Removal
b Cleaning and Inspection
c Installation

Initial Setup:

Equipment Conditions:

- Brake drum removed (para 4-37)
- Slack adjuster disconnected from airbrake chamber clevis (if replacing slack adjuster) (para 4-32)

Tools/Test Equipment:

- General mechanic's tool kit
- Brakeshoe spring pliers
- Retaining ring pliers

Materials/Parts:

- Dry cleaning solvent (Item 5, Appendix E)
- Grease (Item 6, Appendix E)
- Rags (Item 12, Appendix E)
- One retaining ring
- Two seals
- Seven lockwashers

a. REMOVAL

WARNING

DO NOT handle brake shoes, brake drums, or other brake components unless area has been properly cleaned. There may be asbestos dust on these components which can be dangerous if you touch It or breathe It. Wear an approved filter mask and gloves. Never use compressed air or a dry brush to clean brake components. Dust may be removed using an Industrial-type vacuum cleaner. Clean dust or mud away from brake components with water and a wet, soft brush or cloth. Failure to follow this warning may result In serious Illness or death to personnel.

1. Using brakeshoe spring pliers, remove two return springs (1) from two pivot pins (5).

2. Remove slotted washer (2) from each pivot pin (5).

3. Remove anchor pin strap (3) and two brake shoes (4) from two pivot pins (5).

4. Using retaining ring pliers, remove retaining ring (14) and flatwasher (13) from camshaft (21). Discard retaining ring.

5. Remove two nuts (15), lockwashers (16), flatwashers (17), and bolts (18). Remove slack adjuster bracket (12) from bracket (9) welded to axle (6). Discard lockwashers.

6. Remove flatwasher (11) and spacer (10) from end of camshaft (21). Work camshaft out of two brackets (9 and 19) and backing plate (20) until slack adjuster (8) can be removed from camshaft.

7. Remove slack adjuster (8), two spacers (23 and 24), two flatwashers (25 and 26), and seal (27) from camshaft (21). Discard seal.

NOTE

If camshaft is frozen In bearings or bracket, it may be necessary to heat bracket and drive out camshaft with a punch.

8. Remove camshaft (21), two flatwashers (22 and 31), and seal (30) from bracket (7). Discard seal.

9. Remove three capscrews (29) and lockwashers (28). Remove bracket (19) from bracket (7). Discard lockwashers.

4-19. SERVICE BRAKE ASSEMBLY REPLACEMENT (M197 AND MI98) (Con't).

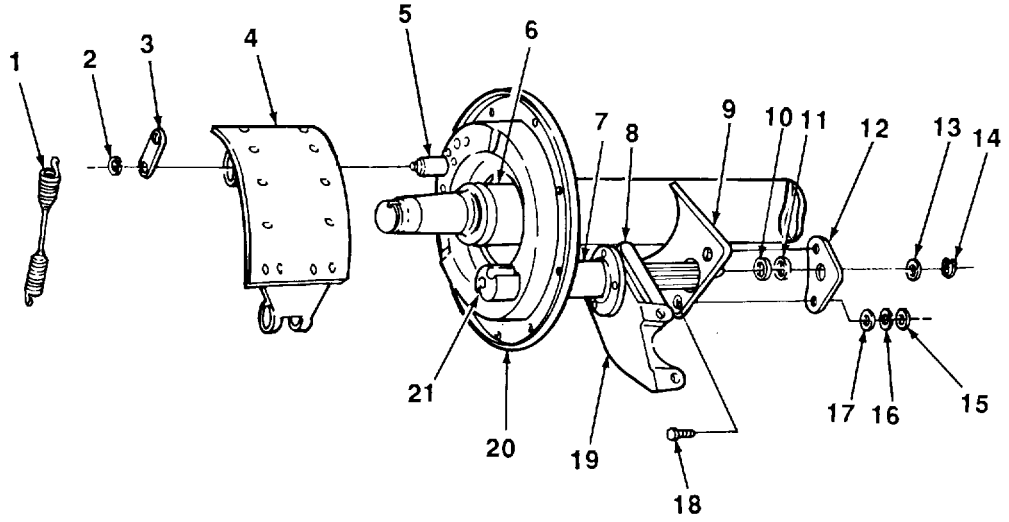

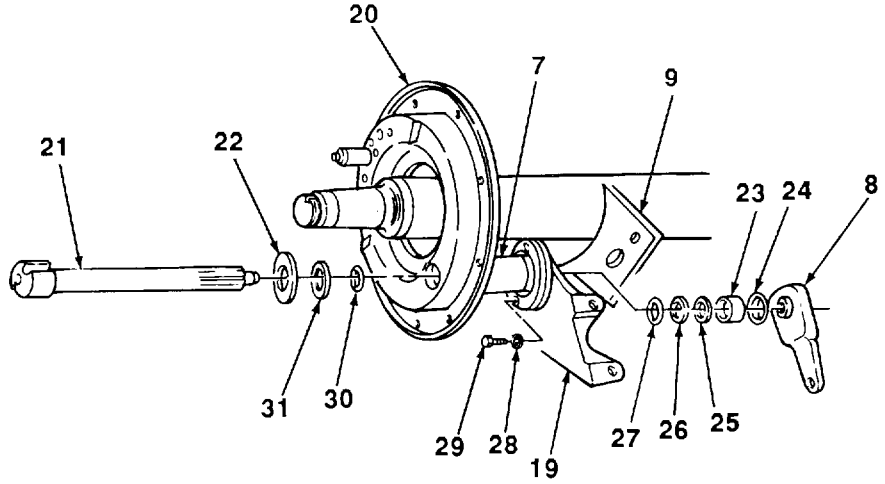

TA510686

4-19. SERVICE BRAKE ASSEMBLY REPLACEMENT (M197 AND M198) (Con't).

10. If bracket (7) is loose or damaged, remove four rivets (36). Remove bracket from backing plate (20). Discard rivets.
11. If damaged, remove lubrication fitting (38) from bracket (7). Discard lubrication fitting.
12. Remove nut (35) and lockwasher (34) from each pivot pin (5). Remove pivot pins from backing plate (20). Discard lockwasher.
13. If mounting plate bracket (33) is loose or damaged, remove four rivets (32). Remove mounting plate bracket from backing plate (20). Discard rivets.
14. Remove ten bolts (31) securing backing plate (20) to axle (6). Remove backing plate from axle.

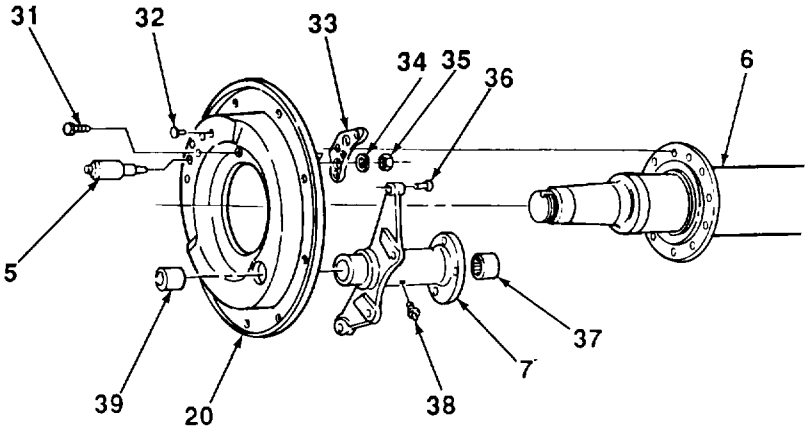

b. CLEANING AND INSPECTION

WARNING

- **DO NOT handle brake shoes, brake drums, or other brake components unless area has been properly cleaned. There may be asbestos dust on these components which can be dangerous If you touch it or breathe it. Wear an approved filter mask and gloves. Never use compressed air or a dry brush to clean brake components. Dust may be removed using an industrial-type vacuum cleaner. Clean dust or mud away from brake components with water and a wet, soft brush or cloth. Failure to follow this warning may result In serious illness or death to personnel.**

- **Dry cleaning solvent, P-D-680, Is toxic and flammable. Always wear protective goggles and gloves, and use only In a well-ventilated area. Avoid contact with skin, eyes, and clothes, and DO NOT breathe vapors. DO NOT use near open flame or excessive heat. The solvent's flash point Is 100°F-138°F (38°C-59°C). If you become dizzy while using cleaning solvent, Immediately get fresh air and medical help. If solvent contacts eyes, Immediately wash your eyes and get medical aid.**

1. Clean all parts with dry cleaning solvent. Dry thoroughly.

2. Inspect all parts for damage. Replace any damaged parts.

TA510687

4-19. SERVICE BRAKE ASSEMBLY REPLACEMENT (M197 AND M198) (Con't).

3. Inspect brakeshoe surface for cracks, distortion, and excessive wear. Brakeshoe linings must have a minimum thickness of X in. (3.2 mm). Replace brakeshoe assembly if cracked or if lining thickness is less than Y in. (3.2 mm).

4. Inspect brakeshoe lining rivets for looseness. Rivets should be at least *16* in. (1.6 mm) below surface of brakeshoe lining. If rivets are less than Y6 in. (1.6 mm) below surface of brakeshoe lining, replace brakeshoe assembly.

5. Check needle roller bearings (37 and 39) in bracket (7). If bearings are damaged, drive out of bracket and replace.

c. INSTALLATION

1. Install backing plate (20) on axle (6) with ten bolts (31).

2. If removed, install mounting plate bracket (33) on backing plate (20) using four new rivets (32).

3. Install each pivot pin (5) on backing plate (20) using new lockwasher (34) and nut (35).

4. If removed, install lubrication fitting (38) in bracket (7).

5. If removed, install bracket (7) on backing plate (20) using four new rivets (36).

6. Install bracket (19) on bracket (7) using three capscrews (29) and new lockwashers (28).

7. Lubricate camshaft (21) and needle roller bearings with grease. Install camshaft, two flatwashers (22 and 31), and new seal (30) through backing plate (20) and brackets (7 and 19).

8. Install new seal (27), two flatwashers (25 and 26), two spacers (23 and 24), and slack adjuster (8) on end of camshaft (21).

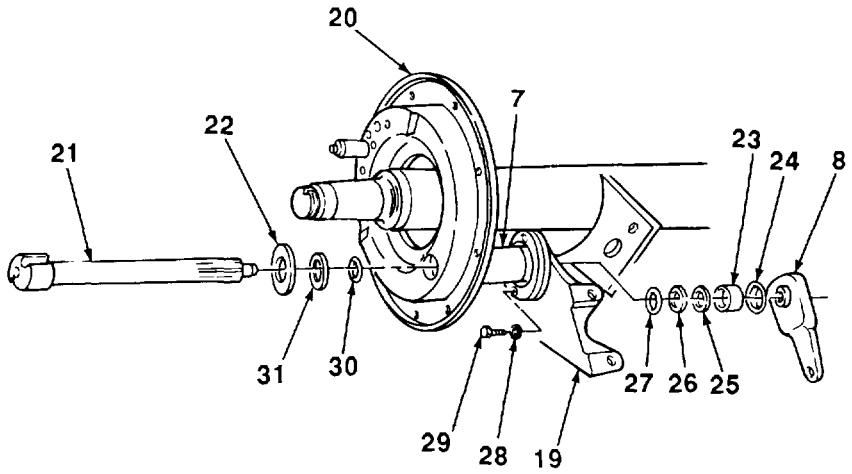

TA510688

4-19. SERVICE BRAKE ASSEMBLY REPLACEVMERT (M:I97 AND M198) (Con't.).

9. Install spacer (10) and flatwasher (11) on end of camshaft (21).

10. Install slack adjuster bracket (12) on bracket (9) welded to axle (6) using two bolts (18), flatwashers (17), new lockwashers (16), and nuts (15).

11. Install flatwasher (13) and new retaining ring (14) on end of camshaft (21) using retaining ring pliers.

12. Install two brake shoes (4).

13. Install anchor pin strap (3) on two pivot pins (5) using slotted washers (2).

14. Install two return springs (1) on brake shoes (4) using brakeshoe spring pliers.

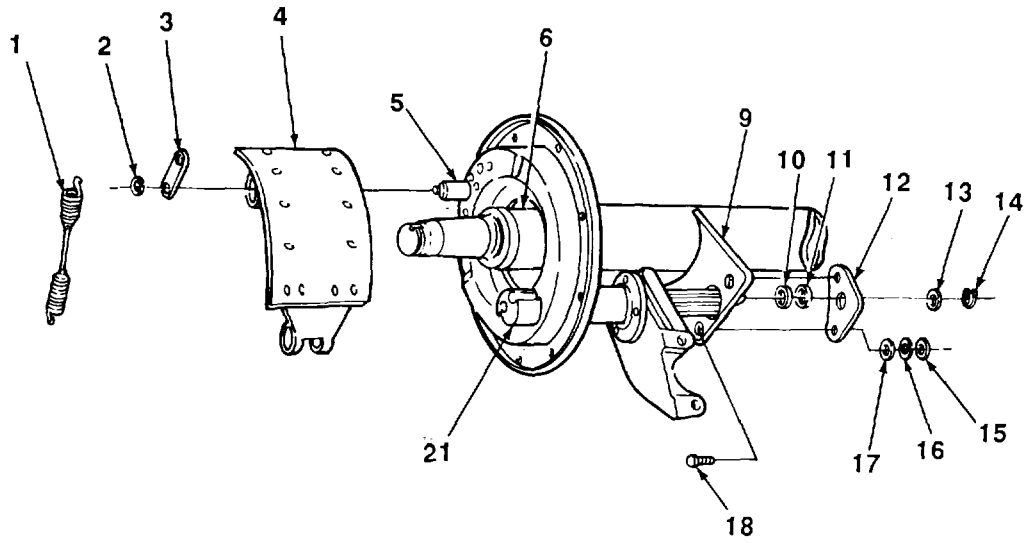

FOLLOW-ON TASKS:

- Install brake drum (para 4-37).
- If disconnected, connect slack adjuster to airbrake chamber clevis (para 4-32).
- Adjust brakes (para 4-18).

TA510689

4-20. SERVICE BRAKE ASSEMBLY REPLACEMENT (EARLY MODEL M197A1 AND M198A1).

This task covers:

a Removal
b Cleaning and Inspection
c Installation

Initial Setup:

Equipment Conditions:

- Brake drum removed (para 4-37)

Tools/Test Equipment:

- General mechanic's tool kit
- Brakeshoe spring pliers
- Retaining ring pliers
- Two C-clamps

Materials/Parts:

- Dry cleaning solvent (Item 5, Appendix E)
- Grease (Item 6, Appendix E)
- Rags (Item 12, Appendix E)
- Two retaining rings
- Two washers
- Ten locknuts

a. REMOVAL

WARNING

DO NOT handle brake shoes, brake drums, or other brake components unless area has been properly cleaned. There may be asbestos dust on these components which can be dangerous If you touch It or breathe It. Wear an approved filter mask and gloves. Never use compressed air or a dry brush to clean brake components. Dust may be removed using an Industrial-type vacuum cleaner. Clean dust or mud away from brake components with water and a wet, soft brush or cloth. Failure to follow this warning may result in serious Illness or death to personnel.

1. Remove two retracting springs (2) and two extension springs (5) using brakeshoe spring pliers.

2. Remove bolt (7) and washer (6) from each brakeshoe (1).

3. Install C-clamps over notched ends (3) of wheel cylinders (4) to retain wheel cylinder pistons.

4. Remove brake shoes (1).

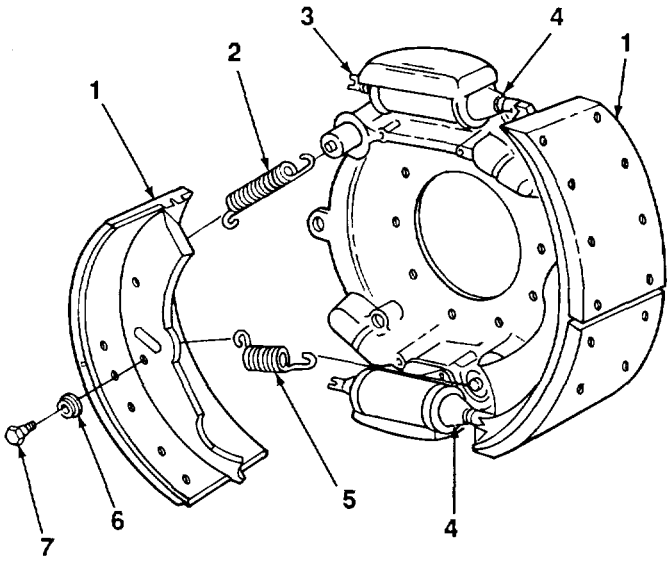

TA510690

4-20. SERVICE BRAKE ASSEMBLY REPLACEMENT (EARLY MODEL M197A1 AND M198A1) (Con't).

5. Remove two anchor pins (10) from spider (11).

6. Remove two adjusting screws (14) and gear (16) from spider (11).

7. Remove retaining ring (19), washer (20), sleeve (21), and worm gear (18) from two adjusting studs (17). Remove adjusting studs from spider (11). Discard washers and retaining rings.

8. Remove two wheel cylinders (8) and shields (9) (para 4-23).

9. Remove ten locknuts (13) and capscrews (22). Remove spider (11) and backing plate (12) from axle. Discard locknuts.

b. CLEANING AND INSPECTION

WARNING

- **DO NOT handle brake shoes, brake drums, or other brake components unless area has been properly cleaned. There may be asbestos dust on these components which can be dangerous if you touch it or breathe it. Wear an approved filter mask and gloves. Never use compressed air or a dry brush to clean brake components. Dust may be removed using an Industrial-type vacuum cleaner. Clean dust or mud away from brake components with water and a wet, soft brush or cloth. Failure to follow this warning may result In serious illness or death to personnel.**

- **Dry cleaning solvent, P-D-680, Is toxic and flammable. Always wear protective goggles and gloves, and use only In a well-ventilated area. Avoid contact with skin, eyes, and clothes, and DO NOT breathe vapors. DO NOT use near open flame or excessive heat. The solvent's flash point Is 100°F-138°F (38°C-59°C). If you become dizzy while using cleaning solvent, Immediately get fresh air and medical help. If solvent contacts eyes, Immediately wash your eyes and get medical aid.**

1. Clean all parts with dry cleaning solvent. Dry thoroughly.

2. Inspect all parts for damage. Replace any damaged parts.

3. Inspect brakeshoe surface for cracks, distortion, and excessive wear. Brakeshoe lining should have a minimum thickness of ; in. (3.2 mm). Replace brakeshoe assembly if cracked of if lining thickness is less than Y in. (3.2 mm).

4. Inspect brakeshoe lining rivets for looseness. Rivets should be at least .6 in. (1.6 mm) below surface of brakeshoe lining. If rivets are less than 16 in. (1.6 mm) below surface of brakeshoe lining, replace brakeshoe assembly.

5. Inspect worm gear and adjusting screw threads. File burrs from threads and chase defective threads on adjusting screw.

c. INSTALLATION

1. Install backing plate (12) and spider (11) on axle using ten capscrews (22) and new locknuts (13).

2. Install two wheel cylinders (8) and shields (9) (para 4-23).

3. Install two adjusting studs (17) in spider (11). Install worm gear (18), sleeve (21), and new washer (20) on each adjusting stud. Secure with new retaining ring (19).

4-20. SERVICE BRAKE ASSEMBLY REPLACEMENT (EARLY MODEL M197A1 AND M198A1) (Con't).

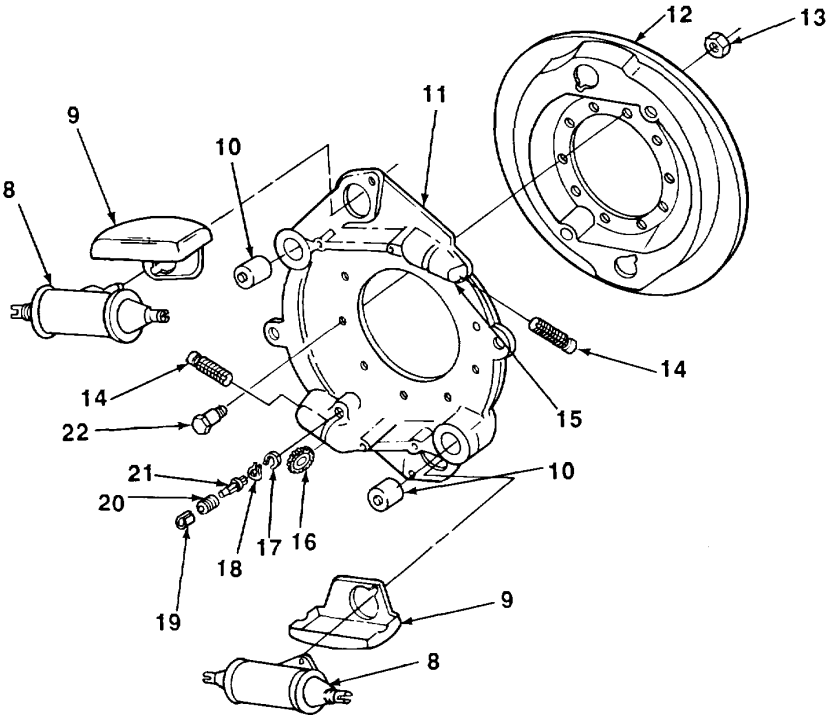

4. Install two adjusting screws (14) and gear (16) in spider (11). Exposed face of adjusting screw should be located 1/2 in. (3.8 cm) from rim of bore (15) to facilitate proper installation of brake shoes.

5. Install two anchor pins (10) in spider (11).

6. Install two brake shoes (1) on spider (11) using two bolts (7) and washers (6). Remove C-clamp from wheel cylinders (4). Ensure that notched ends (3) of brake shoes are properly engaged with wheelcylinder pushrods.

7. Install two retracting springs (2) and two extension springs (5) using brakeshoe spring pliers.

FOLLOW-ON TASKS:

- Install brake drum (para 4-37).
- Adjust brakes (para 4-18).

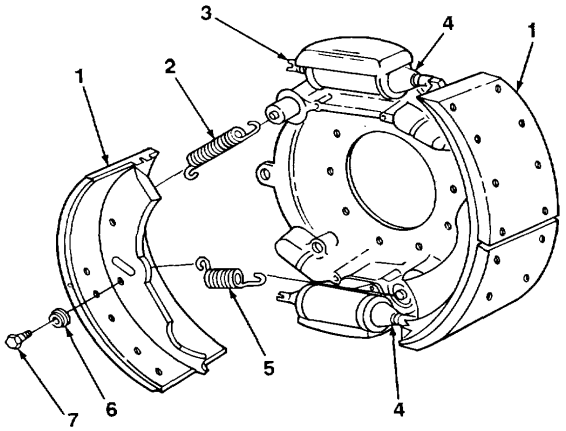

TA510691

4-21. SERVICE BRAKE ASSEMBLY REPLACEMENT (LATE MODEL M197A1 AND M1 98A1).

a Removal
b Cleaning and Inspection
c Installation

Initial Setup:

Equipment Conditions:

- Brake drum removed (para 4-37)

Tools/Test Equipment:

- General mechanic's tool kit
- Brakeshoe spring pliers
- C-clamp

Materials/Parts:

- Dry cleaning solvent (Item 5, Appendix E)
- Grease (Item 6, Appendix E)
- Rags (Item 12, Appendix E)
- Four cotter pins
- Four lockwashers
- Ten locknuts

a. REMOVAL

WARNING

DO NOT handle brake shoes, brake drums, or other brake components unless area has been properly cleaned. There may be asbestos dust on these components which can be dangerous if you touch It or breathe It. Wear an approved filter mask and gloves. Never use compressed air or a dry brush to clean brake components. Dust may be removed using an Industrial-type vacuum cleaner. Clean dust or mud away from brake components with water and a wet, soft brush or cloth. Failure to follow this warning may result In serious illness or death to personnel.

1. Remove extension spring (25) from headless pins (4) using brakeshoe spring pliers.

2. Remove retaining washer (1) and washer (2) from each pin (8).

3. Remove slotted washer (24) from each pivot pin (22). Remove anchor link (23).

4. Install C-clamp over ends of wheel cylinder (6).

5. Remove two brake shoes (5).

6. Remove two cotter pins (3) and headless pin (4) from each brakeshoe (5). Discard cotter pins.

7. Remove spring tension washer (9) from each shouldered pin (13). Do not remove adjusting cams (10), compression springs (11), and shouldered pin unless replacement is required.

8. Remove nut (18) and lockwasher (17) from each pivot pin (22). Remove pivot pins. Discard lockwashers.

9. Remove two screws (15) and lockwashers (14). Remove wheel cylinder (6) and shield (7) (para 4-23). Discard lockwashers.

10. Remove ten locknuts (16) and bolts (19) securing backing plate (12) to axle. Remove backing plate. Discard locknuts and bolts.

4-21. SERVICE BRAKE ASSEMBLY REPLACEMENT (LATE MODEL M197A1 AND M1 98A1) (Con't).

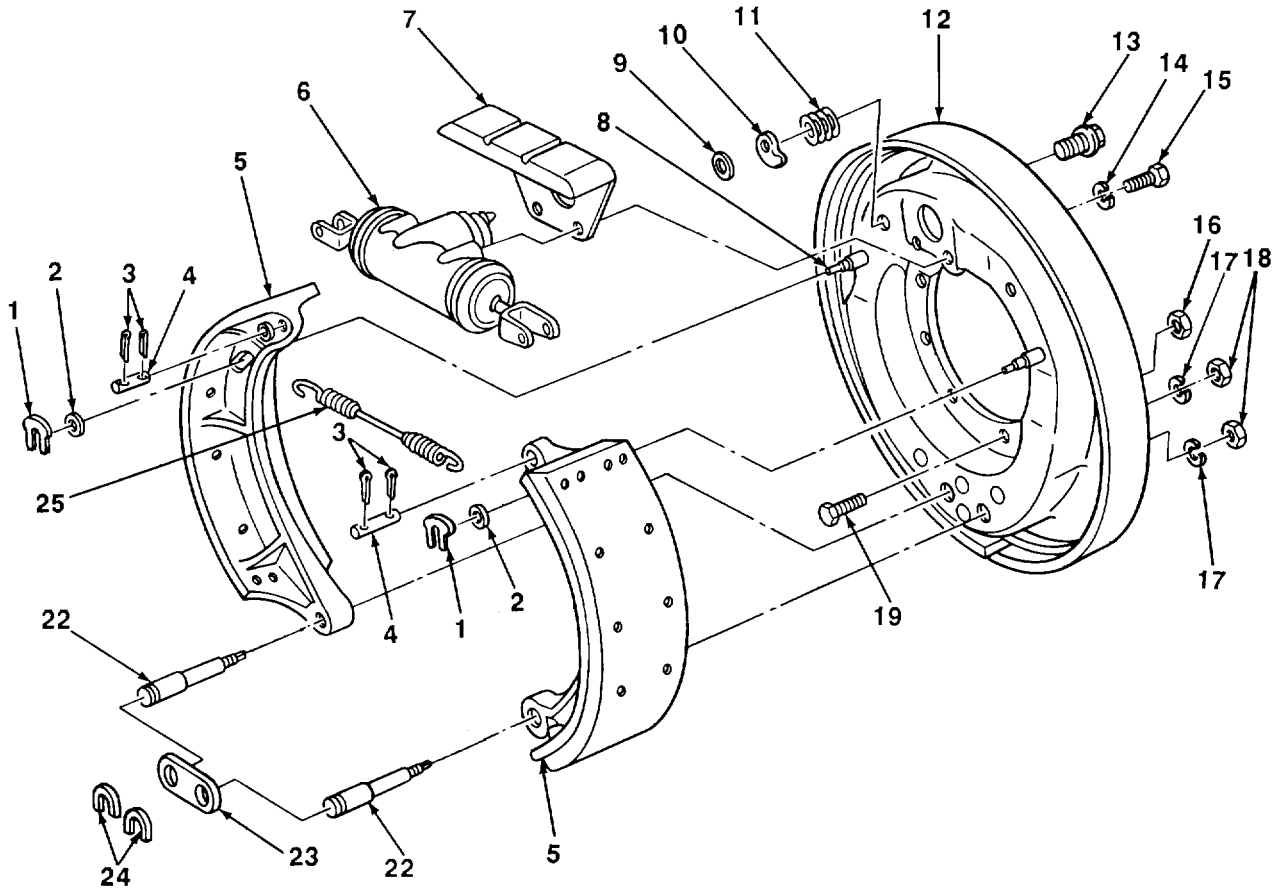

TA51 0692

4-21. SERVICE BRAKE ASSEMBLY REPLACEMENT (LATE MODEL M197A1 AND M198A1) (Con't).

b. CLEANING AND INSPECTION

WARNING

- **DO NOT handle brake shoes, brake drums, or other brake components unless area has been properly cleaned. There may be asbestos dust on these components which can be dangerous If you touch it or breathe it. Wear an approved filter mask and gloves. Never use compressed air or a dry brush to clean brake components. Dust may be removed using an industrial-type vacuum cleaner. Clean dust or mud away from brake components with water and a wet, soft brush or cloth. Failure to follow this warning may result In serious Illness or death to personnel.**
- **Dry cleaning solvent, P-D-680, Is toxic and flammable. Always wear protective goggles and gloves, and use only In a well-ventilated area. Avoid contact with skin, eyes, and clothes, and DO NOT breathe vapors. DO NOT use near open flame or excessive heat. The solvent's flash point Is 1000F-138°F (380C-590C). If you become dizzy while using cleaning solvent, Immediately get fresh air and medical help. If solvent contacts eyes, Immediately wash your eyes and get medical aid.**

1. Clean all parts with dry cleaning solvent. Dry thoroughly.

2. Inspect all parts for damage. Replace any damaged parts.

3. Inspect brake shoes for cracks, distortion, and excessive wear. Brakeshoe lining should have a minimum thickness of X in. (3.2 mm). Replace brakeshoe assembly if cracked or if brakeshoe lining thickness is less than X in. (3.2 mm).

4. Inspect brakeshoe lining rivets (20) for looseness. Rivets should be at least 16 in. (1.6 mm) below surface of brakeshoe lining. If rivets are less than *16* in. (1.6 mm) below surface of brakeshoe lining, replace brakeshoe assembly.

5. Inspect sleeve bushing (21) in each brakeshoe for damage or wear. If damaged or worn, drive out and replace.

c. INSTALLATION

1. Install backing plate (12) on axle using ten new bolts (19) and new locknuts (16).

2. Install wheel cylinder (6) and shield (7) using two screws (15) and new lockwashers (14) (para 4-23).

3. If removed, install two shouldered pins (13) through backing plate (12). Install compression spring (11) and adjusting cam (10) on each shouldered pin. Peen end of shouldered pin to hold cam and compression spring in place.

4. Install spring tension washer (9) on each shouldered pin (13).

5. Install headless pin (4) in each brakeshoe (5) using two new cotter pins (3).

6. Install two brake shoes (5). -

7. Install each pivot pin (22) using new lockwasher (17) and nut (18).

8. Install anchor link (23) over pivot pins (22) and secure with two slotted washers (24).

4-21. SERVICE BRAKE ASSEMBLY REPLACEMENT (LATE MODEL M197A1 AND M198A1) (Con't).

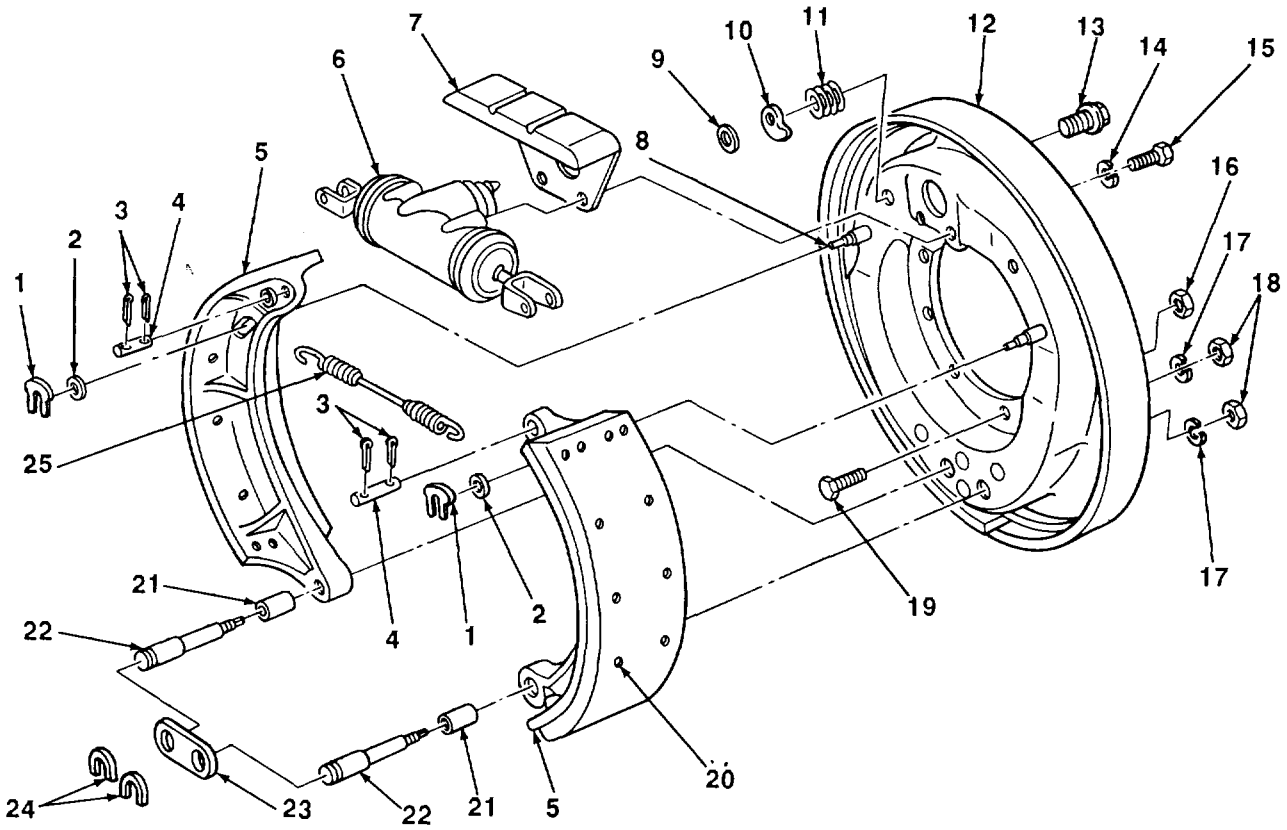

9. Install washer (2) and retaining washer (1) on each pin (8).

10. Install extension spring (25) on headless pins (4) using brakeshoe spring pliers. Remove C-clamp from wheel cylinder (6).

FOLLOW-ON TASKS:

- Install brake drum (para 4-37).
- Adjust brakes (para 4-18).

TA510693

4-22. MASTER CYLINDER REPLACEMENT (M197A1 AND M198A1).

This task covers:

a Removal
b Inspection
c Installation

Initial Setup:

Equipment Conditions:
- Pressure released from service brake system para 1-7)

Tools/Test Equipment:
- General mechanic's tool kit
- Drain pan

Materials/Parts:
- Rags (Item 12, Appendix E)
- One washer
- One gasket
- Three lockwashers

a. REMOVAL

NOTE
Use a drain pan to catch any draining brake fluid. Clean up all spills.

1. Place a suitable container under master cylinder (1).

2. Disconnect hose assembly (7) from multiple connector (10).

3. Remove three nuts (12), lockwashers (13), and master cylinder (1) from mounting bracket. Discard lockwashers.

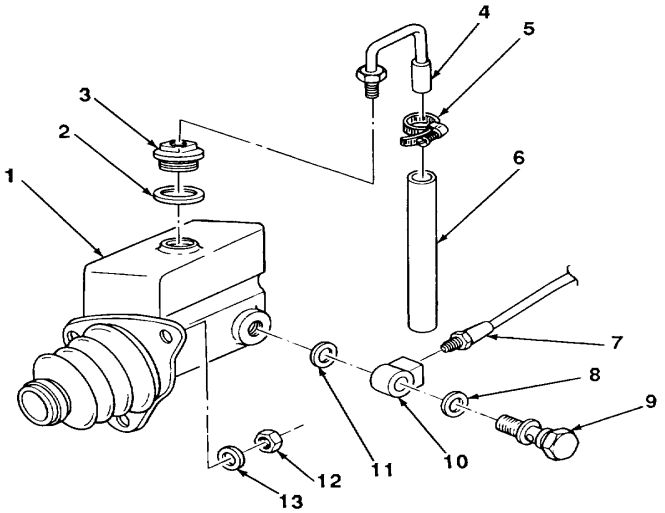

TA510694

4-22. MASTER CYLINDER REPLACEMENT (M197A1 AND M198A1) (Con't).

4. Loosen clamp (5). Remove hose (6) and clamp from tube assembly (4).

5. Remove tube assembly (4), filler cap (3), and spacer (2) from master cylinder (1).

6. Remove fluid passage bolt (9), washer (8), multiple connector (10), and gasket (11) from master cylinder (1). Discard gasket and washer.

b. INSPECTION

1. Check all parts for cracks, breaks, corrosion, or other damage.

2. Replace all damaged parts.

c. INSTALLATION

1. Install new gasket (11), multiple connector (10), new washer (8), and fluid passage bolt (9) in master cylinder (1).

2. Install spacer (2) and filler cap (3) on master cylinder (1).

3. Install tube assembly (4) in filler cap (3). Install clamp (5) and hose (6) on tube assembly.

4. Install master cylinder (1) on mounting bracket using three new lockwashers (13) and nuts (12). Ensure that airbrake chamber push rod is properly seated in master cylinder.

5. Connect hose assembly (7) to multiple connector (10).

6. Close pressure tank draincock (para 1-7).

FOLLOW-ON TASKS:

- Bleed brakes (para 4-24).

4-23. WHEEL CYLINDER REPLACEMENT (M197A1 AND M198A1).

This task covers:

a Removal
b Inspection
c Installation

Initial Setup:

Equipment Conditions:
- Brakedrum removed (para 4-37)

Tools/Test Equipment:
- General mechanic's tool kit
- Brakeshoe spring pliers
- Drain pan

Materials/Parts:
- Dry cleaning solvent (item 5, Appendix E)
- Rags (Item 12, Appendix E)
- One gasket
- Three lockwashers

a. REMOVAL

WARNING

DO NOT handle brake shoes, brake drums, or other brake components unless area has been properly cleaned. There may be asbestos dust on these components which can be dangerous if you touch it or breathe it. Wear an approved filter mask and gloves. Never use compressed air or a dry brush to clean brake components. Dust may be removed using an Industrial-type vacuum cleaner. Clean dust or mud away from brake components with water and a wet, soft brush or cloth. Failure to follow this warning may result In serious Illness or death to personnel.

NOTE
Use a drain pan to catch any draining brake fluid. Clean up all spills.

1. Early Model:

(a) Remove two extension springs (18) and two return springs (19) using brakeshoe spring pliers.

(b) Place a suitable container under tube assembly (4) at back of wheel cylinder (21). Unscrew tube assembly and allow brake fluid to drain into container.

(c) Remove fluid passage bolt (8), spacer (7), tube tee (6), and shouldered washer (5) from wheel cylinder (1).

(d) Remove two capscrews (10) and lockwashers (11) from wheel cylinder (1). Slide brake shoes (3) away from wheel cylinder and remove wheel cylinder and shield (2) from backing plate (9). Discard lockwashers.

(e) Remove fluid passage bolt (14), spacer (13), tube tee (12), and shouldered washer (17) from wheel cylinder (21).

(f) Remove two capscrews (15) and lockwashers (16) from wheel cylinder (21). Slide brake shoes (3) away from wheel cylinder and remove wheel cylinder and shield (20) from backing plate (9). Discard lockwashers.

4-23. WHEEL CYLINDER REPLACEMENT (M197A1 AND M198A1) (Con't).

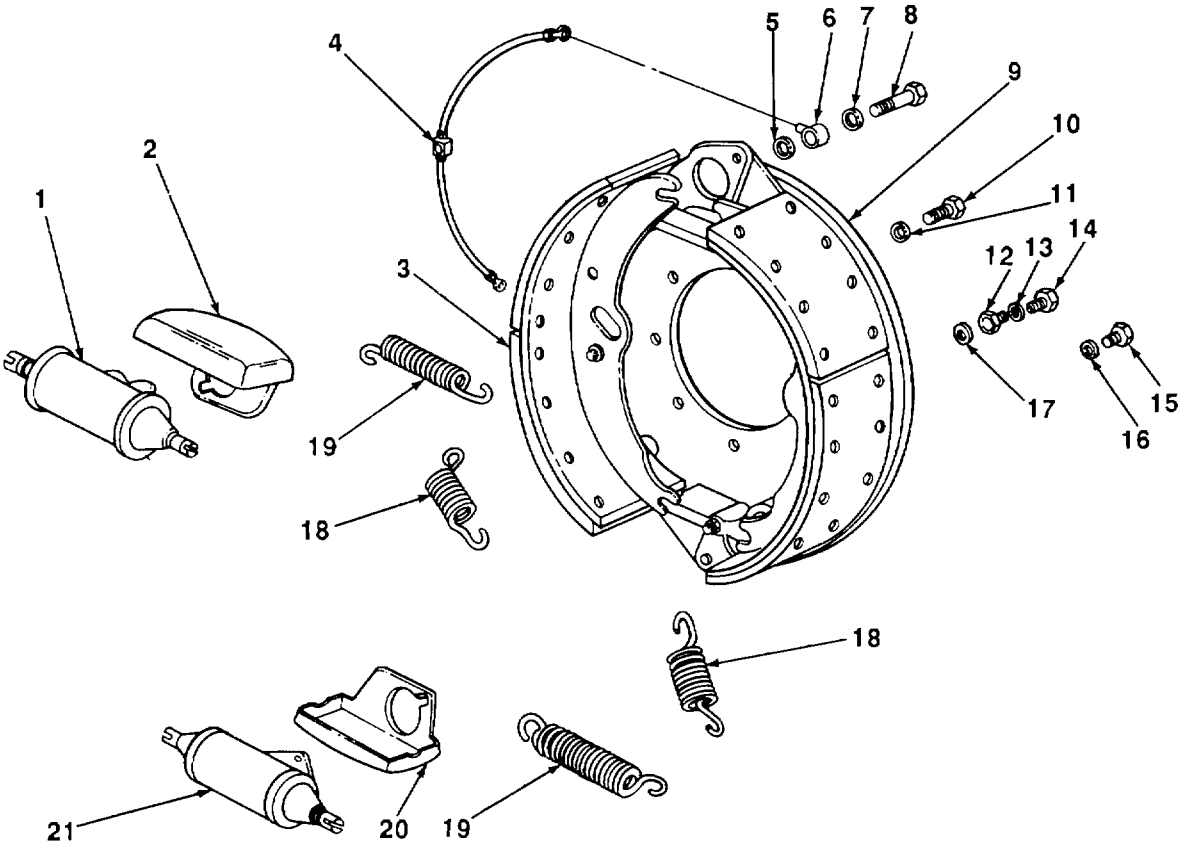

(g) Remove tube tees (6 and 12) from tube assembly (4).

(h) Remove bleeder valve (22) from each wheel cylinder (1 and 21).

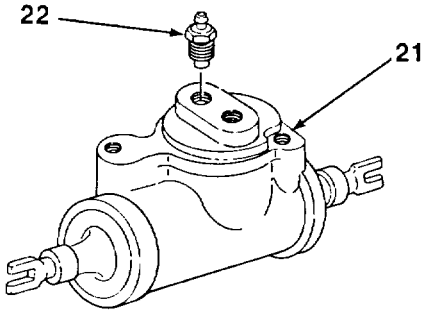

TA510695

4-23. WHEEL CYLINDER REPLACEMENT (M197A1 AND M198A1) (Con't).

2. Late Model:

(a) Remove return spring (23) using brakeshoe spring pliers.

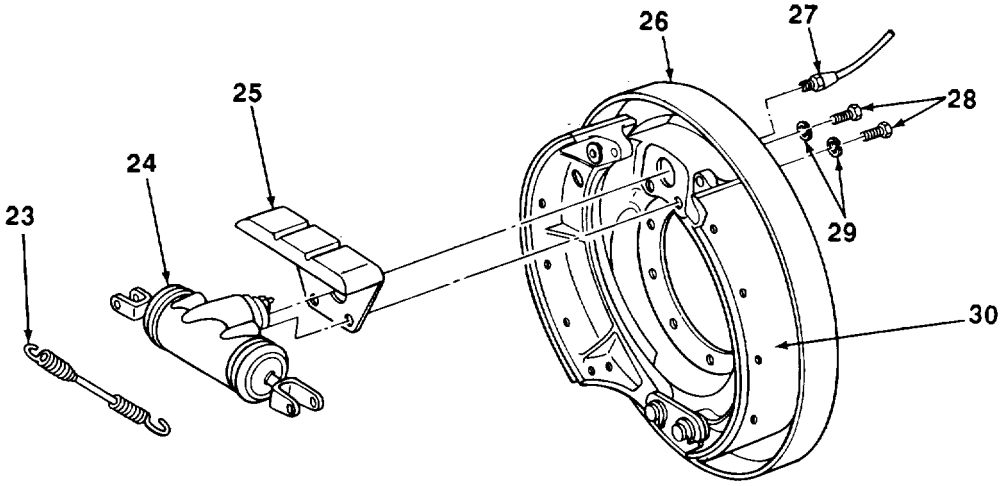

(b) Disconnect tube assembly (27) from wheel cylinder (24).

(c) Remove two capscrews (28) and lockwashers (29) securing wheel cylinder (24) o backing plate (26). Slide brake shoes (30) away from wheel cylinder and remove wheel cylinder and shield (25). Discard lockwashers.

(d) Remove bleeder valve (22) from wheel cylinder (24).

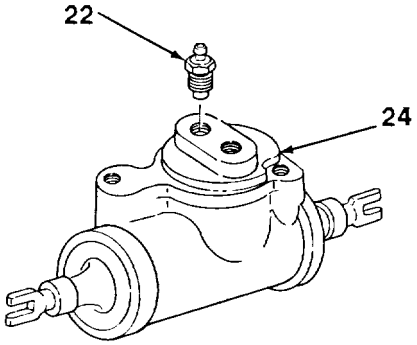

b. CLEANING AND INSPECTION

WARNING

Dry cleaning solvent, P-D-680, is toxic and flammable. Always wear protective goggles and gloves, and use only in a well-ventilated area. Avoid contact with skin, eyes, and clothes, and DO NOT breathe vapors. DO NOT use near open flame or excessive heat. The solvent's flash point is 100°F-138°F (38°C-590C). If you become dizzy while using cleaning solvent, Immediately get fresh air and medical help. If solvent contacts eyes, Immediately wash your eyes and get medical aid.

1. Clean all parts with dry cleaning solvent. Dry thoroughly.

TA510696

4-23. WHEEL CYLINDER REPLACEMENT (M197A1 AND M198A1) (Con't).

2. Inspect all parts for cracks, breaks, corrosion, or other damage. Replace all damaged parts.

c. INSTALLATION

1. Late Model:

   (a) Install bleeder valve (22) in wheel cylinder (24).
   (b) Separate brake shoes (30) and install wheel cylinder (24) and shield (25) on backing plate (26) using two capscrews (28) and new lockwashers (29).
   (c) Connect tube assembly (27) to wheel cylinder (24).
   (d) Install return spring (23) using brakeshoe spring pliers.

2. Early Model:
   (a) Install bleeder valve (22) in wheel cylinders (1 and 21).
   (b) Connect tube assembly (4) to tube tee (6).
   (c) Separate brake shoes (3) and install wheel cylinder (21) and shield (20) on backing plate (9) using two capscrews (15) and new lockwashers (16).

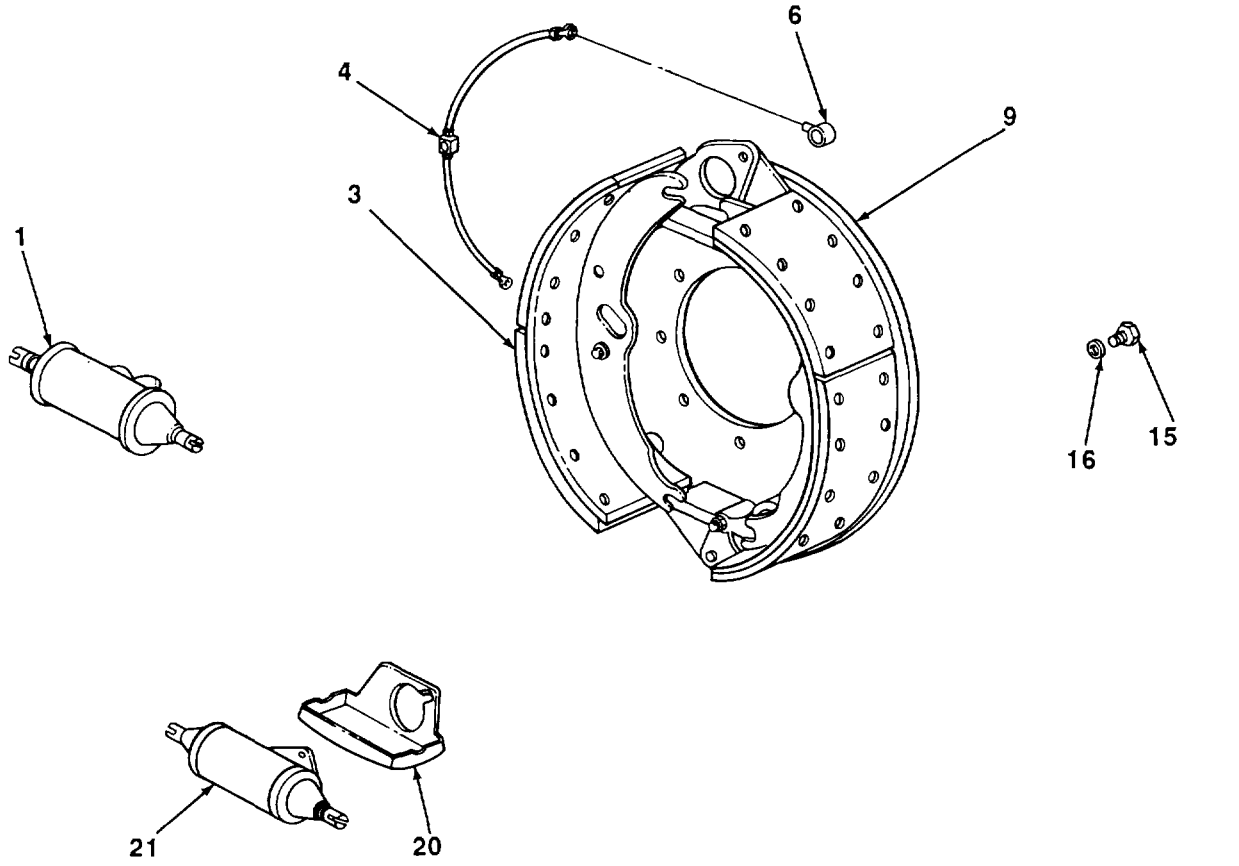

TA510697

4-23. WHEEL CYLINDER REPLACEMENT (M197A1 AND M198A1) (Con't).

(d) Separate brake shoes (3) and install wheel cylinder (1) and shield (2) on backing plate (9) using two capscrews (10) and new lockwashers (11).

(e) Install shouldered washer (17), tube tee (12), spacer (13), and fluid passage bolt (14) in wheel cylinder (21).

(f) Install shouldered washer (5), tube tee (6), spacer (7), and fluid passage bolt (8) in wheel cylinder (1).

(g) Connect tube assembly (4) to tube tee (12) at wheel cylinder (21).

(h) Install two extension springs (18) and two return springs (19) using brakeshoe spring pliers.

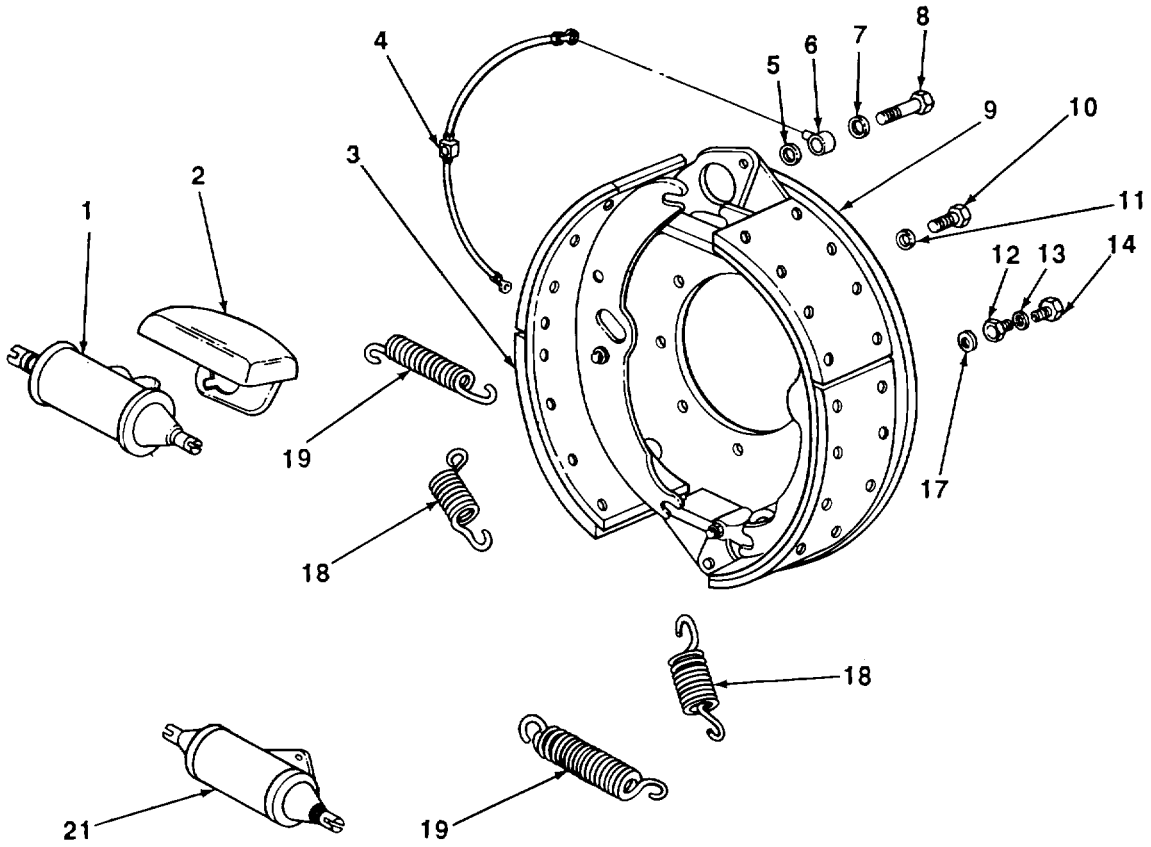

FOLLOW-ON TASKS:

- Install brake drum (para 4-37).
- Close pressure tank draincock (para 1-7).
- Bleed brakes (para 4-24).

TA510698

4-24. BLEEDING HYDRAULIC BRAKE SYSTEM (M197A1 AND M198A1).

This task covers:

a Manual Bleeding c Pressure Bleeding

Initial Setup:

Equipment Conditions:
- Dolly coupled towing vehicle (manual bleeding) (para 2-20)

Tools/Test Equipment:
- General mechanic's tool kit
- Bleeder tube
- Pressure bleeder

Materials/Parts:
- Brake fluid (Item 3, Appendix E)
- Dry cleaning solvent (item 5, appendix E)
- Rags (item 12, Appendix E)
- Plastic tube

a. MANUAL BLEEDING

WARNING

Dry cleaning solvent, P-D-680, Is toxic and flammable. Always wear protective goggles and gloves, and use only in a well-ventilated area. Avoid contact with skin, eyes, and clothes, and DO NOT breathe vapors. DO NOT use near open flame or excessive heat. The solvent's flash point is 100°F-138°F (38°C-590C). If you become dizzy while using cleaning solvent, Immediately get fresh air and medical help. If solvent contacts eyes, Immediately wash your eyes and get medical aid.

NOTE

- Plastic tube should be approximately 18 in. (46 cm) long.
- Use a clean, clear Jar or bottle to hold brake fluid.

1. Clean bleeder valve (1) with dry cleaning solvent and rags.
2. Attach plastic tube (3) to bleeder valve (1).
3. Submerge free end of plastic tube (3) in jar (2) containing approximately 3 in. (7.6 cm) of clean brake fluid.

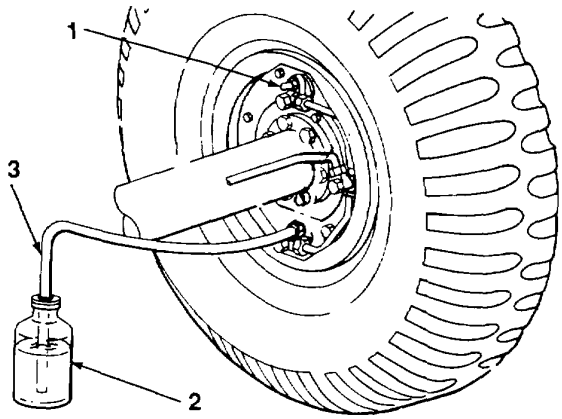

TA510699

4-24. BLEEDING HYDRAULIC BRAKE SYSTEM (M197A1 AND M198A1) (Con't).

NOTE

Master cylinder must be kept full during bleeding to prevent air from entering hydraulic system.

4. Remove filler cap (5) and vent tube assembly (4) from master cylinder (6). Fill master cylinder with brake fluid to within X in. (13 mm) of top of filler Cap opening.
5. Open breeder valve (1) by turning counterclockwise) turn.
6. Have assistant press and hold brake pedal on towing vehicle. Fluid will be forced through plastic tube (3) to expel air in jar (2), which will show as bubbles in fluid coming out of plastic tube. Continue to hold brake pedal until air bubbles do not appear. Ensure that plastic tube remains submerged in brake fluid.
7. When air bubbles cease, close bleeder valve (1). Remove plastic tube (3).
8. Repeat steps 1 through 7 for other wheel cylinder (early model only).
9. Repeat steps 1 through 8 for other wheel.
10. Replenish brake fluid in master cylinder (6) then install vent tube assembly (4) and filler cap (5).

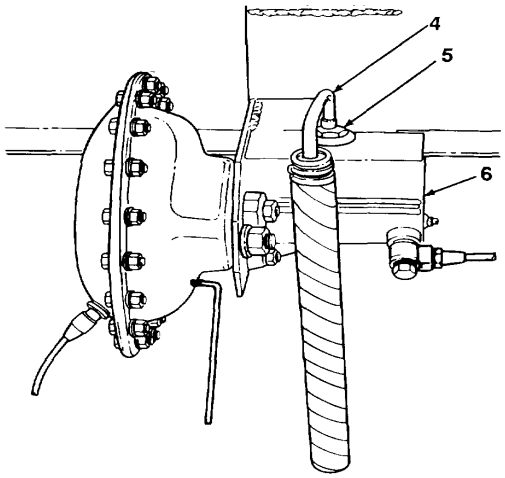

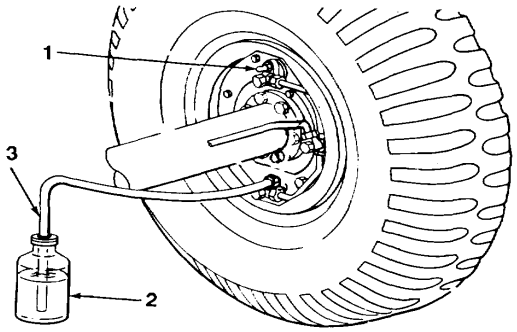

TA510700

4-24. BLEEDING HYDRAULIC BRAKE SYSTEM (M197A1 AND M198A1) (Con't).

b. PRESSURE BLEEDING

1. Remove filler cap (5) and vent tube assembly (4) from master cylinder (6). Install proper size pressure feed adapter. Connect pressure feed filler hose to pressure feed adapter. Filler should contain between 10 and 20 psi (69 and 138 kPa) air pressure and sufficient fluid to maintain constant fluid level in master cylinder. 2 Bleed the system as in manual bleeding above. Manual operation of brake pedal and replenishment of brake fluid are not required.

3 . Remove pressure feed filler hose and pressure feed adapter from master cylinder (6).

4.Install filler cap (5) and vent tube assembly (4) in master cylinder (6).

FOLLOW-ON TASKS:

Uncouple dolly from towing vehicle (manual bleeding) (para 2-14).
Service master cylinder (Chapter 3, Section I).

4-25. HYDRAULIC LINES, FITTINGS, AND HOSES REPLACEMENT (M197A1 AND M198A1).

This Task Covers:

a. Hose Assembly Removal
b. Tube Assembly Removal
c. Tee Removal
d. Tee Installation
e. Tube Assembly Installation
f. Hose Assembly Installation

Initial Setup:

Equipment Conditions

* Air pressure drained from pressure tank (para 1-7).

Materials/Parts:

One gasket
One lockwasher

Tools/Test Equipment:

· General mechanic's tool kit
· Drain pan

NOTE
Use a drain pan to catch any draining brake fluid. Clean up all spills.

a. HOSE ASSEMBLY REMOVAL

1. Place a suitable container under master cylinder (1).

2. Disconnect hose assembly (4) from multiple connector (3).

3. Remove fluid passage bolt (6), washer (5), multiple connector (3), and gasket (2) from master cylinder (1). Discard gasket.

4. Disconnect hose assembly (4) from tee (12) on axle (8) and remove.

b. TUBE ASSEMBLY REMOVAL

1. Place a suitable container under wheel cylinder.

2. Disconnect tube assembly (9 or 13) from tube tee at wheel cylinder.

3. Disconnect tube assembly (9 or 13) from tee (12) on axle (8).

4. Remove tube assembly (13) from clip on axle (8). Remove tube assembly.

c. TEE REMOVAL

1. Place a suitable container under tee (12).

2. Disconnect hose assembly (4) from tee (12).

3. Disconnect two tube assemblies (9 and 13) from tee (12).

4. Remove nut (10), lockwasher (11), and tee (12) from axle stud (7). Discard lockwasher.

5. Remove axle stud (7) if replacement is required.

4-25. HYDRAULIC LINES, FITTINGS, AND HOSES REPLACEMENT (M197A1 AND M198A1) (Con't).

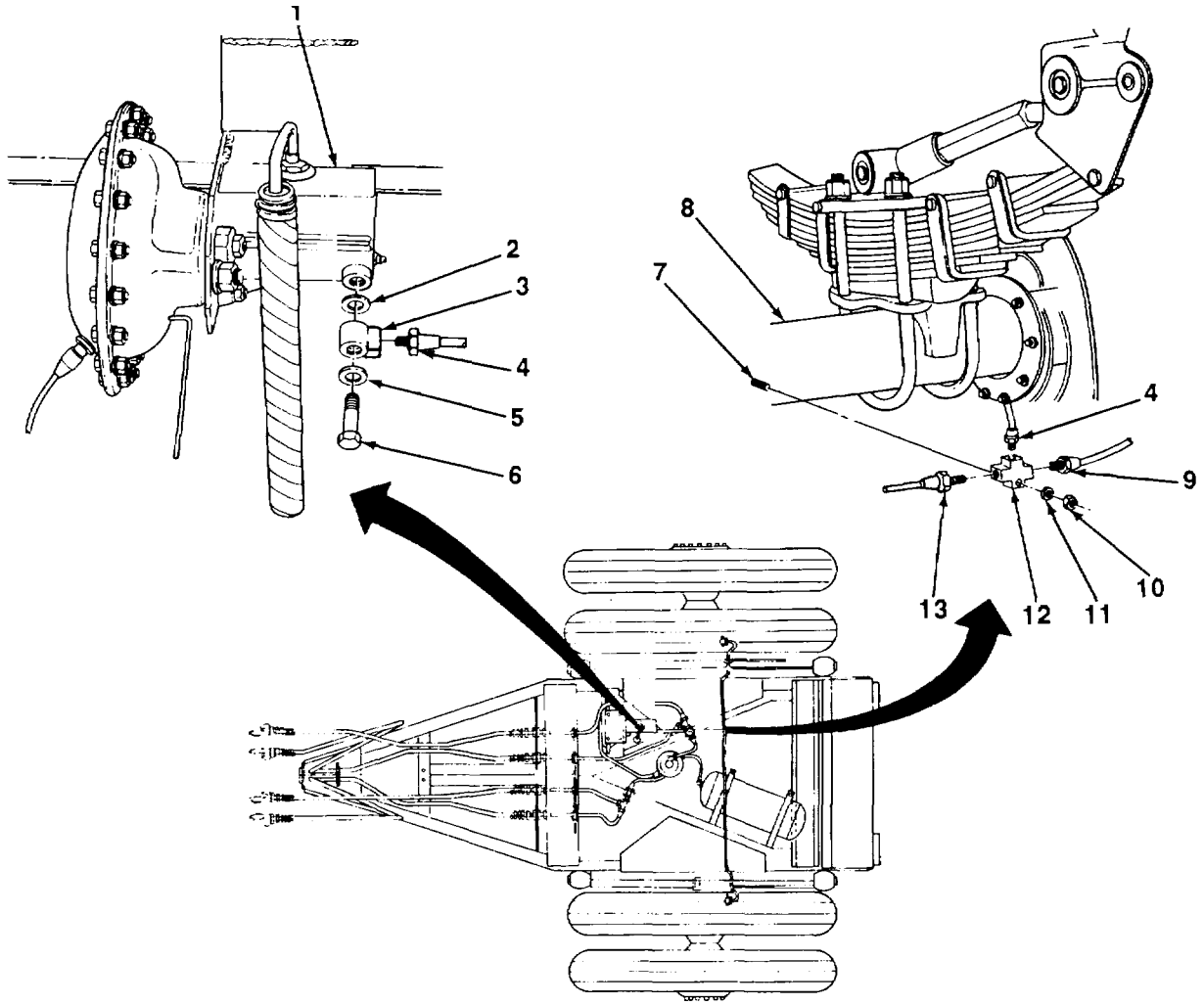

d. TEE INSTALLATION

1. Install axle stud (7) if removed.

2. Install tee (12) on axle stud (7) using new lockwasher (11) and nut (10).

3. Connect two tube assemblies (9 and 13) to tee (12).

4. Connect hose assembly (4) to tee (12).

e. TUBE ASSEMBLY INSTALLATION

1. Connect tube assembly (9 or 13) to tee (12) on axle (8).

2. Secure tube assembly (13) to axle (8) with clip.
TA510701

3. Connect tube assembly (9 or 13) to tube tee at wheel cylinder.

4-25. HYDRAULIC LINES, FITTINGS, AND HOSES REPLACEMENT (M197A1 AND M198A1) (Con't).

f. HOSE ASSEMBLY INSTALLATION

1. Connect hose assembly (4) to tee (12) on axle (8).

2. Install new gasket (2), multiple connector (3), washer (5), and fluid passage bolt (6) in master cylinder (1).

3. Connect hose assembly (4) to multiple connector (3).

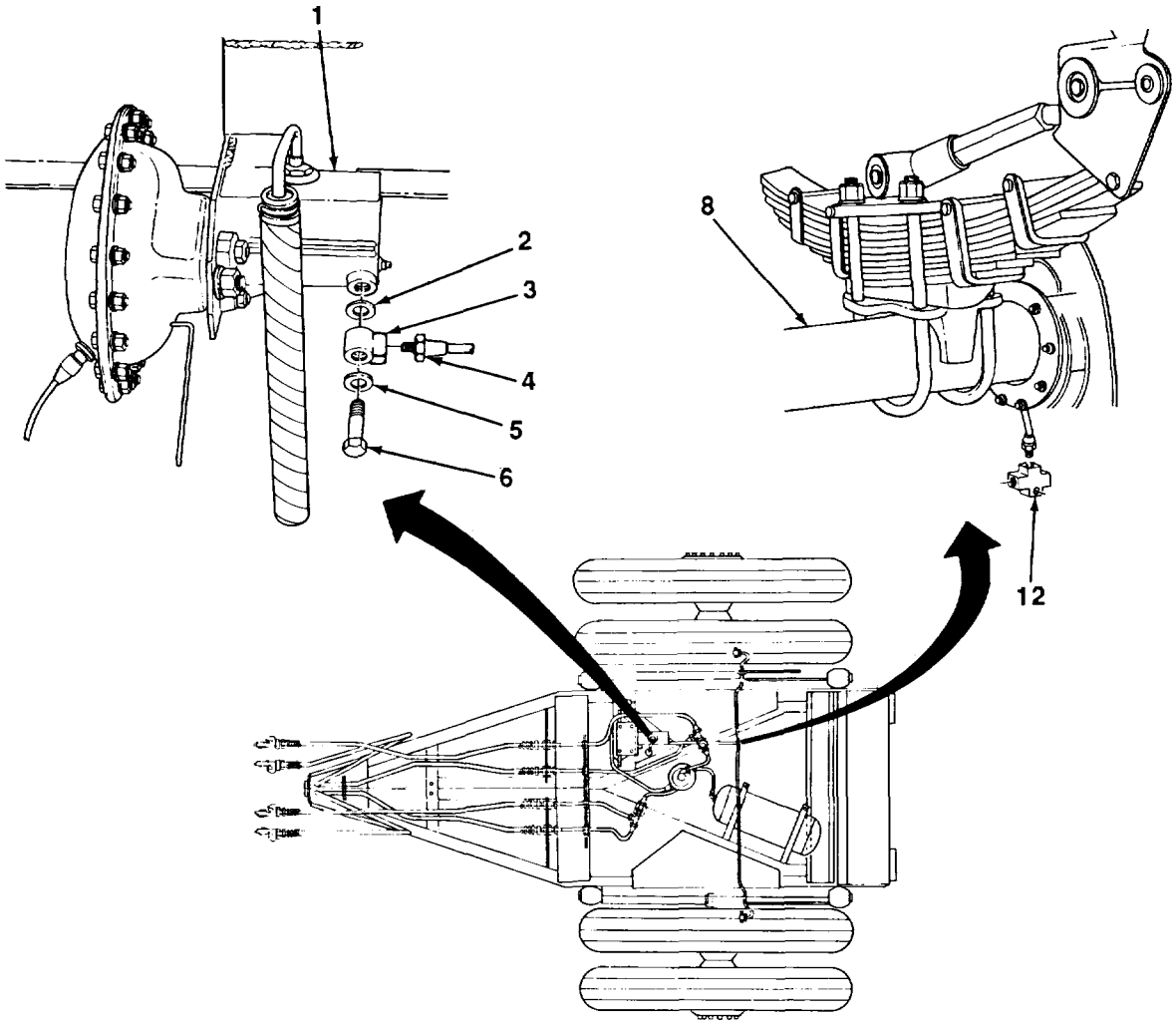

FOLLOW-ON TASKS:

· Close pressure tank draincock (para 1-7).
· Bleed brakes (para 4-24).

TA510702

4-26. INTERVEHICULAR AIR HOSE AND AIR COUPLING MAINTENANCE.

This Task Covers:

a. Removal
b. Disassembly
C. Assembly
d. Installation

Initial Setup:

Equipment Conditions

Intervehicular air hoses disconnected from towing vehicle (para 2-14).
·Pressure released from service brake system (para 1-7).

Materials/Parts:

Antiseizing tape (Item 15, Appendix E)
One preformed packing
Two locknuts
Two sleeves

Tools/Test Equipment:

General mechanic's tool kit

a. REMOVAL

1. Lift up on hook (2) and remove intervehicular air hose (1) from under hook.

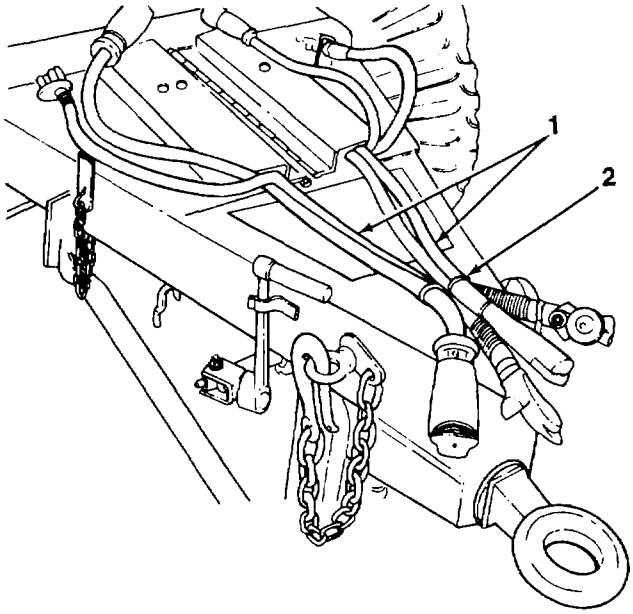

TA510703

4-26. INTERVEHICULAR AIR HOSE AND AIR COUPLING MAINTENANCE (Con't).

2. Open stowage compartment cover (5).

3. Remove two locknuts (3) and screws (6) and remove clamp (4). Discard locknuts.

4. Disconnect intervehicular air hose (1) from connector (M197 and M198) (7) or terminal bolt (M197A1 and M198A1) m (7)and remove from dolly.

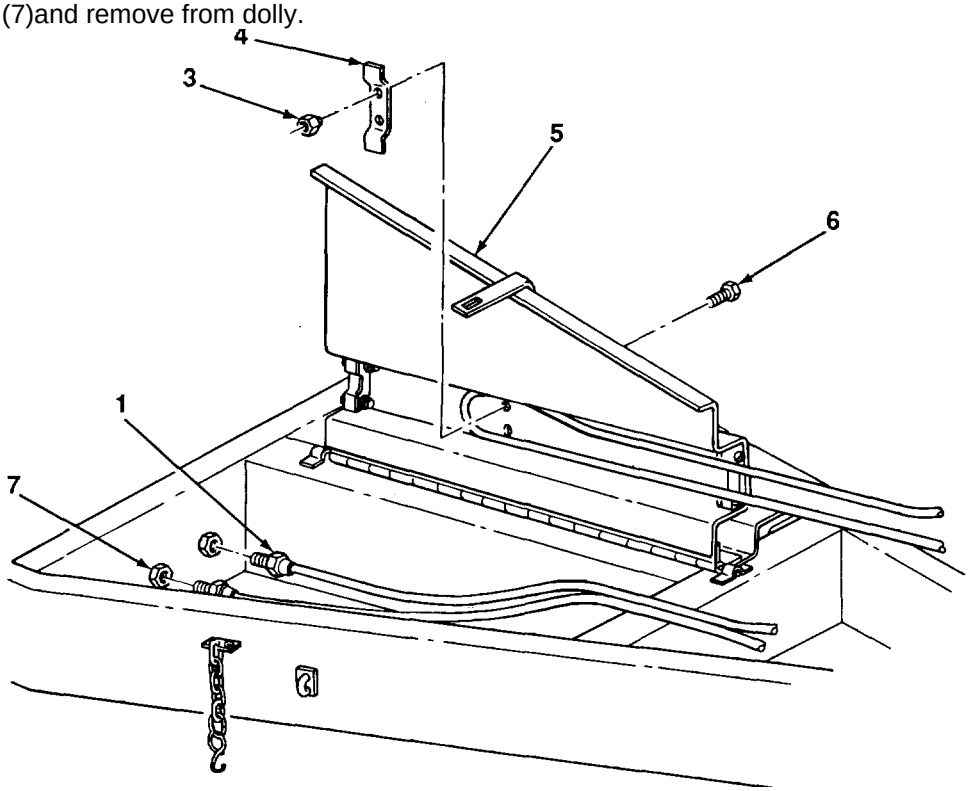

b. DISASSEMBLY

1. Remove air coupling (8) from adapter body (14).

2. Remove preformed packing (9) from air coupling (8). Discard preformed packing.

3. Remove plug (10), spring (11), pin (13), and plunger (12) from air coupling (8).

4. Remove adapter body (19) from compression nut (17).

5. Pull adapter body (19), sleeve (18), compression nut (17), and spring (16) off hose (15). Discard sleeve.

6. Repeat steps 4 and 5 for adapter body (14) on other end of hose (15).

c. ASSEMBLY

NOTE
Apply antiseizing tape to all male threads.

1. Assembly spring (16) on rear of compression nut (17).

2. Install spring (16) and compression nut (17) on hose (15).

4-26. INTERVEHICULAR AIR HOSE AND AIR COUPLING MAINTENANCE (Con't).

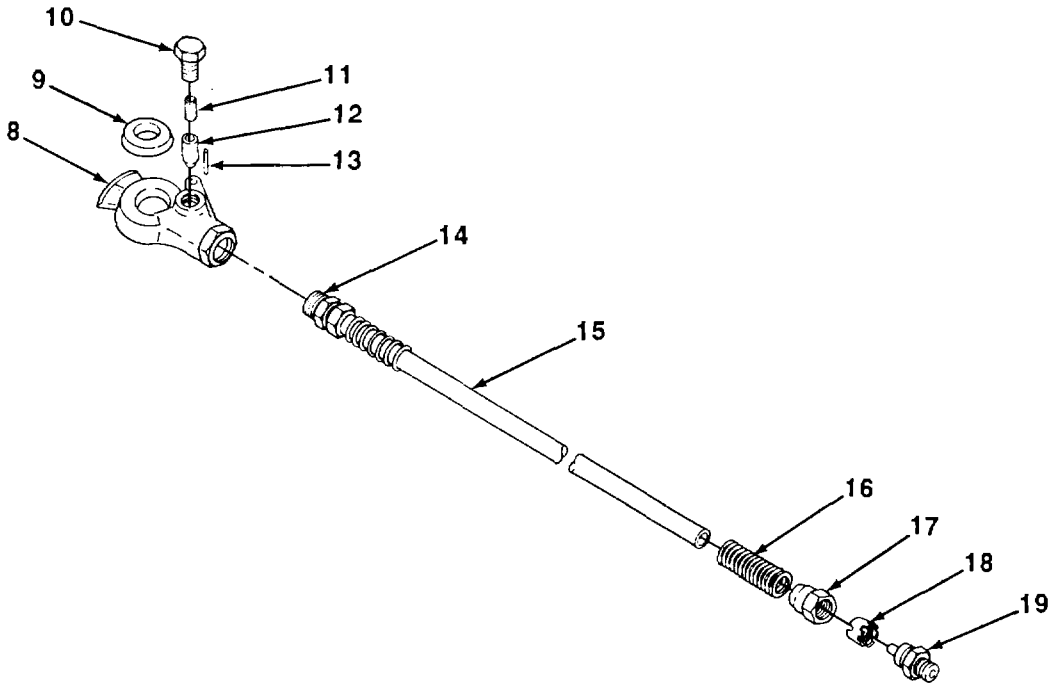

3. Position new sleeve (18) on hose (15) about X in. (13 mm) from end of hose with beveled surface facing out.

4. Insert hose (15) in adapter body (19). Ensure that hose is seated in bottom of recess in adapter body.

5. Slide sleeve (18) until it is seated against edge of adapter body (19). Tighten adapter body sufficiently to ensure an airtight joint.

6. Repeat steps 1 through 5 for adapter body (14) on other end of hose (15).

7. Install plunger (12), pin (13), spring (11), and plug (10) in air coupling (8).

8. Partially collapse new preformed packing (9) and insert one side of flange into groove in air coupling (8). Use a blunt nose screwdriver or similar tool to seat preformed packing. Ensure that exposed face of preformed packing Is flat and not twisted or bulged at any point.

9. Install air coupling (8) to adapter body (14).

TA510705

4-26. INTERVEHICULAR AIR HOSE AND AIR COUPLING MAINTENANCE (Con't).

d. INSTALLATION

NOTE
Apply antiseizing tape to all male threads.

1. Connect intervehicular air hose (1) to connector (M197 or M198) (7) or terminal bolt (M197A1 and M198A1) (7).
2. Install clamp (4) with two screws (6) and new locknuts (3).
3. Close stowage compartment cover (5).

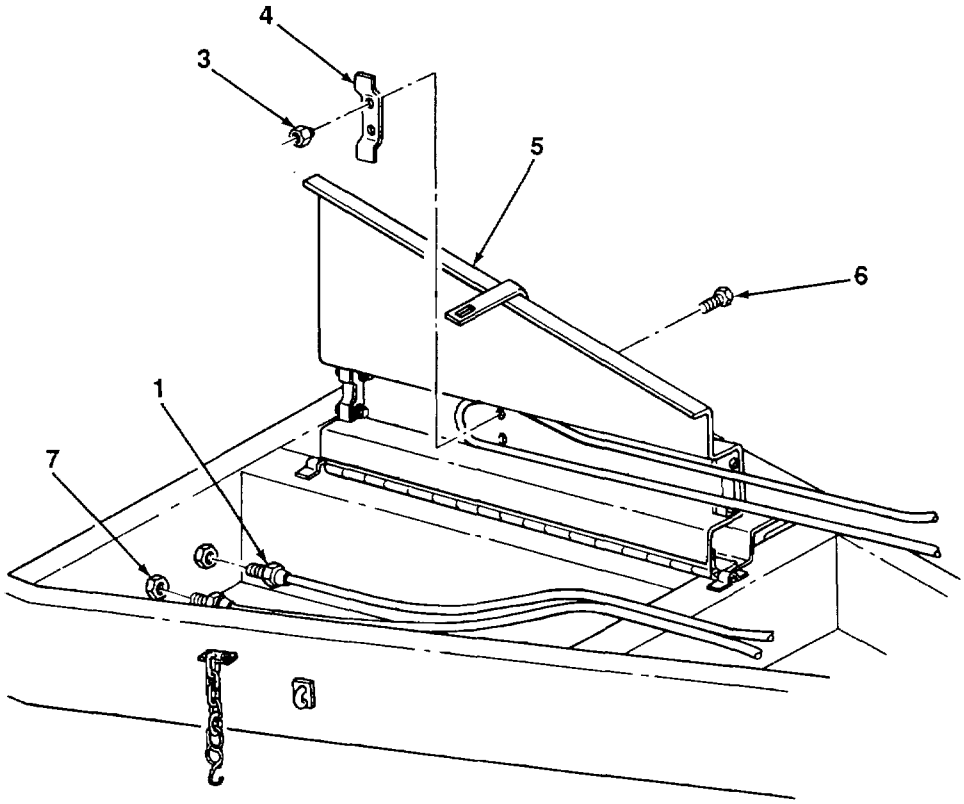

TA510706

4-26. INTERVEHICULAR AIR HOSE AND AIR COUPLING MAINTENANCE (Con't).

4. Lift hook (2) and place intervehicular air hose (1) under hook. Release hook.

FOLLOW-ON TASKS:

Connect intervehicular air hoses to towing vehicle (para 2-10).
Perform air leakage test (para 4-31).

4-27. AIR FILTER MAINTENANCE (M197A1 AND M198A1).

This Task Covers:

a. Service
b. Removal
c. Disassembly
d. Cleaning and Inspection
e. Assembly
f. Installation

Initial Setup:

Equipment Conditions:
Intervehicular air hoses disconnected from towing vehicle (para 2-14).
Antiseizing tape (Item 15, Appendix E)

Materials/Parts:
Dry cleaning solvent (Item 5, Appendix **E)**
Rags (Item 12, Appendix E)
One gasket
Two lockwashers

Tools/Test Equipment:
General mechanic's tool **kit**
·General mechanic's tool kit · Two lockwashers

a. SERVICE

1. Remove pipe plug (2) from bottom of air filter body (1)
2. Allow moisture to drain.
3. Install pipe plug (2)

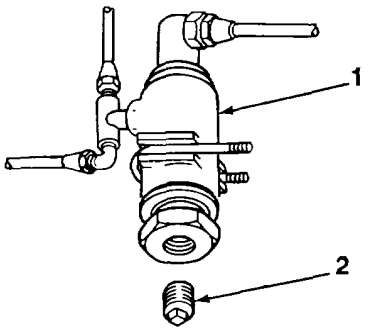

b. REMOVAL

1.Open pressure tank draincock to relieve pressure in service brake system. Close draincock (para 1-7).

2.Disconnect two tube assemblies (4) from elbow (14) and tee (3). Remove elbow from tee.

3.Remove tee (3) from body (1).

4.Disconnect tube assembly (5) from body (1).

5.Remove two nuts (13) and lockwashers (12) from U-bolt (6). Remove air filter from frame. Discard lockwashers.

TA510708

4-27. AIR FILTER MAINTENANCE (M197A1 AND M198A1) (Con't).

c. DISASSEMBLY

1. Remove pipe plug (2) from adapter (11)
2. Remove adaptor (11) from body (1)
3. Remove gasket (10), spring (9), washer (8), and filter element (7) from body (1). Discard gasket.

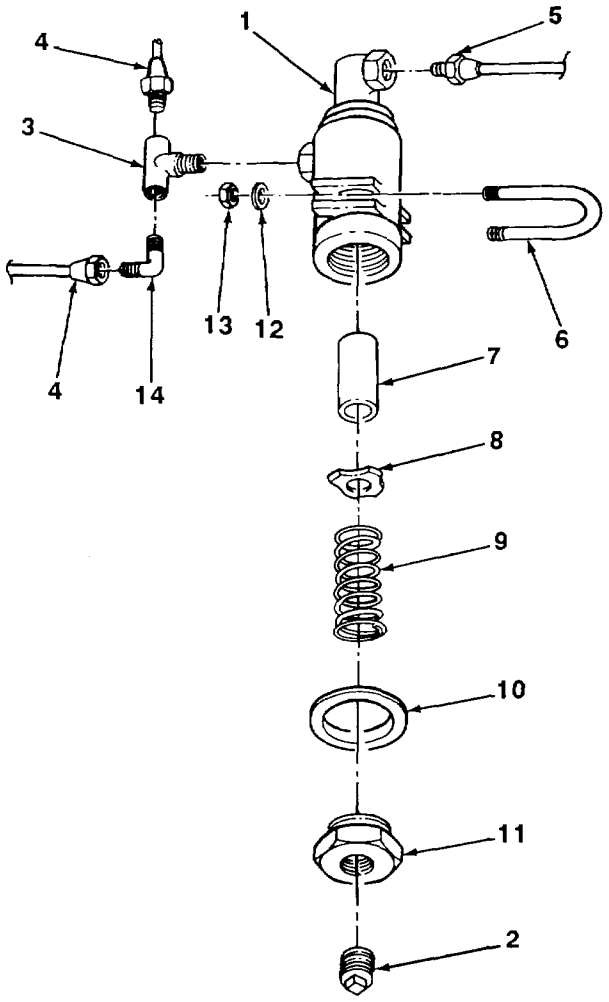

d. CLEANING AND INSPECTION

WARNING

Dry cleaning solvent, P-D-680, Is toxic and flammable. Always wear protective goggles and gloves, and use only in a well-ventilated area. Avoid contact with skin, eyes, and clothes, and DO NOT breathe vapors. DO NOT use near open flame or excessive heat. The solvent's flash point is 100F-138°F (38°C-590C). If you become dizzy while using cleaning solvent, Immediately get fresh air and medical help. If solvent contacts eyes, immediately wash your eyes and get medical aid.

1. Clean all parts with dry cleaning solvent. Dry thoroughly.
2. Inspect all parts for cracks, breaks, corrosion, or other damage. Replace all damaged parts.
3. Replace filter element if damaged or filled with oil or gummy deposit.

TA51 0709

4-27. AIR FILTER Maintenance (M197A1 AND M198A1) (Con't).

e. Assembly

Note

Apply antiseizing tape to all male threads

1. Install filter element (7), washer(8), spring (9), new gasket (10), and adapter (11) in body (1).

2. Install pipe plug (2) in adapter (11).

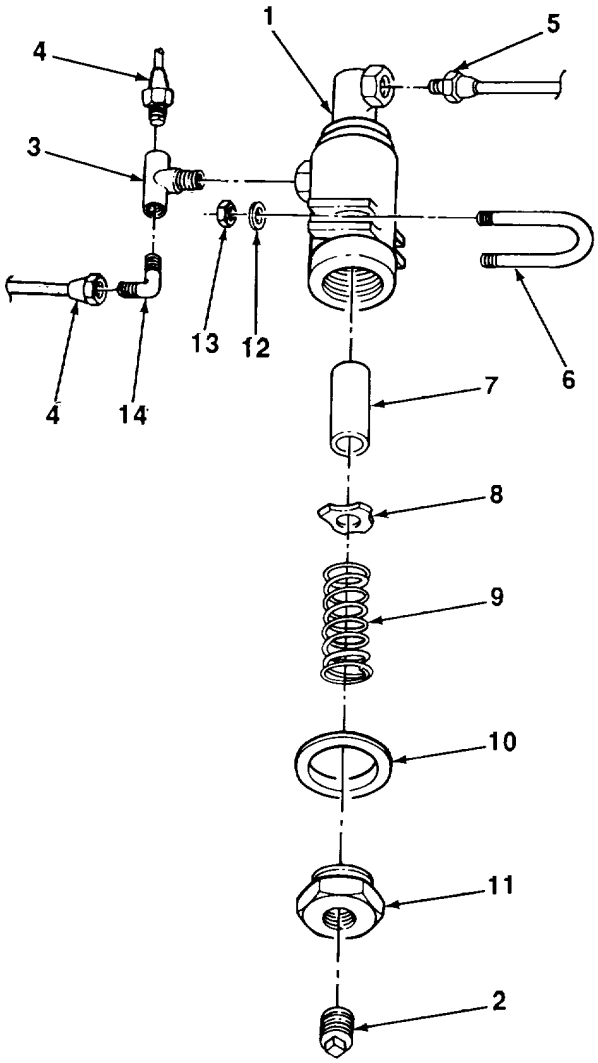

f. INSTALLATION

NOTE

Apply antiseizing tape to all male threads.

1. Install air filter on frame with U-bolt (6), two new lockwashers (12), and nuts (13). Arrow on body (1) must point in direction of airflow.
2. Connect tube assembly (5) to body (1).
3. Install tee (3) into body (1). Install elbow (14) to tee.
4. Connect two tube assemblies (4) to elbow (10) and tee (3).

FOLLOW-ON TASKS:

Connect intervehicular air hoses to towing vehicle (para 2-10).
Perform air leakage test (para 4-31).

TA51O71O

4-28. AIR LINES, FITTINGS, AND HOSES REPLACEMENT (M197 AND M198).

This Task Covers:

a. Removal b. Installation

Initial Setup:

Equipment Conditions:

Intervehicular air hoses disconnected from towing vehicle (para 2-14).
·Pressure released from service brake system (para 1-7)

Materials/Parts:

Marker tags (Item 14, Appendix E)
Antiseizing tape (Item 15, Appendix E)

Tools/Test Equipment:

General mechanic's tool kit

a. REMOVAL

NOTE

Ensure that tube assemblies are tagged for installation.

1. Open stowage compartment cover and disconnect two intervehicular air hoses (18) from connectors (17).

2. Disconnect two tube assemblies (14) from adapters (15).

3. Remove two adapters (15) from two connectors (17).

4. Remove two coupling nuts (16) from each end of connectors (17). Remove connectors from frame.

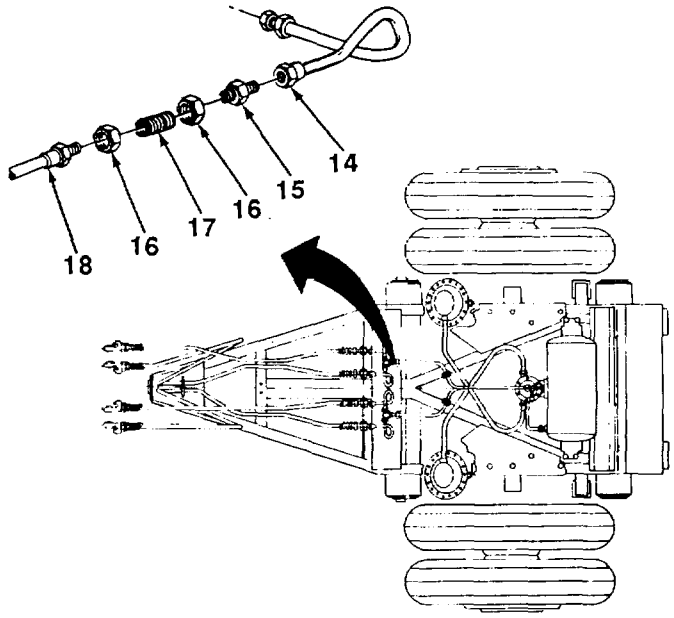

TA510711

4-28. AIR LINES, FITTINGS, AND HOSES REPLACEMENT (M197 AND M198) (Con't).

5. Disconnect two tube assemblies (14) from tee (1). Remove tube assemblies from frame.

6. Disconnect tube assembly (3) from elbow (2).

7. Remove elbow (2) from tee (1).

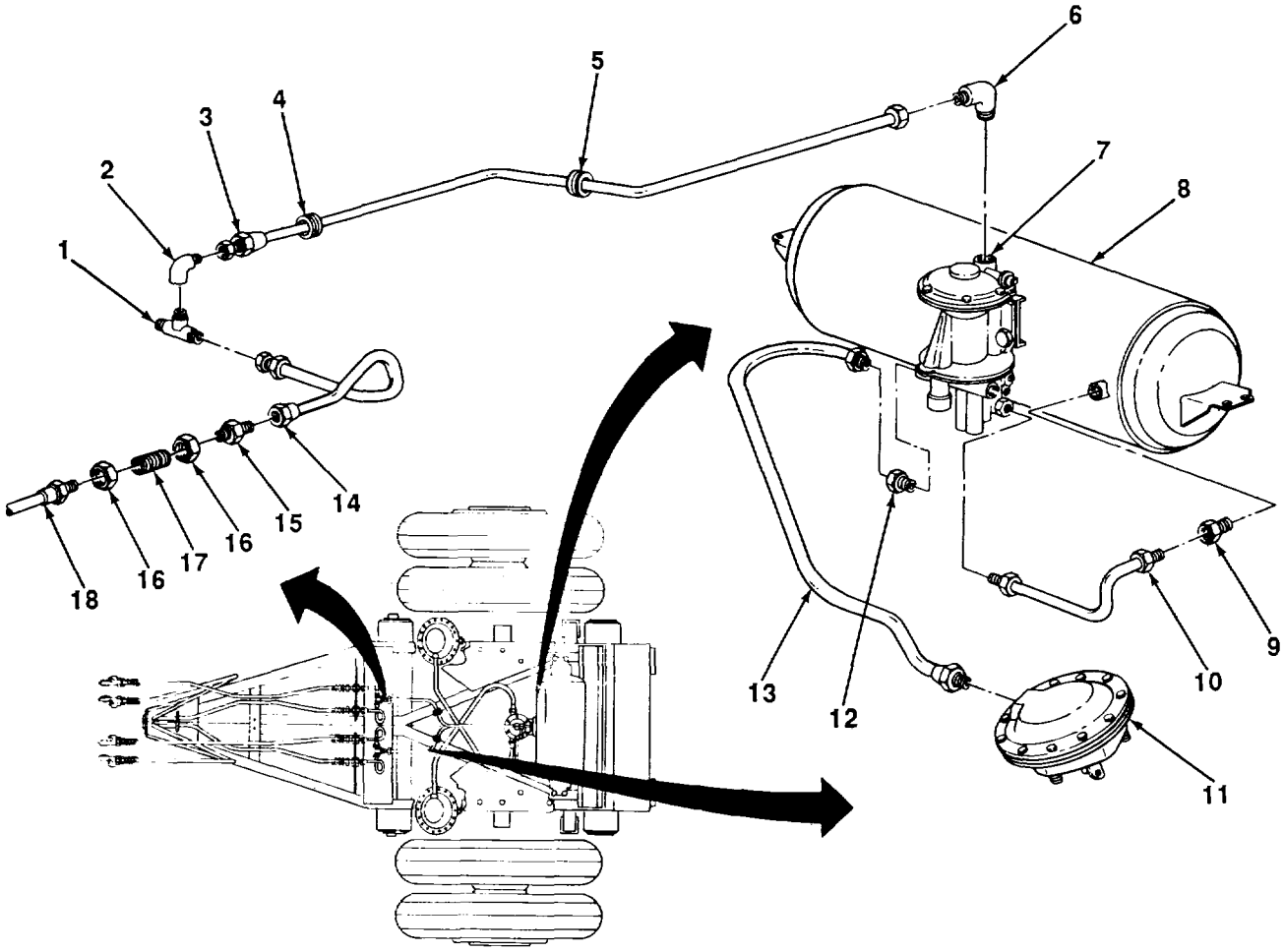

8. Remove two grommets (4 and 5) from frame.

9. Disconnect tube assembly (3) from elbow (6) on emergency relay valve (7).

10. Remove tube assembly (3) from frame.

11. Remove elbow (6) from emergency relay valve (7).

12. Disconnect hose assembly (13) from reducer (12) on emergency relay valve (7) and airbrake chamber (11). Remove hose assembly from frame.

13. Remove reducer (12) from emergency relay valve (7).

14. Repeat steps 1 through 13 for other side of dolly.

TA510712

4-28. AIR LINES, FITTINGS, AND HOSES REPLACEMENT (M197 AND M198) (Con't).

15.Remove tube assembly (10) from emergency relay valve (7) and connector (9) on pressure tank (8).
16.Remove connector (9) from pressure tank (8).

b. INSTALLATION

NOTE

Apply antiseizing tape to all male threads.

1. Install connector (9) in pressure tank (8).
2. Connect tube assembly (10) to emergency relay valve (7) and connector (9) on pressure tank (8).
3. Install reducer (12) in emergency relay valve (7).
4. Connect hose assembly (13) to reducer (12) on emergency relay valve (7) and airbrake chamber (11).
5. Install elbow (6) in emergency relay valve (7).
6. Connect tube assembly (3) to elbow (6).
7. Install two grommets (4 and 5) in frame.
8. Feed tube assembly (3) through grommets (4 and 5).
9. Install elbow (2) on tee (1).
10. Connect tube assembly (3) to elbow (2).
11. Connect two tube assemblies (14) to tee (1).
12. Install two connectors (17) in frame using four coupling nuts (16).
13. Install two adapters (15) on connectors (17).
14. Connect two tube assemblies (14) to adapters (15).
15. Connect two intervehicular air hoses (18) to connectors (17).
16. Repeat steps 3 through 15 for other side of dolly.
17. Close stowage compartment cover.

FOLLOW-ON TASKS:

· Connect intervehicular air hoses to towing vehicle (para 2-10).
· Perform air leakage test (para 4-31).

4-29. AIR LINES, FITTINGS, AND HOSES REPLACEMENT (M197A1).

This Task Covers:
a. Removal
b. Installation

Initial Setup:

Equipment Conditions:

Intervehicular air hoses disconnected from towing vehicle (para 2-14).

Tools/Test Equipment:

General mechanic's tool kit

Materials/Parts:

Marker tags (Item 14, Appendix E)
Antiseizing tape (Item 15, Appendix E)
Five lockwashers

a. REMOVAL

NOTE
Ensure that tube assemblies are tagged for installation.

1. Open pressure tank draincock to relieve pressure in service brake system. Close draincock (para 1-7).
2. Open storage compartment cover and disconnect two intervehicular air hoses (20) from terminal bolts (19).
3. Disconnect two tube assemblies (21) from two elbows (15) and tee (14). Remove tube assemblies.
4. Remove two elbows (15) from two terminal bolts (19).
5. Remove nut (16) and lockwasher (17) from each terminal bolt (19). Remove two terminal bolts and identification plates (18) from frame. Discard lockwashers.
6. Remove tee (14) from air filter (13).
7. Disconnect tube assembly (11) from adapter (12) on air filter (13) and elbow (9) on emergency relay valve (4).
8. Remove grommet (10) from hole in frame.
9. Remove tube assembly (11) from frame. Remove grommet (10) from tube assembly.
10. Remove adapter (12) from air filter (13).
11. Remove elbow (9) from emergency relay valve (4).
12. Repeat steps 2 through 11 for other side of dolly.
13. Disconnect tube assembly (6) from elbow (8) on pressure tank (7) and adapter (5) on emergency relay valve (4). Remove tube assembly.
14. Remove elbow (8) from pressure tank (7).
15. Remove adapter (5) from emergency relay valve (4).
16. Disconnect tube assembly (2) from elbow (26) on airbrake chamber (1) and adapter (3) on emergency relay valve (4).
17 Remove nut (25), lockwasher (24), screw (22), and clamp (23) from frame. Remove tube assembly (2) from frame. Remove clamp from tube assembly. Discard lockwasher.

4-29. A:R LINES, FITTINGS, AND HOSES REPLACEMENT (M197A1) (Con't).

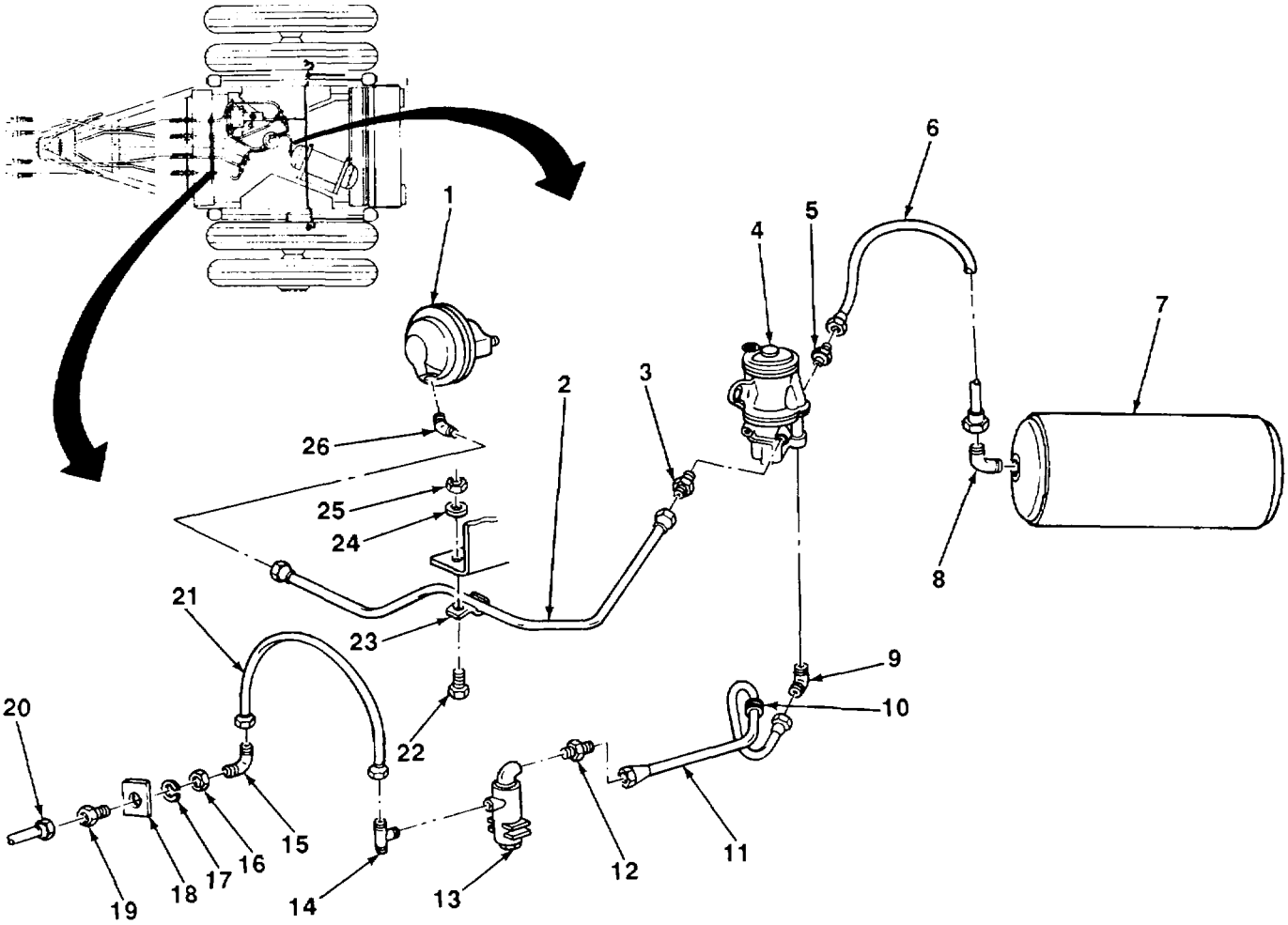

18. Remove elbow (26) from airbrake chamber (1).
19. Remove adapter (3) from emergency relay valve (4).

b. INSTALLATION

NOTE

Apply antiseizing tape to all male threads.

1. Slide clamp (23) over tube assembly (2). Install clamp on frame using screw (22), new lockwasher (24), and nut (25).
2. Install elbow (26) in airbrake chamber (1).
3. Install adapter (3) in emergency relay valve (4).
4. Connect tube assembly (2) to elbow (26) on airbrake chamber (1) and adapter (3) on emergency relay valve (4).
5. Install adapter (5) in emergency relay valve (4).

TA510713

4-29. AIR LINES, FITTINGS, AND HOSES REPLACEMENT (M197A1) (Con't).

6. Install elbow (8) in pressure tank (7).
7. Connect tube assembly (6) to elbow (8) on pressure tank (7) and adapter (5) on emergency relay valve (4).
8. Install elbow (9) In emergency relay valve (4).
9. Install adapter (12) In air filter (13).
10. Install grommet (10) In frame.
11. Feed tube assembly (11) through grommet (10) in frame. Connect tube assembly to elbow (9) on emergency relay valve (4) and adapter (12) on air filter (13).

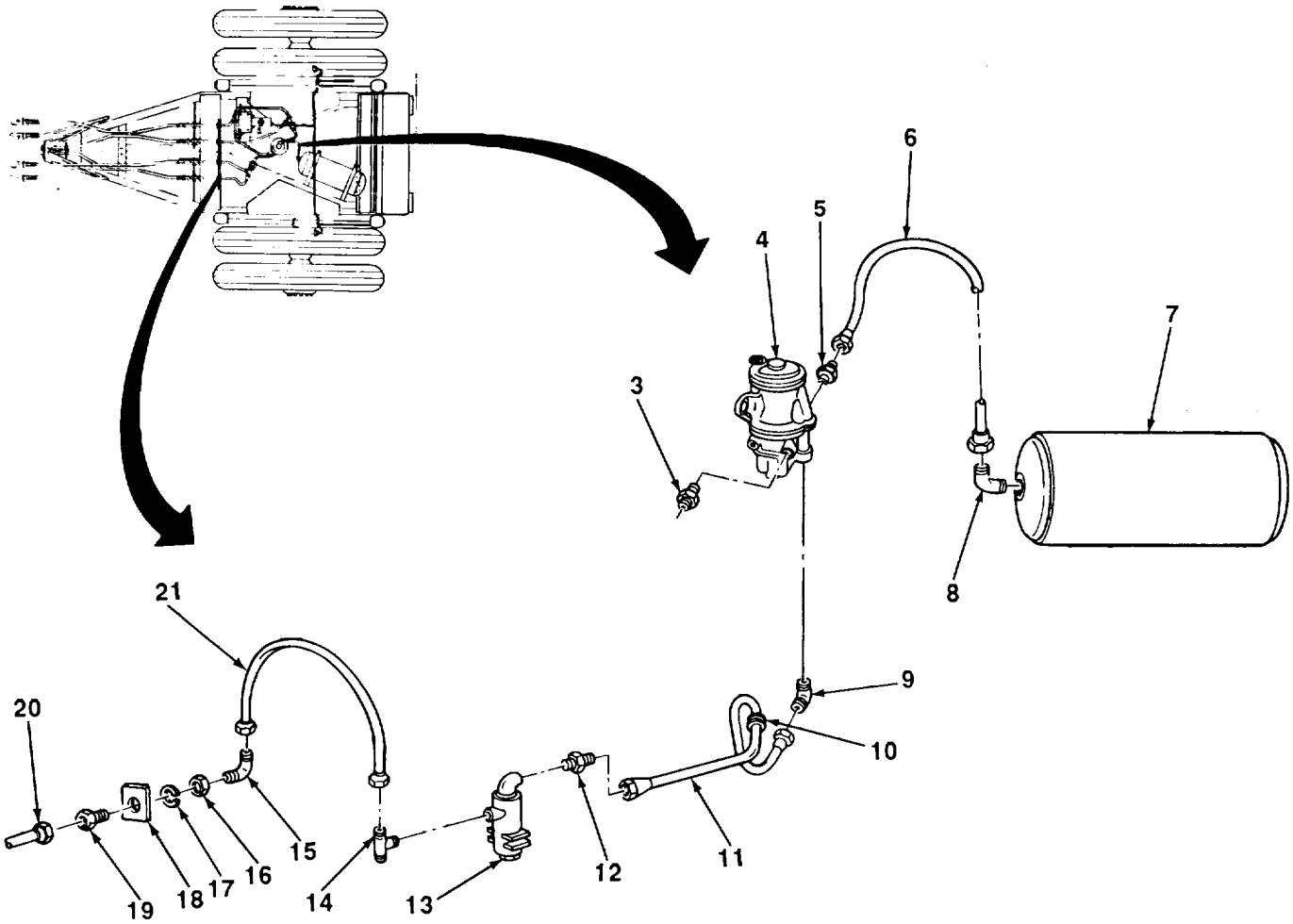

12. Install tee (14) in air filter (13).
13. Install two terminal bolts (19) and identification plates (18) in frame using two new lockwashers (17) and nuts (16).
14. Install two elbows (15) on two terminal bolts (19).
15. Connect two tube assemblies (21) to two elbows (15) and tee (14).

TA510714

4-29. AIR LINES, FITTINGS, AND HOSES REPLACEMENT (M197A1) (Con't).

16. Connect each intervehicular air hose (20) to terminal bolt (19).
17. Repeat steps 8 through 16 for other side of dolly.
18. Close stowage compartment cover.

FOLLOW-ON TASKS:

Connect intervehicular air hoses to towing vehicle (para 2-10).
Perform air leakage test (para 4-31).

4-30. AIR LINES, FITTINGS, AND HOSES REPLACEMENT (M198A1).

This Task Covers:

a. Removal

b. Installation

Initial Setup:

Equipment Conditions:

Intervehicular air hoses disconnected from towing vehicle (para 2-14).

Tools/Test Equipment:

General mechanic's tool kit

Materials/Parts:

Marker tags (Item 14, Appendix E)
Antiseizing tape (item 15, Appendix E)
Five lockwashers

a. REMOVAL

1. Open pressure tank draincock to relieve pressure in service brake system. Close draincock (para 1-7).
2. Open stowage compartment cover and disconnect two intervehicular air hoses (26) from terminal bolts (27).
3. Disconnect two tube assemblies (21) from two adapters (22).
4. Remove two adapters (22) from terminal bolts (27).
5. Remove nut (23) and lockwasher (24) from each terminal bolt (27). Remove two terminal bolts and identification plates (25) from frame. Discard lockwashers.
6. Disconnect each tube assembly (21) from tee (19).
7. Remove two grommets (20) from holes in frame.

NOTE

On right side only, clamp securing each tube assembly to frame must first be removed.

8. Remove two tube assemblies (21). Remove grommets (20) from tube assemblies.
9. Remove tee (19) from air filter (18).
10. Disconnect tube assembly (13) from elbow (17) on air filter (18) and elbow (12) on emergency relay valve (10).

NOTE

Clamp is mounted on left side only. To remove clamp, part of pressure tank mounting must also be removed.

11. Remove tube assembly (13) from clamp (15) at pressure tank (14) and remove from frame.
12. Remove elbow (17) from air filter (18).
13. Remove elbow (12) from emergency relay valve (10).
14. Repeat steps 2 through 13 for other side of dolly.
15. Disconnect tube assembly (8) from elbow (16) on pressure tank (14) and adapter (9) on emergency relay valve (10). Remove tube assembly.

4-30. AIR LINES, FITTINGS, AND HOSES REPLACEMENT (M198A1) (Con't).

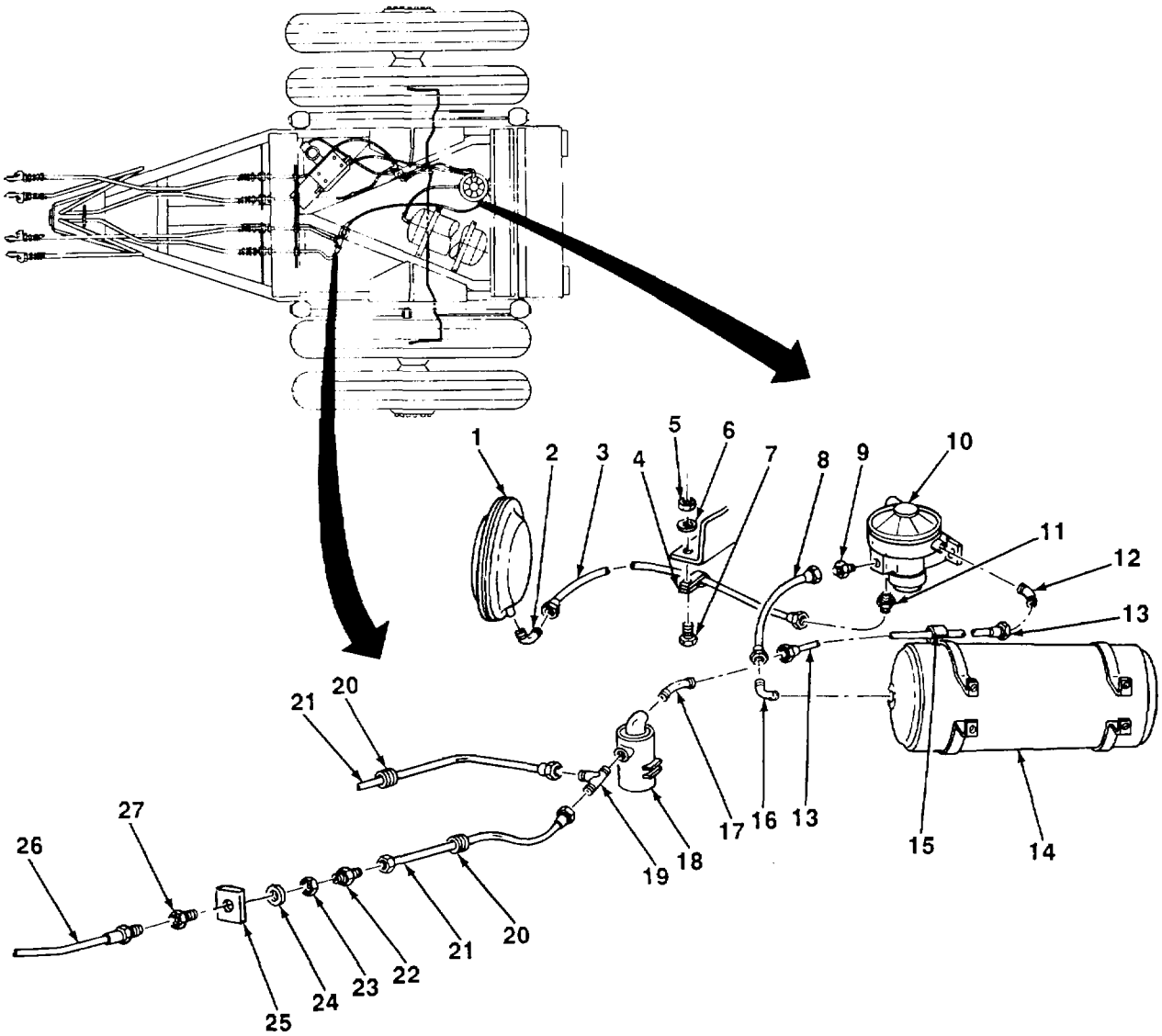

16. Remove elbow (16) from pressure tank (14).
17. Remove adapter (9) from emergency relay valve (10).
18. Disconnect tube assembly (3) from elbow (2) on airbrake chamber (1) and adapter (11) on emergency relay valve (10).
19. Remove nut (5), lockwasher (6), screw (7), and clamp (4) from frame. Remove tube assembly (3) from frame. Remove clamp from tube assembly. Discard lockwasher.
20. Remove elbow (2) from airbrake chamber (1).
21. Remove adapter (11) from emergency relay valve (10).

TA510715

4-30. AIR LINES, FITTINGS, AND HOSES REPLACEMENT (M198A1) (Con't).

b. INSTALLATION

NOTE

Apply antiselzing tape to all male threads.

1. Slide clamp (4) on tube assembly (3). Install clamp on frame with screw (7), new lockwasher (6), and nut (5).
2. Install adapter (11) in emergency relay valve (10).
3. Install elbow (2) in airbrake chamber (1).
4. Connect tube assembly (3) to elbow (2) on airbrake chamber (1) and adapter (11) on emergency relay valve (10).
5. Install adapter (9) in emergency relay valve (10).
6. Install elbow (16) in pressure tank (14).
7. Connect tube assembly (8) to elbow (16) on pressure tank (14) and adapter (9) on emergency relay valve (10).
8. Install elbow (12) in emergency relay valve (10).
9. Install elbow (17) in air filter (18).

NOTE

Clamp Is mounted on left side only.

10. Feed tube assembly (13) through clamp (15) and connect to elbow (17) on air filter (18) and elbow (12) on emergency relay valve (10). Ensure that pressure tank (14) mounting is installed and clamp is secure around tube assembly.
11. Install tee (19) in air filter (18).
12. Install two grommets (20) in frame.
13. Install two Identification plates (25) and terminal bolts (27) in frame using two new lockwashers (24) and nuts (23).
14. Install two adapters (22) in terminal bolts (27).
15. Connect two tube assemblies (21) to tee (19) and adapters (22).
16. Connect each intervehicular air hose (26) to terminal bolt (27).
17. Repeat steps 8 through 16 for other side of dolly.
18. Close stowage compartment cover.

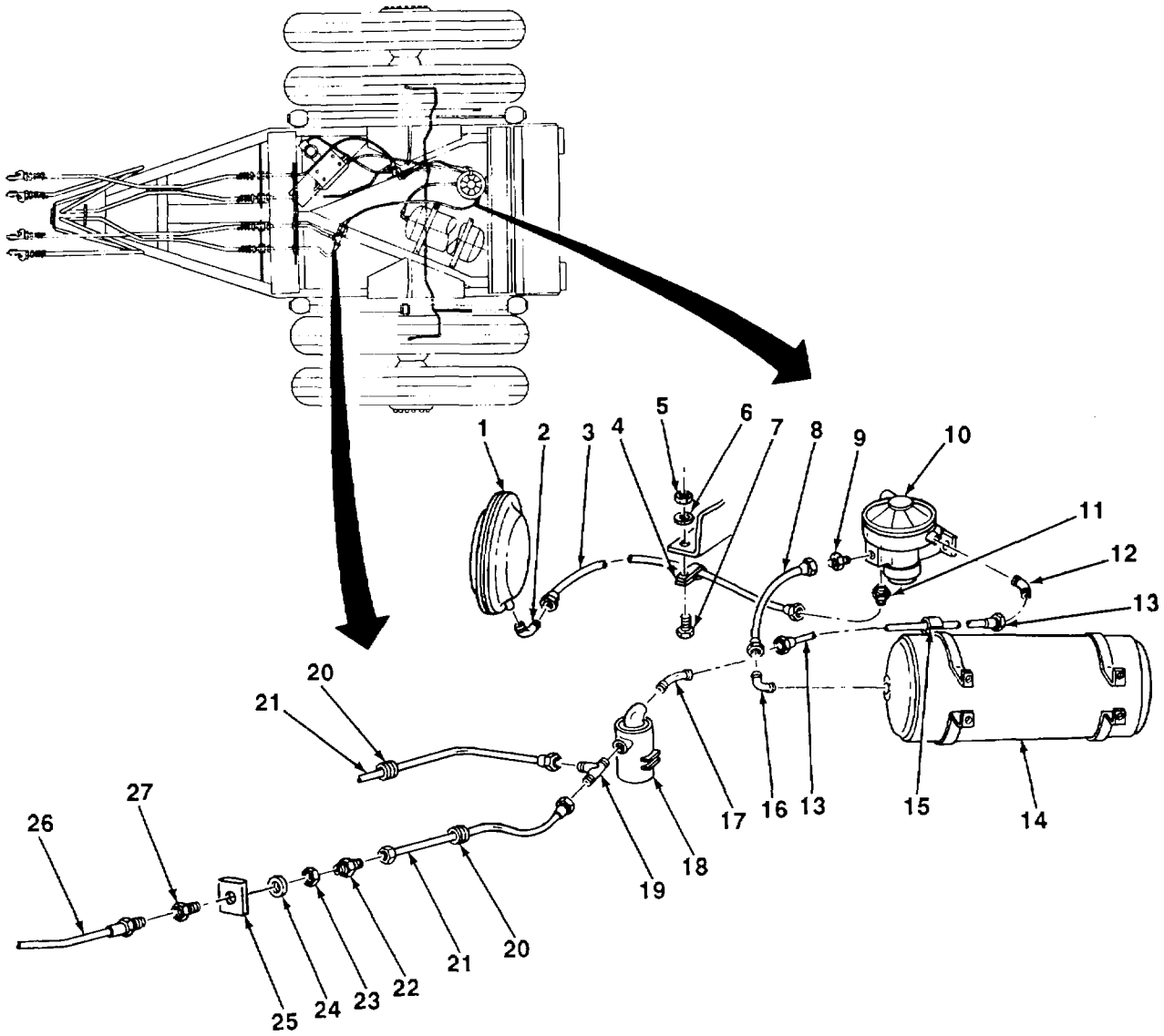

FOLLOW-ON-TASKS:

- Connect intervehicular air hoses to towing vehicle (para 2-10)
- Perform air leakage test (para 4-31).

TA510716

4-31. BRAKE SYSTEM TESTS.

This Task Covers:

a. Air Leakage Test

b. Airbrake Chamber Pushrod Travel Test (Ml97A1 and M198A1)

Initial Setup:

Equipment Conditions:

Intervehicular air hoses connected to towing vehicle (para 2-10).

Materials/Parts:

· Detergent (Item 4, Appendix E)

Tools/Test Equipment:

General mechanic's tool kit

Personnel Required: Two

a. AIR LEAKAGE TEST

1. Coat air system lines and fittings with a soapy solution.
2. Have assistant apply brakes in towing vehicle. Check air system lines and fittings for leaks. No leaks are permissible.
3. Tighten fittings to stop leakage. If leakage does not stop, replace tube assemblies and fittings (para 4-28, 4-29, or 4-30). Intervehicular air hose air coupling leakage is usually caused by a worn, damaged, or improperly installed preformed packing. Replace preformed packing (para 4-26).
4. Coat exhaust check valve (M197 and M198) or exhaust port (M197A1 and M198A1) on emergency relay valve with a soapy solution. Have assistant apply brakes in towing vehicle. Check for leaks. No leaks are permissible. Replace emergency relay valve (para 4-34).

b. AIRBRAKE CHAMBER PUSHROD TRAVEL TEST (M197A1 AND M198A1)

1.With service brakes released, insert a small rod (3) Y in. (3.2 mm) in diameter through inspection hole in rear of airbrake chamber (1). Insert rod as far as it will go and mark rod at surface of bracket (2). Remove rod.

2.Have assistant apply brakes. Insert rod (3) as far as it will go and mark rod at surface of bracket (2).

3.Remove rod (3) and measure distance between marks on rod. Marks should be between X in. and X in. (13 mm and 22 mm) apart. If marks are less than X in. (13 mm) or greater than % In. (22 mm) apart, adjust brakes (para 4-18).

4.If brake adjustment is satisfactory but marks are not within tolerance, replace master cylinder (para 4-22) and airbrake chamber (para 4-33).

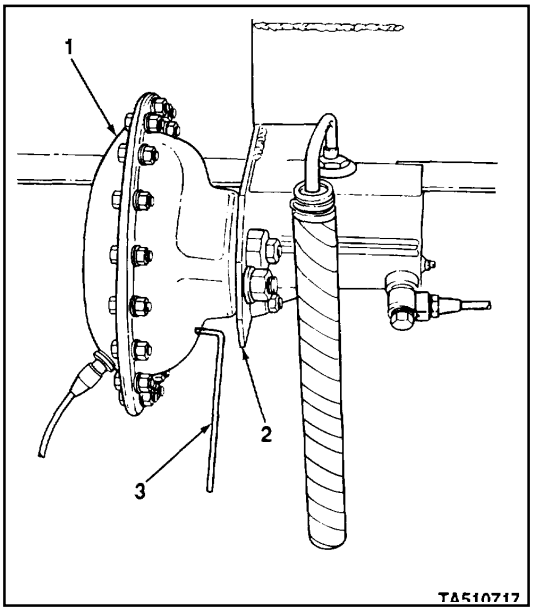

FOLLOW-ON TASKS:

* Disconnect intervehicular air hoses from towing vehicle (para 2-14).

4-32. AIRBRAKE CHAMBER MAINTENANCE (M197 AND M198).

This Task Covers:

a.Removal
b. Disassembly
c. Inspection
d. Assembly
e. Installation

Initial Setup:

Equipment Conditions

Intervehicular air hoses disconnected from towing vehicle (para 2-14).
Pressure released from service brake system (para 1-7).

Materials/Parts:

Tow lockwashers
Antiseizing tape (Item 15, Appendix E.)
One cotter pin
One repair kit

Tools/Test Equipment

General mechanic's tool kit
Vise

Personnel Required: Two

a. REMOVAL

1. Disconnect tube assembly (17) from cover (2).

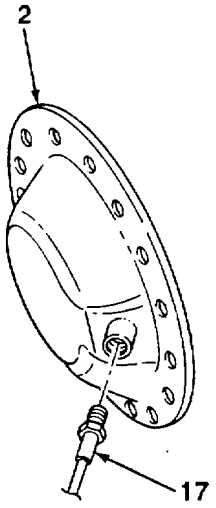

TA510718

4-32. AIRBRAKE CHAMBER MAINTENANCE (MI 97 AND M198) (Con't).

2. Remove cotter pin (12) and straight pin (14) connecting clevis (13) to slack adjuster. Discard cotter pin.
3. Remove two nuts (15) and lockwashers (16) securing airbrake chamber to bracket. Remove airbrake chamber. Discard lockwashers.

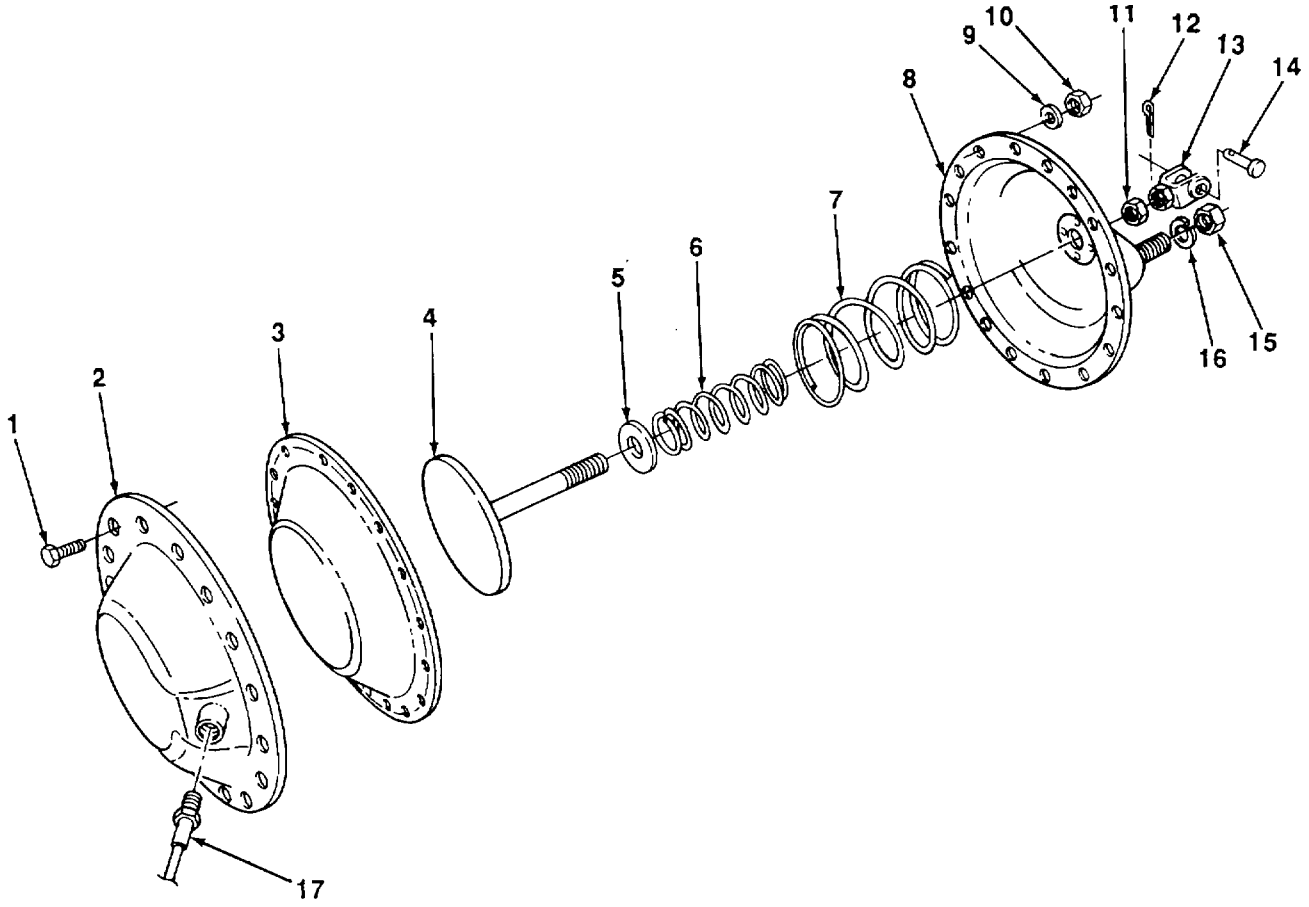

b. DISASSEMBLY

1. Loosen nut (11) and remove nut and clevis (13) from rod (4).

WARNING

Use caution when disassembling airbrake chamber. Springs are under tension. Failure to follow this warning may cause components Inside airbrake chamber to fly apart, causing injury to personnel.

2. Place airbrake chamber in a vise. Remove 18 nuts (10), lockwashers (9), and bolts (1) securing cover (2) to body (8) Discard lockwashers, nuts, and bolts.
3. Separate body (8), cover (2), and diaphragm (3). Remove rod (4) and two springs (6 and 7). Discard diaphragm and springs.
4. Remove flatwasher (5) from rod (4).

TA510719

4-32. AIRBRAKE CHAMBER MAINTENANCE (M197 AND M198) (Con't).

c. INSPECTION

1. Inspect all parts for cracks, breaks, corrosion, or other damage. If body, cover, rod, or flatwasher are damaged, replace entire airbrake chamber.
2. Replace all damaged parts.

d. ASSEMBLY

WARNING

Use caution when assembling airbrake chamber. Springs Inside airbrake chamber will be placed under tension. Failure to follow this warning may cause components inside airbrake chamber to fly apart, causing Injury to personnel.

1. Install flatwasher (5) on rod (4).
2. Assemble body (8), two new springs (7 and 6), rod (4), new diaphragm (3), and cover (2). Secure in a vise.
3. Secure cover (2) to body (8) using 18 new bolts (1), new lockwashers (9), and new nuts (10). Remove from vise.
4. Install nut (11) and clevis (13) on rod (4). Tighten nut against clevis.

e. INSTALLATION

1. Position airbrake chamber for installation. Ensure that rod (4) is properly seated in master cylinder.
2. Secure airbrake chamber to bracket using two new lockwashers (16) and nuts (15).
3. Connect clevis (13) to slack adjuster using straight pin (14) and new cotter pin (12).
4. Apply antiseizing tape to threads of tube assembly (17). Connect tube assembly to cover (2).
5. Connect intervehicular air hoses to towing vehicle (para 2-10).

NOTE

Length of rod may require adjusting to maintain the proper angle between rod and slack adjuster. With brakes released, angle should be greater than 90 0. Slack adjuster should never travel over the center in the applied position.

6. Apply and release brakes and check angle between rod (4) and slack adjuster. Adjust each clevis (13) to obtain the proper length. Apply brakes to test operation and adjust rod again if necessary.

FOLLOW-ON TASKS:

- Perform air leakage test (para 4-31).

4-33. AIRBRAKE CHAMBER MAINTENANCE (M197A1 AND M198A1).

This Task Covers:

a. Removal
b. Disassembly
c. Inspection
d. Assembly
e. Installation

Initial Setup:

Equipment Conditions:

* Intervehicular air hoses disconnected from towing vehicle (para 2-14).
·Pressure released from service brake system (para 1-7).

Materials/Parts:

Antiseizing tape (Item 15, Appendix E)
One repair kit
Two lockwashers

Tools/Test Equipment:

General mechanic's tool kit
*Vise

a. REMOVAL

1. Disconnect tube assembly (12) from cover (1).
2. Remove two nuts (9) and lockwashers (8) securing airbrake chamber to bracket. Remove airbrake chamber. Discard lockwashers.

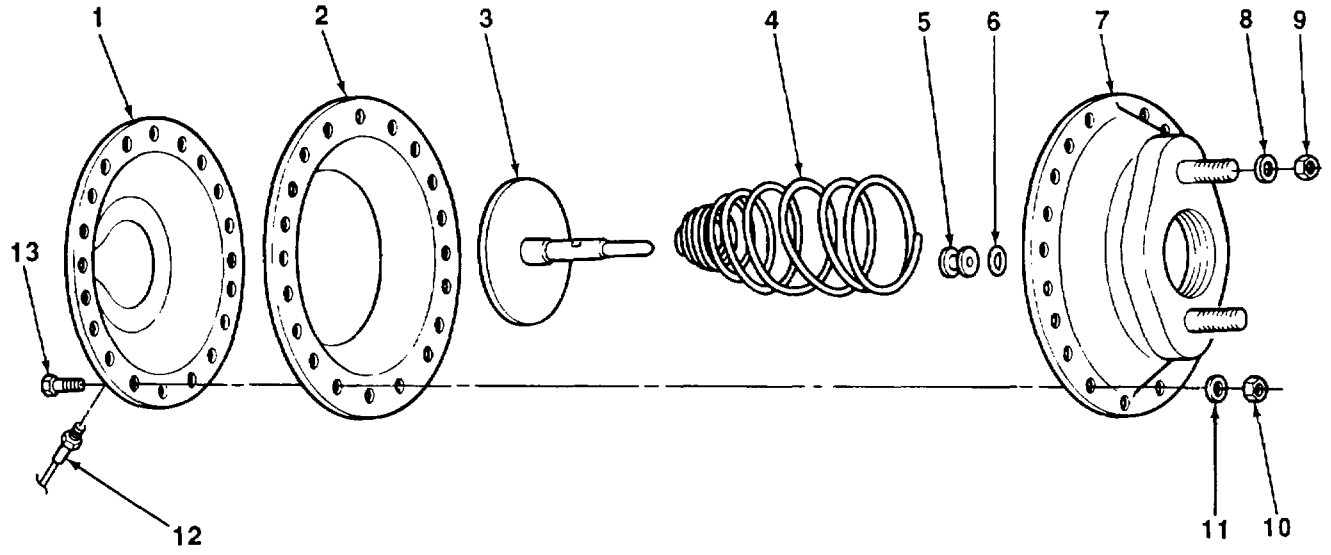

TA510720

4-33. AIRBRAKE CHAMBER MAINTENANCE (M197A1 AND M198A1) (Con't).

b. DISASSEMBLY

WARNING

Use caution when disassembling airbrake chamber. Spring is under tension. Failure to follow this warning may cause components inside airbrake chamber to fly apart, causing injury to personnel.

1. Place airbrake chamber in a vise. Remove 18 nuts (10), lockwashers (11), and screws (13) securing cover (1) to body (7). Discard lockwashers, nuts, and screws.
2. Separate body (7), cover (1), and diaphragm (2). Remove pushrod (3) and spring (4). Discard diaphragm and spring.
3. Remove preformed packing (6) and seal (5) from pushrod (3). Discard preformed packing.

c. INSPECTION

1. Inspect all parts for cracks, breaks, corrosion, or other damage. If cover, seal, pushrod, or body are damaged, replace entire airbrake chamber.
2. Replace all damaged parts.

d. ASSEMBLY

WARNING

Use caution when assembling airbrake chamber. Spring Inside airbrake chamber will be placed under tension. Failure to follow this warning may cause components inside airbrake chamber to fly apart, causing injury to personnel.

1. Install seal (5) and new preformed packing (6) on pushrod (3).
2. Assemble body (7), new spring (4), pushrod (3), new diaphragm (2), and cover (1). Secure in a vise.
3. Secure cover (1) to body (7) using 18 new screws (13), new lockwashers (11), and new nuts (10). Remove from vise.

e. INSTALLATION

1. Position airbrake chamber for installation. Ensure that pushrod (3) is properly seated in master cylinder.
2. Secure airbrake chamber to bracket using two new lockwashers (8) and nuts (9).
3. Apply antiseizing tape to threads of tube assembly (12). Connect tube assembly to cover (1).

FOLLOW-ON TASKS:

- Connect intervehicular air hoses to towing vehicle (para 2-10).
- Perform air leakage test (para 4-31).
- Test airbrake chamber pushrod travel (para 4-31).

4-34. EMERGENCY RELAY VALVE REPLACEMENT.

This Task Covers.:
Removal
b. Installation

Initial Setup:

Equipment Conditions:

- Intervehicular air hoses disconnected from towing vehicle (para 2-14).
- Pressure released from service brake system (para 1-7).

Materials/Parts:

Marker tags (Item 14, Appendix E)
Antiseizing tape (Item 15, Appendix E)
Two lockwashers

Tools/Test Equipment:

- General mechanic's tool kit

Personnel Required: Two

a. REMOVAL

1. Tag and disconnect all air lines and fittings from emergency relay valve (1).

2. Remove two nuts (3), lockwashers (2), and capscrews (4) securing emergency relay valve (1) to bracket. Remove emergency relay valve. Discard lockwashers.

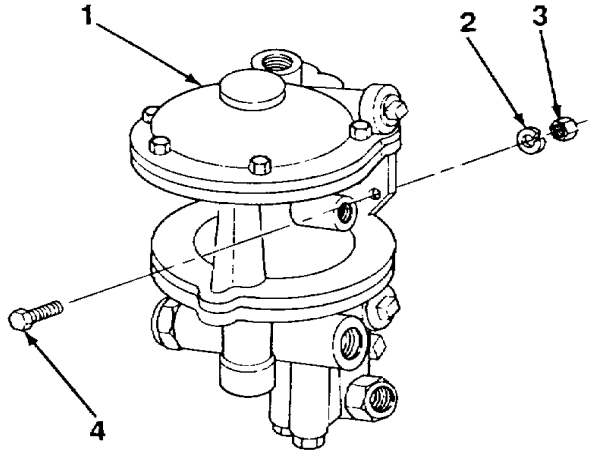

b. INSTALLATION

NOTE

Apply antiseizlng tape to all male threads.

1. Install emergency relay valve (1) on bracket using two capscrews (4), new lockwashers (2), and nuts (3).

2. Connect all air lines and fittings to emergency relay valve (1) as tagged. Remove tags.

FOLLOW-ON TASKS:

- Perform air leakage test (para 4-31).

TA510721

4-35. PRESSURE TANK DRAINCOCK REPLACEMENT.

This Task Covers:

a. Removal b. Installation

Initial Setup:

Equipment Conditions:

- Intervehicular air hoses disconnected from towing vehicle (para 2-14).
- Pressure released from service brake system (para 1-7).

Materials/Parts:

- Antiseizing tape (Item 15, Appendix E)

Tools/Test Equipment:

- General mechanic's tool kit

a. REMOVAL

Remove draincock (2) from pressure tank (1).

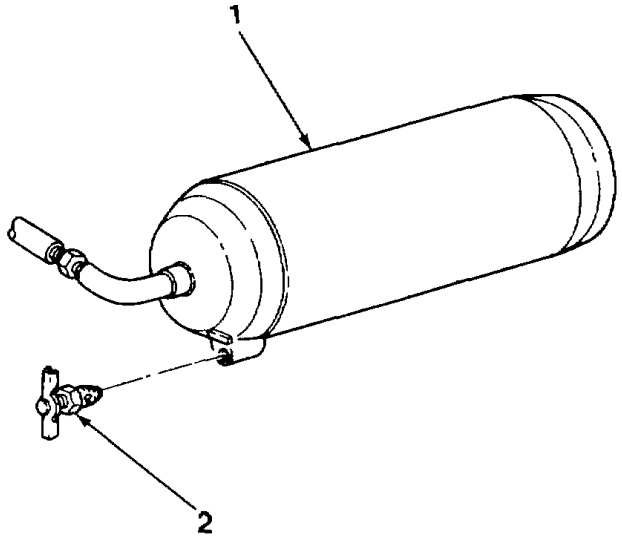

b. INSTALLATION

1. Apply antiseizing tape to threads of draincock (2). Install draincock into pressure tank (1).
2. Close draincock (2).

FOLLOW-ON TASKS:

- Connect intervehicular air hoses to towing vehicle (para 2-10).
- Perform air leakage test (para 4-31).

TA510722

4-35. PRESSURE TANK DRAINCOCK REPLACEMENT.

This Task Covers:

a. Removal b. Installation

Initial Setup:

Equipment Conditions:

- Intervehicular air hoses disconnected from towing vehicle (para 2-14).
- Emergency relay valve removed (M197 and M198) (para 4-34).

Materials/Parts:

- Antiseizing tape (item 15, Appendix E)
- Four locknuts (M197 and M198)
- Six lockwashers (Ml97A1 and Ml98A1)

Tools/Test Equipment:

- General mechanic's tool kit

a. REMOVAL

1. M197 and M198:

(a) Disconnect tube assembly (2) from connector (3). Remove connector from pressure tank (4).

b) Remove four locknuts (5) and screws (1). Discard locknuts.

(c) Remove pressure tank (4), four grommets (7), and eight washers (6) from frame.

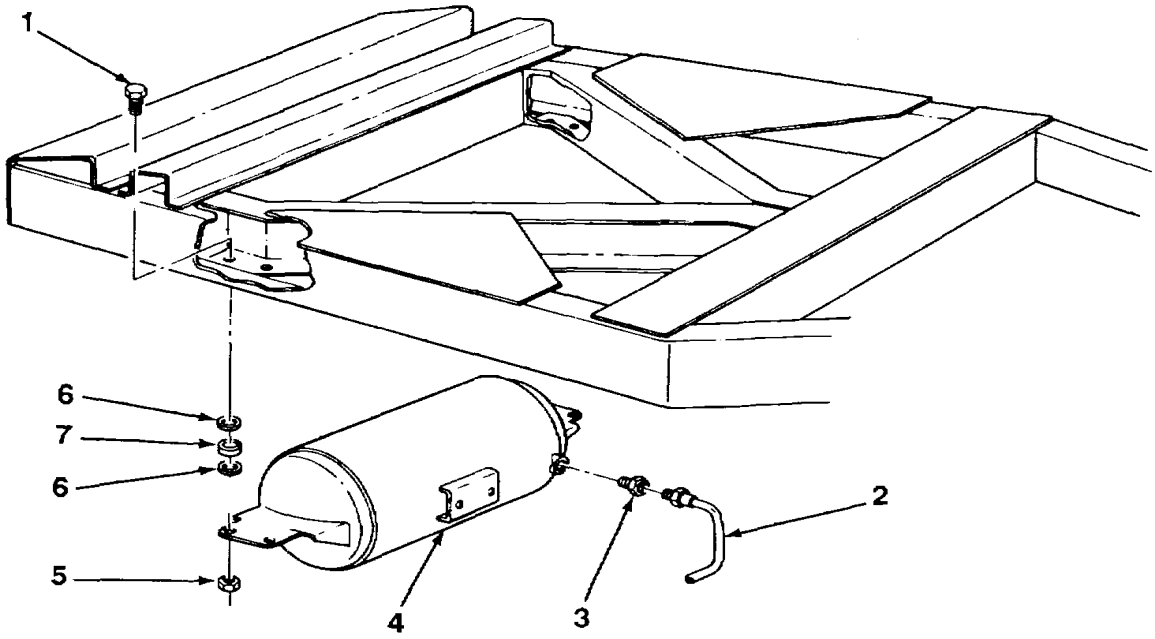

TA510723

4-36. PRESSURE TANK REPLACEMENT (Con't).

2. M197A1 and M198A1:

   (a) Disconnect tube assembly (12) from elbow (11).

   (b) Remove elbow (11) from pressure tank (10).

   (c) Remove nut (13), lockwasher (14), and bolt (16) from each upper clamp (9) and each lower bracket (15). Remove pressure tank (10) from frame. Discard lockwashers.

   (d) Remove two nuts (17), lockwashers (18), and bolts (8) securing upper clamps (9) to lower brackets (15). Remove upper clamps and lower brackets from pressure tank (10). Discard lockwashers.

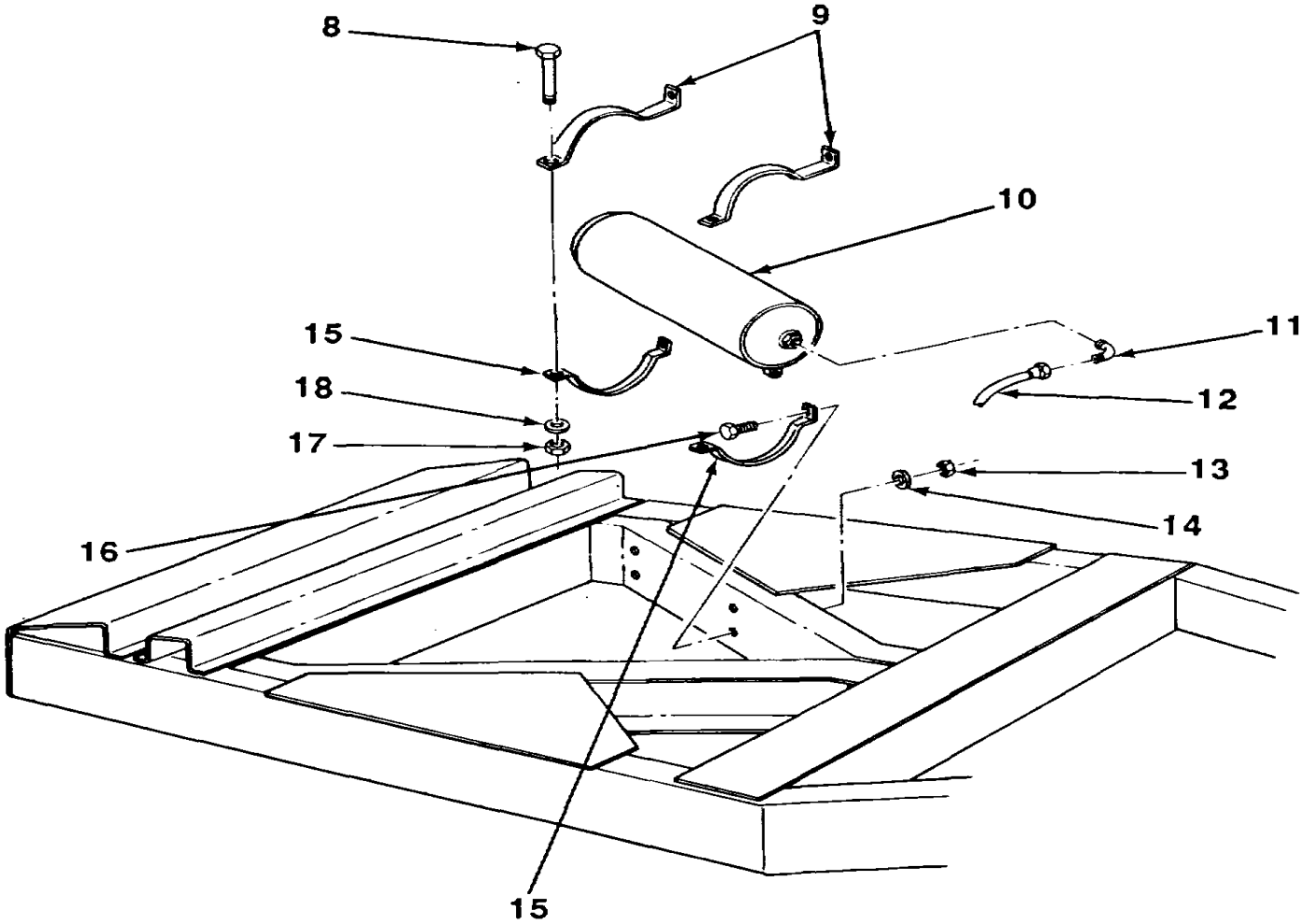

b. INSTALLATION

1. M197A1 and M198A1:

   (a) Install each lower bracket (15) on frame using bolt (16), new lockwasher (14), and nut (13).

   (b) Rest pressure tank (10) on lower brackets (15).

TA510724

4-36. PRESSURE TANK REPLACEMENT (Con't).

(c) Install each upper clamp (9) on frame using bolt (16), new lockwasher (14), and nut (13).

(d) Install two bolts (8), new lockwashers (18), and nuts (17) to upper clamps (9) and lower brackets (15).

(e) Install elbow (11) in pressure tank (10).

(f) Connect tube assembly (12) to elbow (11).

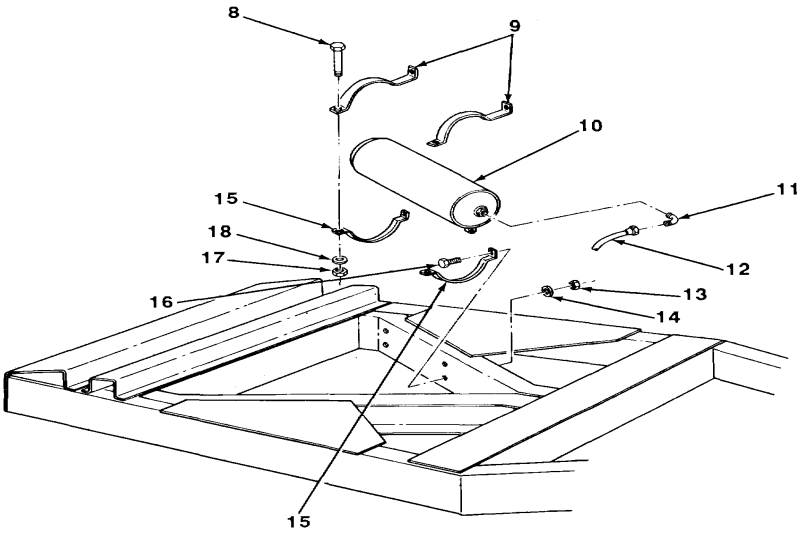

2. M197 and M198:

(a) Position pressure tank (4), four grommets (7), and eigth washers (6) for installation.

(b) Secure pressure tank (4) to frame using four screws (1) and new locknuts (5).

(c) Install connector (3) in pressure tank (3).

(d) Connect tube assembly (2) to connector (3).

TA510725

4-36. PRESSURE TANK REPLACEMENT (Con't).

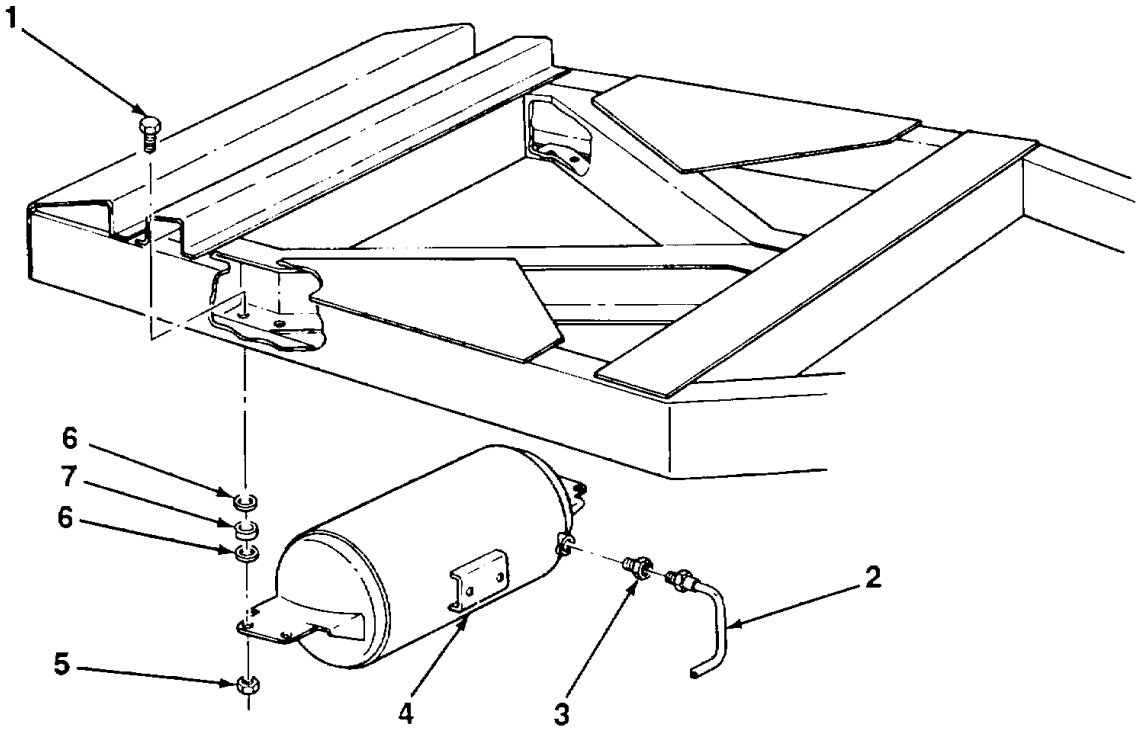

FOLLOW -ON TASKS:

- Install emergency relay valve (M197 and M198) (para 4-34).
- Connect intervehicular air hoses to towing vehicle (para 2-10).
- Perform air leakage test (para 4-31).

TA510726

Section VIII. WHEELS, HUBS, AND BRAKEDRUMS MAINTENANCE

4-37. HUB, WHEEL BEARING, AND BRAKEDRUM MAINTENANCE.

This Task Covers:

a. Removal
b. Disassembly
c. Cleaning and Inspection
d. Assembly
e. Installation
f. Wheel Bearing Adjustment

Initial Setup:

Equipment Conditions:

- Wheel and tire assembly removed (para 4-38).

Tools/Test Equipment:

- General mechanic's tool kit
- Bearing puller
- Oil seal replacer
- Wheel bearing wrench

Materials/Parts:

- Dry cleaning solvent (Item 5, Appendix E)
- Grease (Item 6, Appendix E)
- Rags (Item 12, Appendix E)
- One gasket
- One oil seal
- Sixteen lockwashers

References:

- TM 9-214

a. REMOVAL

WARNING

DO NOT handle brakeshoes, brakedrums, or other brake components unless area has been properly cleaned. There may be asbestos dust on these components which can be dangerous if you touch it or breathe it. Wear an approved filter mask and gloves. Never use compressed air or a dry brush to clean brake components. Dust may be removed using an Industrial-type vacuum cleaner. Clean dust or mud away from brake components with water and a wet, soft brush or cloth. Failure to follow this warning may result in serious Illness or death to personnel.

1. Remove six bolts (9), lockwashers (10), hub cap (11), and gasket (12) from hub (19). Discard gasket and lockwashers.
2. Remove outer bearing nut (not installed on M197A1) (13), keywasher (14), inner bearing adjusting nut (15), and keywasher (M197 and M197A1 only) (16).
3. Remove outer bearing (17).

4-37. HUB, WHEEL BEARING, AND BRAKEDRUM MAINTENANCE (Con't).

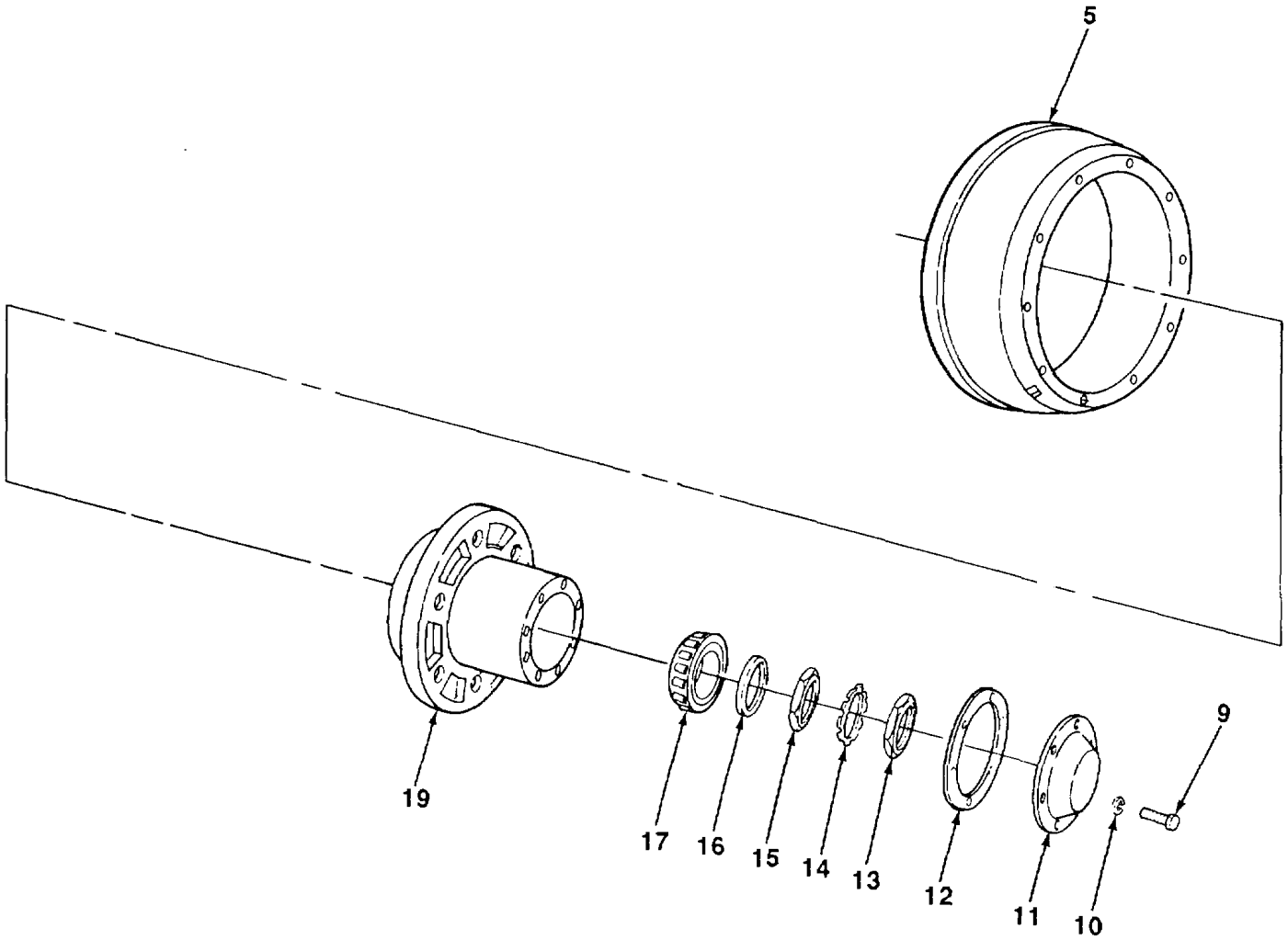

WARNING

DO NOT handle brakeshoes, brakedrums, or other brake components unless area has been properly cleaned. There may be asbestos dust on these components which can be dangerous if you touch It or breathe it. Wear an approved filter mask and gloves. Never use compressed air or a dry brush to clean brake components. Dust may be removed using an industrial-type vacuum cleaner. Clean dust or mud away from brake components with water and a wet, soft brush or cloth. Failure to follow this warning may result in serious illness or death to personnel.

NOTE

It may be necessary to back off brake adjustment to remove brakedrum (para 4-18).

4. Remove hub (19) and brakedrum (5) as an assembly from axle spindle.

TA510727

4-37. HUB, WHEEL BEARING, AND BRAKEDRUM MAINTENANCE (Con't).

b. DISASSEMBLY

NOTE

Do not separate hub and brakedrum unless replacement of either Is necessary.

1. Remove oil seal (22) and inner bearing (21). Discard oil seal.

NOTE

Lockwashers are not used on M197.

2. Remove ten nuts (6), lockwashers (7), bolts (1), and access cover (8) from brakedrum (5). Remove brakedrum and deflector (M197 and M198 only) (2) from hub (19). Discard lockwashers.

3. If ribbed bolts (3) or adapter plate (4) are damaged, drive ribbed bolts out of hub (19) and adapter plate. Remove adapter plate from hub if replacement is required.

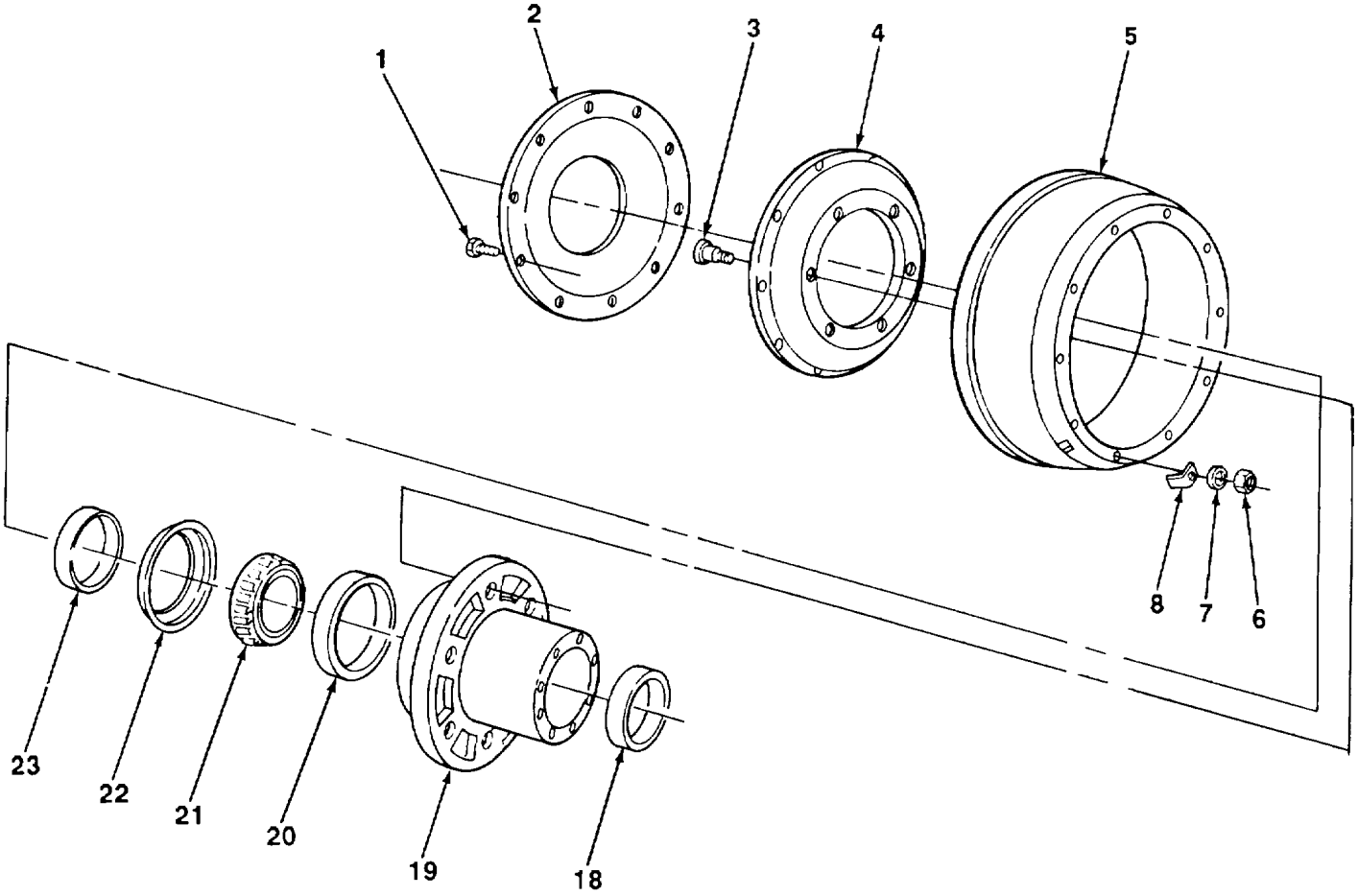

TA510728

4-37. HUB, WHEEL BEARING, AND BRAKEDRUM MAINTENANCE (Con't).

NOTE

If inner and outer bearing cups require replacement, bearings and cups are replaced as a set.

4. If damaged, pull bearing cups (18 and 20) out of hub (19) using bearing puller
5. If damaged, remove wiper ring (23) from axle spindle using bearing puller or drift.

c. CLEANING AND INSPECTION

WARNING

•DO NOT handle brakeshoes, brakedrums, or other brake components unless area has been properly cleaned. There may be asbestos dust on these components which can be dangerous if you touch it or breathe it. Wear an approved filter mask and gloves. Never use compressed air or a dry brush to clean brake components. Dust may be removed using an industrial-type vacuum cleaner. Clean dust or mud away from brake components with water and a wet, soft brush or cloth. Failure to follow this warning may result in serious illness or death to personnel.

•Dry cleaning solvent, P-D-680, is toxic and flammable. Always wear protective goggles and gloves, and use only in a well-ventilated area. Avoid contact with skin, eyes, and clothes, and DO NOT breathe vapors. DO NOT use near open flame or excessive heat. The solvent's flash point is 1000F-138°F (380C-590C). If you become dizzy while using cleaning solvent, immediately get fresh air and medical help. If solvent contacts eyes, Immediately wash your eyes and get medical aid.

1. Clean all parts with dry cleaning solvent and dry thoroughly.
2. Clean and inspect bearings and bearing cups in accordance with TM 9-214.
3. Visually inspect inside of brakedrum for out-of-round condition or scoring. Replace brakedrum if scored or out-of-round.
4. Inspect all parts for cracks, breaks, corrosion, or other damage. Replace all damaged parts.

d. ASSEMBLY

1. If removed, install wiper ring (23) on axle spindle using oil seal replacer.
2. Coat inner surface of hub (19) with a thin layer of grease.

NOTE

If inner and outer bearing cups require replacement, bearings and cups are replaced as a set.

3. If removed, press or drive bearing cups (18 and 20) into hub (19) until seated on shoulder in hub.
4. If removed, position adapter plate (4) against hub (19) and press in ribbed bolts (3).

NOTE
Lockwashers are not used on M1 97.

5. Install brakedrum (5) and deflector (M197 and M198 only) (2) on adapter plate (4) and access cover (8) on brakedrum using ten bolts (1), new lockwashers (7), and nuts (6).

4-37. HUB, WHEEL BEARING, AND BRAKEDRUM MAINTENANCE (Con't).

e. INSTALLATION

1. Pack inner bearing i21) with grease and install in hub (19).
2. Tap new oil seal (22) into hub (19).
3. Install hub (19) and brakedrum (5) as an assembly on axle spindle.
4. Pack outer bearing (17) with grease and install in hub (19).
5. Install keywasher (M197 and M197A1 only) (16) and inner bearing adjusting nut (15) on axle spindle. Do not tighten nut.

f. WHEEL BEARING ADJUSTMENT

1. While turning brakedrum (5), tighten inner bearing adjusting nut (15) until hub (19) binds on axle spindle.
2. Back off inner bearing adjusting nut (15) about Y turn or until hub (19) rotates freely on axle spindle.
3. Try to rock brakedrum (5) on axle spindle. There should be no movement noticeable between brakedrum and edge of brake backing plate. A slight drag caused by lubricant and a new oil seal will be apparent on well-adjusted bearings.

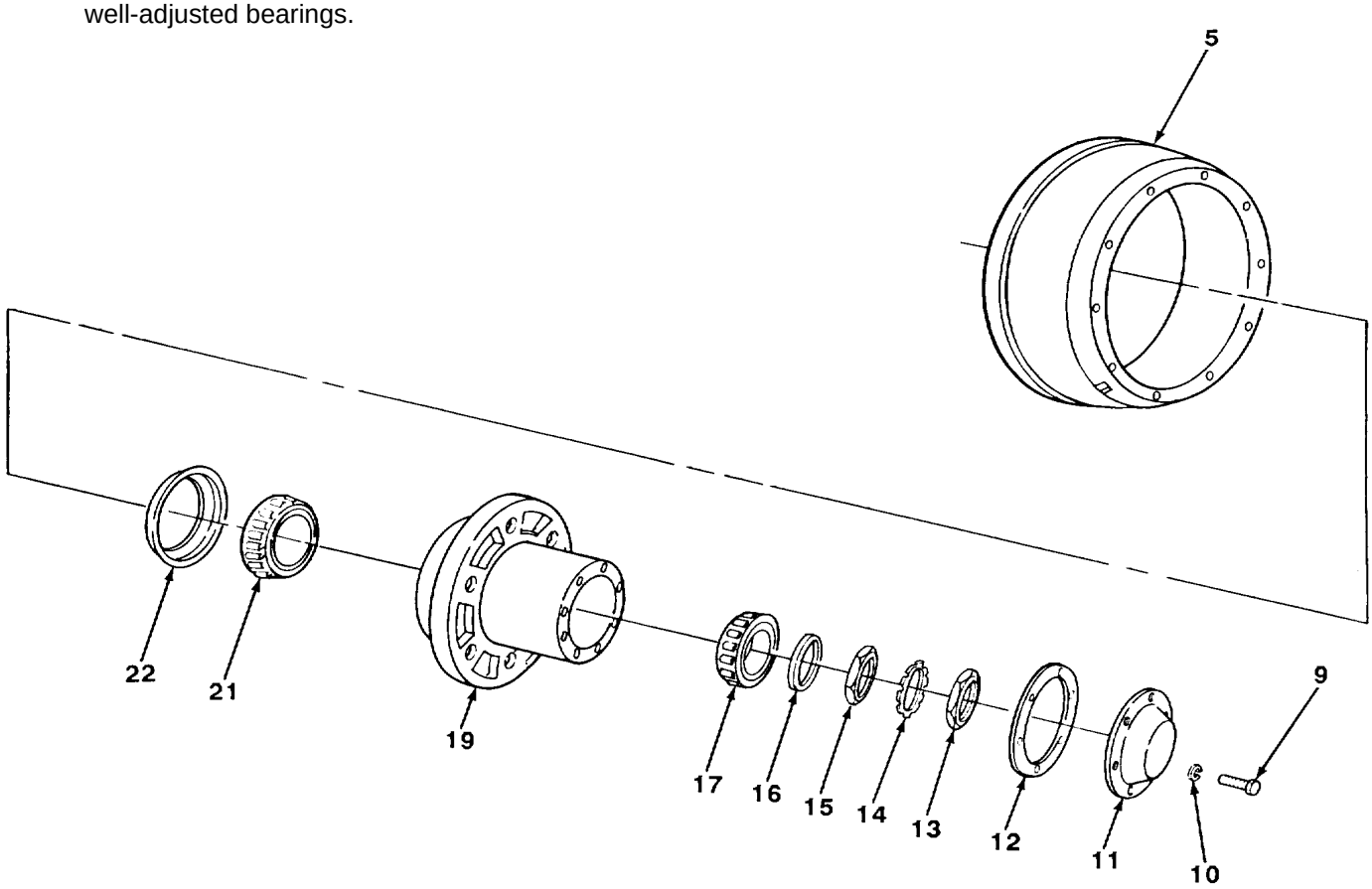

TA510729

4-37. HUB, WHEEL BEARING, AND BRAKEDRUM MAINTENANCE (Con't).

4. Install keywasher (14) on axle spindle. Ensure that internal key engages slot in axle spindle. Bend external key over flat portion of inner bearing adjusting nut (15). If corner of nut interferes with key, back off nut until key can be locked over nut, then repeat step 3.

5. Install outer bearing nut (not installed on M197A1) (13) and lock with keywasher (14).

6. Install new gasket (12) and hub cap (11) on hub (19) using six new lockwashers (10) and bolts (9).

FOLLOW-ON TASKS:

- Install wheel and tire assembly (para 4-38).
- Adjust brakes (para 4-18).

4-38. WHEEL AND TIRE ASSEMBLY REPLACEMENT.

This Task Covers:
a. Removal b. Installation

Initial Setup:
Tools/Test Equipment:
- General mechanic's tool kit
- Jack
- Torque wrench

NOTE

•Nuts for the right wheel (marked R) have right-hand threads. Nuts for the left wheel(marked L) have left-hand threads.

•M1 98 and M198A1 have ten nuts securing Inner and outer wheel and tire assembly.

a. REMOVAL

1. Loosen six nuts (4) securing outer wheel and tire assembly (3).
2. Position jack under axle where wheel and tire assembly are to be removed. Raise axle until tires clear ground.
3. Remove six nuts (4) and outer wheel and tire assembly (3).
4. Remove six capnuts (5) and inner tire and wheel assembly (2) if replacement is required.

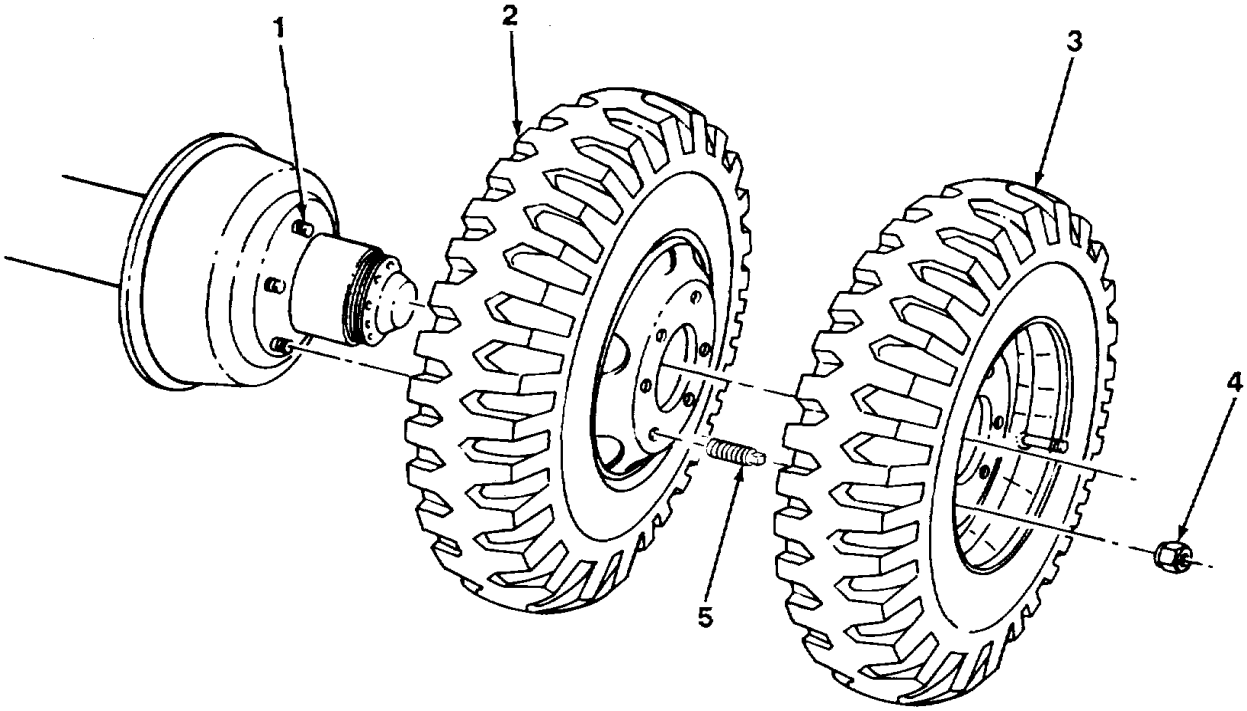

TA510730

4-38. WHEEL AND TIRE ASSEMBLY REPLACEMENT.

b. INSTALLATION

1. Install inner wheel and tire assembly (2) on studs (1) using six capnuts (5). Tighten capnuts alternately and evenly.

2. Block tires and torque capnuts (5) to 450-500 lb.-ft. (610-678 N-m).

3. Install outer wheel and tire assembly (3) using six nuts (4). Tighten nuts alternately and evenly.

4. Lower jack and remove from dolly.

5. Torque nuts (4) to 450-500 lb.-ft. (610-678 N-m).

4-38. WHEEL AND TIRE ASSEMBLY REPLACEMENT.

Repair tires and tubes in accordance with TM 9-2610-200-14.

Section IX. FRAME AND TOWING ATTACHMENTS MAINTENANCE

4-40. RETAINING STRAP REPLACEMENT.

This Task Covers:

a. Removal b. Installation

Initial Setup:

Tools/Test Equipment:

- General mechanic's tool kit

a. REMOVAL

Remove two capscrews (1) and retaining strap (2) from frame.

b. INSTALLATION

Install retaining strap (2) to frame using two capscrews (1).

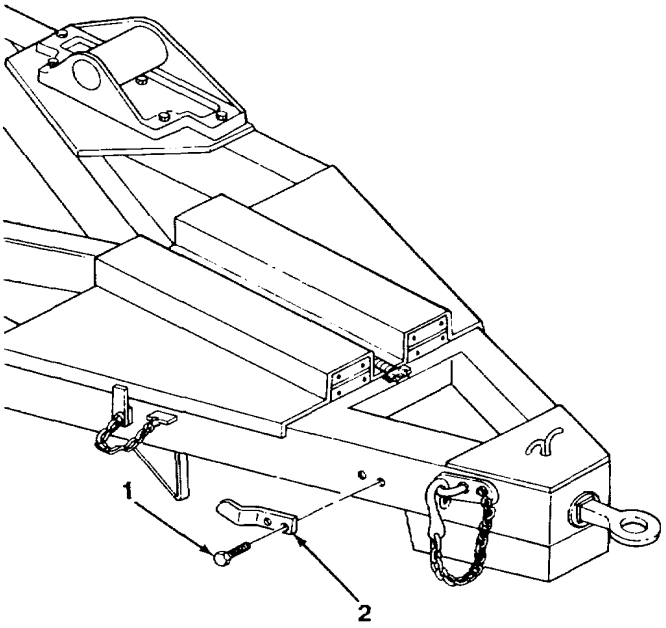

TA510731

4-41. RETAINING HOOK REPLACEMENT.

This Task Covers:

a. Removal

b. Installation

Initial Setup:

Materials/Parts:

- One cotter pin

Tools/Test Equipment:

- General mechanic's tool kit

a. REMOVAL

1. Remove cotter pin (4), washer (3), and spring (2) from retaining hook (1).

2. Remove retaining hook (1) from frame. Discard cotter pin.

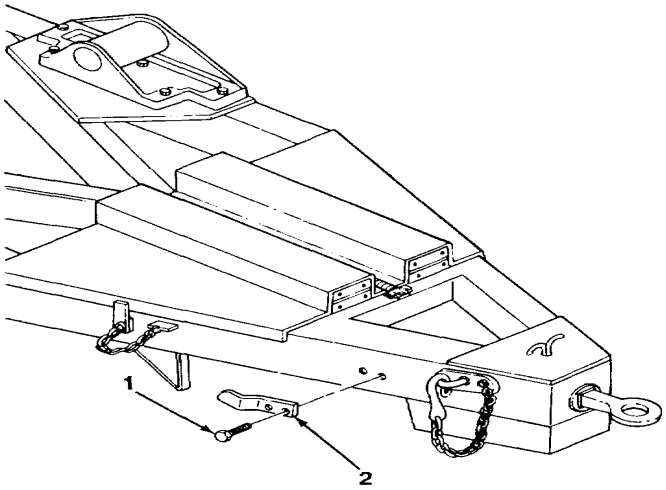

TA510731

b. INSTALLATION

1. Install retaining hook (1) in frame.

2. Install spring (2) and washer (3) on retaining hook (1) and secure with new cotter pin (4).

TA510732

4-42. SPRING MOUNTING BRACKET REPLACEMENT (M198A1).

This Task Covers:

a. Removal

b. Installation

Initial Setup:

Equipment Conditions:

- Spring assembly removed (para 4-50).
- Radius rod removed (rear bracket only) (para 4-51).

Materials/Parts:

- Five lockwashers

Tools/Test Equipment:

- General mechanic's tool kit

a. REMOVAL

NOTE

There are four spring mounting brackets. All are removed in the same manner.

Remove five nuts (2), lockwashers (3), and capscrews (4) from spring mounting bracket (1). Remove spring mounting bracket from frame. Discard lockwashers.

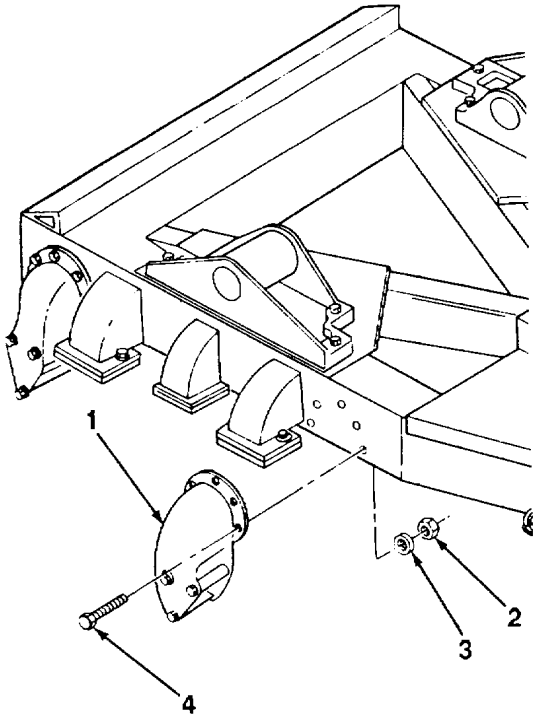

b. INSTALLATION

NOTE

There are four spring mounting brackets. All are installed in the same manner.

Install spring mounting bracket (1) on frame using five capscrews (4), new lockwashers (3), and nuts (2).

FOLLOW-ON TASKS:

- Install radius rod (rear bracket only) (para 4-51).
- Install spring assembly (para 4-50).

TA510733

4-43. SPRING WEAR PLATE REPLACEMENT (M197 AND M198).

This Task Covers:

a. Removal

b. Installation

Initial Setup:

Materials/Parts:

- Two lockwashers

Tools/Test Equipment:

- General mechanic's tool kit

a. REMOVAL

NOTE

There are four spring wear plates. All are removed in the same manner.

Remove two capscrews (1) and lockwashers (2) from spring wear plate (3). Remove spring wear plate from frame. Discard lockwashers.

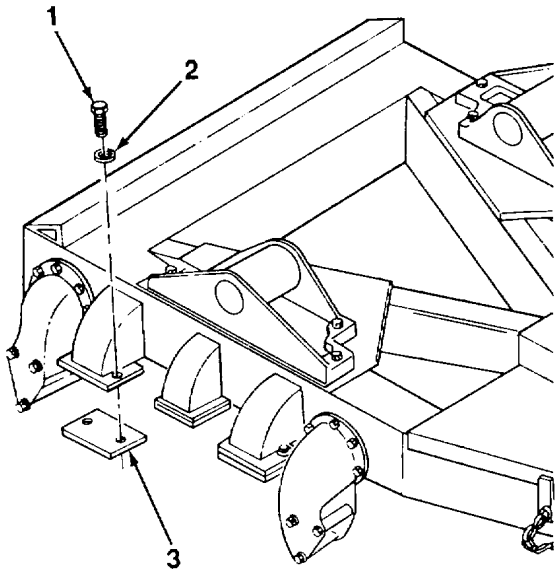

b. INSTALLATION

NOTE

There are four spring wear plates. All are Installed in the same manner.

Install spring wear plate (3) on frame using two capscrews (1) and new lockwashers (2).

TA510734

4-44. LUNETTE REPLACEMENT.

This Task Covers:
a. Removal
b. Installation

Initial Setup:

Materials/Parts:

- One cotter pin

Tools/Test Equipment:

- General mechanic's tool kit

a. REMOVAL

1. Remove cotter pin (1) and nut (2) securing lunette (4) to frame. Discard cotter pin.
2. Remove lunette (4) and washer (3).

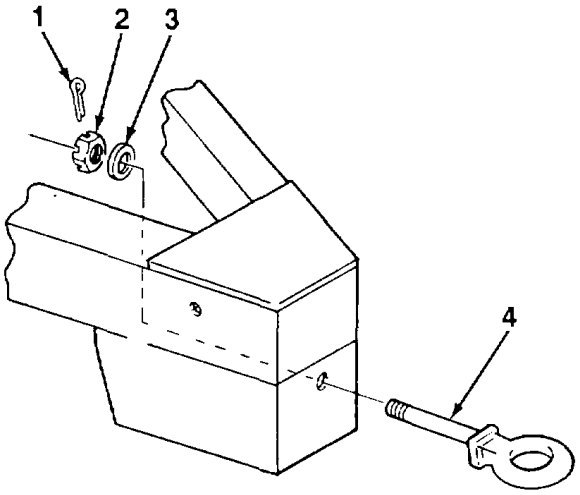

b. INSTALLATION

NOTE

On M1 98 and M1 98A1, lunette may be installed in either of two positions. Install lunette in position required to match pintle on towing vehicle.

1. Install lunette (4) through hole in frame.
2. Install washer (3) and nut (2) on lunette (4).
3. Secure nut (2) with new cotter pin (1).

TA510735

4-45. SAFETY CHAIN REPLACEMENT.

This Task Covers:

a. Removal (M197 and M198)
b. Installation (M197 and M198)
c. Removal (M197A1 and M198A1)
d. Installation (M19781 and M198A1)

Initial Setup:

Materials/Parts:
- One lockwasher (M197 and M198)
- Two lockwashers (M197A1 and M198A1)

Tools/Test Equipment:
- General mechanic's tool kit

a. REMOVAL (M197 AND M198)

1. Remove nut (1), lockwasher (2), and washer (3) securing eyebolt (6) and safety chain (5) to frame. Discard lockwasher.

2. Remove eyebolt (6), safety chain (5), and washer (4) from frame.

b. INSTALLATION (M1 97 AND M198)1

1. Install eyebolt (6), safety chain (5), and washer (4) on frame using washer (3), new lockwasher (2), and nut (1).

2. Hook safety chain (5) to eyebolt (6).

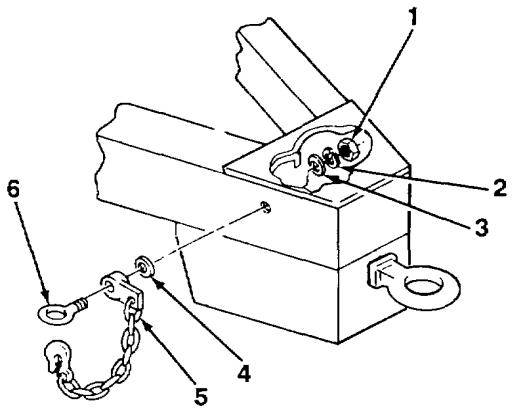

M197 AND M198

c. REMOVAL (M197A1 AND M198Al)

1. Remove two nuts (8) and lockwashers (7) from U-bolt (10). Discard lockwashers.

2. Remove U-bolt (10), safety chain (11), two washers (13), and plate (9) from frame.

3. Remove two nuts (12) from U-bolt (10).

d. INSTALLATION (M197A1 AND M198A1)

1. Install two nuts (12) on U-bolt (10).

2. Install safety chain (11), U-bolt (10), two washers (13), and plate (9) on frame using two new lockwashers (7) and nuts (8).

3. Hook safety chain (11) to U-bolt (10).

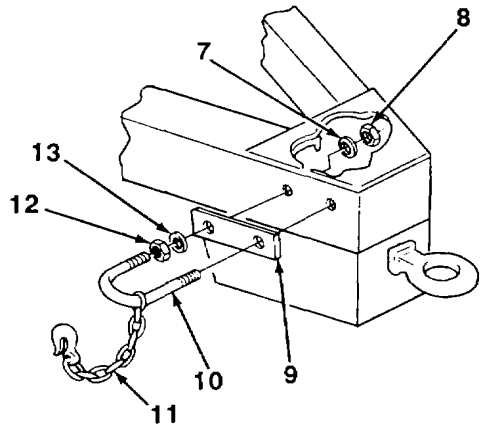

M197A1 AND M198A1

TA510736

4-46. FIFTH WHEEL MAINTENANCE.

This Task Covers:

a. Removal
b. Disassembly
c. Cleaning and Inspection
d. Assembly
e. Installation

Initial Setup:

Materials/Parts:

- Dry cleaning solvent (Item 5, Appendix E)
- Grease (Item 6, Appendix E)
- Five lubrication fittings
- Seven cotter pins
- Thirteen lockwashers

Tools/Test Equipment:

- General mechanic's tool kit
- Hoist

Personnel Required: Two

a. REMOVAL

1. Position dolly under hoist.

2. Remove lubrication fitting (2) from each anchor bracket (8). Discard lubrication fittings.

NOTE

On M197, M198, and M198A1 one capscrew is of different length. Note location to ensure correct installation.

3. Remove six nuts (5), lockwashers (6), and capscrews (1) from each anchor bracket (8). Discard lockwashers.

WARNING

Remove anchor brackets from shaft before fully hoisting fifth wheel from dolly. Failure to do so could cause anchor brackets to fall off and damage equipment or injure personnel.

4. Using hoist, raise fifth wheel (3) enough to remove anchor brackets (8) from shaft (4) and mounting plate (7) from dolly.

5. Lift fifth wheel (3) away from dolly.

b. DISASSEMBLY

1. Lower fifth wheel (3) and place upside down on suitable work surface.

2. Remove nut (10), lockwasher (9), and capscrew (13) securing shaft (4) to fifth wheel (3). Discard lockwasher.

3. Remove cotter pin (11) from each collar (12). Discard cotter pins.

4. Remove shaft (4) and two collars (12) from fifth wheel (3).

4-46. FIFTH WHEEL MAINTENANCE (Con't).

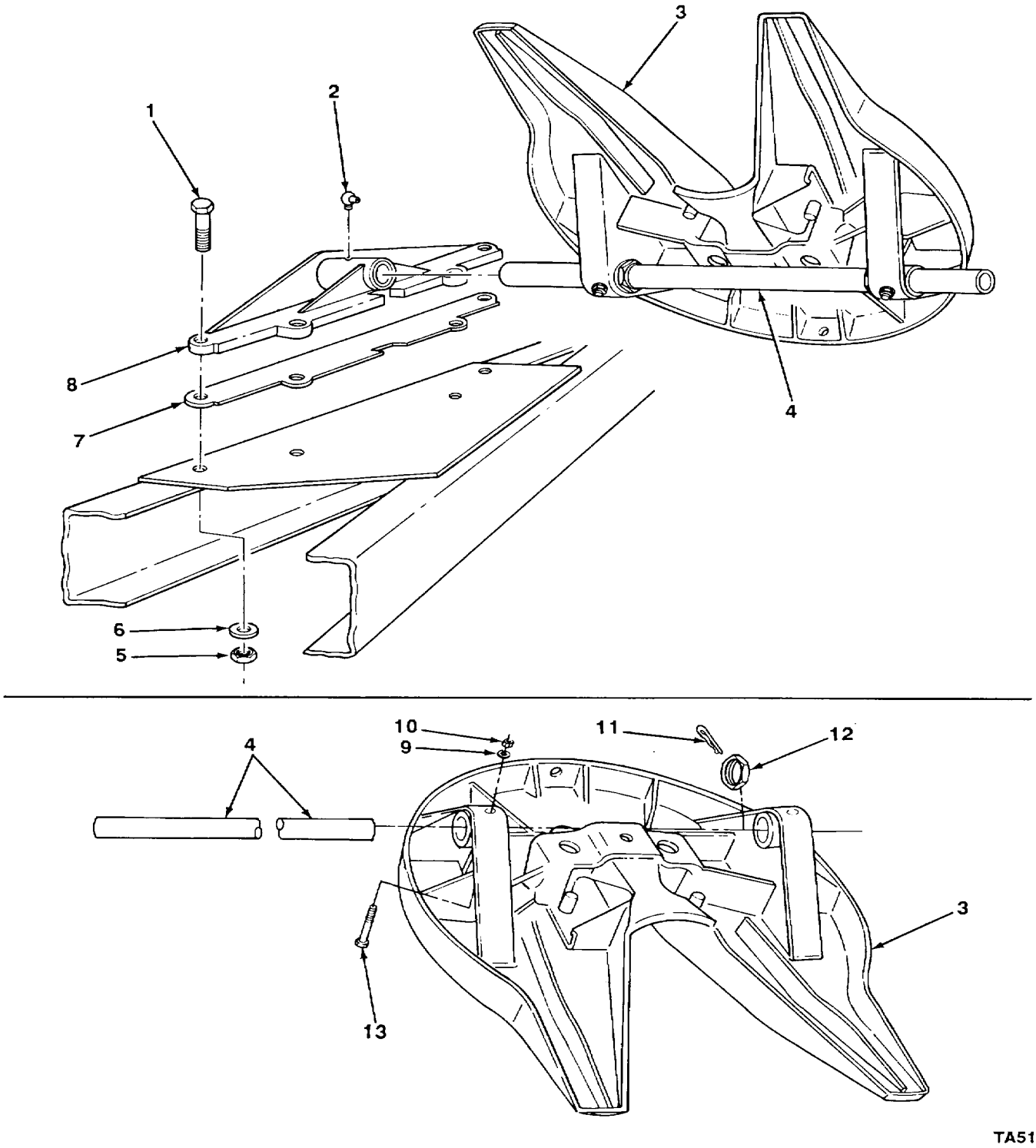

4-46. FIFTH WHEEL MAINTENANCE (Con't).

5. Remove cotter pin (14) from each wheel coupling pin (17). Discard cotter pins.

6. Remove two wheel coupling pins (17), washers (18), coupler jaws (16), and lubrication fittings (15) from fifth wheel (3). Discard lubrication fittings.

7. Remove shouldered bolt (33) and lock (32).

8. Unhook and remove spring (30) from fifth wheel (3) and latch (34).

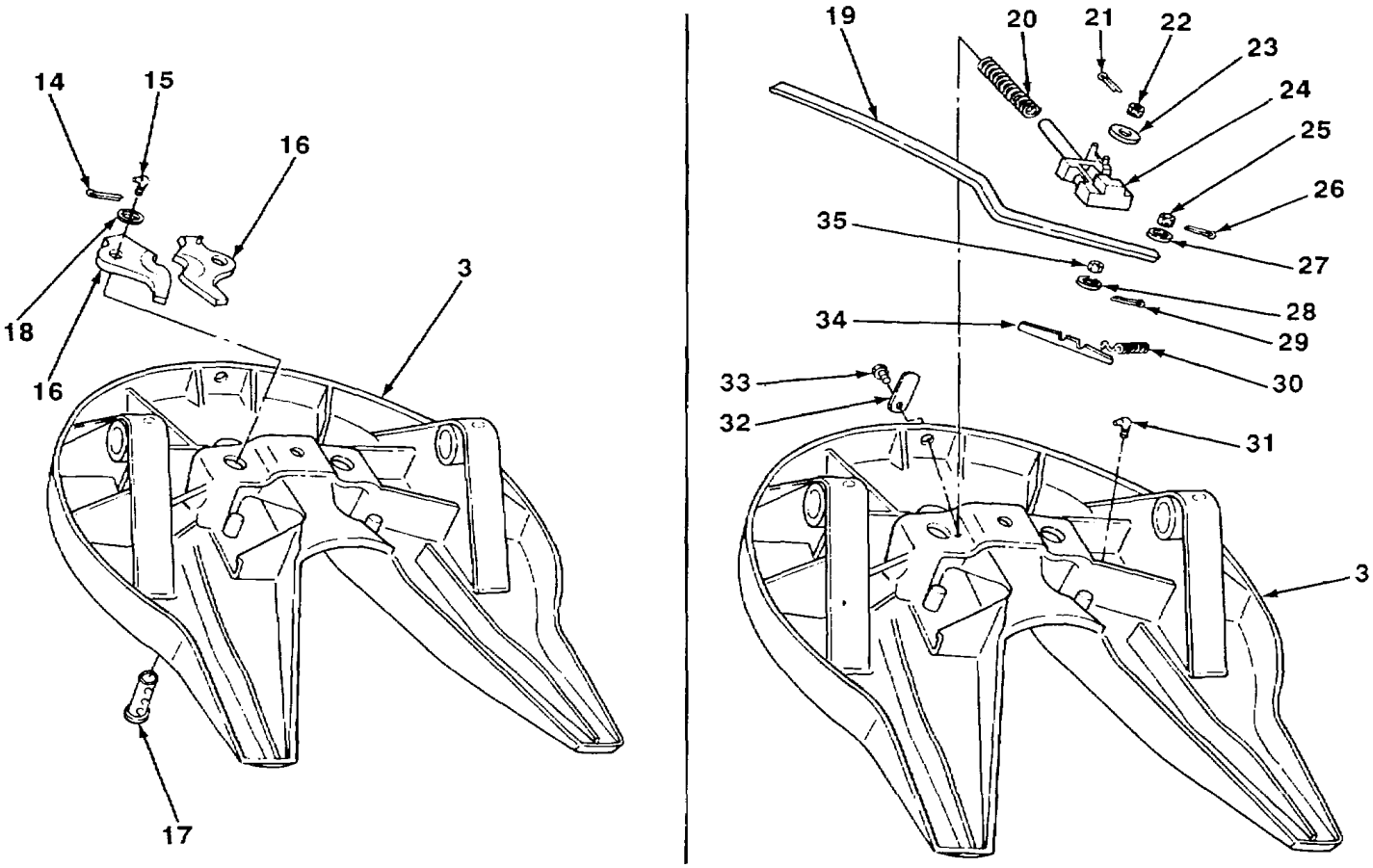

9. Remove cotter pin (29), nut (35), washer (28), and latch (34) from fifth wheel (3). Discard cotter pin.

10. Remove cotter pin (21), nut (22), washer (23), plunger (24), and spring (20) from fifth wheel (3). Discard cotter pin.

11. Remove cotter pin (26), nut (25), washer (27), and lever (19) from fifth wheel (3). Discard cotter pin.

12. Remove lubrication fitting (31) from fifth wheel (3). Discard lubrication fitting.

TA510738

4-46. FIFTH WHEEL MAINTENANCE (Con't).

c. CLEANING AND INSPECTION

WARNING

Dry cleaning solvent, P-D-680, is toxic and flammable. Always wear protective goggles and gloves, and use only in a well-ventilated area. Avoid contact with skin, eyes, and clothes, and DO NOT breathe vapors. DO NOT use near open flame or excessive heat. The solvent's flash point is 100°F-138°F (38 OC-59°C). If you become dizzy while using cleaning solvent, immediately get fresh air and medical help. If solvent contacts eyes, Immediately wash your eyes and get medical aid.

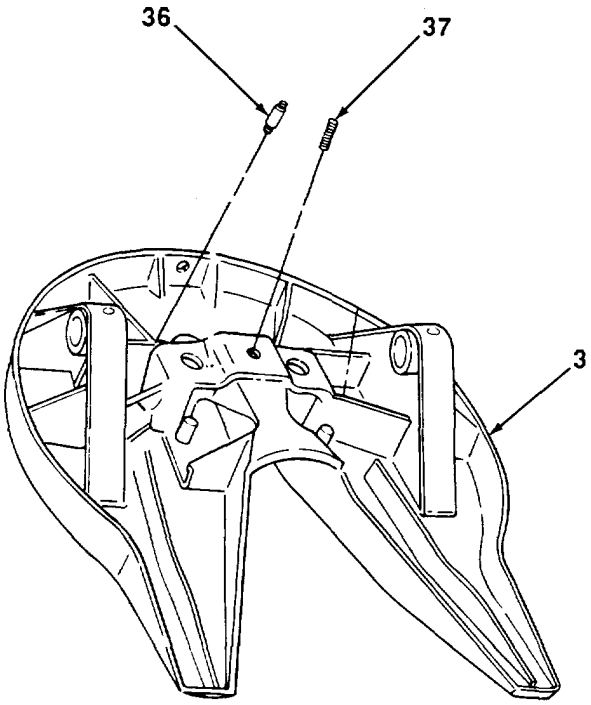

1. Clean all parts with dry cleaning solvent and dry thoroughly.

2. Inspect all parts for cracks, distortion, damaged threads, excessive corrosion, or other damage. Replace all damaged parts.

3. Check studs (36 and 37) in fifth wheel (3). If damaged, remove and replace.

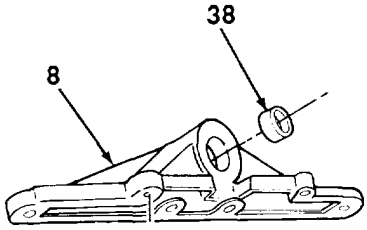

4. Inspect sleeve bearings (38) in anchor brackets (8) for damage. If damaged, press out and replace.

d. ASSEMBLY

1. Install lever (19) using washer (27), nut (25), and new cotter pin (26). Nut must be loose enough to allow operation of lever.

2. Lightly lubricate spring (20) and plunger (24) with grease. Install plunger and spring using washer (23), nut (22),and new cotter pin (21). Nut must be loose enough to allow operation of plunger.

3. Install latch (34) using washer (28), nut (35), and new cotter pin (29). Nut must be loose enough to allow operation of latch.

4. Hook spring (30) to latch (34) and fifth wheel (3).

5. Install lock (32) using shouldered bolt (33).

6. Install new lubrication fitting (31) in fifth wheel.

TA510739

4-46. FIFTH WHEEL MAINTENANCE (Con't).

7. Lubricate two washers (18), wheel coupling pins (17), and coupler jaws (16) with grease. Install coupler jaws using wheel coupling pins, washers, and new cotter pins'(14).

8. Install two new lubrication fittings (15).

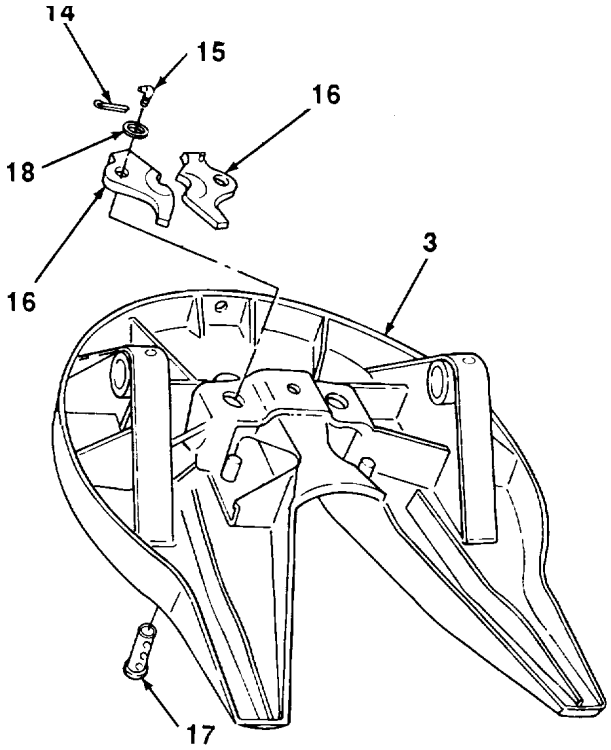

9. Slide two collars (12) onto shaft (4). Install shaft in fifth wheel (3). Install two new cotter pins (11) to secure collars.

10. Install capscrew (13), new lockwasher (9), and nut (10) to secure shaft (4) to fifth wheel (3).

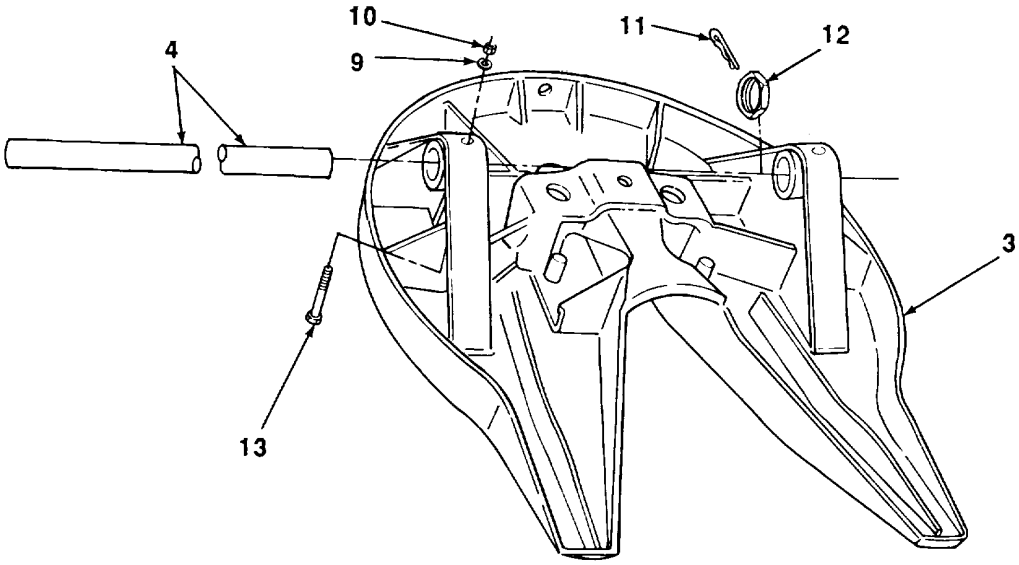

TA510740

4-46. FIFTH WHEEL MAINTENANCE (Con't).

e. INSTALLATION

1. Using hoist, raise fifth wheel (3) into position over dolly. Align holes in mounting plate (7) with holes on dolly, and position mounting plate on dolly.

WARNING

Use extreme caution to ensure that anchor brackets do not fall from shaft while lowering fifth wheel into position on dolly. Failure to do so could cause anchor brackets to fall off and damage equipment or Injure personnel.

2. Slide two anchor brackets (8) onto shaft (4).

3. Lower fifth wheel (3) with anchor brackets on mounting plate (7) aline holes and secure each anchor bracket (8) to frame using six capscrews (1), new lockwashers (6), and nuts (5).

4. Install new lubrication fitting (2) in each anchor bracket (8).

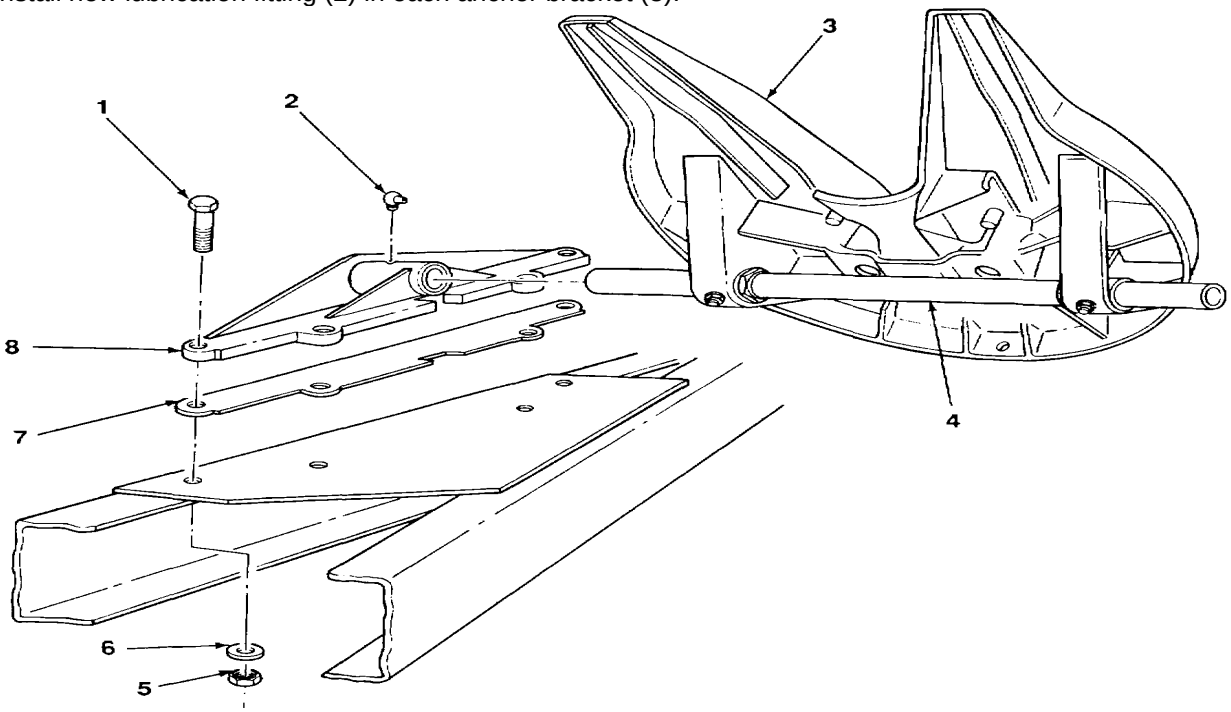

FOLLOW-ON TASKS:
- Lubricate fifth wheel (Chapter 3, Section I)
- Couple semitrailer to dolly and check operation of fifth wheel (para 2-11).

4-47. LANDING LEG BRACE REPLACEMENT.

This Task Covers:

a. Removal

b. Installation

Initial Setup:

Materials/Parts:

- Two cotter pins

Tools/Test Equipment:

- General mechanic's tool kit
- Two jackstands

a. REMOVAL

1. Support front of dolly frame with jackstands.
2. Remove safety clip (1) from pin (4). Release pin securing brace (6) to landing leg or bracket on front of frame. Allow brace to rest on ground.
3. Remove two cotter pins (2) and washers (3) securing brace (6) to bolts welded to frame. Remove brace. Discard cotter pins.
4. If damaged, remove chain and pin assembly (5) and safety clip from brace (6).

e. INSTALLATION

1. If removed, install chain and pin assembly (5) and safety clip on brace (6).
2. Install brace (6) on bolts welded to frame using two washers (3) and new cotter pins (2).
3. Secure brace (6) to landing leg or bracket on front of frame with pin (4).
4. Remove jackstands from dolly frame.
5. Install safety clip (1)' into pin (4).

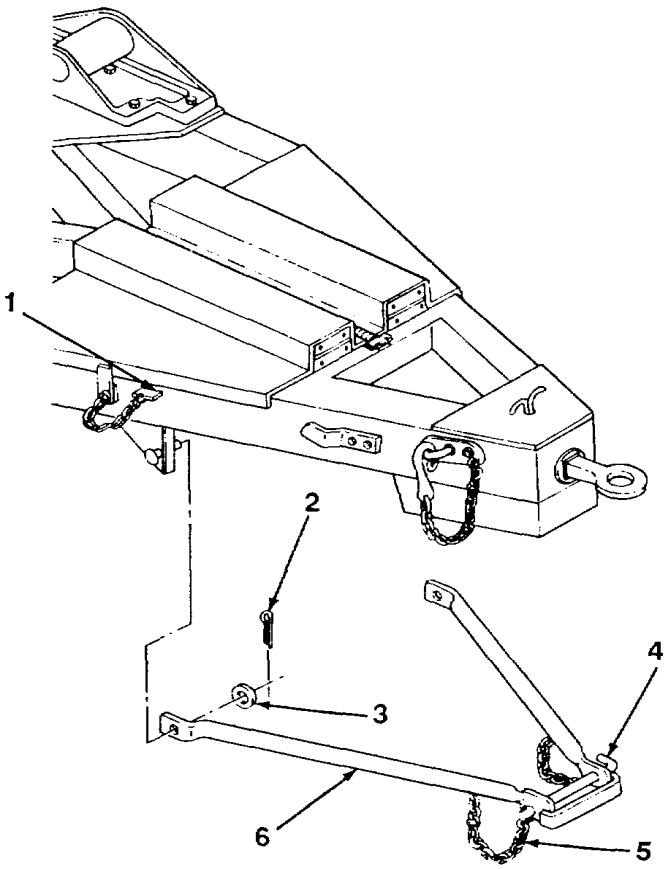

TA510742

4-47. LANDING LEG BRACE REPLACEMENT.

This Task Covers:

a. Removal
b. Disassembly
c. Cleaning and Inspection
d. Assembly
e. Installation

Initial Setup:

Materials/Parts:

- Detergent (Item 4, Appendix E)
- Dry cleaning solvent (Item 5, Appendix E)
- Grease (Item 6, Appendix E)
- One cotter pin
- One pin
- Two locknuts (M 197A1)
- Four lockwashers

Tools/Test Equipment:

- General mechanic's tool kit
- Two jackstands

a. REMOVAL

1. Support front end of dolly frame with jackstands.

2. Disconnect landing leg brace from landing leg (1) para 2-10).

3. Raise landing leg (1) to traveling position and remove frontward nut (2), lockwasher (3), and screw (5) from retainer (4) on landing leg. Discard lockwasher.

4. With landing leg (1) still in traveling position, remove center nut (2), lockwasher (3), and screw (5) from retainer (4) on landing leg. Discard lockwasher.

5. Pull landing leg (1) forward and up as much as possible. Remove rearmost nut (2), lockwasher (3), and screw (5) from retainer (4) on landing leg. Remove landing leg and retainer. Discard lockwasher.

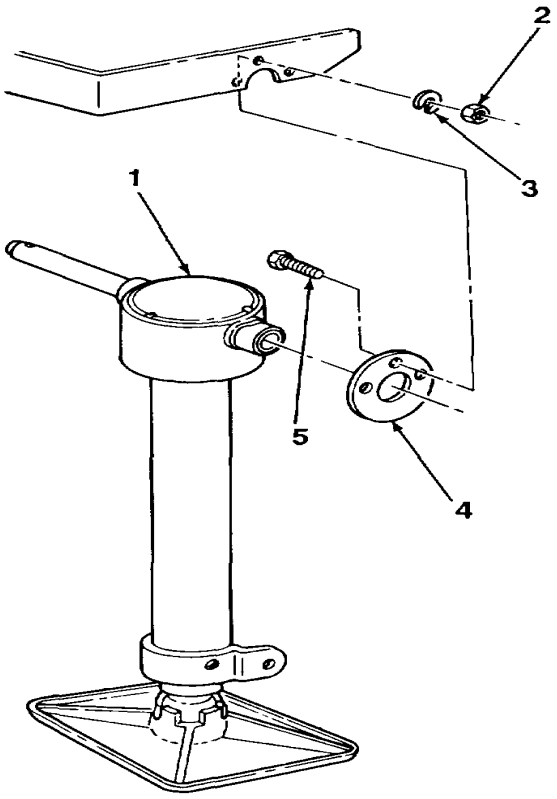

TA510743

4-48. LANDING LEG MAINTENANCE.

a. REMOVAL

1. If shoe (6) is damaged, heat tangs on shoe and bend them away from knuckle on inner leg (41). Remove shoe from knuckle.

2. On M197A1, remove two locknuts (12) and screws (10). Remove bracket (11) and spacer (13) from inner leg (41). Discard locknuts.

3. Turn handcrank (21) until inner leg (41) is fully extended.

4. Remove nut (7), setscrew (8), and two screws (9).

5. Remove inner leg (41) from screw (40). Remove collar (42) from inner leg.

6. Remove nut (24), lockwasher (23), screw (22), and handcrank (21) from swivel (26). Discard lockwasher.

7. Remove cotter pin (20) from screw (25). Discard cotter pin.

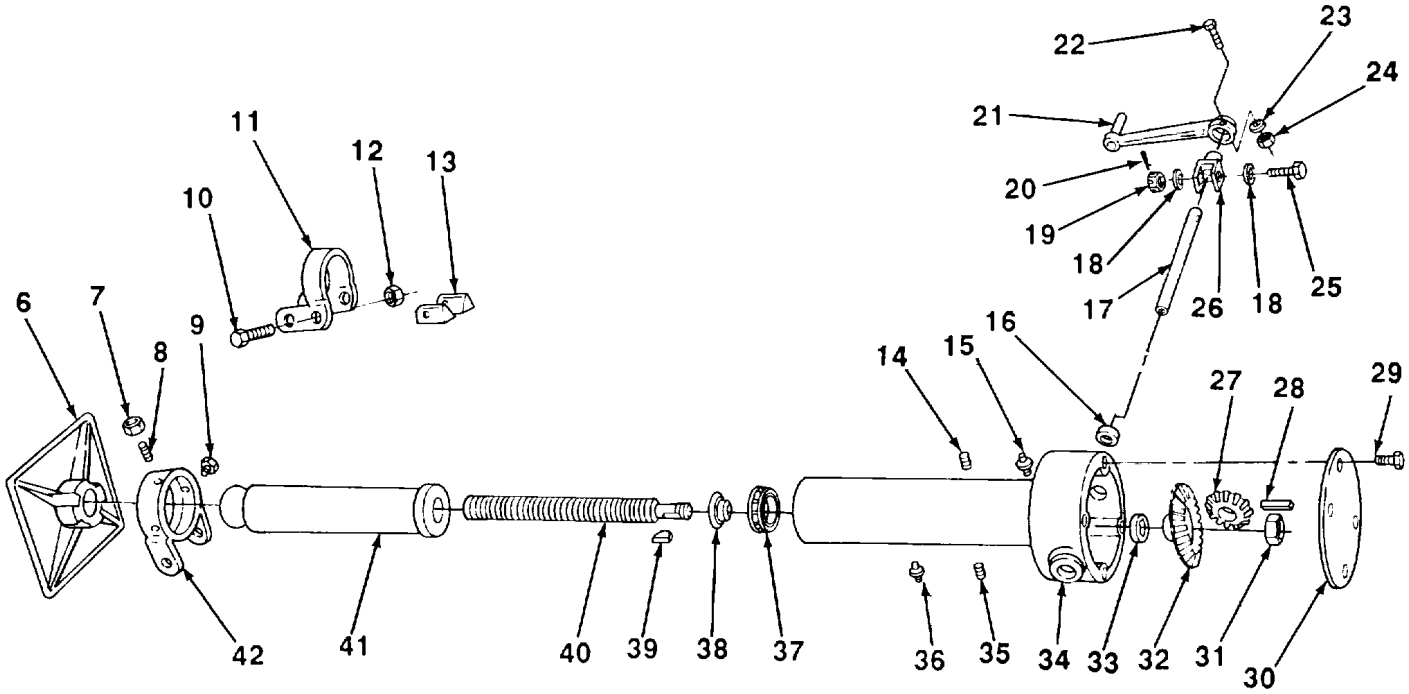

8. Remove nut (19), two washers (18), screw (25), and swivel (26) from shaft (17).

9. Remove four screws (29) and cover (30) from outer leg (34).

10. Remove plug (35) from outer leg (34).

11. Drive pin (28) out of shaft (17) and gear (27). Remove shaft and gear from outer leg (34). Discard pin.

12. Remove nut (31), gear (32), key (39), and bearing (33) from screw (40).

TA510744

4-48. LANDING LEG MAINTENANCE (Cont't)

13. Remove screw (40), spacer (38), and bearing (37) from outer leg (34).

14. Remove plug (14) from outer leg (34).

c. CLEANING AND INSPECTION

WARNING

Dry cleaning solvent, P-D-680, is toxic and flammable. Always wear protective goggles and gloves, and use only in a well-ventilated area. Avoid contact with skin, eyes, and clothes, and DO NOT breathe vapors. DO NOT use near open flame or excessive heat. The solvent's flash point is 100°F-1380F (38°C-59°C). If you become dizzy while using cleaning solvent, immediately get fresh air and medical help. If solvent contacts eyes, Immediately wash your eyes and get medical aid.

1. Clean all metal parts with dry cleaning solvent. Clean all other parts with detergent and water. Dry all parts thoroughly.

2. Inspect all parts for cracks, distortion, damaged threads, excessive corrosion, or other damage. Replace all damaged parts.

3. If damaged, drive two sleeve bushings (16) out of outer leg (34) and replace.

4. If damaged, remove two lubrication fittings (15 and 36) and replace.

d. ASSEMBLY

1. Install plug (14) in outer leg (34).

2. Install bearing (37), spacer (38), and screw (40) in outer leg (34).

3. Install bearing (33), key (39), gear (32), and nut (31) on end of screw (40).

4. Install shaft (17) and gear (27). Secure gear to shaft using new pin (28).

5. Install plug (35) in outer leg (34).

6. Pack gears (27 and 32) with grease.

7. Install cover (30) on outer leg (34) using four screws (29).

8. Install swivel (26) on shaft (17) using screw (25), two washers (18), and nut (19). Secure nut to screw using new cotter pin (20).

9. Install handcrank (21) on swivel (26) using screw (22), new lockwasher (23), and nut (24).

10. Install collar (42) on inner leg (41) using two screws (9), setscrew (8), and nut (7). Screw inner leg onto screw 40).

11. On M197A1, install spacer (13) and bracket (11) on inner leg (41) using two screws (10) and new locknuts (12).

12. If shoe (6) was removed, position knuckle on inner leg (41) in tangs of shoe. Heat tangs and form them around knuckle. Allow sufficient clearance to permit shoe to rotate on knuckle.

4-48. LANDING LEG MAINTENANCE (Cont't)

e. INSTALLATION

1. Position landing leg (1) and retainer (4) under frame. Extend landing leg forward and up as much as possible until rear retainer hole Is alined with hole in frame. Insert rearmost screw (5) from inside and secure with new lockwasher (3) and nut (2).

2. Extend inner leg until holes are alined with center and forward hole on retainer. Insert center screw (5) from inside and secure with new lockwasher (3) and nut (2).

3. Insert frontward screw (5) from inside and secure with new lockwasher (3) and nut (2).

4. Lubricate landing leg (Chapter 3, Section I).

5. Check operation of landing leg (para 2-2).

6. Lower landing leg (1) to ground and connect landing leg brace to landing leg (para 2-14).

7. Remove jackstands used to support front of dolly frame.

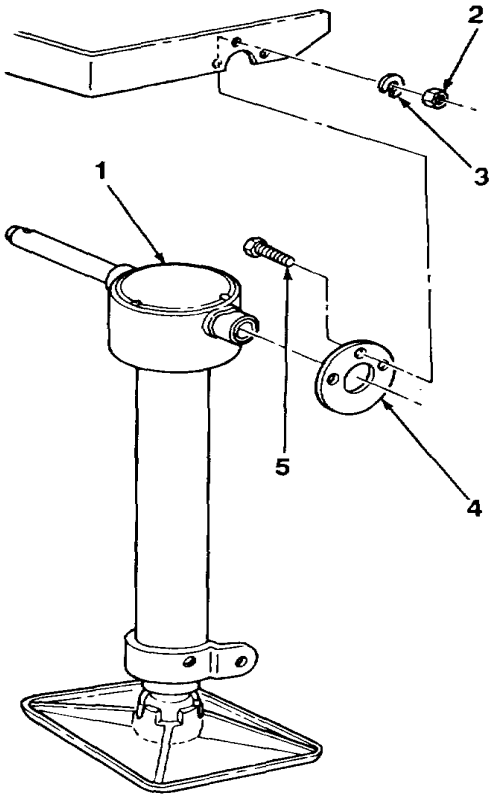

TA510745

Section X. SPRINGS AND RADIUS RODS MAINTENANCE

4-49. SPRING ASSEMBLY REPLACEMENT (M197 AND M198).

This Task Covers:

a. Removal
b. Cleaning and Inspection
c. Installation

INITIAL SETUP:

Materials/Parts:
- Detergent (Item 4, Appendix E)
- Dry cleaning solvent (Item 5, Appendix E)
- Rags (Item 12, Appendix E)
- One cotter pin
- Two locknuts
- Five lockwashers

Tools/Test Equipment:
- General mechanic's tool kit
- Jack
- Two jackstands

Personnel Required: Two

4-49. SPRING ASSEMBLY REPLACEMENT (M197 AND M198) (Con't.).

a. REMOVAL

1. Using jack, raise axle on side where spring assembly (4) is to be removed.
2. Remove wheel and tire assemblies (para 4-38).
3. Remove cotter pin (19), nut (20), and fluid passage bolt (2). Discard cotter pin.
4. Raise frame sufficiently to remove weight of dolly from spring assembly (4) and support on two jackstands.
5. Remove nut (14), lockwasher (13), screw (11), and spacer (12). Discard lockwasher.
6. Remove four sleeve nuts (7), lockwashers (6), and two U-bolts (18) securing axle to spring assembly (4). Discard lockwashers.
7. Lower axle enough so that spring assembly (4) can be removed from spring seat. Remove spring assembly and mounting plate (5).
8. On M1 98, remove block (16) and pin (17) from spring seat.

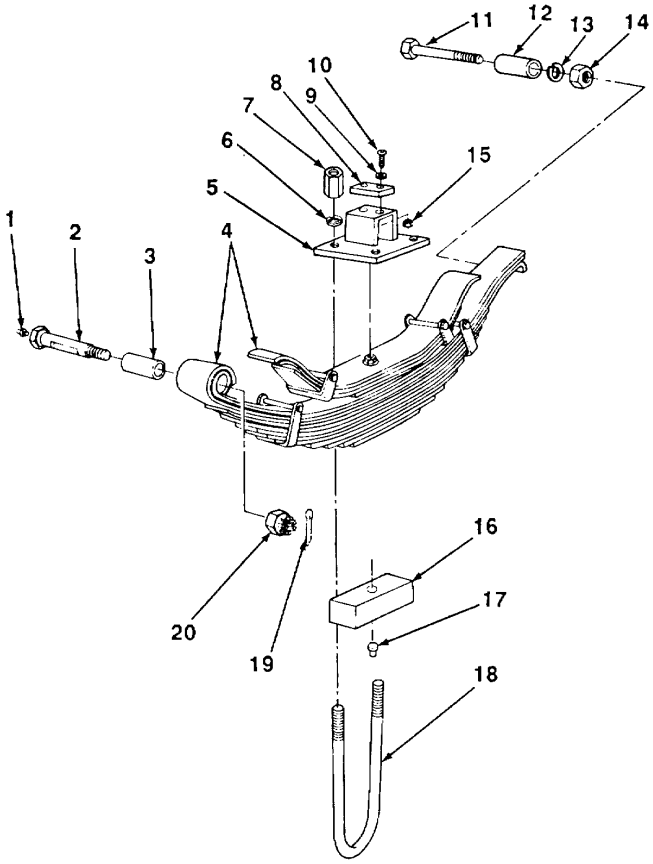

TA510746

4-49. SPRING ASSEMBLY REPLACEMENT (M197 AND M198) (Con't.).

9.Remove two screws (10), washers (9), locknuts (15), and pad (8) from mounting plate (5). Discard locknuts.

10.If damaged, remove grease fitting (1) from fluid passage bolt (2). Discard grease fitting.

b. CLEANING AND INSPECTION

WARNING

Dry cleaning solvent, P-D-680, is toxic and flammable. Always wear protective goggles and gloves, and use only In a well-ventilated area. Avoid contact with skin, eyes, and clothes, and DO NOT breathe vapors. DO NOT use near open flame or excessive heat. The solvent's flash point is 100°F-138°F (38°C-59°C). If you become dizzy while using cleaning solvent, Immediately get fresh air and medical help. If solvent contacts eyes, immediately wash your eyes and get medical aid,

1.Clean all metal parts with dry cleaning solvent. Clean all other parts with detergent and water. Dry all parts thoroughly.

2.Inspect sleeve bearing (3) for damage. If damaged, remove entire spring assembly.

3.Inspect all parts for cracks, distortion, damaged threads, excessive corrosion, or other damage. If any leaf spring is damaged, replace entire spring assembly.

4.Replace all damaged parts.

c. INSTALLATION

1.Install pad (8) on mounting plate (5) using two screws (10), washers (9), and new locknuts (15).

2.On M198, position pin (17) and block (16) on spring seat.

3.Position spring assembly (4) on spring seat in alinement with front and rear spring brackets. Position mounting plate (5) on top of spring assembly.

4.Secure spring assembly (4) to axle using two U-bolts (18), four new lockwashers (6), and sleeve nuts (7).

5.Raise axle until outer ends of spring assembly (4) are alined with front and rear spring brackets.

6.Install screw (11) and spacer (12) and secure with new lockwasher (13) and nut (14).

7.Install fluid passage bolt (2) and secure with nut (20) and new cotter pin (19).

8.If removed, install new grease fitting (1) in fluid passage bolt (2).

9.Install wheel and tire assembly (para 4-38).

10.Remove jackstands and lower frame and axle.

FOLLOW-ON TASKS:

- Lubricate spring assembly (Chapter 3, Section I).

4-50. SPRING ASSEMBLY REPLACEMENT ((M197A1 AND M198A1).

This Task Covers:

a. Removal
b. Cleaning and Inspection
c. Installation

Initial Setup:

Materials/Parts:

- Adhesive (Item 1, Appendix E)
- Detergent (Item 4, Appendix E)
- Dry cleaning solvent (Item 5, Appendix E)
- Rags (Item 12, Appendix E)
- Two cotter pins
- Four lockwashers

Tools/Test Equipment:

- General mechanic's tool kit
- Jack
- Two Jackstands

Personnel Required: Two

a. REMOVAL

1.Using jack, raise axle on side where spring assembly (21) is to be removed.

2.Remove wheel and tire assemblies (para 4-38).

3.Raise frame sufficiently to remove weight from spring assembly (21) and support on two jackstands.

4.Remove two cotter pins (4), nuts (3), and bolts (1) from two spring brackets (2 and 16). Discard cotter pins.

5.Remove two nuts (14 and 13) and screw (22) from end of radius rod (5) and bracket (15).

6.Loosen setscrew (6) in radius rod (5).

7.Remove two packing retainers (12), bushings (11), washers (7), and spacer (23) from bracket (15).

8.Remove four nuts (9), washers (10), and two U-bolts (20).

9.Lower axle enough to allow removal of spring assembly (21) and bracket (15) from spring seat.

10.Remove two setscrews (19) from each shaft (18). Remove shaft and roller (17) from each spring bracket (2 and 16).

11.If damaged, remove bumper (8) from bracket (15).

b. CLEANING AND INSPECTION

WARNING

Dry cleaning solvent, P-D-680, is toxic and flammable. Always wear protective goggles and gloves, and use only in a well-ventilated area. Avoid contact with skin, eyes, and clothes, and DO NOT breathe vapors. DO NOT use near open flame or excessive heat. The solvent's flash point is 100°F-138°F (38°C-59°C). If you become dizzy while using cleaning solvent, Immediately get fresh air and medical help. If solvent contacts eyes, immediately wash your eyes and get medical aid,

1.Clean all metal parts with dry cleaning solvent. Clean all other parts with detergent and water. Dry all parts thoroughly.

4-50. SPRING ASSEMBLY REPLACEMENT ((M197A1 AND M198A1) (Con't).

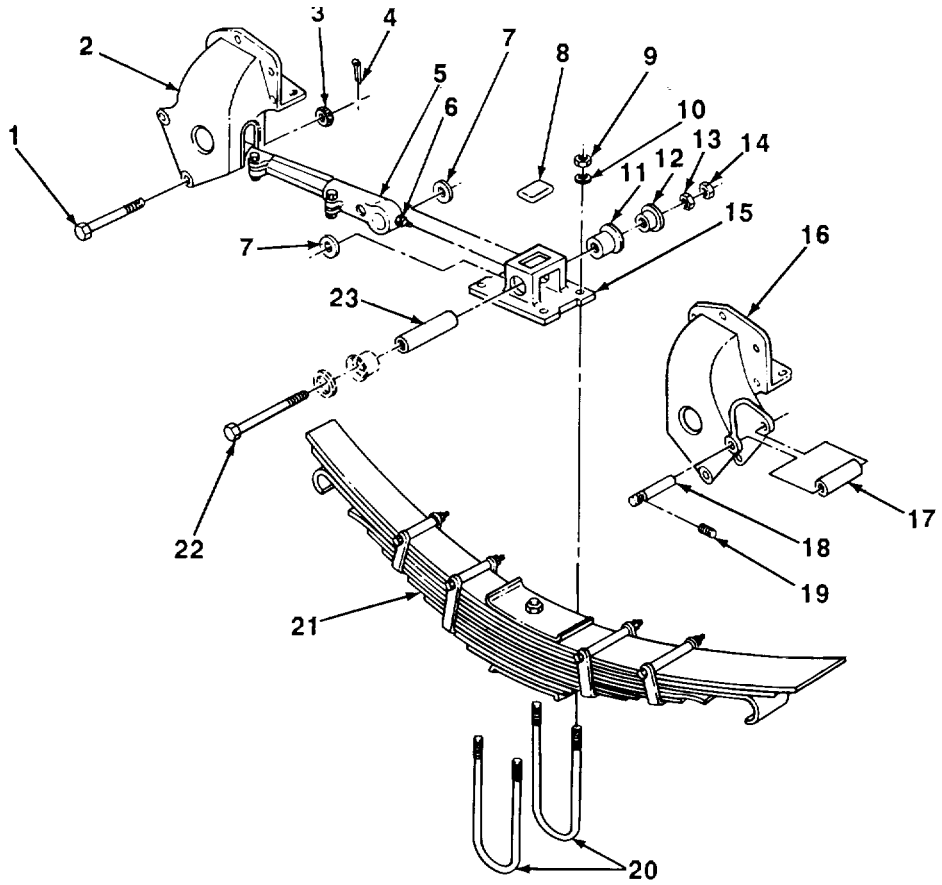

2.Inspect all parts for cracks, distortion, damaged threads, excessive corrosion, or other damage. If any leaf spring is damaged, replace entire spring assembly.

3.Replace all damaged parts.

c. INSTALLATION

1.If bumper (8) was removed, thoroughly clean and dry bumper recess in bracket (15). Cement new bumper to bracket using adhesive.

2.Install roller (17) and shaft (18) in each spring bracket (2 and 16). Install two setscrews (19) in each shaft.

3.Position spring assembly (21) on spring seat in alinement with spring brackets (2 and 16).

4.Position bracket (15) on top of spring assembly (21).

5.Install two U-bolts (20) using four washers (10) and nuts (9).

6.Install two washers (7) on radius rod (5).

TA510747

4-50. SPRING ASSEMBLY REPLACEMENT ((M197A1 AND M198A1) (Con't).

NOTE
Use detergent and water solution on bushings to ease assembly.

7.Raise axle and position radius rod (5) for installation. Install two bushings (11), spacer (23), and two packing retainers (12).

8.Install screw (22) two nuts (13 and 14).

9.Tighten setscrew (6) in radius rod (5).

10.Raise axle until outer ends of spring assembly (21) bear against rollers (17).

11.Install bolt (1), nut (3), and new cotter pin (4) in spring brackets (2 and 16)

12.Install wheel and tire assembly (para 4-38).

13.Remove jackstands and lower frame.

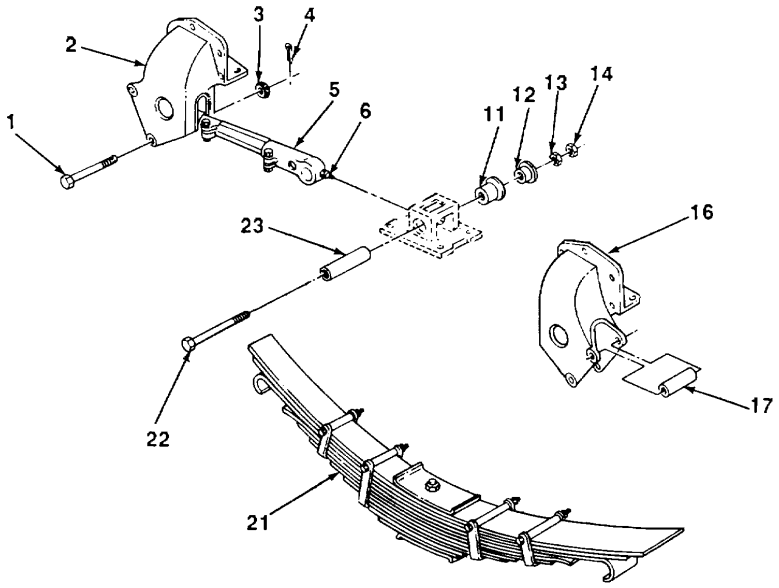

FOLLOW-ON TASKS:

- Adjust radius rods (para 4-51).

TA510748

4-51. RADIUS ROD MAINTENANCE (M197A1 AND M198A1).

This Task Covers:

a. Removal
b. Cleaning and Inspection
c. Installation
d. Adjustment

Initial Setup:

Materials/Parts:

- Detergent (Item 4, Appendix E)
- Dry cleaning solvent (Item 5, Appendix E)
- Rags (Item 12, Appendix E)

Tools/Test Equipment:

- General mechanic's tool kit
- Jack
- Jackstand

a. REMOVAL

NOTE

Adjustable and fixed radius rods are removed the same way. This task covers adjustable radius rod replacement.

1.Remove wheel and tire assemblies (para 4-38). Support axle with a jackstand.

2.Loosen two nuts (13). Turn radius rod spacer (10) to relieve tension on bushings (5).

3.Loosen setscrew (12) at each end of radius rod (9).

4.Remove two nuts (1 and 2) and screw (7) from spring bracket (6) and bracket (11) at each end of radius rod (9).

5.Remove two packing retainers (3), bushings (5), spacer (4), and two washers (8) from each end of radius rod (9). Remove radius rod from spring bracket (6) and bracket (11).

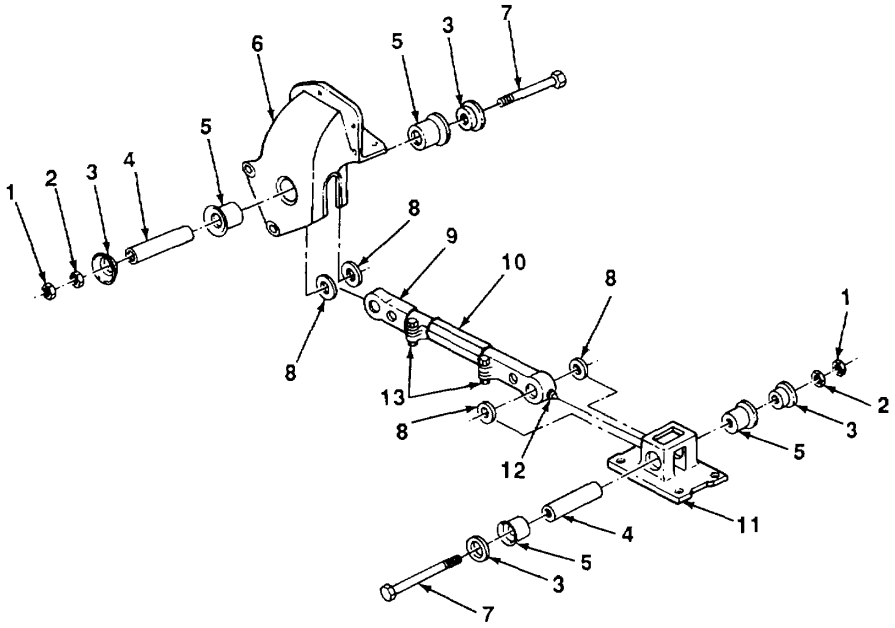

TA510749

4-51. RADIUS ROD MAINTENANCE (M197A1 AND M198A1) (Con't).

b. CLEANING AND INSPECTION

WARNING

Dry cleaning solvent, P-D-680, is toxic and flammable. Always wear protective goggles and gloves, and use only in a well-ventilated area. Avoid contact with skin, eyes, and clothes, and DO NOT breathe vapors. DO NOT use near open flame or excessive heat. The solvent's flash point is 100°F-138°F (38°C-59°C). If you become dizzy while using cleaning solvent, Immediately get fresh air and medical help. If solvent contacts eyes, immediately wash your eyes and get medical aid,

1.Clean all metal parts with dry cleaning solvent. Clean all other parts with detergent and water. Dry all parts thoroughly.

2.Inspect all parts for cracks, distortion, damaged threads, excessive corrosion, or other damage. Replace all damaged parts.

3.Inspect radius rod for bends or damaged threads. Remove burrs using fine file.

c. INSTALLATION

1.Install two washers (8) on each end of radius rod (9).

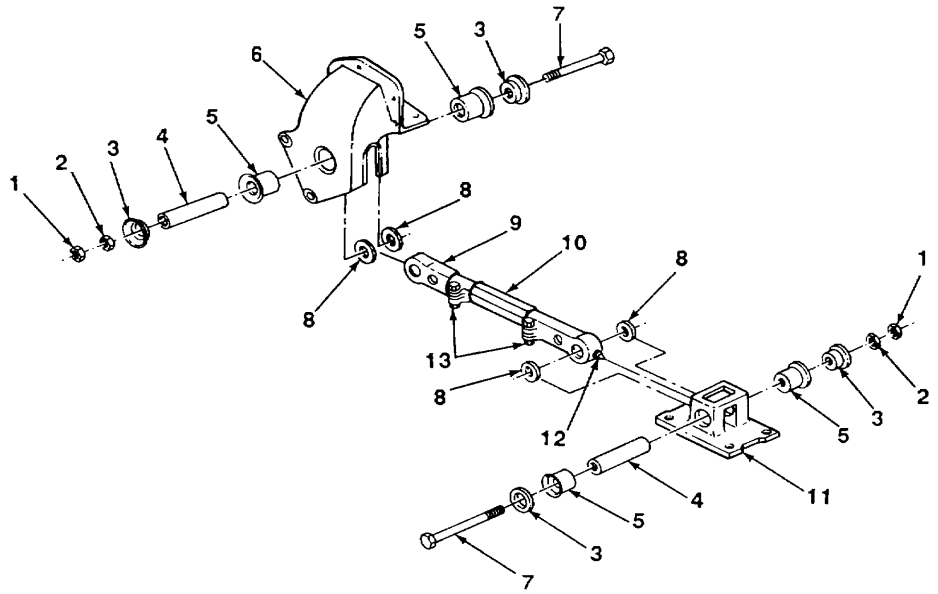

TA510750

4-51. RADIUS ROD MAINTENANCE (M197A1 AND M198A1) (Con't).

NOTE
Use detergent and water solution on bushings to ease Installation.

2.Position radius rod (9) for installation in bracket (11) and spring bracket (6). Install two bushings (5), spacer (4), and two packing retainers (3) on each end of radius rod.
3.Install screw (7) at each end of radius rod (9) and secure with two nuts (2 and 1).
4.Tighten setscrew (12) at each end of radius rod (9).
5.Install wheel and tire assembly (para 4-38).
6.Remove jackstand and lower axle.
7.Adjust radius rod (subpara d).

d. ADJUSTMENT

1.Loosen two nuts (13) securing radius rod spacer (10) to rod ends.

NOTE
Centerline of dolly Is a line passing through center of lunette and center of fifth wheel.

2.Turn radius rod spacer (10) clockwise or counterclockwise as necessary to bring centerline of axle into perpendicular alinement with centerline of dolly.

3.Tighten two nuts (13).

Section XI. BODY MAINTENANCE

4-52. STOWAGE COMPARTMENT COVER REPLACEMENT.

This Task Covers:

a. Removal

b. Installation

Initial Setup:

Materials/Parts:

- Four lockwashers

Tools/Test Equipment:

- General mechanic's tool kit

a. REMOVAL

1.Release clip and chain assembly (7) from hasp (8) on each side and open cover assembly (6).

2.Remove four nuts (5), lockwashers (4), washers (2), and screws (1) from two guards (3). Discard lockwashers.

3.Remove guards (3) and cover assembly (6).

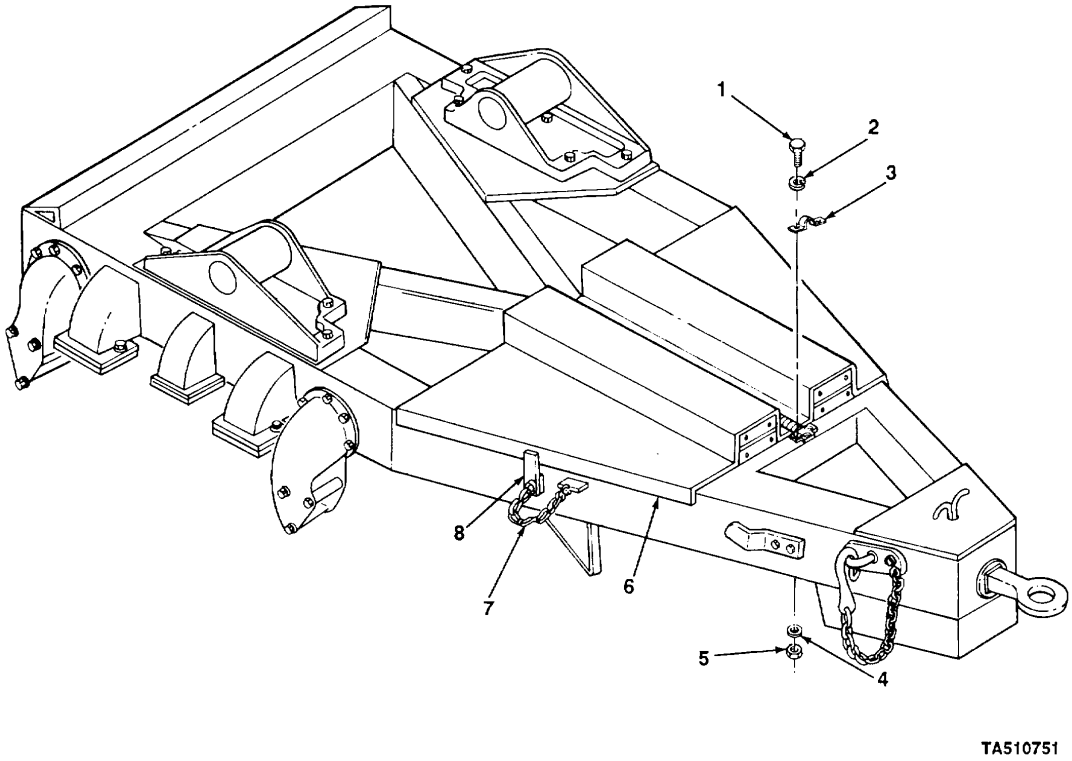

4-52. STOWAGE COMPARTMENT COVER REPLACEMENT (Con't).

b. INSTALLATION

1.Position cover assembly (6) for installation.
2.Install two guards (3) using four screws (1), washers (2), new lockwashers (4), and nuts (5).
3.Close cover assembly (6). Secure clip and chain assembly (7) to hasp (8) on each side.

Section XII. ACCESSORY ITEMS MAINTENANCE

4-53. REFLECTOR REPLACEMENT.

This Task Covers:

a. Removal

b. Installation

Initial Setup:

Tools/Test Equipment:

- General mechanic's tool kit

a. REMOVAL

Remove two screws (2) and reflector (1) from frame.

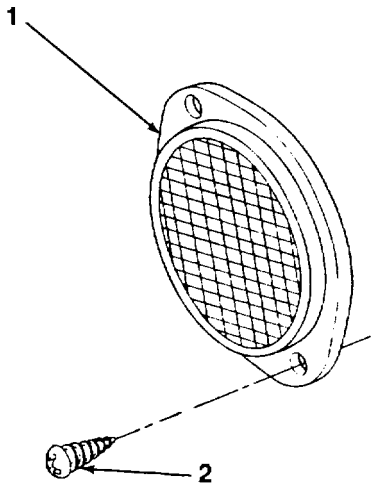

b. INSTALLATION

Install reflector (1) on frame using two screws (2).

TA510752

4-54. DATA PLATE REPLACEMENT.

This Task Covers:

a. Removal

b. Installation

Initial Setup:

Tools/Test Equipment:

- General mechanic's tool kit

a. REMOVAL

1.Remove six screws (1) and data plate (2) from frame.

2On M197 and M1 98, remove two screws (4) and data plate (3) from frame.

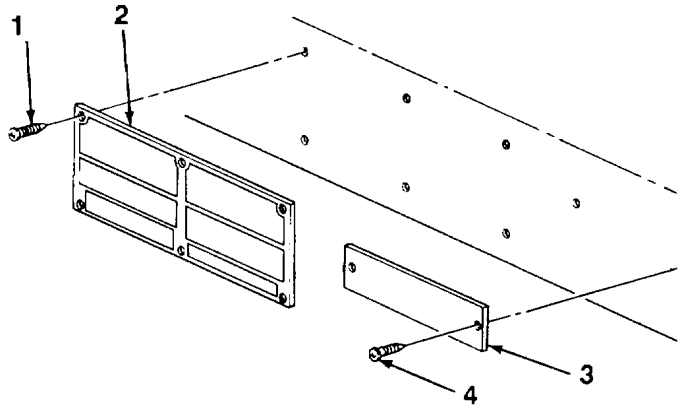

b. INSTALLATION

1.On M197 and M198, install data plate (3) to frame using two screws (4).

2.Install data plate (2) to frame using six screws (1).

TA510753

Section XIII. PREPARATION FOR STORAGE OR SHIPMENT

4-55. GENERAL.

a. This section contains requirements and procedures for administrative storage of equipment that is issued to and in use by Army activities worldwide.

b. The requirements specified herein are necessary to maintain equipment in administrative storage in such a way as to achieve the maximum readiness condition.

c. Equipment that is placed in administrative storage should be capable of being readied to perform its mission within 24 hours, or as otherwise may be prescribed by the approving authority. Before equipment is placed in administrative storage, a current PMCS should be completed and deficiencies corrected.

d. Report equipment in administrative storage as prescribed for all reportable equipment.

e. Perform inspections, maintenance services, and lubrication as specified herein.

f. Records and reports to be maintained for equipment In administrative storage are those prescribed by DA Pam 738-750 for equipment in use.

g. A 10 % variance is acceptable on time, running hours, or mileage used to determine required maintenance actions.

h. Accomplishment of applicable PMCS, as mentioned throughout this section, will be on a quarterly basis.

4-56. DEFINITION OF ADMINISTRATIVE STORAGE.

The placement of equipment in administrative storage can be for short periods of time when a shortage of maintenance effort exists. Items should be ready for use within the time factors determined by the directing authority. During storage appropriate records will be kept.

4-57. PREPARATION OF EQUIPMENT FOR ADMINISTRATIVE STORAGE.

a. **Storage Site**.

(1) Select the best available site for administrative storage. Separate stored equipment from equipment in use. Conspicuously mark the area "Administrative Storage".

(2) Covered space is preferred.

(3) Open sites should be improved hardstand, if available. Unimproved sites should be firm, well drained, and free of excessive vegetation.

b. **Storage Plan**.

(1) Store equipment so as to provide maximum protection from the elements and to provide access for inspection, maintenance, and exercising. Anticipate removal or deployment problems and take suitable precautions.

4-57. PREPARATION OF EQUIPMENT FOR ADMINISTRATIVE STORAGE (Con't).

(2) Take into consideration environmental conditions such as extreme heat or cold; high humidity; blowing sand, dust, or loose debris; soft ground; mud; heavy snows; or any combinations thereof, and take adequate precautions.

(3) Establish a fire plan and provide adequate fire fighting equipment and personnel.

c. Maintenance Service and Inspection.

(1) Maintenance Service. Prior to storage, perform the next scheduled organizational PMCS.

(2) Inspection. Inspect and approve the equipment prior to storage. Do not place nonmission-capable equipment in storage.

d. Auxiliary Equipment and Basic Issue Items.

Process auxiliary equipment and basic issue items simultaneously with the major end item to which they are assigned.

(2) If possible, store auxiliary equipment and basic Issue items with the major item.

(3) If stored apart from the major item, mark auxiliary equipment and basic issue items with tags indicating the major item, its registration or serial number, and location, and store in protective type closures. In addition, place a tag or list indicating the location of the removed items in a conspicuous place on the major item.

e. Correction of Shortcomings and Deficiencies. Correct all shortcomings and deficiencies prior to storage, or obtain a deferment from the approving authority.

f. Lubrication. Lubricate equipment in accordance with instructions in Chapter 3, Section I.

g. General Cleaning, Painting, and Preservation.

CAUTION

Do not direct water or steam, under pressure, against unsealed electrical systems or any exterior opening if it will damage a component.

(1) **Cleaning.** Clean the equipment of dirt, grease, and other contaminants but do not use vapor degreasing.

(2) **Painting**. Remove rust and damaged paint by scraping, wire brushing, sanding, or buffing. Sand to a smooth finish and spot paint as necessary (TB 43-0209).

(3) **Preservation**. After cleaning and drying, Immediately coat unpainted metal surfaces with oil or grease, as appropriate (Chapter 3, Section I).

CAUTION

Place a piece of barrier material (Item 2, Appendix E) between desiccant bags and metal surfaces to prevent corrosion.

NOTE

Air circulation under draped covers reduces deterioration from moisture and heat.

(4) **Weatherproofing**. Sunlight, heat, moisture (humidity), and dirt tend to accelerate deterioration. Install all covers (including vehicle protective closures) authorized for the equipment. Close and secure all openings except those required for venting and draining. Seal openings to prevent entry of rain, snow, or dust. Insert desiccant when complete seal is required. Place equipment and provide blocking or framing to allow for ventilation and water drainage. Support cover away from surfaces that may rust, rot, or mildew.

4-58. CARE OF EQUIPMENT IN ADMINISTRATIVE STORAGE.

a. **Maintenance Services**. After equipment has been placed in administrative storage, inspect, service, and exercise as specified herein.

b. **Inspection**. Inspection will usually be visual and must consist of at least a walk-around examination of all equipment to detect any deficiencies. Inspect equipment in open storage weekly and equipment in covered storage monthly. Inspect all equipment immediately after any severe storm or environmental change. The following are examples of things to look for during a visual inspection:

(1) Low or flat tires.
(2) Condition of preservatives, seals, and wraps.
(3) Torn, frayed, or split canvas covers and tops.
(4) Corrosion or other deterioration.
(5) Missing or damaged parts.
(6) Water in compartments.
(7) Any other readily recognizable shortcomings or deficiencies.

c. **Repair During Administrative Storage**. Keep equipment in an optimum state of readiness. Accomplish the required services and repairs as expeditiously as possible. Whenever possible, perform all maintenance on-site.

d. **Exercising**. Exercise equipment in accordance with Table 4-3 and the following instructions:

(1) **Vehicle Major Exercise.** Depreserve equipment by removing only that material restricting exercise. Close all drains, remove blocks, and perform all before-operation checks. Couple dolly to towing vehicle and drive for at least 25 mi (40 km). Make several right and left 900 turns. Make several hard braking stops without skidding. Do the following during exercising when it Is convenient: operate all other functional components and perform all during- and after-operation checks.

(2) **Scheduled Services**. Scheduled services will include inspection per paragraph 4-58b and will be conducted in accordance with Table 4-3. Lubricate in accordance with instructions in Chapter 3, Section I.

(3) **Corrective Action**. Immediately take action to correct shortcomings and deficiencies noted. Record inspection and exercise results on DA Form 2404. Record and report all maintenance actions on DA Form 2407. After exercising, restore the preservation to the original condition. Replenish lubricants used during exercising and note the amount on DA Form 2408.

e. **Rotation**. Rotate items in accordance with any rotational plan that will keep equipment in an operational condition and reduce the maintenance effort.

Table 4-3. Exercise Schedule.

Weeks	2	4	6	8	10	12	14	16	18	20	22	24
PMCS							X					X
Scheduled Services			X		X		X		X		X	
Major Exercise												X

4-59. PROCEDURES FOR COMMON COMPONENTS AND MISCELLANEOUS ITEMS.

a. **Tires.** Visually inspect tires during each walk-around inspection. This inspection includes checking with a tire gage. Inflate repair, or replace as necessary those found to be low, damaged, or excessively worn. Mark inflated and repaired tires with chalk for checking at the next inspection.

4-59. PROCEDURES FOR COMMON COMPONENTS AND MISCELLANEOUS ITEMS (Con't).

b. **Air Lines and Pressure Tank**. Drain air lines and pressure tank of condensation and leave draincocks open. Attach a caution tag, annotated to provide for closing of draincocks when equipment is exercised. Place tags in a conspicuous location.

c. **Seals**. Seals may develop leaks during storage, or shortly thereafter. If leaking persists, refer to the applicable maintenance section in this manual for corrective maintenance procedures.

4-60. REMOVAL OF EQUIPMENT FROM ADMINISTRATIVE STORAGE.

a. **Activation**. Restore the equipment to normal operating condition in accordance with the instructions contained in Chapter 4, Section II.

b. **Servicing**. Resume the maintenance service schedule in effect at the commencement of storage, or service the equipment before the scheduled dates in order to produce a staggered maintenance workload.

4-61. PREPARATION OF EQUIPMENT FOR SHIPMENT

a. Refer to FM 55-21,TM 55-601, and TM 743-200-1 for additional instructions on processing, storage, and shipment of materiel.

b. Dollies that have been removed from storage for shipment do not have to be reprocessed if they will reach their destination within the administrative storage period. Reprocess only if inspection reveals any corrosion or if anticipated in-transit weather conditions make it necessary.

c. When a dolly is received and has already been processed for domestic shipment, as indicated on DD Form 1397, the dolly does not have to be reprocessed for storage unless corrosion and deterioration are found during the inspection upon receipt. List on SF 364 all discrepancies found because of poor preservation, packaging, packing, marking, handling, loading, storage, or excessive preservation. Repairs that cannot be handled by the receiving unit must have tags attached listing the needed repairs. A report of these conditions will be submitted by the unit commander for action by an ordnance maintenance unit.

CHAPTER 5
DIRECT SUPPORT AND GENERAL SUPPORT MAINTENANCE

Section I. BRAKE SYSTEM MAINTENANCE

5-1. BRAKESHOE REPAIR.

This Task Covers:

a. Disassembly
b. Cleaning and Inspection
c. Assembly

Initial Setup:

Equipment Conditions

- Brakeshoes removed (para 4-19 or (4-20)

Tools/Test Equipment:

- General mechanic's tool kit
- Field automotive shop set

Materials/Parts:

- Dry cleaning solvent (Item 5, Appendix E)
- One friction lining kit
- Rivets (as required)

a. DISASSEMBLY

WARNING

- **DO NOT handle brakeshoes, brakedrums, or other brake components unless area has been properly cleaned. There may be asbestos dust on these components which can be dangerous if you touch it or breathe it. Wear an approved filter mask and gloves. Never use compressed air or a dry brush to clean brake components. Dust may be removed using an Industrial-type vacuum cleaner. Clean dust or mud away from brake components with water and a wet, soft brush or cloth. Failure to follow this warning may result in serious illness or death to personnel.**

- **DO NOT grind rivet heads off of brakeshoes when removing friction linings. Asbestos dust from friction linings is hazardous to your health.**

NOTE

Late model M197A1 and M198A1 friction lin-ings are bonded; no repair is authorized.

1.Remove rivets (3) and friction lining (2) from brakeshoe (1). Discard rivets and friction lining.

2.Repeat step 1 to remove friction lining (2) from other brakeshoe (1).

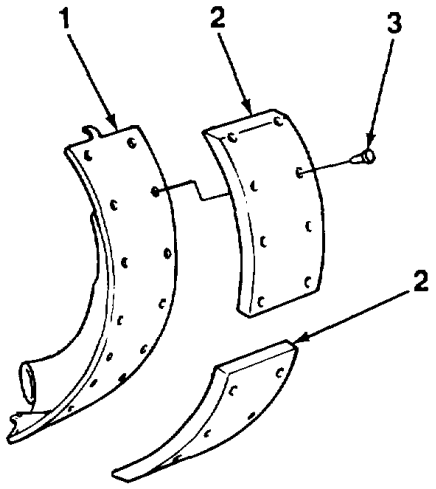

M197A1 AND M198A1, EARLY MODEL

TA510754

5-1. BRAKESHOE REPAIR (Con't)

b. CLEANING AND INSPECTION

WARNING

Dry cleaning solvent, P-D-680, is toxic and flammable. Always wear protective goggles and gloves, and use only in a well-ventilated area. Avoid contact with skin, eyes, and clothes, and DO NOT breathe vapors. DO NOT use near open flame or excessive heat. The solvent's flash point is 100°F-138°F (38°C-59°C). If you become dizzy while using cleaning solvent, Immediately get fresh air and medical help. If solvent contacts eyes, immediately wash your eyes and get medical aid,

1Clean brakeshoes with dry cleaning solvent and dry thoroughly.

2.Visually check brakeshoes for cracks and distor-tion. Discard brakeshoes if cracked or distorted.

3.Visually check pivot holes for excessive wear. Discard brakeshoes if pivot holes are excessively worn.

4.On M197 and M198 brakeshoes, check Inside diameter of sleeve bushing (4). If inside diameter is greater than 1.406 in. (3.57 cm), drive out and replace sleeve bushing.

5.On M197 and M198 brakeshoes, remove set- screw (8), pin (7), and roller (9). Check inside diameter of roller. If inside diameter is greater that 0.734 in. (18.64 mm), replace brakeshoes.

6.On M197 and M198 brakeshoes, check pin (6) and cotter pin (5) for damage. Replace pin and cotter pin if damaged.

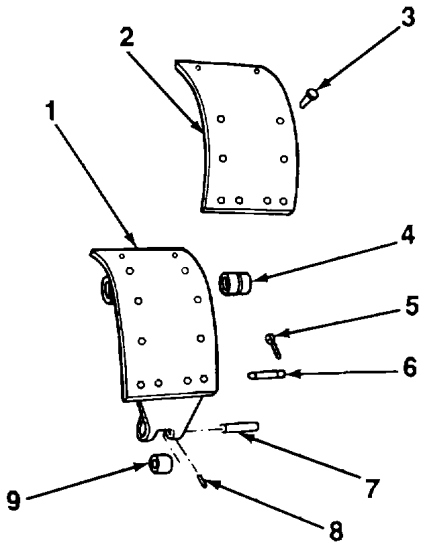

M197 AND M198

c. ASSEMBLY

1.Install new friction lining (2) on brakeshoe (1) withnew rivets (3).
2.Repeat step I to install new friction lining (2) on other brakeshoe (1).

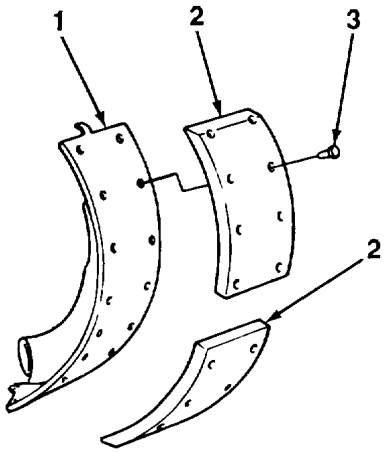

M197A1 AND M198A1, EARLY MODEL

FOLLOW-ON TASKS:
- Install brakeshoes (para 4-19 or 4-20).

TA510755

Section II. WHEELS, HUBS, AND BRAKEDRUMS MAINTENANCE

5-2. BRAKEDRUM REPAIR.

This Task Covers:

a. Inspection.

b. Repair

Initial Setup:

Equipment Conditions

- Brakedrum removed (para 4-37).

Tools/Test Equipment

- General mechanic's tool kit
- Field automotive shop set

a. INSPECTION

1.Visually check braking surface of brakedrum for cracks, heat checking, and scoring. Reface braking surface if heat checked or scored.

2.Check for out-of-round condition at 450 intervals. Maximum out-of-round is 0.01 in. (0.25 mm).

3.Check that inside diameter does not exceed 16.880 in. (42.88 cm).

4.Check brakedrum for tapered condition. Maxi- mum taper is 0.0004 in. (0.01 mm).

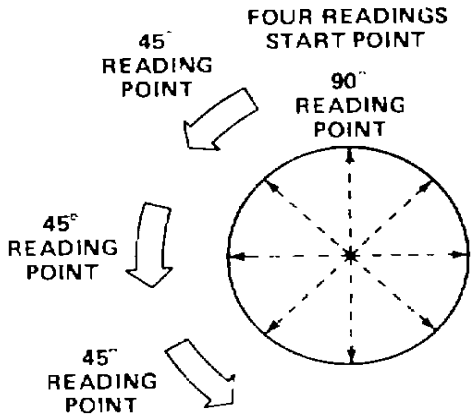

b. REPAIR

WARNING

DO NOT use a brakedrum that exceeds maximum wear specifications. Failure to follow this warning may result in brake failure and serious injury or death.

1.Reface braking surface of brakedrum to remove heat checking and scoring. Remove a maximum of 0.01 in. (0.25 mm) per cut.

2.Discard brakedrum with edge cracks or if inside diameter exceeds 16.880 in. (42.88 cm) after refacing.

TA510756

5-3. TIRE REPAIR.

Repair tires in accordance with TM 9-2610-200-14.

Section III. FRAME AND TOWING ATTA CHMENTS MAINTENANCE

5-4. FRAME REPAIR.

Repair frame in accordance with TB 9-2300-247-40.

APPENDIX A
REFERENCES

A-1. SCOPE.

This appendix lists all forms, field manuals, technical manuals, and other publications referenced in this manual and which apply to the operation, Organizational, Direct Support, and General Support Maintenance of the M197, M197A1, M198, and M198A1 Trailer Converter Dollies.

A-2. PUBLICATION INDEX.

DA Pam 25-30, Consolidated Index of Army Publications and Blank Forms, should be consulted frequently for the latest changes or revisions and for new publications relating to materiel covered in this technical manual.

A-3. FORMS.

Refer to DA Pam 738-750, The Army Maintenance Management System (TAMMS), for instructions on the use of maintenance forms.

Equipment Inspection and Maintenance Worksheet ..... DA Form 2404
Equipment Log Assembly (Records) ..... DA Form 2408
Maintenance Request Form DA Form 2407
Preventive Maintenance Schedule and Record ..... DD Form 314
Processing and Deprocessing Record for Shipment, Storage and Issue of
Vehicles and Spare Engines DD Form 1397
Product Quality Deficiency Report ..... SF 368
Report of Discrepancy (ROD) ..... SF 364

A-4.FIELD MANUALS.

Desert Operations FM 90-3
Manual for the Wheeled Vehicle Driver ..... FM 21-305
Operation and Maintenance of Ordnance Materiel in Cold Weather (00 to -650F) ..... FM 9-207
Railway Operating and Safety Rules ..... FM 55-21

A-5.TECHNICAL BULLETINS.

Color, Marking, and Camouflage Painting of Military Vehicles, Construction
Equipment, and Materials Handling Equipment ..... TB 43-0209
Tactical Wheeled Vehicles: Repair of Frames ..... TB 9-2300-247-40

A-6.TECHNICAL MANUALS.

Inspection, Care, and Maintenance of Antifriction Bearings ..... TM 9-214
Operator's Manual for Welding Theory and Application ..... TM 9-237
Operator's, Unit, Direct Support, and General Support Maintenance
Manual for Care, Maintenance, Repair, and Inspection of Pneumatic
Tires and Inner Tubes ..... TM 9-2610-200-14
Procedures for Destruction of Tank-Automotive Equipment to Prevent Enemy Use ..... TM 750-244-6
Railcar Loading Procedures TM 55-601
Storage and Materials Handling ..... TM 743-200-1

A-7.OTHER PUBLICATIONS.

Army Logistics Readiness and Sustainability.....AR 700-138
Army Medical Department Expendable/Durable Items ..... CTA 8-100
Expendable/Durable Items (Except Class V, Repair Parts, and Heraldic Items) ..... CTA 50-970

APPENDIX B
MAINTENANCE ALLOCATION CHART

Section I. INTRODUCTION

B-1. GENERAL.

a. This section provides a general explanation of all maintenance and repair functions authorized at the various maintenance levels.

b. The Maintenance Allocation Chart (MAC) in Section II designates overall authority and responsibility for the performance of maintenance functions on the identified end item or component. The application of the maintenance functions to the end item or component will be consistent with the capacities and capabilities of the designated maintenance levels.

c. Section III lists the tools and test equipment (both special tools and common tool sets) required for each maintenance function as referenced from Section II.

d. Section IV contains supplemental instructions and explanatory notes for a particular maintenance function.

B-2. MAINTENANCE FUNCTIONS.

Maintenance functions will be limited to and defined as follows:

a. **Inspect.** To determine the serviceability of an item by comparing its physical, mechanical, and/or electrical characteristics with established standards through examination (e.g., by sight, sound, or feel).

b. **Test**. To verify serviceability by measuring the mechanical, pneumatic, hydraulic, or electrical characteristics of an item and comparing those characteristics with prescribed standards.

c. **Service.** Operations required periodically to keep an item in proper operating condition, i.e., to clean (includes decontaminate, when required), to preserve, to drain, to paint, or to replenish fuel, lubricants, chemical fluids, or gases.

d. **Adjust.** To maintain or regulate, within prescribed limits, by bringing Into proper or exact position, or by setting the operating characteristics to specified parameters.

e. **Aline**. To adjust specified variable elements of an item to bring about optimum or desired performance.

f. **Calibrate.** To determine and cause corrections to be made or to be adjusted on instruments or test, measuring, and diagnostic equipments used in precision measurement. Consists of comparisons of two instruments, one of which is a certified standard of known accuracy, to detect and adjust any discrepancy in the accuracy of the instrument being compared.

g. **Remove/Install**. To remove and install the same item when required to perform service or other maintenance functions. Install may be the act of emplacing, seating, or fixing into position a spare, repair part, or module (component or assembly) in a manner to allow the proper functioning of an equipment or system.

h. **Replace**. To remove an unserviceable item and install a serviceable counterpart in its place. "Replace" is authorized by the MAC and is shown as the third position of the SMR code.

i. **Repair.** The application of maintenance services, including fault location/troubleshooting, removal/installation, and disassembly/assembly procedures, and maintenance actions to identify troubles and restore serviceability to an item by correcting specific damage, fault, malfunction, or failure in a part, subassembly, module (component or assembly), end item, or system.

B-2. MAINTENANCE FUNCTIONS (CON'T).

a. **Overhaul.** That maintenance effort (service/action) prescribed to restore an item to a completely serviceable/operational condition as required by maintenance standards in appropriate technical publications (i.e., DMWR). Overhaul Is normally the highest degree of maintenance performed by the Army. Overhaul does not normally return an item to like new condition.

b. **Rebuild**. Consists of those services/actions necessary for the restoration of unserviceable equipment to a like new condition in accordance with original manufacturing standards. Rebuild is the highest degree of materiel maintenance applied to Army equipment. The rebuild operation includes the act of returning to zero those age measurements (hours/miles, etc.) considered in classifying Army equipment/components.

B-3. EXPLANATION OF COLUMNS IN THE MAC, SECTION II.

a. **Column 1, Group Number.** Column 1 lists functional group code numbers, the purpose of which is to identify maintenance significant components, assemblies, subassemblies, and modules with the next higher assembly. End item group number shall be "00."

b. **Column 2, Component/Assembly.** Column 2 contains the names of components, assemblies, subassemblies, and modules for which maintenance is authorized.

c. **Column 3, Maintenance Function.** Column 3 lists the functions to be performed on the item listed in Column 2. (For a detailed explanation of these functions, refer to paragraph B-2.)

d. **Column 4, Maintenance Level.** Column 4 specifies, by the listing of a work time figure in the appropriate subcolumn(s), the level of maintenance authorized to perform the function listed in Column 3. This figure represents the active time required to perform that maintenance function at the indicated level of maintenance. If the number or complexity of the tasks within the listed maintenance function vary at different maintenance levels, appropriate work time figures will be shown for each level. The work time figure represents the average time required to restore an item (assembly, subassembly, component, module, end item, or system) to a serviceable condition under typical field operating conditions. This time includes preparation time (including any necessary disassembly/assembly time), troubleshooting/fault location time, and quality assurance/quality control time in addition to the time required to perform the specific tasks identified for the maintenance functions authorized in the Maintenance Allocation Chart. The symbol designations for the various maintenance levels are as follows:

C ..... Unit (Operator or Crew)
O ..... Unit (Organizational) Maintenance
F ..... Direct Support Maintenance
H ..... General Support Maintenance
D ..... Depot Maintenance

e. **Column 5. Tools and Equipment.** Column 5 specifies, by code, those common tool sets (not individual tools) and special tools, I MD_, and support equipment required to perform the designated function.

f. **Column 6. Remarks.** This column shall, when applicable, contain a letter code, In alphabetic order, which shall be keyed to the remarks contained in Section IV.

B-4. EXPLANATION OF COLUMNS IN TOOL AND TEST EQUIPMENT REQUIREMENTS, SECTION III.

a. **Column 1, Tool or Test Equipment Reference Code.** The tool and test equipment reference code correlates with a code used in the MAC, Section II, Column 5.

b. **Column 2, Maintenance Level.** The lowest level of maintenance authorized to use the tool or test equipment.

c. **Column 3, Nomenclature.** Name or identification of the tool or test equipment.

B-4. EXPLANATION OF COLUMNS IN TOOL AND TEST EQUIPMENT REQUIREMENTS, SECTION III (CON'T).

d. Column 4, National/NATO Stock Number. The National or NATO Stock Number of the tool or test equipment.

e. Column 5, Tool Number. The manufacturer's part number.

B-5. EXPLANATION OF COLUMNS IN REMARKS, SECTION IV.

a. Column 1, Reference Code. The code recorded in Column 6, Section II.

b. Column 2, Remarks. This column lists information pertinent to the maintenance function being performed as indicated in the MAC, Section II.

Section II. MAINTENANCE ALLOCATION CHART

(1) GROUP NUMBER	(2) COMPONENT/ASSEMBLY	(3) MAINTENANCE FUNCTION	(4) MAINTENANCE CATEGORY C	O	F	H	D	(5) TOOLS AND EQPT	(6) REMARKS
06	**ELECTRICAL SYSTEM**								
0609	*Lights*								
	Stoplight and Taillight	Inspect	0.1						
		Replace		0.2				1	
		Repair		0.2				1,2	
0613	*Hull or Chassis Wiring Harness*								
	Rear Chassis Wiring	Replace		1.0				1	
	Harness	Repair		2.0				1,2	
	Intervehicular Cable	Replace		2.0				1	
11	**REAR AXLE**								
1100	*Rear Axle Assembly*								
	Axle	Inspect		0.2					
		Replace		5.0				1,2	
12	**BRAKES**								
1202	*Service Brakes*								
	Shoe, Brake	Inspect		1.0					
		Adjust		0.5				1,2	
		Replace		4.0				1,2,3	
		Repair			1.5			1,2,3,4	

Section II. MAINTENANCE ALLOCATION CHART (Con't)

(1) GROUP NUMBER	(2) COMPONENT/ASSEMBLY	(3) MAINTENANCE FUNCTION	(4) MAINTENANCE CATEGORY C	O	F	H	D	(5) TOOLS AND EQPT	(6) REMARKS
1204	*Hydraulic Brake System*								
	Cylinder, Master	Inspect		0.1					
		Service		0.2				1	
		Replace		1.0				1,2	
	Cylinder, Wheel	Replace		2.0				1,2	
	Hydraulic Lines, Fittings and Hoses	Replace		2.0				1,2	
1208	*Airbrake System*								
	Coupling, Air	Replace		1.0				1	
		Repair		0.5				1	
	Filter, Air	Service		0.5				1	
		Replace		1.0				1	
		Repair		0.5				1	
	Air Lines, Fittings and Hoses	Replace		2.5				1	
	Chamber, Airbrake	Replace		2.0				1,2,3	
		Repair		3.0				1,2,3	
	Valve, Emergency Relay	Replace		2.0				1	
	Cock, Drain	Replace		0.5				1	
	Reservoir, Air	Replace		2.0				1	
13	**WHEELS & TRACKS**								
1311	*Wheel Assembly*								
	Bearing, Hub	Inspect		1.0					
		Adjust		2.0				1,2,8	
		Replace		2.0				1,2,8	
	Drum, Brake	Inspect		1.0					
		Replace		3.0				1,2,3	
		Repair			4.0			1,2,3,4	
	Hub, Wheel	Replace		3.0				1,2,3,6,7	
	Seal, Oil	Replace		2.0				1,2,3,5	
	Wheel	Replace		1.0				1,2	
	Wiper, Oil Seal	Replace		2.0				1,2,3,5	

Section II. MAINTENANCE ALLOCATION CHART (Con't)

(1) GROUP NUMBER	(2) COMPONENT/ASSEMBLY	(3) MAINTENANCE FUNCTION	(4) MAINTENANCE CATEGORY C	O	F	H	D	(5) TOOLS AND EQPT	(6) REMARKS
1313	*Tires, Tubes, Tire Chains*								
	Tires	Replace		1.0					
		Repair			2.0			1,4	
	Tubes	Replace		1.0				1,2,3	
		Repair		1.5				1,2,3	
15	**FRAME, TOWING ATTACHMENTS, DRAW-BARS, AND ARTICULATION SYSTEMS**								
1501	*Frame Assembly*	Repair		0.5				1,2,3	
1503	*Pintles and Towing Attachments*								
	Lunette	Replace		3.0				1,2	
1506	*Fifth Wheel*								
	Fifth Wheel Assembly	Service		0.3					
		Replace		2.0				1,2,3	
		Repair		4.0				1,2,3	
1507	*Landing Gear, Leveling Jacks*								
	Landing Leg	Service		0.3					
		Replace		2.0				1,2,3	
		Repair		4.0				1,2,3	
16	**SPRINGS AND SHOCK ABSORBERS**								
	1601 Springs	Service		0.2					
		Replace		4.0				1,2,3	
	Rod, Radius	Adjust		1.0				1,2	
		Replace		2.0				1,2	

SECTION II. MAINTENANCE ALLOCATION CHART

(1) GROUP NUMBER	(2) COMPONENT/ASSEMBLY	(3) MAINTENANCE FUNCTION	(4) MAINTENANCE CATEGORY C	O	F	H	D	(5) TOOLS AND EQPT	(6) REMARKS
18	**BODY, CAB, HOOD, AND HULL**								
1808	*Stowage Racks, Boxes, Straps, Carrying Cases, Cable Reels, Hose Reels, Etc.*								
	Stowage Compartment Cover	Replace		0.5				1	
22	**BODY, CHASSIS, AND HULL ACCESSORY ITEMS**								
2202	*Accessory Items*								
	Reflectors	Replace		0.2				1	
2210	*Data Plates and Instruction Holders*								
	Plate, Data	Replace		0.2				1	

SECTION III TOOL AND TEST EQUIPMENT REQUIREMENTS

(1) TOOL OR TEST EQUIPMENT REF CODE	(2) MAINTENANCE LEVEL	(3) NOMENCLATURE	(4) NATIONAL/NATO STOCK NUMBER	(5) TOOL NUMBER
1	O	Tool Kit, General Mechanic's, Automotive	5180-00-177-7033	
2	O	Shop Equipment, Automotive Maintenance and Repair: Organizational Maintenance, Common No. 1, Less Power	4910-00-754-0654	
3	O	Shop Equipment, Automotive Maintenance and Repair: Organizational Maintenance, Common No. 2, Less Power	4910-00-754-0650	
4	F	Shop Equipment, Automotive Maintenance and Repair: Field Maintenance, Supplemental No. 1	4910-00-754-0706	
5	O	Replace, Oil Seal	5120-00-795-0136	
6	O	Wrench, Socket	5120-00-378-3139	
7	O	Wrench, Socket	5120-00-708-3197	
8	O	Wrench, Wheel Bearing	5120-00-795-0059	

Section IV. REMARKS

Not Applicable.

APPENDIX C
COMPONENTS OF END ITEM AND BASIC ISSUE ITEMS LISTS

The M197, M197A1, M198, and M198A1 Trailer Converter Dollies currently do not have Components of End Item or Basic Issue Items Lists assigned.

APPENDIX D
ADDITIONAL AUTHORIZATION LIST

The M197, M197A1, M198, and M198A1 Trailer Convertor Dollies currently do not have an Additional Authorization List assigned.

APPENDIX E
EXPENDABLE/DURABLE SUPPLIES AND MATERIALS LIST

Section I. INTRODUCTION

E-1. SCOPE.

This appendix lists expendable/durable supplies and materials you will need to operate and maintain the M197, M197A1, M198, and M198A1 Trailer Converter Dollies. This listing is for informational purposes only and is not authority to requisition the listed items. These items are authorized to you by CTA 50-970, *Expendable/Durable Items (Except Medical, Class V, Repair Parts, and Heraldic Items)* or CTA 8-100, *Army Medical Department Expendable/Durable Items.*

E-2. EXPLANATION OF COLUMNS.

a. **Column (1) - Item Number.** This number is assigned to the entry in the listing and is reference in the "Initial Setup" of maintenance paragraphs or narrative instructions to identify the material needed (e.g., Dry cleaning solvent, Item 5, Appendix E).

b. Column (2) - Level. This column identifies the lowest level of maintenance that requires the listed item.

C - Operator/Crew
0- Organizational Maintenance
F - Direct Support Maintenance
H - General Support Maintenance

c. **Column (3) - National Stock Number.** This is the National Stock Number assigned to the item. Use it to request or requisition the item.

d. **Column (4) - Description.** Indicates the Federal item name and, if required, a description to identify the item. the last line for each item indicates the Commercial and Government Entity (CAGE) Code in parentheses followed by the part number, if applicable.

e. **Column (5) - Unit of Measure (U/M).** Indicates the measure used in performing the actual maintenance function. This measure is expressed by a two-character alphabetical abbreviation (e.g., ea., in., pr). If the unit of measure differs from the unit of issue, requisition the lowest unit of issue that will satisfy your requirements.

SECTION II EXPENDABLE/DURABLE SUPPLIES AND MATERIALS LIST

(1) ITEM NUMBER	(2) LEVEL	(3) NATIONAL STOCK NUMBER	(4) Description (CAGE) PART NUMBER	(5) U/M
1	O		Adhesive	
			(55974) Q760723	
		8040-00-290-4301	1 Quart Can	qt
2	O		Barrier Material, Greaseproofed, Waterproofed, Flexible	
			(81349) MILI-B-46176	
		8135-00-171-09310	100 Yard Roll	yd
3	O		Brake Fluid, Automotive	
			(81349) MIL-B-46176	
		9150-01-102-9455	1 Gallon Can	gl
		9150-01-123-3152	5 Gallon Can	gl
		9150-01-072-8379	55 Gallon Drum	gl
4	C		Detergent, General Purpose, Liquid	
			(81349) MIL-D-16791	
		7930-00-282-9699	1 Gallon Can	gl
5	C		Dry Cleaning Solvent	
			(81348) p-d-680, Type II	
		6850-00-664-5685	1 Quart Can	qt
		6850-00-281-1985	1 Gallon Can	gl
		6850-00-285-8011	55 Gallon Drum	gl
6	O		Grease, Automotive and Artillery	
			(81349) MIL-G-10924	
		9150-00-935-1017	14 Ounce Cartridge	oz
		9150-00-190-0904	1.75 Pound Can	lb
		9150-00-190-0905	6.5 Pound Can	lb
7	O		Lubricating Oil, Engine,	
			OE/HDO-10	
			(81349) MIL-L-2104	
		9150-00-189-6727	1 Quart Can	qt
		9150-00-186-6668	5 Gallon Can	gl
		9150-00-191-2772	55 Gallon Drum	gl
8	O		Lubricating Oil, Engine,	
			OE/HDO-30	
			(81349) MIL-L-2104	
		9150-00-186-6681	1 Quart Can	qt
		9150-00-188-9858	5 Gallon Can	gl
		9150-00-189-6729	55 Gallon Drum	gl

Section II. EXPENDABLE/DURABLE SUPPLIES AND MATERIALS LIST (Con't)

(1) ITEM NUMBER	(2) LEVEL	(3) NATIONAL STOCK NUMBER	(4) Description (CAGE) PART NUMBER	(5) U/M
9	O		Lubricating Oil, Engine, OEA	
			(81349) MIL-L-4617	
		9150-00-402-4478	1 Quart Can	qt
		9150-00-402-2372	5 Gallon can	gl
		9150-00-491-7197	55 Gallon Drum	gl
10	O		Lubricating Oil, General Purpose,	
			(81349) MIL-L-3150	
		9150-00-231-2361	1 Quart Can	qt
11	O		Lubricating Oil, General Purpose,	
			Preservative, PL-S	
			(81348) V-VL-800	
		9150-00-231-6689	1 Quart Can	qt
12	C		Rag, Wiping	
			(58536) A-A-531	
		7920-00-205-1711	50 Pound Bale	lb
			Solder, Lead Alloy	
			(81348) QQ-5-571	
		3439-00-265-7102	1 Pound Roll	lb
14	O		Tag Marker	
			(81349) MIL-T-12755	
		9905-00-537-8954	50 Each	ea
15	O		Tape, Antiseizing, ½ inch Width	
			(81349) MIL-T-27730	
		8030-00-889-3535	260 Inch Roll	in
16	O		Tape, Insulation, Electrical	
			(81348) HH1510	
		5970-00-198-8621	85 Foot Roll	ft

APPENDIX F
REPAIR PARTS AND SPECIAL TOOLS LISTS

Section I. INTRODUCTION

F-1. SCOPE.

This RPSTL lists and authorizes spares and repair parts; special tools; special test, measurement, and diagnostic equipment (TMDE); and other special support equipment required for performance of organizational, direct support, and general support maintenance of the Dolly, Trailer, Convertor. It authorizes the requisitioning, issue, and disposition of spares, repair parts and special tools as indicated by the source, maintenance and recoverability (SMR) codes.

F-2. GENERAL.

In addition to Section I, *Introduction,* this Repair Parts and Special Tools List is divided into the following sections:

a. **Section II. Repair Parts List**. A list of spares and repair parts authorized by this RPSTL for use in the performance of maintenance. The list also includes parts which must be removed for replacement of the authorized parts. Parts lists are composed of functional groups in ascending alphanumeric sequence, with the parts in each group listed in ascending figure and item number sequence. Bulk materials are listed in item name sequence. Repair parts kits are listed separately in their own functional group within Section II. Repair parts for reparable special tools are also listed in this section. Items listed are shown on the associated illustration(s)/figure (s).

b. **Section III. Special Tools List**. A list of special tools, special TMDE, and other special support equipment authorized by this RPSTL [as indicated by Basis of Issue (BOI) information in the *DESCRIPTION AND USABLE ON CODE* column] for the performance of maintenance.

c. **Section IV. Cross-reference Indexes**. A list, in National Item Identification Number (NIIN) sequence, of all National stock numbered items appearing in the listing, followed by a list in alphanumeric sequence of all part numbers appearing in the listings. National stock numbers and part numbers are cross-referenced to each illustration/figure and item number appearance. The figure and item number index lists figure and item numbers in alphanumeric sequence and cross-references NSN, CAGE, and part numbers.

F-3. EXPLANATION OF COLUMNS (SECTIONS II AND III).

a. **ITEM NO. [Column (1)]**. Indicates the number used to identify items called out in the illustration.

b. **SMR CODE [Column (2)]**. The Source, Maintenance, and Recoverability (SMR) code is a 5-position code containing supply/requisitioning information, maintenance category authorization criteria, and disposition instruction, as shown in the following breakout:

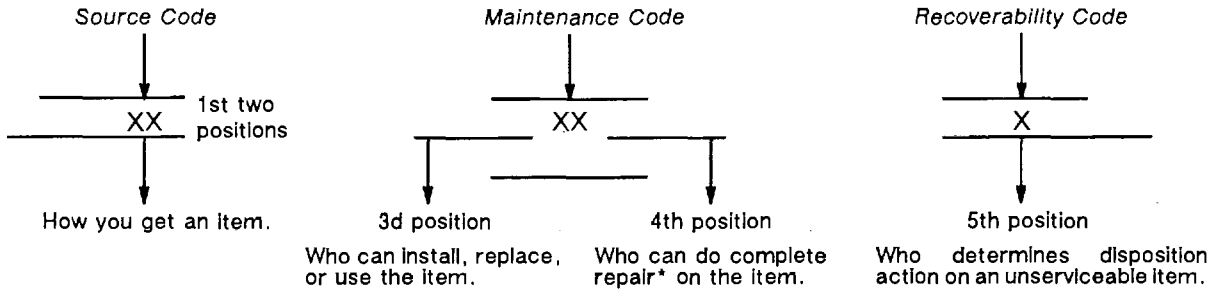

** Complete Repair:* Maintenance capacity, capability, and authority to perform all corrective maintenance tasks of the *'Repair* function In a use/user environment in order to restore serviceability to a failed item.

F-3. EXPLANATION OF COLUMNS (SECTIONS II AND III) (Con't).

(1) **Source Code.** The source code tells you how to get an item needed for maintenance, repair, or overhaul of an end item/equipment. Explanations of source codes follow:

Code	Application/Explanation
PA PB PC PD PE PF PG	Stocked items; use the applicable NSN to request/requisition items with these source codes. They are authorized to the category indicated by the code entered in the 3rd position of the SMR code. ***Items coded PC are subject to deterioration.*
KD KF KB	Items with these codes are not to be requested/requisitioned individually. They are part of a kit which is authorized to the maintenance category indicated in the 3d position of the SMR code. The complete kit must be requisitioned and applied.
MO—Made at org/AVUM category MF—Made at DS/AVUM category MH—Made at GS category ML—Made at Specialized Repair Activity (SRA) MD—Made at Depot	Items with these codes are not to be requested/requisitioned individually. They must be made from bulk materiel which is identified by the part number in the *DESCRIPTION AND USABLE ON CODE (UOC)* column and listed in the bulk materiel group of the repair parts list in this RPSTL. If the item is authorized to you by the 3d position code of the SMR code, but the source code indicates it is made at a higher level, order the item from the higher level of maintenance.
AO—Assembled by org/AVUM category AF—Assembled by DS/AVUM category AH—Assembled by GS category AL—Assembled by SRA AD—Assembled by Depot	Items with these codes are not to be requested/requisitioned individually. The parts that make up the assembled item must be requisitioned or fabricated and assembled at the level of maintenance indicted by the source code. If the 3d position code of the SMR code authorizes you to replace the item, but the source code indicates that the item is assembled at a higher level, order the item from the higher level of maintenance.

NOTE

Cannibalization or controlled exchange, when authorized, may be used as a source of supply for items with the above source codes, except for those source coded "XA. "

XA - DO NOT requisition an "XA"-coded item. Order its next higher assembly.
XB - If an "XB" item is not available from salvage, order it using the CAGE and part number given.

F-3. EXPLANATION OF COLUMNS (SECTIONS II AND III) (Con't)

.

XC - Installation drawing, diagram, instruction sheet, field service drawing, that is identified by manufacturer's part number.

XD - Item is not stocked. Order an "XD"-coded item through normal supply channels using the CAGE and part number given, if no NSN is available.

(2) **Maintenance Code**. Maintenance codes tell you the level(s) of maintenance authorized to use and repair support items. The maintenance codes are entered in the third and fourth positions of the SMR code as follows:

(a) The maintenance code entered in the third position tells you the lowest maintenance level authorized to remove, replace, and use an item. The maintenance code entered in the third position will indicate authorization to one of the following levels of maintenance.

Code	Application/Explanation
C	- Crew or operator maintenance done within unit maintenance or aviation unit maintenance.
O	- Unit maintenance or aviation unit can remove, replace, and use the item.
F	- Direct support or aviation intermediate level can remove, replace, and use the item.
H	- General support level can remove, replace, and use the item.
L	- Specialized repair activity can remove, replace, and use the item.
D	- Depot level can remove, replace, and use the item.

NOTE

Some limited repair may be done on the item at a lower level of maintenance, if authorized by the Maintenance Allocation Chart (MAC) and SMR codes.

(b) The maintenance code entered in the fourth position tells whether or not the item is to be repaired and identifies the lowest maintenance level with the capability to do complete repair (i.e., perform all authorized *"Repair"* functions). This position will contain one of the following maintenance codes:

Code	Application/Explanation
O	- Unit maintenance or aviation unit is the lowest level that can do complete repair of the item.
F	- Direct support or aviation intermediate is the lowest level than can do complete repair of the item.
H	- General support is the lowest level that can do complete repair of the item.
L	- Specialized repair activity is the lowest level that can do complete repair of the item.
D	- Depot is the lowest level that can do complete repair of the item.
Z	- Nonreparable. No repair is authorized.
B	- No repair is authorized. (No parts or special tools are authorized for the maintenance of a "B"-coded item.) However, the item may be reconditioned by adjusting, lubricating, etc., at the user level.

F-3. EXPLANATION OF COLUMNS (SECTIONS II AND III) (Con't).

(3) Recoverability Code. Recoverability codes are assigned to items to indicate the disposition action on unserviceable items. The recoverability code is entered in the fifth position of the SMR code as follows:

Code		*Application/Explanation*
Z	-	Nonreparable item. When unserviceable, condemn and dispose of the item at the level of maintenance shown in the 3d position of the SMR code.
O	-	Reparable item. When uneconomically reparable, condemn and dispose of the item at unit maintenance or aviation unit level.
F	-	Reparable item. When uneconomically reparable, condemn and dispose of the item at the direct support or aviation intermediate level.
H	-	Reparable item. When uneconomically reparable, condemn and dispose of the item at the general support level.
D	-	Reparable item. When beyond lower level repair capability, return to depot. Condemnation and disposal of item not authorized below depot level.
L	-	Reparable item. Condemnation and disposal of item not authorized below specialized repair activity (SRA).
A	-	Item requires special handling or condemnation procedures because of specific reasons (e.g., precious metal content, high dollar value, critical material, or hazardous material). Refer to appropriate manuals/directives for specific instructions.

c. **CAGEC [Column (3)]**. The Commercial and Government Entity (CAGE) Code (C) is a 5-digit alphanumeric code which is used to identify the manufacturer, distributor, or Government agency, etc., that supplies the item.

NOTE

When you use an NSN to requisition an item, the item you receive may have a different part number from the part ordered.

d. **PART NUMBER [Column (4)]**. Indicates the primary number used by the manufacturer (individual, company, firm, corporation, or Government activity), which controls the design and characteristics of the item by means of its engineering drawings, specifications standards, and inspection requirements to identify an item or range of items.

e. **DESCRIPTION AND USABLE ON CODE (UOC) [Column (5)]**. This column includes the following information:

(1) The Federal item name and, when required, a minimum description to identify the item.
(2) Physical security classification. Not Applicable.
(3) Items that are included in kits and sets are listed below the name of the kit or set on Figure KIT.
(4) Spare/repair parts that make up an assembled item are listed immediately following the assembled item line entry.
(5) Part numbers for bulk materiels are referenced in this column in the line item entry for the item to be manufactured/fabricated.
(6) When the item is not used with all serial numbers of the same model, the effective serial numbers are shown on the last line(s) of the description (before UOC).
(7) The usable on code, when applicable (see paragraph F-5, Special Information).

F-3. EXPLANATION OF COLUMNS (SECTIONS II AND III) (Con't).

(8) In the Special Tools List section, the Basis of Issue (BOI) appears as the last line(s) in the entry for each special tool, special TMDE, and other special support equipment. When density of equipments supported exceeds density spread indicated in the Basis of Issue, the total authorization is increased proportionately.

(9)The statement "END OF FIGURE" appears just below the last item description in Column 5 for a given figure in both Section 11 and Section III.

f. **QTY [Column (6)]**. The QTY (quantity per figure) column indicates the quantity of the item used in the breakout shown on the illustration/figure, which is prepared for a functional group, subfunctional group, or an assembly. A "V" appearing in this column in lieu of a quantity indicates that the quantity is variable and the quantity may vary from application to application.

F-4. EXPLANATION OF COLUMNS (SECTION IV).

a. National Stock Number (NSN) Index.

(*1) STOCK NUMBER* **Column**. This column lists the NSN by National Item Identification Number (NIIN) sequence. The NIIN consists of the last nine digits of the NSN (i.e.,

NSN
5305-01-674-1467). When using this column to locate an item, ignore the first 4 digits of the NSN. Howev-
NIIN
er, the complete NSN should be used when ordering items by stock number.

(*2) FIG.* **Column**. This column lists the number of the figure where the item is identified/located. The figures are in numerical order in Section II and Section III.

(*3) ITEM* **Column**. The item number identifies the item associated with the figure listed in the adjacent FIG. column. This item is also identified by the NSN listed on the same line.

b. **Part Number Index**. Part numbers in this index are listed by part number in ascending alphanumeric sequence (i.e., vertical arrangement of letter and number combination which places the first letter or digit of each group in order A through Z, followed by the numbers 0 through 9 and each following letter or digit in like order).

(*1) CAGEC* **Column**. The Commercial and Government Entity (CAGE) Code (C) is a 5-digit alphanumeric code used to identify the manufacturer, distributor, or Government agency, etc., that supplies the item.

(*2) PART NUMBER* **Column**. Indicates the primary number used by the manufacturer (individual, firm, corporation, or Government activity), which controls the design and characteristics of the item by means of its engineering drawings, specifications standards and inspection requirements to identify an item or range of items.

(*3) STOCK NUMBER* **Column**. This column lists the NSN for the associated part number and manufacturer identified in the PART NUMBER and CAGE columns to the left.

(*4) FIG* **Column**. This column lists the number of the figure where the item is identified/located in Section II and Section III.

(*5) ITEM* **Column**. The item number is that number assigned to the item as it appears in the figure referenced in the adjacent figure number column.

c. **Figure And Item Number Index.**

(*1) FIG.* ***column.*** This column lists the number of the figure where the item is identified/located in Sections II and Ill.

(*2) ITEM* ***column.*** The item number is that number assigned to the item as it appears in the figure referenced in the adjacent figure number column.

(*3) STOCK NUMBER* ***column.*** This column lists the NSN for the item.

F-4. SPECIAL INFORMATION (Con't).

(4) CAGE column. The Commercial and Government Entity (CAGE) is a 5-digit alphanumeric code used to identify the manufacturer, distributor, or Government agency, etc., that supplies the item.

(*5) PART NUMBER column.* Indicates the primary number used by the manufacturer (individual, firm, corporation, or Government activity), which controls the design and characteristics of the item by means of its engineering drawings, specifications standards and inspection requirements to identify an item or range of items.

F-5. SPECIAL INFORMATION.

a. **Usable On Code**. The usable on code appears in the lower left corner of the Description column heading. Usable on codes are shown as "UOC:....."in the Description column (justified left) on the first line applicable item description/nomenclature. Uncoded items are applicable to all models. Identification of the usable on codes used in this RPSTL are:

Code	*Used On*
842	M197
843	M198
844	M197A1
152	M198A1

b. **Fabrication Instructions**. Bulk materiels required to manufacture items are listed in the Bulk Materiel Functional Group of this RPSTL. Part numbers for bulk materiels are also referenced in the DESCRIPTION column of the line item entry for the item to be manufactured/fabricated. Detailed fabrication instructions for items source coded to be manufactured or fabricated are found in *Appendix G* of this manual.

c. **Assembly Instructions**. Detailed assembly instructions for items source coded to be assembled from component spare/repair parts are found in *Chapters 4* and 5 of this manual. Items that make up the assembly are listed immediately following the assembly item entry or reference is made to an applicable figure.

d. **Kits**. Line item entries for repair parts kits appear in group 9401 in Section II. Not Applicable.

e. **Index Numbers**. Items which have the word BULK in the FIG, column will have an index number shown in the item column. This index number is a cross-reference between the National Stock Number/Part Number Index and the bulk materiel list in Section II.

F-6. HOW TO LOCATE REPAIR PARTS.

a. **When National Stock Number or Part Number is Not Known:**

(1) **First**. Using the Table of Contents, determine the assembly group or subassembly group to which the item belongs. This is necessary since figures are prepared for assembly groups and subassembly groups, and listings are divided into the same groups.

(2) **Second**. Find the figure covering the assembly group or subassembly group to which the item belongs.

(3) **Third**. Identify the item on the figure and use the Figure and Item Number Index to find the NSN.

b. **When National Stock Number or Part Number is Known:**

(1) **First**. Using the National Stock Number or Part Number Index, find the pertinent National Stock Number or Part Number. The NSN Index is in National Item Identification Number (NIIN) sequence [see paragraph F-4.a(1)]. The part numbers in the Part Number Index are listed in ascending alphanumeric sequence (see paragraph F-4.b). Both indexes cross-reference you to the illustration/figure and item number of the item you are looking for.

F-6. HOW TO LOCATE REPAIR PARTS (Con't).

(2) Second. Turn to the figure and item number, verify that the item is the one you're looking for, then locate the item number in the repair parts list for the figure.

F-7. ABBREVIATIONS.

For standard abbreviations see MIL-STD-12D, *Military Standard Abbreviations for Use on Drawings, Specifications, Standards, and in Technical Documents.*

Abbreviations	*Explanation*
NIIN	National Item Identification Number (consists of the last 9 digits of the NSN)
RPSTL	Repair Parts and Special Tools Lists

1

2 THRU 8

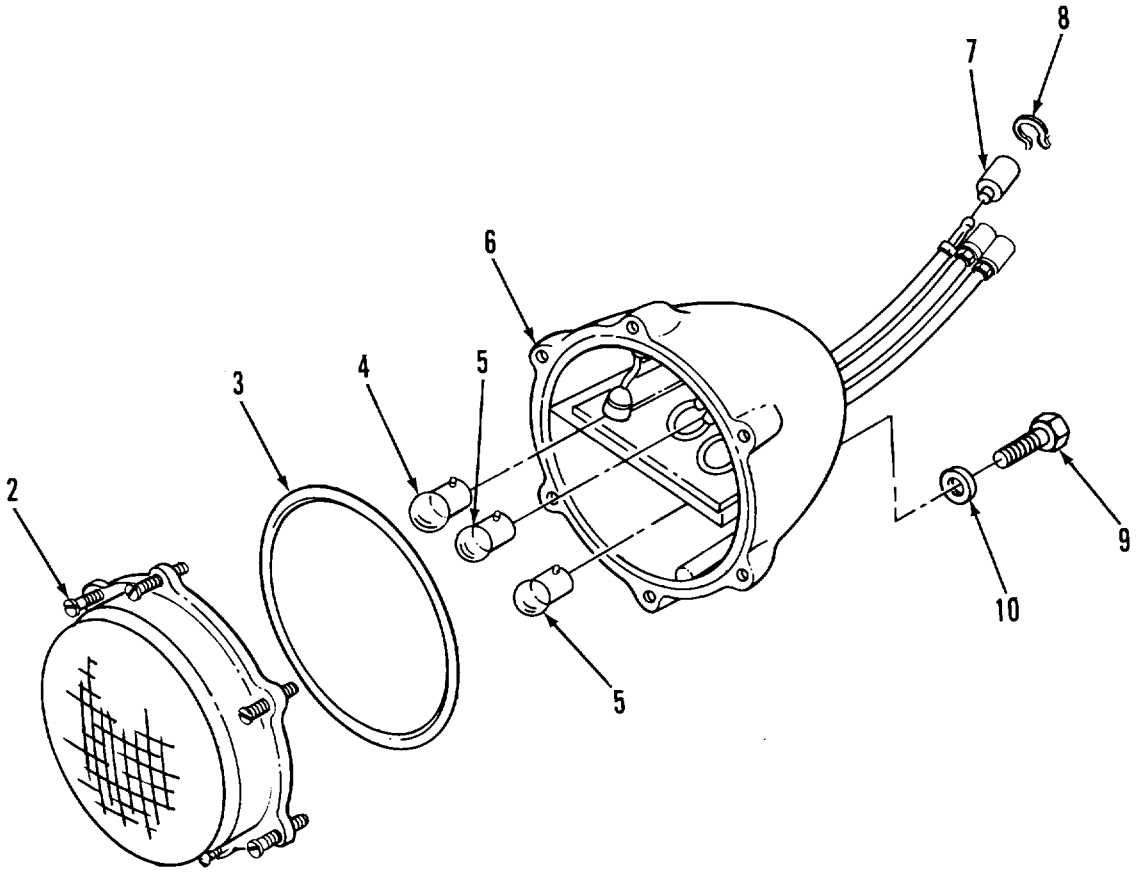

TA506749

FIGURE 1. STOP, TURN, AND TAILLAMP ASSEMBLY (M197A1 AND M198A1).

(1) ITEM NO	(2) SMR CODE	(3) CAGEC	(4) PART NUMBER	(5) DESCRIPTION AND USABLE ON CODES (UOC)	(6) QTY
				GROUP 06 ELECTRICAL SYSTEM	
				GROUP 0609 LIGHTS	
				FIG. 1 STOP, TURN, AND TAILLAMP ASSEMBLY (M197A1 AND M198A1l	
1	PAOOO	19207	10920548-2	STOPLIGHT-TAILLIGHT UOC:152, 844	2
2	PAOZZ	19207	10920506	LENS.LIGHT UOC:152.844	1
3	PAOZZ	19207	732G658	PACKING PREFORMED..... UOC:1528644	1
4	PAOZZ	96906	MS35478-1691	LAMP, .INCANDESCENT..... UOC:152, 844	1
5	PAOZZ	96906	MS35418-1683	LAMP, INCANDESCENT..... UOC:152, 844	2
6	XAOZZ	19207	7525997	BODY..... UOC:152t844	1
7	XDOZZ	19207	2-8338566	SHELL..... UOC:152, 844	3
8	XDOZZ	19207	2-8338567	WASHER UOC:152.844	3
9	PAOZZ	96906	MSSC725-58	SCREW, CAP, HEXAGON ..... UC: 152.844	2
10	PAOZZ	96906	MS35388-46	WASHER.LOCK UOC:152, 844	2

END OF FIGURE

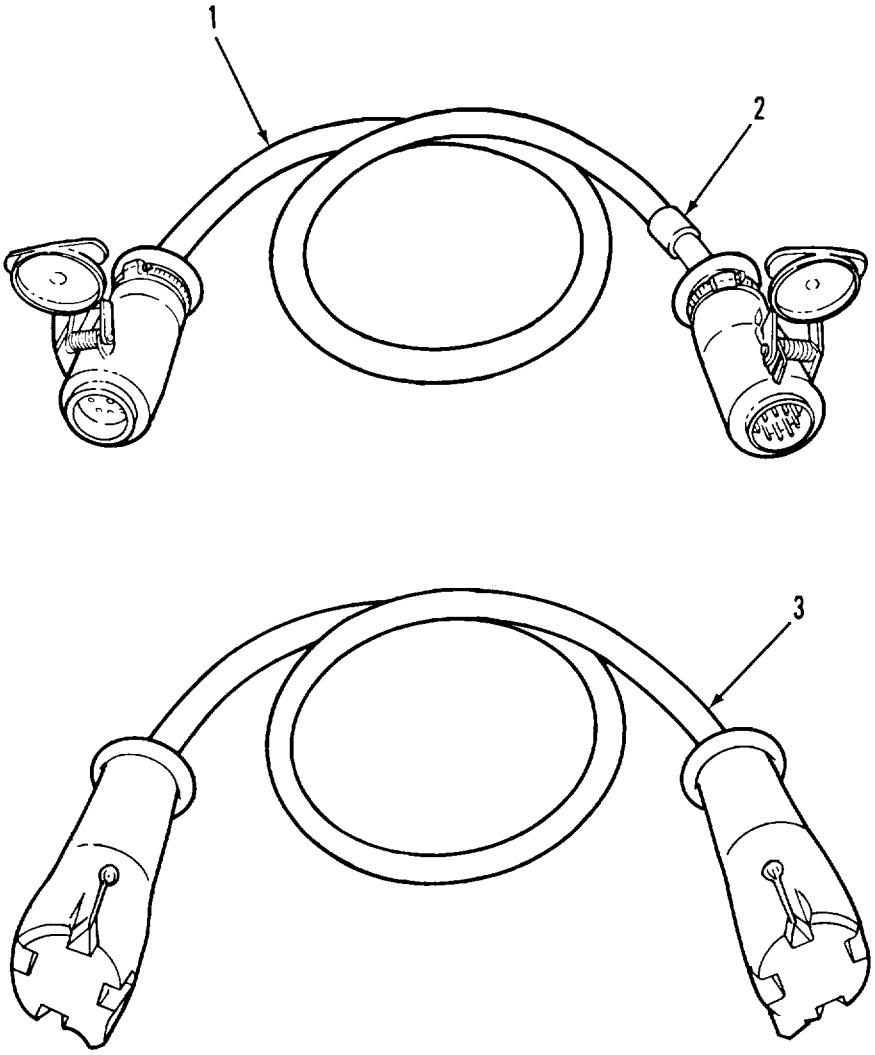

T506750

FIGURE 2. INTERVEHICULAR CABLE ASSEMBLIES.

(1) ITEM NO	(2) SMR CODE	(3) CAGEC	(4) PART NUMBER	(5) DESCRIPTION AND USABLE ON CODES (UOC)	(6) QTY
				GROUP 0613 HULL OR CHASSIS WIRING HARNESS	
				FIG. 2 INTERVEHICULAR CABLE ASSEMBLIES	
1	PAOZZ	19207	8366206	CABLE ASSEMBLY HARN INTERVEHICULAR 24V,R,H	1
2	PAOZZ	96906	MS39020-4	BAND, MARKER.....	1
3	PAOZZ	19207	83662O7	CABLE ASSEMBLY 12V, L.H..... UCC:842, 843	1

END OF FIGURE

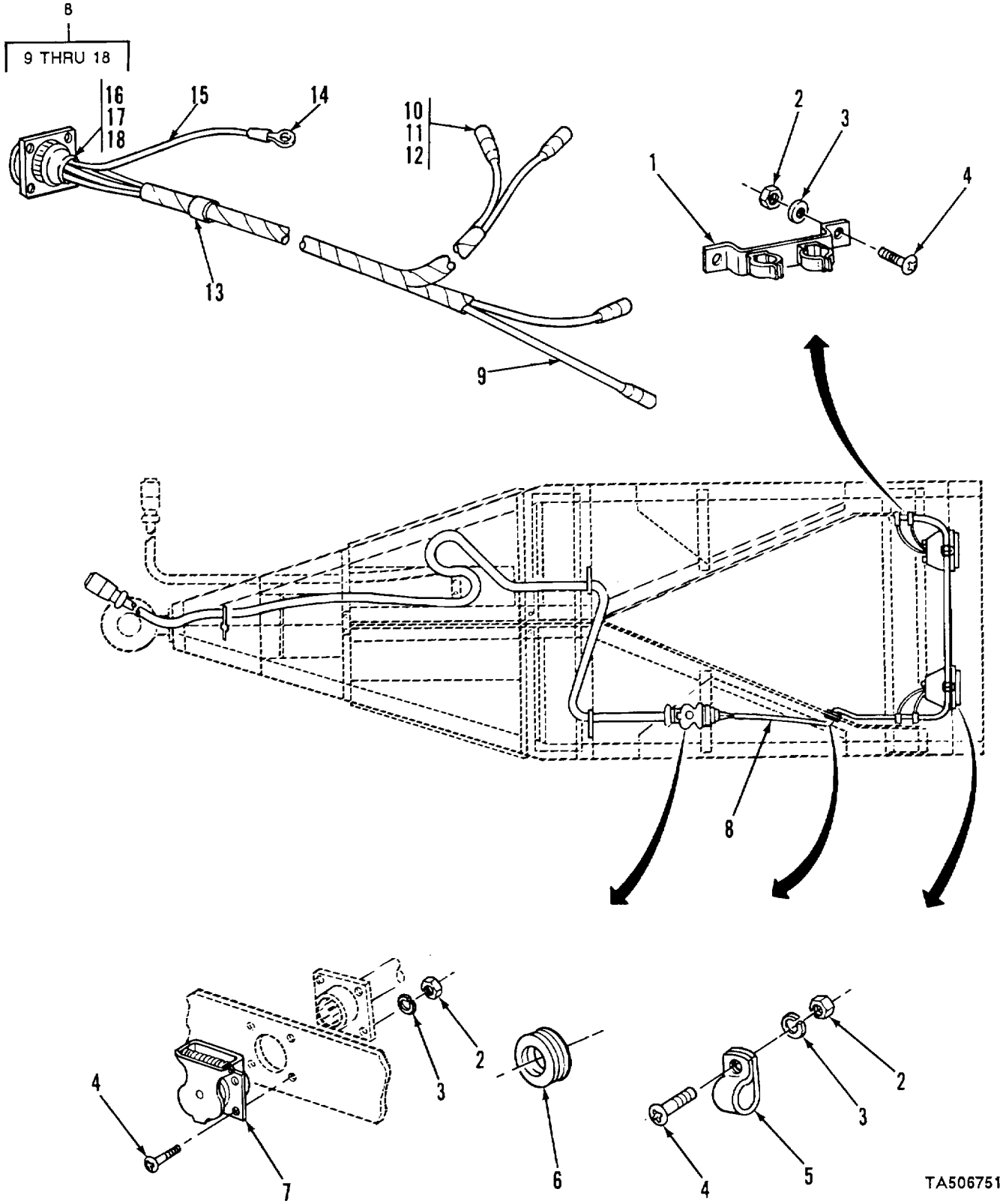

FIGURE 3. REAR CHASSIS WIRING HARNESS AND MOUNTING HARDWARE (M197A1 AND M198A1).

(1) ITEM NO	(2) SMR CODE	(3) CAGEC	(4) PART NUMBER	(5) DESCRIPTION AND USABLE ON CODES (UOC)	(6) QTY
				GROUP 0613 HULL OR CHASSIS WIRING HARNESS	
				FIG. 3 REAR CHASSIS WIRING HARNESS AW MOUNTING HARDWARE (M197A1 AND M198A1)	
1	PAOZZ	19207	8742392	RETAILER, ELECTRICAL ..... UOC: 152,844	2
2	PAOZZ	969063	MS51967-2	NUT, HEXAGON..... UOC:152, 844	10
3	PAOZZ	96906	MS35338-44	WASHER.LOCK UCC:152, 844	10
4	PAOZZ	96906	MS35206-281	SCREW, MACHINE UOC:152.844	10
5	PAOZZ	19207	8724501	STRAP.TIEDOWN, ELEC UOC:152.844	4
6	PAOZZ	96906	MS35490-88	GROMMET, NONMETALLIC UOC:152,844	2
7	PAOZZ	19207	7131428	COVER, ELECTRICAL UOC:152, 844	1
8	XDOOO	19207	11625435	WIRING HARNESS UOC:152, 844	1
9	MOOZZ	81349	M13486/1-5-1	CABLE MAKE FROM WIRE, P/N M13486/1-V 5 ..... UOC:152, 844	
10	PAOZZ	19207	8338561	SHELL, ELECTRICAL CCNNECTOR UOC:152, 844	4
11	PAOZZ	19207	8338562	INSULATOR, .BUSHING ..... UOC: 152,844	4
12	PAOZZ	19207	8338564	TERMINAL, ASSEMBLY..... UOC: 152, 844	4
13	XDOZZ	96906	MS39020-2	BAND, PIPE..... UOC:152, 844	1
14	PAOZZ	19207	506209	TERMINAL, LUG UOC:152, 844	1
15	PAOZZ	96906	MS39020-1	BAND, PIPE..... UOC:152,844	12
16	PAOZZ	96906	MS75021-1	CONNECTOR, .RECEPTACL ELECTRICAL..... UOC: 152,.844	1
17	PAOZZ	19207	7723309	NUT, PLAIN ..... UCC: 152, 844	1
18	PAOZZ	19207	7722333	BUSHING, NONMETALLIC..... UOC: 152, 844	1

END OF FIGURE

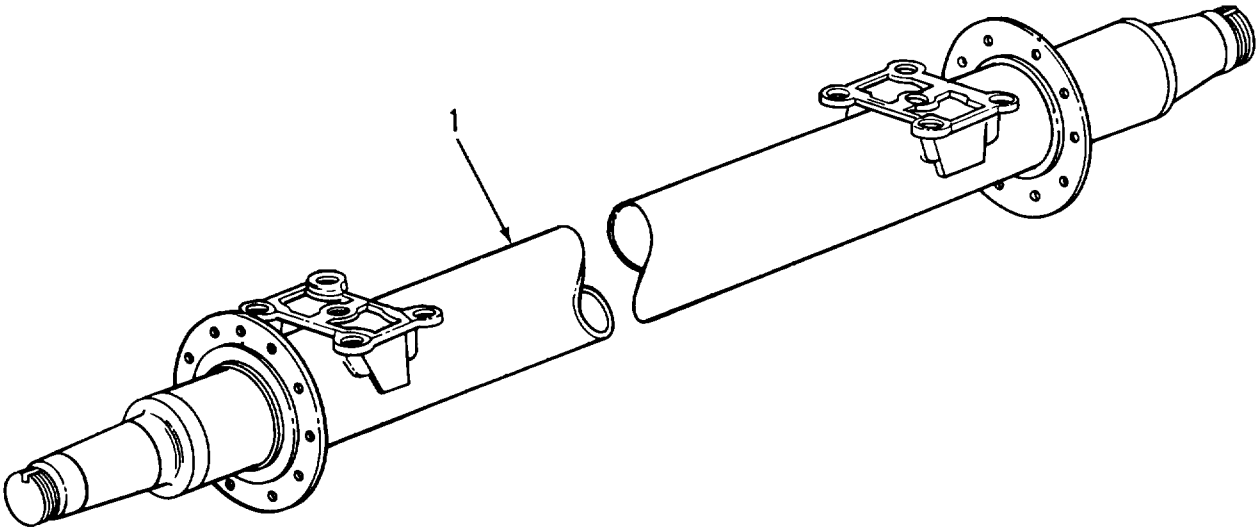

TA506752

FIGURE 4. NONDRIVING VEHICULAR AXLE.

(1) ITEM NO	(2) SMR CODE	(3) CAGEC	(4) PART NUMBER	(5) DESCRIPTION AND USABLE ON CODES (UOC)	(6) QTY
				GROUP 11 REAR AXLE	
				GROUP 1100 REAR AXLE ASSEMBLY	
				FIG. 4 NONDRIVING VEHICULAR AXLE	
1	XDOZZ	19207	8331715	AXLE ASSEMBLY AUTOM ..... UOC: 843	2
1	PAOZZ	19207	8332126	AXLE, VEHICULAR, NOND..... UGC:842	1
1	PAOZZ	19207	8710746	AXLE, VEHICULAR, NOND WITH SPRING ..... SEATS UOC:844	1
1	XDOZZ	19207	8689797	AXLE, VEHICULAR ..... UOC: 152	1

END OF FIGURE

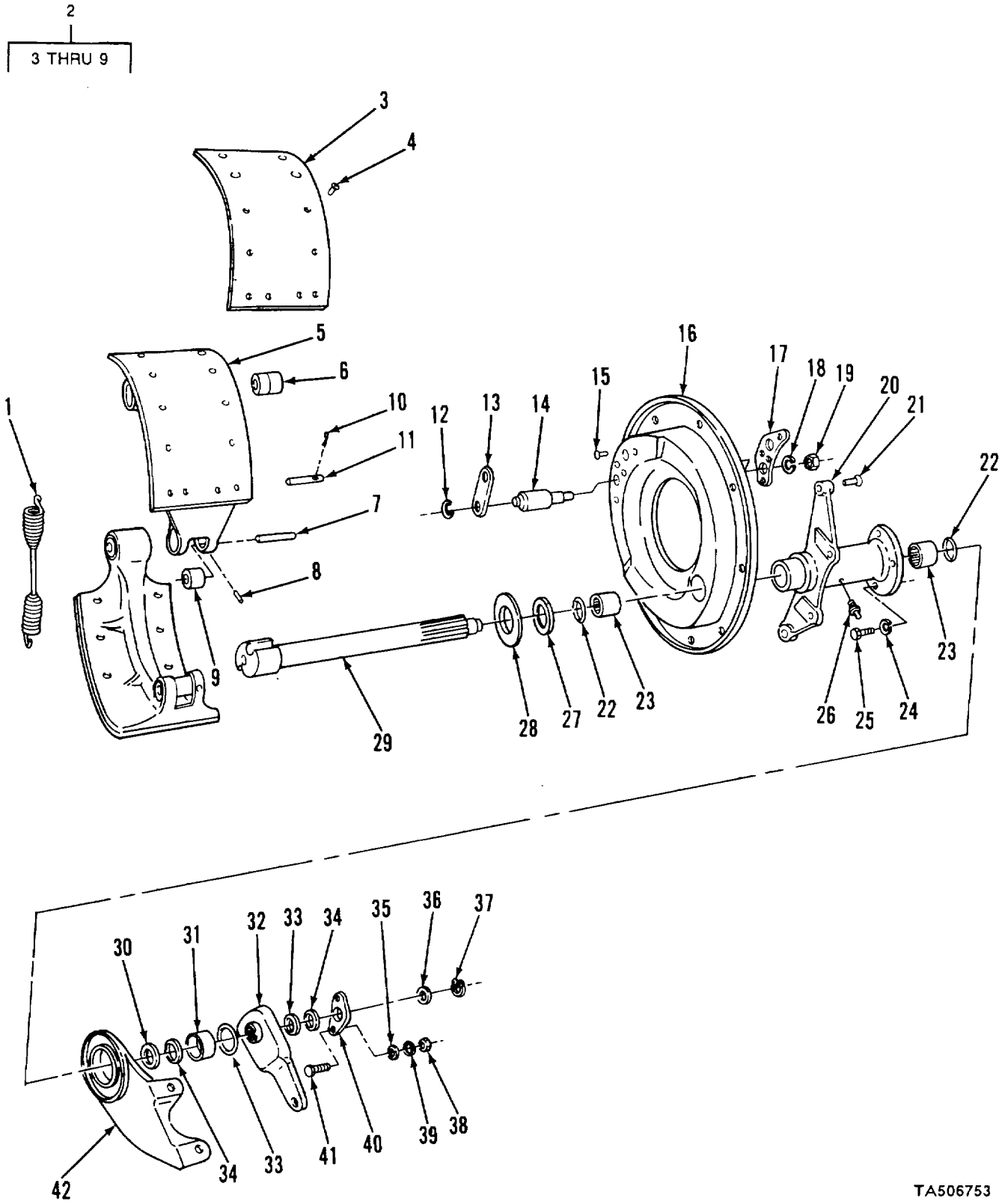

FIGURE 5. BRAKES (M197 AND M198).

(1) ITEM NO	(2) SMR CODE	(3) CAGEC	(4) PART NUMBER	(5) DESCRIPTION AND USABLE ON CODES (UOC)	(6) QTY
				GROUP 12 BRAKES	
				GROUP 1202 SERVICE BRAKES	
				FIG. 5 BRAKES (M197 AND M198)	
1	PAOZZ	19207	7979339	SPRING, HELICAL, EXTE..... UOC: 842, 843	1
1	PAOZZ	19207	7409383	SPRING, HELICAL, EXTE..... UOC: 842.843	1
2	PAOFF	78500	A1-3722B28	BRAKE SHOE WITH LINING ..... UOC: 842,.843	4
3	PAFZZ	19207	7979277	LINING, FRICTION PART OF KIT P/N..... 8720226..... UOC:842, 843	2
4	PAFZZ	96906	MS16536-172	RIVET, TUBULAR..... UOC: 842, 843	20
5	XAFZZ	19207	7979279	BRAKE SHOE..... UOC: 842, 843	1
6	PAFZZ	19207	7409567	BUSHING, SLEEVE..... UOC: 842, 843	1
7	XAFZZ	19207	7534847	PIN, STRAIGHT..... UOC: 842, 843	1
8	PAFZZ	96906	MS51019-65	SETSCREW ..... UOC :842, 843	1
9	XAFZZ	19207	7934846	ROLLER..... UOC:842, 843	1
10	PAFZZ	96906	M524665-283	PIN, COTTER ..... UOC: 842,.843	2
11	PAFZZ	19207	7409379	PIN, GROOVED, HEADLES..... UOC 842, 843	2
12	PAOZZ	19207	7696584	WASHER, SLOTTED ..... UOC: 842,.843	2
13	XBOZZ	19207	7409384	STRAP..... UOC: 842,.843	1
14	PAOZZ	78500	7979271	PIN.SHOULDER, HEADLE..... UOC: 842, .843	2
15	PAOZZ	96906	MS35743-76	RIVET, SOLID..... UOC: 842.843	4
16	PFOZZ	19207	7979336	PLATE, BACKNG, BRAKE ..... UOC: 842, 843	1
17	PFOZZ	192C7	7979334	BRACKET, ANCHOR PIN ..... UOC: 842, 843	1
18	PAOZZ	96906	MS35338-51	WASHER, LOCK ..... UOC: 842, 843	2
19	XBOZZ	78500	72782	NUT,.PLAIN, HEXAGON ..... UCC: 842, 843	2
20	XBOZZ	19207	7979335	BRACKET..... UOC: 842, 843	1
21	XDOZZ	19207	7979352	RIVET ..... UOC: 842, 843	4
22	PAOZZ	19207	7979333	SEAL, PLAIN ENCASED.....	2

(1) ITEM NO	(2) SMR CODE	(3) CAGEC	(4) PART NUMBER	(5) DESCRIPTION AND USABLE ON CODES (UOC)	(6) QTY
				UOC: 142, 843	
23	PAOZZ	10190	W19TB2420XOH	BEARING, .ROLLER, NEED	2
				UOC: 842, 843	
24	PAOZZ	96906	MS35338-48	WASHER, LOCK	3
				UOC: 842, 843	
25	PAFZZ	96906	NSSC725-111	SCREW, CAP, HEXAGON, H	3
				UOC: 842, 843	
26	PACZZ	96906	MS15003-1	FITTING, LUBRICATION.....	2
				UOC: 842, 843	
27	XDOZZ	19207	7534867	WASHER, FLAT	1
				UOC: 842, 843	
28	PAOZZ	19207	7979353	WASHER, FLAT	1
				UOC: 842.843	
29	PAOZZ	19207	7979317	CAMSHAFT, ACTUATING RIGHT SIDE.....	1
				UOC: 842, 843	
29	PFOZZ	19207	7979318	CAMSHAFT, ACTUATING LEFT SIDE	1
				UOC: 842, 843	
30	PAOZZ	19207	5168890	WASHER, .FLAT	2
				UOC: 842, 843	
31	PAOZZ	785OO	1744B2	SPACER, .SLEEVE	1
				UOC: 842, 843	
32	PAOZZ	19207	7349532	ADJUSTER, SLACK, BRAK R. H.	1
				UOC:843	
32	PAOZZ	19207	7349533	ADJUSTER, SLACK, BRAK L.H.....	1
				UOC: 843	
32	PAOZZ	19207	7979273	ADJUSTER, SLACK, BRAK	2
				UOC: 842	
33	XBCZZ	19207	7979354	SPACER	2
				UOC: 842, 843	
34	PAOZZ	19207	7014891	WASHER, FLAT, ...	2
				UOC: 842.843	
35	XDOZZ	19207	7979331	WASHER, FLAT	2
				UOC: 842, 843	
36	XDOZZ	19207	7979362	WASHER, FLAT	1
				UOC: 842, 843	
37	PAOZZ	96906	MS16624-1112	RING, RETAINING	1
				UOC: 842, 843	
38	PAOZZ	96906	MS35690-724	NUT, PLAIN, HEXAGON	2
				UOC:842, 843	
39	PAOZZ	96906	MS35338-47	WASHER, LOCK	2
				UOC: 842, 843	
40	XBOZZ	19207	7979350	BRACKET	1
				UOC: 842, 843	
41	PAOZZ	19207	7409389	BOLT, RIBBED SHOULDE.....	2
				UOC: 842, .843	
42	XBOZZ	19207	8384225	BRACKET, L.H	1
				UOC: 842, 843	
42	XBOZZ	19207	8384226	BRACKET, R.H.....	1
				UOC: 842, 843	

END OF FIGURE

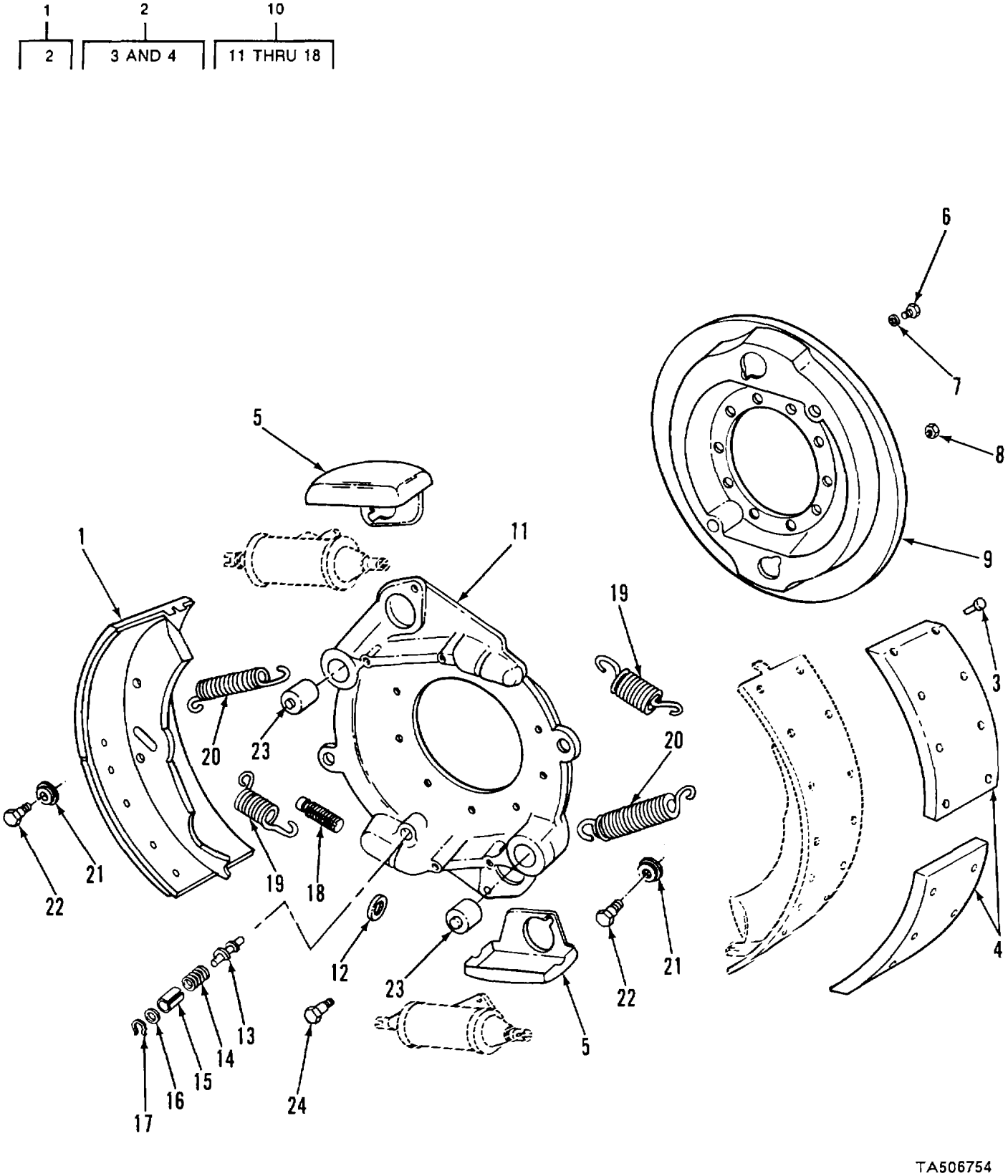

FIGURE 6. BRAKE ASSEMBLY (M197A1 AND M198A1, EARLY MODELS).

(1) ITEM NO	(2) SMR CODE	(3) CAGEC	(4) PART NUMBER	(5) DESCRIPTION AND USABLE ON CODES (UOC)	(6) QTY
				GROUP 1202 SERVICE BRAKES	
				FIG. 6 BRAKE ASSEMBLY (M197A1 AND M198A1 EARLY MODELS)	
1	PAOFF	96906	MS51003-1	BRAKE SHOE W/LINING, EARLY MODELS ..... UOC: 152, 844	4
2	PAFZZ	19207	8720226	BRAKE LINING KIT EARLY MODELS ..... V UOC: 152, 844	
3	PAFZZ	96906	MS16536-175	RIVET TUBULAR EARLY MODELS..... UOC: 152, 844	32
4	PAFZZ	19207	8710711	LINING, FRICTION EARLY MODELS ..... UOC: 152.844	4
5	PAOZZ	19207	8710694	SPARK SHIELD, .BRAKE EARLY MODELS..... L. H ..... UOC: 152, 844	1
5	PAOZZ	19207	8710693	SPARK SHIELD, BRAKE EARLY MODELS..... UOC: 152, 844	1
6	PAOZZ	96906	MS90725-34	BOLT.MACHINE EARLY MODELS UOC:152, 844	2
7	XDOZZ	96906	MS35291-34	WASHER, LOCK EARLY MODELS ..... UOC: 152, 844	2
8	PAOZZ	96906	MS51922-45	NUT, SELF-LOCKING EARLY MODELS UOC:152, 844	10
9	PAOZZ	19207	8710717	PLATE, BACKING,.BRAKE EARLY MODELS UOC:152, 844	1
9	PAOZZ	19207	8710718	PLATE, BACKING, BRAKE EARLY MODELS, ... R. H. UOC:152, 844	1
10	PFOOO	19207	8710718	SPIDER ASSEMBLY EARLY MODELS, L.H..... UOC: 152, 844	1
10	PFOOO	19207	8710681	SPIDER ASSEMBLY EARLY MODELS. R.H..... UOC: 152, 844	1
11	PFOZZ	19207	8710712	SPIDER, BRAKE EARLY MCDELS, L.H ..... UOC: 152, 844	1
11	PFOZZ	19207	8710713	SPIDER, BRAKE EARLY MCDELS, R.H..... UOC: 152.844	1
12	PAOZZ	19207	8710674	GEAR, HELICAL EARLY MODELS..... UOC: 152, 844	1
13	PAOZZ	19207	8710692	STUD ASSEMBLY EARLY MODELS..... UOC: 152, 844	2
14	PAOZZ	19207	8710695	GEAR, WORM EARLY MODELS ..... UOC: 152, 844	2
15	PAOZZ	63477	F010937	BUSHING, SLEEVE EARLY MODELS..... UOC: 152.844	2
16	PAOZZ	19207	810673	WASHER, KEY EARLY MCDELS ..... UOC: 152.844	2
17	PAOZZ	19207	8710672	RING, RETAINING EARLY MODELS ..... UOC: 152, 844	2
18	PAOZZ	19207	8710708	SCREW ADJUSTING BRA EARLY MODELS.....	2

(1) ITEM NO	(2) SMR CODE	(3) CAGEC	(4) PART NUMBER	(5) DESCRIPTION AND USABLE ON CODES (UOC)	(6) QTY
				UOC: 152, 844	
19	PAOZZ	19207	8710696	SPRING, HELICAL, EXTE EARLY MODELS.....	2
				UOC:152, 844	
20	PAOZZ	19207	8710697	SPRING, HELICAL, EXTE EARLY MODELS.....	2
				UOC: 152, .844	
21	PAOZZ	19207	8710685	WASHER, FLAT EARLY MODELS	2
				UOC:152, 844	
22	PAOZZ	19207	8710683	BOLT, SHOULDER.....	4
				UCC: 152, 844	
23	PAOZZ	19207	8710705	PIN, .ANCHOR EARLY MODELS	2
				UOC: 152, 844	
24	PAOZZ	19207	123936	SCREW, CAP, HEXAGCN EARLY MODELS	10
				UOC: 844	
24	XDOZZ	96906	MS35298-139	SCREW EARLY MODELS.....	10
				UOC: 152	
				END OF FIGURE	

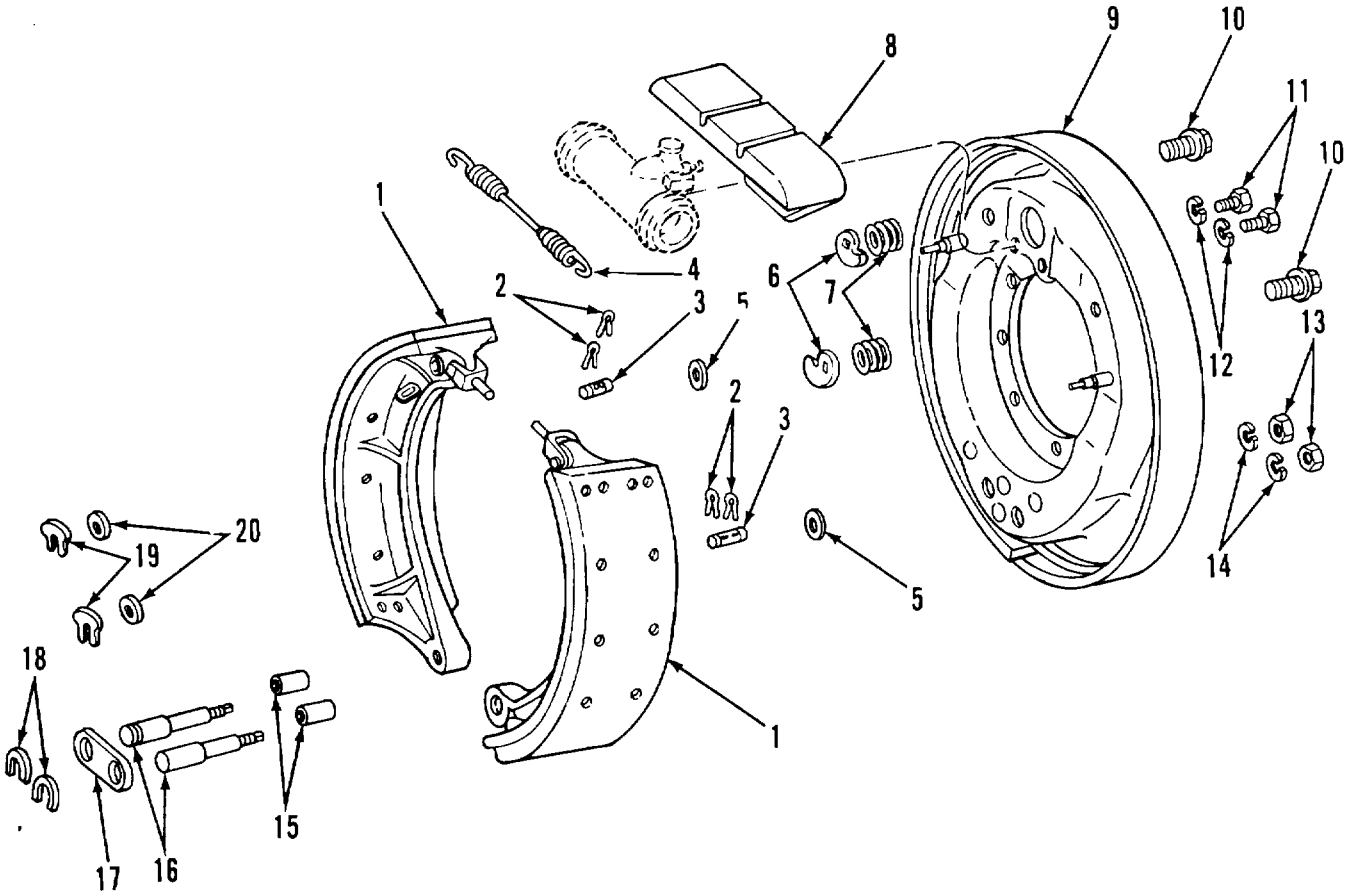

FIGURE 7. SERVICE BRAKE ASSEMBLY (M197A1 AND M198A1, LATE MODELS).

(1) ITEM NO	(2) SMR CODE	(3) CAGEC	(4) PART NUMBER	(5) DESCRIPTION AND USABLE ON CODES (UOC)	(6) QTY
				GROUP 1202 SERVICE BRAKES	
				FIG. 7 SERVICE BRAKE ASSEMBLY (M197A1 AND M198A1. LATE MODELS)	
1	PAOZZ	19207	7409380	SHOE LATE MODELS..... UOC: 152, .844	2
2	PAOZZ	96906	MS244665-283	PIN, COTTER LATE MODELS..... UOC: 152.844	2
3	PAOZZ	19207	7979330	PIN, GROOVED.HEADLES LATE MODELS..... UOC: 152.844	2
4	PAOZZ	19207	7979339	SPRING.HELICAL, EXTE LATE MODELS..... UOC:152.844	1
5	PAOZZ	19207	7409385	WASHER, SPRING TENSI LATE MODELS ..... UOC: 152.844	2
6	PAOZZ	23862	2003399	CAM, BRAKE ADJUSTING LATE MODELS ..... UOC: 152, 844	2
7	PAOZZ	78500	275803	SPRING.HELICAL.COMP LATE MODELS UOC:152, 844	2
8	PAOZZ	78500	2797E5	COVER, ACCESS LATE MODELS UOC:152, 844	1
9	PAOZZ	78500	A13736H8	PLATE, BACKING, BRAKE LATE MODELS..... UOC: 152.844	1
10	PAOZZ	19207	7409376	PIN, SHOULDER, HEADED LATE MODELS..... UOC: 152.844	2
11	PAOZZ	96906	MS90725-59	SCREW, CAP, HEXAGCN LATE MODELS ..... UOC :152, 844	2
12	PAOZZ	12603	23E06	WASHER, LOCK LATE MODELS ..... UOC: 152, 844	2
13	PAOZZ	19207	7207919	NUT, PLAIN, HEXAGON LATE MODELS..... UOC: 152, 844	2
14	PAOZZ	96906	MS35338-51	WASHER, .LOCK LATE MODELS ..... UOC: 152, 844	2
15	PAOZZ	19207	7409567	BUSHING, SLEEVE..... UOC: 152, 844	2
16	PAOZZ	78500	7979271	PIN, SHOULDER, HEADLE LATE MODELS ..... UOC: 152, 844	2
17	PAOZZ	78500	1745-E-5	LINK, ANCHOR.BRAKE LATE MODELS..... UOC:152, 844	2
18	PAOZZ	19207	7979332	WASHER,.SLOTTED LATE MODELS ..... UOC: 152, 844	2
19	PAOZZ	78500	1229-216	WASHER LATE MODELS..... UOC:152,.844	8
20	XDOZZ	19207	594261	WASHER, FLAT LATE MODELS ..... UOC: 152, 844	2

END OF FIGURE

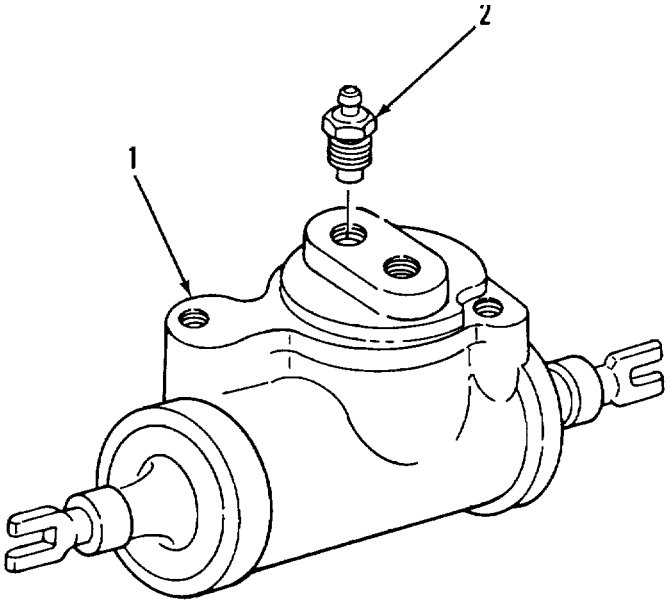

TA506756

FIGURE 8. HYDRAULIC WHEEL CYLINDER (M197A1 AND M198A1).

(1) ITEM NO	(2) SMR CODE	(3) CAGEC	(4) PART NUMBER	(5) DESCRIPTION AND USABLE ON CODES (UOC)	(6) QTY
				GROUP 1204 HYDRALLIC BRAKE SYSTEM	
				FIG. 8 HYDRAULIC WHEEL CYLINDER (Mig97Ai ANO ML98Al)	
1	PAOZZ	19207	8758259	CYLINDER ASSEMBL, ,LATE MCDELS..... UOC: 152, 844	2
1	PAOZZ	19207	8720473	CYLINDER ASSEMBLY, H WHEEL (LH ..... LOWER. RH UPPER) EARLY MCDELS UOC:152, 844	4
2	PAOZZ	19207	7411C71	BLEEDER VALVE, HYDRA LATE MODELS..... UOC: 152, 844	2
2	PAGZZ	19207	7373260	BLEEDER VALVE, HYDRA EARLY MODELS..... UOC: 152, 844	4

END OF FIGURE

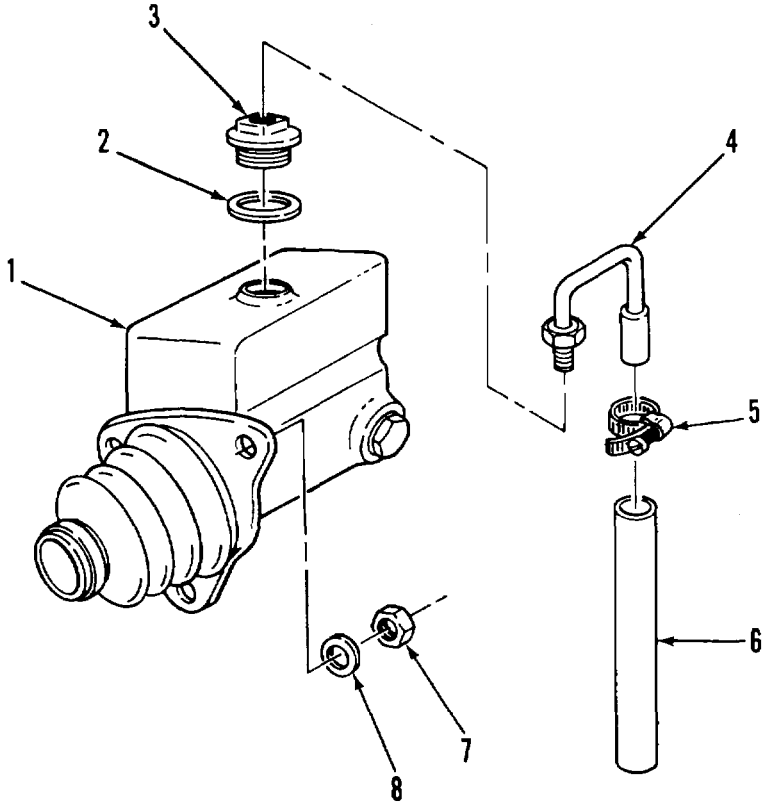

TA506757

FIGURE 9. HYDRAULIC BRAKE, MASTER CYLINDER (M197A1 AND M198A1).

(1) ITEM NO	(2) SMR CODE	(3) CAGEC	(4) PART NUMBER	(5) DESCRIPTION AND USABLE ON CODES (UOC)	(6) QTY
				GROUP 1204 HYDRAULIC BRAKE SVSTEM	
				FIG. 9 HYDRAULIC BRAKE. MASTER CYLINDER (M197A1 AND M198A1)	
1	PAOOO	19207	8332086	CYLINDER ASSEMBLY, H. ..... UOC: 152, 844	1
2	PAOZZ	19207	7373354	SPACE, RING ..... UOC: 152, 844	1
3	PAOZZ	19207	7979691	CAP, FILLER OPENING..... UOC: 152, 844	1
4	PAOZZ	19207	8365426	TUBE ASSEMBLY, .METAL..... UOC: 152, 844	1
5	PAOZZ	96906	MS35842-10	CLAMP, HOSE ..... UOC: 152, 844	2
6	PAOZZ	19207	8365425	HOSE, NONMETALLIC UOC:152, 844	1
7	PAOZZ	96906	MS51968-8	NUT, PLAIN, HEXAGON UOC:152, 844	3
8	PAOZZ	96906	MS35338-046	WASHER, LOCK UOC:152, 844	3

END OF FIGURE

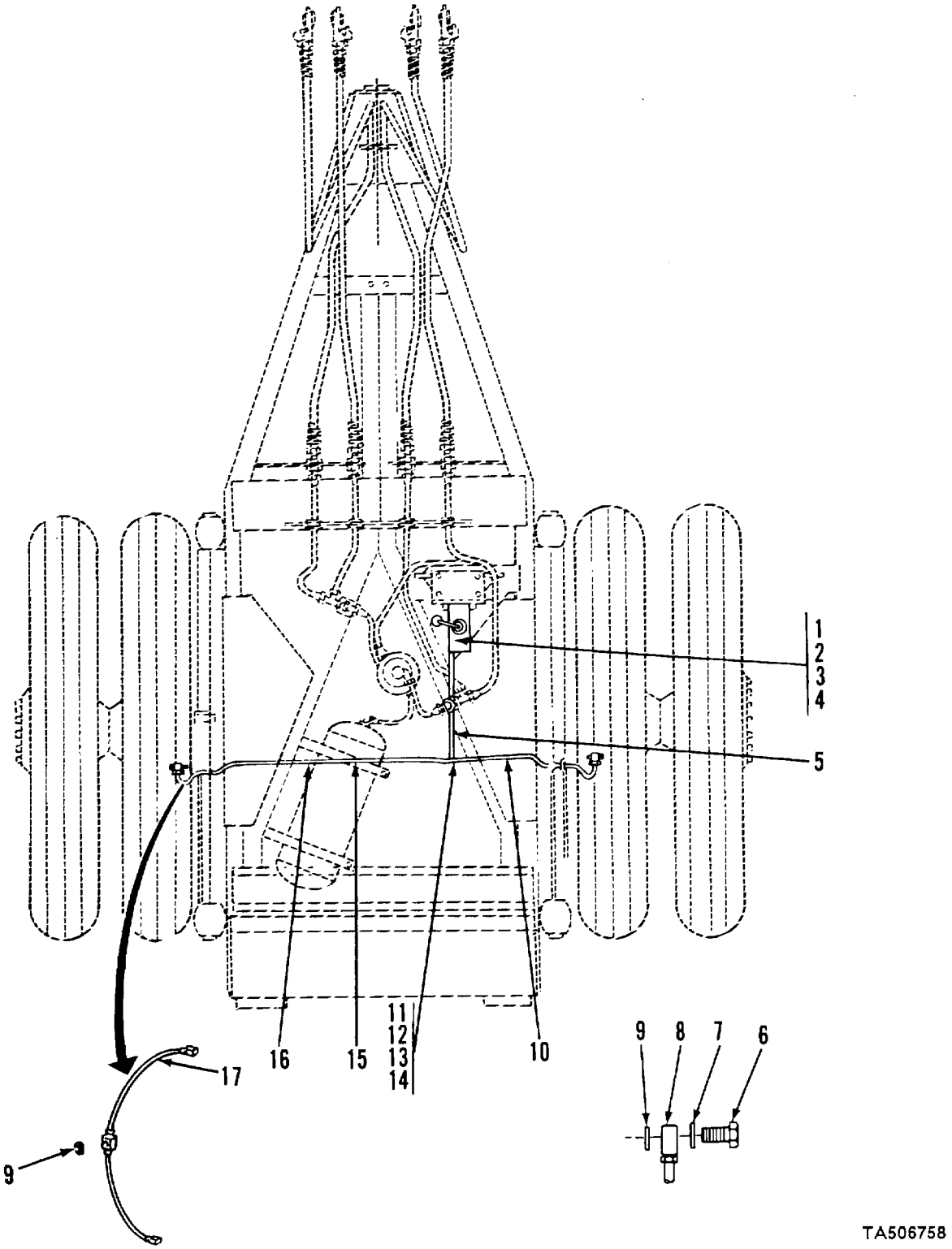

FIGURE 10. BRAKE HYDRAULIC SYSTEM (M197A1 AND M198A1)

(1) ITEM NO	(2) SMR CODE	(3) CAGEC	(4) PART NUMBER	(5) DESCRIPTION AND USABLE ON CODES (UOC)	(6) QTY
				GROUP 1204 HYDRAULIC BRAKE SYSTEM	
				FIG. 10 BRAKE HYDRAULIC SYSTEM (M197A AND M198A1	
1	PAOZZ	19207	5167419	BOLT, FLUID PASSAGE.. UOC:152,844	1
2	PAOZZ	19207	5160323	WASHER, FLAT UOC:152,844	1
3	PAOZZ	19207	7998669	CONNECTOR, MULTIPLE UOC:152,844	1
4	PAOZZ	19207	5175415	GASKET. UOC:152,844	1
5	PAOZZ	19207	8342220	HOSE ASSEMBLY, NONME UOC:844	1
5	PAOZZ	19207	10888837-2	HOSE ASSEMBLY, N0NME UOC:152	1
6	PAOZZ	19207	7412079	BOLT, FLUID, PASSAGE UOC:844	2
7	PAOZZ	19207	5298653	SPACER, RING UOC:844	2
8	PAOZZ	19207	7745464	TEE, TUBE. UOC:844	2
9	PAOZZ	19207	7412088	WASHER, SHOULDERED UOC:844	2
10	MFFZZ	19207	10888836	TUBE ASSEMBLY, METAL R.H., MAKE FROM TUBE, P/N., M3520-B70C02G UOC:844	1
10	MFFZZ	19207	8701375	TUBE ASSEMBLY R.H., MAKE FROM TUBE, P/N M3520-B70C02G	1
11	PAOZZ	96906	MS5168-8	NUT, PLAIN HEXAGON UOC:152,844	1
12	PAOZZ	19207	MS35338-046	WASHER, LOCK UOC152,844	1
13	XDOZZ	19207	8733906	STUD, PLAIN. UOC:152,844	1
14	XDOZZ	19207	5291100	TEE, TUBE.. UOC:152,844	1
15	MFFZZ	19207	8701374	TUBE, ASSEMBLY ,METAL R.H, WAKE FROM TUBE, P/N, M3520-B70C02G UOC:844	1
15	MFFZZ	19207	10888835	TUBE ASSEMBLY, METAL MAKE FROM TUBE PIN, M3520-B70C02G UOC:152	1
16	XDOZZ	19207	8365413	CLIP, TUBE. UOC: 152,844	1
17	PAOZZ	19207	8710676	TUBE, ASSEMBLY, METAL EARLY MODELS UPPER AND LOWER UOC:152.844	1

END OF FIGURE

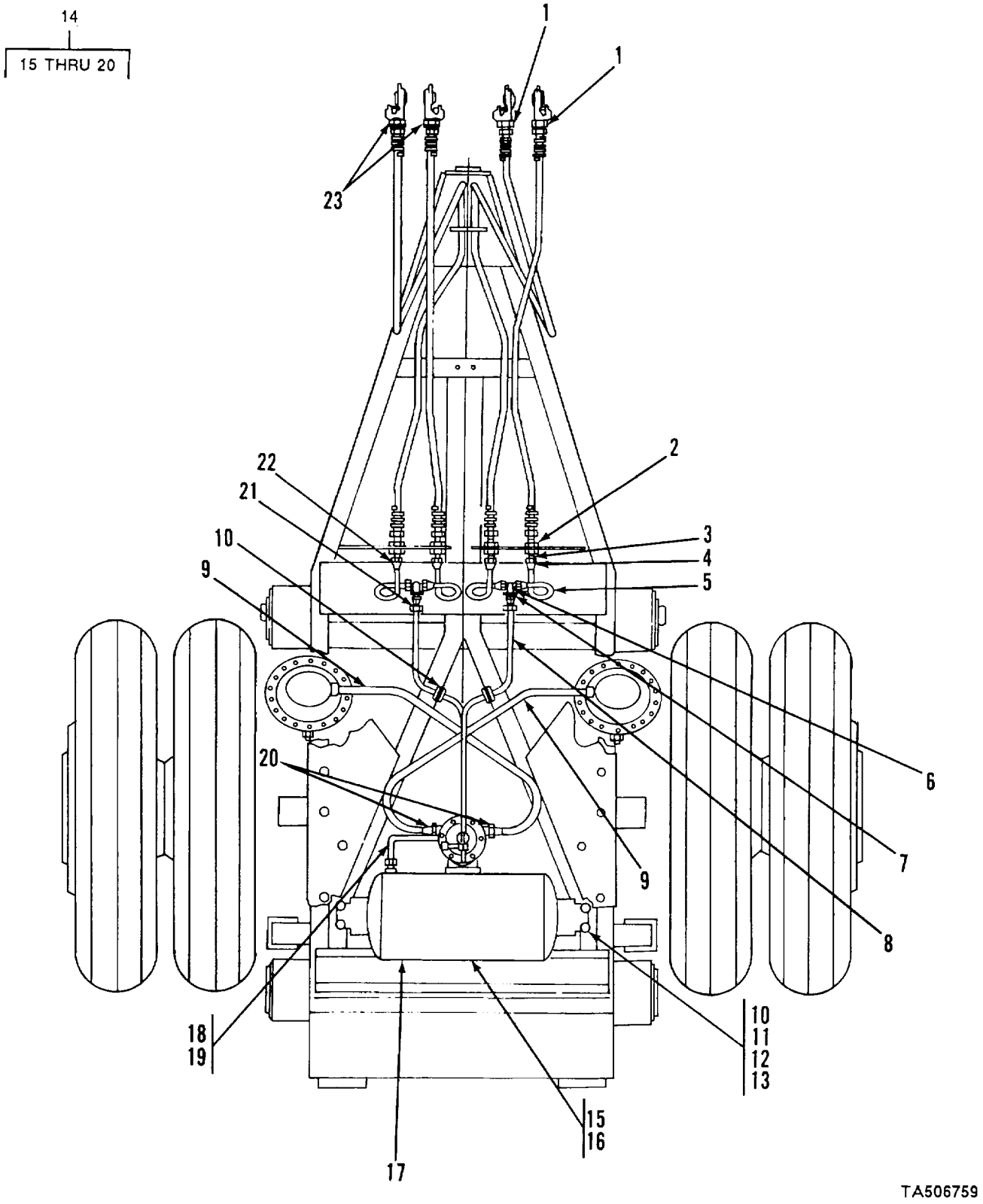

FIGURE 11. AIRBRAKE SYSTEM (M197 AND M198).

(1) ITEM NO	(2) SMR CODE	(3) CAGEC	(4) PART NUMBER	(5) DESCRIPTION AND USABLE ON CODES (UOC)	(6) QTY
				GROUP 1208 AIRBRAKE SYSTEM FIG 11 AIRBRAKE SYSTEM (M191 AND M198	
1	PAOZZ	19207	1979292	PLATE, IDENTIFICATION SERVICE. UOC:842,843	1
1	PAOZZ	19207	1979293	PLATE IDENTIFICATION EMERGENCY..... UOC:UOC:842,843	1
2	XBOZZ	19207	215759	NUT, COUPLING..... UOC:UOC:842,843	4
3	PAOZZ	19207	7979893	CONNECTOR, BRAKE TUB ..... UOC: UOC:842,843	4
4	PAOZZ	96906	MS39158-5	ADAPTER, STRAIGHT..... UOC:UOC:842,843	4
5	PAOZZ	19207	7197522	TUBE, ASSEMBLY, METAL..... UOC:843	4
5	XBOZZ	19207	7979001	TUBE, ASSEMBLY, METAL..... UOC:842	4
6	XBOZZ	96906	MS39165-5	TEE TUBE UOC:842,843	1
7	XBOZZ	19207	137538	ELBOW, TUBE UOC:842,843	2
8	XDOZZ	19207	7579898	TUBE, METAL UOC:842,843	4
9	PAOZZ	19207	799897	HOSE, ASSEMBLY, NONME..... UOC:842,843	2
10	PAOZZ	19207	7979287	GROMMET, NONMETALLIC UOC:842,843	4
11	PAOZZ	96906	MS95122-021	NUT, SELF-LOCKING HEXAGON. UOC:842,843	4
12	PAOZZ	96506	MS15795-214	WASHER, FLAT. UOC:842,843	8
13	PAOZZ	96906	MS35292-2	SCREW, CAP, HEXAGON HEAD UOC:842,843	4
14	XDOOO	19207	7979896	TANK, ASSEMBLY, AIR..... UOC:842,843	1
15	PAOZZ	19207	7979298	TANK, PRESSURE AIR..... UOC:842,843	1
16	PAOZZ	96906	MS35783-2	DRAIN, COCK UOC:842,843	1
17	PAOZZ	96906	M535812-5	NUT, TUBE, COUPLING UOC:842,843	1
18	XBOZZ	19207	137409	CONNECTOR, TUBE UOC:842,843	2
19	XBOZZ	19207	7979173	TUBE, ASSEMBLY, ,METAL..... UOC:842,843	1
20	XBOZZ	21450	144036	REDUCER U0C842,843	2
19	XBOZZ	19207	7064645	GROMMET UOC:842,843	2
20	PAOZZ	81343	6-4 120102BA	ADAPTER ,STRAIGHT.....	2

(1) ITEM NO	(2) SMR CODE	(3) CAGEC	(4) PART NUMBER	(5) DESCRIPTION AND USABLE ON CODES (UOC)	(6) QTY
				UOC: 42,843	
23	PAOZZ	40342	N101790B	TAG EMERGENCY LINE	2
				UOC:842,843	

END 0F FIGURE

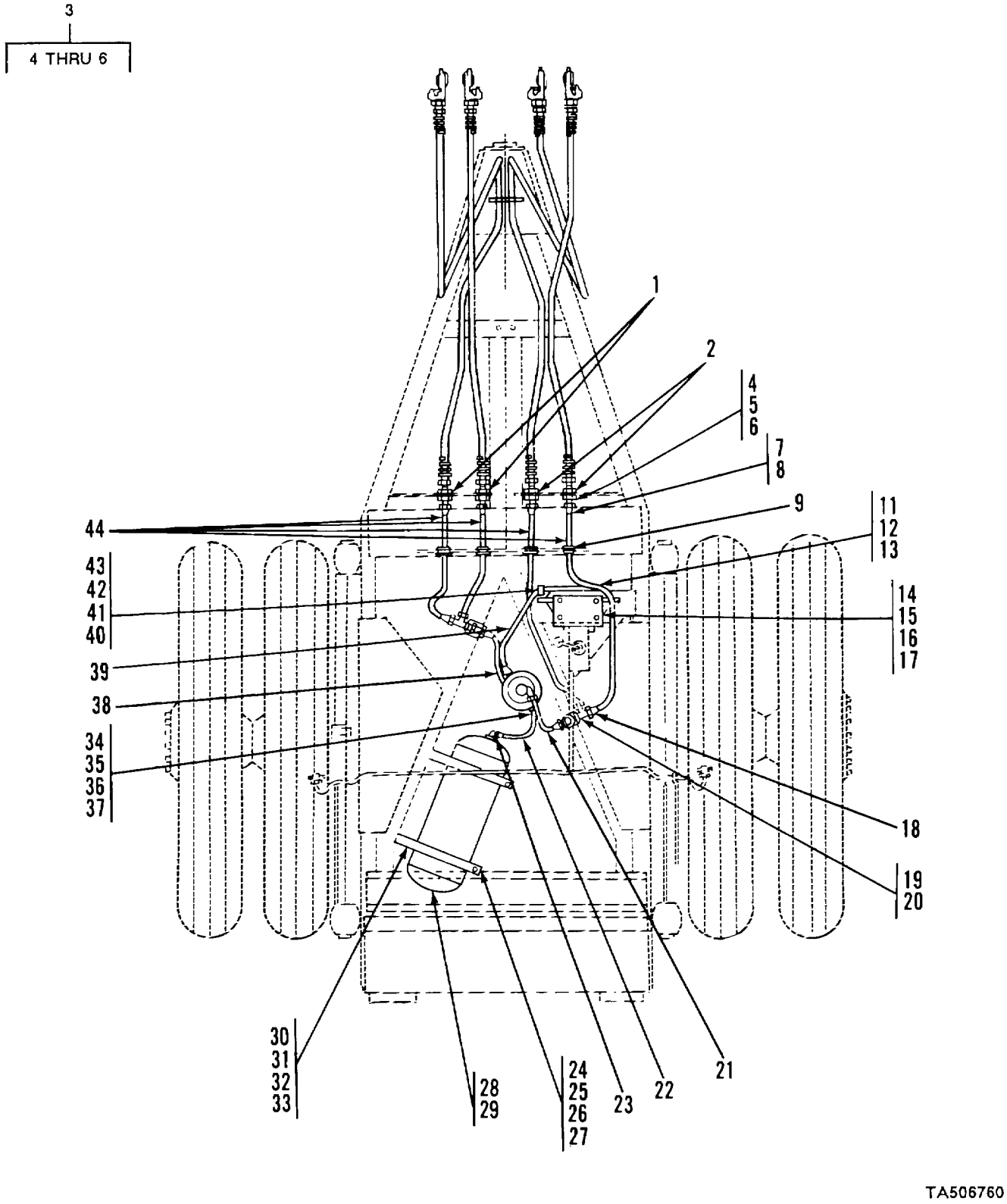

FIGURE 12. AIRBRAKE SYSTEM (M197A1 AND M198A1).

(1) ITEM NO	(2) SMR CODE	(3) CAGEC	(4) PART NUMBER	(5) DESCRIPTION AND USABLE ON CODES (UOC)	(6) QTY
				GROUP 1208 AIRBRAKE SYSTEM	
				FIG.12 AIRBRAKE SYSTEM (M197A1 AND M198A1)	
1	PAOZZ	96906	MS53007-2	PLATE, IDENTIFICATION EMERGENCY..... UOC:152,844	2
2	PAOZZ	96906	MS3507-1	PLATE, IDENTIFICATION SERVICE UOC:152,844	2
3	AOOOO	19207	7064896	BOLT, TERMINAL UOC:152,844	4
4	XAOZZ	19207	7344896	BOLT..... UOC:152,844	1
5	PAOZZ	96906	MS35333-30	WASHER, LOCK UOC:152,844	1
6	PAOZZ	96506	MS35690-1225	NUT, PLAIN HEXAGON UOC:152,844	1
7	PAOZZ	96506	MS39179-5	ADAPTER STRAIGHT PIPE..... UOC:152,844	4
8	PAOZZ	19201	CPR102321-1	INSERT..... UOC:152,844	4
9	PAOZZ	19201	7979287	GROMMET, RUBBER UOC:152,844	4
10	PAOZZ	96906	MS1333-101	CLAMP, ASSEMBLY, ... UOC:152	2
11	PAOZZ	56506	MS90726-5	SCREW UOC:152	2
12	PAOZZ	56906	MS51964-2	NUT..... UOC:152	2
13	PAOZZ	96906	MS3533Z-44	WASHER. UOC:152	2
14	XBOZZ	19207	8380803	BRACKET UOC:152,844	1
15	PAOZZ	96906	MS90726-60	SCREW UOC:152,844	4
16	PAOZZ	96906	MS35338-46	WASHER, LOCK UOC:152,844	4
17	PAOZZ	96906	MS51966-8	NUT..... UOC:152,844	4
18	PAOZZ	69906	MS39182-3	ELBOW..... UOC:152,844	2
19	PAOZZ	96906	MS39190-3	TEE, PIPE..... UOC:844	2
19	PAOZZ	96906	MS39191-2	TEE, PIPE..... UOC:152	2
20	PAOZZ	19207	CPR102321-1	INSERT..... UOC:152,844	4
21	XBOZZ	19207	8701353-2	TUBING UOC:844	1
21	XBOZZ	19207	10888834-3	TUBING UOC:152	1
22	XBOZZ	19207	8701353-5	TUBE, BENT.....	1

(1) ITEM NO	(2) SMR CODE	(3) CAGEC	(4) PART NUMBER	(5) DESCRIPTION AND USABLE ON CODES (UOC)	(6) QTY
				UOC: 844	
22	XBOZZ	19207	10888834-8	TUBE, COPPER	1
				UOC:152	
23	PAOZZ	96906	MS39182-6	ELBOW, PIPE TO TUBE	1
				UOC:152,844	
24	PAOZZ	96906	MS35338-46	WASHER, LOCK.	2
				UOC:152,844	
25	PAOZZ	96906	MS51968-8	NUT	2
				UOC:152,844	
26	PAOZZ	96906	MS35355-71	BOLT, MACHINE.	2
				UOC:152,844	
27	XBOZZ	19207	7411079	BRACKET.	2
				UOC:152,844	
28	PAOZZ	96906	MS53782-5	COCK, DRAIN	1
				UOC:152,844	
29	PAOZZ	19207	7411078	RESERVOIR, TANK	1
				UOC:152,844	
30	PAOZZ	96906	MS51968-8	NUT	4
				UOC:152,844	
31	PAOZZ	96906	MS90726-60	BOLT.	4
				UOC:152,844	
32	PAOZZ	96906	MS35338-46	WASHER, LOCK	4
				UOC:152,844	
33	PAOZZ	19207	7411080	CLAMP, AIR RESERVOIR	2
				UOC:152,844	
34	PAOZZ	96906	MS35182-5	ELBOW	1
				UOC:152,844	
35	PAOZZ	19207	CPR102321-1	INSERT	1
				UOC:152,844	
36	PAOZZ	96906	MS39139-9	ADAPTER...	1
				UOC:152,844	
37	PAOZZ	19207	CPR102321-1	INSERT	1
				UOC:152,844	
38	XBOZZ	19207	8701353-3	TUBING	1
				UOC:844	
38	XBOZZ	19207	10888834-6	TUBING	1
				UOC:152	
39	X80ZZ	19207	8701323-4	TUBING	1
				UOC:844	
39	XBOZZ	19207	10888834-7	TUBING	1
				UOC:152	
40	PAOZZ	96906	MS21333-101	CLAMP	1
				UOC:844	
41	PAOZZ	96906	MS90726-5	SCREW, CAP, HEXAGON	1
				UOC:844	
42	PAOZZ	96906	MS51968-2	NUT, PLAIN HEXAGON.	1
				UOC:844	
43	PAOZZ	96906	MS35338-44	WASHER, LOCK	1
				UOC:844	
44	XBOZZ	19207	8701353-1	TUBING	4
				UOC:844	
44	XBOZZ	19207	10888834-1	TUBING 33 INCHES L0NG	1

(1) ITEM NO	(2) SMR CODE	(3) CAGEC	(4) PART NUMBER	(5) DESCRIPTION AND USABLE ON CODES (UOC)	(6) QTY
				UOC: 152	
44	XBOZZ	19207	10888834-2	TUBING 26 INCHES LONG..... UOC:152	1
44	XBOZZ	19207	10888834-4	TUBING 14 INCHES LONG..... UOC:152	1
44	XBOZZ	19207	10888834-5	TUBING 17 INCHES LONG..... UOC:152	1

END OF FIGURE

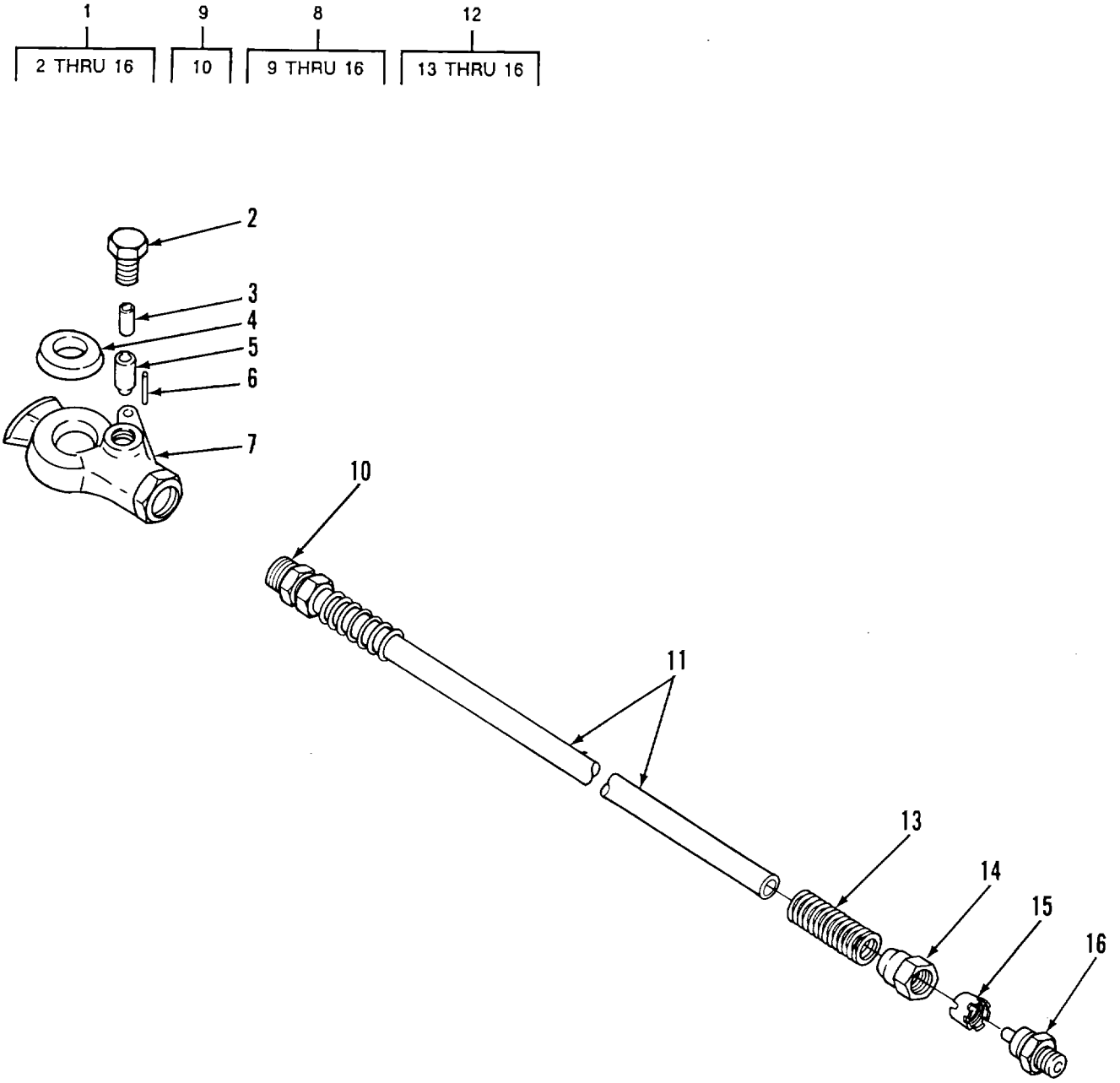

TA506761

FIGURE 13. BRAKE LINE COUPLING AND HOSE ASSEMBLY.

(1) ITEM NO	(2) SMR CODE	(3) CAGEC	(4) PART NUMBER	(5) DESCRIPTION AND USABLE ON CODES (UOC)	(6) QTY
				GROUP 1208 AIRBRAKE SYSTEM	
				FIG 13 BRAKE LINE COUPLING AND HOSE ASSEMBLY	
1	PAOOO	96906	MS35746-1	COUPLING, HALF, QUICK	2
2	XBOZZ	96906	MS35750-1	PLUG, PIPE	1
3	XBOZZ	96906	MS35749-1	SPRING, HELICAL, COMP	1
4	PAOZZ	19207	538824	PACKING, PERFORMED	1
5	XBOZZ	96906	MS35750-1	PLUNGER	1
6	PAOZZ	24617	103725	PIN, STRAIGHT, HEADLE	1
7	XBOZZ	24617	538822	BODY COUPLING.	1
8	PAOOO	19207	7979895.	HOSE, ASSEMBLY, NONME	4
9	PAOOO	96906	MS39133-1	ADAPTER, STRAIGHT	1
10	XAOZZ	96906	MS39137-1	ADAPTER, BODY	1
11	XAOZZ	79207	8681944	HOSE...	1
12	PAOZZ	96906	MS39133-2	ADAPTER, STRAIGHT	1
13	XAOZZ	96906	MS39134	SPRING, HELICAL, COMP.	2
14	XAOZZ	96906	MS39135	NUT, COMPRESSION	2
15	XAOZZ	96906	MS39136	SLEEVE, COMPRESSION	2
16	PAOZZ	96906	MS39137-2	ADAPTER, BODY	1

END OF FIGURE

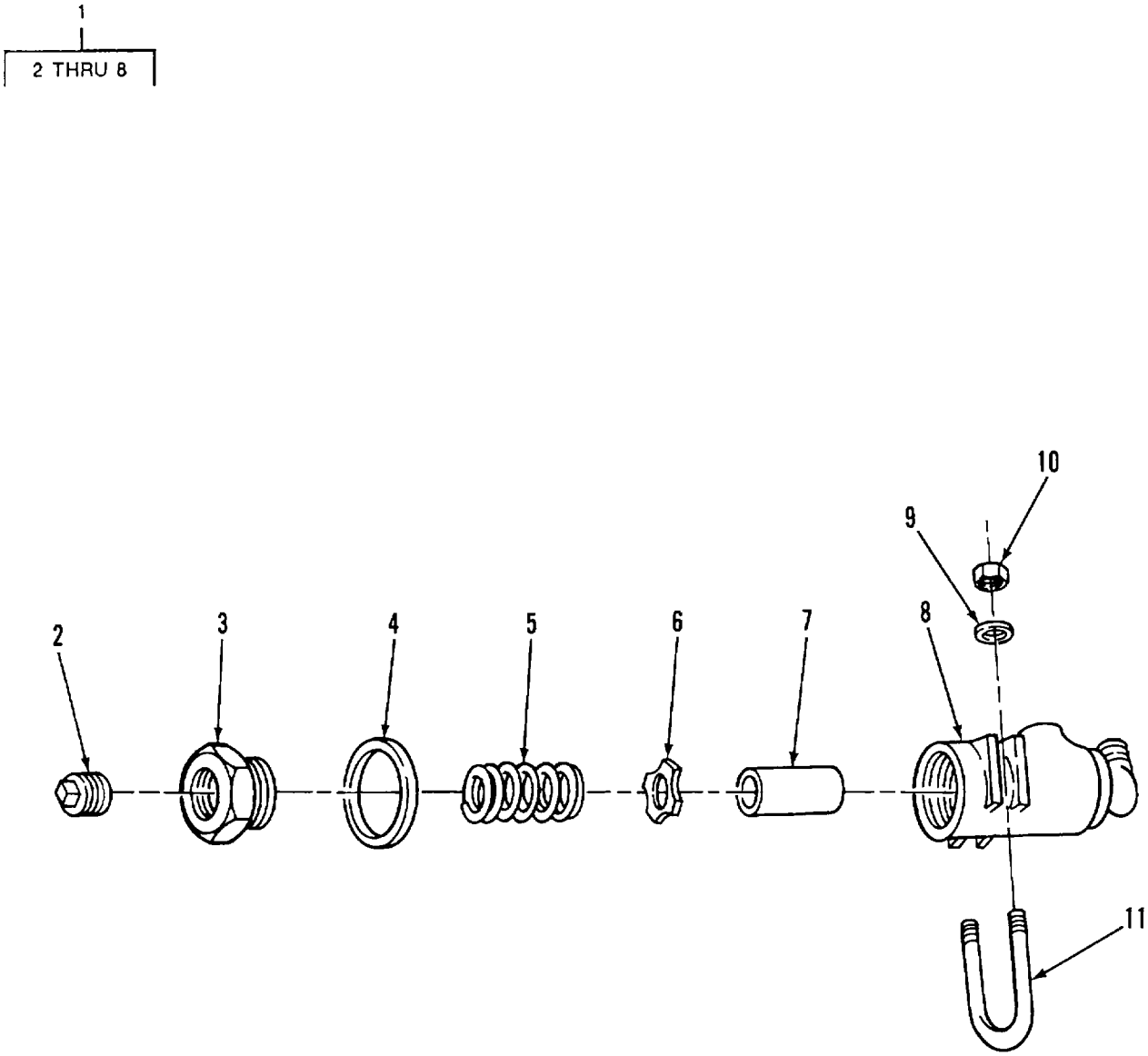

TA506762

FIGURE 14. AIR FILTER (M197A1 AND M198A1).

(1) ITEM NO	(2) SMR CODE	(3) CAGEC	(4) PART NUMBER	(5) DESCRIPTION AND USABLE ON CODES (UOC)	(6) QTY
				GROUP 128 AIRBRAKE SYSTEM	
				FIG 14 AIR FILTER (M19A1 AND M198A1)	
1	PAOOO	19207	7411022	AIR, FILTER BRAKE LINE UOC:152,844	2
2	PAOOO	96906	MS20913-12	PLUG, PIPE UOC:152,844	1
3	PAOOO	19207	7979613	ADAPTER, BUSHING..... UOC:152,844	1
4	PAOOO	19207	8325823	GASKET, PART OF KIT P/N RN13A UOC:152,844	1
5	PAOOO	19207	7979612	SPRING, HELICAL COMP PART OF KIT P/N RN3A UOC:152,844	1
6	PAOOO	19207	7979614	WASHER UOC:152,844	1
7	PAOOO	19207	7411081	ELEMENT, FILTER, FLUI PART OF KIT P/N RN13A UOC:152,844	1
8	PAOOO	19207	7415748	BODY, AIR LINE FILTE UOC:152,844	1
9	PAOOO	96096	MS35337-25	WASHER, L0CK. UOC:152,844	4
10	PAOOO	96096	MS51967-2	NUT, PLAIN HEXAGON UOC:152,844	4
11	PAOOO	19207	7979296	BOLT, U. UOC:152,844	2

END OF FIGURE

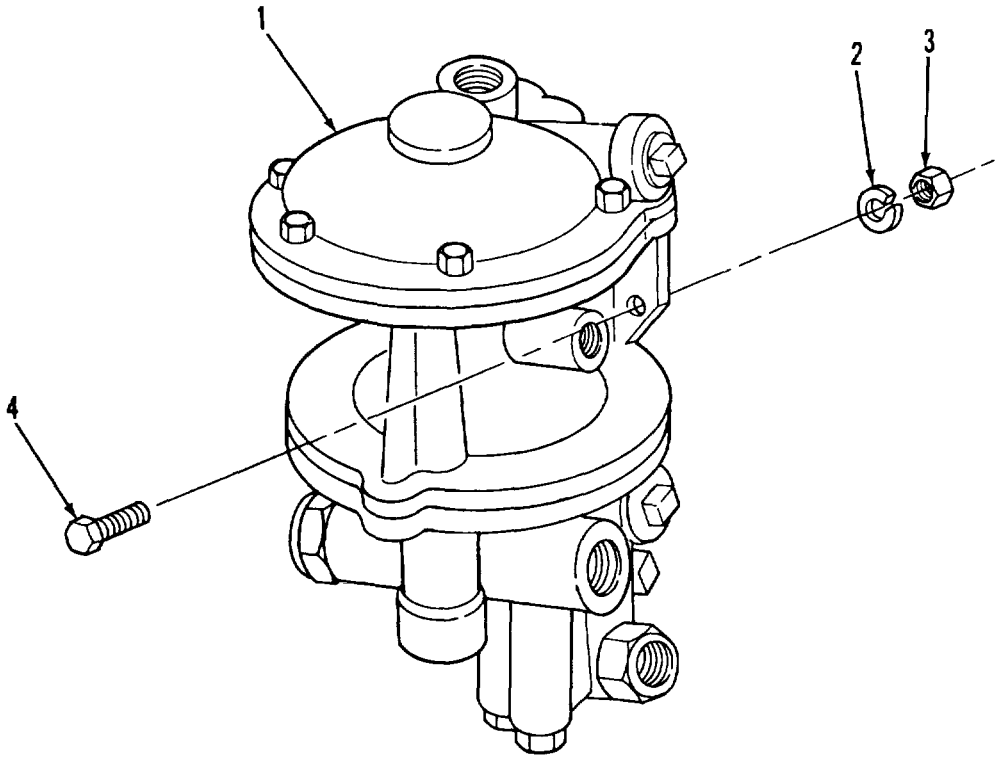

TA506763

FIGURE 15. EMERGENCY RELAY VALVE.

(1) ITEM NO	(2) SMR CODE	(3) CAGEC	(4) PART NUMBER	(5) DESCRIPTION AND USABLE ON CODES (UOC)	(6) QTY
				GROUP 1208 AIRBRAKE SYSTEM	
				FIG 15 EMERGENCY RELAY VALVE	
1	PAOZZ	96906	MS53004-2	VALUE, RELAY.....	1
2	PAOZZ	96906	MS35338-46	WASHER, LOCK.	2
3	PAOZZ	96906	MS51968-8	NUT, PLAIN, HEXAGON UOC:842,844	2
3	PAOZZ	96906	MS35690-624	NUT, PLAIN HEXAGON UOC:152,843	2
4	PAOZZ	96906	MS90726-63	SCREW, CAP HEXAGON. UOC:842,844	2
4	XBOZZ	96906	MS35294-63	SCREW, CAP HEXAGON. UOC:152,843	2

END OF FIGURE

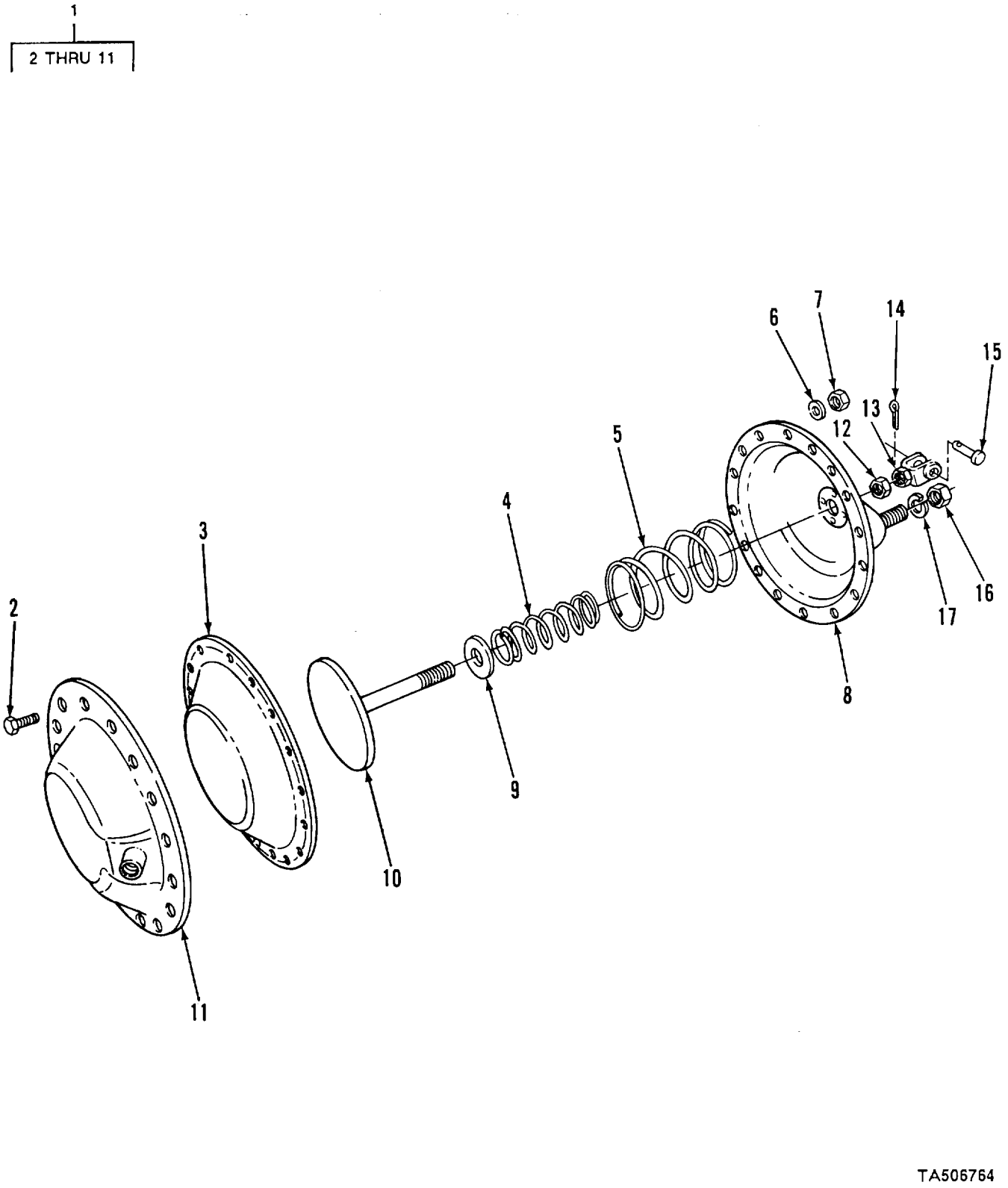

FIGURE 16. AIR CHAMBER ASSEMBLY (M197 AND M198).

(1) ITEM NO	(2) SMR CODE	(3) CAGEC	(4) PART NUMBER	(5) DESCRIPTION AND USABLE ON CODES (UOC)	(6) QTY
				GROUP 1208 AIRBRAKE SYSTEM	
				FIG 16 AIR CHAMBER ASSEMBLY (M197 AND M198)	
1	PAOOO	19207	7979039	CHAMBER, AIR BRAKE. UOC:842,843	2
2	PAOZZ	96906	MS35290-33	BOLT, MACHINE PART OF KIT P/N 7362426 UOC:842,843	18
3	PAOZZ	40342	N2318	DIAPHRAGM PART OF KIT P/N 7362426 UOC:842,843	1
4	KFOZZ	40342	N11225A	SPRING, PART OF KIT P/F 7362426 UOC:842,843	1
5	PAOZZ	40342	N12471	SPRING, PART OF KIT P/N 7362426. UOC:842,843	1
6	PAOZZ	96906	MS35338-45	WASHER, LOCK, PART OF KIT P/N 7362426 UOC:842,843	18
1	KFOZZ	96906	120368	NUT, PART, OF KIT P/N 7362426. UOC:842,843	18
8	XAOZZ	40342	10493D	BODY, CHAMBER UOC:842,843	1
9	XAOZZ	40342	11194	WASHER, FLAT UOC:842,843	1
10	XAOZZ	40342	N10521	ROD UOC:842,843	1
11	XAOZZ	40342	N10417	COVER, CHAMBER. UOC:842,843	1
12	PAOZZ	96906	MS35690-826	NUT, PLAIN HEXAGON.. UOC:842,843	1
13	PAOZZ	06721	N10447	CLEVIS, ROD END UOC:842,843	1
14	PAOZZ	96906	MS24665-353	PIN, COTTER UOC:842,843	1
15	PAOZZ	96506	MS35810-36	PIN, STRAIGHT, HEADED. UOC:842,843	1
16	PAOZZ	96906	MS35690-1025	NUT, PLAIN HEXAGON UOC:842,843	1
17	PAOZZ	96906	MS35338-50	WASHER, LOCK UOC:842,843	1

END OF FIGURE

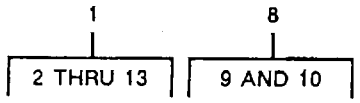

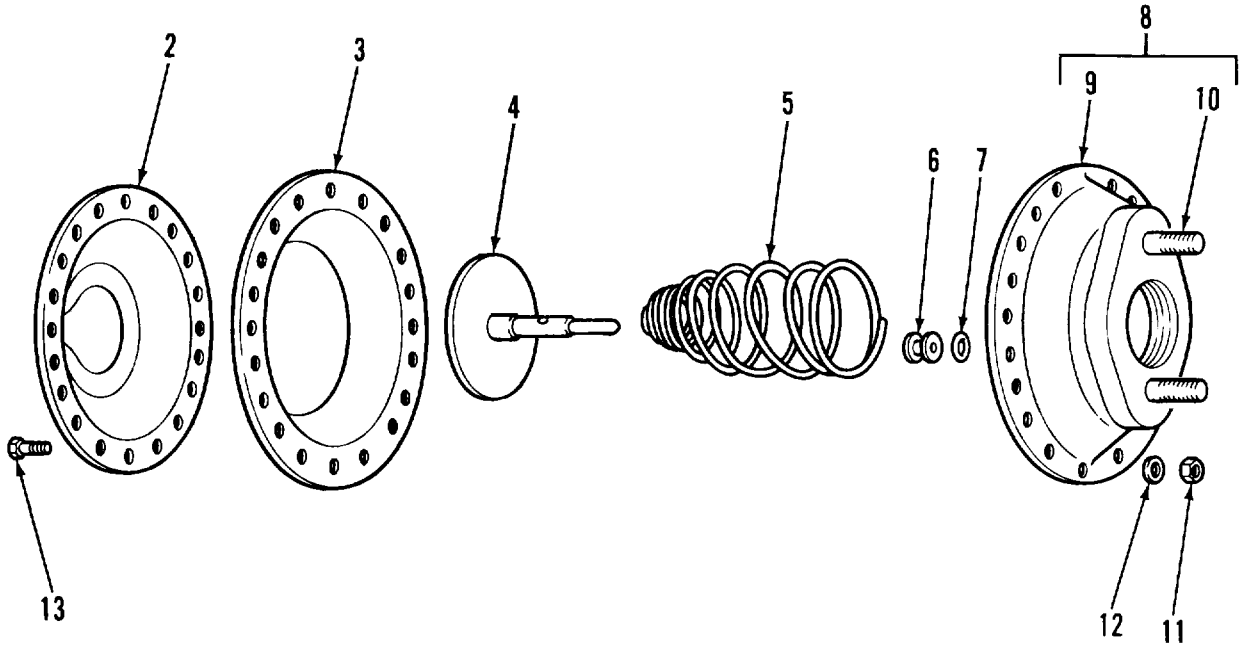

TA506765

FIGURE 17. AIR CHAMBER (M197A1 AND M198A1).

(1) ITEM NO	(2) SMR CODE	(3) CAGEC	(4) PART NUMBER	(5) DESCRIPTION AND USABLE ON CODES (UOC)	(6) QTY
				GROUP 1208 AIRBRAKE SYSTEM	
				FIG. 17 AIR CHAMBER (M197A1 AND M198A1)	
1	PAOOO	19207	7017931	CHAMBER, AIR BRAKE..... UOC:152,844	1
2	XAOZZ	19207	8380817	COVER, CHAMBER UOC:152,844	1
3	PAOZZ	19207	8380805	DIAPHRAGM, PART OF KIT P/N 8332643..... UOC:152,844	1
4	XAOZZ	19207	8380816	ROD, PUSH UOC:152,844	1
5	PAOZZ	19207	8380802	SPRING, RETURN PART OF KIT P/N..... 8332643 UOC:152,844	1
6	XAOZZ	19207	8380814	SEAL..... UOC:152,844	1
7	KFOZZ	19207	501212	PACKING, PERFORMED PART OF KIT P/N 8332643 UOC:152,844	1
8	XAOZZ	19207	8380801	BODY, ASSEMBLY..... UOC:152,844	1
9	XAOZZ	19207	8380807	BODY, CHAMBER..... UOC:152,844	1
10	XAOZZ	19207	10919661	SCREW, ... UOC:152,844	2
11	PAOZZ	96906	MS35690-625	NUT, PLAIN, HEXAGON PART OF KIT P/N..... 8332643 UOC:152,844	18
12	PAOZZ	96906	MS3533E-46	WASHER, LOCK PART OF KIT P/N 8332643..... UOC:152,844	18
13	PAOZZ	96906	MS90726-60	SCREW,. CAP, HEXAGON PART OF KIT P/F..... 833243 UOC:152,844	18

END OF FIGURE

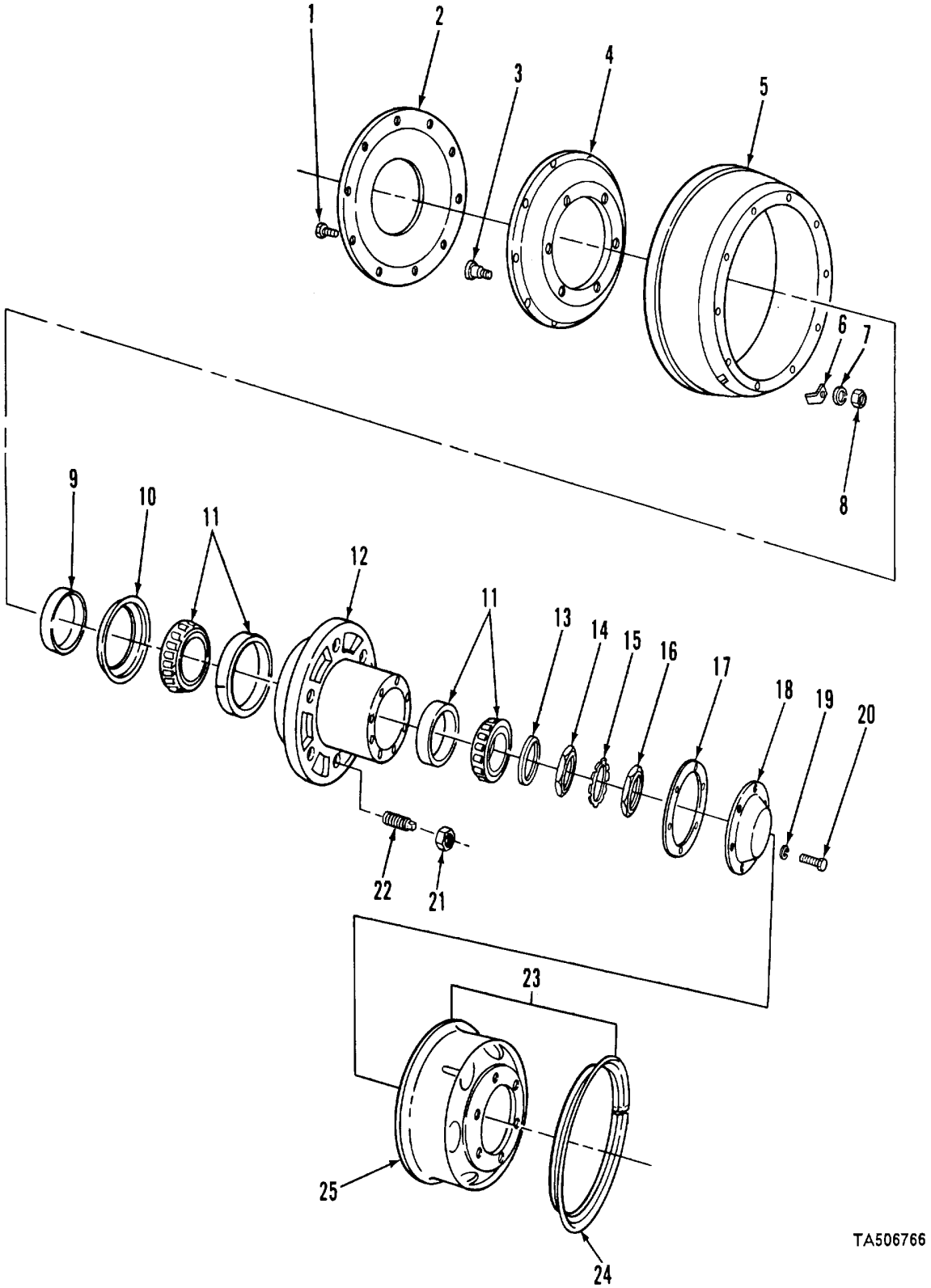

FIGURE 18. WHEEL AND HUB.

(1) ITEM NO	(2) SMR CODE	(3) CAGEC	(4) PART NUMBER	(5) DESCRIPTION AND USABLE ON CODES (UOC)	(6) QTY
				GROUP 13 WHEELS AND TRACKS	
				GROUP 1311 WHEEL ASSEMBLY	
				FIG 18 WHEEL AND HUB	
1	PAOZZ	19207	7409389	BOLT, RIBBED SHOULDE 7/16-20UNF X 1-	20
2	PAOZZ	19207	8343588	DEFLECTOR, DIRT AND LIQUID UOC:842	1
2	PAOZZ	19207	7409556	DEFLECTOR, DIRT AND LIQUID UOC:843	1
3	PAOZZ	96906	MS51946-1	BOLT, RIBBED SHOULDE LEFT UOC:842,844	10
3	PAOZZ	96906	MS51946-1	BOLT, RIBBED SHOULDE LEFT UOC:152,843	6
3	PAOZZ	96906	MS51S46-2	BOLT, RIBBED, SHOULDE RIGHT UOC:842,844	10
3	PAOZZ	96906	MS51946-2	80LT,RIBBED, SHOULDE RIGHT..... UOC:842,844	6
4	XDOZZ	19207	8710742	ADAPTER, DRUM UOC:152,844	1
4	PAOZZ	19207	8343587	ADAPTER UOC:842	1
4	XBOZZ	19207	7409380	ADAPTER, DRUM UOC:843	1
5	PAOZZ	19207	7409394	BRAKE, DRUM	2
6	PAOZZ	19207	7979315	COVER ACCESS	1
7	PAOZZ	96906	MS3533E-47	WASHER, LOCK	10
8	PAOZZ	96906	MS35690-724	NUT, PLAIN, HEXAGON	10
9	PAOZZ	19207	7405553	RING, WIPER	2
10	PAOZZ	19207	7975349	SEAL, PLAIN ENCASED.....	2
11	PAOZZ	08162	BT3994	CONE AND ROLLERS, TA.....	2
12	PAOZZ	19207	8710723	HUB, TRAILER WHEEL UOC:152	1
12	XAOZZ	19207	8343586	HUB. UOC:842	1
12	PAOZZ	19207	7979324	HUB, BODY UOC:843	1
12	PAOZZ	19207	871036	HUB, WHEEL UOC:844	1
13	PAOZZ	19207	7954291	WASHER, KEY UOC:842,844	1
14	PAOZZ	19207	7001725	NUT, PLAIN HEXAGON UOC:152	2
14	PAOZZ	19207	7521633	NUT, PLAIN OCTAGON UOC:842	4
14	PAOZZ	78500	12275305	NUT, PLAIN, OCTAGON HUB BEARING INNER..... UOC:842,844	2
15	PAOZZ	19207	7521650	WASHER, KEY UOC:842,844	2
15	XBOZZ	19207	7007089	WASHER KEY	1

(1) ITEM NO	(2) SMR CODE	(3) CAGEC	(4) PART NUMBER	(5) DESCRIPTION AND USABLE ON CODES (UOC)	(6) QTY
				UOC: 152.843	
16	PAOZZ	19207	7346885	NUT, PLAIN, OCTAGON WHEEL BEARING ADJUSTING (OUTER)	2
				UOC:152,842,843	
17	PAOZZ	19207	7521787	GASKET	2
				UOC:842	
17	PAOZZ	19207	8710726	GASKET	2
				UOC:152	
17	PAOZZ	19207	87107143	GASKET.	1
				UOC:844	
17	XBOZZ	19207	7346993	GASKET.	1
				UOC:843	
18	PAOZZ	19207	8710725	COVER, ACCESS	1
				UOC:152	
18	PAOZZ	19207	326286	CAP, GREASE.	1
				UOC:842	
18	PAOZZ	19207	8170744	COVER, ACCESS	1
				UOC:844	
18	XBOZZ	19207	7979307	COVER, ACCESS	1
				UOC:843	
19	PAOZZ	96906	MS35338-45	WASHER, LOCK	6
				UOC:152,844	
19	PAOZZ	96906	MS35338-48	WASHER, LOCK	6
				UOC:842,843	
20	PAOZZ	96906	MS90725-29	BOLT, MACHINE	6
				UOC:152,844	
20	XBOZZ	96906	MS3529-113	SCREW, CAP, HEXAGON.	6
				UOC:842,843	
21	PAOZZ	96906	MS51983-4	NUT, PLAIN, SINGLE BA R.H. THD.	6
21	PAOZZ	96906	MS51983-3	NUT, PLAIN, SINGLE BA LH THD	6
22	PAOZZ	96906	MS53068-2	NUT, CAP, DUAL WHEEL MOUNTING R.H., THD.	6
22	PAOZZ	96906	MS5306-1	NUT, CAP DUAL WHEEL MOUNTING, RH, THD.	6
23	PAOZZ	96906	MS53044-5	WHEEL, PNEUMATIC,TIR.	4
				UOC:842,844	
23	PAOZZ	96906	MS53044-6	RING, SIDE, AUTOMOTIV KNEUMATIC, TIR	4
				UOC:152,843	
24	PAOZZ	96906	MS53045-3	RING, SIDE, AUTOMOTIV.	4
25	PAOZZ	19207	7389493	DISK, WHEEL	1
				UOC:152,843	
25	PAOZZ	19207	7389620	WHEEL, KNEUMATIC, TIR	1
				UOC:42,844	

END OF FIGURE

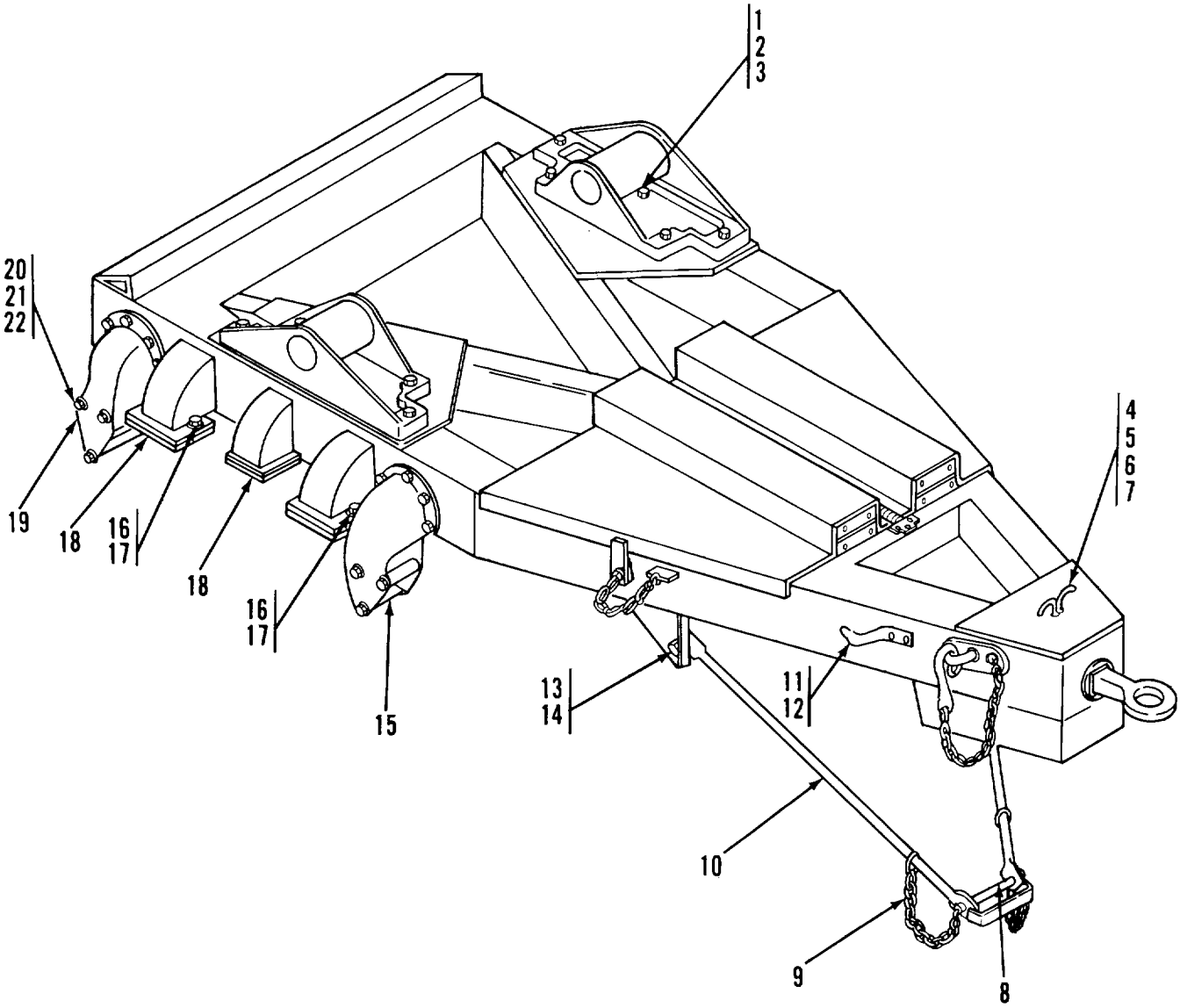
1
2
3
20
21
22
19
18
16
17
18
16
17
15
13
14
11
12
4
5
6
7
10
9
8

1

2 AND 3

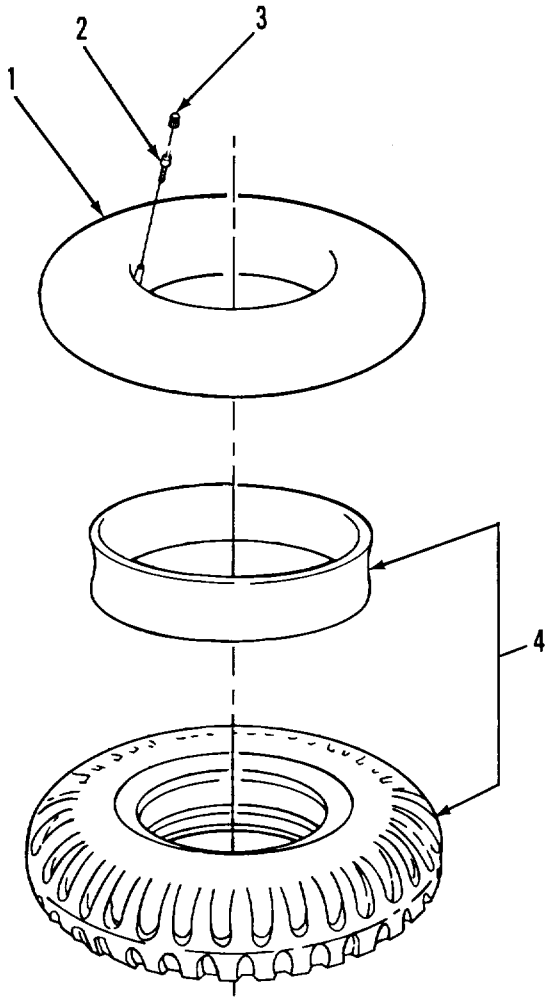

TA506767

FIGURE 19. TIRES AND TUBES.

(1) ITEM NO	(2) SMR CODE	(3) CAGEC	(4) PART NUMBER	(5) DESCRIPTION AND USABLE ON CODES (UOC)	(6) QTY
				GROUP 1313 TIRES, TUBES, TIRE CHAINS	
				FIG 19 TIRES AND TUBES	
1	PAOOO	81348	2289994	INNER TUBE, PNEUMATI TRUCK AND BUS 9.00-20 UOC:842,844	4
1	PAOOO	81348	11.0-20/TR78A/C N CENTER	INNER TUBE, PNEUMATI TRUCK AND BUS 11.00-20 UOC:152,843	4
2	PAOZZ	17875	100AA	VALVE CORE	4
3	PAOZZ	51665	US49	CAP, PNEUMATIC VALVE.	1
4	PAOFF	81348	GROUP 3/9.00-2/ D/TBCC	TIRE, PNEUMATIC TRUCK AND BUS,8- ..... PLY NDCC 9.00-20 UOC:842,844	5
4	PAOFF	07464	555374	TIRE,PNEUMATIC TRUCK AND BUS.12- PLY,NDCC,11.00-20 UOC:152,843	4
				END OF FIGURE	

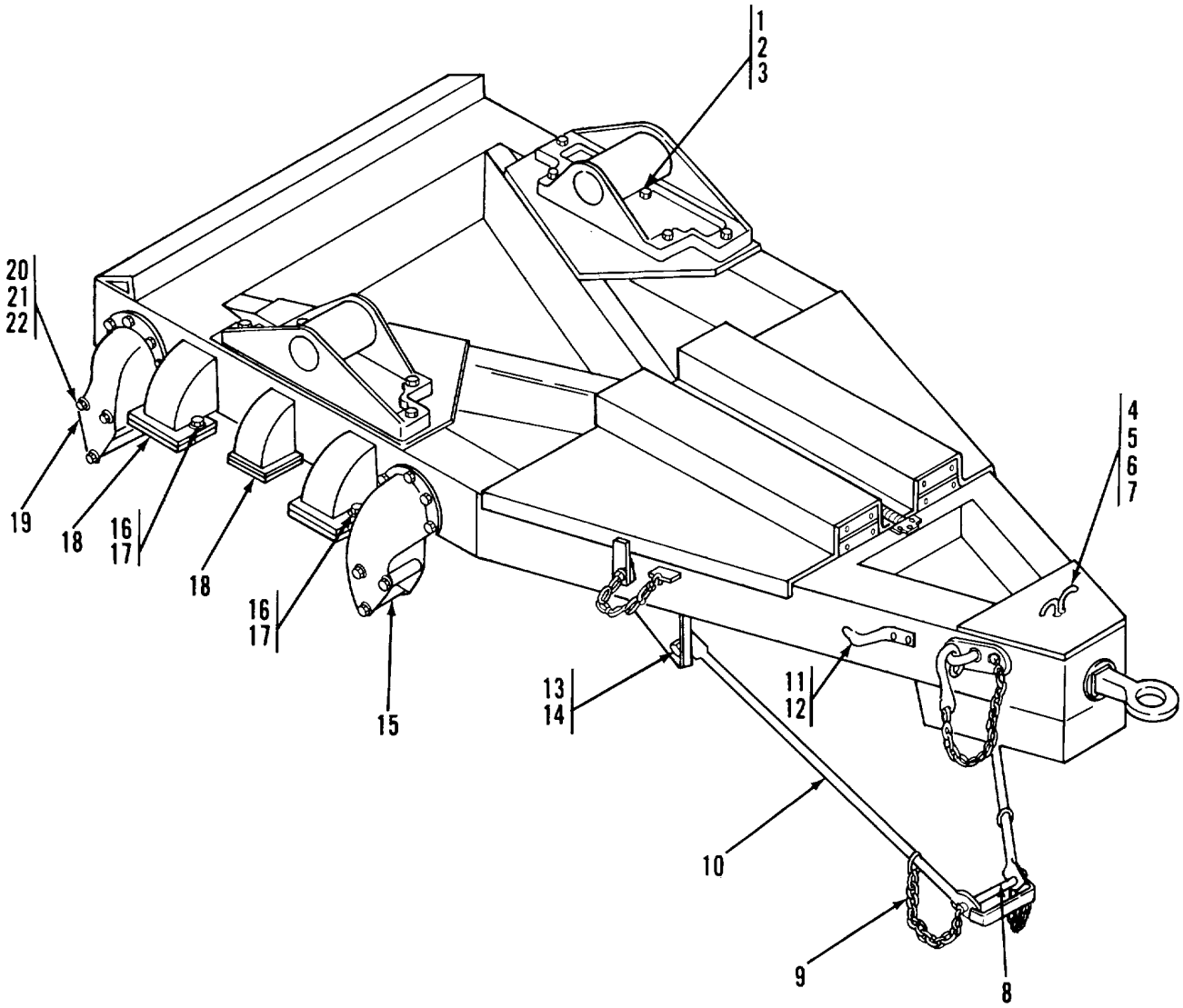

TA506768

FIGURE 20 LANDING LEG BRACE AND SPRING BUMPER.

(1) ITEM NO	(2) SMR CODE	(3) FSCM	(4) PART NUMBER	(5) DESCRIPTION AND USABLE ON CODES (UOC)	(6) QTY
				GROUP 15 FRAME. TOWING ATTACHMENTS, DRAWBARS. AND ARTICULATION SYSTEMS	
				GROUP 1501 FRAME ASSEMBLY	
				FIG. 20 LANDING LEG BRACE AND SPRING BUMPER	
1	PAOZZ	96906	MS35337-31	WASHER, LOCK	6
2	PAOZZ	96906	MS3569C-1024	NUT, PLAIN, HEXAG0N UOC:152	6
2	PAOZZ	96906	MS35690-1025	NUT, PLAIN, HEXAGON UOC:842,843,844	6
3	XDOZZ	96906	MS35290-166	SCREW, CAP, HEXAGON UOC:152	1
3	PAOZZ	96906	MS90724-144	SCREW, CAP, HEXAGON UOC:842,843,844	1
4	XDOZZ	19207	7979858	HOOK	1
5	PAOZZ	19207	8343401	SPRING, HELICAL, COMP	1
6	XBOZZ	96906	MS15797-221	WASHER, FLAT UOC:152	1
6	PAOZZ	96906	MS27183-22	WASHER, FLAT UOC:842,843,844	1
7	PAOZZ	96906	MS24665-353	PIN, COTTER	1
8	XBOZZ	19207	8343374	PIN	1
9	XBOZZ	19207	10888833	CUP AND CHAIN ASSEMBLY UOC:152	2
9	PAOZZ	19207	8343435	CHAIN AND PIN ASSEMBLY UOC:842,843,844	2
10	PAOZZ	19207	8701367	SUPPORT, LANDING LEG UOC:152	1
10	PAOZZ	19207	8343458	BRACE, ASSEMBLY UOC:842,843,844	1
11	XBOZZ	19207	8343425	STRAP, RETAINING	1
12	XBOZZ	19207	171768	SCREW, CAP, HEXAGON	2
13	PAOZZ	96906	MS27183-21	WASHER, FLAT UOC:152	1
14	PAOZZ	96906	MS2718-27	WASHER, FLAT UOC:842,843,844	1
14	PAOZZ	96906	MS24665-359	PIN, COTTER	1
15	XBOZZ	19207	8716978	BRACKET, MOUNTING UOC:152	2
16	PAOZZ	96906	MS3533E-46	WASHER, LOCK UOC:842,843	8
17	PAOZZ	96906	MNSS0726-59	SCREW, CAP, HEXAGON UOC:842,843	8
18	XBOZZ	19207	8681838	PLATE, WEAR LEAF UOC:842,843	4
19	XBOZZ	19207	8116977	BRACKET, MOUNTING UOC:152	2
20	XBOZZ	96906	MS35292-112	SCREW, CAP, HEXAGON UOC:842,843	20

(1) ITEM NO	(2) SMR CODE	(3) FSCM	(4) PART NUMBER	(5) DESCRIPTION AND USABLE ON CODES (UOC)	(6) QTY
21	PAOZZ	96906	MS35338-29	WASHER, LOCK UOC:842.843	20
22	PAOZZ	969O6	MS35690-825	NUT, PLAIN, HEXAGON.. ..... UOC:842,843	20

END OF FIGURE

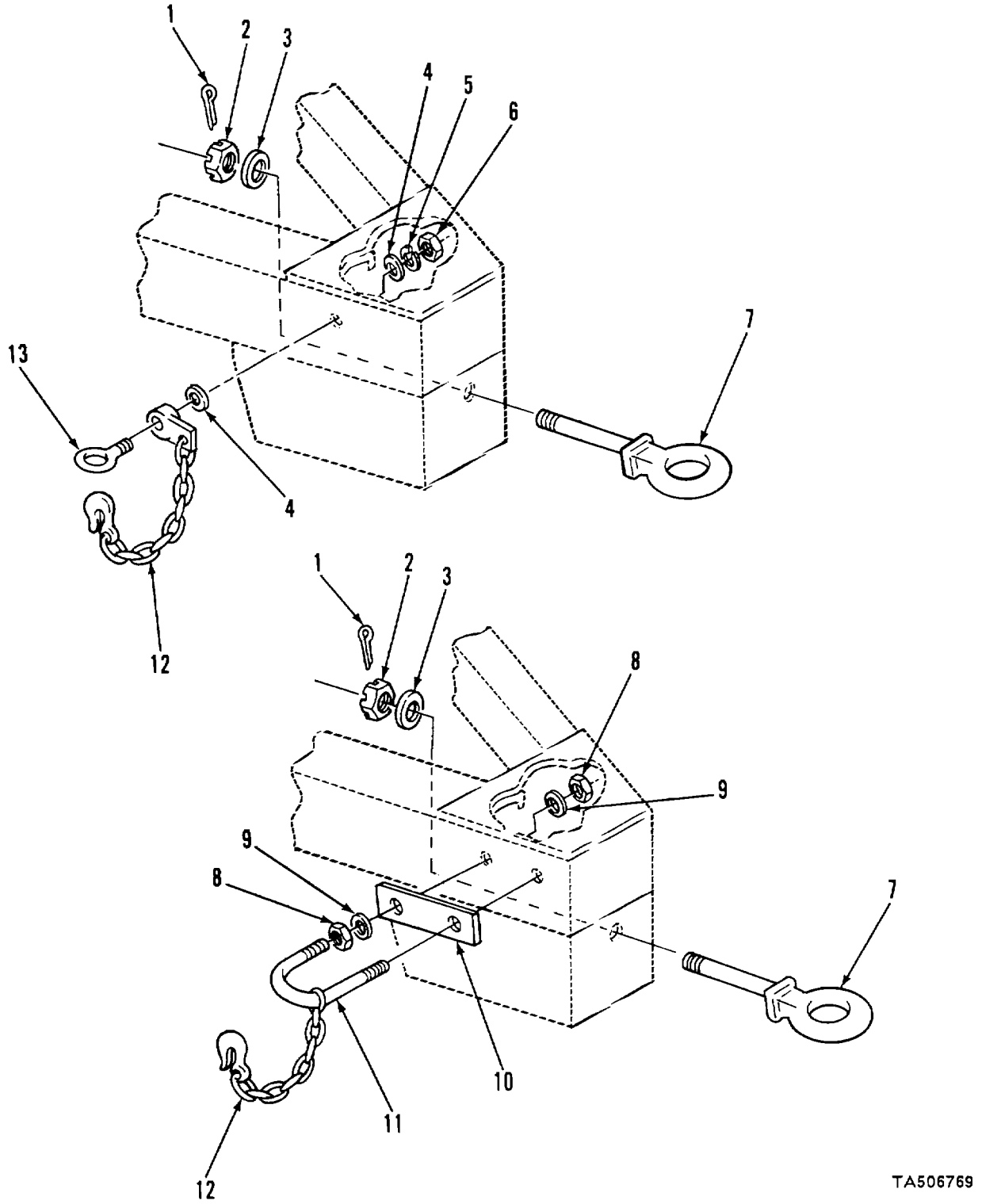

FIGURE 21. LUNETTE AND SAFETY CHAIN.

(1) ITEM NO	(2) SMR CODE	(3) FSCM	(4) PART NUMBER	(5) DESCRIPTION AND USABLE ON CODES (UOC)	(6) QTY
				GROUP 1503 PINTLES AND TONING ATTACHMENTS	
				FIG.21 LUNETTE AND SAFETY CHAIN	
1	PAOZZ	96906	MS24665-431	PIN, COTTER..	1
2	PAOZZ	19207	174603	NUT, PLAIN, SLOTTED, H	1
3	PAOZZ	96906	MS27183-34	WASHER, FLAT	1
4	XBOZZ	19207	8343438	WASHER. UOC:842,843	4
5	PAOZZ	96906	MS35338-51	WASHER, LOCK UOC:842,843	2
6	XBOZZ	96906	MS35691-1204	NUT, PLAIN, HEXAGON UOC:842,843	2
7	PAOZZ	19207	7979867	LUNETTE	1
8	PAOZZ	96906	MS51967-24	NUT UOC:844	8
8	PAOZZ	96906	MS21967-30	NUT UOC:152	8
9	PAOZZ	96906	MS27183-23	WASHER. UOC:844	8
9	PAOZZl	96906	MS7183-27	WASHER UOC:152	8
10	XBOZZ	19201	11597635	PLATE UOC:844	2
10	XBOZZ	19207	11625386	PLATE UOC:152	2
11	XBOZZ	19207	11597636	C-BOLT. UOC:844	2
11	XBOZZ	19207	11625381	U-BOLT UOC:152	2
12	PAOZZ	26051	MTS	CHAIN, ASSEMBLY UOC:842,843	2
12	XBOZZ	19207	11597639	CHAIN, ASSEMBLY UOC:844	2
12	XBOZZ	19207	11625384	CHAIN, ASSEMBLY UOC:152	2
13	XBOZZ	19207	7979944	EYEBOLT UOC:842,843	4

END OF FIGURE

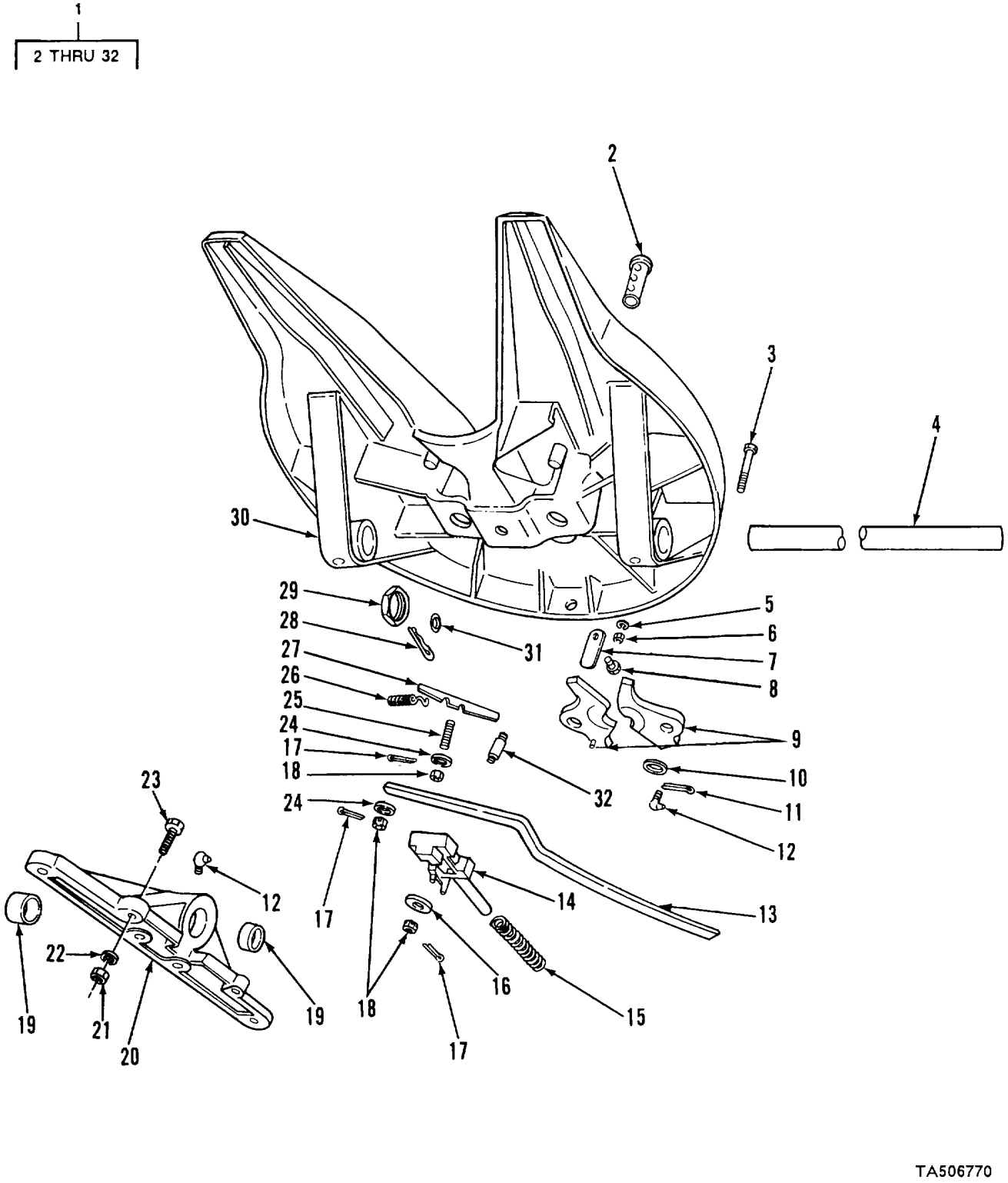

FIGURE 22. FIFTH WHEEL ASSEMBLY.

(1) ITEM NO	(2) SMR CODE	(3) FSCM	(4) PART NUMBER	(5) DESCRIPTION AND USABLE ON CODES (UOC)	(6) QTY
				GROUP 1506 FIFTH WHEEL	
				FIG. 22 FIFTH WHEEL ASSEMBLY	
1	XBOOO	96906	MS53035-1	FIFTH, WHEEL, ASSEMBL	1
2	XDOZZ	19207	7971210	PIN, WHEEL COUPLING	2
3	PAOZZ	96906	MS35291-72	SCREW, CAP, HEXAGON	1
4	PAOZZ	19207	7069268	SHAFT.	1
5	PAOZZ	96906	MS35337-27	LASER, LOCK	1
6	PAOZZ	96906	MS35690-605	NUT, PLAIN, HEXAGON	1
7	XAOZZ	19207	7971292	LOCK PLUNGER SAFETY	1
8	PAOZZ	19207	7067979	BOLT, SHOULDERED	1
9	PAOZZ	19207	7068180	JAW, COUPLER.	2
10	XBOZZ	19207	7971293	WASHER, FLAT	2
11	PAOZZ	96906	MS24665-686	PIN, COTTER	2
12	PAOZZ	96906	MS15003-6	FITTING, LUBRICATION	2
13	PAOZZ	19207	5328443	LEVER, OPERATING	1
14	PAOZZ	19207	1068245	PLUNGER	1
15	PAOZZ	72540	SP112512	SPRING, HELICAL, COMP	1
16	XBOZZ	19207	7971291	WASHER, FLAT	1
17	PAOZZ	96506	MS24645-355	PIN, COTTER	1
18	PAOZZ	96906	MS35692-805	NUT, PLAIN, SLOTTED	3
19	XDOZZ	19207	7069266	BEARING, SLEEVE	4
20	XBOZZ	19207	104S261	BRACKET, ANCHOR	2
21	PAOZZ	96906	MS35690-1024	NUT, PLAIN, HEXAGON UOC:152	6
21	PAOZZ	96906	MS35690-1025	NUT, PLAIN, HEXAGON UOC:842,843,844	5
22	PAOZZ	96906	MS35337-31	WASHER, LOCK	6
23	XBOZZ	96906	MS35290-166	SCREW, CAP, HEXAGON UOC:152	6
23	XBOZZ	96906	MS35292-145	SCREW, CAP, HEXAGON UOC:842,843,844	5
24	PAOZZ	96906	MS271283-19	WASHER, FLAT.	2
25	PAOZZ	19207	7068244	STUD, PLAIN	1
26	PAOZZ	19207	1419903	SPRING, HELICAL EXTE	1
27	XBOZZ	19207	7971275	LATCH, PLUNGER	1
28	PAOZZ	96906	MS524665-153	PIN, COTTER	1
29	XBOZZ	19207	866E534	COLLAR, SHAFT	2
30	PAOZZ	19207	1068505	BASE	1
31	PAOZZ	96906	MS15003-4	FITTING, LUBRICATION.	1
32	XBOZZ	19207	7971272	STUD	1

END OF FIGURE

1

2 THRU 29

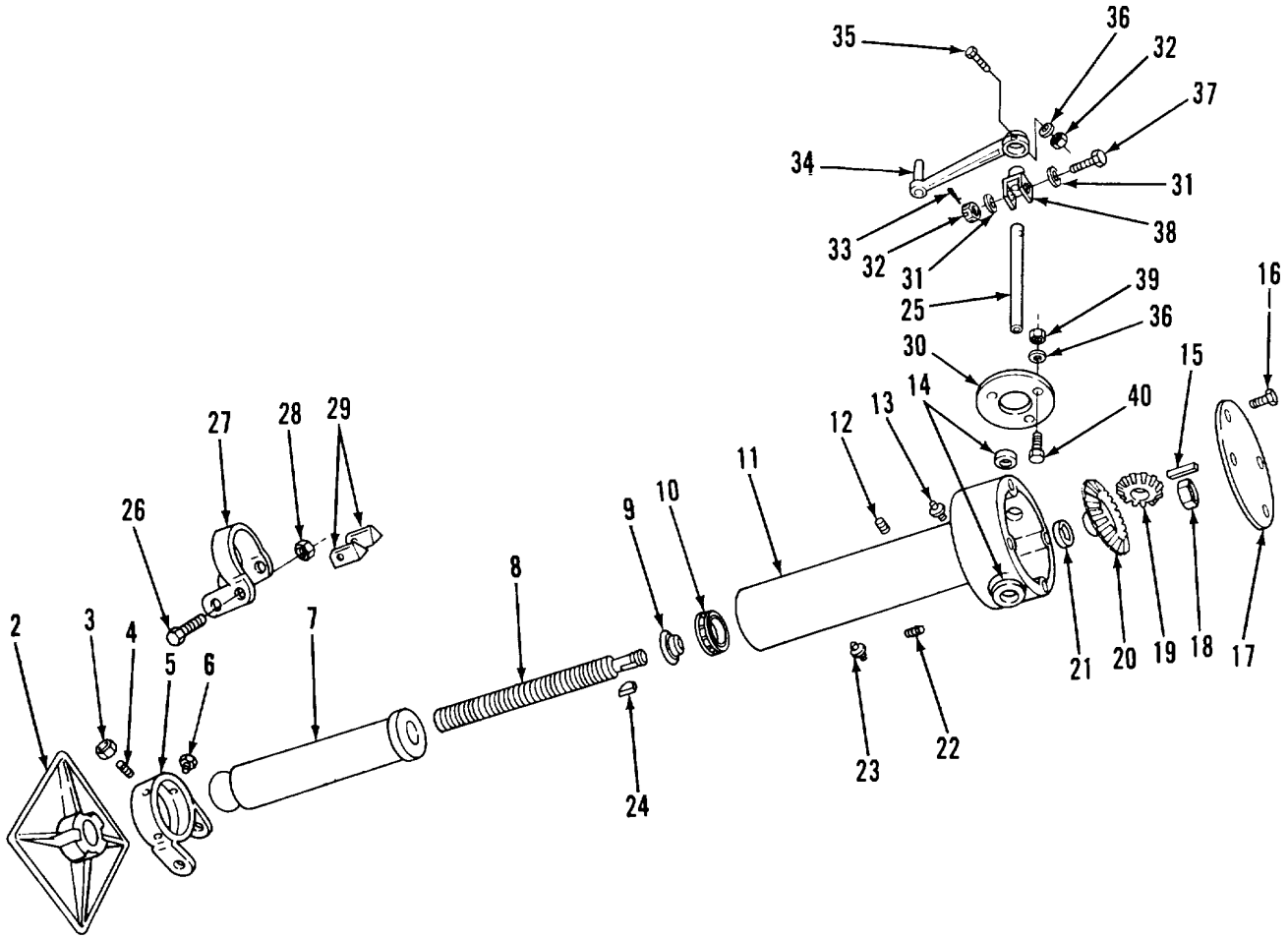

TA506771

FIGURE 23. LEVELING JACK

(1) ITEM NO	(2) SMR CODE	(3) CAGEC	(4) PART NUMBER	(5) DESCRIPTION AND USABLE ON CODES (UOC)	(6) QTY
				GR0UP 1507 LANDING GEAR, LEVELING JACKS	
				FIG. 23 LEVELING JACK	
1	PAOOO	19207	8716983	JACK, LEVELING-SUPP0 ..... UOC:844	1
1	PAOOO	19207	8343622	LEG ASSEMBLY, LANDIN UOC:152, 842, 843	1
2	PAOZZ	19207	8327362	SHOE,JACK SUPP0RT	1
3	PAOZZ	96906	MS35691-1021	NUT, PLAIN, HEXAG0N	1
4	XBOZZ	19207	22338	SET SCREW	1
5	PAOZZ	19207	8343432	COLLAR, RETRACTABLE ..... UCO: 152, 842, 843	1
5	PAOZZ	19207	8343621	BEARING JACK..... UOC:844	1
6	PAOZZ	96906	MS35190-315	SCREW MACHINE	2
7	PAOZZ	19207	8343503	LEG ASSEMBLY.....	1
8	PAOZZ	19207	8343612	SCREW, JACK LEVELING.....	1
9	PAOZZ	19207	8343615	SPACER SLEEVE	1
10	PAOZZ	96906	MS17161-33	BEARING BALL THRUST	1
11	XAOZZ	19207	8343450	LEG, OUTER	1
12	XBOZZ	96906	MS20913-3S	PLUG	1
13	XBOZZ	19207	05004203	FITTING, LUBRICATION.....	1
14	PAGZZ	21450	542041	BUSHING, SLEEVE0.....	2
15	PA0ZZ	19207	142534	PIN, GROOVED, HEADLES.....	1
16	FAOZZ	96906	MS35207-263	SCREW MACHINE	4
17	XAOZZ	19207	8343610	COVER	1
18	XBOZZ	96906	MS203644-1614	NUT , PLAIN, HEXAG0N.0	1
19	PAOZZ	19207	8343597	GEAR, BE VEL	1
20	PAOZZ	19207	8343613	GEAR, BEVEL	1
21	PAOZZ	19207	8343617	BEARING, WASHER THRU	1
22	PAOZZ	96906	MS49005-4	PLUG, PIPE	1
23	PAOZZ	96906	MS15003-1	FITTING, LUBRICATION.....	1
24	PAOZZ	96906	MS35156-15	KEY, WOODRUFF	1
25	XAOZZ	19207	8343618	SHAFT	1
26	PAOZZ	96906	MS90726-200	SCREW, CAP, HEXAG0N, H ..... UOC: 844	2
27	PAOZZ	19207	8142427	BRACKET, LEVELING UOC:844	1
28	PAOZZ	96506	MS20365-1216A	NUT, SELF-LOCKING, HE UOC:E44	2
29	XBOZZ	19207	8742428	SPACER UOC:844	1
30	XBOZZ	19207	10888842	RETAINER..... UOC:152	1
30	XBOZZ	19207	8343369	RETAINE ..... UOC: E42, 43, 844	2
31	PAOZZ	96906	MS27183-15	WASHER FLAT	2
32	PAOZZ	96906	MS35692-624	NUT, PLAIN, SLOTTED UOC:152	2
32	PAOZZ	96906	MS35492-625	NUT, PLAIN, SLOTTED, H	2

(1) ITEM NO	(2) SMR CODE	(3) CAGEC	(4) PART NUMBER	(5) DESCRIPTION AND USABLE ON CODES (UOC)	(6) QTY
				UOC: 842 8439 844	
33	PAOZZ	96906	MS2466-285	PIN, COTTER	1
34	PAOZZ	19207	8343453	CRANK, HAND	1
35	PAOZZ	969C6	MS90726-67	SCREW, CAP HEXAGON H	6
36	PAOZZ	12002	23E06	WASHER LOCK	4
37	PAOZZ	19207	8343452	SCREW CAP, HEXAGON H	1
38	XBOZZ	19207	8343482	SWIVEL	1
39	PAOZZ	96906	MS35690-625	NUT, PLAIN, HEXAGON	3
40	PAOZZ	96906	MS35290-58	SCREW CAP HEXAGON, H U0C: 152	3
40	PAOZZ	S6SC6	MS90726-62	SCREW CAP HEXAGON, H UOC: 842, 243, 844	3

END OF FIGURE

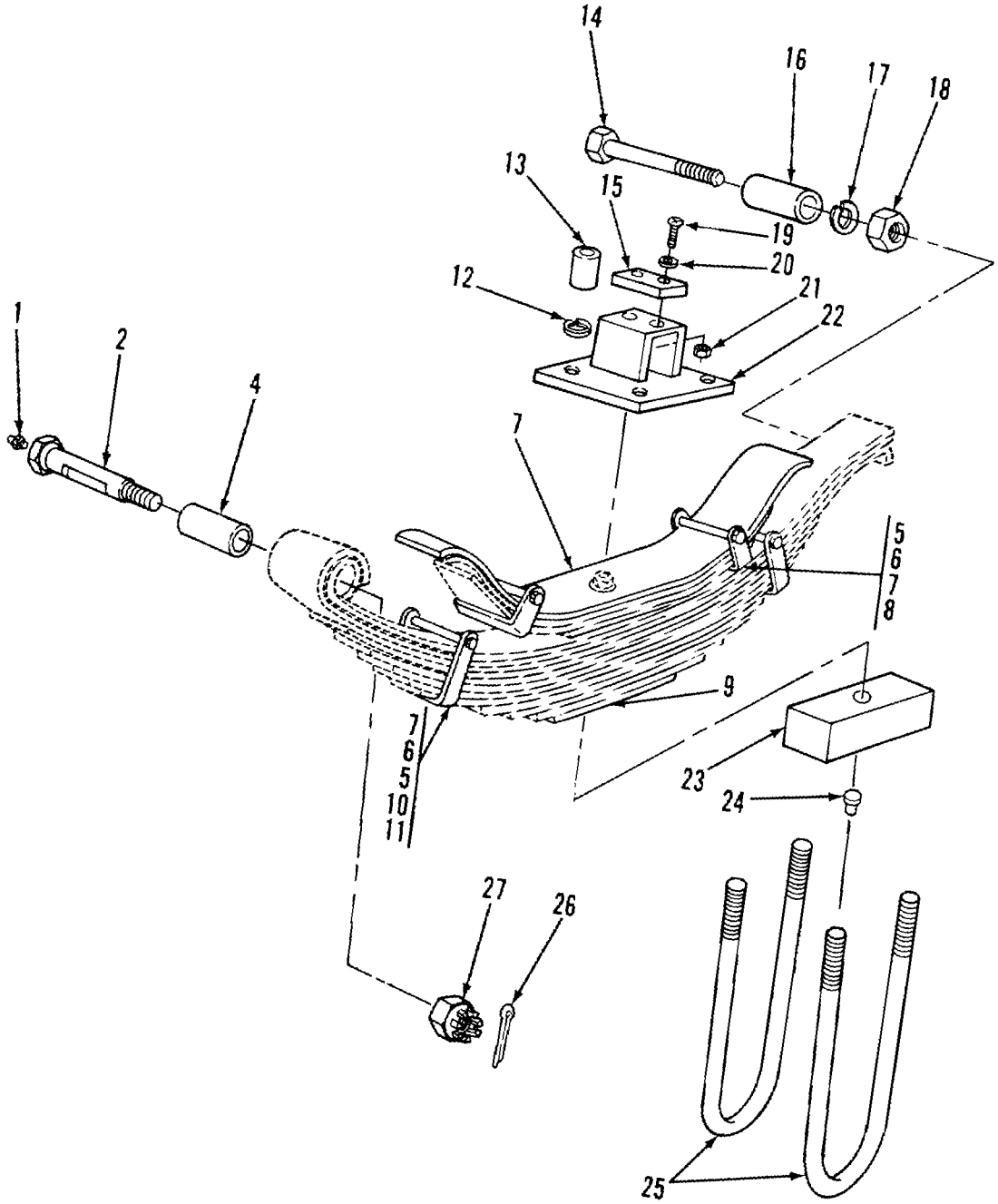

Figure 24. Springs (197 AND M198)

(1) ITEM NO	(2) SMR CODE	(3) CAGEC	(4) PART NUMBER	(5) DESCRIPTION AND USABLE ON CODES (UOC)	(6) QTY
				GR0UP 16 SPRINGS ND SH0CK ABSORBERS GR0UP 1601 SPRINGS	
				FIG. 24 SPRINGS (M197 AND M198)	
1	PAOZZ	96906	MS55003-1	FITTING.LUBRICATION UOC:E42.843	2
2	PAOZZ	19207	8327359	B0LT, FLUID PASSAGE UOC:E 42, 843	2
3	XBOZZ	19207	8681895	SPRING ASSEMBLY UOC: 42	2
3	PAOZZ	19207	7979930	SPRING ASSEMBLY LEA UOC:843	2
4	XAOZZ	1S207	8343418	BEARING* SLEEVE UOC:E42, 843	2
5	XABZZ	19207	8343477	SPACER,.SLEEVE UOC:E42, 843	1
6	XAOZZ	19207	1095443	SCREW, CAP, HEXAGON UOC:842	4
6	XAOZZ	96906	MS35291-14	SCREW, CAP, HEXAGON UOC:843	4
7	XAOZZ	96906	MS35690-605	NUT, PLAIN.HEXAGON UOC:E42P843	4
8	XAOZZ	19207	8343475	CLIP REB0UND UOC:E42, 843	2
9	XAOZZ	19207	8343492	SPRING, LEAF UOC:E42	1
9	XAOZZ	19207	7979950	SPRING.LEAF UOC:843	1
10	XBOZZ	19207	135183	AZVET UOC:842	2
10	XBOZZ	96906	MS35744-68	RIVET UOC:843	2
11	XAOZZ	19207	8343476	CLIP, REBOUND UOC:E42	2
11	XAOZZ	19207	7979934	CLIP, REBOUND UOC:843	2
12	PAOZZ	S6SC6	M35338-52	WASHER LOCK UOC:842, 843	4
13	PAOZZ	19207	8327364	NUT, SLEEVE UOC: 842.843	4
14	PAOZZ	S6SC6	MS35292-175	SCREW, CAP, HEXAGON UOC:E42.843	1
15	PAOZZ	19207	8343444	PAD.CUSHIONING UOC:E42.843	2
16	PAOZZ	19207i	8327360	SPACER SLEEVE UOC:E42, 843	1
17	PAOZZ	96906	MS35338-50	WASHER L0CK UOC: 842, 843	1
18	PAOZZ	96906	MS35690-1024	NUT, PLAIN, HEXAGON UOC:842.843	1

(1) ITEM NO	(2) SMR CODE	(3) CAGEC	(4) PART NUMBER	(5) DESCRIPTION AND USABLE ON CODES (UOC)	(6) QTY
19	PAOZZ	96906	MS35207-73	SCREW MACHINE UOC:842, 843	1
20	PAOZZ	96906	M27183-10	WASHER FLAT. UOC:842.843	2
21	PAOZZ	96906	MS51922-5	NUT SELF-L0CKING UOC:42, 843	2
22	PAOZZ	19207	8327361	PLATE MOUNTING ..... UOC: 842	1
22	XBOZZ	19207	7919936	PLATE MOUNTING UOC:E43	1
23	XBOZZ	19207	7979932	BL0CK, SUSPENSION UOC:843	1
24	XBOZZ	19207	7979932	PIN, DOWEL UOC:843	1
25	XDOZZ	19207	7979935	BOLT, U UOC:843	4
25	PAOZZ	19207	8327362	BOLT,U UOC:842	2
26	PAOZZ	96906	MS24665-360	PIN, COTTER ..... UOC: 42, 843	1
27	PAOZZ	96906	MS35692-1614	NUT, PLAIN, SLOTTED, ... UOC:E42.843	I

END OF FIGURE

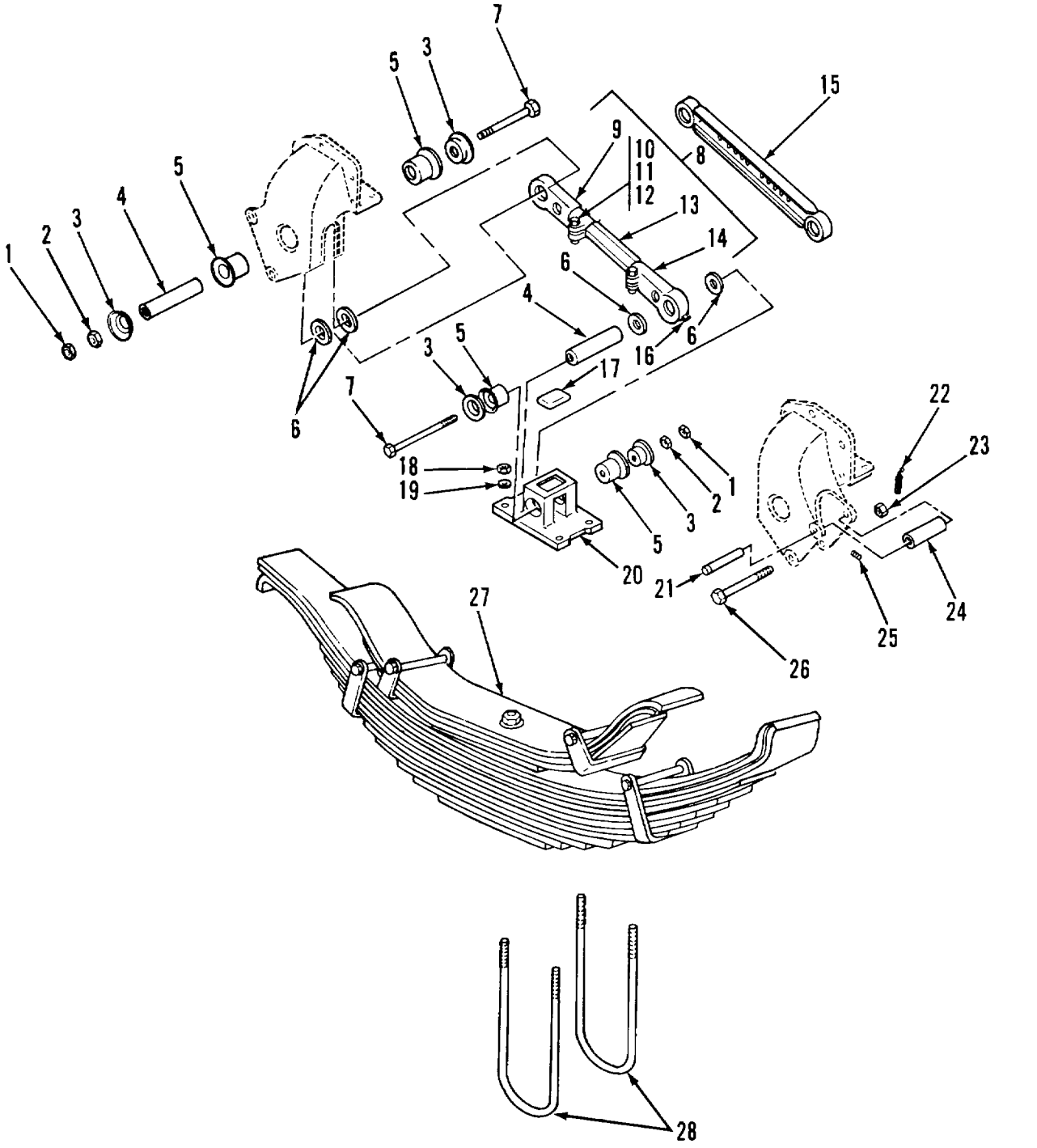

FIGURE 25. SPRINGS AND RADIUS R0DS (M197A1 AND M198A1).

(1) ITEM NO	(2) SMR CODE	(3) CAGEC	(4) PART NUMBER	(5) DESCRIPTION AND USABLE ON CODES (UOC)	(6) QTY
				GR0UP 1601 SPRINGS	
				FIG. 25 SPRINGS AND RADIUS R0DS (M197AL AND M198AL)	
1	PAOZZ	96906	MS27151-28	NUT STAMPED UOC:152, 844	4
2	PAOZZ	96906	MS35690-1025	NUT, PLAIN, HEXAGON UOC:152.844	4
3	PAOZZ	19207	7349028	RETAINER, PACKING..... UOC:152.844	4
4	PAOZZ	19207	7974917	SPACER, SLEEVE ..... UOC: 52, 844	2
5	PAOZZ	23705	563400	BUSHING, RUBBER..... UDC:152, 844	8
6	PAOZZ	19207	7349029	WASHER, FLAT UOC:52, 844	4
7	XBOZZ	96906	MS35292-178	SCREW.CAP, HEXAGON UOC:152, 844	2
8	PAOZZ	19207	7707070	R0D ASSEMLY, RADIUS UOC:152, 844	1
9	PAOZZ	19207	7349016	ROD, END.	1
10	PAOZZ	96906	MS35690-825	NUT, PLAIN, HEXAGON	2
11	PAOZZ	96096	MS35338-48	WASHER, L0CK	2
12	FAOZZ	96906	MS0726-116	SCREW,.CAP.HEXAGON, H	2
13	PAOZZ	19207	741377i	R0D ALINING, VEHICUL.....	1
14	PAOZZ	19207	1315C1	R0D, END RADIUS,.H.....	1
15	PAOZZ	19207	7520513	ROD, RADIUS. UOC:152, 844	1
16	PAOZZ	12204	921721	SET, SCREW ..... UOC: 152, 844	4
17	PAOZZ	19207	1974918	BUMPER, NON-METALLIC..... UOC: 44	2
17	XDOZZ	19207	10E88829	BUMPER, RUBBER..... UOC:152	1
18	PAOZZ	1L207	7979366	NUT, PLAIN, HEXAGON	4
19	PAOZZ	596906	MS27183-27	WASHER, FLAT UOC:152, 844	4
20	XBOZZ	19207	8742682	BRACKET, BUMPER..... UOC:844	1
20	XBOZZ	19207	871518	BRACKET, BUMPER..... UOC:152	1
21	PAOZZ	19207	797491	PIN, STRAIGHT, HEADLE UOC:152.844	4
22	PAOZZ	6SC4	MS24665-357	PIN, COTTER UOC:152.844	2
23	PAOZZ	969C6	MS35652-53	NUT, PLAIN, HEXAGON UOC:152.844	2
24	PAOZZ	19207	7118598	BEARING, SLEEVE0..... UOC:844	2
24	XAOZZ	19207	10888841	BEARING SLEEVE..... UOC:152	2

(1) ITEM NO	(2) SMR CODE	(3) CAGEC	(4) PART NUMBER	(5) DESCRIPTION AND USABLE ON CODES (UOC)	(6) QTY
25	PAOZZ	23105	563497	STESCREW UOC:152, 844	4
26	PAOZZ	19207	8742683	BOLT MACHINE UOC:152, 844	4
27	PAOZZ	23705	336837	SPRING ASSEMBLY, LEA UOC:152.844	2
27	PAOZZ	19207	8742684	B0LT, U ..... UOC: 834	4
28	XB0ZZ	19207	10888828	B0LT, U UOC:152	2

END OF FIGURE

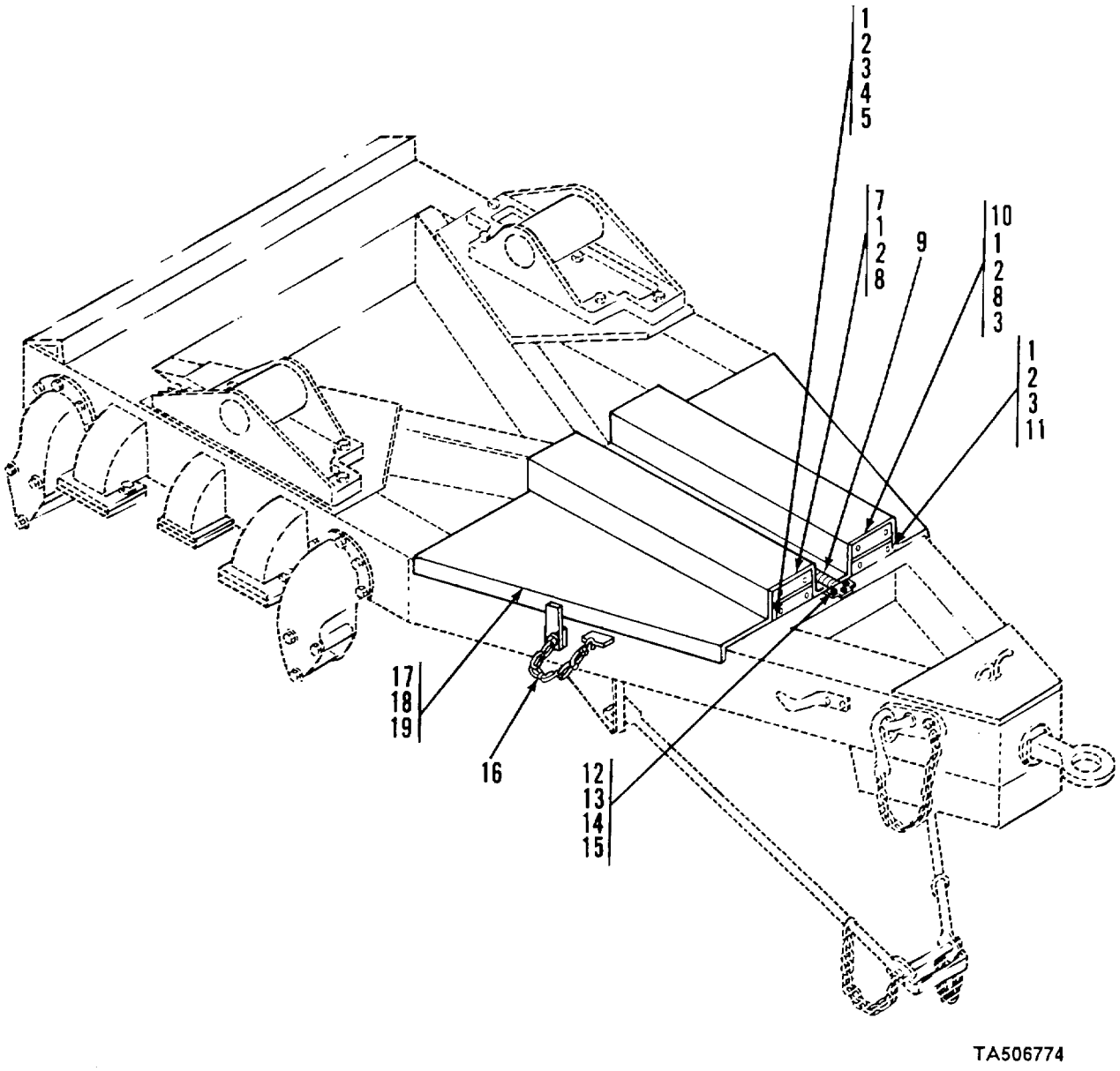

FIGURE 26. ST0WAGE RACK.

(1) ITEM NO	(2) SMR CODE	(3) CAGEC	(4) PART NUMBER	(5) DESCRIPTION AND USABLE ON CODES (UOC)	(6) QTY
				GR0UP 18 B0DY, CAB, HOOD AND HULL GR0UP 1808 ST0WAGE RACKS, B0XES, STRAPS, CARRYING CASES, H0SE REELS, ETC. FIG. 26 AIR H0SE GUARD AND RELATED PART S	
1	PAOZZ	96906	MS51968-2	NUT, PLAIN, HEXAGON UOC:152	6
1	PAOZZ	96906	MS35690-425	NUT, PLAIN, HEXAGON. UOC: 842.843, 844	4
2	PAOZZ	96906	MS535338-44	WASHER, LOCK	6
3	PAOZZ	96906	MS27183-10	WASHER, FLAT	4
4	PAOZZ	96906	MS35207-284	SCREW, MACHINE	2
5	XBOZZ	19207	7979846	GUARD CABLE	1
6	XBOZZ	19207	7979879	COVER ASSEMBLY	1
7	XAOZZ	19207	7S79897	GUARD CABLE	1
8	XBOZZ	96906	MS35207-74	SCREW,MACHINE	4
9	XAOZZ	19207	7979880	HINGE AND LID ASSEM	I
10	XBOZZ	19207	7979848	GLARE CABLE	1
11	XBOZZ	19207	7979849	GUARD CABLE	1
12	PAOZZ	19207	8343383	STRAP RETAINER.	2
13	PAOZZ	24617	106325	B0LT, MACHINE	4
14	PAOZZ	24617	102634	NUT, PLAIN, HEXAGON	4
15	PAOZZ	24617	102320	WASHER LOCK	4
16	PAOZZ	19207	8343435	CLIP ANC CHAIN...	2
17	XBOZZ	19207	797993	CLAMP CABLE	2
18	XBOZZ	15207	443322	NUT, PLAIN, HEXAGON	4
19	PAOZZ	96909	MS90726-64	SCREW, CAP, HEXAGON, H	4

END OF FIGURE

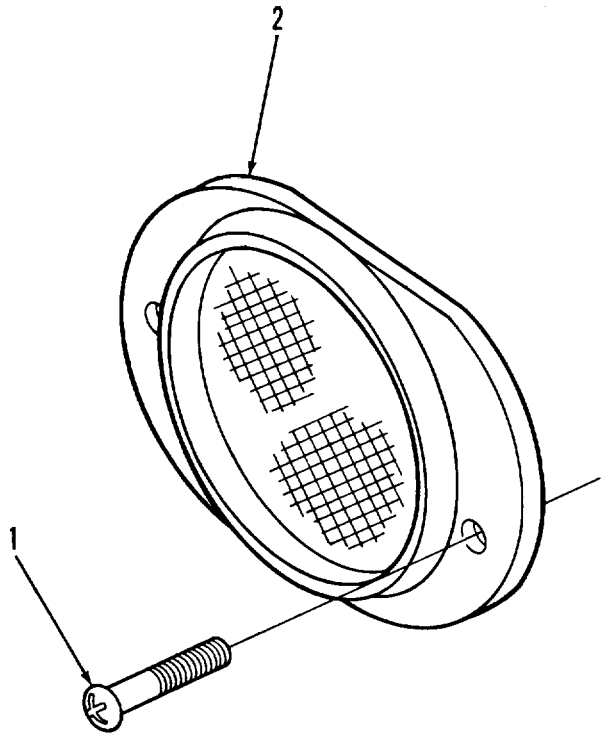

TA506775

FIGURE 27. REFLECT0RS.

(1) ITEM NO	(2) SMR CODE	(3) CAGEC	(4) PART NUMBER	(5) DESCRIPTION AND USABLE ON CODES (UOC)	(6) QTY
				GR0UP 22 B0DY CHASSIS AND HULL ACCESSORY ITEMS GR0UP 2202 ACCESSORY ITEMS FIG. 27 REFLECTORS	
1	PAOZZ	19207	171764	SCREW, TAPPING, THEA	8
2	PAOZZ	96906	MS35387-1	REFLECTOR, INDICATIN	4

END OF FIGURE

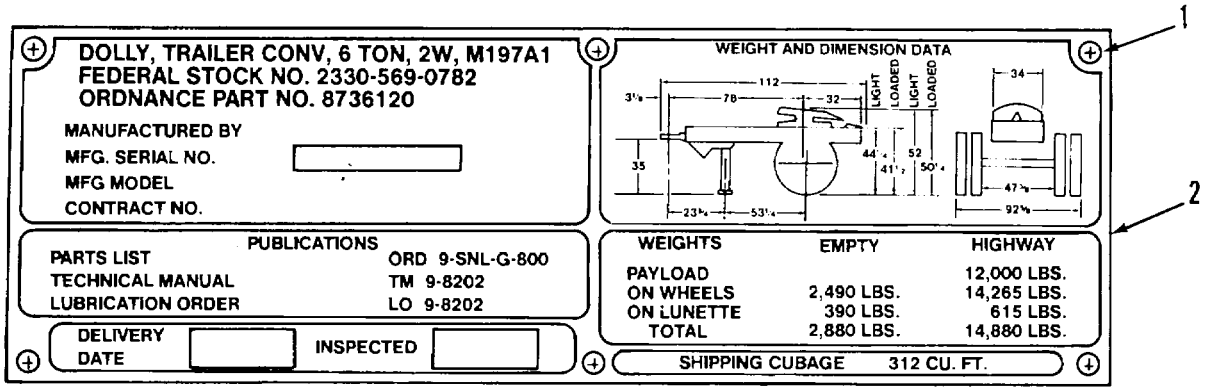

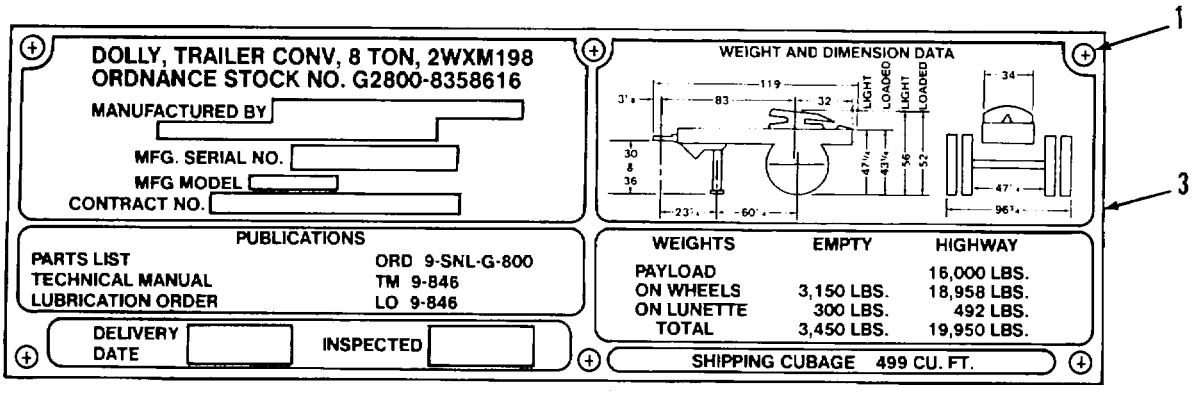

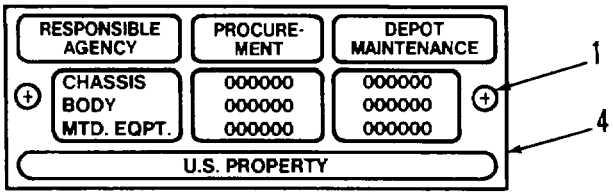

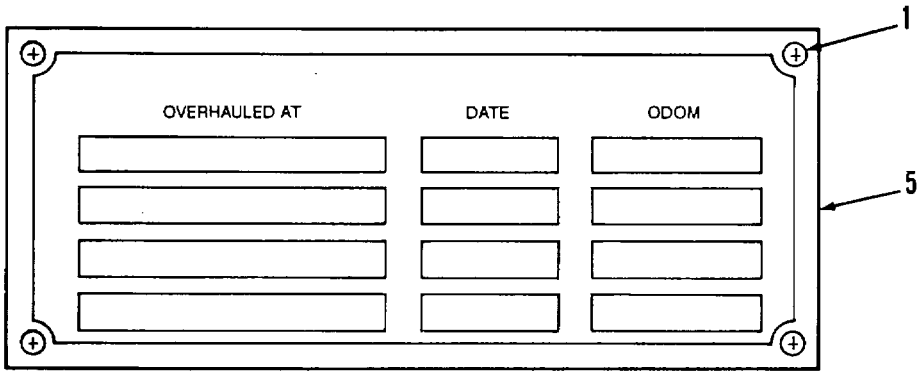

TA506780

FIGURE 28. DATA PLATES.

(1) ITEM NO	(2) SMR CODE	(3) CAGEC	(4) PART NUMBER	(5) DESCRIPTION AND USABLE ON CODES (UOC)	(6) QTY
				GR0UP 2210 DATA PLATES AND INSTRUC1I0N H0LDERS	
				FIG. 28 DATA PLATES	
1	XBOZZ	19207	441201	SCREW, MACHINE	16
2	XBOZZ	19207	8701371	PLATE INDENTIFICATI UOC:844	1
3	PAOZZ	19207	10888831	PLATE, I0ENTIFICATIO UOC:152	1
4	PAOZZ	19207	7915373	PLATE, IDENTIFICATIO SERVICE	1
5	PAOZZ	19207	7916577	PLATE, IDENTIFICATIO VEHICLE 0VERHAUL	1

END OF FIGURE

(1) ITEM NO	(2) SMR CODE	(3) CAGEC	(4) PART NUMBER	(5) DESCRIPTION AND USABLE ON CODES (UOC)			(6) QTY
				GR0UP 94 REPAIR KITS			
				GR0UP 9401 REPAIR KITS			
				FIG. KITS			
	PAOZZ	40342	RN13A	PARTS KIT, FLUID PRE V			
				UOC:152.844			
				ELEMENT, FILTER	(1)	14-7	
				GASKET	(1)	14-4	
				SPRING, HELICAL.CCMP	(1)	14-5	
	PAOZZ	96106	MS53004-2	PARTS KIT.RELAY VAL V			
				UOC: 52, 8"4			
				ADAPTER, STRAIGHT (1) 15-6			
				ELBOW, PIPE	(1)	15-2	
				ELB0W, PIPE	(1)	15-3	
				ELBCW, PIPE	(2)	15-4	
				ELBOW, STREET, PIPE	(4)	15-5	
				VALVE, RELAAY	(1)	15-1	
	PA0LL	19207	7362426	PARTS KIT, BRAKE CHA			V
				UOC:842, 843			
				B0LT, MACHINE	(18)	16-2	
				DIAPHRAM	(1)	16-3	
				NUT	(1)	16-7	
				SPRING	(1)	16-4	
				SPRING	(1)	16-5	
				WASHER	(18)	16-6	
	PAOZZ	19207	8332543	PARTS KIT, BRAKE CHA			V
				UOC: L1 52, 84			
				DIAPRAGM	(1)	17-3	
				NUT, PLAIN.HEXAG0N	(18)	17-11	
				PACKING, PREF0RMED	(1)	17-7	
				SCREW, CAP, HEXAGON	(18)	17-13	
				SPRING, RETURN	(1)	17-5	
				WASHER, L0CK	(18)	17-12	
	PAOZZ	19207	8720226	PARTS KIT, BRAKE LIN V			
				UOC: 152, 844			
				LINING, FRICTION	(2)	5-3	

END OF FIGURE

(1) ITEM NO	(2) SMR CODE	(3) CAGEC	(4) PART NUMBER	(5) DESCRIPTION AND USABLE ON CODES (UOC)	(6) QTY
				GR0UP 95 GENERALULSE STANDARIZED PARTS GR0UP 9501 BULK MATERIEL	
				FIG. BULK	
1	PAOZZ	81349	M3520-870C02G	TUBE, METALLIC.....	V

END OF FIGURE

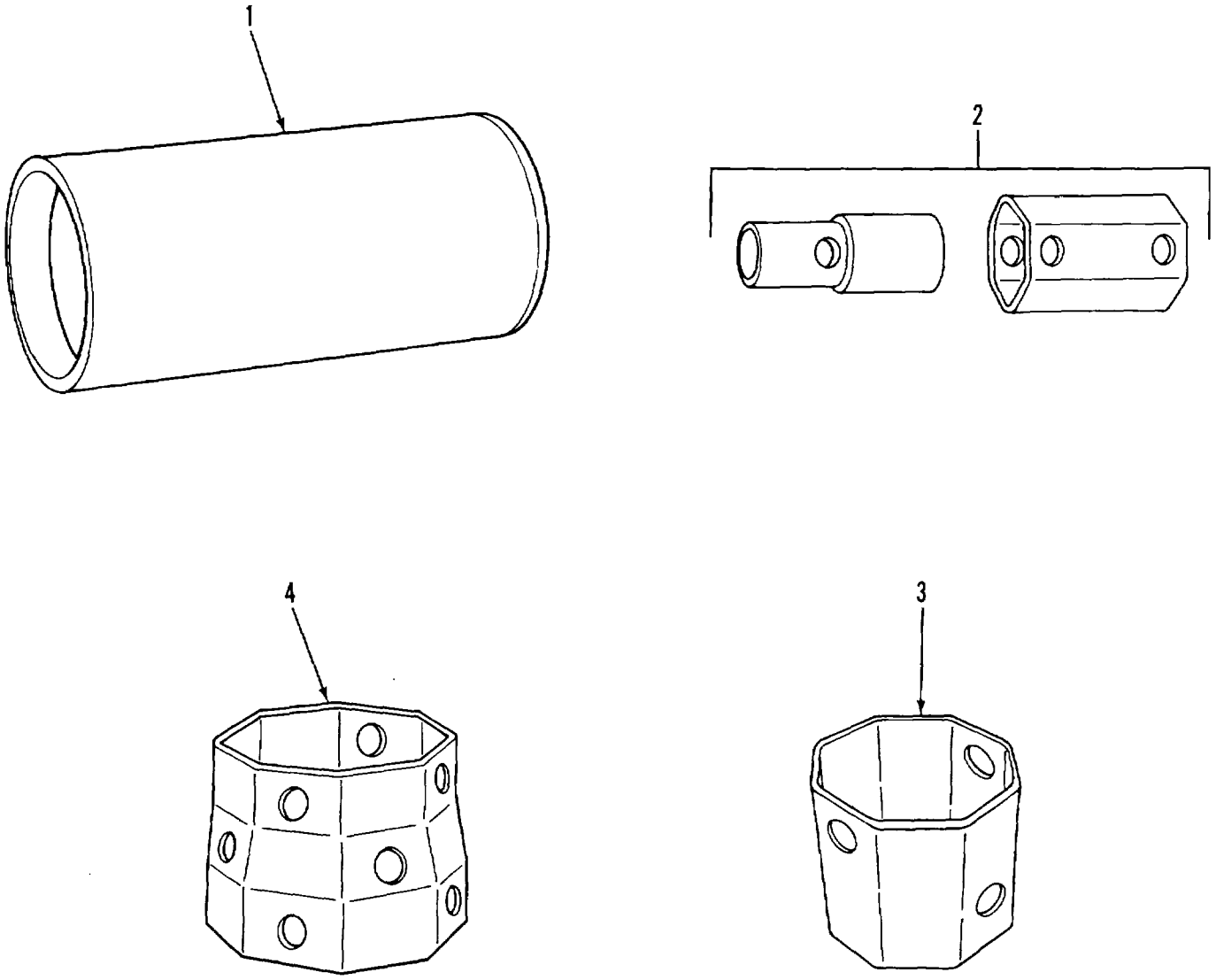

TA507724

FIGURE 29. SPECIAL T00LS.

(1) ITEM NO	(2) SMR CODE	(3) CAGEC	(4) PART NUMBER	(5) DESCRIPTION AND USABLE ON CODES (UOC)	(6) QTY
				GR0UP 26 SPECIAL TOOLS AND TEST EQUIPMENT GR0UP 2604 SPECIAL T0CLS	
				FIG. 29 SPECIAL TOOLS	
1	PBOZZ	19207	795013	REPLACER, 0IL SEAL..... UOC :152, 844	2
2	PBOZZ	19207	950055	WRENCH, WHEEL BEARING UOC:l2, 844	2
3	PBOZZ	19207	7083179	WRENCH, SOCKET..... UOC:842	2
4	PBOZZ	19207	1016968	WRENCH.S0CKET..... UOC:152, 843	2

END OF FIGURE

CROSS- REFERENCE-INDEXES
NATIONAL STOCK NUMBER INDEX

STOCK NUMBER	FIG.	ITEM	STOCK NUMBER	FIG.	ITEM
5310-00-003-4094	5	24	5360-00-141-6119	22	15
5310-40-004-5033	9	8	5310-00-151-8992	18	15
5310-00-004-5034	16	17	3110-00-156-1722	23	10
5315-00-005-0442	23	33	4730-00-172-0028	22	31
5310-00-010-3030	20	2	4730-00-172-0034	22	12
	22	21	2530-00-177-7986	5	16
	24	18	2530-00-177-8065	6	10
5315-00-010-3725	13	6	2530-00-179-3635	6	5
5320-00-011-9951	6	3	3110-00-183-6724	5	23
5315-00-012-0123	22	17	5315-00-187-9558	21	1
5315-00-013-7214	20	14	5315-00-187-9588	22	11
2530-00-021-2366	15	1	5360-00-200-5422	20	5
	KITS		2530-00-204-3622	7	17
2530-00-026-0255	18	1	9905-00-205-2795	27	2
2530-00-026-0265	18	23	5360-00-205-4654	6	19
5365-00-040-2386	24	16	5360-00-205-4657	6	20
2590-00-040-2388	23	2	5365-00-205-5105	6	17
2530-00-040-2874	KITS		5310-00-205-8358	5	28
2590-00-040-2878	24	15	5310-00-209-0965	5	39
2530-00-040-2880	23	7		18	7
2510-00-040-2883	2	1	5310-00-239-1761	10	2
6240-00-044-6514	1	5	5340-00-211-6129	18	6
2640-00-050-1229	19	2	5310-00-220-6587	6	21
4130-00-050-4208	5	26	5306-00-225-8499	6	6
	23	23	5310-00-234-7815	5	38
	24	1		18	8
5940-00-050-6205	3	14	3020-00-260-0956	23	20
2610-00-051-9450	19	I	2610-00-262-8653	19	4
5320-00-058-5883	5	4	5305-00-269-2802	20	17
5315-00-059-0238	22	28	5305-00-269-2803	12	15
2640-00-060-3550	19	3		12	31
5305-00-068-0505	12	11		17	13
	12	41	5305-00-269-2805	23	40
4730-00-069-1186	11	22	5305-00-269-2807	26	19
	12	1	5305-00-269-2811	23	35
4730-00-069-1187	12	18	5305-00-269-3209	1	9
5310-00-080-6004	11	12	5305-00-269-3210	7	11
5340-00-088-6455	12	I0	5305-00-269-3239	15	4
	12	40	5365-00-274-4544	10	7
5330-00-090-2128	13	4	5310-00-275-9460	7	13
5365-00-090-5426	3	18	2510-00-277-9772	24	3
4720-00-090-9259	13	8	2530-00-278-2243	9	1
4720-00-090-9260	11	9	2330-00-278-6555	8	2
3120-00-091-9774	6	15	4730-00-278-8257	13	5
5310-00-091-9775	6	16	9905-00-282-7489	28	4
2530-00-091-5776	6	13	5306-00-282-9639	26	13
2530-00-091-9777	6	18	5330-00-285-5123	14	4
2530-00-093-5591	18	5	3020-00-287-8211	6	12
3110-00-100-3056	18	11	3020-00-287-8215	6	14
6220-00-133-7904	1	1	5340-00-287-8220	18	18

CROSS- REFERENCE-INDEXES
NATIONAL STOCK NUMBER INDEX

STOCK NUMBER	FIG.	ITEM	STOCK NUMBER	FIG.	ITEM
2530-00-288-0358	5	32	4730-00-516-7419	10	1
4730-00-289-0051	12	23	4710-00-534-2347	10	17
5330-00-290-8521	18	17	4710-00-541-6887	BULK	1
5310-00-292-7851	18	13	5310-00-550-3714	12	5
6240-00-295-2668	1	4	5340-00-562-1943	25	17
2590-00-295-8665	2	3	5330-00-562-1947	18	17
5330-00-297-7106	1	3	5340-00-562-1948	18	18
5306-00-297-8274	6	22	5315-00-562-1956	25	21
5330-00-297-9829	5	22	5310-00-563-4391	7	19
5315-00-298-1481	25	22	4730-00-580-8457	14	3
5315-00-298-1499	24	26	5310-00-582-5965	3	3
2590-00-302-6061	23	8		12	13
4720-00-318-1087	10	5		12	43
2530-00-318-1216	4	1		26	2
2530-00-318-1225	6	1	5310-00-584-5272	18	19
2530-00-318-1227	17	3		20	21
5365-00-350-0155	25	5		25	11
5305-00-350-0158	25	16	5310-00-584-7888	5	18
	25	25		7	14
2510-00-353-0642	22	13		21	5
5310-00-353-2297	18	14	4730-00-595-0083	13	1
5310-00-353-2427	18	16	5340-00-598-3250	23	34
2530-00-359-1162	18	22	5330-00-599-4230	18	17
5310-00-374-0836	18	14	2530-00-603-5768	18	23
5120-00-378-3139	29	4	5315-00-616-5530	23	24
5306-00-383-4957	18	3	2510-00-624-0254	25	27
	18	3	5365-00-624-0255	25	4
2590-00-389-8197	23	5	2530-00-624-0256	4	1
3020-00-389-8199	23	19	5306-00-624-0257	25	26
5365-00-389-8202	23	9	5310-00-637-9541	7	12
3120-00-389-8203	23	21		12	16
5310-00-393-6685	3	17		12	24
5540-00-399-6676	3	12		12	32
5310-00-407-9566	16	6		15	2
	18	19		17	12
4730-00-408-4583	11	4		20	16
4730-00-419-9425	10	8		23	36
3040-00-421-9425	18	12	5340-00-656-4855	7	8
2530-00-421-1241	25	13	3120-00-661-9523	23	14
5310-00-424-1452	25	3	5310-00-679-3606	14	6
5310-00-424-1456	25	6	5310-00-682-5684	24	27
5340-00-421-0080	25	9	2530-00-692-6133	7	9
2530-00-457-1676	7	6	2530-00-693-0996	6	2
5310-50-460-3006	23	32		KITS	
5315-00-461-3835	5	14	2530-00-693-1029	18	22
	7	16	2530-00-696-0351	KITS	
2590-00-476-9334	20	10	5310-00-701-4851	5	30
5975-00-483-5156	3	5		5	34
4730-00-494-6580	12	19	5315-00-705-4686	6	23
4710-00-511-1692	9	4	2510-00-706-8180	22	9

CROSS- REFERENCE-INDEXES
NATIONAL STOCK NUMBER INDEX

STOCK NUMBER	FIG.	ITEM	STOCK NUMBER	FIG.	ITEM
2510-00-706-8245	22	14	5310-00-768-0319	26	1
5360-00-716-9054	14	5	2530-00-770-7070	25	8
5120-00-708-3179	29	3	5935-00-772-2982	3	1
5305-00-716-8183	25	12	5935-00-773-1428	3	7
5310-00-725-7382	15	3	4730-00-773-2163	9	3
5305-00-726-2551	20	3	2530-00-773-9381	6	4
4730-00-729-6437	10	6	2530-00-776-0966	8	1
5310-00-232-0559	9	7	5360-00-780-0508	17	5
	10	11	5305-00-782-9495	5	25
	12	17	2530-00-792-7354	6	11
	12	25	5120-00-795-0136	29	1
	11	30	2530-00-797-9039	16	1
	15	3	2530-00-797-9273	5	32
5304-00-733-9239	18	3	2530-00-757-5277	5	3
	18	3	2530-00-797-9278	5	2
4010-00-733-9458	21	12	5325-00-797-9287	11	10
2530-00-134-9533	5	32		12	9
2530-00-736-2426	KITS	9	2530-00-797-9295	14	1
2530-00-737-3260	8	2	5306-00-797-9296	14	11
5330-00-737-3354	9	2	2530-00-797-9298	11	15
2530-00-738-9061	18	24	2530-00-797-9317	5	29
2530-00-738-9453	18	25	5310-00-797-9332	5	12
2530-00-738-9620	18	25		7	18
5315-00-740-9376	7	10	5360-00-797-9339	5	1
5315-00-740-9379	5	11		5	1
	7	3		7	4
5360-00-740-9382	7	7	5365-00-797-9358	5	31
5310-00-740-9385	7	5	5310-00-798-1265	25	18
5306-00-740-9389	5	41	5365-00-803-7319	5	31
	18	1	4720-00-809-2150	9	6
5330-00-740-9550	18	10	5310-00-809-3079	22	24
2590-00-140-9553	18	9	5310-00-809-4058	24	20
2530-00-740-5556	18	2		26	3
3123-00-140-9567	5	6	5310-00-809-4061	23	31
	7	15	5310-00-809-8533	21	9
5360-00-740-9903	22	26	5310-00-859-8541	20	14
2530-00-741-1078	12	29		21	9
2940-00-741-1081	14	7		25	19
5310-00-741-2088	10	9	4730-00-813-7811	12	19
2530-00-741-5748	14	8	2540-00-814-8149	21	1
2530-00-752-0513	25	15	5310-00-820-6653	24	17
5310-00-752-1633	18	14	5310-00-823-8803	20	13
9905-00-752-4649	3	15	5305-00-825-6014	6	24
5310-60-754-2005	24	12	9905-00-831-0208	11	23
3040-00-757-1718	18	12	9905-00-831-6271	28	5
5310-00-761-6882	3	2	5305-00-832-6344	23	37
	14	10	5307-00-832-7982	22	25
5310-00-762-6219	21	8	5935-00-833-8561	3	10
5310-00-763-8922	21	8	5970-00-833-8562	3	11
3103-00-768-0319	12	42	5315-00-839-5822	16	14

CROSS- REFERENCE-INDEXES
NATIONAL STOCK NUMBER INDEX

STOCK NUMBER	FIG.	ITEM	STOCK NUMBER	FIG.	ITEM
5315-00-839-5822	20	7			
5315-00-842-3044	5	10			
	7	2			
5315-00-842-3154	16	15			
5310-00-842-7783	25	23			
9905-00-845-0507	28	3			
4820-00-845-1096	11	16			
5935-00-846-3883	3	1I			
4820-00-849-1220	12	28			
2530-00-844-2990	7	1			
5310-00-880-2004	18	21			
5310-00-880-2005	18	21			
3120-00-893-4972	25	24			
5310-00-897-5940	6	8			
6220-00-903-6647	1	2			
4730-00-908-3195	9	5			
2530-00-920-7568	8	1			
2530-00-930-5312	17	1			
2590-00-930-6231	23	27			
2590-00-937-4840	23	1			
4703-00-937-6103	11	3			
5310-00-951-7209	20	6			
4730-00-954-1281	23	22			
5305-00-959-5257	23	6			
5310-00-959-7600	24	21			
5340-00-977-0815	12	33			
5310-00-982-6572	21	3			
5310-00-985-0782	25	1			
4130-00-987-9013	13	12			
5305-00-988-1725	3	4			
5305-00-984-7434	23	16			
5305-00-993-2457	26	4			
9905-00-999-7369	12	1			
5120-01-021-5956	23	1			
5320-01-049-8261	5	15			
9905-01-050-3055	2	2			
5340-01-053-5090	6	5			
4730-01-079-8821	12	8			
	12	20			
	12	35			
	12	37			
2530-01-094-7940	6	9			
2510-01-250-1882	5	17			
4710-01-255-6070	11	5			
4730-01-263-9756	10	3			

NATIONAL STOCK NUMBER AND PART NUMBER INDEX
PART NUMBER INDEX

CAGEC	PART NUMBER	STOCK NUMBER	FIG.	ITEM
78500	A1-3122B28	2530-00-791-9278	5	2
78500	A173736H8	2530-00-692-6133	7	9
08162	BT 3S4	3110-00-100-3096	18	11
19207	CPR 102321-1	4370-01-079-8821	12	8
			12	20
			12	35
			12	37
63477	FC10937	3120-00-091-9774	6	15
81348	GROUP 3/9.00-20/ D/TBCC		19	4
96906	MS155003-1	4730-00-050-4208	5	26
			23	23
			24	1
96906	MS15003-4	4730-00-172-0028	22	31
96906	MS15003-6	4130-00-172-0034	22	12
96906	MS15975-214	5310-00-080-6004	11	12
96906	MS15797-221		20	6
96906	MS16536-172	5320-00-058-9883	5	4
96906	MS16536-175	5320-00-011-9951	6	3
96906	MS16624-1112	5365-00-803-7319	5	37
96906	MS17161-33	3110-00-156-1722	23	10
96906	MS203644-1614		23	18
96906	MS20365-1216A		23	28
96906	MS20913-12		14	2
90906	MS20913-3S		23	12
96906	MS21333-101	5340-00-088-6655	12	10
			12	40
96906	MS24665-283	5315-00-842-3044	5	10
			7	2
96906	MS24665-285	5315-00-005-0442	23	33
96906	MS24665-353	5315-00-839-5822	16	14
			20	7
96906	MS24665-355	5315-00-012-0123	22	17
90906	MS24665-357	5315-00-298-1481	25	22
96906	MS24665-359	5315-00-013-7214	20	14
96906	MS24665-360	5315-00-298-1499	24	26
96906	MS24665-421	5315-00-187-9558	21	1
96906	MS24665-686	5315-00-187-9588	22	11
96906	MS24665-753	5315-00-059-0238	22	28
96906	MS2715128	5310-00-985-0782	25	1
96906	MS27183-10	5310-00-809-4058	24	20
			26	3
96906	MS27183-15	5310-00-809-4061	23	31
96906	MS27183-19	5310-00-809-3079	22	24
99096	MS27183-21	5310-00-823-8803	20	13
96906	MS27183-22	5310-00-951-7209	20	6
96906	MS27183-23	5310-00-809-8533	21	9
96906	MS27183-27	5310-00-809-8541	20	14
			21	9
			25	19
96906	MS27183-34	5310-00-982-6592	21	3

NATIONAL STOCK NUMBER AND PART NUMBER INDEX
PART NUMBER INDEX

CAGEC	PART NUMBER	STOCK NUMBER	FIG.	ITEM
96906	MS35007-1		12	2
96906	MS35182-5		12	34
96906	MS35190-315	5305-00-958-5257	23	6
96906	MS35206-281	5305-00-988-1725	3	4
96906	MS35207-263	5305-00-989-2434	23	16
96906	MS35207-284	5305-00-993-2457	26	4
96906	MS35207-73		24	19
96936	MS35207-74		26	8
96906	MS35290-166		20	3
			22	23
96906	MS35290-33		16	2
96906	MS35290-58		23	40
96906	MS35291-34		6	7
96906	MS35291-72		22	3
96906	MS35291-74		24	6
96906	MS35292-112		20	20
96906	MS35292-165		22	23
96906	MS35292-175		24	14
96906	MS35292-178		25	7
96906	MS35252-62		11	13
96906	MS35294-63		15	4
96906	MS35295-113		18	20
96906	MS35298-139		6	24
969d6	MS35333-30	5310-00-550-3714	12	5
96906	MS35337-25		14	9
96906	MS35337-27		22	5
96906	MS35337-31		20	1
			22	22
96906	MS35338-046	5310-00-004-5033	9	8
			10	12
96906	MS35338-29	5310-00-584-5272	20	21
96906	MS35338-44	5310-00-582-5965	3	3
			12	13
			12	43
			26	2
96906	MS35338-45	5310-00-407-9566	16	6
			18	19
96906	MS35338-46	5310-00-637-9541	12	16
			12	24
			12	32
			15	2
			17	12
			20	16
96906	MS35338-47	5310-00-209-0965	5	39
			18	7
96906	MS35338-48	5310-00-003-4094	5	24
		5310-00-584-5272	18	19
			25	11
96906	MS53533-50	5310-00-004-5034	16	17
		5310-00-820-6653	24	11
96906	M353538-51	5310-00-584-7888	5	18

NATIONAL STOCK NUMBER AND PART NUMBER INDEX
PART NUMBER INDEX

CAGEC	PART NUMBER	STOCK NUMBER	FIG.	ITEM
96906	MS35338-51	5310-00-584-7888	7	14
			21	5
96906	MS3338-52	5310-00-754-2005	24	12
96906	MS35355-71		12	26
96906	MS35387-1	9905-00-205-2795	27	2
96906	MS35388-46		1	10
96906	MS3541 8-1683	6240-00-044-6914	1	5
96906	MS35476-1691	6424-00-295-2668	1	4
90906	MS35490-88		3	6
96906	MS35690-1024	5310-00-010-3030	20	2
			22	21
			24	18
96906	MS35490-1025		16	16
			20	2
			22	21
			25	2
90906	MS35690-1225		12	6
96900	MS35690-425		26	1
96906	NS35690-605		22	6
			24	7
96906	MS35690-624	5310-00-725-7382	15	3
96906	MS35690-625		17	11
			23	39
96906	MS35690-724	5310-00-234-7815	5	38
			18	8
96900	MS35690-825		20	22
			25	10
969060	MS35690-826		16	12
96906	MS35691-1021		23	3
96906	MS35691-1204		21	6
96906	MS35692--1624	5310-00-682-5684	24	27
96906	MS35692-53	5310-00-842-7783	25	23
96906	MS35692-624	5310-00-460-3006	23	32
96906	MS35692-625		23	32
96906	MS35692-805		22	18
96906	MS35743-76	5320-01-049-8261	5	15
96906	MS35744-68		24	10
96906	MS35746-14	4730-00-595-0083	13	1
90906	MS35749-1		13	3
96906	MS35750-1		13	2
			13	5
96906	MS35756-15	5315-00-616-5530	23	24
96906	MS35762-5	4820-00-849-1220	12	28
90906	MS35783-2	4820-00-845-1 096	11	16
96900	MS35810-36	5315-00-842-3154	16	15
96906	MS35842-10	4730-00-908-3195	9	5
96906	MS35812-5		11	17
96906	MS39020-1	9905-00-752-464	3	15
96906	MS39020-2		3	13
96906	MS39020-4	9905-01-050-3055	2	2
96906	MS539133-1	4130-00-278-8257	13	9

NATIONAL STOCK NUMBER AND PART NUMBER INDEX
PART NUMBER INDEX

CAGEC	PART NUMBER	STOCK NUMBER	FIG.	ITEM
96906	MS39133-2	4730-00-887-9073	13	12
96906	MS39134		13	13
96906	MS39135		13	14
96906	MS39136		13	15
96906	MS39137-1		13	10
96906	MS39137-2		13	16
96906	MS39139-9		12	36
96906	MS39158-5	4730-00-408-4583	11	4
96906	MS1539165-5		11	6
96906	MS39179-5	4730-00-069-1186	12	7
96906	MS39182-3	4730-00-069-1187	12	18
96906	MS39182-6	4730-00-289-0051	12	23
96906	MS39190-3	4730-00-494-6580	12	19
96906	MS39191-2	4730-00-813-7811	12	19
96906	MS49005-4	4730-00-954-1281	23	22
96906	MS51003-1	2530-00-318-1225	6	1
96906	MS51019-65		5	8
96906	MS51922-45	5310-00-817-5940	6	8
96906	MS51922-5	5310-00-959-7600	24	21
96906	MS51946-1	5310-00-733-9239	18	3
			18	3
96906	MS51946-2	5310-00-383-4957	18	3
			18	3
96906	MS51964-2		12	12
90906	MS51967-2	5310-00-761-6882	3	2
			14	10
96906	MS51967-24	5310-00-763-8522	21	8
96906	MS51967-30	5310-00-762-6219	21	8
96906	MS51968-2	5310-00-768-0319	12	42
			26	1
96906	MS51968-8	5310-00-732-0559	9	7
			10	11
			12	17
			12	25
			12	30
			15	3
96906	MS51983-3	5310-00-880-2004	18	21
96906	MS51983-4	5310-00-880-2005	18	21
96906	MS53004-2	2530-00-021-2366	15	1
			KITS	
96906	MS53007-2	9905-00-999-7369	12	1
96906	MS53035-1		22	1
96906	MS53044-5	2530-00-026-0265	18	23
96906	MS53044-6	2530-00-603-5768	18	23
96906	MS53045-3	2530-00-738-9061	18	24
96906	MS53068-1	2530-00-653-1029	18	22
96906	MS53068-2	2530-00-359-1162	18	22
96906	MS75021-1	2530-00-846-3883	3	16
96906	MS90725-111	5935-00-846-3883	5	25
96906	MS90725-29		18	20
96906	MS90725-34	5306-00-225-8499	6	6

NATIONAL STOCK NUMBER AND PART NUMBER INDEX
PART NUMBER INDEX

CAGEC	PART NUMBER	STOCK NUMBER	FIG.	ITEM
96906	MS90725-58	5305-00-269-3209	1	9
96906	MS90725-59	5305-00-269-3210	7	11
90906	MS90726-116	5305-00-716-8183	25	12
96906	MS90726-164	5305-00-726-2551	20	3
96906	MS90726-200		23	26
96906	MS90726-5	5305-00-068-0505	12	11
			12	41
96906	MS90726-59	5305-00-269-2802	20	11
96906	MS90726-60	5305-00-269-2803	12	15
			12	31
			17	13
96906	MS90726-62	!305-00-269-2805	23	40
96906	MS90726-63	!305-00-269-3239	15	4
96906	MS90726-64	!3 0-00-26S-2807	26	19
96906	MS90726-67	!305-00-269-2811	23	35
90906	MS95122-021		11	11
26051	MT9	4010-00-133-9458	21	12
81349	ML3486/1-5-1		3	9
81349	M3520-B70002G	4710-00-541-6887	BULK	1
06721	N10447		16	13
40J42	N10497		16	11
40342	N10521		16	10
40342	NI07908	9905-00-831-0208	11	23
40342	N11225A		16	4
40342	N12471		16	5
40342	N2318		16	3
40342	RN13A	2530-00-696-0351	KITS	
72540	SP112512	5360-00-141-6119	22	15
51665	US49	2640-00-060-3550	19	3
10190	W9TB2420X0H	3110-00-183-6724	5	23
19207	05004203		23	13
17875	100AA	2640-00-050-1229	19	2
24617	102634		26	14
24617	103320		26	15
24617	103725	5315-00-010-3725	13	6
40342	10493D		16	8
24617	106325	5306-00-282-9639	26	13
19207	10888828		25	28
19007	10888829		25	17
19207	10888831	5905-00-845-0507	28	3
19207	10888833		20	9
19207	10888834-1		12	44
19207	10888834-2		12	44
19207	10888834-3		12	21
19207	10088884-4		12	44
19207	10888834-5		12	44
19207	10888834-6		12	38
19207	10868834-7		12	39
19207	10888834-8		12	22
19207	10888835		10	15
19207	10888836		10	10

NATIONAL STOCK NUMBER AND PART NUMBER INDEX
PART NUMBER INDEX

CAGEC	PART NUMBER	STOCK NUMBER	FIG.	ITEM
19207	10188837-2		10	5
19207	10888841		25	24
19207	108*88*842		23	30
19207	10919661		17	10
19207	10920506	6220-00-903-6647	1	2
19207	10920548-2	6220-00-133-7904	1	1
19207	10443		24	6
81348	11.00-20/TR78A/0 N CENTER	2610-00-051-9450	1	1
40342	11194		16	9
19207	11591635		21	10
19207	11591436		21	11
19207	11597139		21	12
19207	11625384		21	12
192c7	11625386		21	10
19207	11625387		21	11
19207	11625435		3	8
19207	120368		16	7
78500	1227S305	5310-00-353-2297	18	14
78500	1229-216	5310-00-563-4391	7	19
19207	123936	5305-00-825-6074	6	24
19207	135183		24	10
19207	137405		11	18
19207	137538		11	7
19207	142534		23	15
21450	144036		11	20
19207	171144		27	1
19207	171768		20	12
78500	1744B2	5365-00-717-9358	5	31
78500	1745-B-5	5305-00-204-3622	7	17
19207	174603		21	2
19207	2-8338566		1	7
19207	2-8338567		1	8
23802	2003399	2530-00-451-1676	7	6
19237	215159		11	2
19207	22338		23	4
81348	2285954		19	1
12603	23E06	5310-00-637-9541	7	12
			23	36
78500	275103	5360-00-740-9382	7	7
78500	2797E5	5340-00-656-4895	7	8
78500	3262H86	2530-00-026-0255	18	18
23705	336837	2510-00-624-0254	25	27
19207	441201		28	1
19207	443322		26	18
19277	501212		17	7
19207	50620S	5940-00-050-6209	3	14
19207	5160323	5310-00-209-1761	10	2
19207	5167419	4730-00-516-7419	10	1
19207	5168890	5310-00-701-4891	5	30
19207	5175415		10	4

NATIONAL STOCK NUMBER AND PART NUMBER INDEX
PART NUMBER INDEX

CAGEC	PART NUMBER	STOCK NUMBER	FIG.	ITEM
19207	5291100		10	14
19207	5298653	5365-00-274-4544	10	7
19207	5328843	2510-00-353-0642	22	13
24617	538822		13	7
19207	538824	5330-00-090-2128	13	4
21450	542041	3120-00-661-9523	23	14
01464	559374	2610-00-262-8653	19	4
23705	563400	5365-00-350-0155	25	5
23705	563497	5305-00-350-0158	25	25
19207	594261		7	20
81343	6-4120102BA	4730-00-069-1186	11	22
19207	7001725	5310-00-374-0836	18	14
19207	7007089		18	15
19207	7014891	5310-00-701-4891	5	34
19207	7017531	2530-00-530-5312	17	1
19207	7064645		11	21
19207	7064896		12	3
19207	7107979		22	8
19207	7068180	2510-00-106-8180	22	9
19207	7068244	5307-00-832-7982	22	25
19207	7068245	2510-00-706-8245	22	14
19207	7068505		22	30
19207	7069261		22	20
19207	7069266		22	19
19207	7069268		22	4
19207	7069668	5120-00-378-3139	29	4
19207	7083179	5120-00-708-3179	29	3
19207	7207919	5310-00-275-9460	7	13
78500	72782		5	19
19207	7320658	5330-00-297-7106	1	3
19207	7344896		12	4
19207	7346885	5310-00-353-2427	18	16
19207	7346553		18	17
19207	7349016	5340-00-427-0080	25	9
19207	7349028	5310-00-424-1452	25	3
19207	7349025	5310-00-424-1456	25	6
19207	7349532	2530-00-288-0358	5	32
19207	7345533	2530-00-734-9533	5	32
19207	7362420	2530-00-736-2426	KITS	9
19207	7373260	2330-00-737-3260	8	2
19207	7373354	5330-00-737-3354	9	2
19207	7385453	2530-00-738-9493	18	25
19207	7389620	2530-00-738-9620	18	25
19207	7399017		25	14
19207	7409376	5315-00-740-9376	7	10
19207	7409379	5315-00-740-9379	5	11
19207	7409380	2530-00-864-2990	7	1
19207	7400383	5360-00-797-9339	5	1
19207	7409384		5	13
19207	7409385	5310-00-740-9385	7	5
19207	7405388		18	4

NATIONAL STOCK NUMBER AND PART NUMBER INDEX
PART NUMBER INDEX

CAGEC	PART NUMBER	STOCK NUMBER	FIG.	ITEM
19207	7409389	5306-00-740-9389	5	41
			18	1
19207	7405394	2530-00-093-5597	18	5
19207	7409553	2590-00-740-9553	18	9
19207	7409556	2530-00-740-9556	18	2
19207	7405567	3120-00-740-957	5	6
			7	15
19207	7409903	5360-00-740-9903	22	26
19207	7411022	2530-00-797-9295	14	1
19207	7411071	2530-00-278-6555	8	2
19237	7411078	2530-00-741-1078	12	29
19207	7411079		12	27
19207	7411080	5340-00-977-0815	12	33
19207	7411081	2940-00-141-1081	14	7
19207	7412079	4730-00-729-6437	10	6
19200	7412088	5310-00-741-2088	10	9
19207	7413772	2530-00-421-7241	25	13
19251	7415748	2530-00-741-5748	14	8
19207	7520513	2530-00-152-0513	25	15
19207	7521433	5310-00-752-1633	18	14
19207	7521650	5310-00-151-8992	18	15
19207	7521787	5330-00-559-4230	18	17
19207	7525997		1	6
19207	7534847		5	7
19207	7534267		5	27
19207	7696584	5310-00-797-9332	5	12
19207	7707070	2530-00-770-7070	25	8
19207	7722333	5365-00-090-5426	3	18
19207	7723309	5310-00-393-6685	3	17
19207	7731428	5930-00-773-1428	3	7
19207	7145464	4730-00-419-9425	10	8
10207	7934846		5	9
19207	7950059		29	2
19207	7950136	5210-22-795-0136	29	I
19207	7954291	5310-00-292-7851	18	13
19207	7971270		22	2
19207	7971272		22	32
19207	7911275		22	27
19207	7971291		22	16
19207	7971292		22	7
19207	7971293		22	10
19207	7974917	5365-00-624-0255	25	4
19207	7974918	5340-00-562-1943	25	17
19207	7974919	5315-00-562-1956	25	21
19207	7979039	2530-00-797-9039	16	1
19207	7971573		11	19
76500	7975271	5315-00-461-3835	5	14
			7	16
19207	7979273	2530-00-797-9273	5	32
19207	7979277	2530-00-797-9277	5	3
19207	7979219		5	5

NATIONAL STOCK NUMBER AND PART NUMBER INDEX
PART NUMBER INDEX

CAGEC	PART NUMBER	STOCK NUMBER	FIG.	ITEM
19207	7479287	5325-00-797-9287	11	10
			12	9
19207	7979292		11	1
19207	7979253		11	1
19207	7979296	5306-00-797-9296	14	11
19207	7979258	2530-00-797-9298	11	15
19207	7979307		18	18
19207	7979315	5340-00-211-6129	18	6
19207	7979317	2530-00-797-9317	5	29
19207	7979318		5	29
19207	7979324	3040-00-421-3928	18	12
19207	7979330	5315-00-740-9379	7	3
19207	7979331		5	35
19207	7975332	5310-00-797-9332	7	18
19207	7979333	5330-00-297-9829	5	22
19207	7979334	2510-01-250-1882	5	17
19207	7979335		5	20
19207	7979336	2530-00-177-7986	5	16
19207	7979339	5360-00-797-9339	5	1
			7	4
19207	7979349	5330-00-740-9550	18	10
19207	7979350		5	40
19207	7979352		5	21
19207	7979353	5310-00-205-8358	5	28
19207	7979354		5	33
19207	7979362		5	36
19207	7979366	5310-00-798-1265	25	18
19207	7919373	9905-00-282-7489	28	4
19207	7979612	5360-00-706-9054	14	5
19207	7979613	4730-00-580-8457	14	3
19207	7979614	5310-00-679-3606	14	6
19207	7979691	4730-00-773-2163	9	3
19207	7979846		26	5
19207	7979848		26	10
19207	7979849		26	11
19207	7979858		20	4
19207	7979867	2450-00-814-8149	21	7
19207	7979879		26	6
19207	7979880		26	9
19207	7979893	4730-00-937-6103	11	3
19207	7979895	4720-00-090-9259	13	8
19207	7979966		11	14
19207	7979897	4720-00-090-9260	11	9
			26	7
19207	7979898		11	8
19207	7979901		11	5
19207	7979921	4710-00-255-6070	11	5
19207	797993		26	17
19207	7979930	2510-00-277-9772	24	3
19207	7979932		24	23
19207	7979933		24	24

NATIONAL STOCK NUMBER AND PART NUMBER INDEX

PART NUMBER INDEX

CAGEC	PART NUMBER	STOCK NUMBER	FIG.	ITEM
19207	7979934		24	11
19207	7979953		24	25
19207	7979936		24	22
19207	7979944		21	13
19207	7979950		24	9
19207	7996977	9905-00-831-6271	28	5
19207	7998598	3120-00-893-4972	25	24
19207	7998669	4130-01-263-9756	10	3
19207	8327359		24	2
19207	8327360	5365-00-040-2386	24	16
19207	8327361		24	22
19207	8327362		24	25
19207	8327363	2590-00-040-2388	23	2
19207	8327364		24	13
19207	8329823	5330-00-285-5123	14	4
19207	8331715		4	1
19207	8332086	2530-00-278-2243	9	1
19207	8332126	2530-00-318-1216	4	1
19207	8332543	2530-00-040-2874	KITS	9
19207	8338561	5935-00-833-8561	3	10
19207	8338562	5970-00-833-8562	3	11
19207	8338564	5940-00-399-6676	3	12
19207	8342220	4720-00-318-1087	10	5
19207	8343369		23	30
19207	8343374		20	8
19207	8343383		26	12
19207	8343401	5360-00-200-5422	20	5
19207	8343425		20	11
19207	8343432	2590-00-389-8197	23	5
19207	8343435		20	9
			26	16
19207	8343438		21	4
19207	8343444	2590-00-040-2878	24	15
19207	8343450		23	11
19207	8343452	5305-00-832-6344	23	37
19207	8343453	5340-00-598-3250	23	34
19207	8343475		24	8
19207	8343476		24	11
19207	8343477		24	5
19207	8343478		24	4
19207	8343482		23	38
19207	8343492		24	9
19207	8343498		20	10
19207	8343503	2530-00-040-2880	23	7
19207	8343586		18	12
19207	8343587		18	4
19207	8343588		18	2
19207	8343597	3020-0-389-8199	23	19
19207	8343610		23	17
19207	8343612	2590-00-302-6061	23	8
19207	8343613	3020-00-260-0956	23	20

CROSS-REFERENCE INDEXES

PART NUMBER INDEX

CAGEC	PART NUMBER	STOCK NUMBER	FIG.	ITEM
19207	8343615	5365-00-389-8202	23	9
19207	8343617	3120-00-389-8203	23	21
19207	8343618		23	25
19207	8343621		23	5
19207	8343622	2590-00-537-4840	23	1
19207	8365413		10	16
19207	8345425	4120-00-809-2750	9	6
19207	8365426	4710-00-511-1692	9	4
19207	8366206	2510-00-040-2863	2	1
19207	8366207	2590-00-295-8665	2	3
19207	8380801		17	8
19207	8380802	5360-00-780-0508	17	5
19207	8380803		12	14
19207	8380085	2530-00-318-1227	17	3
19207	8380807		17	9
19207	8380814		17	6
19207	8380816		17	4
19207	8380817		17	2
19207	8384225		5	42
19207	8384226		5	42
19207	8668934		22	29
19207	8681838		20	18
19207	8681855		24	3
19207	8681944		13	11
19207	8689797		4	1
19207	8701353-1		12	44
19207	8701353-2		12	21
19207	8701333-3		12	38
19207	8701353-4		12	39
19207	8701353-5		12	22
19207	8701367	2590-00-476-9334	20	10
19207	8701371		28	2
19207	8101314		10	15
19207	8701315		10	10
19207	8710672	5365-00-205-5105	6	17
19207	8710613	5310-00-091-9775	6	16
19207	8710674	3020-00-287-8211	6	12
19207	8710676	4710-00-534-2347	10	17
19207	8710680		6	10
19207	8710681	5365-00-177-8065	6	10
19207	8710683	5306-00-257-8274	6	22
19207	8710665	5310-00-220-6587	6	21
19207	8710692	2530-00-091-9776	6	13
19207	8710693	5340-01-053-5090	6	5
19207	8710654	2530-00-179-3635	6	5
19207	8710695	3020-00-287-8215	6	14
19207	8710696	5360-00-205-4654	6	19
19207	8710697	5360-00-205-4657	6	20
19207	8710705	5315-00-705-4686	6	23
19207	8710708	2530-00-091-9777	6	18
19207	8710712	2530-00-792-7354	6	11

CROSS-REFERENCE INDEXES

PART NUMBER INDEX

CAGEC	PART NUMBER	STOCK NUMBER	FIG.	ITEM
19207	8710713		6	11
19207	8711716	2530-00-773-9381	6	4
19207	8710717		6	9
19207	8710718	2530-01-094-7940	6	9
19207	8710723		18	12
19207	8710725	5340-00-287-8220	18	18
19207	8710126	5330-00-250-85Z1	18	17
19207	8710136	3040-00-757-1718	18	12
19207	8710742		18	4
19207	8710743	5330-00-562-1947	18	17
19217	8710744	5340-00-562-1948	18	18
19207	8710746	2530-00-624-0256	4	1
19207	8715118		25	20
19207	8716977		20	19
19207	8716978		20	15
19207	8716983	5120-01-021-5996	23	1
19207	8720226	2530-00-693-0996	6	2
			KITS	
19207	8720473	2530-00-776-0966	8	1
19207	8724501	5975-00-483-5756	3	5
19207	8733906		10	13
19207	8742392	5935-00-772-2982	3	1
19207	8742427	2590-00-930-6231	23	27
19207	8742428		23	29
19207	8742682		25	20
19207	8742683	5306-00-624-0257	25	26
19207	8742664		25	28
19207	8758259	2530-00-920-7568	8	1
12204	929121	5305-00-350-0158	25	16

CROSS REFERENCE INDEXES

FIGURE AND ITEM NUMBER INDEX

FIG.	ITEM	STOCK NUMBER	CAGEC	PART NUMBER
BULK	1	4710-00-541-6887	81349	M3520-B700G2G
KITS		2530-00-021-2366	96906	MS53004-2
KITS		2530-00-040-2874	19207	8332543
KITS		2530-00-693-0996	19207	8720226
KITS		2530-00-696-0351	40342	RN13A
KITS		2530-00-736-2426	19207	7362426
1	1	6220-00-133-7904	19207	10920548-2
1	2	6220-00-903-6647	19207	10920506
1	3	5330-00-297-7106	19207	7320658
1	4	6240-00-295-2668	96906	MS35478-1691
1	5	6240-00-044-4914	56906	9535478-1683
1	6		19207	7525997
1	7		19207	2-8338566
1	8		19207	2-8338567
1	s	5305-00-269-3209	96906	MS90725-58
1	10		96906	MS35388-46
2	1	2510-00-040-2883	19207	8366206
2	2	9905-01-050-3055	96906	MS39020-4
2	3	2590-00-295-8665	19207	8366207
3	1	5935-00-772-2582	19207	8742392
3	2	5310-00-761-6882	96906	MS51967-2
3	3	5310-00-582-5965	96906	MS35338-44
3	4	5305-00-988-1725	96906	MS35206-281
3	5	5915-00-483-5756	19207	8124501
3	6		96906	MS35490-88
3	7	5935-00-773-1428	19207	71731428
3	8		19207	11625435
3	9		81349	M13486/1-5-1
3	10	5935-00-833-8561	19207	8338561
3	11	5970-00-833-8562	19207	8338562
3	12	5940-00-399-6676	19207	8338564
3	13		96906	MS39020-2
3	14	5940-00-050-6209	19207	506209
3	15	9905-00-752-4649	96906	MS39020-1
3	16	5935-00-846-3883	96906	MS75021-1
3	17	5310-00-393-6685	19207	7723309
3	18	5365-00-090-5426	19207	7722333
4	1		19207	8331715
4	1		19207	8689797
4	1	2530-00-318-1216	19207	8332126
4	1	2530-00-624-0256	19207	8710746
5	1	5360-00-797-9339	19207	1405383
5	1	5360-00-797-9339	19207	797933 9
5	2	2530-00-797-9278	78500	A1-3722B28
5	3	2530-00-797-9277	19207	7979277
5	4	5320-00-058-9883	56906	MS16536-172
5	5		19207	7979279
5	6	3120-00-740-9567	19207	7409567
5	7		19207	7534847
5	8		96906	MS51019-65
5			19207	7934846

CROSS REFERENCE INDEXES

FIGURE AND ITEM NUMBER INDEX

FIG.	ITEM	STOCK NUMBER	CAGEC	PART NUMBER
5	10	5315-00-842-3044	96906	MS24665-283
5	11	5315-00-340-5379	19207	7409379
5	12	5310-30-157-5332	19207	7696584
5	13		19207	7409384
5	14	5315-00-461-3135	78500	7979271
5	15	5320-01-049-8261	96906	MS35743-76
5	16	2530-00-177-7986	19207	7979336
5	17	2510-01-250-1882	19207	7979334
5	18	5310-00-584-7888	96906	MS35338-51
5	19		78500	72782
5	20		19207	7979335
5	21		19207	7979352
5	22	5330-00-297-9829	19207	7979333
5	23	3110-00-183-6724	10190	W19TB2420X0H
5	24	5310-00-003-4094	96906	MS35338-48
5	25	5305-00-782-9495	96906	MS90725-111
5	26	4730-00-050-4208	96906	MS15003-1
5	27		19207	7534867
5	28	5310-00-205-8358	19207	7179353
5	25		19207	7979318
5	29	2530-00-797-9317	19207	7979317
5	30	5310-00-701-4851	19207	5168890
5	31	5365-00-797-9358	78500	174482
5	32	2530-00-288-0358	19207	7349532
5	32	2530-00-734-9533	19207	7349533
5	32	2530-00-797-9273	19207	7979273
5	33		19207	7979354
5	34	5310-00-701-4891	19207	7014891
5	35		19207	7979331
5	36		19207	7979362
5	37	5365-00-803-7319	96906	MS16624-1112
5	38	5310-00-234-7815	96906	MS35690-724
5	39	5310-00-209-0965	96906	MS35338-47
5	40		19207	7979350
5	41	5306-00-740-5389	19207	7405389
5	42		19207	8384225
5	42		19207	8384226
6	1	2530-00-318-1225	96906	MS5L003-1
6	2	2530-00-693-0996	19207	8720226
6	3	5320-00-011-9951	96906	MS16536-175
6	4	2530-00-773-9381	19207	8710716
6	5	2530-00-179-3635	19207	8710694
6	5	5340-01-053-5090	19207	8110693
6	6	5306-00-225-8499	96906	MS90725-34
6	7		96906	MS35291-34
6	8	5310-00-897-5940	96906	MS51922-45
6	9		19207	8110717
6	9	2530-01-094-7940	19207	8710718
6	10		19207	8710680
6	10	2530-00-117-8065	19207	8710681
6	11		19207	8710713

CROSS REFERENCE INDEXES

FIGURE AND ITEM NUMBER INDEX

FIG.	ITEM	STOCK NUMBER	CAGEC	PART NUMBER
6	11	2530-00-792-7354	19207	8710712
6	12	3020-00-287-8211	19207	8710674
6	13	2530-00-091-9177	19207	8710692
6	14	3020-00-287-8215	19207	8710695
6	15	3120-00-091-5774	63477	FC10937
6	16	5310-00-091-5775	19207	8710673
6	17	5365-00-205-5105	19207	8710672
6	18	2530-00-091-5777	19207	8710708
6	19	5360-00-205-4654	19207	8710696
6	20	5360-00-205-4657	19207	8710697
6	21	5310-00-220-6587	19207	8710685
6	22	5306-00-297-8274	19207	8710683
6	23	5315-00-705-4686	19207	8710705
6	24		96906	MS35298-139
6	24	5305-00-825-6074	19207	123936
7	1	2530-00-864-2990	19207	7409380
7	2	5315-00-842-3044	96906	MS24665-283
7	3	5315-00-740-9379	19207	7979330
7	4	5360-00-757-5233	19207	7979339
7	5	5310-00-740-5385	19207	7409385
7	6	2530-00-457-1676	23862	2003399
7	7	5360-00-140-0382	78500	2758C3
7	8	5340-00-454-4955	78500	27917E5
7	9	2530-00-692-6133	78500	A173136H8
7	10	5315-00-140-9316	19207	7409376
7	11	5305-00-269-3210	96906	MS90725-59
?	12	5310-00-437-9541	12603	23806
7	13	5310-00-275-5460	19207	7207919
7	14	5310-00-584-7888	96906	MS35338-51
7	15	3120-00-740-5567	19207	7409567
7	16	5315-00-461-3835	78500	7179271
7	17	2530-00-204-3622	78500	1745-E-5
?	18	5310-00-797-9332	19207	7979332
7	19	5310-00-563-4391	78500	1229-216
7	20		19207	594261
8	1	2530-00-776-0966	19207	8720473
8	1	2530-00-920-7568	19207	8758259
8	2	2530-00-273-6555	19207	1411071
8	2	2530-00-737-3260	19207	7373260
9	1	2530-00-278-2243	19207	8332086
9	2	5330-00-737-3354	19207	7373354
9	3	4730-00-773-2163	19207	7979691
9	4	4710-00-511-1692	19207	8365426
9	5	4730-00-908-3195	96906	MS35842-10
9	6	4720-00-809-2750	19207	8365425
9	7	5310-00-732-0559	96906	MS51968-8
9	8	5310-00-004-5033	96906	MS35338-046
10	1	4730-00-516-7419	19207	5167419
10	2	5310-00-209-1761	19207	5160323
10	3	4730-01-263-9756	19207	7998669
10	4		19207	5175415

CROSS REFERENCE INDEXES

FIGURE AND ITEM NUMBER INDEX

FIG.	ITEM	STOCK NUMBER	CAGEC	PART NUMBER
10	5		19207	10888837-2
10	5	4720-00-318-1087	19207	8342220
10	6	4730-00-729-6431	19207	7412079
10	7	5365-00-274-4544	19207	298653
10	8	4730-00-419-9425	19207	7745464
10	9	5310-00-141-2088	19207	7412088
10	10		19207	10888836’
10	10		11207	8701375
10	11	5310-00-732-0559	96906	MS51968-8
10	11		19207	MS35333-046
10	13		19207	8733906
10	14		19207	5291100
10	15		19207	10888835
10	15		19207	8701374
10	16		19207	8365413
10	17	4710-00-534-2347	19207	8710676
11	1		19207	7979292
11	1		19207	7979293
11	2		19207	2l9759
11	3	4730-00-937-6103	19207	7979893
11	4	4730-00-408-4583	96906	MS39158-5
11	5		19207	7971901
11	5	4710-01-255-6070	19207	7979921
11	6		96906	MS39165-5
11	7		19207	137538
11	8		19207	7979898
11	9	4720-00-090-9260	19207	7979897
11	10	5325-00-797-9287	19207	7979287
11	11		56906	N995122-021
11	12	5310-00-080-6004	96906	MS15795-214
11	13		96906	MS35292-62
11	14		19207	7979896
11	15	2530-00-191-9298	19207	7979298
11	16	4820-00-845-1096	96906	MS35783-2
1£	17		96906	MS35872-5
11	18		19207	137409
11	19		19207	7979173
11	20		21450	144036
11	21		19207	7064645
11	22	4730-00-069-1186	81343	6-4 1201028A
11	23	9905-00-851-0208	40342	N107908
12	1	9905-00-559-1369	96906	M553007-2
12	2		96906	MS35007-1
12	3		19207	7064896
12	4		19207	7344896
12	5	5310-00-550-3114	96906	MS935333-30
12	6		96906	MS35690-1225
16	7	4730-00-065-1188	96906	MS35179-9
12	8	4730-01-079-8821	19207	CPR602321-1
12	9	5325-00-797-9281	19207	7979287
12	10	5340-10-088-6655	96906	MS21333-101

CROSS REFERENCE INDEXES

FIGURE AND ITEM NUMBER INDEX

FIG.	ITEM	STOCK NUMBER	CAGEC	PART NUMBER
12	11	5305-00-068-0505	96906	MS90726-5
12	12		96906	MS51964-2
12	13	5310-00-582-5965	96906	MS35338-44
12	14		19207	8380803
12	15	5305-00-269-2883	96906	MS90726-60
12	16	5310-00-637-9541	56906	MS35338-46
12	11	5310-00-722-0559	96906	MS51968-8
12	18	4730-00-069-1187	96906	M939182-3
12	19	4730-00-494-6580	96906	MS39190-3
12	19	4730-00-813-7811	96906	MS539191-2
12	20	4130-01-079-8821	19207	CPR102321-1
12	21		19207	10888834-3
12	21		19207	8701353-2
12	22		19207	10888834-8
12	22		19207	8701353-5
12	23	4730-00-289-0051	96906	MS39182-6
12	24	5310-00-637-5541	96906	MS35338-46
12	25	5310-00-732-0559	96906	MS51968-8
12	26		96906	MS35355-71
12	27		19207	7411079
12	28	4820-00-849-1220	96906	MS535782-5
12	29	2530-00-141-1078	19207	7411078
12	30	5310-00-132-0555	96906	MS51968-8
12	31	5305-00-264-2Z03	96906	MS90726-60
12	32	5310-00-637-9541	96906	MS535338-46
12	33	5340-00-977-0815	19207	7411080
12	34		96906	MS35182-5
12	35	4730-01-079-8821	19207	CPR102321-1
12	36		96906	MS39139-9
12	37	4130-01-017-8821	19207	CPR102321-1
12	38		19207	10888834-6
12	38		19207	8701353-3
12	39		19207	10888834-7
12	35		19207	8101353-4
12	40	5340-00-088-6655	96906	M’921333-101
1	41	5305-00-068-0505	96906	MS90726-5
12	42	5310-00-168-0319	96906	MS1968-2
12	43	5310-00-582-5565	96906	MS35338-44
12	44		19207	10888834-1
12	44		19207	10888834-2
12	44		19207	10888834-4
12	44		19207	10888834-9
12	44		19207	8701353-1
13	1	4730-00-595-0083	96906	MS35746-1
13	2		96906	MS35750-1
13	3		96906	MS35749-1
13	4	5330-00-090-2128	19207	538824
13	5		96906	M935750-1
13	6	5315-00-010-3725	24617	103725
13	7		24617	538822
13	8	4720-00-090-9259	19207	7979895

CROSS REFERENCE INDEXES

FIGURE AND ITEM NUMBER INDEX

FIG.	ITEM	STOCK NUMBER	CAGEC	PART NUMBER
13	9	4730-00-278-8257	96906	MS39133-1
13	10		96906	MS39137-1
13	11		19207	8681944
13	12	4730-00-567-9073	96906	MS35133-2
13	13		96906	MS39134
13	14		96906	M531135
13	15		96906	MS39136
13	16		56906	MS39137-2
14		2530-00-797-9295	19207	7411022
14	2		56906	MS20913-12
14	3	4730-00-580-8457	19207	7979613
14	4	5330-00-285-5123	19207	8329823
14	5	5360-00-706-9054	19207	7979612
14	t	3310-00-675-3606	19207	7979614
14	?	2940-00-741-1081	19207	7411081
14	8	2530-00-741-5748	19207	7415748
14	9		16906	MS35337-25
14	10	5310-00-761-6882	96906	MS51967-2
14	11	5306-00-797-9296	19207	7979296
15	1	2530-00-021-2366	96906	MS53004-2
15	2	5310-00-637-9541	96906	MS3 5338-46
15	3	5310-00-725-1382	56906	MS35690-624
15	3	5310-00-732-0559	96906	MS51968-8
15	4		96906	MS35294-63
15	4	5305-00-269-3239	96906	MS590726-63
16	1	2530-00-797-5039	19207	7171039
1	2		56906	M535290-33
16	3		40342	N2318
16	4		40342	N11225A
16	5		40342	N12471
16	6	5310-00-407-9566	96906	MS35338-45
16	7		19207	120368
16	8		40342	10413D
16	9		40342	11194
16	10		40342	N10521
16	11		40342	N10497
16	12		96906	MS35690-826
16	13		06721	N10447
16	14	5315-00-839-5822	96906	MS524665-353
16	15	5315-00-842-3154	96906	MS35810-36
16	16		56906	MS35690-1025
16	17	5310-00-004-5034	96906	MS535338-50
17	1	2530-00-930-5312	19207	7017931
17	2		19207	8380817
17	3	2530-00-318-1227	19201	8380805
17	4		19207	8380816
17	5	5360-00-780-0508	19207	8380802
17	6		19207	8380814
17	7		19207	501212
17	8		19207	8380801
17	9		19207	8380807

CROSS REFERENCE INDEXES

FIGURE AND ITEM NUMBER INDEX

FIG.	ITEM	STOCK NUMBER	CAGEC	PART NUMBER
17	10		19207	10919661
17	11		96906	MS35690-625
11	12	5310-00-137-9541	96906	MS35338-46
17	13	5305-00-269-2803	96906	MS90726-60
18	1	5300-00-740-9385	19207	7409389
18	2		19207	8343588
18	2	2530-00-140-9556	19207	7409556
18	3	5306-00-383-4957	96906	MS511946-2
18	3	5306-00-383-4557	96906	MS51946-2
18	3	5306-00-733-5239	96906	MS51945-1
18	3	5306-00-733-5235	96906	MS51946-1
18	4		19207	7409388
18	4		19207	8343587
18	4		19207	8710742
18	5	2530-00-093-5597	19207	740394
18	6	5340-00-211-6129	19207	7979315
18	7	5310-00-209-0965	96906	MS535338-47
18	8	5310-00-234-7815	96906	MS35690-724
18	9	2590-00-140-9553	19207	409553
18	10	5330-00-740-9550	19207	7151349
18	11	3110-00-100-3096	08162	8T3994
18	12		19207	8343586
18	12		19207	8710723
1i	12	3040-00-421-2926	19207	7979324
18	12	3040-00-757-1718	19207	8710736
18	13	5310-00-292-1151	19207	7954291
18	14	5310-00-352-2251	78500	12275305
18	14	5310-00-374-0836	19207	7001725
18	14	5310-00-152-1633	19207	7521633
18	15		19207	7007089
18	15	5310-00-151-8992	19207	7521650
18	£6	5310-00-353-2427	19207	17346885
18	17		19207	7346993
18	17	5330-00-290-8521	19207	8710726
18	17	5330-00-562-1947	19207	8710743
d18	17	5330-00-599-4230	19207	7521787
18	18		19207	7979301
18	12	2530-00-026-0255	78500	3212H86
18	18	5340-00-287-8220	19207	8710725
18	18	5340-00-562-1948	19207	8710744
18	19	5310-00-407-9566	96906	MS35338-45
d18	19	5310-00-584-5272	56906	MS35338-48
18	20		96906	MS35295-113
18	20		96906	MS90725-29
18	21	5310-00-880-2004	96906	MS51983-3
1d	21	5310-00-880-2005	96906	MS51983-4
18	22	2530-00-359-1162	96906	MS53068-2
18	22	2530-00-693-1029	96906	MS53068-1
18	23	2530-00-026-0265	96906	MS53044-5
18	23	2530-00-603-5768	96906	MS53044-6
18	24	2530-00-738-9001	96906	MS53045-3

CROSS REFERENCE INDEXES

FIGURE AND ITEM NUMBER INDEX

FIG.	ITEM	STOCK NUMBER	CAGEC	PART NUMBER
18	25	2530-00-738-5493	19207	7389493
18	25	2530-00-138-5620	19207	7389620
19	1		81348	2289994
19	1	2610-00-051-5450	81348	11.00-20/TR78A/0 N CENTER
19	2	2640-00-050-1229	17875	100AA
19	3	2640-00-060-3550	51665	US49
19	4		81348	GR0UP 3/9.00-20/ D/TBCC
19	4	2610-00-242-8653	07464	559374
20	1		96906	MS35337-31
20	2		56906	MS35690-1025
20	2	5310-00-010-3030	96906	MS35690-1024
20	3		96906	MS35290-166
20	3	5305-00-726-2551	96906	MS90726-164
20	4		19207	7979858
20	5	5360-00-200-5422	19207	8343401
20	6		96906	MS515797-221
20	6	5310-00-591-7209	96906	MS27183-22
20	7	5315-00-835-5822	96906	MS524665-353
20	8		19207	8343374
20	9		19207	10888833
20	9		19207	8343435
20	10		19207	8343498
20	10	2590-00-476-9334	19207	8701367
20	11		19207	8343425
20	12		19207	171768
20	13	5310-00-823-8803	96906	MS27183-21
20	14	5310-00-809-8541	96906	MS27183-27
20	14	5315-00-013-7214	56906	MS524665-359
20	15		19207	8716978
20	16	5310-00-637-9541	96906	MS35338-46
20	1	5305-00-269-2802	96906	MS0726-59
20	18		19207	8681838
20	19		19207	8716977
20	20		56906	MS35292-112
20	21	5310-00-584-5272	96906	MS35338-29
20	22		96906	MS35690-825
21	1	5315-00-187-9558	96906	924665-431
21	2		19207	174603
21	3	5310-00-982-6592	96906	9527183-34
21	4		19207	8343438
21	5	5310-00-314-7888	96906	MS35338-51
21	6		56906	MS35691-1204
21	7	2540-00-814-8149	19207	7979867
21	8	5310-00-762-4219	96906	MS51967-30
21	8	5310-00-703-8922	96906	MS51967-24
21	9	5310-00-800-8533	96906	MS27183-23
21	9	5310-00-809-8341	96906	MS27183-27
21	10		19207	11597635
21	10		19207	11625386

CROSS REFERENCE INDEXES

FIGURE AND ITEM NUMBER INDEX

FIG.	ITEM	STOCK NUMBER	CAGEC	PART NUMBER
21	11		19207	11597636
21	11		19207	11625387
21	12		19207	11557639
21	12		19207	1125384
21	12	4010-00-733-9456	26051	MT9
21	13		19207	7979944
22	1		96906	MS53035-1
22	2		19207	7971273
22	3		56906	MS35291-72
22	4		19207	7069268
22	5		96906	MS35337-27
22	6		96906	M535690-605
22	7		19207	7971292
22	8		19207	7061979
22	9	2510-00-706-8180	19207	1068180
22	10		19207	7971293
22	11	5315-00-187-9588	96906	M524665-686
22	12	4730-00-172-0034	96906	MS15003-6
22	13	2510-00-353-0642	19207	5328463
22	14	2510-00-706-8245	19207	7068245
22	15	5360-00-141-6119	72540	SP112512
22	16		19207	7971291
22	17	5315-00-012-0123	96906	MS24665-355
22	18		96906	MS35692-805
22	19		19207	7069266
22	20		19207	7069261
22	21		96906	MS35690-1025
22	21	5310-00-010-3030	96906	M935690-1024
Z2	22		96906	MS35337-31
22	23		96906	MS35290-166
22	23		96906	MS35292-165
22	24	5310-00-809-3079	96906	MS27183-19
22	25	5307-00-832-7982	19207	7068244
22	26	5360-00-740-9903	19207	7409903
22	27		19207	7971275
22	28	5315-00-059-0238	96906	MS24665-753
22	25		19207	8668934
22	30		19207	7068505
22	31	4730-00-172-0028	56906	MS15003-4
22	32		19207	7971272
23	1	2590-00-937-4840	19207	8343622
23	1	5120-01-021-5996	19207	8716983
23	2	2590-00-040-2388	19207	8327363
23	3		96906	MS35691-1021
Z3	4		19207	22338
23	5		19207	8343621
23	5	2590-00-385-8197	19207	8343432
Z3	6	5305-00-958-5257	96906	MS35190-315
23	7	2530-00-040-2880	19207	8343503
23	6	2590-00-302-6061	19207	8343612
23	9	5365-00-389-8202	19207	8343615

CROSS REFERENCE INDEXES

FIGURE AND ITEM NUMBER INDEX

FIG.	ITEM	STOCK NUMBER	CAGEC	PART NUMBER
23	10	3110-00-156-1722	96906	MS17161-33
23	11		19207	8343450
23	12		56906	MS20913-39
23	13		19207	050042033
23	14	3120-00-661-9523	21450	542041
23	1§		19207	142534
23	16	5305-00-989-7434	96906	MS35207-263
23	17		19207	8343610
23	18		96906	MS203644-1614
23	11	3020-00-389-8199	19207	8343597
23	20	3020-00-260-0956	19207	8343613
23	21	3120-00-389-8203	19207	8343617
23	22	4730-00-954-1281	96906	MS49005-4
23	23	4730-00-050-4208	96906	MS15003-1
23	24	5315-00-616-5530	96906	MS35756-15
23	25		19207	8343618
2J	26		96906	MS90726-203
23	27	2590-00-930-6231	19207	8742427
23	28		96906	MS20365-1216A
23	29		19207	8142428
23	30		19207	10888842
23	30		19207	8343369
23	31	5310-00-809-4061	96906	MS27183-15
23	32		96906	MS35692-625
23	32	5310-00-460-3006	96906	MS35692 -624
Z3	32	5315-00-005-0442	96906	524665-285
23	34	5340-00-598-3250	19207	8343453
23	35	5305-00-269-2811	96906	MS90726-67
23	36	5310-00-437-9541	12603	23E06
23	37	5305-00-812-6344	19207	8343452
23	38		19207	8343482
23	39		96906	MS35690-625
23	40		96906	MS35290-58
23	40	1305-00-269-2805	96906	MS90726-62
24	1	4730-00-050-4208	96906	MS15003-1
24	2		19207	8327359
24	3		19207	8681895
24	3	2510-00-277-9772	19207	7979930
24	4		19207	8343478
24	5		19207	8343477
24	6		19207	109443
24	6		96906	MS35291-74
24	7		96906	MS35690-605
24	e		19207	8343475
24	9		19207	7979950
24	9		19207	8343492
24	10		19207	135183
24	10		96906	M 535744-68
24	11		19207	7919934
24	11		19207	8343476
24	12	5310-00-754-2005	96906	MS35338-52

CROSS REFERENCE INDEXES

FIGURE AND ITEM NUMBER INDEX

FIG.	ITEM	STOCK NUMBER	CAGEC	PART NUMBER
24	13		19207	8327364
24	14		96906	MS35292-175
24	11	2590-00-040-2878	19207	8343444
24	16	5365-00-040-2386	19207	8327360
24	17	5310-00-820-6653	96906	MS35333-50
24	18	5310-00-010-3030	96906	MS35690-1024
24	19		96906	MS35207-73
24	20	5310-00-809-4058	96906	MS27183-10
24	21	5310-00-959-7600	96906	MS51922-5
24	22		19207	7979936
24	22		19207	8317361
24	23		19207	7979932
24	24		19207	7979933
24	25		19207	7975935
24	25		19207	8327362
24	26	5315-00-298-1499	96906	M52466b-36J
24	27	5310-00-682-5684	96906	MS35692-1624
45	1	5310-00-985-0782	96900	M527151-28
25	2		96906	MS35690-1025
25	3	5310-00-424-1452	19207	7349028
26	4	5365-00-624-0255	19207	7974917
25	5	5365-00-350-0155	23105	563400
25	6	5310-00-424-1456	19207	7349029
25	7		96906	MS35292-11d
25	8	2530-00-770-7070	19207	7707070
25	9	5340-00-427-0080	19207	1349016
25	10		96906	MS535690-825
25	11	5310-00-584-5272	96906	MS535338-48
25	12	5305-00-716-8183	90906	MS90726-110
25	13	2530-00-421-7241	19207	7413772
25	14		19207	7399017
25	15	2530-00-752-0513	19207	1520513
25	16	5305-00-350-0158	12204	929121
25	17		19207	10888829
25	17	5340-00-562-1943	19207	7974918
25	18	5310-00-798-1265	19207	79719366
25	19	5310-00-805-8541	96906	MS527183-27
25	20		19207	8715118
25	20		19207	842682
25	21	5315-00-562-1956	19207	1974919
25	22	5315-00-298-1481	96906	MS24665-351
25	23	5310-00-842-7783	96906	5935692-53
25	24		19207	10888841
25	24	3120-00-893-4972	19207	7998598
25	25	5305-00-350-0158	23705	563497
25	26	5306-00-624-0257	19207	8742683
25	27	2510-00-644-0254	23705	336837
25	28		19207	1388b828
25	28		19207	8742684
26	1		96906	MS35690-425
26	1	5310-00-768-0319	96906	MS51968-2

CROSS REFERENCE INDEXES

FIGURE AND ITEM NUMBER INDEX

FIG.	ITEM	STOCK NUMBER	CAGEC	PART NUMBER
26	2	5310-00-582-5965	96906	M335338-44
26	3	5310-00-809-4058	96906	MS27183-10
26	4	5305-00-993-2457	96906	MS35207-284
26	5		19207	7979846
20	6		19207	7919879
26	7		19207	7179897
Z6	8		96906	M535207-74
26	9		19207	7979880
26	10		19207	7979848
26	11		19207	7979849
26	12		19207	8343383
26	13	5306-00-282-539	24617	106325
26	14		24617	102634
26	15		24617	103320
26	16		19207	8343435
26	17		19207	797993
26	18		19207	443322
26	19	5305-00-269-2807	96906	MS90726-64
27	1		19207	171764
27	2	9905-00-205-2795	96906	MS35387-1
28	1		19207	441201
28	2		19207	8701371
28	3	9905-00-845-0507	19207	10888831
28	4	9905-00-282-7489	19207	7979373
28	5	9905-00-831-6271	19207	7996177
29	1	5120-00-795-0136	19207	7950136
29	2		19207	7950059
29	3	5120-00-708-8179	19207	7083179
29	4	5120-00-378-3139	19207	7076968

APPENDIX G
ILLUSTRATED LIST OF MANUFACTURED ITEMS

Section I. INTRODUCTION

G-1. SCOPE.

a. This appendix includes complete instructions for making items authorized for fabrication.

b. All bulk materials needed for manufacture of an item are listed by part number or specification number in the manufacturing instructions.

c. When manufacturing items, ensure that the appropriate tools are used to cut and shape materials. Bend tubes to configurations required and be careful not to kink tubing. Reuse old connector and fittings whenever possible. Ensure that tubing is clean before installing after fabrication.

Section II. MANUFACTURING INSTRUCTIONS

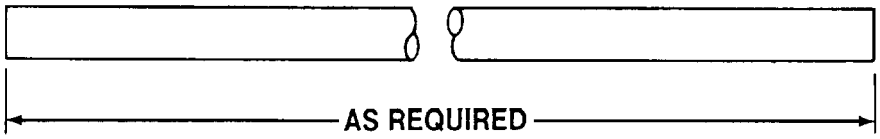

NOTES:

1. Make from NSN 4710-00-541-6887, Part Number MIL-T-3520 stock.
2. Cut ends of tube square.
3. Remove burrs from inside of tube.

Figure G-1. Tube.

TA510757

APPENDIX H
TORQUE LIMITS

H-1. SCOPE.

a. This appendix lists standard torque values, as shown in Table , and provides general information for applying torque.

b. Special torque values are indicated in the maintenance procedures for applicable components.

H-2. GENERAL.

a. Always use the torque values listed below when the maintenance procedure does not give a specific torque value.

b. Unless otherwise specified, standard torque t tolerance shall be ±10%.

c. Torque values are based on clean, dry threads. Reduce torque by 10% when engine oil is used as a lubricant.

d. Reduce toque by 20% when new plated capscrews are used.

e. Capscrews threaded into aluminum may require reductions in torque of 30% or more of Grade 5 capscrew torque. Capscrews threaded into aluminum must also attain two capscrew diameters of thread engagement.

CAUTION

If replacement capscrews are of higher grade than originally supplied, use torque specifications for the original. This will prevent equipment damage due to overtorquing.

Table H-1. Torque Limits.

Current Usage		Much Used		Much Used		Used at Times		Used at Times	
Quality of Material		Indeterminate		Minimum Commercial		Medium Commercial		Best Commercial	
SAE Grade Number		1 or 2		5		6 or 7		8	
Capscrew Head Markings Manufacturer's marks may vary These are all SAE Grade 5 (3 line)		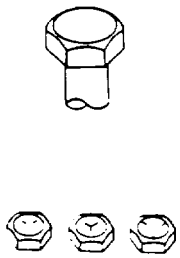						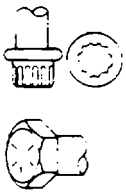	
Capscrew Body Size Inches - Thread		Torque lb.-ft. (N•m)		Torque lb.-ft. (N•m)		Torque lb.-ft. (N•m)		Torque lb.-ft. (N•m)	
¼	20	5	(7)	8	(11)	10	(14)	12	(16)
	28	6	(8)	10	(14)			14	(19)
5/16	18	11	(15)	17	(23)	19	(26)	24	(33)
	24	13	(18)	19	(26)			27	(37)
⅜	16	18	(24)	31	(42)	34	(46)	44	(60)
	24	20	(27)	35	(47)			49	(66)
7/16	14	28	(38)	49	(66)	55	(75)	70	(95)
	20	30	(41)	55	(75)			78	(106)
½	13	39	(53)	75	(102)	85	(115)	105	(142)
	20	41	(56)	85	(115)			120	(163)
9/16	12	51	(69)	110	(149)	120	(163)	155	(210)
	18	55	(75)	120	(163)			170	(231)
⅝	11	83	(113)	150	(203)	167	(226)	210	(285)
	18	95	(129)	170	(231)			240	(325)
¾	10	105	(142)	270	(366)	280	(380)	375	(508)
	16	115	(156)	295	(400)			420	(569)
⅞	9	160	(217)	395	(536)	440	(597)	605	(820)
	14	175	(237)	435	(590)			675	(915)
1	8	235	(319)	590	(800)	660	(895)	910	(1234)
	14	250	(339)	660	(895)			990	(1342)

TA510758

INDEX

INDEX

INDEX

INDEX

INDEX

INDEX

INDEX

By Order of the Secretary of the Army:

GORDON R. SULLIVAN
General, United States Army
Chief of Staff

Official:

MILTON H. HAMILTON
Administrative Assistant to the
Secretary of the Army
00412

Distribution:

To be distributed in accordance with DA Form 12-39-E (Block 0512) Operator, Unit, Direct and General Support maintenance requirements for TM 9-2330-203-14&P.

☆U.S. GOVERNMENT PRINTING OFFICE: 1995 - 388-421/03363

TEAR ALONG PERFORATED LINE

RECOMMENDED CHANGES TO EQUIPMENT TECHNICAL PUBLICATIONS

SOMETHING WRONG WITH THIS PUBLICATION?

FROM: (PRINT YOUR UNIT'S COMPLETE ADDRESS)

DATE SENT

PUBLICATION NUMBER	PUBLICATION DATE	PUBLICATION TITLE
TM 11-5825-270-10	23 Jul 81	Radio Frequency R-2176/FRN

BE EXACT. . .PIN-POINT WHERE IT IS

PAGE NO.	PARA-GRAPH	FIGURE NO	TABLE NO.	IN THIS SPACE TELL WHAT IS WRONG AND WHAT SHOULD BE DONE ABOUT IT:

PRINTED NAME, GRADE OR TITLE, AND TELEPHONE NUMBER

SIGN HERE:

DA FORM 1 JUL 79 2028-2

PREVIOUS EDITIONS ARE OBSOLETE.

P.S.—IF YOUR OUTFIT WANTS TO KNOW ABOUT YOUR RECOMMENDATION MAKE A CARBON COPY OF THIS AND GIVE IT TO YOUR HEADQUARTERS.

PIN: 069190-000

This fine document...

Was brought to you by me:

Liberated Manuals -- free army and government manuals

Why do I do it? I am tired of sleazy CD-ROM sellers, who take publicly available information, slap “watermarks” and other junk on it, and sell it. Those masters of search engine manipulation make sure that their sites that sell free information, come up first in search engines. They did not create it... They did not even scan it... Why should they get your money? Why are not letting you give those free manuals to your friends?

I am setting this document FREE. This document was made by the US Government and is NOT protected by Copyright. Feel free to share, republish, sell and so on.

I am not asking you for donations, fees or handouts. If you can, please provide a link to liberatedmanuals.com, so that free manuals come up first in search engines:

<A HREF=http://www.liberatedmanuals.com/>Free Military and Government Manuals</A>

- Sincerely
  Igor Chudov
  http://igor.chudov.com/
- Chicago Machinery Movers