TM 9-2330-201-14

TECHNICAL MANUAL

OPERATOR'S, ORGANIZATIONAL, DIRECT SUPPORT,
AND GENERAL SUPPORT MAINTENANCE MANUAL
(INCLUDING REPAIR PARTS AND SPECIAL TOOLS LISTS)

TRAILER, CARGO AMPHIBIOUS

1/4 TON, 2-WHEEL

M100 (2330-732-8227)

TRAILER, CHASSIS

1/4 TON, 2-WHEEL

M115 (2330-835-8590)

TRAILER, MAINTENANCE: TELEPHONE CABLE SPLICER

1/4 TON, 2-WHEEL

M367 (2330-215-4211)

HEADQUARTERS, DEPARTMENT OF THE ARMY

This copy is a reprint which includes current pages from Change 1.

APRIL 1972

CHANGE No. 1

HEADQUARTERS
DEPARTMENT OF THE ARMY
WASHINGTON, D.C. *3 August 1973*

Operator's Organizational Direct Support and General Support Maintenance Manual (Including Repair Parts and Special Tools List) FOR TRAILER, CARGO, AMPHIBIOUS 1/4-TON, 2-WHEEL M100 (2330-732-8227) TRAILER, CHASSIS 1/4-TON, 2-WHEEL M115 (2330-835-8590) TRAILER, MAINTENANCE: TELEPHONE CABLE SPLICER 1/4-TON, 2-WHEEL M367 (2330-215-4211)

Current as of 15 April 1973

TM 9-2330-201-14, 26 April 1972 is changed as follows:

Page ii, APPENDIX C. Delete Section II page C-4.
Page 1-9. Add paragraph 1-9 and 1-10 as shown below.

1-9. Components of End Item

These items are installed in the vehicle at the time manufacture or rebuild. They are securely fastened, permanently attached or placed behind a cover. *(None authorized).*

1-10. Expendable Consumable Maintenance Supplies and Materials

Supplies and materials required for maintenance support of the equipment covered herein in are authorized to be requisitioned by SB 700-50 (See Table 1-1).

Table 1-1. Expendable Consumable Maintenance Supplies and Materials

Federal stock number	Description		
9150-190-0905	GAA, Gresae automotive and artillery (5 lb Can)	EA	V
9150-190-0907	GAA, Grease automotive and artillery (5 lb Can)	EA	V
9150-265-9433	OE/HDO Lubricating oil internal combustion engine (1 qt)	EA	V
9150-242-7602	OE/HDO Lubricating oil internal combustion engine (sub-zero) (1 qt)	EA	V

Page C-1. Paragraph C-2b is superseded as follows:

b. Items Troop Installed or Authorized List - Section II. A list in alphabetical sequence of items which at the discretion of the unit commander, may accompany the end item but are not subject to be turned in with the end item. *(None authorized).*

By Order of the Secretary of the Army:

CREIGHTON W. ABRAMS
General United States Army
Chief of Staff

Official:

VERNE L. BOWERS
Major General, United States Army
The Adjutant General

Distribution:

To be distributed in accorddance with DA Form 12-39, organizational maintenance requirements for Trailers: Cargo, 1/4 Ton, M100; Chassis, 1/4 Ton, M115; and Maintenance (Tel Cable Splicing), M367.

TECHNICAL MANUAL
No. 9-2339-201-14

HEADQUARTERS
DEPARTMENT OF THE ARMY
WASHINGTON, D.C., 26 April 1972

OPERATOR'S ORGANIZATIONAL

DIRECT SUPPORT AND GENERAL SUPPORT MAINTENANCE MANUAL

(INCLUDING REPAIR PARTS AND SPECIAL TOOLS LISTS)

TRAILER, CARGO, AMPHIBIOUS: ¼ TON, 2-WHEEL, M100 (2330-732-8227)

TRAILER, CHASSIS: ¼ TON, 2-WHEEL, M115 (2330-835-8590)

TRAILER, MAINTENANCE: TELEPHONE CABLE SPLICER, ¼ TON, 2-WHEEL, M367 (2330-215-4211)

***This manual supersedes TM 9-871A, 27 July 1951; ORD 7 and 8 SNL G-747, July 1956; and ORD 9 SNL G-747, 7 February 1952, including all changes.**

CHAPTER 1

INTRODUCTION

Section I. GENERAL

1-1 Scope

a. This manual contains instructions for the use of operating personnel maintaining the 1/4-ton, 2-wheel trailers, M100, M115 and M367 as allocated by the Maintenance Allocation Chart. It provides information of the operation, lubrication, and preventive maintenance checks and services of the equipment, accessories, components and attachments. This manual also includes instructions for shipment and limited storage.

1-2. Forms and Records

Maintenance forms, records, and reports which are to be used by maintenance personnel at all maintenance levels are listed in and prescribed by TM 38-750.

1-3. Reporting of Equipment Publication Improvements

The reporting of errors, omissions, and recommendations for improving this publication by the individual user is encouraged. Reports should be submitted on DA Form 2028, (Recommended Changes to Publications) and forwarded direct to Commanding General, U.S. Army Tank-Automotive Command, ATTN: AMSTA-MAPT (NMP), Warren, Mich., 48090. A reply will be furnished directly to you.

1-4. Destruction of Army Materiel to Prevent Enemy Use

Refer to TM 750-244-3.

1-5. Administrative Storage

For information on administrative storage, refer to TM 740-90-1.

Section II. DESCRIPTION AND DATA

1-6. Description

a. General. The M100 Cargo Trailer (fig. 1-1 and (l-2) and the M115 Chassis Trailer are a two-wheel general purpose carrier designed to carry a load of 500 pounds cross-country. The M367 Maintenance Trailer (fig. 1-3) is a two-wheel general purpose carrier used as a Telephone Cable Splicer.

(1) The body and frame are of one piece welded construction.

(2) The body is water-tight and will float the trailer and a 500-pound load in fording operations.

(3) Two drain valves are provided, one in the front, and one in the rear of the floor.

(4) The trailer is equipped with two tail lights which are operated from the towing vehicle.

(5) An intervehicular cable is provided for connecting the trailer electrical system with that of the towing vehicle. This cable is stowed in the intervehicular cable storage box mounted on the left front of the body.

(6) Reference in this manual to the right or left sides of the vehicle will be as viewed when standing at the rear of the vehicle facing forward.

(7) An A frame drawbar is bolted to the frame side members and serves as a mount for the towing connections and the support leg. The support leg is a movable support which is used to keep the trailer upright when the trailer is not connected to a towing vehicle.

(8) A canvas paulin, which fastens to hooks welded to the body, is provided to cover the trailer top.

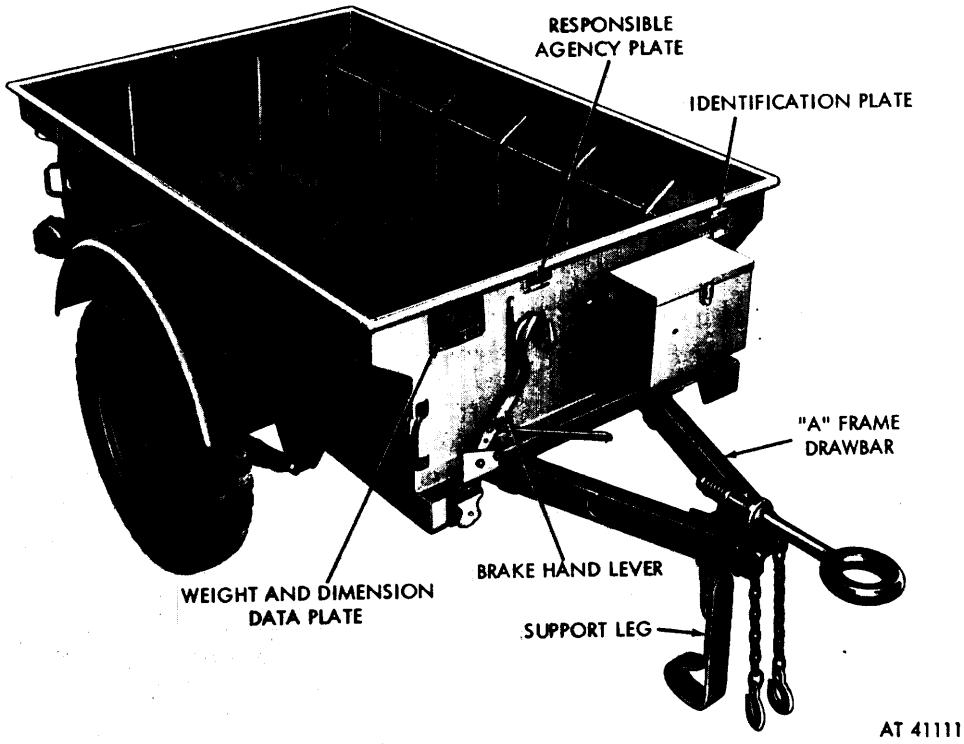

Figure 1-1. 1/4-ton, 2-wheel Cargo Trailer M100—right front view.

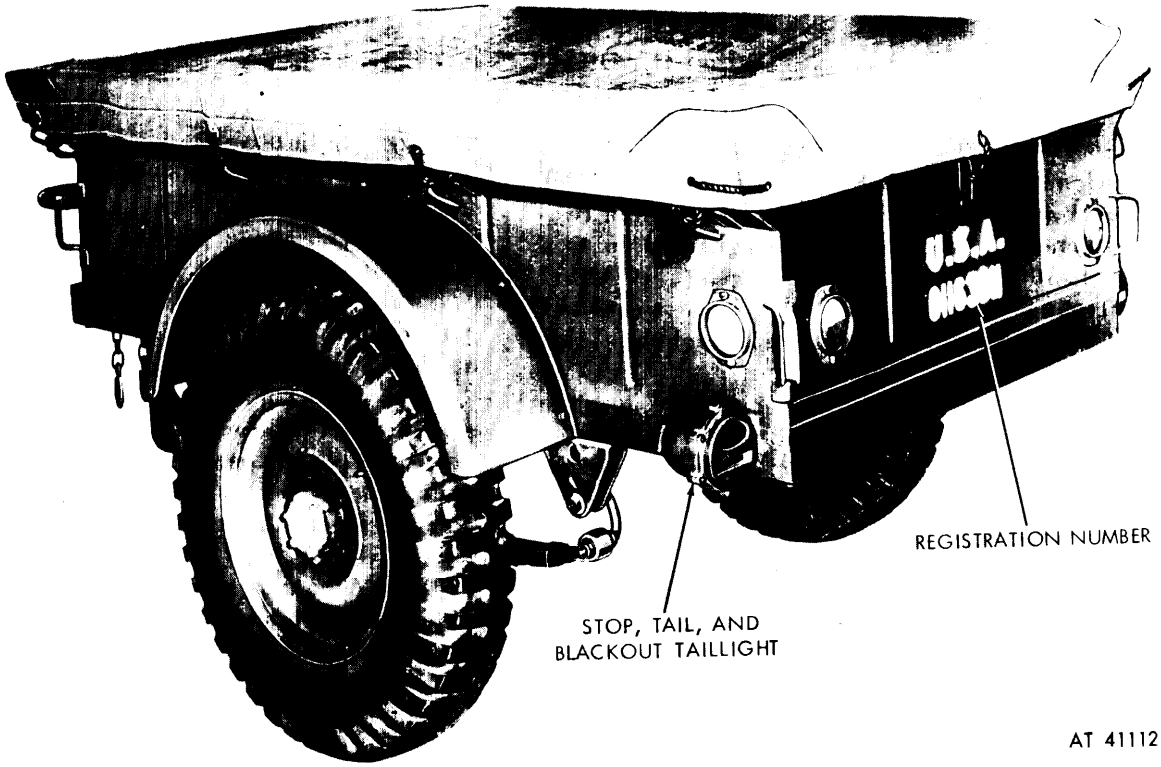

Figure 1-2. 1/4-ton. 2-wheel, Cargo Trailer M100 with tarpaulin installed–left rear view.

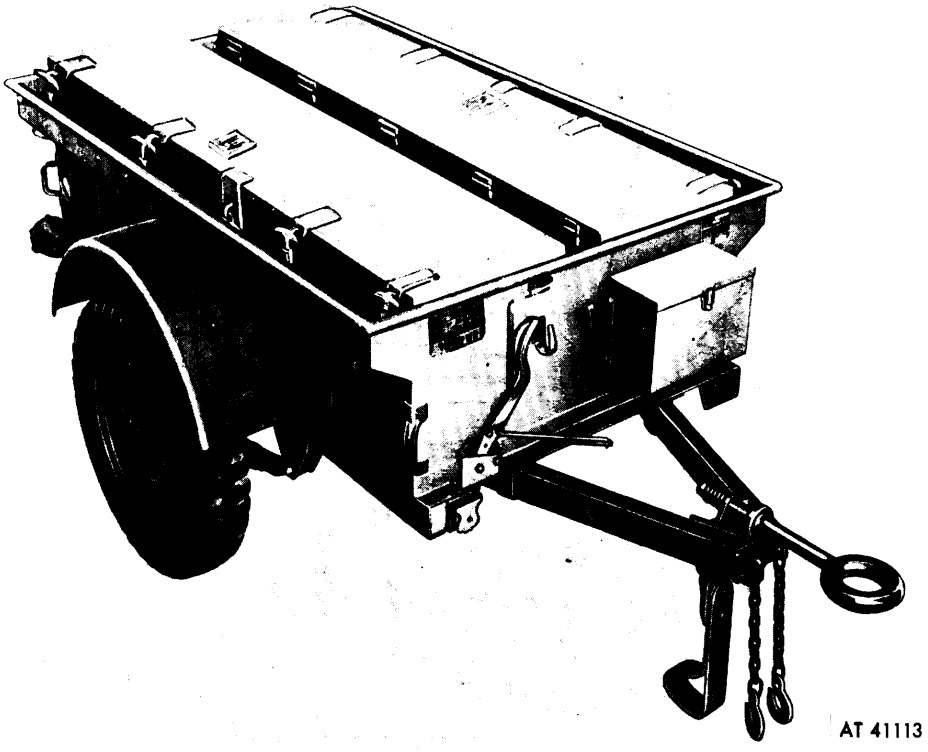

Figure 1-3. 1/4-ton. 2-wheel Maintenance Trailer, Telephone Cable Splicer M367.

b. Springs and Shock Absorbers (fig. 1-4). The frame is suspended on two semielliptical leaf type springs with double wrapped eyes. Each spring has ten leaves held by a center bolt and four rebound clips. The springs are attached to the frame by means of a pivot bolt in the front and a shackle U-bolt in the rear. The shock absorbers are direct-acting, two-way control units mounted on rubber bushings. The shock absorbers are nonadjustable and nonrefillable, and cannot be repaired or rebuilt.

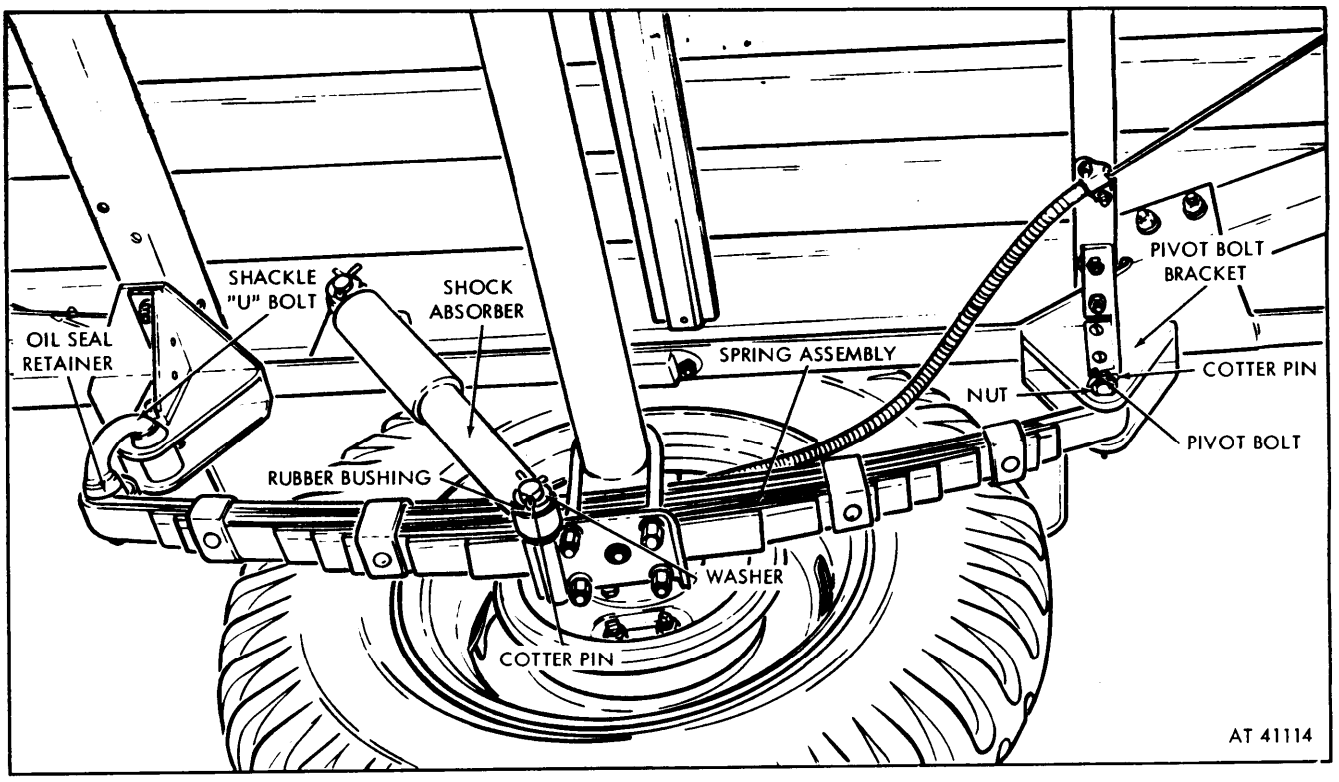

Figure 1-4. Spring and shock absorber installed.

c. Axle (fig. 1-5). The axle is of a one-piece tubular design. It is fastened to the springs by means of U-shaped clips and the spring clip plates. The axle is flanged to mount the brake backing plate.

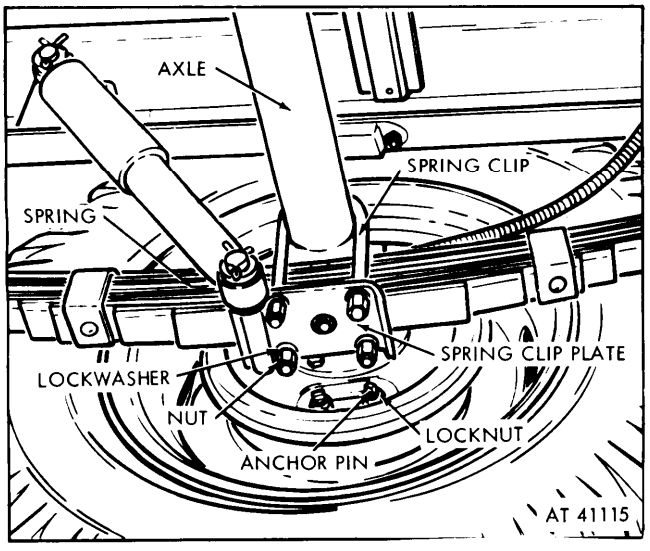

Figure 1-.5. Axle installed.

d. Wheels and Tires (fig. l-6). The wheels are of two-piece riveted steel construction and are fastened to the wheel hub by five wheel bolts and nuts. The vehicle is equipped with nondirectional 7:00-16, 6-ply mud and snow tires.

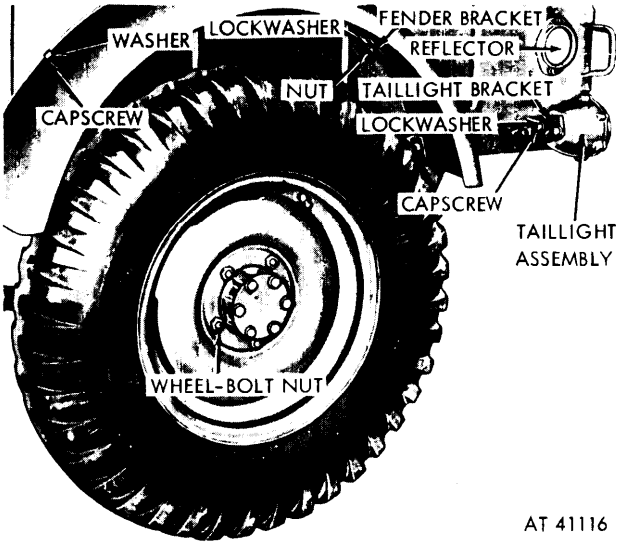

Figure 1-6. Wheel, fender, and taillight installed.

e. Parking Brake. The brake system is a hand-operated internal expanding, double anchor, two-shoe type parking brake with cable control. The hand lever (fig. 1-1) is located on the front of the body on the right side. It controls the two brake cables through a lever rod, bellcrank, and adjusting rod (fig. 1-7). The hand lever assembly includes a ratchet mechanism which holds the brakes in the applied position until released.

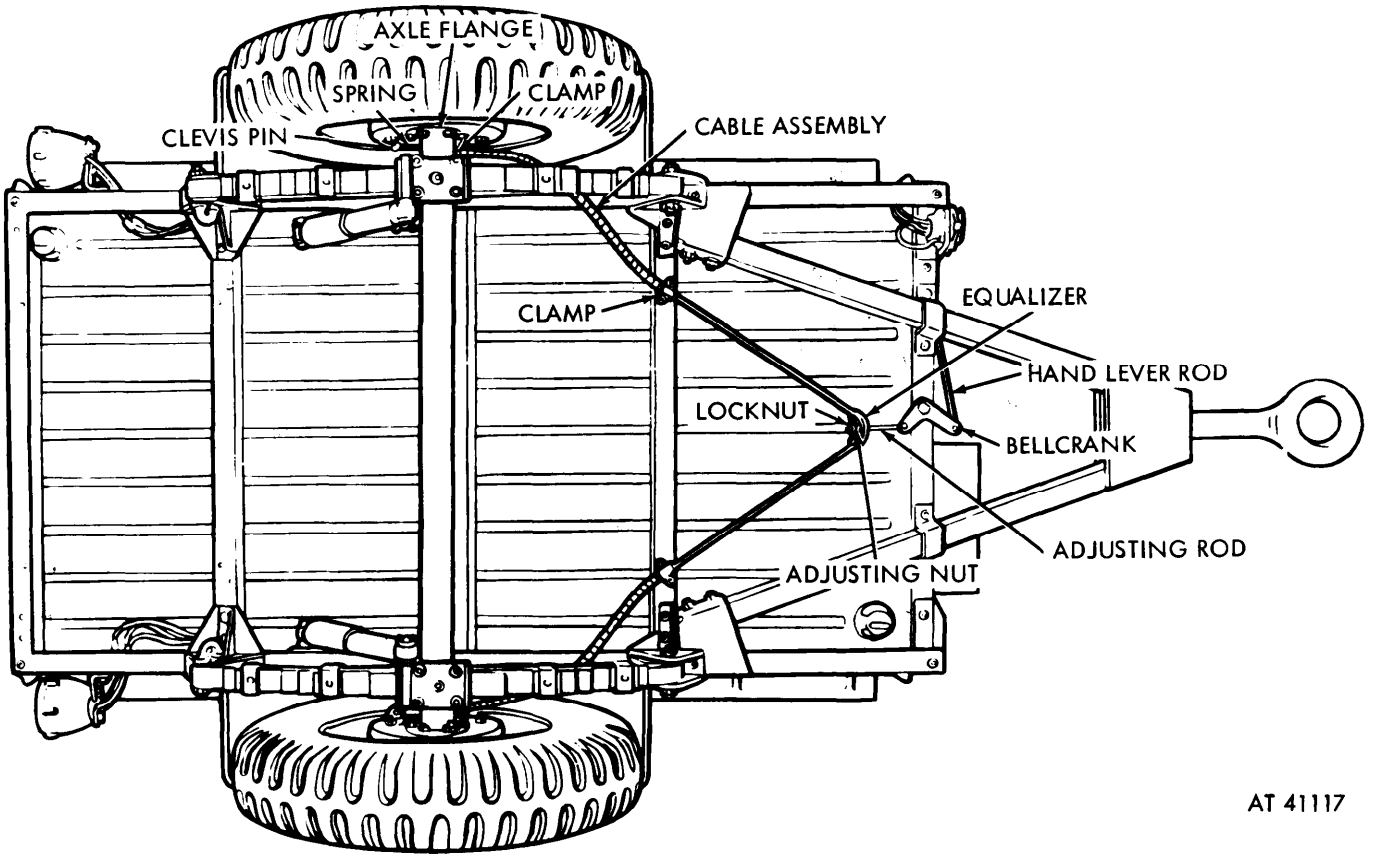

Figure 1-7. Brake system.

f. Electrical System. (fig. 1-8). The trailer electrical system consists of two tail lights and their wiring harness. The taillights are waterproof units mounted at the rear corners of the trailer. The wiring harness is completely waterproof, being made up of rubber covered cables and watertight bell-type connectors. These connectors consist of male and female shells which lock together by means of bayonet-type fasteners, inclosing rubber grommets and connectors which surround and protect the contacts.

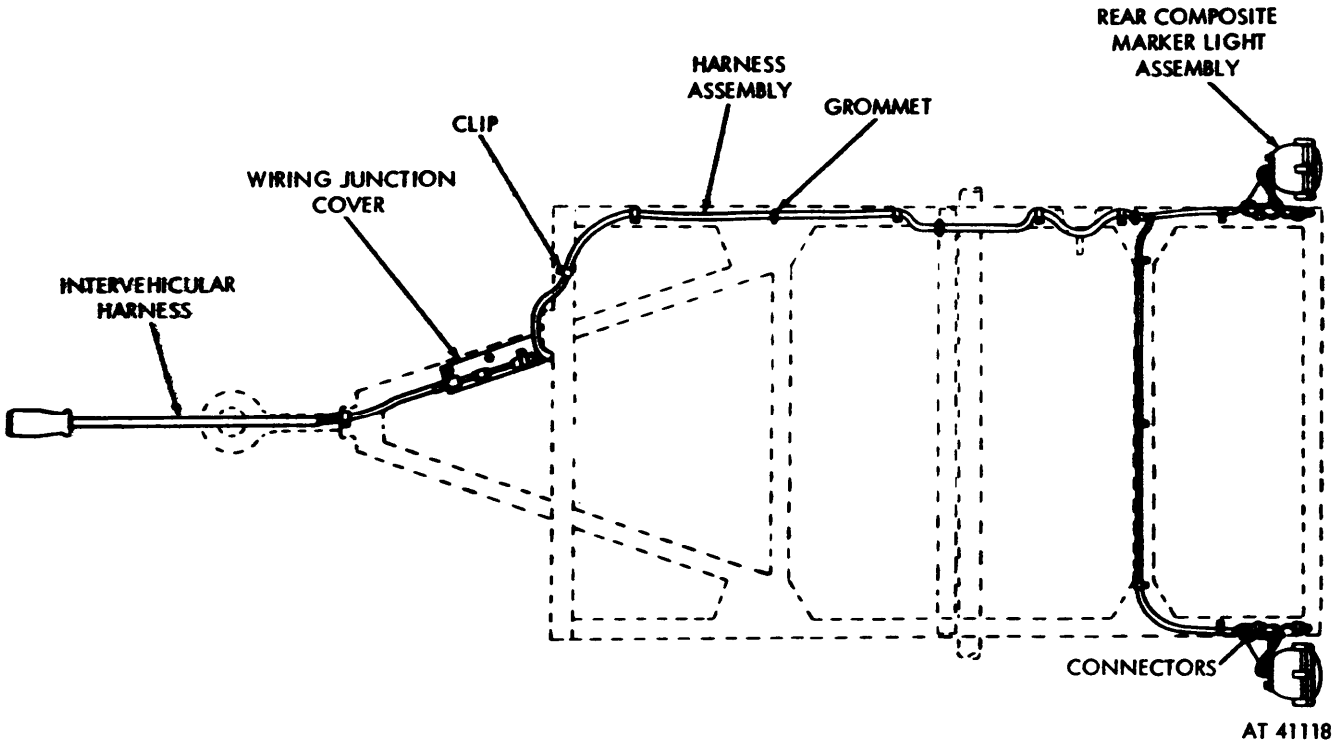

Figure 1-8. Trailer wiring.

g. Drawbar and Support Leg. (fig. 1-1 and 1-9). The A frame drawbar is of steel channel construction and is bolted to the trailer frame. The lunette eye is spring mounted in the front support bracket. The support leg is mounted on the bracket so that it can be swivelled into position up in the A frame when the trailer is in operation or straight down when the trailer is parked. The leg is held in position by a spring loaded plunger. Two chains with hooks are provided to be hooked through the towing vehicle pintle eyes during operation as a safety measure. The chains are bolted to the front support bracket.

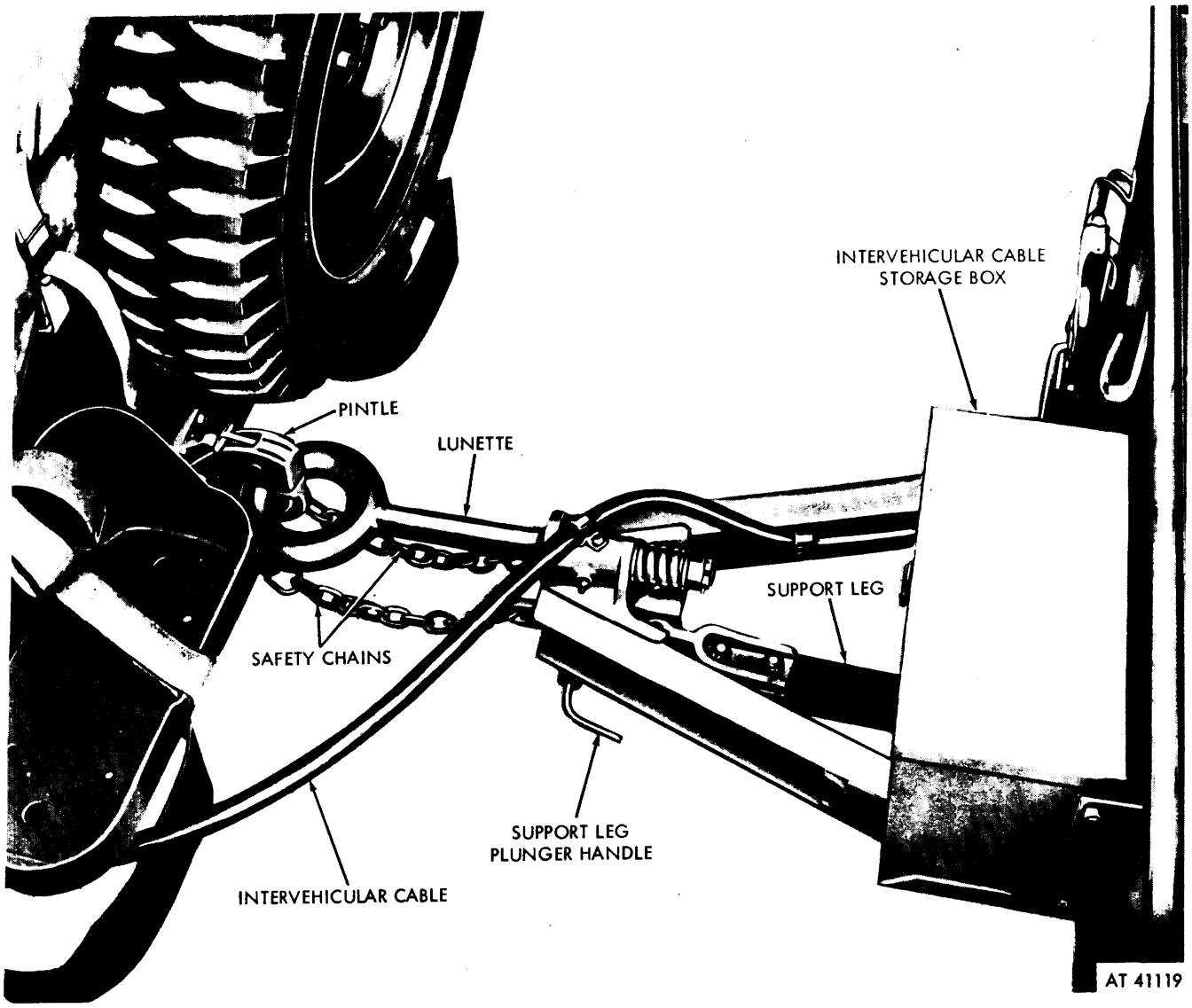

Figure 1-9. Trailer connected to towing vehicle.

h. Name, Data and Service Plates. (fig. 1-10).

(1) Name and Data Plates list the name of the vehicle. federal stock number, manufacturer's serial number, contract number, publication concerning the vehicle, delivery and inspection dates, weight and dimension data, and shipping cubage.

(2) Service plates designate the agencies responsible for procurement and general support maintenance of the M100 and M367 trailers and mounted equipment.

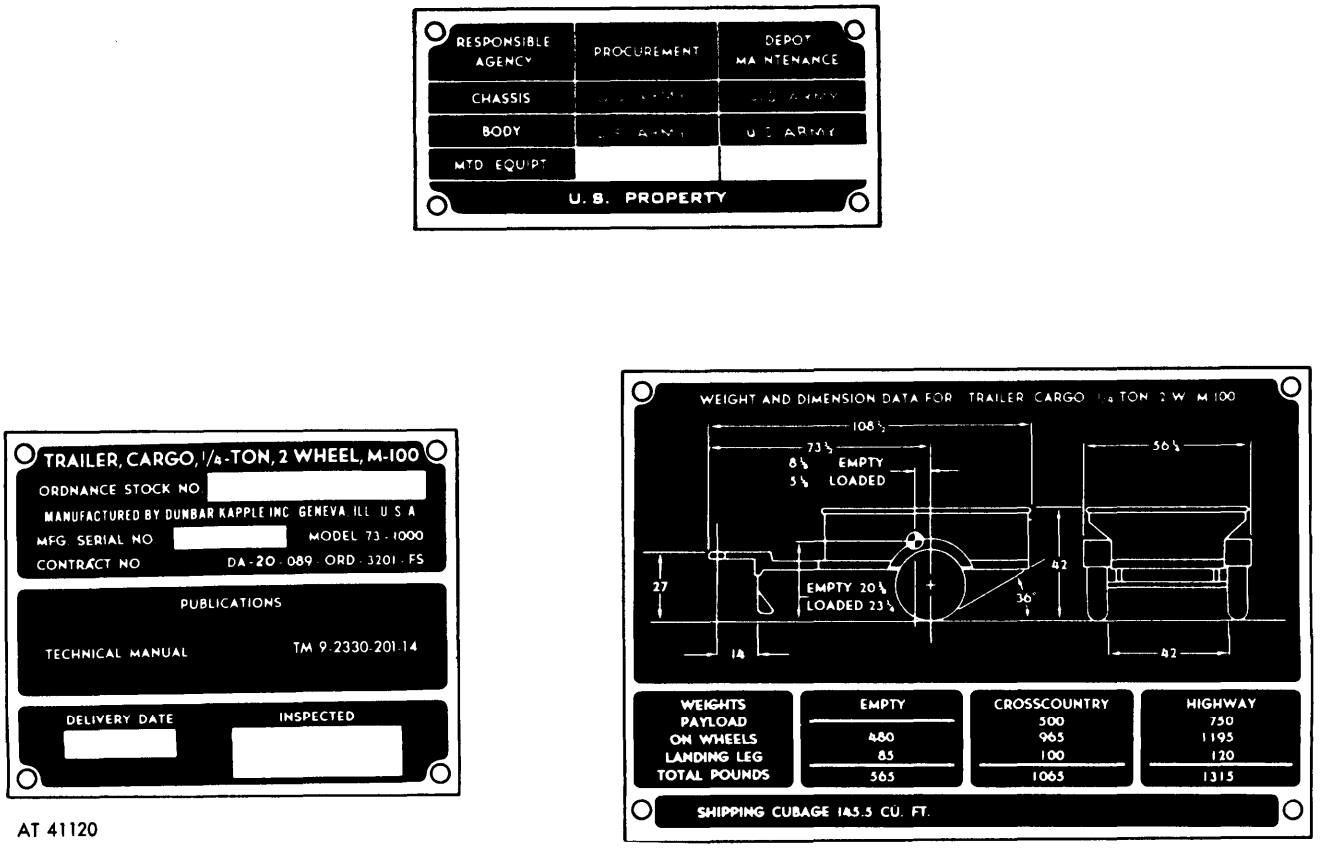

Figure 1-10. Name. Data, and service plates.

1-7. Difference Among Models

Some of the 1/4-ton, 2-wheel cargo trailers M100 are equipped with telephone cable splicing equipment. These trailers are designated a 1 / 4-ton, 2-wheel telephone cable splicer trailers, M367 (signal corps model K-38-A). This technical manual does not provide operation nor maintenance instructions for the cable splicing equipment.

1-8. Tabulated Data

a. General.

Tires:	
Number	2
Ply	6
Size	7:00 x 16
Pressure for highway driving (cool)	25 psi
Tread center to center	49 in.
Type	mud and snow
Components	
Parking brakes	Mechanical
Springs	Semielliptical
Axle	Tubular
Lights	24 volt

b. Dimensions.

Length, overall	108 1 / 2 in.
Length, inside	72 in.
Width, overall	56 1 / 4 in.
Width, inside	Top 46 in., bottom 38 in.
Height, overall	42 in.
Height, inside	18 in.
Lunette eye height (trailer level)	27 in.

c. Weights and Shipping Volume.

Loaded for shipment, nonexport with paulin cover	575 lb.
Empty	565 lb.
Payload (on highways)	750 lb.
Pay load (crosscountry)	500 lb
Shipping volume	145.5 cu. ft.

d. Axle.

Type	Tubular
Road clearance	13.5 in.
Wheel bearings	Tapered roller

e. Parking Brakes.

Model number	46397-LH 46398-RH
Shoes:	
Lining length:	
Front	10 1 / 4 in.
Rear	6 1 / 2 in.
Width	1 3 / 4 in.
Thickness	3 / 16

f. Springs.

Length-center line of eyes	36 1 / 4 in.
Width	1 3 / 4 in.
Number of leaves	10
Pivot bolt	Front
Shackle U bolt	Rear

g. Shock Absorbers.

Army part number	7697442
Type	Single-acting
Length compressed	10.37 in.
Length extended	16.43 in.
Adjustable	No
Refillable	No
Mounting	Rubber bushings

h. Rear Composite Marker Light.

Voltage	24-28V
Lamp Sizes	32 Candlepower and 3 candlepower

i. Wheels.

Type	Automotive, riveted construction
Rim size	16 x 4.50
Number of bolts	5

CHAPTER 2

OPERATING INSTRUCTIONS

WARNING
If equipment fails to operate, refer to troubleshooting procedures in chapter 3.

Section I. SERVICE UPON RECEIPT OF MATERIEL

2-1. Genera1

When new, lised, or reconditioned materiel is first received, it is the responsibility of the officer in charge to determine whether the materiel has been properly prepared for service by the supplying organization and to be sure it is in condition to perform its function. For the purpose, inspect all assemblies, subassemblies, and accessories to be sure they are properly assembled, secure, clean, and correctly adjusted and / or lubricated. Check all tools and equipment to be sure every item is present, in good condition, clean, and properly mounted or stowed.

2-2. Inspecting and Servicing the Equipment

a. Preliminary Services.

(1) *General procedures.*

(a) If any exterior surfaces are coated with rust preventive compound, remove it with dry cleaning solvent or mineral spirits paint thinner.

(b) Read "Processing and Reprocessing Record for Shipment, Storage and Issue of Vehicles and Spare Engines," DD Form 1397, and follow all directions carefully.

(2) *Special procedures.*

(a) Perform the "S" semiannual preventive maintenance.

(b) Lubricate all lubrication points illustrated in the Lubrication Chart (fig. 3-1), regardless of interval.

(c) Schedule second "S" semiannual preventive maintenance service on DA Form 2403, Preventive Maintenance Roster.

(d) Deficiencies which appear to involve unsatisfactory design or material will be reported in accordance with TM 38-750.

(e) Perform a "break-in'" of 25 miles at a maximum speed of 30 mph.

b. Before-Operation Service. This is a brief service to ascertain that the trailer is ready for operation; it is mainly a check to see if conditions affeeting the vehicle's readiness have changed since the last after-operating service. Refer to table 3-1 for preventive maintenance service.

Section II. CONTROLS AND INSTRUMENTS

2-3. General

This section describes, locates, illustrates, and furnishes the operator with information pertaining to the various controls provided for the operation of the vehicle. It also contains instructions for the mechanical steps necessary to operate the trailer under usual conditions. For operation under unusual conditions refer to section IV.

2-4. Parking Brake Hand Lever

(fig. 1-1)

The parking brake is operated by a hand lever located on the right front of the body. The brake is actuated by pulling the lever toward the right side of the trailer. The ratchet will hold the brake in the applied position. Squeezing the lever grip will release the ratchet and allow the brake hand lever to return, releasing the brakes. The parking brake should be applied whenever the trailer is disconnected from the towing vehicle and must always be released before the trailer is moved.

2-5. Support Leg Plunger Handle

(fig. 1-9)

The position of the support leg can only be changed when the plunger which secures it has been pulled out against the tension of its spring. The leg can be moved to the up or down position, and the plunger allowed to drop in place. The plunger handle is located slightly in front of the support leg under the drawbar. Before the trailer is disconnected from a towing vehicle the support leg should always be in the down position to support the front of the trailer.

Section III. OPERATION UNDER USUAL CONDITIONS

2-6. Before-Operation Service

Before operation, the trailer must be inspected and serviced as outlined by the before-operation services listed in table 3-1 paragraph 3-4.

2-7. Coupling Trailer to Towing Vehicle (fig. 1-9)

a. Secure lunette of trailer to pintle on rear of towing vehicie. Make certain pintle is closed and latched.

b. Hook the trailer safety chains to the towing vehicle.

c. Insert the end of the intervehicular cable into towing vehicle's receptacle. Test the operation of the lights.

d. Raise the support leg by pulling out on the support leg plunger handle and moving the leg backward. Allow the plunger to drop into place as the leg reaches its upper position.

e. Makc certain the parking brake has been released.

2-8. Driving Truck and Trailer

a. When tinning corners, allowance must be made for the fact that the trailer will have a turning radius shorter than that of the truck and will "cut the corner".

b. When backing, the towing vehicle should be started back in a direction opposite to that desired for the trailer. After the trailer has started it's turn, the truck is straightened to follow the trailer. Considerable experience should be gained in backing before attempting to maneuver in close quarters.

c. When stopping, it must be remembered that the momentum of the trailer and its load have been added to that of the towing vehicle and that the trailer brakes cannot be operated from the truck. Care must be exercised, therefore, to slow the vehicle for a stop through a greater distance than that required for the truck alone.

2-9. Uncoupling Trailer From Towing Vehicle

a. Apply the trailer brakes by pulling the hand lever toward the right side of the trailer.

b. Disconnect the intervehicular cable from truck receptacle.

c. Remove the safety chains from the rear of the truck.

d. Pull out the support leg plunger handle and allow the support leg to drop to its lowered or vertical position. Release the plunger handle and allow the plunger to snap into place and lock the leg into position.

e. Lift the latch on the truck pintle to raise the top half of the pintle. Lift the lunette clear of the pintle.

f. The towing vehicle may now be driven away.

Section IV. OPERATION UNDER UNUSUAL CONDITIONS

2-10. Operation Under Unusual Conditions

a. General. These trailers require no special preparations for operation under extreme heat or cold, other than the use of proper lubricants. For proper lubrication under these conditions. refer to the lubricat ion chart (fig. 3-1).

b. Extreme Cold.

(1) Wheel bearings should be throughly cleansed and handpicked with the lubricant specified in the lubrication chart (fig. 3-1) as soon as the tactical situation permits.

(2) Check air pressure of tires with tire pressure gage before operating trainer (para 4-27). Do not rely upon appearance of tire for inflation test. Look for tires frozen to the ground and frozen flat spots where in contact with the ground during long halts.

(3) Carefully remove large collections of ice and caked snow from under the fender and where suspended from electric cables.

(4) Park trailer on planking or brush when ground is muddy or covered with snow, to prevent tires from freezing to the ground. Release brakes and check wheels if necessary.

c. Extreme Heat.

(1) Great care must be exercised to insure that the wheel bearings are properly packed with the lubricant specified in the lubrication chart (fig. 3-1).

(2) Shield tires from direct heat and rays of the sun whenever possible. It is imperative that proper tire pressures be maintained (para 4-27).

(3) The canvas top should be exposed to the direct rays of the sun as little as possible.

d. Sand or Dust.

(1) Operation under extremely sandy or dusty conditions necessitates frequent inspection. cleaning. and lubrication of the trailer working parts.

CAUTION

When repacking the wheel bearings, it is necessary to clean the wheel bearings completely before repacking with grease, since sand or dust mixed with the grease forms an abrasive mixture.

(2) Reducing tire pressures will aid in amphibious landings (para 4-27).

NOTE

Bring tires up to normal specified pressure as soon as soft sand area has been traversed.

e. Fording and Excessive Humidity.

(1) Wheel bearings should be cleansed and hand-packed with lubricant as specified in the lubrication chart (para 3-1) after each submersion.

(2) Tire pressure should be reduced to aid in amphibious landings.

(3) Cables and terminals must be protected by ignition insulation compound.

(4) Corrosive action on all parts of the trailer will occur in areas of high humidity and during the rainy season. Evidence will appear in the form of rust and paint blisters on metal surfaces and mildew or mold on fabrics, leather, and unpainted wooden surfaces. Protect exterior surfaces by touch-up painting and keeping a film of engine lubricating oil (OE / HDO-10) on unfinished exposed metal surfaces.

(5) A careful watch must be kept for evidence of the presence of moths and termites.

CHAPTER 3

OPERATOR MAINTENANCE INSTRUCTIONS

Section I. BASIC ISSUE ITEM

Repair parts, tools, and accessories issued with or authorized for use by the operator for the Cargo Trailer, M100, and Maintenance Trailer, M367, are listed in the Basic Issue Items List, appendix C of this manual.

Section II. LUBRICATION AND PAINTING

3-1. Lubricantion

a. For lubrication under usual conditions refer to figure 3-1.

b. For instructions on lubrication in weather below 0°F., refer to TM 9-207, and to Lubrication chart (fig. 3-1).

c. After fording operations, in water 12 inches or more in depth, perform a complete lubrication (fig. 3-1).

LUBRICATION CHART

TM 9-2330-201-14

TRAILER, CARGO, 1/4-TON, 2-WHEEL, M100
TRAILER CHASSIS, 1/4-TON, 2-WHEEL, M115
TRAILER, MAINTENANCE: TELEPHONE CABLE SPLICER, 1/4-TON, 2-WHEEL, M367

Lubrication will be performed only as prescribed by this order except as required under unusual conditions as described in this TM.

Clean fittings before lubrication. Clean parts with THINNER, paint, mineral spirits (TPM) or SOLVENT dry cleaning (SD). Dry before lubricating. Dotted arrow points indicate lubrication on both sides of the equipment.

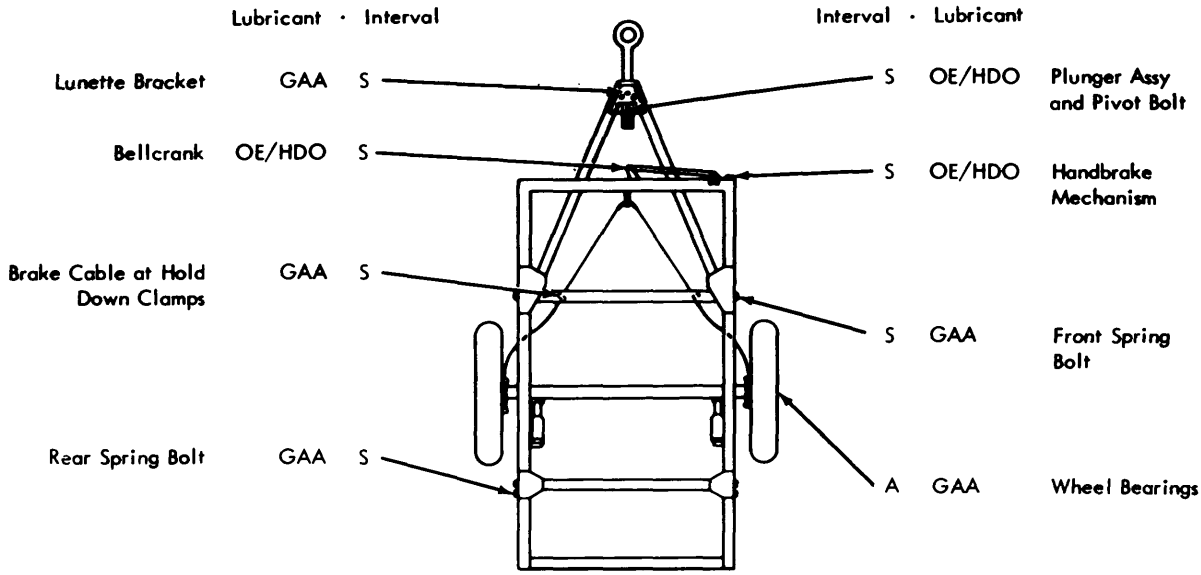

— KEY —

LUBRICANTS	EXPECTED TEMPERATURE			FOR ARCTIC OPERATION Refer to TM 9-207	INTERVALS
	above +32°F	+40°F to -10°F	0°F to -65°F		
OE/HDO - LUBRICATING OIL INTERNAL COMBUSTION ENGINE	OE/HDO 30	OE/HDO 10			S - Semi-annual (6 months) A - Annually (every 2nd "S" P.M. Service)
OES - LUBRICATING OIL INTERNAL COMBUSTION ENGINE - SUB-ZERO			OES		
GAA - GREASE LUBR., AUTOMOTIVE AND ARTILLERY	GAA	GAA	GAA		

- NOTES -

1. OIL CAN POINTS
   Quarterly lubricate all connecting linkage and handbrake operating linkage with OE/HDO.
2. LUBRICATION INTERVALS
   Intervals marked "S" may be lubricated by the operator if supervised by a qualified mechanic.
3. DO NOT LUBRICATE
   Springs and shock absorber bushings.

AT 41121

Figure 7-1. Lubrication chart.

3-2. Painting and identification Marking

a. Painting. before painting insure that all surfaces are clean and dry.

b. Identification Marking. Marking of tactical vehicles will be performed in accordance with TB 740-03-93-1.

WARNING

To prevent injury to personnel, avoid excessive inhalation of vapors. All cleaning and stenciling procedures must be performed in a well-ventilated room or outdoors. A fire extinguisher must be positioned adjacent to the area where cleaning and stenciling procedures are performed.

Section III. PREVENTIVE MAINTENANCE CHECKS AND SERVICES

3-3. General

Preventive maintenance is the systematic care, inspection, and servicing of equipment to maintain it in serviceable condition and assure maximum operational readiness. Daily preventive maintenance is accomplished by the equipment operator. The operator's role in the performance of preventive-maintenance service is to perform the daily service each day the equipment is operated.

3-4. Checks and Services

a. Before-Operation Service. This is a check to see if conditions affecting the materiel's readiness have changed since the last after-operation service.

b. During-Operation Service. While driving, the driver of the towing vehicle should be alert for any unusual noises, steering irregularities, or any other indications of malfunction of any part of the materiel.

c. After-Operation Service. This service consists of correcting any operating deficiencies.

d. Specific Procedures for the Operator. Table 3-1 gives the specific procedures to be performed on the materiel by the operator in the daily service. The operation performed by the operator in the daily service is indicated by a sequence number in the appropriate column opposite the procedures.

Table 3-1. Preventative Maintenace Checks and Services

Operator Maintenance Category — *Daily Schedule*

Interval and sequence No.			Item to be inspected	Procedure	Paragraph reference
Before operation	During operation	After operation			
1			TIRES	Gage tires for correct pressure. Remove penetrating objects such as nails or glass. Check for unusual wear and missing valve caps.	4-26, 4-27
2			VEHICLE EQUIPMENT	Visually inspect body, chassis, towing connections, shocks, and springs.	2-1, 2-2
3			ELECTRICAL WIRING	Visually inspect electrical wiring, conduits and shielding.	4-14, 4-16
4			DAMAGE	Check for any tampering or damage that may have occurred since last inspection.	2-1,2-2
5			BRAKES	Operate trailer handbrake levers to see if handbrakes hold the trailer securely. Inspect handbrake mechanism.	4-17, 4-20
	6		GENERAL OPERATION	At all times during road test, be alert for unusual or excessive noise that may indicate damage, looseness defects, or deficient lubrication in attachments, landing leg or wheels.	3-4
	7		LIGHTS	During stops in road test observe operation of lights. Note condition of safety reflectors.	4-14, 4-16
		8	OPERATING FAULTS	Investigate and correct or report any faults noted during operation.	
		9	CLEAN	Wash off exterior of vehicle.	3-5
		10	LUBRICATE	Lubricate items specified on lubricating chart.	3-1

3-5. Cleaning

a. General. Any special cleaning instructions required for specific mechanisms or parts are contained in the pertinent section. General cleaning instructions are as follows:

(1) Use dry-cleaning solvent or mineral-spirits paint thinner to clean or wash grease or oil from all parts of the vehicle.

(2) A solution of one part grease-cleaning compound to four parts of dry-cleaning solvent or mineral-spirits paint thinner may be used for dissolving grease and oil from chassis and other parts. After cleaning, use cold water to rinse off any solution which remains.

(3) After the parts are cleaned, rinse and dry them thorughly. Apply a light grade of oil to all polished metal surfaces to prevent rusting.

(4) Before installing new parts, remove any preservative materials, such as rust-preventive compound, protective grease etc.;prepare parts as required (oil seals, etc); and for those parts requiring lubrication, apply the lubricant prescribed in the lubrication order.

b. General Precautions in Cleaning.

(1) Dry-cleaning solvent and mineral-spirits paint thinner are inflammable and should not be used near an open flame. Fire extinguishers should be provided when these materials are used. In addition, they evaporate quickly and have a drying effect on the skin. If used without gloves, they may cause cracks in the skin and, in the case of some individuals, a mild irritation or inflammation. Use only in well ventilated places.

(2) Avoid getting products such as dry-cleaning solvent, mineral-spirits paint thinner, engine fuels, or lubricants on rubber parts as they will deteriorate the rubber.

Section IV. TROUBLESHOOTING

3-6. General

a. This section contains troubleshooting information for locating and correcting most of the operating troubles which may develop in the vehicle. Each symptom of trouble or malfunction given for an individual unit or system is followed by a list of probable causes of the trouble and corrective action necessary to remedy the malflunction.

b. This manual cannot list all malfunctions that may occur nor all test or inspections and corrective actions. If the malfunction is not listed or is not corrected by listed corrective actions, notify your supervisor.

c. The tests and remedies provided in table 3-2 are governed by the scope of operator / crew level of maintenance. The malfunctions, probable causes, and corrective action that can be performed by the operator are listed in table 3-2.

3-7. Procedures

Table 3-2 lists possible malfunctions (symptoms) that may be encountered in the vehicle or in individual units or systems of the vehicle. Each malfunction is followed by a list of probable causes (test) that must be considered in determining the corrective action (remedy). Probable causes are listed in their order of probability, and should be considered in that manner during troubleshooting.

Table 3-2. Operator and Crew Troubleshooting

Malfuction	Pobable Cause	Corrective Action
1. Trailer pulls hard.	Hand lever not completely released.	Release lever (para 2-4).
	AXLE, WHEEL AND TIRES	
2. Wheel wobbles.	Loose or missing wheel studs.	Tighten or replace; torque to 110-125.
3. Abnormal or uneven tire wear.	*a.* Trailer overloaded. *b.* Low or unequal tire pressure.	*a.* Load to specified limits (para 1-8). *b.* Inflate properly (para 1-8).
	SPRING AND SHOCK ABSORBERS	
4. Noisy springs.	Shackles dry.	Lubricate (para 3-1).
5. Hard riding or sway.	Unevenly distributed load.	Redistribute load.
	ELECTRICAL SYSTEM	
6. All lamps fail to light.	Intervehicular cable not properly plugged into receptacle on towing vehicle.	Re-insert cable.
7. One or more lamps will not light.	Dirty or corroded contacts in cable plug.	Remove and clean.
8. Dim or flickering lamps.	Dirty or corroded contacts in plugs of intervehicular cable.	Remove plug and clean (para 6-1).
	DRAWBAR AND FRONT SUPPORT	
9. Noisy drawbar.	Loose attachment nuts.	Tighten nuts (para 6-3).
10. Support leg plunger will not operate.	Stuck plunger mechanism.	Lubricate (para 3-1).
11. Support leg will not swing up or down.	*a.* Support leg pivot bolt too tight. *b.* Support leg pivot bolt dirty.	*a.* Loosen (para 4-23, 4-24, 4-25). *b.* Remove and clean (para 4-23, 4-24, 4-251.

CHAPTER 4

ORGANIZATIONAL MAINTENANCE INSTRUCTIONS

Section I. SERVICE UPON RECEIPT OF MATERIEL

For services upon receipt of materiel refer to chapter 2 paragraph 2-1 and 2-2.

Section II. REPAIR PARTS, SPECIAL TOOLS AND EQUIPMENT

4-1. Tools and Equipment

Standard and commonly used tools and equipment having general application to this materiel are authorized for issue by Tables of Allowances and Tables of Organization and Equipment.

4-2. Special Tools and Equipment

Certain tools and equipment specially designed for organizational maintenance, repair and general use with the materiel are listed in appendix C.

Section III. PREVENTIVE MAINTENANCE CHECKS AND SERVICES

4-3. General

All of the general procedures given in paragraph 3-4 will be followed. Organizational mechanics must be so thoroughly trained in these procedures that they apply them automatically at all times in the performance of their duties.

4-1. Checks and Services

a. Intervals. The semiannual "S'" service is performed by organizational mechanics every six months in so far as practicable in accordance with the procedures outlined in table 4-1.

b. Purpose. The "S" preventive maintenance service insures the correct adjustment, securing, and assembly of all components of the vehicle. Necessary replacements, cleaning, lubrication, and protection of parts and assemblies will be accomplished, as required, to give reasonable assurance of trouble free operation until the next semiannual "S" service is performed.

Table 4-1. Preventive Maintenance Checks and Services

Organizational maintenance category — Semiannual Schedule

Sequence No.	Item to be inspected	Procedure	Para reference
1	TIRES	Remove penetrating objects such as nails or glass. Gage tires for correct pressure.	4-6, 4-27
2	VEHICLE EQUIPMENT	Visually inspect body, chassis, towing connections, check springs and shocks for damage.	2-1, 2-2
3	ELECTRICAL WIRING	Visually inspect electrical wiring, conduits and shielding.	4-14, 4-15, 4-16
4	BRAKES	Operate trailer handbrake lever to see if handbrakes hold the trailer securely. Inspect handbrake mechanism.	4-17, 4-18, 4-19, 4-20
5	GENERAL OPERATION	At all times during the road test be alert for unusual or excessive noises that may indicate damage, looseness, defects, or deficient lubrication in attachments, landing leg or wheels.	2-3, 2-4, 2-5, 2-6
6	LIGHTS	During stops in road test observe operation of lights, note condition of safety reflectors.	4-14,4-15,4-16
7	BRAKE TEMPERATURE	Immediately after road test cautiously feel brakedrums and hubs. An overheated wheel hub and brakedrum indicate an improperly adjusted, defective or dry wheel bearing or a dragging brake.	4-7,4-17
8	LEAKS	Oil, grease. Make general observations of the landing leg, and axle assemblies for oil or grease.	

Table 4-1. Preventive Maintenance Checks and Services—Continued

Organizational maintenance category Semiannual schedule

Sequence Number	Item to be Inspected	Procedure	Para Reference
9	WHEEL BEARINGS	Wheel bearings will be disassembled, cleaned and repacked during every other semi-annual inspection. If wheel bearings are due for repacking, remove wheels and hubs and make observation of brake internal components. Adjust brakes.	4-9
10	FRAME, ATTACHMENTS AND PAINT	Inspect these items. Give particular attention to landing leg, observe condition of paint, legibility of markings and data plates. Tighten spring U-bolts and leaf clips.	
11	LUNETTE AND SAFETY CHAINS	Inspect lunette and safety chains, give particular attention to security of mounting.	4-21, 4-22
12	MAINTENANCE DISCREPANCIES	Investigate and correct or report any discrepancies noted during the inspection.	4-3, 4-4
13	CLEAN	Wash interior and exterior of vehicle.	3-5
14	LUBRICATE	Lubricate vehicle in accordance with lubrication chart. Coordinate with inspection and disassembly operator to avoid duplication.	3-1
15	FINAL ROAD TEST	Perforrn final road test: give special attention to items which were repaired and where adjustments were made.	

Section IV. TROUBLESHOOTING

1-5. General

a. Refer to paragraph 3-6 *a* and *h*

b. The tests and remedies provided in Table 4-2 are governed by the scope of organizational level of maintenance. The malfunctions, probable causes. and corrective action that can be performed by the using organization are listed in Table 4-2.

4-6. Procedures

Table 4-2 lists possible malfunctions (symptoms) that may be encountered in the vehicle or in individual units or systems of the vehicle. Each malfunction is followed by a list of probable causes (tests) that must be considered in determining the corrective action (remedy). Probable causes are listed in their order of probability, and should be considered in that manner during troubleshooting.

Table 4-2. Organizational Troubleshooting

Malfunction	Probable Cause	Corrective Action
	BRAKES	
1. Trailer pulls hard.	*a.* Brake shoe improperly adjusted.	*a.* Adjust clearance (para 4-17).
	b. Weak broken or missing return spring.	*b.* Replace spring (para 4-18, 4-19, 4-20).
2. No brake effect.	*a.* Brake lining to drum clearance too great.	*a.* Adjust clearance (para 4-17).
	b. Brake linings greasy or dirty.	*b.* Clean, reline, replace shoes (para 4-18, 4-19, 4-20).
	c. Brake linings worn out.	*c.* Replace shoes (same as above).
	d. Brake cable disconnected or broken.	*d.* Connect or replace cable (para 1-18).
	e. Cable too loose.	*e.* Adjust tension (para 4-17).
	f. Hand lever disconnected or broken.	*f.* Connect, replace or repair hand lever (para 4-18, 4-19, 4-20).
	AXLE, WHEEL AND TIRES	
3. Wheel wobbles.	*a.* Improper wheel bearing adjustment.	*a.* Adjust wheel bearings (para 4-7).
	b. Damaged bearings.	*b.* Replace (para 4-8).
	c. Bent wheel.	*c.* Replace (para 4-7, 4-8).
4. Abnormal or uneven tire wear.	*a.* Loose wheel bearings.	*a.* Adjust (para 4-7).
	b. Bent wheel.	*b.* Replace (para 4-26).
	c. Axle out of line.	*c.* Realign (para 4-8, 4-9, 4-10).
5. Axle loose or out of line.	*a.* Loose or broken U-bolts.	*a.* Tighten or replace (para 4-11).
	b. Bent or broken spring shackle plate.	*b.* Replace (para 4-11).
	c. Bent or broken spring hanger.	*c.* Replace (para 4-13).
	d. Axle bent.	*d.* Replace (para 4-8, 4-9, 4-10).

Table 4-2. Organizational Troubleshooting—Continued

Malfunction	Probable Cause	Corrective Action
	SPRING AND SHOCK ABSORBERS	
6. Noisy springs.	*a.* Mountings loose.	*a.* Tighten U bolts, rebound clips; shackle bolts and center bolts.
	b. Broken leaf.	*b.* Replace (para 4-11, 4-12, 4-13).
	c. Worn spring eye bearings.	*c.* Replace (para 4-11, 4-12, 4-13).
7. Hard riding or sway.	*a.* Overloaded springs.	*a.* Reload to specified limits (para 1-8).
	b. Broken spring leaf.	*b.* Replace (para 4-11, 4-12, 4-13, 5-3, 5-4, 5-5).
	c. Empty, loose or damaged shock absorber.	*c.* Tighten or replace shock absorber (para 4-11, 4-12, 4-13).
	d. Axle loose.	*d.* Tighten (para 4-8, 4-9, 4-10).
8. Spring leaves shifted or out of line.	*a.* Broken or missing rebound clips.	*a.* Replace (para 5-3, 5-5).
	b. Broken or missing center bolt.	*b.* Replace (para 5-3, 5-4, 5-5).
	ELECTRICAL SYSTEM	
9. All lamps fail to light.	*a.* Light switch on towing vehicle not operating properly.	*a.* Check and replace if necessary.
	b. Intervehicular cable not properly plugged in.	*b.* Re-insert connector.
10. One or more lamps will not light.	*a.* Burned out lamp.	*a.* Replace lamp (para 4-14).
	b. Broken cable or loose connections.	*b.* Tighten or repair (para 6-2).
	c. Damaged taillight assembly.	*c.* Replace light assembly (para 6-1).
11. Dim or flickering lamps.	*a.* Loose, dirty or correded terminals.	*a.* Clean and tighten (para 6-11.
	b. Poor or loose ground.	*b.* Clean and tighten (para 6-1).
	c. Defective lamp.	*c.* Replace lamp.
	d. Dirty or corroded cable contacts in sleeves of light assembly sockets.	*d.* Remove lamp and clean contact (para 6-1).
	DRAWBAR AND FRONT SUPPORT	
12. Support leg plunger will not operate.	Worn, stuck or bent plunger.	Lubricate, replace bracket assembly, if necessary (para 4-23, 4-24, 4-25).
13. Support leg will not swing up or down.	Plunger inoperative.	Lubricate, replace.

Section V. AXLE

1-7. Wheel Bearing Adjustments

With the hub cap, wheel bearing lock nut and lockwasher remove (fig. 4-2) and the brakes fully released, loosen the wheel bearing adjusting nut, using wrench (1, fig. C-22) as shown in figure 4-1. Turn the wheel to see that it rotates freely. Tighten the adjusting nut until the wheel no longer turns freely. Then back off the adjusting nut about one-sixth turn until the wheel once again rotates freely. Install the lockwasher and locknut and tighten. Do not fail to bend the lockwasher over one flat of the locknut. Install hub cap, new gasket, and six capscrews and lockwashers.

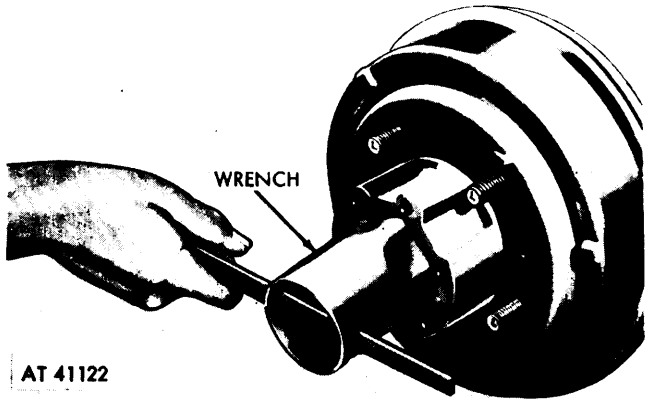

Figure 4-1. Removing locknut with nut wrench.

4-8. Axle Removal

a. Remove Wheel and Hub and Drum Assembly (fig. 4-2). Loosen five wheel-bolt nuts. Raise the vehicle and support the frame, using jack stands or horses if available, so that the wheels will just clear the floor. Remove the wheels (para 4-26); remove the six capscrews and lockwashers holding the hub cap and gasket to the hub. Remove the cap and gasket. Place the parking brake in released position. Remove the wheel bearing locknut using nut wrench (1, fig. C-22) as shown in figure 4-1. After straightening the lockwasher behind it, remove the lockwasher. Remove the wheel bearing adjusting nut using wrench (1, fig. C-22), as shown in figure 4-1. Remove plain washer. Pull the hub and brake drum assembly off the axle, being careful to keep the wheel outer bearing cone from falling to the floor. The wheel inner bearing cone and the oil seal will come off with the hub and brake drum assembly.

b. Remove Brake Assembly. Remove the cotter pin and clevis pin from the brake lever on the rear of the brake backing plate (fig. 1-7). Loosen the clamp, at the axle flange, holding the brake cable assembly, by loosening the nut. Pull the cable forward from the clamp, compressing the cable spring (fig. 1-7). When the conduit portion of the cable has cleared the clamp, slip the cable through the clam p opening. Remove the six nuts, lock-washers, and capscrews fastening the backing plate to the axle flange (fig. 4-3). The brake assembly can now be removed from the axle.

c. Remove Spring Clips (fig. 1-5). Remove the spring clip nuts and lockwashers and lift spring clips from axle. Spring clip plate will remain fastened to shock absorber.

d. Remove Axle. Carry out procedures *a.* through *c.* above for the other wheel and pull out axle.

e. Disassemble Hub and Drum Assembly.

(1) *Remove brake drum* (fig. 4-2). Remove the three machine screws holding the brake drum to the hub. The drum can now be removed from the hub by placing the drum on a bench or on a piece of wood on the floor, rim down, and tapping the hub with a lead or plastic mallet.

(2) *Remove oil seal and inner bearing cone* (fig. 4-2). Remove the oil seal and bearing cone from the hub by tapping the bearing cone lightly from the opposite end of the hub with a wooden. plastic, or soft metal drift.

(3) *Remove the two bearing cups* (fig. 4-4). Insert the bearing cup remover and replacer (2, fig. C-22) as shown in figure 4-4, into the wheel hub behind the bearing cup to be removed. Spread the two halves apart and insert the remover and replacer screw (3, fig. C-22), as shown in figure 4-4, The screw should be inserted through the hub) opening from behind. The screw serves to expand the remover and provides an extension for tapping. Using a plastic or lead mallet, tap on the screw and force the clip out of the hub.

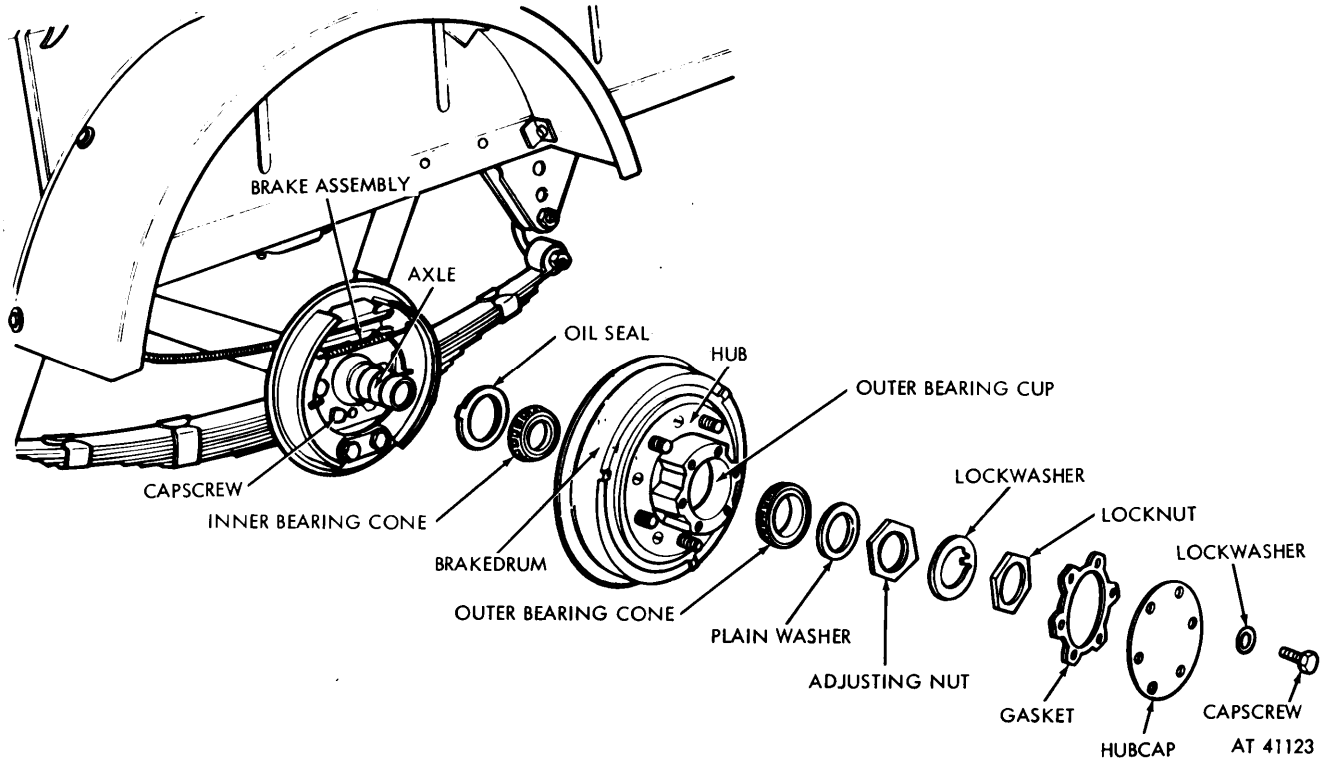

Figure 4-2. Axle assembly—exploded view.

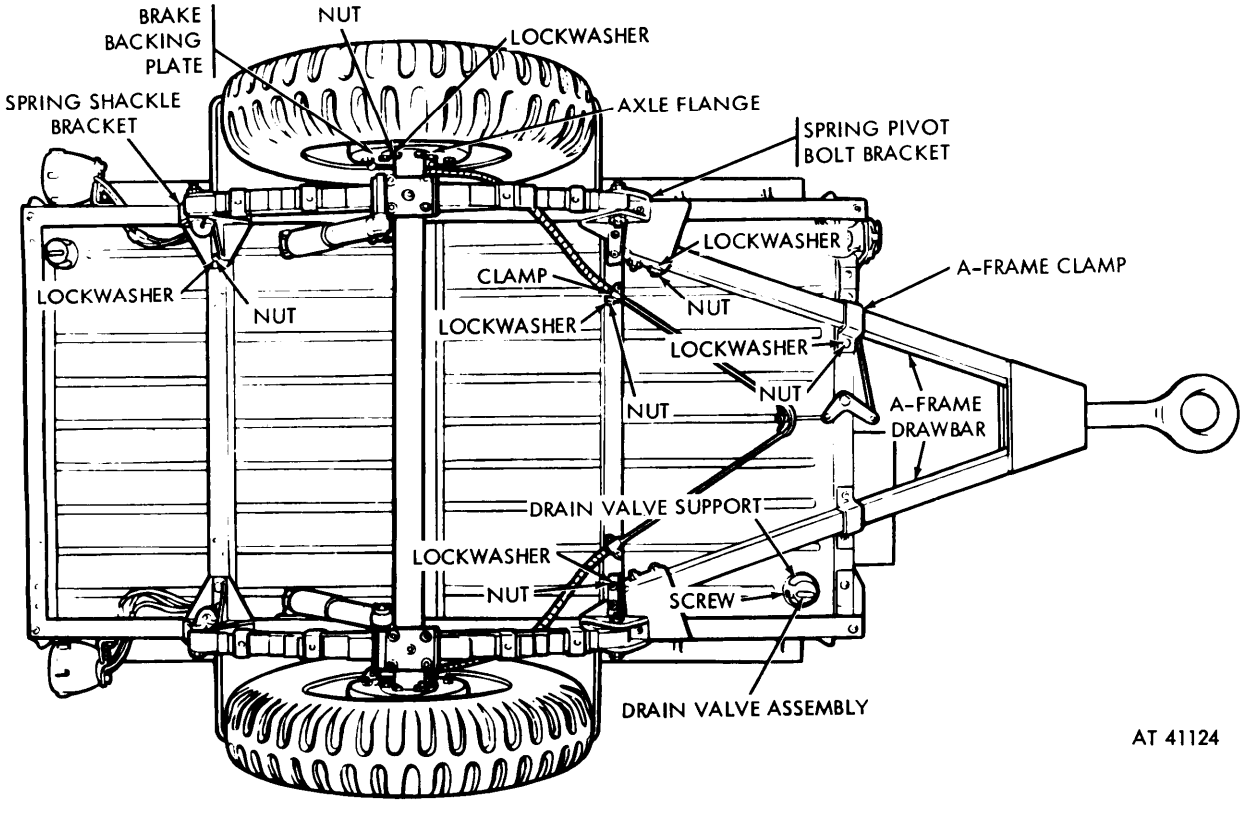

Figure 4-3. Trailer—bottom view.

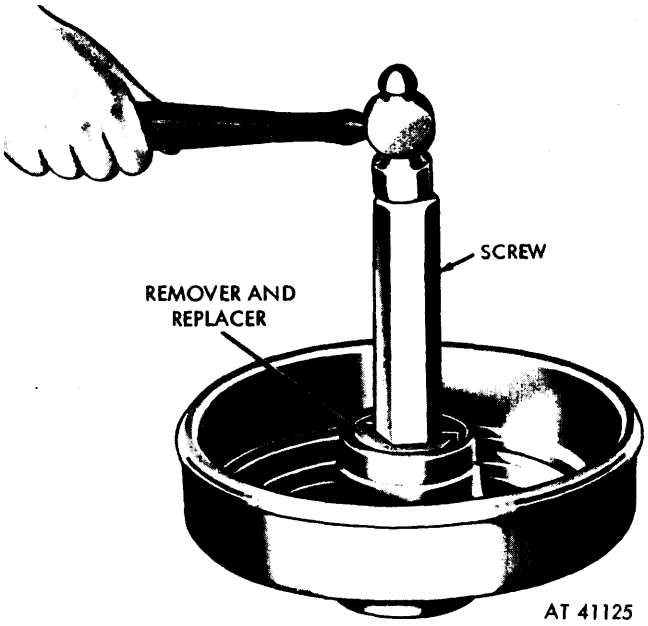

Figure 4-4. Installing bearing cup with remover and replacer and remover and replacer screw.

4-9. Axle Maintenance

a. Clean and Lubricate Wheel Bearings (fig. 4-2). Any time the wheel, hub, and drum assembly is removed, the wheel bearings should be cleaned and repacked with the proper lubricant as specified on the lubrication chart (fig. 3- 1). Wash the bearing parts in dry-cleaning solvent or mineral spirits paint thinner. Clean the entire inside of the hub so that dirt will not enter the bearings. Dry the bearing parts using compressed air, when available, or clean wiping cloths. inspect the bearings for damaged rollers or cages, looking for worn or scored spots. Replace the bearing if damage is found. Fill the palm of the hand with wheeling bearing grease and work it into the bearings, filling the cavities between the rollers. Assemble bearings in clean hub.

b. Clean and Inspect Oil Seal (fig. 4-2). Wash the seal in dry-cleaning solvent or mineral spirits paint thinner and inspect it for damage, hardened leather. and wear. Replace if necessary. Cover leather of seal with a light film of clean grease.

CAUTION

Upon using air do not spin the bearing.

4-10. Axle Installation

a. Assemble Axle to Springs (fig. 1-5). Insert the axle between the frame and either spring and position it on top of the springs so that the axle spring pads are centered over the spring center bolt. Drop the spring clips over the axle on both sides of thc spring. Position the spring clip plates on the bottom of the spring clips. Assemble the lockwashes and special spring clip nuts to the clips and tighten.

b. Install Brake Assembly. Slip the brake assembly over the end of the axle and position it against the flange with the brake return spring at the top (fig. 4-2). Insert the six capscrews through the backing plate and axle flange, assemble the lockwashers and hex nuts and tighten (fig. 4-3). Slip the brake cable into the loosened clamp at the axle flange by compressing the spring toward the end of the cable (fig. 1-7). Push the conduit portion of the cable into clamp. Insert the end of the cable into the brake lever and line up the holes so that the clevis pin may be inserted from the top of the lever (fig. 4-5). Insert the cotter pin into the hole in the end of the clevis pin and secure it by bending back both halves. Make sure the cable assembly is positioned in its clamp and tighten the nut on the clamp bolt.

c. Install Hub and Drum Assembly (fig. 4-2).

(1) *Assemble brake drum to hub* (fig. 4-2). Slip the brake drum, rim side in, over the five studs on the hub and position it over the hub groove. insert the three flat head machine screws through the drum into the hub and tighten them.

(2) *Install bearing cups* (fig. 4-4). Slip the bearing cup over the bearing cup remover and replacer (2, fig. C-22) as shown in figure 4-4, so that the large end of the inside diameter is against the replacer shouder. Insert removr and replacer screw (3, fig. C-22) as shown in figure 4-4. spreading the replacer. Start the cup into the hub and move it into place by tapping on the end of the screw with a plastic or lead mallet.

(3) *Install inner bearing cone and oil seal.* Service the bearings and oil seal (para 4-9) before installation. Insert the inner wheel bearing, small diameter first, into the brake drum and of the hub. insert the oil seal, plain metal side out, into the brake drum end of the hub and push it in so that the metal side of the seal is just flush with the hub face. A slight pressure around the rim will be required to install the seal.

(4) *Install hub and drum assembly on axle.*

NOTE

If a new axle is being installed. new axle nuts and washers will be furnished with the axle. These must be removed before attempting to assemble the hub and drum assembly to the axle.

Place the hub and drum assembly squarely over the end of the axle and push it on. Insert the wheel outer bearing over the axle shaft and slide it into place in the hub. Assemble the plain washer and adjusting nut using nut wrench (1, fig. C-22) as shown in figure 4-1. Adjust the hearings (para 4-7). Assemble the lockwasher and locknut and bend the lockwasher back over one flat of the lock nut. Place a new hub cap gasket and the hub cap on the end of the hub and fasten them with the six hub cap lockwashers and capscrews.

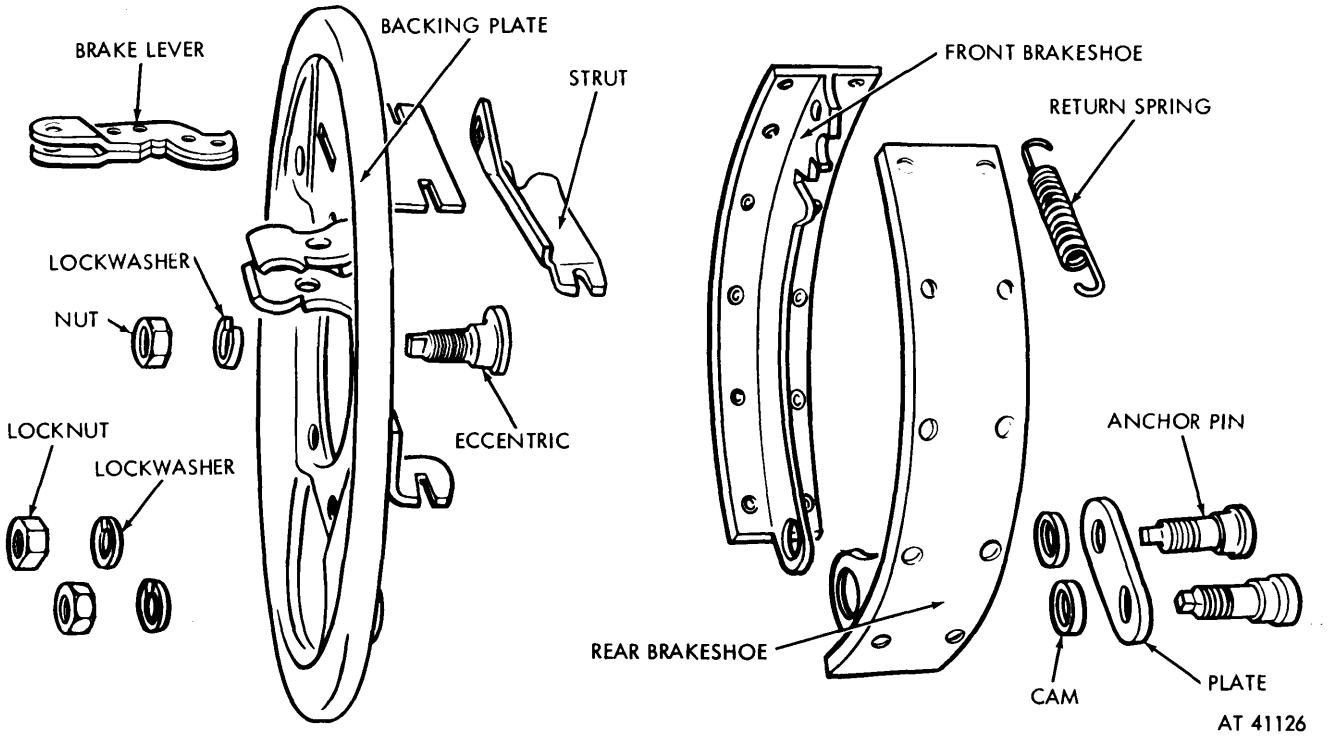

Figure 4-5. Brake assembly—exploded view.

Section VI. SPRINGS AND SHOCK ABSORBERS

4-11. Spring and Shock Absorber Removal

a. Remove Shock Absorber (fig. 1-4). Remove the cotter pins holding the upper and lower washers against the shock absorber rubber bushings. Remove the washers and pull off the shock absorber ad bushings.

b. Remove Pivot Bolt (figs. 1-4 and 4-6). Jack up the vehile frame so that the wheel almost clears the floor. This relieves the load on the spring. Remove the pivot bolt cotter pin and castle nut. Drive out the pivot bolt using a block of wood or a plastic mallet to avoid damaging the threads.

c. Remove Spring Shackle Lower Bushing (fig. 4-6). Remove the shackle lower bushing from the spring eye.

NOTE

The lower, or spring eye bushing for the right side spring shackle is left-hand threaded.

d. Remove Spring Clips (fig. 1-5). Remove the four spring clip nuts and lockwashers and pull off the spring clip plate. Slip the end of the spring off the shackle U-bolt and remove the spring.

e. Remove Shackle U-Bolt (fig. 4-6). Unscrew shackle upper bushing from Shackle U-bolt. Pull shackle U-bolt, oil seals, and retainers from shackle bracket.

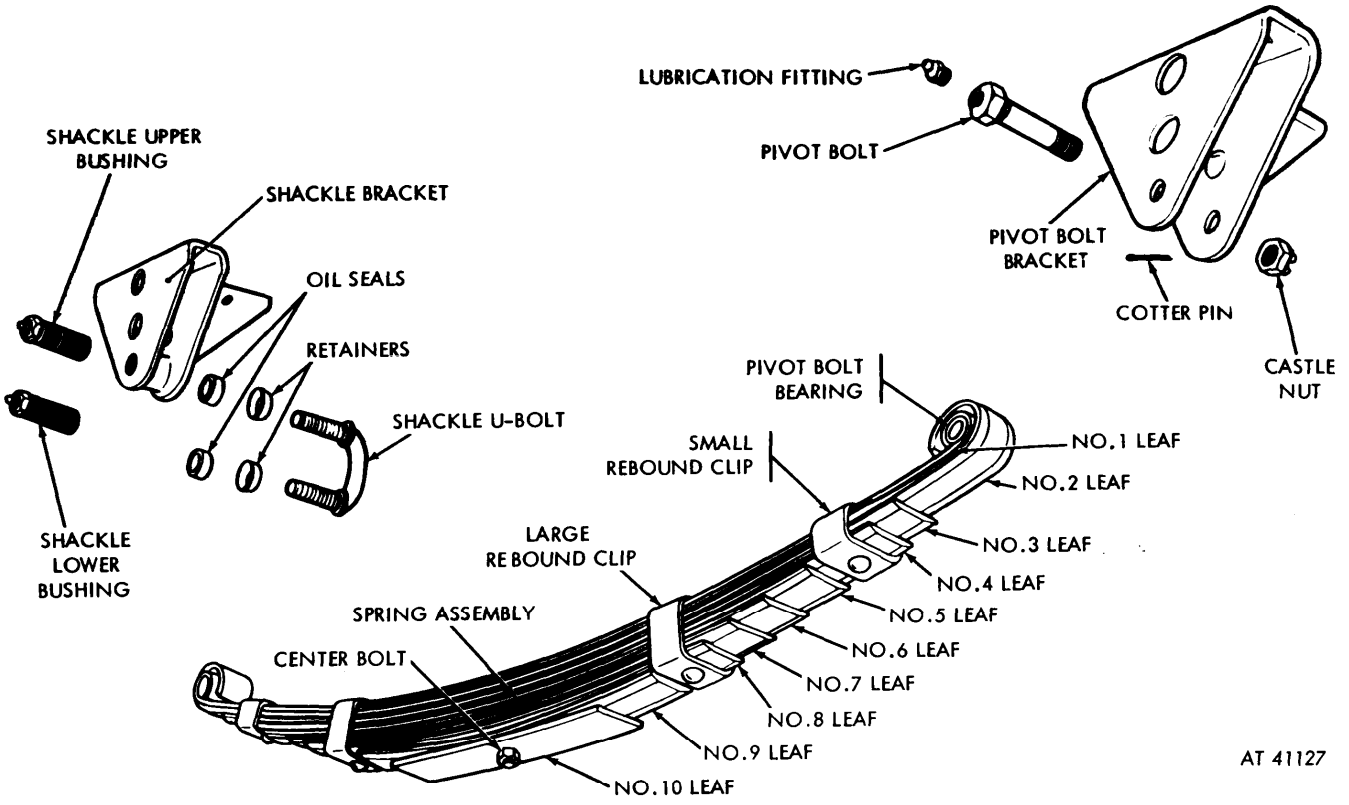

Figure 4-6. Spring and attaching parts—exploded view.

4-12. Spring and Shock Absorber Maintenance

a. Maintenance of the springs consists of regular lubrication of shackles and pivot bolt with chassis grease as described in the lubrication chart (fig. 3-1). Inspect oil seals for deterioration and if damaged, replace.

b. Maintenance of the shock absorbers consists of regular cleaning of the bushings with hydraulic brake fluid to be certain that no oil or grease has a chance to deteriorate the rubber.

4-13. Spring and Shock Absorber Installation

a. Install Shackle U-Bolt (if not already on the trailer) (fig. 1-4). Place oil seal retainers, small end first, on shackle U-bolt. Place oil seals in against retainers. Push one end of "U" bolt through holes at end of shackle braket and screw on shackle upper bushing.

NOTE

Right spring shackle U-bolt must be positioned so that right-hand threaded bushing is used to fasten it to shackle bracket. Tighten the bushing until the hex head is about one-thirty-second inch from the bracket.

b. Install Spring Shackle Lower Bushing (figs. 1-4 and 4-6.

NOTE

The spring end of the right spring shackle U-bolt has a left-hand thread and requires a left-hand threaded bushing.

The left-hand threaded portion of the U-bolt has an identifying fin on the end of the threaded section. The left-hand threaded bushing has six radial notches on the bushing face. Postion the spring eye over the shackle U-bolt and hold it tightly against the oil seal. Install the lower bushing holding the spring eye and U-bolt tightly together. Tighten the bushing until the hex head is about one-thirty-second in inch away from the spring eye. Lubricate the shackle (fig. 3-l). Test the shackle flexibility. If it is not free, the binding bushing must be removed and reinstalled.

c. Install Pivot Bolt (figs. 1-1 and 4-6). Line up the bolts in the spring pivot bolt bracket and the bushing in the spring eye and slip the pilot bolt into place with the lubrication fitting toward the outside. Install and tighten the pivot bolt nut, lining up the cotter pin hole in the pivot bolt with one of the grooves in the nut. Install and bend back the cotter pin.

d. Install Spring Clips (fig. 1-5). With the spring installed on the shackke U-bolt and the pivot bolt (*b* and *c* above), center the axle spring pad over the

spring center bolt and raise the vehicle frame until the axle rests on the spring. Drop the spring clips over the axle and through the spring clip plate. position the plate so that the shock absorber shaft end extends toward the inside of the shackle end of the spring. Assemble the four spring clip lockwashers and special nuts to the clips and tighten.

e. Install Shock Absorbers (fig. 1-4). Insert the rubber bushings into the shock absorber eyes and push them with large end of shock absorber up, onto the shock absorber shafts on the frame and spring clip plate. Slip the washers over the shafts and holding them against the rubber bushings, install the cotter pin through the hole in the shaft. Bend back the cotter pin.

Section VII. ELECTRICAL SYSTEM

4-14. Lamps

(Fig. 4-7)

a. Removal. Remove the taillight door assembly and rubber gasket by loosening the six screws holding the door to the housing. These screws have ring retainers to keep them from falling out of the door when loosened. Remove the lamps by pushing in and twisting them in a counterclockwise direction until the bayonet-type fasteners on the lamp base are free.

b. Installation. Insert the lamp into the bayonet-type receptacle in the housing assembly and secure it by pushing in and twisting in a clockwise direction. Install the gasket and the door assembly and tighten the six screws of the door assembly.

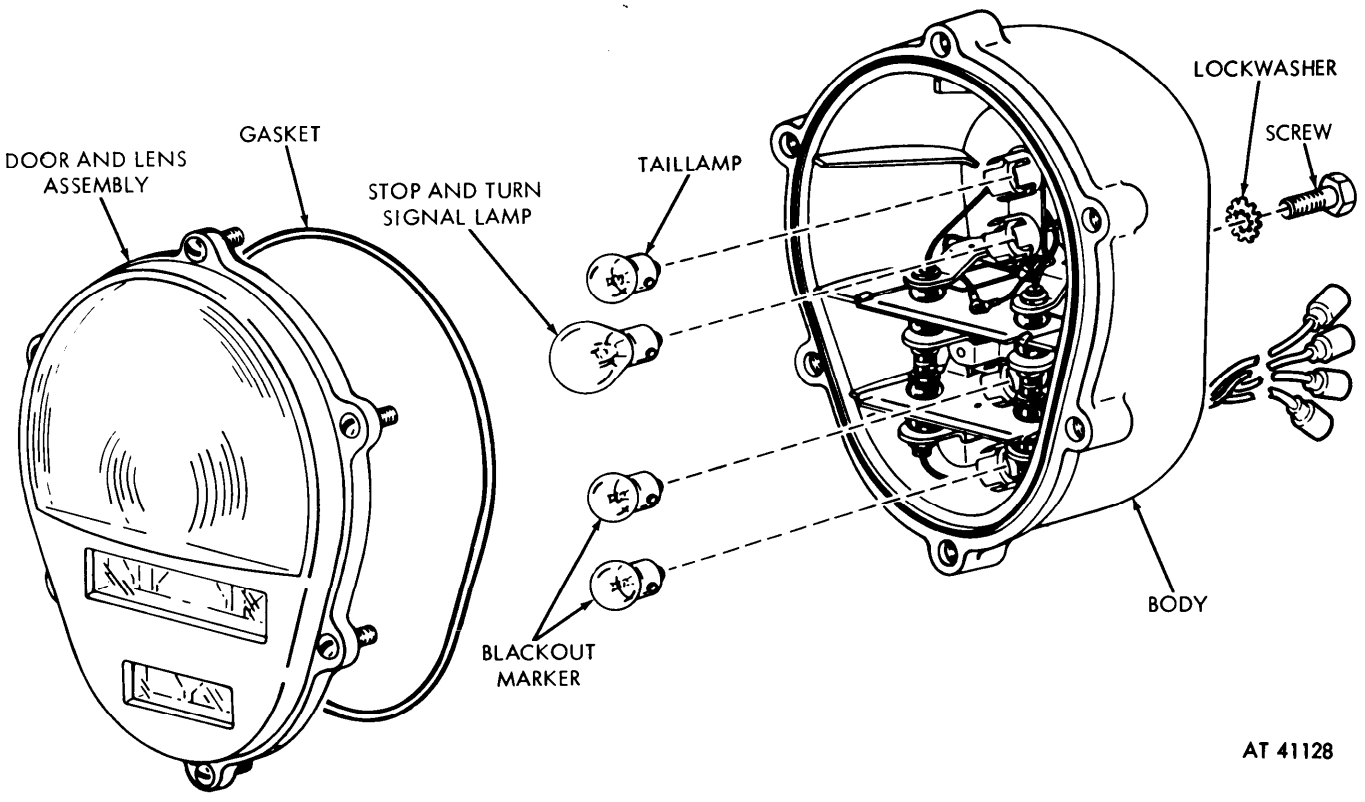

Figure 4-7. Lamp replacement.

4-15. Taillight Assembly

(Fig. 1-6).

a. Removal. Disconnect the taillight cables from the wiring harness at the bell-type connectors (figs. 4-8 and 1-8). After removing the split rubber grommet from the frame side member pull the leads through the hole one at a time. Remove the two capscrews, the two split-type lockwashers, and the two tooth-type lockwashers holding the light to the taillight bracket.

b. Installation. Position the taillight against the taillight bracket so that the lettering on the face of the door is down. Place the split-type lockwashers on the capscrews and insert the screws through the bracket. Place the two tooth-type lockwashers on the screws so that they will be between the bracket and light. Tighten the two screws into the back of the light. Push the taillight cables through the holes in the frame side members and connect them to the wiring harness by coupling the connectors (fig. 4-8). Connect the cables so that the numbered band on the taillight cable corresponds to the band on the harness cable. Insert the rubber grommet into the hole in the frame side member.

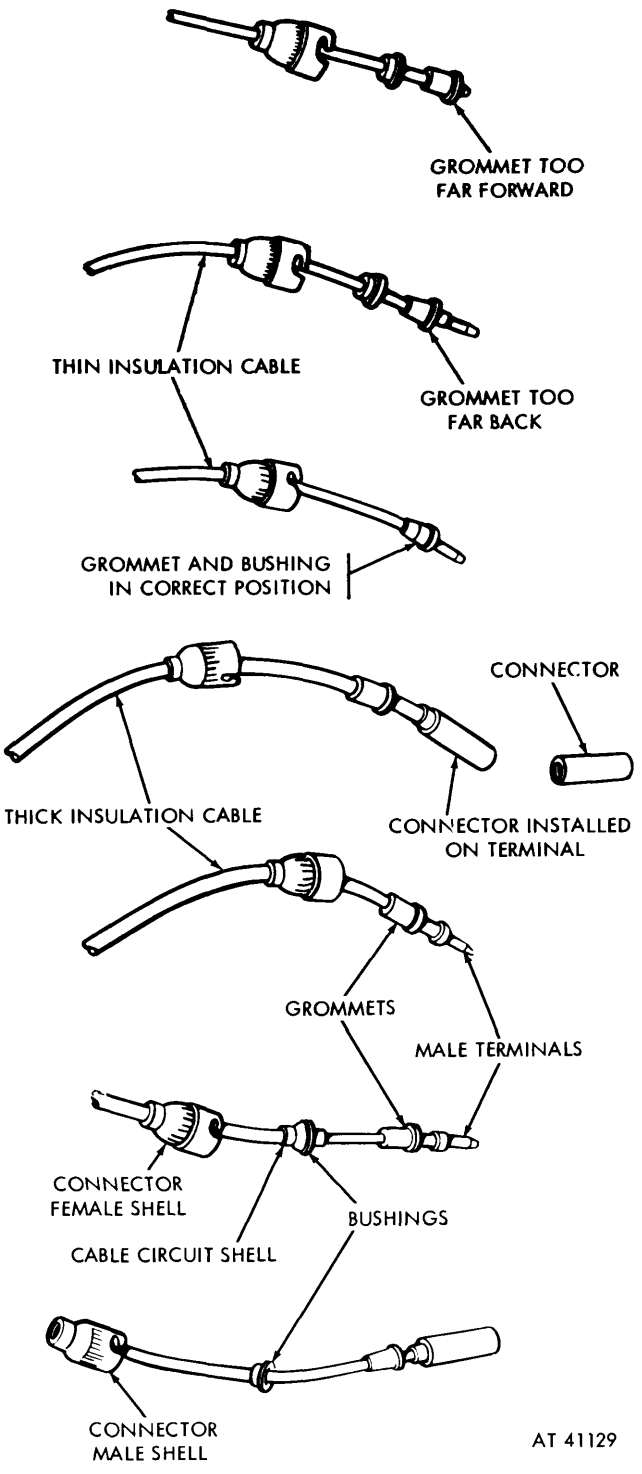

Figure 4-8. Cable connectors.

4-16. Light Wiring Harness (fig. 1-8).

a. Removal. Disconnect the taillight cables at the connectors. Remove the split rubber grommets from the holes where the harness passes through the frame members. Remove the nuts and lockwashers from the screws holding the wiring harness clips in place on the frame members. Slip the clips off the wires. Pull out the wiring harness through the holes in the frame feeding each bell-type connector through each frame member hole individually.

b. Installation. Thread the wiring harness. taillight bell-type connectors first, through the openings in the frame cross members, starting at the large hole at the right front corner of the frame. Insert two of the rubber grommets into their positions in the cross member frame holes. The grommets are split so that they will slip over the cables. Slip the harness clips over the harness cables and fasten the clips to the frame with the screws, lockwashers, and hex nuts. Fasten the taillight cables to the harness by coupling the connectors and twisting them to the locked position. In fastening the connectors make sure that the terminal connector grommet is position so that it just covers the terminal shoulder. This position is illustrated in figure 4-8.

Section VIII. PARKING BRAKES

4-17. Adjustments

d. Brake Shoes–Minor Adjustment Method (fig. 1-9). Jack up the vehicle so that the wheel clears the floor. Pull up the hand brake lever one-third of the distance from the fully released position. Loosen the eccentriv lock nuts on the back of the brake backing plate. Using the engineers ange wrench (fig. 4-9) turn the forward eccentric toward the front of the vehicle until the brake shoe strikes the drum; then turning the wheel, release the eccentric until the wheel just turns freely. Hold the eccentric and tighten the lock nut. Repeat this

procedure on the other eccentric adjusting the reverse shoe but turn the eccentric toward the rear of the vehicle to bring the shoe against the drum.

b. Brake Shoes—Major Adjustment Method. After brake shoes have been removed and replaced, the major brake shoe adjustment must be made. Make the minor adjustment as outlined in a. above. Loosen the anchor pin locknuts and using wrench (fig. 4-91, turn the anchor pins (fig. 1-5) toward each other and down until the shoes are set to 0.008-inch toe and 0.008-inch heel clearance as measured with feeler gages inserted between the shoe and the drum through the slot provided at the rim on the face of the drum. Tighten the anchor pin lock nuts.

c. Brake Cable Adjustment (fig. 1-7). The brake cable adjustment should be preceded by the brake shoe minor adjustment (a above). With the hand brake lever one-third of the distance from the fully released position, loosen the lock nut holding the cable equalizer and move the equalizer adjusting nuts forward or backward until a slight drag is felt at the wheels. Tighten the lock nut. The wheels must be free from drag with the hand lever in the fully released position.

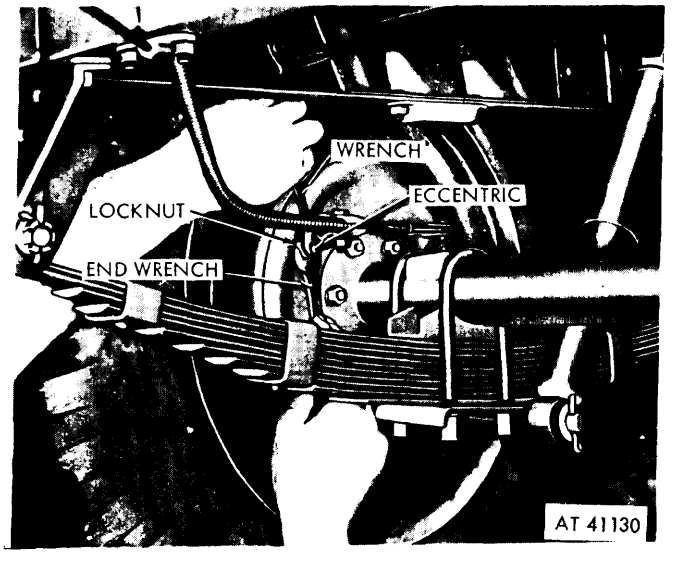

Figure 4-9. Brake adjustment with engineer's angle wrench.

4-18. Removal

a. Remote Brake Hand Lever Assembly (fig. 1-1). Remove the cotter pin from the end of the rod connecting the hand lever to the bellcrank and pull the rod away from the lever. Remove the safety nut and capscrew holding the lever and the left side of the ratchet to the hand lever bracket. The lever assembly can now be pulled up free of the ratchet. remove the nut and lockwasher from the capscrew holding the right side of the ratchet to the bracket. Remove the capscrew and ratchet.

b. Remove Brake Shoes (fig. 4-5). With the wheel removed (para 4-2 *b)* and the hub and drum assembly removed (para 4-8), the brake shoes can be removed, using brake spring pliers. Remove the brake return spring by unhooking it from both shoes. Remove the locknuts and washers which secure the anchor pins; from the rear of the brake backing plate (fig. 1-5). Remove the anchor pin plate and cams. Spread the shoes apart to clear the brake shoe strut and remove them.

c. Remove Brake Assembly. Refer to paragraph 4-8 *b* for removal of brake assembly.

d. Remove Brake Cable Assembly (fig. 1-7). Remove the cotter pins and clevis pins behind the brake backing plate holding the cable end into the brake lever. Loosen the brake cable clamps and pull the conduit portion of the cable assembly forward out of the clamp, compressing the spring. When the conduit has cleared the clamp, slip the cable out of the clamp opening. Remove the lock nut and adjusting nut from the cable equalizer and remove the equalizer. The cable will now slip out of the equalizer. Remove the bolts and nuts holding the cable clamps to the frame cross member and remove the clamps. Remove the cotter pin from the hand lever rod and lift the rod from the bellcrank.

e. Remove Bellcrank (fig. 1-7). Remove the cotter pin and slotted nut from the bellcrank pivot bolt and remove the bolt and bellcrank.

4-19. Maintenance

The parking brake should be inspected and lubricated regularly according to the preventive maintenance services outlined in table 4-1. Check hand brake lever ratchet teeth for sharpness. Replace ratchet if teeth are worn. Brake linings and drums nust be kept free of dirt, oil, and grease and the brake adjustments made (para 4-17). If inspection shows brake linings to be worn to the extent that the rivets might come into contact with the drum during the next period of service, a new shoe assembly should be installed (para 4-20 *c).*

4-20. Installation

a. Install Hand Lever Assembly (fig. 1-1). Place the ratchet segment against the rear of the hand lever bracket so that the ratchet teeth are up and the screw hole beneath the opening in the ratcte lines up with the left hand hole in the bracket when facing the trailer from the front. Line up the hole at the end of the ratchet with the right hand hole in the bracket. Insert the 5 / 16-24 x 1 capscrew through the right hand holes in the bracket and ratchet. Assemble and tighten the 5 / 16-inch lockwasher and 5 / 16-24 hex nut. Mount the hand lever assembly so that it straddles the ratchet with the pawl release side of the lever assembly to the left. The lowest screw holes in the lever should now line up with the holes in the left of the bracket and ratchet. Insert the $^3/_8$-24 x 1 $^1/_1$ capscrew and install and tighten the $^3/_8$-24 hex safety nut. Insert the end of the hand lever rod into the hole in the hand lever assembly just above the ratchet teeth.

Insert the cotter pin into the hole in the end of the rod behind the lever and bend it back.

b. Install Brake Assembly. Refer to paragraph 4-10 *b.*

c. Install Brake Shoe. Insert anchor pins through holes in anchor pin plate, brake shoes, and cams. Spread brake shoes to clear brake shoe struts on brake backing plate and guide anchor pins through holes in backing plate. Secure anchor pins with lockwashers and nuts. Close shoes into strut notches and install brake shoe return spring. If removed, install brake adjusting eccentrics and secure with lockwashers and nuts.

d. Install Brake Cable Assembly (fig. 1-7). Compress the brake cable spring toward the end of the cable so that the cable can be slipped into the clamp on the rear of the brake backing plate. Fasten the cable end into the brake lever with the clevis pin and insert the cotter pin and bend it back. Position the cable conduit in the clamp and tighten the clamp. Repeat the foregoing procedure at the second wheel. Fasten the other ends of the conduits to the frame cross member with the cable clamps. Secure the clamps by installing and tightening the clamp bolts, lockwashers, and hex nuts. The bolt heads should be on the clamp side of the frame member. Place the middle portion of the cable in the equalizer. Insert the cable adjusting rod, with the lock nut assembled from the convex side of the equalizer, so that it holds the cable in the equalizer. Install the adjusting nut and second lock mut to the rod. Adjust cable tension. (para 4-17 *c).*

e. Install Bellcrank (fig. 1-7). Hook the cable adjusting rod in the hole in the short arm of the bellcrank. Insert the bellcrank pivot bolt through the bellcrank and frame member and install the slotted nut and the cotter pin. Hook the hand lever rod through the hole in the long bellcrank arm and secure it with the cotter pin.

f. Install the Hub and Drum Assembly. Refer to paragraph 4-10 *c.*

g. Adjust Brakes. Refer to paragraph 4-17.

Section IX. TOWING ATTACHMENTS

4-21. Lunette
(fig. 4-10)

a. Removal. Remove the cotter pin from the shaft end of the lunette and remove the lunette castle nut. Remove the keyed washer, lunette spring, and spring washer from the lunette shaft. Pull the lunette forward out of the lunette support bracket.

b. Installation. Slip the lunette shaft into the lunette support bracket after it has been cleaned (para 3-5). Assemble the spring washer, spring, keyed washer, and castle nut onto the end of the shaft in that order. Tighten the nut so that the cotter pin hole in the shaft is in line with one slot of the nut. Insert the cotter pin and bend it back around the nut. Lubricate the lunette (para 3-1).

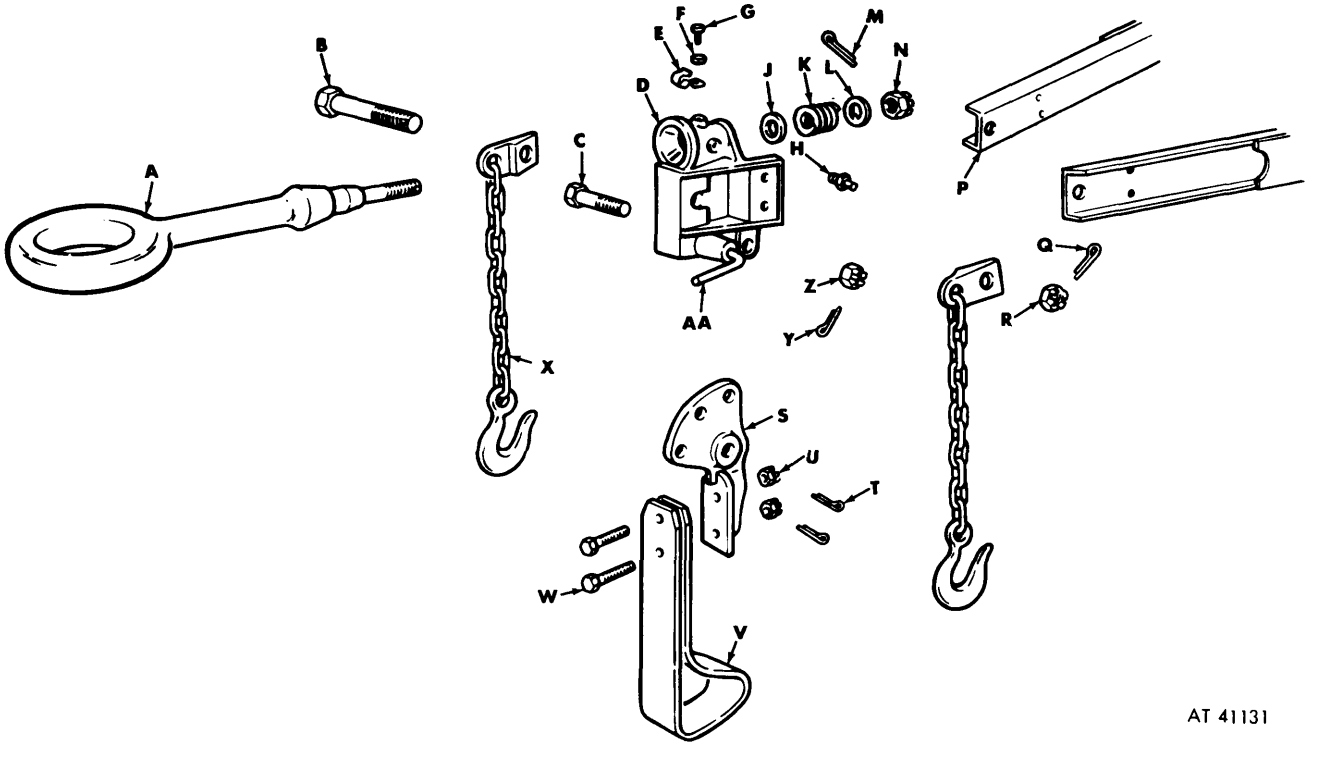

Figure 4-10. Lunette support bracket attachments—exploded view.

A–Lunette
B–Safety chain capscrew
C–Support leg bracket pivot screw
D–Lunette support bracket
E–Clip
F–Lockwasher
G–Capscrew
H–Lubrication fitting
J–Spring washer
K–Lunette spring
L-Keyed washer
M–Cotter pin
N–Lunette castle nut
P–A-frame channel
Q–Cotter pin
R–Castle nut
S–Support leg bracket
T–Cotter pin
U–Castle nut
V–Support leg
W–Support leg capscrew
X–Safety chain
Y–Cotter pin
Z–Castle nut
AA–Support leg plunger

4-22. Safety Chains
(fig. 4-10)

a. Removal. Remove the cotter pin and castle nut from the safety chain capscrew. Remove the capscrew from the lunette support bracket.

b. Installation. Place the safety chain fasteners against the frame, one on each side, flat side out, so that the screw holes are in line. Slip the capscrew through the chain fasteners, the frame, and the lunette support bracket and assemble the castle nut. Tighten it so that the cotter pin hole in the screw lines up with one slot of the nut. Insert the cotter pin and bend it back around the nut.

4-23. Support Leg
(fig. 1-10)

a. Removal. Remove the two cotter pins and castle nut located on the rear of the support leg bracket. Remove the support leg capscrews.

b. Installation. Position the support leg on the front of the support leg bracket so that the loop of the leg is toward the rear of the trailer. Assemble the two capscrews and castle nuts. Tighten the nuts so that the cotter pin holes line up with one slot of the nuts. Insert the cotter pins and bend them over.

4-24. Support Leg Bracket
(fig. 4-10)

a. Removal. Remove support leg (para 4-23). Remove the cotter pin and castle nut from the support leg bracket pivot screw in the front support bracket. Withdraw the screw. Pull out the support leg plunger and slide the support leg bracket out of the lunette support bracket.

b. Installation. Pull out the support leg plunger and slip the support leg bracket up into place in the lunette support bracket so that the pivot screw holes in both brackets are in line. Insert the pivot screw and assemble the castle nut and tighten it so that the cotter pin hole in the screw lines up with one slot of the nut. Do not tighten to the point where support leg movement is hampered. Insert the cotter pin and bend it back around the nut. Install support leg (para 4-23).

4-25. Lunette Support Bracket
(fig. 4-l0)

a. Removal. Remove lunette (para 4-21), safety chains (para 4-22), support leg (para 4-23), and support leg bracket (para 4-24). Remove the four cotter pins and castle nuts from the bracket capscrews. Remove the screws and slide the lunette support bracket out from between the two channels to the rear.

b. Installation. Slip the lunette support bracket between the A frame channels so that the lunette hole is on top. Line up the holes in the bracket with those in the A frame channels and insert the four capscrews with the heads on the outside of the channels. Assemble the four castle nuts and tighten, lining up one slot with the cotter pin hole in the screw. Insert the cotter pin and bend it back around the nut. Install lunette (para 4-21), safety chains (para 4-22), support leg bracket (para 4-24), and support leg (para 4-23).

Section X. WHEELS AND TIRES

4-26. Wheel and Tire Assembly
(fig. 1-6

a. Removal. Lossen, but do not remove, the wheel-bolt nuts. Jack up the trailer on the side of the wheel to be removed. Remove the five nuts and lift off the wheel.

b. Installation. Place the wheel on the drum over the five wheel bolts and assemble the five nuts finger tight. Lower the vehicle so that the tire touches the ground, or apply the parking brake, and tighten the nuts.

4-27. Tires

a. Inflation. Standard tire inflation pressure for highway operation is 25 psi, for cross-country operation, 25 psi, for operation in sand, or snow 10 psi. Pressure must be equal in both tires.

NOTE

Take tire pressure readings when tires are cold; do not reduce the pressures of overinflated hot tires. Allow the tires to cool, check the pressures, and deflate them if necessary.

b. Removal. After removing the wheel and tire assembly (para 4-26), completely deflate the tube by removing the valve core. Use tire irons to dislodge the bead of the tire and carefully force it off the rim. Remove the tube and pull the back bead of the tire off the rim.

c. Installation. With the wheel off the axle, carefully force one head of the tire casing over the rim. Be careful that the bead is not damaged. Insert the tube between the casing and the rim so that the valve can be pushed through its hole in the rim. Install the valve core. Partially inflate the tube to fill out the tire and position the tube. Push the second bead over the rim using tire irons and rubber mallet to force the last section over. Inflate the tube and then completely deflate again. This further positions the tube and lessens the chance of damage from pinching due to a fold in the tube. Inflate the tire to the proper pressure (*a* above).

Section XI. BODY ATTACHING PARTS

4-28. Intervehicular Cablc Storage Box

(fig. 1-9).

a. Removal. Remove the four hexagon nuts and lockwashers from the hexagon head capscrews holding the intervehicular cable storage box to the storage box bracket. Remove the capscrews and special washers from the inside of box and slip the box out of the bracket. The bracket is welded to the body.

b. Installation. Slip the intervehicular cable storage box inside the storage box bracket and line up the screw holes of the box and bracket. Place the four special washers on the four hexagon head capscrews and insert the capscrews into the holes from the inside of the box. Assemble the four lock-washcrs and hexagon nuts and tighten.

4-20. Fenders

(fig. 1-6)

a. Removal. Remove the six hexagon nuts and lockwashers, and plain washers from the capscrews holding the fender to the fender brackets. Remove the six screws and washers from the fender and brackets. Remove the fenders. The fender brackets are welded to the body.

b. Installation. Position the fender over the fender brackets, lining up the screw holes. Place six of thc plain washers on the six capscrews and insert the screws into the holes from the outside of the fender. Assemble the other six plain washers, lock-washers, and hexagon nuts and tighten the nuts.

4-30. Reflectors

(fig. 1-6)

a. Removal. Remove the two hexagon nuts and lockwashers from the machine screws holding the reflector to the body. Remove the two screws, washers, and the reflector.

b. Installation. Position the reflector against the body so that the holes of the reflector and body line up. Place the two plain washers on the machine screws and insert the screws through the reflector and body holes from inside the body. Assemble the two lockwashers and hexagon nuts and tighten the nuts.

4-31. A-Frame Channels

(fig. 4-3)

a. Removal. Remove the lunette support bracket the two hexagon nuts and lockwashers from the two bolts holding the back end of the channel into the frame. Remove the bolts and channel.

b. Installation. Place the channel, flat side in, into the frame pocket, lining up the channel and frame bolt holes. Insert the two hexagon head bolts into the channel and frame holes from the inside of the channel and assemble the two lockwashers and hexagon nuts. Place the A-frame clamp over the channel so that the clamp holes line up with the frame holes. Insert the two bolts through the frame and clamp holes from the top and assemble the lockwashers and nuts.

4-32. Spring Brackets

(fig. 4-3 and 4-6)

a. Removal. The removal procedures of the spring shackle bracket and the spring pivot bolt bracket are the same. Remove the spring pivot bolt or shackle U-bolt corresponding to the bracket to be removed. The U-bolt can be removed after the spring shackel bushings have between removed (para 1-11). Remove the four nuts and lockwashers from the four capscrews holding the brackets to the frame. Remove the bracket.

b. Installation. Position the proper bracket against the frame with the bracket brace toward the inside and the screw holes of the bracket lined up with the screw holes of the frame. Insert the four capscrews through the frame and bracket holes from the top. Assemble the four lockwashers and nuts, and tighten the nuts.

4-33. Taillight Brackets

(fig. l-6)

a. Removal. Remove the taillight assembly (para 4-15). Remove the two nuts and lockwashers from the two capscrews holding the taillight bracket to the frame. Remove the capscrews and bracket.

b. Installation. Position the taillight bracket with the short leg against the frame so that the frame and bracket screw holes line up. The long leg of the bracket should angle upward with the semicircular cutout facing down. Insert the two capscrews through the bracket and frame from the outside. Assemble the lockwashers and nuts, and tighten the nuts. Install taillight assembly (para 4-15).

4-34. Brake Lever Bracket

a. Removal. Remove the hand lever assembly and ratchet (para 4-18). Remove the two hexagon nuts and lockwashers from the capscrews holding

the brake lever bracket to the frame. Remove the screws and bracket.

b. Installation. Position the brake lever bracket on top of the frame cross member with the vertical portion away from the body. Line up the screw holes in the bracket and the frame. Insert the two capscrews through the bracket and frame from the top. Assemble the two lockwashers and nuts, and tighten the nuts.

4-35. Drain Valve Assembly

(fig. 4-3)

a. Removal. With the drain valve open, remove the two screws and lockwashers holding the drain valve support to the frame. Remove the support and the drain valve assembly.

b. Maintenance. Wipe off the valve seat and the valve assembly, removing any oil or grease which will contact and deteriorate the rubber valve. If the valve assembly is damaged, replace the assembly.

c. Installation. Slip the drain valve support over the valve assembly ring. Pull the ring through the support compressing the valve spring and turn the ring through 90° so that it will keep the valve spring compressed. Position the support so that the screw holes in the support and frame line up. Install and tighten the two screws and lockwashers. Turn the ring through 90° and allow the valve to close.

CHAPTER 5

DIRECT SUPPORT AND GENERAL SUPPORT MAINTENANCE INSTRUCTIONS

Section I. REPAIR PARTS, SPECIAL TOOLS, AND EQUIPMENT

5-1. Tools and Equipment
Tools and equipment and maintenance parts over and above those available to using organization are supplied to direct and support units for maintaining and repairing the materiel. Refer to paragraph 4-1.

5-2. Special Tools and Equipment
Refer to appendix C.

Section II. TROUBLESHOOTING

Refer to tables 3-2 and 4-2.

Section III. REMOVAL AND INSTALLATION OF MAJOR COMPONENTS

5-3. Disassembly of Springs
Disassembly of the springs requies the destruction of the rebound clips and center bolt. Inspect the spring assembly for cracked or broken leaves and clips. Do not disassemble it unless damage is found.

a. Remove the spring assembly from the vehicle (para. 4-11).

b. Clamp the spring leaves together in a vise or heavy clamp so that the leaves will not fan out as the center bolt and nut are removed.

c. Before loosening the center bolt nut, remove the rebound clips using a chisel and hammer.

d. Remove nut and center bolt. The individual leaves are now loose.

5-4. lnspection, Repair, and Rebuild of Springs
Examine the parts carefully for damage. The center bolt and nut are staked after assembly and will be stripped after removal. They must be replaced. Examine the bearing in the eye of No. 1 leaf. If this bearing is scratched or scored it should be reamed or broached to remove the defect. Remove bearing if inside diameter is greater than 0.5705 inch. If removal is necessary, press the bearing from the eye of No. 1 leaf (fig. 4-6) using a bushing pilot and a small hand press. If reaming or broaching will not remove the defect, a new bearing should be installed. Replace cracked or broken leaves and clips.

5-5. Assembly of Springs
(fig. 4-6)

a. Using a small hand press and a bearing pilot, press the new bearing into the pivot bolt eye of the No. 1 leaf. The bearing inside diameter must be reamed or broached to 0.5655 inch after assembly into the leaf.

b. Assemble the leaves in the proper order using a new center bolt as a stacking guide. Place a small amount of powdered graphite between the leaves as a lubricant. Compress the leaves, using a large clamp or vise, and assemble a new center bolt nut to the center bolt.

c. Replace the spring rebound clips with new ones and assemble them so that the small clips hold leaves one through four and the large clips hold leaves one through eight.

5-6. Disassembly of Taillight Assembly
(fig. 4-7)

NOTE

Refer to appendix C for other light assemblies

a. Remove Door Assembly. Loosen the six screws holding the door assembly to the housing and remove the door assembly. The rubber ring gasket will come off with the door assembly. The door screws are removed by taking the ring retainer off the screw on the rear of the door.

b. Remove Socket Plates. Remove the two filister head machine screws holding each socket plate to the housing. Remove the plates.

c. Remove Baffle Plate and Body Grommet. Remove the three machine screws holding the baffle plate and body grommet to the housing. The cables, socket plates, baffle plate, and grommet can now be removed by pulling the cables and connectors through the large grommet hole in the rear of the housing.

d. Remove Cables. Work the terminal connector grommets over the end of the cables. The connector shells and bushings will now slip off the cables. Pull the cable through the body grommet. The cables will now slip easily through the baffle plate and socket plates.

5-7. Inspection of Taillight Assembly

a. Check the rubber parts, the grommets, gasket, and cable insulation, for cracks, deterioration, and fit, replacing any damaged parts.

b. Inspect the screws for damaged threads and missing lockwashers and check the internal housing threads using a thread gage, tap, or good screw. The threads should be clean and free fitting.

c. Inspect the baffle plate, socket plates, shell connectors, and bushings. Bent, cracked, or otherwise damaged parts must be replaced.

d. Inspect cables, terminals, and contacts for corrosion and dirt.

5-8. Assembly of Taillight Assembly (fig. 4-7)

a. Assemble Internal Parts on the Cables. Push the terminal ends of the cables through the springs, socket plates, baffle plate grommet, baffle plate, and body grommet in the order named. Position the baffle plate grommet in its hole in the baffle plate. Push the ends of the cables through the hole in the rear of the body and position the body grommet in the hold. Seal the cables in the body grommet and seal the body grommet in the body with gasket cement.

b. Assemble Baffle and Socket Plates. Slip the baffle plate into the housing so that the plate covers the body grommet. Insert the three filister bead machine screws, through the baffle plate and grommet, into the body and tighten them. Slip the eyelets into the socket plates and position the socket plates in the body. Assemble and tighten the four machine screws through the socket plate eyelets into the body.

c. Assemble the Connector Parts to the Cables. Slip the bell-type connector shells, small openings first, over the ends of the cables. Slip the terminal connector bushings, small diameters first, over the cable ends. Work the terminal connector grommets over the cable ends, small ends first, and position them properly (fig. 4-8).

d. Assemble Door Assembly. Place the six special door screws in the door and fasten the retaining rings in the screw grooves on the hack of the door. Install the lamps and the door and gasket to the body.

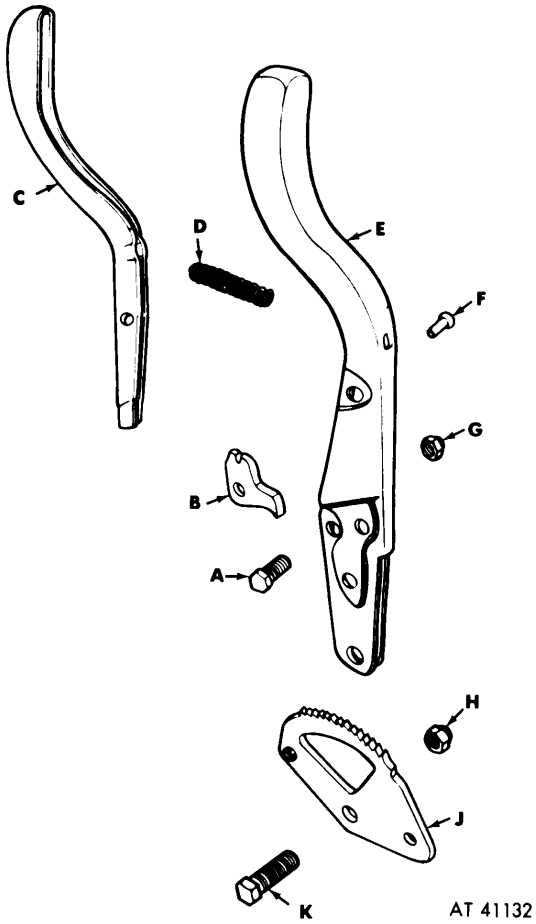

A–Screw, cap
B–Pawl, Locking
C–Latch
D–Spring, Latch
E–Shaft, Hand Lever
F–Rivet, Hand Lever
G–Nut, Safety
H–Nut, Safety
J–Ractchet, Hand Lever
K–Screw, Cap

5-9. Disassembly of the Brake Hand Lever Assembly (fig. 5-1)

Remove the safety nut and capscrew holding the pawl and slide the pawl out of the shaft. Drill out the lever assembly rivet and remove it. This frees the latch and spring from the shaft.

Straighten the shaft or latch if bent and replace damaged parts. The pawl should be carefully inspected, particularly for elongation of the pivot hole and damage to the point. Test spring for suitable action. These items shoud be replace if found to be damaged.

5-11. Assembly of the Brake Hand Lever Assembly

Place the latch spring on its projection in the shaft and insert the latch into the shaft so that the spring is positioned properly and the rivet holes of the shaft and latch are in line. Insert a new rivet through the rivet holes. Hold the assembly so that the rivet head rests on a solid support such as the anvil portion of a large vise. Expand and flatten the rivet head, being careful not to tighten the rivet so that the latch is bound. Slide the pawl into position so that the notch is under the latch, the point is down, and the screw hole lines up with the corresponding hole in the shaft. Insert the hexagon head capscrew through the shaft and pawl and assemble and tighten the hexagon safety nut.

CHAPTER 6

REPAIR INSTRUCTIONS

6-1. Repair and Rebuild of Taillight Assembly

Straighten any bent parts and replace those which cannot be easily straightened. Replace damaged rubber parts and cables. Clean dirty or corroded electrical contacts. Replace rusty or corroded springs and sockets. Clean all dirty internal threads, removing any foreign material with a tap and a small brush or jet of air. Replace the housing if threads are very loose or badly damaged.

6-2. Repair and Rebuild of Wiring Harness

a. Remove Harness. Remove the wiring harness from the trailer (para 4-16).

b. Inspection. Repair, and Rebuild. The procedures for the inspection, repair, and rebuild of the wiring harness receptacle is covered in TM 9-1825E. Replace cables that have frayed or corroded insulation.

c. Install Harness. Install the harness to the trailer (para 4-16).

6-3. Repair and Rebuild of Towing Attachments

a. Disassembly and assembly procedures for the towing attachments are covered in paragraphs 4-21 through 4-25.

b. Repair and rebuild of the items consists of visual and operational inspection and the replacemcnt of any broken or damaged parts. The support leg plunger is not removable from the front support bracket. In case the plunger or spring should become damaged, replace the lunette support bracket.

6-4. Repair and Rebuild of Body

Inspect the body for any defects. looking particularly for broken frame and body welds, dented and tom panels, leaks, rust, and poor finish. Repair any defects, straightening dents and welding rips and tears; remove rust and corrosion; and touch up bare or shiny spots with paint.

6-5. Repair and Rebuild of Wheels, Hubs, and Drums

a. The removal and installation procedures for these items are covered in paragraphs 4-3, 4-10 and 4-26.

b. Inspect these items carefully for distortion and replace if damaged. Check condition of paint and repaint if chipped, cracked, or if bare metal is found. Inspect wheel mounting holes for excessive wear or elongation due to loose mounting and replace the wheel if such a condition is found. Replace the wheel bolts if they are bent or the threads are damaged.

6-6. Repair and Rebuild Standards

The serviceability standards included herin give the minimuim, maximum, and key clearances of new or rebuild parts. They also give wear limits which indicate that point to which a part or parts may be worn before replacement. in order to receive maximum service with minimum replacement. Normally, all parts which have not been worn beyond the dimensions shown in the "wear limits" column or damaged from corrosion will be approved for service. Refer to table 6-1 and figure 4-6 for repair standards.

Table 6-1. Repair Standard

Item and point of measurement	Fig. ref.	Size and fits of new parts		Wear limits
		Min.	Max.	
Outside diameter of spring pivot bolt.	4-6	0.558	0.563	0.550
Inside diameter of spring pivot bearing after sizing.	4-6	0.5655	0.5705	0.580

CHAPTER 7

SHIPMENT AND LIMITED STORAGE

Section I. SHIPMENT

7-1. Shipping Instructions

a. Responsibility. When shipping the 1 / 4 ton, 2-wheel trailer, M100, or M367, the officer in charge of preparing the shipment is responsible for furnishing the vehicles to the carriers in a serviceable condition, properly processed for shipment. ment.

b. Preparation for shipment. Do not reprocess materiel removed from storage for shipment unless inspection reveals it to be inadequately preserved or reprocessing is necessary because of anticipated in-transit weather or shipping conditions. Do not remove or disturb preservatives except as necessary to insure that materiel is complete and serviceable. If preservatives are removed, restore them prior to shipment.

c. Army Shipping Documents. Prepare all Army shipping documents accompanying freight in accordance with existing regulations.

Section II. LIMITED STORAGE

7-2. Limited Storage Instructions

a. Receiving Instructions.

(1) Prepare DD Form 6 for all shipments received in a damaged or otherwise unsatisfactory condition.

(2) Do not reprocess a vehicle for storage which has already been processed for domestic shipment, unless inspection performed on receipt of vehicle reveals corrosion, deterioration, or other damage.

(3) Completely process vehicles upon receipt directly from manufacturing facilities or if the processing data indicates that preservatives have been rendered ineffective by operation or freight shipping damage.

b. Limitcd Technical Inspection.

(1) Vehiles to be prepared for limited storage must be given a limited technical inspection and processed as prescribed in TB 9-300-2 / 1. Enter the results on the inspection and classification on DA Form 2404 and secure the form to each vehicle in a conspicuous location.

(2) After inspection, replace or repair all missing or broken parts. If repairs are beyond the scope of the unit and vehicle will be inactivated for appreciable length of time, place vehicle in limited storage and attach tags specifying the repairs needed. The unit commander will submit reports of these conditions for action by maintenance personnel.

c. Storage Site. The preferred storage site for vehicles is under cover in open sheds or warehouses whenever possible. Protect vehicles stored outdoors against the elements.

d. Inspection During Storage.

(1) Perfom a visual inspection periodically to determine general condition of vehicle. If damage or corrosion is found on any part, repair or process as prescribed in TB 9-300-2 / 1.

(2) If vehicles are not shipped or issued upon expiration of the limited storage period, process as applicable in accordance with TB 9-300-2 / 1.

(3) When vehicles are inactivated, process in accordance with prescribed instructions.

NOTE

Before painting insure that all surfaces are clean and dry.

7-3. Loading the 1 / 4-Ton, 2-Wheel Trailers M100 or M367 for Rail Shipment

a. Preparation.

(1) When trailers are shipped by rail, every precaution must be taken to see that they are properly loaded and securely fastened and blocked to the floor of car. All on vehicle materiel (OVM) will be thoroughly cleaned, preserved, packed, and securely stowed in or on the trailer for transit.

(2) Prepare all trailers for rail shipment in accordance with paragraph 7-1.

(3) Increase tire pressure slightly higher than normal except where shipment is to be exposed to extremely hot weather conditions.

b. Type of Cars. Instructions contained herein pertain to the loading of trailers in boxcars (cars equipped with side or side and end doors), gondola cars (an open-top car having fixed sides, fixed or drop ends, and solid bottom), and flatcars (cars with wooden floors laid over sills and without sides and ends but equipped with stake pockets.

c. Method of Loading Trailers on Freight Cars.

(1) *Flatcar loading.*

(a) When suitable hoisting equipment is not available for loading trailers on or for subsequent unloading from a flatcar, and end ramp

must be used in cases where the trailer is not on a leve with the flatear deck. Trailers on a warehouse platform or loading dock can be pivoted over spanning platforms aboard a flatcar adjacent to the platform, then again pivoted into lateral position on the flatear.

(b) When unboxed trailers must be loaded from ground level, a ramp may be improvised by borrowing railroad ties normally found stacked in railroad yards and by procuring necessary planking.

(c) To accomplish loading, the trailer is towed or pushed onto the improvised apron at base of ramp. While the trailer is moving up the ramp, follow up forward movement by chocking behind one wheel of the trailer. This will prevent undesirable rearward travel and assist loading.

(d) After the first trailer or trailers are loaded on the flatcar, additional trailers may be similarly hauled aboard and located on flatcars as shown in figures 7-l and 7-2. When a train of flatcars is being loaded, steel or wooden spanning platforms or bridges are used to cover the gap between cars. Flatcar brake wheels must first be lowered to floor level to permit passage. These spanning platforms are moved along the train by hand as the trailer advances.

(e) The above method of train loading requires careful planning as to the order of loading, so that trailers are arranged on each flatcar under prescribed methods and combinations (figs. 7-1 and 7-2).

(2) *Gondola car loading.*

(a) Fixed-end gondola cars may only be loaded when hoisting facilities are available for initial loading and for unloading at destinaion. Hopper or drop-bottom gondola cars without false flooring and hoisting facilities are not to be usedl for shipments of unboxed trailers.

(b) Drop-end gondola cars may be loaded exactly as described for flatcars ((1) above). Height of fixed sides is immaterial. Trailers may progress through a gondola car by passing over the two inwardly-dropped ends and over spanning platforms. Trailers selected to remain in a gondola car are first moved to the closed end of the car, then spread out for blocking after the remaining end is closed and latched.

(3) *Boxcar loading.*

NOTE

Do not block trailers flush against ends of gondola car. When ordering gondola cars, specify inside width required as smoe may be received with gussets along the inner sides which affect clearance.

(a) End-door boxcars are spotted with the door end toward the ramp and loaded as described for flatears (1) above). When the height of the trailers (double loading, fig. 7-2) to be loaded is close to the inside height limits of the boxcar, it will be necessary to first load the trailer on an adjacent flatcar. The two end doors must be opened before the flatcar is coupled to the doorend of the boxcar.

NOTE

When ordering end-door boxcars, it must be remembered that some automobile boxcars may be received with an overhead built-in rack which affects inside height calculations. Specify inside height required. Keep open end doors clear of traffic on adjacent tracks.

(b) Side-door boxcars are provided with either single or double rolling doors at each side and must be loaded from a platform of about the same level as the boxcar floor or from an adjacent flatcar. Automobile cars of this type have large side door openings and present less diffiulty in loading. Steel plates or spanninh platforms must be used to bridge the gap between platform and car.

(4) *Loading ramp.*

(a) A ramp for end-loading of trailers on open top freight cars may be improvised as prescribed in TM 55-200 when no permanent ramps of hoisting facilities are available. The width of the ramp for loading trailers may be constructed to provide two double-plank runways, each cleated together. Length of planking must be determined with consideration to underchassis clearance, in order to clear the hump at upper end of ramp.

CAUTION

Personnel guiding the trailers up the ramp must exerise care when working close to the edges of the ramp planking.

(b) The car bearing the ramp must be securely blocked against rolling, particularly when the car brakes are not applied as in trail loading. Successive cars must remain coupled and be additionally chocked at several points along the train if ground towing of vehicles aboard the train is being affected.

(c) Whenever the freight cars are not on an isolated track or blocked siding, each end approach to the train must be posted with a blue flag or light to advise that men are at work and that the siding may not be entered beyond those points.

(d) Upon completion of the loading operation, the ramp planks and bridging devices should be loaded on the train for use in unloading operations. Random sizes of timbers used in building the approach apron up to rail level should be included. All materials should be securely fastned to the car floors, after trailers are blocked in place, and entered upon the bill of lading (B / L). Railroad ties if borrowed for the operation should not be forwarded to the unloading point unless specifically required and only with the consent of the owner.

d. Loading Rules. For general loading rules pertaining to rail shipment of ordnance vehicles, refer to TM 55-200.

WARNING

The height and width of vehicles, when prepared for rail transportation, must not exceed the limitations indicated by the loading table in AR 700-105 (sec II). Whenever possible, local transportation officers must be consulted about the limitations of the particular railroad lines to be used for the movement in order to avoid delays; dangerous conditions, or damage to equipment.

NOTE

Item reference letters refer to the descriptions in text.

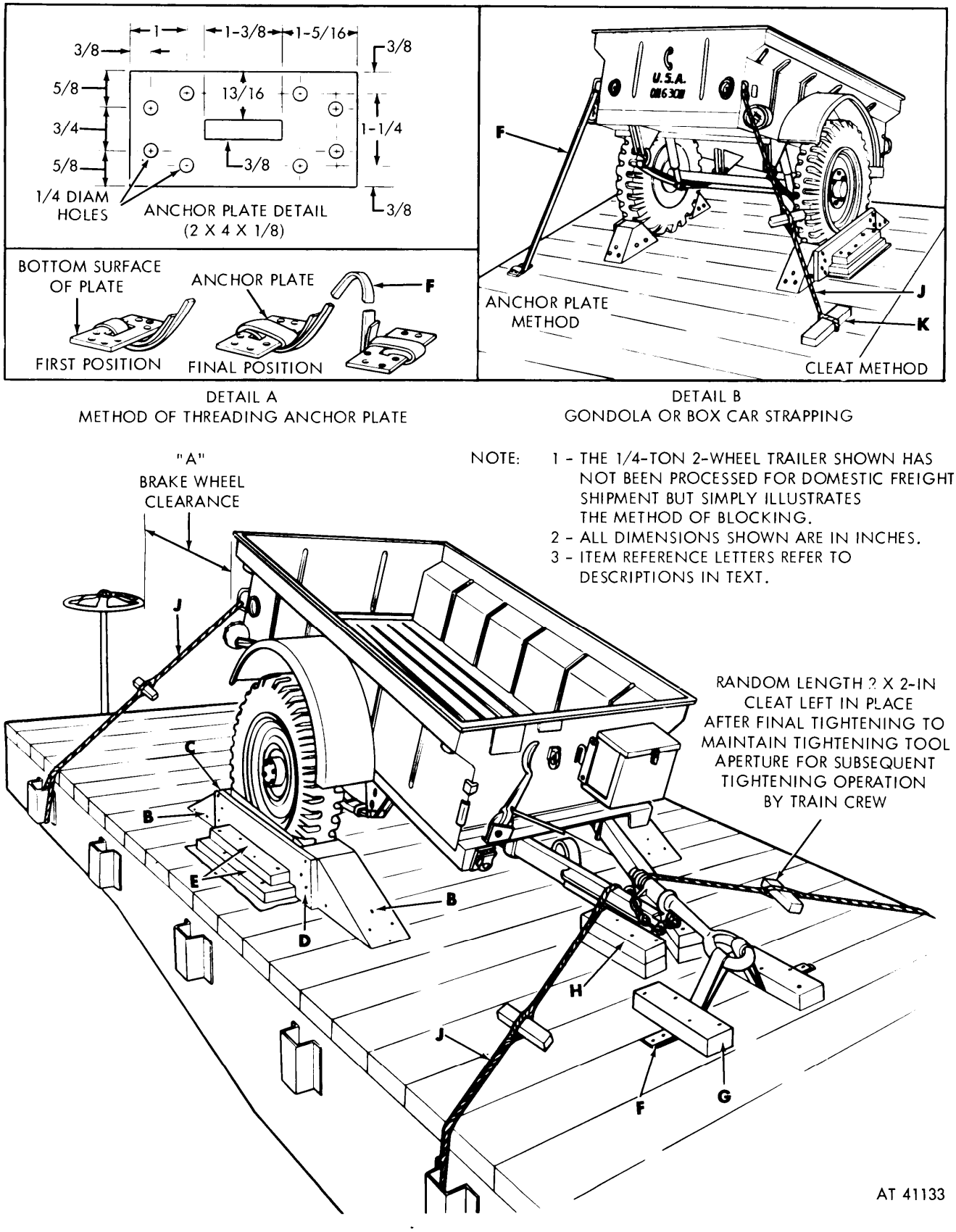

Figure 7-1. Method of blocking the 1 / 4-ton, 2-wheel Trailer M100 or M367 (single loading) for rail shipment.

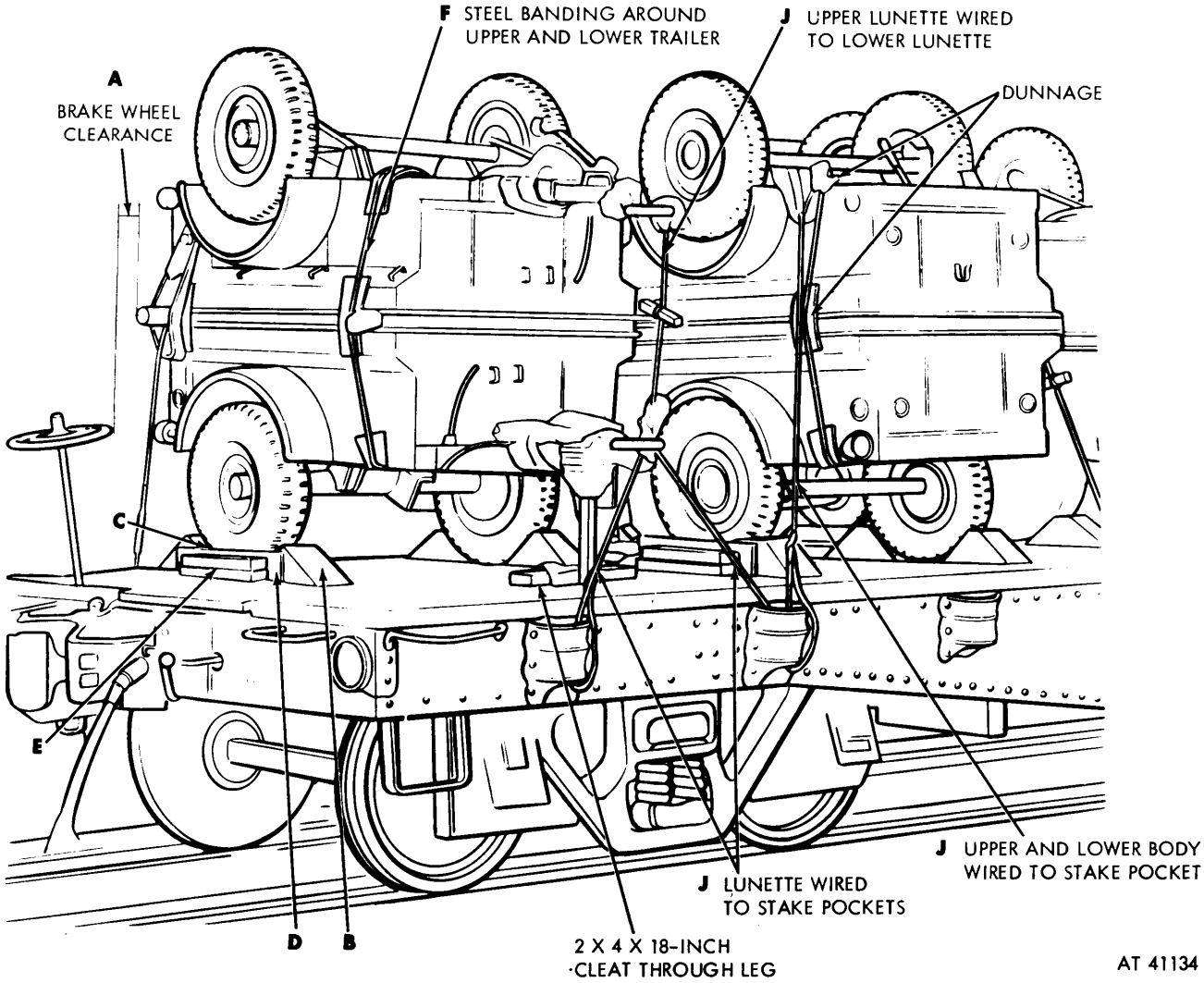

Figure 7-2. Method of blocking the 1 / 4-ton. 2-wheel Cargo Trailer M100 (double loading) for rail shipment.

7-4. Blocking the ¼-Ton, 2-Wheel Trailer M100 or M367 for Rail Shipment

a. General. All blocking instructions specified herein are minimum and in accordance witll the Association of American Railroads "Rules Governing the Loading of Department of Defense Materiel on Open-Top Car." Additional Blocking may be added as required at the discretion of the officer in charge. Double-headed nails may be used if available, except in the lower piece of two-piece cleats. All item reference letters given below refer to the details and locations as shown in figures 7-1 and 7-2. The ¼-ton 2-wheel trailer may be single loaded with the leg retracted as shown in figure 7-1 or double loaded with the lower trailer positioned with the leg down as shown in figure 7-2.

NOTE

The trailer shown in figure 7-2 is not the model M100, however, model M100 may be similarly blocked for rail shipment. Any loading methods or instructions developed by any source which appear in conflict with this publication or existing loading rules of the carriers, must be submitted for approval to the proper authorities.

b. Brake Wheel Clearance "A". Load trailers on flatcars with a minimum clearance of at least 4 inches below and 6 inches above, behind, and to each side of the brake wheel (fig. 7-1 and 7-2). Increase clearance as much as is consistent with proper location of load.

c. Chock Blocks "B" (6 x 8 x 24 Inches). Locate the 45-degree face of blocks against the front and rear of each wheel. Blocks are to be positioned in such a manner as to allow flush application of wheel side cleats "D" *(e* below) when nailed to chock blocks. Nail heel of blocks to car floor with three forty penny nails each.

NOTE

Filler cleats may be used between chock blocks and side cleats to centrally locate the chock block against tires. These cleats are not shown on figures 7-1 and 7-2. Chock blocks may be cut from timbers (or railroad ties, when available) as shown in figure 7-3.

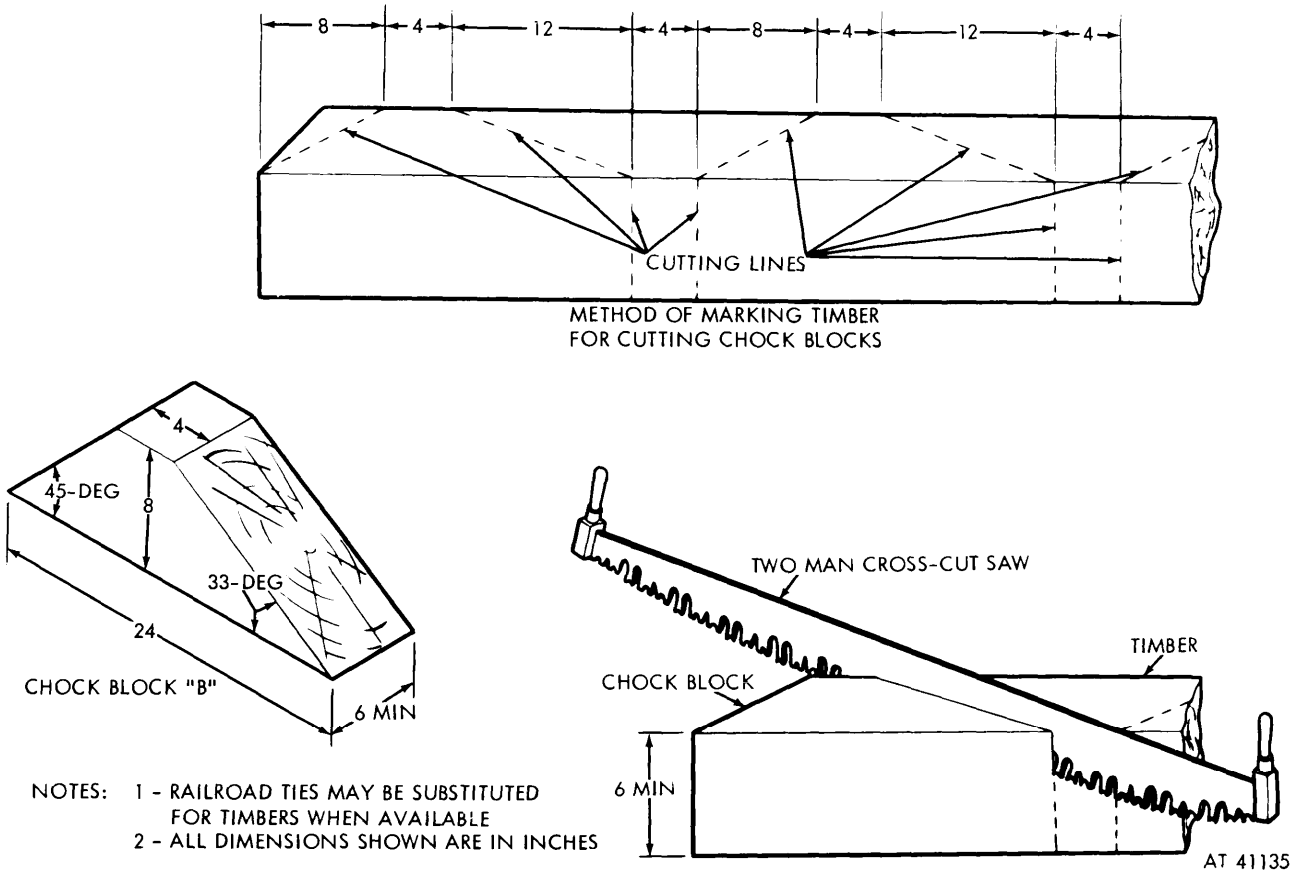

Figure 7-3. Cutting chock blocks from timbers.

d. Cushioning Material "C". Locate suitable cushioning material, such as waterproof paper or burlap between tires and cleats "D". The cushioning material should protrude beyond cleats "E" at floor" and above cleats "D".

e. Wheel Side Cleats "D" (1 x 8 Inches, Length to Suit). Locate and nail cleats to chock blocks "B" with four ten penny nails at each end. See note in *c* above.

f. Floor Side Cleats "E" (2 x 6-Inch Lower Cleat; 2 x 4-Inch Upper Cleat. Length to Suit. Locate two side cleats against whee1 side cleats "D" with cushioning material protruding underneath. Nail the 2 x 6-inch lower cleats to car floor with thirtypenny nails and 2 x 4-inch upper cleats to lowerr cleats and car floor with fortypenny nails.

g. Strapping Trailers for Single Loading (fig. 7-1).

(1) *Lunette strapping "F".* Locate two pieces of 1 ¼ x 0.035-inch hot-rolled steel strapping through eye of lunette and nail strapping to car floor with large headed nails.

(2) *Lunette cleats "G".* Locate a 2 x 4 x 12-inch cleat over each end of strapping and nail cleats to car floor with thirtypenny nails.

NOTE

Strap may be secured to to car floor by means of anchor plates as shown in detail A, figure 7-1.

(3) *Drawbar cleats "H".* Locate two 2 x 4 x 12-inch cleats on each side of drawbar. Nail lower cleats to car floor with thirtypenny nails and top cleat to the lower cleats and car floor with fortypenny nails.

(4) Drawbar strapping "J" (No. 8 gage black annealed wire, length to suit).

(a) Cut four lengths of wire to length required according to the location of stake pockets. Twist-tie wires together to form a single cable.

(b) Pass one cable end around drawbar and extend the cable end for a length beyond half the distance to a stake pocket.

(c) Pass the other end through the stake pocket. Form a 6-inch loop and wind each of the

four wires tightly around cable to secure the loop. Make certain the loop is well above the free cable end.

(d) Insert free cable end through the loop, pulling the cable hand tight and form another loop winding ends tightly around the cable.

(e) Locate a random length 2 x 2-inch cleat between cables. Insert end of a tightening tool at approximate center of cables and twist-tie cables just taught enough to remove all slack, retaining cleat in its position between cables.

(f) Repeat above operation for opposite side of flatcar.

(5) Body strapping "J". Locate cable (4) above and attach to rear end of trailer bracket and stake pocket. Twist-tie as prescribed for drawbar strapping (4 above).

h. Strapping Trailers for Double Loading (fig. 7-2).

NOTE

Separate upper and lower trailers by 2 x 4 inches, length to suit dunnage.

(1) *Landing leg.* Place landing legs in position (Fig. 7-2) and secure to car floor by passing one 2 x 2 \ 18-inch cleat through loop at lower end of leg. Nail cleat to car floor with thirtypenny nails.

(2) *Lunette strapping "J" (No. 8 gage black annealed wire, length to suit).* Locate cable (g (4) above) and attach to stake pockets. Twist-tie as prescribed for drawbar strapping (g (4) above).

(3) *Body strapping.*

(a) Encircle both front and rear of upper and lower trailers with two pieces of 1 ¼ x 0.035-inch hot-rolled steel strapping "F". Apply strap seals and crimp.

NOTE

Apply suitable dunnage, such as creped cellulose wadding (kimpak) or corrugated cardboard between trailers and strapping at each contact point.

(b) Encircle rear end of upper and lower trailers with four strands of No. 8 gage black annealed wires “J” and secure to stake pockets (fig. 7-2). Twist-tie as prescribed for drawbar stripping (g (4) above).

i. Gondola or Boxcar Strapping (optional for Flatcars). Locate 1 ¼ x 0.035-inch hot-rolled steel strapping at each location specified in *g* and *h* above, where strapping is attached to stake pockets. Coil strapping around steel anchor plates as shown in details A and B, figure 7-1. Secure by nailing anchor plates to car floor with not less than six twentypenny nails (doubleheader nails preferred). As an alternate method of securing trailers to car floors, form and substitute a cable “J”, consisting of four strands of No. 8 gage black annealed wire or wires of equivalent strength, at each location for steel strapping “F”. Attach cables to car floors by wrapping around wooden cleats “K” (2 x 4 x 18-inches). Locate cleats lengthwise of car and nail to car floor with thirtypenny nails (g (4) above). Join both ends of cable together, twist, and tighten with rod or bolt just taut enough to take up slack (details B and C, fig. 7-1).

APPENDIX A

REFERENCES

A-1. Publication Indexes

The following indexes should be consulted frequently for latest changes or revisions and for new publications related to materiel covered in this technical manual.

Index of Army Films, Transparencies, GTA Charts, and Recordings. . . . . .. DA Pam108-1
Index of Administrative Publications. . . . . DA Pam 310-1
lndex of Blank Forms . . . . . DA Pam 310-2
Index of Doctrinal, Training, and Organizational Publications . . . . . DA Pam 310-3
Index of Technical Manuals, Technical Bulletins, Supply Manuals (types 7, 8, and 9), Supply Bulletins, and Lubrication Orders . . . . . DA Pam 310-4
Index of Supply Catalogs and Supply Manuals. . . . . DA Pam 310-6

A-2. Forms

Refer to TM 38-750, The Army Maintenance Management System (TAMMS), for instructions on the use of maintenance forms pertaining to the material.

A-3. Publications

Accident Reporting and Records. . . . . AR 385-40
Explosives and Demolitions. . . . . FM 5-25
Color and Marking of Military Vehicles, Construction Equipment, and Materials Handling Equipment. . . . . TB 746-93-1
Wheeled Vehicles: Inspection, Care Preservation During Storage . . . . . TB 9-300-2 / 1
Railway OperatingRulea . . . . . TM 55-200
Operation and Maintenance Ordnance Material in Extreme Cold Weather 0° to—65° (TO 36-1-40). . . . . TM 9-207
Operator's Manual: Welding Theory and Application . . . . . TM 9-237
Electrical Equipment (Bendix-Scintilla) . . . . . TM 9-1825E
Pneumatic Tires and Inner Tubes. . . . . TM 9-2610-200-20
Pneumatic Tires and Inner Tubes (Including Depot Rebuild) . . . . . TM 9-2610-200-34
Manual for the Wheeled Vehicle Driver. . . . . TM 21-305
Administrative Storage of Equipment. . . . . TM 740-90-1

APPENDIX B

MAINTENANCE ALLOCATION CHART

Section I. INTRODUCTION

B-1. General

The maintenance allocation chart (MAC) assigns authorized maintenance functions to each maintenance level. These functions are assigned to the lowest available maintenance level based on past experience in the following considerations:

a. Skills Available.

b. Time Required.

c. Tools and Test Equipment Authorized.

If the maintenance function is a replacement function only, the item is not listed in the MAC. Such an item, if included in the Repair Parts and Special Tools List for the end item, is automatic authority to replace at the lowest maintenance level to which the part is authorized. Deviation from maintenance operations as allocated in the MAC is authorized only upon approval of the Army commander reprsentative.

B-2. Definitions

Maintenance functions will be limited to and defined as follows:

a. Inspect. To determine serviceability of an item by comparing its physical. mechanical, and electrical characteristics with established standards.

b. Test. To verify serviceability and to detect electrical or mechanical failure by use of test equipment.

c. Service. To clean, to preserve, to charge, and to add fuel, lubricants, cooling agents, and air.

d. Adjust. To rectify to the extent necessary to bring into proper operating range.

e. Aline. To adjust specified variable elements of an item to bring to optimum performance.

f. Calibrate. To determine the corrections to be made in the readings of instruments or test equipment used in precise measurement. Consists of the comparison of two instruments, one of which is a certified standard of known accuracy, to detect and adjust any discrepancy in the accuracy of the instrument being compared with the certified standard.

g. Install. To set up for use in an operational environment such as an emplacement, site, or vehicle.

h. Replace. To replace unserviceable items with serviceable assemblies, subassemblies, or parts.

i. Repair. Those maintenance operations necessary to restore an item to serviceable condition through correction of material damage or a specific failure. Repair may be accomplished at each level of maintenance.

j. Overhaul. Normally the highest degree of maintenance performed by the Army in order to minimize time. Work in process is consistent with quality and economy of operation. It consists of that maintenance necessary to restore an item to completely serviceable condition as prescribed by maintenance standards in technical publications for each item of equipment. Overhaul normally does not return an item to like new, zero mileage, or zero hour condition.

k. Rebuild. The highest degree of materiel maintenance. It consists of restoring equipment as nearly as possible to new condition in accordance with original manufacturing standards. Rebuild is performed only when required by operational considerations or other paramount factors and then only at the depot maintenance category. Rebuild reduces to zero the hours or miles the equipment, or component thereof, has been in use.

l. Symbols. The uppercase letter placed in the appropriate column indicates the lowest level at which that particular maintenance function is to be performed.

C Operator/Crew
O Organizational Maintenance
F Direct Support Maintenance
H General Support Maintenance

B-3. Explanation of Columns

a. Column 1, Group Number. This column lists group numbers, the purpose of which is to identify components, assemblies, subassemblies, and models, with next higher assembly.

b. Column 2, Functional Group. This column lists the noun names of components assemblies, and subassemblies on which maintenance is authorized.

c. Column 3, Maintenance Functions. This column carries a heading for each of the maintenance functions, defined in paragraph B-2 of this section.

d. Column 4, Tools and Equipment. This column shall be used to specify by code those tools and test equipment required to perform the designated maintenance function.

e. Column 5, Remarks. This column will list any special information or instructions required, but defined elsewhere, and required for performance of the designated maintenance function.

Section II. MAINTENANCE ALLOCATION CHART

(1) Group No.	(2) Functional group	(3) Maintenance functions											(4) Tools and equipment	(5) Remarks
		A Inspect	B Test	C Service	D Adjust	E Align	F Calibrate	G Install	H Replace	I Repair	J Overhaul	K Rebuild		
	GROUP 06—ELECTRICAL													
	Lights	C	..	..	..	..	..	..	O					
0613	Cable, intervehicular	..	..	..	..	..	..	..	O	O				
	Harness, wiring chassis	..	..	..	..	..	..	..	O	O				
	GROUP 11—AXLE													
1100	Axle	..	..	..	..	..	..	..	F	F				
	GROUP 12—BRAKES													
1201	Controls and linkage handbrake	C	..	..	O	..	..	..	O	O				
	Shoe, brake	O	..	..	..	..	..	..	O	F				
	GROUP 13—WHEELS, HUBS AND DRUMS													
1311	Drum, brake	O	..	..	..	..	..	..	O	F				
	Wheel	O	..	..	..	..	..	..	O					
	Hub, Wheel	O	..	..	..	..	..	..	O					
1313	Tires	C	..	..	..	..	..	..	O	F				
	Tubes	O	..	..	..	..	..	..	O	O				
	GROUP 15—TOWING ATTACHMENTS AND DRAWBARS													
1503	Drawbar	C	..	..	..	..	..	..	O	F				
	Lunette	..	..	..	..	..	..	..	O	F				
1507	Leg, support	..	..	..	..	..	..	..	O	F				
	GROUP 16—SPRINGS AND SHOCK ABSORBERS													
1601	Springs	C	..	..	..	..	..	..	O	F				
1604	Shock absorbers	C	..	..	..	..	..	..	O	F				
	GROUP 17—FENDERS													
1701	Fenders	C	..	..	..	..	..	..	O	F				
	GROUP 18—BODY													
1808	Storage box	C	..	..	..	..	..	..	O	O				
	Chest, telephone cable splicer	C	..	..	..	..	..	..	O	O				
1810	Cargo Body	C	..	..	..	..	..	..	F					
	GROUP 22—MISCELLANEOUS ACCESSORIES													
2201	Canvas cover	C	..	..	..	..	..	..	O					
2202	Reflectors	C	..	..	..	..	..	..	O					
2210	Plate, vehicle data	C	..	..	..	..	..	..	O					

APPENDIX C

REPAIR PARTS AND SPECIAL TOOL LIST

Section I. INTRODUCTION

C-1. Scope

This appendix lists basic issue items, repair parts, and special tools for perform ante of organizational, direct, and general support maintenance of the 1 / 4-ton, 2-wheel, M100 Cargo Trailer, Ml15 Chassis and M367 Maintenance Trailer.

C-2. General

This Repair Parts, Special Tools and Basic Issue Items List is divided into the following sections:

a. Basic Issue Items. Not applicable.

b. Maintenance and Operating Supplies—Section III. A listing of maintenance and operating supplies required for initial operation.

c. Repair Parts-Section III. A combined list of repair parts authorized for the performance of maintenance at the organizational, direct support, and general support levels in figure and item number sequence.

d. Special Tools-Section IV. A combined list of special tools authorized for the performance of maintenance at the organizational, direct support, and general support levels. Test and support equipment are not applicable.

e. Federal Stock Number and Reference Number Index–Section V. A list of Federal stock numbers in ascending numerical sequence, followed by a list of reference numbers appearing in the listings, in ascending alpha-numer sequence, cross-referenced to the illustration figure number and item number.

C-3. Explanation of Columns

The following provides an explanation of columns in the tabulated lists in section II through section IV.

a. Source. Maintenance, and Recoverability Codes (SMR).

(1) Source Code, indicates the selection status and source for the listed item. Source Codes are—

P Repair Parts, Special Tools and Test Equipment supplied from the GSA / DSA, or Army supply system, and authorized for use at indicated maintenance categories.

NOTE

P source coded items with missing Federal Stock Numbers are items which are not recorded in the Army Master Data File (AMDF) and can not be requisitioned from the supply system. When these stock numbers are broadcast in the AMDF they will be provided by a change to this manual.

P2 Repair Parts, Special Tools and Test Equipment which are procured and stocked for insurance purposes because the combat or military essentiality of the end item dictates that a minimum quantity be available in the supply system.

P9 Assigned to items which are NSA design controlled: unique repair parts, special tools, test, measuring and diagnostic equipment, which are stocked and supplied by the Army COMSEC Logistic System and which are not subject to the provisions of AR 380-41.

P10 Assigned to items which are NSA design Controlled: special tools, test, measuring and diagnostic equipment for COMSEC support, which are accountable under the provisions of AR 380-41, and which are stocked and supplied by the Army COMSEC Logistic System.

M Repair Parts, Special Tools and Test Equipment which are not procured or stocked as such, in the supply system but are to be manufactured at indicated maintenance levels.

A Assemblies which are not procured or stocked as such, but are made up of two or more units. Such component units carry individual stock numbers and descriptions, are procured and stocked separately and can be assembled to form the required assembly at indicated maintenance categories.

X Parts and assemblies that are not procured or stocked because the failure rate is normally below that of the applicable end item of component. The failure of such part or assembly should result in retirement of the end item from the supply system.

X1 Repair Parts which are not procured or stocked. The requirement for such items will be filled by the next higher assembly or component.

X2 Repair Parts, Special Tools, and Test Equipment which are not stocked and have no foreseen mortality. The indicated maintenance category requiring such repair parts will attempt to obtain the parts through cannibalization or salvage, if not obtainable through cannibalization or salvage, the item may be requisitioned with exception data, from the end item manager, for immediate use.

G Major assemblies that are procured with PEMA funds for initial issue only as exchange assemblies at DSU and GSU level. These assemblies will not be stocked above the DS and GS level or returned to depot supply level.

NOTE

Cannibalization or salvage may be used as a source of supply for any items source coded above, except those coded X 1.

(2) Maintenance Code. Indicates the lowest level of maintenance authorized to install the listed item. The maintenance level codes are—

C Crew or Operator Maintenance
O Organizational Maintenance
F Direct Support Maintenance
H General Support Maintenance

(3) Recoverability Code. Indicates whether unserviceable items should be returned for recovery or salvage. Recoverability Codes are—

R Applied to repair parts, (assemblies and components), special tools and test equipment which are considered economically reparable at direct and general support maintenance levels. When the item is no longer economically reparable, it is normally disposed of at the GS level. When supply considerations dictate, some of these repair parts may be listed for automatic return to supply for depot level repair as set forth in AR 710-50. When so listed, they will be replaced by supply on an exchange basis.

S Repair Parts, Special Tools, Test Equipment and assemblies which are economically reparable at DSU and GSU activities and which normally are furnished by supply on an exchange basis. When items are determined by a GSU to be uneconomically reparable, they will be evacuated to a depot for evaluation and analysis before final disposition.

T Higher dollar value recoverable repair parts, special tools and test equipment which are subject to special handling and are issued on an exchange basis. Such items will be evacuated to the depot for overhaul or final disposition. Communications-Electronics and Missile Support Items will be repaired / overhauled only at depots.

U Repair Parts, Special Tools and Test Equipment specifically selected for salvage by reclamation units because of precious metal content, critical materiels, high dollar value or reusable casings or castings.

NOTE

When no code is indicated in the recoverability column, the part will be considered non-recoverable.

b. Federal Stock Number. Indicates the Federal stock number assigned to the item and will be used for requisitioning purposes.

c. Description. This column indicates the federal item name and any additional description of the item required. A part number or other reference number is followed by the applicable five-digit federal supply code for manufacturers in parentheses. Repair parts quantities included in the kits, set, and assemblies are shown in front of the repair part name.

d. Unit of Measure (U / M). At two character alphabetic abbreviation indicating the amount or quantity of the item upon which the allowances are based, e.g., ft., ea., pr., etc.

e. Quantity Incorporated in Unit. Indicates the quantity of the item used in the functional group. A "V" appearing in this column in lieu of quantity indicates that a definite quantity cannot be indicated (e.g. shims, spacers, etc.).

f. Component Application. Identifies the component application of each maintenance or operating supply item (M & O supplies only).

g. Quantity Required for Initial Operation. Indicates the quantity of each maintenance or operating supply item required for initial operation of the equipment (M&O supplies only).

h. Quantity Required for 8 Hours Operation. Indicates the estimated quantities required for an average 8 hours of operation (M & O supplies only).

i. Notes. Indicates informative noted keyed to data appearing in a preceding column (M & O supplies only).

j. 15—Day Organizational Maintenance Authorization.

(1) Repair parts reflected in section IV represent repair parts use at the organizational category of maintenance and will be requistioned on an "as required" basis until stockage is based on demand in accordance with AR710-2. An asterisk indicates authorization to obtain or use as required.

(2) Major Army commanders are authorized to approve reductions in the range of support items authorized for use in units within their commands. Recommendations for increases in range of items authorized for use will be forwarded to Commanding General, U. S. Army Tank-Automotive Command, ATTN: AMSTA-M (NMP), Warren, Mich., 48090.

(3) The allowance quantities for special tools, or Test, Measurement and Diagnostic Equipment (TMDE) and other suppport equipment peculiar to the item are shown in the appropriate density spread / allowance columns.

(4) Subsequent changes to allowances will be accomplished in accordance with AR710-2. In addition, the major commands will be authorized to approve reductions in stockage allowances (range and quantity). If additional items are considered necessary, recommendation should be forwarded to Commanding General, U. S. Army Tank-Automotive Command, ATTN: AMSTA-MAPT Warren, Mich., 48090, for exception or revision to the allowance list.

k. 30-Day DS / GS Maintenance Authorization.

(1) The repair parts list includes asterisk entries in separate columns—one for Direct Support (DS) and one for General Support (GS)—as appropriate to indicate the total range of repair parts authorized for use at that category or required to be removed or disassembled during the performance of authorized maintenance operations. They will be requisitioned initially on an "as

required" basis. The repair parts authorized at the DS/GS levels will be those authorized for the maintenance mission at these levels. Requirements for repair part stockage and for distribution to supported units will be based on demand and determined in accordance with AR710-2. An asterisk indicates authorization to obtain or use as required.

(2) Special Tools or Test, Measurement and Diagnostic Equipment (TMDE) and other support equipment peculiar to an item are listed with quantities in the appropriate density spread/allowance columns.

l. 1-Year Allowances Per 100 Equipments/Contingency Planning Purposes. This column indicates the quantity required for distribution and contingency planning purposes. An asterisk indicates authorization to obtain or use as required.

m. Depot Maintenance Allowance Per 100 Equipment. Not applicable.

n. Illustration.

(1) *Figure Number.* Indicates the figure number of illustration in which the item is shown.

(2) *Item Number. Indicates the callout number used to reference the item in the illustration.*

C-4. How to Locate Repair Parts

a. When Federal stock number or reference number is unknown:

(1) *First.* Using the table of contents, determine the functional group or functional subgroup within which the repair part belongs. This is necessary since illustrations are prepared for functional groups or functional subgroups and listings are divided into the same groups.

(2) *Second.* Find the illustration covering the functional group or functional subgroup to which the repair part belongs.

(3) *Third.* Identify the repair part on the illustration and not the illustration figure and item number of the repair part.

(4) *Fourth.* Using the repair parts listing, find the functional group or functional subgroup to which the repair part belongs and locate the illustration figure and item number noted on the illustration.

b. When Federal stock number or reference number is known:

(1) *First.* Using the Index of federal stock numbers and Reference numbers find the pertinent federal stock number or reference number. This index is in ascending alpha-numeric sequence, cross-referenced to the illustration figure number and item number.

(2) *Second.* Using the repair parts listing, find the functional group or functional subgroup of the repair part and the illustration figure number and item number reference in the Index of Federal Stock Numbers and Reference Numbers.

C-5. Federal Supply Code for Manufacturers

Code	*Manufacturer*
19207	U. S. Army Tank-Automotive Command Warren, Mich., 48090
20076	Electric Wheel Company Quincy, Ill., 62301
21450	Ordnance Corps Engineering Standards Rock Island Arsenal Rock Island, Ill.
96906	Military Standards Promulgated by Standardization Div, Directorate of Logistic Services DSA

Section II. MAINTENANCE AND OPERATING SUPPLIES

(1) Component application	(2) Federal stock number	(3) Description	(4) Quantity required F initial operation	(5) Quantity required F/8 hrs operation	(6) Notes
General Operation (1)	9150-190-0905	GAA, Grease automotive and artillery, 5-lb. can			(1) Used in wheel bearings, front spring bolt, lunette bracket, brake cable at hold down clamps, rear spring bolt.
Handbrake lever (2)	9150-190-0907	GAA, Grease automotive and artillery, 5-lb. can			(2) Plunger assembly and pivot bolt, bellcrank.
		Oil, lubrication, 1 qt as follows			
	9150-265-9433	OE / HDO, lubricating oil internal combustion engine			
	9150-242-7602	OE / HDO lubricating oil internal combustion engine (sub-zero)			

Section III. REPAIR PARTS

(1) SMR Code	(2) Federal Stock Number	(3) Description Reference Number & Mfr. Code / Useable on Code	(4) Unit of meas	(5) Qty inc in unit	(6) 15-day org maint alw. (a) 1-5	(b) 6-20	(c) 21-50	(d) 51-100	(7) 30-day DS maint alw. (a) 1-20	(b) 21-50	(c) 51-100	(8) 30-day GS maint alw. (a) 1-20	(b) 21-50	(c) 51-100	(9) 1-yr.alw. per 100 equip. cntgcy planning	(10) Illustration (a) Fig. No.	(b) Item No.
		GROUP 06—ELECTRICAL SYSTEM															
		0609—LIGHTS															
		NOTE. Electrical Tool Kit, FSN 5180-876-9336, authorized by T. O. & E. will be utilized for applicable replacement parts not specified in this group.															
P-O	6220-846-9745	STOPLIGHT, VEHICULAR: MS51302-1 (96906)	EA	1	*	*	*	*	*	*	*	*	*	*	*	C-1	1
P-O	5305-764-0070	SCREW, MACHINE: door MS51959-46 (96906)	EA	2	*	*	*	*	*	*	*	*	*	*	*	C-1	2
P-O	6220-775-2384	DOOR, ASSEMBLY SIGNAL LIGHT: stoplight 8741646 (19207)	EA	1	*	*	*	*	*	*	*	*	*	*	*	C-1	3
P-O	6220-678-9047	GASKET: door 8694464 (19207)	EA	1	*	*	*	*	*	*	*	*	*	*	*	C-1	4
P-O	6240-019-0877	LAMP, INCANDESCENT: stoplight MS15570-1251 (96906)	EA	1	*	*	*	*	*	*	*	*	*	*	*	C-1	5
X1		BODY; light 8741650 (19207)		1												C-1	6
P-O	5306-225-9084	SCREW, CAP, HEXAGON: mounting ½in. lg, 5/16-24UNF-2A MS90726-29 (96906)	EA	1	*	*	*	*	*	*	*	*	*	*	*	C-1	7
P-O	5310-407-9566	WASHER, LOCK: 5/16 nom. size mounting bolt MS35338-45 (96906)	EA	1	*	*	*	*	*	*	*	*	*	*	*	C-1	8
P-O	6220-669-5623	STOPLIGHT-TAILLIGHT: MS51329-1 (96906)	EA	1	*	*	*	*	*	*	*	*	*	*	*	C-2	1
P-O	6220-752-6020	DOOR, ASSEMBLY: taillight 7526020 (19207)	EA	1	*	*	*	*	*	*	*	*	*	*	*	C-2	2
P-O	5330-297-7106	PACKING, PREFORMED: door 7320658 (19207)	EA	1	*	*	*	*	*	*	*	*	*	*	*	C-2	3
P-O	6240-044-6914	LAMP, INCANDESCENT: taillight MS35478-1683 (96906)	EA	1	*	*	*	*	*	*	*	*	*	*	*	C-2	4
P-O	6240-019-0877	LAMP INCANDESCENT: taillight MS15570-1251 (96906)	EA	2	*	*	*	*	*	*	*	*	*	*	*	C-2	5
P-O	6220-368-4945	BODY: taillight (when exhausted use 6220-500-0437) 7525997 (19207)	EA	1	*	*	*	*	*	*	*	*	*	*	*	C-2	6
P-O	5310-637-9541	WASHER, LOCK: ⅜ nom. size mounting screw MS35338-46 (96906)	EA	2	*	*	*	*	*	*	*	*	*	*	*	C-2	7

(1) SMR Code	(2) Federal Stock Number	(3) Description Reference Number & Mfr. Code / Useable on Code	(4) Unit of meas	(5) Qty inc in unit	(6) 15-day org maint alw. (a) 1-5	(b) 6-20	(c) 21-50	(d) 51-100	(7) 30-day DS maint alw. (a) 1-20	(b) 21-50	(c) 51-100	(8) 30-day GS maint alw. (a) 1-20	(b) 21-50	(c) 51-100	(9) 1-yr.alw. per 100 equip. cntgcy planning	(10) Illustration (a) Fig. No.	(b) Item No.
		0609—LIGHTS—Continued															
P-O	5305-269-3209	SCREW, CAP, HEXAGON: ⅜-16UNC-2A, ¾ in. lg, mounting MS90725-58 (96906)	EA	2	*	*	*	*	*	*	*	*	*	*	*	C-2	8
P-O	6220-880-1625	LIGHT ASSEMBLY, COMPOSITE MARKER: 24V, stop and turn signal, tail blackout marker and blackout stop 11614157 (19207)	EA	2	*	*	*	*	*	*	*	*	*	*	*	C-3	1
P-O	6220-179-4324	DOOR AND LENS ASSEMBLY: composite taillight with screws, marker light 11639535 (19207)	EA	1	*	*	*	*	*	*	*	*	*	*	*	C-3	2
P-O	5330-462-0907	GASKET: marker light door, composite taillight 11639519-2 (19207)	EA	1	*	*	*	*	*	*	*	*	*	*	*	C-3	3
P-O	6240-044-6914	LAMP, INCANDESCENT: composite taillight, G6, bulb, single contact, candelabra, bayonet base, stop and turn signal MS35478-1683 (96906)	EA	1	*	*	*	*	*	*	*	*	*	*	*	C-3	4
P-O	6240-019-3093	LAMP, INCANDESCENT: composite taillight, G6 bulb, single contact, candelabra, bayonet base, tail MS15570-623 (96906)	EA	1	*	*	*	*	*	*	*	*	*	*	*	C-3	5
P-O	5310-061-1258	WASHER, LOCK: ⅜ nom size, internal and external tooth, marker light mounting MS45904-76 (96906)	EA	1	*	*	*	*	*	*	*	*	*	*	*	C-3	8
P-O	5310-627-6128	WASHER, LOCK: ⅜ nom size, external tooth, marker light mounting MS35335-35 (96906)	EA	1	*	*	*	*	*	*	*	*	*	*	*	C-3	8
P-O	5305-269-3208	SCREW, CAP, HEXAGON HEAD: ⅜-16UNC-2A, ⅞ in. lg marker light mounting MS90725-57 (96906)	EA	1	*	*	*	*	*	*	*	*	*	*	*	C-3	9
XI		BODY ASSEMBLY: marker light 11639520 (19207)		1												C-3	6
P-O	6240-019-0877	LAMP, INCANDESCENT: blackout marker, blackout stop MS15570-1251 (96906)	EA	2	*	*	*	*	*	*	*	*	*	*	*	C-3	7
		0613—WIRING HARNESS															
P-O	2590-855-9304	CABLE: intervehicular 8722864 (19207)	EA	1	*	*	*	*	*	*	*	*	*	*	*	C-4	1
P-O	5340-177-7832	CLAMP: intervehicular cable 8382973 (19207)	EA	1	*	*	*	*	*	*	*	*	*	*	*	C-4	2

(1) SMR Code	(2) Federal Stock Number	(3) Description Reference Number & Mfr Code — Useable on Code	(4) Unit of meas	(5) Qty inc in unit	(6) 15-day org maint alw. (a) 1-5	(b) 6-20	(c) 21-50	(d) 51-100	(7) 30-day DS maint alw. (a) 1-20	(b) 21-50	(c) 51-100	(8) 30-day GS maint alw. (a) 1-20	(b) 21-50	(c) 51-100	(9) 1-yr.alw. per 100 equip. cntgcy planning	(10) Illustration (a) Fig. No.	(b) Item No.
		0613—WIRING HARNESS—Continued															
P-O	5310-596-7691	WASHER, LOCK: external tooth, No. 10 nom size, intervehicular cable clamp MS35335-32 (96906)	EA	10	*	*	*	*	*	*	*	*	*	*	*	C-4	3
P-O	5305-855-0956	SCREW: intervehicular cable clamp MS24629-47 (96906)	EA	10	*	*	*	*	*	*	*	*	*	*	*	C-4	4
X2-O		COVER: intervehicular cable 10924576 (19207)	EA	1	*	*	*	*	*	*	*	*	*	*	*	C-4	5
P-O	2590-860-0555	CLIP: wiring harness 8722870 (19207)	EA	2	*	*	*	*	*	*	*	*	*	*	*	C-4	6
P-O	5305-855-0964	SCREW: wiring harness clamp MS24629-48 (96906)	EA	10	*	*	*	*	*	*	*	*	*	*	*	C-4	7
P-O	5340-385-3288	CLAMP, LOOP: wiring harness 7979250 (19207)	EA	5	*	*	*	*	*	*	*	*	*	*	*	C-4	8
P-O	2590-863-5602	HARNESS: trailer wiring 10924552 (19207)	EA	1	*	*	*	*	*	*	*	*	*	*	*	C-4	9
P-O	5325-737-5064	GROMMET, RUBBER: wiring harness 7375064 (19207)	EA	5	*	*	*	*	*	*	*	*	*	*	*	C-4	10
X2-O		BRACKET: right hand, marker light 11625310-2 (19207)	EA	1	*	*	*	*	*	*	*	*	*	*	*	C-4	11
P-O	5310-934-9751	NUT, PLAIN HEXAGON: No. 10-32 UNF-2B, wiring harness clip MS35650-302 (96906)	EA	8	*	*	*	*	*	*	*	*	*	*	*	C-4	12
X2-O		CLIP: wiring harness 8722943 (19207)	EA	4	*	*	*	*	*	*	*	*	*	*	*	C-4	13
P-O	5310-045-3296	WASHER, LOCK: wiring harness clip MS35338-43 (96906)	EA	8	*	*	*	*	*	*	*	*	*	*	*	C-4	14
P-O	5305-989-7434	SCREW, MACHINE: No. 10-32UNF-2A, ½ in. lg, wiring harness clip MS35207-263 (96906)	EA	8	*	*	*	*	*	*	*	*	*	*	*	C-4	15
P-O	5340-057-2891	CLAMP, LOOP: 5/16 in. wiring harness MS21333-4 (96906)	EA	5	*	*	*	*	*	*	*	*	*	*	*	C-4	16
P-O	5306-225-9087	SCREW, CAP, HEXAGON HEAD: 5/16-24UNF-2A, ¾ in lg, marker light bracket MS90726-32 (96906)	EA	4	*	*	*	*	*	*	*	*	*	*	*	C-4	17
P-O	5310-407-9566	WASHER, LOCK: 5/16 nom size, marker light bracket MS35338-45 (96906)	EA	4	*	*	*	*	*	*	*	*	*	*	*	C-4	18
P-O	5310-880-7746	NUT, PLAIN HEXAGON: 5/16-25UNF-2B, marker light bracket MS51968-5 (96906)	EA	4	*	*	*	*	*	*	*	*	*	*	*	C-4	19

Section III. REPAIR PARTS

(1) SMR Code	(2) Federal Stock Number	(3) Description Reference Number & Mfr. Code — Useable on Code	(4) Unit of meas	(5) Qty inc in unit	(6) 15-day org maint alw. (a) 1-5	(b) 6-20	(c) 21-50	(d) 51-100	(7) 30-day DS maint alw. (a) 1-20	(b) 21-50	(c) 51-100	(8) 30-day GS maint alw. (a) 1-20	(b) 21-50	(c) 51-100	(9) 1-yr.alw. per 100 equip. cntgcy planning	(10) Illustration (a) Fig. No.	(b) Item No.
P-O	5310-627-6128	WASHER, LOCK: external tooth ⅜ nom. size, marker light bracket MS35335-35 (96906)	EA	4	*	*	*	*	*	*	*	*	*	*	*	C-4	20
P-O	5310-637-9541	WASHER, LOCK: ⅜ nom. size, marker light bracket MS35338-46 (96906)	EA	4	*	*	*	*	*	*	*	*	*	*	*	C-4	21
P-O	5305-269-3210	SCREW CAP, HEXAGON HEAD: ⅜-16UNC-2A, 7/8 in. lg, marker light bracket MS90725-59 (96906)	EA	4	*	*	*	*	*	*	*	*	*	*	*	C-4	22
X2-O		BRACKET: left hand, marker light 11625310-1 (19207)	EA	1	*	*	*	*	*	*	*	*	*	*	*	C-4	23
P-O	5340-912-8871	CLAMP, LOOP: 1.000 in. intervehicular cable MS21333-43 (96906)	EA	1	*	*	*	*	*	*	*	*	*	*	*	C-4	24
P-O	5310-582-5965	WASHER, LOCK: ¼ nom. size, intervehicular cable clamp MS35338-44 (96906)	EA	1	*	*	*	*	*	*	*	*	*	*	*	C-4	25
P-O	5305-068-0500	SCREW, CAP, HEXAGON HEAD: ¼-20UNC-2A, ½ in. lg, intervehicular cable clamp MS90725-3 (96906)	EA	1	*	*	*	*	*	*	*	*	*	*	*	C-4	26
		GROUP 11—REAR AXLE															
		1100—REAR AXLE ASSEMBLY															
X2-O		BOLT, MACHINE: backing plate 7328298 (19207)	EA	12	*	*	*	*	*	*	*	*	*	*	*	C-5	1
P-O	5310-637-9541	WASHER, LOCK: ⅜ nom. size, backing plate MS35338-46 (96906)	EA	12	*	*	*	*	*	*	*	*	*	*	*	C-5	2
P-O	5310-732-0599	NUT, PLAIN, HEXAGON: ⅜-24-UNF-2B, backing plate MS51968-8 (96906)	EA	12	*	*	*	*	*	*	*	*	*	*	*	C-5	3
P-F	2530-732-8287	AXLE, VEHICULAR: with brakes, hubs and drums (issue until stock is depleted, then use AXLE, FSN 2530-732-8288) 7328287 (19207)	EA	1					*	*	*	*	*	*	*	C-5	4
P-F	2530-732-8288	AXLE, VEHICULAR: with spring seats and pads 7328288 (19207)	EA	1					*	*	*	*	*	*	*	C-5	4

Section III. REPAIR PARTS

(1) SMR Code	(2) Federal Stock Number	(3) Description Reference Number & Mfr. Code / Useable on Code	(4) Unit of meas	(5) Qty inc in unit	(6) 15-day org maint alw. (a) 1-5	(b) 6-20	(c) 21-50	(d) 51-100	(7) 30-day DS maint alw. (a) 1-20	(b) 21-50	(c) 51-100	(8) 30-day GS maint alw. (a) 1-20	(b) 21-50	(c) 51-100	(9) 1-yr.alw. per 100 equip. cntgcy planning	(10) Illustration (a) Fig. No.	(b) Item No.
		1201—HANDBRAKES															
P-)	5315-143-6323	PIN, STRAIGHT HEADED: cable end to cam lever 7735847 (19207)	EA	2	*	*	*	*	*	*	*	*	*	*	*	C-6	1
P-)	2530-732-8329	CABLE, ASSEMBLY, HANDBRAKE: 7328329 (19207)	EA	1	*	*	*	*	*	*	*	*	*	*	*	C-6	2
P-)	5310-880-7746	NUT, PLAIN, HEXAGON: 5/16-24UNF-2B, brake cable MS51968-5 (96906)	EA	7	*	*	*	*	*	*	*	*	*	*	*	C-6	3
P-)	2530-732-8334	EQUALIZER: brake cable 7328334 (19207)	EA	1	*	*	*	*	*	*	*	*	*	*	*	C-6	4
P-)	5310-842-1488	NUT, SLOTTED, HEXAGON: 3/8-24UNF-2B, bell crank MS35692-21 (96906)	EA	1	*	*	*	*	*	*	*	*	*	*	*	C-6	5
P-)	5315-842-3044	PIN, COTTER: 3/32 dia. 3/4 in. lg, connecting link MS24665-283 (96906)	EA	2	*	*	*	*	*	*	*	*	*	*	*	C-6	6
P-)	2530-732-8341	CONNECTING LINK, RIGID: hand lever to bellcrank 7328341 (19207)	EA	1	*	*	*	*	*	*	*	*	*	*	*	C-6	7
P-)	2530-732-8332	BELL CRANK: hand lever to brake cable 7328332 (19207)	EA	1	*	*	*	*	*	*	*	*	*	*	*	C-6	8
P-)	5306-732-8335	BOLT, HOOK: adjusting, brake cable equalizer 7328335 (19207)	EA	1	*	*	*	*	*	*	*	*	*	*	*	C-6	9
P-)	5306-732-8333	BOLT, SHOULDER: bellcrank 7328333 (19207)	EA	1	*	*	*	*	*	*	*	*	*	*	*	C-6	10
P-)	5340-732-8331	STRAP, RETAINING: brake cable 7328331 (19207)	EA	2	*	*	*	*	*	*	*	*	*	*	*	C-6	11
P-)	5310-407-9566	WASHER, LOCK: 5/16 nom. size, brake cable MS35338-45 (96906)	EA	6	*	*	*	*	*	*	*	*	*	*	*	C-6	12
P-)	5306-225-9091	SCREW, CAP, HEXAGON HEAD: 5/16-24UNF-2A, 1 1/4 in. lg, brake cable MS90726-36 (96906)	EA	6	*	*	*	*	*	*	*	*	*	*	*	C-6	13
P-)	2530-737-3238	LEVER: handbrake, assembly 7373238 (19207)	EA	1	*	*	*	*	*	*	*	*	*	*	*	C-7	1
P-)	5306-225-9089	SCREW, CAP, HEXAGON HEAD: 5/16-24UNF-2A, 1.000 in. lg, hand lever bracket MS90726-34 (96906)	EA	2	*	*	*	*	*	*	*	*	*	*	*	C-7	2
X2-O		BRACKET: hand lever 7328343 (19207)	EA	1	*	*	*	*	*	*	*	*	*	*	*	C-7	3
P-)	2530-737-3240	RATCHET: hand lever 7373240 (19207)	EA	1	*	*	*	*	*	*	*	*	*	*	*	C-7	4

(1) SMR Code	(2) Federal Stock Number	(3) Description (Reference Number & Mfr. Code; Useable on Code)	(4) Unit of meas	(5) Qty inc in unit	(6) 15-day org maint alw. (a) 1-5	(b) 6-20	(c) 21-50	(d) 51-100	(7) 30-day DS maint alw. (a) 1-20	(b) 21-50	(c) 51-100	(8) 30-day GS maint alw. (a) 1-20	(b) 21-50	(c) 51-100	(9) 1-yr. alw. per 100 equip. cntgcy planning	(10) Illustration (a) Fig. No.	(b) Item No.
		1201—HANDBRAKES—Continued															
P-O	5305-269-2805	SCREW, CAP, HEXAGON HEAD: ⅜-24UNF-2A, 1¼ in. lg, lever to ratchet and bracket MS90726-62 (96906)	EA	1	*	*	*	*	*	*	*	*	*	*	*	C-7	5
P-O	5306-225-9087	SCREW, CAP, HEXAGON HEAD: 5/16-24UNF-2A, ¾ in. lg, pawl to hand lever MS90726-32 (96906)	EA	1	*	*	*	*	*	*	*	*	*	*	*	C-7	6
P-O	2530-737-3241	PAWL: hand lever 7373241 (19207)	EA	1	*	*	*	*	*	*	*	*	*	*	*	C-7	7
X1		LATCH: hand lever 606063 (21450)		1												C-7	8
P-O		SPRING, HELICAL EXTENSION: hand lever latch 606353 (20076)	EA	1	*	*	*	*	*	*	*	*	*	*	*	C-7	9
X1		SHAFT: hand lever 607174 (21450)		1												C-7	10
P-O		RIVET: hand lever shaft 500204 (21450)	EA	1	*	*	*	*	*	*	*	*	*	*	*	C-7	11
P-O	5310-984-3807	NUT, SELF-LOCKING HEXAGON: 5/16-24UNF, pawl to hand lever machine bolt MS51922-13 (96906)	EA	1	*	*	*	*	*	*	*	*	*	*	*	C-7	12
P-O	5310-982-4908	NUT, SELF-LOCKING HEXAGON: ⅜-24UNF-3B, lever to ratchet and bracket machine bolt MS21045-6 (96906)	EA	1	*	*	*	*	*	*	*	*	*	*	*	C-7	13
P-O	5310-880-7746	NUT, PLAIN HEXAGON: 5/16-24UNF-2B, hand lever bracket MS51068-5 (96906)	EA	2	*	*	*	*	*	*	*	*	*	*	*	C-7	14
P-O	5310-407-9566	WASHER, LOCK: 5/16 nom. size, hand lever bracket MS35338-45 (96906)	EA	2	*	*	*	*	*	*	*	*	*	*	*	C-7	15
X2-O		LEVER, BRAKE STRUT: operating 5304075 (19207)	EA	2	*	*	*	*	*	*	*	*	*	*	*	C-8	1
X2-O		PLATE ASSEMBLY, BACKING: left 7377747 (19207)	EA	1	*	*	*	*	*	*	*	*	*	*	*	C-8	2
X2-O	2530-737-7748	PLATE ASSEMBLY, BACKING: right 7377748 (19207)	EA	1	*	*	*	*	*	*	*	*	*	*	*	C-8	2
X2-O		STRUT, BRAKESHOE: left 7377726 (19207)	EA	1	*	*	*	*	*	*	*	*	*	*	*	C-8	3
X2-O		STRUT, BRAKESHOE: right 7377727 (19207)	EA	1	*	*	*	*	*	*	*	*	*	*	*	C-8	3

(1) SMR Code	(2) Federal Stock Number	(3) Description: Reference Number & Mfr. Code — Useable on Code	(4) Unit of meas	(5) Qty inc in unit	(6) 15-day org maint alw. (a) 1-5	(b) 6-20	(c) 21-50	(d) 51-100	(7) 30-day DS maint alw. (a) 1-20	(b) 21-50	(c) 51-100	(8) 30-day GS maint alw. (a) 1-20	(b) 21-50	(c) 51-100	(9) 1-yr.alw. per 100 equip. cntgcy planning	(10) Illustration (a) Fig. No.	(b) Item No.
P-O	2530-741-2178	BRAKESHOE: assembly, rear, with lining 7412178 (19207)	EA	2	*	*	*	*	*	*	*	*	*	*	*	C-8	4
P-O	2530-204-3233	BRAKESHOE: assembly, front, with lining 7735544 (19207)	EA	2	*	*	*	*	*	*	*	*	*	*	*	C-8	4
P-F	5320-013-6065	RIVET, TUBULAR: 9/32 in. lg, brake lining MS16535-233 (96906)	EA	48	*	*	*	*	*	*	*	*	*	*	*	C-8	5
X1		LINING: brake, rear shoe 5304104 (19207)		2												C-8	6
X1		LINING: brake, front shoe 5304105 (19207)		2												C-8	6
P-O	5360-664-7691	SPRING, HELICAL EXTENSION: brake shoe 7412179 (19207)	EA	2	*	*	*	*	*	*	*	*	*	*	*	C-8	7
X2-O		PIN: anchor, shoe 7412176 (19207)	EA	4	*	*	*	*	*	*	*	*	*	*	*	C-8	8
X2-O		PLATE: shoe anchor pin 7735449 (19207)	EA	2	*	*	*	*	*	*	*	*	*	*	*	C-8	9
X2-O		CAM: shoe anchor pin 7377745 (19207)	EA	4	*	*	*	*	*	*	*	*	*	*	*	C-8	10
X2-O		ECCENTRIC: adjusting shoe 7377746 (19207)	EA	4	*	*	*	*	*	*	*	*	*	*	*	C-8	11
P-O	5310-584-5272	WASHER, LOCK: ½ nom. size, shoe anchor pin MS35338-48 (96906)	EA	4	*	*	*	*	*	*	*	*	*	*	*	C-8	12
P-O	5310-732-0560	NUT, PLAIN, HEXAGON: ½-20UNF-2B, shoe anchor pin MS51968-14 (96906)	EA	4	*	*	*	*	*	*	*	*	*	*	*	C-8	13
P-O	5310-732-0559	NUT, PLAIN, HEXAGON: ⅜-24UNF-2B, shoe eccentric MS51968-8 (96906)	EA	4	*	*	*	*	*	*	*	*	*	*	*	C-8	14
P-O	5310-637-9541	WASHER, LOCK: ⅜ nom. size, shoe eccentric MS35338-46 (96906)	EA	4	*	*	*	*	*	*	*	*	*	*	*	C-8	15
		GROUP 13—WHEELS AND TRACKS															
		1311—WHEEL ASSEMBLY															
P-O	5330-852-6255	SEAL, OIL: hub bearing MS51920-21 (96906)	EA	2	*	*	*	*	*	*	*	*	*	*	*	C-9	1
P-O	3110-100-3526	CONE: hub bearing 705423 (21450)	EA	4	*	*	*	*	*	*	*	*	*	*	*	C-9	2
P-O	2530-693-0792	HUB WITH BEARING CUPS: right and left 8333378 (19207)	EA	2	*	*	*	*	*	*	*	*	*	*	*	C-9	3
P-O	5306-732-8294	BOLT: left wheel hub 7328294 (19207)	EA	5	*	*	*	*	*	*	*	*	*	*	*	C-9	4

Section III. REPAIR PARTS

(1) SMR Code	(2) Federal Stock Number	(3) Description Reference Number & Mfr. Code Useable on Code	(4) Unit of meas	(5) Qty inc in unit	(6) 15-day org maint alw. (a) 1-5	(b) 6-20	(c) 21-50	(d) 51-100	(7) 30-day DS maint alw. (a) 1-20	(b) 21-50	(c) 51-100	(8) 30-day GS maint alw. (a) 1-20	(b) 21-50	(c) 51-100	(9) 1-yr.alw. per 100 equip. cntgcy planning	(10) Illustration (a) Fig. No.	(b) Item No.
		1311—WHEEL ASSEMBLY—Continued															
P-O	5306-732-8293	BOLT: right wheel hub 7328293 (19207)	EA	5	*	*	*	*	*	*	*	*	*	*	*	C-9	4
X2-O		HUB: wheel 7328374 (19207)	EA	1	*	*	*	*	*	*	*	*	*	*	*	C-9	5
P-O	2530-352-6962	BRAKEDRUM: wheel hub 7328371 (19207)	EA	1	*	*	*	*	*	*	*	*	*	*	*	C-9	6
P-O	5305-957-6649	SCREW, MACHINE: ¼-20UNC-2A, ⅜ in. lg, brake drum MS35190-285 (96906)	EA	12	*	*	*	*	*	*	*	*	*	*	*	C-9	7
P-O	5310-769-6520	WASHER, KEY: thrust, wheel bearing 7696520 (19207)	EA	2	*	*	*	*	*	*	*	*	*	*	*	C-9	8
P-O	5310-737-1106	NUT, PLAIN, HEXAGON: adjusting or lock, hub bearing 7371106 (19207)	EA	4	*	*	*	*	*	*	*	*	*	*	*	C-9	9
P-O	5310-769-6521	WASHER, KEY: wheel bearing 7696521 (19207)	EA	2	*	*	*	*	*	*	*	*	*	*	*	C-9	10
P-O	5330-737-1109	GASKET: hub cap 7371109 (19207)	EA	2	*	*	*	*	*	*	*	*	*	*	*	C-9	11
P-O	1055-033-6209	COVER, ACCESS: hub 7735821 (19206)	EA	2	*	*	*	*	*	*	*	*	*	*	*	C-9	12
P-O	5310-637-9541	WASHER, LOCK: ⅜ nom size, access cover MS35338-46 (96906)	EA	12	*	*	*	*	*	*	*	*	*	*	*	C-9	13
P-O	5305-269-3210	SCREW, CAP, HEXAGON HEAD: ⅜-16UNC-2A, 7/8 in. lg, access cover MS90725-59 (96906)	EA	12	*	*	*	*	*	*	*	*	*	*	*	C-9	14
		1313—TIRES AND TUBES															
P-O-R	2610-678-1363	TIRE, PNEUMATIC: MS35388-93 (96906)	EA	2	*	*	*	*	*	*	*	*	*	*	*	C-10	1
P-O	2640-060-3550	CAP, PNEUMATIC TIRE VALVE: valve extension MS51375-1 (96906)	EA	2	*	*	*	*	*	*	*	*	*	*	*	C-10	2
P-O	2640-050-1229	VALVE CORE: pneumatic tire. 100AA (17875)	EA	2	*	*	*	*	*	*	*	*	*	*	*	C-10	3
P-O	2610-269-7332	INNER TUBE, PNEUMATIC: tire MS35392-8 (96906)	EA	2	*	*	*	*	*	*	*	*	*	*	*	C-10	4
		1503—PINTLE AND TOWING ATTACHMENTS															
P-O	2540-732-8311	LUNETTE: drawbar 7328311 (19207)	EA	1	*	*	*	*	*	*	*	*	*	*	*	C-11	1
X2		SCREW, CAP: safety chain 7328364 (19207)	EA	1	*	*	*	*	*	*	*	*	*	*	*	C-11	2

Section III. REPAIR PARTS

(1) SMR Code	(2) Federal Stock Number	(3) Description Reference Number & Mfr. Code / Useable on Code	(4) Unit of meas	(5) Qty inc in unit	(6) 15-day org maint alw. (a) 1-5	(b) 6-20	(c) 21-50	(d) 51-100	(7) 30-day DS maint alw. (a) 1-20	(b) 21-50	(c) 51-100	(8) 30-day GS maint alw. (a) 1-20	(b) 21-50	(c) 51-100	(9) 1-yr.alw. per 100 equip. cntgcy planning	(10) Illustration (a) Fig. No.	(b) Item No.
		1503—PINTLE AND TOWING ATTACHMENTS—Continued															
P-O	2510-732-8306	BRACKET, ASSEMBLY LUNETTE: frame drawbar 7328306 (19207)	EA	1	*	*	*	*	*	*	*	*	*	*	*	C-11	3
P-O	5340-732-8330	CLIP, SPRING TENSION: 7328330 (19207)	EA	1	*	*	*	*	*	*	*	*	*	*	*	C-11	4
P-O	5310-582-5965	WASHER, LOCK: ¼ nom. size, clip to lunette bracket MS35338-44 (96906)	EA	1	*	*	*	*	*	*	*	*	*	*	*	C-11	5
P-O	5305-068-0498	SCREW, CAP, HEXAGON HEAD: ¼-20UNC-2A, ⅜ in. lg, clip to lunette bracket MS90725-1 (96906)	EA	1	*	*	*	*	*	*	*	*	*	*	*	C-11	6
P-O	4730-050-4208	FITTING, LUBRICATION: lunette bracket MS15003-1 (96906)	EA	1	*	*	*	*	*	*	*	*	*	*	*	C-11	7
P-O	5310-732-8312	WASHER, FLAT: lunette compression spring (inner) 7328312 (19207)	EA	1	*	*	*	*	*	*	*	*	*	*	*	C-11	8
P-O	2540-200-7022	SPRING, HELICAL, COMPRESSION: lunette bracket 7328313 (19207)	EA	1	*	*	*	*	*	*	*	*	*	*	*	C-11	9
P-O	5310-732-8314	WASHER, KEY: lunette compression spring (outer) 7328314 (19207)	EA	1	*	*	*	*	*	*	*	*	*	*	*	C-11	10
P-O	5315-013-7238	PIN, COTTER: 5/32 dia., 1¾ in. lg, lunette MS24665-425 (96906)	EA	1	*	*	*	*	*	*	*	*	*	*	*	C-11	11
P-O	5310-835-2140	NUT, PLAIN, SLOTTED HEXAGON: 7/8-14 UNF-2B, lunette MS35692-69 (96906)	EA	1	*	*	*	*	*	*	*	*	*	*	*	C-11	12
P-O	2540-732-8302	DRAWBAR: lunette bracket 7328302 (19207)	EA	2	*	*	*	*	*	*	*	*	*	*	*	C-11	13
X2-O		CLAMP: drawbar, right 7338988 (19207)	EA	1	*	*	*	*	*	*	*	*	*	*	*	C-11	14
X2-O		CLAMP: drawbar, left 7338989 (19207)	EA	1	*	*	*	*	*	*	*	*	*	*	*	C-11	15
P-O	5310-998-0608	NUT, PLAIN, SLOTTED, HEXAGON: ¾-16UNF-2B, safety chain MS35692-61 (96906)	EA	1	*	*	*	*	*	*	*	*	*	*	*	C-11	16
P-O	5315-012-0123	PIN, COTTER: ⅛ dia. 1¼ in. lg, safety chain MS24665-355 (96906)	EA	1	*	*	*	*	*	*	*	*	*	*	*	C-11	17
P-O	2540-732-8317	CHAIN ASSEMBLY TOWING: lunette bracket 7328317 (19207)	EA	2	*	*	*	*	*	*	*	*	*	*	*	C-11	18

(1) SMR Code	(2) Federal Stock Number	(3) Description Reference Number & Mfr. Code / Useable on Code	(4) Unit of meas	(5) Qty inc in unit	(6) 15-day org maint alw. (a) 1-5	(b) 6-20	(c) 21-50	(d) 51-100	(7) 30-day DS maint alw. (a) 1-20	(b) 21-50	(c) 51-100	(8) 30-day GS maint alw. (a) 1-20	(b) 21-50	(c) 51-100	(9) 1-yr.alw. per 100 equip. cntgcy planning	(10) Illustration (a) Fig. No.	(b) Item No.
		1503—PINTLE AND TOWING ATTACHMENTS—Continued															
		Non-Illustrated															
P-O	5310-732-0559	NUT, PLAIN HEXAGON: ⅜-24UNF-2B drawbar MS51968-8 (96906)	EA	4	*	*	*	*	*	*	*	*	*	*	*		
P-O	5305-269-2803	SCREW, CAP, HEXAGON HEAD: ⅜-24UNF-2A, 1.000 in. lg, drawbar MS90726-60 (96906)	EA	4	*	*	*	*	*	*	*	*	*	*	*		
P-O	5310-637-9541	WASHER, LOCK: ⅜ nom. size, drawbar MS35338-46 (96906)	EA	4	*	*	*	*	*	*	*	*	*	*	*		
		1507—LANDING GEAR															
P-O	5306-732-8362	BOLT, MACHINE: support leg bracket 7328362 (19207)	EA	1	*	*	*	*	*	*	*	*	*	*	*	C-12	1
P-O	5315-012-0123	PIN, COTTER: ⅛ dia. 1¼ in. lg, support leg bracket MS24665-355 (96906)	EA	1	*	*	*	*	*	*	*	*	*	*	*	C-12	2
P-O	5310-998-0608	NUT, SLOTTED HEXAGON: ¾-16UNF-2B, support leg bracket MS35692-61 (96906)	EA	1	*	*	*	*	*	*	*	*	*	*	*	C-12	3
P-O	2530-732-8315	BRACKET SUPPORT LEG: lunette bracket 7328315 (19207)	EA	1	*	*	*	*	*	*	*	*	*	*	*	C-12	4
P-O	5310-842-1490	NUT, SLOTTED HEXAGON: leg support MS35692-37 (96906)	EA	2	*	*	*	*	*	*	*	*	*	*	*	C-12	5
P-O	5315-839-5822	PIN, COTTER: ⅛ dia., 1.000 in. lg, leg support MS24665-353 (96906)	EA	2	*	*	*	*	*	*	*	*	*	*	*	C-12	6
P-O-R	2510-734-3007	LEG: support bracket 7343007 (19207)	EA	1	*	*	*	*	*	*	*	*	*	*	*	C-12	7
P-O	5306-275-1646	BOLT, MACHINE: leg support 7328363 (19207)	EA	2	*	*	*	*	*	*	*	*	*	*	*	C-12	8
		GROUP 16—SPRINGS AND SHOCK ABSORBERS															
		1601—SPRINGS															
P-O	5306-732-8295	BOLT, "U": spring assembly 7328295 (19207)	EA	4	*	*	*	*	*	*	*	*	*	*	*	C-13	1
P-O	4730-050-4208	FITTING, LUBRICATION: fluid passage bolt MS15003-1 (96906)	EA	2	*	*	*	*	*	*	*	*	*	*	*	C-13	2
P-O	4730-206-1384	BOLT, FLUID PASSAGE: spring bracket 7328328 (19207)	EA	2	*	*	*	*	*	*	*	*	*	*	*	C-13	3
P-O	2510-732-8277	BRACKET, MOUNTING: spring, right front 7328277 (19207)	EA	1	*	*	*	*	*	*	*	*	*	*	*	C-13	4

(1) SMR Code	(2) Federal Stock Number	(3) Description Reference Number & Mfr. Code — Useable on Code	(4) Unit of meas	(5) Qty inc in unit	(6) 15-day org maint alw. (a) 1-5	(b) 6-20	(c) 21-50	(d) 51-100	(7) 30-day DS maint alw. (a) 1-20	(b) 21-50	(c) 51-100	(8) 30-day GS maint alw. (a) 1-20	(b) 21-50	(c) 51-100	(9) 1-yr.alw. per 100 equip. cntgcy planning	(10) Illustration (a) Fig. No.	(b) Item No.
		1601—SPRINGS—Continued															
P-O	6220-732-8276	BRACKET, MOUNTING: spring, left front 7328276 (19207)	EA	1	*	*	*	*	*	*	*	*	*	*	*	C-13	4
P-O	5310-850-6884	NUT, SLOTTED HEXAGON: 9/16-18UNF-2B, fluid passage bolt MS35692-45 (96906)	EA	2	*	*	*	*	*	*	*	*	*	*	*	C-13	5
P-O	5315-839-5822	PIN, COTTER: ⅛ dia., 1.000 in. lg, fluid passage bolt MS24665-353 (96906)	EA	2	*	*	*	*	*	*	*	*	*	*	*	C-13	6
P-O	3120-732-8366	BEARING, SLEEVE: spring eye 7328366 (19207)	EA	2	*	*	*	*	*	*	*	*	*	*	*	C-13	7
P-O	2510-732-8358	SPRING, ASSEMBLY LEAF: axle 7328358 (19207)	EA	2	*	*	*	*	*	*	*	*	*	*	*	C-13	8
P-O	2510-734-3076	PLATE, ASSEMBLY: right spring seat, with shaft 7343076 (19207)	EA	1	*	*	*	*	*	*	*	*	*	*	*	C-13	9
P-O	2510-769-7848	PLATE ASSEMBLY: left spring seat, with shaft 7697848 (19207)	EA	1	*	*	*	*	*	*	*	*	*	*	*	C-13	9
P-O	5310-209-0965	WASHER, LOCK: 7/16 nom. size, "U" bolt type spring clip MS35338-47 (96906)	EA	8	*	*	*	*	*	*	*	*	*	*	*	C-13	10
P-O	5310-732-8296	NUT, PLAIN, HEXAGON: "U" bolt 7328296 (19207)	EA	8	*	*	*	*	*	*	*	*	*	*	*	C-13	11
P-O	3120-732-8324	BEARING, BUSHING TYPE: "U" bolt, left hand threaded 7328324 (19207)	EA	1	*	*	*	*	*	*	*	*	*	*	*	C-13	12
P-O	2510-732-8325	BUSHING, SPRING SHACKLE: "U" bolt, right hand threaded 7328325 (19207)	EA	3	*	*	*	*	*	*	*	*	*	*	*	C-13	13
X2-O	2510-732-8282	BRACKET, MOUNTING: right rear, spring 7328282 (19207)	EA	1	*	*	*	*	*	*	*	*	*	*	*	C-13	14
X2-O		BRACKET, MOUNTING: left rear, spring 7328281 (19207)	EA	1	*	*	*	*	*	*	*	*	*	*	*	C-13	14
P-O	5340-732-8323	BUSHING, RUBBER: "U" bolt bearing 7328323 (19207)	EA	4	*	*	*	*	*	*	*	*	*	*	*	C-13	15
P-O	2510-732-8322	RETAINER, SPRING SHACKLE: "U" bolt bearing oil seal 7328322 (19207)	EA	4	*	*	*	*	*	*	*	*	*	*	*	C-13	16
P-O	2510-773-5833	SHACKLE: "U" bolt type, right mounting bracket 7735833 (19207)	EA	1	*	*	*	*	*	*	*	*	*	*	*	C-13	17
P-O	2510-737-1090	SHACKLE: "U" bolt type, left mounting bracket 7371090 (19207)	EA	1	*	*	*	*	*	*	*	*	*	*	*	C-13	17

(1) SMR Code	(2) Federal Stock Number	(3) Description Reference Number & Mfr. Code / Useable on Code	(4) Unit of meas	(5) Qty inc in unit	(6) 15-day org maint alw. (a) 1-5	(b) 6-20	(c) 21-50	(d) 51-100	(7) 30-day DS maint alw. (a) 1-20	(b) 21-50	(c) 51-100	(8) 30-day GS maint alw. (a) 1-20	(b) 21-50	(c) 51-100	(9) 1-yr. alw. per 100 equip. cntgcy planning	(10) Illustration (a) Fig. No.	(b) Item No.
		1601—SPRINGS—Continued															
		Non-Illustrated															
X2-O		SPACER: rear mounting bracket 7328286 (19207)	EA	2	*	*	*	*	*	*	*	*	*	*	*		
X2-O		BUMPER, AXLE: on frame 7338987 (19207)	EA	2	*	*	*	*	*	*	*	*	*	*	*		
P-O	5306-226-4825	BOLT, MACHINE: axle bumper MS90728-32 (96906)	EA	4	*	*	*	*	*	*	*	*	*	*	*		
P-O	5310-880-7744	NUT, PLAIN, HEXAGON: 5/16-18UNC-2B, axle bumper MS51967-5 (96906)	EA	4	*	*	*	*	*	*	*	*	*	*	*		
P-O	5310-407-9566	WASHER, LOCK: 5/16 nom. size, axle bumper MS35338-45 (96906)	EA	4	*	*	*	*	*	*	*	*	*	*	*		
		1604—SHOCK ABSORBERS															
P-O	5315-059-0206	PIN, COTTER: 3/16 dia. 1.000 in. lg, shock absorber MS24665-491 (96906)	EA	4	*	*	*	*	*	*	*	*	*	*	*	C-14	1
P-O	5310-281-8322	WASHER, FLAT: shock absorber 7371752 (19207)	EA	4	*	*	*	*	*	*	*	*	*	*	*	C-14	2
P-O	5340-734-3032	BUSHING, RUBBER: shock absorber 7343032 (19207)	EA	8	*	*	*	*	*	*	*	*	*	*	*	C-14	3
P-O	2540-708-8715	SHOCK ABSORBER, DIRECT: axle (when exhausted use 2540-769-7442) 7088715 (19207)	EA	2	*	*	*	*	*	*	*	*	*	*	*	C-14	4
		Non-Illustrated															
P-O	2540-732-8258	BRACKET, SHOCK ABSORBER: frame 7328258 (19207)	EA	2	*	*	*	*	*	*	*	*	*	*	*		
		GROUP 18—BODY ASSEMBLIES															
		1802—FENDERS															
X2-O		FENDER: cargo body 7740886 (19207)	EA	2	*	*	*	*	*	*	*	*	*	*	*	C-15	1
P-O	5310-732-0558	NUT, PLAIN, HEXAGON: 3/8-16UNC-2B, fender bracket MS51967-8 (96906)	EA	24	*	*	*	*	*	*	*	*	*	*	*	C-15	2
X2-O		BRACKET: fender 7328243 (19207)	EA	12	*	*	*	*	*	*	*	*	*	*	*	C-15	3
P-O	5310-637-9541	WASHER, LOCK: 3/8 nom. size, fender bracket MS35338-46 (96906)	EA	24	*	*	*	*	*	*	*	*	*	*	*	C-15	4
P-O	5305-269-3209	SCREW, CAP, HEXAGON HEAD: 3/8-16UNC-2A, 3/4 in. lg, fender bracket MS90725-58 (96906)	EA	24	*	*	*	*	*	*	*	*	*	*	*	C-15	5

(1) SMR Code	(2) Federal Stock Number	(3) Description Reference Number & Mfr. Code / Useable on Code	(4) Unit of meas	(5) Qty inc in unit	(6) 15-day org maint alw. (a) 1-5	(b) 6-20	(c) 21-50	(d) 51-100	(7) 30-day DS maint alw. (a) 1-20	(b) 21-50	(c) 51-100	(8) 30-day GS maint alw. (a) 1-20	(b) 21-50	(c) 51-100	(9) 1-yr.alw. per 100 equip. cntgcy planning	(10) Illustration (a) Fig. No.	(b) Item No.
		1808—STOWAGE BOXES															
P-O	2540-732-8344	BOX, VEHICULAR, STOWAGE: cargo body 7328344 (19207)	EA	1	*	*	*	*	*	*	*	*	*	*	*	C-16	1
X1		LID: vehicular stowage box 7328347 (19207)		1												C-16	
X1		PANEL: end, left, vehicular stowage box 7328346 (19207)		1												C-16	
X1		HASP: trunk bolt type, vehicular stowage box 7328349 (19207)		1												C-16	
X1		PANEL: body, vehicular stowage box 7328345 (19207)		1												C-16	
X1		PANEL; end, right, vehicular stowage box 7328367 (19207)		1												C-16	
P-O	2590-040-2075	CATCH: chest 7539197 (19207)	EA	8	*	*	*	*	*	*	*	*	*	*	*	C-17	1
X2-O		PIN: chest retainer 7971904 (19207)	EA	4	*	*	*	*	*	*	*	*	*	*	*	C-17	2
X2-O		CHEST ASSEMBLY: telephone cable splicer 7971882 (19207)	EA	2	*	*	*	*	*	*	*	*	*	*	*	C-17	3
		Non-Illustrated															
X1		HINGE: vehicular stowage box 7328348 (19207)		1													
P-O	5310-732-8316	WASHER, FLAT: vehicular stowage box 7328316 (19207)	EA	4	*	*	*	*	*	*	*	*	*	*	*		
P-O	5310-768-0319	NUT, PLAIN, HEXAGON: vehicular stowage box MS51968-2 (96906)	EA	4	*	*	*	*	*	*	*	*	*	*	*		
P-O	5305-988-1723	SCREW, MACHINE: vehicular stowage box MS35207-279 (96906)	EA	*4	*	*	*	*	**	*	*	*	*	*	*		
P-O	5310-582-5965	WASHER, LOCK: vehicular stowage box MS35338-44 (96906)	EA	4	*	*	*	*	*	*	*	*	*	*	*		
		1810—CARGO BODY															
X1		BODY: with frame 7328228 (19207)		1												C-18	1
X2-O		BRACKET: vehicular stowage box 7328247 (19207)	EA	1	*	*	*	*	*	*	*	*	*	*	*	C-18	2
X2-O		HOOK: paulin rope 7328241 (19207)	EA	11	*	*	*	*	*	*	*	*	*	*	*	C-18	3
P-O	2510-732-8336	VALVE ASSEMBLY, DRAIN: with handle, seal, and spring 7328339 (19207)	EA	2	*	*	*	*	*	*	*	*	*	*	*	C-18	4
P-O	2590-705-8970	SUPPORT, DRAIN VALVE: cargo body 7328340 (19207)	EA	2	*	*	*	*	*	*	*	*	*	*	*	C-18	5

(1) SMR Code	(2) Federal Stock Number	(3) Description Reference Number & Mfr. Code / Useable on Code	(4) Unit of meas	(5) Qty inc in unit	(6) 15-day org maint alw. (a) 1-5	(b) 6-20	(c) 21-50	(d) 51-100	(7) 30-day DS maint alw. (a) 1-20	(b) 21-50	(c) 51-100	(8) 30-day GS maint alw. (a) 1-20	(b) 21-50	(c) 51-100	(9) 1-yr.alw. per 100 equip. cntgcy planning	(10) Illustration (a) Fig. No.	(b) Item No.
		1810—CARGO BODY—Continued															
P-O	5310-596-7691	WASHER, LOCK: external tooth No. 10, drain valve support MS35335-32 (96906)	EA	4	*	*	*	*	*	*	*	*	*	*	*	C-18	6
P-O	5305-990-6444	SCREW, MACHINE: No. 10-32UNF-2A, 3/8 in. lg, drain valve support MS35207-261 (96906)	EA	4	*	*	*	*	*	*	*	*	*	*	*	C-18	7
		Non-Illustrated															
X1		BODY: cargo (without frame) 7328229 (19207)		1													
		GROUP 22—BODY ACCESSORY ITEMS															
		2201—CANVAS ITEMS															
P-O	2540-732-6336	TARPAULIN: body 7328289 (19207)	EA	1	*	*	*	*	*	*	*	*	*	*	*	C-19	1
		2202—ACCESSORY ITEMS															
P-O	5310-768-0319	NUT, PLAIN, HEXAGON: 1/4-28UNF-2B, reflector MS51968-2 (96906)	EA	8	*	*	*	*	*	*	*	*	*	*	*	C-20	1
P-O	5310-582-5965	WASHER, LOCK: 1/4 nom. size, reflector MS35338-44 (96906)	EA	8	*	*	*	*	*	*	*	*	*	*	*	C-20	2
P-O	9905-205-2795	REFLECTOR: red, indicating cargo body MS35387-1 (96906)	EA	4	*	*	*	*	*	*	*	*	*	*	*	C-20	3
P-O	9905-202-3639	REFLECTOR: amber, indicating, cargo body MS35387-2 (96906)	EA	4	*	*	*	*	*	*	*	*	*	*	*	C-20	3
P-O	5310-732-8316	WASHER, FLAT: reflector 7328316 (19207)	EA	8	*	*	*	*	*	*	*	*	*	*	*	C-20	4
P-O	5305-988-1723	SCREW, MACHINE: 1/4-28UNF-2A, 1/2 in. lg, reflector MS35207-279 (96906)	EA	8	*	*	*	*	*	*	*	*	*	*	*	C-20	5
		2210—IDENTIFICATION PLATES															
P-O	2540-732-8351	PLATE, IDENTIFICATION: service 7328351 (19207)	EA	1	*	*	*	*	*	*	*	*	*	*	*	C-21	1
P-O	2590-732-8350	PLATE, IDENTIFICATION: vehicle data 7328350 (19207)	EA	1	*	*	*	*	*	*	*	*	*	*	*	C-21	2
P-O	2590-732-8352	PLATE, IDENTIFICATION: shipping data 7328352 (19207)	EA	1	*	*	*	*	*	*	*	*	*	*	*	C-21	3

(1) SMR Code	(2) Federal Stock Number	(3) Description Reference Number & Mfr. Code — Useable on Code	(4) Unit of meas	(5) Qty inc in unit	(6) 15-day org maint alw.				(7) 30-day DS maint alw.			(8) 30-day GS maint alw.			(9) 1-yr.alw. per 100 equip. cntgcy planning	(10) Illustration	
					(a) 1-5	(b) 6-20	(c) 21-50	(d) 51-100	(a) 1-20	(b) 21-50	(c) 51-100	(a) 1-20	(b) 21-50	(c) 51-100		(a) Fig. No.	(b) Item No.
		GROUP 26—TOOLS															
		2604—SPECIAL TOOLS															
P-O	5120-596-1370	WRENCH, SOCKET: single end 7081465 (19207)	EA	1	1	1	1	1	1	1	1	1	1	1	1	C-22	1
P-O	5120-708-3346	REMOVER AND REPLACER: two piece type 7083346 (19207)	EA	1	1	1	1	1	1	1	1	1	1	1	1	C-22	2
P-O	5120-708-3216	SCREW: remover and replacer 7083216 (19207)	EA	1	1	1	1	1	1	1	1	1	1	1	1	C-22	3

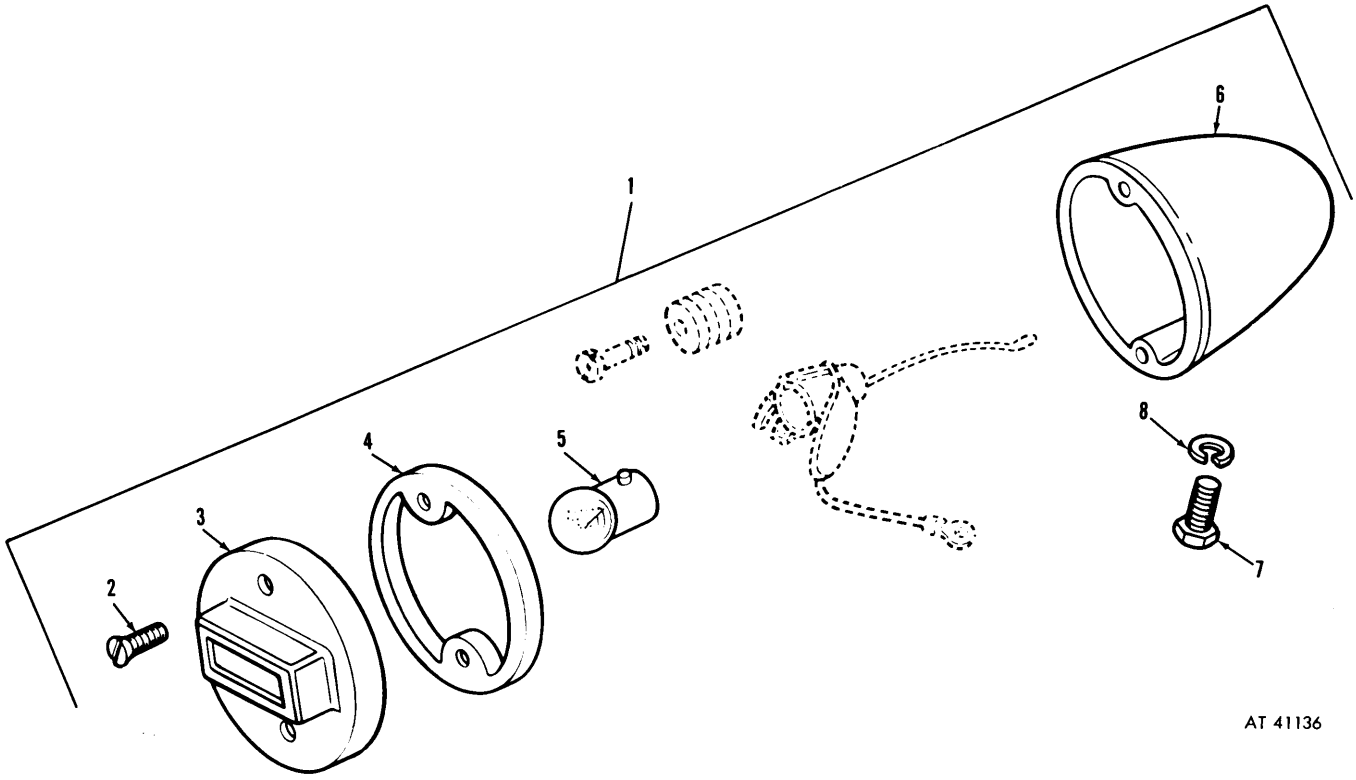

Figure C-1. Blackout-stoplight assembly.

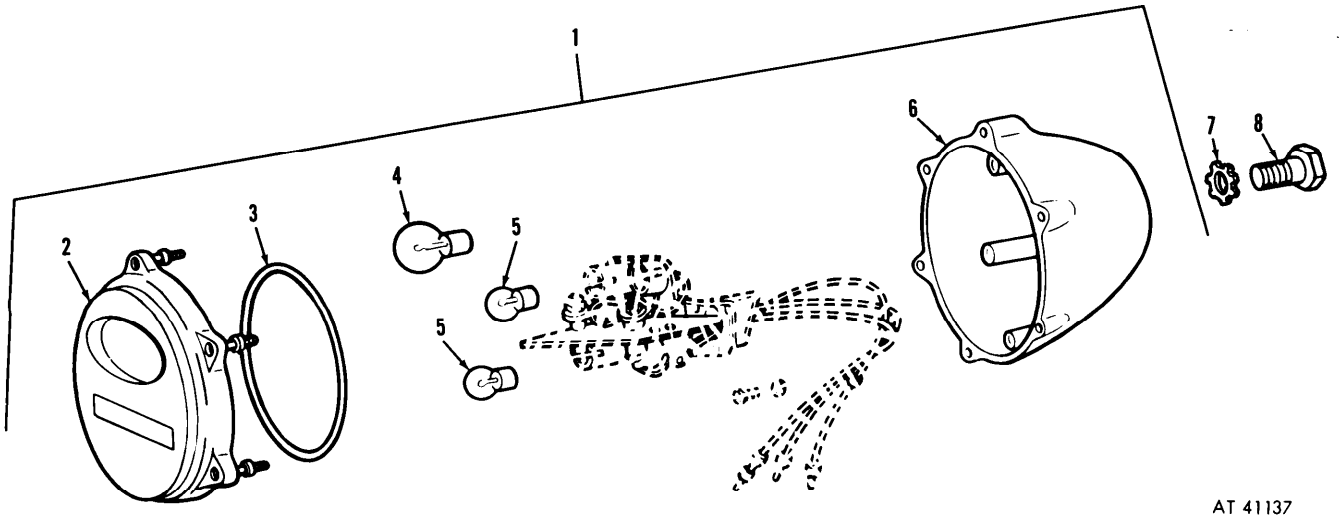

Figure C-2. Taillight-stoplight assembly.

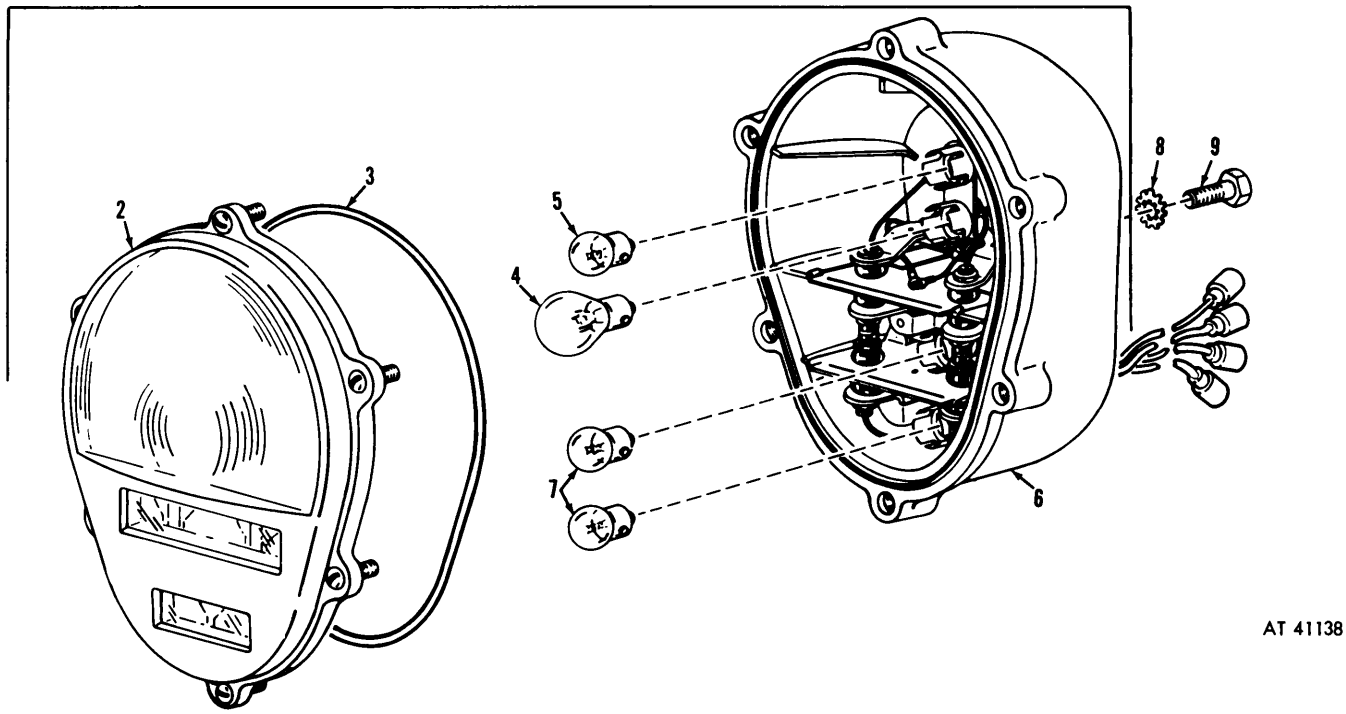

Figure C-3. Composite marker light assembly.

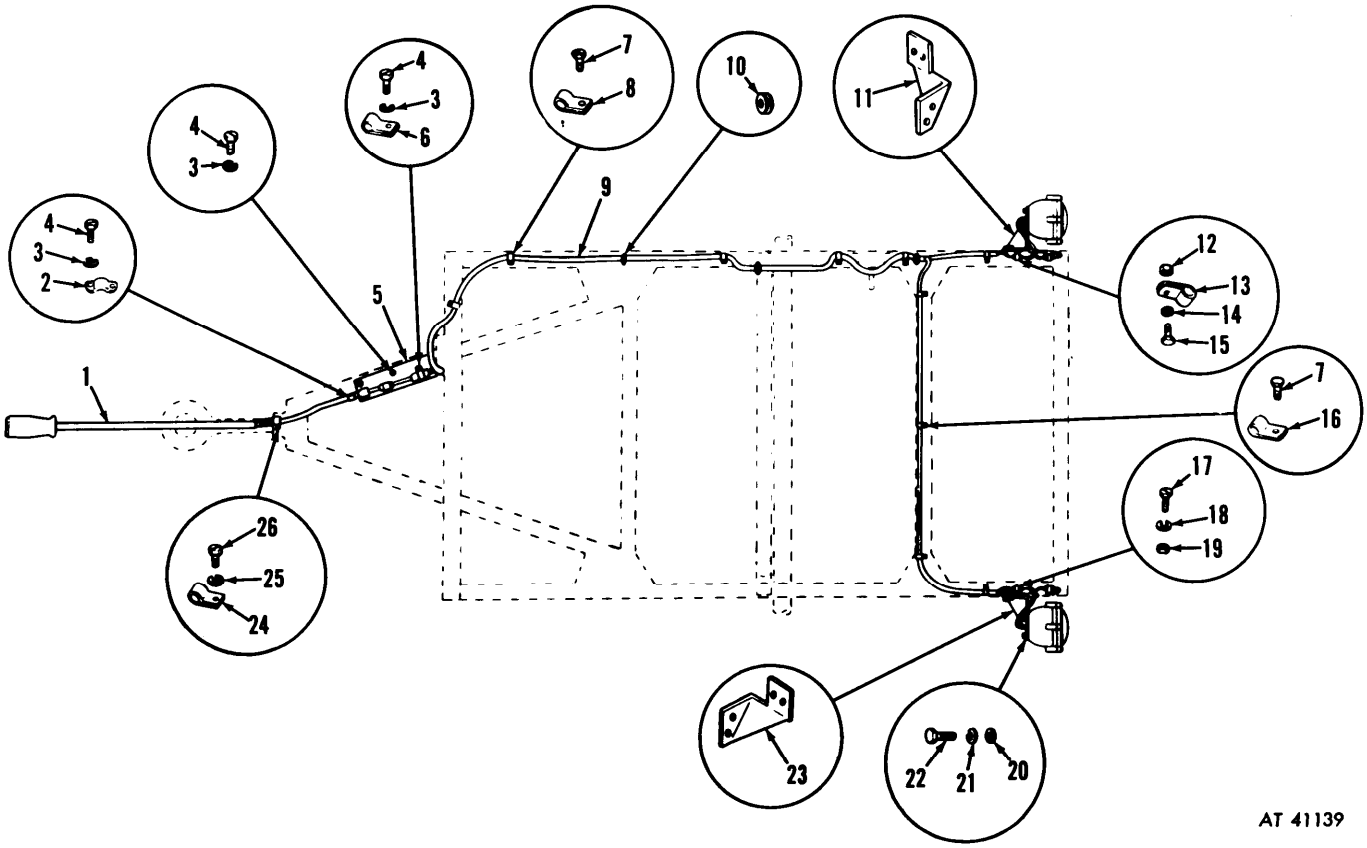

Figure C-4. Trailer wiring.

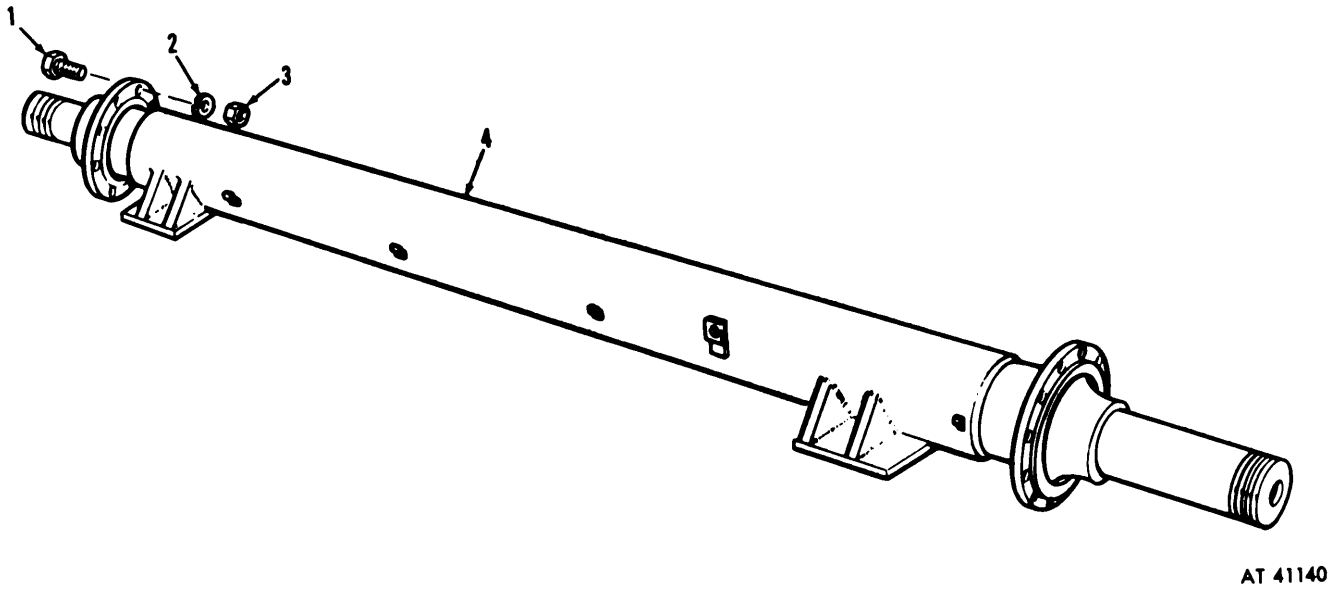

Figure C-5 Rear axle.

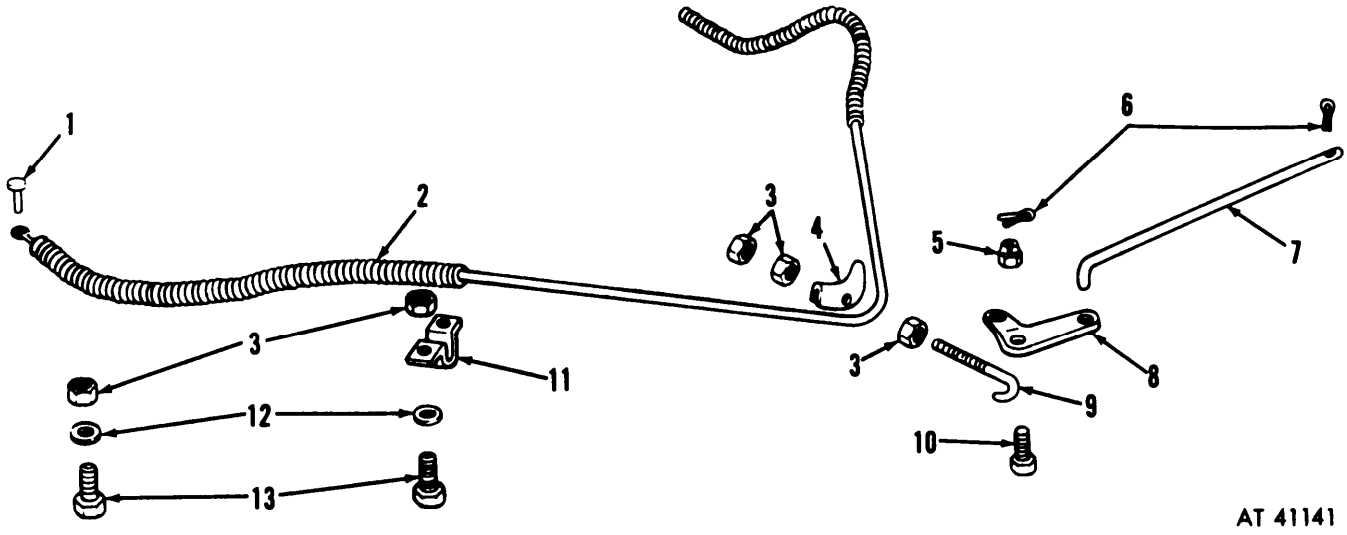

Figure C-6. Brake cable.

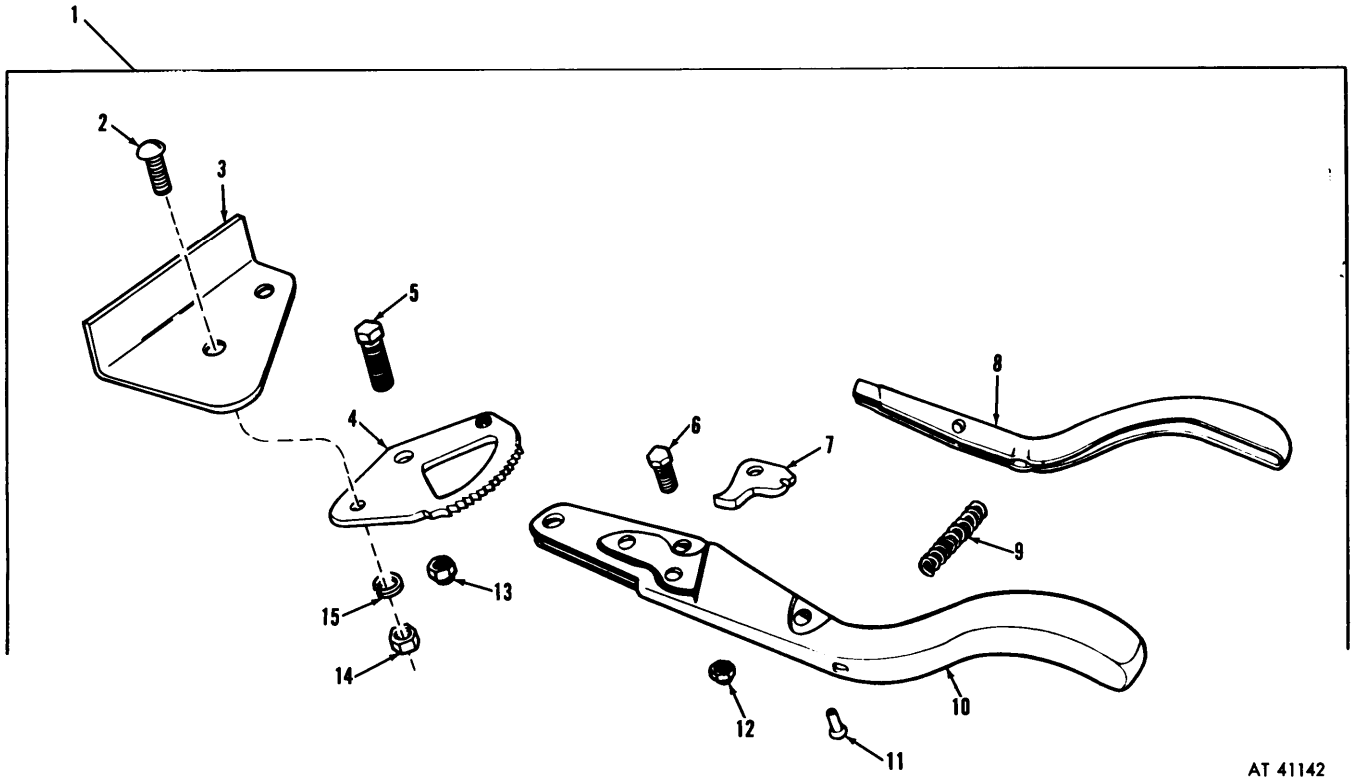

Figure C-7. Brake lever assembly.

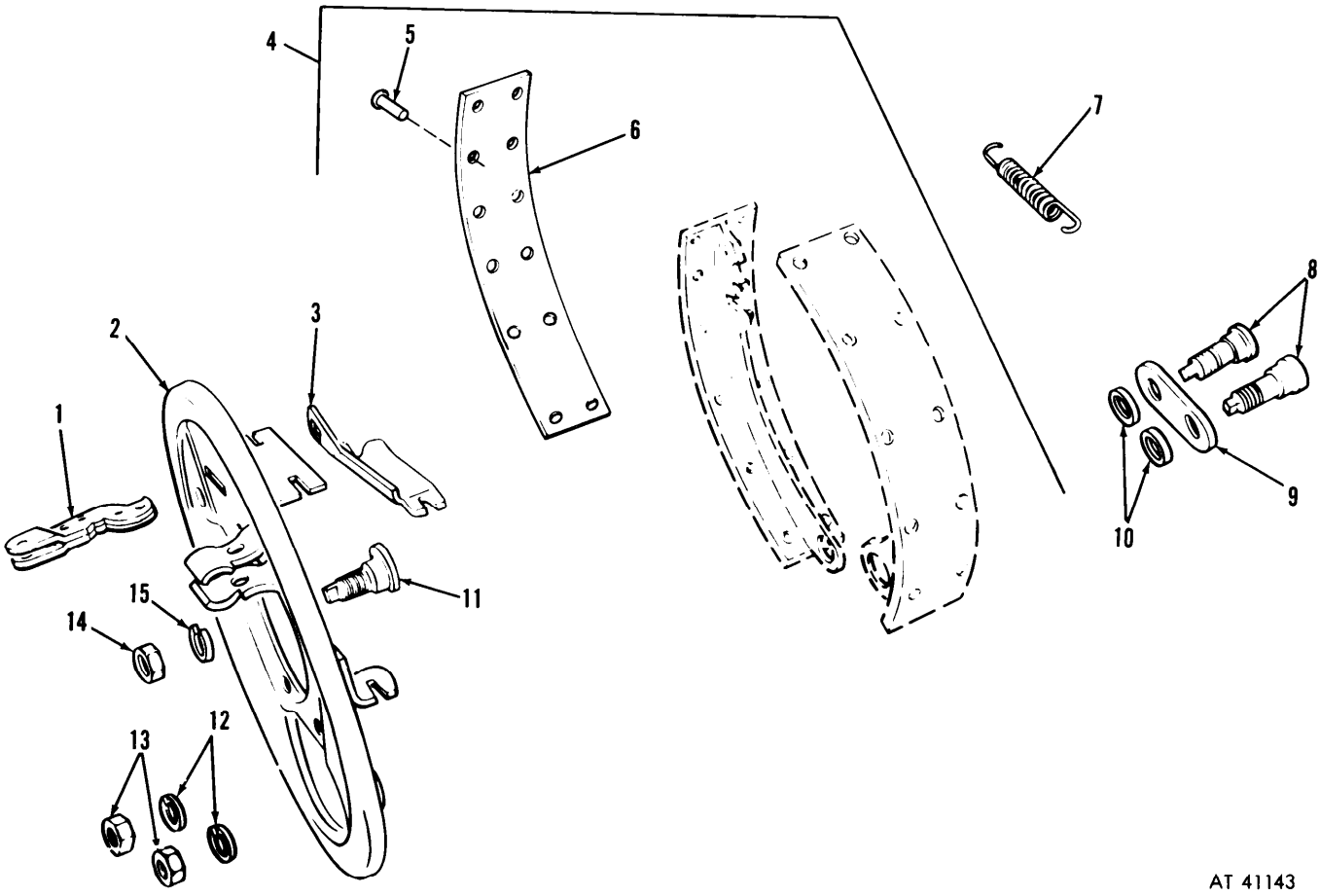

Figure C-8. Brake assembly.

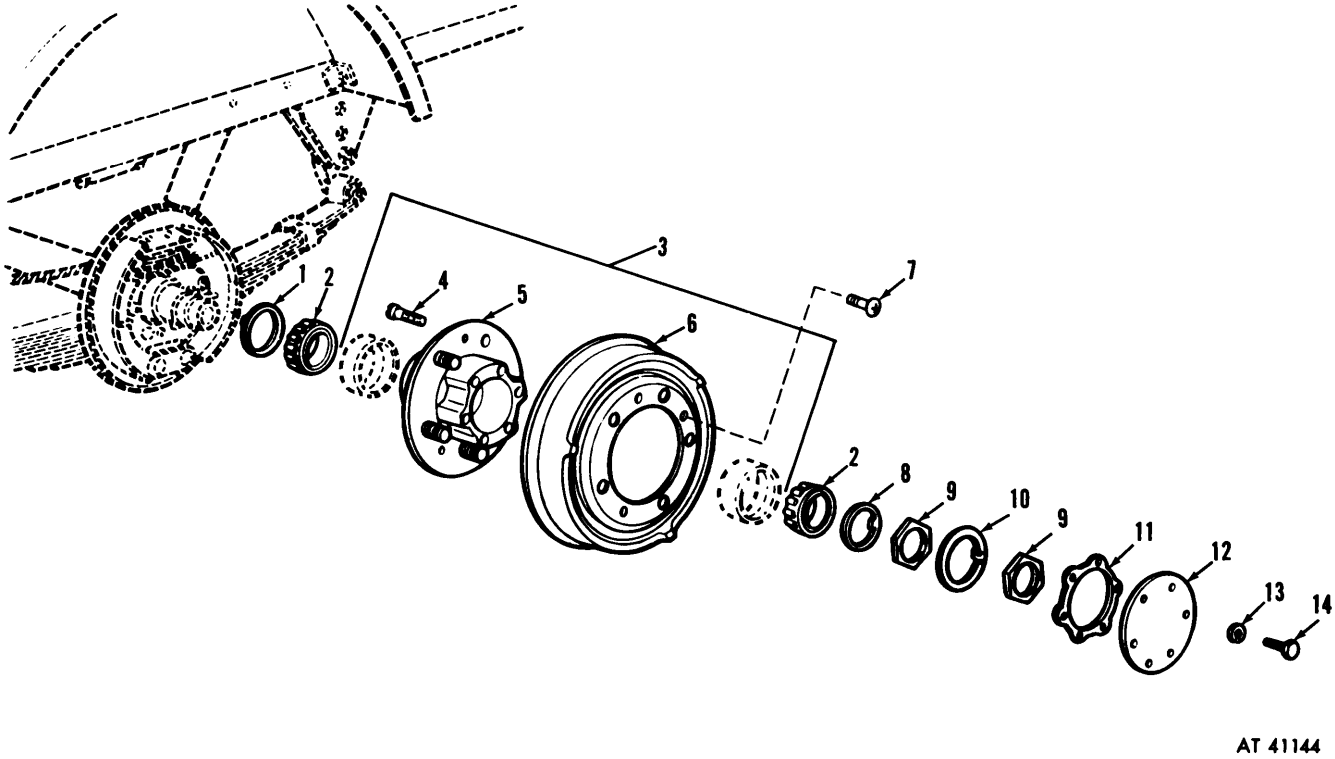

Figure C-9. Hub and drum assembly.

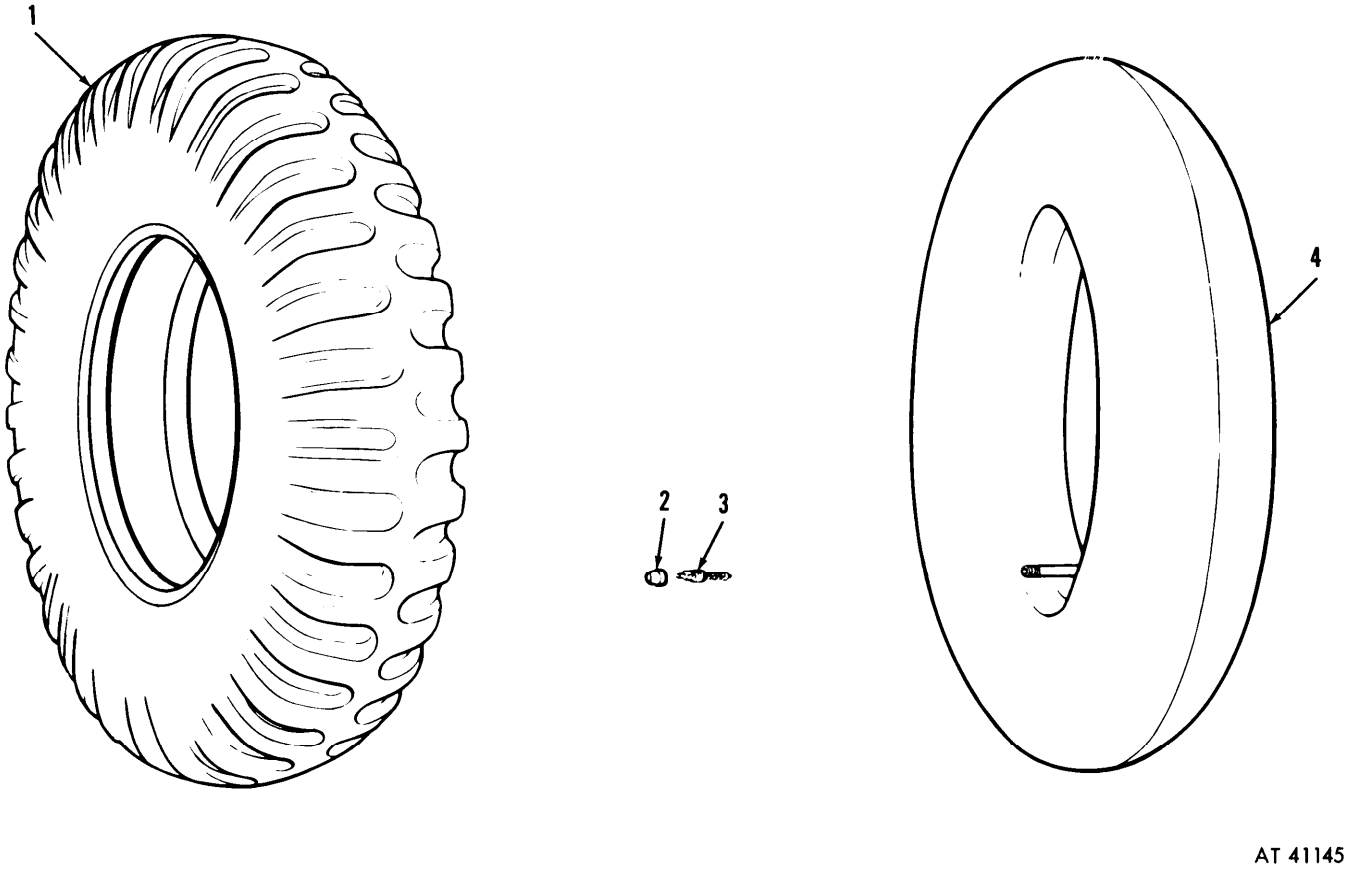

Figure C-10. Tires and tubes.

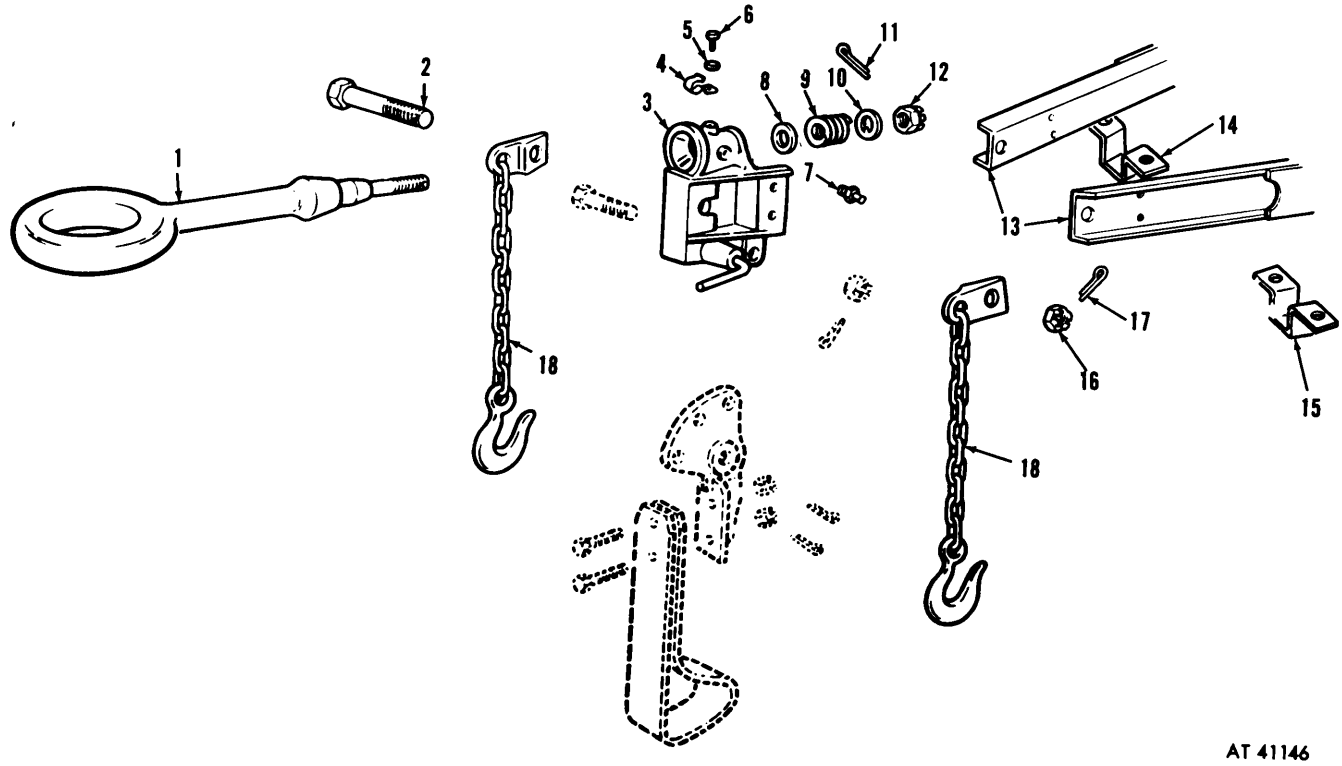

Figure C-11. Lunette and attaching parts.

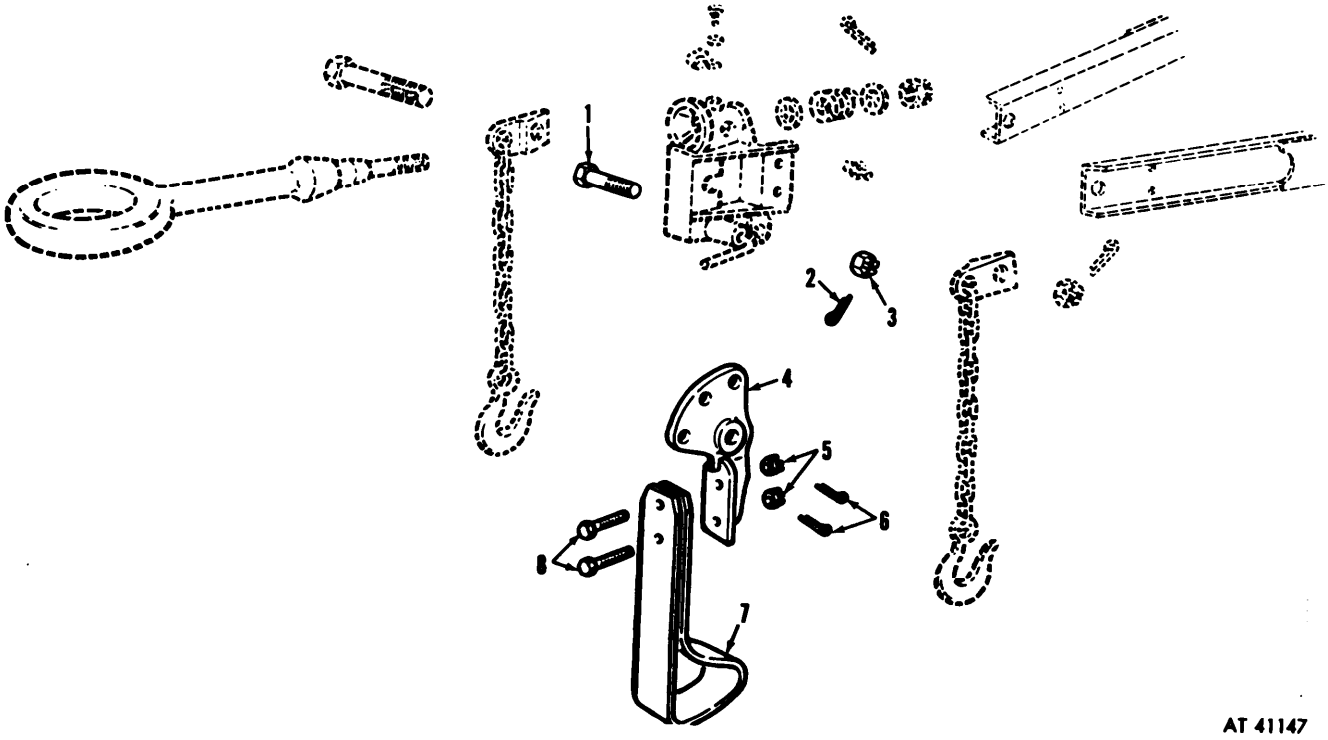

Figure C-12. Leg support and attaching parts.

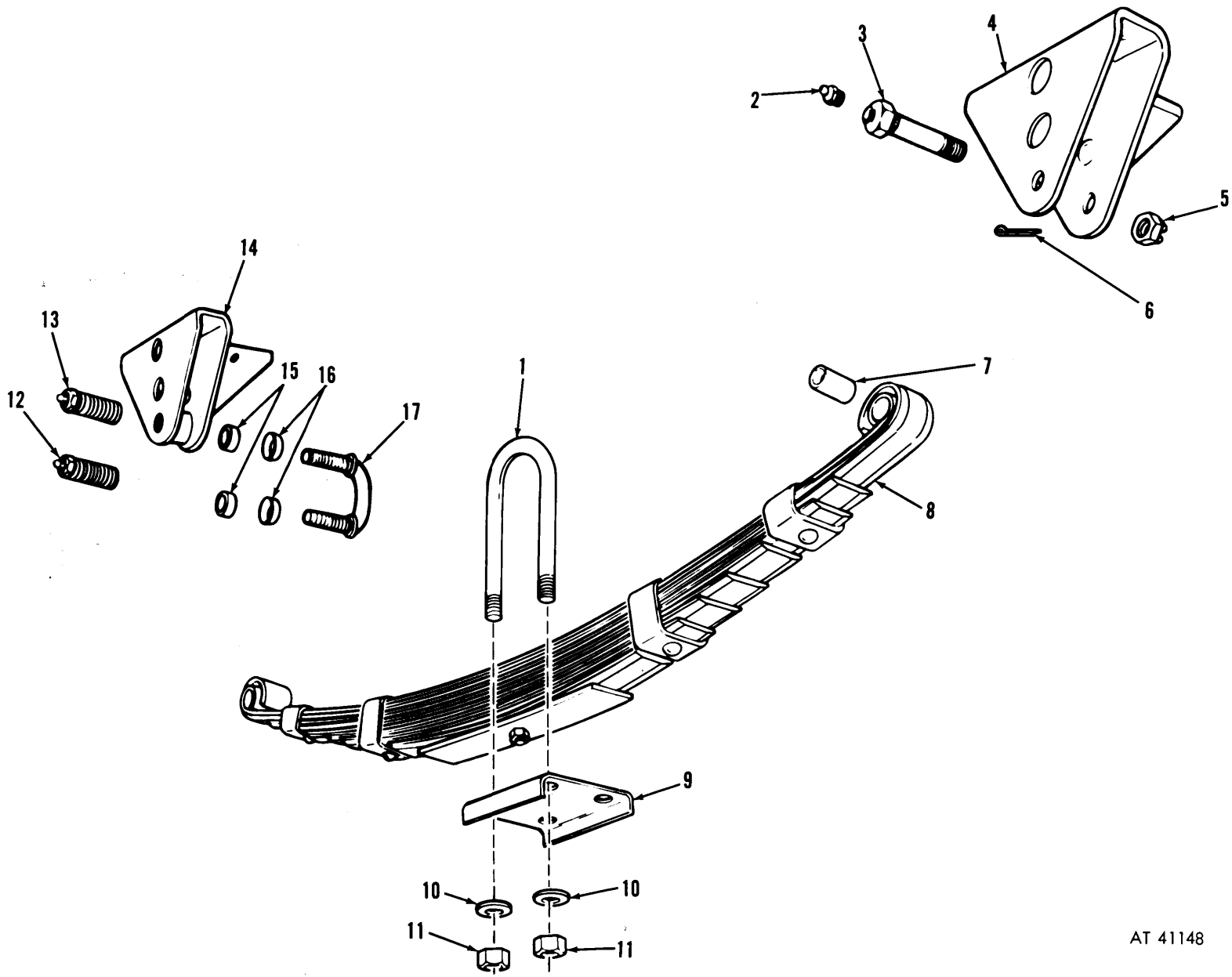

Figure C-13. Spring assembly and related parts.

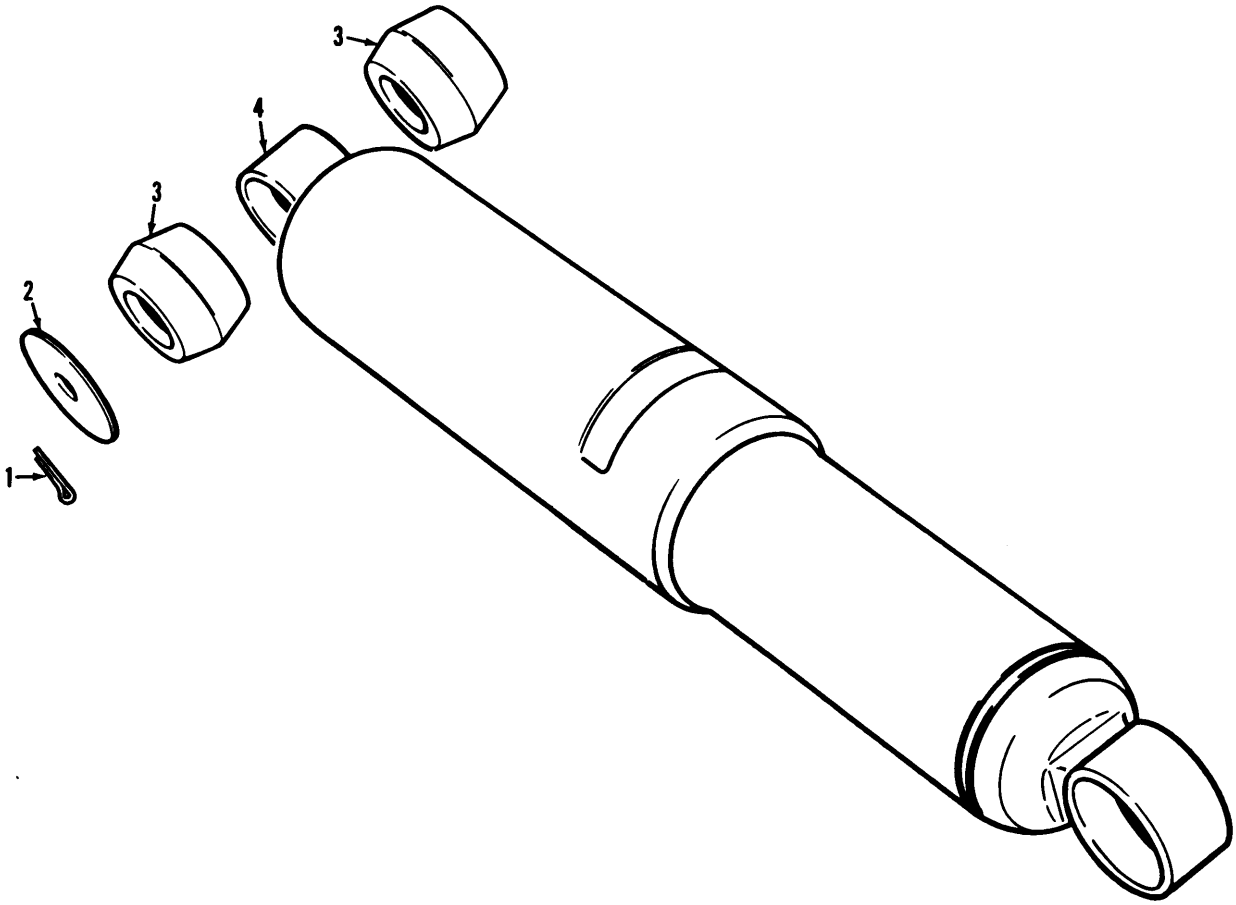

AT 41149

Figure C-14. Shock absorher and related parts.

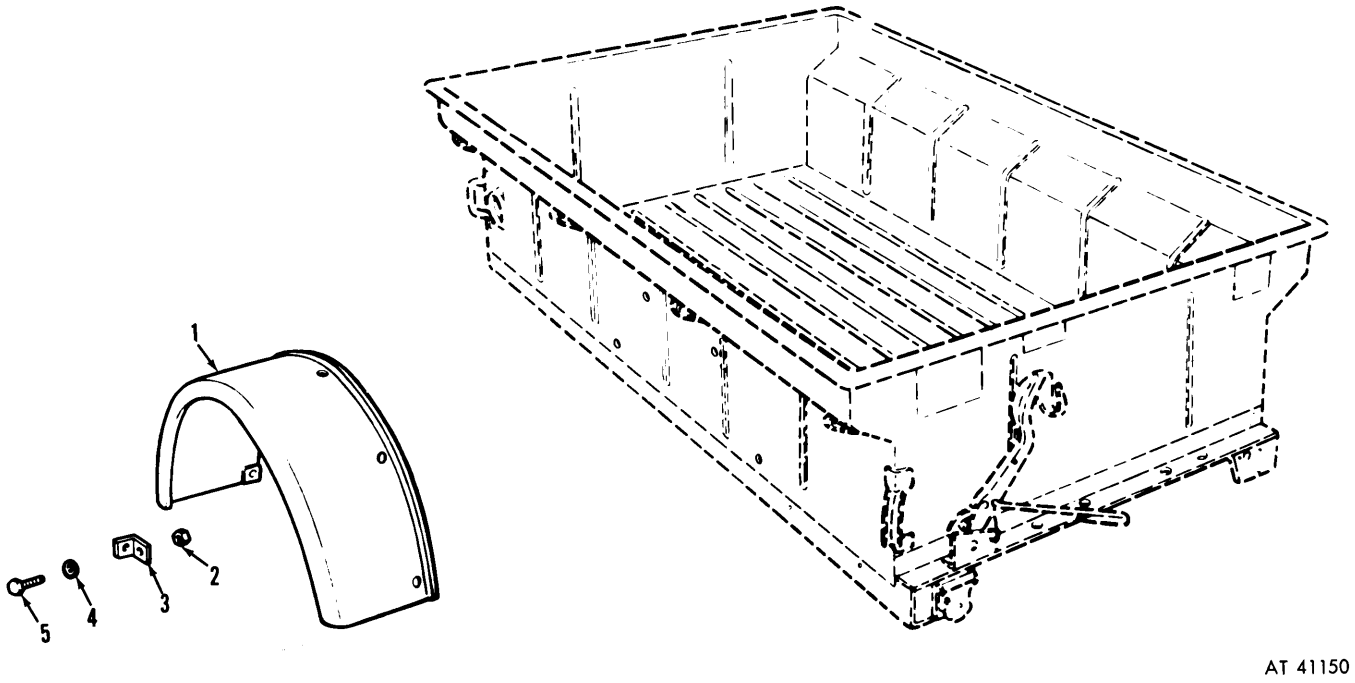

Figure C-15. Fender.

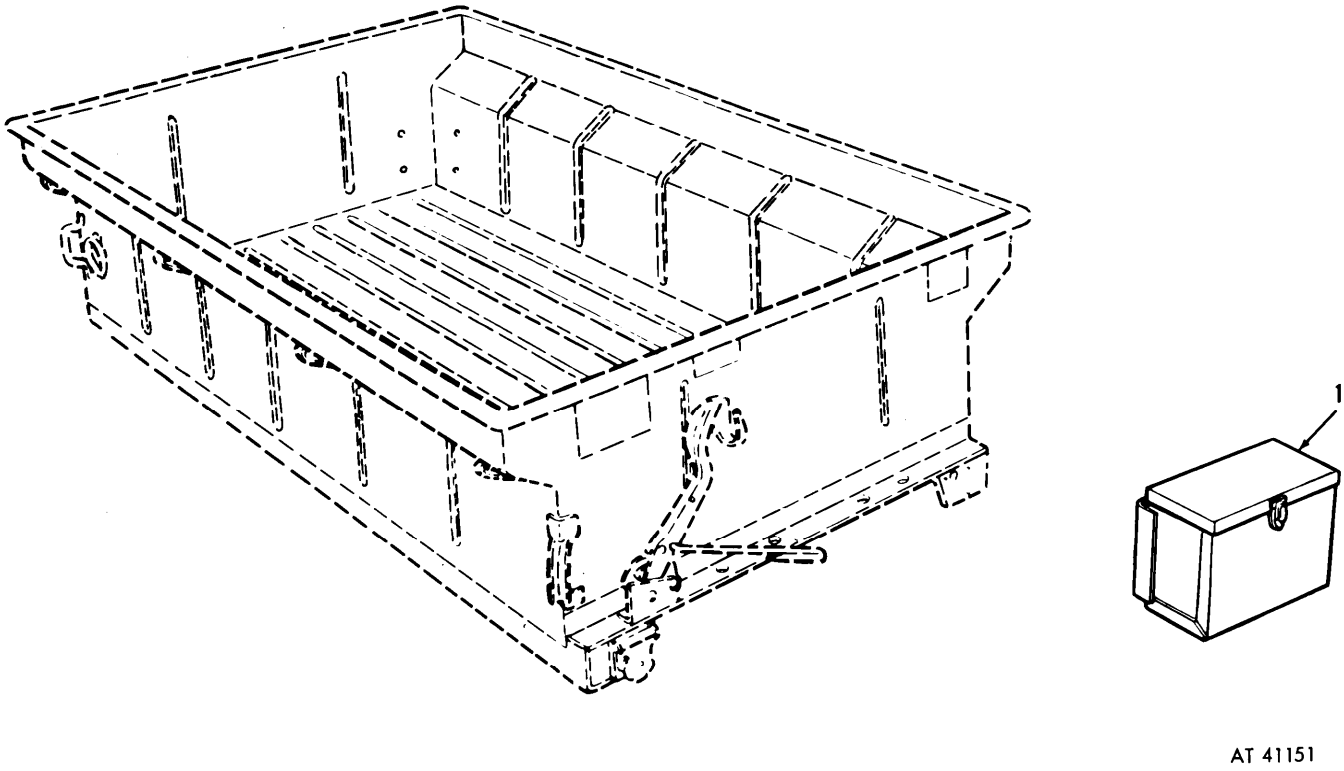

Figurc C-16. Storage box assembly.

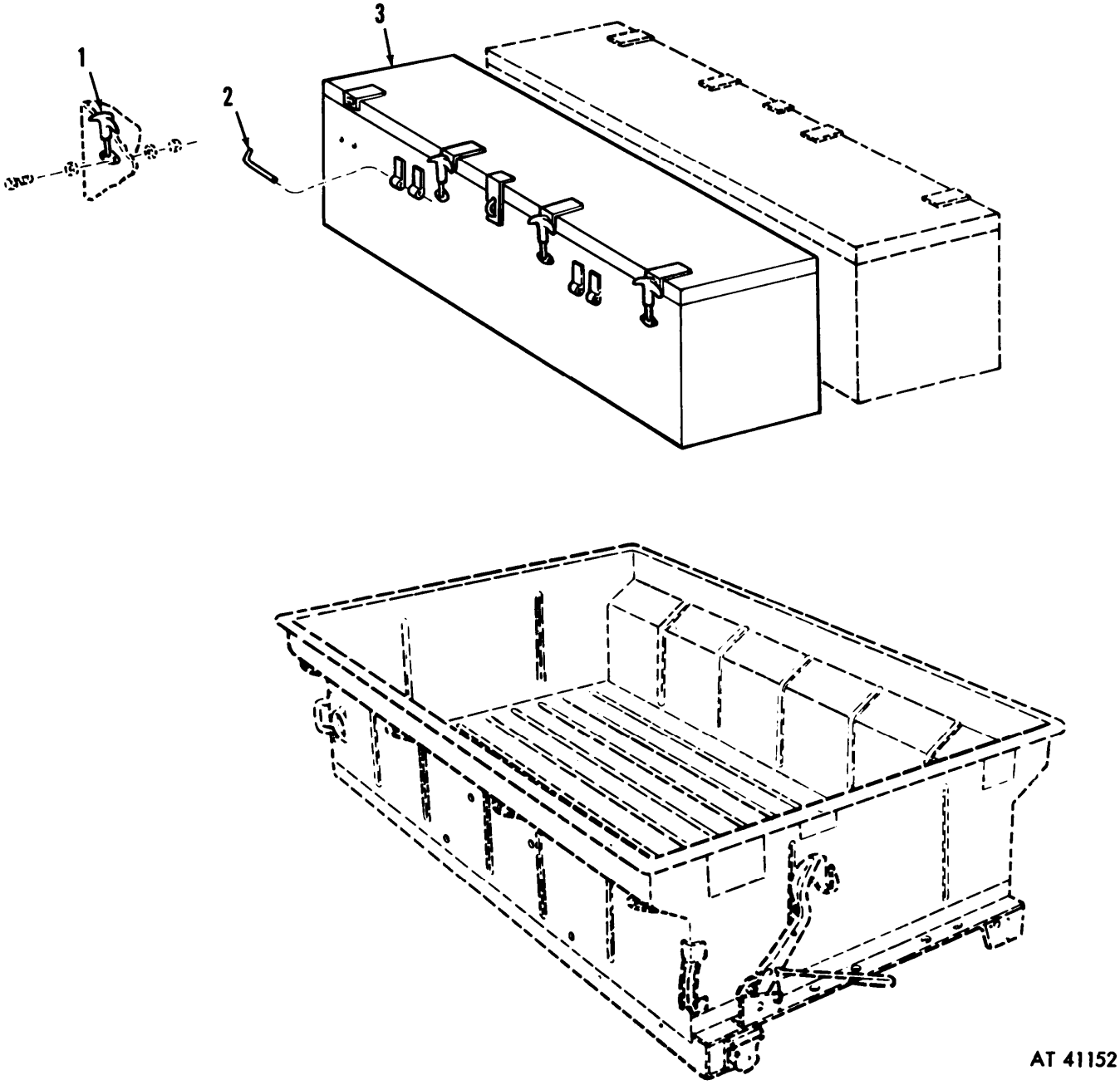

Figure C-17. Chest assembly (M367).

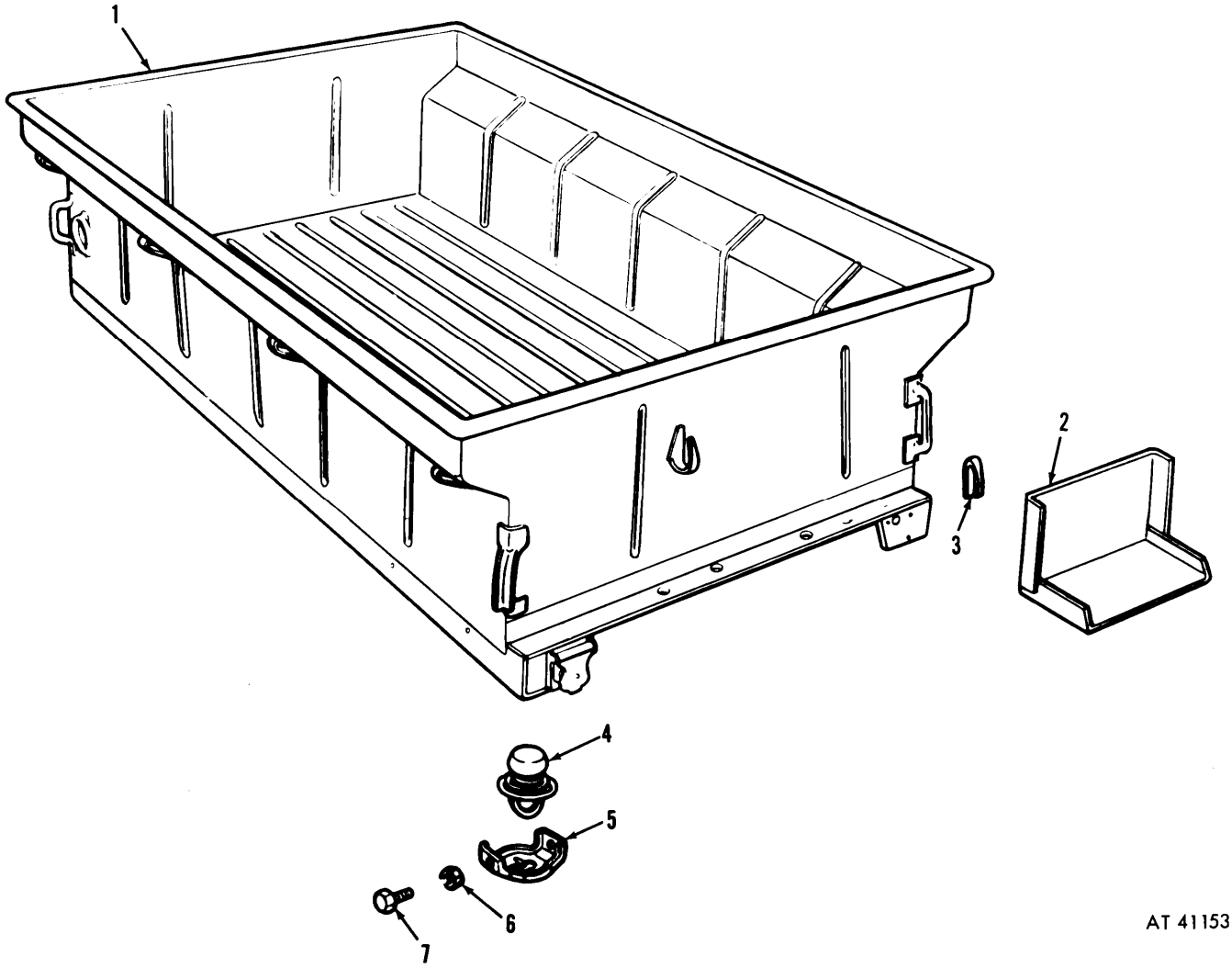

Figure C-18. Cargo body.

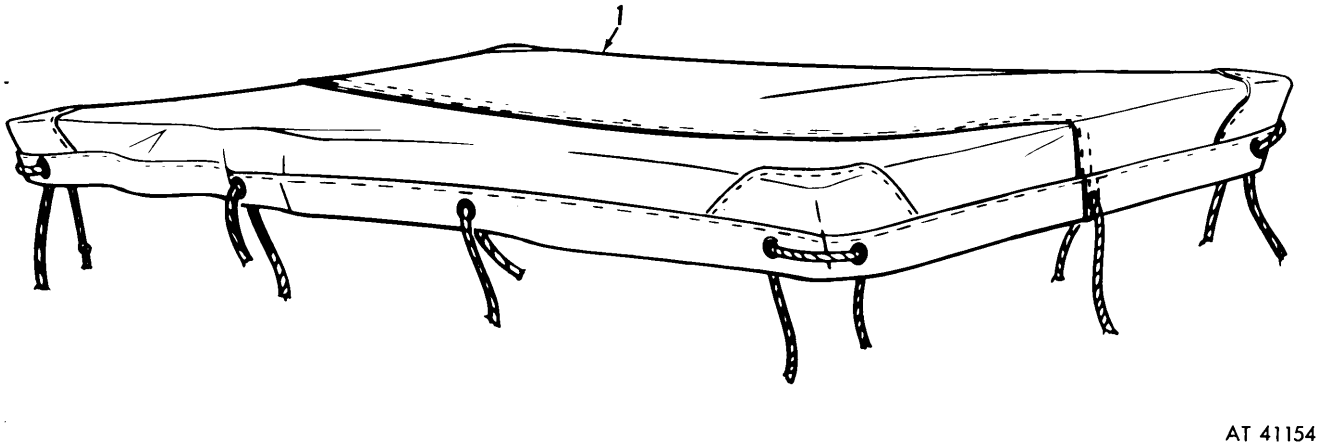

Figure C-19. Trailer cover.

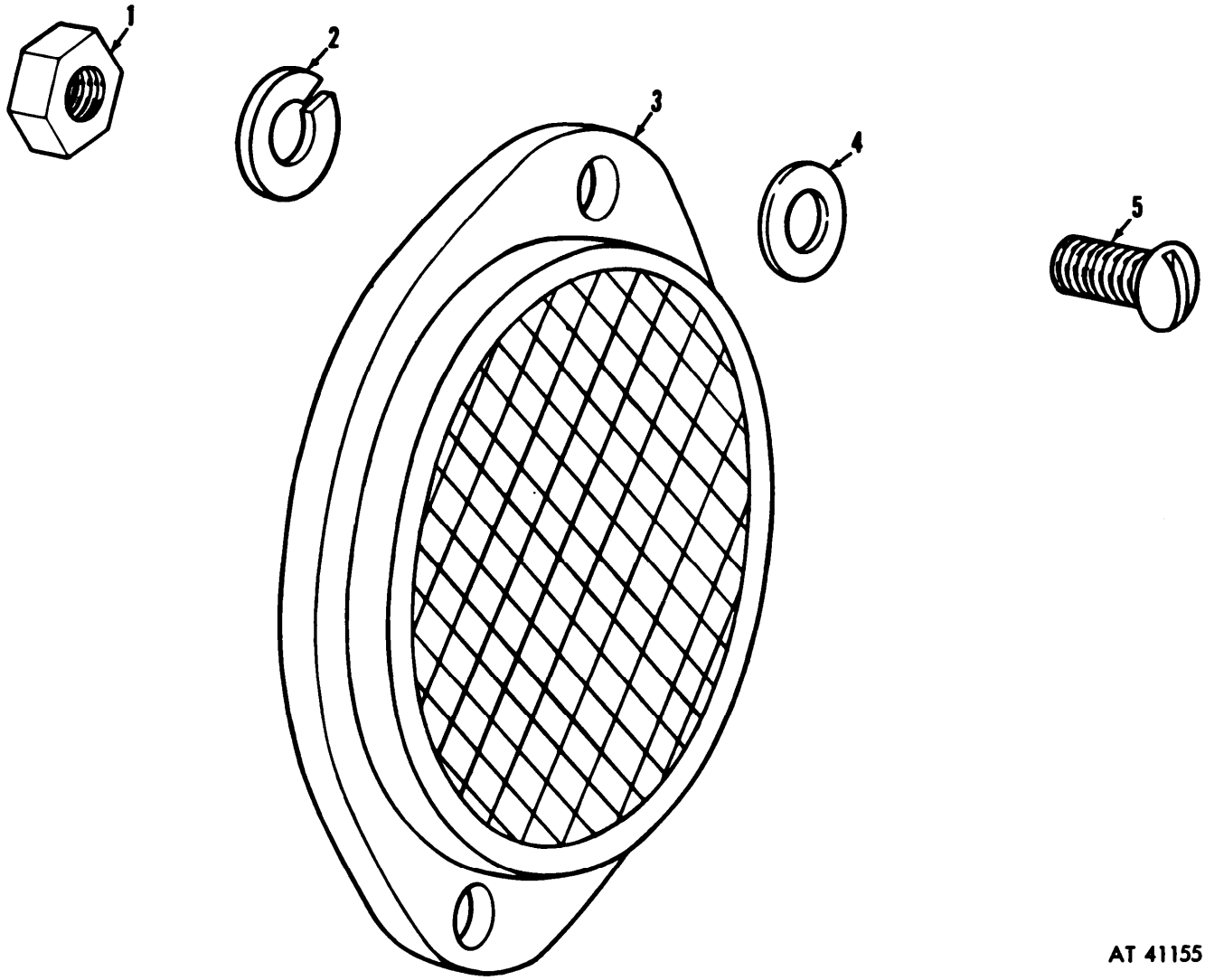

Figure C-20. Reflectors.

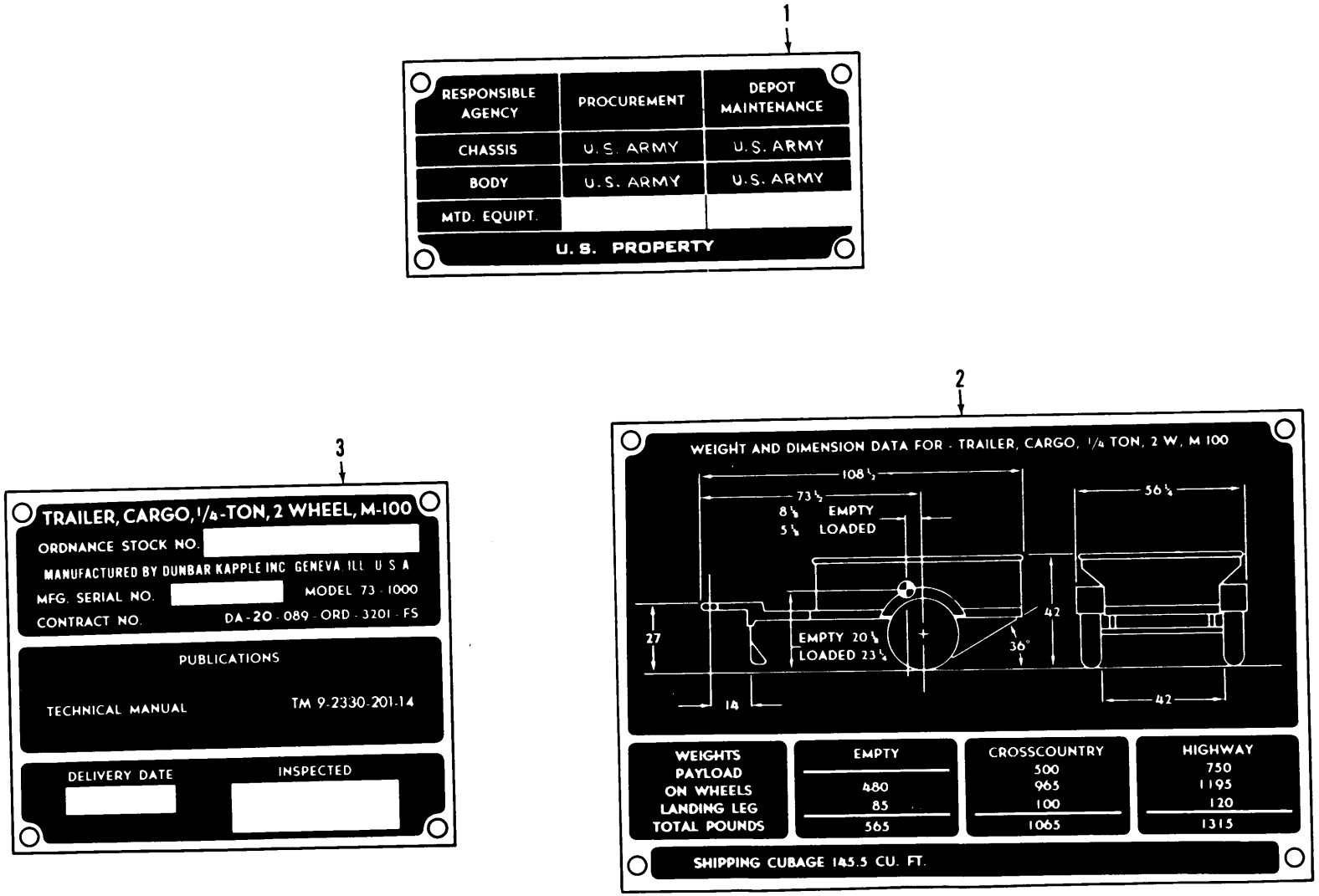

Figure C-21. Name, data, and service plates.

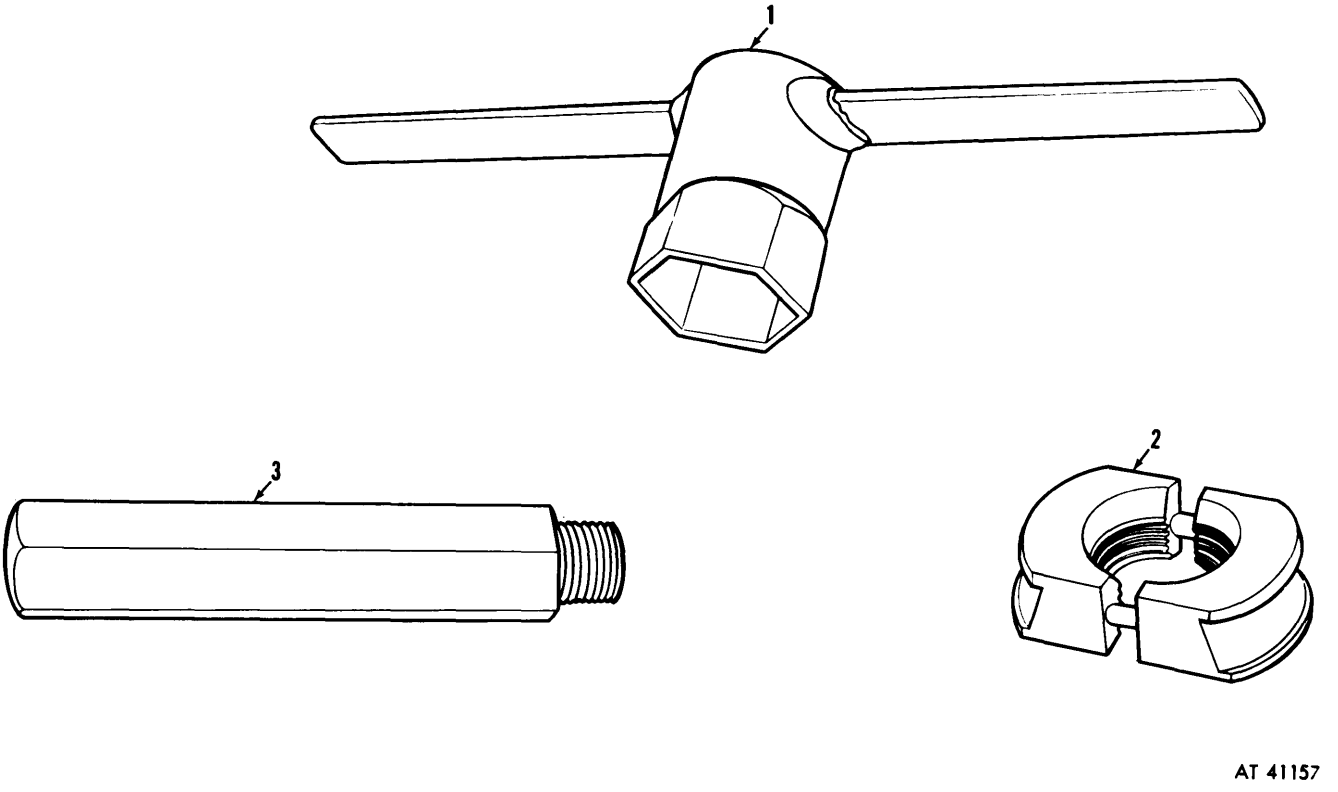

Figure C-22. Special tools.

Section V. FEDERAL STOCK NUMBER AND REFERENCE NUMBER INDEX

Federal Stock Number Cros-Reference to Figure and Item Number

FEDERAL STOCK NUMBER	FIGURE NO	ITEM NO
1055-033-6209	C-9	12
2510-732-8277	C-13	4
2510-732-8282	C-13	14
2510-732-8306	C-11	3
2510-732-8322	C-13	16
2510-732-8325	C-13	13
2510-732-8336	C-18	4
2510-732-8358	C-13	8
2510-734-3007	C-12	7
2510-734-3076	C-13	9
2510-737-1090	C-13	17
2510-769-7848	C-13	9
2510-773-5833	C-13	17
2530-204-3233	C-8	4
2530-352-6962	C-9	6
2530-693-0792	C-9	3
2530-732-8287	C-5	4
2530-732-8288	C-5	4
2530-732-8315	C-12	4
2530-732-8329	C-6	2
2530-732-8332	C-6	8
2530-732-8334	C-6	4
2530-732-8341	C-6	7
2530-737-3238	C-7	1
2530-737-3240	C-7	4
2530-737-3241	C-7	7
2530-737-7748	C-8	2
2530-741-2178	C-8	4
2540-200-7022	C-11	9
2540-708-8715	C-14	4
2540-732-6336	C-19	1
2540-732-8258	C-14	NI
2540-732-8302	C-11	13
2540-732-8311	C-11	1
2540-732-8317	C-11	18
2540-732-8344	C-16	1
2540-732-8351	C-21	1
2590-040-2075	C-17	1
2590-705-8970	C-18	5
2590-732-8350	C-21	2
2590-732-8352	C-21	3
2590-855-9304	C-4	1
2590-860-0555	C-4	6
2590-863-5602	C-4	9
2610-269-7332	C-10	4
2610-678-1363	C-10	1
2610-050-1229	C-10	3
2610-060-3550	C-10	
3110-100-3526	C-9	2
3120-732-8324	C-13	12
3120-732-8366	C-13	7
1730-050-4208	C-11	7
	C-13	2
1730-206-1384	C-13	3
5120-596-1370	C-22	1
5120-708-3216	C-22	3
5120-708-3346	C-22	2
5305-068-0498	C-11	6
5305-068-0500	C-4	26
5305-269-2803	C-11	NI
5305-269-2805	C-7	5
5305-269-3208	C-3	9
5305-269-3209	C-2	8
	C-15	2
5305-269-3210	C-4	2
	C-9	14
5305-764-0070	C-1	2
5305-855-0956	C-4	4
5305-855-0964	C-4	7
5305-957-6649	C-9	7
5305-988-1723	C-16	NI
	C-20	5
5305-989-7434	C-4	15
5305-990-6444	C-18	7
5306-225-9084	C-1	7
5306-225-9087	C-4	17
	C-7	6
5306-225-9089	C-7	2
5306-225-9091	C-6	13
5306-226-4825	C-13	NI
5306-275-1646	C-12	8
5306-732-8293	C-9	4
5306-732-8294	C-9	4
5306-732-8295	C-13	1
5306-732-8333	C-6	10
5306-732-8335	C-6	9
5306-732-8362	C-12	1
5310-045-3296	C-4	14
5310-061-1258	C-3	8
5310-209-0965	C-13	10
5310-281-8322	C-14	2
5310-407-9566	C-1	8
	C-4	18
	C-6	12
	C-7	15
	C-13	NI
5310-582-5965	C-4	25
	C-11	5
	C-16	NI
	C-20	2
5310-584-5272	C-8	12
5310-596-7691	C-4	3
	C-18	6
5310-627-6128	C-3	8
	C-4	20
5310-637-9541	C-2	7
	C-4	21
	C-5	2
	C-8	15
	C-9	13
	C-11	NI
	C-15	4
5310-732-0558	C-15	2
5310-732-0559	C-5	3
	C-8	14
	C-11	NI
5310-732-0560	C-8	13
5310-732-8296	C-13	11
5310-732-8312	C11	8
5310-732-8314	C-11	10
5310-732-8316	C-16	NI
	C-20	4

FEDERAL STOCK NUMBER	FIGURE NO	ITEM NO
5310-737-1106	C-9	9
5310-768-0319	C-16	NI
	C-20	1
5310-769-6520	C-9	8
5310-769-6521	C-9	
2140	C-11	12
5310-842-1488	C-6	5
5310-842-1490	C-12	5
5310-850-6884	C-13	5
5310-880-7744	C-13	NI
5310-880-7746	C-4	19
	C-6	3
	C-7	14
5310-934-9751	C-4	12
5310-982-4908	C-7	13
5310-984-3807	C-7	12
5310-998-0608	C-11	16
	C-12	3
5315-012-0123	C-11	17
	C-12	2
5315-013-7238	C-11	11
5315-059-0206	C-14	1
5315-143-6323	C-6	1
5315-839-5822	C-12	6
	C-13	6
5315-842-3044	C-6	6
5320-013-6065	C-8	5
5325-737-5064	C-4	10
5330-297-7106	C-2	3

FEDERAL STOCK NUMBER	FIGURE NO	ITEM NO
5330-462-0907	C-3	3
5330-737-1109	C-9	11
5330-852-6255	C-9	1
5340-057-2891	C-4	16
5340-177-7832	C-4	2
5340-385-3288	C-4	8
5340-732-8323	C-13	15
5340-732-8330	C-11	4
5340-732-8331	C-6	11
5340-734-3032	C-14	3
5340-912-8871	C-4	24
5360-664-7691	C-8	7
6220-179-4324	C-3	2
6220-368-4945	C-2	6
6220-678-9047	C-1	4
6220-669-5623	C-2	1
6220-732-8276	C-13	4
6220-752-6020	C-2	2
6220-775-2384	C-1	3
6220-880-1625	C-3	1
6220-846-9745	C-1	1
6240-019-0877	C-1	5
	C-2	5
	C-3	7
6240-019-3093	C-3	5
6240-044-6914	C-3	4
	C-3	4
9905-202-3639	C-20	3
9905-205-2795	C-20	3

Reference number Cross-Reference to Figure and Item Number

REFERENCE NUMBER	MFG CODE	FIG NO	ITEM NO
MS15003-1	96906	C-11	7
		C-13	2
MS15570-1251	96906	C-1	5
		C-2	5
		C-3	7
MS15570-623	96906	C-3	5
MS16535-233	96906	C-8	5
MS21045-6	96906	C-7	13
MS21333-4	96906	C-4	16
MS21333-43	96906	C-4	24
MS24629-47	96906	C-2	4
MS24629-48	96906	C-4	7
MS24665-283	96906	C-6	6
MS24665-353	96906	C-12	6
		C-13	6
MS24665-355	96906	C-11	17
		C-12	2
MS24665-425	96906	C-11	11
MS24665-491	96906	C-14	1
MS35190-285	96906	C-9	7
MS35207-261	96906	C-18	7
MS35207-263	96906	C-4	15
MS35207-279	96906	C-16	NI
		C-20	5
MS35335-32	96906	C-4	3
		C-18	6
MS35335-35	96906	C-3	8
		C-4	20
MS35338-43	96906	C-4	14

REFERENCE NUMBER	MFG CODE	FIG NO	ITEM NO
MS35338-44	96906	C-4	25
		C-11	5
		C-16	NI
		C-20	2
MS35338-45	96906	C-1	8
		C-4	18
		C-6	12
		C-7	15
		C-13	NI
MS35338-46	96906	C-2	7
		C-4	21
		C-5	2
		C-8	15
		C-9	13
		C-11	NI
		C-15	4
MS35338-47	96906	C-13	10
MS35338-48	96906	C-8	12
MS35387-1	96906	C-20	3
MS35387-2	96906	C-20	3
MS35388-93	96906	C-10	1
MS35392-8	96906	C-10	4
MS35478-1683	96906	C-2	4
		C-3	4
MS35650-302	96906	C-4	12
MS35692-21	96906	C-6	5
MS35692-37	96906	C-12	5
MS35692-45	96906	C-13	5
MS35692-61	96906	C-11	16
		C-12	3

REFERENCE NUMBER	MFG CODE	FIG NO	ITEM NO
MS35692-69	96906	C-11	12
MS15904-76	96906	C-3	8
MS51302-1	96906	C-1	1
MS51329-1	96906	C-2	1
MS51375-1	96906	C-10	2
MS51920-21	96906	C-9	1
MS51922-13	96906	C-7	12
MS51959-46	96906	C-1	2
MS51967-5	96906	C-13	NI
MS51967-8	96906	C-15	2
MS51968-14	96906	C-8	13
MS51968-2	96906	C-16	NI
		C-20	1
MS51968-5	96906	C-4	19
		C-6	3
		C-7	14
MS51968-8	96906	C-5	3
		C-8	14
		C-11	NI
MS90725-1	96906	C-11	6
MS90725-3	96906	C-4	26
MS90725-57	96906	C-3	9
MS90725-58	96906	C-2	8
		C-15	2
MS90725-59	96906	C-4	22
		C-9	14
MS90726-29	96906	C-1	7
MS90726-32	96906	C-4	17
		C-7	6
MS90726-34	96906	C-7	2
MS90726-36	96906	C-6	13
MS90726-60	96906	C-11	NI
MS90726-62	96906	C-7	5
MS90728-32	96906	C-13	NI
100AA	17875	C-10	3
10924552	19207	C-4	9
10924576	19207	C-4	5
11611157	19207	C-3	1
11625310-1	19207	C-4	23
11625310-2	19207	C-4	11
11639519-2	19207	C-3	3
11639520	19207	C-3	6
11639535	19207	C-3	2
500204	21450	C-7	11
5304075	19207	C-8	1
5304104	19207	C-8	6
5304105	19207	C-8	6
606063	21450	C-7	8
606353	20076	C-7	9
607174	21450	C-7	10
705423	21450	C-9	2
7081465	19207	C-22	1
7083216	19207	C-22	3
7083346	19207	C-22	2
7088715	19207	C-14	4
7320658	19207	C-2	3
7328228	19207	C-18	1
7328229	19207	C-18	NI
7328241	19207	C-18	3
7328243	19207	C-15	3
7328247	19207	C-18	2
7328258	19207	C-14	NI
7328276	19207	C-13	4
7328277	19207	C-13	4
7328281	19207	C-13	14
7328282	19207	C-13	14
7328286	19207	C-13	NI
7328287	19207	C-5	4
7328288	19207	C-5	4
7328289	19207	C-19	1
7328293	19207	C-9	4
7328294	19207	C-9	4
7328295	19207	C-13	1
7328296	19207	C-13	11
7328298	19207	C-5	1
7328302	19207	C-11	13
7328306	19207	C-11	3
7328311	19207	C-11	1
7328312	19207	C-11	8
7328313	19207	C-11	9
7328314	19207	C-11	10
7328315	19207	C-12	4
7328316	19207	C-16	NI
		C-20	4
7328317	19207	C-11	18
7328322	19207	C-13	16
7328323	19207	C-13	15
7328324	19207	C-13	12
7328325	19207	C-13	13
7328328	19207	C-13	3
7328329	19207	C-6	2
7328330	19207	C-11	4
7328331	19207	C-5	11
7328332	19207	C-6	8
7328333	19207	C-6	10
7328334	19207	C-6	4
7328335	19207	C-6	9
7328336	19207	C-18	4
7328339	19207	C-18	4
7328340	19207	C-18	5
7328341	19207	C-6	7
7328343	19207	C-7	3
7328344	19207	C-16	4
7328348	19207	C-16	NI
7328350	19207	C-21	2
7328351	19207	C-21	1
7328352	19207	C-21	3
7328358	19207	C-13	8
7328362	19207	C-12	1
7328363	19207	C-12	8
7328364	19207	C-11	2
7328366	19207	C-13	7
7328371	19207	C-9	6
7328374	19207	C-9	5
7338987	19207	C-13	NI
7338988	19207	C-11	14
7338989	19207	C-11	15
7343007	19207	C-12	7
7343032	19207	C-14	3
7343076	19207	C-13	9
7371090	19207	C-13	17
7371106	19207	C-9	9
7371109	19207	C-9	11
7371752	19207	C-14	2
7373238	19207	C-7	1
7373240	19207	C-7	4
7373241	19207	C-7	7
7375064	19207	C-4	10
7377726	19207	C-8	3
7377727	19207	C-8	3
7377745	19207	C-8	10
7377746	19207	C-8	11

REFERENCE NUMBER	MFG CODE	FIG NO	ITEM NO
7377747	19207	C-8	2
7377748	19207	C-8	2
7412176	19207	C-8	8
7412178	19207	C-8	4
7412179	19207	C-8	7
7525997	19207	C-2	6
7526020	19207	C-2	2
7539197	19207	C-17	1
7696520	19207	C-9	8
7697521	19207	C-9	10
7697848	19207	C-13	9
7735449	19207	C-8	0
7735544	19207	C-8	4
7735821	19206	C-9	12

REFERENCE NUMBER	MFG CODE	FIG NO	ITEM NO
7735833	19207	C-13	17
7735847	19207	C-6	1
7740886	19207	C-15	1
7971882	19207	C-17	3
7971904	19207	C-17	2
7979250	19207	C-4	8
8333378	19207	C-9	3
8382973	19207	C-4	2
8694464	19207	C-1	4
8722864	19207	C-4	1
8722870	19207	C-4	6
8722943	19207	C-4	13
8741646	19207	C-1	3
8741650	19207	C-1	6

INDEX

By Order of the Secretary of the Army:

W. C. WESTMORELAND,
General, United States Army,
Chief of Staff.

Official:

VERNE L. BOWERS,
Major General, United States Army,
The Adjuant General.

Distribution:

To be distributed in accordance with DA Form 12-39, Organizational Maintenance requirements for Trailer, Cargo, 1 / 4 Ton, M100; Trailer, Chassis, 1 / 4 Ton, M115: and Trailer, Maintenance (Tel Cable Splicing) M367.

☆U.S. GOVERNMENT PRINTING OFFICE: 1993 - 342-421/80008

TM 9-2330-201-14 TRAILERS: CARGO AMPHIBIOUS; CHASSIS; MAINTENANCE, TELEPHONE CABLE SPLICER - 1972

PIN: 028614-000

This fine document...

Was brought to you by me:

Liberated Manuals -- free army and government manuals

Why do I do it? I am tired of sleazy CD-ROM sellers, who take publicly available information, slap “watermarks” and other junk on it, and sell it. Those masters of search engine manipulation make sure that their sites that sell free information, come up first in search engines. They did not create it... They did not even scan it... Why should they get your money? Why are not letting you give those free manuals to your friends?

I am setting this document FREE. This document was made by the US Government and is NOT protected by Copyright. Feel free to share, republish, sell and so on.

I am not asking you for donations, fees or handouts. If you can, please provide a link to liberatedmanuals.com, so that free manuals come up first in search engines:

<A HREF=http://www.liberatedmanuals.com/>Free Military and Government Manuals</A>

- Sincerely
  Igor Chudov
  http://igor.chudov.com/
- Chicago Machinery Movers