TM 9-2320-211-10-3
T.O. 36A12-1C-421-3

TECHNICAL MANUAL

TROUBLESHOOTING

OPERATOR LEVEL

5-TON, 6X6, M39 SERIES TRUCKS (MULTIFUEL)

TRUCK, CHASSIS: M40A2C, M61A2, M63A2; TRUCK, CARGO: M54A2, M54A2C, M55A2; TRUCK, DUMP: M51A2; TRUCK, TRACTOR: M52A2; TRUCK, WRECKER, MEDIUM: M543A2

DEPARTMENTS OF THE ARMY AND THE AIR FORCE

SEPTEMBER 1980

WARNING

EXHAUST GASES CAN BE DEADLY

Exposure to exhaust gases produces symptoms of headache, dizziness, loss of muscular control, apparent drowsiness, and coma. Permanent brain damage or death can result from severe exposure.

Carbon monoxide occurs in the exhaust fumes of fuel burning heaters and internal combustion engines, and becomes dangerously concentrated under conditions of inadequate ventilation. The following precautions must be observed to insure the safety of personnel whenever fuel burning heater(s) or engine of any vehicle is operated for maintenance purposes or tactical use.

Do not operate heater of engine of vehicle in an enclosed area unless it is adequately ventilated.

Do not idle engine for long periods without maintaining adequate ventilation in personnel compartments.

Do not drive any vehicle with inspection plates or cover plates removed unless necessary for maintenance purposes.

Be alert at all times during vehicle operation for exhaust odors and exposure symptoms. If either are present, immediately ventilate personnel compartments. If symptoms persist, remove affected personnel from vehicle and treat as follows: expose to fresh air; keep warm; do not permit physical exercise; if necessary, administer artifical respiration.

If exposed, seek prompt medical attention for possible delayed onset of acute lung congestion. Administer oxygen if available.

The best defense against exhaust gas poisoning is adequate ventilation.

Use extreme care when removing radiator cap, especially when temperature gage shows above 180°F.

Always wear leather gloves when handling winch cable never allow cable to slip through hands. Do not operate winch with less than four turns of cable drum.

Do not drive truck until the low air pressure warning buzzer is silent and the air pressure gage shows at least 65 PSI. This is the minimum pressure required for safe braking action.

Do not use hand throttle to drive the vehicle.

Do not park truck with front transmission gearshift lever in gear.

When used to carry flammables, explosives, or other hazardous material, equip truck with a fire extinguisher.

If your vehicle class number is greater than the bridge class number, your vehicle is too heavy for the bridge; DO NOT CROSS.

TECHNICAL MANUAL
NO. 9-2320-211-10-3
TECHNICAL ORDER
NO. 36 A12-1C-421-3

DEPARTMENTS OF THE ARMY
AND
THE AIR FORCE
Washington, DC, 5 September 1980

TECHNICAL MANUAL

TROUBLESHOOTING

OPERATOR LEVEL

5-TON, 6X6, M39 SERIES TRUCKS (MULTIFUEL)

Model		NSN without Winch	NSN with Winch
Chassis	M40A2C	2320-00-969-4114	
	M61A2	2320-00-055-9264	2320-00-965-0321
	M63A2	2320-00-226-6251	2320-00-285-3757
Truck, Cargo	M54A2	2320-00-055-9266	2320-00-055-9265
	M54A2C	2320-00-926-0874	2320-00-926-0874
	M55A2	2320-00-073-8476	2320-00-055-9259
Truck, Dump	M51A2	2320-00-055-9262	2320-00-055-9263
Truck, Tractor	M52A2	2320-00-055-9260	2320-00-055-9261
Truck, Wrecker, Medium	M543A2		2320-00-055-9258

Current as of 25 March 1980.

*This manual, together with TM 0-2320-211-10-1, 5 September 1980; -10-2, 5 September 1980; and -10-3, 5 September 1980 supersedes so much of TM 9-2320-211-10, 20 November 1977 as pertains to mutlifuel vehicles.

REPORTING OF ERRORS AND RECOMMENDING IMPROVEMENTS

You can help improve this manual. If you find any mistake or if you know of a way to improve the procedure, please let us know. Mail your letter DA Form 2028 (Recommended Changes to Publication and Blank Forms), or DA Form 2028-2 located in the back of this manual direct to: Commander, U.S. Army Tank Automotive Materiel Readiness Command, ATTN: DRSTA-MB, Warren, Michigan 48090. A reply will be furnished to you.

CHAPTER 1
GENERAL INFORMATION

1-1. SCOPE. This volume tells you how to do troubleshooting at the operator's level of maintenance. The amount of troubleshooting you can do is based on what the Maintenance Allocation Chart says you can fix. Because of this, the only trouble symptoms you will find here are those that could be caused by faulty things you can fix.

1-2. ORGANIZATION. When you do PMCS, or when you drive the truck and find that something is wrong, write down what is wrong. Then check the fault symptom index to see if the trouble (fault symptom) you noted is in the index. If it is, you can do troubleshooting to find the fault and fix it. If the symptom is not in the index, tell organizational maintenance.

1-3. TROUBLESHOOTING APPROACH. In order to find out what is causing the problem in the truck, you must use a good approach. A good approach just means a way of doing troubleshooting so you can find the problem and not get confused or lost. The following chapter describes how you can use the materials in this volume to troubleshooting with a good approach.

CHAPTER 2

TROUBLESHOOTING APPROACH

2-1. GENERAL APPROACH. This chapter gives you instructions on how to use the troubleshooting material to help you find and fix the trouble. In every system of the truck there can be faults or problems which will cause certain symptoms. Symptoms can be such things as unusual noise, vibration, or even complete failure of a system. This volume gives information for each system on which you can do troubleshooting to find faults and fix them. Before you troubleshoot a system, you should look at the troubleshooting indexes which will lead you to the information you need to help make your troubleshooting faster and easier. If you follow the instructions the right way, you will find those troubles you can fix. But, if you fix something and the trouble is still there, it means there is more than one trouble. If this happens, start all over again to find the other trouble.

2-2. TROUBLESHOOTING INDEX. The troubleshooting index, and instructions on how to use it are in chapter 3. Go to this index first because it tells you where to find troubleshooting roadmaps, fault symptom indexes, summary troubleshooting charts and support diagrams for each system.

2-3. TROUBLESHOOTING ROADMAPS. Troubleshooting roadmaps for each system are in chapter 5. If the system is made up of subsystems, these subsystems are also on the roadmap. Under the subsystem is a list of things which are the most likely causes of a fault symptom in that subsystem. If you have enough skill, you can troubleshoot these things on the truck without using the detailed troubleshooting procedures. So if you know enough about the truck to work on your own, use the roadmap for the system with the problem before you check the fault symptom index.

2-4. FAULT SYMPTOM INDEX. Fault symptom indexes and instructions on how to use them are in chapter f6. For each system of the truck, there is an index which gives you a list of the fault symptoms for that system. The index also tells you where to find the detailed troubleshooting procedures and what resources (tools/people) you need to do each procedure.

2-5. SAMPLE TROUBLESHOOTING PROCEDURE. A sample troubleshooting procedure is in chapter 7. This sample procedure will help you see the way detailed troubleshooting procedures are to be used.

CHAPTER 3
TROUBLESHOOTING INDEX

3-1. GENERAL. This chapter has a troubleshooting index which covers every system of the truck on which you can do troubleshooting. The index tells you where to find all the other information you need to do your troubleshooting procedures.

3-2. INDEX. The troubleshooting index (fig. 3-1) is divided into five columns that list systems, troubleshooting roadmaps, fault symptoms, summary troubleshooting procedures, and system support diagrams. The following breakdown tells you what is in each column.

a. System Column. This column gives a list of systems on the truck for which troubleshooting can be done at the operator's maintenance level.

b. Troubleshooting Roadmaps Column. This column tells you where to find the troubleshooting roadmap for each listed system. These roadmaps are given in chapter 5.

c. Fault Symptom Index Column. This column tells you where to find the troubleshooting fault symptom index for each listed system. Fault symptom indexes are given in chapter 6.

d. Summary Troubleshooting Procedures Column. Summary troubleshooting procedures are not needed at this level of maintenance because they would be the same as the detailed troubleshooting procedures, so this column is not used. The detailed troubleshooting procedures found for using the fault symptom indexes will get you to the cause of the trouble quickly.

e. System Support Diagrams Column. The detailed troubleshooting procedures in this volume will give you all the information you need to find the bad part or problem with the truck. So, because support diagrams not needed, this column is not used.

	SYSTEM	TROUBLE-SHOOTING ROADMAPS	FAULT SYMPTOM INDEXES	SUMMARY TROUBLE-SHOOTING PROCEDURES	SYSTEM SUPPORT DIAGRAMS
1	FUEL SYSTEM	Figure 5-1	Table 6-2		
2	COOLING SYSTEM	Figure 5-2	Table 6-2		
3	TRANSMISSION SYSTEM	Figure 5-3	Table 6-3		
4	TRANSFER SYSTEM	Figure 5-4	Table 6-3		
5	FRONT AXLE SYSTEM	Figure 5-5	Table 6-5		
6	REAR AXLE SYSTEM	Figure 5-6	Table 6-6		
7	BRAKE SYSTEM	Figure 5-7	Table 6-7		
8	WHEEL SYSTEM	Figure 5-8	Table 6-8		
9	STEERING SYSTEM	Figure 5-9	Table 6-9		
10	DUMP TRUCK	Figure 5-10	Table 6-10		
11	FRONT WINCH	Figure 5-11	Table 6-11		
12	REAR WINCH	Figure 5-12	Table 6-12		
13	HOT WATER HEATER	Figure 5-13	Table 6-13		

TA 113870

Figure 3-1. Troubleshooting Index

CHAPTER 4

TEST EQUIPMENT PROCEDURES INDEX

There is no test equipment needed at the operator maintenance level to do troubleshooting, so, no test equipment procedures index is given.

CHAPTER 5

TROUBLESHOOTING ROADMAPS

5-1. GENERAL. This chapter gives troubleshooting roadmaps for every system of the truck for which you have detailed troubleshooting procedures. Figures 5-1 through 5-15 cover all the roadmaps for the detailed procedures.

5-2. ROADMAPS. Each roadmap gives a list of things which are most likely to cause a fault symptom in a system or subsystem. At least one of the items listed will be found to be bad when you do the detailed troubleshooting procedures for that system.

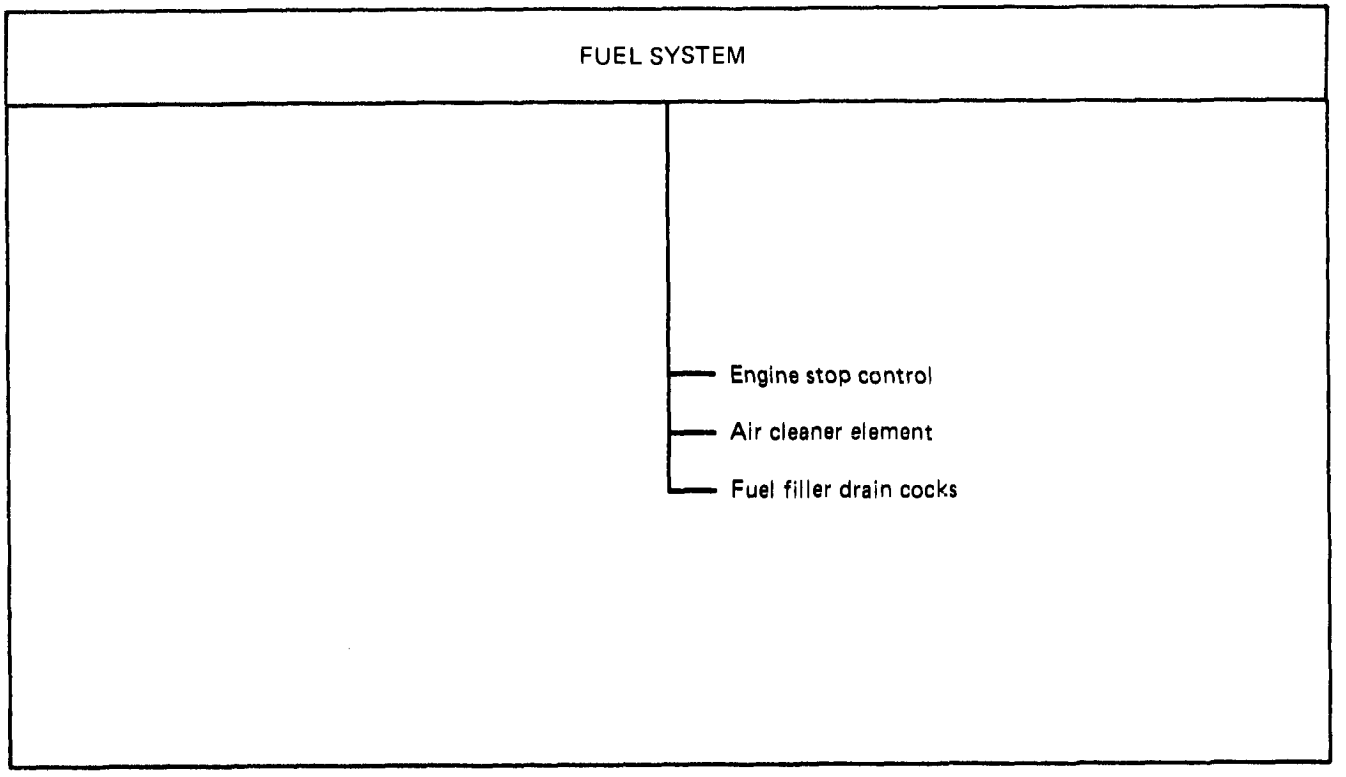

Figure 5-1. Troubleshooting Roadmap, Fuel System

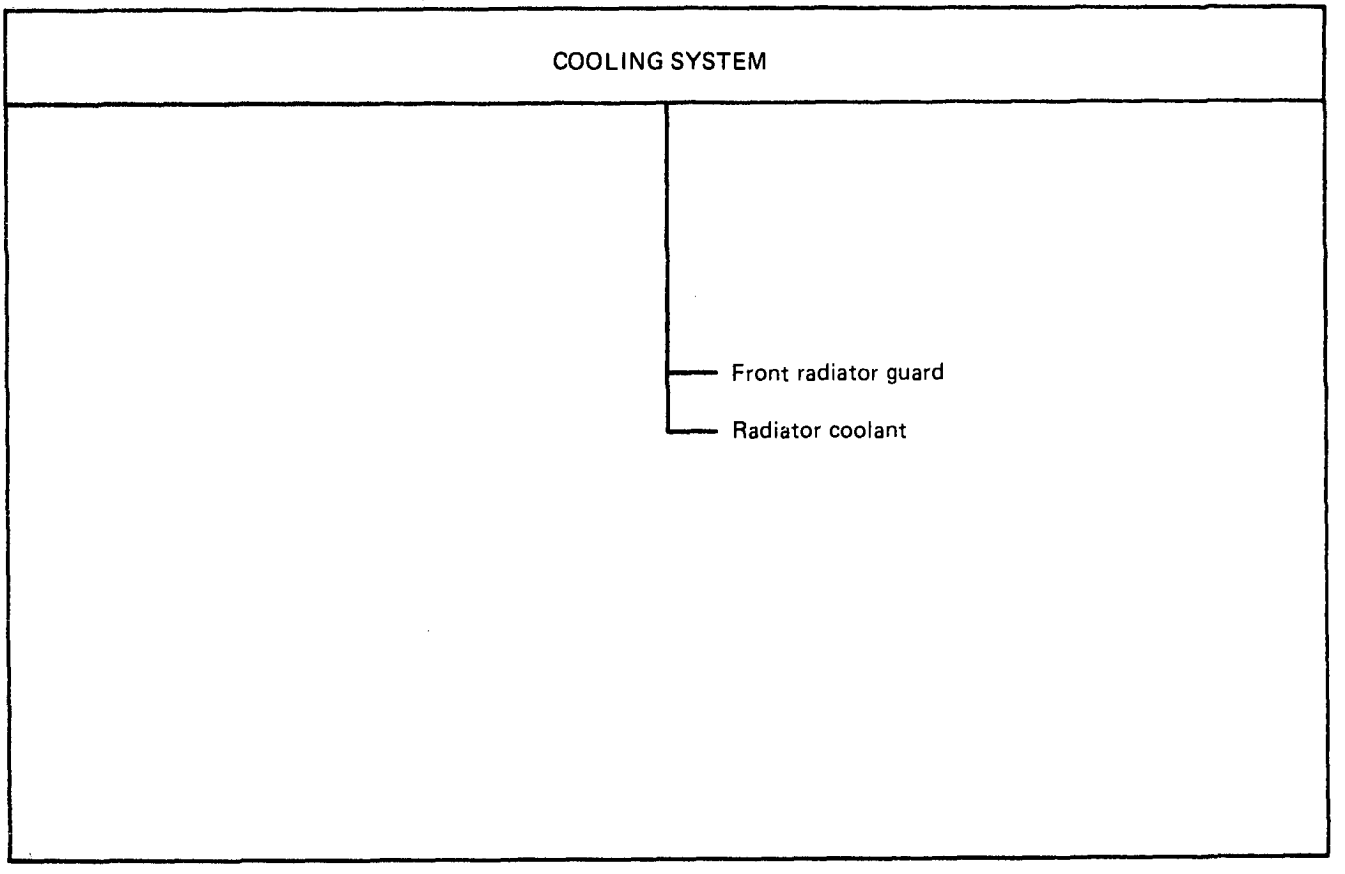

Figure 5-2. Troubleshooting Roadmap, Cooling System

TA 113871

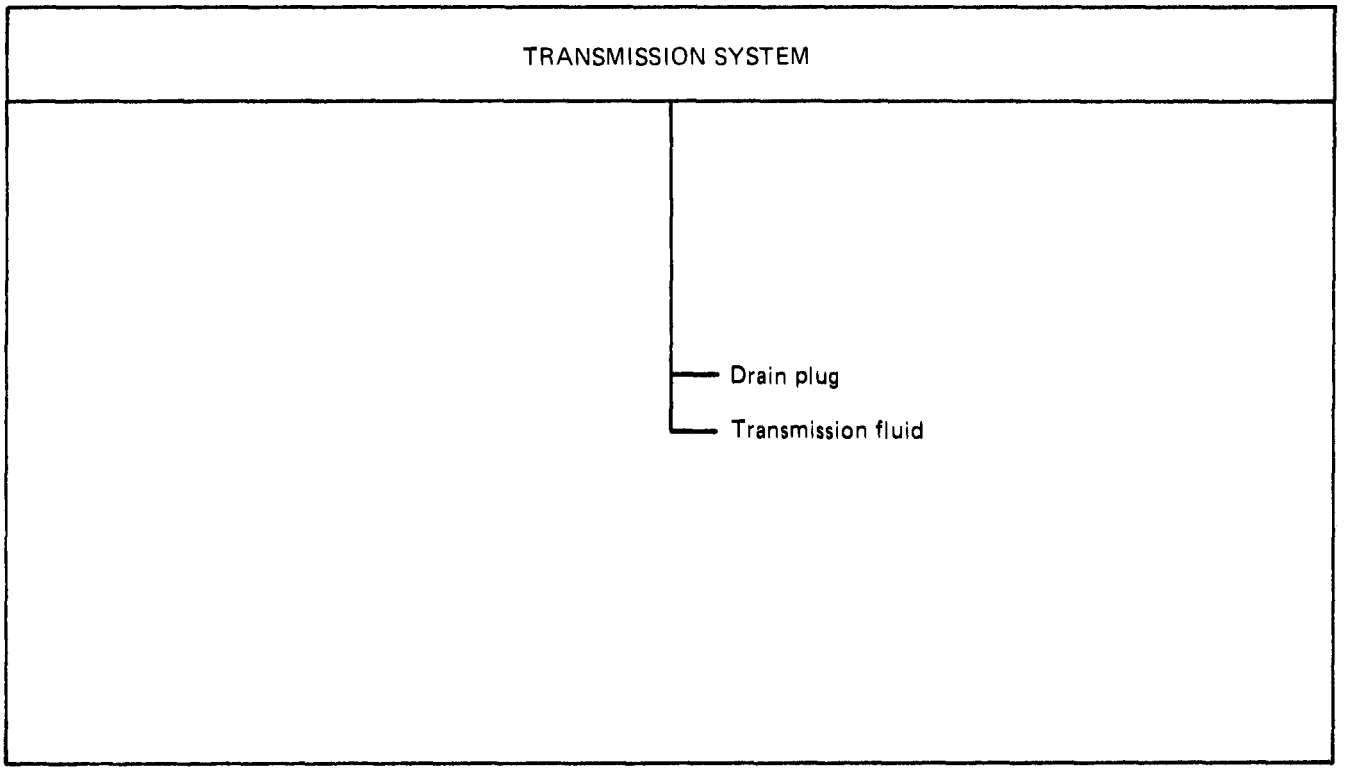

Figure 5-3. Troubleshooting Roadmap, Transmission System

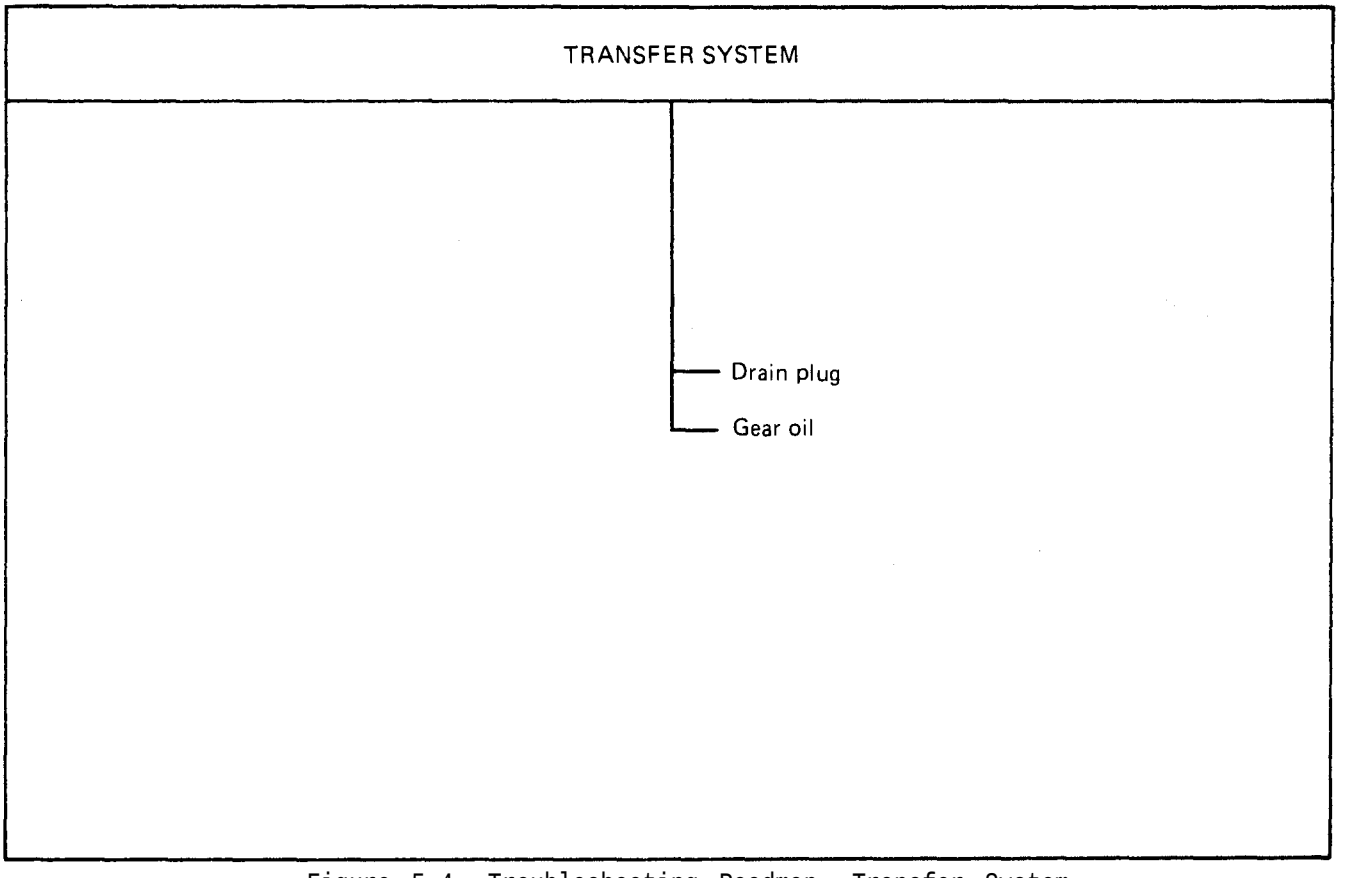

Figure 5-4. Troubleshooting Roadmap, Transfer System

TA 113872

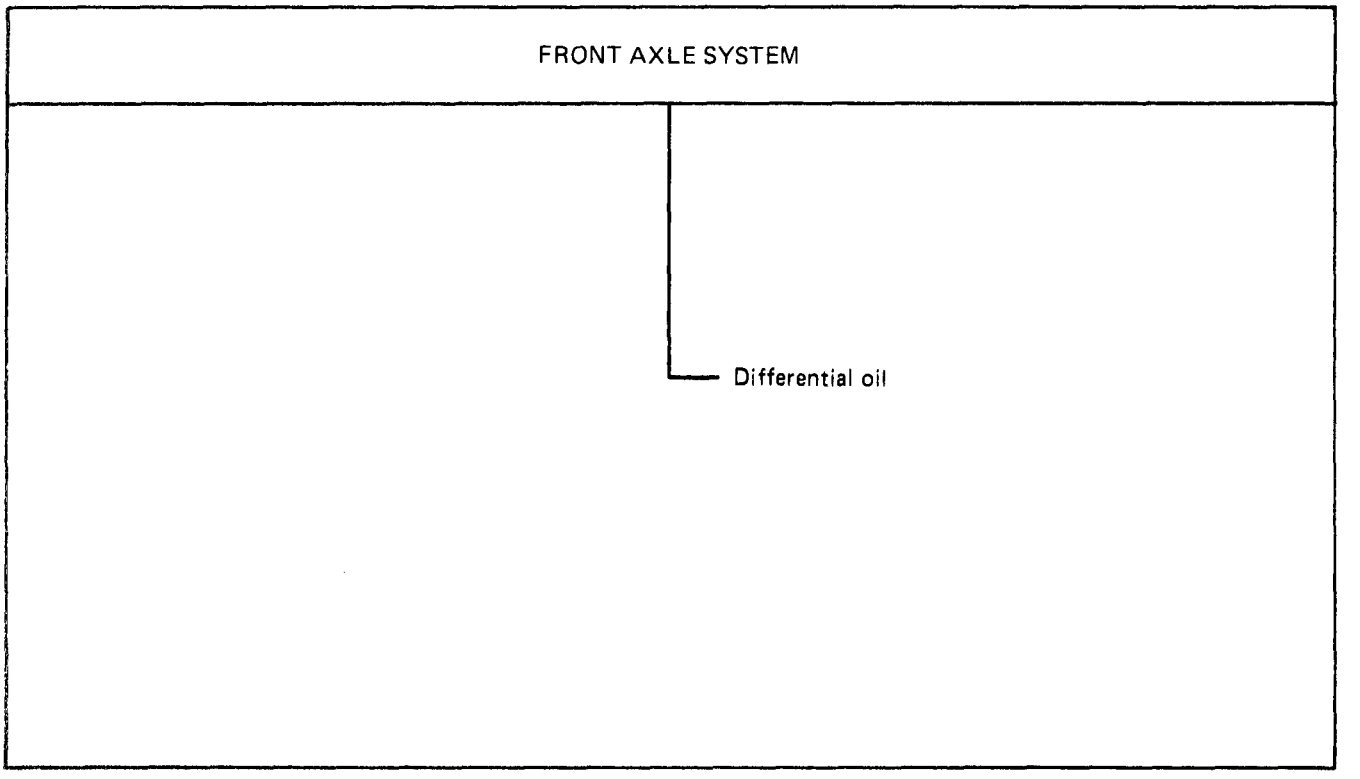

Figure 5-5. Troubleshooting Roadmap, Front Axle System

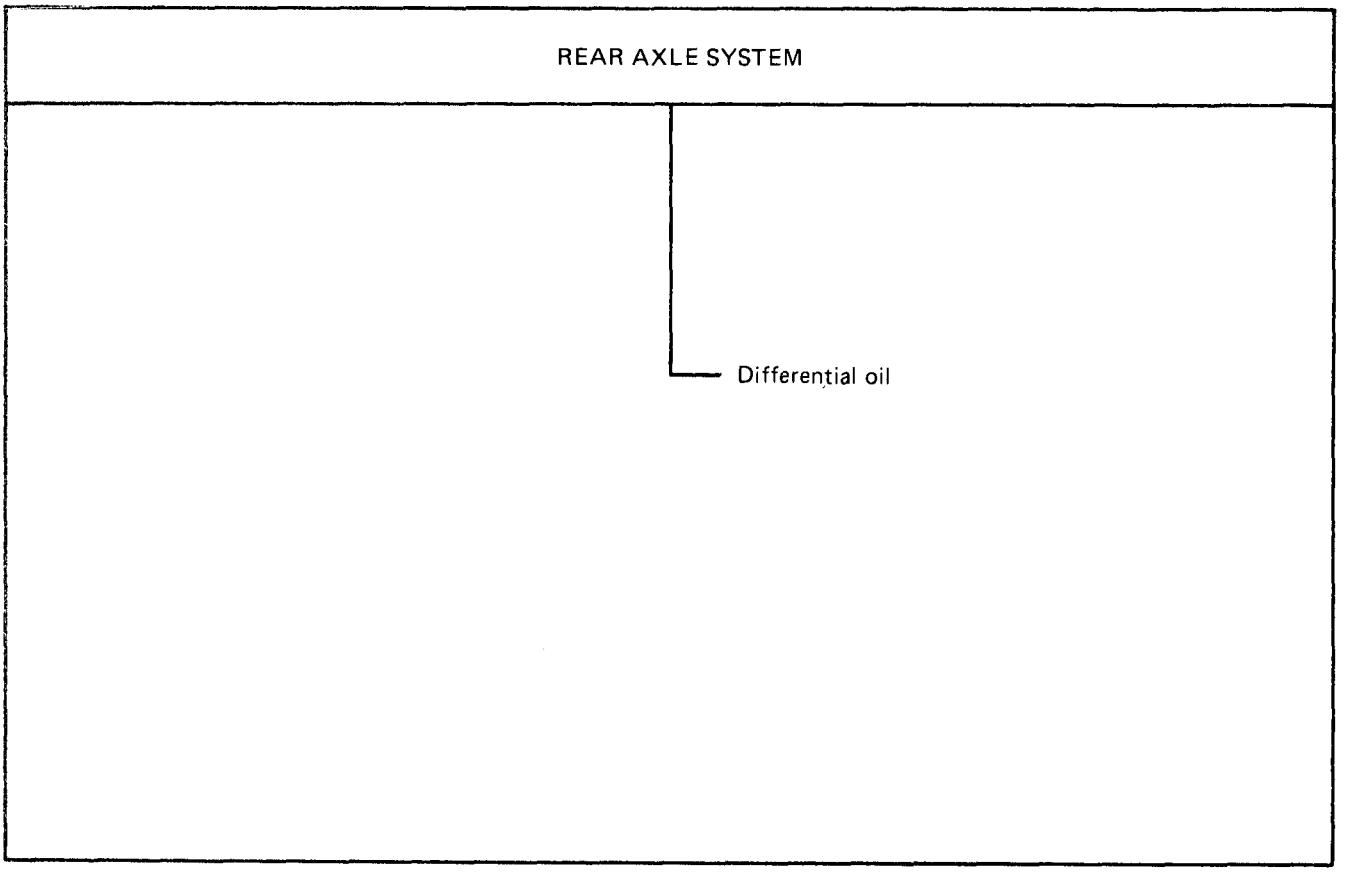

Figure 5-6. Troubleshooting Roadmap, Rear Axle System

TA 113873

BRAKE SYSTEM

- Hydraulic Brake Fluid
- Master Cylinder
- Air Hydraulic Cylinder
- Hydraulic Lines And Fittings
- Compressed Air Lines And Fittings
- Service Brakeshoes
- Wheel Cylinders
- Brake Pedal
- Service Brakeshoe Return Springs
- Air Compressor Strainer
- Air Compressor Drive Belt And Pulley
- Air Governor
- Unload Valve
- Air Pressure Gage
- Warning System
- Handbrake Cable
- Handbrake Brakeshoe Linings And Drum
- Handbrake Brakeshoe And Lever Retracting Springs
- Handbrake Linkage
- Handbrake Adjustment

Figure 5-7. Troubleshooting Roadmap, Brake System

TA 113874

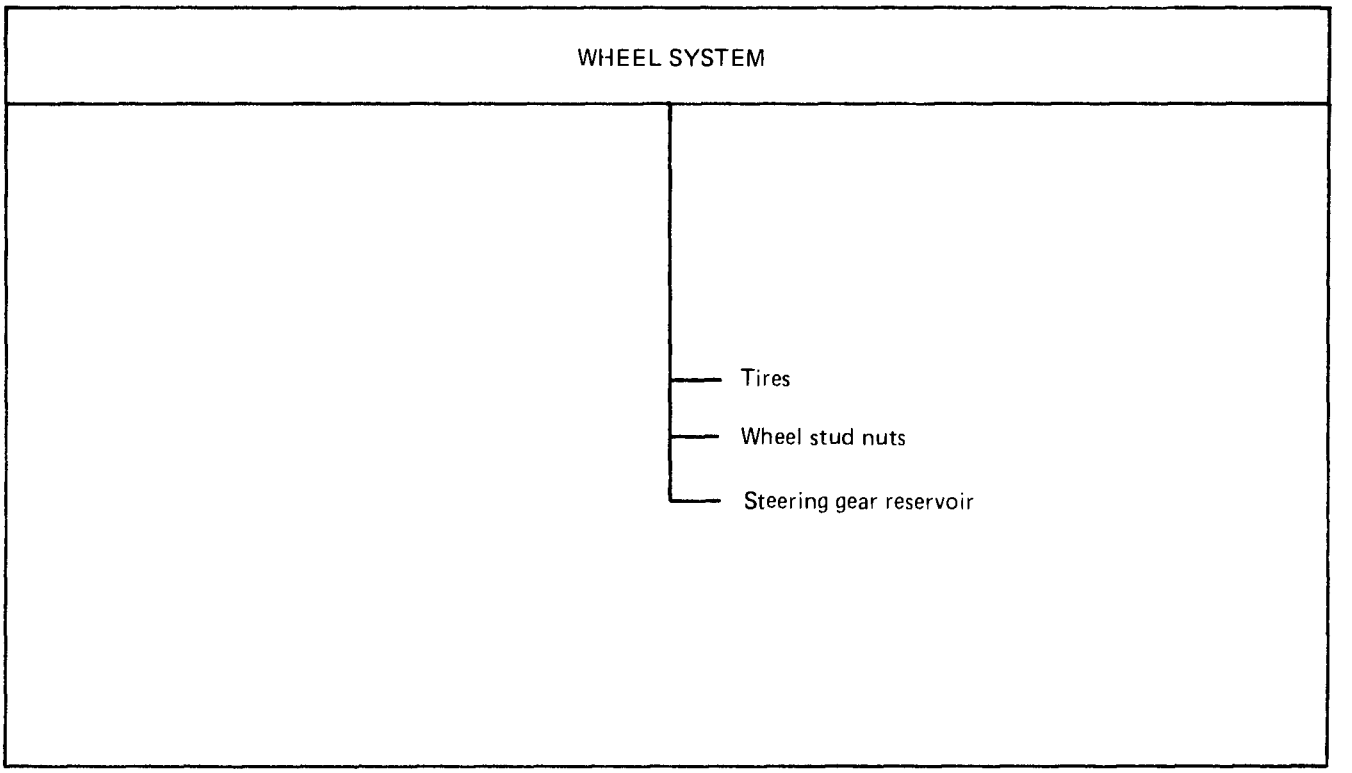

Figure 5-8. Troubleshooting Roadmap, Wheel System

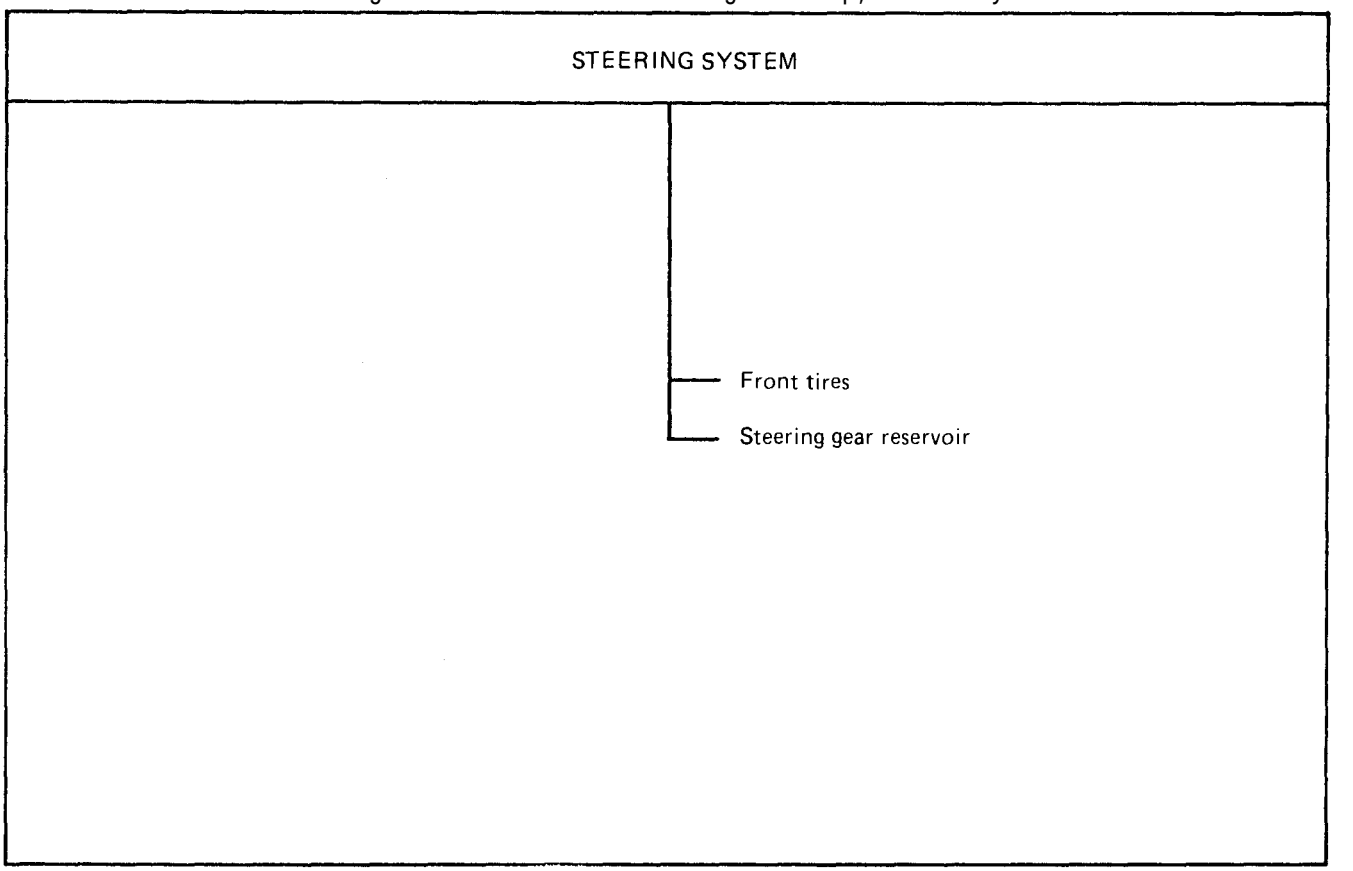

Figure 5-9. Troubleshooting Roadmap, Steering System

TA 113875

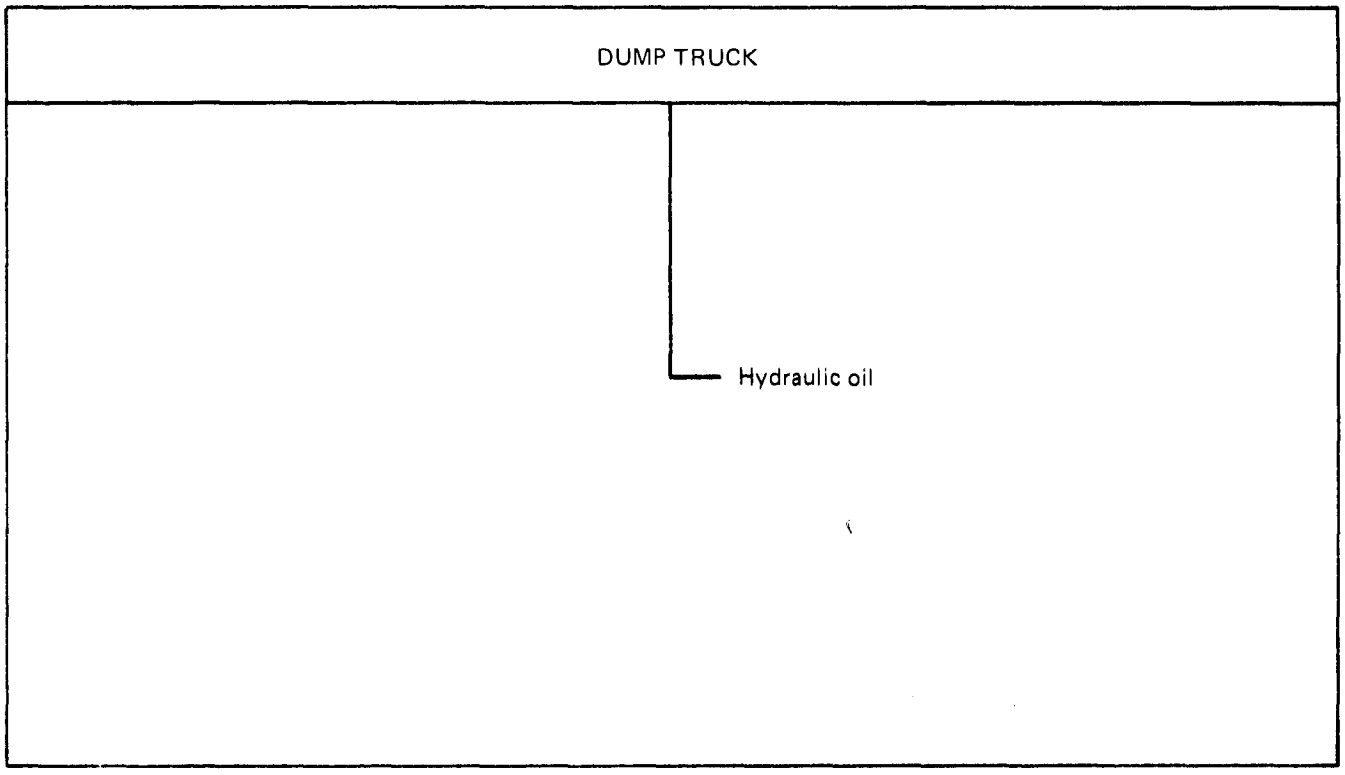

Figure 5-10. Troubleshooting Roadmap, Dump Truck

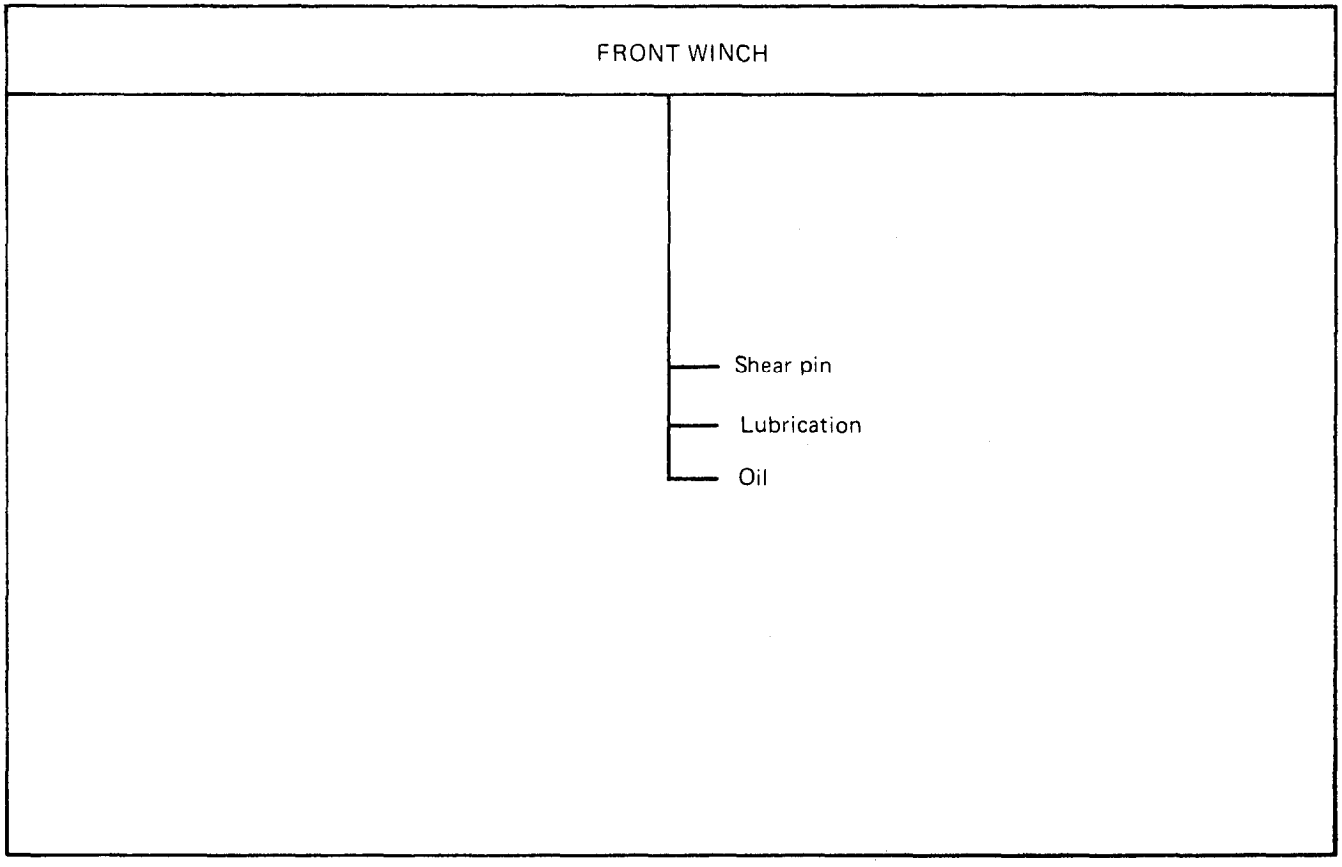

Figure 5-11. Troubleshooting Roadmap, Front Winch

TA 113876

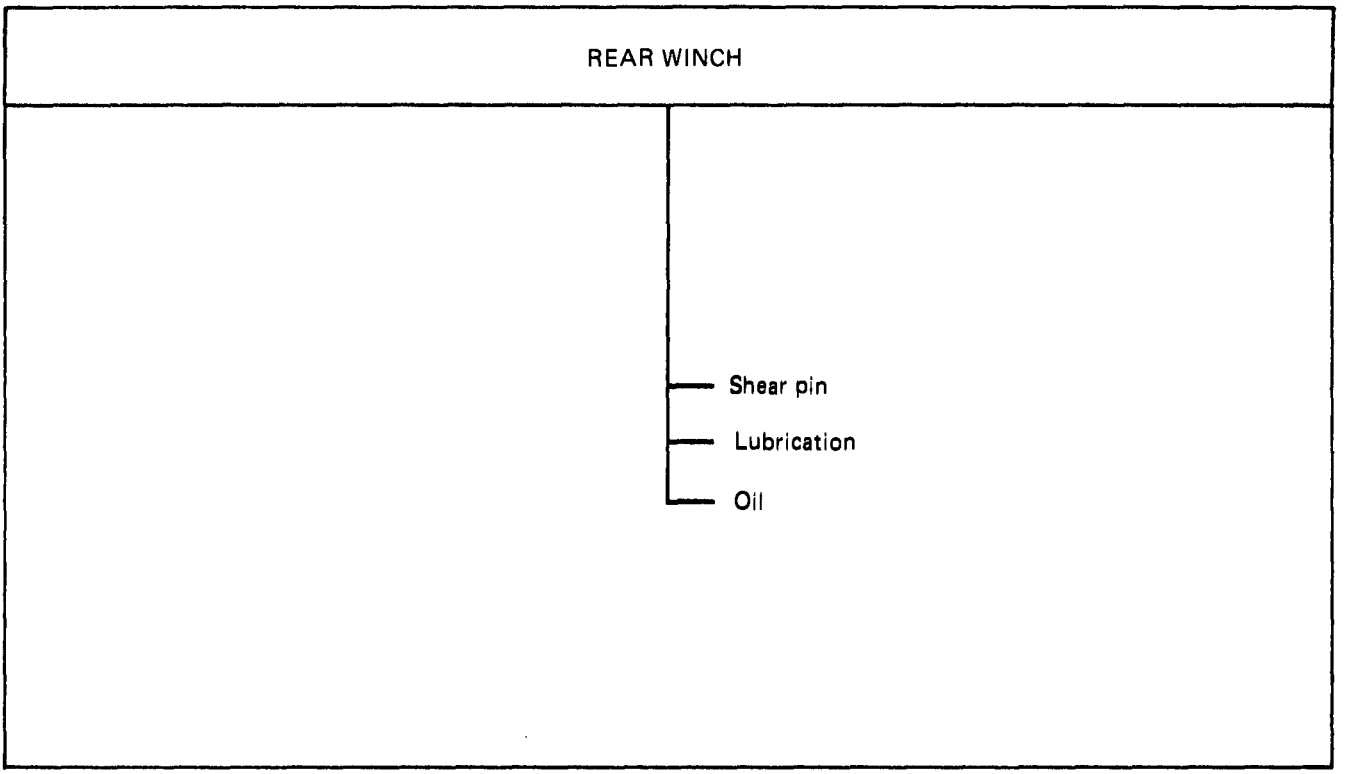

Figure 5-12. Troubleshooting Roadmap, Rear Winch

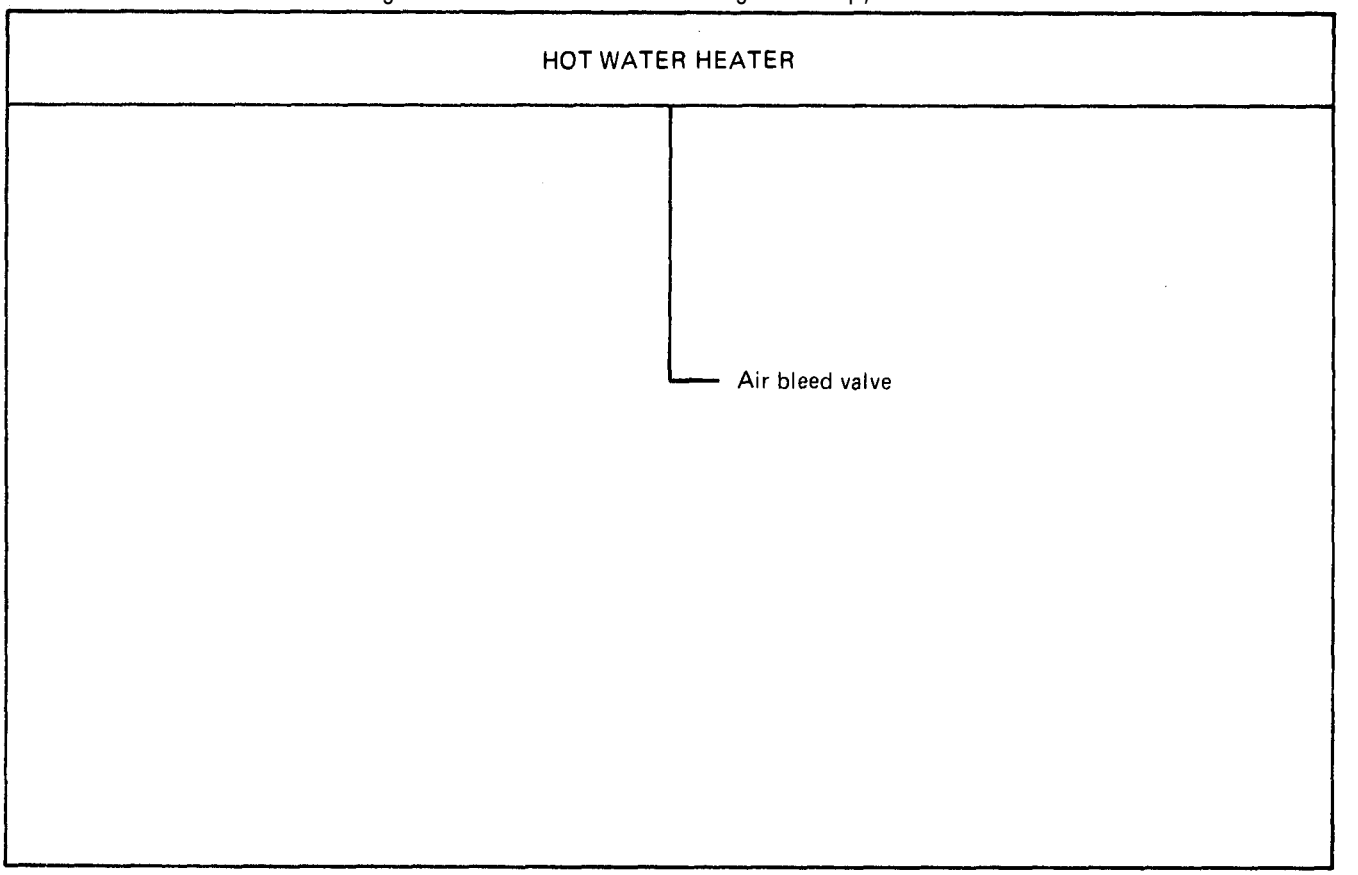

Figure 5-13. Troubleshooting Roadmap, Hot Water Heater

TA 113877

CHAPTER 6

FAULT SYMPTOM INDEXES

6-1. GENERAL. This chapter gives troubleshooting fault symptom indexes for every system of the truck for which you have detailed troubleshooting procedures. These indexes are in table form (tables 6-1 through 6-15) which gives you a quick way to check what material you have to used to do your troubleshooting.

6-2. INDEXES. Each index is divided into columns which give you information you need to help you do troubleshooting procedures. The following breakdown tells you what is in each column.

a. Subsystem Column. If the main system is divided into subsystems, the subsystems will be listed in this column.

b. Symptom Column. This column lists the symptoms, or problems for which detailed troubleshooting procedures are given.

c. Summary Column. No summary troubleshooting procedures are needed at the operator's level of troubleshooting, so, the summary column is not used.

d. Detailed Column. This column tells you where to find the detailed troubleshooting procedure for each symptom.

e. Persons Column. This column tells you how many people are needed to do the troubleshooting procedure.

f. Special Tools Column. Any tools needed to do the troubleshooting procedure which are not included in your common tool kit are listed in this column.

g. Standard Tools Column. A dot in this column means that tools found in your common tool kit are needed to do the troubleshooting procedure.

h. Materials Column. This column tells you what materials are needed to do the troubleshooting procedure. These materials and how they will be issued will be decided by your maintenance officer.

i. Time Column. This column tells you how much time you will need to do the detailed troubleshooting procedure. The time will be decided by your maintenance officer.

FAULT SYMPTOM INDEX

TABLE 6-1. FUEL SYSTEM

SUBSYSTEM	SYMPTOM	TS PROCEDURE		RESOURCES REQ'D				
		SUMMARY	DETAILED	PERSONS	TEST EQUIPMENT		MATERIALS	TIME
					SPECIAL TOOLS	STANDARD TOOLS		
—	1. Engine is hard starting, or cranks and does not start	—	Figure 8-1	1	—			
—	2. Engine runs rough and lacks power, or poor fuel mileage	—	Figure 8-2	1	—			

TABLE 6-2 COOLING SYSTEM

SUBSYSTEM	SYMPTOM	TS PROCEDURE		RESOURCES REQ'D				
		SUMMARY	DETAILED	PERSONS	TEST EQUIPMENT		MATERIALS	TIME
					SPECIAL TOOLS	STANDARD TOOLS		
—	1. Engine temperature gage reads above 195°F while running	—	Figure 9-1	1	—			

TA 113878

FAULT SYMPTOM INDEX

TABLE 6-3 TRANSMISSION SYSTEM

SUBSYSTEM	SYMPTOM	TS PROCEDURE		RESOURCES REQ'D				
					TEST EQUIPMENT			
		SUMMARY	DETAILED	PERSONS	SPECIAL TOOLS	STANDARD TOOLS	MATERIALS	TIME
—	1. Transmission makes noise	—	Figure 10-1	1	—			
—	2. Transmission leaks oil	—	Figure 10-2	1	—			

TABLE 6-4 TRANSFER SYSTEM

SUBSYSTEM	SYMPTOM	TS PROCEDURE		RESOURCES REQ'D				
					TEST EQUIPMENT			
		SUMMARY	DETAILED	PERSONS	SPECIAL TOOLS	STANDARD TOOLS	MATERIALS	TIME
—	1. Transfer makes noise	—	Figure 11-1	1	—			
—	2. Transfer leaks oil	—	Figure 11-2	1	—			

TA 113879

TABLE 6-5 FRONT AXLE SYSTEM

SUBSYSTEM	SYMPTOM	TS PROCEDURE		RESOURCES REQ'D				
		SUMMARY	DETAILED	PERSONS	TEST EQUIPMENT		MATERIALS	TIME
					SPECIAL TOOLS	STANDARD TOOLS		
—	1. Front axle makes noise	—	Figure 12-1	1	—			

TABLE 6-6 REAR AXLE SYSTEM

SUBSYSTEM	SYMPTOM	TS PROCEDURE		RESOURCES REQ'D				
		SUMMARY	DETAILED	PERSONS	TEST EQUIPMENT		MATERIALS	TIME
					SPECIAL TOOLS	STANDARD TOOLS		
—	1. Rear axle makes noise	—	Figure 13-1	1	—			

TA 113880

FAULT SYMPTOM INDEX

TABLE 6-7 BRAKE SYSTEM

SUBSYSTEM	SYMPTOM	TS PROCEDURE		RESOURCES REQ'D				
					TEST EQUIPMENT			
		SUMMARY	DETAILED	PERSONS	SPECIAL TOOLS	STANDARD TOOLS	MATERIALS	TIME
—	1. Brake pedal sinks too close to floorboard	—	Figure 14-1	1	—			
—	2. Truck pulls to one side when brakes are put on	—	Figure 14-2	1	—			
—	1. Buzzer does not shut off and air pressure gage reads below 60 psi on all trucks except M52A2	—	Figure 14-3	1	—			
—	2. Buzzer does not shut off and air pressure gage reads below 60 psi on trucks M52A2	—	Figure 14-4	1	—			
—	1. Trailer brakes do not work when pedal is pressed or hand control lever is used	—	Figure 14-5	1	—			
—	1. Handbrake does not hold parked truck	—	Figure 14-6	1	—			

TA 113881

TABLE 6-8 WHEEL SYSTEM

SUBSYSTEM	SYMPTOM	TS PROCEDURE		RESOURCES REQ'D				
		SUMMARY	DETAILED	PERSONS	TEST EQUIPMENT: SPECIAL TOOLS	TEST EQUIPMENT: STANDARD TOOLS	MATERIALS	TIME
—	1. Hard steering	—	Figure 15-1	1	—			
—	2. Shimmy	—	Figure 15-2	1	—			
—	3. Truck pulls to one side when brakes are put on	—	Figure 15-3	1	—			

TABLE 6-9 STEERING SYSTEM

SUBSYSTEM	SYMPTOM	TS PROCEDURE		RESOURCES REQ'D				
		SUMMARY	DETAILED	PERSONS	TEST EQUIPMENT: SPECIAL TOOLS	TEST EQUIPMENT: STANDARD TOOLS	MATERIALS	TIME
—	1. Hard steering	—	Figure 16-1	1	—			

TA 113882

FAULT SYMPTOM INDEX

TABLE 6-10 DUMP TRUCK

SUBSYSTEM	SYMPTOM	TS PROCEDURE		RESOURCES REQ'D				
					TEST EQUIPMENT			
		SUMMARY	DETAILED	PERSONS	SPECIAL TOOLS	STANDARD TOOLS	MATERIALS	TIME
—	1. Dump body does not rise	—	Figure 17-1	1	—			

TABLE 6-11 FRONT WINCH

SUBSYSTEM	SYMPTOM	TS PROCEDURE		RESOURCES REQ'D				
					TEST EQUIPMENT			
		SUMMARY	DETAILED	PERSONS	SPECIAL TOOLS	STANDARD TOOLS	MATERIALS	TIME
—	1. Winch does not pull load	—	Figure 18-1	1	—			
—	2. Winch makes noise	—	Figure 18-2	1	—			

TA 113883

FAULT SYMPTOM INDEX

TABLE 6-12 REAR WINCH

SUBSYSTEM	SYMPTOM	TS PROCEDURE		RESOURCES REQ'D				
					TEST EQUIPMENT			
		SUMMARY	DETAILED	PERSONS	SPECIAL TOOLS	STANDARD TOOLS	MATERIALS	TIME
—	1. Winch makes noise	—	Figure 19-1	1	—			
—	2. Winch does not pull load	—	Figure 19-2	1	—			

TABLE 6-13 HOT WATER HEATER

SUBSYSTEM	SYMPTOM	TS PROCEDURE		RESOURCES REQ'D				
					TEST EQUIPMENT			
		SUMMARY	DETAILED	PERSONS	SPECIAL TOOLS	STANDARD TOOLS	MATERIALS	TIME
—	1. Heater and defroster does not give enough heat	—	Figure 20-1	1	—			

TA 113884

CHAPTER 7

SAMPLE TROUBLESHOOTING PROCEDURE

7-1. GENERAL. This chapter gives a sample troubleshooting procedure. The purpose of the sample procedure is to help you see how the detailed troubleshooting procedures are used to find faults in a system.

7-2. SAMPLE PROCEDURE. The sample procedure given is the fuel system troubleshooting procedure for the symptom, ENGINE IS HARD STARTING, OR CRANKS AND DOES NOT START. This symptom is one you will have when you try to start your truck and certain parts on the truck are not working correctly. In each numbered box, instructions are given which tell you what to do, and how to do it. A large dot is placed next to the "what to do" instructions, and small dots next the the "how to do it" instructions.

a. Box number 1 gives general instructions on getting the truck ready before you start to troubleshoot.

b. Box number 2 gives a fault isolation test instruction. In this case, you are told to see if the engine stop (ENG STOP) control handle is pushed in. After you do this simple test, you read the question at the bottom of box number 2. If ENG STOP control handle is pulled out, the answer to the question is NO, so you go to the next box.

c. Box number 3 gives you a corrective action. In this case, the fault is the ENG STOP control handle being pulled out. The corrective action is what you do to fix the fault, which is simply to push the handle back in. If the engine still doesn't start after you do this, it could mean that there are other faults in the fuel system besides the ENG STOP control handle. When this happens, go back to the beginning of the procedure and do each step again until you find the other faults.

d. Sometimes the corrective actions given for a fault will tell you what to do to fix the fault, but will not give you detailed instructions on how to fix it. Instead, you will be told to refer to another volume in this manual for these instructions. Box number 5 is an example of this. If the answer to the questions that all the fault isolation test instruction boxes ask is YES, it means that the symptom cannot be corrected at the operator level of maintenance. When this happens you are given the instruction "Tell Organizational Maintenance."

FUEL SYSTEM TROUBLESHOOTING

Symptom 1

ENGINE IS HARD STARTING, OR CRANKS AND DOES NOT START

WARNING

Diesel fuel is very flammable. Care must be used when choosing a place to work on fuel system. Keep truck about 50 feet away from an area where open flame, sparks, or smoking may cause a fire. Keep a fire extinguisher close by

1

- Make truck ready for work on fuel system
  - Find a well ventilated area
  - Park truck. Refer to Vol 1, chapter 4, para 4-6e

GENERAL INSTRUCTIONS

FAULT ISOLATION TEST INSTRUCTION

2

- Check engine stop control
  - See if ENG STOP control handle has been pushed in

Is engine stop control OK?

GO

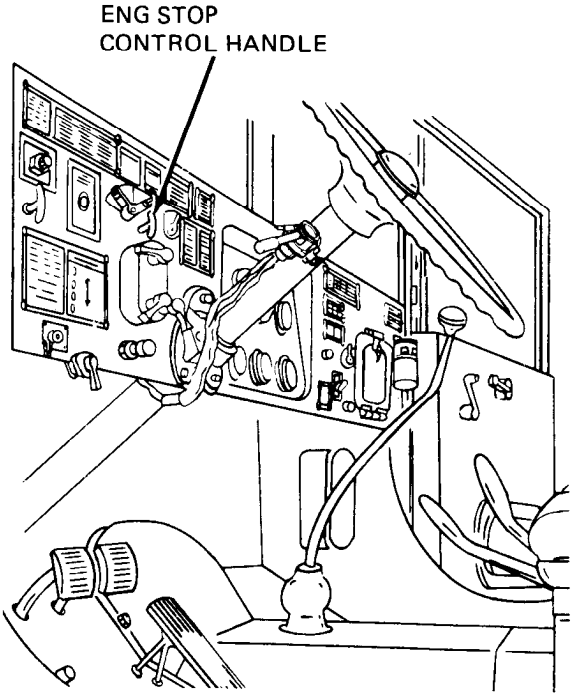

TA 113885

Figure 7-1 (Sheet 1 of 3)

GO

CORRECTIVE ACTION

3

- Reset engine stop control
  - Turn ENG STOP control handle and push in until it stops

YES

NO

4

- Check air cleaner indicator gage
  - Start engine. Refer to Vol 1, chapter 4, para 4-6b
  - Look for red band showing on gage
  - Stop engine. Refer to Vol 1, chapter 4, para 4-6e

Does red band fail to show?

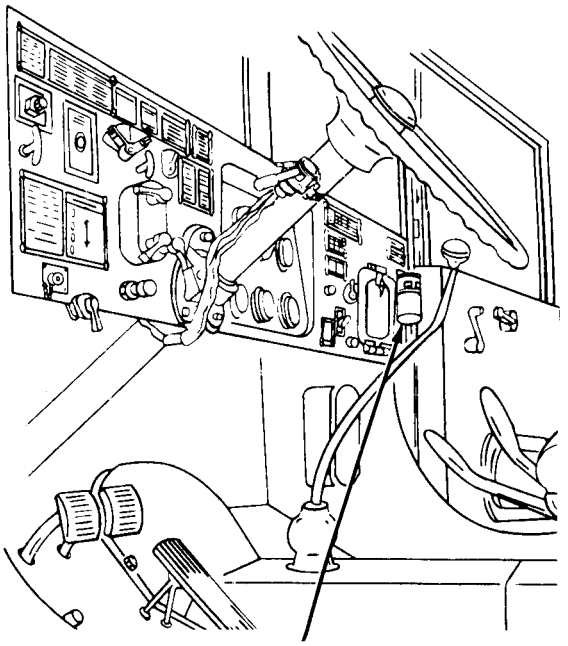

5

- Clean dirty air cleaner element
  - Refer to Vol 4, chapter 2, para 2-3

YES

NO

GO

TA 113886

Figure 7-1 (Sheet 2 of 3)

GO

6

- Check fuel filter drain cocks
  - Look for fuel leaking from drain cocks
  - Feel for loose drain cocks

Are drain cocks OK?

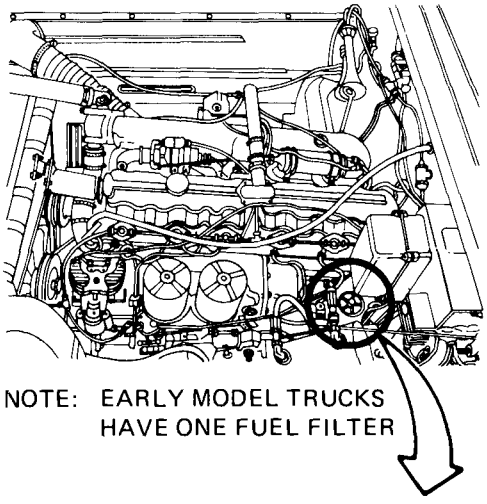

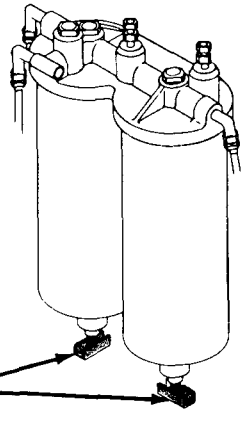

YES

NO

7

- Tighten loose or leaking fuel filler drain cocks
  - Using pliers tighten drain cocks until leak stops

8

Tell organizational maintenance

TA 113887

Figure 7-1 (Sheet 3 of 3)

CHAPTER 8

FUEL SYSTEM TROUBLESHOOTING PROCEDURES

8-1. GENERAL. Detailed troubleshooting procedures for the fuel system are given in this chapter.

8-2. PROCEDURES. These troubleshooting procedures are used the same way as the sample troubleshooting procedure given in chapter 7.

Symptom 1

ENGINE IS HARD STARTING, OR CRANKS AND DOES NOT START

WARNING

Diesel fuel is very flammable. Care must be used when choosing a place to work on fuel system. Keep truck about 50 feet away from an area where open flame, sparks, or smoking may cause a fire. Keep a fire extinguisher close by

1

- Make truck ready for work on fuel system
  - Find a well ventilated area
  - Park truck. Refer to Vol 1, chapter 4, para 4-6e

2

- Check engine stop control
  - See if ENG STOP control handle has been pushed in

Is engine stop control OK?

GO

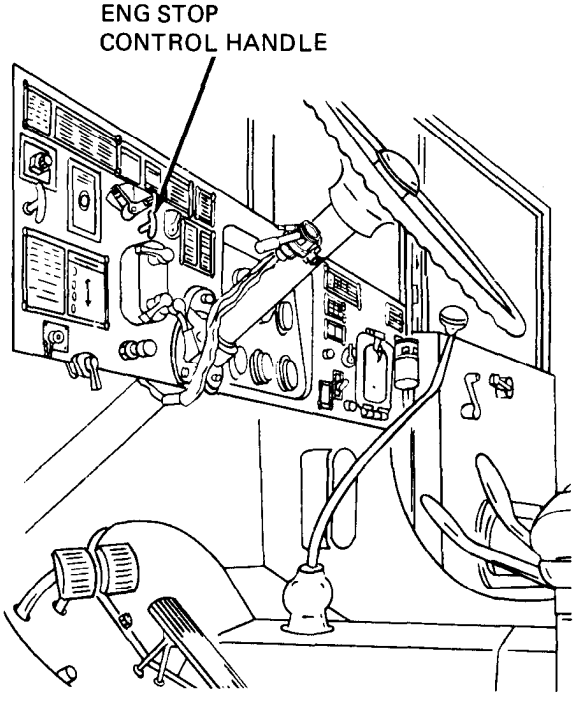

TA 113900

Figure 8-1 (Sheet 1 of 3)

GO

CORRECTIVE ACTION

3

- Reset engine stop control
  - Turn ENG STOP control handle and push in until it stops

YES

NO

4

- Check air cleaner indicator gage
  - Start engine. Refer to Vol 1, chapter 4, para 4-6b
  - Look for red band showing on gage
  - Stop engine. Refer to Vol 1, chapter 4, para 4-6e

Does red band fail to show?

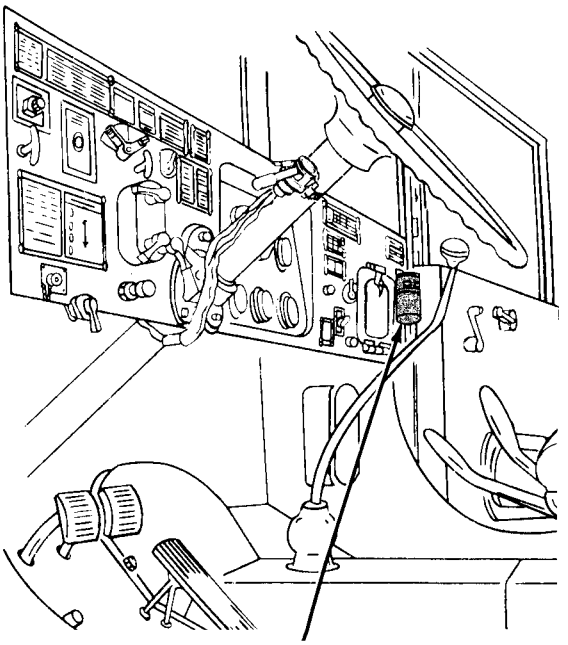

5

- Clean dirty air cleaner element
  - Refer to Vol 4, chapter 2, para 2-3

YES

NO

GO

TA 113901

Figure 8-1 (Sheet 2 of 3)

GO

6

- Check fuel filter drain cocks
  - Look for fuel leaking from drain cocks
  - Feel for loose drain cocks

Are drain cocks OK?

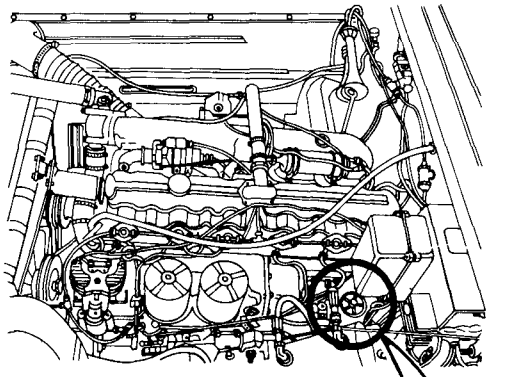

NOTE: EARLY MODEL TRUCKS HAVE ONE FUEL FILTER

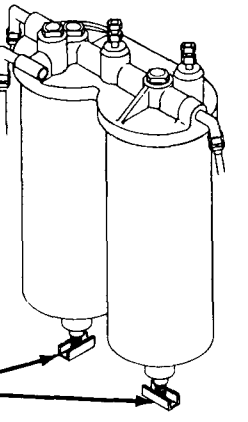

YES

NO

7

- Tighten loose or leaking fuel filler drain cocks
  - Using pliers tighten drain cocks until leak stops

8

Tell organizational maintenance

TA 113902

Figure 8-1 (Sheet 3 of 3)

Symptom

2 ENGINE RUNS ROUGH AND LACKS POWER, OR POOR FUEL MILEAGE

WARNING

Diesel fuel is very flammable. Care must be used when choosing a place to work on fuel system. Keep truck about 50 feet away from an area where open flame, sparks, or smoking may cause a fire. Keep a fire extinguisher close by

1

- Make truck ready for work on fuel system
  - Find a well ventilated area
  - Park truck. Refer to Vol 1, chapter 4, para 4-6e

2

- Check air cleaner indicator gage
  - Start engine. Refer to Vol 1, chapter 4, para 4-6b
  - Look for red band showing on gage
  - Stop engine. Refer to Vol 1, chapter 4, para 4-6e

Does red band fail to show?

GO

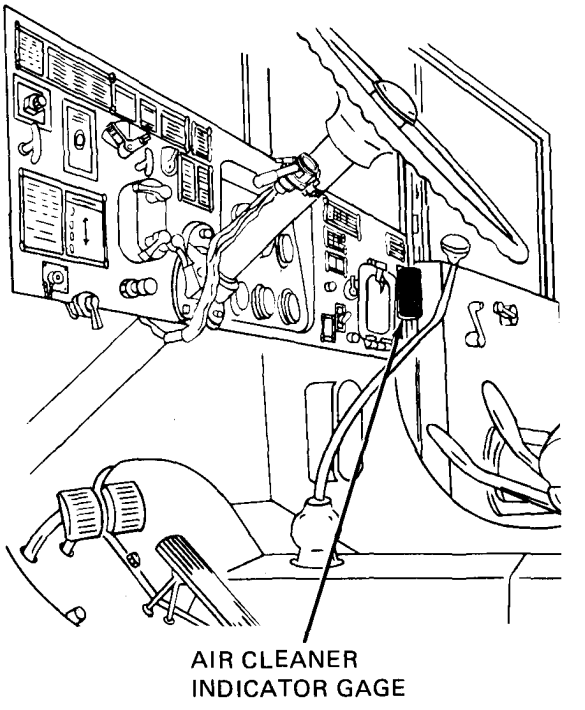

TA 113903

Figure 8-2 (Sheet 1 of 2)

GO

YES

NO

3

- Clean dirty air cleaner element
  - Refer to Vol 4, chapter 2, para 2-4

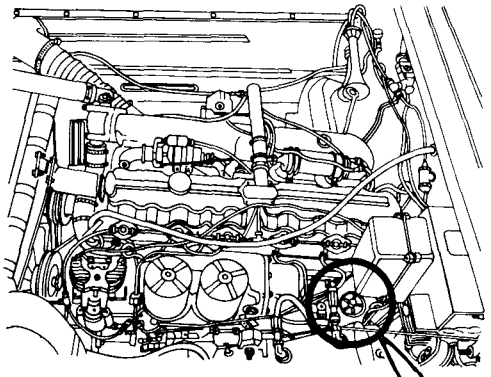

NOTE: EARLY MODEL TRUCKS HAVE ONE FUEL FILTER

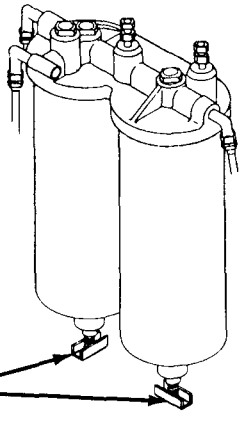

4

- Check fuel filter drain cocks
  - Look for fuel leaking from drain cocks
  - Feel if drain cocks are loose

Are the drain cocks OK?

YES

NO

5

- Tighten loose or leaking fuel filter drain cocks
  - Using pliers tighten drain cocks until leak stops

6

Tell organizational maintenance

TA 113904

Figure 8-2 (Sheet 2 of 2)

CHAPTER 9

COOLING SYSTEM TROUBLESHOOTING PROCEDURES

9-1. GENERAL. Detailed troubleshooting procedures for the cooling system are given in this chapter.

9-2. PROCEDURES. These troubleshooting procedures are used the same way as the sample troubleshooting procedures given in chapter 7.

COOLING SYSTEM TROUBLESHOOTING

Symptom

ENGINE TEMPERATURE GAGE READS ABOVE 195°F WHILE RUNNING

1

- Make truck ready for work on cooling system
  - Park truck. Refer to Vol 1, chapter 4, para 4-6e
  - Chock wheels

2

- Check radiator brush guard assembly
  - Look for anything that will block the air flow to the radiator

Is radiator brush guard assembly clear?

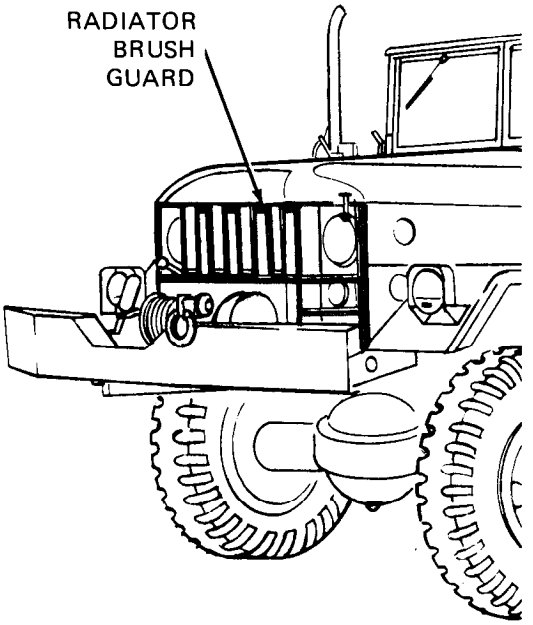

YES → GO

NO → **3**

- Clean blockage away from radiator
  - Clear away blockage
  - Blow away blockage with compressed air

TA 113905

Figure 9-1 (Sheet 1 of 3)

GO

WARNING

Engine cooling system runs under pressure, and at a temperature of 165°F, to 195°F. If filler cap is taken off before pressure is set free scalding coolant will blow out. Due to high temperatures of coolant, bad burns can occur if contact is made with skin

4

- Check radiator coolant level
  - Using rag, grab radiator filler cap and turn to the left until it reaches stop
  - Wait about 30 seconds, or until all pressure has been set free
  - Using rag, push down on cap and turn to left. Take off cap
  - Look inside radiator tank and see if coolant level is within two inches from top

Is radiator coolant level OK?

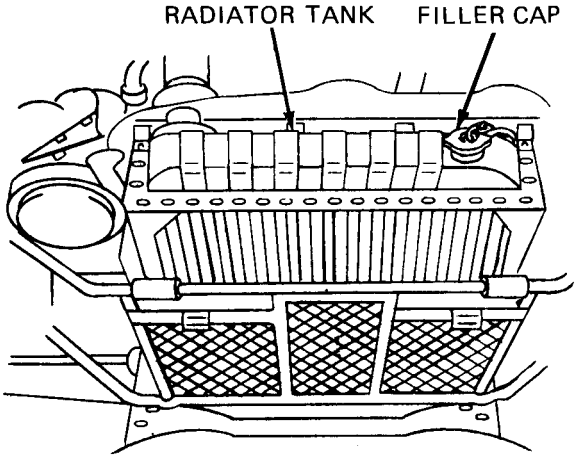

GO

TA 113906

Figure 9-1 (Sheet 2 of 3)

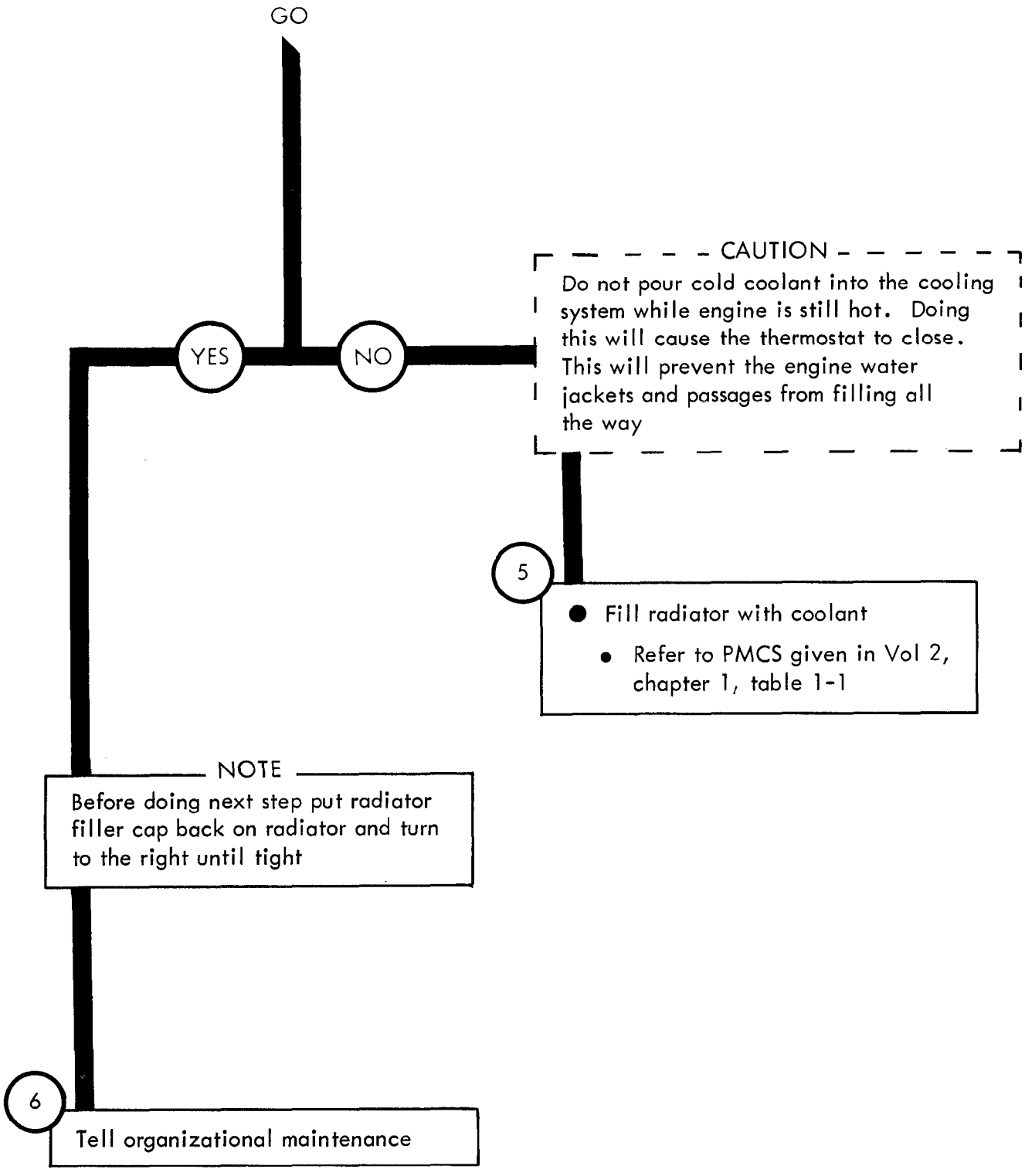

TA 113907

Figure 9-1 (Sheet 3 of 3)

CHAPTER 10

TRANSMISSION SYSTEM TROUBLESHOOTING PROCEDURES

10-1. GENERAL. Detailed troubleshooting procedures for the transmission system are given in this chapter.

10-2. PROCEDURES. These troubleshooting procedures are used the same way as the sample troubleshooting procedure given in chapter 7.

TRANSMISSION SYSTEM TROUBLESHOOTING

Symptom

1 TRANSMISSION MAKES NOISE

1

- Park truck
  - Refer to Vol 1, chapter 4, para 4-6e

WARNING

Transmission casing and gear oil get very hot when truck is being run. After truck is stopped, wait until it has had time to cool off before doing any work on transmission

2

- Check transmission for loose drain plug
  - Using adjustable wrench and plug wrench, feel for loose drain plug

Is drain plug OK?

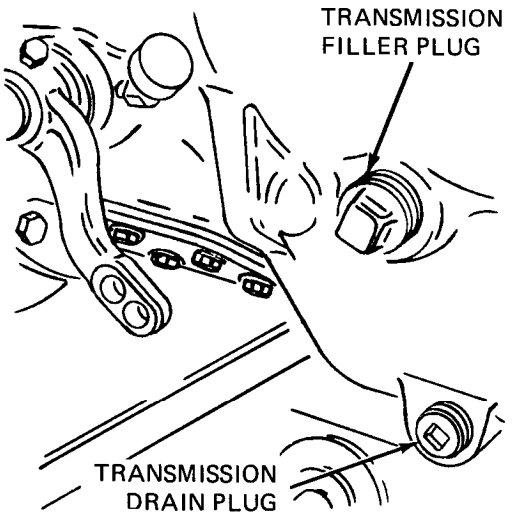

YES → GO

NO → **3**

- Tighten loose drain plug
  - Using adjustable wrench and plug wrench, tighten plug
- Top off oil level in transmission
  - Refer to LO 9-2320-211-12

TA 113908

Figure 10-1 (Sheet 1 of 2)

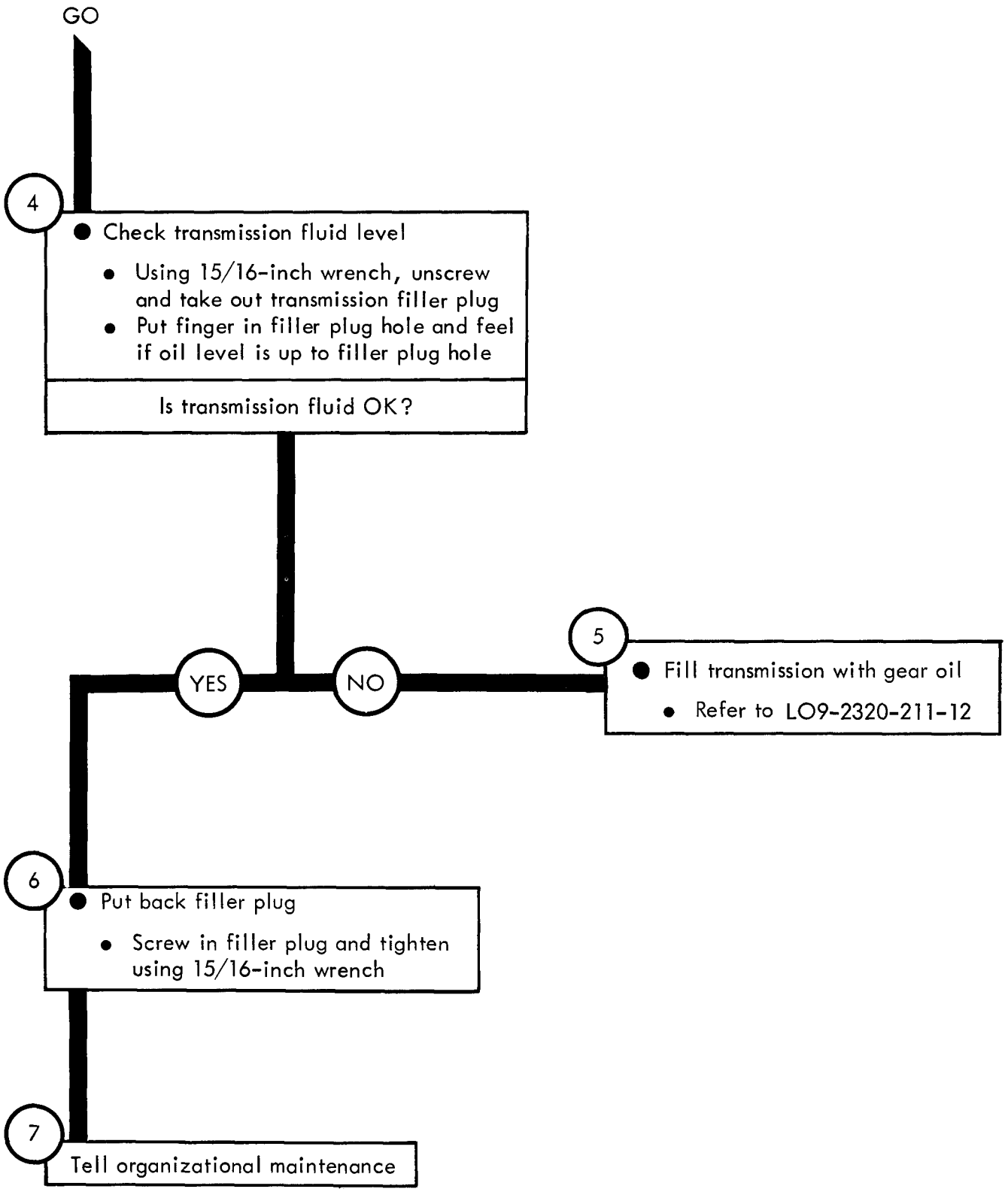

TA 113909

Figure 10-1 (Sheet 2 of 2)

Symptom

2 TRANSMISSION LEAKS OIL

1

- Make truck ready for work on transmission
  - Park truck. Refer to Vol. 1, chapter 4, para 4-6e
  - Chock wheels

2

- Check transmission drain and filler plugs
  - Look for signs of oil leaking from plugs

Are plugs OK?

YES

NO

3

- Tighten leaking plugs
  - Using plug wrench and adjustable wrench tighten transmission drain plug

NOTE: Before doing next step oil level in transmission must be topped off. Refer to LO 9-2320-211-12

  - Using 13/16 inch wrench, tighten transmission filler plug

4

Tell organizational maintenance

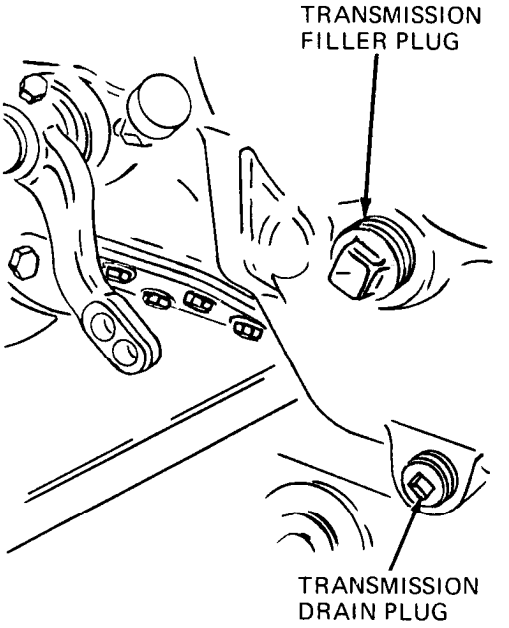

TA 113910

Figure 10-2

CHAPTER 11

TRANSFER SYSTEM TROUBLESHOOTING PROCEDURES

11-1. GENERAL. Detailed troubleshooting procedures for the transfer system are given in this chapter.

11-2. PROCEDURES. These troubleshooting procedures are used the same way as the sample troubleshooting procedure given in chapter 7.

TRANSFER SYSTEM TROUBLESHOOTING

Symptom

1 TRANSFER MAKES NOISE

1

- Make truck ready for work on transfer
  - Park truck. Refer to Vol 1, chapter 4, para 4-6e
  - Chock wheels

WARNING

Gear oil in the transfer will be very hot just after the truck has been run and parked. Wait until transfer has cooled off before doing any work on it or you may get a bad burn

2

- Check gear oil level in transfer
  - Crawl under truck
  - Using plug wrench and adjustable wrench unscrew and take off transfer case filler plug
  - Put finger in filler plug hole to feel if transfer is full

Is transfer case full?

GO

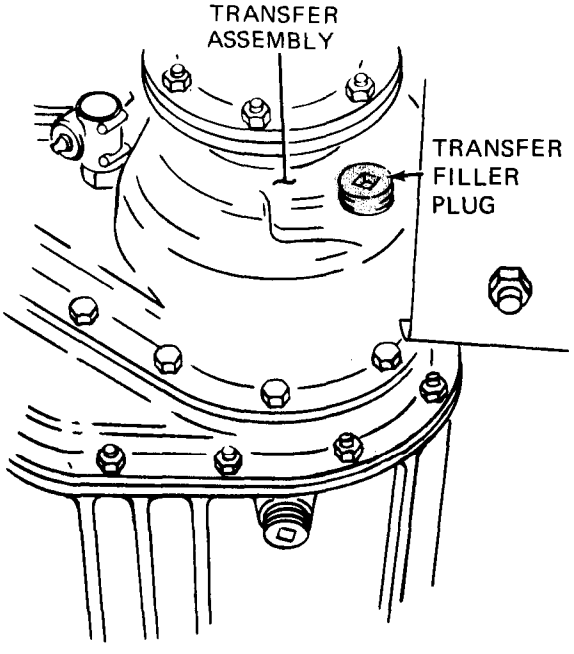

TA 113911

Figure 11-1 (Sheet 1 of 2)

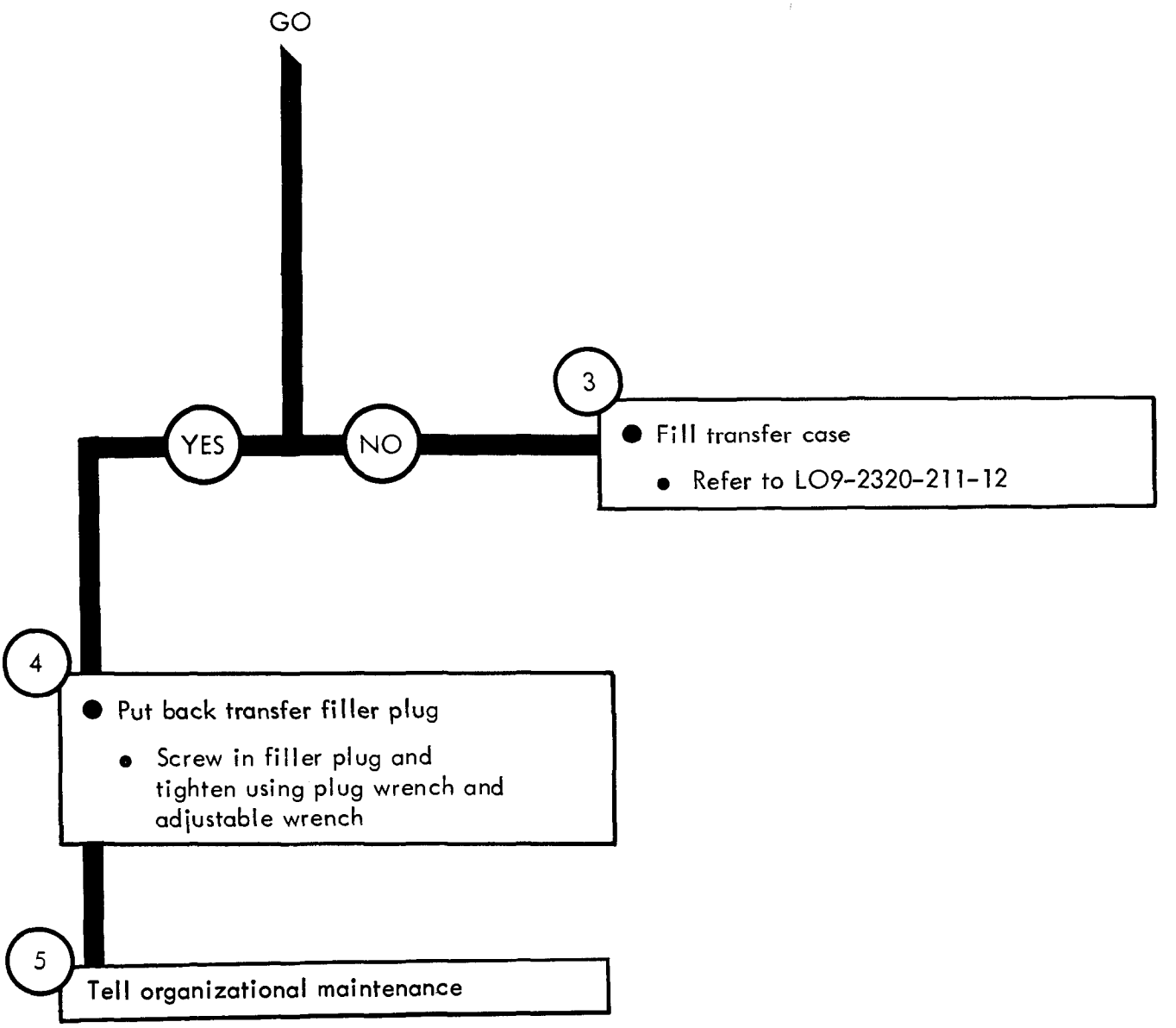

TA 113912

Figure 11-1 (Sheet 2 of 2)

Symptom

2 TRANSFER LEAKS OIL

1

- Make truck ready for work on transfer
  - Park truck. Refer to Vol 1, chapter 4, para 4-6e
  - Chock wheels
  - Crawl under truck

2

- Check transfer drain and filler plugs
  - Look for signs of leaking gear oil from plugs

Are plugs OK?

YES

NO

- Tighten loose plugs
  - Using plug wrench and adjustable wrench tighten drain plug

NOTE: Before doing next step top off gear oil in transfer. Refer to LO9-2320-211-12

  - Using plug wrench and adjustable wrench tighten filler plug

4

Tell organizational maintenance

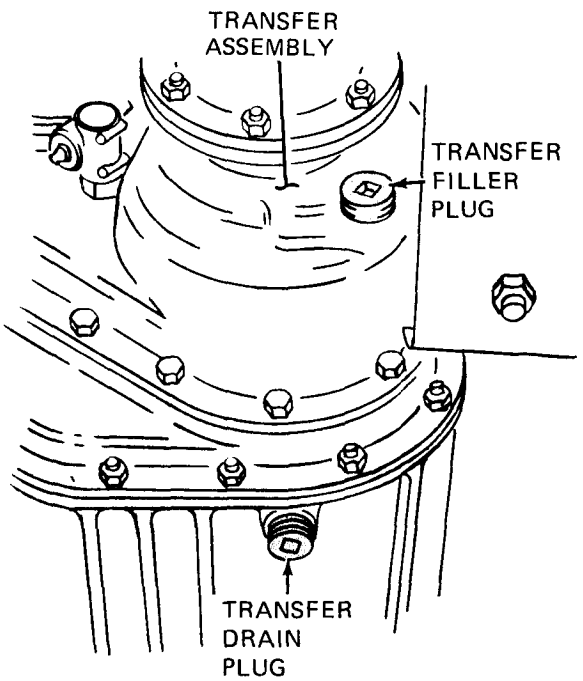

TA 113913

Figure 11-2

CHAPTER 12

FRONT AXLE SYSTEM TROUBLESHOOTING PROCEDURES

12-1. GENERAL. Detailed troubleshooting procedures for the front axle system are given in this chapter.

12-2. PROCEDURES. These troubleshooting procedures are used the same way as the sample troubleshooting procedure given in chapter 7.

FRONT AXLE SYSTEM TROUBLESHOOTING

Symptom

FRONT AXLE MAKES NOISE

1

- Make truck ready for work on front axle
  - Park truck. Refer to Vol. 1, chapter 4, para 4-6e
  - Chock wheels

WARNING

Gear oil in differential will be very hot just after the truck has been run, and parked. Wait until truck cools off before doing any work on front axle

2

- Check differential oil level
  - Crawl under truck
  - Using plug wrench and adjustable wrench unscrew and take out differential filler plug
  - Put finger in filler plug hole to feel if differential is full

Is differential oil level OK?

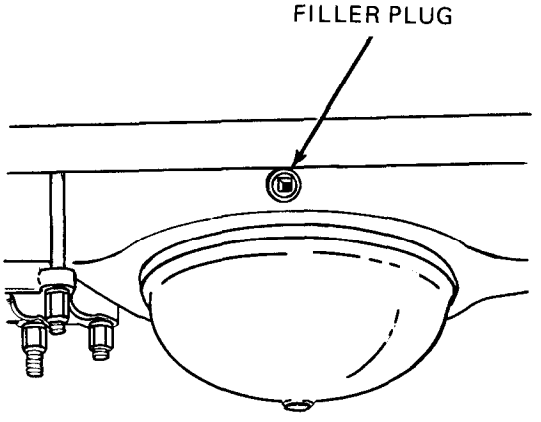

YES

NO

3

- Fill differential
  - Refer to LO9-2320-211-12

4

- Put back filler plug
  - Screw in filler plug and tighten using plug wrench and adjustable wrench

5

Tell organizational maintenance

TA 113914

Figure 12-1

CHAPTER 13

REAR AXLE SYSTEM TROUBLESHOOTING PROCEDURES

13-1. GENERAL. Detailed troubleshooting procedures for the rear axle system are given in this chapter.

13-2. PROCEDURES. These troubleshooting procedures are used the same way as the sample troubleshooting procedure given in chapter 7.

REAR AXLE SYSTEM TROUBLESHOOTING

Symptom

REAR AXLE MAKES NOISE

1

- Make truck ready for work on rear axle
  - Park truck. Refer to Vol. 1, chapter 4, para 4-6e
  - Chock wheels

WARNING

Gear oil in differential will be very hot just after the truck has been run, and parked. Wait until truck cools off before doing any work on front axle

GO

TA 113915

Figure 13-1 (Sheet 1 of 2)

GO

2

- Check differential oil level
  - Crawl under truck
  - Using plug wrench and adjustable wrench unscrew and take out differential filler plug
  - Put finger in filler plug hole to feel if differential is full

Is the differential oil level OK?

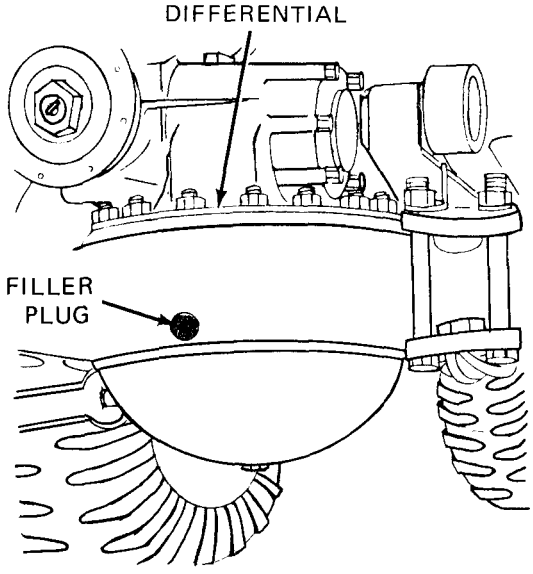

YES

NO

3

- Fill differential
  - Refer to LO9-2320-211-12

4

- Put back filler plug
  - Using plug wrench and adjustable wrench, screw in and tighten filler plug

5

Tell organizational maintenance

TA 113916

Figure 13-1 (Sheet 2 of 2)

CHAPTER 14

BRAKE SYSTEM TROUBLESHOOTING PROCEDURES

14-1. GENERAL. Detailed troubleshooting procedures for the brake system are given in this chapter.

14-2. PROCEDURES. These troubleshooting procedures are used the same way as the sample troubleshooting procedure given in chapter 7.

BRAKE SYSTEM TROUBLESHOOTING

Symptom

1 BRAKE PEDAL SINKS CLOSE TO FLOORBOARD

1

- Park truck
  - Refer to Vol 1, chapter 4, para 4-6e

- Check hydraulic brake fluid in master cylinder
  - Using screwdriver, open master cylinder access hatch on driver's side of cab floor
  - Using 13/16 inch wrench, unscrew and take off master cylinder filler cap
  - Using a flashlight, shine light into master cylinder resrrvoir to see if fluid level is low

Is hydraulic brake fluid level OK?

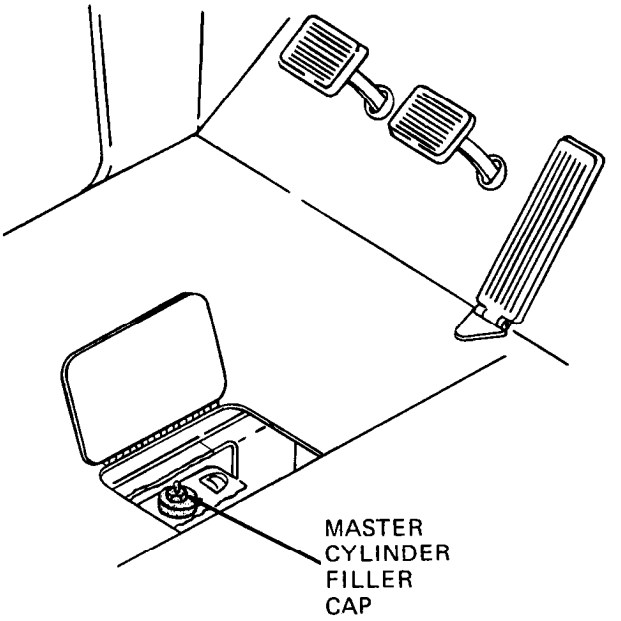

YES

NO

CAUTION

To be sure that the brake system works right use a non-petroleum base hydraulic fluid only

3

- Fill master cylinder reservoir
  - Refer to LO 9-2320-211-12

4

- Put back master cylinder filler cap
  - Screw on cap and tighten using 13/16 inch wrench

5

Tell organizational maintenance

TA 113917

Figure 14-1

Symptom

2 TRUCK PULLS TO ONE SIDE WHEN BRAKES ARE PUT ON

1
- Park truck
  - Refer to Vol 1, chapter 4, para 4-6e

NOTE

Tires are not part of brake system. However, a tire with low air pressure can cause the truck to pull when braking

2
- Check air pressure in tires
  - Refer to Preventive Maintenance Checks and Services (PMCS), Vol 2, Chapter 1, table 1-1

Is air pressure in tires OK?

YES

NO

3
- Fill tires if low
  - Refer to Preventive Maintenance Checks and Services (PMCS), Vol 2, chapter 1, table 1-1

4 Tell organizational maintenance

TA 113918

Figure 14-2

Symptom 3

BUZZER DOES NOT SHUT OFF AND AIR PRESSURE GAGE READS BELOW 60 PSI ON ALL TRUCKS EXCEPT M52A2

1

- Stop engine
  - Refer to Vol 1, chapter 4, para 4-6e

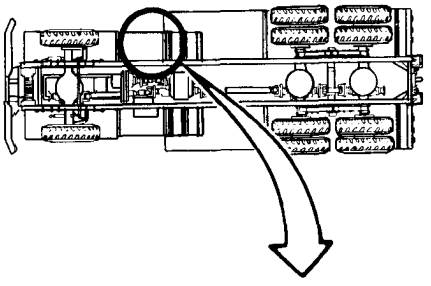

2

- Check air reservoir drain valve under left side running board
  - Feel if drain valve is loose

Is air reservoir drain valve tight ?

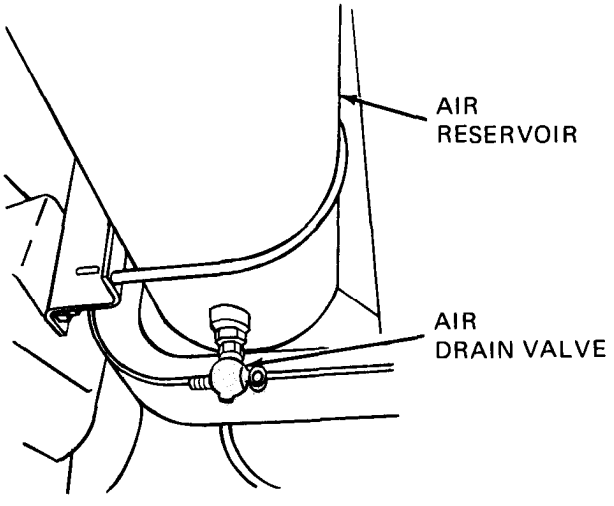

YES

NO

3

- Tighten air reservoir drain valve
  - Using pliers, tighten drain valve

GO

TA 113919

Figure 14-3 (Sheet 1 of 2)

GO

4

- Check both rear air coupling shut off valves
  - Go to rear of truck
  - Make sure the air coupling shut off valves are off

Are air coupling shut off valves off?

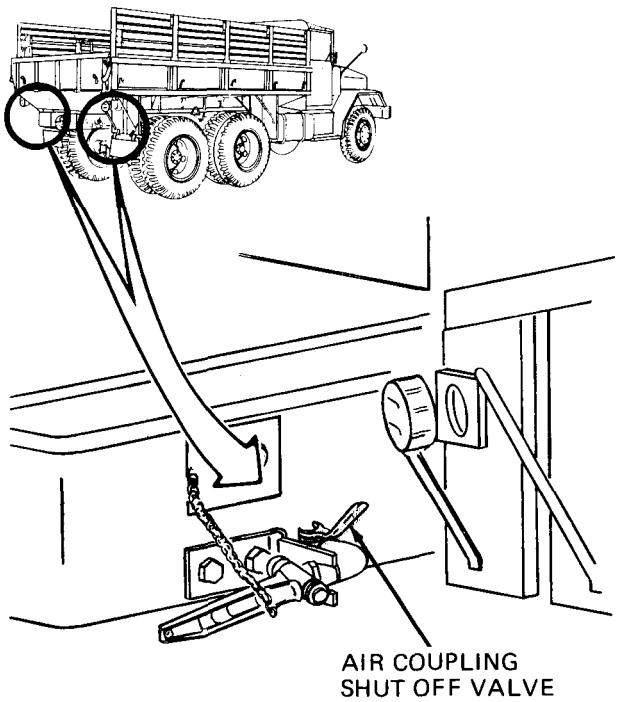

YES

NO

5

- Shut off air coupling valves
  - Turn valve to off position

6

Tell organizational maintenance

TA 113920

Figure 14-3 (Sheet 2 of 2)

Symptom

4 BUZZER DOES NOT SHUT OFF AND AIR PRESSURE GAGE READS BELOW 60 PSI ON TRUCKS M52A2

1
- Stop engine
  - Refer to Vol 1, chapter 4, para 4-6

2
- Check air reservoir drain valve under left side running board
  - Feel if drain valve is loose

Is air reservoir drain valve tight?

YES

NO

3
- Tighten air reservoir drain valve
  - Using pliers, tighten drain valve

4
- Check both rear air coupling shut off valves
  - Go to rear of truck
  - Make sure the air coupling shut off valves are off

Are air coupling shut off valves off?

GO

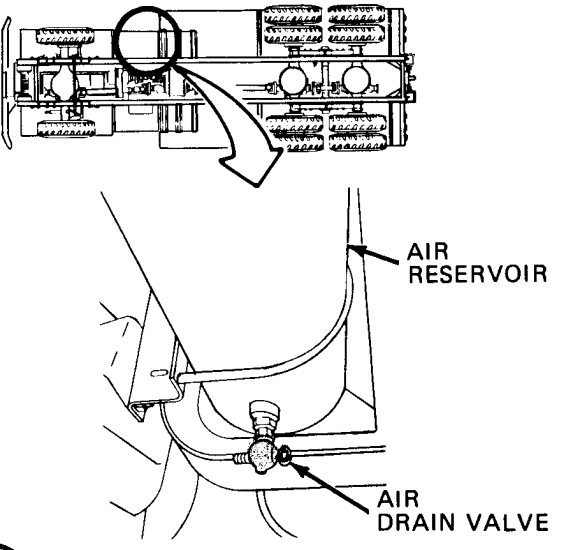

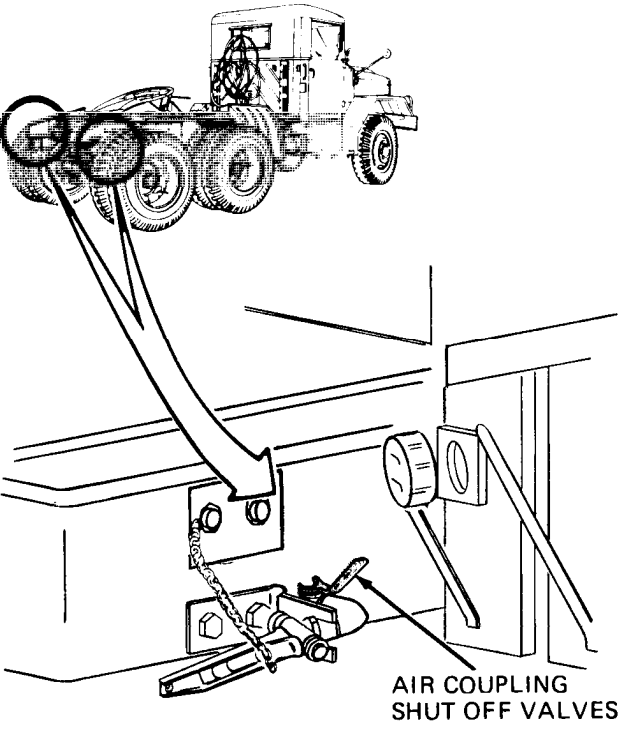

TA 113921

Figure 14-4 (Sheet 1 of 2)

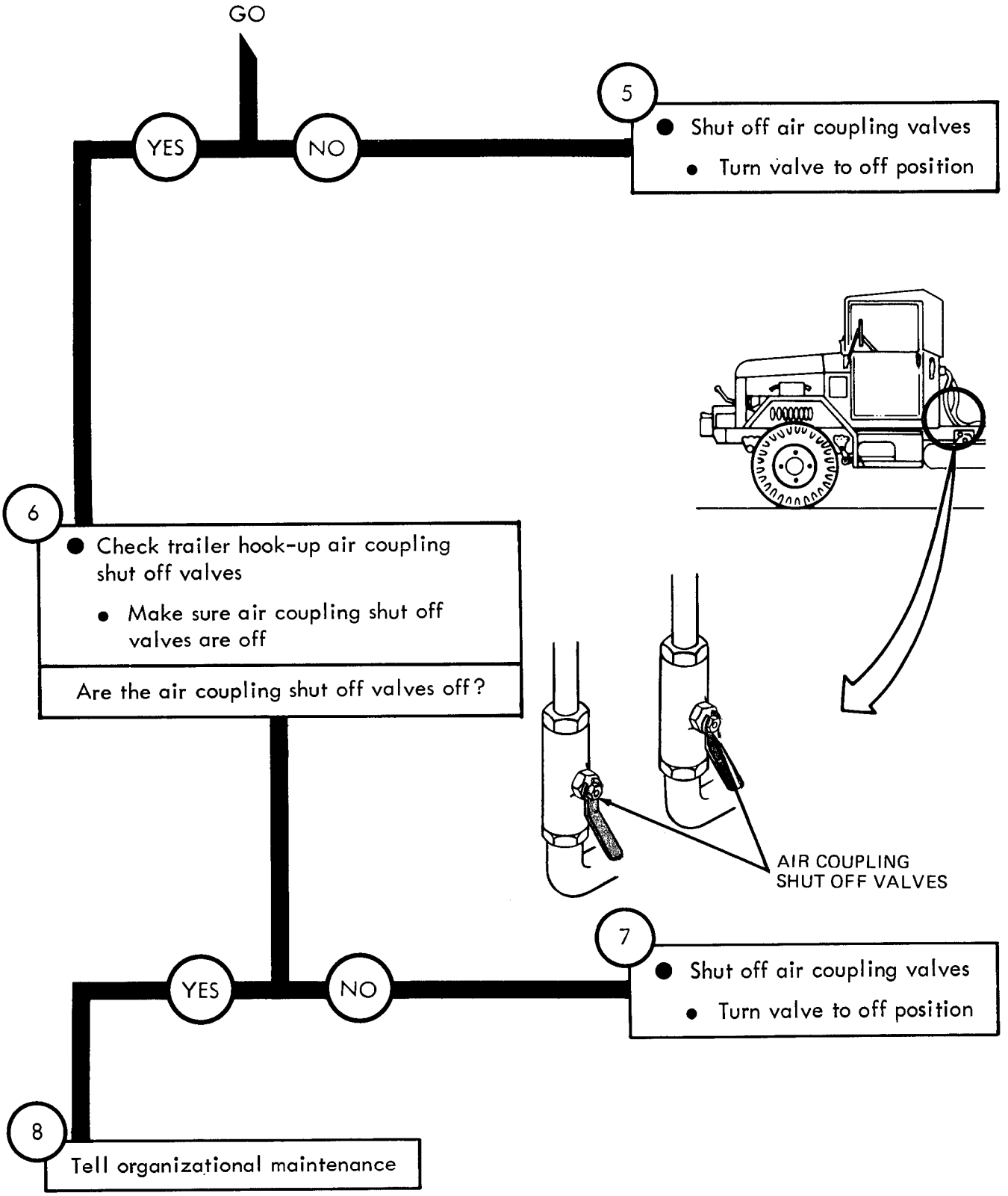

TA 113922

Figure 14-4 (Sheet 2 of 2)

Symptom 5

TRAILER BRAKES DO NOT WORK WHEN PEDAL IS PRESSED OR HAND CONTROL LEVER IS USED

1

- Park truck
  - Refer to Vol 1, chapter 4, para 4-6e

2

- Check rear air coupling shut off valves
  - Make sure shut off valves are in on position

Are the air coupling shut off valves on?

YES → GO

NO → 3

3

- Turn air coupling shut off valves on

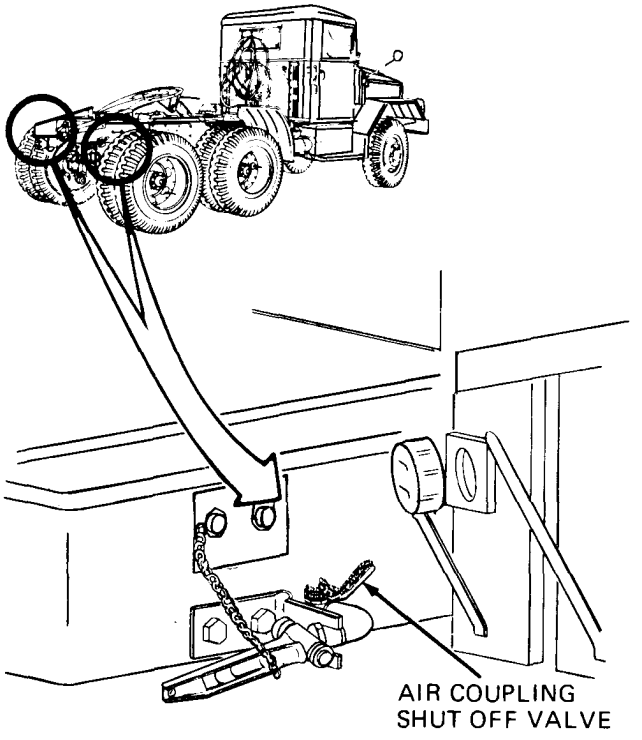

TA 113923

Figure 14-5 (Sheet 1 of 2)

GO

4

- Check tractor-to-trailer hose connections
  - Feel for air leaking around hose connection

Is hose connection OK?

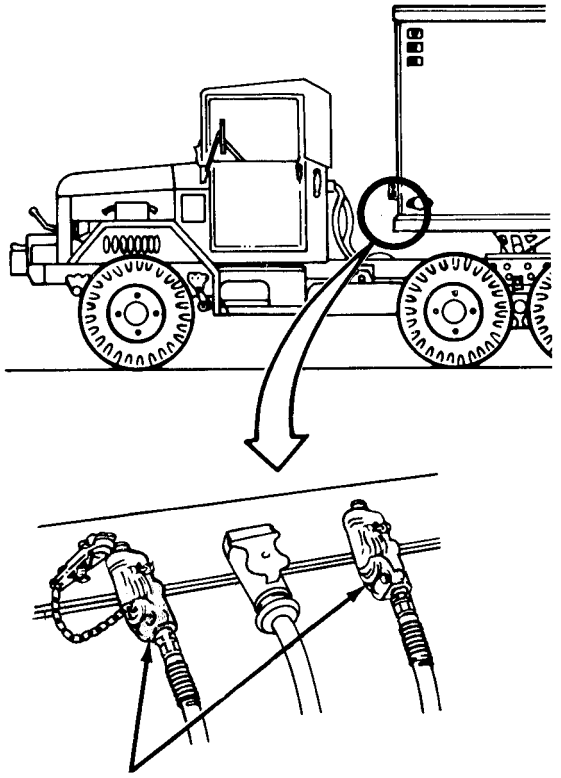

YES

NO

5

- Tighten leaking tractor-to-trailer hose connections

  Note: If hose connection cannot be tightened, tell organizational maintenance

6

Tell organizational maintenance

TA 113924

Figure 14-5 (Sheet 2 of 2)

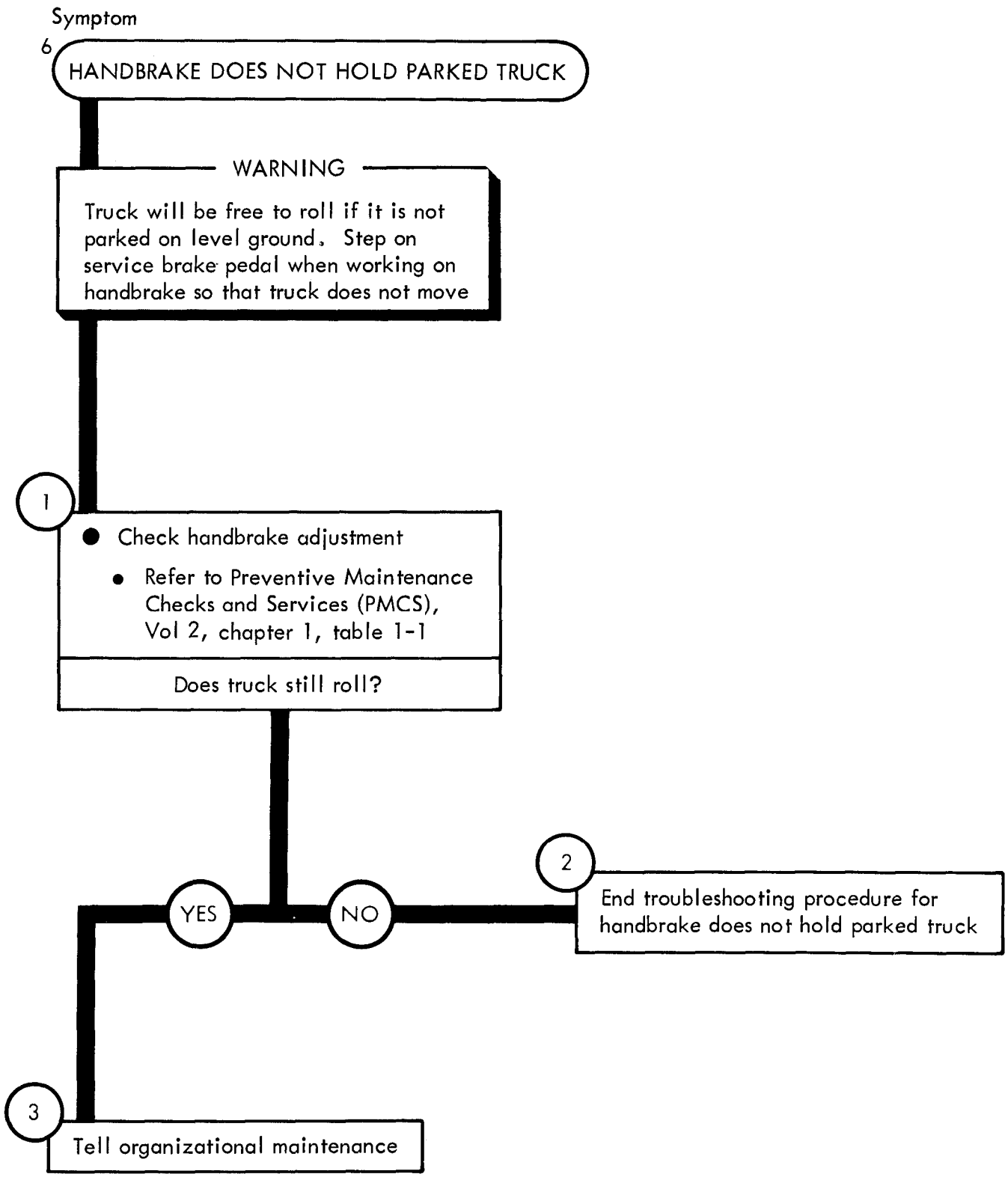

TA 113925

Figure 14-6

CHAPTER 15
WHEEL SYSTEM TROUBLESHOOTING PROCEDURES

15-1. GENERAL. Detailed troubleshooting procedures for the wheel system are given in this chapter.

15-2. PROCEDURES. These troubleshooting procedures are used the same way as the sample troubleshooting procedure given in chapter 7.

WHEEL SYSTEM TROUBLESHOOTING

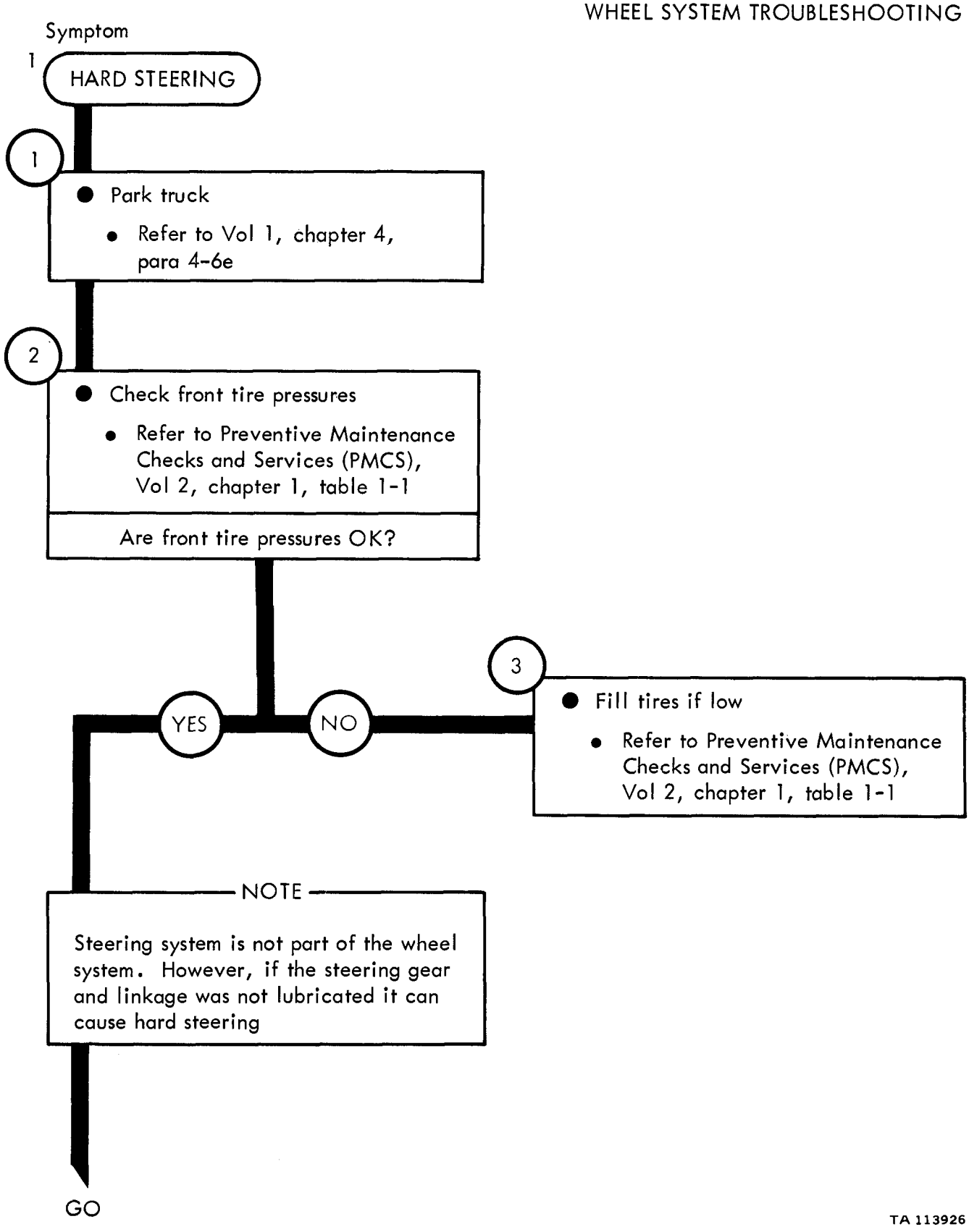

Figure 15-1 (Sheet 1 of 2)

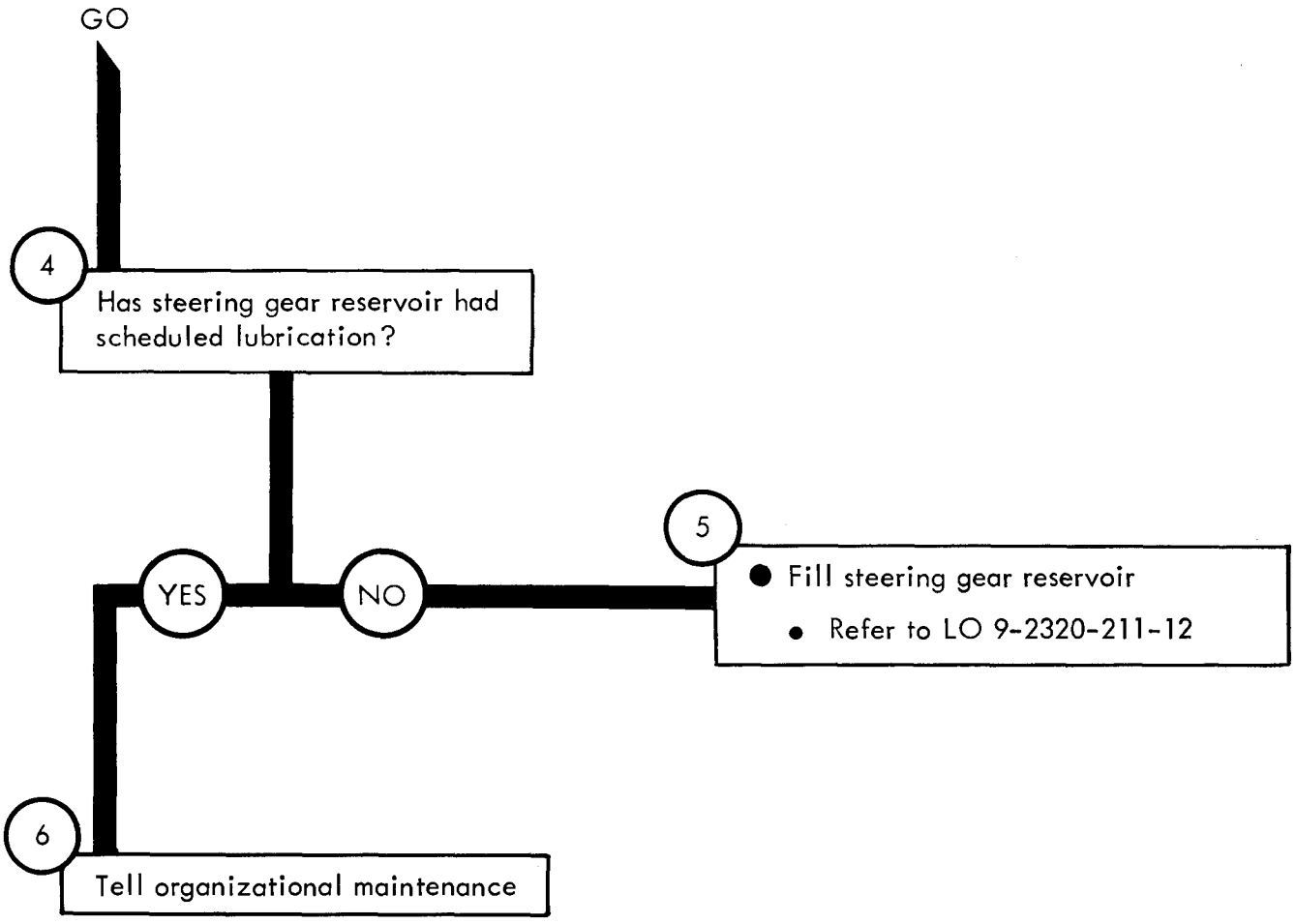

TA 113927

Figure 15-1 (Sheet 2 of 2)

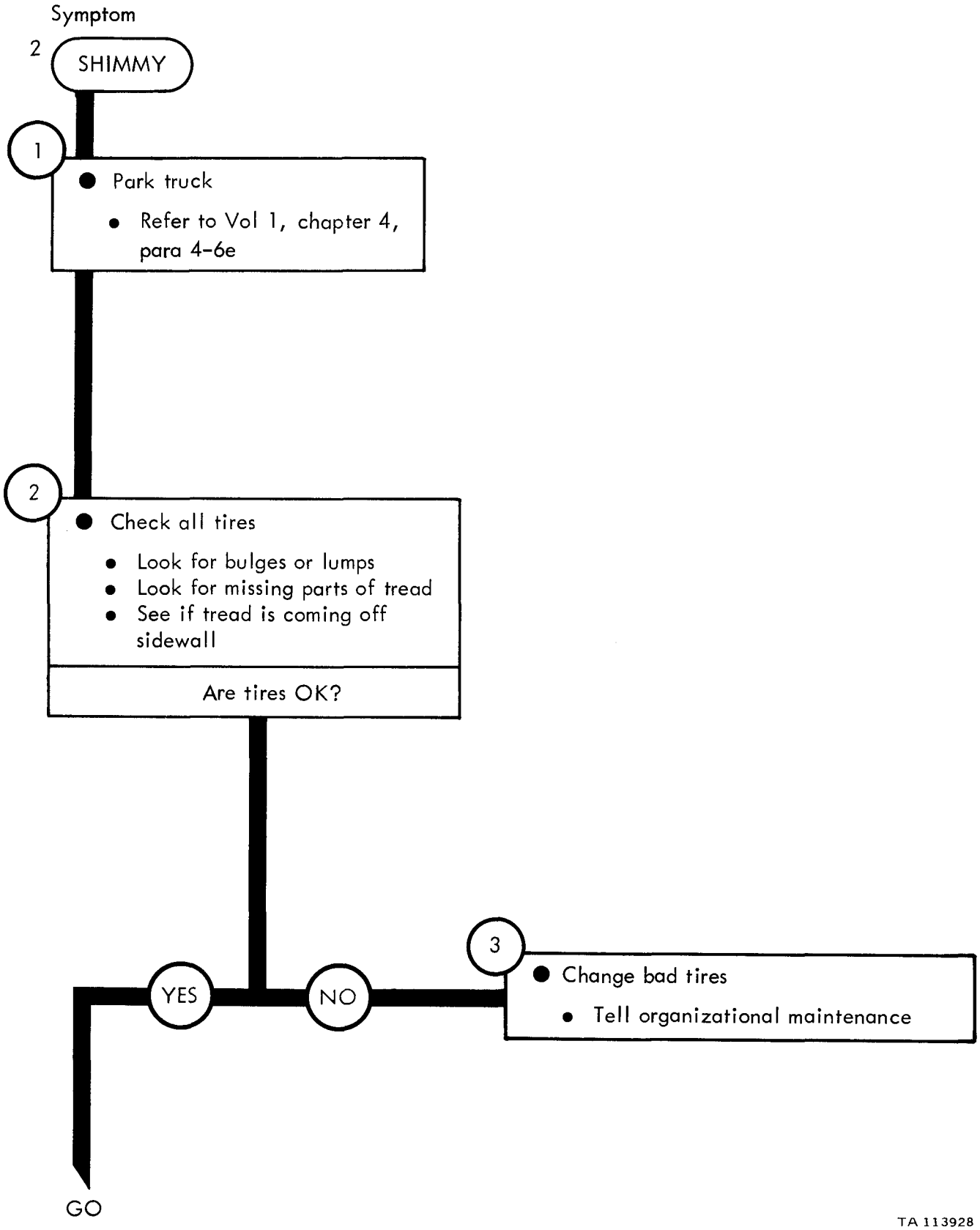

Figure 15-2 (Sheet 1 of 2)

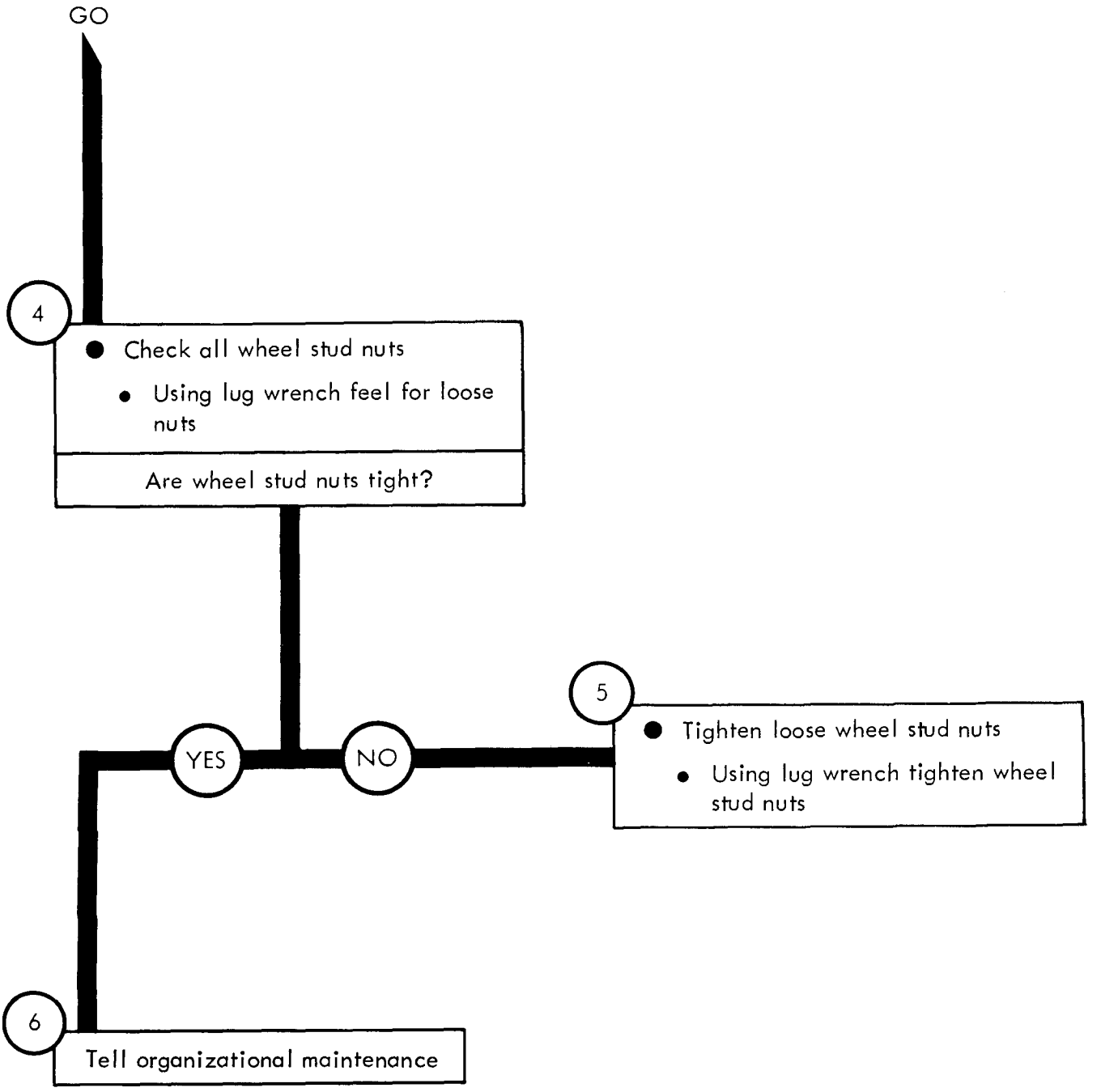

TA 113929

Figure 15-2 (Sheet 2 of 2)

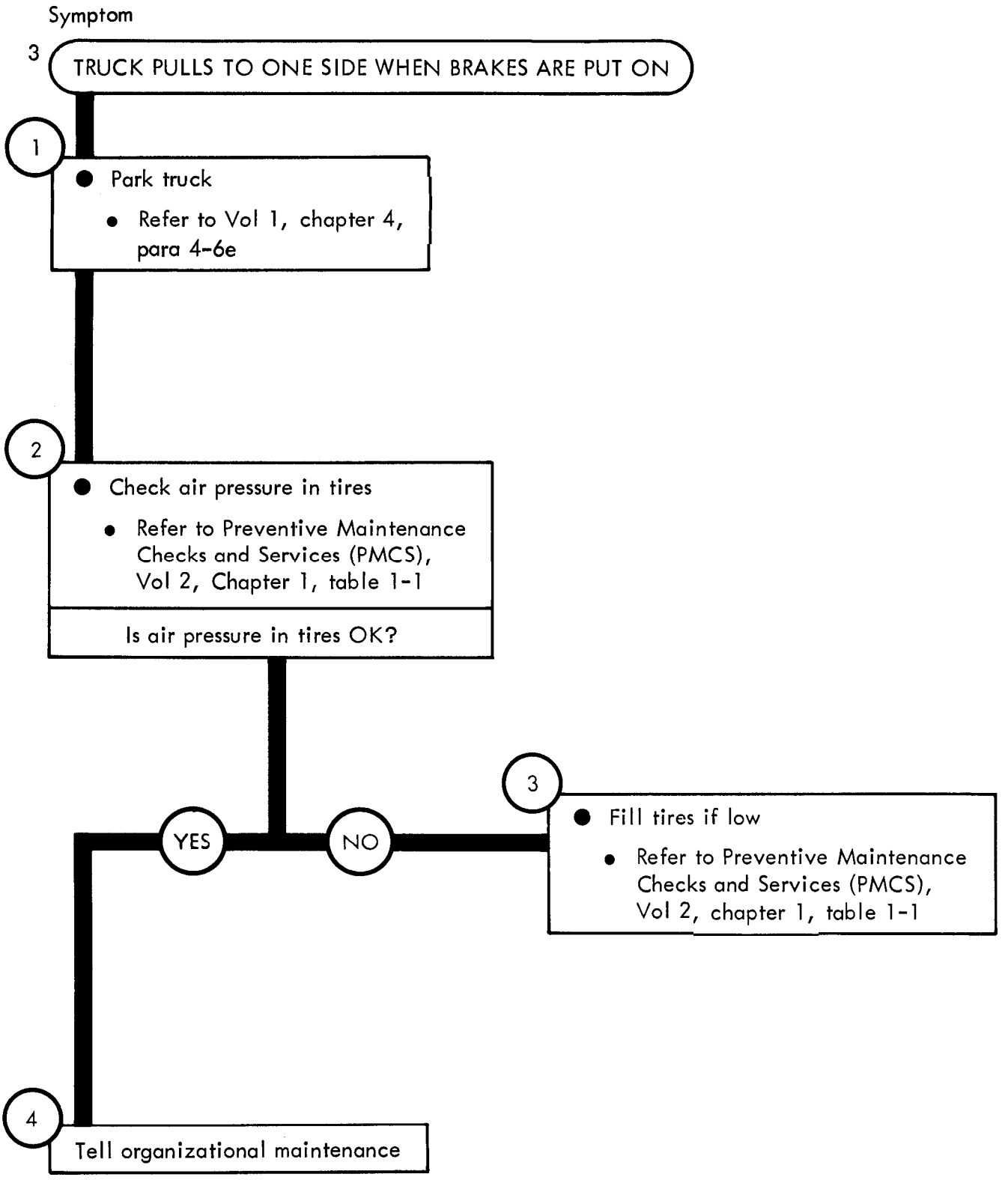

TA 113930

Figure 15-3

CHAPTER 16

STEERING SYSTEM TROUBLESHOOTING PROCEDURES

16-1. GENERAL. Detailed troubleshooting procedures for the steering system are given in this chapter.

16-2. PROCEDURES. These troubleshooting procedures are used the same way as the sample troubleshooting procedure given in chapter 7.

STEERING SYSTEM TROUBLESHOOTING

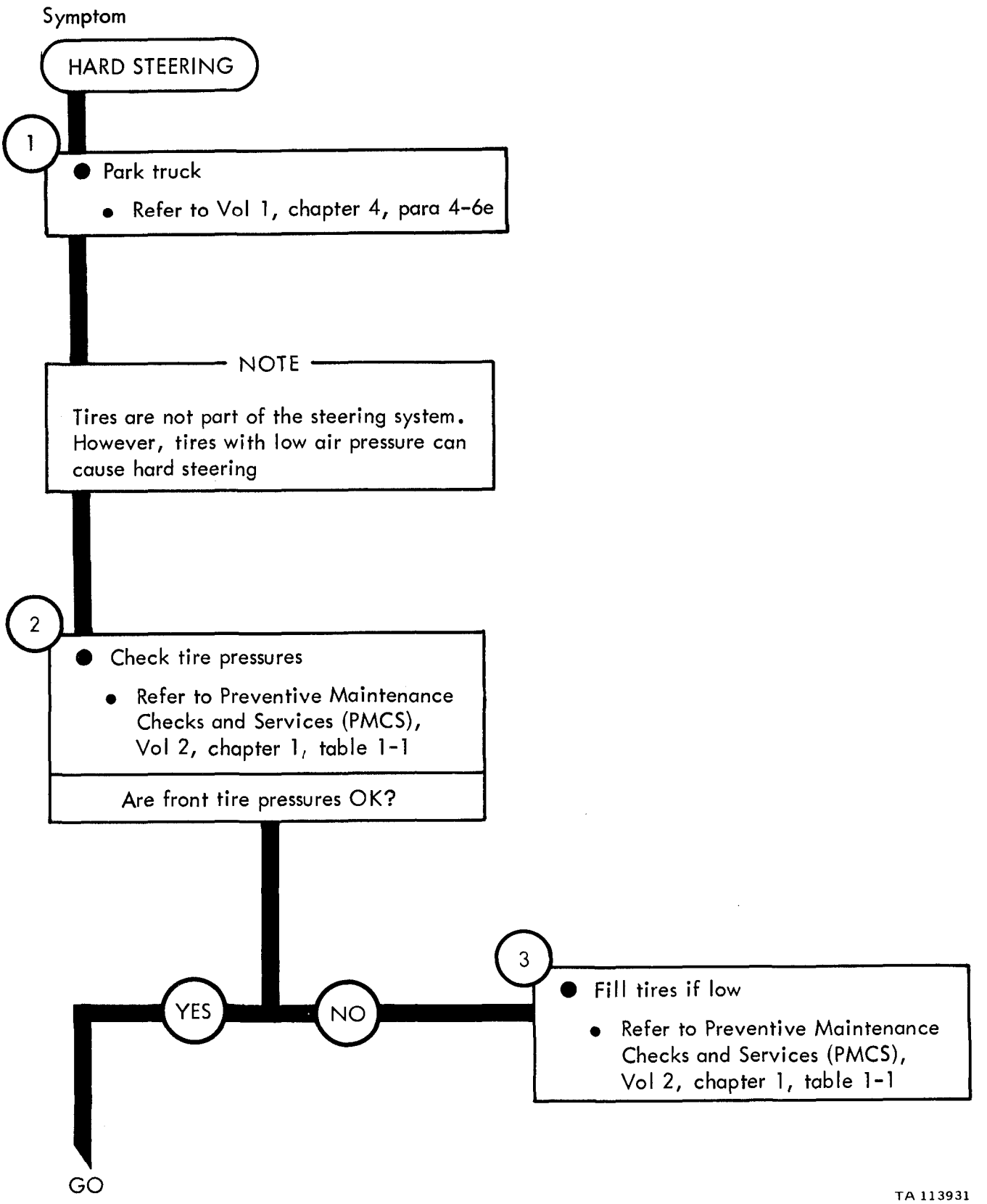

Figure 16-1 (Sheet 1 of 2)

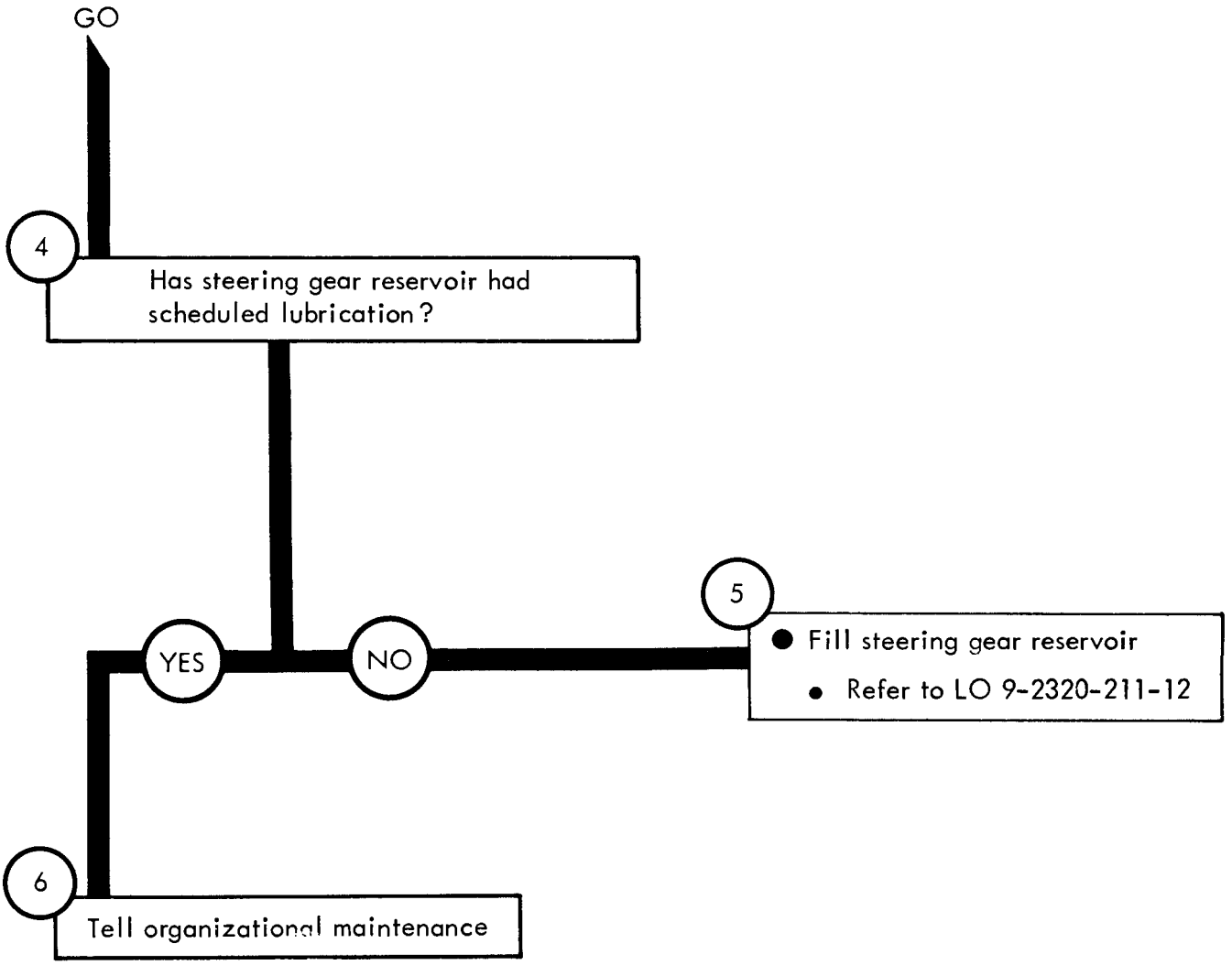

TA 113932

Figure 16-1 (Sheet 2 of 2)

CHAPTER 17

DUMP TRUCK TROUBLESHOOTING PROCEDURES

17-1. GENERAL. Detailed troubleshooting procedures for the dump truck are given in this chapter.

17-2. PROCEDURES. These troubleshooting procedures are used the same way as the sample troubleshooting procedure given in chapter 7.

DUMP TRUCK TROUBLESHOOTING

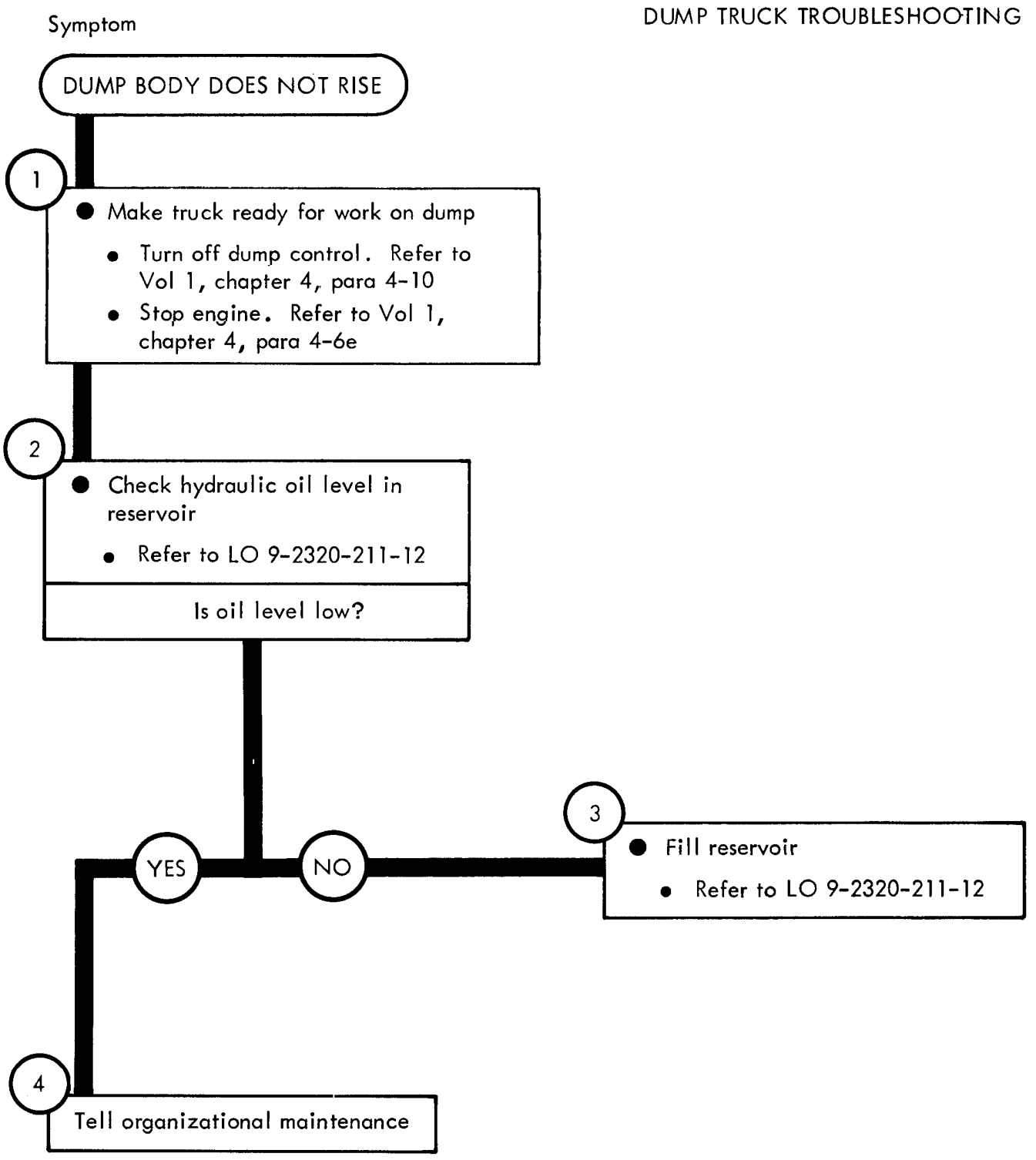

TA 113934

Figure 17-1

CHAPTER 18

FRONT WINCH TROUBLESHOOTING PROCEDURES

18-1. GENERAL. Detailed troubleshooting procedures for the front winch are given in this chapter.

18-2. PROCEDURES. These troubleshooting procedures are used the same way as the sample troubleshooting procedure given in chapter 7.

FRONT WINCH TROUBLESHOOTING

Symptom

1 WINCH DOES NOT PULL LOAD

1

- Make truck ready for work on front winch
  - Turn off winch. Refer to Vol 1, chapter 4, para 4-7g
  - Stop engine. Refer to Vol 1, chapter 4, para 4-6e

2

- Check shear pin
  - Look for a broken shear pin

Is shear pin OK?

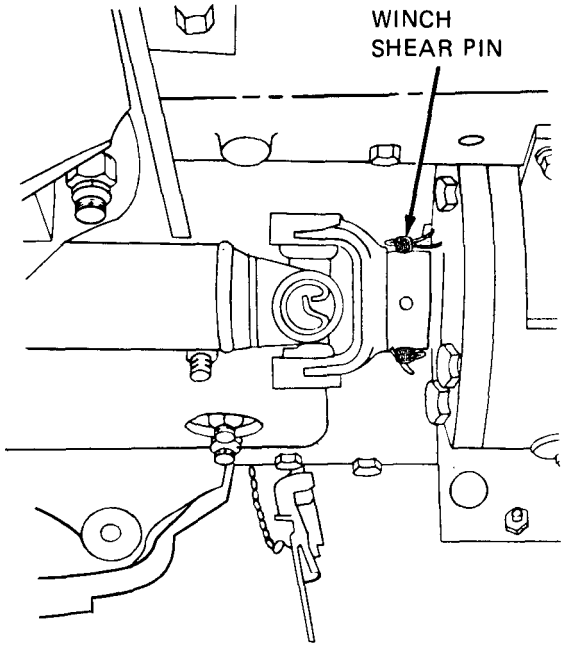

YES

NO

3

- Replace broken shear pin
  - Refer to Vol 4, chapter 2, para 2-11

4

Tell organizational maintenance

TA 113933

Figure 18-1

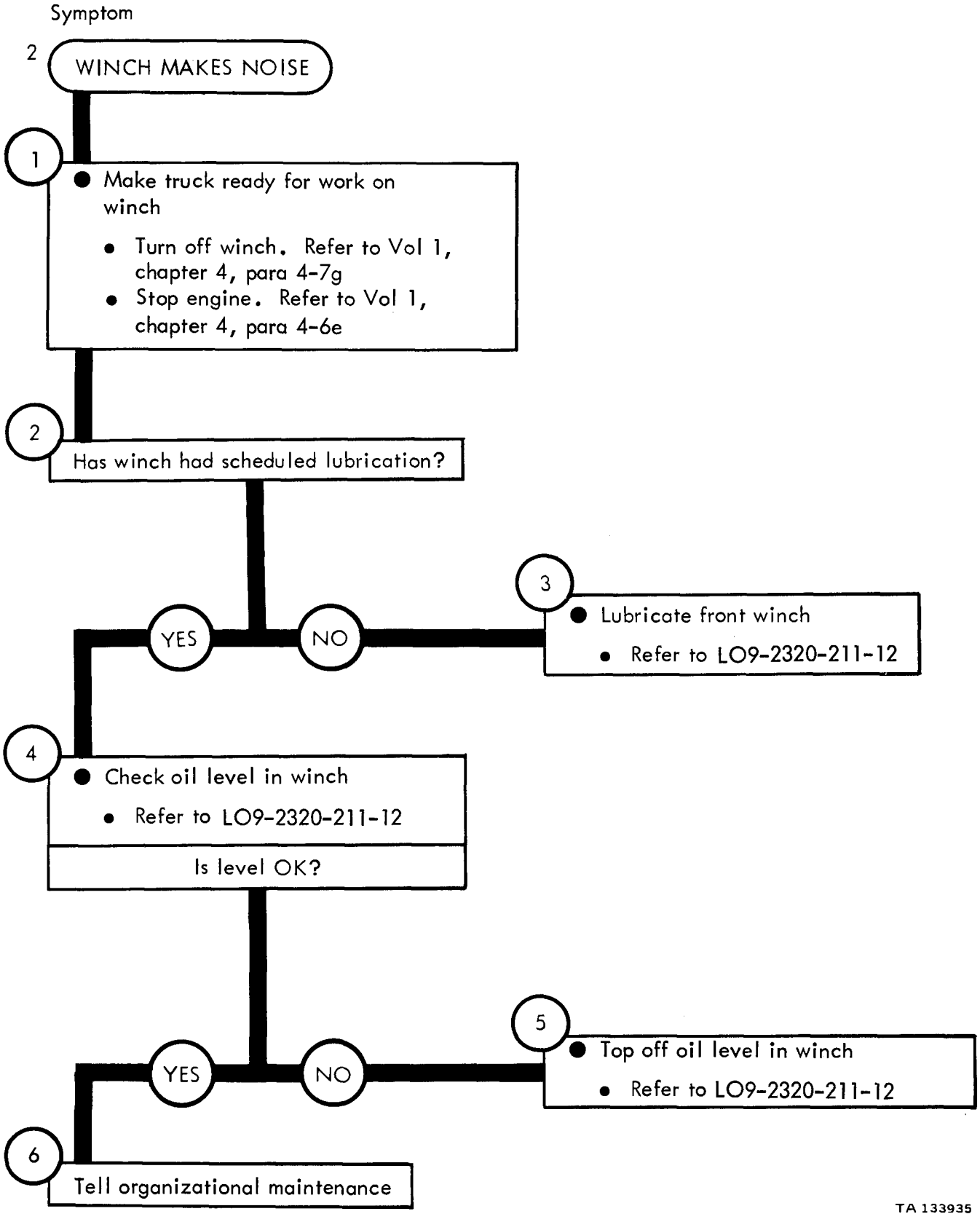
Symptom
2
WINCH MAKES NOISE
1
Make truck ready for work on winch
Turn off winch. Refer to Vol 1, chapter 4, para 4-7g
Stop engine. Refer to Vol 1, chapter 4, para 4-6e
2
Has winch had scheduled lubrication?
YES
NO
3
Lubricate front winch
Refer to LO9-2320-211-12
4
Check oil level in winch
Refer to LO9-2320-211-12
Is level OK?
YES
NO
5
Top off oil level in winch
Refer to LO9-2320-211-12
6
Tell organizational maintenance
TA 133935

Figure 18-2

CHAPTER 19

REAR WINCH TROUBLESHOOTING PROCEDURES

19-1. GENERAL. Detailed troubleshooting procedures for the rear winch are given in this chapter.

19-2. PROCEDURES. These troubleshooting procedures are used the same way as the sample troubleshooting procedure given in chapter 7.

REAR WINCH TROUBLESHOOTING

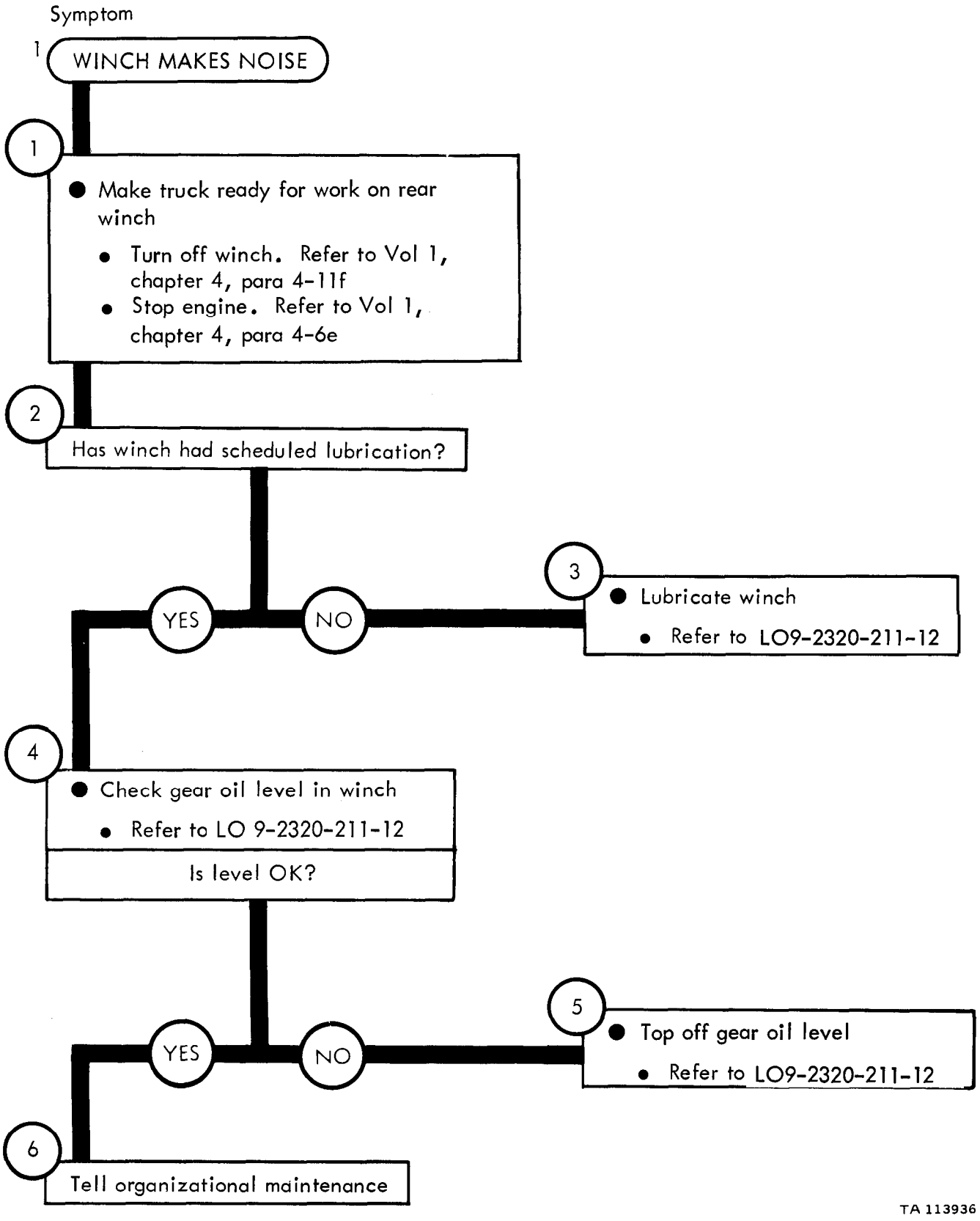

Figure 19-1

Symptom

2 WINCH DOES NOT PULL LOAD

1
- Make truck ready for work on rear winch
  - Turn off winch. Refer to Vol 1, chapter 4, para 4-11f
  - Stop engine. Refer to Vol 1, chapter 4, para 4-6e
  - Chock wheels

2
- Check shear pin
  - Look for a broken shear pin

Is shear pin OK?

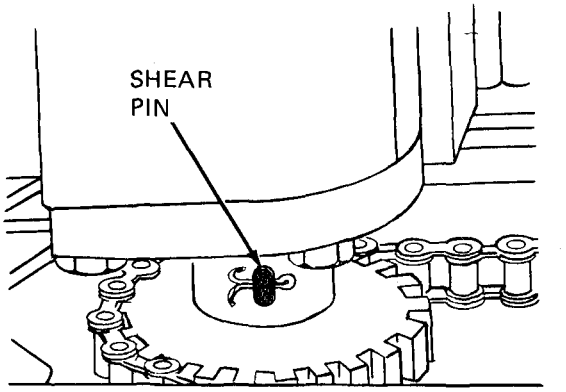

YES

NO

3
- Replace broken shear pin
  - Refer to Vol 4, chapter 2, para 2-18

4 Tell organizational maintenance

TA 113937

Figure 19-2

CHAPTER 20

HOT WATER HEATER TROUBLESHOOTING PROCEDURES

20-1. GENERAL. Detailed troubleshooting procedures for the hot water heater are given in this chapter.

20-2. PROCEDURES. These troubleshooting procedures are used the same way as the sample troubleshooting procedure given in chapter 7.

HOT WATER HEATER TROUBLESHOOTING

Symptom

HEATER AND DEFROSTER DO NOT GIVE ENOUGH HEAT

1. ● Park truck
   - Refer to Vol 1, chapter 4, para 4-6e

2. Has heater been bled?

YES → 4

NO → 3

3. ● Bleed system
   - Start engine. Refer to Vol 1, chapter 4, para 4-6b
   - Turn air bleed valve on top of heater to the left
   - Leave air bleed valve open until all air is out of the system
   - Turn air bleed valve to the right until tight
   - Stop engine. Refer to Vol 1, chapter 4, para 4-6e

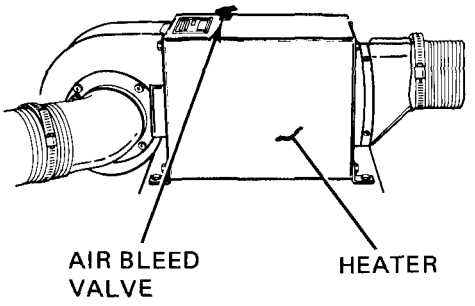

4. Tell organizational maintenance

TA 113938

Figure 20-1

By Order of the Secretaries of the Army and the Air Force:

E. C. MEYER
General, United States Army
Chief of Staff

Official:

J. C. PENNINGTON
Maior Genera1, United States Army
The Adjutant General

LEW ALLEN, JR., General, USAF
Chief of Staff

Official:

VAN L. CRAWFORD, JR., Colonel, USAF
Director of Administration

DISTRIBUTION:

To be distributed in accordance with DA Form 12-38, Operator maintenance requirements for 5-Ton Truck Chassis: 5-Ton, 6x6, M39A2.

☆ U.S. GOVERNMENT PRINTING OFFICE: 1980-603128/278

RECOMMENDED CHANGES TO EQUIPMENT TECHNICAL PUBLICATIONS

SOMETHING WRONG WITH THIS PUBLICATION?

FROM (PRINT YOUR UNIT'S COMPLETE ADDRESS)
CDR, 1st Bn, 65th ADA
Attn: SP4 Jane Idone
Key West, FL 33040

DATE SENT
23 September 1980

PUBLICATION NUMBER	PUBLICATION DATE	PUBLICATION TITLE
TM 9-2320-211-10-3	5 Sept. 80	OPERATOR TROUBLESHOOTING MANUAL

BE EXACT PIN-POINT WHERE IT IS

PAGE NO	PARA-GRAPH	FIGURE NO	TABLE NO	IN THIS SPACE TELL WHAT IS WRONG AND WHAT SHOULD BE DONE ABOUT IT:
3-1	3-2			Subparagraph b refers to chapter 6. Should refer to chapter 5.
10-2		10-1 (Sheet 1 of 2)		Box ③, second sentence reads "Using plug wrench, tighten plug." Should read "Using adjustable wrench and plug wrench, tighten plug."
11-4		11-2		Add label for transfer drain plug to illustration.

SAMPLE

PRINTED NAME GRADE OR TITLE AND TELEPHONE NUMBER
SP4 Jane Idone Autovon 222-2224

SIGN HERE
Jane Idone

DA FORM 1 JUL 79 2028-2

PREVIOUS EDITIONS ARE OBSOLETE.

P.S.--IF YOUR OUTFIT WANTS TO KNOW ABOUT YOUR RECOMMENDATION MAKE A CARBON COPY OF THIS AND GIVE IT TO YOUR HEADQUARTERS

RECOMMENDED CHANGES TO EQUIPMENT TECHNICAL PUBLICATIONS

THEN. . . JOT DOWN THE DOPE ABOUT IT ON THIS FORM, CAREFULLY TEAR IT OUT, FOLD IT AND DROP IT IN THE MAIL!

SOMETHING WRONG WITH THIS PUBLICATION?

FROM (PRINT YOUR UNIT'S COMPLETE ADDRESS)

DATE SENT

PUBLICATION NUMBER	PUBLICATION DATE	PUBLICATION TITLE
TM 9-2320-211-10-3	5 SEPT 80	OPERATOR TROUBLESHOOTING MANUAL

BE EXACT . . PIN-POINT WHERE IT IS

PAGE NO	PARA-GRAPH	FIGURE NO	TABLE NO

IN THIS SPACE TELL WHAT IS WRONG AND WHAT SHOULD BE DONE ABOUT IT:

PRINTED NAME GRADE OR TITLE AND TELEPHONE NUMBER

SIGN HERE

DA FORM 1 JUL 79 2028-2

PREVIOUS EDITIONS ARE OBSOLETE.

P.S.--IF YOUR OUTFIT WANTS TO KNOW ABOUT YOUR RECOMMENDATION MAKE A CARBON COPY OF THIS AND GIVE IT TO YOUR HEADQUARTERS

REVERSE OF DA FORM 2028-2

FILL IN YOUR UNIT'S ADDRESS

FOLD BACK

DEPARTMENT OF THE ARMY

OFFICIAL BUSINESS
PENALTY FOR PRIVATE USE $300

POSTAGE AND FEES PAID
DEPARTMENT OF THE ARMY
DOD 314

U.S. MAIL

TEAR ALONG PERFORATED LINE

COMMANDER
U.S. ARMY TANK – AUTOMOTIVE
MATERIEL READINESS COMMAND
ATTN: DRSTA-MB
WARREN, MI 48090

RECOMMENDED CHANGES TO EQUIPMENT TECHNICAL PUBLICATIONS

THEN. . JOT DOWN THE DOPE ABOUT IT ON THIS FORM, CAREFULLY TEAR IT OUT, FOLD IT AND DROP IT IN THE MAIL!

SOMETHING WRONG WITH THIS PUBLICATION?

FROM: (PRINT YOUR UNIT'S COMPLETE ADDRESS)

DATE SENT

PUBLICATION NUMBER	PUBLICATION DATE	PUBLICATION TITLE
TM 9-2320-211-10-3	5 SEPT 80	OPERATOR TROUBLESHOOTING MANUAL

BE EXACT. PIN-POINT WHERE IT IS

PAGE NO.	PARA-GRAPH	FIGURE NO.	TABLE NO.

IN THIS SPACE TELL WHAT IS WRONG AND WHAT SHOULD BE DONE ABOUT IT:

PRINTED NAME, GRADE OR TITLE, AND TELEPHONE NUMBER

SIGN HERE:

TEAR ALONG PERFORATED LINE

DA FORM 1 JUL 79 2028-2

PREVIOUS EDITIONS ARE OBSOLETE.

P.S.--IF YOUR OUTFIT WANTS TO KNOW ABOUT YOUR RECOMMENDATION MAKE A CARBON COPY OF THIS AND GIVE IT TO YOUR HEADQUARTERS.

REVERSE OF DA FORM 2028-2

FILL IN YOUR UNIT'S ADDRESS

FOLD BACK

TEAR ALONG PERFORATED LINE

DEPARTMENT OF THE ARMY

OFFICIAL BUSINESS
PENALTY FOR PRIVATE USE $300

POSTAGE AND FEES PAID
DEPARTMENT OF THE ARMY
DOD 314

U.S. MAIL

COMMANDER
U.S. ARMY TANK-AUTOMOTIVE
MATERIEL READINESS COMMAND
ATTN: DRSTA-MB
WARREN, MI 48090

RECOMMENDED CHANGES TO EQUIPMENT TECHNICAL PUBLICATIONS

THEN. . JOT DOWN THE DOPE ABOUT IT ON THIS FORM, CAREFULLY TEAR IT OUT, FOLD IT AND DROP IT IN THE MAIL!

SOMETHING WRONG WITH THIS PUBLICATION?

FROM: (PRINT YOUR UNIT'S COMPLETE ADDRESS)

DATE SENT

PUBLICATION NUMBER	PUBLICATION DATE	PUBLICATION TITLE
TM 9-2320-211-10-3	5 SEPT 80	OPERATOR TROUBLESHOOTING MANUAL

BE EXACT. . .PIN-POINT WHERE IT IS

PAGE NO.	PARA-GRAPH	FIGURE NO	TABLE NO.

IN THIS SPACE TELL WHAT IS WRONG AND WHAT SHOULD BE DONE ABOUT IT:

PRINTED NAME, GRADE OR TITLE, AND TELEPHONE NUMBER

SIGN HERE:

TEAR ALONG PERFORATED LINE

DA FORM 1 JUL 79 2028-2

PREVIOUS EDITIONS ARE OBSOLETE.

P.S.--IF YOUR OUTFIT WANTS TO KNOW ABOUT YOUR RECOMMENDATION MAKE A CARBON COPY OF THIS AND GIVE IT TO YOUR HEADQUARTERS.

REVERSE OF DA FORM 2028-2

FILL IN YOUR UNIT'S ADDRESS

FOLD BACK

DEPARTMENT OF THE ARMY

OFFICIAL BUSINESS
PENALTY FOR PRIVATE USE $300

POSTAGE AND FEES PAID
DEPARTMENT OF THE ARMY
DOD 314

U.S. MAIL

COMMANDER
U.S. ARMY TANK-AUTOMOTIVE
MATERIEL READINESS COMMAND
ATTN: DRSTA-MB
WARREN, MI 48090

TEAR ALONG PERFORATED LINE

THE METRIC SYSTEM AND EQUIVALENTS

LINEAR MEASURE
1 Centimeter = 10 Millimeters = 0.01 Meters = 0.3937 Inches
1 Meter = 100 Centimeters = 1,000 Millimeters = 39.37 Inches
1 Kilo Meter = 1,000 Meters = 0.621 Miles

WEIGHTS
1 Gram = 0.001 Kilograms = 1,000 Milligrams = 0.035 Ounces
1 Kilogram = 1,000 Grams = 2.2 Lb
1 Metric Ton = 1,000 Kilograms = 1 Megagram = 1.1 Short Tons

LIQUID MEASURE
1 Milliliter = 0.001 Liters = 0.0338 Fluid Ounces
1 Liter = 1,000 Milliliters = 33.82 Fluid Ounces

SQUARE MEASURE
1 Sq Centimeter = 100 Sq Millimeters = 0.155 Sq Inches
1 Sq Meter = 10,000 Sq Centimeters = 10.76 Sq Feet
1 Sq Kilometer = 1,000,000 Sq Meters = 0.386 Sq Miles

CUBIC MEASURE
1 Cu Centimeter = 1,000 Cu Millimeters = 0.06 Cu Inches
1 Cu Meter = 1,000,000 Cu Centimeters = 35.31 Cu Feet

TEMPERATURE
5/9 (°F -32) = °C
212° Fahrenheit is equivalent to 100° Celsius
90° Fahrenheit is equivalent to 32.2° Celsius
32° Fahrenheit is equivalent to 0° Celsius
9/5 C° +32 = F°

APPROXIMATE CONVERSION FACTORS

TO CHANGE	TO	MULTIPLY BY
Inches	Centimeters	2.540
Feet	Meters	0.305
Yards	Meters	0.914
Miles	Kilometers	1.609
Square Inches	Square Centimeters	6.451
Square Feet	Square Meters	0.093
Square Yards	Square Meters	0.836
Square Miles	Square Kilometers	2.590
Acres	Square Hectometers	0.405
Cubic Feet	Cubic Meters	0.028
Cubic Yards	Cubic Meters	0.765
Fluid Ounces	Milliliters	29.573
Pints	Liters	0.473
Quarts	Liters	0.946
Gallons	Liters	3.785
Ounces	Grams	28.349
Pounds	Kilograms	0.454
Short Tons	Metric Tons	0.907
Pound-Feet	Newton-Meters	1.356
Pounds Per Square Inch	Kilopascals	6.895
Miles Per Gallon	Kilometers Per Liter	0.425
Miles Per Hour	Kilometers Per Hour	1.609

TO CHANGE	TO	MULTIPLY BY
Centimeters	Inches	0.394
Meters	Feet	3.280
Meters	Yards	1.094
Kilometers	Miles	0.621
Square Centimeters	Square Inches	0.155
Square Meters	Square Feet	10.764
Square Meters	Square Yards	1.196
Square Kilometers	Square Miles	0.386
Square Hectometers	Acres	2.471
Cubic Meters	Cubic Feet	35.315
Cubic Meters	Cubic Yards	1.308
Millimeters	Fluid Ounces	0.034
Liters	Pints	2.113
Liters	Quarts	1.057
Liters	Gallons	0.264
Grams	Ounces	0.035
Kilograms	Pounds	2.205
Metric Tons	Short Tons	1.102
Newton-Meters	Pound-Feet	0.738
Kilopascals	Pounds Per Square Inch	0.145
Kilometers Per Liter	Miles Per Gallon	2.354
Kilometers Per Hour	Miles Per Hour	0.621

This fine document...

Was brought to you by me:

Liberated Manuals -- free army and government manuals

Why do I do it? I am tired of sleazy CD-ROM sellers, who take publicly available information, slap “watermarks” and other junk on it, and sell it. Those masters of search engine manipulation make sure that their sites that sell free information, come up first in search engines. They did not create it... They did not even scan it... Why should they get your money? Why are not letting you give those free manuals to your friends?

I am setting this document FREE. This document was made by the US Government and is NOT protected by Copyright. Feel free to share, republish, sell and so on.

I am not asking you for donations, fees or handouts. If you can, please provide a link to liberatedmanuals.com, so that free manuals come up first in search engines:

<A HREF=http://www.liberatedmanuals.com/>Free Military and Government Manuals</A>

- Sincerely
  Igor Chudov
  http://igor.chudov.com/
- Chicago Machinery Movers