ARMY TM 9-1005-224-23&P
AIR FORCE T.O. 11W2-6-4-11
Supersedes Copy Dated July 1987
See Page i for details

TECHNICAL MANUAL

UNIT AND DIRECT MAINTENANCE MANUAL (INCLUDING REPAIR PARTS AND SPECIAL TOOLS LIST) FOR MACHINE GUN, 7.62-MM, M60 W/E (1005-00-605-7710) (EIC: 4AJ) AND MACHINE GUN, 7.62-MM, M60D W/E (1005-00-909-3002) (EIC: 4A8)

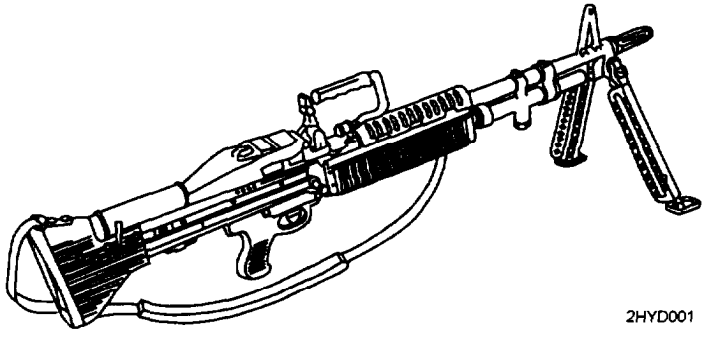

M60

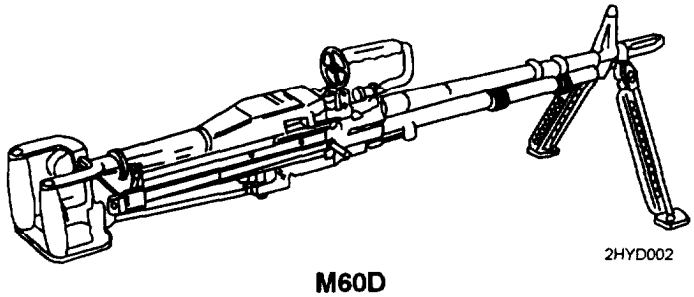

M60D

DISTRIBUTION STATEMENT:
Approved for public release; distribution is unlimited.

HEADQUARTERS, DEPARTMENTS OF THE ARMY AND AIR FORCE

MAY 1998

WARNING

The M240 Series Machine Guns must be inspected and gaged at least once annually for safety and serviceability. Initial gaging is required one year from receipt of the weapons. Air Force users refer to inspection requirements in Air Force Manual (AFM) 36-2227-1, Volume 1.

All Army Reserve and Army National Guard M240 Series Machine Guns must be inspected and gaged at least every two years, after initial inspection/gaging procedures have been accomplished. This initial gaging procedure is required one year from receipt of the weapons. This two year interval may be maintained unless preventive maintenance checks and services (PMCS) or other physical evidence indicates that an individual unit's M240 Machine Guns require inspection/gaging at a more frequent interval. If it is determined that a yearly inspection is necessary for an individual unit, only that unit will be affected. That will not affect other units in regard to the interval of inspection.

Dry cleaning solvent (SD) is flammable.

Do not clean parts near an open flame or in a smoking area. Dry cleaning solvent evaporates quickly and has a drying effect on the skin. When used without protective gloves, solvent may cause irritation to or cracking of the skin.

Personnel operating vapor degreaser are warned not to breathe the vapor fumes.

Before starting an inspection, be sure to clear the weapon. Do not actuate the trigger before clearing the weapon. Inspect the chamber to make sure it is empty and free of obstructions. Check to see there are no obstructions in the barrel and no ammunition is in position to be chambered.

Using paint thinners, gasoline, kerosene, benzene (benzol), water, steam, or air for cleaning the weapon is prohibited. Use only authorized cleaning materials.

Be careful when removing and installing spring-loaded components. Carelessness could cause injury.

To prevent possible body injuries and aircraft damage, personnel should not stand the weapon on its barrel assembly when disassembling or assembling the weapon.

For additional first aid data, see FM 21-11.

TECHNICAL MANUAL

No. 9-1005-224-23&P

***ARMY TM 9-1005-224-23&P**
AIR FORCE T.O. 11W2-6-4-11
HEADQUARTERS
DEPARTMENTS OF THE ARMY
AND AIR FORCE
Washington D.C., 21 May 1998

Unit and Direct Support Maintenance Manual
(Including Repair Parts and Special Tools List)
for
MACHINE GUN, 7.62-MM, M60 W/E
(1005-00-605-7710)
and
MACHINE GUN, 7.62-MM, M60D W/E
(1006-00-909-3002)

DISTRIBUTION STATEMENT: Approved for Public Release; Distribution Is Unlimited.

REPORTING ERRORS AND RECOMMENDING IMPROVEMENTS

You can help improve this manual. If you find any mistakes or if you know of a way to improve the procedures, please let us know. Army users mail your letter, DA Form 2028 (Recommended Changes to Publications and Blank Forms), or DA Form 2028-2 located in the back of this manual direct to: Director, Armament and Chemical Acquisition & Logistics Activity, ATTN: AMSMC-NML, Rock Island, IL 61299-7630. Air Force users submit AFTO Form 22, Technical Order System Publication Improvement Report and Reply, to: WR-ALC/MMIBTC, Robins AFB, GA 31098-5330. A reply will be furnished to you.

*This TM supersedes TM 9-1005-224-24, dated 8 July 1987; TM 9-1005-224-24P, 23 July 1987; and TB 9-1005-224-50-1, dated 7 October 1994, including all changes.

Work Package

Work Package

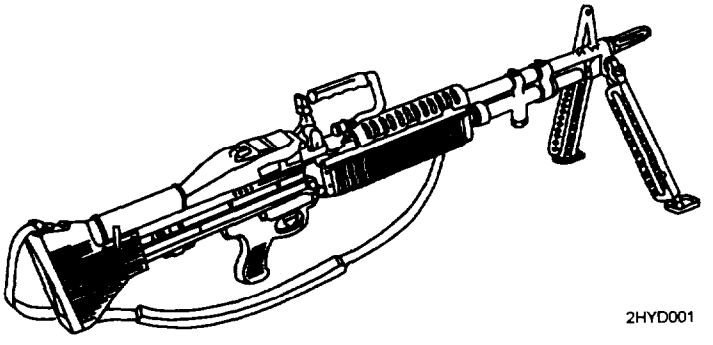

M60, 7.62-MM, MACHINE GUN

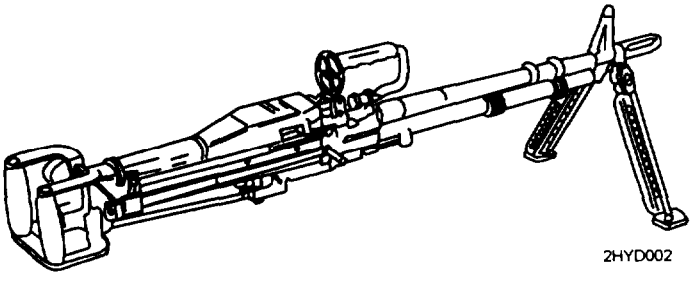

M60D, 7.62-MM, MACHINE GUN

Full External Views

CHAPTER 1

INTRODUCTION

GENERAL INFORMATION 0001 00

SCOPE

a. Type of Manual: Unit, Direct Support, Maintenance Manual.

b. Model Numbers and Equipment Names:

(1) M60 7.62-mm machine gun

(2) M60D 7.62-mm machine gun

c. Purpose of Equipment:

(1) The M60 7.62-mm machine gun is a general purpose weapon capable of being fired from several mounts or while being handheld. The weapon is mainly used for ground operations.

(2) The M60D 7.62-mm machine gun is a general purpose weapon capable of being fired from several mounts. The weapon is mainly used for support of ground operations. The M60D is an aircraft door-mounted, or vehicle mounted machine gun.

MAINTENANCE FORMS, RECORDS, AND REPORTS

Department of the Army forms and procedures for equipment maintenance will be those prescribed by DA PAM 738-750, The Army Maintenance Management System (TAMMS).

DESTRUCTION OF ARMY MATERIEL TO PREVENT ENEMY USE

Procedures and materials used for the destruction of the machine guns and tripod mount will be found in TM 750-244-7.

PREPARATION FOR STORAGE OR SHIPMENT

Requirements for storage or shipment are listed in TM 9-1005-224-10.

OFFICIAL NOMENCLATURE, NAMES AND DESIGNATIONS

This listing includes nomenclature cross-references used in this manual:

NOMENCLATURE CROSS-REFERENCE LIST

Common Name	Official Nomenclature
Bipod Legs	Leg, Machine Gun, RH Leg, Machine Gun, LH
Leaf Assembly	Leaf Assembly, Rear Sight

REPORTING EQUIPMENT IMPROVEMENT RECOMMENDATIONS (EIR)

If your machine gun or tripod mount needs improvement, let us know. Send us an EIR. You, the user, are the only one who can tell us what you don't like about your equipment. Let us know why you don't like the design. Put it on an SF 368 Quality Deficiency Report (QDR). Mail it to us at Director, Armament and Chemical Acquisition & Logistics Activity, ATTN: AMSMC-QAD, Rock Island, IL 61299-6000. We'll send you a reply.

CORROSION PREVENTION AND CONTROL (CPC)

CPC of Army materiel is a continuing concern. It is important that any corrosion problems with this item be reported so that the problem can be corrected and improvements can be made to prevent the problem in future items.

While corrosion is typically associated with rusting of metals, it can also include deterioration of other materials such as rubber and plastic. Unusual cracking, softening, swelling, or breaking of these materials may be a corrosion problem.

If a corrosion problem is identified, it can be reported using Standard Form 368, Product Quality Deficiency Report. Use of key words such as corrosion, rust, deterioration, or cracking will assure that the information is identified as a CPC problem.

Army users submit Product Quality Deficiency Report (SF 368) to: Director, Armament and Chemical Acquisition & Logistics Activity, ATTN: AMSMC-QAD/Customer Feedback Center, Rock Island, IL 61299-6000.

EQUIPMENT DESCRIPTION AND DATA 0002 00

EQUIPMENT CHARACTERISTICS, CAPABILITIES, AND FEATURES

a. M60 Machine Gun. The M60 machine gun is an air-cooled, link-belt fed, gas operated weapon. The operating cycle begins from an open bolt position. The weapon features fixed head space, which permits rapid changing of barrels.

b. M60D Machine Gun. The M60D machine gun is an air-cooled, link-belt fed, gas operated weapon. The operating cycle begins from an open bolt position. The weapon features fixed head space, which permits rapid changing of barrels.

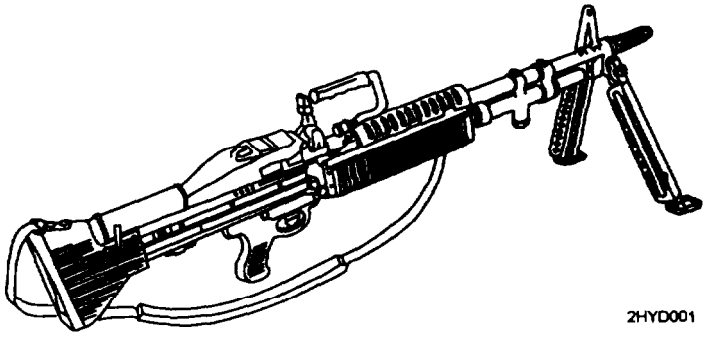

M60 Machine Gun

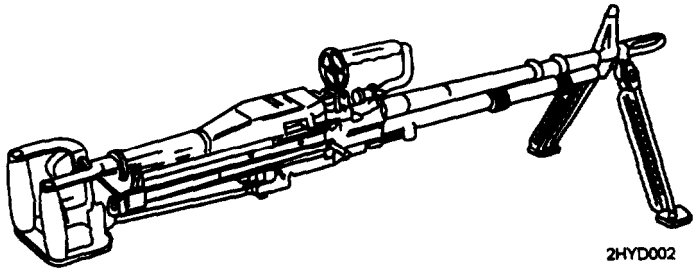

M60D Machine Gun

EQUIPMENT DESCRIPTION AND DATA (cont) 0002 00

LOCATION AND DESCRIPTION OF MAJOR COMPONENTS

a. The M60 machine gun consists of the following major external components:

A **SHOULDER GUN STOCK.** Stabilizes the weapon against the shoulder while firing the machine gun in all positions except from the hip.

B **COVER ASSEMBLY.** Positions and holds cartridges in place for stripping, feeding link belt, and chambering rounds.

C **RECEIVER ASSEMBLY.** Supports all major components. Houses internal parts and, through a series of cam ways, controls operation of weapon.

D **TRAY AND HANGER ASSEMBLY.** Guides cartridges for positioning and feeding.

E **REAR SIGHT.** Provides a means to aim the machine gun at the target with accuracy. The sight adjusts horizontally as well as vertically.

F **CARRYING HANDLE ASSEMBLY.** Provides a means to carry the machine gun with one hand, The carrying handle assembly folds down when the rear sight is used and the machine gun is fired.

G **FOREARM ASSEMBLY.** Provides a protective cover to hold when firing from the hip or from a standing and/or kneeling position.

H **BARREL AND BIPOD ASSEMBLY.** The barrel assembly houses cartridges for firing and directing projectiles. The bipod assembly provides a semi-stable platform when the machine gun is fired from the prone position.

I **COCKING HANDLE ASSEMBLY.** Provides a means to manually move the bolt assembly to the rear.

J **TRIGGER MECHANISM GRIP ASSEMBLY.** Provides controls for firing the machine gun.

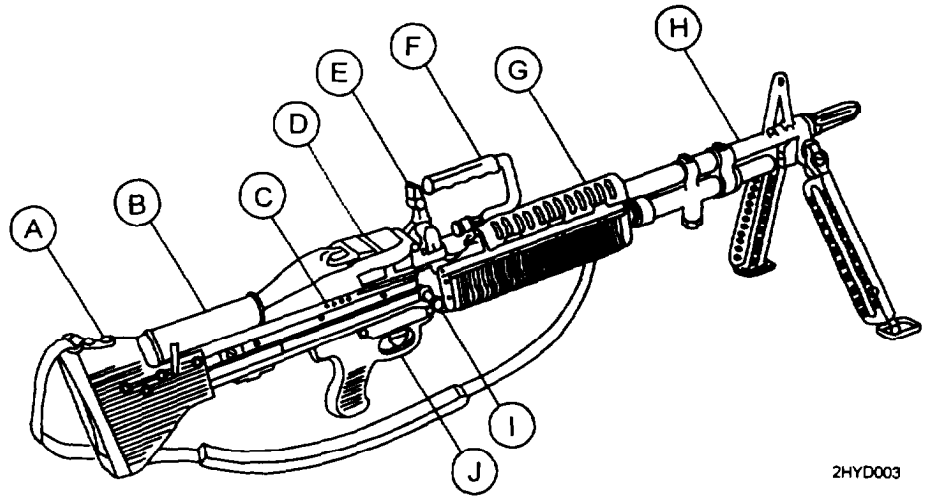

b. The M60D machine gun consists of the following major components:

A **GRIP AND TRIGGER ASSEMBLY.** Provides handles to move machine gun toward the target and houses the machine gun trigger.

B **COVER ASSEMBLY.** Positions and holds cartridges in place for stripping, feeding link belt, and chambering rounds.

C **CARTRIDGE FEED TRAY ASSEMBLY.** Guides cartridges for positioning and feeding.

D **REAR SIGHT.** Provides a means to aim the machine gun in the general area of the target. The rear sight is non adjustable.

E **CARRYING HANDLE ASSEMBLY.** Provides a means to carry the machine gun with one hand. The carrying handle assembly folds down when the rear sight is used and the machine gun is fired.

F **BARREL AND BIPOD ASSEMBLY.** The barrel assembly houses cartridges for firing and directing projectiles. The bipod assembly provides a semi-stable platform when the machine gun is fired from other than the designated mount.

G **RECEIVER ASSEMBLY.** Supports all major components. Houses internal parts and, through a series of cam ways, controls operation of weapon.

H **COCKING HANDLE ASSEMBLY.** Provides a means to manually move the bolt assembly to the rear.

I **SEAR AND SAFETY HOUSING.** Provides controls for firing the machine gun.

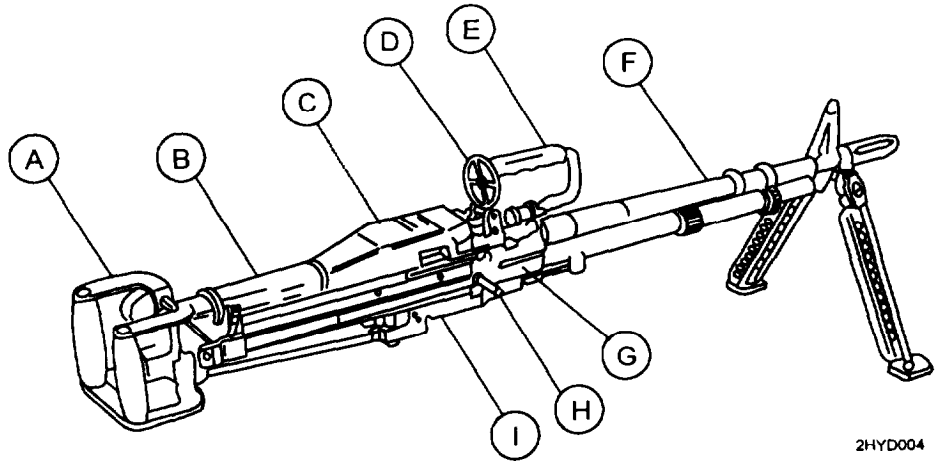

DIFFERENCES BETWEEN MODELS

Differences between the M60 and M60D machine gun are listed below.

Assembly/Component	M60	M60D
Tray and hanger assembly	x	
Cartridge feed tray assembly		x
Dust and moisture seal boot		x
Forearm assembly	x	
Grip and trigger assembly		x
Gun adapter		x
Bandoleer hanger assembly	x	
Magazine bracket assembly		x
Rear sight (adjustable)	x	
Rear sight (non adjustable)		x
Receiver assembly	x	
Receiver assembly		x
Sear and safety housing assembly		x
Sear assembly link and spring		x
Shoulder gun stock assembly	x	
Small arms sling	x	
Trigger mechanism grip assembly	x	
Quick release pin		x
Leaf spring	x	x

EQUIPMENT DATA

a. M60 Machine Gun.

Weight ..... 23 lb (1 0.43 kg)
Length ..... 43.50 in. overall (1.1 m overall)
Range ..... Ref to Ft 7.62-A-2
Rate of fire (cyclic) ..... 550 rd per min (approx)
Muzzle velocity ..... 2800 FPS
Capacity of bandoleer ..... 100 rds

Rifling:
Number of lands 4
Right hand twist ..... One turn in 12 in. (30.54 cm)

Trigger Pull:
Maximum..... 11.5 lb (5.2 kg)
Minimum..... 6.0 lb (2.7 kg)

EQUIPMENT DATA

b. M60D Machine Gun.

Weight	25 lbs (10.42 kg)
Length	43.5 in. overall (1.1 m overall)
Rate of fire (cyclic)	550 rd per min (approx)
Muzzle velocity	2800 FPS

Rifling:

Number of lands	4
Right hand twist	One turn in 12 in. (30.54 Cm).

Trigger pull at sear activator:

Maximum	20 lb (9.06 kg)
Minimum	10.5 lb (4.75 kg)

CHAPTER 2

UNIT MAINTENANCE INSTRUCTIONS

REPAIR PARTS, SPECIAL TOOLS, AND SUPPORT EQUIPMENT 0003 00

COMMON TOOLS AND EQUIPMENT

For authorized common tools and equipment, refer to Modified Table of Organization and Equipment (MTOE) applicable to your unit.

SPECIAL TOOLS AND SUPPORT EQUIPMENT

Tools and test equipment are listed in work package WP 0048 00. Special tools and support equipment are listed and illustrated in work package WP 0079 00.

REPAIR PARTS

Repair parts are listed and illustrated in work packages WP 0050 00 through WP 0079 00 of this manual.

SERVICE UPON RECEIPT 0004 00

GENERAL

a. Inspect the machine gun for damage incurred during shipment. If machine gun has been damaged, report the damage on SF 364, Report of Discrepancy (ROD).

b. Check the machine gun against the packing slip to see if shipment is complete. Army users report all discrepancies in accordance with DA PAM 738-750. Air Force users submit Materiel Deficiency Report (MDR) to: DIR MAT MGT ROBINS AFB GA//MMIBTC// and Product Quality Deficiency Report to: DIR MAT MGT ROBINS AFB GA//MMQA// in accordance with Technical Order 00-35D-54.

c. Check to see whether the equipment has been modified.

SERVICE UPON RECEIPT OF MATERIEL

WARNING

Before starting an inspection, be sure to clear the weapon. Do not actuate the trigger before clearing the weapon. Inspect the chamber to make sure it is empty and free of obstructions. Check to see there are no obstructions in the barrel and no ammunition is in position to be chambered.

Table 1. SERVICE UPON RECEIPT

LOCATION	ITEM	ACTION	REMARKS
		M6O MACHINE GUN	
1. Container	a. Machine gun	a. Remove machine gun from containers.	If the equipment has been damaged, report the damage on SF Form 384, Report of Discrepancy (ROD).
		b. Inspect the equipment for damage incurred during shipment.	
		c. Check the equipment against the packing list to see if the shipment is complete.	Report all discrepancies in accordance with the instructions of DA PAM 738-750.
	b. Basic issue items	Check for missing items.	TM 9-1005-224-10
2. Machine gun	a. Barrel assembly	Remove volatile corrosion inhibitor (VCI) bore tube from barrel and discard.	
	b. All parts	a. Field-strip machine gun and inspect for missing, damaged, and rusted or corroded parts.	TM 9-1005-224-10
		b. Clean and lubricate.	TM 9-1005-224-10
		c. Reassemble.	TM 9-1005-224-10
		d. Operate by hand using belted dummy cartridges.	TM 9-1005-224-10
		e. Check to see whether the equipment has been modified.	DA PAM 25-30

Table 1. SERVICE UPON RECEIPT (cont)

LOCATION	ITEM	ACTION	REMARKS
		M60D MACHINE GUN	
1. Container	a. Machine gun	a. Remove machine gun from containers.	If the equipment has been damaged, report the damage on SF Form 364, Report of Discrepancy (ROD).
		b. Inspect the equipment for damage incurred during shipment.	
		c. Check the equipment against the packing list to see if the shipment is complete.	Report all discrepancies in accordance with the instructions of DA PAM 738-750.
	b. Basic issue items	Check for missing items.	TM 9-1005-224-10
2. Machine gun	a. Barrel assembly	Remove volatile corrosion inhibitor (VCI) bore tube from barrel and discard.	
	b. All parts	a. Field-strip machine gun and inspect for missing, damaged, and rusted or corroded parts.	TM 9-1005-224-10
		b. Clean and lubricate.	TM 9-1005-224-10
		c. Reassemble.	TM 9-1005-224-10
		d. Operate by hand using belted dummy cartridges.	TM 9-1005-224-10
		e. Check to see whether the equipment has been modified.	DA PAM 25-30

PREVENTIVE MAINTENANCE CHECKS AND SERVICES (PMCS) 0005 00

GENERAL

This work package contains the procedures and instructions necessary to perform preventive maintenance checks and services. These services are to be performed by unit maintenance personnel with the assistance, where practical, of the operator/crew who will clean and lubricate in accordance with TM 9-1005-224-10. All items to be inspected and procedures for the M60 Machine Gun will apply to the M60D Machine Gun, as appropriate.

NOTE

Maintenance of some assemblies are not authorized by the maintenance allocation chart (see WP 0048 00) to unit maintenance. Insure that no work is being accomplished beyond the scope authorized to unit maintenance. Evacuate to direct support maintenance for repairs when necessary.

The PMCS procedures are contained in the table following. They are arranged in logical sequence requiring a minimum amount of time and motion on the part of the persons performing them and are arranged so that there will be minimum interference between persons performing checks simultaneously on the same end item.

item No. Column. Checks and services are numbered In disassembly sequence. This column shall be used as a source of item numbers for the TM Number column on DA Form 2404, Equipment Inspection and Maintenance Worksheet, in recording results of PMCS.

Interval Column. This column gives the designated interval when each check is to be performed.

Item To Be Checked Or Serviced Column. This column lists the items to be checked or serviced.

Procedure Column. This column contains a brief description of the procedure by which the check is to be performed. It contains all the information required to accomplish the checks and setvices. Information marked SH indicates a specific equipment shortcoming and the procedure needed to correct the shortcoming.

“Not Fully Mission Capable If:” Column. This column contains a brief statement of the condition (e.g., malfunction, shortage) that would cause the covered equipment to be less than fully ready to perform its assigned mission.

WARNING

Before starting an inspection, be sure to clear the weapon. Do not actuate the trigger before clearing the weapon. Inspect the chamber to make sure it is empty and free of obstructions. Check to see there are no obstructions in barrel and no ammunition is in position to be chambered.

NOTE

When weapon has not been used, perform preventive maintenance every 90 days unless inspection reveals more frequent servicing is necessary.

If the M60/M60D machine gun has to go to direct support maintenance for any repair, both barrel assemblies must be turned in with the weapon.

Coordinate cleaning and lubrication with crew/operator as part of quarterly service.

Table 2. PREVENTIVE MAINTENANCE CHECKS AND SERVICES

Item NO.	Interval	Man-Hour	Item To Be Checked Or serviced	Procedure	Not Fully Mission Capable If:
1			M60/M60D Machine Gun	a. Visually inspect machine gun for general appearance, condition, and operation. Operate the weapon by hand using dummy rounds/cartridges.	
				b. Make sure all serial numbers and identification numbers are legible.	
				c. Inspect for burrs or damage on exterior of weapon.	
				d. Check to make sure weapon is properly assembled.	
				e. Field-strip the weapon, as necessary, to perform detail inspection.	
				f. Repair or replace all authorized components (WP 0007 00/WP 0008 00). If additional repair is needed, notify direct support maintenance.	
				g. Check that assigned barrel and spare barrel have been headspaced and tagged to your receiver.	Barrel and spare barrel not properly headspaced/ tagged to weapon.

Item No.	Interval	Man-Hour	item To Be Checked Or serviced	Procedure	Not Fully Mission Capable If:

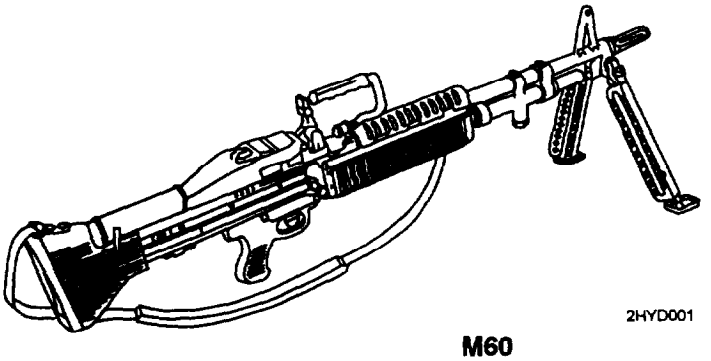

M60

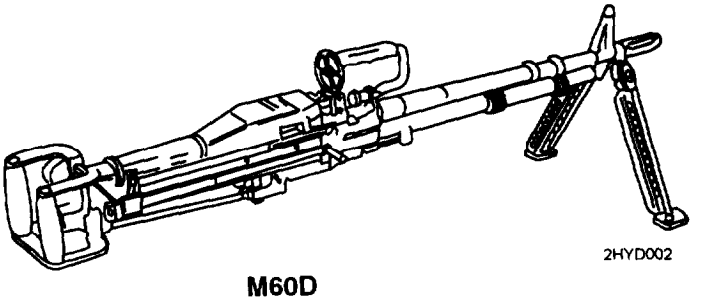

M60D

				h. Check that flat leaf spring is the proper type for weapon and is installed correctly. See TM 9-1005-224-10.	Leaf spring is incorrect type or improperly installed.
				i. Assemble the weapon according to TM 9-1005-224-10. Make sure all components are lubricated and installed correctly.	
				j. Visually inspect all external aluminum parts for a dull black finish.	
				k. Check to ensure annual direct support maintenance safety and serviceability inspection and gaging has been done and that the next gaging and inspection is scheduled. If annual gaging has not been performed within the last year, notify direct support maintenance.	Annual gaging has not been performed.

Table 2. PREVENTIVE MAINTENANCE CHECKS AND SERVICES (cont)

Item No.	Interval	Man-Hour	item To Be Checked Or Serviced	Procedure	Not Fully Mission Capable It:
2			Shoulder Gun Stock Assembly (M60 only)	a. Inspect shoulder gun stock assembly for damage.	Damaged so as not to allow positive retention on weapon or interferes with grip of weapon.
				b. Inspect latch (2), it must operate correctly and hold the shoulder gun stock assembly to the receiver assembly.	Shoulder gun stock does not hold to receiver assembly.
				c. Inspect shoulder rest plate (3), it must be held in either the open or closed position by the spring-loaded detent.	
				d. Rubber coating (4) must not be gummy or retain finger impressions. Abrasions, cuts, gouges, or holes in the rubber are acceptable. Loose bonding of the rubber near cuts etc., is acceptable provided cuts do not interfere with the operator's grip on the weapon.	
				e. Inspect sling swivel (1) for secureness.	
				f. Inspect solid rivets (5) for looseness or sharp edges.	
				g. Repair or replace all authorized components (WP 0009 00). If additional repair is needed, notify direct support maintenance.	

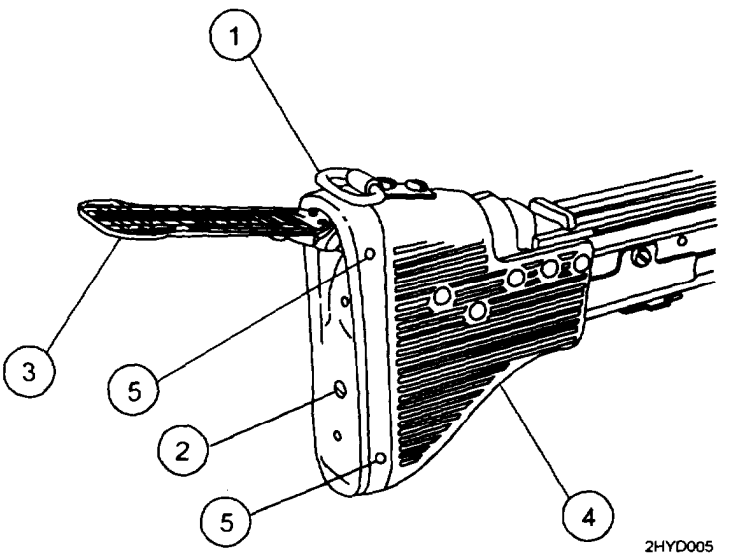

Item No.	Interval	Man-Hour	item To Be Checked Or Serviced	Procedure	Not Fully Mission Capable if:
3			Grip and Trigger Assembly (M60D only)	a. Check for burred, bent, and damaged components.	Damaged so as to prevent proper operation of trigger assembly or cannot be retained on receiver.
				b. Check trigger (1) for free movement.	Trigger is not free.
				c. Check sear assembly link and spring (2) for proper adjustments. (Refer to WP 0008 00 for adjustments.)	Sear assembly link and spring are out of adjustment.
				d. Check that grip and trigger assembly (3) is securely fastened to the receiver assembly.	Grip and trigger assembly are not secure.
				e. Repair or replace (WP 0010 00).	

Table 2. PREVENTIVE MAINTENANCE CHECKS AND SERVICES (cont)

Item No.	Interval	Man-Hour	Item To Be Checked Or Serviced	Procedure	Not Fully Mission Capable If:
				CAUTION Do not allow breech bolt to slam closed when the weapon is empty, as this will cause damage to locking surfaces on the breech bolt or barrel socket. **NOTE** Burrs or raised surfaces, may be removed or smoothed using a fine grit sharpening stone. DO NOT change the dimensions of any component by stoning. Cracks, chips, dents, or gouges on components shall be reported to direct support maintenance for repair or replacement. Cracks, chips, dents, or gouges on breech bolt locking surfaces can damage the barrel socket. Damage to barrel socket locking surfaces can damage the breech bolt. If either condition exists, notify direct support maintenance for replacement or repair.	
4			Breech Bolt Assembly	a. Inspect firing pin helical compression spring for tension.	

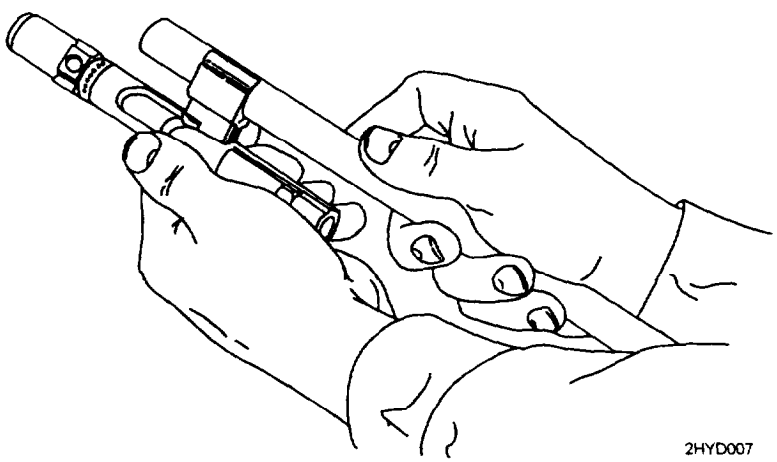

NOTE

Check spring tension. Remove the bolt from operating rod, turn bolt so you can see spring guide and firing pin, shake bolt moderately, if firing pin moves; replace firing pin spring.

Item No.	Interval	Man-Hour	Item To Be Checked or Service	Procedure	Not Fully Mission Capable It:
				b. Inspect bolt body for burrs or damage in the areas indited.	Damaged beyond repair by stoning.

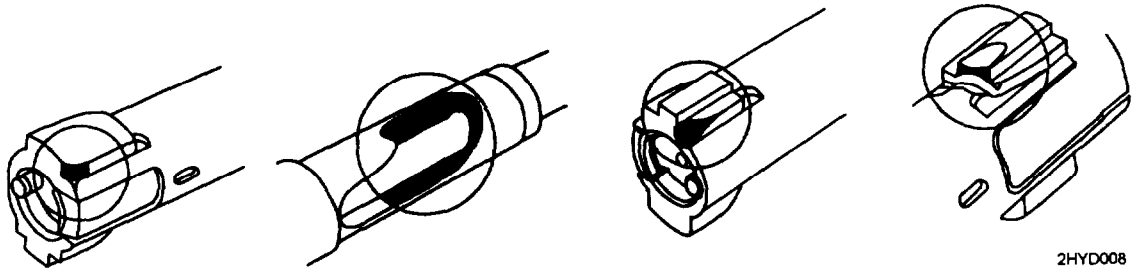

				c. Make sure breech bolt operates correctly. Roller (1) on cam actuator assembly (2) should rotate freely, and cam actuator assembly should rotate freely on breech bolt (3). Inspect bolt assembly for missing headless straight pin (4) securing plug assembly (5).	Roller and cam actuator assembly do not rotate freely. Parts missing or broken.

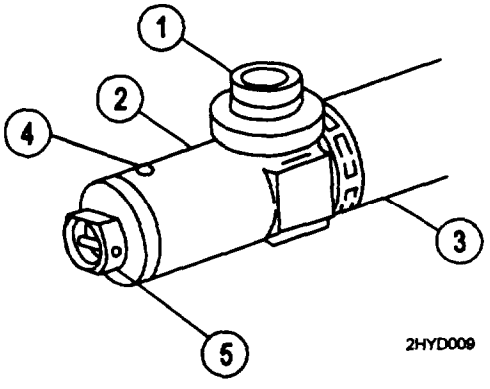

Table 2. PREVENTIVE MAINTENANCE CHECKS AND SERVICES (cont)

Item No.	Interval	Man-Hour	Item To Be Checked Or Serviced	Procedure	Not Fully Mission Capable If:
4 (cont)			Breech Bolt Assembly (cont)	d. Inspect firing pin (6) in breech bolt. Firing pin (6) must not be cracked or bent and must have a well-rounded point.	Firing pin broken/cracked. Point flattened.
				e. Inspect cartridge ejector (7) for freedom of movement. When cartridge ejector is depressed/released, helical compression spring must return cartridge ejector to normal position.	Parts damaged or missing.
				f. Inspect cartridge extractor (8) for chipped or damaged hook portion and for freedom of movement. When cartridge extractor is depressed/released, helical compression spring must returncartridge extractor to normal position.	Parts damaged or missing.

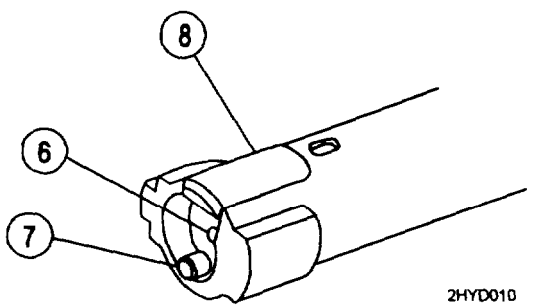

				g. Inspect for pits on breech bolt face. Make sure that firing pin hole is round and not elongated.	Major pits on bolt face. Elongated/out-of-round firing pin hole.
				h. Repair or replace all authorized components (WP 0011 00). If additional repair is needed, notify direct support maintenance.	

Item No.	Interval	Man-Hour	Item To Be Checked Or Serviced	Procedure	Not Fully Mission Capable If:
5			Operating Rod Assembly and Hydraulic Buffer Assembly	a. Inspect buffer assembly (1) for damage, rust, and burrs. Depress plunger to check its movement. Plunger must have a light amount of hydraulic fluid on its surfaces. If plunger is dry or buffer assembly is faulty, replace buffer assembly.	Buffer assembly is dry or faulty.
				b. Inspect helical compression spring (2) for damage and for signs of weakness, burrs, or sharp edges. The minimum length of the drive spring will be 23-1/4 inches long with no maximum length.	Spring is damaged/broken or less than 23-1/4 in length.
				c. Inspect operating rod assembly (3) for damage or obstructions in the helical compression spring hole. Linear-rotary roller (4) must be free of cracks and rotate freely. Inspect sear notch (P) to ensure notch is sharp and not round. Inspect for loose end section of operating rod (8) and for pin (9). If pin is loose or missing, notify direct support maintenance.	Parts are missing/ damaged. Roller does not rotate freely. Pin is loose.
				d. Make sure that yoke and tube assembly (5) is tight on operating rod assembly and that spring pin (6) does not protrude on either side. Check yoke and tube assembly for damage.	Any part other than the roller is loose. Retaining pin protrudes.

NOTE

Primary (P) notch is normal sear notch. Secondary (S) notch is short recoil sear notch.

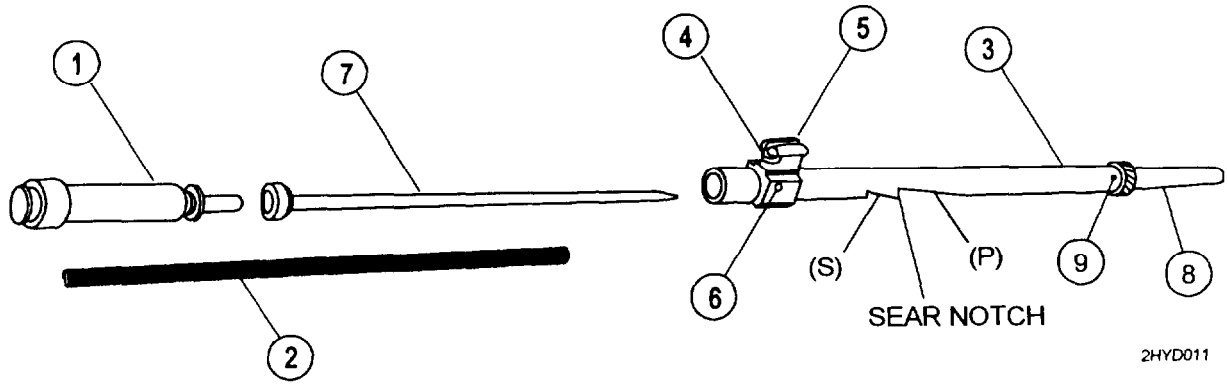

Table 2. PREVENTIVE MAINTENANCE CHECKS AND SERVICES (cont)

Item No.	Interval	Man-Hour	Item To Be Checked Or serviced	Procedure	Not Fully Mission Capable If:
5 (cont)			Operating Rod Assembly and Hydraulic Buffer Assembly (cont)	e. Notify direct support maintenance for replacement or repair of operating rod assembly.	Guide is broken or bent beyond standards.
				f. Inspect guide assembly (7) for straightness; the operating spring guide will only be considered unserviceable when the rod becomes so distorted as to cause binding of the spring or when the rod with the spring installed cannot be inserted in the operating rod well.	Rod is distorted so as to cause binding.
6			Trigger Mechanism Grip Assembly (M60 only)	a. Inspect components of trigger mechanism grip assembly for burrs, damage, and for proper operation. Check sear for rounding and safety notch for breaks or wear. Check sear spring to see if it is kinked or obstructed.	Trigger assembly is bent or damaged so as to prevent operation. Sear is excessively worn/cracked or broken.
				b. When safety is in S (safe) position, make sure small arms safety (1) prevents sear (2) from being activated. Make sure sear can be actuated when safety is in F (fire) position and trigger assembly (3) is pulled. Check trigger for proper installation and binding.	Safety does not function properly.

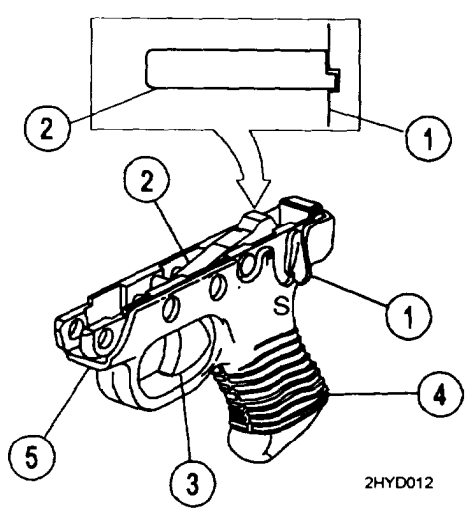

Item No.	Interval	Man-Hour	Item To Be Checked Or serviced	Procedure	Not Fully Mission Capable It:
6 (cont)			Trigger Mechanism Grip Assembly (M60 only) (cont)	c. Rubber coating (4) must not be gummy or retain finger impressions. Abrasions, cuts, gouges, or holes in the rubber are acceptable. Loose bonding of the rubber near cuts etc., is acceptable provided cuts do not interfere with operator's grip on the weapon.	
				d Inspect trigger housing (5) for cracks and loose rivets.	Housing is cracked. Rivets are loose.
				e. Repair all authorized components (WP 0013 00). Notify direct support maintenance to repair trigger housing, or replace trigger mechanism grip assembly.	
7			Sear and Safety Housing Assembly (M60D only)	a. Check components for freedom of movement.	
				b. Check for broken or missing parts, and deformed or weak springs.	Parts are missing/broken. Springs are deformed/weak and prevent proper functioning.
				c. When safety is in safe position, make sure small arms safety (1) prevents sear (2) from being activated. Make sure sear (2) can be actuated when small arms safety (1) is in fire position and sear assembly activator (3) is moved.	Safety does not function properly or sear assembly activator does not move.
				d. Repair or replace sear and safety housing assembly (WP 0014 00).	

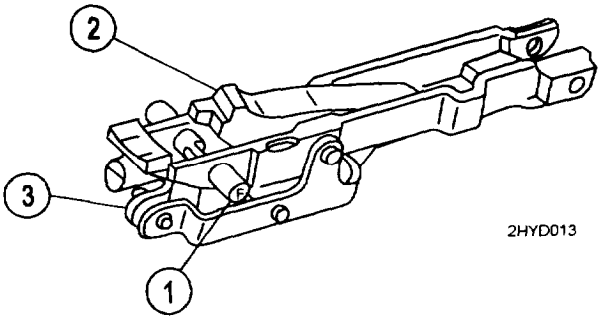

Table 2. PREVENTIVE MAINTENANCE CHECKS AND SERVICES (cont)

Item No.	Interval	Man-Hour	Item To Be Checked Or Serviced	Procedure	Not Fully Mission Capable If:
				NOTE Check both barrel assemblies when performing PMCS. Burrs or raised surfaces may be removed or smoothed using a fine grit sharpening stone. DO NOT change the dimensions of any components by stoning. Components with cracks, chips, dents, or gouges shall be reported to direct support maintenance for repair or replacement. Cracks, chips, dents, or gouges on breech bolt locking surfaces can damage the barrel socket. Damage to barrel socket locking surfaces can damage the breech bolt. Notify direct support maintenance for replacement or repair if either condition exists.	
8			Barrel and Bipod Assemblies	a. Inspect barrel assembly and bipod assembly for damage. Headless straight pin (1) must be tight and staked at both ends to hold flash suppressor (2). Check suppressor for looseness, if loose notify direct support maintenance.	Barrel assembly damaged. Suppressor straight pin missing. Suppressor loose.
				b. Tilt barrel (3) to make sure gas piston (4) moves freely, make sure bleeder hole (5) is open.	Gas piston does not move.
				NOTE Check for broken or cracked gas piston when it is removed for cleaning.	
				c. Inspect bipod assembly (6) for looseness, damage or bent parts. Check gas cylinder vent plug for wiring. Replace if missing. See WP 0015 00 for instructions.	

Item No.	Interval	Man-Hour	Item To Be Checked Or Serviced	Procedure	Not Fully Mission Capable If:
				d. Check bipod legs for ease of extention and retraction by:	Bipod legs do not extend, retract, or remain locked.
				(1) Press leg locks (7) legs shall fully extend.	
				(2) Invert barrel (3) and bipod assembly (6) up, press leg locks (7), and the legs shall retract.	
				(3) Check leg locks (7) for retention at each detent (9) by pushing on leg bottom (11) at each detent (9) position.	
				(4) Check foot (10) to ensure rotation does not exceed 360°.	Foot rotates 360°.

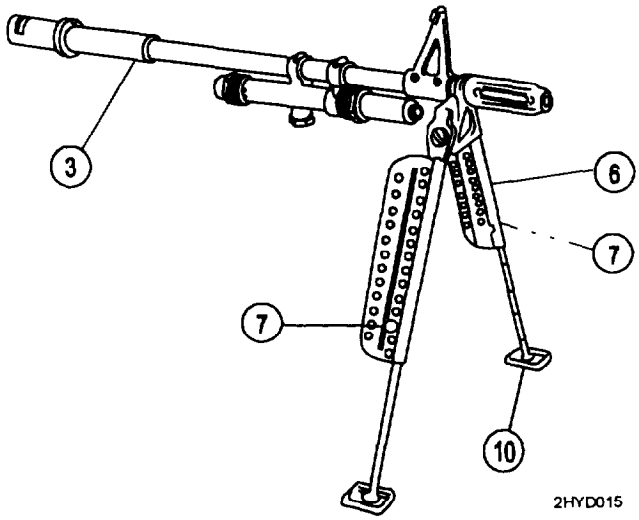

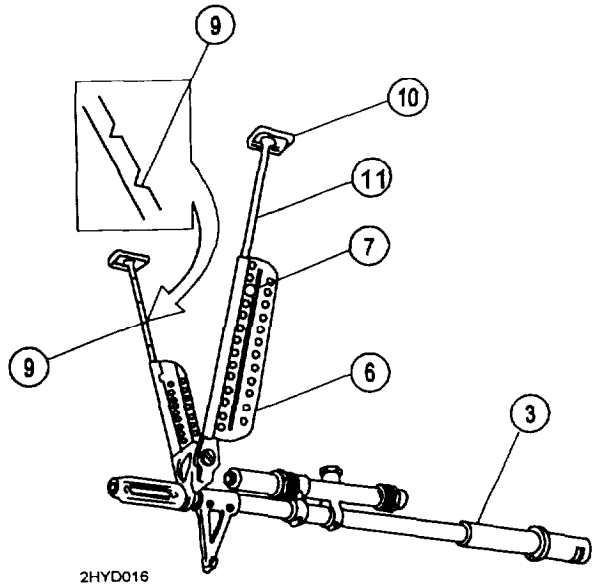

Table 2. PREVENTIVE MAINTENANCE CHECKS AND SERVICES (cont)

Item No.	Interval	Man-Hour	Item To Be Checked Or Serviced	Procdure	Not Fully Mission Capable if:
8 (cont)			Barrel and Bipod Assemblies (cont)	e. Inspect front sight (11) for looseness or any damage (bent).	Front sight is loose.
				f. Inspect key washers (12) for broken tabs. If broken, replace, and notify direct support for additional repair if necessary.	
				Inspect gas cylinder (14) for looseness. If loose notify direct support maintenance.	Gas cylinder loose.
				h. Inspect for loose or cracked barrel socket (15).	Socket loose or cracked.
				i. Check bipod shoulder screws (13) for tightness and staking.	
				j. Repair (see WP 0015 00). If additional repair is necessary, notify direct support maintenance.	

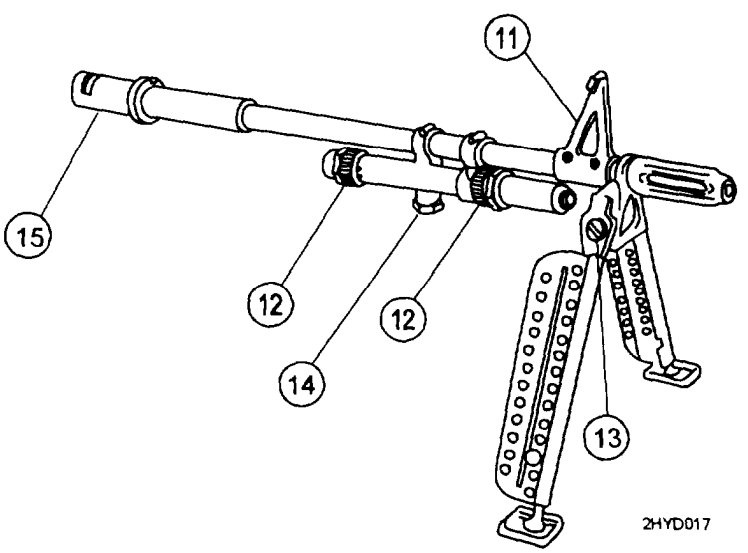

Item No.	Interval	Man-Hour	Item To Be Checked Or Serviced	Procedure	Not Fully Mission Capable II:
9			Cover Assembly	a. Inspect for proper operation. Cover assembly (1) must be held open by spring (2) tension, and held closed by cover latch (3).	Cover latch does not hold cover closed.
				b. Make sure cover assembly opens and closes freely.	
				c. Inspect for damaged or missing components.	Parts missing, loose or damaged.
				d. Check that front and rear cartridge guides (4) operate smoothly. Ensure that flat washers are not damaged and that shouldered pins are not loose (no movement).	Cover components do not operate smoothly.
				e. Make sure springs allow feed lever assembly (5) feed cam assembly (6), and feed pawl assembly (7) to operate freely.	
				f. Check that latch lever assembly shaft (8) operates freely.	
				Repair or replace all authorized components (WP 0016 00). If additional repair is necessary, notify direct support maintenance.	
				h. Visually inspect that all external aluminum parts have a dull black finish.	Missing finish allows light reflection.

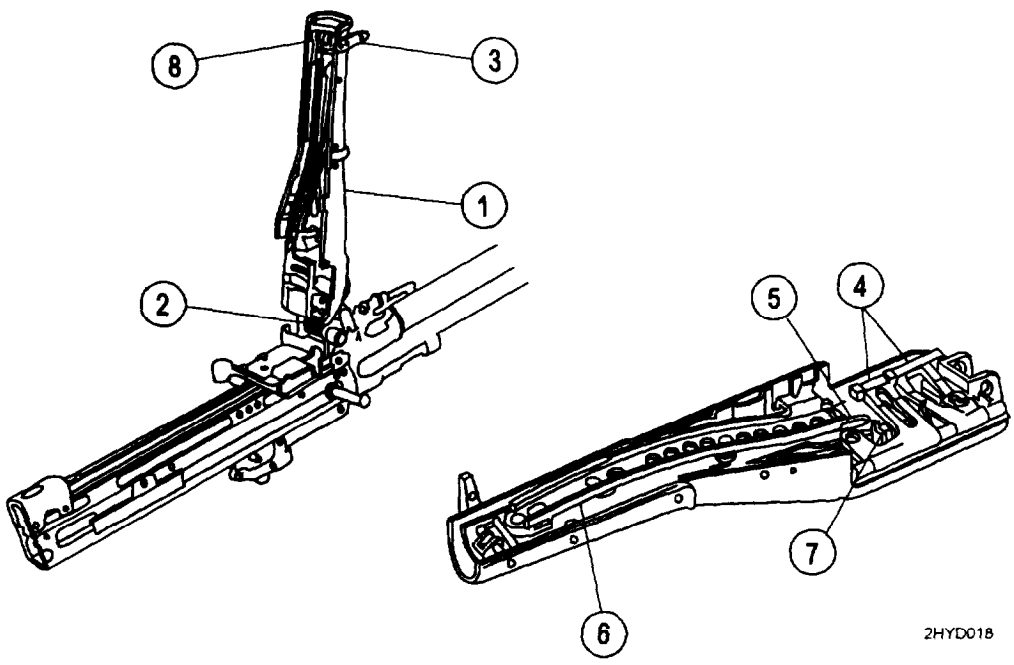

Table 2. PREVENTIVE MAINTENANCE CHECKS AND SERVICES (cont)

Item No.	Interval	Man-Hour	Item To Be Checked Or serviced	Procedure	Not Fully Mission Capable If:
10			Tray and Hanger Assembly (M60 only)	a. Inspect feed tray assembly for cracks or distortion. inspect belt holding cartridge retainer pawl (1) and helical torsion spring for weakness or damage.	Tray cracked or distorted.
				b. Inspect bandoleer hanger assembly (2) for bends or cracks, and for freedom of movement.	Hanger bent or cracked.
				c. Inspect spot welds for evidence of separation of failure.	Welds cracked or separated.
				d. Repair (WP 0017 00).	
11			Cartridge Feed Tray Assembly (M60D only)	a. Inspect feed tray assembly for cracks or distortion. Inspect belt holding cartridge retainer pawl (1) and helical torsion spring for weakness or damage.	Tray cracked or distorted.
				b. Inspect linear rotary rollers (2) for freedom of movement.	
				c. Inspect spot welds for evidence of separation or failure.	Welds cracked or separated.
				d. Repair (WP 0018 00).	

Item No.	Interval	Man-Hour	Item To Be checked Or Serviced	Procedure	Not Fully Mission Capable if:
12			Forearm Assembly (M60 only)	a. Inspect cover assembly (1) and shell assembly (2) for damage. Notify direct support maintenance to fix broken rib (3).	Distorted so as to interfere with removal of barrel.
				b. Inspect tension of forearm catch and flat spring (4), they must operate properly.	Forearm assembly does not latch in position.
				c. Inspect to make sure tripod clevis slot (5) is not covered by tabs.	
				d. Inspect sling swivel (6) to make sure it is secure.	
				e. Rubber coating (7) must not be gummy or retain finger impressions. Abrasions, cuts, gouges or holes in the rubber are acceptable. Loose bonding of rubber near cuts, etc., is acceptable provided cuts do not interfere with the operator's grip on the weapon,	
				f. Inspect forearm assembly for any distortion that would interfere with removal or installation.	
				g. Inspect for damaged or missing parts.	
				h. Repair by replacing authorized components (WP 0019 00). If additional repair is necessary, notify direct support maintenance.	

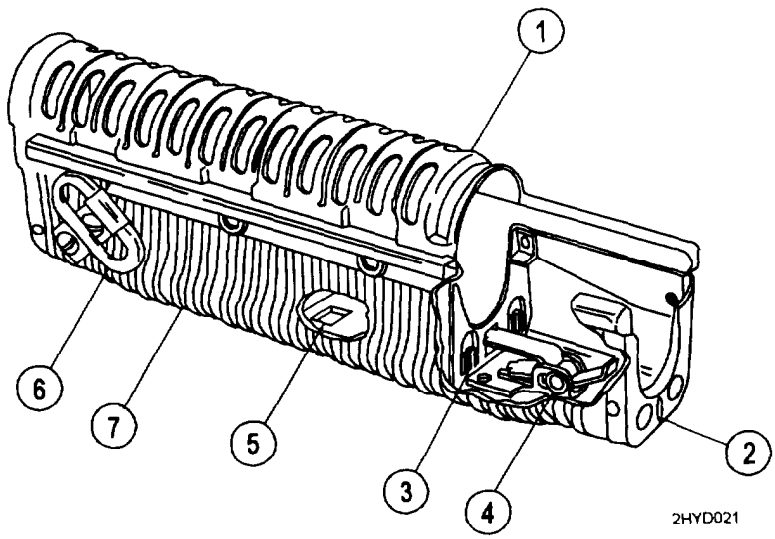

Table 2. PREVENTIVE MAINTENANCE CHECKS AND SERVICES (cont)

Item No.	Interval	Man-Hour	Item To Be Checked Or Serviced	Procedure	Not Fully Mission Capable if:
13			**Rear Sight (M60 only)**	a. Inspect rear sight assembly to make sure it rotates from horizontal to vertical position and is retained by spring tension in the vertical position.	Rear sight does not rotate to/stay in vertical position.
				b. Make sure that windage knob (1) and elevating knob (2) rotate freely and that the clicks are distinct.	Windage/elevation knobs do not rotate.
				c. Check that markings on elevation scale (3) are legible.	Markings are missing or not legible.
				d. If repair is necessary, notify direct support maintenance.	

Item No.	Interval	Man-Hour	Item To Be Checked Or Serviced	Procedure	Not Fully Mission Capable if:
14			Rear Sight (M60D only)	a. Check for burred, bent, or damaged components.	Parts bent or damaged.
				b. Make sure rear sight assembly is secured to receiver assembly.	Sight loose on receiver.
				c. Make sure sight ring (1) and rear sight retainer (2) are secured to rear sight base (3).	Rear sight does not stay in vertical position.
				d. Make sure sight ring rotates smoothly from horizontal to vertical position.	Sight ring does not rotate smoothly.
				e. Make sure sight ring is retained when placed in vertical position by spring tension.	
				f. Notify direct support maintenance if repair is necessary.	

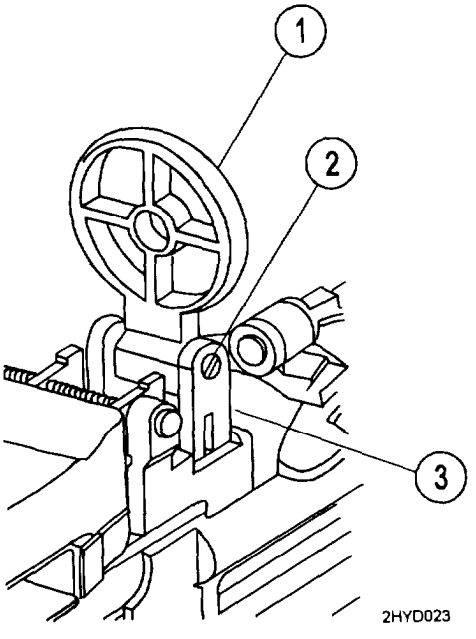

Table 2. PREVENTIVE MAINTENANCE CHECKS AND SERVICES (cont)

Item No.	Interval	Man-Hour	Item To Be Checked Or serviced	Procedure	Not Fully Mission Capable if:
15			Gun Receiver Assembly (M60 only)	a. Inspect barrel lock (1) and barrel lock ring (2). Make sure barrel assembly is secured to the receiver assembly.	Barrel will not lock in receiver.
				b. Inspect carrying handle assembly (3) for cracks. It must be held securely by spring tension. Rubber coating must not be gummy or retain finger impressions. Abrasions, cuts, gouges, or holes in the rubber are acceptable. Loose bonding of rubber near cuts, etc., is acceptable provided cuts do not interfere with the operator's grip on the weapon.	
				c. Make sure cocking handle assembly (4) works without binding. Reassemble weapon. Perform operation check.	Cocking handle does not function without binding.
				d. Inspect trigger lug area (5) for cracking. Notify direct support maintenance if any cracks are noted.	Trigger lug area is cracked.
				e. Check for tightness of operating rod guide tube to receiver. Check the tapered pin to ensure it is tight and not missing.	
				f. Check for loose receiver mounting plate.	
				g. Check for loose receiver bridge and/or rivets. If loose return to direct support maintenance.	Rivets are loose or missing.
				h. Inspect for missing finish. Apply solid film lubricant on shiny surfaces.	Finish is missing from one third or more of the receiver.
				i. Repair or replace authorized components (WP 0007 00). If additional repair is necessary, notify direct support maintenance.	

Item No.	Interval	Man-Hour	item To Be Checked Or serviced	Procedure	Not Fully Mission Capable if:

NOTE

The breakthrough of the wall in the forearm spring catch notch of the receiver extension (tube) is not cause for rejection.

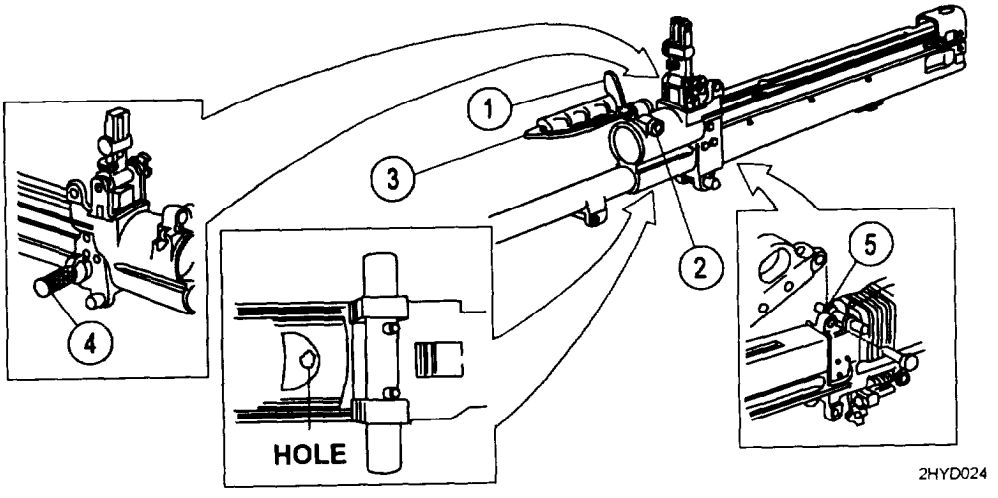

Table 2. PREVENTIVE MAINTENANCE CHECKS AND SERVICES (cont)

Item No.	Interval	Man-Hour	Item To Be Checked Or serviced	Procedure	Not Fully Mission Capable if:
16			Gun Receiver Assembly (M60D only)	a. Inspect barrel lock (1) and barrel lock ring (2). Make sure barrel assembly is secured to receiver assembly. b. Inspect magazine bracket assembly (3) for damage and positive spring tension of latches (4). c. Inspect carrying handle assembly (5) for cracks. It must be held securely by spring tension. Rubber coating must not be gummy or retain finger impressions. Abrasions, cuts, gouges, or holes in the rubber are acceptable. Loose bonding of rubber near cuts, etc., is acceptable provided cuts do not interfere with the operator's grip on the weapon.	Barrel does not lock onto receiver. Magazine bracket assembly damaged or loose.

Item No.	Interval	Man-Hour	Item To Be Checked Or Serviced	Procedure	Not Fully Mission Capable if:
16 (cont)			Gun Receiver Assembly (M60D only) (cont)	d. Make sure cocking handle assembly (6) works without binding. Reassemble weapon and perform operation check.	Cocking handle binds.
				e. Make sure gun adapter (7) moves freely and is held in place by spring pin.	Spring pin is missing.
				f. Inspect quick release pin (8) to make sure that bearing ball works properly, and that wire rope assembly secures quick release pin (8) to rear sight.	Ball bearing is missing or not working properly.
				g. Repair or replace authorized components (WP 0008 00). If additional repair is necessary, notify direct support maintenance.	
				h. Check for loose receiver bridge and/or rivets. If loose return to direct support maintenance.	Rivets loose or missing.
				i. Inspect for missing finish. Apply solid film lubricant on shiny surfaces.	Finish is missing from one third or more of the receiver.

NOTE

Coordinate cleaning and lubrication with crew/operator as part of quarterly services.

The breakthrough of the wall in the forearm spring catch notch of the receiver extension (tube) is not cause for rejection.

TROUBLESHOOTING PROCEDURES 0006 00

THIS WORK PACKAGE COVERS:
M60/M60D Machine Gun

INITIAL SETUP:

Maintenance Level
Unit and Direct Support

GENERAL

This section contains troubleshooting information for locating and correcting most of the operating troubles which may develop in your machine gun. Each malfunction for an individual component, unit, or system is followed by a list of tests or inspections which will help you to determine corrective actions to take. You should perform the tests/inspections and corrective actions in the order listed.

This manual cannot list all possible malfunctions that may occur, nor all tests or inspections and corrective actions. If a malfunction is not listed (except when malfunction and cause are obvious) or is not corrected by listed corrective actions, notify your supervisor.

TROUBLESHOOTING PROCEDURES

SYMPTOM INDEX

Table 1. TROUBLESHOOTING PROCEDURES

MALFUNCTION	TEST OR INSPECTION	CORRECTIVE ACTION
1. FAILURE TO FEED	1. Check cover assembly for weak feed pawl assembly and helical torsion spring. Inspect feed lever assembly for damage.	Notify direct support maintenance.

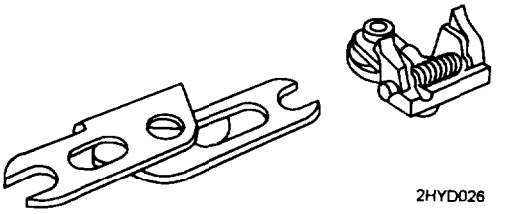

	2. Check cartridge guides and he compression springs for defects. Ensure that flat washers are not damaged and that shouldered pins are not loose (no movement).	Notify direct support maintenance.

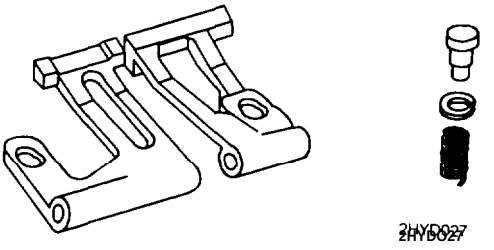

	3. Check cover assembly for defective cover latch.	If repair is necessary, notify direct support maintenance.

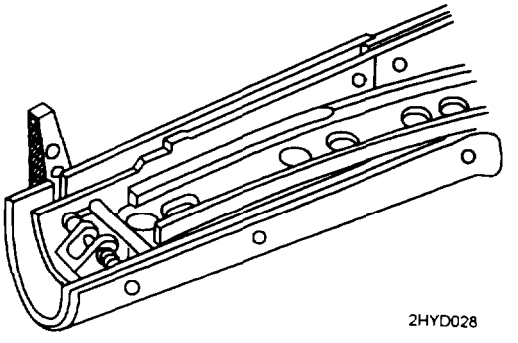

MALFUNCTION	TEST OR INSPECTION	CORRECTIVE ACTION
	4. Check feed cam assembly for defects.	Notify direct support maintenance.

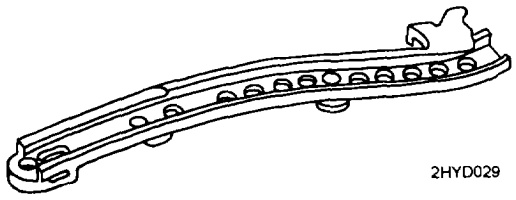

	5. Check operating rod assembly for broken helical compression spring.	Replace defective helical compression spring. (See TM 9-1005-224-l 0).

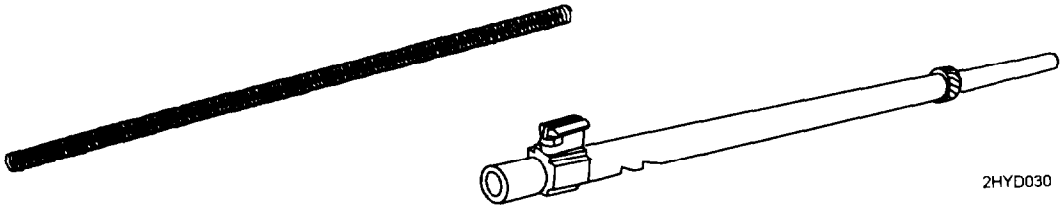

	6. Check receiver assembly for obstruction.	Remove obstruction, clean and lubricate in accordance with TM 9-1005-224-10.

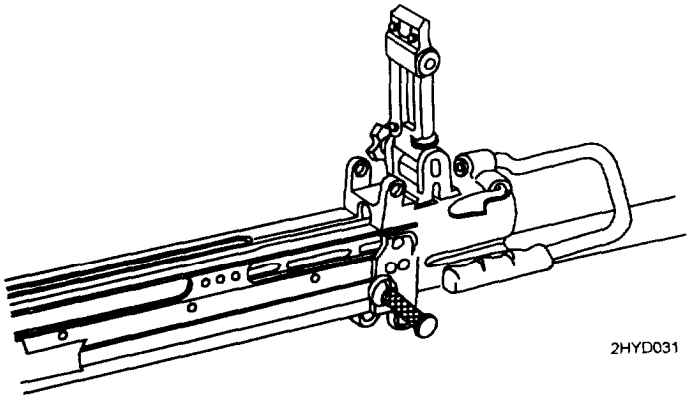

TROUBLESHOOTING PROCEDURES (cont) 000600

Table 1. TROUBLESHOOTING PROCEDURES (cont)

MALFUNCTION	TEST OR INSPECTION	CORRECTIVE ACTION
1. FAILURE TO FEED (cont)	7. Check cam actuator assembly for proper assembly and defects.	Replace cam actuator assembly (WP 0011 00).

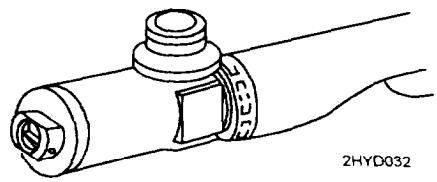

	8. Check for lubrication. 9. Check for blockage in gas cylinder gas port	Lubricate according to TM 9-1005-224-10. Clean gas port according to TM 9-1005-224-10.

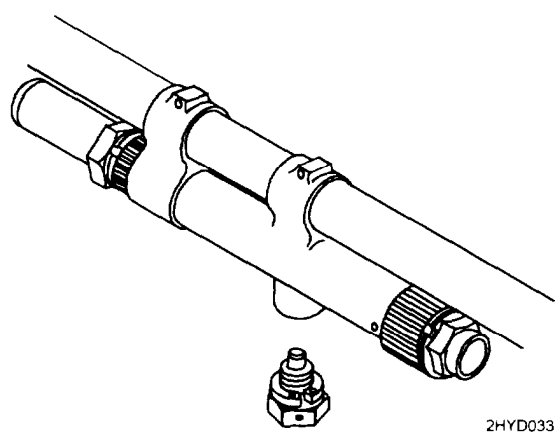

2. FAILURE TO CHAMBER	1. Check for ruptured cartridge case.	Remove according to procedures in TM 9-1005-224-10.

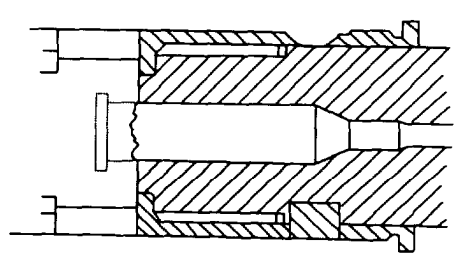

	2. Check chamber for damaged round.	Remove round and charge weapon.

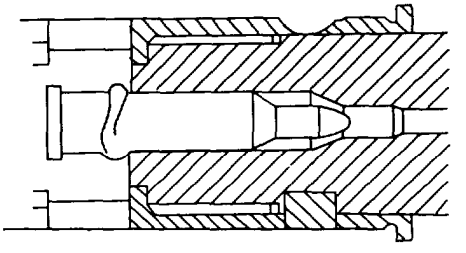

2HYD035

	3. Check chamber for dirt.	Clear barrel and clean and lubricate as required.

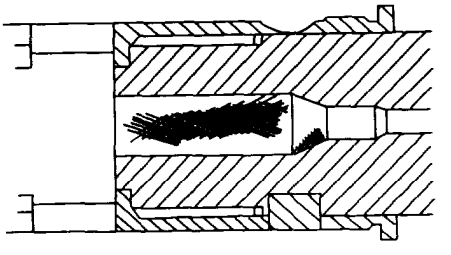

2HYD036

	4. Check gas cylinder for carbon buildup.	Remove carbon.

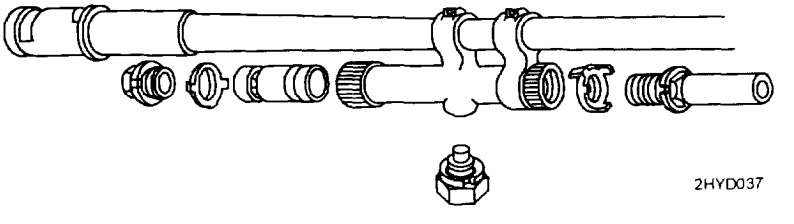

2HYD037

	5. Check receiver assembly for carbon buildup.	Remove carbon

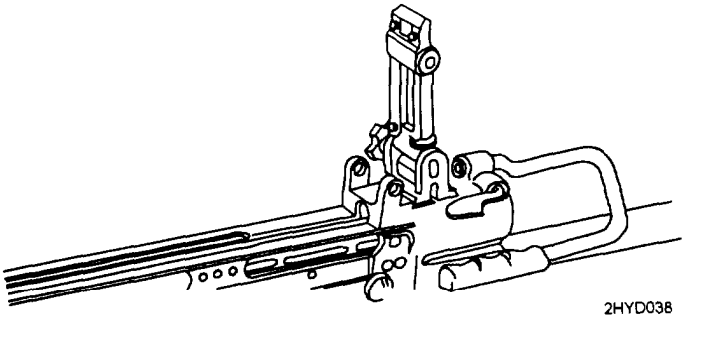

2HYD038

Table 1. TROUBLESHOOTING PROCEDURES (cont)

MALFUNCTION	TEST OR INSPECTION	CORRECTIVE ACTION
3. FAILURE TO LOCK	1. Check for broken or short helical compression spring (23 1/4 inches minimum).	Replace helical compression spring (see TM 9-1005-224-10).

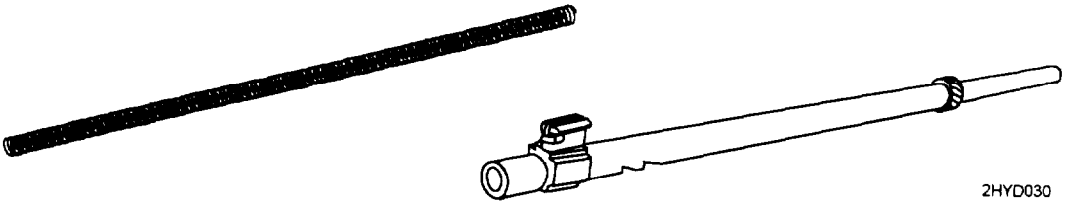

	2. Check chamber, receiver extension, and receiver assembly for foreign matter.	Clean and lubricate in accordance with TM 9-1005-224-10.

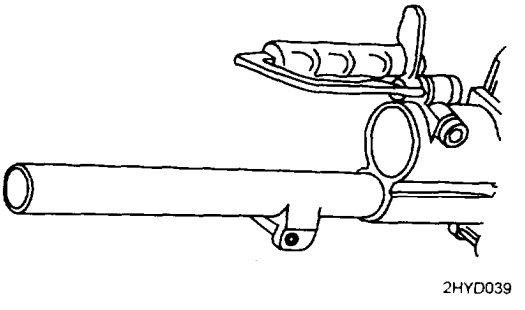

	3. Check barrel socket to make sure there is no burr, mutilation, and/or chipping.	Notify direct support maintenance.

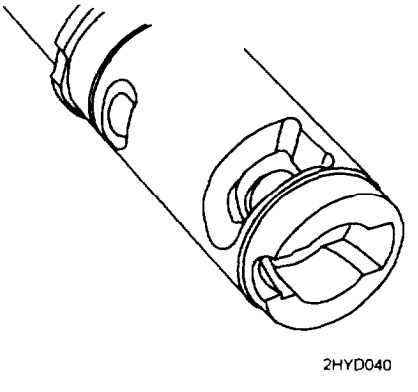

4. FAILURE TO FIRE	1. Check breech bolt assembly for broken firing pin or broken helical compression spring.	Replace firing pin or helical compression spring (WP 0011 00).

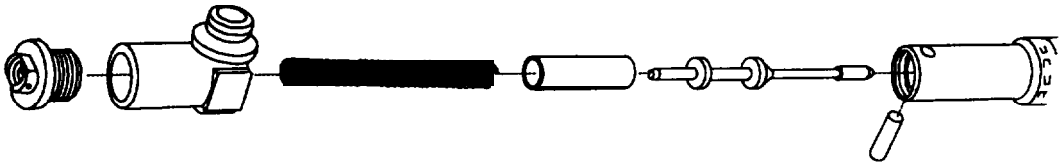

2HYD041

	2. Check trigger assembly for defects (M60 only). Replace trigger (WP 0013 00).	

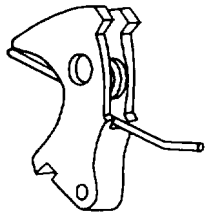

2HYD042

	3. Check that grip and trigger assembly (M60D only) is property connected and secured to the sear and safety housing assembly by inspecting the sear assembly activator, sear link nut, and the sear assembly link and spring.	Connect and secure components (WP 0014 00).

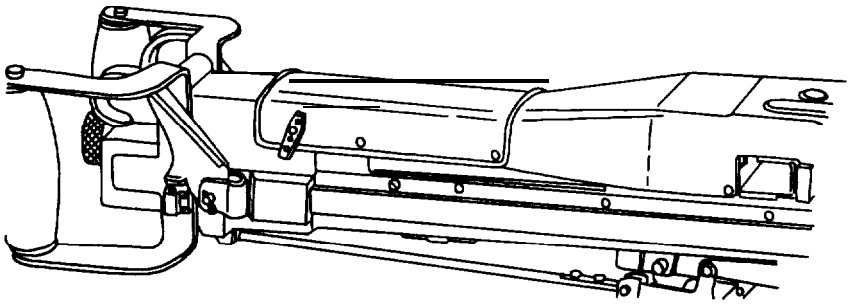

2HYD043

	4. Check sear assembly link and spring for adjustment.	Adjust sear assembly link and spring (WP 0008 00).

Table 1. TROUBLESHOOTING PROCEDURES (cont)

MALFUNCTION	TEST OR INSPECTION	CORRECTIVE ACTION
4. FAILURE TO FIRE (cont)	5. Check for broken or defective sear plunger and/or helical compression spring.	Replace sear plunger and/or helical compression spring. (see TM 9-1005-224-10).

2HYD044

	6. Check to make sure breech bolt assembly goes into lock position.	See FAILURE TO LOCK for correction.

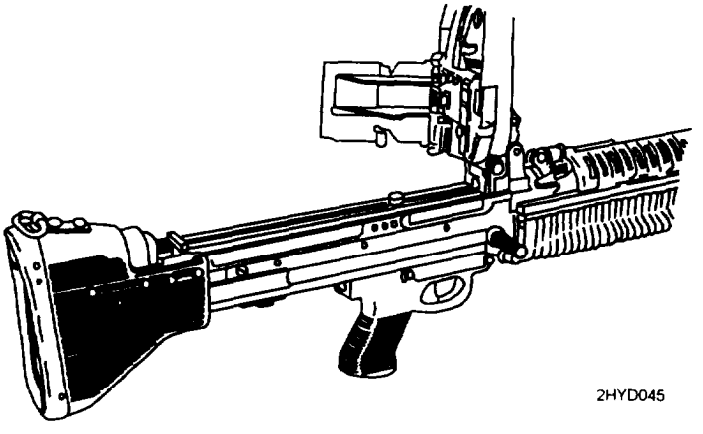

2HYD045

5. FAILURE TO UNLOCK	Check breech bolt assembly for a broken firing pin.	Replace firing pin (WP 0011 00).

2HYD046

6. FAILURE TO EXTRACT	1. Check for chipped or broken cartridge extractor.	Replace cartridge extractor (WP 0011 00).
	2. Check for broken extractor helical compression spring.	Replace extractor helical compression spring (WP 0011 00).
	3. Check for defective extractor plunger.	Replace extractor plunger (WP 0011 00).

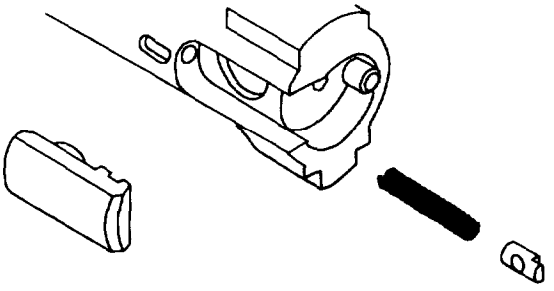

2HYD047

	4. Check gas cylinder system to see if the gas piston is installed backwards.	Replace or install correctly.
	5. Check operating rod assembly, operating rod tube of receiver assembly, and gas cylinder system for carbon. Carbon on these components can cause short recoil.	Clean and lubricate operating rod and receiver assemblies. Clean gas cylinder system only if necessary.

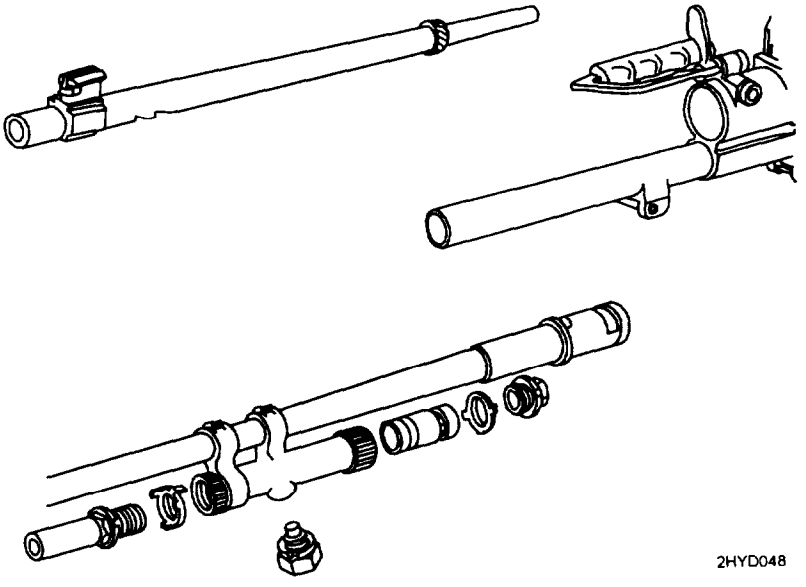

2HYD048

Table 1. TROUBLESHOOTING PROCEDURES (cont)

MALFUNCTION	TEST OR INSPECTION	
6. FAILURE TO EXTRACT TO (CONT)	6. Check for dirty or pitted chamber.	Clean and lubricate in accordance with TM 9-1005-224-10

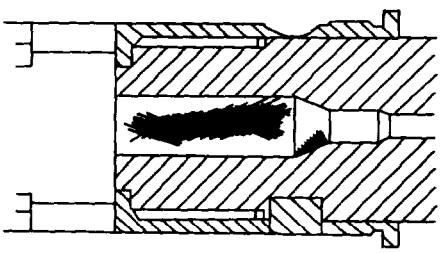

2HYD036

7. FAILURE TO EJECT	1. Check for frozen or damaged cartridge ejector or weak helical compression spring.	Replace cartridge ejector or helical compression spring (WP 0011 00).

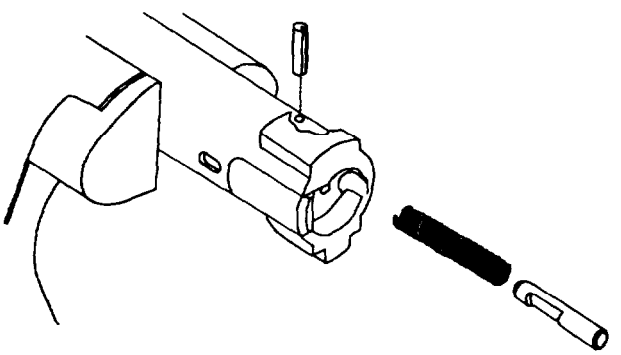

2HYD049

	2. Check operating rod assembly, operating rod tube of receiver assembly, and gas cylinder system for carbon. Carbon on these components can cause short recoil.	Clean and lubricate operating rod and receiver assemblies. Clean gas cylinder system only if necessary.

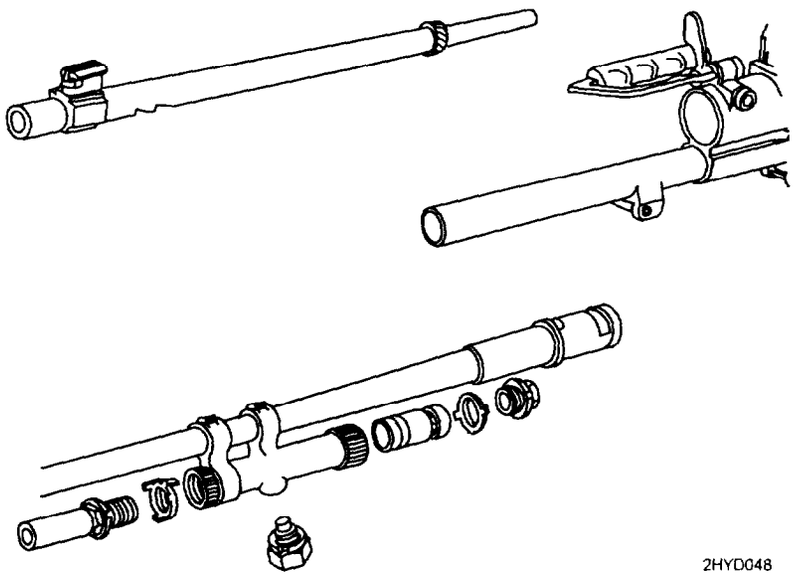

8. FAILURE TO COCK	1. Check to see if sear is broken or worn.	Replace sear (WP 0013 00, M60) (WP 0014 00, M60D).

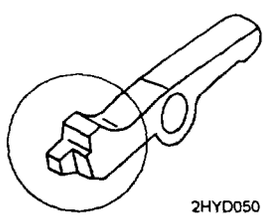

	2. Check operating rod sear notch (P) for damage or rounding.	Notify direct support maintenance.

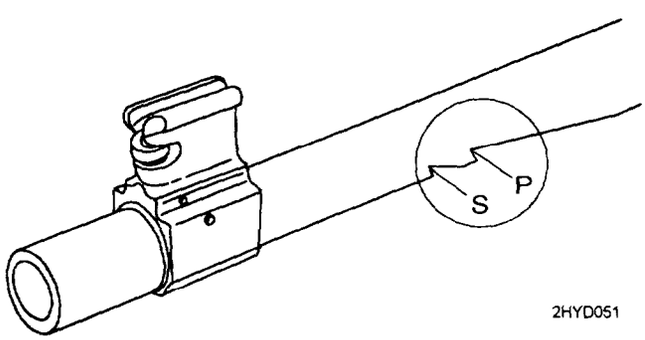

Table 1. TROUBLESHOOTING PROCEDURES (cont)

MALFUNCTION	TEST OR INSPECTION	CORRECTIVE ACTION
8. FAILURE TO COCK (cont)	3. Check sear plunger and helical compression spring for breaks or defects.	Replace sear plunger and helical compression spring (WP 0013 00, M60)(WP 0014 00, M60D).

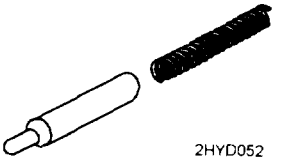

	4. Check operating rod assembly, operating rod tube of receiver assembly, and gas cylinder system for carbon. Carbon on these components can cause a short recoil.	Clean and lubricate operating rod and receiver assemblies. Clean gas cylinder system only if necessary.

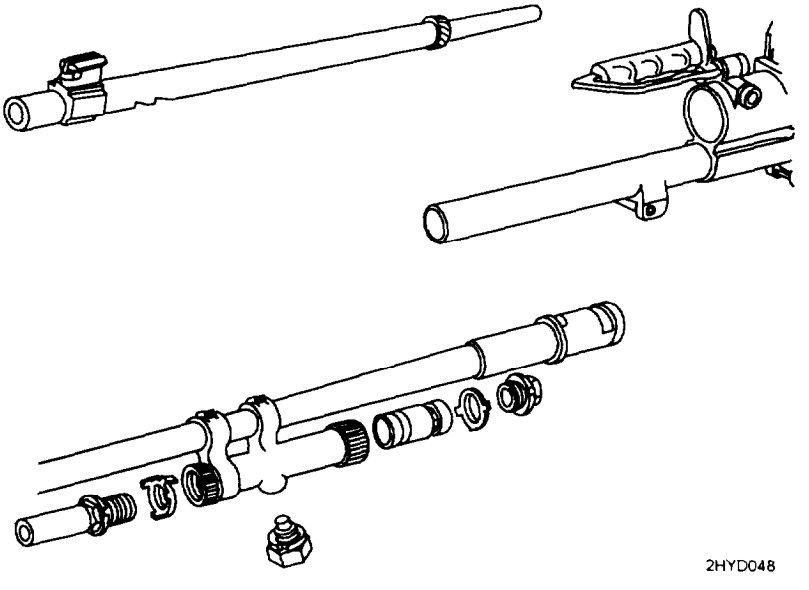

9. SLUGGISH OPERATION	**1.** Check for loose machine-threaded plug.	Tighten machine-threaded plug (WP 0015 00).

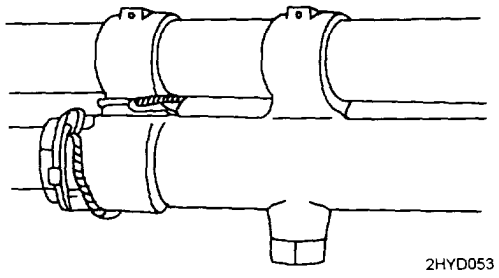

	2. Check gas cylinder and gas port for carbon buildup.	Clean gas cylinder and gas port (WP 0015 00).

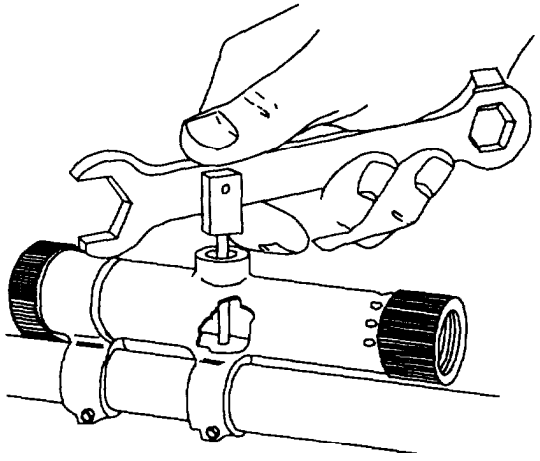

	3. Check machine gun for lubrication.	See TM 9-1005-224-10.

Table 1. TROUBLESHOOTING PROCEDURES (cont)

MALFUNCTION	TEST OR INSPECTION	CORRECTIVE ACTION
10. UNCONTROL-LED FIRE (runaway gun)		

WARNING

A runaway gun will not be reloaded until all corrective actions have been completed.

	1. Check for broken or defective sear.	Replace sear (WP 0013 00, M60) (WP 0014 00, M60D).

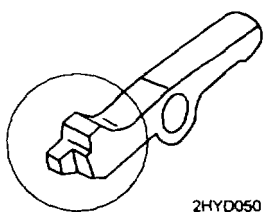

	2. Make sure sear is not installed backwards.	Reinstall properly (WP 0013 00, M60) (WP 0014 00, M60D).
	3. Check sear plunger and spring for damage.	Replace sear plunger or spring as necessary.
	4. Check trigger for proper installation and binding	Reinstall property and lubricate.

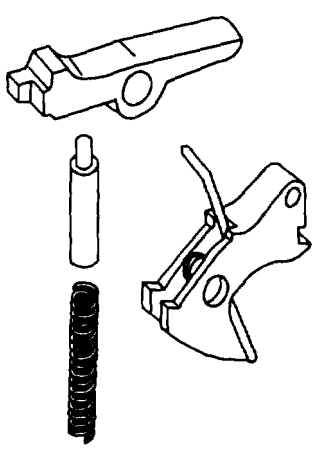

	5. Check operating rod for damaged sear notch (P).	Notify direct support maintenance.

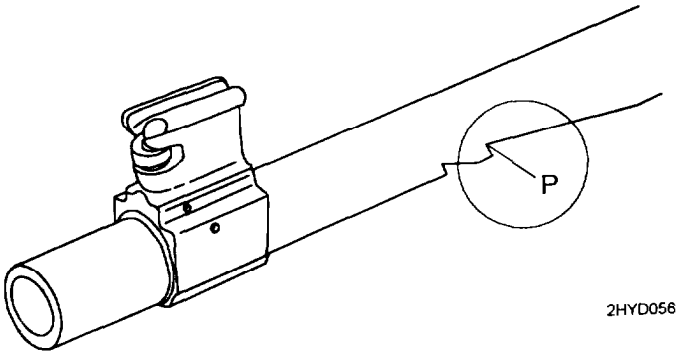

	6. Check gas cylinder and gas port for carbon buildup.	Clean gas cylinder and gas port (WP 0015 00).

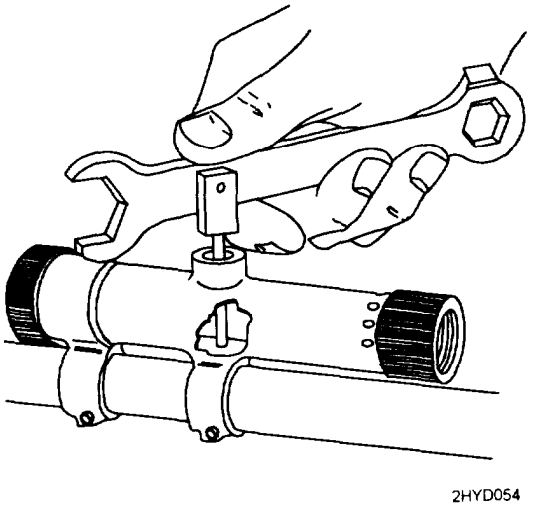

Table 1. TROUBLESHOOTING PROCEDURES (cont)

	TEST OR INSPECTION	CORRECTIVE ACTION
10. UNCONTROL-LED Fire (runaway gum)	7. Check sear assembly link and spring for adjustments.	Adjust sear assembly link and spring (WP 0008 00).

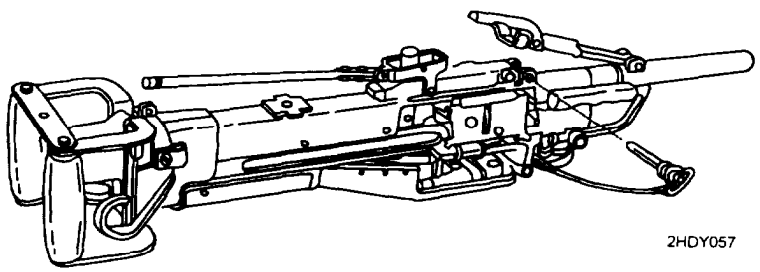

MAINTENANCE OF M60 MACHINE GUN 0007 00

THIS TASK COVERS:
Inspection, Repair, Disassembly, Reassembly

INITIAL SETUP

Maintenance Level
Unit

Applicable Configuration
M60 Machine Gun

Tools and Special Tools
Small Arms Repairman Tool Kit
(SC 5180-95-CL-A07)

Troubleshooting References
Refer to WP 0006 00

Materials/Parts
Cloth, abrasive (crocus) (item 5, WP 0082 00)
Dry cleaning solvent (SD) (item 7, WP 0082 00)
Gloves, rubber (item 8, WP 0082 00)
Lubricant (as required)
Lubricant, solid film (item 10, WP 0082 00)
Rag, wiping (item 13, WP 0082 00)
Swab, small arms (item 14, WP 0082 00)

References
TM 9-1005-224-10

General Safety Instructions

WARNING

Make sure weapon is cleared and there are no obstructions in the barrel or chamber. Be careful when removing and installing spring-loaded components. Carelessness could cause injury.

Dry cleaning solvent (SD) is flammable. Do not clean parts near an open flame or in a smoking area. Dry cleaning solvent evaporates quickly and has a drying effect on the skin. When used without protective gloves, solvent may cause irritation to or cracking of the skin

Using paint thinner, gasoline, kerosene, benzene (benzol), water, steam, or air for cleaning the weapon is prohibited. Use only authorized cleaning materials.

CAUTION

Care MUST be exercised to avoid getting cleaners or lubricants in the gas cylinder when cleaning the barrel. Position the gas cylinder above the barrel during cleaning. The gas cylinder components will be removed and cleaned only when inspection reveals that the piston will no longer move within the cylinder under its own weight when the barrel is tilted end to end. If gas cylinder components are cleaned, wipe interior of cylinder and piston dry before reassembly. After reassembly, check for movement of gas piston by manually tilting the barrel assembly. Rewire gas cylinder vent plug and machine-thread plug.

NOTE

If the M60/M60D machine gun has to go to direct support maintenance for any repair, both barrel assemblies must be turned in with the weapon.

No stamping or etching is authorized. Identify barrels/receiver using tags.

Burrs or raised surfaces may be removed or smoothed using a fine grit sharpening stone. DO NOT change the dimensions of any component by stoning. Components with cracks, chips, dents, or gouges shall be reported to direct support maintenance for repair or replacement.

Cracks, chips, dents, or gouges on breech bolt locking surfaces can damage the barrel socket. Damage to barrel socket locking surfaces can damage the breech bolt. Notify direct support maintenance for replacement or repair if either condition exists.

INSPECTION

WARNING

Before starting an inspection, be sure to clear the weapon. Do not actuate the trigger before clearing the weapon. Inspect the chamber to make sure it is empty and free of obstructions. Check to see there are no obstructions in the barrel and no ammunition is in position to be chambered.

CAUTION

Do not allow breech bolt to slam closed when the weapon is empty, as this will cause damage to locking surfaces on the barrel socket and breech bolt.

1. Inspect general condition of machine gun (1).

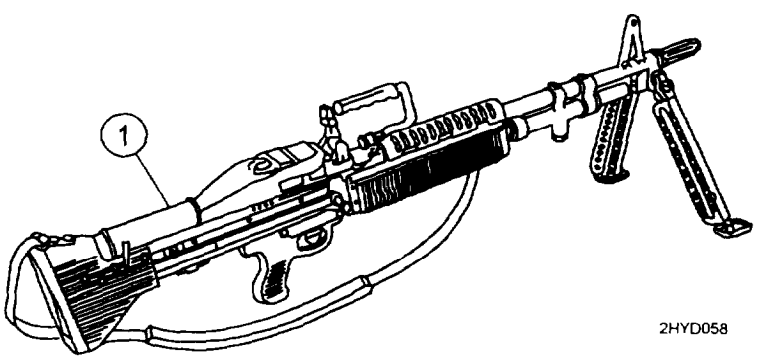

2. Inspect for missing, loose, or damaged parts.

3. Check for proper cleaning and lubrication (TM 9-1005-224-10).

4. Make sure latches and controls work properly.

5. Check to make sure vent plug key washer is secured by safety wire.

DISASSEMBLY

1. Field-strip the weapon (refer to TM 9-1005-224-10).

NOTE

The following procedures are only performed when a specific repair is required.

2. Remove spring pin (1), barrel lock ring (2) and helical compression spring (3) using a 3/32-inch drive pin punch and hammer. Push out barrel lock (4).

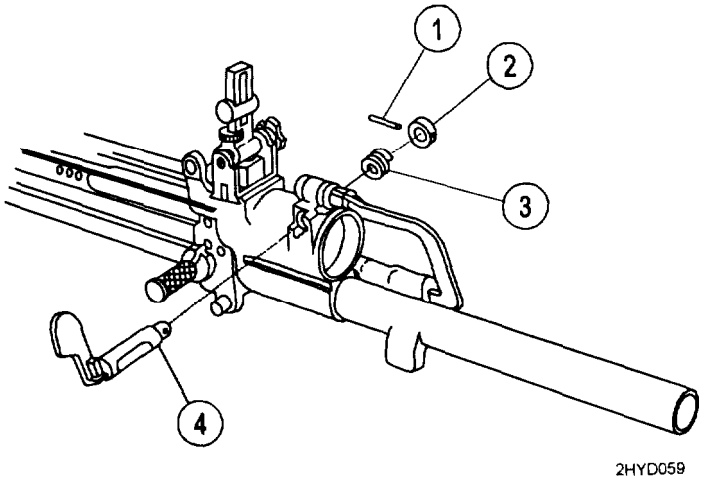

3. Remove spring pin (5) and barrel lock ring (6) using a 3132-inch drive pin punch and hammer. Carefully slide out carrying handle assembly (7), while catching detent plunger (8) and helical compression spring (9). Remove carrying handle assembly (7).

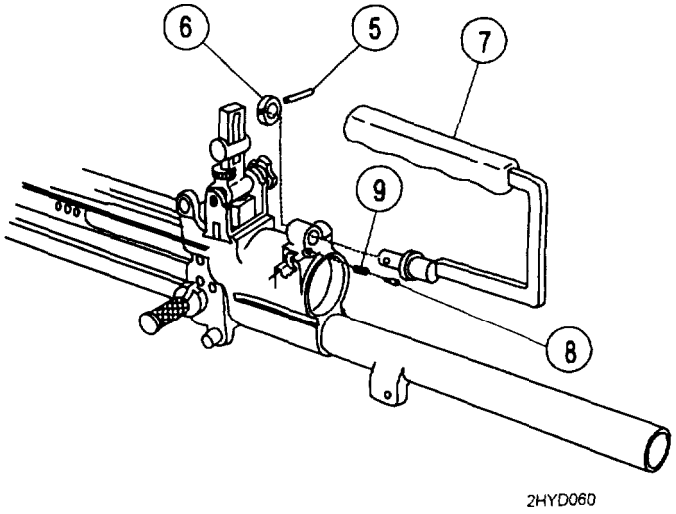

DISASSEMBLY (cont)

4. Remove assembled washer screw (10) and cocking handle guide (11) using a flat tip screwdriver.

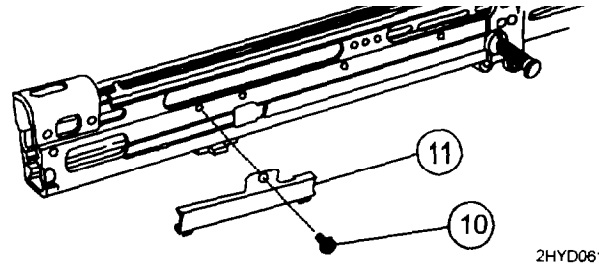

REPAIR

WARNING

Dry cleaning solvent (SD) is flammable. Do not clean parts near an open flame or in a smoking area. Dry cleaning solvent evaporates quickly and has a drying effect on the skin. When used without protective gloves, solvent may cause irritation to or cracking of the skin.

Using paint thinner, gasoline, kerosene, benzene (benzol), water, steam, or air for cleaning the weapon is prohibited. Use only authorized cleaning materials.

CAUTION

The buffer assembly will not be submerged in solvents or other cleaning fluids. Use CLP/RBC on cloth, wipe exterior surfaces to prevent corrosion.

1. Repair by replacing all authorized parts.

2. Clean rusted or shiny metal surfaces with crocus cloth. Wash thoroughly with dry cleaning solvent (SD).

CAUTION

If solid film lubricant comes in contact with any moving or internal part, clean part with dry cleaning solvent.

3. Following manufacturers instructions for use, apply solid film lubricant to all external surfaces showing wear and allow weapon to dry 12 hours before being used.

4. Once repair/replacement is completed, lubricate according to TM 9-1005-224-10 using the cleaning and lubricating materials in WP 0082 00.

5. Repair of subassemblies is covered in the following work packages:

	Work Package
Barrel and bipod assembly	WP 0015 00
Breech bolt assembly	WP 0011 00
Cover assembly	WPOO1600
Forearm assembly (M60 only)	WP 0019 00
Operating rod assembly	WPOO12 00
Shoulder gun stock assembly ,M60 only)	WP 0009 00
Tray and hanger assembly and cartridge feed tray assembly (M60 only)	WP 0017 00
Trigger mechanism grip assembly (M60 only)	WP 0013 00

REASSEMBLY

1. To reassemble weapon refer to TM 9-1005-224-10.

NOTE

The following procedures are only performed when a specific repair is required.

2. Place cocking handle guide (1) against receiver assembly (2) and engage tabs into receiver slots and position over end of cocking handle assembly (3).

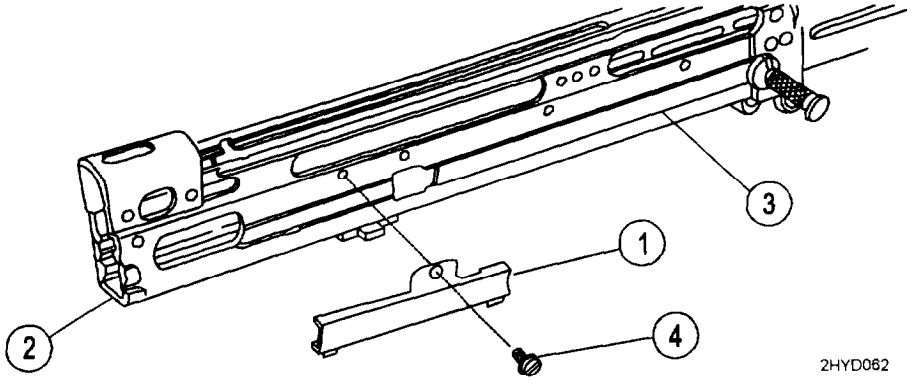

3. Install assembled washer screw (4) and tighten using flat tip screwdriver.

4. Install helical compression spring (5), detent plunger (6), and carrying handle assembly (7) on front end of receiver assembly (2).

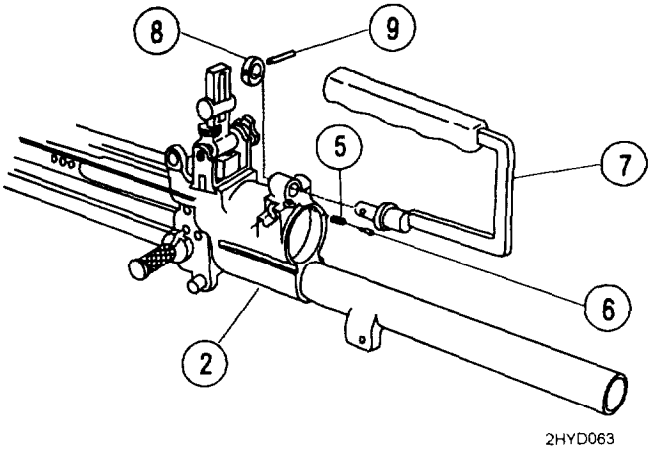

REASSEMBLY (cont)

5. Install barrel lock ring (8) and secure with spring pin (9) using a 1/8-inch drive pin punch and hammer.

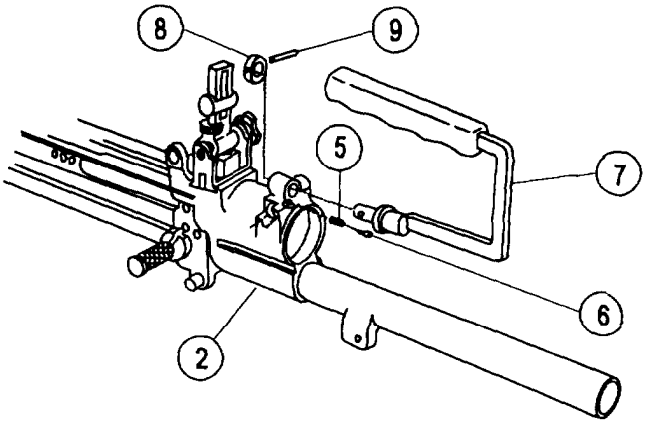

6. Install barrel lock (10) from the right side of receiver assembly (2).

7. Install helical compression spring (11) and barrel lock ring (12).

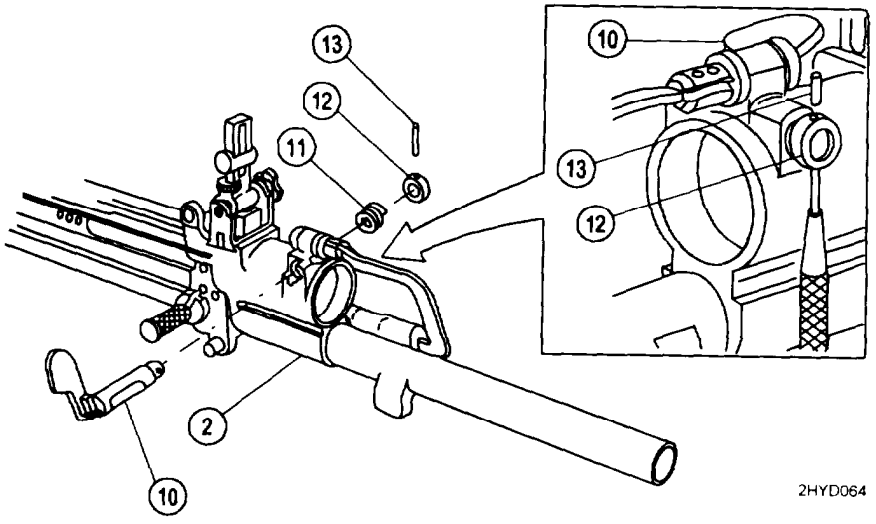

8. Apply pressure to barrel lock (10) and barrel lock ring (12), and slip a 3/32-inch drive pin punch into pin hole of barrel lock ring to align.

9. Remove drive pin punch by driving spring pin (13) into pin hole using hammer.

END OF TASK

MAINTENANCE OF M60D MACHINE GUN 0008 00

THIS TASK COVERS:
Inspection, Disassembly, Repair, Reassembly

INITIAL SETUP

Maintenance Level
Unit

Applicable Configuration
M60D Machine Gun

Tools and Special Tools
Small Arms Repairman Tool Kit
(SC 5180-95-CL-A07)

Troubleshooting References
Refer to WP 0006 00

Materials/Pats
Brush, cleaning, tool and parts
(item 1, WP 0082 00)
Cloth, abrasive (crocus) (item 5, WP 0082 00)
Dry cleaningsolvent (SD) (item 7, WP 0082 00)
Gloves, rubber (item 8, app D)
Lubricant (as required)
Lubricant, solidfilm(item 10, WP 0082 00)
Rag, wiping **(item 13,** WP **0082 00)**

References
TM 9-1005-224-10

General Safety Instructions

WARNING

Make sure weapon is cleared and there are no obstructions in the barrel or chamber. Be careful when removing and installing spring-loaded components. Carelessness could cause injury

INSPECTION

WARNING

Before starting an inspection, be sure to clear the weapon. Do not actuate the trigger before clearing the weapon. Inspect the chamber to make sure it is empty and free of obstructions. Check to see there are no obstructions in the barrel and no ammunition is in position to be chambered.

CAUTION

Do not allow breech bolt to slam closed when the weapon is empty, as this will cause damage to locking surfaces on the barrel socket and breech bolt.

Burrs or raised surfaces may be removed or smoothed using a fine grit sharpening stone. DO NOT change the dimensions of any component by stoning. Components with cracks, chips, dents, or gouges shall be reported to direct support maintenance for repair or replacement.

1. Inspect general condition of machine gun.
2. Inspect for missing, loose, or damaged parts.
3. Check for proper cleaning and lubrication (TM 9-1005-224-10).
4. Make sure latches and controls operate properly.
5. Check to make sure gas cylinder machine thread plug, gas extension key washer, sear link nut, and sear assembly link and spring are secured.

MAINTENANCE OF M60D MACHINE GUN 0008 00

DISASSEMBLY

1. To field-strip the weapon refer to TN91 005-224-10.

NOTE

The following procedures are only performed when a specific repair is required.

2. For barrel lock, carrying handle assembly, and cocking handle guide **maintenance, refer to M60** Machine Gun maintenance (WP 0007 00).

WARNING

Check chamber area to make sure there is no ammunition **present. If ammunition** is present, remove it. Refer to TM 9-1005-224-10.

3. **Disengage quick** release pin (1). Using a 3/16-inch drive pin punch and hammer, drive out **spring** pin (2) and remove guradapter (3).

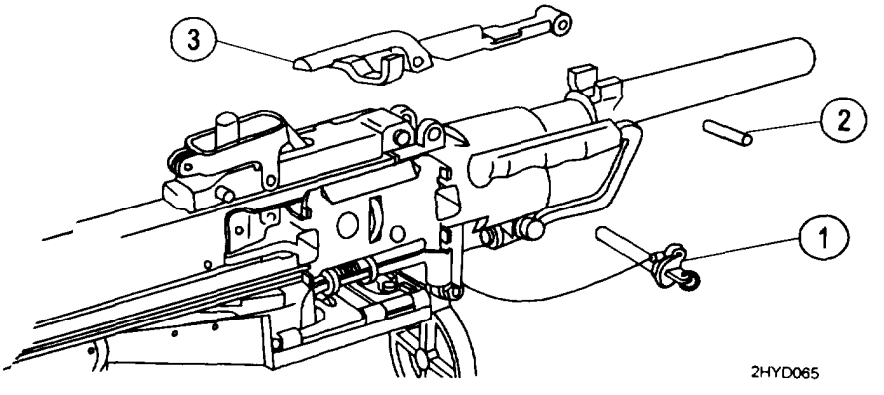

NOTE

Wire rope assembly must be replaced whenever quick release pin is replaced.

4. Using diagonal pliers, cut both loops in end of wire rope assembly (4), remove quick release pin (1), and discard wire rope assembly (4).

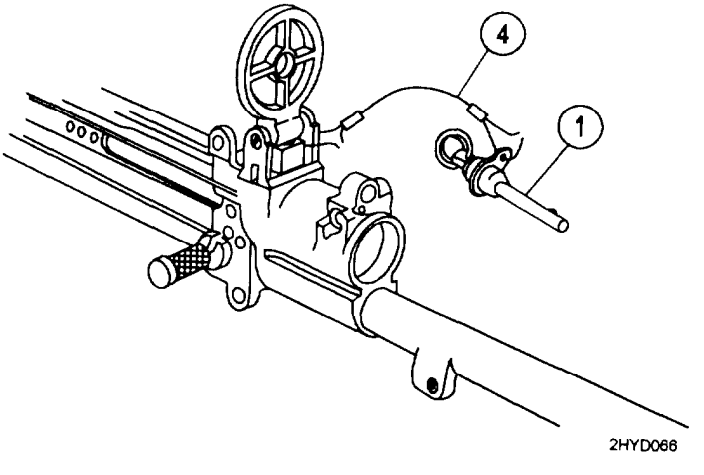

REPAIR

WARNING

Dry cleaning solvent (SD) is flammable. Do not clean parts near an open flame or in a smoking area. Dry cleaning solvent evaporates quickly and has a drying effect on the skin. When used without protective gloves, solvent may cause irritation to or cracking of the skin.

Using paint thinners, gasoline, kerosene, benzene (benzol), water, steam, or air for cleaning the weapon is prohibited. Use only authorized cleaning materials.

CAUTION

The buffer assembly will not be submerged in solvents or other cleaning fluids. Using lubricant on a cloth, wipe exterior surfaces to prevent corrosion.

Care MUST be exercised to avoid getting cleaner, lubricant and preservative (CLP/RBC) in the gas cylinder when cleaning the barrel. Position the gas cylinder above the barrel during cleaning. The gas cylinder components will be removed and cleaned only when inspection reveals that the piston will no longer move within the cylinder under its own weight when the barrel is tilted end to end. If gas cylinder components are cleaned, wipe interior of cylinder and piston dry before reassembly. After reassembly, check for movement of gas piston by manually tilting the barrel assembly. Rewire gas cylinder vent plug.

NOTE

Do not dilute CLP. Shake well before using.

1. Repair by replacing all authorized parts.

2. Once repair/replacement is completed, clean and lubricate in accordance with TM 9-1005-224-10.

3. Repair of subassemblies is covered in the following work packages:

	Work package
Barrel and bipod assembly	WP 0015 00
Breech bolt assembly	WP 0011 00
Cartridge feed tray assembly (M60D only)	WP 0018 00
Cover assembly	WP 0016 00
Grip and trigger assembly (M60D only)	WP 0010 00
Operating rod assembly	WP 0012 00
Sear and safety housing assembly (M60D only)	WP 0014 00

4. Clean rusted or shiny metal surfaces with crocus cloth. Wash thoroughly with dry cleaning solvent.

CAUTION

If solid film lubricant comes in contact with any moving or internal part, clean part with dry cleaning solvent.

5. Following manufacturer's instructions for use, apply solid film lubricant to all external surfaces showing wear and allow weapon to dry 12 hours before being used.

REPAIR (cont)

6. On component parts which have a hard carbon residue, it may be necessary to use CLP/RBC to begin repair. Depending on the amount of carbon residue, coat parts 2 to 16 hours, brush, wipe dry with wiping rag, and lubricate as necessary.

NOTE

The following procedures are performed only when a specific repair is required.

7. Remove cotter pin (1) and headed grooved pin (2).

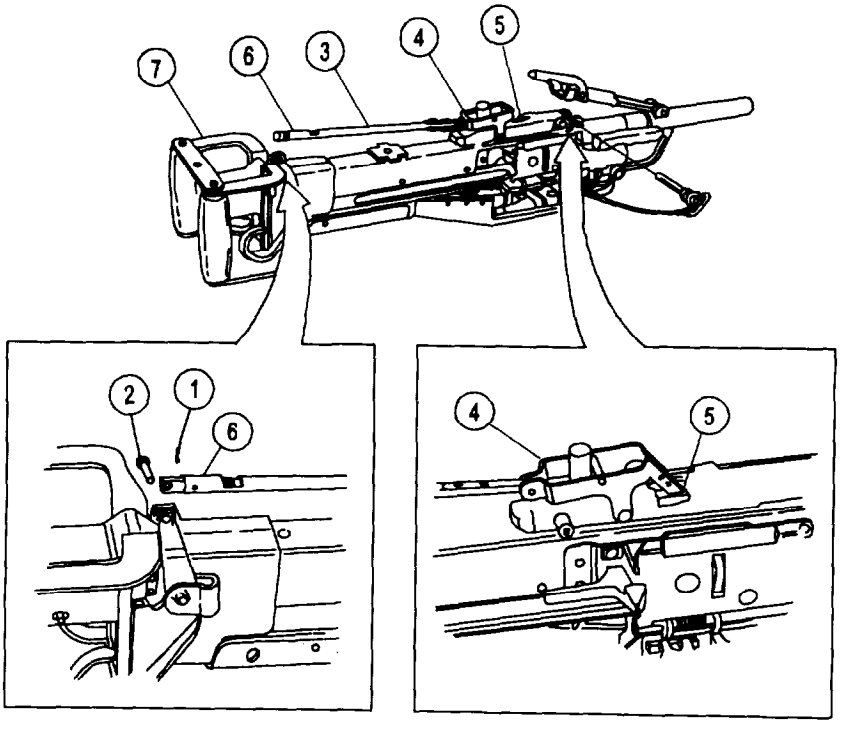

2HYD067

8. Grasp sear assembly link and spring (3) and push forward until sear assembly activator (4) just touches sear (5). Hold sear assembly link and spring (3) while you position sear link nut (6) to fit in slot of grip and trigger assembly (7).

10. With sear link nut (6) in slot of grip and trigger assembly (7), sight through the holes to determine the amount of adjustment required to align holes. Pull sear link nut (6) out of slot and adjust by turning sear link nut (6), repeating procedures until holes align.

11. Lift sear link nut (6) out of slot and rotate one-half turn clockwise. Push sear assembly link and spring (3) rearward and insert headed grooved pin (2). There should be a slight gap between sear (5) and sear assembly activator (4). Reinstall cotter pin (1). Lock sear link nut (6) and sear assembly link and spring (3) with safety wire.

REASSEMBLY

1. To reassemble the weapon refer to TM 9-1005-224-10.

NOTE

The following procedures are only performed when a specific repair is required.

2. For maintenance on cocking handle guide, carrying handle assembly, and barrel lock, refer to M60 Machine Gun maintenance procedures (WP 0007 00).

3. With new wire rope assembly (1) and new swaging sleeves (2), securely connect quick release pin (3) using the following procedures:

   a. Insert one end of wire rope assembly (1) through swaging sleeve (2) and through the opening in base of rear sight (4). Loop wire assembly (1) around the front of rear sight (4) base and insert end back through swaging sleeve (2). Using parallel pliers, crimp swaging sleeve (2) to wire rope assembly (1).

   b. Insert other end of wire rope assembly (1) through another swaging sleeve (2) and through ring of quick release pin (3). Loop wire rope assembly (1) around quick release pin (3), and insert the end back through swaging sleeve (2). Using parallel pliers, crimp swaging sleeve (2) to wire rope assembly (1).

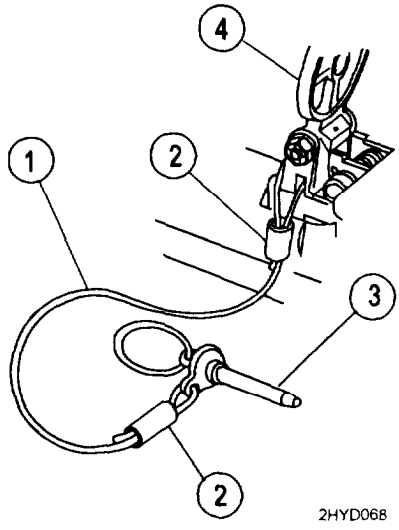

REASSEMBLY (cont)

4. Place gun adapter (5) on bottom of receiver assembly (6), align holes, and install spring pin (7). Using hammer, drive in spring pin (7) until flush.

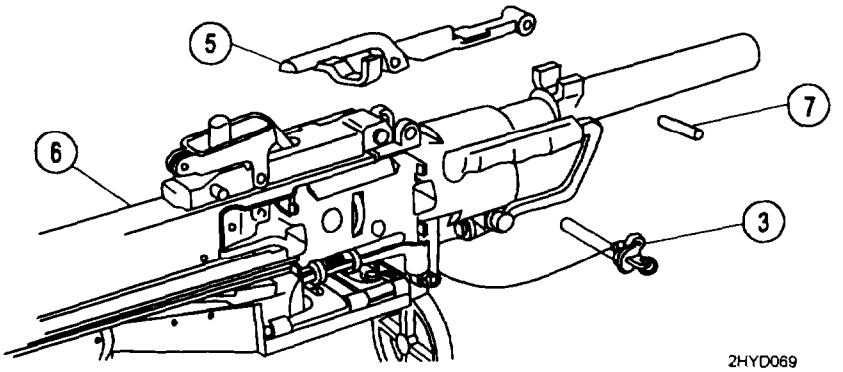

5. Insert quick release pin (3).

END OF TASK

MAINTENANCE OF SHOULDER GUN STOCK ASSEMBLY (M60 ONLY) 0009 00

THIS TASK COVERS:
Inspection, Disassembly, Repair, Reassembly

INITIAL SETUP

Maintenance Level
Unit

Applicable Configuration
M60 Machine Gun

Tools and Special Tools
Small Arms Repairman Tool Kit
(SC 5180-95-CL-A07)

INSPECTION/DISASSEMBLY/REPAIR/ASSEMBLY

1. Inspect to see if sling swivel is loose, missing, bent, broken, or binding.
2. Remove parts in order shown on illustration.
3. Repair by replacing all authorized parts.
4. Reassemble parts (3 through 1) as shown on illustration.

LEGEND:
1. Assembled washer screws
2. Sling swivel
3. Backup plate spacer

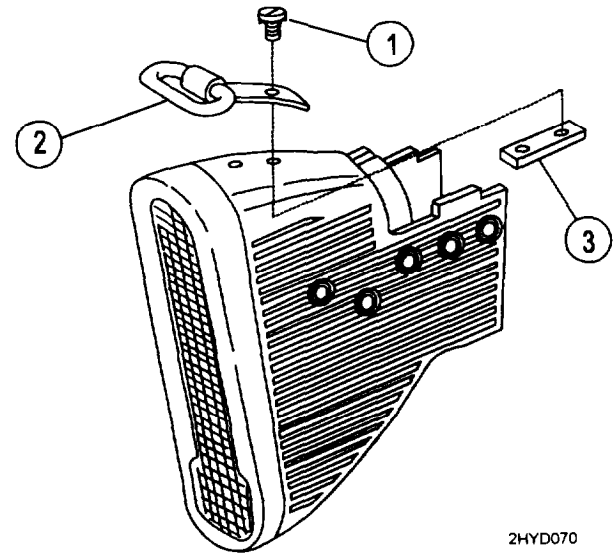

END OF TASK

MAINTENANCE OF GRIP AND TRIGGER ASSEMBLY (M60D ONLY) 0010 00

THIS TASK COVERS:
Inspection, Disassembly, Repair, Reassembly

INITIAL SETUP

Maintenance Level
Unit

Applicable Configuration
M60D Machine Gun

Tools and Special Tools
Small Arms Repairman Tool Kit
(SC 5180-95-CL-A07)

General Safety Instructions

Materials/Parts
Cloth, abrasive (crocus) (item 4, WP 0082 00)
Dry cleaning solvent (SD) (item 7, WP 0082 00)
Gloves, rubber (item 8, WP 0082 00)
Lubricant, solid film (item 10, WP 0082 00)

WARNING
Be careful when removing and installing spring-loaded components. Carelessness could cause injury.

INSPECTION

1. Inspect general condition of grip and trigger assembly.
2. Inspect for missing, loose, or damaged parts.
3. Inspect for no binding of parts.

DISASSEMBLY

1. Remove retaining ring (1) and slide out knob and pin assembly (2).

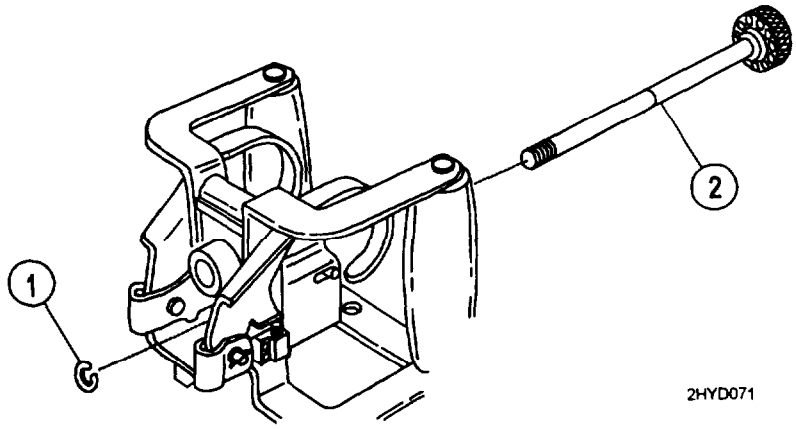

MAINTENANCE OF GRIP AND TRIGGER ASSEMBLY (M60D ONLY) 0010 00

2. Hold down headless shoulder pin (3) and helical compression spring (4) while removing spring pin (5).

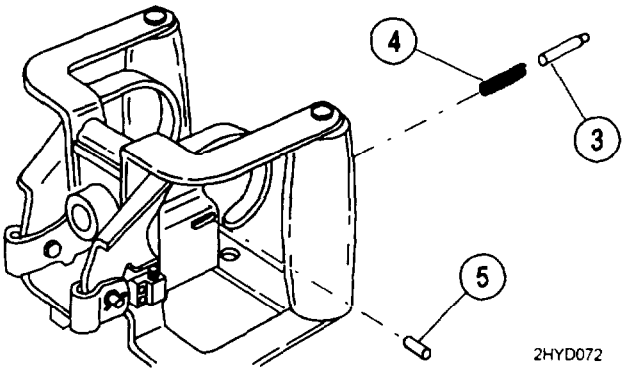

3. Remove cotter pins (6) and push out headed grooved pins (7).

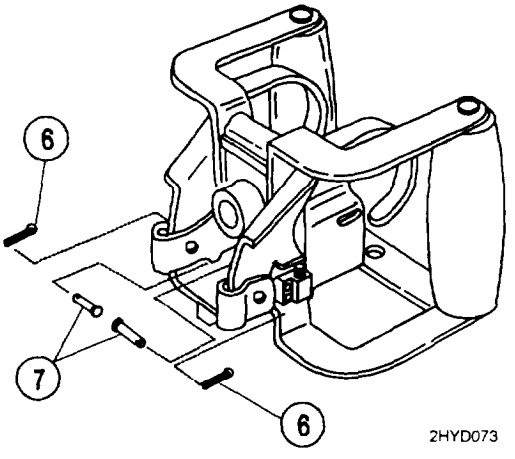

4. Raise up grip and trigger assembly (8) and remove helical compression springs (9).

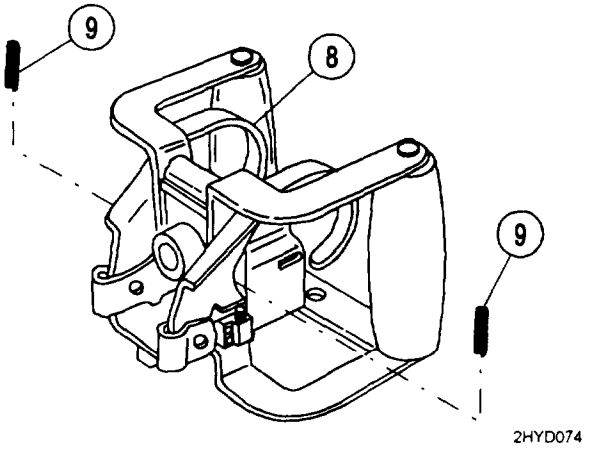

REPAIR

WARNING

Dry cleaning solvent (SD) is flammable. Do not clean parts near an open flame or in a smoking area. Dry cleaning solvent evaporates quickly and has a drying effect on the skin. When used without protective gloves, solvent may cause irritation to or cracking of the skin.

1. Repair by replacing authorized parts.

2. Clean rusted or shiny metal surfaces with crocus cloth. Wash thoroughly with dry cleaning solvent (SD).

CAUTION

If solid film lubricant comes in contact with any moving or internal part, clean part with dry cleaning solvent.

3. Following manufacturer's instructions for use, apply solid film lubricant to all external surfaces showing wear and allow weapon to dry 12 hours before being used.

4. Damage not repaired by minor replacement of parts will cause replacement of entire assembly.

REASSEMBLY

1. Raise up grip and trigger assembly (1) and insert helical compression springs (2) into trigger stop blocks (3).

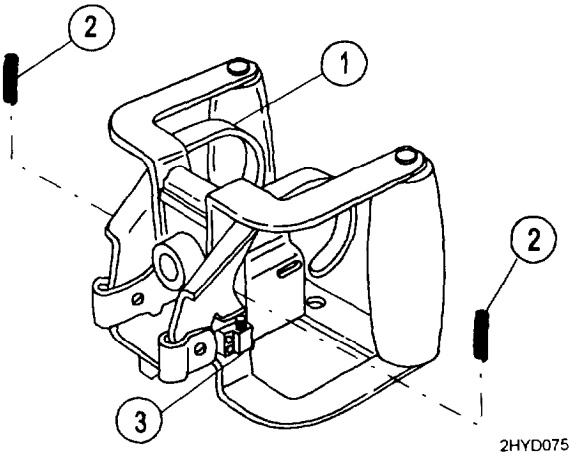

2. Align holes in grip and trigger assembly (1), install headed grooved pins (4), and secure with cotter pins (5).

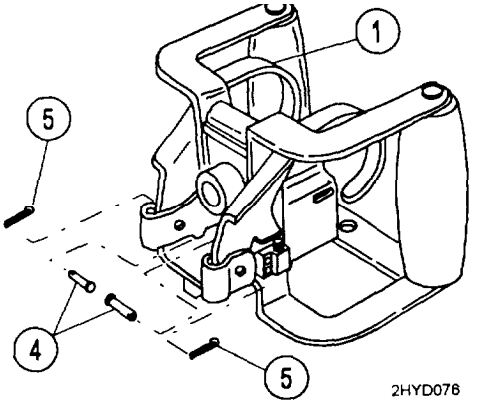

MAINTENANCE OF GRIP AND TRIGGER ASSEMBLY (M60D ONLY) 0010 00

REASSEMBLY (cont)

3. Place helical compression spring (6) and headless shoulder pin (7) in back plate (8), and align holes in headless shoulder pin (7) with slot (9) in back plate (8).

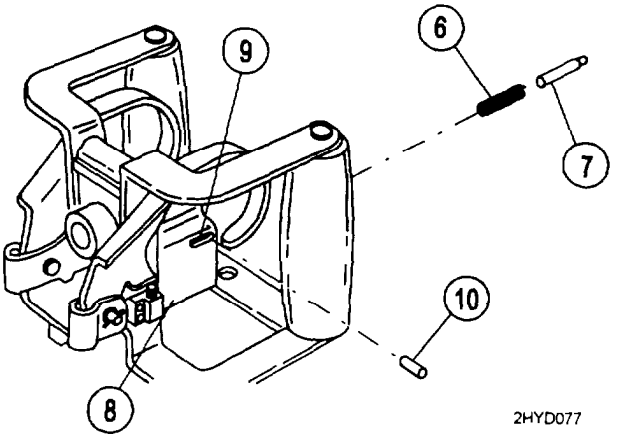

4. Press in on headless shoulder pin (7) and insert spring pin (10) through slot (9) and into hole of headless shoulder pin (7). Using a hammer, drive spring pin (10) into hole.

5. Install knob and pin assembly (11) through back plate (8) and secure with retaining ring (12).

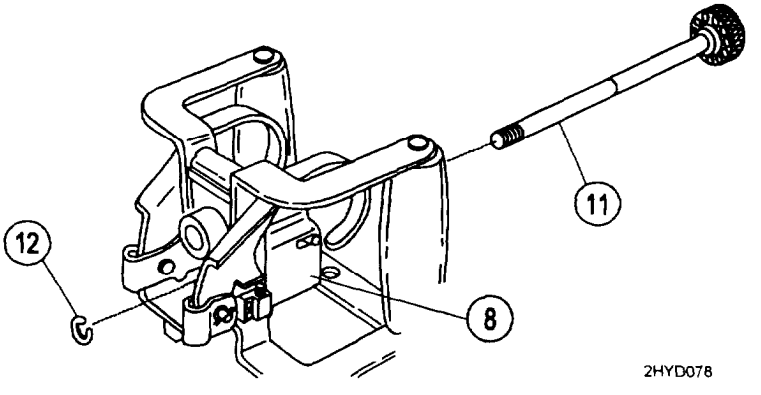

END OF TASK

MAINTENANCE OF BREECH BOLT ASSEMBLY 0011 00

THIS TASK COVERS:
Inspection, Disassembly, Repair, Reassembly

INITIAL SETUP

Maintenance Level
Unit

Applicable Configuration
M60/M60D Machine Guns

Tools and Special Tools
Small Arms Repairman Tool Kit
(SC 5180-95-CL-A07)

Materials/Parts
Lubricant (as required)

References
TM 9-1005-224-1 0

General Safety Instructions

WARNING

Be careful when removing and installing spring-loaded components. Carelessness could cause injury.

The weapon's breech bolt assembly will be used to check headspace. Do not intermix the breech bolt assembly or barrel and bipod assembly without checking headspace requirements.

CAUTION

Do not allow breech bolt to slam closed when the weapon is empty, as this will cause damage to the locking surfaces on the barrel socket and breech bolt.

NOTE

Headspace will be gaged annually, using appropriate gages, by direct support maintenance personnel. If space is faulty, a new breech bolt or test bolt gage is required to determine if the barrel or breech bolt is defective. For Army Reserve and Army National Guard, M60/M60D machine gun must be inspected and gaged at least once every two years.

MAINTENANCE OF BREECH BOLT ASSEMBLY 0011 00

INSPECTION

NOTE

No cracks are permitted in this area. Notify direct support maintenance if cracks are found.

1. Inspect back side of breech bolt assembly bottom lug (1) for minor chips, dents, gouges, and burrs. These conditions may be corrected by stoning.

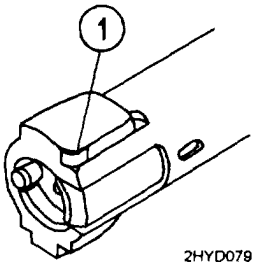

CAUTION

If sharp edges or burrs are present, notify direct support maintenance for replacement.

2. Inspect front side of breech bolt assembly bottom lug (1) for sharp edges or burrs.

NOTE

Raised or rough surfaces can be repaired by stoning. Notify direct support maintenance for replacement if stoning fails.

3. Inspect breech bolt assembly cam area (2) for raised or rough surfaces,

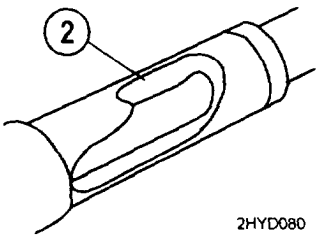

NOTE

Rounding or mutilation found on breech bolt locking surfaces will cause damage to mating locking surfaces on the barrel socket. If breech bolt is rounded or mutilated, notify direct support maintenance.

4. Inspect left front corner of breech bolt assembly stripping lug (3). A stripping lug showing complete loss of original radius surface area due to chipping may still be used.

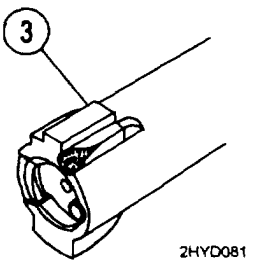

5. Inspect back side of breech bolt assembly stripping lug (3). Burrs may be smoothed by stoning but cracks, chips, dents, or gouges are not repairable in this area. If cracks, chips, dents, or gouges are present, notify direct support maintenance.

DISASSEMBLY

1. To field-strip the weapon refer to TM 9-1005-224-10.

NOTE

Procedures shown are in addition to field-stripping.

1. Place bolt in vise.

2. Using a 3/32-inch drive pin punch and hammer, drive out spring pin (1) and remove cartridge ejector (3) and helical compression spring (2).

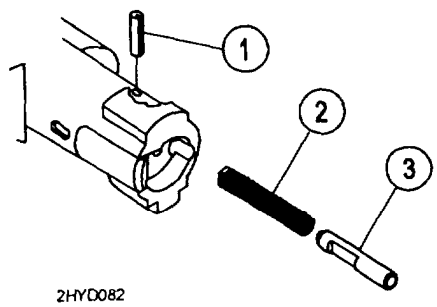

3. Using a 1/16-inch punch, release spring tension on cartridge extractor (4). Push punch rearward and hold it. Push down on forward end of extractor applying pressure towards cartridge ejector lifting the back end cartridge ejector out of position and remove it.

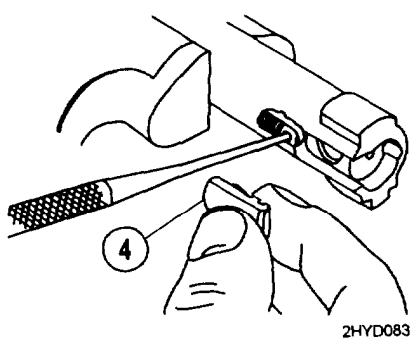

4. Slowly release pressure on punch and remove extractor plunger (5) and helical compression spring (6) from body of breech bolt (7).

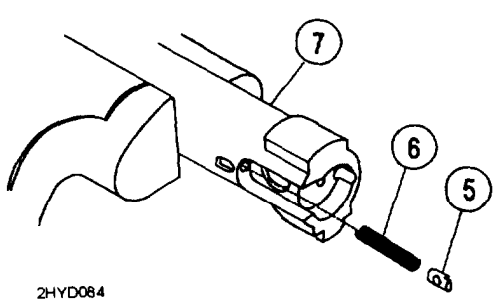

MAINTENANCE OF BREECH BOLT ASSEMBLY (cont) 0011 00

REPAIR

1. Repair by replacing all authorized components.

NOTE

Burrs or raised surfaces may be removed or smoothed using a fine grit sharpening stone. DO NOT change the tolerances of any component by stoning. Components with cracks, chips, dents, or gouges shall be reported to direct support maintenance for repair or replacement.

Cracks, chips, dents, or gouges on breech bolt locking surfaces and rounding/mutilation of the rear locking surface can damage the mating locking surfaces of the barrel socket. Damage to barrel socket locking surfaces can damage the breech bolt. Notify direct support maintenance for replacement or repair if either condition exists.

2. Repair by stoning burrs and raised surfaces from bottom lug's (1) forward corner and rear locking surface. No cracks, chips, dents, and gouges are permitted on the rear locking surface.

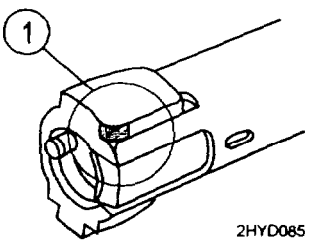

3. Repair cam area (2) by stoning raised or rough surfaces.

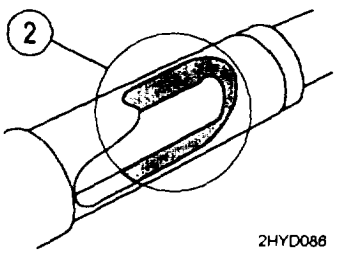

4. Repair camming surface of stripping lug (3) by stoning the forward edge. A stripping lug showing complete loss of original radius surface area may still be used.

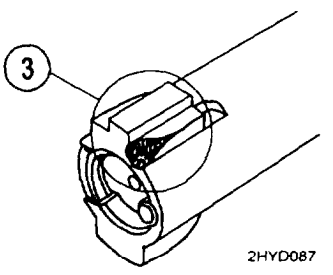

5. Repair by stoning burrs or raised surfaces from rear locking surface of stripping lug (4). No cracks, chips, dents, or gouges are permitted in this area.

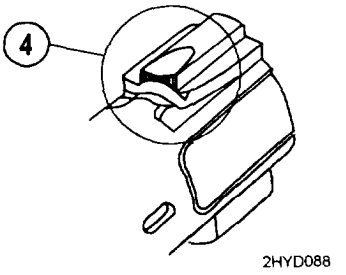

REASSEMBLY

1. Install helical compression spring (1) and extractor plunger (2) in body of breech bolt (3).

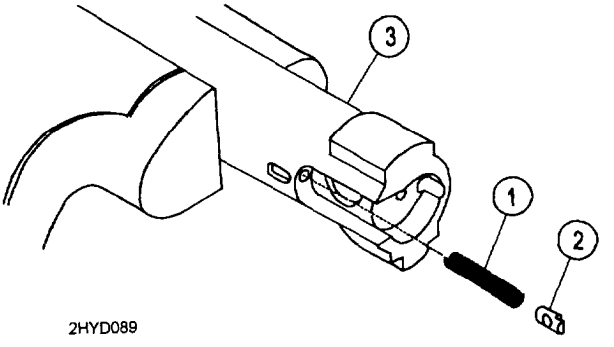

2. Press in and hold helical compression spring and extractor plunger (2) with an 1/8-inch punch. Use a 1/16-inch punch to hold extractor plunger (2) back in bolt body. Remove 1/8 inch punch. Insert cartridge extractor (4) and slide it in place while gradually releasing the punch pressure.

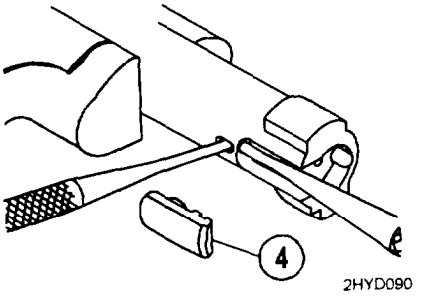

3. Install helical compression spring (5) and cartridge ejector (6) in body of breech bolt (3).

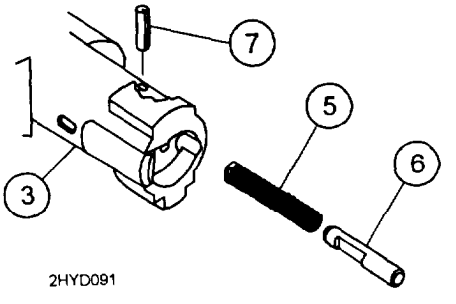

REASSEMBLY (cont)

4. Align notch in cartridge ejector (6) with pin hole in body of breech bolt (3) and install spring pin (7).

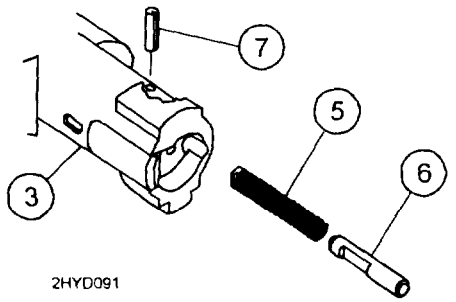

5. Secure by tapping spring pin (7) until it is flush with body of breech bolt (3)

6. Apply lubricant sparingly to bolt locking lugs (8), actuator roller (9), and camming recess (10).

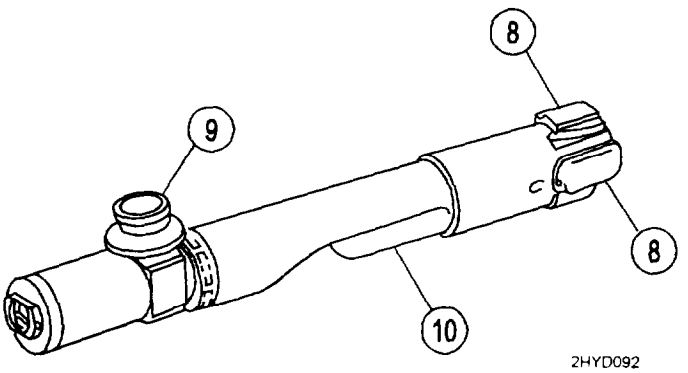

7. Refer to TM 9-1005-224-10 to reassemble the weapon.

END OF TASK

MAINTENANCE OF OPERATING ROD ASSEMBLY 0012 00

THIS TASK COVERS:
Repair

INITIAL SETUP

Maintenance Level
Unit

Applicable Configuration
M60/M60D Machine Guns

Tools and Special Tools
Small Arms Repairman Tool Kit
(SC 5180-95CL-A07)

Materials/Parts
Lubricant (as required)

REPAIR

1. Check for burrs, cracks, distortion, and mutilation on yoke area (1), firing pin bearing area (2), guide ways (3), and sear notches (4).

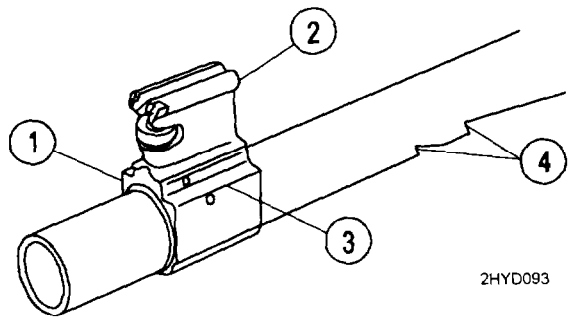

2. Raised or upset areas are unacceptable on tower area (5), firing pin bearing area (2), and guideways (3). Remove burrs and sharp edges by stoning.

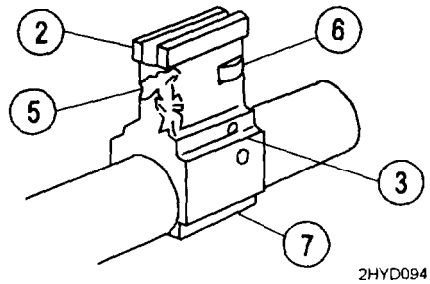

3. Apply lubricant sparingly on linear-rotar roller (6) and surfaces (7) immediately below the yoke which ride within the receiver assembly rails.

END OF TASK

MAINTENANCE OF TRIGGER MECHANISM GRIP ASSEMBLY (M60 ONLY) 0013 00

THIS TASK COVERS:
Inspection, Disassembly, Repair, Reassembly

INITIAL SETUP

Maintenance Level
Unit

Applicable Configuration
M60 Machine Gun

Tools and Special Tools
Small Arms Repairman Tool Kit
(SC 5180-95-CL-A07)

Troubleshooting References
Refer to WP 0006 00

Materials/Parts
Cloth, abrasive (crocus) (item 5, WP 0082 00)
Dry cleaning solvent (SD) (item 7, WP 0082 00)
Gloves, rubber (item 8, WP 0082 00)
Lubricant, solid film (item 10, WP 0082 00)

References
TM 9-1005-224-10

General Safety Instructions

WARNING

Be careful when removing and installing spring-loaded components. Carelessness could cause injury.

Dry cleaning solvent (SD) is flammable. Do not clean parts near an open flame or in a smoking area. Dry cleaning solvent evaporates quickly and has a drying effect on the skin. When used without protective gloves, solvent may cause irritation to or cracking of the skin.

INSPECTION

1. Inspect sear plunger and helical compression spring for proper operation by checking tension on the sear.

2. Inspect safety plunger and helical compression spring for proper operation by checking tension on the small arms safety.

3. Inspect that small arms safety locks sear when rotated to the safe position.

4. Inspect that trigger returns to normal position when depressed and released.

5. Rubber coating must not be gummy or retain finger impressions. Abrasions, cuts, gouges, and holes in rubber are acceptable. Loose bonding of rubber near cuts, etc., is acceptable providing the cuts do not interfere with operator's grip on weapon.

MAINTENANCE OF TRIGGER MECHANISM GRIP ASSEMBLY (M60 ONLY) (cont) 0013 00

DISASSEMBLY

1. To field-strip the weapon refer to TM 9-1005-224-10.

NOTE
The following procedures are in addition to field-stripping.

2. Clamp forward section of trigger housing (1) firmly in vise.

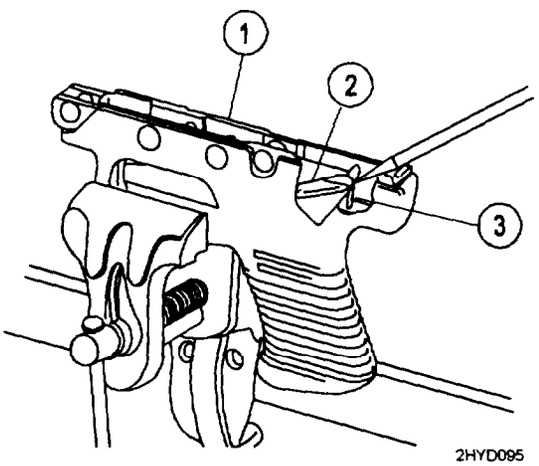

3. Move small arms safety (2) to fire (F) position.

4. Press down on, and hold, safety plunger (3) with screwdriver. Remove small arms safety (2) and slowly release pressure on safety plunger (3).

5. Remove safety plunger (3) and helical compression spring (4).

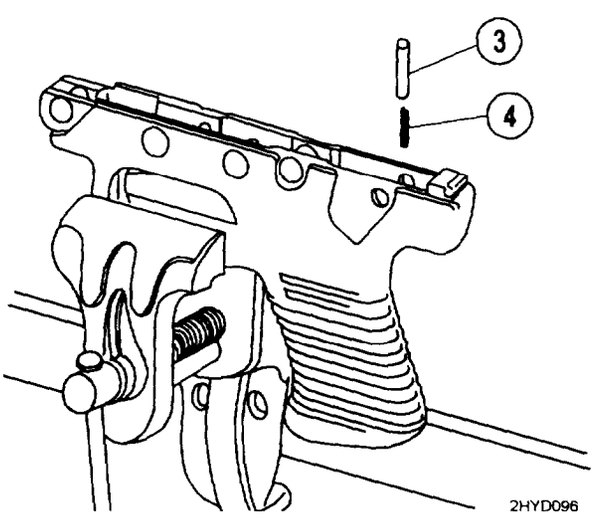

REPAIR

1. Repair by replacing all authorized components.

2. Clean rusted metal surfaces with crocus cloth. Wash thoroughly with dry cleaning solvent.

REASSEMBLY

1. Clamp trigger housing (1) in vise.

2. Insert helical compression spring (2) and safety plunger (3) into trigger housing (1)

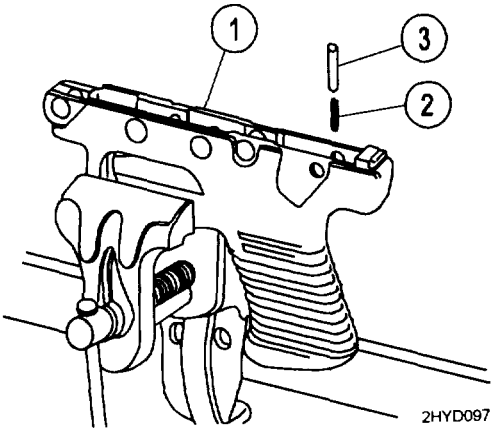

3. Push down on safety plunger (3) with screwdriver, hold it, and slowly insert small arms safety (4).

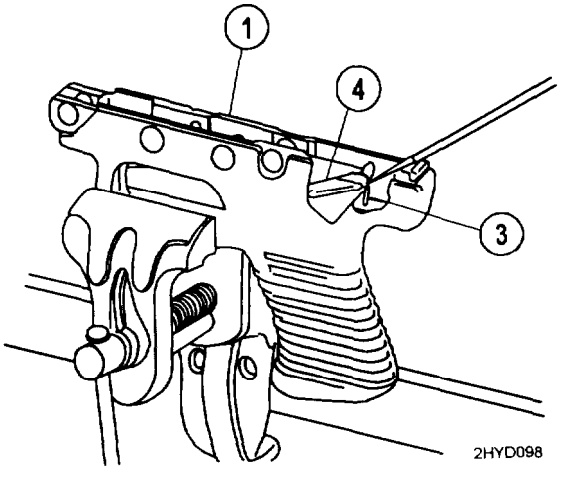

4. After small arms safety (4) is in place, remove screwdriver.

5. Remove trigger housing (1) from vise and lubricate.

6. Refer to TM 9-1005-224-10 to reassemble the weapon.

END OF TASK

MAINTENANCE OF SEAR AND SAFETY HOUSING ASSEMBLY (M60D ONLY) 0014 00

THIS TASK COVERS:
Inspection, Disassembly, Repair, Reassembly

INITIAL SETUP

Maintenance Level
Unit

Applicable Configuration
M60D Machine Gun

Tools and Special Tools
Small Arms Repairman Tool Kit
(SC 5180-95CL-A07)

Troubleshooting References
Refer to WP 0006 00

Materials/Parts
Cloth, abrasive (crocus) (item 5, WP 0082 00)
Dry cleaning solvent (SD) (item 7, WP 0082 00)
Gloves, rubber (item 8, WP 0082 00)
Lubricant, solid film (item 11, WP 0082 00)

References
TM 9-1005-224-10

General Safety Instructions

WARNING
Be careful when removing and installing spring-loaded components
Carelessness could cause injury.

INSPECTION

1. Inspect sear and safety housing assembly for bent, broken, or missing parts.

2. inspect that small arms safety prevents sear from moving when in safe (S) position but allows sear to move freely when in fire (F) position.

DISASSEMBLY

1. To field-strip the weapon refer to TM 9-1005-224-10.

NOTE
The following procedures are in addition to field-stripping.

MAINTENANCE OF SEAR AND SAFETY HOUSING ASSEMBLY (M60D ONLY) (cont)

2. Clamp sear and safety housing assembly (1) into bench vise with brass jaw caps and secure.

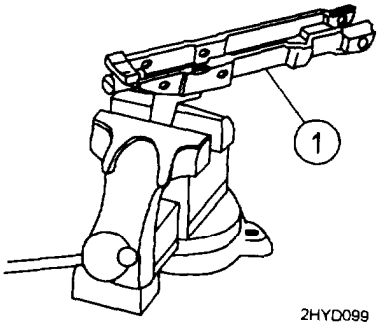

3. Depress safety plunger (2) with screwdriver as small arms safety (3) is removed. Release pressure on safety plunger (2).

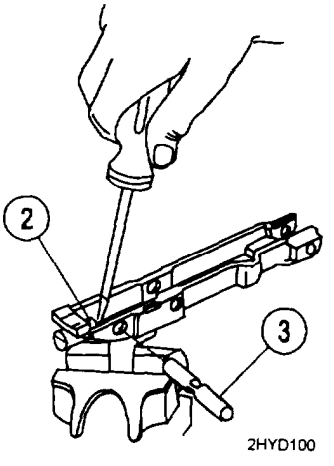

4. Lift out safety plunger (2) and helical compression spring (4) from the sear housing (5).

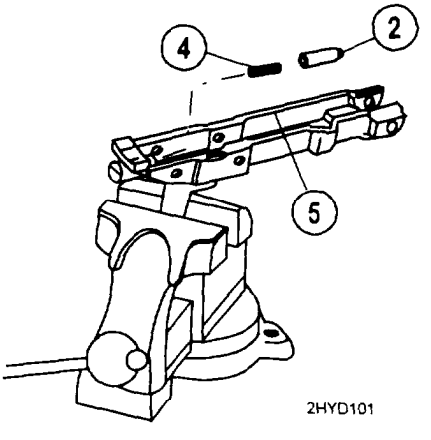

REPAIR

WARNING

Dry cleaning solvent (SD) is flammable. Do not clean parts near an open flame or in a smoking area. Dry cleaning solvent evaporates quickly and has a drying effect on the skin. When used without protective gloves, solvent may cause irritation to or cracking of the skin.

1. Repair by replacing all authorized components.

2. Clean rusted metal surfaces with crocus cloth. Wash thoroughly with dry cleaning solvent.

CAUTION

If solid film lubricant comes in contact with any moving or internal part, clean part with dry cleaning solvent.

3. Following manufacturer's instructions for use, apply solid film lubricant to all external surfaces showing wear and allow weapon to dry 12 hours before being used.

REASSEMBLY

1. Clamp sear housing (1) in bench vise with brass jaw caps and secure.

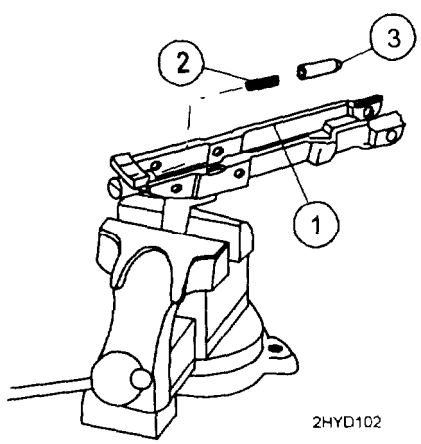

2. Install helical compression spring (2) and safety plunger (3) into sear housing (1).

MAINTENANCE OF SEAR AND SAFETY HOUSING ASSEMBLY (M60D ONLY) (cont)

0014 00

REASSEMBLY (cont)

3. Press in on safety plunger (3) with screwdriver while installing small arms safety (4).

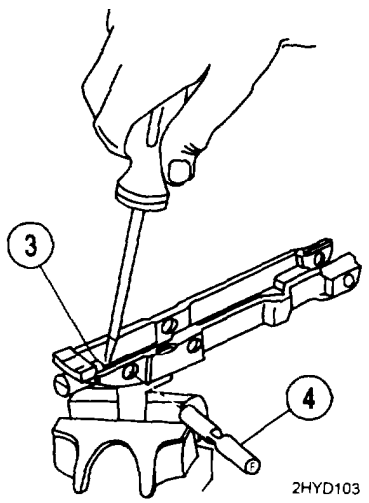

4. Refer to TM 9-1005-224-10 to reassemble the weapon

END OF TASK

MAINTENANCE OF BARREL AND BIPOD ASSEMBLY 0015 00

THIS TASK COVERS:
Inspection, Disassembly, Repair, Reassembly

INITIAL SETUP

Maintenance Level
Unit

Applicable Configuration
M60/M60D Machine Gun

Tools and Special Tools
Small Arms Repairman Tool Kit
(SC 5180-95-CL-A07)

Troubleshooting References
Refer to WP 0006 00

Materials/Parts
Cloth, abrasive (crocus) (item 5, WP 0082 00)
Dry cleaning solvent (SD) (item 7, WP 0082 00)
Gloves, rubber (item 8, WP 0082 00)
Lubricant (as required)
Lubricant, solid film (item 10, WP 0082 00)
Rag, wiping (item 13, WP 0082 00)

References
TM 9-1005-224-10

INSPECTION

1. Inspect front and rear key washers for broken tabs.
2. Inspect general appearance of barrel and bipod assembly.
3. Inspect for loose bipod leg screws, tighten and stake if necessary.
4. Inspect gas cylinder system for cleanliness.

DISASSEMBLY

1. Pull both bipod legs (1) to the rear and down to the extended position.

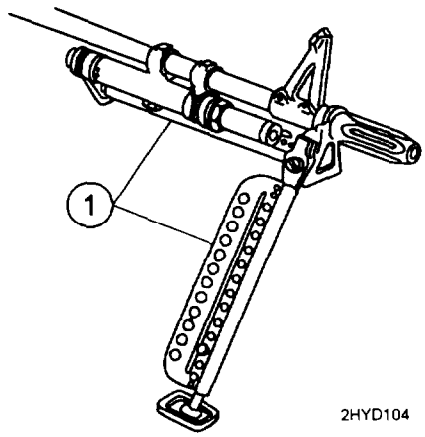

DISASSEMBLY (cont)

2. Using diagonal cutting pliers, cut and discard safety wire (2) from key washer (3).

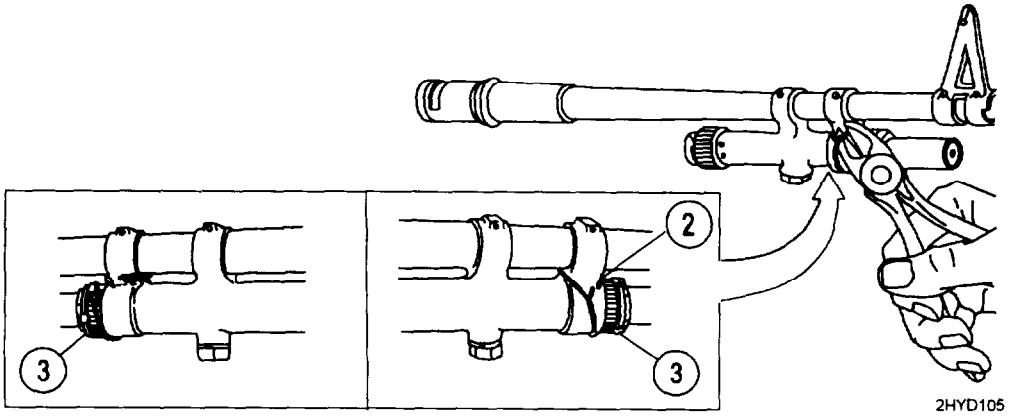

NOTE
When disassembling be careful not to damage key washers,

3. Using combination wrench, remove vent plug (4), key washer (3), machine thread bushing (5), and key washer (6). Tilt barrel, gas piston (7) should fall out.

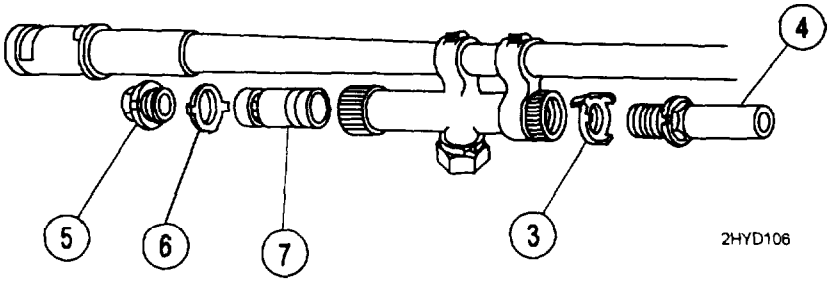

4. Remove gas plug assembly (8) with a combination wrench.

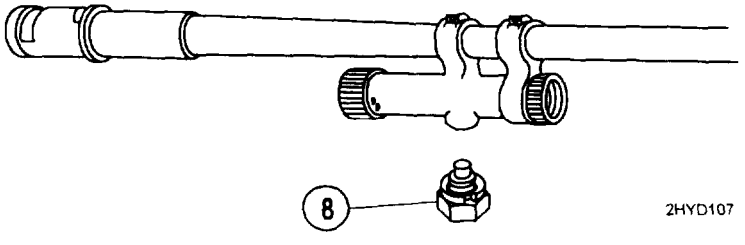

REPAIR

WARNING

Dry cleaning solvent (SD) is flammable. Do not clean parts near an open flame or in a smoking area. Dry cleaning solvent evaporates quickly and has a drying effect on the skin. When used without protective gloves, solvent may cause irritation to or cracking of the skin.

CAUTION

Care MUST be exercised to avoid getting lubricant or oil in the gas cylinder when cleaning the barrel. Position the gas cylinder above the barrel during cleaning. The gas cylinder components will be removed and cleaned only when inspection reveals that the piston will no longer move within the cylinder under its own weight when the barrel is tilted end for end. If gas cylinder components are cleaned, wipe interior of cylinder and piston dry before reassembly. After reassembly, check for movement of gas piston by manually tilting the barrel assembly. Rewire vent plug.

NOTE

Do not dilute lubricant. Shake well before using.

Burrs or raised surfaces may be removed or smoothed using a fine grit sharpening stone. DO NOT change the tolerances of any component by stoning. Cracks, chips, dents, or gouges on components shall be reported to direct support maintenance for repair or replacement.

Cracks, chips, dents, or gouges on breech bolt locking surfaces can damage the barrel socket. Damage to barrel socket locking surfaces can damage the breech bolt. Notify direct support maintenance for replacement or repair if either condition exists.

No abrasive materials will be used to clean the gas piston or the inside of the gas cylinder (i.e. green pads, steel wool or crocus cloth). The receiver brush will not be used to clean inside of gas cylinder.

1. The use of crocus cloth is restricted for external surfaces only.

CAUTION

If solid film lubricant comes in contact with any moving or internal part, clean part with dry cleaning solvent.

2. Following manufacturers instructions for use, apply solid film lubricant to all external surfaces showing wear and allow weapon to dry 12 hours before being used.

3. Repair by replacing safety wire, unserviceable key washers, and gas plug assembly.

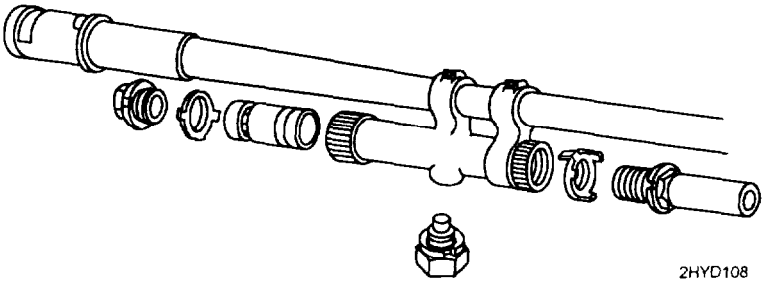

REPAIR (cont)

NOTE

Restore gas cylinder assembly to a serviceable condition by performing the following procedures,

4. Insert reamer (1) on screwdriver and reamer combination wrench all the way in the machine thread plug hole to make sure all carbon is removed.

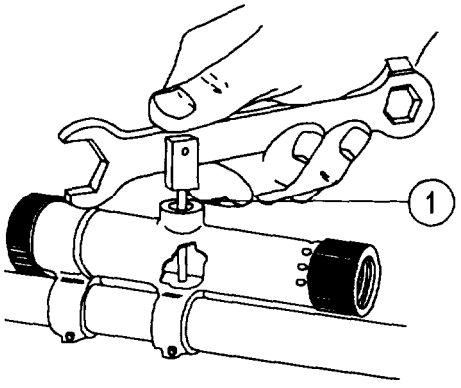

2HYD109

5. Remove carbon from holes in gas cylinder (2) with reamer (1) and wipe carbon residue from gas cylinder (2).

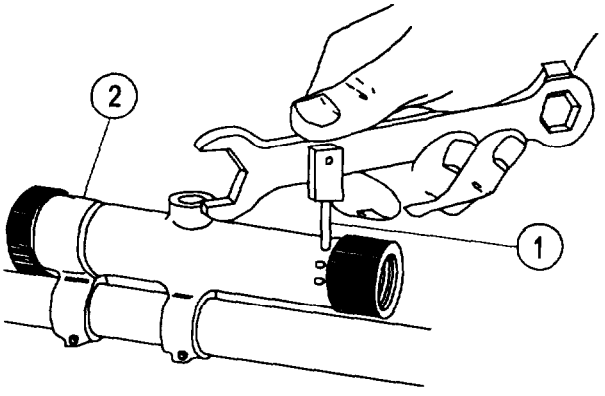

2HYD110

6. Remove carbon from holes in gas piston (3) with reamer (1) and wipe carbon residue from gas piston (3).

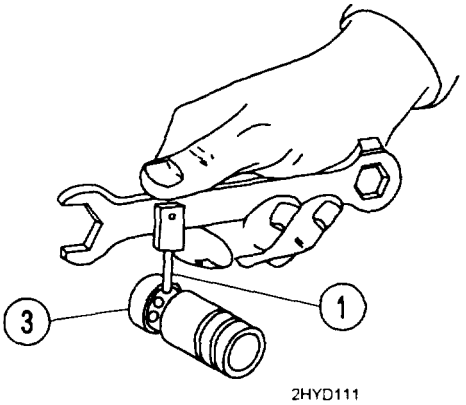

2HYD111

REASSEMBLY

1. Install gas piston (1) in gas cylinder (2). Make sure holes in gas piston (1) are facing rearward.

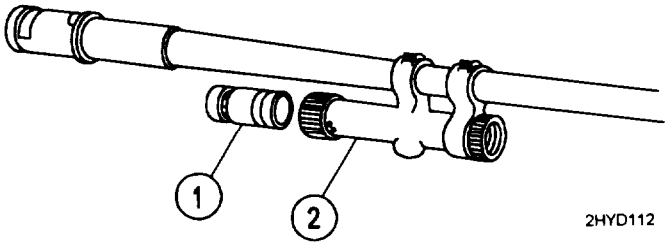

2. Install and tighten key washer (3) and machine thread bushing (4).

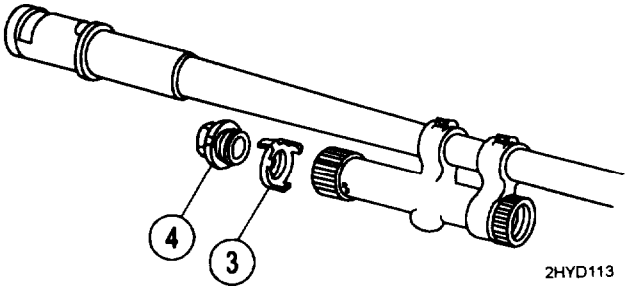

3. Install and tighten key washer (5) and vent plug (6).

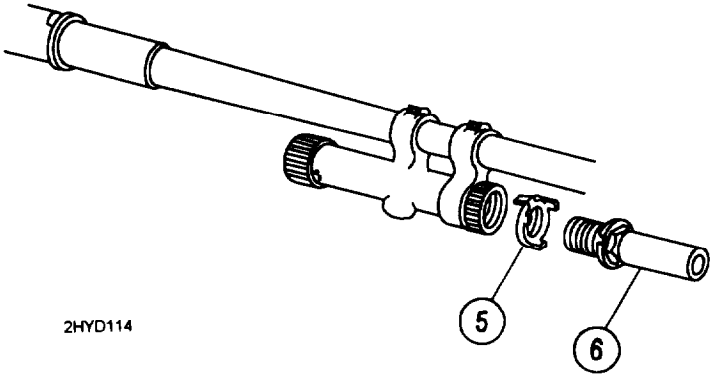

4. Check location of locking tab. When tightened, the locking tab must be in the location shown.

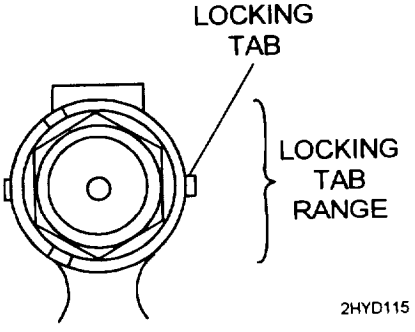

MAINTENANCE OF BARREL AND BIPOD ASSEMBLY (cont) 0015 00

REASSEMBLY (cont)

5. Tilt barrel and bipod assembly (7) up and down. Gas piston should click as it moves inside gas cylinder (2). If click is not heard, disassemble, clean, and assemble again (refer to TM 9-1005-224-10).

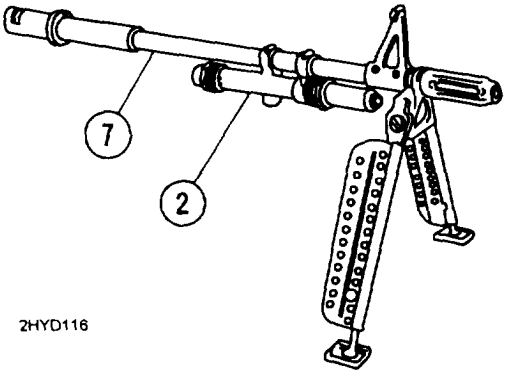

6. Install and tighten gas plug assembly (8) with combination wrench. If the gas plug is the old type that does not have a lock washer, safety wire the gas plug.

NOTE

If gas plug is the old type (without lock washer), safety wire the plug.

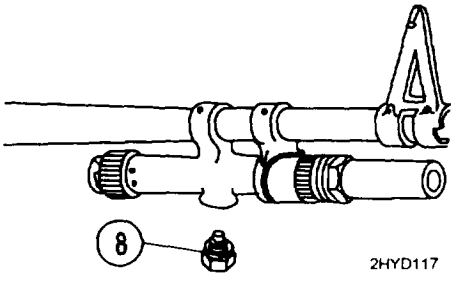

7. Secure key washer (5) to gas cylinder (2) with safety wire (9) to cylinder front mounting arm as shown, using double twist method.

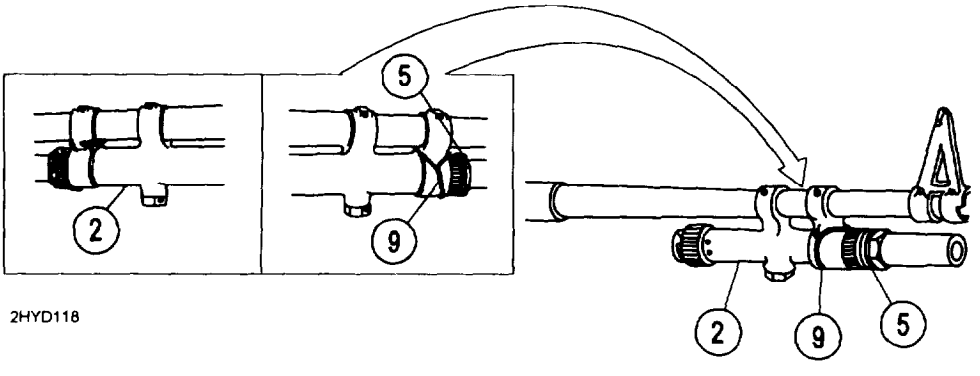

END OF TASK

MAINTENANCE OF COVER ASSEMBLY 0016 00

THIS TASK COVERS:
Inspection, Disassembly, Repair, Reassembly

INITIAL SETUP

Maintenance Level
Unit

Applicable Configuration
M60/M60D Machine Guns

Tools and Special Tools
Small Arms Repairman Tool Kit
(SC 5180-95-CL-A07)

Troubleshooting References
Refer to WP 0006 00

General Safety Instructions

Materials/Parts
Brush, cleaning, tool and parts
(item 1, WP 0082 00)
Dry cleaning solvent (SD) (item 7, WP 0082 00)
Gloves, rubber (item 8, WP 0082 00)
Lacquer (item 9, WP 0082 00)
Lubricant (as required)
Rag, wiping (item 13, WP 0082 00)

References
TM 9-1005-224-10

WARNING
Dry cleaning solvent (SD) is flammable. Do not clean parts near an open flame or in a smoking area. Dry cleaning solvent evaporates quickly and has drying effect on the skin. When used without protective gloves, solvent may cause irritation to or cracking of the skin.

INSPECTION

1. Inspect cover assembly for broken, bent, worn, or missing parts.
2. Inspect cover assembly for proper cleaning and lubrication.
3. Rubber coating must not be gummy or retain finger impressions. Abrasions, cuts, gouges, and holes in rubber are acceptable. Loose bonding of rubber near cuts, etc., is acceptable provided cuts do not interfere with operator's grip on weapon.
4. Visually inspect external surfaces for dull black finish.

DISASSEMBLY

1. Remove guide cotter pin (1) and straight shaft (2).

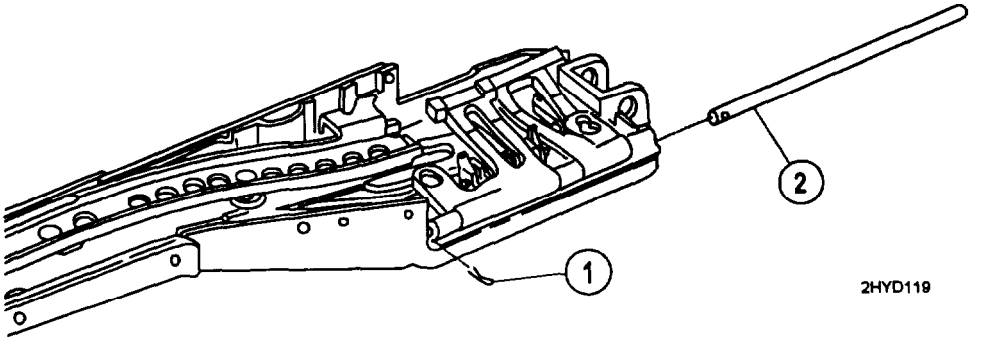

MAINTENANCE OF COVER ASSEMBLY (cont) 0016 00

2. Push down and over to remove front (3) and rear (4) cartridge guides.

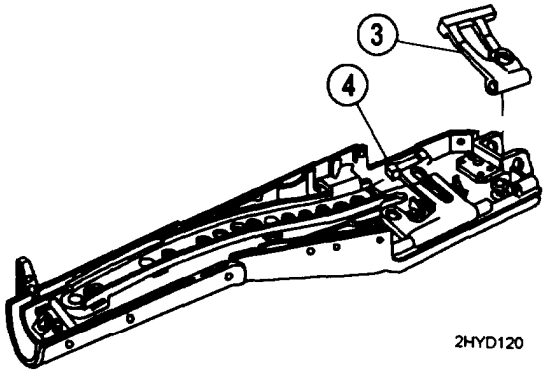

3. Pull back on feed cam retainer (5) with long nose pliers and lift out feed cam assembly (6).

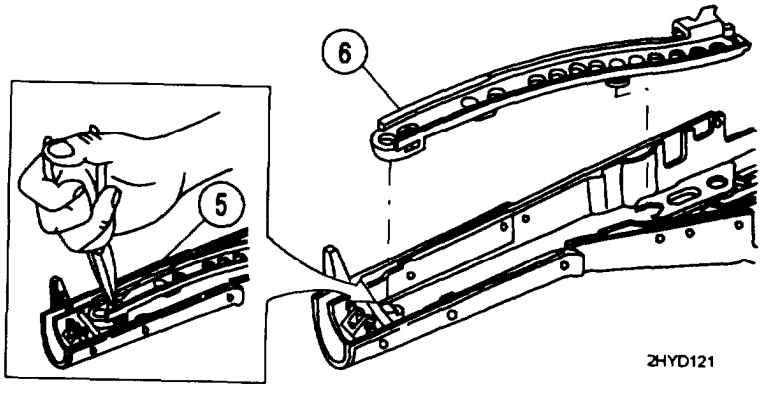

4. Press in on spring lever clip (7) and lift out feed lever assembly (8).

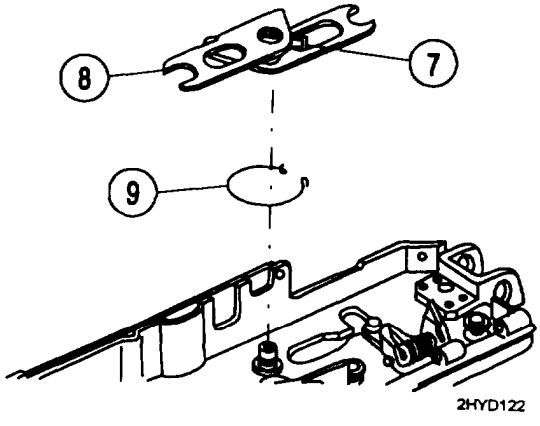

5. Lift out helical torsion spring (9).

6. Slide feed pawl assembly (10) in slot (11) and guide it toward feed lever stud (12). Remove feed pawl assembly (10).

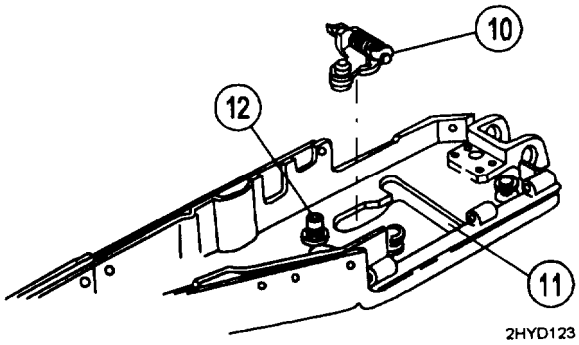

REPAIR

1. Replace damaged helical torsion spring (10).

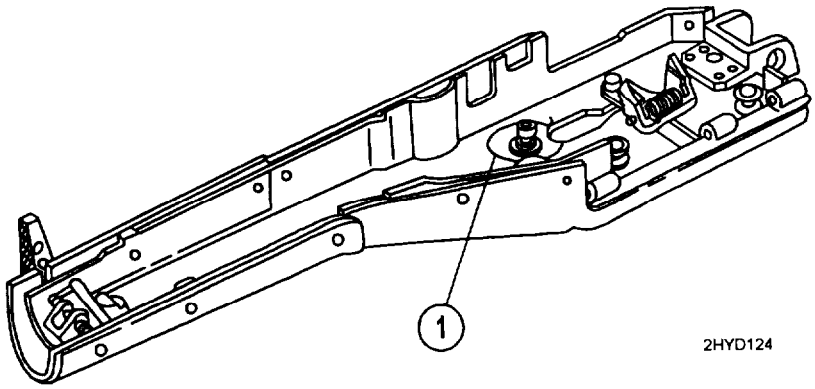

2. Clean powder-fouled parts with CLP/RBC and a brush. Wipe all parts clean and remove excess CLP/RBC with a wiping rag.

3. Apply a coating of lubricant on the lower surfaces and frame mating areas of feed pawl assembly (2).

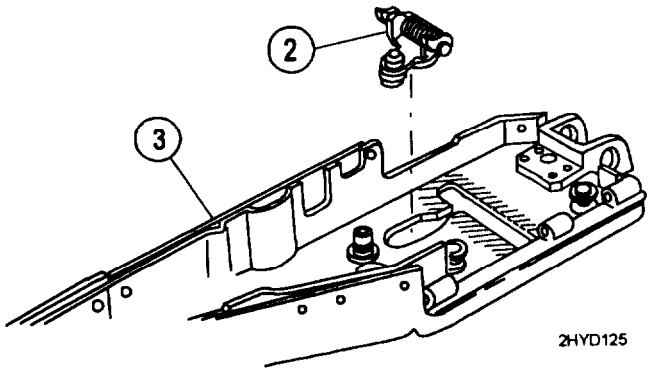

4. Dampen wiping rag with lubricant and wipe each part before reassembling cover assembly (3).

REPAIR (cont)

5. Refinish exterior of all aluminum parts not having a dull black finish by painting with a black lusterless lacquer (item 9, WP 0082 00).

6. Clean worn or flaking surfaces with crocus cloth. Wash thoroughly with dry cleaning solvent.

7. Following manufacturer's instructions for use, apply lacquer to all external aluminum surfaces showing wear and allow to dry for appropriate length of time before being used.

REASSEMBLY

1. Place feed pawl assembly (1) in slot (2) near feed lever stud (3) and slide it into narrow leg of slot (2).

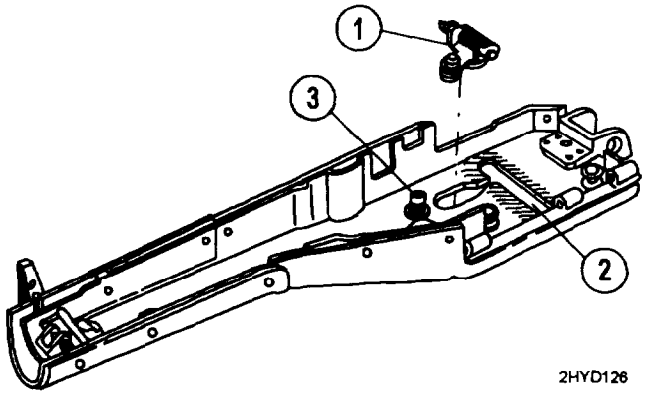

2. Place helical torsion spring (4) around feed lever stud (3) and hook one end of helical torsion spring (4) in slot (2).

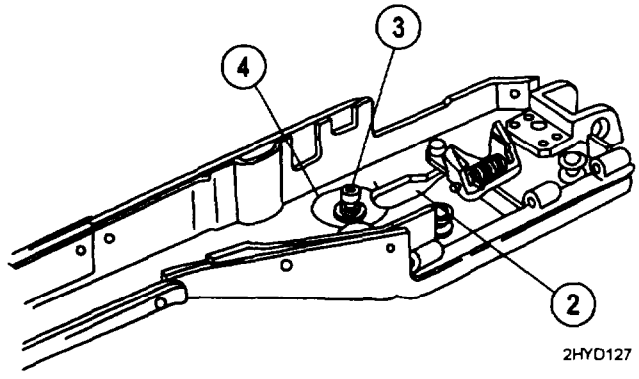

3. Position feed lever assembly (5) so slot (6) is aligned above projection (7) on feed pawl assembly (1).

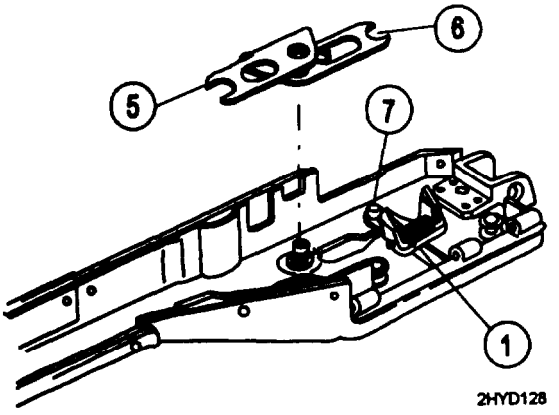

4. Press spring lever clip (8) in feed lever assembly (5) and place on feed lever stud (3). Make sure helical torsion spring (4) rests against side of feed lever assembly (5).

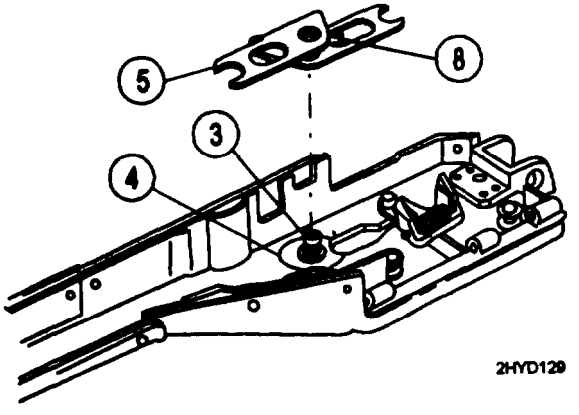

5. Align feed cam assembly (9) with feed lever assembly (5) so cam stud (10) enters slot in the end of feed lever assembly (5). Align hole (11) over cover stud (12).

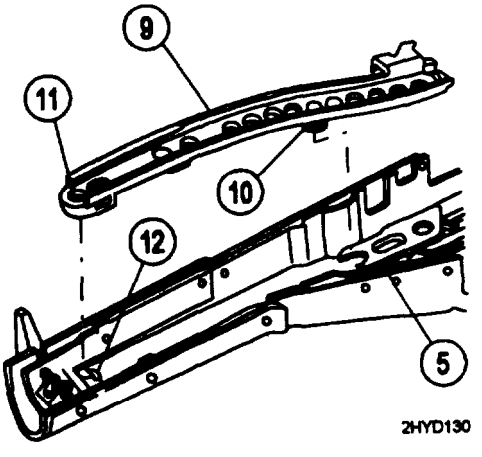

MAINTENANCE OF COVER ASSEMBLY (cont) 0016 00

REASSEMBLY (cont)

6. Pull back on feed cam retainer (13) with long nose pliers and press down on feed cam assembly (9) to latch it.

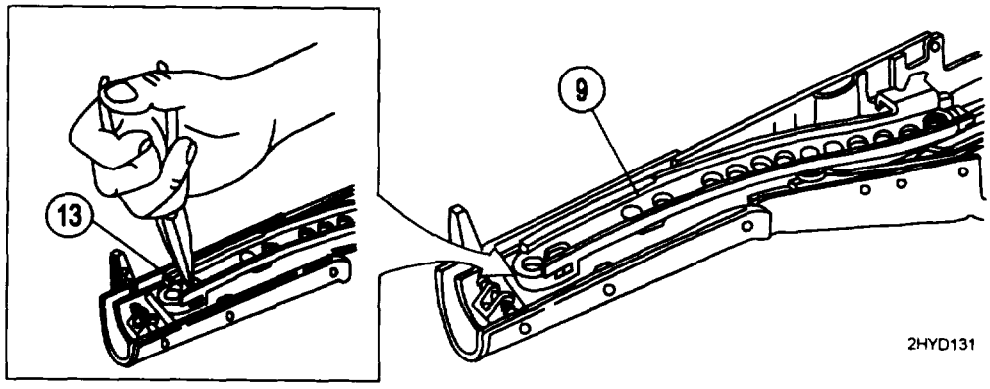

7. Move feed pawl assembly (1) back and forth several times to check it for freedom of movement, Make sure feed pawl assembly (1) does not bind. If binding is present, notify direct support maintenance.

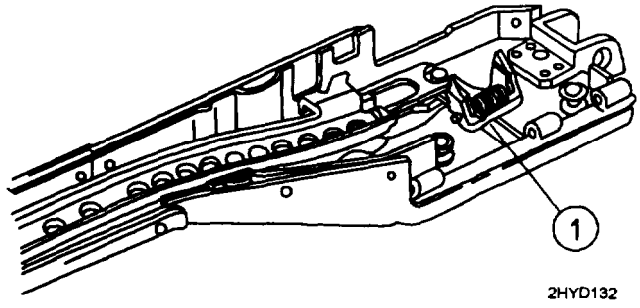

8. Install front (14) and rear (15) cartridge guides. Press down on front and rear cartridge guides and slide out to align hole for straight shaft. Secure with straight shaft (16).

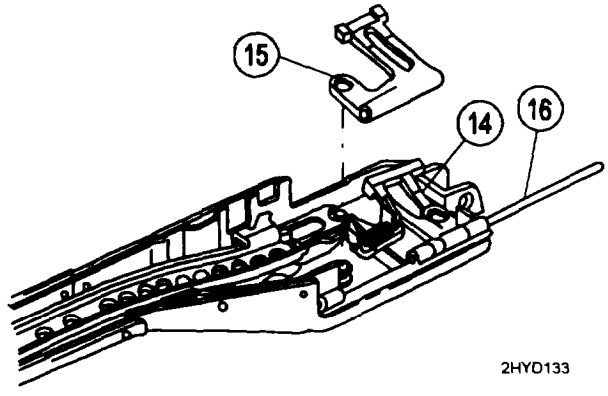

9. Install guide cotter pin (17) on straight shaft (16) and bend prongs of guide retaining pin around straight shaft so ends do not stick out.

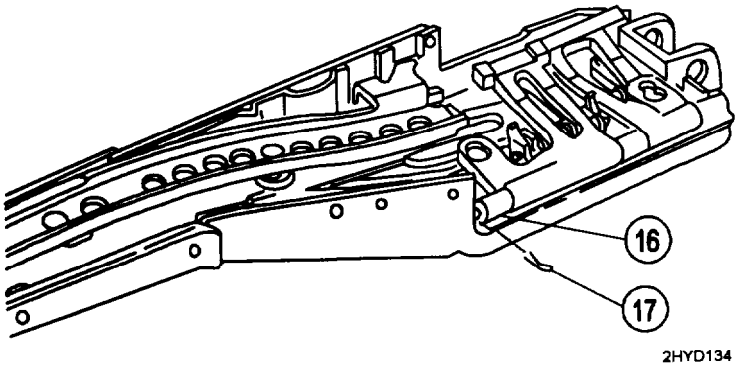

END OF TASK

MAINTENANCE OF TRAY AND HANGER ASSEMBLY AND CARTRIDGE FEED TRAY ASSEMBLY (M60 ONLY) 0017 00

THIS TASK COVERS:
Disassembly, Repair, Reassembly

INITIAL SETUP

Maintenance Level
Unit

Applicable Configuration
M60 Machine Gun

Tools and Special Tools
Small Arms Repairman Tool Kit
(SC 5180-95-CL-A07)

NOTE

The cartridge feed tray assembly is a subassembly of the tray and hanger assembly. Since the cartridge feed tray components cannot be removed separately from the major components of the tray and hanger assembly, maintenance procedures are combined in this work package.

DISASSEMBLY

1. Slowly tap cartridge shaft (1) out part way with a hammer and 1/8-inch drive pin punch. Catch helical torsion spring (2) and cartridge retainer pawl (3) from underside of cartridge tray frame assembly (4).

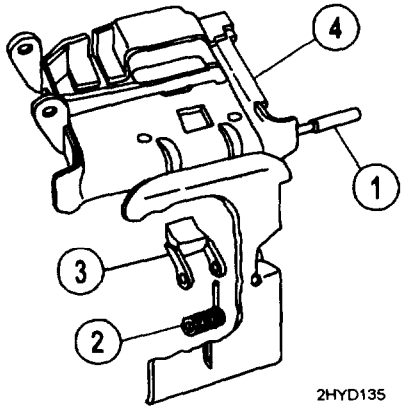

2. Remove cartridge shaft (1) and separate magazine bandoleer hanger assembly (5) from cartridge tray frame assembly (4).

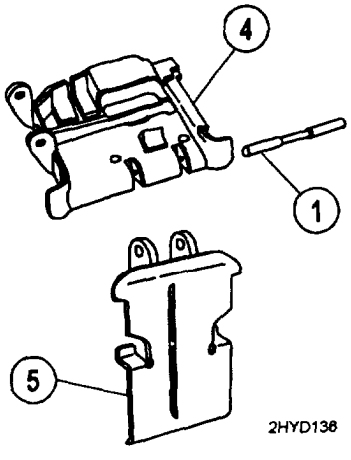

MAINTENANCE OF TRAY AND HANGER ASSEMBLY AND CARTRIDGE FEED TRAY ASSEMBLY (M60 ONLY) 0017 00

REPAIR

Repair by replacing all authorized components.

REASSEMBLY

1. Attach magazine bandoleer hanger assembly (1) to cartridge tray frame assembly (2), and insert cartridge shaft (3) in part way.

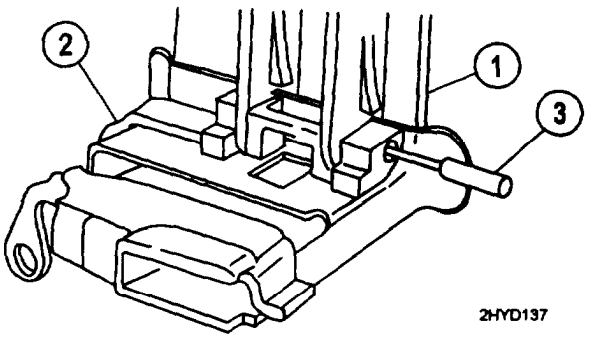

2. Insert cartridge retainer pawl (4) and helical torsion spring (5) as a unit from underside of cartridge tray frame assembly (2) and align helical torsion spring (5) with cartridge shaft.

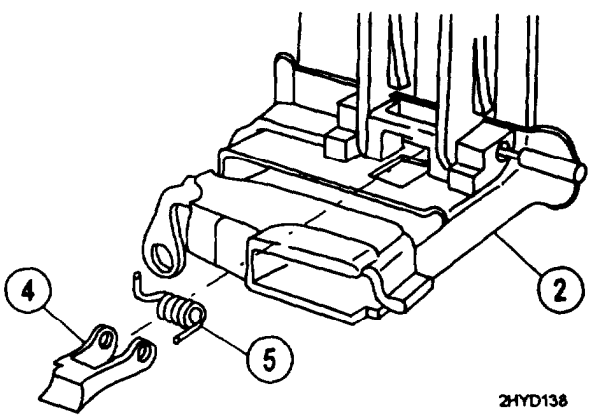

3. Insert 1/8-inch drive pin punch in other side and work it through cartridge retainer pawl (4) and helical torsion spring (5) to help keep all parts in line.

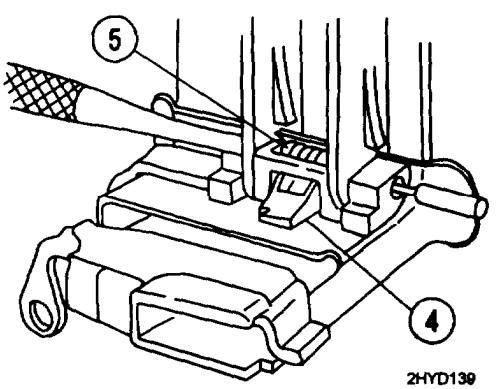

4. Use hammer to tap cartridge shaft (3) and drive it through retainer pawl (4), helical torsion spring (5), magazine bandoleer hanger assembly (1) until it drives out drive pin punch. Flush both ends of cartridge shaft (3).

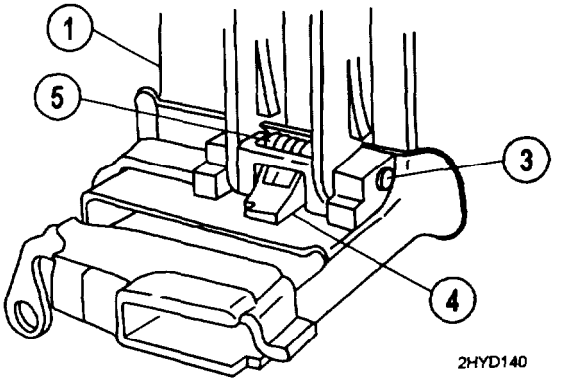

END OF TASK

MAINTENANCE OF CARTRIDGE FEED TRAY ASSEMBLY (M60D ONLY) 0018 00

THIS TASK COVERS:
Disassembly, Repair, Reassembly

INITIAL SETUP

Maintenance Level
Unit

Applicable Configuration
M60D Machine Gun

Tools and Special Tools
Small Arms Repairman Tool Kit
(SC 5180-95-CL-A07)

DISASSEMBLY

1. Slowly tap cartridge shaft (1) part way out with a hammer and 1/8 inch drive pin punch and remove one yoke roller (2), helical torsion spring (3), and cartridge retainer pawl (4) from underside of cartridge tray frame assembly (5).

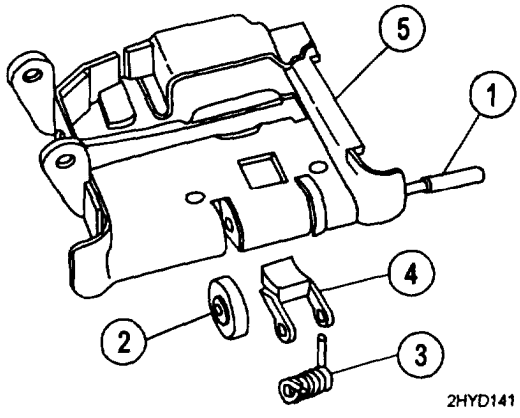

2. Remove cartridge shaft (1) and separate second yoke roller (2) from cartridge tray frame assembly (5).

REPAIR

Repair by replacing all authorized components.

REASSEMBLY

1. Attach one yoke roller (1) to cartridge tray frame assembly (2) and insert cartridge shaft (3) in part way.

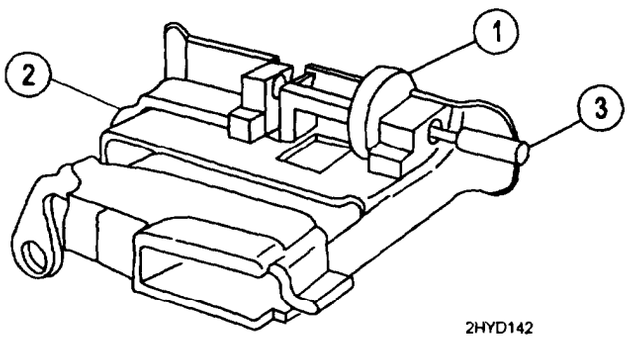

2. Insert cartridge retainer pawl (4) and helical torsion spring (5) as a unit from underside of cartridge tray frame assembly (2) and align helical torsion spring (5) with cartridge shaft (3).

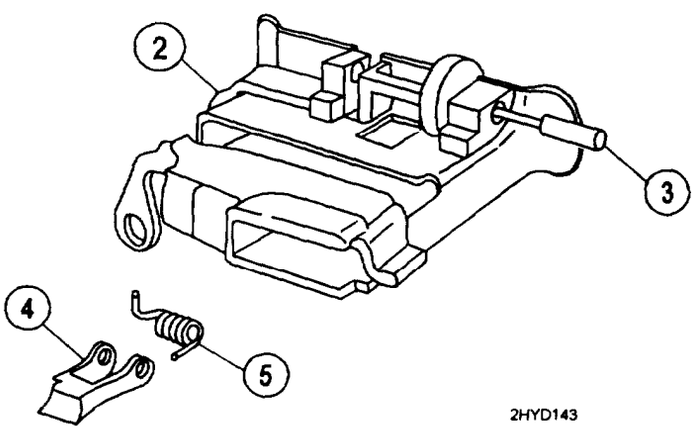

3. Insert second yoke roller (6) in cartridge tray frame assembly (2). Insert 1/8-inch drive pin punch in other side and work it through cartridge retainer pawl (4) and helical torsion spring (5) to help keep all parts in line.

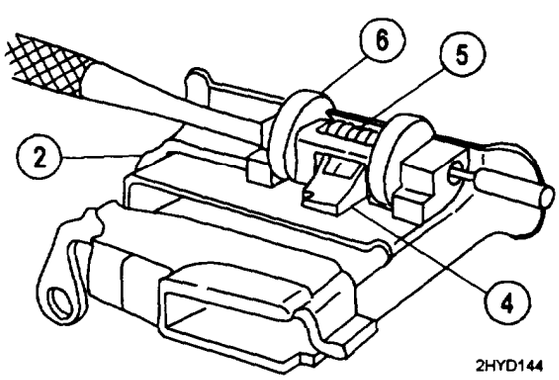

4. Use hammer to tap cartridge shaft (3) and drive it through retainer pawl (4), helical torsion spring (5) until it drives out drive pin punch. Flush both ends of the cartridge shaft (3).

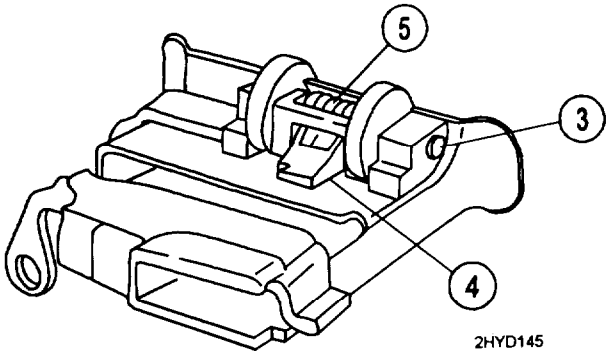

END OF TASK

MAINTENANCE OF FOREARM ASSEMBLY (M60 ONLY) 0019 00

THIS TASK COVERS:
Inspection, Disassembly, Repair, Reassembly

INITIAL SETUP

Maintenance Level
Unit

Applicable Configuration
M60 Machine Gun

Tools and Special Tools
Small Arms Repairman Tool Kit
(SC 5180-95-CL-A07)

Materials/Parts
Cloth, abrasive (crocus) (item 5, WP 0082 00)
Dry cleaning solvent (SD) (item 7, WP 0082 00)
Gloves, rubber (item 8, WP 0082 00)
Lubricant, solid film (item 10, WP 0082 00)

General Safety Instructions

WARNING

Be careful when removing and installing spring-loaded components. Carelessness could cause injury.

Dry cleaning solvent (SD) is flammable. Do not clean parts near an open flame or in a smoking area. Dry cleaning solvent evaporates quickly and has a drying effect on the skin. When used without protective gloves, solvent may cause irritation to or cracking of the skin.

INSPECTION

1. Inspect forearm assembly for broken, bent, or torn surfaces. If damaged, notify direct support maintenance.

2. Check to see if sling swivel is properly secured or missing parts.

DISASSEMBLY

1. Using flat tip screwdriver, remove assembled washer screws (1) and sling swivel (2) from the left side of forearm assembly (3). Shake out plate spacer (4).

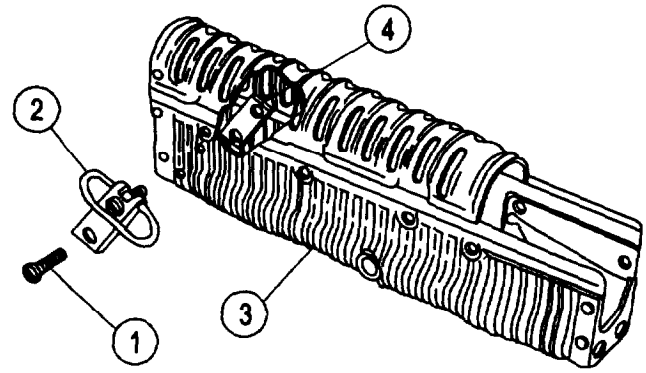

DISASSEMBLY (cont)

2. Using slip joint pliers, pull up on back end of flat catch spring (5).

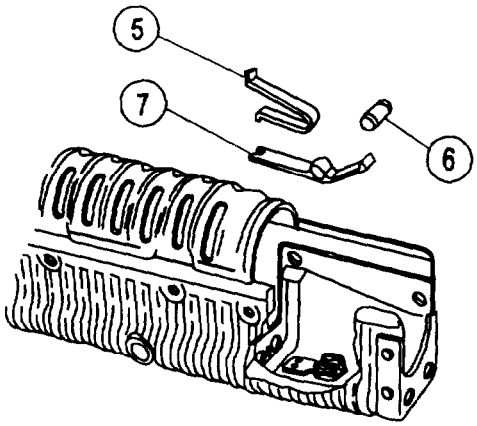

3. To remove headless shoulder pin (6), press forward on forward catch (7). Remove headless shoulder pin (6).

NOTE

If headless shoulder pin does not fall out, push pin out using a bent wire.

REPAIR

1. Repair by replacing all authorized components.

CAUTION

Keep dry cleaning solvent and solid film lubricant from coming into contact with rubber coated surface.

2. Clean rusted metal surfaces with crocus cloth. Wash thoroughly with dry cleaning solvent (SD).

3. Following manufacturers instructions for use, apply solid film lubricant to all external surfaces showing wear and allow weapon to dry 12 hours before being used.

REASSEMBLY

1. Insert assembled washer screws (1) in sling swivel (2). Position sling swivel (2) against left side of forearm assembly (3) so loop is on top and ends of assembled washer screws (1) are sticking through side of forearm assembly (3).

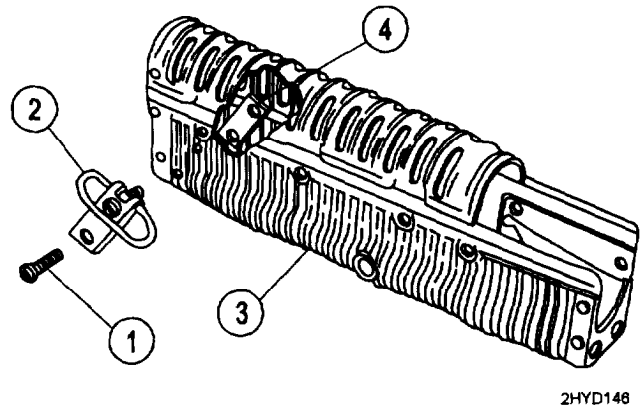

2. Position plate spacer (4) inside forearm assembly (3). Align holes in plate spacer (4) with threaded ends of assembled washer screws (1). Using flat tip screwdriver, tighten assembled washer screws (1).

3. Insert forearm catch (7), with notch forward, into bracket on bottom of forearm assembly. Install headless shoulder pin (6) through catch and pull back on forearm catch. Install flat catch spring (5) by inserting long end into notch of rib. Push down on back of spring until it snaps in place.

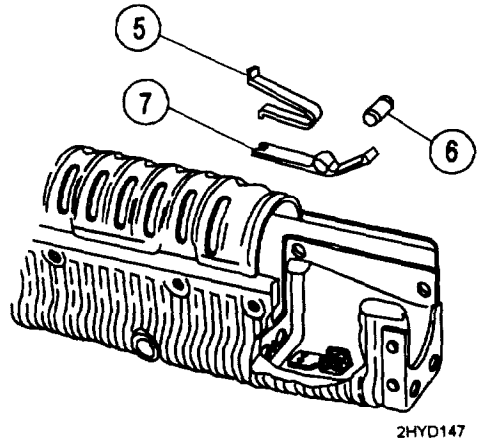

END OF TASK

LUBRICATION INSTRUCTIONS 0020 00

Weapons NOT in use or that are to be stored in the arms room for prolonged periods should have all interior and exterior metal parts lubricated and a light film of lubricant applied to the interior of the gas cylinder and the gas piston following cleaning and inspection. The use of lubricant will not eliminate periodic cleaning and/or inspection to ensure that corrosion is not forming. Remove excess lubricant from the remainder of the weapon. Avoid lubricant contact with non-metallic surfaces.

Refer to TM 9-1005-224-10 for lubrication instructions.

PREPARATION FOR STORAGE OR SHIPMENT 0021 00

ADMINISTRATIVE STORAGE

Refer to Chapter 3, WP 0046 00.

CHAPTER 3

DIRECT SUPPORT

MAINTENANCE INSTRUCTIONS

REPAIR PARTS, SPECIAL TOOLS AND SUPPORT EQUIPMENT 0022 00

COMMON TOOLS AND EQUIPMENT

For authorized common tools and equipment refer to Modified Table of Organization and Equipment (MTOE) applicable to your unit.

SPECIAL TOOLS AND SUPPORT EQUIPMENT

Tools and Test equipment requirements are listed in WP 0048 00. Special tools and support equipment are listed and illustrated in WP 0079 00 of this manual. Fabricated tools are listed and illustrated in WP 0083 00.

REPAIR PARTS

Repair parts are listed and illustrated in WP 0050 00 through WP 0079 00 of this manual.

TROUBLESHOOTING 0023 00

TROUBLESHOOTING PROCEDURES

Refer to work package WP 0006 00 of this manual.

GENERAL

Without a gauge, or inspection criteria, to determine if any component part or assembly of a weapon has excessive wear and/or how deep of a crescent/half-moon appearance make the component/ assembly unserviceable, the determining factors will have to remain as follows:

a. The functional/operational check with dummy cartridges.

b. The experience and judgmental expertise of the DS armorer and/or maintenance personnel to determine that a component, assembly or repair part needs replacement.

NOTE

When a weapon is received by direct support with a maintenance request, all gaging requirements must be checked as a standard maintenance procedure. In addition, the weapon must be inspected and any other deficiencies found will be repaired, or noted for repair, at the appropriate maintenance level. As a minimum requirement, for active duty M60/M60D guns the headspace and gaging must be verified annually by direct support personnel. All Army Reserve and Army National Guard M60/M60D machine guns must be inspected and gaged at least every other year. This requirement could be increased up to four times a year or after each training cycle depending on usage factors.

If the M60/M60D machine gun has to go to direct support maintenance for any repair, both barrel assemblies must be turned in with the weapon.

Burrs or raised surfaces may be removed or smoothed using a fine grit sharpening stone. **DO NOT** change the dimensions of any components by stoning. Cracks, chips, dents, or gouges on components shall be reported to the appropriate maintenance level for repair or replacement.

Cracks, chips, dents, or gouges on breech bolt locking surfaces can damage the barrel socket. Damage to barrel socket locking surfaces can damage the breech bolt.

MAINTENANCE OF M60 MACHINE GUN 0025 00

THIS TASK COVERS:
Disassembly, Repair, Test/Inspection, Reassembly

INITIAL SETUP

Maintenance Level
Direct Support

Applicable Configuration
M60 Machine Gun

Tools and Special Tools
Combination square (GGG-S-656 or equivalent)
Dial indicating scale (AAA-S-133 or equivalent)
Firing pin protrusion gage (7274754)
Headspace gage (7274790)
Machinist's steel rule (GGG-R-791 or equivalent)

Tools and Special Tools (cont)
Plain cylindrical plug gage (7458598)
Small Arms Gage Kit MS (5910297)
Small Arms Tool Kit (SC 4933-95-CL-A11)
Test bolt gage (7799699)

Materials/Parts
Identification tag (item 15, WP 0082 00)
Lacquer (item 9, WP 0082 00)
Wire, Nonelectrical (MS20995C32)

Troubleshooting References
Refer to WP 0006 00

References
TM 9-1005-224-10

General Safety Instructions

CAUTION
The ability to detect oil movement on or around the rivet head and/or between riveted components does not classify rivets as being loose, and is an unauthorized procedure.

NOTE
The disassembly/reassembly procedures in this paragraph are additions to those described in organizational maintenance (WP 0007 00).

Before doing the trigger pull test for both weapons (M60/M60D), the weapons must be reassembled.

No stamping or etching is authorized. Use tags for identification.

DISASSEMBLY

WARNING
Make sure weapon is cleared and that there are no obstructions in the barrel.

1. Field-strip (TM 9-1005-224-10) and perform organizational maintenance in accordance with WP 0007 00.

DISASSEMBLY (cont)

2. Remove rear sight (1) from receiver assembly (2).

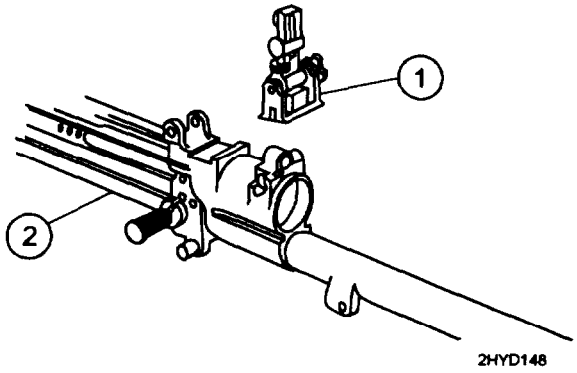

REPAIR

1. Repair by replacing all authorized components.

2. Additional maintenance procedures for subassemblies are contained in the following work packages:

	Work Package
Barrel and bipod assembly	WP 0031 00
Breech bolt assembly	WP 0028 00
Cocking handle assembly	WP 0043 00
Cover assembly	WP 0034 00
Forearm assembly (M60 only)	WP 0039 00
Operating rod assembly	WP 0029 00
Rear sight (M60 only)	WP 0040 00
Gun receiver assembly	WP 0044 00
Shoulder gun stock assembly (M60 only)	WP 0027 00
Trigger mechanism grip assembly (M60 only)	WP 0030 00

TEST/INSPECTION

NOTE

Small arms gages will be inspected and certified annually. The gages will not be used unless they are accompanied with the appropriate gage record.

LOOSE RECEIVER TEST

1. a. Check for loose receiver. Remove all major assemblies and internal components (WP 0007 00 and WP 0044 00).

TEST/INSPECTION (cont)

LOOSE RECEIVER TEST (cont)

b. Clamp receiver assembly (1) securely in machinist's vise equipped with jaw caps.

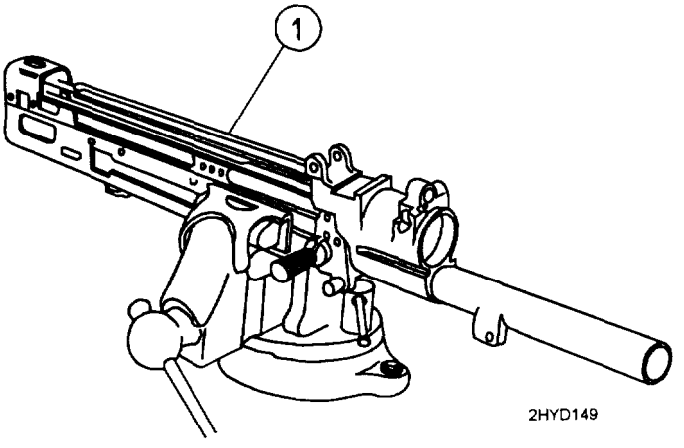

2. Place combination square (2) against receiver assembly (1). Combination square (2) should be parallel to receiver assembly (1) with the edge of its blade touching the side of receiver assembly (1).

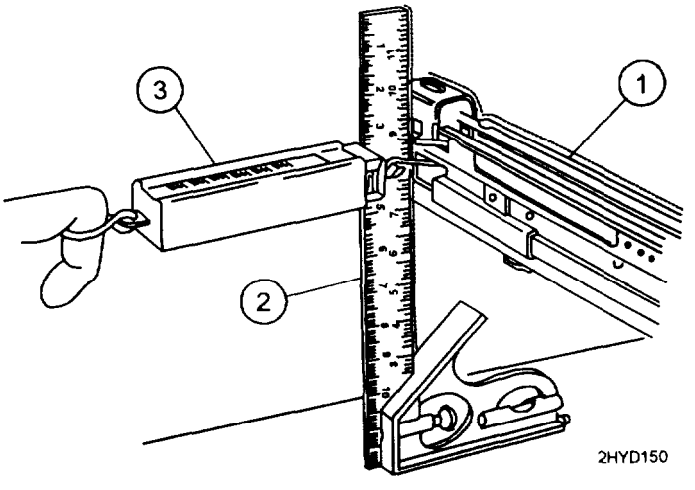

3. Attach dial indicating scale (3) to rear of receiver assembly (1).

NOTE

In the following step, after obtaining 10 pounds of pressure on dial indicating scale, release pressure and do not move combination square.

4. Pull dial indicating scale (3) to 10 pounds of pressure and allow combination square (2) to move with receiver assembly (1).

TEST/INSPECTION (cont)

LOOSE RECEIVER TEST (cont)

5. Attach dial indicating scale (3) on other side of receiver assembly (1) and pull to 10 pounds of pressure. Butt machinist's steelrule (4) against receiver assembly (1) while holding pressure.

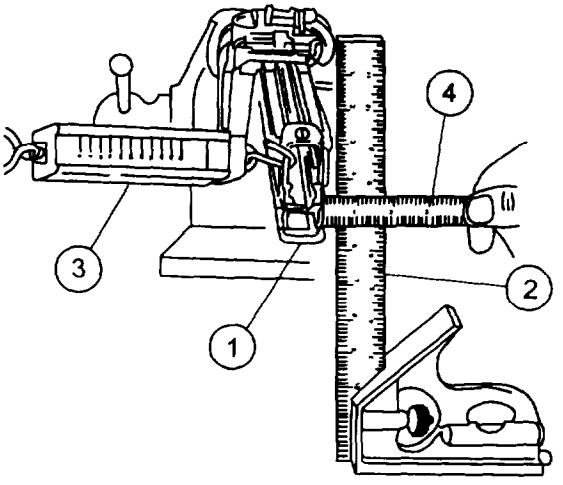

2HYD151

6. Read distance between receiver assembly (1) and blade of combination square (2). Total horizontal movement should not exceed 3/32 (0.094) of an inch.

7. Remove dial indicating scale (3).

8. Move combination square (2) against receiver assembly (1), and attach dial indicating scale (3) to bottom of receiver assembly (1).

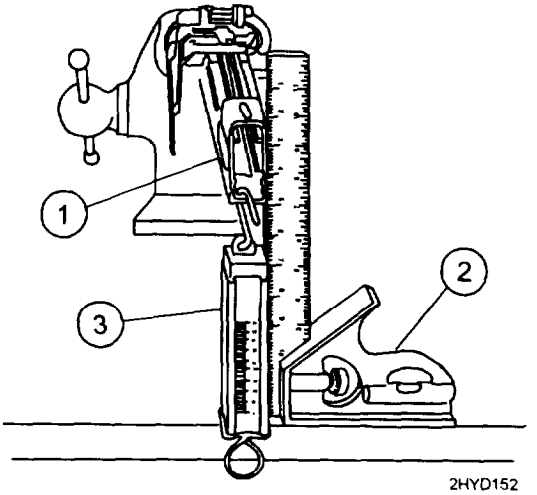

2HYD152

9. Mark receiver assembly (1) at whole number increments for reference point.

10. Pull dial indicating scale (3) to 10 pounds of pressure and hold it. Mark a line on the blade of combination square (2), or on the rear of receiver assembly (1), with pencil.

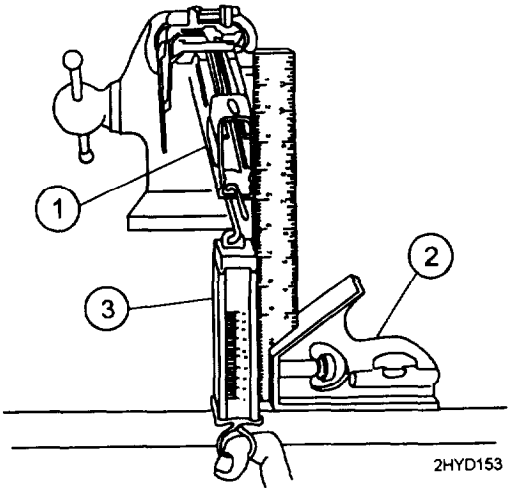

11. Remove dial indicating scale (3).

12. Attach dial indicating scale (3) to upper side of receiver assembly (1), pull dial indicating scale (3) to 10 pounds of pressure, and hold it.

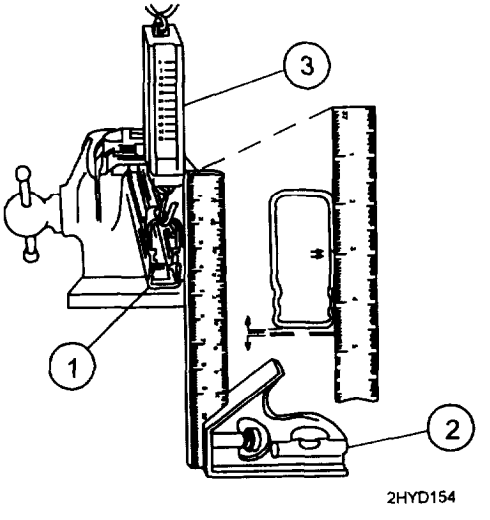

13. Measure vertical movement by using scribe line as a reference and reading against combination square (2). Total vertical movement should not exceed 3/32 (0.094) of an inch.

14. Remove dial indicating scale (3) from receiver assembly (1).

TEST/INSPECTION (cont)

LOOSE RECEIVER TEST (cont)

NOTE

Receiver assemblies exceeding the maximum looseness tolerance of 3/32 (0.094) of an inch vertically or horizontally will be judged unserviceable. Receiver assemblies having tolerances of less than 3/32 (0.094) of an inch in either direction will be judged serviceable.

15. Inspect receiver assembly (1) and weld areas (5, 6, and 7). Minute or full length cracks in welds are considered serviceable providing they pass the looseness check of 3/32 (0.094) of an inch, Cracks in the base metal of the receiver assembly (1) are a reason to consider it unserviceable.

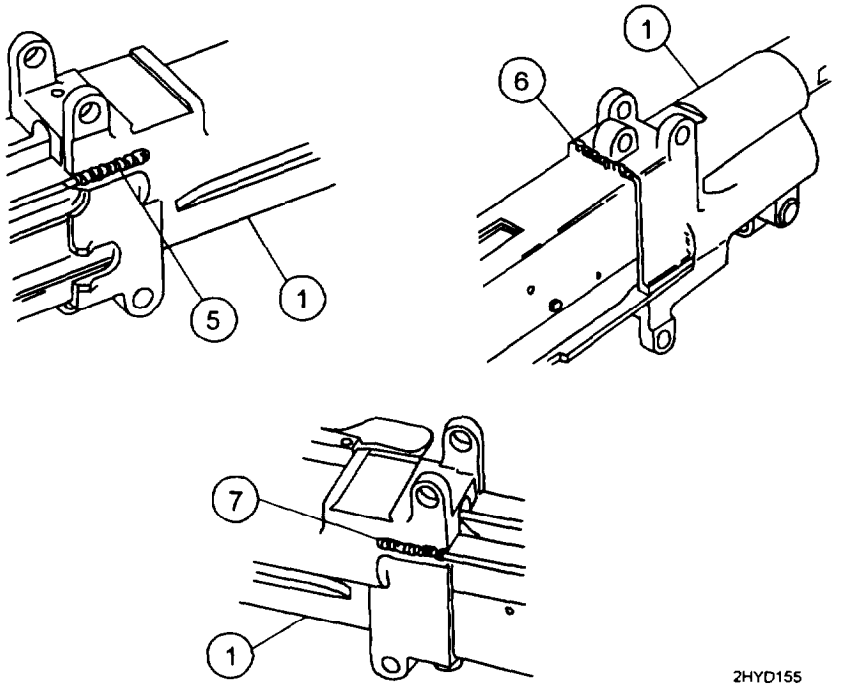

NOTE

Same procedures will be utilized when checking breech bolt and barrel for proper preembarkation headspace.

16. Raise barrel muzzle up to about 30 to 45 degree angle so locking surface can be seen clearly.

17. Moderate to severe mutilation or chipping on either surface shall be cause for removing barrel from service.

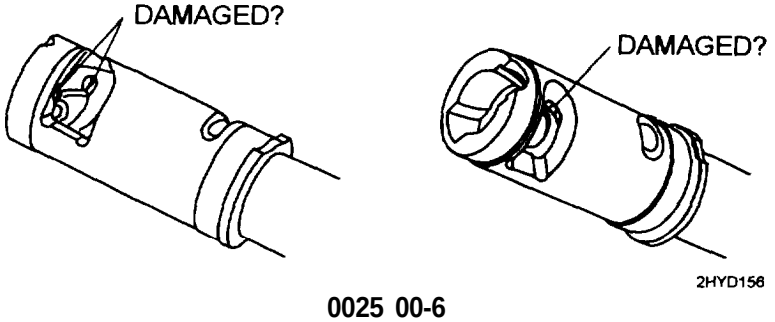

18. Lower barrel muzzle to about 30 to 45 degree angle so cam curved surfaces can be seen clearly.

19. Raised burr on cam cover shall be removed with a smooth half round file and crocus cloth.

20. Return bad to service if headspace check is within tolerance.

BREECH BOLT TEST

1. Disassemble bolt assembly.

2. Using a firing pin protrusion gage and plain cylindrical plug gage, test breech bolt assembly.

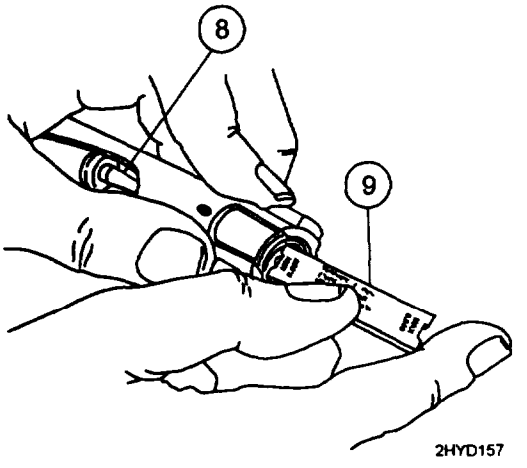

3. Push forward firing pin (8) and measure the exposed length with firing pin protrusion gage (9). Firing pin (8) should protrude a minimum of 0.035 inches to a maximum of 0.043 inches.

4. Push firing pin (8) rearward using plain cylindrical plug gage (10). The gage shall not enter the firing pin hole. The body of breech bolt assembly (11) will be replaced if the hole is oversized.

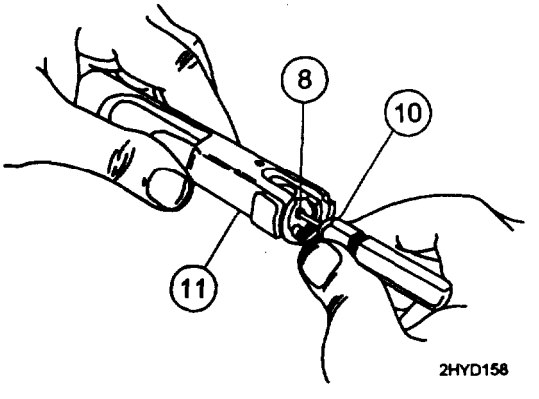

TEST/INSPECTION (cont)

BREECH BOLT TEST (cont)

WARNING

The breech bolt assembly used with the weapon will be the only one used when checking headspace. New breech bolt assemblies or test bolt gages will not be used as a standard.

Do not intermix breech bolt assembly or barrel and bipod assembly without checking headspace requirements.

NOTE

If headspace is faulty, a test bolt gage is required to determine if the barrel or breech bolt is defective. Use of a new breech bolt assembly is authorized only in a contingency situation, where it becomes imperative for deployment of the weapon or to put the weapon on-line, until a test bolt gage is available.

For annually verified headspace, both barrels (issue and spare) will be checked.

5. Check breech bolt assembly and barrel and bipod assembly for proper headspace using a headspace gage, a test bolt gage, or a new breech bolt assembly.

6. Insert headspace gage (12) in chamber of barrel and bipod assembly (13).

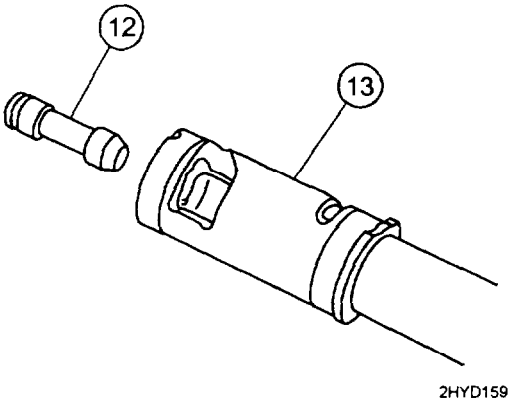

NOTE

Leading edge of breech bolt assembly locking lugs must not touch the locking recess edge of barrel socket when rotated.

If breech bolt assembly locks in chamber of barrel and bipod assembly with headspace gage installed, headspace is incorrect. The following procedures can be used to determine fault.

7. Insert breech bolt assembly (11) in socket of barrel and bipod assembly (13), and turn breech bolt assembly (11) with light finger pressure. Breech bolt assembly (11) should not close.

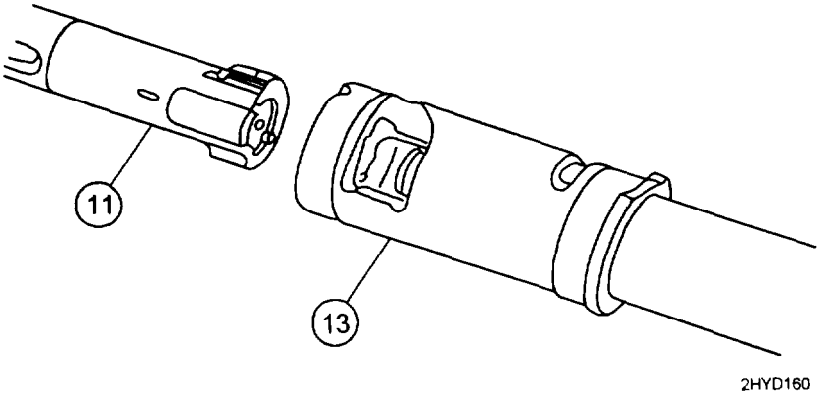

NOTE

A new breech bolt assembly may be used if test bolt gage is not available.

8. Remove breech bolt assembly from socket of barrel and bipod assembly (13), and insert test bolt gage (14) in chamber.

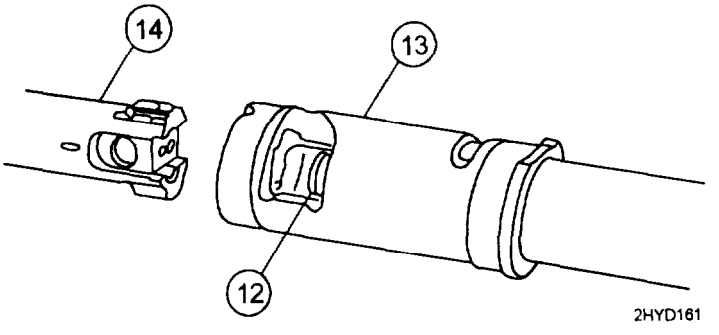

9. If test bolt gage (14) does not close, breech bolt assembly (11) is defective. If test bolt gage closes, barrel and bipod assembly (13) is defective.

10. Remove test bolt gage (14) and headspace gage (12) from barrel and bipod assembly (13).

BARREL AND BIPOD TEST

NOTE

Check the small arms gage kit before using it.

1. Test barrel and bipod assembly for barrel erosion with Small Arms Gage Kit M8 (15).

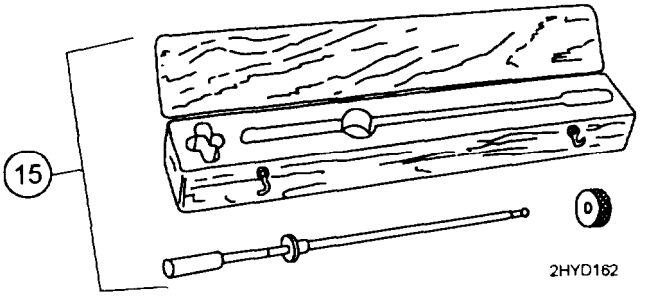

TEST/INSPECTION (cont)

BARREL AND BIPOD TEST (cont)

2. Check barrel erosion gage (16) by sliding collet (17) on gage tube (18) to reject line (19).

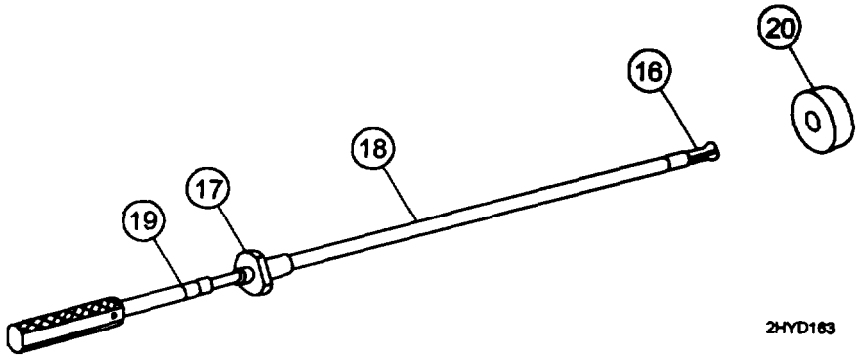

3. Slide wear check gage (20) on barrel erosion gage (16). A drag can be felt **as** barrel erosion gage **(16)** contacts wear check gage (20).

4. Remove wear check gage (20) and slide handle of barrel erosion gage (16) to serviceable range.

5. Insert gage tube (18) in chamber end of barrel and bipod assembly (13) until collet (17) rests against rear of chamber.

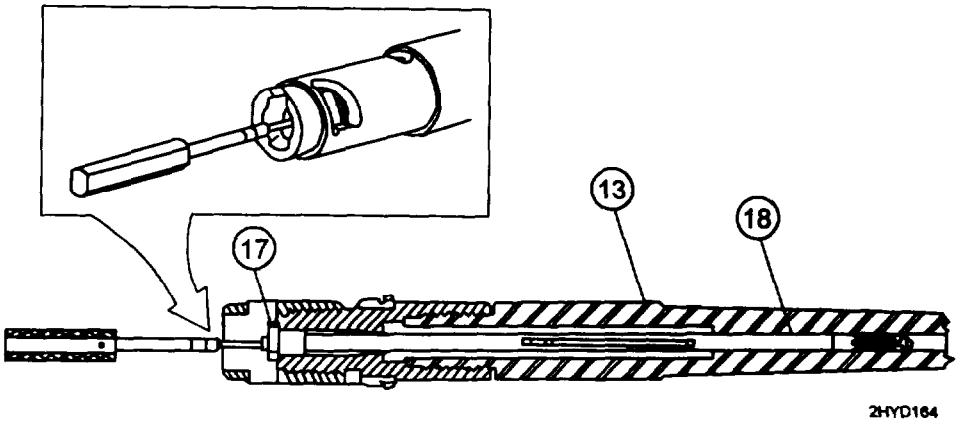

NOTE

If barrel is replaced, remove ID tag, attach to new barrel.

The first mark (20) on barrel erosion gage (16) is a preembarkation mark. It applies to barrels on weapons scheduled for overseas shipment only.

6. Apply light finger pressure to end of handle on barrel erosion gage (16) and read scale against collet (17). Barrel is serviceable until reject line (19) enters collet (17).

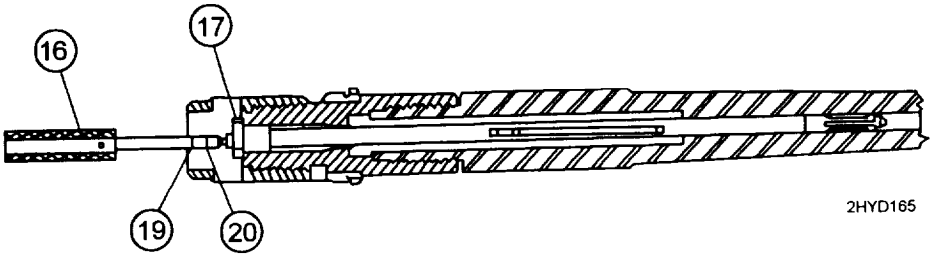

7. Remove and store Small Arms Gage Kit M8.

REASSEMBLY

1. With windage knob toward left side of receiver, slide rear sight (1) on receiver assembly (2) and center it in groove.

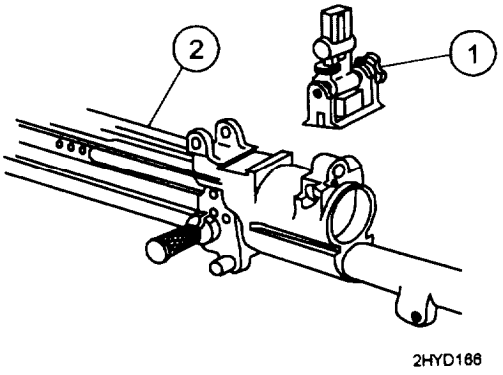

2. Locate original stake marks (3) on receiver assembly (2) used to secure rear sight (1).

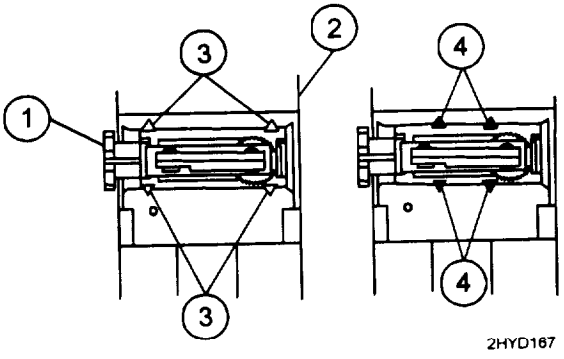

3. Stake new stake marks (4) in four different locations.

TRIGGER PULL TEST

CAUTION

Do not allow breech bolt to slam closed when the weapon is empty, as this will cause damage to locking surfaces on the breech bolt or barrel.

NOTE

Before doing the trigger pull test for both weapons (M60/M60D), the weapons must be reassembled.

1. Position the weapon in a vertical position and hook trigger pull fixture (21) on trigger (22). The sear should not release with less than 6 pounds of weights attached. Carefully add weights (23), as necessary, until sear releases. Total weight should not exceed 11.5 pounds.

2. When trigger pull is light, check for worn sear lug, worn sear notches on operating rod, or a weak sear spring. When trigger pull is excessive, check for burrs on the sear lug and on the sear notches of the operating rod. Check sear spring to see if it is kinked or obstructed.

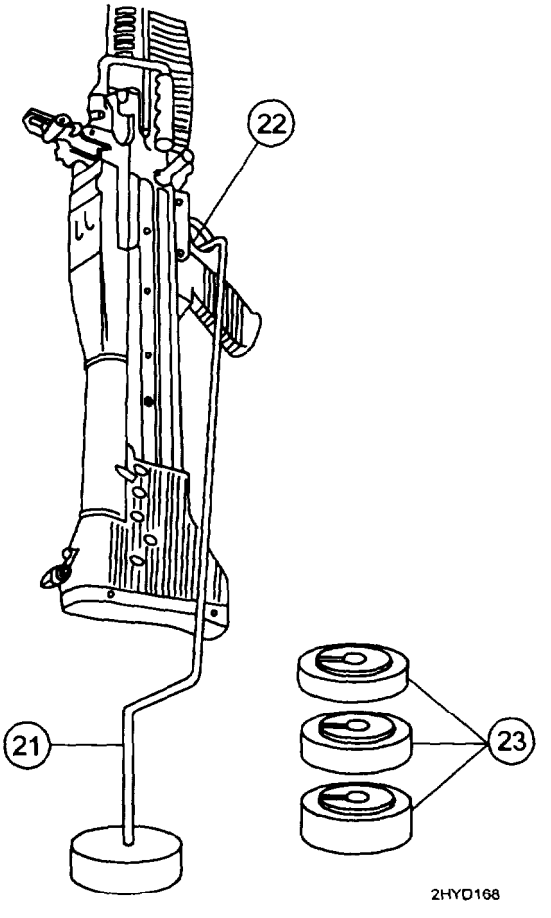

3. Remove weights (23) and trigger pull fixture (21) after test.

END OF TASK

MAINTENANCE OF M6OD MACHINE GUN 0026 00

THIS TASK COVERS:
Disassembly, Test/Inspection, Repair, Reassembly

INITIAL SETUP

Maintenance Level
Direct Support

Applicable Configuration
M60/M60D Machine Guns

Tools and Special Tools
Anvil assembly (Fig. 3 thru 8, WP 0083 00)
Combination square (GGG-S-656 or equivalent)
Dial indicating scale (AAA-S-133 or equivalent)
Firing pin protrusion gage (7274754)
Headspace gage (7274790)

Tools and Special Tools (cont)
Machinist's steel rule (GGG-R-791 or equivalent)
Plain cylindrical plug gage (7458598)
Small Arms Gage Kit M8 (5910297)
Small Arms Tool Kit (SC 4933-95-CL-A11)
Test bolt gage (7799699)

Materials/Parts
Lubricant (as required)

References
TM 9-1005-224-10

General Safety Instructions

CAUTION
Do not allow breech bolt to slam closed when the weapon is empty, as this will cause damage to the locking surfaces on the barrel socket and breech bolt.

NOTE
The disassembly/reassembly procedures in this paragraph are in addition to those described in organizational maintenance (WP 0008 00).

Before doing the trigger pull test for both weapons (M60/M60D), the weapons must be reassembled.

DISASSEMBLY

1. Remove cotter pin (1), headed straight pin (2), lock-release lever (3), and helical compression spring (4).

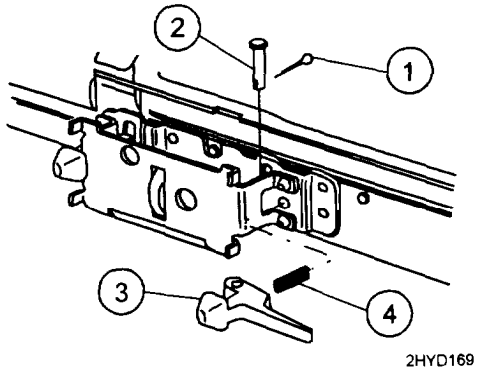

DISASSEMBLY (cont)

2. Remove cotter pin (5), headed straight pin (6) pawl (7), and helical compression spring (8).

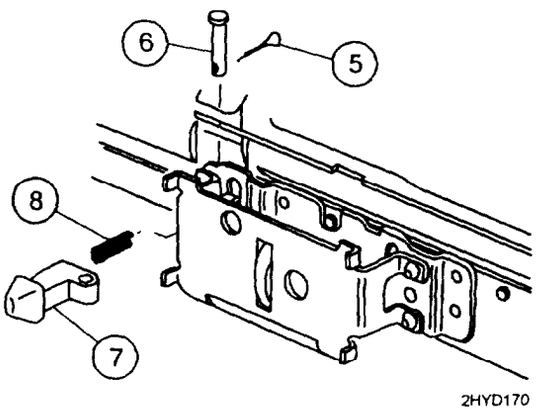

3. Remove solid rivets (9) from magazine bracket (10) only if replacement is necessary.

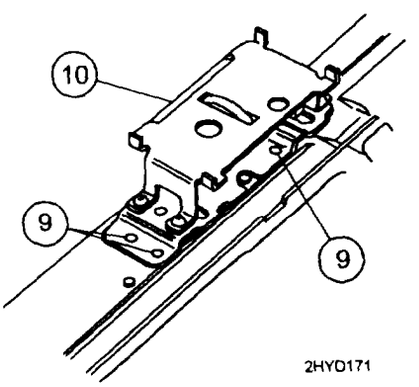

NOTE

Do not remove rear sight unless rear sight base is damaged.

4. Using 1/2-inch drift pin and hammer, drive rear sight (11) out of grooved area on receiver assembly (12).

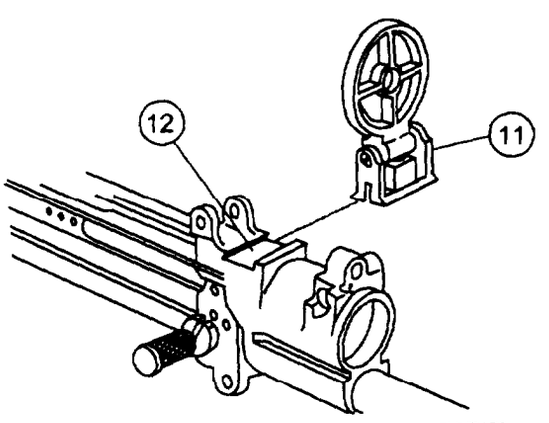

REPAIR

Repair by replacing all authorized components.

Additional maintenance procedures for subassemblies are contained in the following work packages:

	Work Package
Barrel and bipod assembly	WP 0031 00
Breech bolt assembly	WP 0028 00
Cocking handle assembly	WP 0043 00
Cover assembly	WP 0034 00
Gun receiver assembly	WP 0044 00
Operating rod assembly	WP 0029 00
Rear sight (M60D only)	WP 0042 00

REASSEMBLY

1. Insert solid rivets (1) in magazine bracket (2) and through receiver assembly (3).

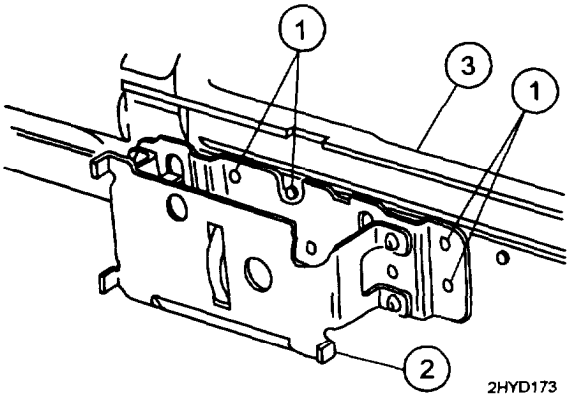

2. Insert fabricated anvil assembly (4) (Figure 3 thru 8, WP 0083 00) in receiver assembly (3) by placing grooved plate (5) in left side rails of receiver assembly (3). Once anvil assembly (4) is properly fitted in receiver assembly (3), push smooth surfaced plate (6) in receiver assembly (3).

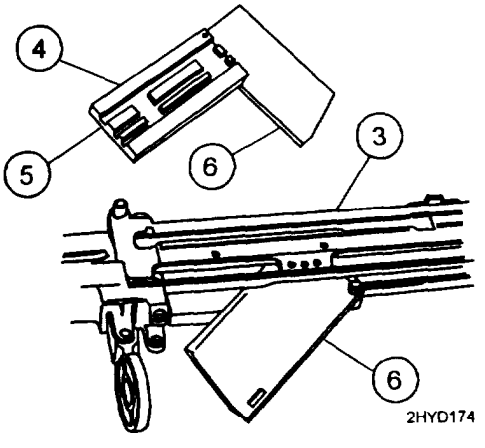

REASSEMBLY (cont)

3. Insert and secure back plate (7) in machinist's vise equipped with jaw caps.

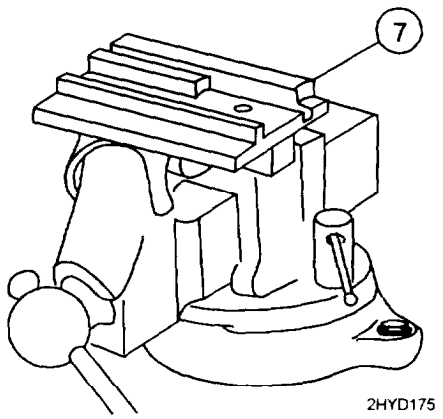

4. Position receiver assembly (3) atop back plate (7). Using a drive pin punch and hammer, tighten solid rivets (1). Pull out smooth surfaced plate (6) and remove anvil assembly (4).

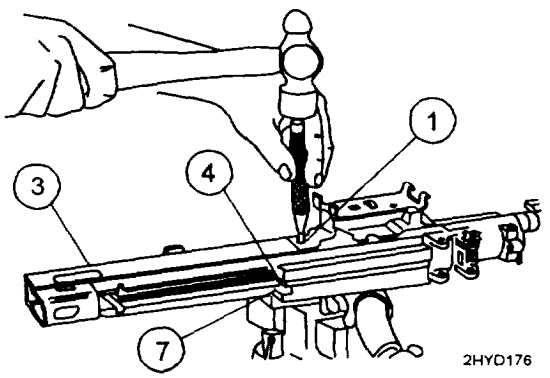

5. Position helical compression spring (8) and pawl (9) in magazine bracket (2). Insert headed straight pin (10) and secure with cotter pin (11).

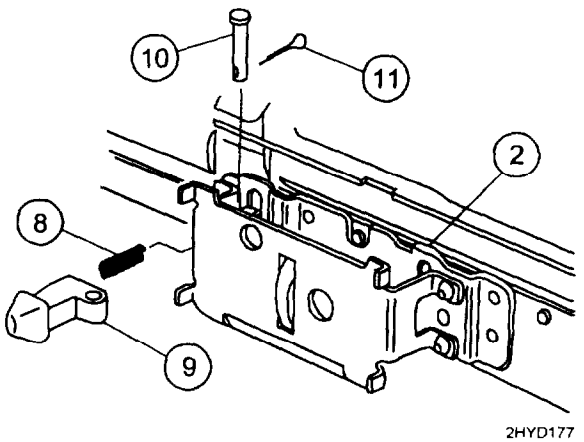

6. Position helical compression spring (12) and lock-release lever (13) in magazine bracket (2). Insert headed straight pin (14) and secure with cotter pin (15).

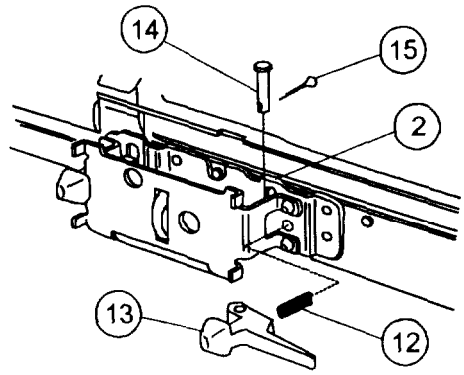

2HYD178

7. Install and center rear sight (16) in grooved space on receiver assembly (3).

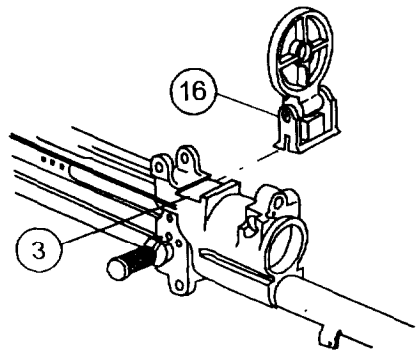

2HYD179

8. Look for old stake marks (17) and restake new stake marks (18) in a different location. Using a center punch and hammer, stake receiver assembly to base of rear sight (16) in four places.

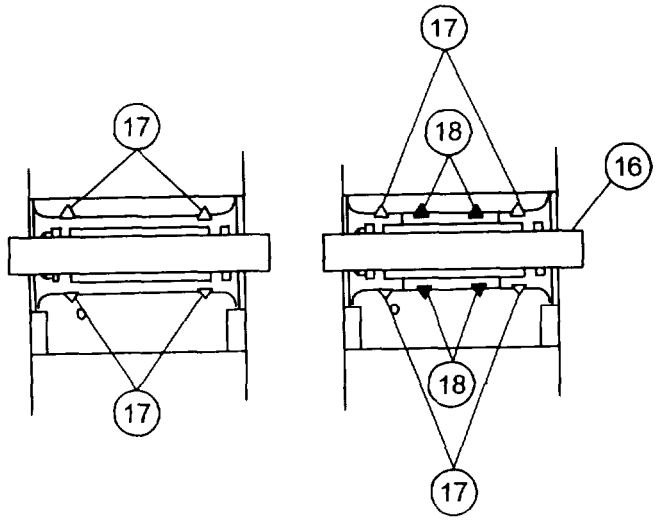

2HYD180

TRIGGER PULL TEST

NOTE

Test and inspection procedures are the same for the M60 (WP 0025 00) and M60D machine guns, except for checking the trigger pull (listed below).

The weapon must be reassembled before doing trigger pull test.

1. Check trigger pull using two trigger pull fixtures and a dummy round.
2. Press in on 'F' to place small arms safety (1) in fire (F) position.
3. First pull cocking handle assembly (2) to the rear, and then push it forward.
4. Press in on 'S" to place small arms safety (1) in safe (S) position.

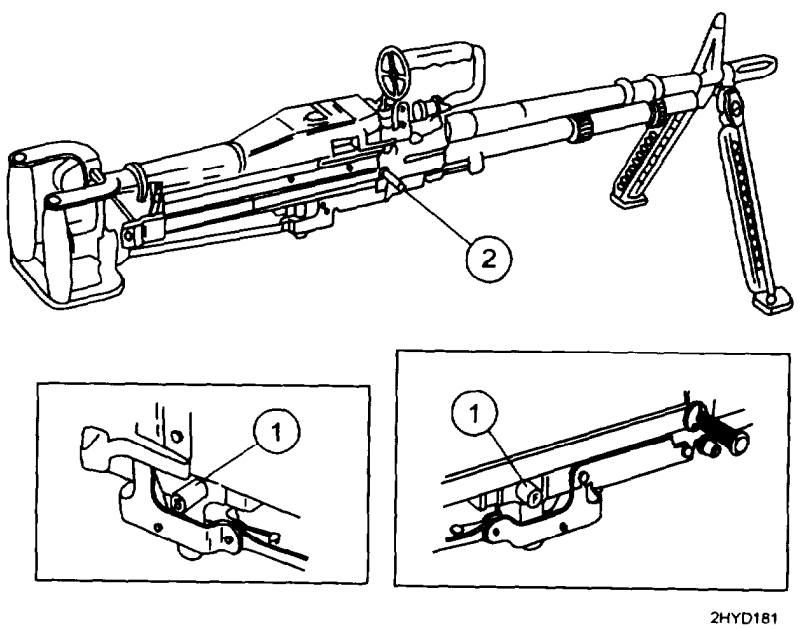

5. Load dummy rounds on cartridge feed tray (see TM 9-1005-224-10).

6. Attach one trigger pull fixture (3) to each of the triggers (4). Place small arms safety (1) in fire (F) position.

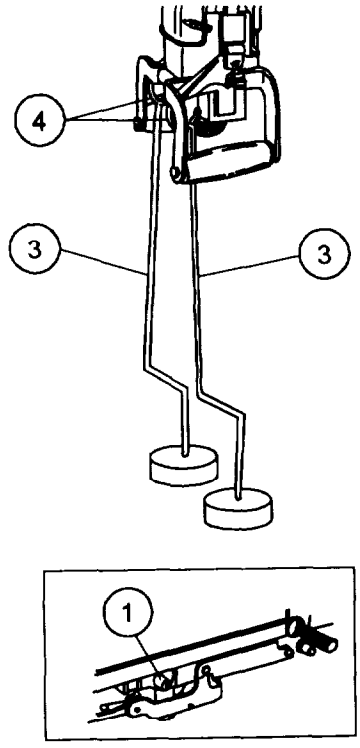

7. Tilt the weapon about 35 to 40 degrees and carefully add weights (5) until sear releases breech bolt assembly. The sear should not release with less than 10 pounds of weight, but should release with less than 20 pounds of weight.

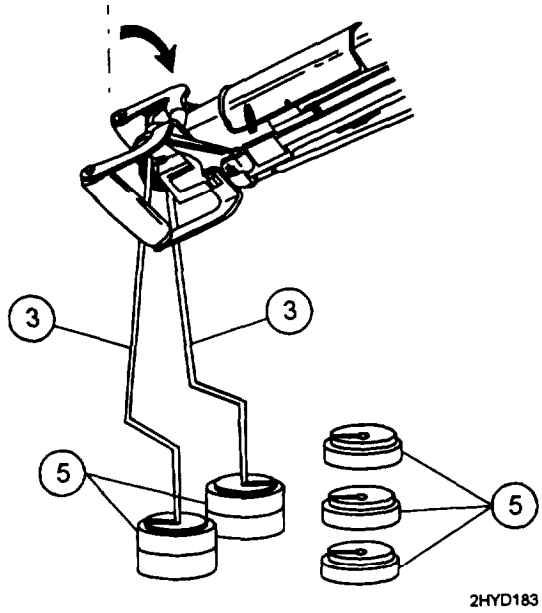

8. Remove weights (5), trigger pull fixtures (3), and the dummy rounds.

END OF TASK

0026 00-7/0026 00-8 blank

MAINTENANCE OF SHOULDER GUN STOCK ASSEMBLY (M60 ONLY) 0027 00

THIS TASK COVERS:
Repair

INITIAL SETUP

Maintenance Level
Direct Support

Applicable Configuration
M60 Machine Gun

Tools and Special Tools (cont)
Small Arms Tool Kit (SC 4933-95-CL-A11)

Materials/Parts
Lubricant, solid film (item 10, WP 0082 00)

REPAIR

1. Remove solid rivets (1) from shoulder gun stock (2) if repair or replacement is necessary.

NOTE
If shoulder gun stock has cracks or enlarged holes in original rivet area, repair using the following procedures. If cracks are not present, install and secure solid rivets (1) in shoulder gun stock (2).

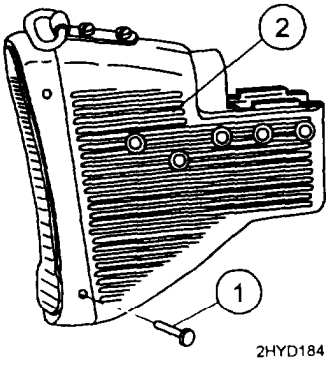

2. Measure in 1/2 inch from solid rivet holes. Select a 1/8-inch diameter, 1/4 inch-long, rivet with countersunk head. Following the instructions furnished with the riveter, install rivets with a hand blind riveter. After blind head rivets are installed, touch up shiny rivet heads with solid film lubricant.

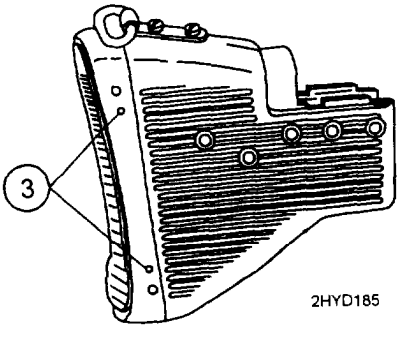

END OF TASK

MAINTENANCE OF BREECH BOLT ASSEMBLY 0028 00

THIS TASK COVERS:
Repair, Test

INITIAL SETUP

Maintenance Level
Direct Support

Applicable Configuration
M60/M60D Machine Guns

Tools and Special Tools
Firing pin protrusion gage (7274754)
Plain cylindrical plug gage (7458598)
Small Arms Tool Kit (SC 4933-95-CL-A11)

General Safety Instructions

WARNING

The breech bolt assembly used in the weapon will be the only one used to check the headspace.

Do not intermix the breech bolt assembly or barrel and bipod assembly without checking headspace requirements.

CAUTION

Do not allow breech bolt to slam closed when the weapon is empty, as this will cause damage to the locking surfaces or the barrel socket and breech bolt.

NOTE

If headspace is faulty, a new breech bolt or test bolt gage is required to determine whether the barrel or breech bolt is defective.

REPAIR

Repair by replacing all authorized components or by stoning (see WP 0011 00).

NOTE

Burrs or raised surfaces may be removed or smoothed using a fine grit sharpening stone. DO NOT change the dimensions of any components by stoning. Cracks, chips, dents, or gouges on components shall be reported to the appropriate maintenance level for repair or replacement.

Cracks, chips, dents, or gouges on breech bolt locking surfaces can damage the barrel socket. Damage to barrel socket locking surfaces can damage the breech bolt.

TEST

NOTE

Small arms gages will be inspected and certified annually. The gages will not be used unless they are accompanied with the appropriate gage record.

Perform BREECH BOLT TEST (see WP 0025 00).

END OF TASK

MAINTENANCE OF OPERATING ROD ASSEMBLY 0029 00

THIS TASK COVERS:
Disassembly, Repair, Reassembly

INITIAL SETUP

Maintenance Level
Direct Support

Tools and Special Tools
Small Arms Tool Kit (SC 4933-95-CL-A11)

Applicable Configuration
M60/M60D Machine Guns

NOTE
Disassembly, reassembly, and stoning procedures are covered in WP 0011 00.

DISASSEMBLY

Remove spring pin (1), headless straight pin (2), and yoke roller (3) from operating rod assembly (4).

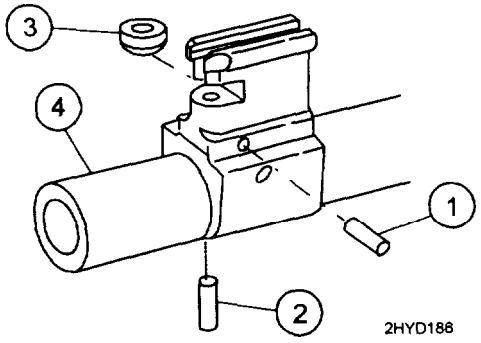

REPAIR

Repair by replacing all authorized components.

REASSEMBLY

Insert yoke roller (3) in slot of operating rod (4). Insert headless straight pin (2) and spring pin (1).

END OF TASK

MAINTENANCE OF TRIGGER MECHANISM GRIP ASSEMBLY (M60 ONLY) 0030 00

THIS TASK COVERS:
Repair

INITIAL SETUP

Maintenance Level
Direct Support

Tools and Special Tools
Small Arms Tool Kit (SC 4933-95-CL-A11)

Applicable Configuration
M60 Machine Gun

NOTE
Disassembly and reassembly of trigger mechanism grip assembly is covered in WP 0013 00.

REPAIR

Repair by replacing all authorized components.

END OF TASK

MAINTENANCE OF BARREL AND BIPOD ASSEMBLY 0031 00

THIS TASK COVERS:
Disassembly, Repair, Reassembly, Test

INITIAL SETUP

Maintenance Level
Direct Support

Applicable Configuration
M60/M60D Machine Guns

Tools and Special Tools
Headspace gage (7274790)
Small Arms Gage Kit M8 (5910297)
Small Arms Tool Kit (SC 4933-95-CL-A11)
Test bolt gage (7799699)

Materials/Parts (cont)
Cloth, abrasive (crocus) (item 5, WP 0082 00)
Dry cleaning solvent (item 7, WP 0082 00)
Gloves, rubber (item 8, WP 0082 00)
Lubricant (as required)
Lubricant, solid film (item 10, WP 0082 00)
Rag, wiping (item 13, WP 0082 00)

Troubleshooting References
Refer to WP 0006 00

References
TM 9-1005-224-10

General Safety Instructions

WARNING

The breech bolt assembly used in the weapon will be the only one used to check headspace.

Do not intermix the breech bolt assembly or barrel and bipod assembly without checking headspace requirements.

NOTE

Headspace will be gaged annually using appropriate gages.

If headspace is faulty, a new breech bolt or test bolt gage is required to determine whether the barrel or breech bolt is defective.

DISASSEMBLY

1. Refer to WP 0015 00 for disassembly of the gas cylinder system.

2. Turn barrel and bipod assembly (1) upside down, and place it in a machinist's vise equipped with vise jaw caps. Tighten vise just enough to hold barrel and bipod securely.

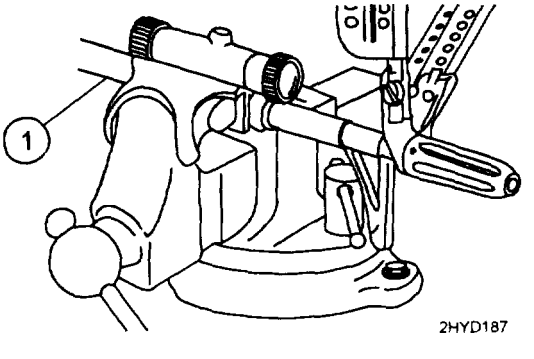

MAINTENANCE OF BARREL AND BIPOD ASSEMBLY (cont) 0031 00

DISASSEMBLY (cont)

3. Using a portable electric drill and 7/64-inch twist drill, drill off stake marks from both sides of flash suppressor (2).

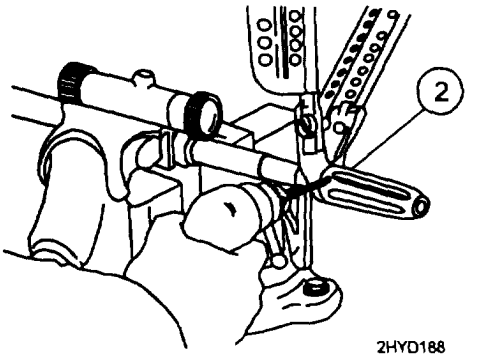

4. Using a drive pin punch, drive out headless straight pin (3) and discard.

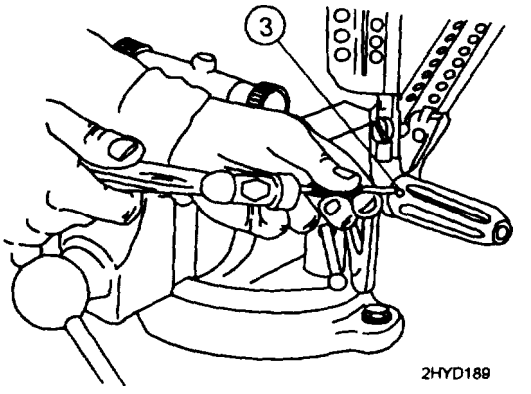

5. Unscrew and remove flash suppressor (2) and machine gun bipod (4) from barrel (5). Remove barrel (5) from machinist's vise.

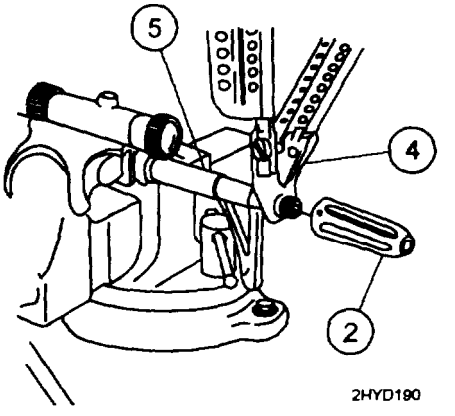

REPAIR

WARNING

Dry cleaning solvent (SD) is flammable. Do not clean parts near an open flame or in a smoking area. Dry cleaning solvent evaporates quickly and has a drying effect on the skin. When used without protective gloves, solvent may cause irritation to or cracking of the skin.

NOTE

No abrasive materials will be used to clean the gas piston or the inside of the gas cylinder (i.e., green pads, steel wool, or crocus cloth). The receiver brush will not be used to clean inside of gas cylinder.

1. Repair by replacing all authorized components,

CAUTION

Keep dry cleaning solvent and lubricant out of the gas cylinder.

2. The use of crocus cloth is restricted to external surfaces only.

3. Following manufacturer's instructions for use, apply solid film lubricant to all external surfaces showing wear and allow weapon to dry 12 hours before being used.

4. Clean and lubricate in accordance with TM 9-1005-224-10.

5. Additional maintenance procedures for subassemblies of the barrel and bipod assembly are listed in the following work packages:

	Work Package
Machine gun bipod	WP 0032 00
Machine gun legs	WP 0033 00

REASSEMBLY

NOTE

When a new flash suppressor or barrel is used, it must be drilled for a headless straight pin. Redrilling may be required on originally installed equipment if tolerances changed.

1. Install machine gun bipod (1) on end of barrel (2).

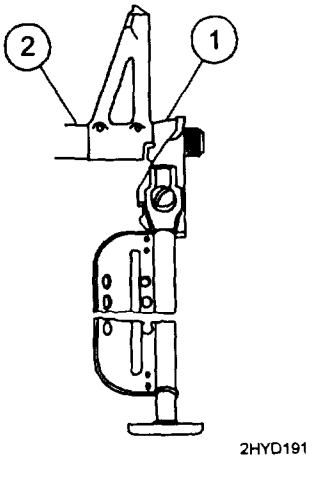

REASSEMBLY (cont)

NOTE

If bipod or bipod leg is replaced, remove ID tag, and attach to new bipod/leg.

2. Screw flash suppressor (3) on end of barrel (2). Tighten and position flash suppressor (3) so one prong will align with gas cylinder. Check that machine gun bipod (1) swings freely from side to side. Spacing between machine gun bipod (1) and flash suppressor (3) should not exceed a maximum of 0.020 inch.

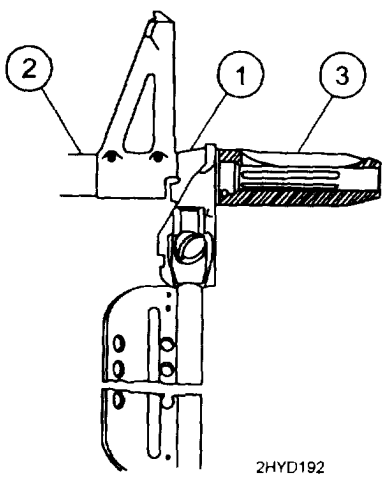

3. Clamp barrel (2) in a machinist's vise equipped with vise jaw caps. Using flash suppressor (3) as a guide, drill #31 drill (0.120) for the new headless straight pin.

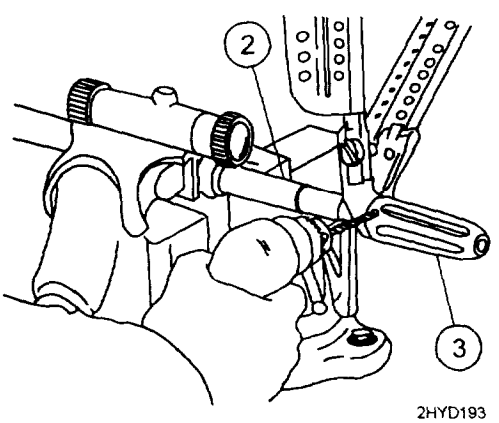

4. Drive headless straight pin (4) in hole (5), center the pin in the flash suppressor and stake to secure both ends of headless straight pin (4). Loosen machinist's vise and remove barrel and bipod assembly (6).

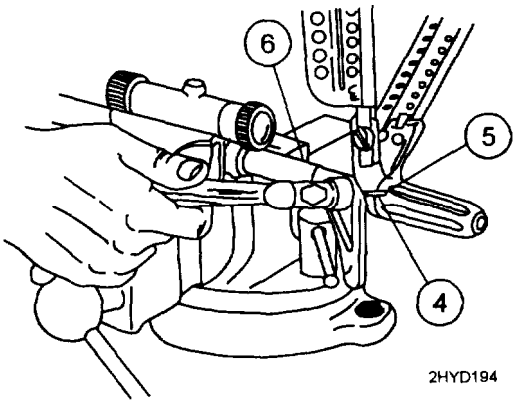

5. Clean rusted metal surfaces with crocus cloth. Wash thoroughly with dry cleaning solvent (SD).

CAUTION

Make sure solid film lubricant does not enter into the gas cylinder.

6. Following manufacturer's instructions for use, apply solid film lubricant to all external surfaces showing wear and allow weapon to dry 12 hours before being used.

7. Refer to WP 0015 00 for reassembly procedures for the gas cylinder assembly.

NOTE

Bipod legs must be open to work on the gas cylinder assembly.

TEST

WARNING

The breech bolt assembly used in the weapon will be the only one used to check headspace.

Do not intermix the breech bolt assembly or barrel and bipod assembly without checking headspace requirements.

NOTE

Headspace will be gaged annually using appropriate gages.

If headspace is faulty, a new breech bolt or test bolt gage is required to determine whether the barrel or breech bolt is defective.

The test procedure below is in addition to those performed in BARREL AND BIPOD TEST (see WP 0025 00).

Visually check the barrel extension locking surfaces for cracks.

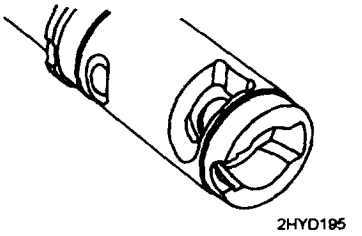

NOTE

If barrel is replaced, remove ID tag, and attach to new barrel.

1. Place the barrel and bipod assembly in a vise equipped with vise jaw caps. Tighten vise just enough to hold the assembly securely.

2. Attach a dial scale (1) to the foot (2) of leg assembly, depress the foot retainer button (3) fully and pull straight down. The leg assembly must extend and retract the full length of travel with a maximum force of 10 pounds. Repeat the procedure on the other leg.

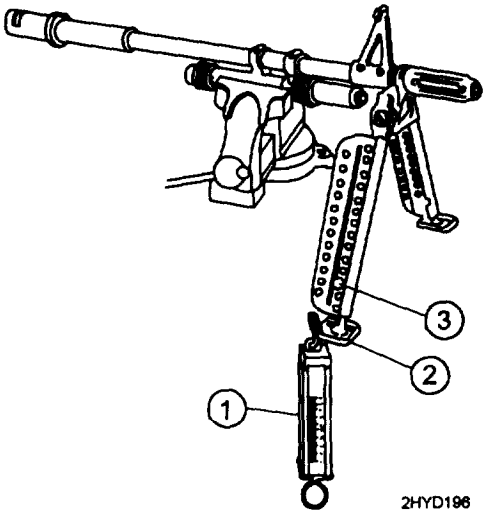

END OF TASK

MAINTENANCE OF MACHINE GUN BIPOD 0032 00

THIS TASK COVERS:
Disassembly, Repair, Reassembly

INITIAL SETUP

Maintenance Level
Direct Support

Applicable Configuration
M60/M60D Machine Guns

Tools and Special Tools
Small Arms Tool Kit (SC 4933-95-CL-A11)

Materials/Parts
Lubricant, solid film (item 10, WP 0082 00)

NOTE
The following procedures are performed when disassembling and reassembling both bipod legs.

DISASSEMBLY

1. Clamp end of bipod leg (1) in a machinist's vise equipped with vise jaw caps.

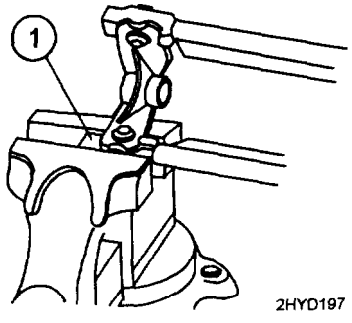

2. Grind off end of shoulder screw (2) with a rotary grinder or hand file. Loosen machinist's vise and remove bipod leg (1).

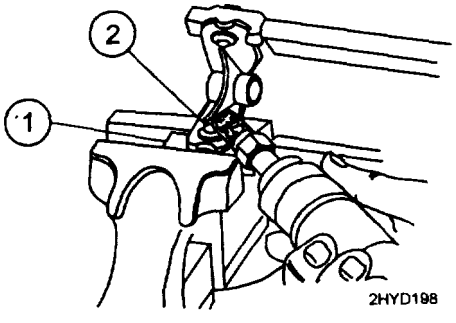

DISASSEMBLY (cont)

3. Remove and discard shoulder screw (2). Separate bipod leg (1) from bipod assembly pivot (3).

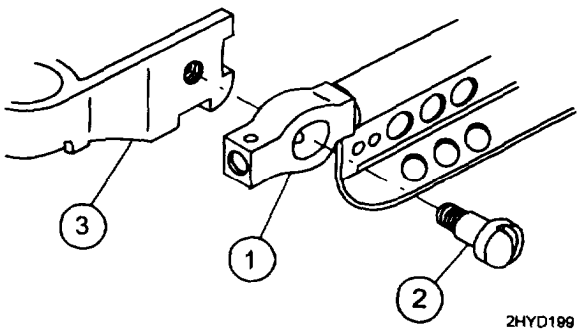

4. Push out headless grooved pin (4) and shake out spring leg retainer (5) helical compression spring (6) and headed straight pin (7) from bipod leg (1).

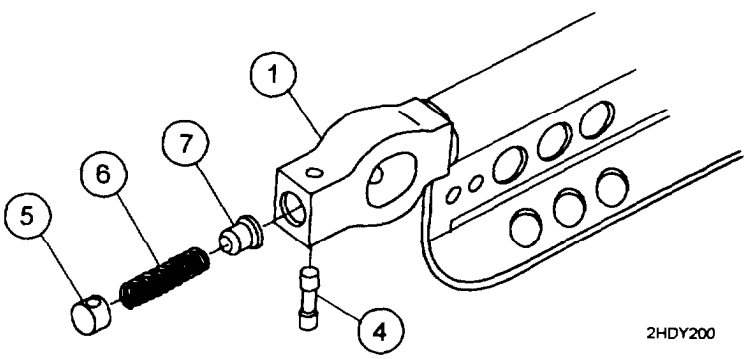

REPAIR

1. Repair by replacing all authorized components.

WARNING

Dry cleaning solvent (SD) is flammable. Do not clean parts near an open flame or in a smoking area. Dry cleaning solvent evaporates quickly and has a drying effect on the skin. When used without protective gloves, solvent may cause irritation to or cracking of the skin.

2. Clean rusted metal surfaces with crocus cloth. Wash thoroughly with dry cleaning solvent (SD).

3. Following manufacturer's instructions for use, apply solid film lubricant to all external surfaces showing wear and allow weapon to dry 12 hours before being used.

REASSEMBLV

1. Insert headed straight pin (1) and helical compression spring (2) in bipod leg (3).

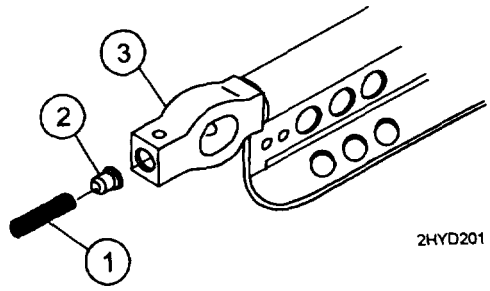

2. Position spring leg retainer (4) so hole aligns with the hole in bipod leg (3). Install headless grooved pin (5).

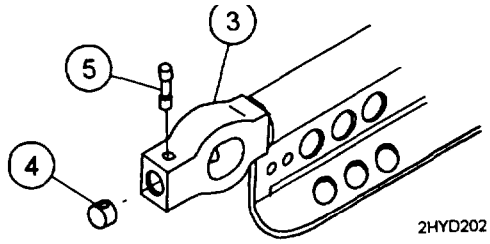

3. Press in on headed straight pin (1), and insert new shoulder screw (6) in bipod leg (3).

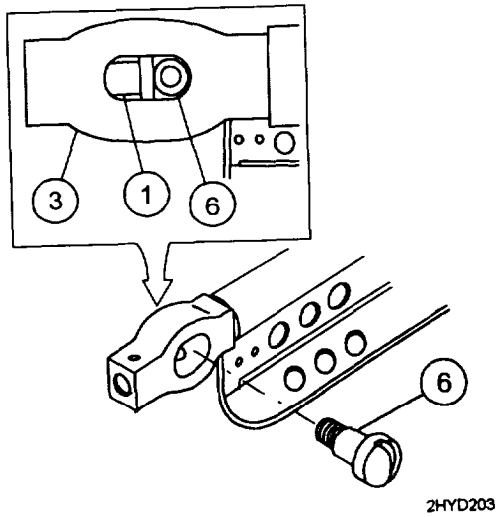

4. Position bipod leg (3) against bipod assembly pivot (7) and tighten shoulder screw (6).

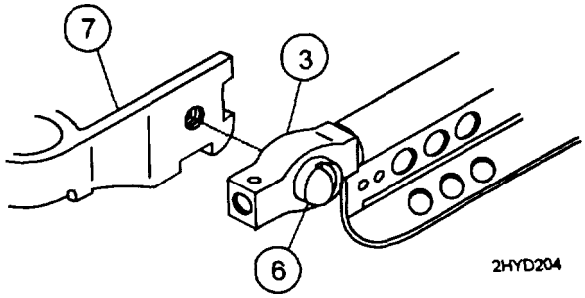

REASSEMBLY (cont)

5. Using a hammer and punch, stake shoulder screw (6) in two places.

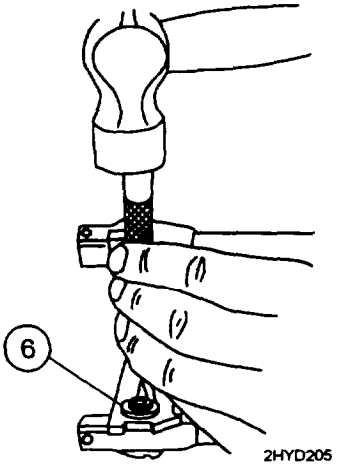

END OF TASK

MAINTENANCE OF MACHINE GUN LEGS 0033 00

THIS TASK COVERS:
Disassembly, Repair, Reassembly

INITIAL SETUP

Maintenance Level
Direct Support

Tools and Special Tools
Small Arms Tool Kit (SC 4933-95-CL-A11)

Applicable Configuration
M60/M60D Machine Guns

DISASSEMBLY

NOTE
If foot of bipod leg rotates 360°, replace the entire leg assembly.

Remove peened end of solid rivets (1) and drive out rivets. Shake machine key (2) out of bipod leg (3).

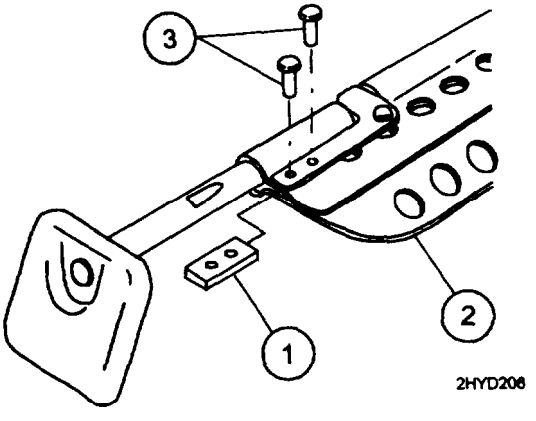

REPAIR

Repair by replacing all authorized components.

REASSEMBLY

NOTE
If bipod or bipod leg is replaced, remove ID tag, and attach to new bipod/leg.

Insert machine key (2) in bipod leg (3). Install and secure solid rivets (1).

END OF TASK

MAINTENANCE OF COVER ASSEMBLY

0034 00

THIS TASK COVERS:
Disassembly, Repair, Reassembly

INITIAL SETUP

Maintenance Level
Direct Support

Applicable Configuration
M60/M60D Machine Guns

Tools and Special Tools
Small Arms Tool Kit (SC 4933-95-CL-A11)

DISASSEMBLY

Refer to WP 0016 00 for disassembly of cover assembly.

REPAIR

1. Repair by replacing all authorized components.

2. Additional maintenance procedures for subassemblies of the cover assembly are contained in the following work packages:

	Work Packages
Cover housing assembly	WP 0038 00
Feed cam assembly	WP 0035 00
Feed lever assembly	WP 0036 00
Feed pawl assembly	WP 0037 00

REASSEMBLY

Refer to WP 0016 00 for reassembly of cover assembly.

END OF TASK

MAINTENANCE OF FEED CAM ASSEMBLY 0035 00

THIS TASK COVERS:
Disassembly, Repair, Reassembly

INITIAL SETUP

Maintenance Level
Direct Support

Applicable Configuration
M60/M60D Machine Guns

Tools and Special Tools
Small Arms Tool Kit (SC 4933-95-CL-A11)

DISASSEMBLY

1. Push retainer plunger (1) back and hold it while feed cam retainer (2) is pushed out. Slowly release pressure on retainer plunger (1).

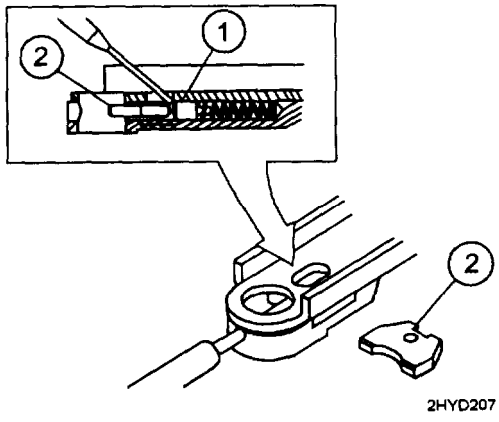

2. Shake retainer plunger (1) and helical compression spring (3) from cam assembly (4).

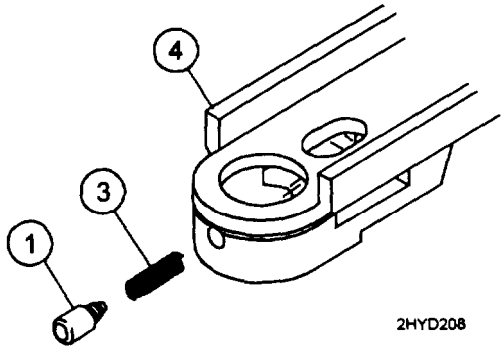

MAINTENANCE OF FEED CAM ASSEMBLY (cont) 0035 00

REPAIR

Repair by replacing all authorized components.

REASSEMBLY

1. Install helical compression spring (1) and retainer plunger (2) in cam assembly (3).

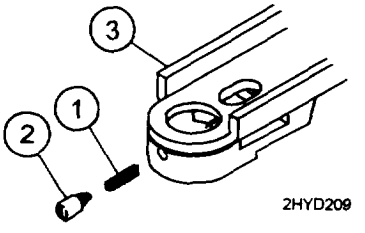

2. Press against retainer plunger (2) with a drive pin punch, and install feed cam retainer (4) in slot. Release pressure and withdraw drive pin punch.

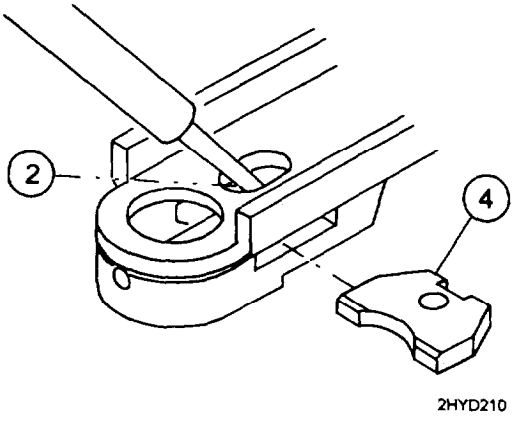

END OF TASK

MAINTENANCE OF FEED LEVER ASSEMBLY 0036 00

THIS TASK COVERS:
Disassembly, Repair, Reassembly

INITIAL SETUP

Maintenance Level
Direct Support

Applicable Configuration
M60/M60D Machine Guns

Tools and Special Tools
Small Arms Tool Kit (SC 4933-95CL-A11)

DISASSEMBLY

Carefully use a screwdriver to free and separate end of spring lever clip (1) from feed lever (2).

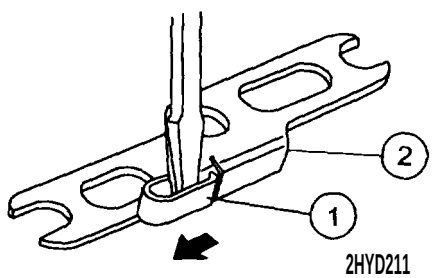

REPAIR

Repair by replacing all authorized components.

REASSEMBLY

Attach spring lever clip (1) to feed lever (2), and slide them together until end of spring lever clip (1) enters slot in rear of feed lever (2).

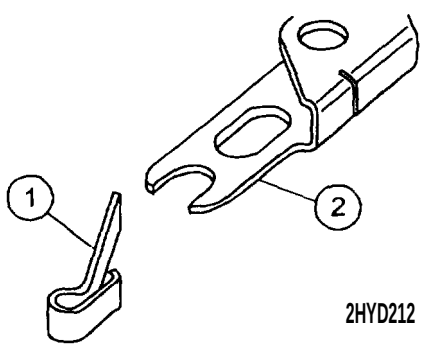

END OF TASK

MAINTENANCE OF FEED PAWL ASSEMBLY 0037 00

THIS TASK COVERS:
Disassembly, Repair, Reassembly

INITIAL SETUP

Maintenance Level
Direct Support

Tools and Special Tools
Small Arms Tool Kit (SC 4933-95-CL-A11)

Applicable Configuration
M60/M60D Machine Guns

DISASSEMBLY

Push out shouldered shaft (1) and remove helical torsion spring (2). Separate chassis assembly (3) from pawl (4).

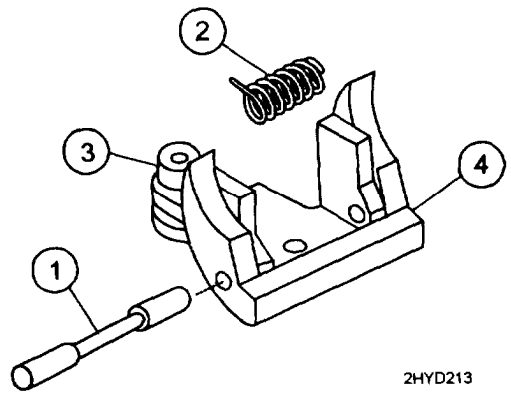

REPAIR

Repair by replacing all authorized components.

REASSEMBLY

1. Assemble chassis assembly (1) into center of pawl (2). Insert 1/16-inch drive pin punch into left side of pawl (2) and through chassis assembly (1) slightly.

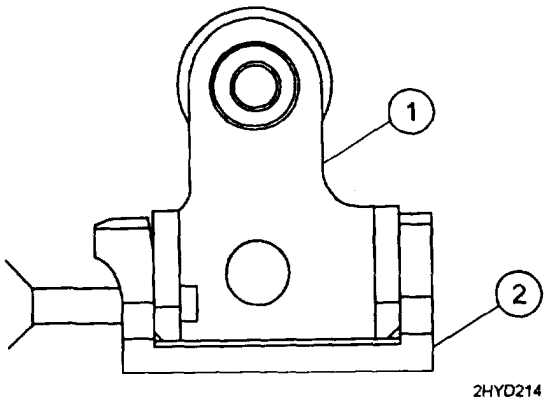

REASSEMBLY

2. Position helical compression spring (3) so the short tang is on the left side and presses against front side of pawl (2).

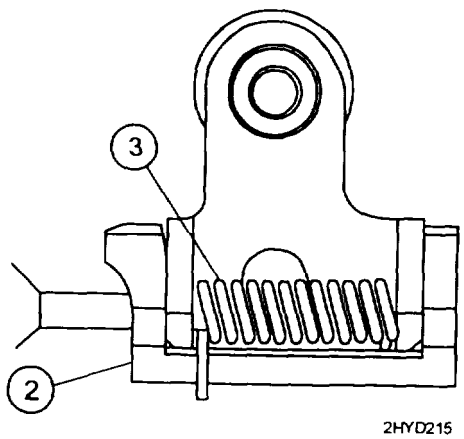

3. Turn helical compression spring (3) longest tang one half turn so end rest against chassis assembly.

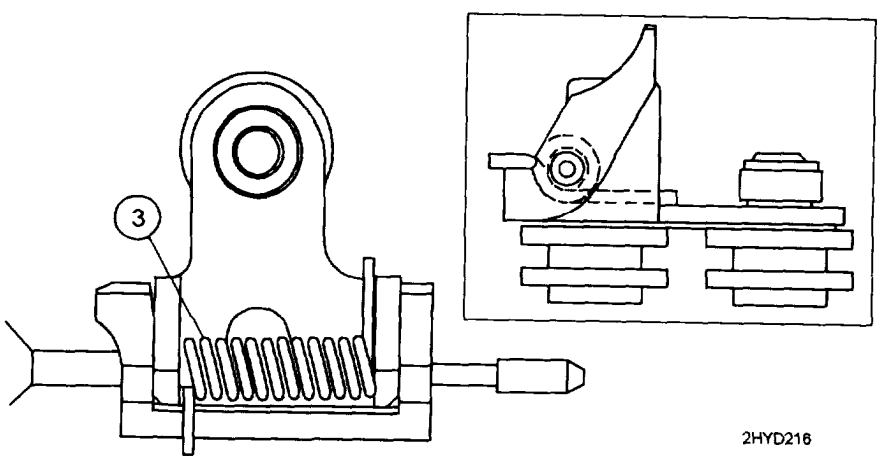

4. Install shouldered shaft (4) into right side of chassis assembly (1) and tap it through to drive pin punch out with the shouldered shaft (4).

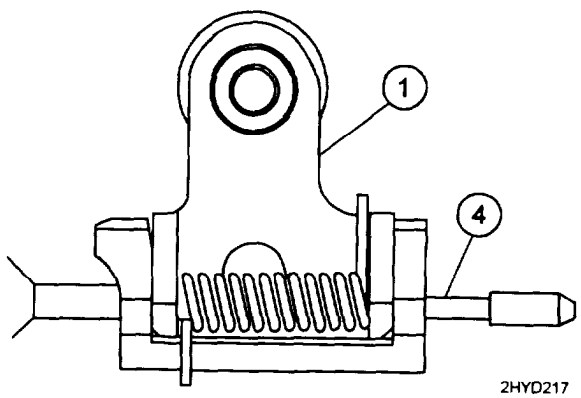

END OF TASK

MAINTENANCE OF COVER HOUSING ASSEMBLY 0038 00

THIS TASK COVERS:
Disassembly, Repair, Reassembly

INITIAL SETUP

Maintenance Level
Direct Support

Applicable Configuration
M60/M60D Machine Guns

Tools and Special Tools
Small Arms Tool Kit (SC 4933-95-CL-A11)

Materials/Parts
Lever Assembly, Latch (7269137)
Rivet bucking tool (Fig. 9, WP 0083 00)
Rivet heading tool (Fig. 10, WP 0083 00)

DISASSEMBLY

1. Remove solid rivets (1), and cam bumper assembly (2).

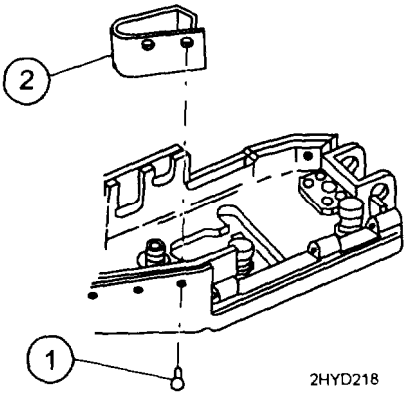

2. Using hand file with file handle, file of heads of solid rivets (3). Using 1/16-inch drive pin punch and hammer, drive out solid rivets (3) and remove cover shield (4).

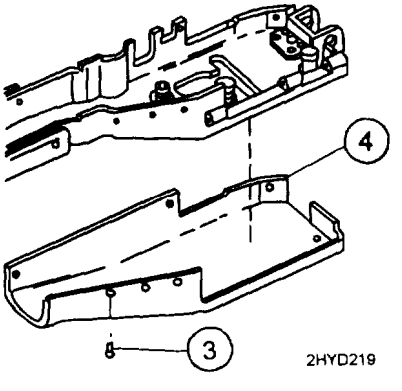

MAINTENANCE OF COVER HOUSING ASSEMBLY (cont) 0038 00

DISASSEMBLY (cont)

NOTE
If cheek pad is the only item requiring maintenance, do not disassemble these items. Go to repair section below for alternate repair instructions.

3. Using a 1/8-inch twist drill and electric drill, drive punch end off of headed shoulder pins (5). Remove and discard headed shoulder pins (5). Lift out flat washers (6) and helical compression springs (7).

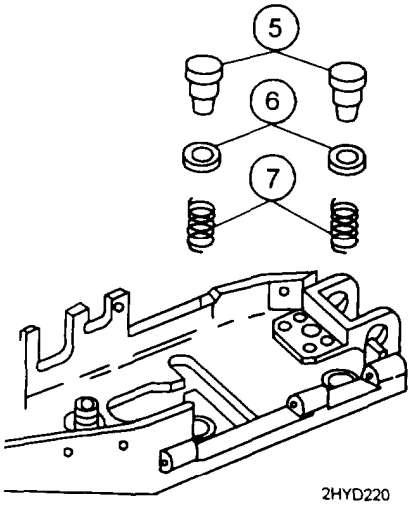

4. Using a 3/16-inch twist drill and an electric drill, drill end of latch lever assembly (8) to remove peened area. Remove and discard latch lever assembly (8). Remove cover latch (9) and helical torsion spring (10).

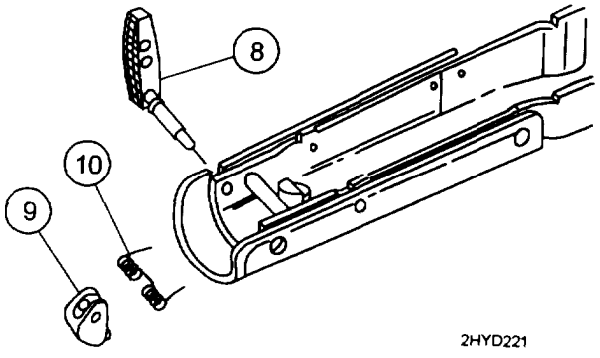

5. Grind off heads of four solid rivets. Using a 1/16-inch punch, drive out solid rivets (11) and separate cheek pad assembly (12) from cover frame assembly (13).

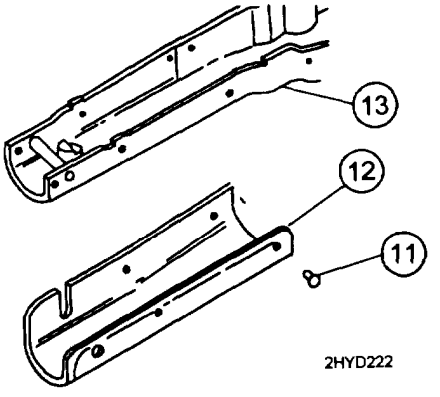

6. Remove headless straight pin (14) from cover frame assembly (13).

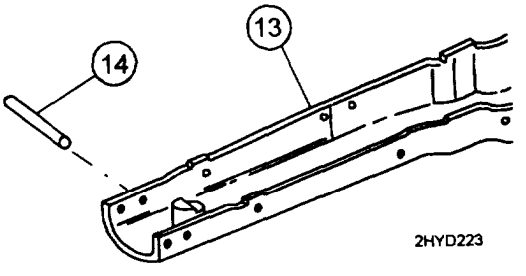

REPAIR

1. Repair by replacing all authorized components.

2. Place corner of cheek pad assembly (1) on a block of wood or steel, as shown. Using a 1/4-inch hand cold chisel and hammer, cut cheek pad assembly (1) along top edge of frame assembly back past latch lever hole.

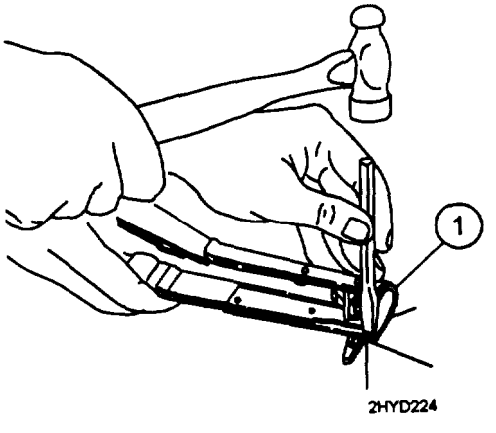

REPAIR (cont)

3. Using slip joint pliers, bend corner of cheek pad assembly (1) back past latch lever hole. Break off corner if possible and discard.

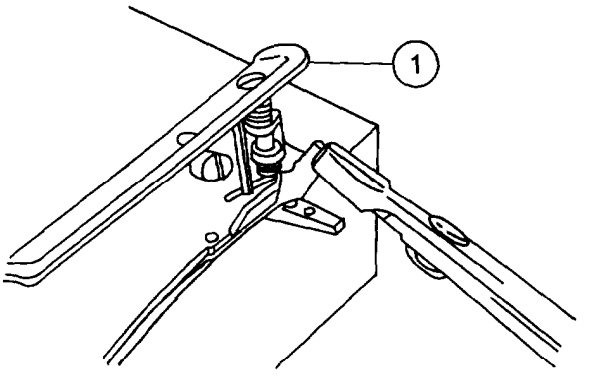

4. Wearing an industrial faceshield and using a utility grinding machine, grind off heads of four solid rivets (2).

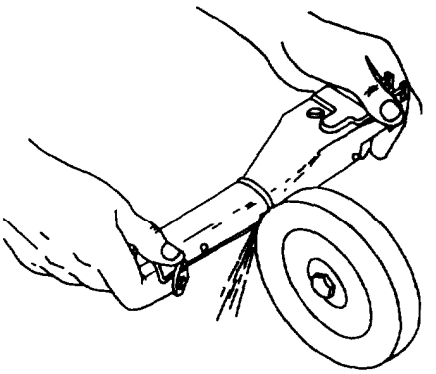

5. Using a 1/16-inch drive pin punch and hammer, drive out four solid rivets (2) from cheek pad assembly (1). Remove cheek pad assembly (1) and discard.

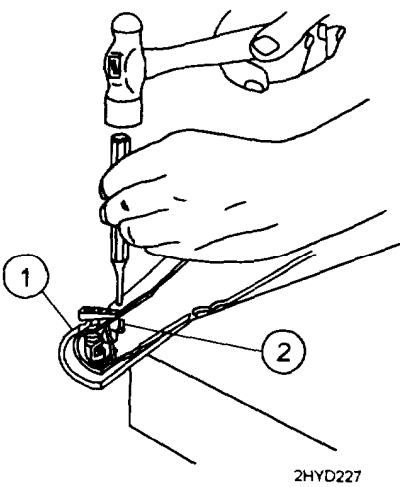

6. Place new cheek pad on a solid surface, as shown. Using hammer and cold chisel, cut down to existing hole of both sides to form a slot. Using hand file, remove all burrs and sharp edges from the slot area.

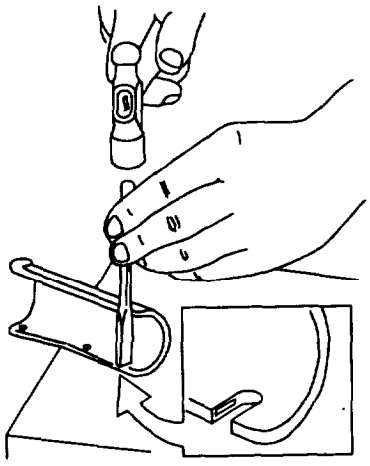

2HYD228

7. Slide cheek pad slotted area around lever shaft (3). Align rivet holes and insert one or two solid rivets (4).

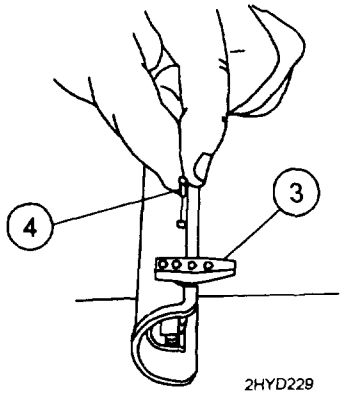

2HYD229

8. Clamp fabricated rivet bucking tool (Fig. 9, WP 0083 00) in the machinist's vise. Position rivet head into the concave recess. Position fabricated rivet heading tool on end of solid rivet. Use hammer to rivet all four rivets.

CAUTION

Do not attempt to touch up shiny metal in the slotted area with solid film lubricant. The process can cause damage to the rubber coating.

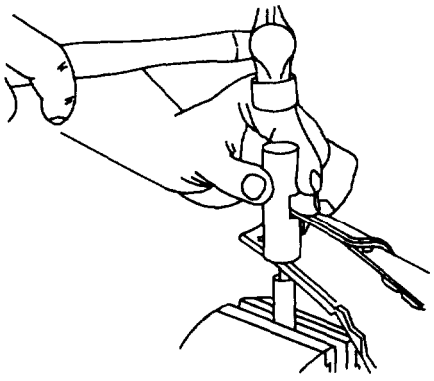

2HYD230

MAINTENANCE OF COVER HOUSING ASSEMBLY (cont) 0038 00

REASSEMBLY

1. Insert headless straight pin (1) through holes of cover frame assembly (2).

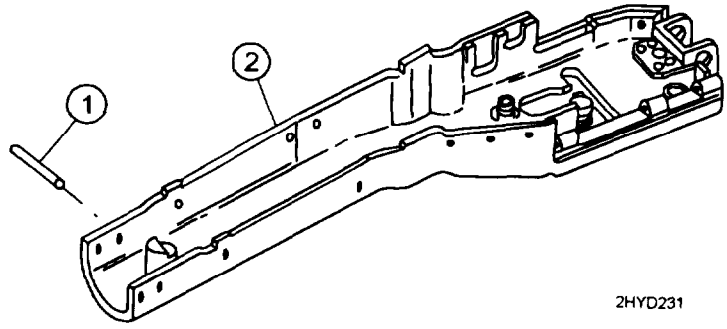

2. Insert helical compression spring (3) so long end of tangs is under headless straight in (1). Position cover latch (4) so tang touches cross section of spring (3). Insert drive pin punch from curved side of the cover frame assembly (2) and through the spring and cover latch (4).

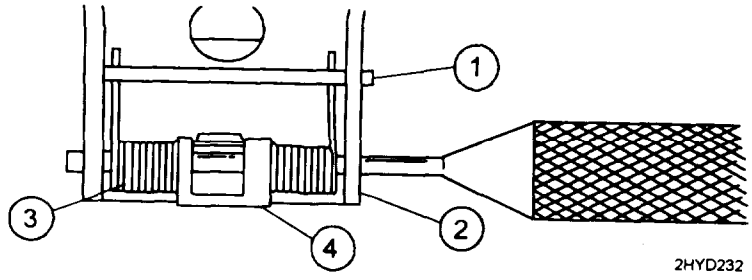

3. Press on helical compression spring (3) in center of cover latch (4) with a flat tip screwdriver. Keep pressure on screwdriver and on helical compression spring (3).

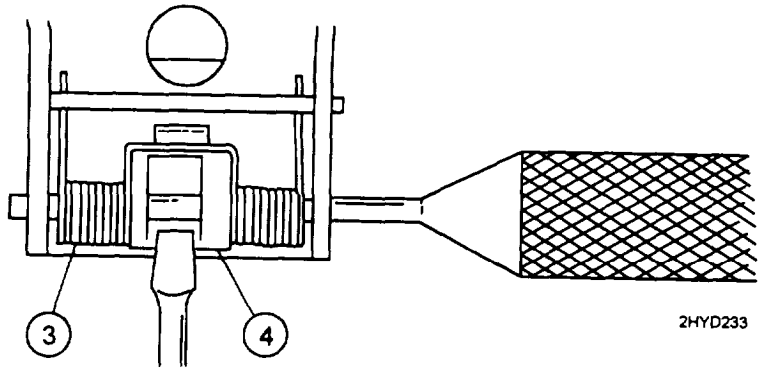

4. Insert new latch lever assembly (5) from the straight side of the cover. Slowly guide the latch lever assembly (5) through spring and gradually work the punch out of other side.

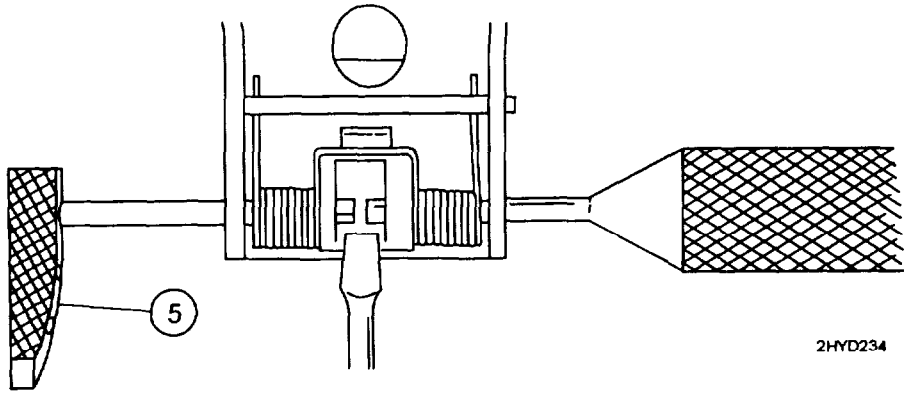

5. Using ballpeen end of hammer, peen end of latch lever assembly (5) in cover frame assembly (2).

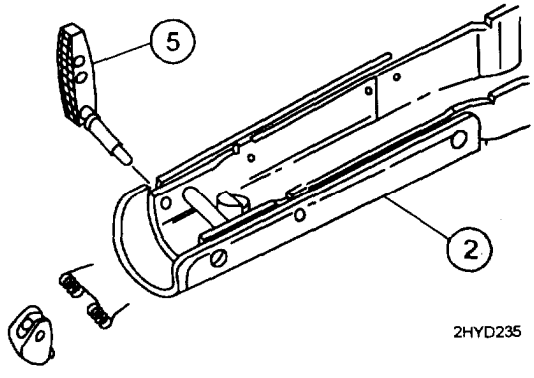

NOTE

New cheek pads will have a slot cut for the latch lever assembly. Unmodified cheek pad may be issued and will require modification using steps 6 through 8 under REPAIR.

6. Assemble shoulder pins (6), flat washers (7), and helical compression springs (8) and install in cover frame assembly (2). Using ballpeen end of hammer, peen ends of headed shoulder pins (6). Ensure that shoulder pins are tight (no movement). Repeat procedures for other pin.

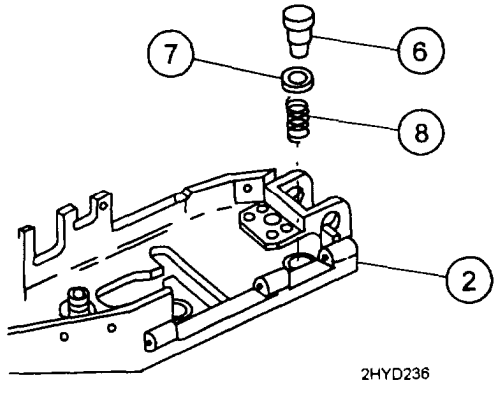

REASSEMBLY (cont)

7. Install cover shield (9) on cover frame assembly (2), align holes, and install solid rivets (10). Do not install solid rivets in holes (11). Secure solid rivets (10).

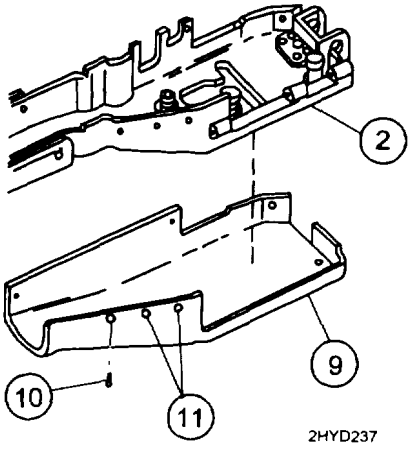

8. Install cam bumper assembly (12) and align holes. Install and secure solid rivets (13).

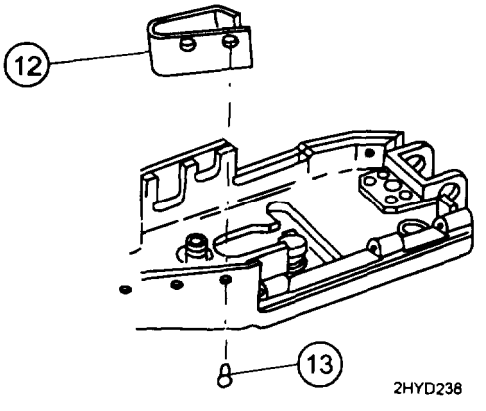

END OF TASK

MAINTENANCE OF FOREARM ASSEMBLY (M60 ONLY) 0039 00

THIS TASK COVERS:
Repair

INITIAL SETUP

Maintenance Level
Direct Support

Applicable Configuration
M60 Machine Gun

Tools and Special Tools
Drilling fixture assembly (Fig. 13, WP 0083 00)
No. 30 twist drill (GGG-D-751)
Small Arms Tool Kit (SC 4933-95-CL-A11)

Materials/Parts
Forearm assembly rib (Fig. 2, WP 0083 00)

REPAIR

1. Repair forearm assembly by replacing broken forearm rib. Remove flat catch spring (1).

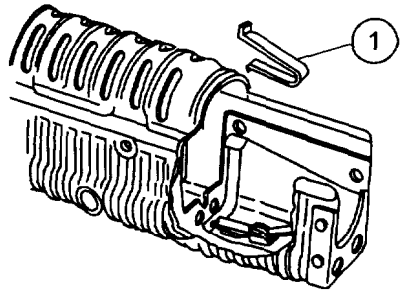

2HYD239

2. Straighten damaged rib (2) as much as possible. Return damaged metal to its original configuration.

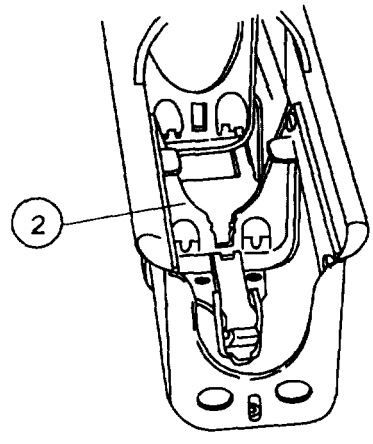

2HYD240

REPAIR (cont)

3. Use 1/8-inch diameter twist drill and drilling fixture assembly (3) as a guide and drill two holes in the damaged rib.

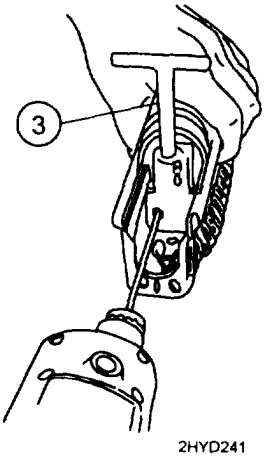

2HYD241

4. Place repair rib (4) (Fig. 2, WP 0083 00) on the side nearest to the catch of damaged rib.

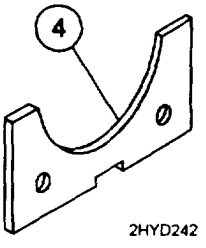

2HYD242

5. Align drilled holes in repair rib (4) with holes in damaged rib (2). Install two rivets using blind head riveter. Make sure notch area (5) is not covered. Make sure curved portion (6) of repair rib (4) does not stick above damaged rib (2). If curved portion (6) is higher than repaired rib (2), use hand file to file off excess repair rib (4).

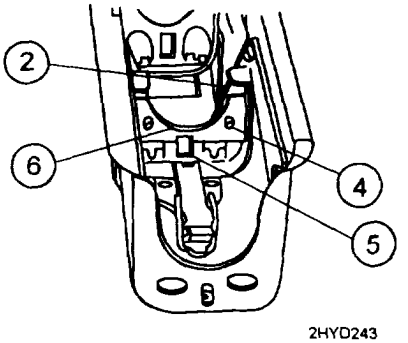

2HYD243

6 . Reinstall flat catch spring (1).

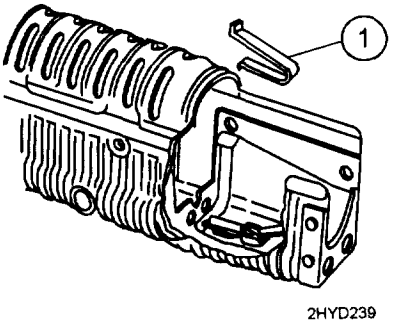

END OF TASK

MAINTENANCE OF REAR SIGHT (M60 ONLY) 0040 00

THIS TASK COVERS:
Disassembly, Repair, Reassembly

INITIAL SETUP

Maintenance Level
Direct Support

Tools and Special Tools
Small Arms Tool Kit (SC 4933-95-CL-A11)

Applicable Configuration
M60 Machine Gun

DISASSEMBLY

NOTE
Remove rear sight from receiver only if required to perform repair.

1. Turn adjustment knob (1) so view of tubular rivet (2) is unobstructed. Place rear sight in vise. Remove tubular rivet (2) and lateral adjustment slide (3). Discard tubular rivet (2).

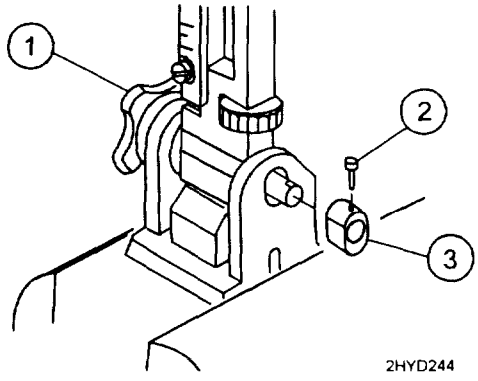

DISASSEMBLY (cont)

CAUTION

Two bearing balls and two helical compression springs are between leaf assembly, and base and lateral knob assembly. Separate carefully to prevent loss of bearing balls.

2. Screw headless shoulder pin (4) out of adjustment knob (1) and remove it while applying slight pressure on leaf assembly (5). Remove leaf assembly (5) bearing balls (6) and helical compression springs (7) from base and lateral knob assembly (8).

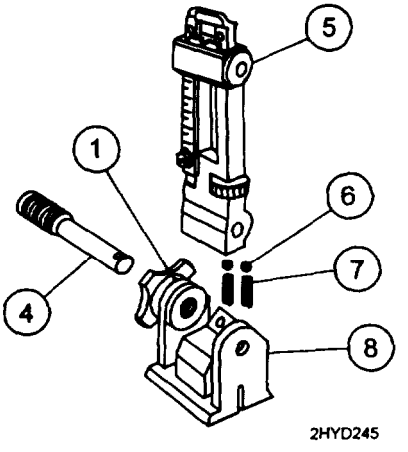

REPAIR

1. Repair by replacing all authorized components.

2. Additional maintenance procedures for subassemblies of the rear sight assembly are contained in the following Work Package:

	Work Package
Leaf assembly	WP 0041 00

REASSEMBLY

1. Insert helical compression springs (1) in holes of base and lateral knob assembly (2). Place one bearing ball (3) on each helical compression spring (1).

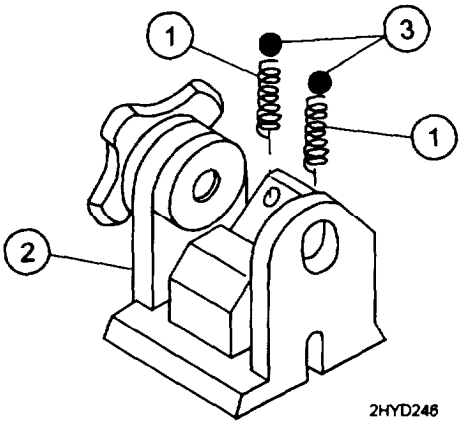

2. Carefully position leaf assembly (4) on base and lateral knob assembly (2), and slide headless shoulder pin (5) in center of adjustment knob (6). Screw headless shoulder pin (5) into adjustment knob (6) until leaf assembly (4) comes in contact with the inside edge of base and lateral knob assembly (2).

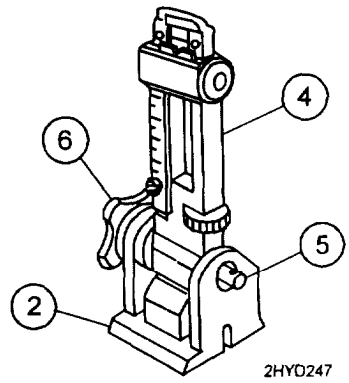

NOTE

When a new headless shoulder pin is used, drill a hole in the headless shoulder pin with a 5/64-inch twist drill. The hole in the lateral adjustment slide must be used as a guide and must be flush with the end of the headless shoulder pin.

3. Slide lateral adjustment slide (7) on end of headless shoulder pin(s) with lateral adjustment slide hole near end of headless shoulder pin (5).

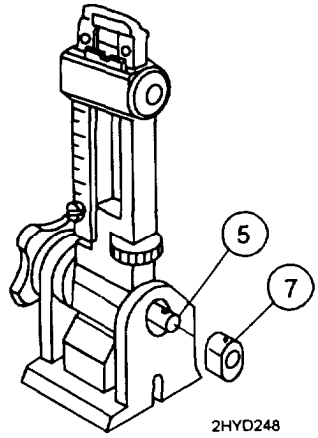

MAINTENANCE OF REAR SIGHT (M60 ONLY) 0040 00

REASSEMBLY (cont)

4. Install new tubular rivet (8) through lateral adjustment slide (7) and headless shoulder pin (5). Secure tubular rivet (8). To check freedom of movement, turn adjustment knob (6) and move leaf assembly (4). If components bind, repeat disassembly/reassembly.

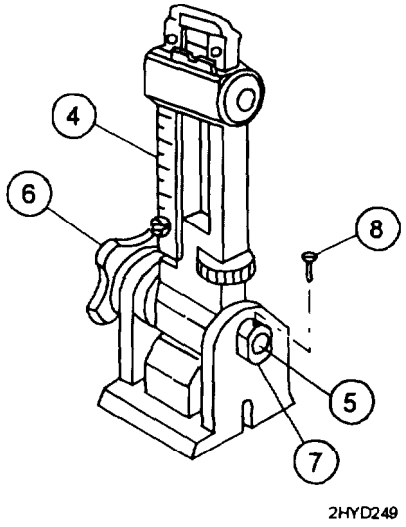

END OF TASK

MAINTENANCE OF LEAF ASSEMBLY (M60 ONLY) 0041 00

THIS TASK COVERS:
Disassembly, Repair, Reassembly

INITIAL SETUP

Maintenance Level
Direct Support

Tools and Special Tools
Small Arms Tool Kit (SC 4933-95-CL-A11)

Applicable Configuration
M60 Machine Gun

DISASSEMBLY

1. Using a drill, remove expanded point from machine screw (1) and peened end of tubular rivet (2). Remove and discard machine screw (1) and tubular rivet (2). Remove elevation scale (3).

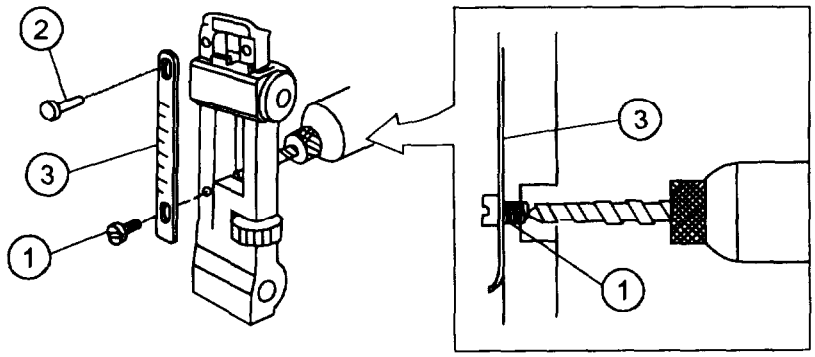

2HYD250

NOTE
Leaf frame cap may be under spring tension from helical compression spring mounted at the bottom of elevating screw.

2. Drill out peened end of solid rivet (4). Remove solid rivet (4) and leaf frame cap (5).

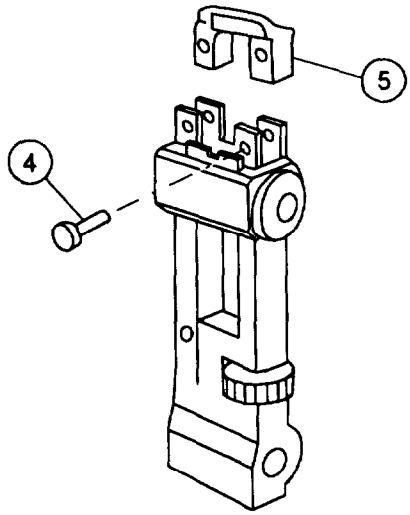

2HYD251

MAINTENANCE OF LEAF ASSEMBLY (M60 ONLY) (cont) 0041 00

DISASSEMBLY (cont)

3. Press in on slide release assembly (6) and raise sight slide (7) while holding your hand over top of rear sight leaf (8). Remove slide release assembly (6), helical compression spring (9), and sight slide (7) from rear sight leaf (8).

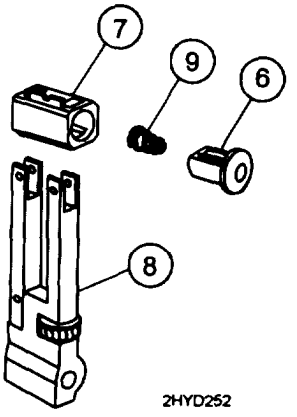

4. Remove elevation screw (10), elevating knob (11), bearing ball (12), and helical compression springs (13 and 14) from rear sight leaf (8).

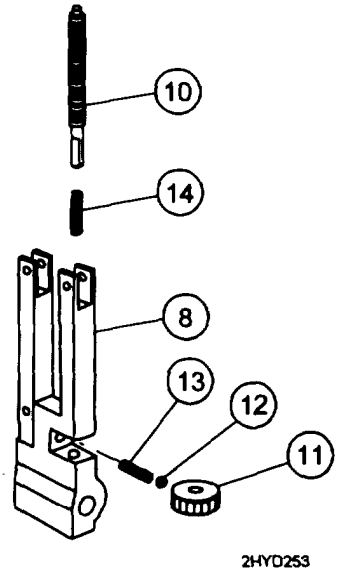

REPAIR

Repair by replacing all authorized components.

REASSEMBLY

1. Position elevation scale (1) on rear sight leaf (2), align holes, and install new machine screw (3).

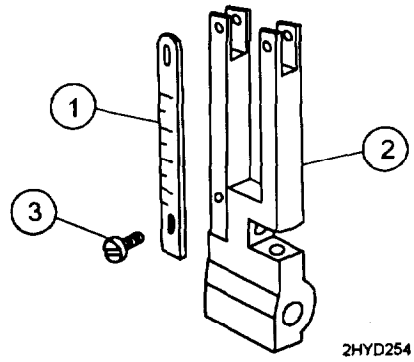

2. Install helical compression springs (4 and 5), bearing ball (6), elevating knob (7), and insert elevation screw (8) from top of rear sight leaf (2).

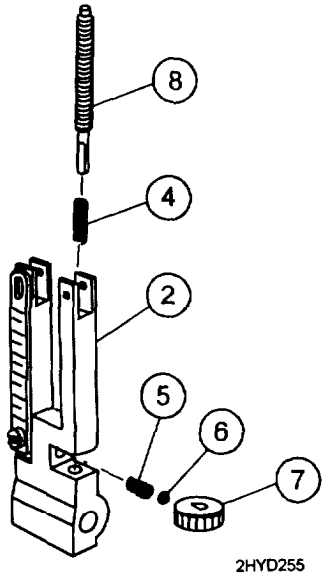

3. Insert helical compression spring (9) and slide release assembly (10) in sight slide (11). Press in on slide release assembly (10) and slide rear sight leaf (2) through sight slide (11).

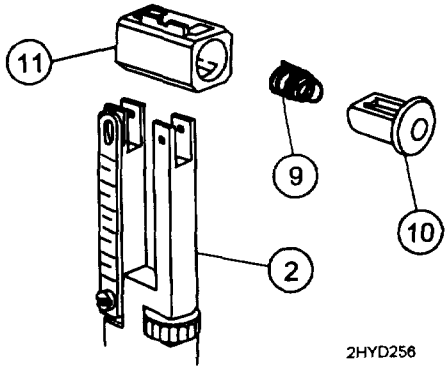

4. Position leaf frame cap (12) on top of rear sight leaf (2) and align holes. Install solid rivet (13) and peen the end.

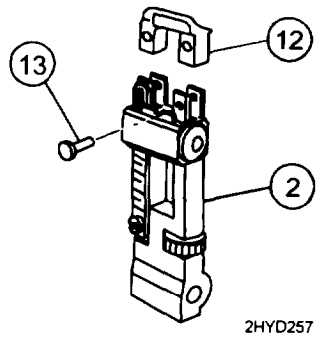

5. Install tubular rivet (14) through elevation scale (1), rear sight leaf (2), and leaf frame cap (12). Tighten tubular rivet (14) firmly but not tight enough to bind. Elevation scale (1) must move freely.

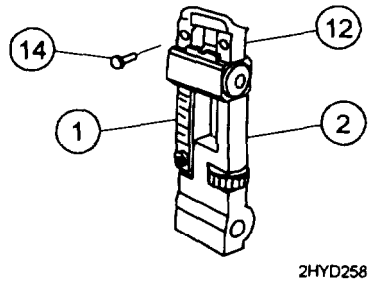

6. Adjust machine screw (3) until elevation scale (1) moves when pushed with fingers. Expand end of machine screw (3) with a hammer and punch to prevent it from being removed. Secure elevation scale (1) by tightening machine screw (3).

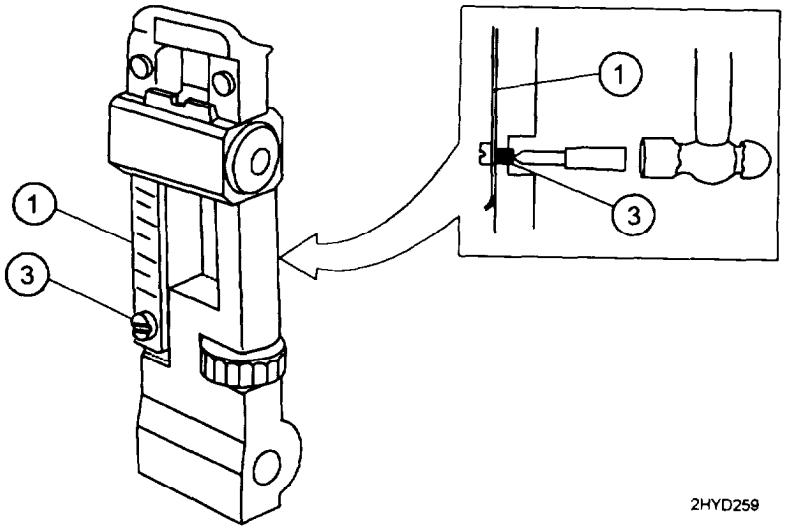

END OF TASK

MAINTENANCE OF REAR SIGHT (M60D ONLY) 0042 00

THIS TASK COVERS:
Inspection, Disassembly, Repair, Reassembly

INITIAL SETUP

Maintenance Level
Direct Support

Applicable Configuration
M60D Machine Gun

Tools and Special Tools
Small Arms Tool Kit (SC 4933-95-CL-A11)

Materials/Parts
Cloth, abrasive (crocus) (item 5, WP 0082 00)
Dry cleaning solvent (SD) (item 7, WP 0082 00)
Gloves, rubber (item 8, WP 0082 00)
Lubricant, solid film (item 10, WP 0082 00)

General Safety Instructions

WARNING
Be careful when removing and installing spring-loaded components. Carelessness could cause injury.

INSPECTION

1. Inspect sight ring for breaks, bends, or cracks.

2. Check to see if sight ring remains in both upright and folded positions when under spring tension.

DISASSEMBLY

Using a 3/32-inch drive pin punch and hammer, fold sight ring (1) down flat and remove spring pin (2). Using an open end adjustable wrench and flat tip screwdriver, remove hexagon self-locking nut (3). Apply slight pressure on sight ring (1) and remove rear sight retainer (4), bearing ball (5), and helical compression spring (6) from rear sight base (7).

NOTE
After several disassemblies, a self-locking nut can lose its self-locking feature. If a self-locking nut works loose during operation, replace it.

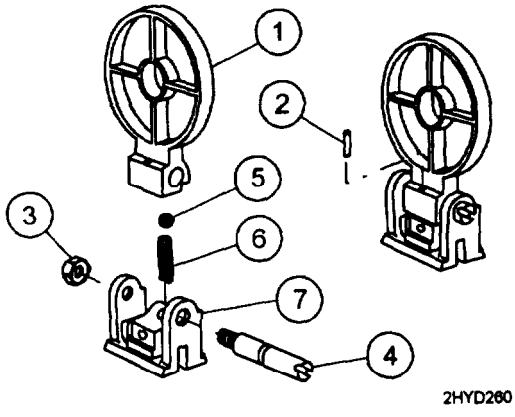

MAINTENANCE OF REAR SIGHT (M60D ONLY) (cont) 0042 00

REPAIR

WARNING

Dry cleaning solvent (SD) is flammable. Do not clean parts near an open flame or in a smoking area. Dry cleaning solvent evaporates quickly and has a drying effect on the skin. When used without protective gloves, solvent may cause irritation to or cracking of the skin,

1. Repair by replacing all authorized parts.

2. Clean rusted metal surfaces with crocus cloth. Wash thoroughly with dry cleaning solvent.

CAUTION

If solid film lubricant comes in contact with any moving or internal part, clean part with dry cleaning solvent.

3. Following manufacturer's instructions for use, apply solid film lubricant to all external metal surfaces showing wear and allow weapon to dry 12 hours before being used.

REASSEMBLY

1. Place helical compression spring (1) in hole of rear sight base (2). Place bearing ball (3) on helical compression spring (1).

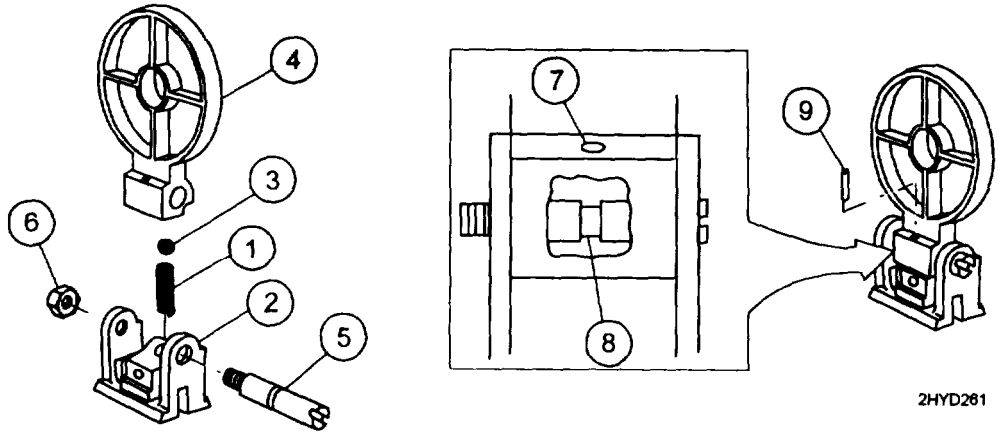

2. Position sight ring (4) on top of bearing ball (3) and rear sight base (2). Press down on rear sight and insert rear sight retainer (5) from the right side (largest hole).

3. Install hexagon self-locking nut (6) on end of rear sight retainer (5).

4. Using an open end adjustable wrench and flat tip screwdriver, center sight ring (4) so pin hole (7) aligns with groove (8) of rear sight retainer (5).

5. Using 1/8-inch drive pin punch and hammer, install spring pin (9).

END OF TASK

MAINTENANCE OF COCKING HANDLE ASSEMBLY 0043 00

THIS TASK COVERS:
Disassembly, Repair, Reassembly

INITIAL SETUP

Maintenance Level
Direct Support

Tools and Special Tools
Small Arms Tool Kit (SC 4933-95-CL-A11)

Applicable Configuration
M60/M60D Machine Guns

DISASSEMBLY

Compress and hold helical compression spring (1). Remove cocking handle retainer (2) and helical compression spring (1) from cocking handle slide assembly (3).

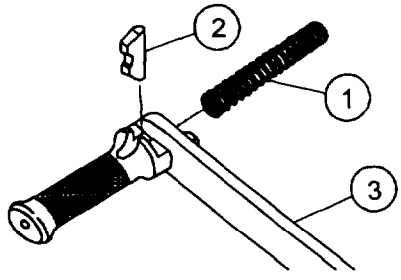

2HYD262

REPAIR

Repair by replacing all authorized components.

REASSEMBLY

Insert helical compression spring (1) in cocking handle slide assembly (3). Press helical compression spring (1) and slide cocking handle retainer (2) in cocking handle slide assembly (3). Release pressure on helical compression spring (1).

END OF TASK

MAINTENANCE OF GUN RECEIVER ASSEMBLY 0044 00

THIS TASK COVERS:
Disassembly, Repair, Reassembly, Test/Inspection

INITIAL SETUP

Maintenance Level
Direct Support

Applicable Configuration
M60/M60D Machine Guns

Tools and Special Tools
Anvil bucking bar (Fig. 1, WP 0083 00)
Combination square (GGG-S-656 or equivalent)

Tools and Special Tools (cont)
Dial indicating scale (AAA-S-133 or equivalent)
Machinist's steel rule (GGG-R-791 or equivalent)
Small Arms Tool Kit (SC 4933-95-CL-A11)

DISASSEMBLY

1. Remove staked metal from headless straight pin (1) and remove headless straight pin (1).

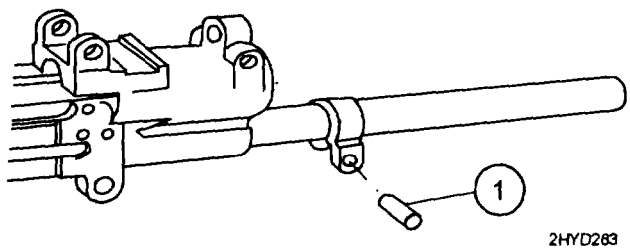

2. Remove staked metal from headed straight pins (2). Remove and discard headed straight pins (2). Remove headless straight pin (3).

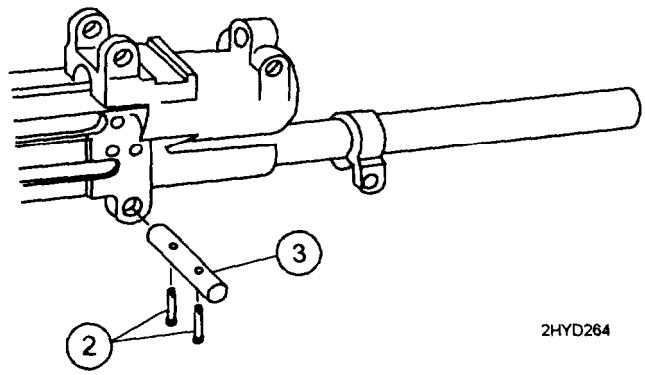

DISASSEMBLY (cont)

3. Carefully drill out and discard solid rivets (4). Remove mounting plate (5).

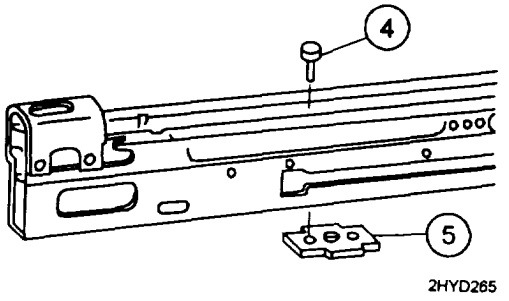

4. Drill out and discard countersunk solid rivets (6). Do not remove bridge (7) from receiver assembly (8).

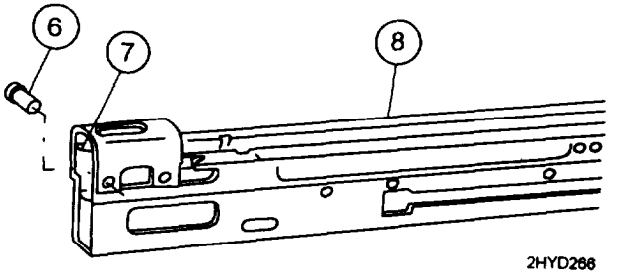

REPAIR

Repair by replacing all authorized components.

REASSEMBLY

1. Insert and tighten countersunk solid rivets (1) with a anvil bucking bar (2) by sliding the anvil bucking bar in rear of receiver assembly (3) near bridge (4). Make sure countersunk solid rivets do not protrude more than 0.010 of an inch inside or 0.005 of an inch outside, and peen countersunk solid rivets.

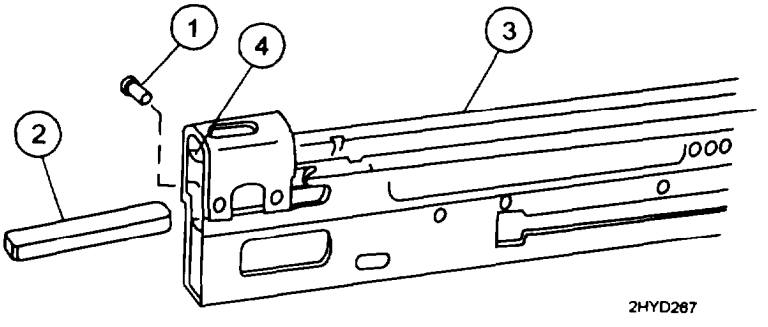

2. Position mounting plate (5) on bottom of receiver assembly (3) and align holes. Install solid rivets (6) and rivet securely. Rivets must not protrude more than 0.005 of an inch inside and must be flush outside.

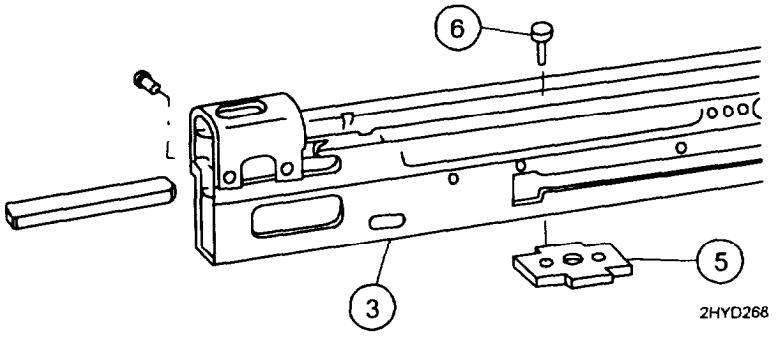

3. Slide headless straight pin (7) in holes of receiver assembly (3) and center it. Install headed straight pins (8) and stake the ends.

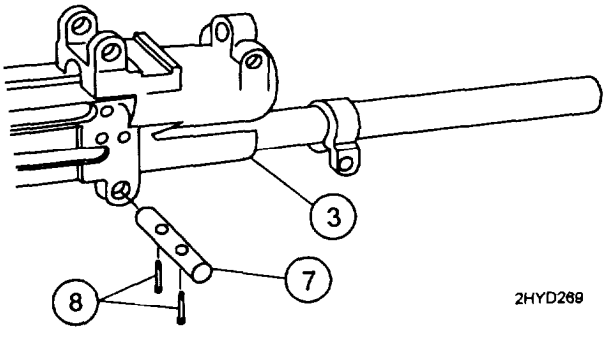

4. Drive headless straight pin (9) into hole in receiver assembly (3) and center it. Stake both ends to secure.

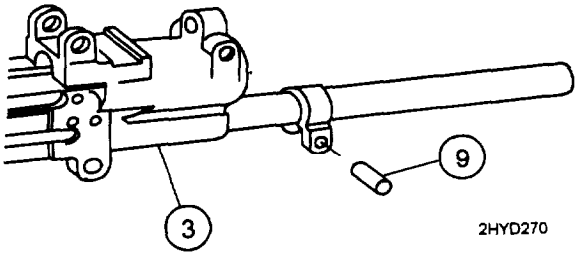

TEST/INSPECTION

NOTE

Small arms gages will be inspected and certified annually. The gages will not be used unless they are accompanied with the appropriate gage record.

Perform LOOSE RECEIVER TEST (see WP 0025 00).

PREEMBARKATION INSPECTION OF MATERIEL IN UNITS ALERTED FOR OVERSEAS MOVEMENT 0045 00

GENERAL

This section provides special instructions for direct support personnel inspecting materiel in alerted units scheduled for overseas duty. Inspection is for:

a) Determining serviceability.
b) Recognizing conditions that would cause failure.
c) Assuring proper maintenance at prescribed level.
d) Determining the ability of a unit to accomplish its maintenance and supply mission.

INSPECTION PROCEDURES

WARNING

Before starting an inspection, be sure to clear the weapon. DO NOT actuate the trigger until the weapon has been cleared. Inspect the chamber to make sure that it is empty and that no ammunition is in position to be introduced.

a. Exercise judgment regarding degree of inspection of integral parts within assemblies.

b. Refer to TB 9-1000-247-34 and specific inspection criteria listed below.

(1) Check headspace using headspace gage 7274786 in place of head space gage 7274790 (see WP 0025 00 for procedures).

(2) Check trigger pull, WP 0025 00 for the M60 machine gun and WP 0026 00 for the M60D machine gun.

(3) Check barrel for wear using a barrel erosion gage 7319994 (WP 0025 00).

(4) Check firing pin protrusion using firing pin protrusion gage 7274754 (WP 0025 00).

(5) Check firing pin hole using plain cylindrical plug gage 7458598 (WP 0025 00).

(6) Measure operating rod helical compression spring. Spring must be a minimum of 23 1/4 inches long.

(7) Check sear cocking surface for roundness. Cocking surface must not be rounded more than 3/64 of an inch on top rear corner.

(8) Test receiver for looseness using procedures and equipment listed in WP 0025 00.

(9) Make sure that the proper flat leaf spring is available for the proper model (WP 0005 00).

PREPARATION FOR STORAGE OR SHIPMENT 0046 00

SECURITY

Security of the M60 or M60D machine gun is as defined in AR 190-11 and AR 190-13. Weapons will be stored in suitable containers to prevent theft, and as stated by the above security regulations. The storage area must be covered and as moisture-free as possible.

CLEANING AND PRESERVATION

1. Disassemble the M60 or M60D machine gun as necessary to accomplish cleaning and lubrication.

CAUTION
Avoid contaminating the gas cylinder with lubricants.

2. Clean all metallic surfaces of the M60 and M60D machine gun and Bll items with lubricating oil and dry with clean, dry wiping rags (item 13, WP 0082 00). Clean nonmetallic surfaces with clean, dry wiping rags.

3. Preserve all metallic surfaces with lubricating.

4. Reassemble weapon except for barrel assembly.

APPENDIX A

REFERENCES

REFERENCES 0047 00

PUBLICATION INDEX

Consult the following publications indexes frequently for the latest changes or revisions of references and for new publications relating to materiel covered in this manual.

ARMY REGULATIONS

AR 190-11 ..... Physical Security of Arms, Ammunition and Explosives

AR 190-13 ..... The Army Physical Security Program

DEPARTMENT OF ARMY PAMPHLETS

DA PAM 25-30 ..... Consolidated Index of Army Publications and Blank Forms

DA PAM 738-750 ..... The Army Maintenance Management System (TAMMS)

RELATED PUBLICATIONS

DOD 4160.21-M-1 ..... Defense Demilitarization Manual

FIELD MANUALS

FM 21-30 ..... Military Symbols

FM 23-67 ..... Machine Gun, 7.62-MM, M60

SUPPLY BULLETINS

SB 708-41/42 ..... Federal Supply Codes for Manufactures: United States and Canada

SUPPLY CATALOGS

SC 4933-95-CL-A11 ..... Tool Kit, Small Arms: Field Maintenance, Post, Camp and Station

SC 5180-95-CL-A07 ..... Tool Kit, Small Arms Repairman

TECHNICAL BULLETINS

TB 9-1000-247-34 ..... Standards for Overseas Shipment of Small Arms, Aircraft Armament, Towed Howitzers, Mortars, Recoilless Rifles, Rocket Launchers, and Associated Fire Control Equipment

TECHNICAL MANUALS

TM 9-1005-224-10 ..... Operator's Manual - M60/M60 D Machine Guns

TM 9-4933-208-34 ..... Kits, Barrel Erosion Gage, M8 and M6A1

REFERENCES (cont) 0047 00

TECHNICAL MANUALS (cont)

TM 750-244-7 . . . . . Procedures for Destruction of Equipment in Federal Supply Classification 1000, 1015, 1010, 1015, 1020, 1025, 1030, 1055, 1090, and 1095 to Prevent Enemy Use

TM 9-1005-245-13&P. . . . . Operator's, Unit, and Direct Support Maintenance Manual with Repair Parts and Special Tools List (RPSTL) for Machine Gun Mounts and Combinations for Tactical/Armored Vehicles and Ground Mounting

AIR FORCE MANUALS

AFM 36-2227, Vol. 1 . . . . . Combat Arms Training Management and Range Operation

APPENDIX B

MAINTENANCE ALLOCATION CHART

MAINTENANCE ALLOCATION CHART 0048 00

INTRODUCTION

This introduction provides a general explanation of all maintenance and repair functions authorized at various maintenance levels under the standard Army Maintenance System concept.

The Maintenance Allocation Chart (MAC) immediately following the introduction designates overall authority and responsibility for the performance of maintenance functions on the identified end item or component, The application of the maintenance functions to the end item or component shall be consistent with the capacities and capabilities of the designated maintenance levels, which are shown on the MAC in column (4) as:

Unit ..... Includes two subcolumns, C (operator/crew) and O (unit) maintenance

Direct Support . . . . . Includes an F subcolumn

General Support . . . . . Includes a H subcolumn

Depot . . . . . Includes a D subcolumn

The tools and test equipment requirements (immediately following the MAC) list the tools and test equipment (both special tools and common tool sets) required for each maintenance function as referenced from the MAC.

The remarks (immediately following the tools and test equipment requirements) contain supplemental instructions and explanatory notes for a particular maintenance function.

MAINTENANCE FUNCTIONS

Maintenance functions will be limited to and defined as follows:

1. **Inspect.** To determine the serviceability of an item by comparing its physical, mechanical, and/or electrical characteristics with established standards through examination (e.g., by sight, sound, or feel). This includes scheduled inspection and gagings and evaluation of cannon tubes.

2. **Test.** To verify serviceability by measuring the mechanical pneumatic, hydraulic, or electrical characteristics of an item and comparing those characteristics with prescribed standards on a scheduled basis, e. g., load testing of lift devices and hydrostatic testing of pressure hoses.

3. **Service.** Operations required periodically to keep an item in proper operating condition, e.g., to clean (includes decontaminate, when required), to preserve, to drain, to paint, or to replenish fuel, lubricates, chemical fluids, or gases. This includes scheduled exercising and purging of recoil mechanisms.

4. **Adjust.** To maintain or regulate, within prescribed limits, by bringing in proper position, or by setting the operating characteristics to specified parameters.

5. **Align.** To adjust specified variable elements of an item to bring about optimum or desired performance.

MAINTENANCE FUNCTIONS (cont)

6. **Calibrate.** To determine and cause corrections to be made or to be adjusted on instruments of test, measuring and diagnostic equipment used in precision measurement. Consist of comparisons of two instruments, one of which is a certified standard of known accuracy, to detect and adjust any discrepancy in the accuracy of the instrument being compared.

7. **Remove/Install.** To remove and install the same item when required to perform service or other maintenance functions. Install may be the act of emplacing, seating, or fixing into position a spare, repair part, or module (component or assembly) in a manner to allow the proper functioning of an equipment or system.

8. **Replace.** To remove an unserviceable item and install a serviceable counterpart in its place. "Replace" is authorized by the MAC and assigned maintenance level is shown as the third position code of the Source, Maintenance and Recoverability (SMR) code.

9. **Repair.** The application of maintenance services, including fault location/troubleshooting, removal/installation, disassembly/assembly procedures and maintenance actions to identify troubles and restore serviceability to an item by correcting specific damage, fault, malfunction, or failure in a part, subassembly, module (component or assembly), end item, or system.

NOTE

The following definitions are applicable to the "repair" maintenance function:

Service - Inspect, test, service, adjust, align, calibrate, and/or replace.

Fault location/troubleshooting - The process of investigating and detecting the cause of equipment malfunctioning: the act of isolating a fault within a system or Unit Under Test (ET).

Disassembly/assembly - The step-by-step breakdown (taking apart) of a spare/functional group coded item to the level of its least component, that is assigned an SMR code for the level of maintenance under consideration (i.e., identified as maintenance significant).

Actions - Welding, grinding, riveting, straightening, facing, remachinery, and/or resurfacing.

10. **Overhaul.** That maintenance effort (service/action) prescribed to restore an item to a completely serviceable/operational condition as required by maintenance standards in appropriate technical publications. Overhaul is normally the highest degree of maintenance performed by the Army. Overhaul does not normally return an item to like new condition.

11. **Rebuild.** Consists of those services/actions necessary for the restoration of unserviceable equipment to a like new condition in accordance with original manufacturing standards. Rebuild is the highest degree of materiel maintenance applied to Army equipment. The rebuild operation includes the act of returning to zero those age measurements (e.g., hours/miles) considered in classifying Army equipment/components.

EXPLANATION OF COLUMNS IN THE MAC

Column (1) - Group Number. Column (1) lists functional group code (FGC) numbers, the purpose of which is to identify maintenance significant components, assemblies, subassemblies, and modules with the next higher assembly (NHA).

Column (2) - Component/Assembly. Column (2) contains the item names of components, assemblies, sub-assemblies, and modules for which maintenance is authorized.

Column (3) - Maintenance Function. Column (3) lists the functions to be performed on the item listed in column (2). (For detailed explanation of these functions, refer to “Maintenance Functions” outlined above.)

Column (4) - Maintenance Level. Column (4) specifies each level of maintenance authorized to perform the function listed in column (3), by indicating work time required. This work time figure represents the active time required to perform that maintenance function at the indicated level of maintenance. If the number or complexity of the tasks within the listed maintenance function varies at different maintenance levels, appropriate work time figures will be shown for each level. The work time figure represents the average time required to restore an item (assembly, subassembly, component, module, end item, or system) to a serviceable condition under typical field operating conditions. This time includes preparation time (including any necessary disassembly/assembly time), troubleshooting/fault location time, and quality assurance time in addition to the time required to perform the specific tasks identified for the maintenance functions authorized in the MAC. The symbol designations for the various maintenance levels are as follows:

C - Operator or Crew Maintenance
O - Unit Maintenance
F - Direct Support Maintenance
L - Specialized Repair Activity (SRA)
H - General Support Maintenance
D - Depot Maintenance

NOTE

The ‘L” maintenance level is not included in column (4) of the MAC. Functions to this level of maintenance are identified by a work time figure in the “H” column of column (4), and an associated reference code is used in the REMARKS column (6). The code is keyed to the remarks and the SRA complete repair application is explained there.

Column (5) - Tools and Equipment Reference Code. Column (5) specifies, by code, those common tool sets (not individual tools), common Test, Measurement and Diagnostic Equipment (TMDE), and special tools, special TMDE and special support equipment required to perform the designated function. Codes are keyed to the entries in the tools and test equipment table.

Column (6) - Remarks Code. When applicable, this column contains a letter code, in alphabetic order, which is keyed to the remarks table entries.

MAINTENANCE ALLOCATION CHART (cont) 0048 00

EXPLANATION OF COLUMNS IN TOOL AND TEST EQUIPMENT REQUIREMENTS

Column (1) - Tool or Test Equipment Reference Code. The tool or test equipment reference code correlates with a code used in Column (5) of the MAC.

Column (2) - Maintenance Level. The lowest level of maintenance authorized to use the tool or test equipment.

Column (3) - Nomenclature. Name or identification of the tool or test equipment.

Column (4) - National Stock Number (NSN). The NSN of the tool or test equipment,

Column (5) - Tool Number. The manufacturer's part number, model number, or type number.

EXPLANATION OF COLUMNS IN REMARKS

Column (1) - Reference Code. The code recorded in column (6) of the MAC.

Column (2) - Remarks. This column lists information pertinent to the maintenance function being performed as indicated in the MAC.

Table 1. MAC for Machine Gun, 7.62-MM, M60 and M60D

(1) GROUP NUMBER	(2) COMPONENT/ ASSEMBLY	(3) MAINTENANCE FUNCTION	(4) MAINTENANCE LEVEL					(5) TOOLS AND EQPT REF CODE	(6) REMARKS
			UNIT		DS	GS	DEPOT		
			C	O	F	H	D		
00	MACHINE GUN, 7.62-MM, M60 (7269100) AND M60D (11699750)	Inspect	0.1	0.2	0.2				C and N
		Test			0.5			1 thru 8, 10	A, D, F & G
		Repair		0.5	0.5		15.0	9 and 13	C, E, F, G, J and M
01	SHOULDER GUN STOCK ASSEMBLY (11686711) (M60 ONLY)	Inspect	0.1	0.1	0.1				N
		Service	0.1						
		Remove/ Install	0.1						
		Replace			0.1				
		Repair		0.1	0.1			9 and 13	M
02	GRIP AND TRIGGER ASSEMBLY (11699751) (M60D ONLY)	Inspect	0.1		0.1				N
		Service	0.1						
		Remove/ Install	0.1						
		Replace		0.1				9 and 13	M
		Repair		0.3				9	M
03	BREECH BOLT ASSEMBLY (11010357)	Inspect	0.1	0.1	0.1				N
		Test			0.1			1 and 4	A, F and G
		Service	0.1						
		Remove/ Install	0.1						
		Replace			0.1				
		Repair		0.2	0.2			9 and 13	I and M
04	OPERATING ROD ASSEMBLY (9362510)	Inspect	0.1	0.1	0.1				
		Service	0.1						
		Remove/ Install	0.1						
		Replace			0.1				
		Repair		0.1	0.1			9 and 13	H and M
05	TRIGGER MECHANISM GRIP ASSEMBLY (7629202) (M60 ONLY)	Inspect	0.1	0.1	0.1				N
		Service	0.1						
		Remove/ Install	0.1						
		Replace			0.2				
		Repair		0.2	0.2			9 and 13	M
06	SEAR AND SAFETY HOUSING ASSEMBLY (11699773) (M60D ONLY)	Inspect	0.1	0.1	0.1				N
		Service	0.1						
		Remove/ Install	0.1						
		Replace		0.1					
		Repair		0.1				13	

Table 1. MAC for Machine Gun, 7.62-MM, M60 and M60D (cont)

(1) GROUP NUMBER	(2) COMPONENT/ ASSEMBLY	(3) MAINTENANCE FUNCTION	(4) MAINTENANCE LEVEL					(5) TOOLS AND EQPT REF CODE	(6) REMARKS
			UNIT		DS	GS	DEPOT		
			C	O	F	H	D		
07	BARREL AND BIPOD ASSEMBLY (7269027)	Inspect	0.1	0.1	0.1				N
		Test			0.3			2, 3, 5, & 6	A, E, F & G
		Service	0.1						
		Remove/ Install	0.1		0.1				
		Replace			0.2				F
		Repair		0.1				9 and 13	M
070101	Machine Gun Leg (Right) (7269047)	Replace			0.1				
		Repair			0.1			9	M
070102	Machine Gun Leg (Left) (7269046)	Replace			0.1				
		Repair			0.1			9	M
08	COVER ASSEMBLY (7269114)	Inspect	0.1	0.1	0.1				N
		Service	0.1						
		Replace			0.1				
		Repair		0.1	0.3			9 and 13	M and O
0801	Feed Cam Assembly (11699814)	Replace			0.1				
		Repair			0.1			9 and 13	M
0802	Lever Assembly (7269119)	Replace			0.1				
		Repair			0.1			9 and 13	M
0803	Feed Pawl Assembly (7269120)	Replace			0.1				
		Repair			0.1			9	M
0804	Cover Housing Assembly (7269118)	Replace			0.5				
		Repair			0.2	0.5		9	M
09	TRAY AND HANGER ASSEMBLY (8448237) (M60 ONLY)	Inspect	0.1	0.1					N
		Service	0.1						
		Replace		0.1					
		Repair		0.2				9 and 13	M
0901	Cartridge Feed Tray Assembly (8448415) (M60 ONLY)	Replace		0.1					
		Repair		0.1				9 and 13	M
10	CARTRIDGE FEED TRAY ASSEMBLY (7792096) (M60D ONLY)	Inspect	0.1	0.1					
		Service	0.1						
		Replace		0.1					
		Repair		0.2				13	M
11	FOREARM ASSEMBLY (11010430) (M60 ONLY)	Inspect	0.1	0.1	0.1				N
		Service	0.1						
		Remove/ Install	0.1						
		Replace			0.1				
		Repair		0.1	0.3			9,13&14	L and M

Table 1. MAC for Machine Gun, 7.62-MM, M60 and M60D (cont)

(1) GROUP NUMBER	(2) COMPONENT/ ASSEMBLY	(3) MAINTENANCE FUNCTION	(4) MAINTENANCE LEVEL					(5) TOOLS AND EQPT REF CODE	(6) REMARKS
			UNIT		DS	GS	DEPOT		
			C	O	F	H	D		
12	REAR SIGHT (7791437) (M60 ONLY)	Inspect	0.1	0.1	0.1				N
		Service	0.1						
		Replace			0.3				
		Repair			0.3			9 and 13	M
1201	Rear Sight Leaf/Assembly (7269279) (M60D ONLY)	Remove/ Install				0.2		9	M
		Repair				0.2		9	M
13	REAR SIGHT (11699796) (M60D ONLY)	Inspect	0.1	0.1	0.1				N
		Service	0.1						
		Replace			0.2				
		Repair			0.2			13	
14	COCKING HANDLE ASSEMBLY (7791621)	Inspect	0.1	0.1	0.1				N
		Service	0.1						
		Replace			0.2				
		Repair			0.2			9	M
15	GUN RECEIVER ASSEMBLY (11686308) (M60 ONLY)	Inspect	0.1	0.1	0.1				
		Test			0.3			7 and 8	A and D
		Service	0.1						
		Repair			0.3	0.2		9 and 10	B, C, J & M
16	GUN RECEIVER ASSEMBLY (11699805) (M60D ONLY)	Inspect	0.1	0.1	0.1				N
		Test			0.3			7 and 8	A and D
		Service	0.1						
		Repair			0.2	0.2		9,10&13	B, C, J, K & M

Table 2. Tools and Test Equipment for Machine Gun M60/M60D

TOOL OR TEST EQUIPMENT REF CODE	MAINTENANCE LEVEL	NOMENCLATURE	NATIONAL STOCK NUMBER	TOOL NUMBER
1	F	GAGE, FIRING PIN PROTRUSION	4933-00-653-3373	7274754
2	F	GAGE, HEADSPACE: 1.641 in.	4933-00-069-8676	7274786
3	F	GAGE, HEADSPACE: 1.6455 in.	4933-00-647-3698	7274790
4	F	GAGE, PLUG PLAIN CYLINDRICAL	5220-00-745-8598	7458598
5	F	GAGE, TEST BOLT	4933-00-653-9550	7799699
6	F	GAGE KIT, SMALL ARMS: M8 c/o		5910297
		a. CASE, CARRYING	5140-00-313-9486	7319995
		b. GAGE, BARREL EROSION	4933-00-317-2504	7319994
		c. GAGE, WEAR CHECK	4933-00-317-2501	7274724
7	F	RULE, STEEL, MACHINIST'S	5210-00-234-5223	GGG-R-791 or equivalent
8	F	SCALE, DIAL INDICATING	5210-00-254-4634	AAA-S-133 or equivalent
9	F	TOOL KIT, SMALL ARMS: FIELD MAINTENANCE, POST, CAMP, AND STATION	4933-00-754-0664	SC 4933-95-CL-A11
10	F	SQUARE, COMBINATION	5120-00-078-8949	GGG-S-656 or equivalent
11	F	STOP, TOOL, SCREW	5120-00-077-2081	8436748
12	F	TOOL BOX, PORTABLE	5140-00-473-6260	D5-15-2119
13	0	TOOL KIT, SMALL ARMS REPAIRMAN	5180-00-357-7770	SC-5180-95-CL-A07
14	F	DRILL, TWIST: 1/8 in. dia., 5 1/8 in. long	5133-00-262-2180	GGG-D-751

REMARKS for Machine Gun M60/M60D

Table 3. Remarks for Machine Gun M60/M60D

REFERENCE CODE	REMARKS
A	Gage annually using appropriate gages.
B	Receiver is a serialized item and not replaceable below depot level maintenance.
C	Restamping or altering the serial number is prohibited.
D	Receiver looseness check will be accomplished at time of repair and/or annual gaging cycle.
E	Barrel and bipod assembly will not be interchanged between weapons due to headspace requirements.
F	Barrel and bipod will be issued only when complete weapon is checked for headspace requirements using the bolt that will be used in barrel.
G	Breech bolt assembly will not be interchanged between weapons, and new breech bolt assembly will be checked for proper headspace requirements before returning to service.
H	Burrs on the operating rod tower and yoke area is an inherent condition of the weapon. Organizational maintenance will remove small burrs and upset metal. Operating rod will not be rejected for this condition.
I	Breech bolt assembly feed lug is prone to chipping and is an inherent condition of the weapon. Organizational maintenance will smooth surfaces by stoning. Breech bolt will not be rejected for this condition until the bottom camming lug begins to wear.
J	Fabricated bucking bar anvil will be used to tighten rivets in receiver bridge.
K	Riveting fixture will be used to tighten rivets in the magazine bracket to receiver surface.
L	Rivets for repair of forearm rib are supplied with blind head riveter listed in SC 4933-95-CL-A11.
M	The following supply catalogs will be substituted for SC 4933-95-CL-A11: (1) SC 4940-95-CL-A60 (4940-00-209-6236) SHOP EQUIPMENT, SMALL ARMS REPAIR, SHELTER MOUNTED: used in selected units only (Airborne-Airmobile). (2) SC 4933-95-CL-A04 (4933-00-348-7396) SHOP SET, SMALL ARMS: FIELD MAINTENANCE, POST, CAMP, AND STATION: used by TDA units.
N	When a weapon is received by direct support with a maintenance request, all gaging requirements must be checked as a standard maintenance procedure. In addition, the weapon must be inspected and any other deficiencies found will be repaired, or noted for repair, at the appropriate maintenance level. As a minimum requirement, the M60/M60D headspace must be verified annually by direct support personnel. This requirement could be increased to four times a year or after each training cycle depending on usage factors.
O	Riveting fixtures will be used to re-rivet cheek pad of cover.

APPENDIX C

REPAIR PARTS AND SPECIAL TOOLS LIST

(INCLUDING DEPOT MAINTENANCE REPAIR PARTS)

INTRODUCTION 0049 00

SCOPE

This RPSTL lists and authorizes spares and repair parts; special tools; special test, measurements, and diagnostic equipment (TMDE); and other special support equipment required for performance of unit/direct support maintenance of the M60/M60D, 7.62 MM machine gun. It authorizes the requisitioning, issue, and disposition of spares, repair parts and special tools as indicated by the source, maintenance and recoverability (SMR) codes.

GENERAL

In addition to the Introduction work package, this Repair Parts and Special Tools List (RPSTL) is divided into the following work packages:

1. **Repair Parts List Work Packages.** Work packages containing lists of spares and repair parts authorized by this RPSTL for use in the performance of maintenance. These work packages also include parts which must be removed for replacement of the authorized parts. Parts lists are composed of functional groups in ascending alphanumeric sequence, with the parts in each group listed in ascending figure and item number sequence, with the parts in each group listed in ascending figure and item number sequence. Sending units, brackets, filters, and bolts are listed with the component they mount on. Bulk materials are listed by item name in FIG. BULK at the end of the work packages. Repair parts kits are listed separately in their own functional group and work package. Repair parts for reparable special tools are also listed in a separate work package. Items listed are shown on the associated illustrations.

2. **Special Tools List Work Package.** Work packages containing lists of special tools, special TMDE, and special support equipment authorized by this RPSTL (as indicated by Basis of Issue (BOI) information in DESCRIPTION AND USABLE ON CODE (UOC) column). Tools that are components of common tool sets and/or Class VII are not listed.

3. **Cross-Reference Indexes Work Packages.** There are two cross-reference indexes work packages in this RPSTL: the National Stock Number (NSN) Index Work package and the Part Number (P/N) Index Work Package. The National Stock Number Index work package refers you to the figure and item number. The Part Number Index work package refers you to the figure and item number.

EXPLANATION OF COLUMNS IN THE REPAIR PARTS LIST AND SPECIAL TOOLS LIST WORK PACKAGES

ITEM NO. (Column (1)). Indicates the number used to identify items called out in the illustration.

SMR CODE (Column (2)). The SMR code containing supply/requisitioning information, maintenance level authorization criteria, and disposition instruction, as shown in the following breakout:

Source Code	Maintenance Code		Recoverability Code
x x	x x		X
First two positions: How to get an item.	Third position: Who can install, replace, or use the item.	Forth position: Who can do complete repair* on the item.	Fifth position: Who determines disposition action on unserviceable items.

*Complete Repair: Maintenance capacity, capability, and authority to perform all corrective maintenance tasks of the "Repair" function in a use/user environment in order to restore serviceability to a failed item.

Source Code. The source code tells you how to get an item needed for maintenance, repair, or overhaul of an end item/equipment. Explanations of source codes follow:

Source Code	Application/Explanation
PA **PB** **PC** **PD** **PE** **PF** **PG**	Stock items; use the applicable NSN to requisition/request items with these source codes. They are authorized to the level indicated by the code entered in the third position of the SMR code. **NOTE** Items coded PC are subject to deterioration
KD **KF** **KB**	Items with these codes are not to be requested/requisitioned individually. They are part of a kit which is authorized to the maintenance level indicated in the third position of the SMR code. The complete kit must be requisitioned and applied.
MO - Made at unit/ AVUM level **MF** - Made at DS/ AVIM level **MH** -Made a GS level **ML** - Made at SRA **MD** - Made at depot	Items with these codes are not to be requisitioned/requested individually. They must be made from bulk material which is identified by the P/N in the DESCRIPTION AND USABLE ON CODE (UOC) column and listed in the bulk material group work package of the RPSTL. If the item is authorized to you by the third position code of the SMR code, but the source code indicates it is made at a higher level, order the item from the higher level of maintenance.

Source Code	Application/Explanation
AV - Assembled by unit/AVUM level **AF** - Assembled by DS/AVIM level **AH** - Assembled by GS level **AL** - Assembled by SRA **AD** - Assembled by depot	Items with these codes are not to be requisitioned/requested individually. The parts that make up the assembled item must be requisitioned or fabricated and assembled at the level of maintenance indicated by the source code. If the third position of the SMR code authorizes you to replace the item, but the source code indicates the item is assembled at a higher level, order the item from the higher level of maintenance.
XA	Do not requisition an "XA" coded item. Order the higher assembly. (Refer to NOTE below.)
XB	If an item is not available from salvage, order it using the CAGEC and P/N.
XC	Installation drawings, diagrams, instruction sheets, field service drawings; identified by manufacture's P/N.
XD	Item is not stocked. Order and XD-coded item through normal supply channels using the CAGEC and P/N given, if no NSN is available.

NOTE

Cannibalization or controlled exchange, when authorized, may be used as a source of supply for items with the above source codes, except for those source coded "XA" or those aircraft support items restricted by requirements of AR 750-1.

Maintenance Code. Maintenance codes tell you the level(s) of maintenance authorized to use and repair support items. The maintenance codes are entered in the third and forth positions of the SMR code as follows:

Third Position. The maintenance code entered in the third position tell you the lowest maintenance level authorized to remove, replace, and use the item. The maintenance code entered in the third position will indicate authorization to one of the following levels of maintenance:

Maintenance Code	Application/Explanation
C	Crew or operator maintenance done within unit/AVUM maintenance.
O	Unit level/AVUM maintenance can remove, replace, and use the item.
F	Direct support/AVIM maintenance can remove, replace, and use the item.
H	General support maintenance can remove, replace, and use the item.
L	Specialized repair activity can remove, replace, and use the item.
D	Depot can remove, replace, and use the item.

EXPLANATION OF COLUMNS IN THE REPAIR PARTS LIST AND SPECIAL TOOLS LIST WORK PACKAGES (cont)

Forth Position. The maintenance code entered in the forth position tells you whether or not the item is to be repaired and identifies the lowest maintenance level with the capability to do complete repair (perform all authorized repair functions).

NOTE

Some limited repair may be done on the item at a lower level of maintenance, if authorized by the Maintenance Allocation Chart (MAC) and SMR codes.

Maintenance Code	Application/Explanation
O	Unit/AVUM is the lowest level that can do complete repair of the item.
F	Direct support/AVUM is the lowest level that can do complete repair of the item.
H	General support is the lowest level that can do complete repair of the item.
L	Specialized repair activity (enter specialized repair designator) is the lowest level that can do complete repair of the item.
D	Depot is the lowest level that can do complete repair of the item.
Z	Nonreparable. No repair is authorized.
B	No repair is authorized. No parts or special tools are authorized for the maintenance of a “B” coded item. However, the item may be reconditioned by adjusting, lubricating, etc., at the user level.

Recoverability code. Recoverability codes are assigned to items to indicate the disposition action on unserviceable items. The recoverability code is shown in the fifth position of the SMR code as follows:

Recoverability Code	Application/Explanation
Z	Nonreparable item. When unserviceable, condemn and dispose of the item at the level of maintenance shown in the third position of SMR code.
O	Reparable item. When uneconomically reparable, condemn and dispose of the item at the unit level.
F	Reparable item. When uneconomically reparable, condemn and dispose of the item at the direct support level.
H	Reparable item. When uneconomically reparable, condemn and dispose of the item at the general support level.
D	Reparable item. When beyond lower level repair capability, return to depot. Condemnation and disposal of item are not authorized below depot level.
L	Reparable item. Condemnation and disposal not authorized below Specialized Repair Activity (SRA).
A	Item requires special handling or condemnation procedures because of specific reasons (such as precious metal content, high dollar value, critical material, or hazardous material). Refer to appropriate manuals/directives for specific instructions.

NSN (Column (3)). The NSN of the item is listed in this column.

CAGEC (Column (4)). The Contractor and Government Entity Code is a five-digit code which is used to identify the manufacturer, distributor, or Government agency/activity that supplies the item.

PART NUMBER (Column (5)). indicates the primary number used by the manufacturer (individual, company, firm, corporation, or Government activity), which controls the design and characteristics of the item by means of its engineering drawings, specifications, standards, and inspection requirements to identify an item or range of items.

NOTE

When you use an NSN to requisition an item, the item you receive may have a different P/N from the number listed.

DESCRIPTION AND USABLE ON CODE (UOC) (Column (6)). This column includes the following information:

1. The Federal item name, and when required, a minimum description to identify the item.

2. P/Ns of bulk materials are referenced in this column in the entry to be manufactured or fabricated.

3. Hardness Critical item (HDI). A support item that provides the equipment with special protection from electromagnetic pulse (EMP) damage during a nuclear attack.

4. The statement END OF FIGURE appears just below the last item description in column (6) for a given figure in both the repair parts list and special tools list packages..

QTY (Column (7)). The QTY (quantity per figure column) indicates the quantity of the item used in the breakout shown on the illustration/figure, which is prepared for a functional group, subfunctional group, or an assembly. A “V” appearing in this column in lieu of a quantity indicates that the quantity is variable and the quantity may vary from application to application.

EXPLANATION OF CROSS-REFERENCE INDEXES WORK PACKAGES FORMAT AND COLUMNS

1. National Stock Number (NSN) Index Work Package.

STOCK NUMBER Column. This column lists the NSN in National item identification number (NIIN) sequence. The NIIN consists of the last nine digits of the NSN.

NSN (e.g., 5385-01-574-1476) NIIN	When using this column to locate an item, ignore the first four digits of the NSN. However, the complete NSN should be used when ordering items by stock number.

FIG. Column. This column lists the number of the figure where the item is identified/located. The figures are in numerical order in the repair parts list and special tools list work packages..

ITEM Column. The item number identifies the item associated with the figure listed in the adjacent FIG. column. This item is also identified by the NSN listed on the same line.

EXPLANATION OF CROSS-REFERENCE INDEXES WORK PACKAGES FORMAT AND COLUMNS (cont)

2. Part Number (P/N) Index Work Package. P/N in this index are listed by part number in ascending alphanumeric sequence (vertical arrangement of letter and number combinations which places the first letter or digit of each group in order A through Z, followed by the numbers 0 through 9 and each following letter or digit in like order).

   PART NUMBER column. Indicates the P/N assigned to the item.

   FIG. Column. This column lists the number of the figure where the item is identified/located in the repair parts and special tools list work packages.

   ITEM Column. The item number is that number assigned to the item as it appears in the figure referenced in the adjacent figure number column.

SPECIAL INFORMATION

USABLE ON CODE (UOC). The UOC appears in the lower left corner of the Description Column heading. Usable on codes are shown as "UOC: ..." in the Description Column (justified left) on the first line under the applicable item/nomenclature. Uncoded items are applicable to all models. Identification of the usable on codes used in the RPSTL are:

Code	Used On
023	7.62-MM Machine Gun, M60
G79	7.62-MM Machine Gun, M60D

Fabrication Instructions. Bulk materials required to manufacture items are listed in the bulk material functional group of this RPSTL. Part numbers for bulk material are also referenced in the Description Column of the line item entry for the item to be manufactured/fabricated. Detailed fabrication instructions for items source coded to be manufactured or fabricated are found in Work Package WP 0083 00.

Index Numbers. Items which have the word BULK in the figure column will have an index number shown in the item number column. This index number is cross-referenced between the NSN/ P/N index work packages and the bulk material list in the repair parts list work package.

HOW TO LOCATE REPAIR PARTS

1. When NSNs or P/Ns Are Not Known.

   First. Using the table of contents, determine the assembly group which the item belongs. This is necessary since figures are prepared for assembly groups and subassembly groups, and lists are divided into the same groups.

   Second. Find the figure covering the functional group or the subfunctional group to which the item belongs.

   Third. Identify the item on the figure and note the number(s).

   Forth. Look in the repair parts list work packages for the figure and Rem numbers. The NSNs and part numbers are on the same line as the associated item numbers.

2. When NSN Is Known.

First. If you have the NSN, look in the STOCK NUMBER column of the NSN index work package. The NSN is arranged in NIIN sequence. Note the figure and item number next to the NSN.

Second. Turn to the figure and locate the item number. Verify that the item is the one you are looking for.

3. When P/N Is Known.

First. If you have the P/N and not the NSN, look in the PART NUMBER column of the P/N index work package. Identify the figure and item number.

Second. Look up the item on the figure in the applicable repair parts list work package.

ABBREVIATIONS

Not applicable.

(This page intentionally left blank)

GROUP 00: MACHINE GUN, 7.62MM, M60 AND M60D, (MAJOR ASSEMBLIES), 8413999 AND 11699750, REPAIR PARTS LIST

0050 00

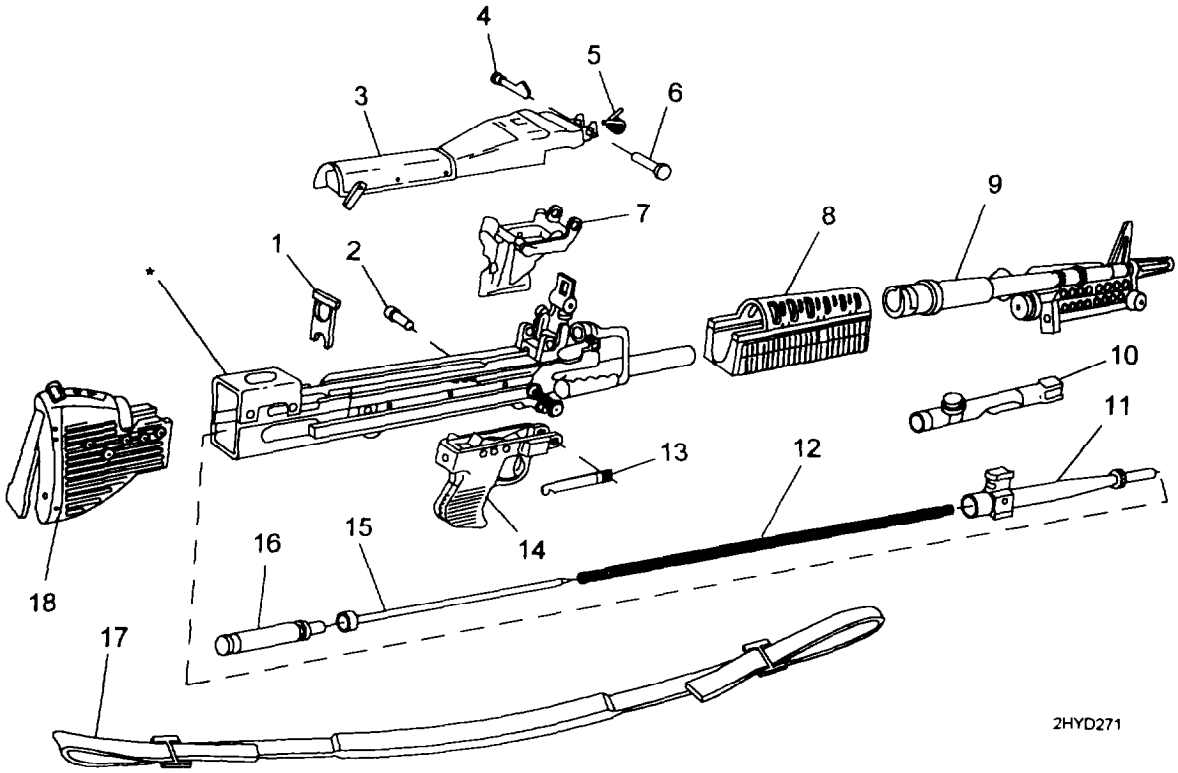

* SEE FIGURE 2 FOR FURTHER DISASSEMBLY

Figure 1. Group 00 Machine Gun, 7.62-MM M60 and M60D (M60 Major Assemblies), PN 8413999 and PN 11699750

(1) ITEM NO	(2) SMR CODE	(3) NATIONAL STOCK NUMBER	(4) CAGEC	(5) PART NUMBER	(6) DESCRIPTION AND USABLE ON CODES (UOC)	(7) QTY
					GROUP 00: MACHINE GUN, 7.62-MM, M60 AND M60D (M60 MAJOR ASSEMBLIES) P/N 8413999 AND 11699750	
					FIG. 1: MACHINE GUN, 7.62-MM (M60 MAJOR ASSEMBLIES)	
1	PAOZZ	1005-00-909-3020	19204	11699786	YOKE, BUFFER RETAINING UOC: G79. 023	1
2	PAOZZ	5315-00-608-5178	19204	7269205	PIN, GROOVED, HEADED UOC: G79, 023	2
3	AFOFF		19204	7269114	COVER ASSEMBLY (SEE FIG. C-15 FOR BREAKDOWN) UOC: G79, 023	1
4	PAOZZ	1005-00-608-5214	19204	7269243	LATCH, HINGE PIN UOC: G79, 023	1
5	PAOZZ	5360-00-608-5269	19205	7269301	SPRING, HELICAL UOC: G79, 023	1
6	PAOZZ	1005-00-608-5218	19204	7269247	PIN. HINGE, COVER UOC: G79, 023	1
7	PAOOO	1005-01-448-1837	19204	8448237	TRAY ASSEMBLY AND HANGER ASSEMBLY (SEE FIG. 19 FOR BREAKDOWN) UOC: 023	1
6	PAOFF	1005-00-919-7275	19204	11010430	FOREARM ASSEMBLY (SEE FIG. 22 FOR BREAKDOWN) UOC: 023	1
9	PAOFF	1005-00-608-5001	19204	7269027	BARREL ASSEMBLY, GUN AND BIPOD ASSEMBLY (SEE FIG. 11 FOR BREAKDOWN) UOC: 023	1
10	AFOFF		19200	11010357	BOLT ASSEMBLY, BREECH (SEE FIG. 7 FOR BREAKDOWN) UOC: G79, 023	1
11	PAOFF	1005-01-183-0572	19200	9362510	ROD ASSEMBLY, OPERATING (SEE FIG. 8 FOR BREAKDOWN) REPLACES P/N 11686309 UOC. G79, 023	1
12	PAOZZ	5360-01-203-2973	19200	9362511	SPRING, HELICAL COMP. REPLACES PIN 7269303 UOC: G79, 023	1
13	PAOZZ	5360-00-975-8595	19204	7792398	SPRING, FLAT UOC: 023	1
14	PAOFF	1005-01-451-0288	19204	7269202	GRIP ASSEMBLY, TRIGGER MECHANISM (SEE FIG. 9 FOR BREAKDOWN) UOC: 023	1
15	PAOZZ	1005-01-188-7877	19200	9362512	GUIDE ASSEMBLY, DRIVE REPLACES P/N 7269199 UOC: G79, 023	1
16	PAOZZ	1005-00-908-4141	19204	11010518	BUFFER ASSEMBLY, HYDRAULIC UOC: G79, 023	1
17	PAOZZ	1005-00-312-7177	19204	12002983	SLING, SMALL ARMS UOC: 023	1
18	PAOFF	1005-00-930-9932	19204	11686711	STOCK, GUN, SHOULDER (SEE FIG. 5 FOR BREAKDOWN) UOC: 023	1

END OF FIGURE

GROUP 00: MACHINE GUN, 7.62MM, M60 AND M60D, (M60 MINOR COMPONENTS), 7269100 AND 11699750, REPAIR PARTS LIST

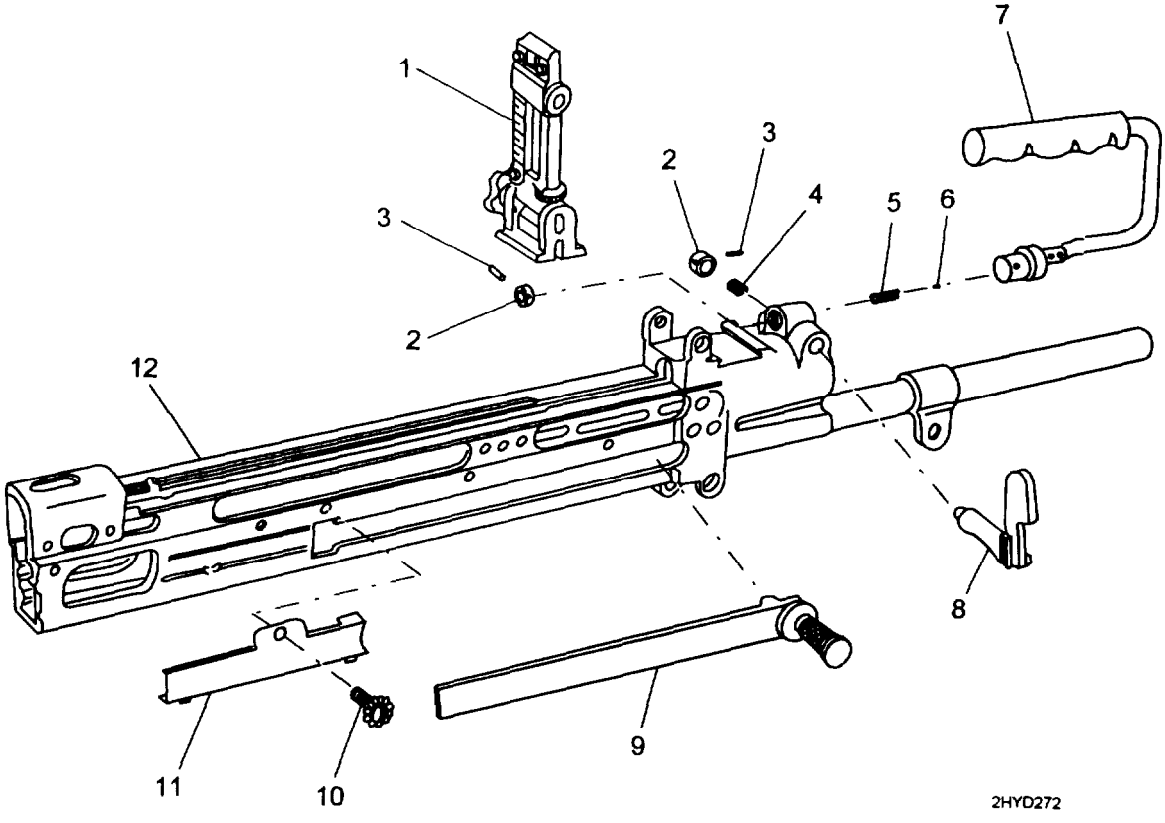

Figure 2. Group 00 Machine Gun, 7.62-MM M60 and M60D (M60 Minor Components), PN 7269100 and PN 11699750

(1) ITEM NO	(2) SMR CODE	(3) NATIONAL STOCK NUMBER	(4) CAGEC	(5) PART NUMBER	(6) DESCRIPTION AND USABLE ON CODES (UOC)	(7) QTY
					GROUP 00: MACHINE GUN, 7.62-MM, M60 AND M60D (M60 MINOR COMPONENTS) P/N 7269100 AND 11699750	
					FIG. 2: MACHINE GUN, 7.82-MM (M60 MINOR COMPONENTS)	
1	PAFFF	1055-00-064-5848	19204	7791437	SIGHT REAR (SEE FIG. C23 FOR BREAKDOWN) UOC: 023	1
2	PAOZZ	1005-00-918-2609	19205	11010377	RING, BARREL LOCK UOC: G79, 023	2
3	PAOZZ	5315-00-839-0901	96906	MS39086-81	PIN, SPRING UOC: G79, 023	2
4	PAOZZ	5360-00-913-0928	19204	11010197	SPRING, HELICAL UOC: G79, 023	1
5	PAOZZ	5360-00-608-5270	19205	7269302	SPRING, HELICAL UOC: G79, 023	1
6	PAOZZ	1005-00-608-5221	19204	7269250	PLUNGER, DETENT UOC: G79, 023	1
7	PAOZZ	1005-00-808-5203	19205	7269231	HANDLE, CARRYING UOC: 079, 023	1
8	PAOZZ	1005-00-918-2608	19204	11010184	LOCK, BARREL UOC: G79, 023	1
9	AFFFF		19205	7791621	HANDLE ASSEMBLY, COCKING (SEE FIG. C-26 FOR BREAKDOWN) UOC: G79, 023	1
10	PAOZZ	5305-00-753-4113	19204	7790559	SCREW, ASSEMBLED UOC: G79, 023	1
11	PAOZZ	1005-00-603-9285	19205	11010155	GUIDE, COCKING HANDLE UOC: G79, 023	1
12	XAFDD		19204	11686308	RECEIVER, GUN (SEE FIG. C-27 FOR BREAKDOWN) UOC: 023	1

END OF FIGURE

GROUP 00: MACHINE GUN, 7.62MM, M60 AND M60D, (M60D MAJOR ASSEMBLIES) 7269100 AND 11699750, REPAIR PARTS LIST

0052 00

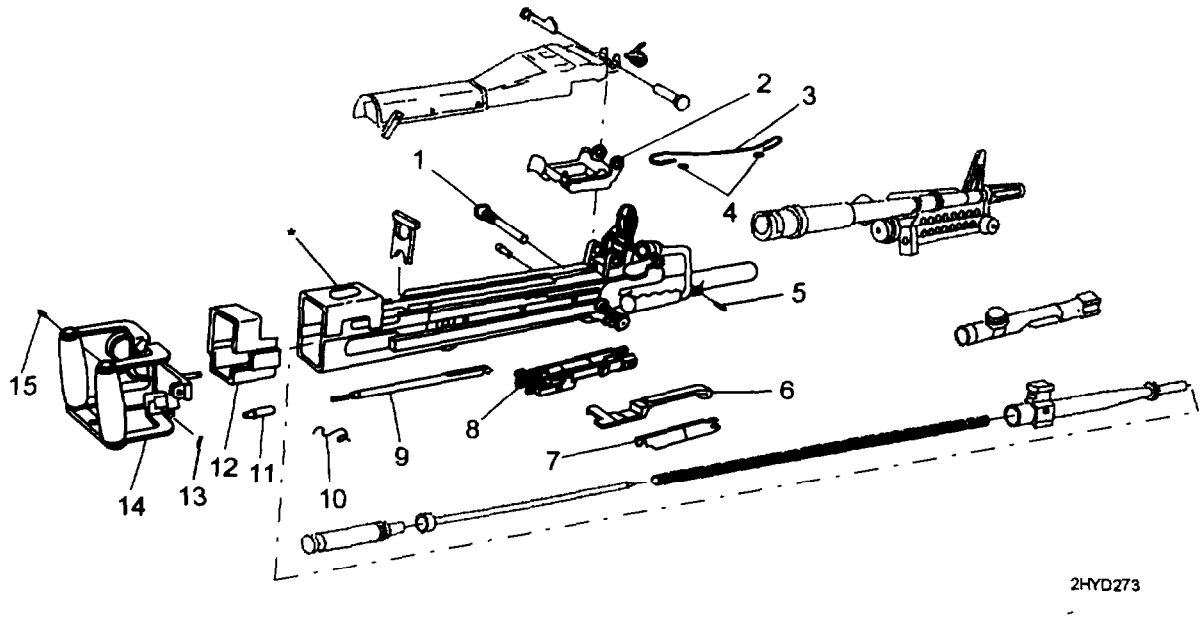

*SEE FIGURE 4 FOR FURTHER DISASSEMBLY

NOTE: PHANTOMED PARTS ARE COMMON TO M60 MODEL. SEE FIGURE 1.

Figure 3. Group 00 Machine Gun, 7.62-MM M60 and M60D (M60D Major Assemblies), PN 7269100 and PN 11699750

(1) ITEM NO	(2) SMR CODE	(3) NATIONAL STOCK NUMBER	(4) CAGEC	(5) PART NUMBER	(6) DESCRIPTION AND USABLE ON CODES (UOC)	(7) QTY
					GROUP 00: MACHINE GUN, 7.62-MM, M60 AND M60D (M60D MAJOR ASSEMBLIES) P/N 7269100 AND 11699750	
					FIG. 3: MACHINE GUN, 7.62-MM (M60D MAJOR ASSEMBLIES)	
1	PA0ZZ	5340-00-913-5486	96906	MS17990C519	PIN, QUICK RELEASE UOC: G79	1
2	PAOOO	1005-00-987-9682	19205	7792096	TRAY ASSEMBLY, CARTRIDGE FEED (SEE FIG. 21 FOR BREAKDOWN) UOC: G79	1
3	PAOZZ	4010-00-912-3627	19205	8427869-7	WIRE ROPE ASSEMBLY UOC: G79	1
4	PAOZZ	1005-00-912-3629	19204	8427871	SLEEVE, SWAGING UOC: G79	2
5	PAOZZ	5315-00-761-6881	96906	MS16562-151	PIN, SPRING UOC: G79	1
6	PAOZZ	1005-00-909-3011	19205	11699793	ADAPTER, GUN UOC: G79	1
7	PAOZZ	5360-00-909-3021	19204	11699785	SPRING, FLAT UOC: G79	1
8	PAOOO	1005-01-441-5508	19205	11699773	SEAR AND SAFETY HOUSING (SEE FIG. 10 FOR BREAKDOWN) UOC: G79	1
9	PAOZZ	1005-00-909-3023	19200	11699790	LINK AND SPRING, SEAR ASSEMBLY UOC: G79	1
10	MOOZZ		19204	MS20995C32	WIRE, SAFETY 0.032 IN. (MAKE FROM NSN 9505-00-293-4208) UOC: G79, 023	1
11	PAOZZ	1005-00-909-3003	19205	11699789	NUT, SEAR LINK UOC: G79	1
12	PAOZZ	1005-00-909-3016	19204	11699787	BOOT, DUST AND MOISTURE UOC: G79	1
13	PAOZZ	5315-00-067-3871	96906	MS24665-18	PIN, COTTER UOC: G79, 023	2
14	PAOOO	1005-00-909-3024	19200	11699751	GRIP AND TRIGGER ASSEMBLY (SEE FIG. 6 FOR BREAKDOWN) UOC: G79	1
15	PAOZZ	5315-00-909-3006	19205	11699788	PIN, GROOVED, HEADED UOC: G79	1

END OF FIGURE

GROUP 00: MACHINE GUN, 7.62MM, M60 AND M60D, (M60D MINOR COMPONENTS), 7269100 AND 11699750, REPAIR PARTS LIST

0053 00

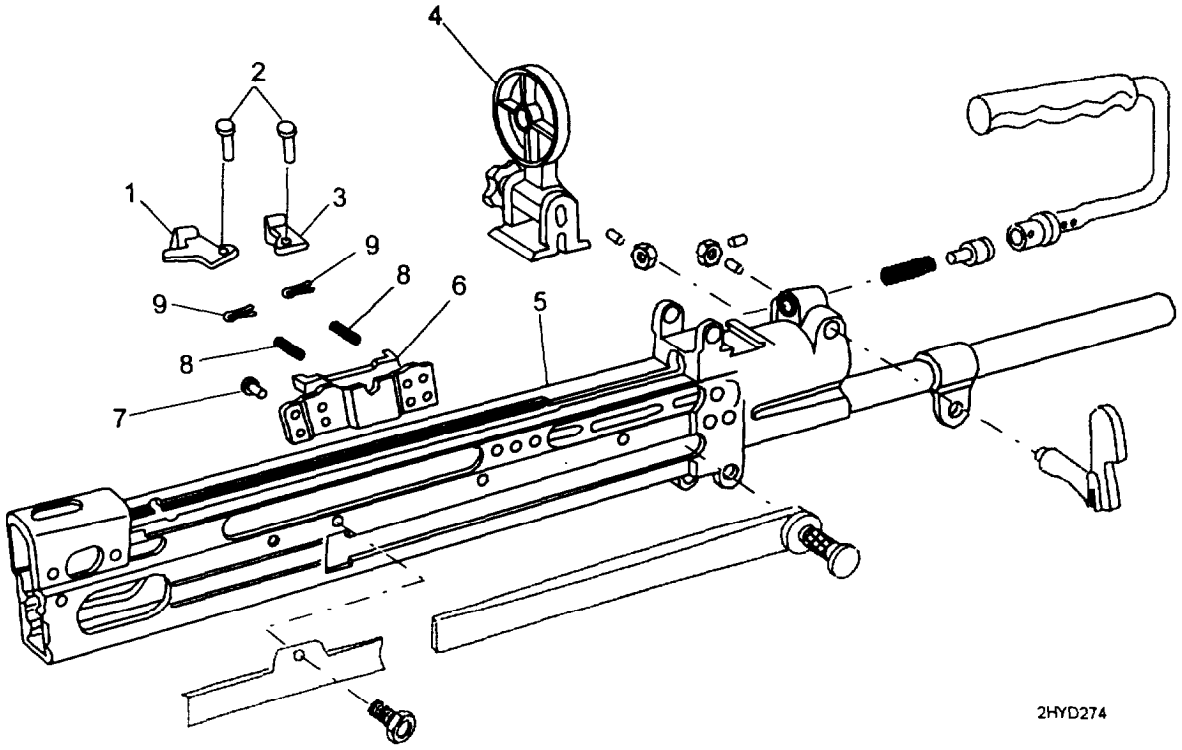

NOTE: PHANTOMED PARTS ARE COMMON TO M60 MODEL. SEE FIGURE 2.

Figure 4. Group 00 Machine Gun, 7.62-MM, M60 and M60D (M60D Minor Components), PN 7239100 and PN 11699750

(1) ITEM NO	(2) SMR CODE	(3) NATIONAL STOCK NUMBER	(4) CAGEC	(5) PART NUMBER	(6) DESCRIPTION AND USABLE ON CODES (UOC)	(7) QTY
					GROUP 00: MACHINE GUN, 7.62-MM, M60 AND M60D (M60D MINOR COMPONENTS) P/N 7269100 AND 11699750	
					FIG. 4: MACHINE GUN, 7.62-MM (M60D MINOR COMPONENTS)	
1	PAFZZ	1005-00-690-3505	19204	7790554	LEVER, LOCK-RELEASE UOC: G79	1
2	PAFZZ	5315-00-066-6082	19204	7792069	PIN, STRAIGHT, HEADED UOC: G79	2
3	PAFZZ	1005-00-690-3504	19204	7790553	PAWL UOC: G79	1
4	PAOOO	1005-01-442-0162	19205	11699796	SIGHT, REAR (SEE FIG. 25 FOR BREAKDOWN) UOC: G79	1
5	XAFDD		19205	11699805	RECEIVER ASSEMBLY, GUN (SEE FIG. 28 FOR BREAKDOWN) UOC: G79	1
6	PAFZZ	1005-00-934-8312	19204	11686976	BRACKET, MAGAZINE UOC: G79	1
7	PAFZZ	5320-00-075-7225	19204	7792086	RIVET, SOLID UOC: G79	4
8	PAFZZ	5360-00-690-3502	19204	7790551	SPRING, HELICAL UOC: G79	2
9	PAFZZ	5310-00-067-3871	96906	MS24665-18	PIN, COTTER UOC: G79	2

END OF FIGURE

GROUP 01: SHOULDER GUN STOCK ASSEMBLY (M60 ONLY), 11686711, REPAIR PARTS LIST

0054 00

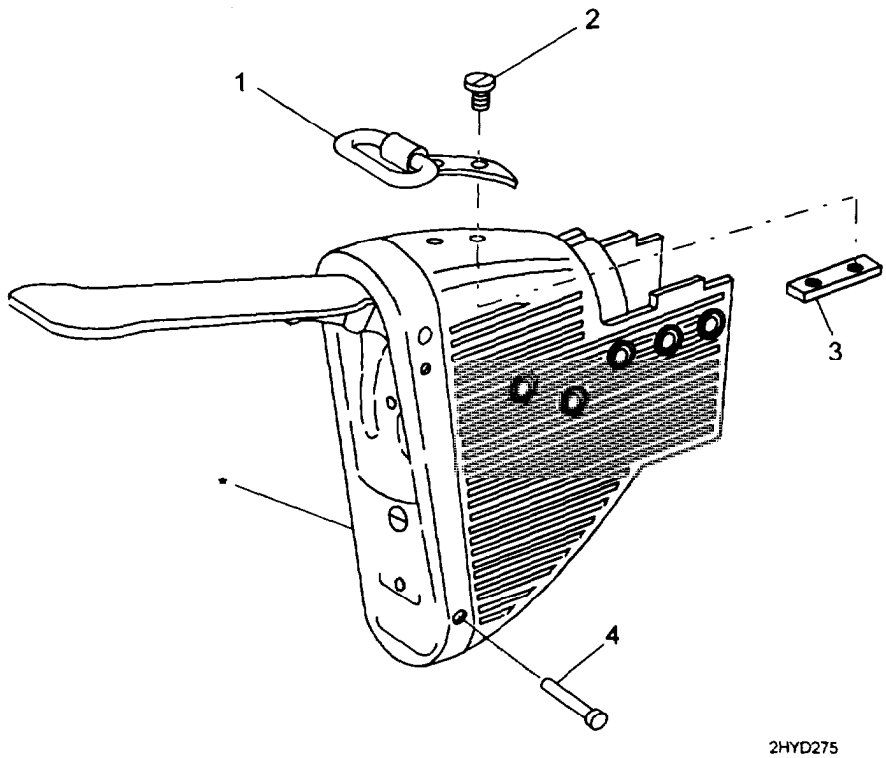

* NO FURTHER DISASSEMBLY AUTHORIZED.

Figure 5. Group 01 Shoulder Gun Stock Assembly (M60 only), PN 11686711

(1) ITEM NO	(2) SMR CODE	(3) NATIONAL STOCK NUMBER	(4) CAGEC	(5) PART NUMBER	(6) DESCRIPTION AND USABLE ON CODES (UOC)	(7) QTY
					GROUP 01: SHOULDER GUN STOCK ASSEMBLY (M60 ONLY), P/N 11686711	
					FIG. 5: M60 SHOULDER GUN STOCK ASSEMBLY	
1	PAOZZ	1005-00-919-7278	19204	7267089	SWIVEL, SLING, SMALL UOC: 023	1
2	PAOZZ	5305-00-920-7254	19205	11010365	SCREW, ASSEMBLED UOC: 023	2
3	PAOZZ	5365-00-919-7274	19204	11010369	SPACER, PLATE UOC: 023	1
4	PAFZZ	5320-00-852-6313	19205	11686722	RIVET, SOLID UOC: 023	2

END OF FIGURE

GROUP 02: GRIP AND TRIGGER ASSEMBLY (M60D ONLY) 11699751, REPAIR PARTS LIST 0055 00

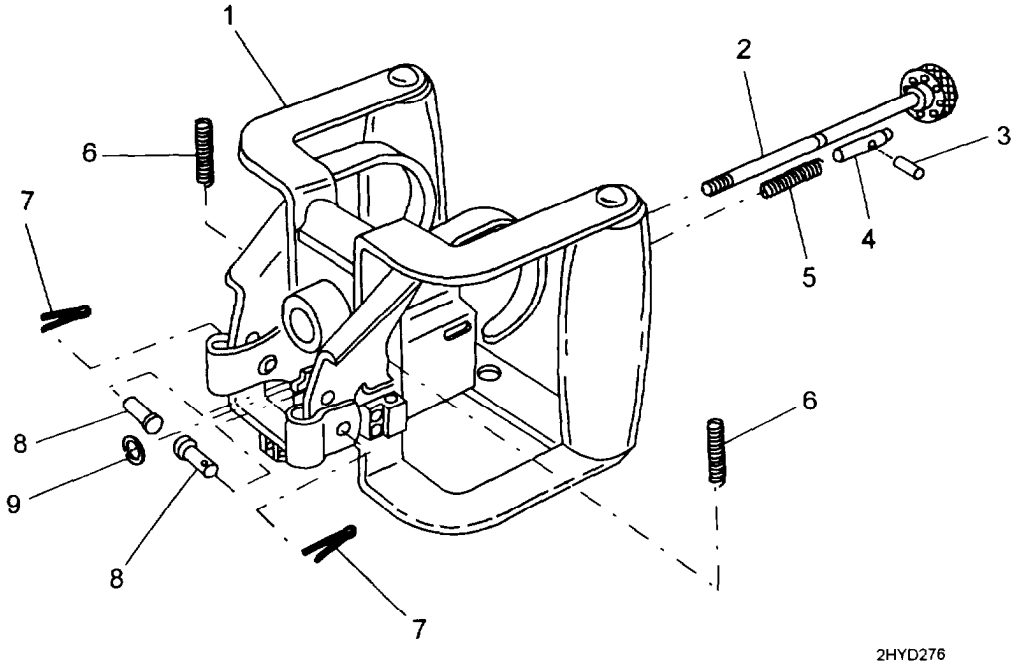

Figure 6. Group 02 Grip and Trigger Assembly (M60D only), PN 11699751

(1) ITEM NO	(2) SMR CODE	(3) NATIONAL STOCK NUMBER	(4) CAGEC	(5) PART NUMBER	(6) DESCRIPTION AND USABLE ON CODES (UOC)	(7) QTY
					GROUP 02: GRIP AND TRIGGER ASSEMBLY (M60D ONLY) P/N 11699751	
					FIG. 6: M60D GRIP AND TRIGGER ASSEMBLY	
1	XAOZZ		19200	11699752	SPADE GRIP TRIGGER AND FRAME ASSEMBLY UOC: G79	1
2	PAOZZ	1005-00-912-3628	19205	11699769	KNOB AND PIN ASSEMBLY UOC: G79	1
3	PAOZZ	5315-00-058-6079	96906	MS16562-127	PIN. SPRING UOC: G79	1
4	PAOZZ	5315-00-909-3026	19205	11699768	PIN, SHOULDER UOC: G79	1
5	PAOZZ	5360-00-909-3025	19204	11699767	SPRING, HELICAL COMPRESSION UOC: G79	1
6	PAOZZ	5360-00-909-3012	19204	11699756	SPRING, HELICAL UOC: G79	2
7	PAOZZ	5315-00-239-8019	96906	MS24665-86	PIN, COTTER UOC: G79	2
8	PAOZZ	5315-00-909-3007	19205	11699757	PIN, GROOVED, HEADED UOC: G79	2
9	PAOZZ	5325-00-909-3033	19205	11699772	RING, RETAINING UOC: G79	1

END OF FIGURE

GROUP 03: BREECH BOLT ASSEMBLY. 11010357, REPAIR PARTS LIST

0056 00

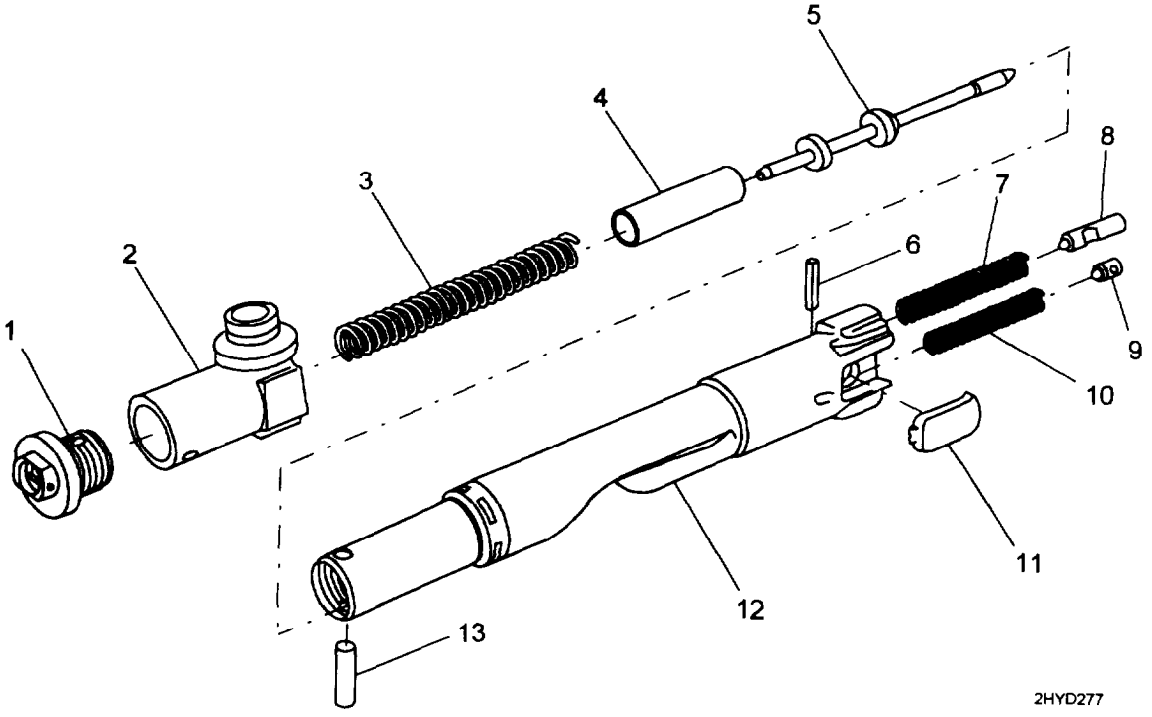

Figure 7. Group 03 Breech Bolt Assembly, PN 11010357

(1) ITEM NO	(2) SMR CODE	(3) NATIONAL STOCK NUMBER	(4) CAGEC	(5) PART NUMBER	(6) DESCRIPTION AND USABLE ON CODES (UOC)	(7) QTY
					GROUP 03: BREECH BOLT ASSEMBLY PIN 11010357 FIG. 7: BREECH BOLT ASSEMBLY	
1	PAOZZ	1005-01-185-0735	19200	9362505	PLUG ASSEMBLY, BOLT REPLACES P/N 7791523 UOC: G79, 023	1
2	PAOZZ	1005-00-608-5037	19204	7269063	ACTUATOR ASSEMBLY, CAM UOC: G79, 023	1
3	PAOZZ	5360-00-608-5061	19204	7269087	SPRING, HELICAL UOC: G79, 023	1
4	PAOZZ	1005-00-608-5039	19204	7269065	GUIDE, FIRING PIN UOC: G79, 023	1
5	PAFZZ	1005-00-872-4443	19204	11010376	PIN, FIRING UOC: G79, 023	1
6	PAOZZ	5315-00-839-0901	96906	MS39086-81	PIN, SPRING UOC: G79,	1
7	PAOZZ	5360-01-015-6191	19204	12003125	SPRING, HELICAL UOC: G79, 023	1
8	PAOZZ	1005-00-872-4442	19204	11010375	EJECTOR, CARTRIDGE UOC: 079, 023	1
9	PAOZZ	1005-00-608-5057	19204	7269083	PLUNGER, EXTRACTOR UOC: G79, 023	1
10	PAOZZ	5360-00-606-5060	19204	7269086	SPRING, HELICAL UOC: G79, 023	1
11	PAOZZ	1005-00-779-6030	19204	7790907	EXTRACTOR, CARTRIDGE UOC: G79, 023	1
12	PAFZZ	1005-00-872-4441	19204	11010358	BOLT, BREECH UOC: G79, 023	1
13	PAOZZ	5315-00-994-9648	19204	7792920	PIN, STRAIGHT, HEADLESS UOC: G79, 023	1

END OF FIGURE

GROUP 04: OPERATING ROD ASSEMBLY, 9362510, REPAIR PARTS LIST

0057 00

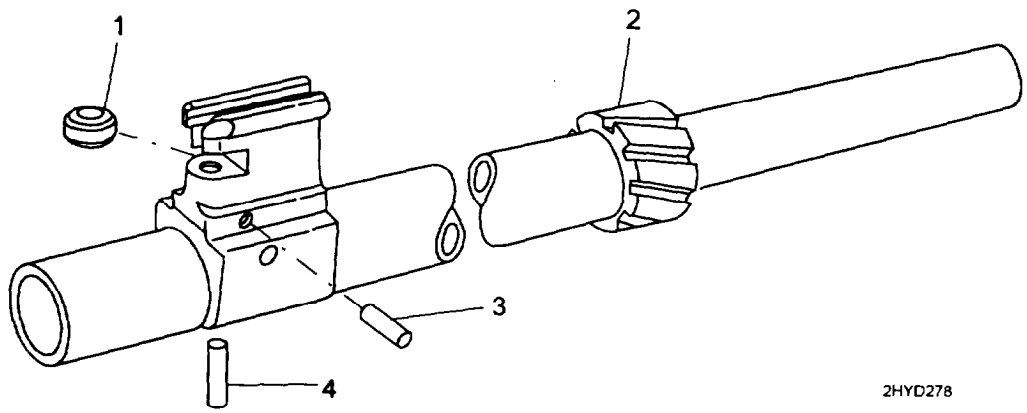

Figure 8. Group 04 Operating Rod Assembly, PN 9362510

(1) ITEM NO	(2) SMR CODE	(3) NATIONAL STOCK NUMBER	(4) CAGEC	(5) PART NUMBER	(6) DESCRIPTION AND USABLE ON CODES (UOC)	(7) QTY
					GROUP 04: OPERATING ROD ASSEMBLY PIN 9362510	
					FIG. 8: OPERATING ROD ASSEMBLY	
1	PAFZZ	1005-01-185-0734	19200	9362506	ROLLER, YOKE REPLACES P/N 7790942 UOC; G79, 023	1
2	XAFZZ		19200	9362509	YOKE AND TUBE ASSEMBLY REPLACES PIN 7790944 UOC: G79, 023	1
3	PAFZZ	5315-00-940-9490	96906	MS51923-105	PIN, SPRING UOC: G79, 023	1
4	PAFZZ	5315-01-183-2860	19200	9362507	PIN, STRAIGHT, HEADLESS REPLACES 11010215 UOC: G79, 023	1

END OF FIGURE

(This page intentionally left blank)

GROUP 05: TRIGGER MECHANISM GRIP ASSEMBLY (M60 ONLY) 7269202, REPAIR PARTS LIST 0058 00

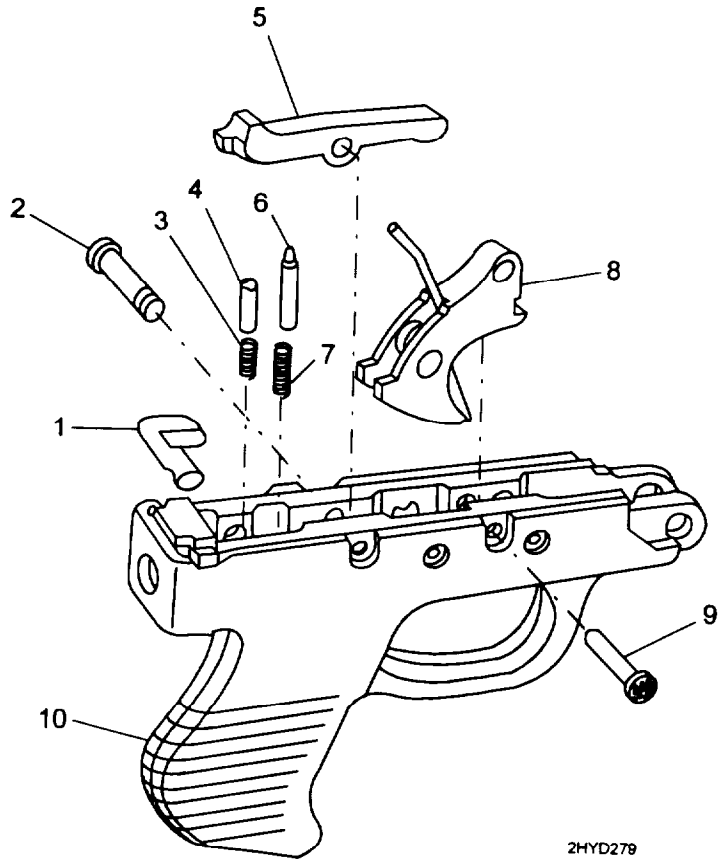

Figure 9. Group 05 Trigger Mechanism Grip Assembly (M60 only), PN 7269202

(1) ITEM NO	(2) SMR CODE	(3) NATIONAL STOCK NUMBER	(4) CAGEC	(5) PART NUMBER	(6) DESCRIPTION AND USABLE ON CODES (UOC)	(7) QTY
					GROUP 05: TRIGGER MECHANISM GRIP ASSEMBLY (M60 ONLY), P/N 7269202 FIG. 9: TRIGGER MECHANISM GRIP ASSEMBLY	
1	PAOZZ	1005-00-069-9358	19204	7269415	SAFETY, SMALL ARMS UOC: 023	1
2	PAOZZ	5315-00-608-5178	19204	7269205	PIN, GROOVED, HEADED UOC: 023	1
3	PAOZZ	5360-00-608-5183	19204	7269210	SPRING, HELICAL UOC: 023	1
4	PAOZZ	1005-00-608-5179	19204	7269206	PLUNGER, SAFETY UOC: 023	1
5	PAOZZ	1005-00-608-5182	19204	7269209	SEAR UOC: 023	1
6	PAOZZ	1005-00-608-5180	19204	7269207	PLUNGER, SEAR UOC: 023	1
7	PAOZZ	5360-00-608-5184	19204	7269211	SPRING, HELICAL UOC: 023	1
8	PAOZZ	1005-00-608-5185	19204	7269212	TRIGGER ASSEMBLY UOC: 023	1
9	PAOZZ	5315-00-608-5177	19205	7269204	PIN, SHOULDER, HEADED UOC: 023	1
10	XAOZZ		19204	7269203	HOUSING, TRIGGER UOC: 023	1

END OF FIGURE

GROUP 06: SEAR AND SAFETY HOUSING ASSEMBLY (M60D ONLY) 11699773, REPAIR PARTS LIST 0059 00

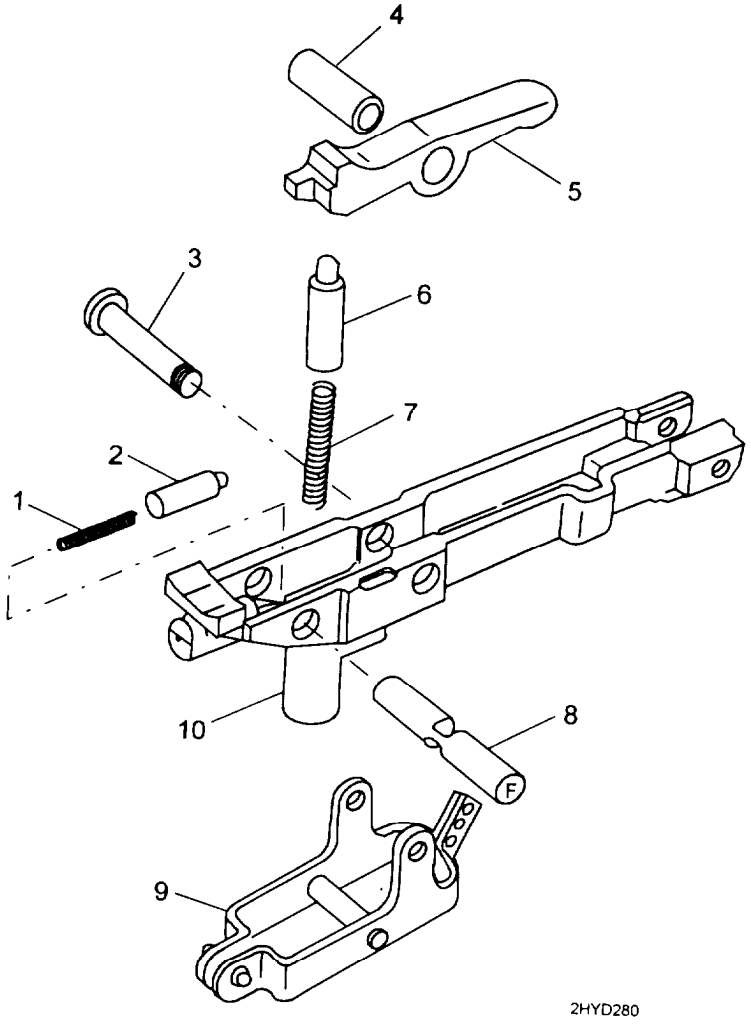

Figure 10. Group 06 Sear and Safety Housing Assembly (M60D only), PN 11699773

(1) ITEM NO	(2) SMR CODE	(3) NATIONAL STOCK NUMBER	(4) CAGEC	(5) PART NUMBER	(6) DESCRIPTION AND USABLE ON CODES (UOC)	(7) QTY
					GROUP 06: SEAR AND SAFETY HOUSING ASSEMBLY (M60D ONLY), P/N 11699773	
					FIG. 10: M60D SEAR AND SAFETY HOUSING ASSEMBLY	
1	PAOZZ	5360-00-909-3017	19204	11699775	SPRING, HELICAL UOC: G79	1
2	PAOZZ	1005-00-909-3009	19205	11699776	PLUNGER, SAFETY UOC: G79	1
3	PAOZZ	5315-00-909-3004	19204	11699779	PIN, GROOVED, HEADED UOC: G79	1
4	PAOZZ	3120-00-909-3005	19204	11699778	BUSHING, SLEEVE UOC: G79	1
5	PAOZZ	1005-00-608-5182	19204	7269209	SEAR UOC: G79	1
6	PAOZZ	1005-00-608-5180	19204	7269207	PLUNGER, SEAR UOC: G79	1
7	PAOZZ	5360-00-608-5184	19204	7269211	SPRING, HELICAL UOC: G79	1
8	PAOZZ	1005-00-909-3008	19204	11699777	SAFETY, SMALL ARMS UOC: G79	1
9	PAOZZ	1005-00-909-3014	19205	11699780	ACTIVATOR, SEAR UOC: G79	1
10	XAOZZ		19205	11699774	HOUSING, SEAR UOC: G79	1

END OF FIGURE

GROUP 07: BARREL AND BIPOD ASSEMBLY, 7269027, REPAIR PARTS LIST

0060 00

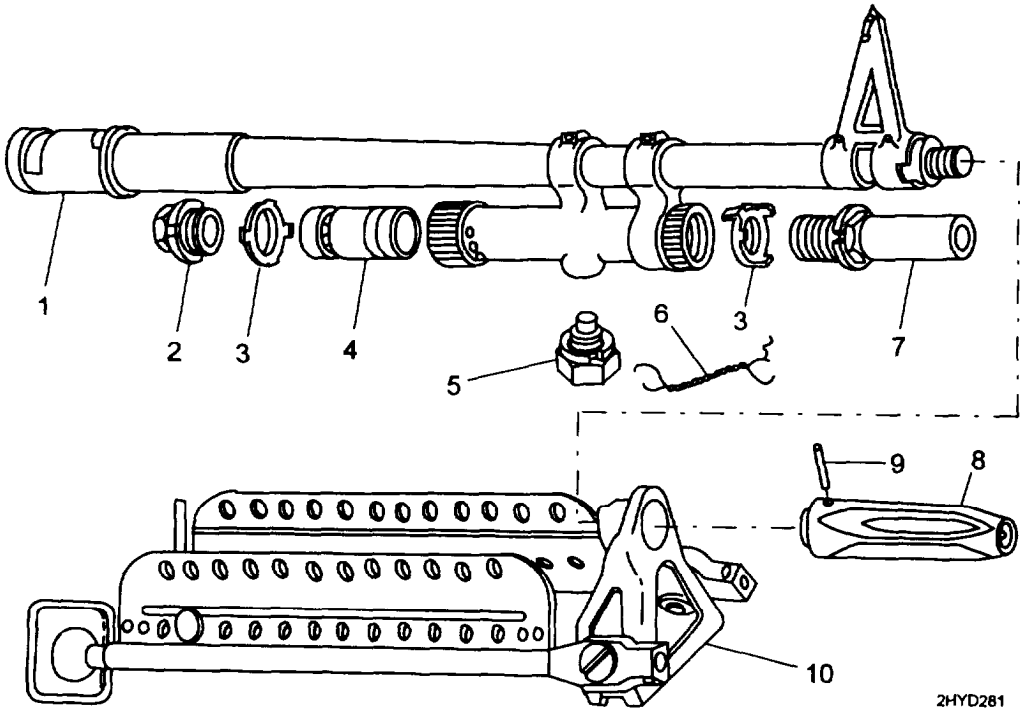

Figure 11. Group 07 Barrel and Bipod Assembly, PN 7269027

(1) ITEM NO	(2) SMR CODE	(3) NATIONAL STOCK NUMBER	(4) CAGEC	(5) PART NUMBER	(6) DESCRIPTION AND USABLE ON CODES (UOC)	(7) O N
					GROUP 07: BARREL AND BIPOD ASSEMBLY P/N 7269027	
					FIG. 11: BARREL AND BIPOD ASSEMBLY	
1	XAFZZ		19204	7269028	BARREL AND GUN ASSEMBLY UOC: G79, 023	1
2	PAOZZ	5365-00-608-5005	19204	7269031	BUSHING, MACHINE UOC: G79, 023	1
3	PAOZZ	5310-00-608-5009	19204	7269035	WASHER, KEY UOC: G79, 023	2
4	PAOZZ	1005-00-875-4350	19204	7791247	PISTON, GAS UOC: G79, 023	1
5	PAOZZ	1005-01-209-3590	19200	9362515	PLUG ASSEMBLY, GAS REPLACES P/N 7792093 UOC: G79, 023	1
6	PAOZZ	9505-00-293-4208	96906	MS20995C32	WIRE, SAFETY 0.032 IN. (MAKE FROM NSN 9505-00-293-4208) UOC: G79, 023	1
7	PAOZZ	1005-00-608-5004	19204	7269030	PLUG, VENT UOC: G79, 023	1
8	PAFZZ	1005-00-608-5008	19204	7269034	SUPRESSOR, FLASH UOC: G79, 023	1
9	PAFZZ	5315-01-285-0610	19200	12599983	PIN, STRAIGHT UOC: G79, 023	1
10	PAFFF	1005-00-020-8683	19204	7793009	BIPOD, MACHINE GUN (SEE FIG. 12 FOR BREAKDOWN) UOC: G79, 023	1

END OF FIGURE

GROUP 0701: MACHINE GUN BIPOD, 7793009, REPAIR PARTS LIST

0061 00

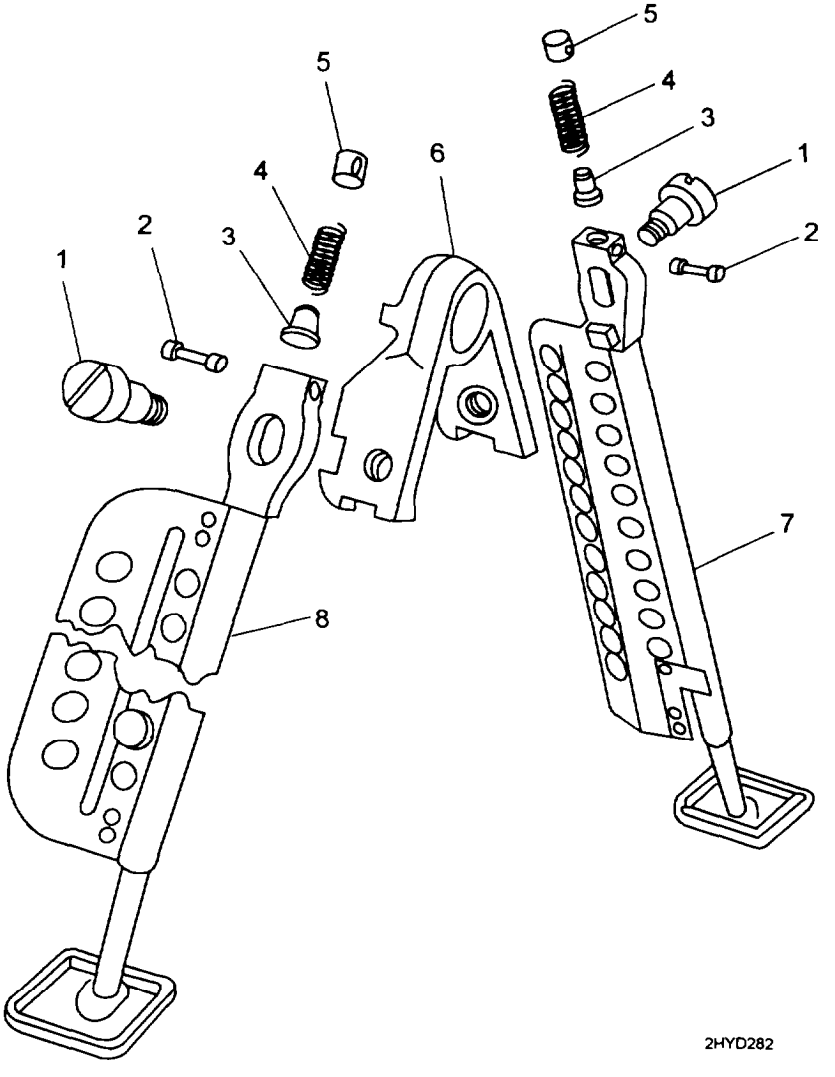

Figure 12. Group 0701 Machine Gun Bipod, PN 7703099

(1) ITEM NO	(2) SMR CODE	(3) NATIONAL STOCK NUMBER	(4) CAGEC	(5) PART NUMBER	(6) DESCRIPTION AND USABLE ON CODES (UOC)	(7) QTY
					GROUP 0701: MACHINE GUN BIPOD PIN 7793009 FIG. 12: MACHINE GUN BIPOD	
1	PAFZZ	5305-00-608-5025	19204	7269051	SCREW, SHOULDER UOC: G79, 023	2
2	PAFZZ	5315-00-608-5022	19204	7269048	PIN, GROOVED UOC: G79, 023	2
3	PAFZZ	5315-00-608-5024	19204	7269050	PIN, STRAIGHT, HEADED UOC: G79, 023	2
4	PAFZZ	5360-00-608-5026	19204	7289052	SPRING, HELICAL UOC: G79, 023	2
5	PAFZZ	1005-00-608-5027	19204	7269053	RETAINER, SPRING LEG UOC: G79, 02	2
6	XAFZZ		19204	7793010	PIVOT, BIPOD ASSEMBLY UOC: G79, 023	1
7	PAFZZ	1005-00-608-5020	19204	7269046	LEG, MACHINE GUN (LEFT) (SEE FIG. 14 FOR BREAKDOWN) UOC: G79, 023	1
8	PAFZZ	1005-00-608-5021	19204	7269047	LEG, MACHINE GUN (RIGHT) (SEE FIG. 13 FOR BREAKDOWN) UOC: G79, 023	1

END OF FIGURE

GROUP 070101: MACHINE GUN LEG (RIGHT), 7269047, REPAIR PARTS LIST 0062 00

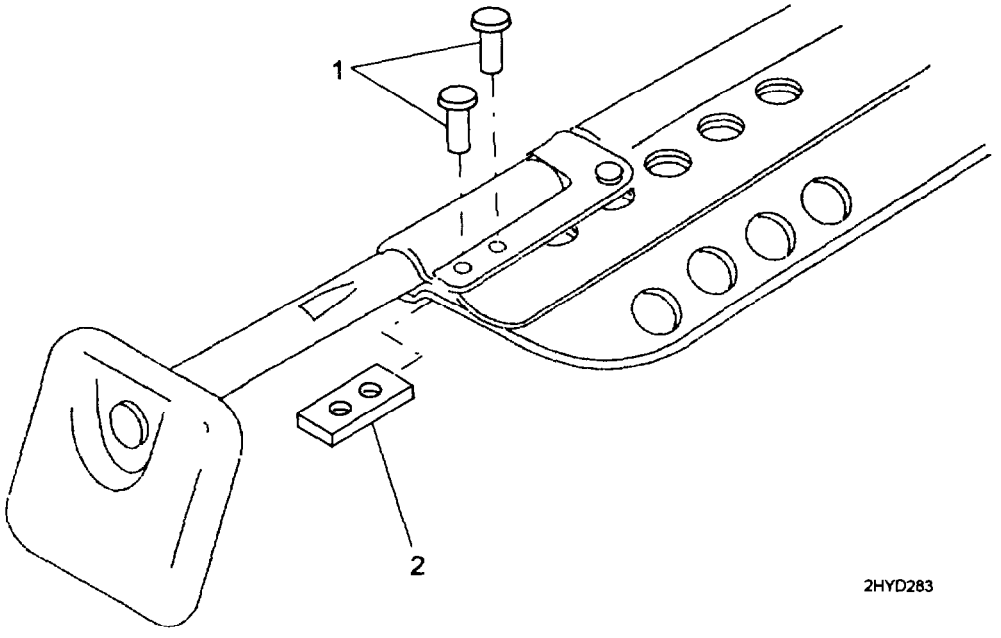

Figure 13. Group 070101 Machine Gun Leg (Right), PN 7269047

(1) ITEM NO	(2) SMR CODE	(3) NATIONAL STOCK NUMBER	(4) CAGEC	(5) PART NUMBER	(6) DESCRIPTION AND USABLE ON CODES (UOC)	(7) QTY
					GROUP 070101: MACHINE GUN LEG (RIGHT) PIN 7269047	
					FIG. 13: MACHINE GUN LEG (RIGHT)	
1	PAFZZ	5320-00-606-5032	19204	7269058	RIVET, SOLID UOC: G79, 023	2
2	PAFZZ	5315-00-196-2753	19204	7269057	KEY, MACHINE UOC: G79, 023	1

END OF FIGURE

GROUP 070102: MACHINE GUN LEG (LEFT), 7269046, REPAIR PARTS LIST

0063 00

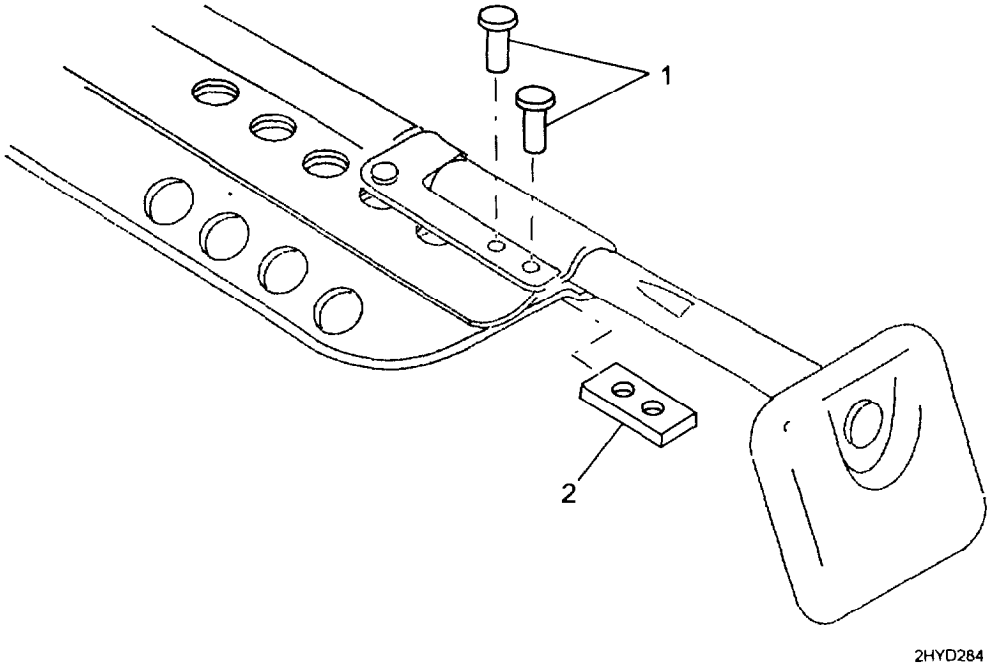

Figure 14. Group 070102 Machine Gun Leg (Left), PN 7269046

(1) ITEM NO	(2) SMR CODE	(3) NATIONAL STOCK NUMBER	(4) CAGEC	(5) PART NUMBER	(6) DESCRIPTION AND USABLE ON CODES (UOC)	(7) QTY
					GROUP 070102: MACHINE GUN LEG (LEFT) PIN 7269046	
					FIG. 14: MACHINE GUN LEG (LEFT)	
1	PAFZZ	5320-00-608-5032	19204	7269058	RIVET, SOLID UOC: G79, 023	2
2	PAFZZ	5315-00-196-2753	19204	7269057	KEY, MACHINE UOC: G79, 023	1

END OF FIGURE

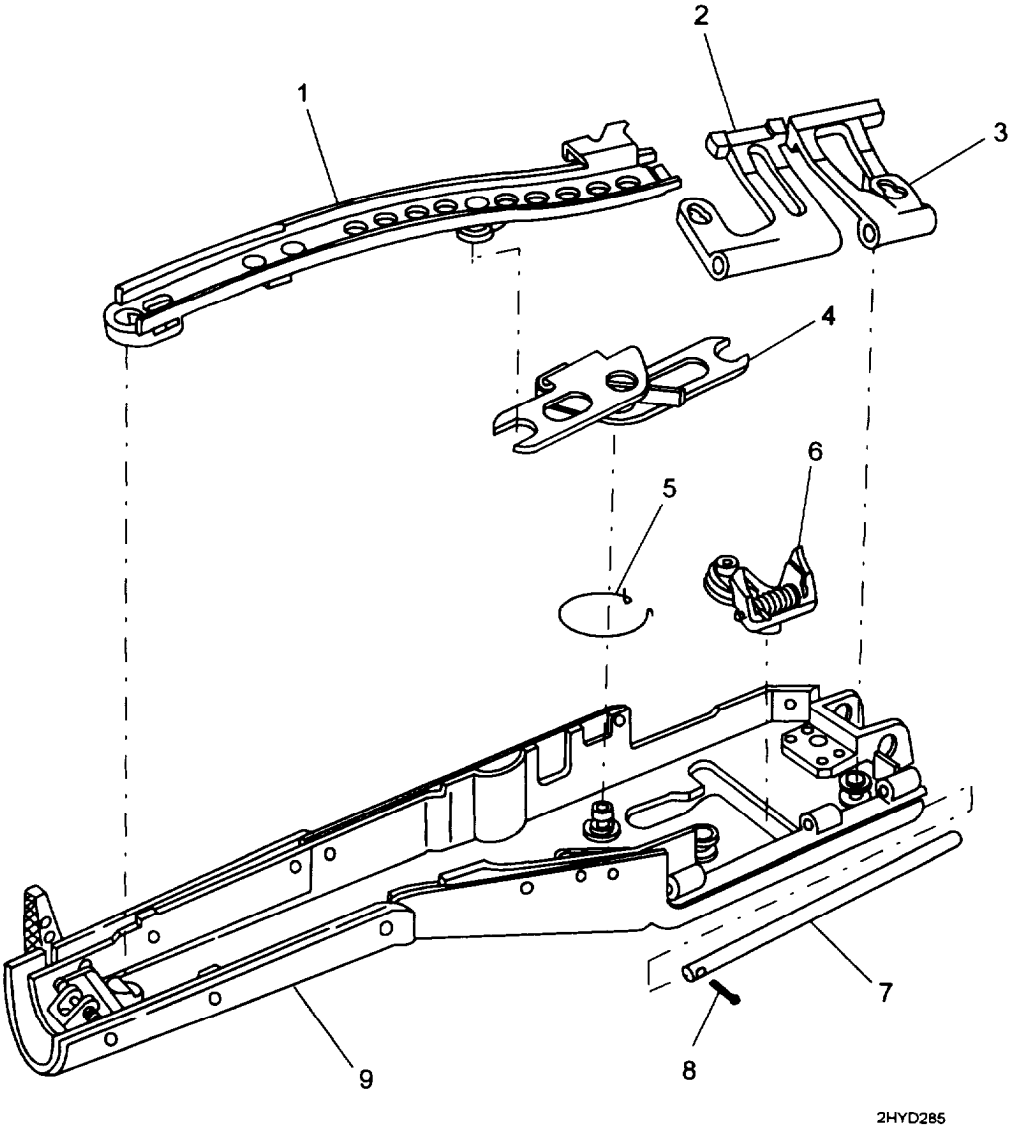

Figure 15. Group 08 Cover and Lever Assembly, PN 7269114

(1) ITEM NO	(2) SMR CODE	(3) NATIONAL STOCK NUMBER	(4) CAGEC	(5) PART NUMBER	(6) DESCRIPTION AND USABLE ON CODES (UOC)	(7) QTY
					GROUP 08: COVER ASSEMBLY P/N 7269114 FIG. 15: COVER AND LEVER ASSEMBLY	
1	PAFFF	1005-00-999-6003	19204	11699814	CAM ASSEMBLY, FEED (SEE FIG. 16 FOR BREAKDOWN) UOC: G79, 023	1
2	PAFZZ	1005-00-608-5090	19204	7269117	GUIDE, CARTRIDGE REAR UOC: G79, 023	1
3	PAFZZ	1005-00-608-5089	19204	7269116	GUIDE, CARTRIDGE FRONT UOC: G79, 023	1
4	AFFFF		19204	7269119	LEVER ASSEMBLY, FEED (SEE FIG. 16 FOR BREAKDOWN) UOC: G79, 023	1
5	PAFZZ	5360-00-912-1146	19204	11686315	SPRING, HELICAL UOC: G79, 023	1
6	PAFFF	1005-00-608-5093	19204	7269120	PAWL ASSEMBLY, CAM FEED (SEE FIG. 17 FOR BREAKDOWN) UOC: G79, 023	1
7	PAFZZ	1005-00-013-7030	19204	11010152	SHAFT, STRAIGHT UOC: G79, 023	1
8	PAOZZ	5315-00-067-3871	19206	MS24665-18	PIN, COTTER UOC: G79, 023	1
9	PAFFF	1005-00-608-5091	19204	7269118	HOUSING ASSEMBLY, COVER (SEE FIG. 18 FOR BREAKDOWN) UOC: G79, 023	1

END OF FIGURE

GROUP 0801: FEED CAM ASSEMBLY, 11699814 AND GROUP 0802: FEED LEVER ASSEMBLY, 7269119, REPAIR PARTS LIST 0065 00

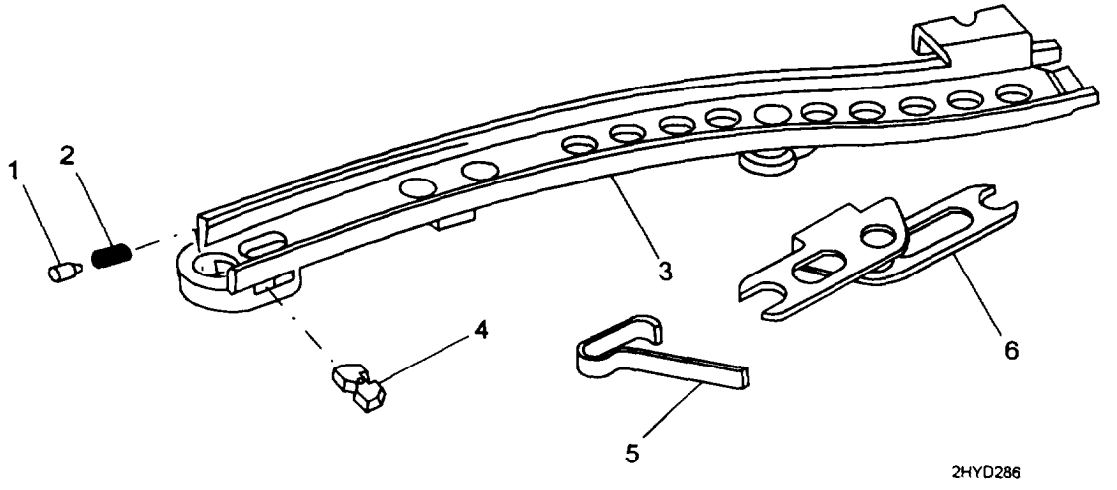

Figure 16. Group 0801 and 0802 Feed Cam Assembly, PN 11699814, and Feed Lever Assembly, PN 7269119

(1) ITEM NO	(2) SMR CODE	(3) NATIONAL STOCK NUMBER	(4) CAGEC	(5) PART NUMBER	(6) DESCRIPTION AND USABLE ON CODES (UOC)	(7) QTY
					GROUP 0801: FEED CAM ASSEMBLY, PIN 7269114 AND GROUP 0802: FEED LEVER ASSEMBLY, PIN 7269119 FIG. 16: FEED CAM ASSEMBLY AND FEED LEVER ASSEMBLY	
1	PAFZZ	1005-00-608-5096	19204	7269123	PLUNGER, RETAINER UOC: G79, 023	1
2	PAFZZ	5360-00-608-5098	19204	7269125	SPRING, HELICAL UOC: G79, 023	1
3	XAFZZ		19204	11699617	CAM ASSEMBLY UOC: G79, 023	1
4	PAFZZ	1005-00-608-5097	19204	7269124	RETAINER, FEED CAM UOC: G79, 023	1
5	PAFZZ	1005-00-608-5119	19204	7269146	CLIP, SPRING LEVER UOC: 079, 023	1
6	PAFZZ	1005-00-608-5118	19204	7269145	LEVER, FEED UOC: G79, 023	1

END OF FIGURE

GROUP 0803: FEED PAWL ASSEMBLY, 7269120, REPAIR PARTS LIST

0066 00

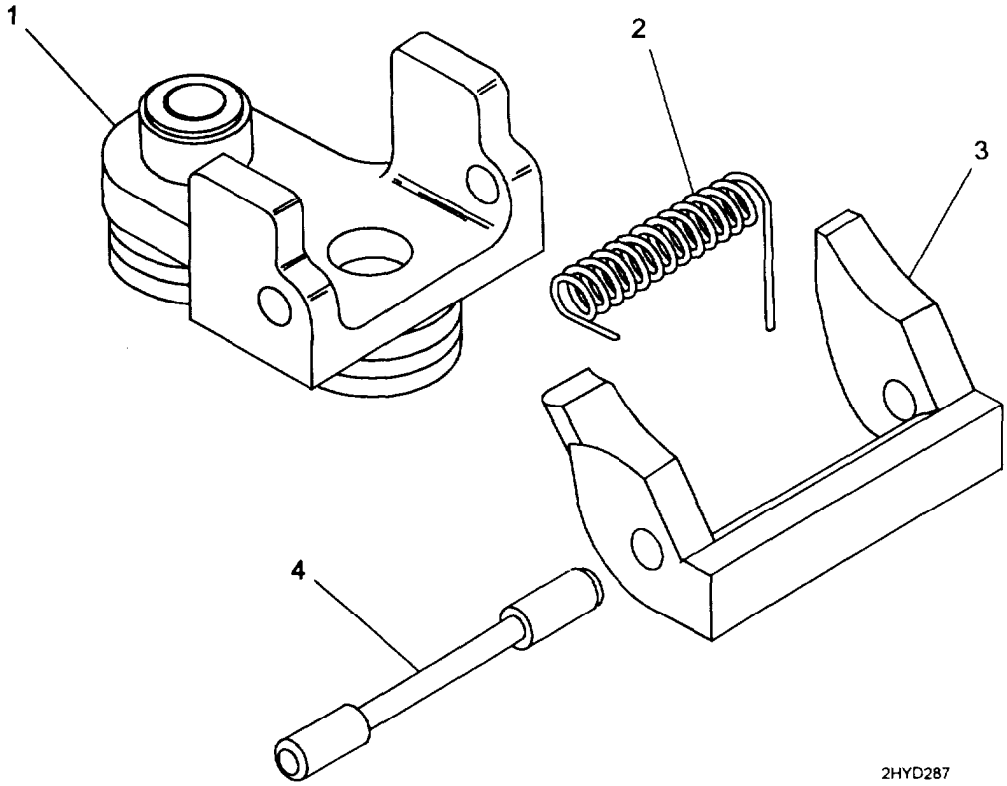

Figure 17. Group 0803 Feed Pawl Assembly, PN 7269120

(1) ITEM NO	(2) SMR CODE	(3) NATIONAL STOCK NUMBER	(4) CAGEC	(5) PART NUMBER	(6) DESCRIPTION AND USABLE ON CODES (UOC)	(7) QTY
					GROUP 0803: FEED PAWL ASSEMBLY P/N 7269120	
					FIG. 17: FEED PAWL ASSEMBLY	
1	XAFZZ		19205	7269149	CHASSIS ASSEMBLY UOC: G79, 023	1
2	PAFZZ	5360-00-608-5125	19204	7269152	SPRING, HELICAL UOC: G79, 023	1
3	XAFZZ		19204	7269150	PAWL UOC; G79. 023	1
4	PAFZZ	1005-00-608-5124	19204	7269151	SHAFT, SHOULDERED UOC: G79, 023	1

END OF FIGURE

GROUP 0804: COVER HOUSING ASSEMBLY, 7269118, REPAIR PARTS LIST

0067 00

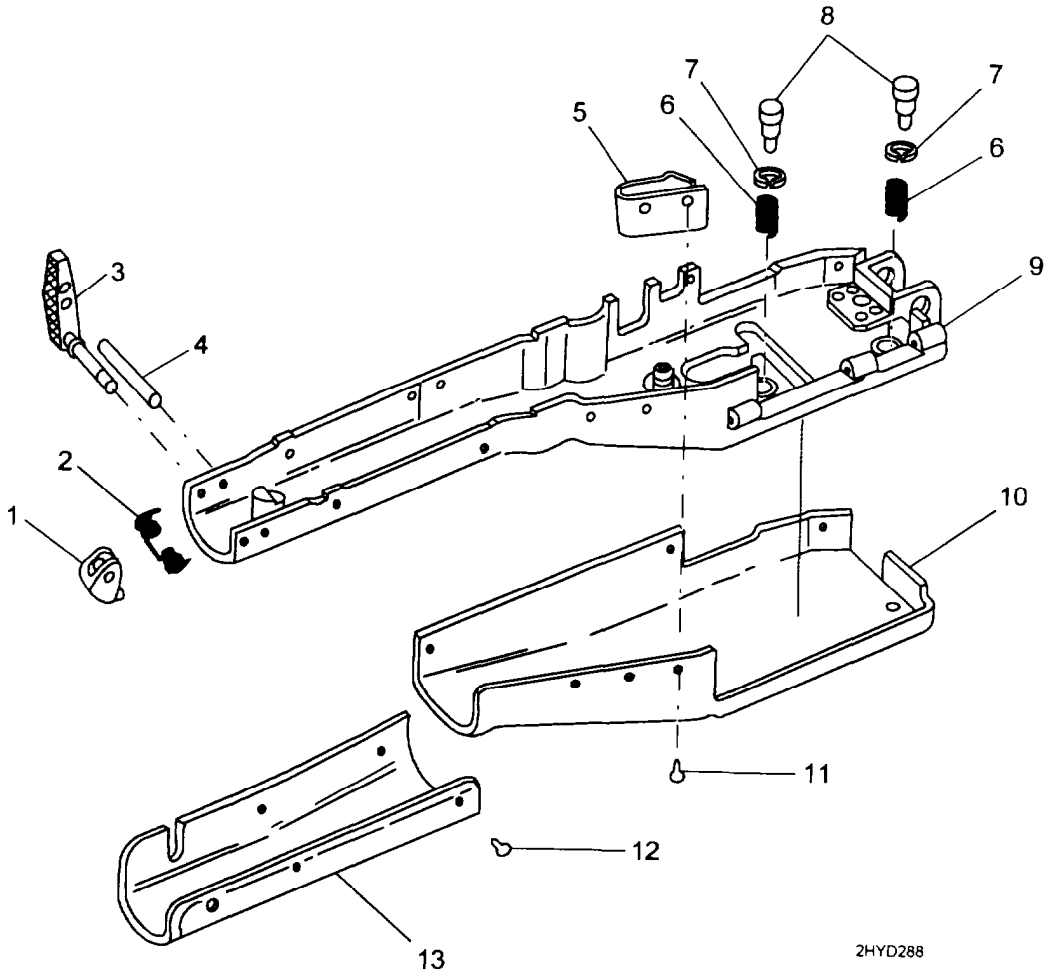

Figure 18. Group 0804 Cover Housing Assembly, PN 7269118

(1) ITEM NO	(2) SMR CODE	(3) NATIONAL STOCK NUMBER	(4) CAGEC	(5) PART NUMBER	(6) DESCRIPTION AND USABLE ON CODES (UOC)	(7) QTY
					GROUP 0804: COVER HOUSING ASSEMBLY P/N 7269118	
					FIG. 18: COVER HOUSING ASSEMBLY	
1	PAFZZ	1005-00-608-5109	19204	7269136	LATCH, COVER UOC: G79, 023	1
2	PAFZZ	5360-00-870-2118	19204	7791271	SPRING, HELICAL UOC: G79, 023	1
3	PAFZZ	1005-00-608-5110	19204	7269137	LEVER ASSEMBLY, LATCH UOC: G79, 023	1
4	PAFZZ	5315-00-878-8615	19205	7791270	PIN, STRAIGHT, HEADLESS UOC: G79, 023	1
5	PAFZZ	1005-01-183-0709	19200	9362520	MOUNT ASSEMBLY (REPLACES P/N 7289126) UOC: G79, 023	1
6	PAFZZ	5360-00-608-5114	19204	7269141	SPRING, HELICAL UOC: G79, 023	2
7	PAFZZ	5310-00-981-8623	19204	7269144	WASHER, FLAT UOC: G79, 023	2
8	PAFZZ	5315-00-608-5116	19205	7269143	PIN, SHOULDER, HEADED UOC: G79, 023	2
9	XAFZZ		19204	7269128	FRAME ASSEMBLY, COVER UOC: G79, 023	1
10	PAFZZ	1005-00-608-5113	19204	7269140	SHIELD, COVER UOC: G79, 023	1
11	PAFZZ	5320-00-608-5112	19204	7269139	RIVET, SOLID UOC: G79, 023	2
12	PAFZZ	5320-00-608-5085	19204	7269112	RIVET, SOLID UOC: G79, 023	9
13	PAFZZ	1005-00-608-5111	19204	7269138	PAD ASSEMBLY, CHEEK UOC: G79, 023	1

END OF FIGURE

GROUP 09: TRAY AND HANGER ASSEMBLY (M60 ONLY), 8448237, REPAIR PARTS LIST 0068 00

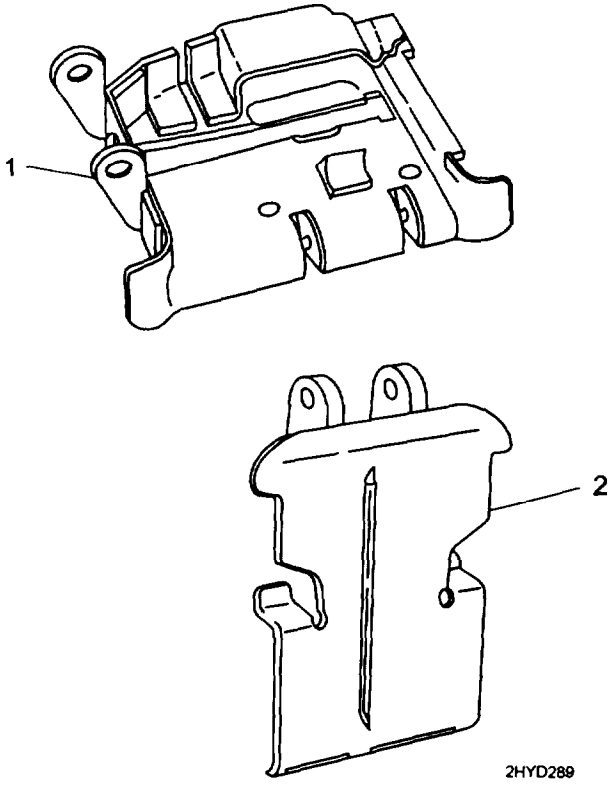

Figure 19. Group 09 Tray and Hanger Assembly (M60 only), PN 8448237

(1) ITEM NO	(2) SMR CODE	(3) NATIONAL STOCK NUMBER	(4) CAGEC	(5) PART NUMBER	(6) DESCRIPTION AND USABLE ON CODES (UOC)	(7) QTY
					GROUP 09: TRAY AND HANGER ASSEMBLY (M60 ONLY) P/N 6446237	
					FIG. 19: TRAY AND HANGER ASSEMBLY	
1	XAOZZ		19204	6448415	TRAY ASSEMBLY, CARTRIDGE FEED (SEE FIG. 20 FOR BREAKDOWN) UOC: 023	1
2	PAOZZ	1005-00-403-9507	19204	8448414	HANGER ASSEMBLY UOC: 023	1

END OF FIGURE

GROUP 0901: CARTRIDGE FEED TRAY ASSEMBLY (M60 ONLY) 8448415, REPAIR PARTS LIST

0069 00

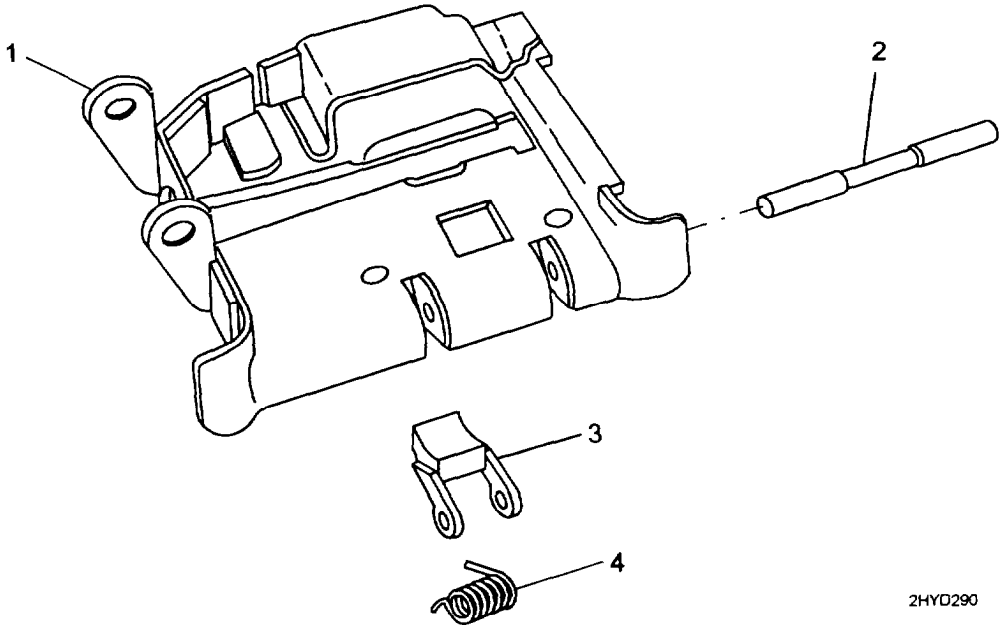

Figure 20. Group 0901 Cartridge Feed Tray Assembly (M60 only), PN 8448415

(1) ITEM NO	(2) SMR CODE	(3) NATIONAL STOCK NUMBER	(4) CAGEC	(5) PART NUMBER	(6) DESCRIPTION AND USABLE ON CODES (UOC)	(7) QTY
					GROUP 0901: CARTRIDGE FEED TRAY ASSEMBLY (M60 ONLY) P/N 8448415	
					FIG. 20: M60 CARTRIDGE FEED TRAY ASSEMBLY	
1	XAOZZ		19204	7792097	FRAME ASSEMBLY, CARTRIDGE TRAY UOC: G79, 023	1
2	PAOZZ	1005-00-768-7084	19204	7790724	SHAFT, CARTRIDGE UOC: G79, 023	1
3	PAOZZ	1005-00-606-5299	19204	7269332	PAWL CARTRIDGE RETAINER UOC: G79, 023	1
4	PAOZZ	5360-00-608-5302	19204	7269335	SPRING, HELICAL UOC: G79, 023	1

END OF FIGURE

GROUP 10: CARTRIDGE FEED TRAY ASSEMBLY (M60D ONLY), 7792996, REPAIR PARTS LIST

0070 00

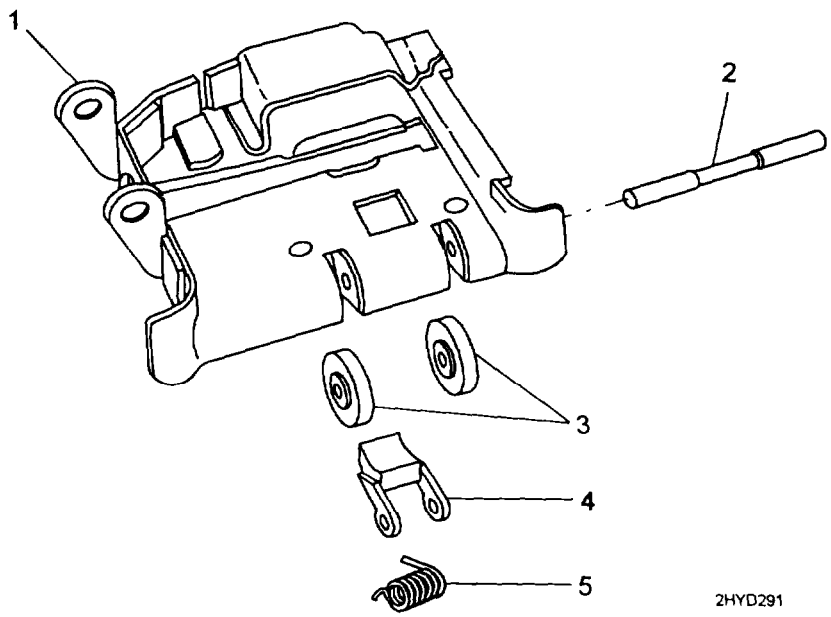

Figure 21. Group 10 Cartridge Feed Tray Assembly (M60D only), PN 7792096

(1) ITEM NO	(2) SMR CODE	(3) NATIONAL STOCK NUMBER	(4) CAGEC	(5) PART NUMBER	(6) DESCRIPTION AND USABLE ON CODES (UOC)	(7) QTY
					GROUP 10: CARTRIDGE FEED TRAY ASSEMBLY (M60D ONLY) P/N 7792096	
					FIG. 21: M60D CARTRIDGE FEED TRAY ASSEMBLY	
1	XAOZZ		19204	7792097	FRAME ASSEMBLY, CARTRIDGE TRAY UOC: G79, 023	1
2	PAOZZ	1005-00-766-7064	19204	7790724	SHAFT, CARTRIDGE UOC: G79, 023	1
3	PAOZZ	3120-00-606-5300	19204	7269333	ROLLER, LINEAR-ROTARY UOC: G79	2
4	PAOZZ	1005-00-608-5299	19204	7269332	PAWL CARTRIDGE CONTAINER UOC: G79, 023	1
5	PAOZZ	5360-00-608-5302	19204	7269335	SPRING, HELICAL UOC: G79, 023	1

END OF FIGURE

GROUP 11: FOREARM ASSEMBLY (M60 ONLY), 11010430, REPAIR PARTS LIST

0071 00

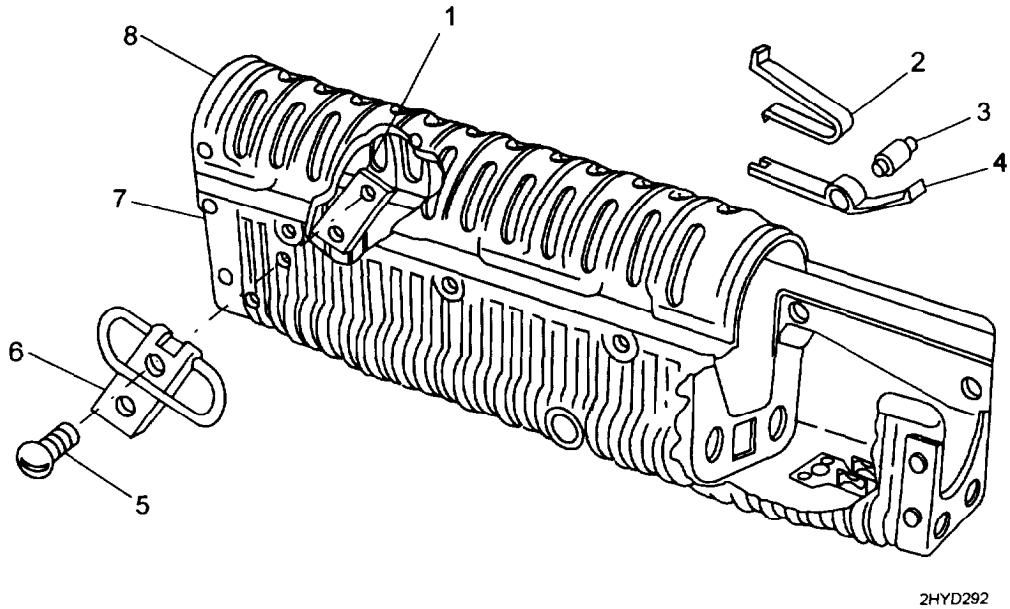

Figure 22. Group 11 Forearm Assembly, PN 11010430

(1) ITEM NO	(2) SMR CODE	(3) NATIONAL STOCK NUMBER	(4) CAGEC	(5) PART NUMBER	(6) DESCRIPTION AND USABLE ON CODES (UOC)	(7) QTY
					GROUP 11: FOREARM ASSEMBLY (M60 ONLY) P/N 11010430 FIG. 22: M60 FOREARM ASSEMBLY	
1	PAOZZ	5365-00-919-7274	19204	11010369	SPACER, PLATE UOC: 023	1
2	PAOZZ	5360-00-608-5160	19204	7269187	SPRING, FIAT UOC: 023	1
3	PAOZZ	5315-00-608-5157	19204	7269184	PIN, SHOULDER UOC: 023	1
4	PAOZZ	5340-01-337-0259	19200	12940984	CATCH, FOREARM UOC: 023	1
5	PAOZZ	5305-00-920-7254	19205	11010365	SCREW, ASSEMBLED UOC: 023	2
6	PAOZZ	1005-00-919-7278	19204	7267089	SWIVEL, SLING, SMALL UOC: 023	1
7	XAOFF		19204	7269190	SHELL ASSEMBLY FOREARM UOC: 023	1
8	XAOFF		19204	7269183	COVER ASSEMBLY FOREARM UOC: 023	1

END OF FIGURE

GROUP 12: REAR SIGHT (M60 ONLY), 7791437, REPAIR PARTS LIST

0072 00

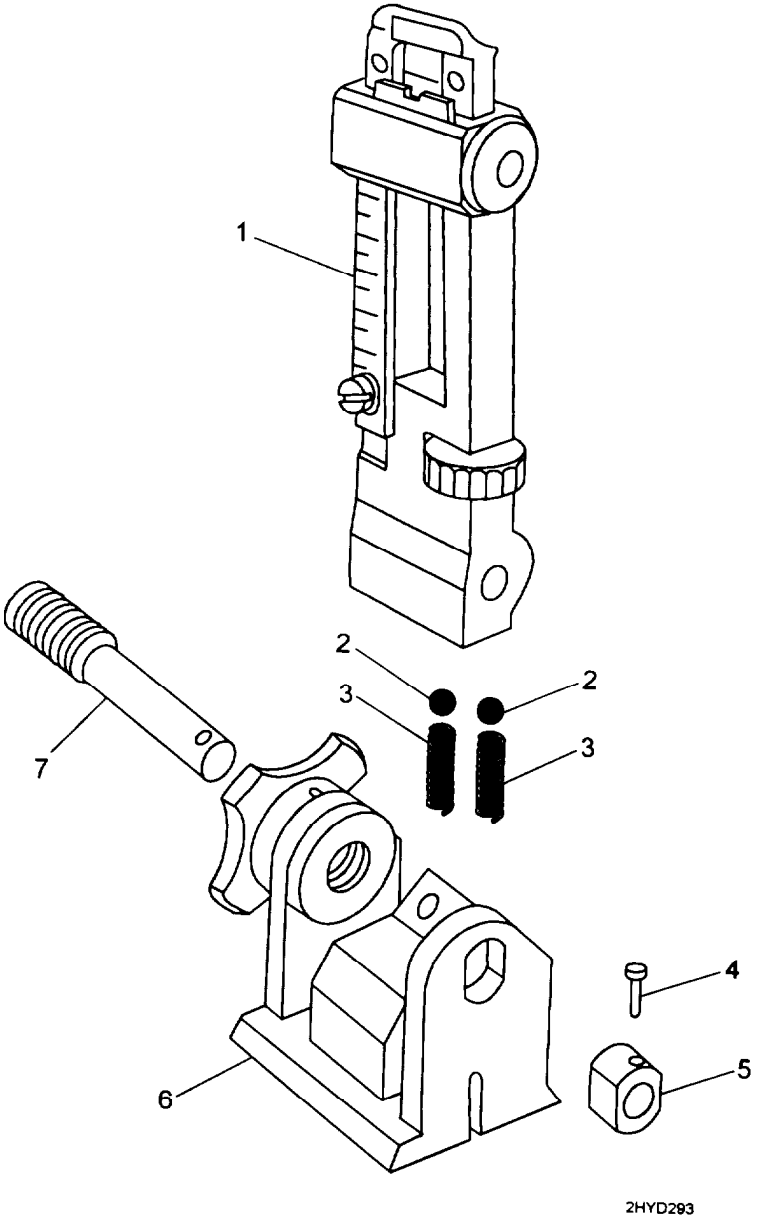

Figure 23. Group 12 Rear Sight (M60 only), PN 7791437

(1) ITEM NO	(2) SMR CODE	(3) NATIONAL STOCK NUMBER	(4) CAGEC	(5) PART NUMBER	(6) DESCRIPTION AND USABLE ON CODES (UOC)	(7) QTY
					GROUP 12: REAR SIGHT (M60 ONLY) PIN 7791437 FIG. 23: M60 REAR SIGHT	
1	XAFFF		19204	7269279	LEAF ASSEMBLY, REAR SIGHT (SEE FIG. 24 FOR BREAKDOWN) UOC: 023	1
2	PAFZZ	3110-00-950-4236	96906	MS19061-20005	BALL, BEARING UOC: 023	2
3	PAFZZ	5360-00-608-5251	19204	7269283	SPRING, HELICAL UOC: 023	2
4	PAFZZ	5320-00-608-5248	19204	7269280	RIVET, TUBULAR UOC: 023	1
5	XAFZZ		19204	7269282	SLIDE. LATERAL UOC: 023	1
6	PAFZZ	1005-01-158-4507	19204	7269278	BASE ASSEMBLY, REAR UOC: 023	1
7	PAFZZ	5315-00-608-5249	19204	7269281	PIN, SHOULDER UOC: 023	1

END OF FIGURE

GROUP 1201: REAR SIGHT LEAF ASSEMBLY (M60 ONLY) 7269279, REPAIR PARTS LIST 0073 00

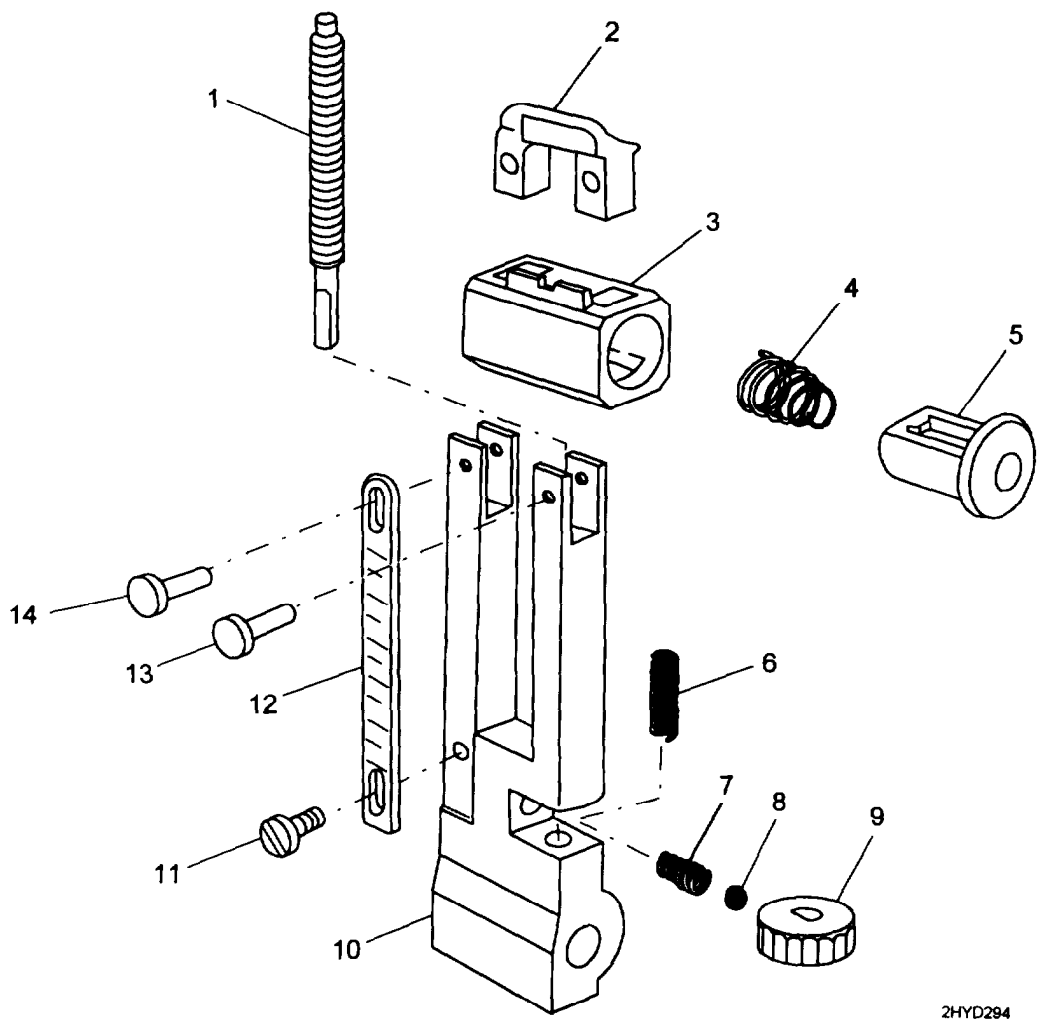

Figure 24. Group 1201 Rear Sight Leaf Assembly (M60 only), PN 7269279

(1) ITEM NO	(2) SMR CODE	(3) NATIONAL STOCK NUMBER	(4) CAGEC	(5) PART NUMBER	(6) DESCRIPTION AND USABLE ON CODES (UOC)	(7) QTY
					GROUP 1201: REAR SIGHT LEAF ASSEMBLY (M60 ONLY) P/N 7269279	
					FIG. 24: M60 REAR SIGHT LEAF ASSEMBLY	
1	XAFZZ		19204	7269295	SCREW, ELEVATION UOC: 023	1
2	XAFZZ		19204	7269288	CAP, LEAF FRAME UOC: 023	1
3	XAFZZ		19204	7269289	SLIDE UOC: 023	1
4	PAFZZ	5360-00-608-5267	19205	7269299	SPRING, HELICAL UOC: 023	1
5	XAFZZ		19204	7269292	RELEASE ASSEMBLY UOC: 023	1
6	PAFZZ	5360-00-608-5266	19205	7269298	SPRING, HELICAL UOC: 023	1
7	PAFZZ	5360-00-608-5255	19204	7269267	SPRING, HELICAL UOC: 023	1
8	PAFZZ	3110-00-950-8446	96906	MS19061-3	BALL, BEARING UOC: 023	1
9	XAFZZ		19204	7269291	KNOB, ELEVATING UOC: 023	1
10	XAFZZ		19204	7269290	LEAF, REAR SIGHT UOC: 023	1
11	PAFZZ	5305-00-608-5264	19204	7269296	SCREW, MACHINE UOC: 023	1
12	PAFZZ	1005-00-066-2786	19204	11686738	SCALE, ELEVATION UOC: 023	1
13	PAFZZ	5320-00-606-5262	19205	7269294	RIVET, SOLID CAP, RH UOC: 023	1
14	PAFZZ	5320-00-608-5261	19205	7269293	RIVET, TUBULAR CAP, LH UOC: 023	1

END OF FIGURE

GROUP 13: REAR SIGHT (M60D ONLY), 11699796, REPAIR PARTS LIST

0074 00

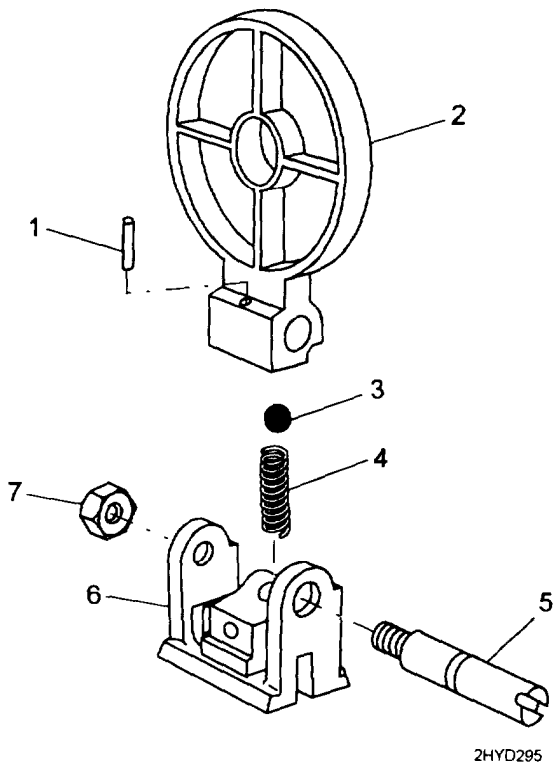

Figure 25. Group 13 Rear Sight (M60D only), PN 11699796

(1) ITEM NO	(2) SMR CODE	(3) NATIONAL STOCK NUMBER	(4) CAGEC	(5) PART NUMBER	(6) DESCRIPTION AND USABLE ON CODES (UOC)	(7) QTY
					GROUP 13: REAR SIGHT (M60D ONLY) P/N 11699796	
					FIG. 25: M60D REAR SIGHT	
1	PAOZZ	5315-00-812-3312	96906	MS16562-119	PIN. SPRING UOC: G79	1
2	PAOZZ	1005-00-909-3018	19204	11699799	RING, SIGHT UOC: G79	1
3	PAOZZ	3110-00-100-6149	96906	MS19059-2412	BALL, BEARING UOC: G79	1
4	PAOZZ	5360-00-952-4705	96908	MS24585-75	SPRING, HELICAL UOC: G79	1
5	PAOZZ	1005-00-909-4179	19205	11699798	RETAINER, REAR SIGHT UOC: G79	1
6	XAOZZ		19205	11699797	BASE, REAR SIGHT UOC: G79	1
7	PAOZZ	5310-00-158-4447	19205	11699763	NUT, SELF-LOCKING UOC: G79	1

END OF FIGURE

GROUP 14: COCKING HANDLE ASSEMBLY, 7791621, REPAIR PARTS LIST

0075 00

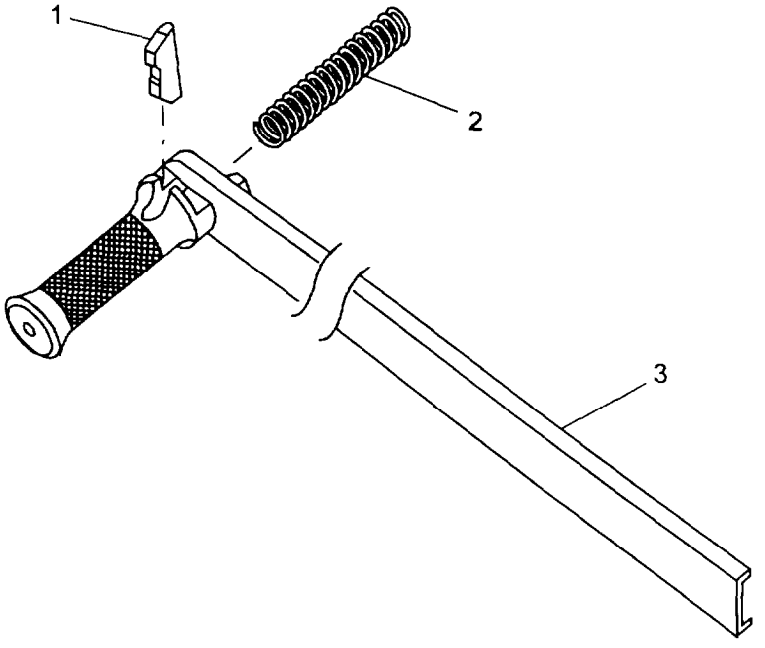

Figure 26. Group 14 Cocking Handle Assembly, 7791621

(1) ITEM NO	(2) SMR CODE	(3) NATIONAL STOCK NUMBER	(4) CAGEC	(5) PART NUMBER	(6) DESCRIPTION AND USABLE ON CODES (UOC)	(7) QTY
					GROUP 14: COCKING HANDLE ASSEMBLY PIN 7791621	
					FIG. 26: COCKING HANDLE ASSEMBLY	
1	PAFZZ	1005-00-608-5208	19205	7269237	RETAINER, COCKING HANDLE UOC: G79, 023	1
2	PAFZZ	5360-00-066-6061	19204	7791522	SPRING, HELICAL UOC: G79, 023	1
3	PAFZZ	1005-00-608-5210	19204	7269239	SLIDE ASSEMBLY UOC: G79, 023	1

END OF FIGURE

GROUP 15: GUN RECEIVER ASSEMBLY (M60 ONLY), 11686308, REPAIR, PARTS LIST

0076 00

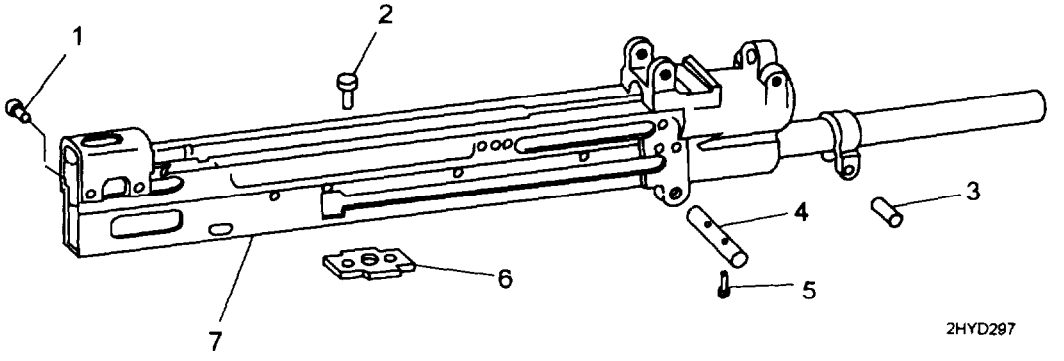

Figure 27. Group 15 Gun Receiver Assembly (MS0 only), PN 11686308

(1) ITEM NO	(2) SMR CODE	(3) NATIONAL STOCK NUMBER	(4) CAGEC	(5) PART NUMBER	(6) DESCRIPTION AND USABLE ON CODES (UOC)	(7) QTY
					GROUP 15: GUN RECEIVER ASSEMBLY (M60 ONLY) PIN 11686308	
					FIG. 27: M60 GUN RECEIVER ASSEMBLY	
1	PAFZZ	5320-00-071-8945	19205	7269411	RIVET, SOLID UOC: 023	4
2	PAFZZ	5320-083-0290	19204	7792972	RIVET, SOLID UOC: 023	2
3	PAFZZ	5315-00-083-0293	19204	7792976	PIN, STRAIGHT MOUNTING, FRONT UOC: 023	1
4	PAFZZ	5315-00-083-0292	19204	7792975	PIN, STRAIGHT UOC: 023	1
5	PAFZZ	5315-00-083-0289	19204	7792971	PIN, STRAIGHT, HEADED UOC: 023	2
6	PAFZZ	1005-00-083-0291	19204	7792974	PLATE, MOUNTING UOC: 023	1
7	XADDA		19200	11686307	RECEIVER ASSEMBLY UOC: 023	1

END OF FIGURE

GROUP 16: GUN RECEIVER ASSEMBLY (M60D ONLY), 11699805, REPAIR PARTS LIST

0077 00

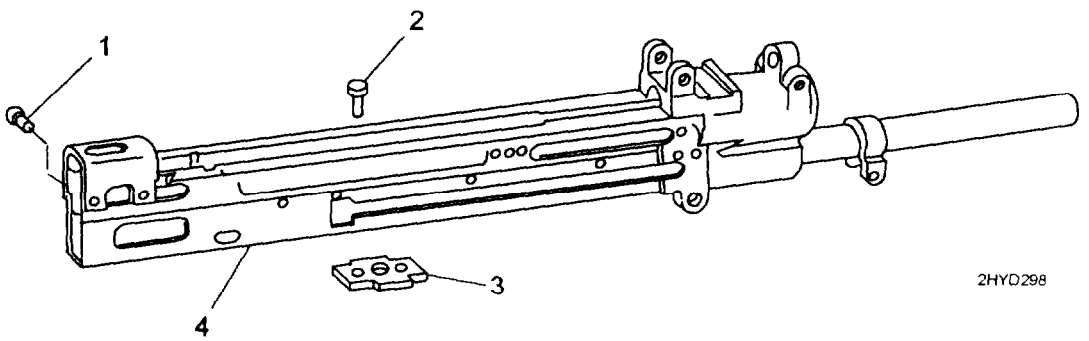

Figure 28. Group 16 Gun Receiver Assembly (M60D only), PN 11699805

(1) ITEM NO	(2) SMR CODE	(3) NATIONAL STOCK NUMBER	(4) CAGEC	(5) PART NUMBER	(6) DESCRIPTION AND USABLE ON CODES (UOC)	(7) QTY
					GROUP 16: GUN RECEIVER ASSEMBLY (M60D ONLY) PIN 11699805	
					FIG. C-28: M60D GUN RECEIVER ASSEMBLY	
1	PAFZZ	5320-00-071-8945	19205	7269411	RIVET, SOLID UOC: G79	4
2	PAFZZ	5320-00-083-0290	19204	7792972	RIVET, SOLID UOC: G79	2
3	PAFZZ	1005-00-083-0291	19204	7792974	PLATE, MOUNTING UOC: G79, 023	1
4	XADDA		19200	11686307	RECEIVER ASSEMBLY UOC: G79	1

END OF FIGURE

(This page intentionally left blank)

GROUP 9999
BULK MATERIAL

0078 00

(1) ITEM NO	(2) SMR CODE	(3) NATIONAL STOCK NUMBER	(4) CAGEC	(5) PART NUMBER	(6) DESCRIPTION AND USABLE ON CODES (UOC)	(7) QTY
					GROUP 9999: BULK MATERIAL	
					FIG. BULK	
1	PAOZZ	9505-00-293-4208	96906	MS20995C32	WIRE, NON-ELECTRICAL	

END OF FIGURE

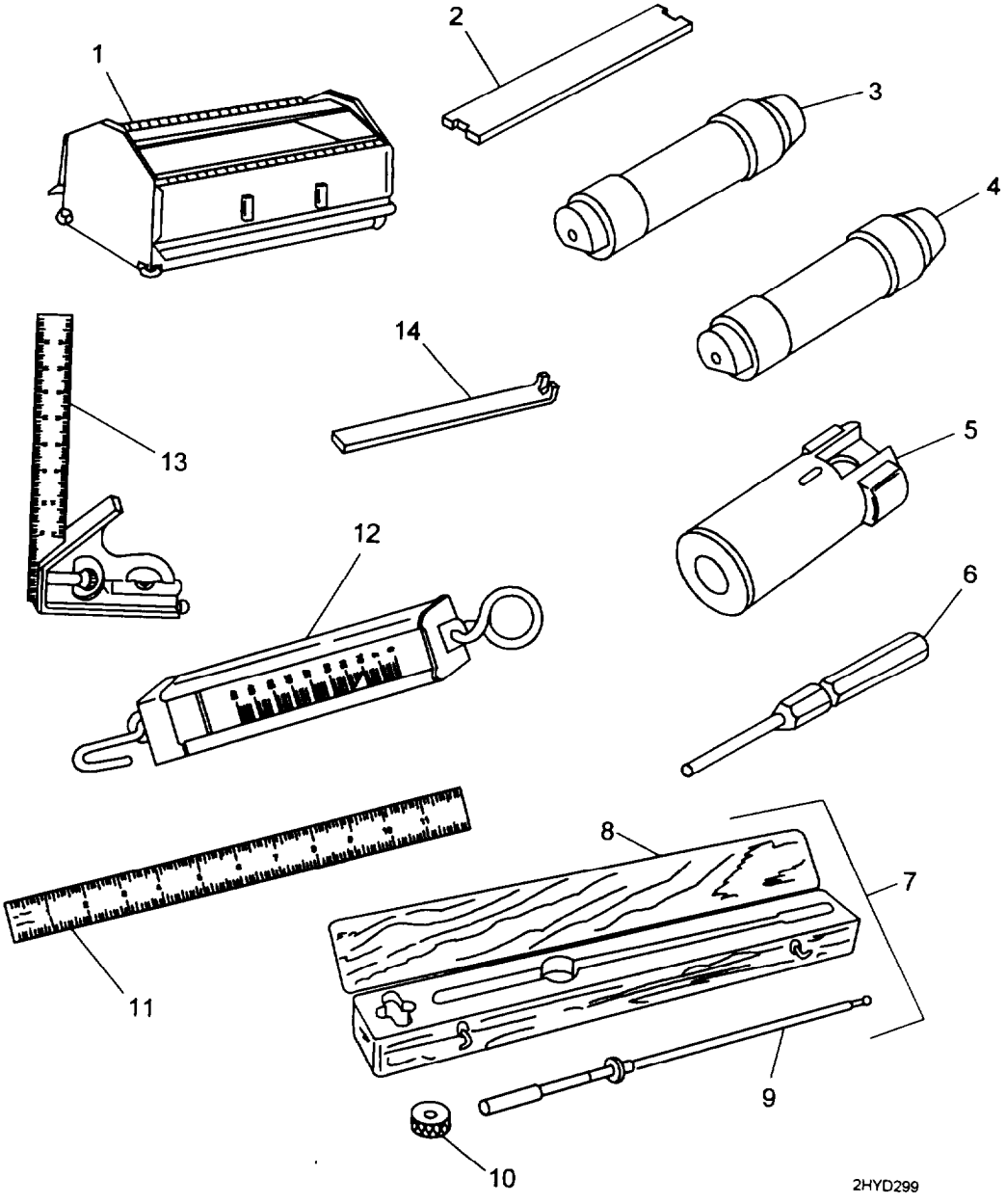

Figure 29. Group 9500 Special Tools

(1) ITEM NO	(2) SMR CODE	(3) NATIONAL STOCK NUMBER	(4) CAGEC	(5) PART NUMBER	(6) DESCRIPTION AND USABLE ON CODES (UOC)	(7) QTY
					GROUP 9500: SPECIAL TOOLS	
					FIG. 29: SPECIAL TOOLS	
1	PAFZZ	5140-00-473-6260	81348	GGGT558-2	TOOL BOX, PORTABLE (BOI: 2 PER SUPPORTING DS/GS MAINTENANCE COMPANY) UOC: G79,023	
2	PAFZZ	4933-00-653-3373	19205	7274754	GAGE, FIRING PIN PROTRUSION 0.035 TO 0.043 (BOI: 2 PER SUPPORTING DS/GS MAINTENANCE COMPANY) UOC: G79,023	
3	PAFZZ	4933-00-069-8676	19205	7274786	GAGE, HEADSPACE 1.6415 IN M60 PREEMBARKATION (BOI: 2 PER SUPPORTING DS/GS MAINTENANCE COMPANY) UOC: G79,023	
4	PAFZZ	4933-00-647-3698	19205	7274790	GAGE, HEADSPACE 1.6455 IN M60 SERIES FIELD REJECTION (BOI: 2 PER SUPPORTING DS/GS MAINTENANCE COMPANY) UOC: G79,023	
5	PAFZZ	4933-00-653-9550	19205	7799699	GAGE, TEST BOLT (BOI: 2 PER SUPPORTING DS/GS MAINTENANCE COMPANY) UOC: G79,023	
6	PAFZZ	5220-00-745-8598	19205	7458598	GAGE, PLUG, PLAIN CYLINDRICAL SGLE END NO GO 0.018 OD M60 SERIES (BOI: 2 PER SUPPORTING DS/GS MAINTENANCE COMPANY) UOC: G79,023	
7	ADFDD		19204	5910297	GAGE KIT, SMALL ARMS (BOI: 2 PER M8 SERIES SUPPORTING DS/GS MAINTENANCE COMPANY) UOC: G79,023 CASE, CARRYING, GAGE (1) 36-7 GAGE, BARREL EROSION (1) 36-8 GAGE, WEAR CHECK (1) 36-9	
8	PAFZZ	5140-00-313-9486	19205	7319995	CASE, CARRYING, GAGE PART OF KIT P/N 5910297 UOC: G79,023	
9	PAFZZ	4933-00-317-2504	19205	7319994	GAGE BARREL EROSION, CAL .30, M8 SERIES PART OF KIT P/N 5910297	
10	PAFZZ	4933-00-317-2501	19205	7274724	GAGE WEAR CHECK PART OF KIT P/N 5910297	
11	PAFZZ	5210-00-234-5223	81348	GGG-R-791	RULE, STEEL (BOI: 2 PER SUPPORTING DS/GS MAINTENANCE COMPANY) UOC: G79,023	
12	PAFZZ	6670-00-254-4634	81348	AAA-S-133	SCALE, DIAL (BOI: 2 PER SUPPORTING DS/GS MAINTENANCE COMPANY) UOC: 110	

(1) ITEM NO	(2) SMR CODE	(3) NATIONAL STOCK NUMBER	(4) CAGEC	(5) PART NUMBER	(6) DESCRIPTION AND USABLE ON CODES (UOC)	(7) QTY
					GROUP 9500: SPECIAL TOOLS (CONT)	
					FIG. 29: SPECIAL TOOLS	
13	PAFZZ	5210-00-078-8949	81348	GGG-S-656	SQUARE, COMBINATION (BOI: 2 PER SUPPORTING DS/GS MAINTENANCE COMPANY)	
14	PAFZZ	4933-00-077-2081	19204	8436748	STOP TOOL, SCREW (BOI: 2 PER SUPPORTING DS/GS MAINTENANCE COMPANY) UOC: 110	

END OF FIGURE

PART NUMBER INDEX 0080 00

PART NUMBER INDEX (cont) 0080 00

PART NUMBER	FIG.	ITEM	PART NUMBER	FIG.	ITEM
7791522	26	2			
7791621	2	9			
7792069	4	2			
7792086	4	7			
7792096	3	2			
7792097	20	1			
	21	1			
7792398	1	13			
7792920	7	13			
7792971	27	5			
7792972	27	2			
	28	2			
7792974	27	6			
	28	3			
7792975	27	4			
7792976	27	3			
7793009	11	10			
7793010	12	6			
7799699	29	5			
8427869-7	3	3			
8427871	3	4			
8436748	29	14			
8448237	1	7			
8448414	19	2			
8448415	19	1			
9362505	7	1			
9362506	8	1			
9362507	8	4			
9362509	8	2			
9362510	1	11			
9362511	1	12			
9362512	1	15			
9362515	11	5			
9362520	18	5			

STOCK NUMBER INDEX 0081 00

STOCK NUMBER	FIG.	ITEM
1005-00-013-7030	15	7
1005-00-020-8683	11	10
5315-00-051-8636	31	18
5315-00-058-6079	6	3
1005-00-064-5648	2	1
1005-00-066-2786	24	12
5360-00-066-6061	26	2
5315-00-066-6062	4	2
5315-00-067-3871	3	13
	4	8
	15	8
4933-00-069-8676	29	3
1005-00-069-9358	9	1
5320-00-071-8945	27	1
	28	1
5320-00-075-7225	4	7
4933-00-077-2081	29	14
5210-00-078-8949	29	13
5315-00-083-0289	27	5
5320-00-083-0290	27	2
	28	2
1005-00-083-0291	27	6
	28	3
5315-00-083-0292	27	4
5315-00-083-0293	27	3
3110-00-100-6149	25	3
5310-00-158-4447	25	7
5315-00-196-2753	13	2
	14	2
5210-00-234-5223	29	11
5315-00-239-8019	6	7
6670-00-254-4634	29	12
9505-00-293-4208	3	10
	11	6
	BULK	1
1005-00-312-7177	1	17
5140-00-313-9486	29	8
4933-00-317-2501	29	10
4933-00-317-2504	29	9
1005-00-403-9507	19	2
5140-00-473-6260	29	1
1005-00-603-9285	2	11
1005-00-608-5001	1	9
1005-00-608-5004	11	7
5365-00-608-5005	11	2
1005-00-608-5008	11	8
5310-00-608-5009	11	3
1005-00-608-5020	12	7
1005-00-608-5021	12	8
5315-00-608-5022	12	2
5315-00-608-5024	12	3
5305-00-608-5025	12	1
5360-00-608-5026	12	4
1005-00-608-5027	12	5
5320-00-608-5032	13	1
	14	1
1005-00-608-5037	7	2
1005-00-608-5039	7	4
1005-00-608-5057	7	9
5360-00-608-5059	7	7
5360-00-608-5060	7	10
5360-00-608-5061	7	3
5320-00-608-5085	18	12
1005-00-608-5089	15	3
1005-00-608-5090	15	2
1005-00-608-5091	15	9
1005-00-608-5093	15	6
1005-00-608-5097	16	4
5360-00-608-5098	16	2
1005-00-608-5109	18	1
1005-00-608-5110	18	3
1005-00-608-5111	18	13
5230-00-608-5112	18	11
1005-00-608-5113	18	10
5360-00-608-5114	18	6
5315-00-608-5116	18	8
1005-00-608-5118	16	6
1005-00-608-5119	16	5
1005-00-608-5124	17	4
5360-00-608-5125	17	2
5315-00-608-5157	22	3
5360-00-608-5160	22	2
5315-00-608-5177	9	9
5315-00-608-5178	1	2
	9	2
1005-00-608-5179	9	4
1005-00-608-5180	9	6
	10	6
1005-00-608-5182	9	5
	10	5
5360-00-608-5183	9	3
5360-00-608-5184	9	7
	10	7
1005-00-608-5185	9	8
1005-00-608-5203	2	7
1005-00-608-5208	26	1
1005-00-608-5210	26	3
1005-00-608-5214	1	4
1005-00-608-5218	1	6
1005-00-608-5221	2	6
5320-00-608-5248	23	4
5315-00-608-5249	23	7

STOCK NUMBER INDEX (cont) 0081 00

STOCK NUMBER	FIG.	ITEM
5360-00-608-5251	23	3
5360-00-608-5255	24	7
5320-00-608-5261	24	14
5320-00-608-5262	24	13
5305-00-608-5264	24	11
5360-00-608-5266	24	6
5360-00-608-5267	24	4
5360-00-608-5269	1	5
5360-00-608-5270	2	5
1005-00-608-5299	20	3
	21	4
3120-00-608-5300	21	3
5360-00-608-5302	20	4
	21	5
4933-00-647-3698	36	4
4933-00-653-3373	29	2
4933-00-653-9550	29	5
5360-00-690-3502	4	9
1005-00-690-3504	4	3
1005-00-690-3505	4	1
5220-00-745-8598	29	6
5305-00-753-4113	2	10
5315-00-761-6881	3	5
1005-00-768-7084	20	2
	21	2
1005-00-779-6030	7	11
5315-00-812-3312	25	1
5315-00-839-0901	2	3
	7	6
5320-00-852-6313	5	4
5360-00-870-2118	18	2
1005-00-872-4441	7	12
1005-00-872-4442	7	8
1005-00-872-4443	7	5
1005-00-875-4350	11	4
5315-00-878-8615	18	4
1005-00-908-4141	1	16
1005-00-909-3003	3	11
5315-00-909-3004	10	3
3120-00-909-3005	10	4
5315-00-909-3006	3	15
5315-00-909-3007	6	8
1005-00-909-3008	10	8
1005-00-909-3009	10	2
1005-00-909-3011	3	6
5360-00-909-3012	6	6
1005-00-909-3014	10	9
1005-00-909-3016	3	12
5360-00-909-3017	10	1
1005-00-909-3018	25	2

STOCK NUMBER	FIG.	ITEM
1005-00-909-3020	1	1
5360-00-909-3021	3	7
1005-00-909-3023	3	9
1005-00-909-3024	3	14
5360-00-909-3025	6	5
5315-00-909-3026	6	4
5325-00-909-3033	6	9
1005-00-909-4179	25	5
5360-00-912-1146	15	5
4010-00-912-3627	3	5
1005-00-912-3628	6	2
1005-00-912-3629	3	4
5360-00-913-0928	2	4
5340-00-913-5486	3	1
1005-00-918-2608	2	8
1005-00-918-2609	2	2
5365-00-919-7274	5	3
	22	1
1005-00-919-7275	1	8
1005-00-919-7278	5	1
	22	6
5305-00-920-7254	5	2
	22	5
1005-00-930-9932	1	18
1005-00-934-8312	4	6
5315-00-940-9490	8	3
3110-00-950-4236	23	2
3110-00-950-8446	24	8
5360-00-952-4705	25	4
5360-00-975-8595	1	13
5310-00-981-8623	18	7
1005-00-987-9682	3	2
5315-00-994-9648	7	13
1005-00-999-6003	15	1
5360-01-015-6191	7	7
1005-01-158-4507	23	6
1005-01-183-0572	1	11
1005-01-183-0709	18	5
5315-01-183-2860	8	4
1005-01-185-0734	8	1
1005-01-185-0735	7	1
1005-01-188-7877	1	15
5360-01-203-2973	1	12
1005-01-209-3590	11	5
5315-01-285-0610	11	9
5340-01-337-0259	22	4
1005-01-441-5508	3	8
1005-01-442-0162	4	4
1005-01-448-1837	1	7
1005-01-451-0288	1	14

APPENDIX D

EXPENDABLE/DURABLE SUPPLIES AND MATERIALS LIST

EXPENDABLE/DURABLE SUPPLIES AND MATERIALS LIST 0082 00

INTRODUCTION

SCOPE

This work package lists expendable/durable items that you will need to operate and maintain the M60/M60D machine gun. This list is for information only and is not authority to requisition the listed items. These items are authorized to you by CTA 50-970, Expendable/Durable Items (except Medical, Class V, Repair Parts, and Heraldic Items), or CTA 8-100, Army Medical Department Expendable/Durable items.

EXPLANATION OF COLUMNS IN THE EXPENDABLE/DURABLE ITEMS LIST

Column (1) - Item Number. This number is assigned to the entry in the list and is referenced in the narrative instructions to identify the item (e.g., Use brake fluid (item 5, WP 0038 00).).

Column (2) - Level. This column identifies the lowest level of maintenance that requires the listed item.

C - Operator/Crew
O - Unit Maintenance
F - Direct Support Maintenance

Column (3) - National Stock Number (NSN). This is the NSN assigned to the item which you can use to requisition it.

Column (4) - Description. Item name, Description, Commercial and Government Entity Code (CAGEC), and Part Number. This column provides the other information you need to identify the item.

Column (5) - Unit of Measure (U/M). This code shows the physical measurement or count of an item, such as gallon, dozen, gross, etc.

EXPENDABLE/DURABLE SUPPLIES AND MATERIALS LIST (cont) 0082 00

EXPENDABLE AND DURABLE ITEMS LIST

Table 1. Expendable and Durable Items List

(1) ITEM NUMBER	(2) LEVEL	(3) NATIONAL STOCK NUMBER	(4) ITEM NAME, DESCRIPTION, CAGEC, PART NUMBER	(5) (U/M)
1	O	7920-00-205-2401	BRUSH, CLEANING, TOOL AND PARTS: (81349) MIL-S-43871	EA
2	O	8020-00-244-0153	BRUSH, ARTISTS (81348) H-B-241	EA
3			CLEANER, LUBRICANT AND PRESERVATIVE (CLP): (27412) MIL-L-63460	
	C	9150-01-079-6124	CLP 4 OZ BOTTLE	OZ
	O	9150-01-054-6453	CLP 5 PT BOTTLE	PT
	O	9150-01-053-6688	CLP 7 1 GAL CONTAINER	GL
4	O		CLEANING COMPOUND, SOLVENT: RIFLE BORE CLEANER (RBC) (81349) MIL-C-372	
		6850-00-224-6657	8 OZ CAN	OZ
		6850-00-224-6663	1 GAL CAN	GL
5	O	5350-00-221-0872	CLOTH, ABRASIVE (CROCUS): (58536) A-A-1206	SH
6	O	8010-00-181-7859	COATING COMPOUND: (81349) MIL-P-21563	PT
7	O		DRY CLEANING SOLVENT (02978) PD680	
		6850-00-281-1985	1 GAL CAN (SD)	GL
		6850-01-378-0679	5 GAL CAN (SD2)	GL
8	O	8410-00-823-7457	GLOVES, RUBBER: TYPE 3 (81348) ZZ-G-381	PR
9	O	8010-00-582-5382	LACQUER, BLACK (87187) 1602	PT
10	O		LUBRICANT, SOLID FILM: (81349) MIL-L-23398	
		9150-00-754-0064	16 OZ CAN	OZ
11	C		LUBRICATING OIL, WEAPONS (LAW) (81349) MIL-L-14107	
		9150-00-292-9689	1 QT CAN	QT
12	O		LUBRICATING OIL, WEAPONS, (LSA) (81349) MIL-L-46000	
		9150-00-753-4686	1 GAL CAN	GL
13	C	7920-00-205-1711	RAG, WIPING: (58536) A-A-531	LB

(1) ITEM NUMBER	(2) LEVEL	(3) NATIONAL STOCK NUMBER	(4) ITEM NAME, DESCRIPTION, CAGEC, PART NUMBER	(5) (U/M)
14	C	1005-00-288-3565	SWAB, SMALL ARMS (19204) 5019316	EA
15	F	8465-00-242-4804	TAG, IDENTIFICATION (81349) MIL-T-842	
16	O	9505-00-293-4208	WIRE, NONELECTRICAL 0.032 in. (81346) ASTM A580	LB

APPENDIX E

ILLUSTRATED LIST OF MANUFACTURED ITEMS

ILLUSTRATED LIST OF MANUFACTURED ITEMS 0083 00

INTRODUCTION

This work package includes complete instructions for making items authorized to be manufactured or fabricated at the direct support maintenance level.

HOW TO USE THE INDEX OF MANUFACTURED ITEMS

A part number index in alphanumeric order is provided for cross-referencing the part number of the item to be manufactured to the page which covers fabrication criteria.

EXPLANATION OF THE ILLUSTRATIONS OF MANUFACTURED ITEMS

All instructions needed by maintenance personnel to manufacture the item are included on the illustrations. All bulk materials needed for manufacture of an item are listed by part number or specification number in a tabular list on the illustration.

INDEX OF MANUFACTURED ITEMS

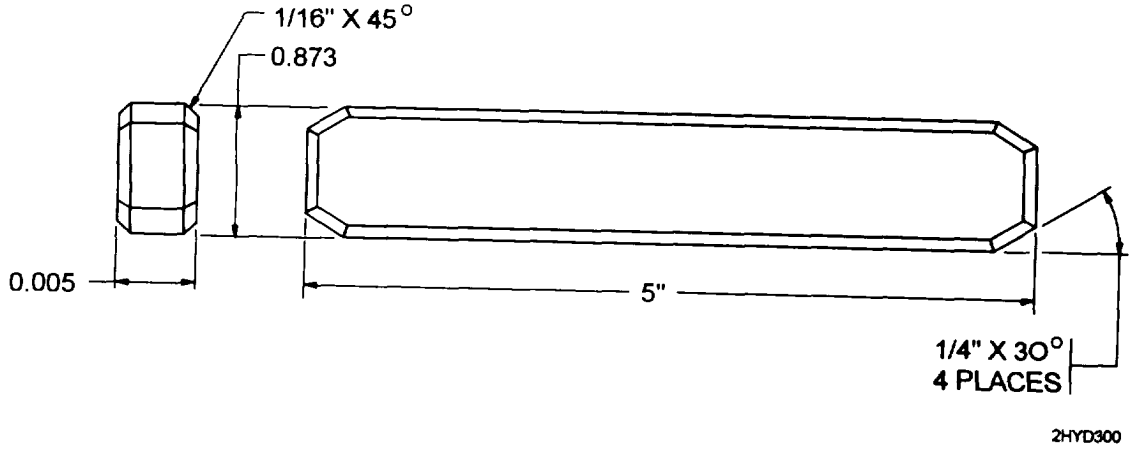

NOTES:

- FABRICATE FROM NSN 9510-00-231 -2087
- MACHINE TO DIMENSIONS SHOWN ON DRAWING.

Figure 1. Anvil Bucking Bar

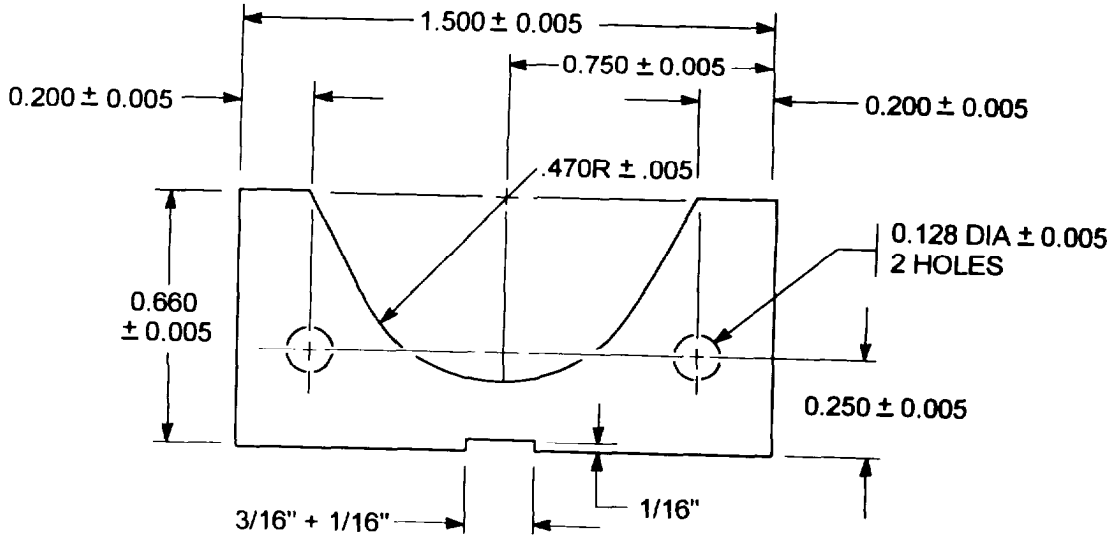

NOTES:

- FABRICATE FROM NSN 9535-00-250-6501.
- USING DIMENSIONS ON ILLUSTRATION, LAYOUT RIB.
- CUT RIB OUT OF STOCK, THEN DRILL THE TWO HOLES.

Figure 2. Forearm Assembly Rib

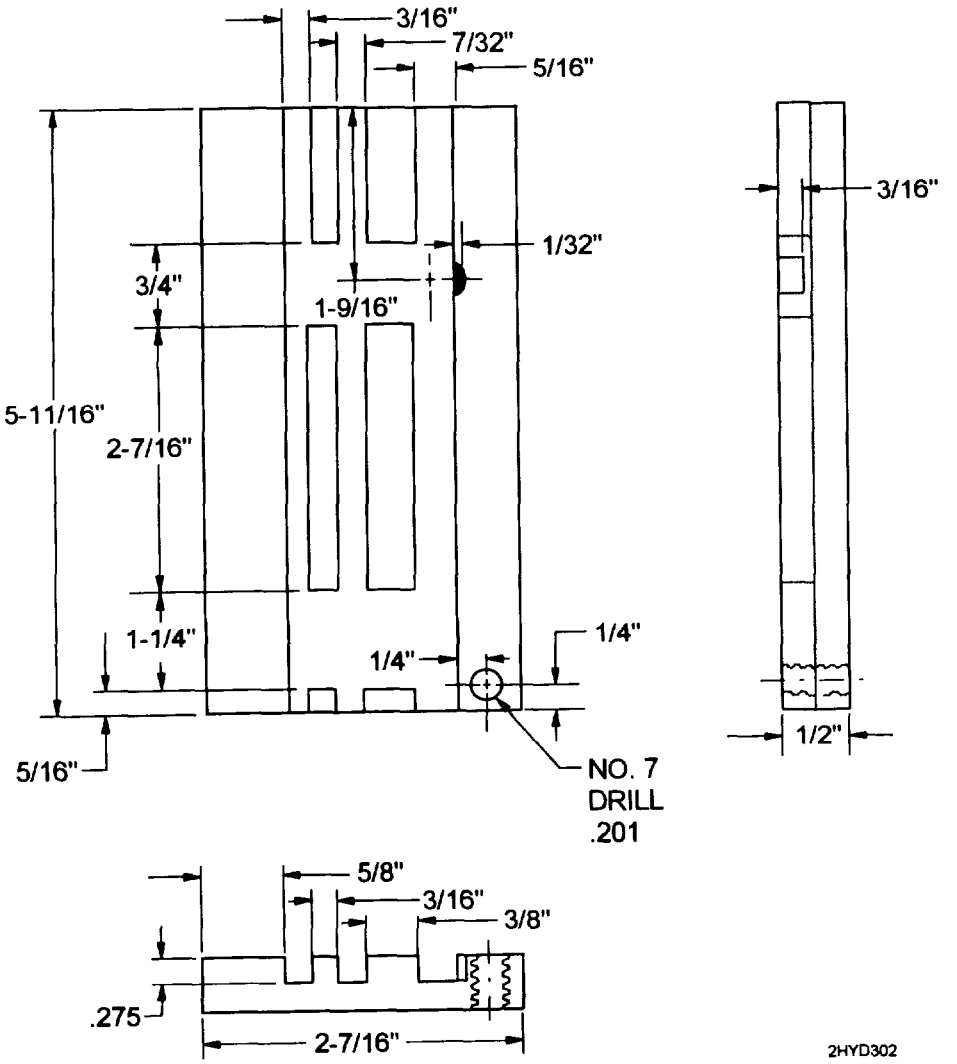

ANVIL

NOTES:

- FABRICATE FROM NSN 95120-00-542-2464.
- MACHINE TO DIMENSIONS SHOWN ON DRAWING.

Figure 3. Improvised Riveting Fixture

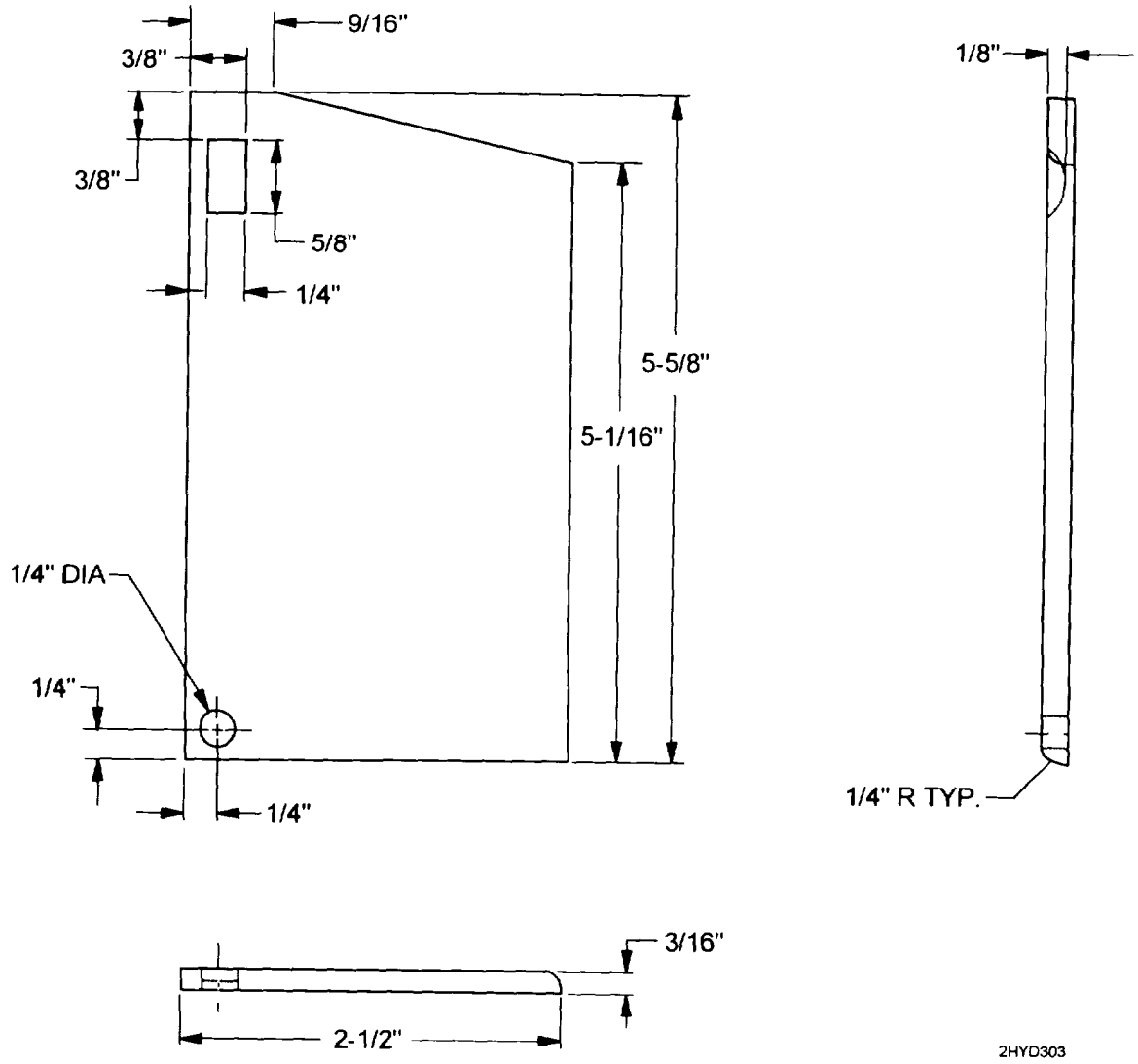

ANVIL LOCKING PLATE

NOTES:

- FABRICATE FROM NSN 9510-00-596-2032.
- MACHINE TO DIMENSIONS SHOWN ON DRAWING.

Figure 4. Improvised Riveting Fixture (cont)

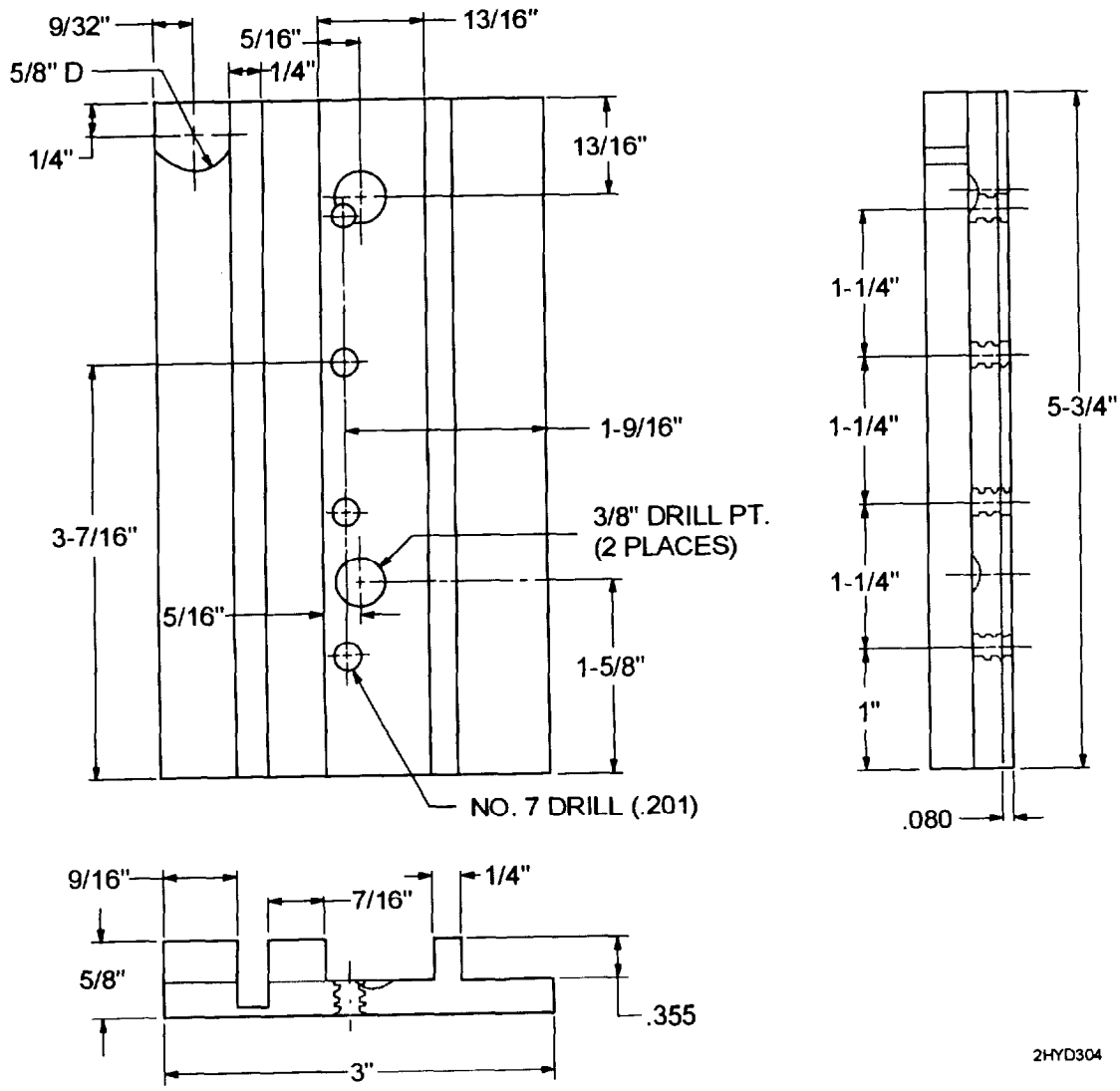

BACKING PLATE

NOTES:

- FABRICATE FROM NSN 9510-00-542-2444.
- MACHINE TO DIMENSIONS SHOWN ON DRAWING.

Figure 5. Improvised Riveting Fixture (cont)

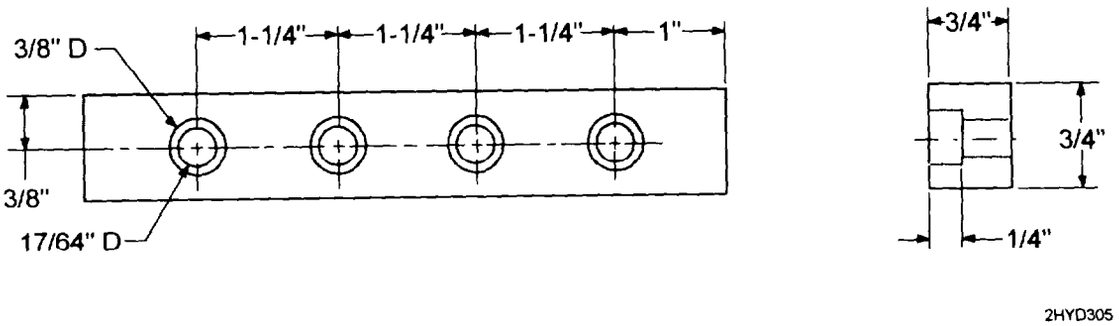

BACKING PLATE BAR

NOTES:

- FABRICATE FROM NSN 9510-00-265-1681.
- MACHINE TO DIMENSIONS SHOWN ON DRAWING.

Figure 6. Improvised Riveting Fixture (cont)

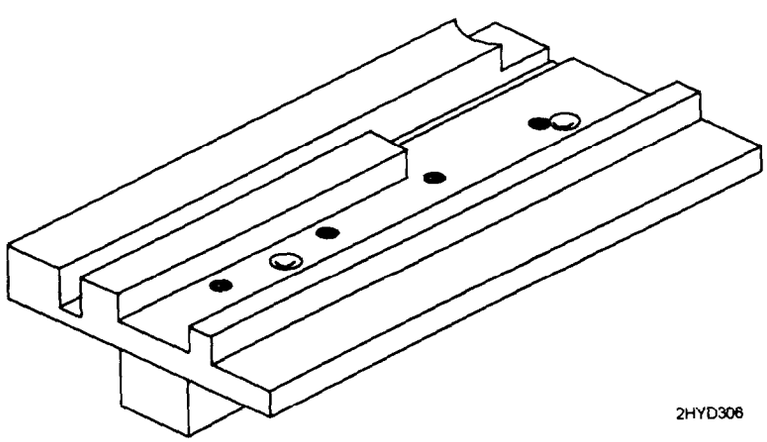

- POSITION BACKING PLATE BAR ON BACKSIDE OF BACKING PLATE AND ALIGN THE FOUR HOLES.
- USE FOUR OF THE 1/4-20 X 3/4 SOCKET HEAD SCREWS TO SECURE.

Figure 7. Improvised Riveting Fixture (cont)

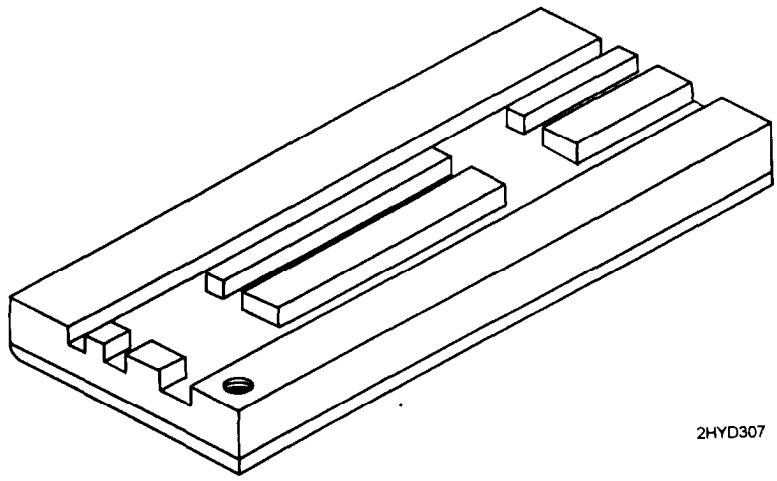

- POSITION ANVIL LOCKING PLATE ON BACKSIDE OF ANVIL AND ALIGN THE HOLE.
- USE ONE 1/4-2C X 3/4 SOCKET HEAD SCREW TO SECURE.

Figure 8. Improvised Riveting Fixture (cont)

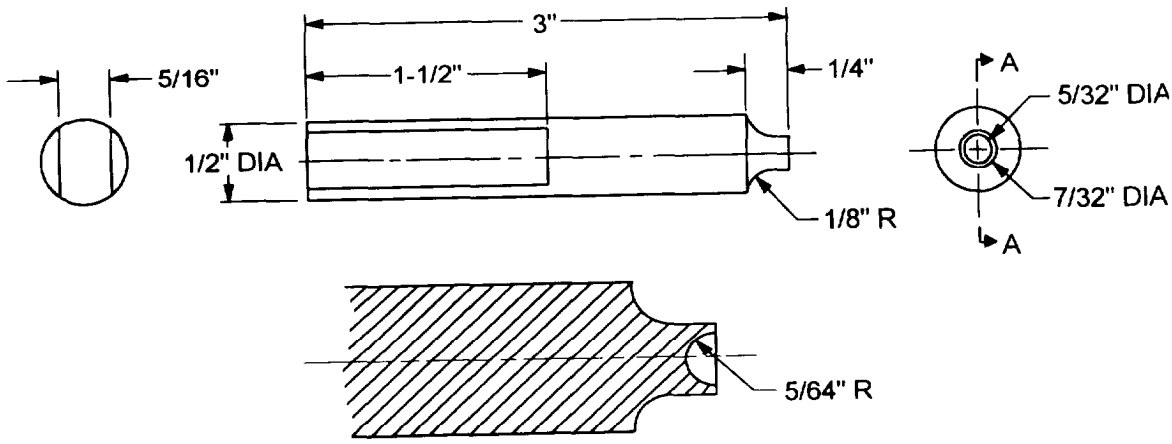

SECTION A-A

- MATERIAL: 4140 STEEL (.50 DIA) NSN 9510-00-596-3572.

Figure 9. Riveting Bucking Tool

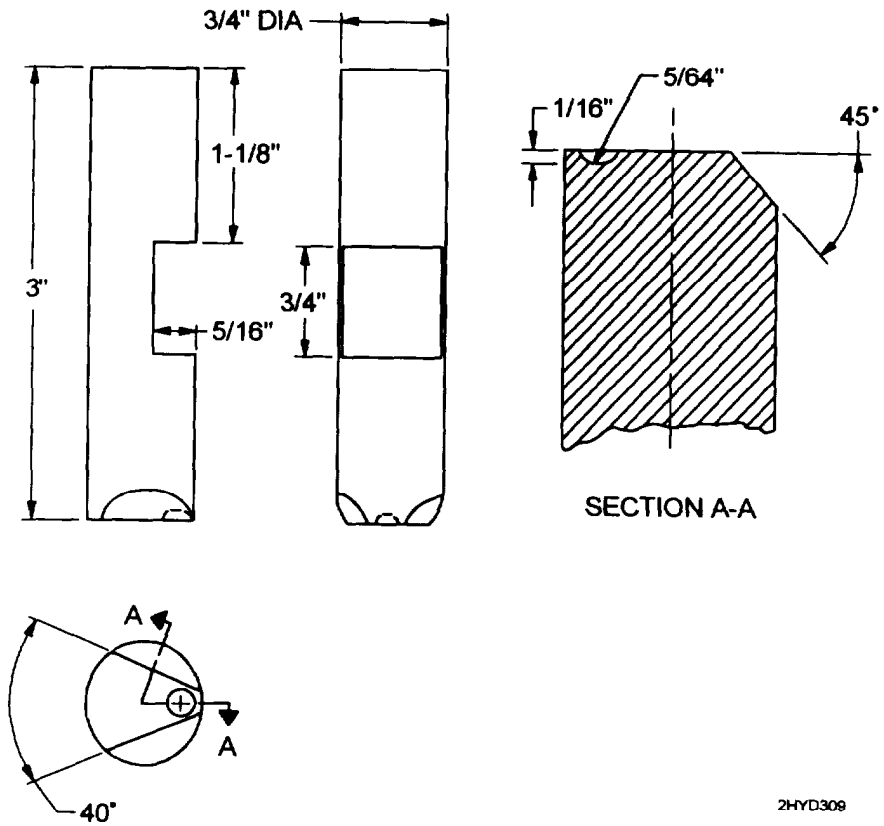

- MATERIAL: 4140 STEEL (.750 DIA) NSN 9510-00-596-3554.

Figure 10. Rivet Heading Tool

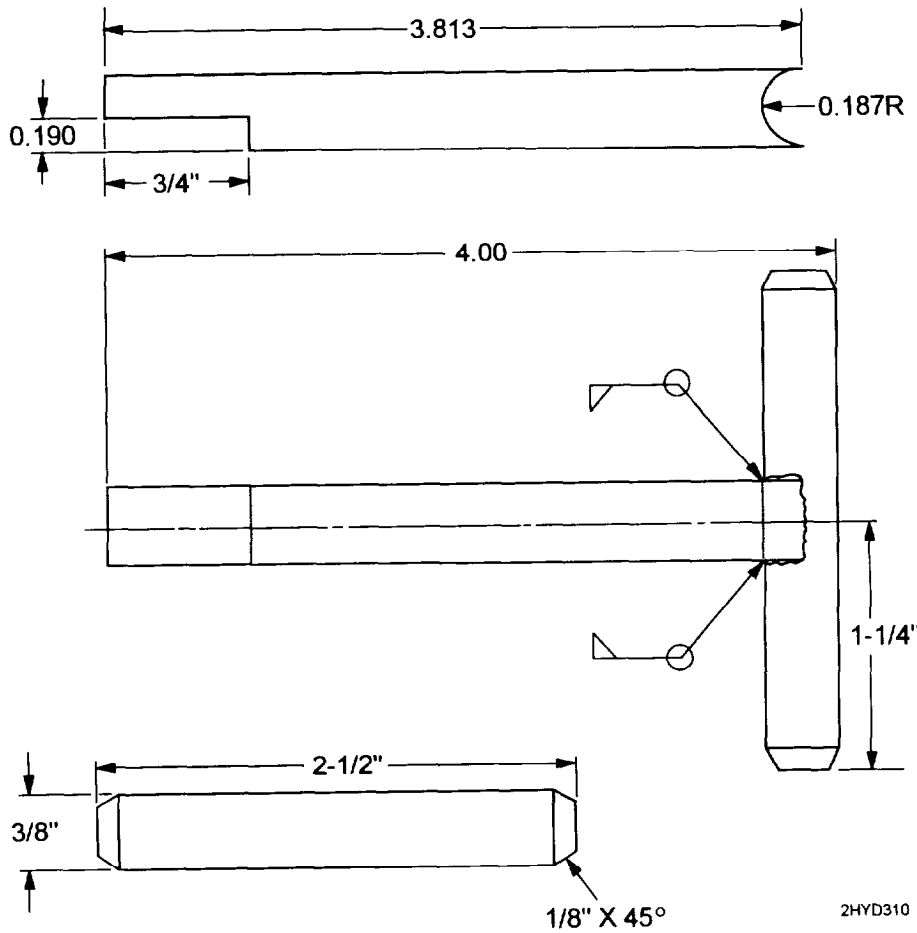

- FABRICATE FROM NSN 9510-00-813-5322.
- USE DIMENSIONS ON ILLUSTRATION TO LAYOUT HANDLE.
- CUT HANDLE OUT OF STOCK, THEN WELD TOGETHER.

Figure 11. Handle

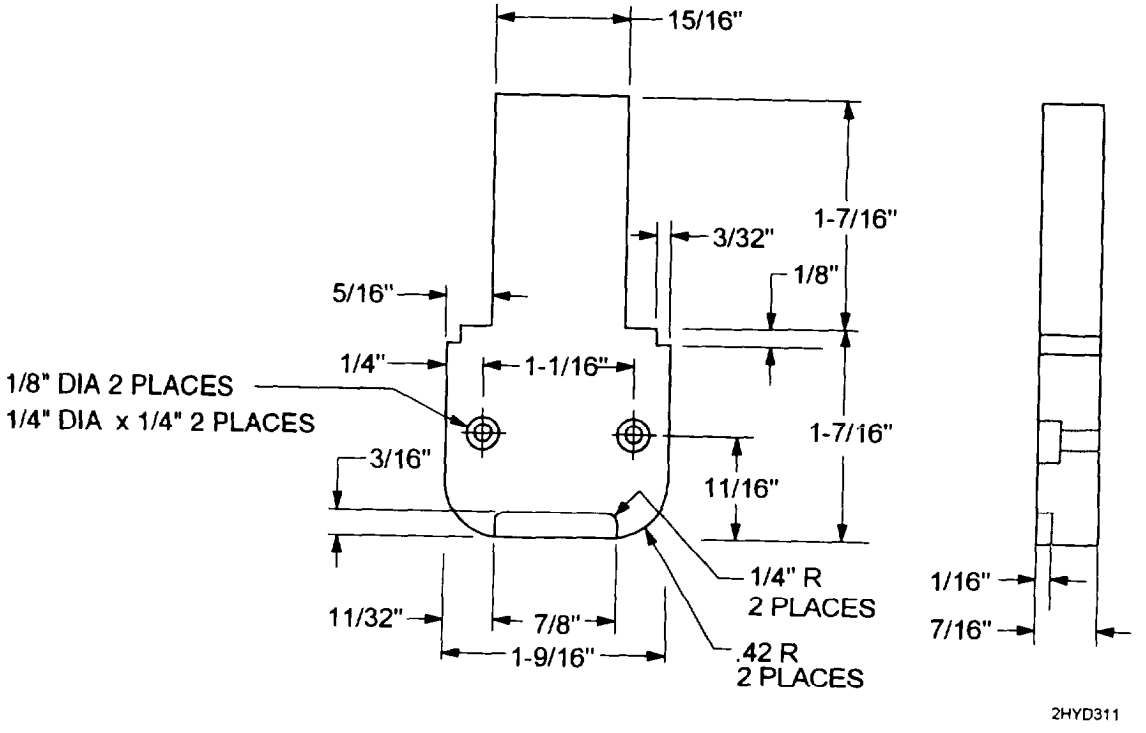

- FABRICATE FROM NSN 9510-00-542-2441
- USE DIMENSIONS ON ILLUSTRATION TO LAYOUT FIXTURE.
- CUT FIXTURE OUT OF STOCK AND MACHINE.

Figure 12. Fixture

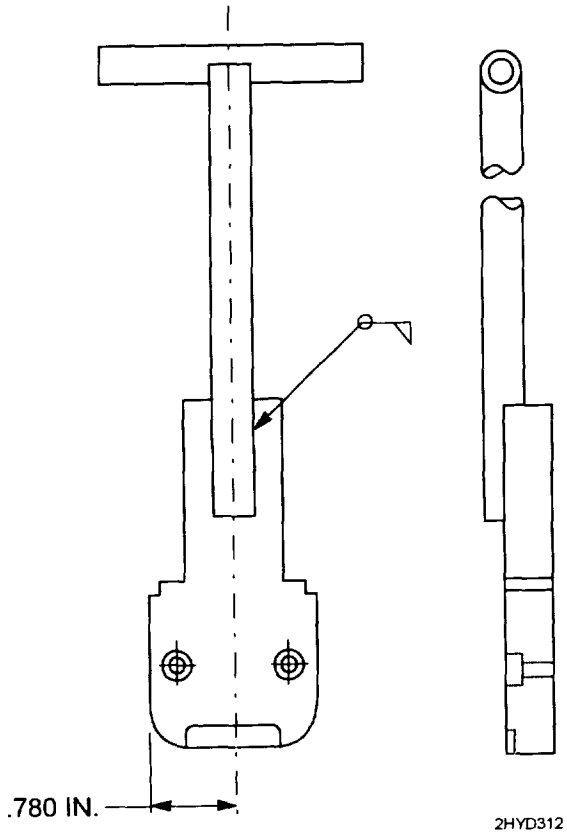

- ASSEMBLE USING COMPONENTS MANUFACTURED IN FIGURES 11 AND 12.
- USE DIMENSIONS ON ILLUSTRATION, AND POSITION HANDLE ONTO FIXTURE.
- WELD HANDLE TO FIXTURE.

Figure 13. Drilling Fixture Assembly

ALPHABETICAL INDEX

0084 00

SUBJECT **WORK PACKAGE**

SUBJECT WORK PACKAGE

M (cont)

P

R

S

T

By Order of the Secretary of the Amy:

DENNJS J. REIMER
General, United States Army
Chief of Staff

Official:

JOEL B. HUDSON
Administrative Assistant to the
Secretary of the Army
04713

DISTRIBUTION: TO be distributed in accordance with the initial distribution requirements for IDN 401127 for TM 9-1005-224-23&P.

:YU.S. GOVERNMENT PRINTING OFFICE: 1998-646-039/60121

RECOMMENDED CHANGES TO EQUIPMENT TECHNICAL PUBLICATIONS

THEN. . JOT DOWN THE DOPE ABOUT IT ON THIS FORM, CAREFULLY TEAR IT OUT, FOLD IT AND DROP IT IN THE MAIL!

SOMETHING WRONG WITH THIS PUBLICATION?

FROM: (PRINT YOUR UNIT'S COMPLETE ADDRESS)

DATE SENT

PUBLICATION NUMBER	PUBLICATION DATE	PUBLICATION TITLE
TM 9-1005-224-23&P	21 May 1998	Machine Gun, 7.62-MM, M60 W/E Machine Gun, 7.62-MM, M60D W/E

BE EXACT. . .PIN-POINT WHERE IT IS

PAGE NO	PARA-GRAPH	FIGURE NO	TABLE NO
0006 00-6	1.		

IN THIS SPACE TELL WHAT IS WRONG AND WHAT SHOULD BE DONE ABOUT IT:

Line 1 - change short helical compression spring to long helical compresssion spring.

SAMPLE

PRINTED NAME, GRADE OR TITLE AND TELEPHONE NUMBER

SIGN HERE

DA FORM 1 JUL 79 2028-2

PREVIOUS EDITIONS ARE OBSOLETE.

P.S.--IF YOUR OUTFIT WANTS TO KNOW ABOUT YOUR RECOMMENDATION MAKE A CARBON COPY OF THIS AND GIVE IT TO YOUR HEADQUARTERS.

REVERSE OF DA FORM 2023-2 AMSMC OP 103-85

FILL IN YOUR
UNITS ADDRESS

DEPARTMENT OF THE ARMY

OFFICIAL BUSINESS

NO POSTAGE
NECESSARY
IF MAILED
IN THE
UNITED STATES

BUSINESS REPLY MAIL

FIRST CLASS PERMIT NO. 82 ROCK ISLAND IL

POSTAGE WILL BE PAID BY ROCK ISLAND ARSENAL

Director
Armament and Chemical Acquisition
and Logistics Activity
ATTN: AMSTA-AC-NML
Rock Island, IL 61201-9948

TEAR ALONG PERFORATED LINE

RECOMMENDED CHANGES TO EQUIPMENT TECHNICAL PUBLICATIONS

THEN JOT DOWN THE DOPE ABOUT IT ON THIS FORM, CAREFULLY TEAR IT OUT, FOLD IT AND DROP IT IN THE MAIL!

SOMETHING WRONG WITH THIS PUBLICATION?

FROM (PRINT YOUR UNIT'S COMPLETE ADDRESS)

DATE SENT

PUBLICATION NUMBER	PUBLICATION DATE	PUBLICATION TITLE
TM 9-1005-224-23&P	21 May 1998	Machine Gun, 7.62-MM, M60 W/E Machine Gun,7.62-MM, M60D W/E

BE EXACT PIN-POINT WHERE IT IS

PAGE NO	PARA-GRAPH	FIGURE NO	TABLE NO

IN THIS SPACE TELL WHAT IS WRONG AND WHAT SHOULD BE DONE ABOUT IT:

PRINTED NAME GRADE OR TITLE AND TELEPHONE NUMBER

SIGN HERE

TEAR ALONG PERFORATED LINE

DA FORM 1 JUL 79 2028-2

PREVIOUS EDITIONS ARE OBSOLETE

AMSMC OP-103-85

P.S.--IF YOUR OUTFIT WANTS TO KNOW ABOUT YOUR RECOMMENDATION MAKE A CARBON COPY OF THIS AND GIVE IT TO YOUR HEADQUARTERS

REVERSE OF DA FORM 2023-2 AMSMC OP 100-85

FILL IN YOUR UNITS ADDRESS

DEPARTMENT OF THE ARMY

OFFICIAL BUSINESS

NO POSTAGE NECESSARY IF MAILED IN THE UNITED STATES

BUSINESS REPLY MAIL

FIRST CLASS PERMIT NO. 82 ROCK ISLAND IL

POSTAGE WILL BE PAID BY ROCK ISLAND ARSENAL

Director
Armament and Chemical Acquisition
and Logistics Activity
ATTN: AMSTA-AC-NML
Rock Island, IL 61201-9948

TEAR ALONG PERFORATED LINE

RECOMMENDED CHANGES TO EQUIPMENT TECHNICAL PUBLICATIONS

THEN JOT DOWN THE DOPE ABOUT IT ON THIS FORM, CAREFULLY TEAR IT OUT, FOLD IT AND DROP IT IN THE MAIL!

SOMETHING WRONG WITH THIS PUBLICATION?

FROM (PRINT YOUR UNIT'S COMPLETE ADDRESS)

DATE SENT

PUBLICATION NUMBER	PUBLICATION DATE	PUBLICATION TITLE
TM 9-1005-224-23&P	21 May 1998	Machine Gun, 7.62-MM, M60 W/E Machine Gun,7.62-MM, M60D W/E

BE EXACT PIN-POINT WHERE IT IS

PAGE NO	PARA-GRAPH	FIGURE NO	TABLE NO

IN THIS SPACE TELL WHAT IS WRONG AND WHAT SHOULD BE DONE ABOUT IT:

PRINTED NAME GRADE OR TITLE AND TELEPHONE NUMBER

SIGN HERE

TEAR ALONG PERFORATED LINE

DA FORM 1 JUL 79 2028-2

PREVIOUS EDITIONS ARE OBSOLETE

AMSMC OP-103-85

P.S.--IF YOUR OUTFIT WANTS TO KNOW ABOUT YOUR RECOMMENDATION MAKE A CARBON COPY OF THIS AND GIVE IT TO YOUR HEADQUARTERS

REVERSE OF DA FORM 2023-2 AMSMC OP 103-85

FILL IN YOUR
UNITS ADDRESS

DEPARTMENT OF THE ARMY

OFFICIAL BUSINESS

NO POSTAGE
NECESSARY
IF MAILED
IN THE
UNITED STATES

BUSINESS REPLY MAIL

FIRST CLASS PERMIT NO. 82 ROCK ISLAND IL

POSTAGE WILL BE PAID BY ROCK ISLAND ARSENAL

Director
Armament and Chemical Acquisition
and Logistics Activity
ATTN: AMSTA-AC-NML
Rock Island, IL 61201-9948

TEAR ALONG PERFORATED LINE

RECOMMENDED CHANGES TO EQUIPMENT TECHNICAL PUBLICATIONS

THEN . JOT DOWN THE DOPE ABOUT IT ON THIS FORM, CAREFULLY TEAR IT OUT, FOLD IT AND DROP IT IN THE MAIL!

SOMETHING WRONG WITH THIS PUBLICATION?

FROM (PRINT YOUR UNIT'S COMPLETE ADDRESS)

DATE SENT

PUBLICATION NUMBER	PUBLICATION DATE	PUBLICATION TITLE
TM 9-1005-224-23&P	21 May 1998	Machine Gun, 7.62-MM, M60 W/E Machine Gun,7.62-MM, M60D W/E

BE EXACT PIN-POINT WHERE IT IS

PAGE NO	PARA-GRAPH	FIGURE NO	TABLE NO

IN THIS SPACE TELL WHAT IS WRONG AND WHAT SHOULD BE DONE ABOUT IT:

PRINTED NAME GRADE OR TITLE AND TELEPHONE NUMBER

SIGN HERE

TEAR ALONG PERFORATED LINE

DA FORM 1 JUL 79 2028-2

PREVIOUS EDITIONS ARE OBSOLETE

AMSMC OP-103-85

P.S.--IF YOUR OUTFIT WANTS TO KNOW ABOUT YOUR RECOMMENDATION MAKE A CARBON COPY OF THIS AND GIVE IT TO YOUR HEADQUARTERS

REVERSE OF DA FORM 2029-2 AMSMC OP 103-85

FILL IN YOUR
UNITS ADDRESS

DEPARTMENT OF THE ARMY

OFFICIAL BUSINESS

NO POSTAGE
NECESSARY
IF MAILED
IN THE
UNITED STATES

BUSINESS REPLY MAIL

FIRST CLASS PERMIT NO. 82 ROCK ISLAND IL

POSTAGE WILL BE PAID BY ROCK ISLAND ARSENAL

Director
Armament and Chemical Acquisition
and Logistics Activity
ATTN: AMSTA-AC-NML
Rock Island, IL 61201-9948

TEAR ALONG PERFORATED LINE

This fine document...

Was brought to you by me:

Liberated Manuals -- free army and government manuals

Why do I do it? I am tired of sleazy CD-ROM sellers, who take publicly available information, slap “watermarks” and other junk on it, and sell it. Those masters of search engine manipulation make sure that their sites that sell free information, come up first in search engines. They did not create it... They did not even scan it... Why should they get your money? Why are not letting you give those free manuals to your friends?

I am setting this document FREE. This document was made by the US Government and is NOT protected by Copyright. Feel free to share, republish, sell and so on.

I am not asking you for donations, fees or handouts. If you can, please provide a link to liberatedmanuals.com, so that free manuals come up first in search engines:

<A HREF=http://www.liberatedmanuals.com/>Free Military and Government Manuals</A>

- Sincerely
  Igor Chudov
  http://igor.chudov.com/
- Chicago Machinery Movers