TECHNICAL MANUAL

TRANSPORTABILITY GUIDANCE

HEAVY EXPANDED MOBILITY TACTICAL TRUCK (HEMTT), 10-TON,8x8

TRUCK, CARGO, TACTICAL, 10-TON, 8x8, WITH LIGHT CRANE, M977

WOWN (NSN 2320-01-099-6426)

WWN (NSN 2320-01-097-0269)

TRUCK, FUEL-SERVICING, 10-TON, M978

WOWN (NSN 2320-01-100-7672)

WWN (NSN 2320-01-097-0249)

TRUCK, TRACTOR, 10-TON, 8x8, M983

WITH 2-INCH FIFTH WHEEL (NSN 2320-01-099-6421) (W/CRANE)

WITH 3.5-INCH FIFTH WHEEL (NSN 2320-01-097-0247) (W/O CRANE)

TRUCK, WRECKER, RECOVERY, 10-TON, 8x8, M984E1

(NSN 2320-01-195-7641)

TRUCK,CARGO, TACTICAL, 10-TON 8x8, WITH MEDIUM CRANE, M985

WOWN (NSN 2320-01-100-7673)

WWN (NSN 2320-01-097-0261)

TRUCK, WRECKER, RECOVERY, 10-TON, 8x8, M984

(NSN 2320-01-097-0248)

TRUCK, CARGO, TACTICAL, 10-TON, 8x8, M985E1,

GUIDED MISSILE TRANSPORTER (GMT)

WOWN (NSN 2320-01-194-7031)

WWN (NSN 2320-01-194-7032)

HEADQUARTERS, DEPARTMENT OF THE ARMY 29 JANUARY 1987

TECHNICAL MANUAL
No. 55-2320-279-14

HEADQUARTERS
DEPARTMENT OF THE ARMY
WASHINGTON, DC, 29 *January 1987*

TECHNICAL MANUAL

TRANSPORTABILITY GUIDANCE

HEAVY EXPANDED MOBILITY TACTICAL TRUCK (HEMTT), 10-TON, 8x8

TRUCK, CARGO, TACTICAL, 10-TON, 8x8, WITH LIGHT CRANE, M977

WOWN (NSN 2320-01-099-6426)

WWN (NSN 2320-01-097-0269)

TRUCK, FUEL-SERVICING, 10-TON, M978

WOWN (NSN 2320-01-100-7672)

WWN (NSN 2320-01-097-0249)

TRUCK, TRACTOR, 1O-TON, 8x8 M983

WITH 2-INCH FIFTH WHEEL (NSN 2320-01-099-6421) (W/CRANE)

WITH 3.5-INCH FIFTH WHEEL (NSN 2320-01-097-0247) (W/O CRANE)

TRUCK, WRECKER, RECOVERY, 1O-TON, 8x8, M984E1

(NSN 2320-01-195-7641)

TRUCK, CARGO, TACTICAL, IO-TON, 8x8, WITH MEDIUM CRANE, M985

WOWN (NSN 2320-01-100-7673)

WWN (NSN 2320-01-097-0261)

TRUCK, WRECKER, RECOVERY, 1O-TON, 8x8, M984

(NSN 2320-01-097-0248)

TRUCK, CARGO, TACTICAL, 1O-TON, 8x8, M985E1 ,

GUIDED MISSILE TRANSPORTER (GMT)

(WOWN (NSN 2320-01-194-7031)

(WWN (NSN 2320-01-194-7032)

173-131 0 - 87 - 1

		Paragraph	Page
CHAPTER 1.	INTRODUCTION		
	Purpose and Scope	1-1	1-1
	Safety	1-2	1-1
	Definitions of Warnings, Cautions, and Notes	1-3	1-1
	Reporting of Recommendations and Comments	1-4	1-1
CHAPTER 2	TRANSPORTABILITY DATA		
SECTION I.	GENERAL		
	Scope	2-1	2-1
	Description	2-2	2-1
	Transportability Drawings	2-3	2-3
II.	CHARACTERISTICS AND RELATED DATA		
	General Transportability Characteristics	2-4	2 - 8
	Unusual Characteristics	2-5	2-10
	Hazardous and Dangerous Characteristics	2-6	2-11
CHAPTER 3.	SAFETY		
CHAPTER 4.	AIR TRANSPORTABILITY GUIDANCE		
	Scope	4-1	4-1
	Maximum Utilization of Aircraft	4-2	4-1
	Applicability	4-3	4-1
	Safety	4-4	4-1
	Preparation of Equipment	4-5	4-1
	Transport by US Air Force Aircraft	4-6	4-2
	Internal and External Transport by US Army Aircraft	4-7	4-6
CHAPTER 5.	HIGHWAY TRANSPORTABILITY GUIDANCE		
SECTION I.	GENERAL		
	Scope	5-1	5-1
	Safety	5-2	5-1
	General	5-3	5-1
II.	SELF-PROPELLED MOVEMENT		
	US Highways	5-4	5-1
	European Highways	5-5	5-1
	Other Countries	5-6	5-1
III.	TRANSPORT BY SEMITRAILER		
	General	5-7	5-1
	Preparation for Transport	5-8	5-2
	Loading and Tiedown on semitrailer	5-9	5-2
CHAPTER 6.	MARINE AND TERMINAL TRANSPORTABILITY GUIDANCE		
SECTION I.	GENERAL		
	Scope	6-1	6-1
	Safety	6-2	6-1
	Water Shipment	6-3	6-1
II.	LOADING AND SECURING		
	General Rules for Stowing	6-4	6-1
	Special Design Ships	6-5	6-7
	Barges and Lighters	6-6	6-7
	Landing Ships, Landing Craft, and Amphibious Vehicles	6-7	6-7
CHAPTER 7.	RAIL TRANSPORTABILITY GUIDANCE		
SECTION I.	GENERAL		
	Scope	7-1	7-1
	Maximum Utilization of Railcars	7-2	7-1
	Safety	7-3	7-1
II.	TRANSPORT OF CONUS RAILWAYS		
	General	7-4	7-1
	Preparation for Loading	7-5	7-1
	Loading or General Purpose Flatcars	7-6	7-1
	Loading on Special (Chain Tiedown) Flatcars	7-7	7-4
III.	TRANSPORT ON FOREIGN RAILWAYS		
	General	7-8	7-9
	Transport on Foreign-Service Flatcars	7-9	7-9

CHAPTER 1

INTRODUCTION

1-1. Purpose and Scope

a. This manual provides transportability guidance for logistical handling and movement of the heavy expanded mobility tactical truck (HEMTT), models M977, M978, M983, M984, M984E1, M985, and M985E1 (GMT). It contains information considered appropriate for safe transport of the trucks. Included are technical data, as well as safety considerations, which will be useful in planning for worldwide movement by the various transportation modes. Where considered appropriate, metric equivalents are given in parentheses following the dimensions or other measurements.

b. This manual is intended for transportation officers and other personnel responsible for movement of HEMTTs or for providing transportation services.

1-2. Safety

Precautionary measures required during movement of the HEMTT are contained in chapter 3.

1-3. Definitions of Warnings, Cautions, and Notes

Throughout this manual, warnings, cautions, and notes emphasize important or critical guidance. They are used for the following conditions:

a. *Warning*. Instructions that, if not followed, could result in injury to or death of personnel.

b. *Caution*. Instructions that, if not strictly observed, could result in damage to or destruction of equipment.

c. *Note*. An operating procedure or condition that must be emphasized.

1-4. Reporting of Recommendations and Comments

Users of this manual are encouraged to submit comments and make recommended changes for its improvement. Comments and recommendations should be prepared on DA Form 2028 (Recommended Changes to DA Publications and Blank Forms) and forwarded to Commander, Military Traffic Management Command Transportation Engineering Agency, ATTN: MTT-TRS, PO Box 6276, Newport News, VA 23606-0276. Electrically transmitted messages should be addressed to CDR MIMCTEA FT EUSTIS VA//MTT-TRS//. A reply will be furnished by this command.

CHAPTER 2

TRANSPORTABILITY DATA

Section I. GENERAL

2-1. Scope

This chapter provides a general description and identification photographs of the HEMTTs, as well as tabulated data that will assist in the movement of the vehicles.

2-2. Description

a. *General.* The HEMTT is a 10-ton, 8x8 truck with a diesel engine, an automatic transmission, and an 11-ton load capacity. Each vehicle, except for the M983 truck tractor (PATRIOT) and the M978 fuel-servicing truck, is equipped with a crane for self-loading and unloading.

b. M977 Truck, Cargo, 10-Ton, 8x8. This HEMTT is equipped with a 7-ton capacity crane and is shown in figure 2-1.

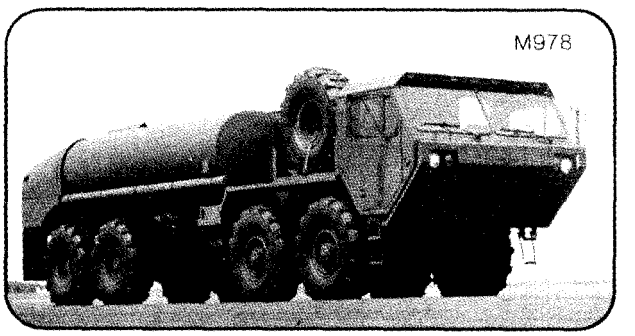

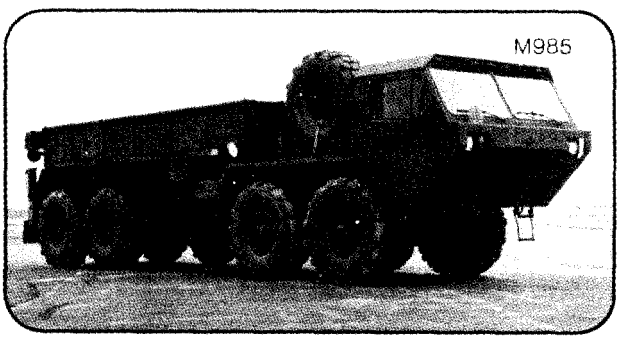

Figure 2-1. HEMTT family of 10-ton, x8 vehicles.

c. M978 Truck, Fuel-Servicing, 10-Ton, 8x8. This HEMTT has a 2,500-gallon capacity and is shown in figure 2-1.

d. M983 Truck, Tractor, 10-Ton, 8x8. This HEMTT is issued with two different fifth wheels. The tractor (NSN 2320-01-099-6421) with crane and 2-inch fifth wheels is used with the PERSHING II missile system and semitrailers with 2-inch kingpins. The tractor (NSN 2320-01-097-0247) without crane and with the 3.5-inch fifth wheels is used with the PATRIOT missile system and semitrailers with 3.5-inch kingpins (fig 2-1).

e. M984E1 Truck, Wrecker, Recovery, 10-Ton, 8x8. This HEMTT has a crane with a 14,000-pound capacity at 9 feet and a cargo bed (fig 2-1).

f. M985 Truck, Cargo, 10-Ton, 8x8. This HEMTT has a crane with a 5,400-pound capacity at 16.5 feet (fig 2-1).

g. M985E1 Truck, Cargo, 10-Ton, 8x8, Guided Missile Transporter (GMT). The M985E1 is the same as the M985 except that the length is 420.5 inches. The bed is lengthened to receive PATRIOT missile rounds.

2-3. Transportability Drawings

Detailed transportability drawings of the HEMTTs, with dimensions and tiedown and lifting provision load-rating capacities, are shown in figures 2–2 through 2–5.

CENTER OF GRAVITY			
		A (AFT OF CL 2ND AXLE)	B (ABOVE GROUND)
M977	CURB	65" (1.65 M)	45" (1.14 M)
	GVW	82.00" (2.08 M)	62" (1.57 M)
M985	CURB	71" (1.80 M)	45" (1.14 M)
	GVW	88.00" (2.24 M)	67" (1.70 M)

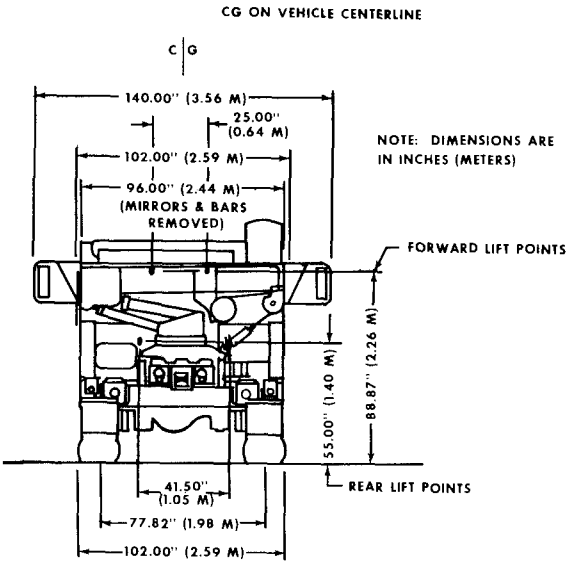

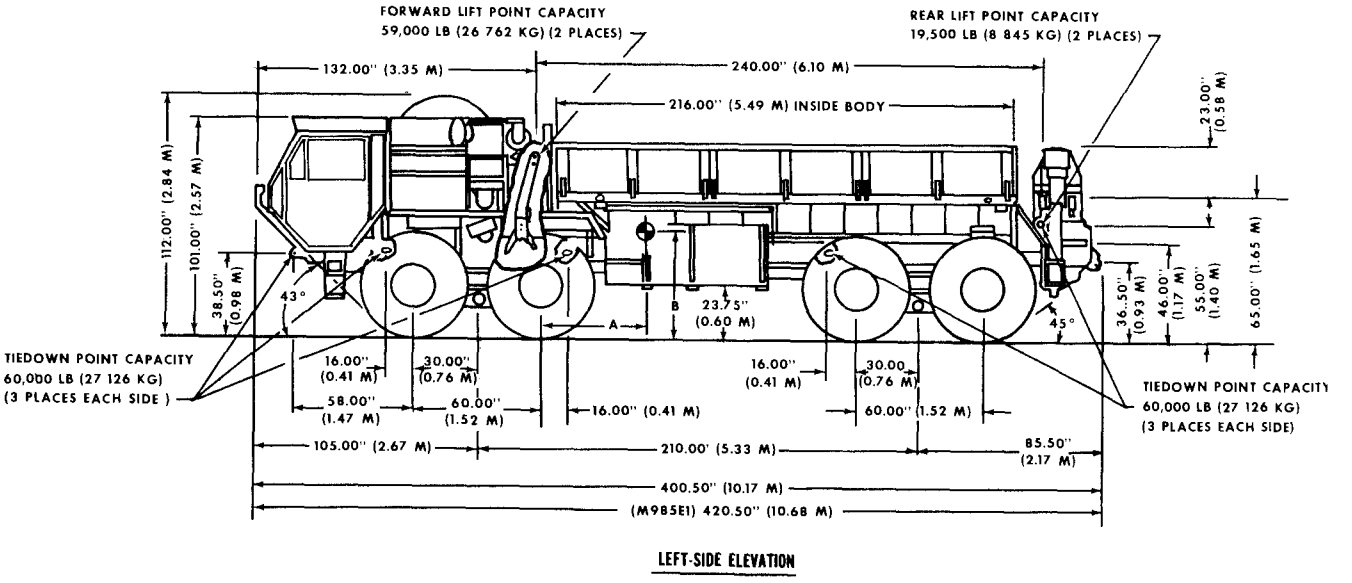

Figure 2-2. Left-side and rear elevation of M977 or M985 truck, cargo, 10-ton, 8x8.

M983 CENTER OF GRAVITY		
	A (AFT OF CL 2ND AXLE)	B (ABOVE GROUND)
W/O CRANE	30" (0.76 M)	43 (1.09 M)
W/CRANE	36" (0.91 M)	49 (1.24 M)

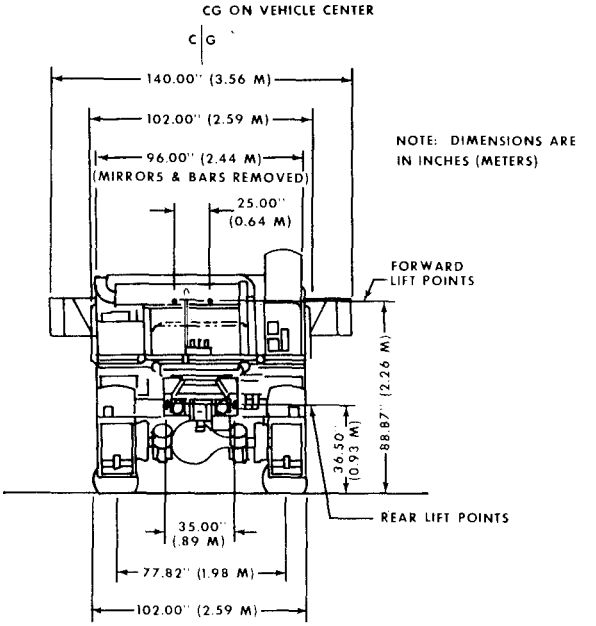

REAR ELEVATION

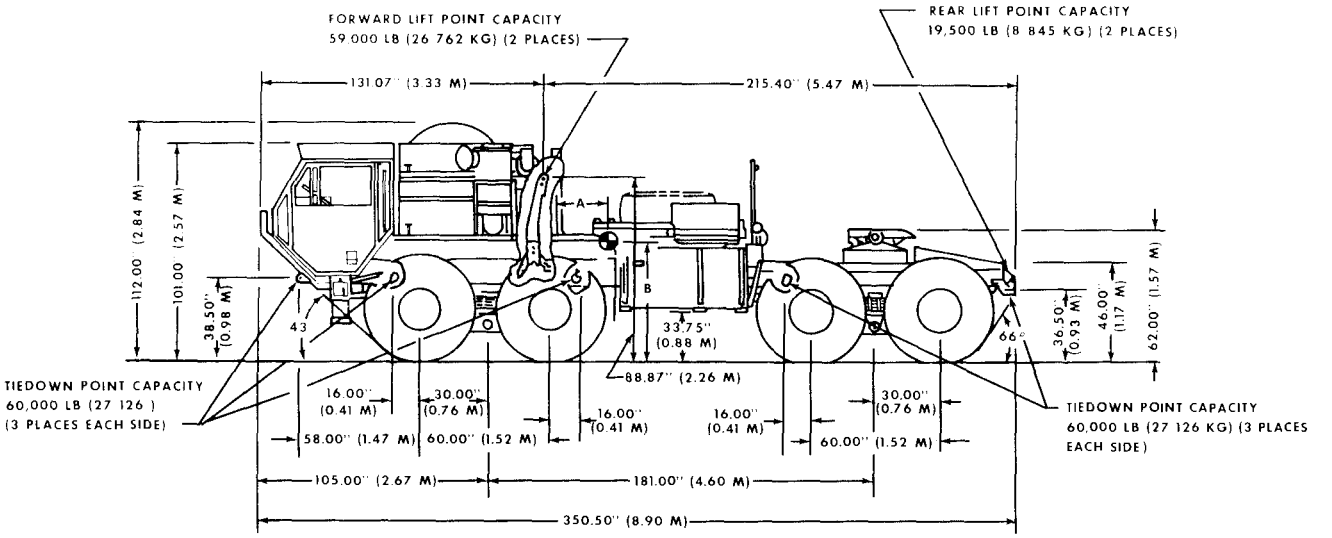

LEFT-SIDE ELEVATION

Figure 2-3. Left-side and rear elevations of M983 truck, tractor, 10-ton, 8x8.

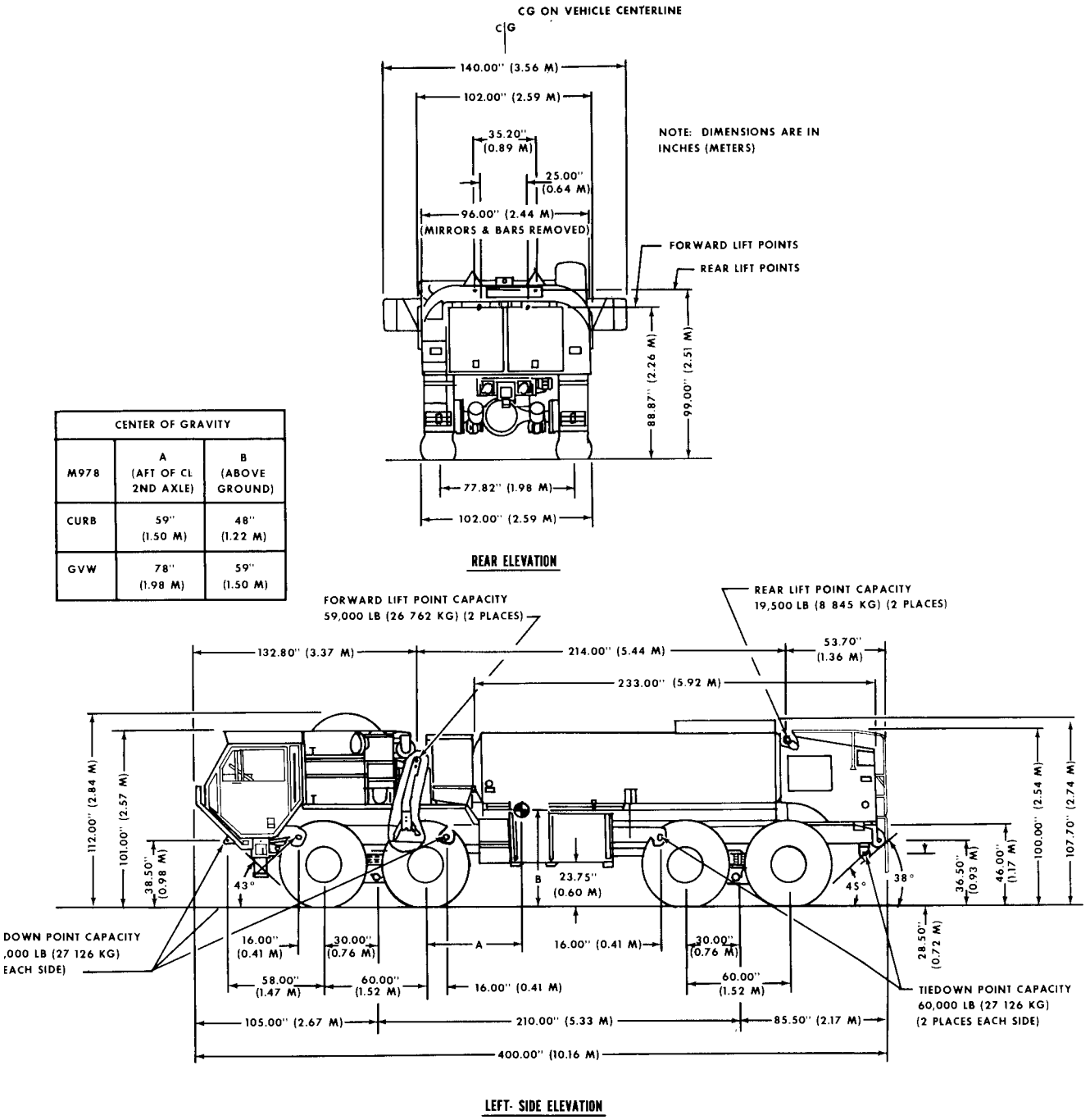

CENTER OF GRAVITY		
M978	A (AFT OF CL 2ND AXLE)	B (ABOVE GROUND)
CURB	59" (1.50 M)	48" (1.22 M)
GVW	78" (1.98 M)	59" (1.50 M)

Figure 2-4. Left-side and rear elevations of M978 truck, fuel-servicing, 10-ton, 8x8.

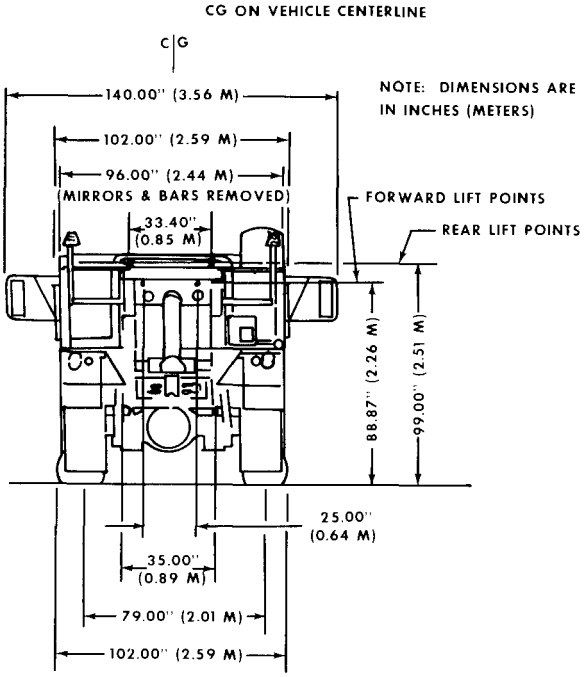

REAR ELEVATION

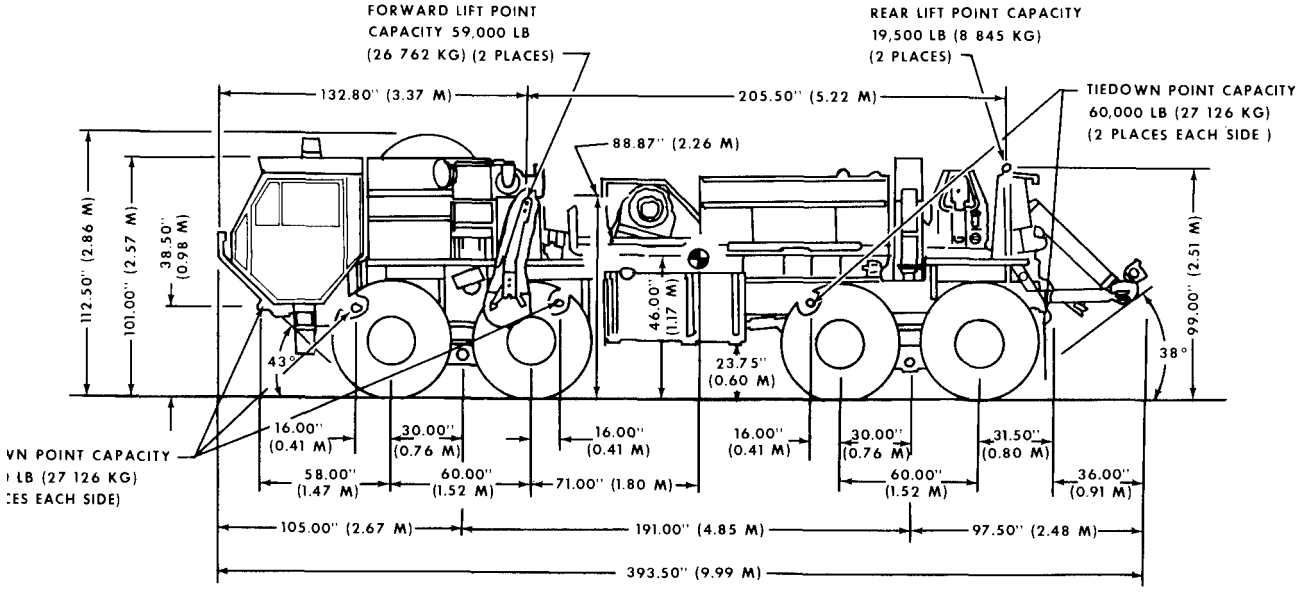

LEFT-SIDE ELEVATION

Figure 2-5. Left-side and rear elevations of M984E1 truck, wrecker, recovery, 10-ton, 8x8.

Section II. CHARACTERISTICS AND RELATED DATA

2-4. General Transportability Characteristics

Data contained herein are applicable to the model number or national stock number (NSN) shown. Changes in model number or NSN may affect the loadability of the item as related to the guidance shown in this manual.

a. M977 Truck Cargo, 10-Ton, 8x8, With Light Crane.

National stock number:	
WWN	2320-01-097-0260
WOWN	2320-01-099-6426
Line item Number	
WWN	T39518
WOWN	T59278
Performance:	
Maximum speed	61 mph (98 km/h)
Maximum range	300 mi (483 km)
Fuel	Diesel
Fuel tank capacity	150 gal (568 L)
Turning radius	47 ft (14.33m)
Angle of approach	43°
Angle of departure	45°
Ground clearance:	
Under axle	13 in. (0.33m)
Under fuel tank	23.8 in. (0.60m)
Tires:	
Size	16.00R20
Type	Radial with tube
Inflation:	
Front	60 psi (414 kPa)
Rear	90 psi (621 kPa)
Footprint (average per tire}	
Unloaded	117.3 in.^{2}(0.08m^2)
Maximum payload	240.3 in.^{2}(0.16 m^2)
Ground pressure (average per tire):	
Unloaded	40 psi (276 kPa)
Maximum payload	63.4 psi (437 kPa)
Crane capacity	
At 19 feet	2,500 lb (1134 kg)
At 9 feet	4,500 lb (2041 kg)
Military load classification:	
Empty	16
Dimensions and shipping data:	
Length operational (not reducible)	400.5 in. (10.17 m)
Width:	
Operational over mirrors	140.0 in. (3.56 m)
Operational over hand bars and tire bulge	102.0 in. (2.85 m)
Operational, basic vehicle	96.0 in. (2.44 m)
Height:	
Operational over spare tire	112.0 in. (2.85 m)
Operational over cab	101.0 in. (2.57 m)
Cube:	
Operational	3,634 ft^3(102.85 m^3)
With mirrors and spare tire removed	2,388 ft^3(67.58 m^3)
With mirrors, hand bars, and spare tire removed	2,247 ft^3(63.60 m^3)
Weight:	
Curb weight	38,800 lb (17600 kg)
Gross vehicle weight	59,700 lb (27080 kg)
Axle load (curb weight):	
No. 1 axle	10,625 lb (4820 kg)
No. 2 axle	10,625 lb (4820 kg)
No. 3 ale	8,775 lb (3980 kg)
No. 4 axle	8,775 lb (3980 kg)
Axle load (gross vehicle weight):	
No. 1 axle	14,000 lb (6350 kg)
No. 2 axle	14,000 lb (6350 kg)
No. 3 axle	15,850 lb (7190 kg)
No. 4 axle	15,850 lb (7190 kg)

b. M985 Truck, Cargo, 10-Ton, 8x8 Medium Crane.

National stock number:	
WWN	2320-01-097-0261
WOWN	2320-01-100-7673
Line item number:	
WWN	T39654
WOWN	T39586
Performance:	
Maximum speed	61 mph (98 km/h)
Maximum range	300 mi (483 km)
Fuel	Diesel
Fuel tank capacity	150 gal (568 L)
Turning radius	47 ft (14.33 m)
Angle of approach	43°
Angle of departure	45°
Ground clearance:	
Under axle	13 in. (0.33 m)
Under fuel tank	23.8 in. (0.60 m)
Tires:	
Size	16.00R 20 x L
Type	Radial with tube
Inflation:	
Front	60 psi (414 kPa)
Rear	90 psi (621 kPa)
Footprint (average per tire):	
Unloaded	117.3 in.^{2}(0.08 m^2)
Maximum payload	240.3 in.^{2}(0.16m^2)
Ground pressure (average per tire):	
Unloaded	41.3 psi (285 kPa)
Maximum payload	64.8 psi (447 kPa)
Crane capacity	
At 16.5 feet	5,400 lb (2449 kg)
Military load classification:	
Empty	17
Dimensions and shipping data	
Length operational (not reducible)	400.5 in. (10.17 m)
Width:	
Operational over mirrors	140.0 in. (3.56 m)
Operational over hand bars and tire bulge	102,0 in. (2.59 m)
Operational, basic vehicle	96,0 in. (2.44 m)
Height:	
Operational over spare tire	112.0 in. (2.85 m)
Operational over cab	101.0 in. (2.57 m)
Cube:	
Operational	3,634 ft^3(102.85 m^3)
With mirrors and spare tire removed	2,388 ft^3(67.58 m^3)
With mirrors, hand bars, and spare tire removed	2,247 ft^3(63.60 m^3)
Weight:	
Curb weight	39,650 lb (17985 kg)
Gross vehicle weight	62,100 lb (28169 kg)

Axle load (curb weight):

No. 1 axle	10,475 lb (4751 kg)
No. 2 axle	10,475 lb (4751 kg)
No. 3 axle	9,350 lb (4241 kg)
No. 4 axle	9,350 lb (4241 kg)

Axle load (gross vehicle weight):

No. 1 axle	13,575 lb (6158 kg)
No. 2 axle	13,575 lb (6158 kg)
No. 3 axle	17,475 lb (7927 kg)
No. 4 axle	17,475 lb (7927 kg)

c. M978 Truck, Fuel-Servicing, 10-Ton, 8x8.

National stock number:	
WWN	2320-01-097-0249
WOWN	2320-01-100-7672
Line item number:	
WWN	T58161
WOWN	T87243
Performance:	
Maximum speed	61 mph (98 km/h)
Maximum range	300 mi (483 km)
Fuel	Diesel
Fuel tank capacity	150 gal (568 L)
Turning radius	47 ft (14.33 m)
Angle of approach	43°
Angle of departure	38º
Ground clearance:	
Under axle	13 in. (0.33 m)
Under fuel tank	23.8 in. (0.60 m)
Tires:	
Size	16.00R 20 x L
Type	Radial with tube
Inflation:	
Front	60 psi (414 kPa)
Rear	90 psi (621 kPa)
Footprint (average per tire):	
Unloaded	117.3 in.^{2}(0.08 m^2)
Maximum payload	240.3 in.^{2}(0.16 m^2)
Ground pressure (average per tire):	
Unloaded	38.9 psi (268 kPa)
Maximum payload	58 psi (400 kPa)
Military load classification:	
Empty	15
Dimensions and shipping data:	
Length operational (not reducible)	400.5 in. (10.17 m)
Width:	
Operational over mirrors	140.0 in. (3.56 m)
Operational over hand bars and tire bulge	102.0 in. (2.59 m)
Operational, basic vehicle	96.0 in. (2.44 m)
Height:	
Operational over spare tire	112.0 in. (2.85 m)
Operational over cab	101.0 in. (2.57 m)
Cube:	
Operational	3,634 ft^3(102.85 m^3)
With mirrors and spare tire removed	2,388 ft^3(67.58 m^3)
With mirrors, hand bars, and spare tire removed	2,247 ft^3(63.60 m^3)
Weight:	
Curb weight	38,150 lb (17305 kg)
Gross vehicle weight	58,850 lb (26694 kg)
Axle load (curb weight):	
No. 1 axle	11,050 lb (5012 kg)
No. 2 axle	11,050 lb (5012 kg)
No. 3 axle	8,025 lb (3640 kg)
No. 4 axle	8,025 lb (3640 kg)
Axle load (gross vehicle weight):	
No. 1 axle	15,175 lb (6883 kg)
No. 2 axle	15,175 lb (6883 kg)
No. 3 axle	14,250 lb (6464 kg)
No. 4 axle	14,250 lb (6464 kg)

d. M983 Truck, Tractor, 10-Ton, 8x8 (for PERSHING II), With 2-Inch Fifth Wheel.

National stock number	2320-01-099-6421
Line item number	T59117
Performance:	
Maximum speed	61 mph (98 km/h)
Maximum range	300 mi (482 km)
Fuel	Diesel
Fuel tank capacity	150 gal (568 L)
Turning radius	42.5 ft (12.95 m)
Angle of approach	43°
Angle of departure	66°
Ground clearance:	
Under axle	13 in. (0.33 m)
Under fuel tank	23.8 in. (0.60 m)
Tires:	
Size	16.00R20
Type	Radial with tube
Inflation:	
Front	60 psi (414 kPa)
Rear	90 psi (621 kPa)
Footprint (average per tire):	
Unloaded	117.3 in.^{2}(0.08 m^2)
Maximum payload	240.3 in.^{2}(0.16 m^2)
Crane capacity:	
At 10 feet	14,620 lb (6632 kg)
Ground pressure (average per tire):	
Unloaded	44.8 psi (309 kPa)
Maximum payload	57.5 psi (397 kPa)
Military load classification:	
Empty	16
Fifth wheel (kingpin size)	2 in. (0.05 m)
Dimensions and shipping data	
Length operational (not reducible)	350.5 in. (8.90 m)
Width:	
Operational over mirrors	140.0 in. (3.56 m)
Operational over hand bars and tire bulge	102.0 in. (2.59 m)
Operational, basic vehicle	96.0 in. (2.44 m)
Height:	
Operational over generator	125.0 in. (3.18 m)
Operational over spare tire	112.0 in. (2.85 m)
Operational over cab	101.0 in. (2.57 m)
Cube:	
Operational	3,550 ft^3(100. 45 m^3)
With mirrors removed	2,586 ft^3(73.19 m^3)
With mirrors and generator removed	2,317 ft^3(65.57 m^3)
Weight:	
Curb weight	39,200 lb (17781 kg)
Gross vehicle weight (with kingpin load)	59,800 lb (27125 kg)
Axle load (curb weight):	
No. 1 axle	12,300 lb (5579 kg)
No. 2 axle	12,300 lb (5579 kg)
No, 3 axle	7,300 lb (3311 kg)
No. 4 axle	7,300 lb (3311 kg)
Axle load (gross vehicle weight):	
No. 1 axle	13,925 lb (6316 kg)
No. 2 axle	13,925 lb (6316 kg)

No. 3 axle	15,975 lb (7246 kg)
No. 4 axle	15,975 lb (7246 kg)

e. M983 Truck, Tractor, 10-Ton, 8x8 (for PATRIOT), With 3.5-Inch Fifth Wheel.

National stock number	2320-01-097-0247
Line item number	T88677
Performance:	
Maximum speed	61 mph (98 km/h)
Maximum range	300 mi (483 km)
Fuel	Diesel
Fuel tank capacity	150 gal (568 L)
Turning radius	42.5 ft (12.95 m)
Angle of approach	43”
Angle of departure	66°
Ground clearance:	
Under axle	13 in. (0.33 m)
Under fuel tank	23.8 in. (0.60 m)
Tires:	
Size	16.00R20
Type	Radial with tube
Inflation:	
Front	60 psi (414 kPa)
Rear	90 psi (621 kPa)
Footprint (average per tire):	
Unloaded	117.3 in.^{2}(0.08 m^2)
Maximum payload	240.3 in.^{2}(0.16m^2)
Ground pressure (average per tire):	
Curb weight	33.6 psi (232 kPa)
Maximum payload	46.0 psi (317 kPa)
Military load classification:	
Empty	14
Fifth wheel (kingpin size)	3.5 in. (0.09 m)
Dimensions and shipping data:	
Length operational (not reducible)	350.5 in. (8.90 m)
Width:	
Operational over mirrors	140.0 in. (3.56 m)
Operational over hand bars and tire bulge	102.0 in. (2.59 m)
Operational, basic vehicle	96.0 in. (2.44 m)
Height:	
Operational over spare tire	112.0 in. (2,85 m)
Operational over cab	101.0 in. (2.57 m)
Cube:	
Operational	3,180 ft^3(90.01 m^3)
With mirrors and spare tire removed	2,090 ft^3(59.14 m^3)
With mirrors, hand bars, and spare tire removed	1,967 ft^3(55.66 m^3)
Weight:	
Curb weight	32,150 lb (14583 kg)
Gross vehicle weight (with kingpin load)	49,650 lb (22521 kg)
Axle load (curb weight):	
No. 1 axle	10,900 lb (4944 kg)
No. 2 axle	10,900 lb (4944 kg)
No. 3 axle	5,175 lb (2347 kg)
No. 4 axle	5,175 lb (2347 kg)
Axle load (gross vehicle weight):	
No. 1 axle	11,400 lb (5171 kg)
No. 2 axle	11,400 lb (5171 kg)
No. 3 axle	13,425 lb (6090 kg)
No. 4 axle	13,425 lb (6090 kg)

f. M984E1 Truck, Wrecker, Recovery, 10-Ton, 8x8.

National stock number	2320-01-195-7641
Line item number	T63093
Performance:	
Maximum speed	61 mph (98 km/h)
Maximum range	300 mi (483 km)
Fuel	Diesel
Fuel tank capacity	150 gal (568 L)
Turning radius	47 ft (14.33 m)
Angle of approach	43°
Angle of departure	38°
Ground clearance:	
Under axle	13 in. (0.33 m)
Under fuel tank	23.8 in. (0.60 m)
Tires:	
Size	16.00R20
Type	Radial with tube
Inflation:	
Front	60 psi (414 kPa)
Rear	90 psi (621 kPa)
Footprint (average per tire):	
Unloaded	117.3 in.^{2}(0.08 m^2)
Maximum payload	240.3 in.^{2}(016m^2)
Ground pressure (average per tire):	
Curb weight	43.7 psi (301 kPa)
Maximum payload	76.7 psi (529 kPa)
Crane capacity:	
At 9 feet	14,000 lb (6350 kg)
At 11.8 feet	12,000 lb (5443 kg)
At 16.4 feet	8,000 lb (3629 kg)
At 18.2 feet	6,000 lb (2722 kg)
Military load classification:	
Empty	19
Dimensions and shipping data	
Length operational (not reducible)	393.5 in. (9.99 m)
With recovery boom folded/ removed..	357.5 in. (9.08 m)
Width:	
Operational over mirrors	140,0 in. (3.56 m)
Operational over hand bars and tire bulge	102.0 in, (2,59 m)
Operational, basic vehicle	96.0 in. (2.44 m)
Height:	
Operational over spare tire	112.0 in (2.85 m)
Operational over cab	101,0 in. (2.57 m)
Cube:	
Operational	3,570 ft^3(101.05m^3)
With mirrors and spare tire removed	2,346 ft^3(66.39 m^3)
With mirrors, hand bars, and spare tire removed	2,208 ft^3(62.49 m^3)
Weight:	
Curb weight	50,900 lb (23088 kg)
Gross vehicle weight	76,200 lb (34564 kg)
Axle load (curb weight):	
No. 1 axle	11,950 lb (5420 kg)
No. 2 axle	11,950 lb (5420 kg)
No. 3 axle	13,500 lb (6124 kg)
No. 4 axle	13,500 lb (6124 kg)
Axle load (gross vehicle weight):	
No. 1 axle	6,100 lb (2767 kg)
No. 2 axle	6,100 lb (2767 kg)
No. 3 axle	32,000 lb (14515 kg)
No. 4 axle	32,000 lb (14515 kg)

2-5. Unusual Characteristics

The HEMTTs have no unusual characteristics that would require special attention be given to temperature, atmospheric pressure, or humidity vari-

ations during their exposure to normal transportation environments.

2-6. Hazardous and Dangerous Characteristics

The HEMMT will not present any special hazardous or dangerous characteristics during exposure to normal transportation environments.

NOTE

Those regulations and/or transportation procedures normally associated with vehicles containing diesel fuel will apply.

CHAPTER 3

SAFETY

General safety considerations and precautions for the handling and movement of the HEMTT are as follows:

a. The truck will not be left unattended while the engine is running.

b. All personnel must stay clear of the truck when it is being operated in reverse, and the area will be clear of obstacles.

c. Personnel must not stand or walk under the truck when it is being lifted.

WARNING

Fire extinguishers must be readily available during all loading and unloading operations.

WARNING

If the truck is operated during loading and unloading operations, proper ventilation must be provided. Prolonged inhalation of carbon monoxide fumes could be fatal.

CHAPTER 4

AIR TRANSPORTABILITY GUIDANCE

4-1. Scope

This chapter provides air transportability guidance movement of the HEMTTs. It covers technical and physical characteristics of HEMTTs, as well as safety considerations. It also prescribes the materials required to prepare, load, unload, and tie down the HEMTTs on US Air Force aircraft.

4-2. Maximum Utilization of Aircraft

The loads described in this chapter are not maximum loads. Additional cargo and/or personnel within allowable load limits and restrictions, prescribed by pertinent safety regulations, can be transport.

4-3. Applicability

a. US Air Force Aircraft. When prepared for loading as described in paragraph 4-5, the HEMTTs are transportable in C-130, C-141, and C-5 aircraft.

b. Tiedown Devices. The HEMTTs will be tied down in accordance with section IV of applicable procedures in TO IC-XXX-9.

c. *Loadmaster.* The loadmaster will ensure that the loaded equipment is secured in accordance with restraint criteria outlined in TO 1C–XXX-9.

4-4. Safety

In addition to the safety precautions contained in chapter 3, the following procedures should be noted:

a. The activity offering the equipment for air transport must notify the aircraft commander, or designated representative, when hazardous materials are to be transported and whether these materials have been prepared for shipment in accordance with TM 38-250/AFR 71-4.

b. The vehicle fuel tank must not be more than three-fourths full.

c. The vehicle must be tied down according to procedures in TO 1C-XXX-9.

d. Each vehicle must be checked carefully to ensure that all loose items are properly secured.

WARNING

Fire extinguishers must be readily available during all loading and unloading operations.

WARNING

Proper ventilation must be provided during loading and unloading operations. Prolonged exposure to carbon monoxide fumes could be fatal.

CAUTION

The vehicles must not exceed 3 mph inside the aircraft or on the loading ramps.

4-5. Preparation of Equipment

a. Communication antennas must be removed and stowed.

b. All basic items (BII) not required for transport use must be stowed and secured.

c. Spare tire must be removed from all HEMTTs and secured during transport in C-130 and C–141 aircraft.

d. The ladder, handrails, mirrors, cover, and vent rollover rail must be removed from the M978 as identified in appendix E, TM 9-2320-279-10 and secured for shipment in C–130 and C-141 aircraft.

e. Forward and rear warning lights must be removed from the M984E1.

f. Bows, tarps, and items in the cargo bed must not exceed the height of the vehicle cab.

g. Generator must be removed from the M983 for PERSHING II and secured to an HCU-6/E (463L) pallet for transport in C-130 and C-141 aircraft.

h. All vehicles to be loaded in C-130 aircraft must not exceed 43,000 pounds gross weight or 13,000 pounds single axle weight.

CAUTION

If the M984E1 is to be loaded on the C-130, the cargo bed must be removed to decrease the curb weight from 50,900 pounds to 43,000 pounds or less.

NOTE

The M985E1 (modified M985 with H1AB 8108 crane and extended frame) has not been certified for transport aboard C-130 aircraft.

i. For C–141 transport, the gross weight must not exceed 62,000 pounds for the M977, M978, and M983 and 68,000 pounds for the M984E1 and M985. Maximum individual axle weight must not

exceed 20,000 pounds. When individual axle weights exceed 10,000 pounds, axles shall be placed in compartments I through M (columns 20 through 36). Maximum rear tandem axle weight shall not exceed 32,000 pounds for the M977, M978, and M983 and 38,000 pounds for the M984E1 and M985. Maximum forward tandem axle weight must not exceed 30,000 pounds.

NOTE

The M985E1 (modified M985 with H1AB 8108 crane and extended frame) has not been certified for transport aboard C-141 aircraft.

j. For C-5 transport, the gross vehicle weight must not exceed 62,000 pounds for the M977, M978, and M983 and 68,000 pounds for the M984E1 and M985. Maximum rear tandem axle weight must not exceed 32,000 pounds for the M977, M978, and M983 and 38,000 pounds for the M984E1 and M985. Maximum forward tandem axle weight must not exceed 30,000 pounds.

k. All four shackles must be installed (one in each forward and aft tiedown provision). If a shackle is missing, a screw pin anchor shackle with a pin size of 1.5-inch diameter (NSN 4030-00-169-9297 or equivalent) must be installed.

4-6. Transport by US Air Force Aircraft

a. All HEMTTs require the same amount of ramp and approach lumber shoring for loading into or unloading from the C–130. The ramp support shoring is 20 by 11 by 10 inches thick. The approach shoring consists of:

(1) Four pieces, 1.5- by 11.5-inch by 5-foot.

(2) Four pieces, 1.5- by 11.5-inch by 4-foot.

(3) Four pieces, 1.5- by 11.5-inch by 2-foot.

b. All HEMTT vehicles require the same amount of ramp and approach lumber shoring for loading into or unloading from the C–141 aircraft. The ramp shoring is 20 by 11 by 10.5 inches thick. The approach shoring consists of:

(1) Four pieces, 1.5- by 11.5-inch by 8-foot.

(2) Four pieces, 1.5- by 11.5-inch by 7-foot.

(3) Four pieces, 1.5- by 11.5-inch by 6-foot.

(4) Four pieces, 1.5- by 11.5-inch by 5-foot.

(5) Four pieces, 1.5- by 11.5-inch by 4-foot.

(6) Four pieces, 1.5- by 11.5-inch by 3-foot.

(7) Four pieces, 1.5- by 11.5-inch by 2-foot.

NOTE

Any two pieces of the above lumber, 1.5 inches thick by 11.5 inches wide, can be replaced with two pieces of 0.75-inch plywood of equal length and 22 inches wide.

c. Approach lumber shoring is stacked two pieces wide with the center matching each tire track of the vehicle. Shoring is stacked with the longest piece on the ground, and each piece added is 1 foot shorter until the desired height is reached.

d. The HEMTT is backed into the aircraft to its tiedown position and the parking brakes are set.

e. Suggested tiedown patterns are shown in figures 4-1 through 4–3. The tiedown devices required, the location of tiedown points, the corresponding fittings to which the devices are secured, and the number and capacity of devices required for loading and securing the vehicles are listed in tables 4-1 through 4-3.

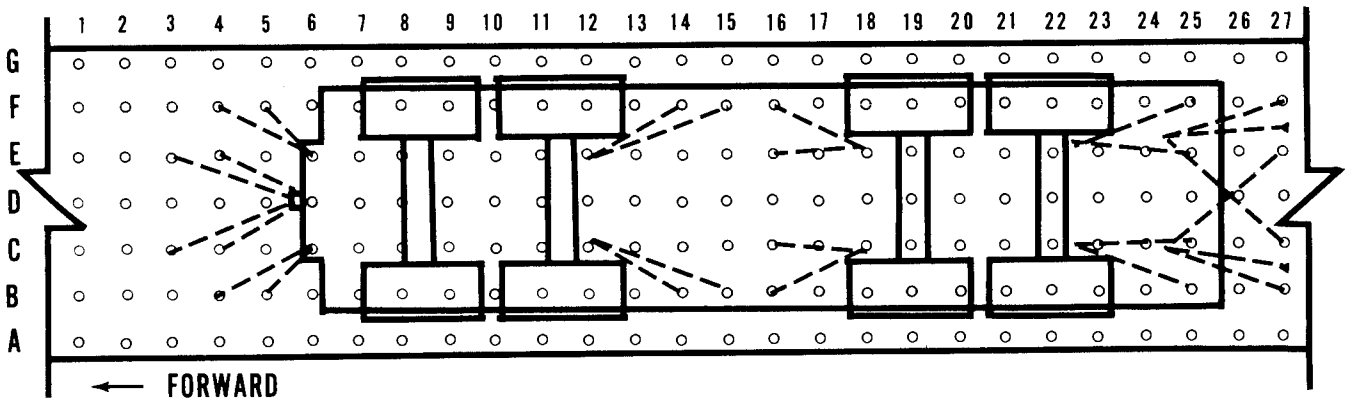

LEGEND: C-130 AIRCRAFT

- ○ 10,000 POUND CAPACITY TIEDOWN FITTING
- ▲ 25,000 POUND CAPACITY TIEDOWN FITTING

NOTE: TIEDOWN FITTINGS ARE LOCATED IN ROWS A THROUGH G AND COLUMNS 1 THROUGH 30. FIVE OF THESE ARE LOCATED ON THE RAMP. THIS IS A TYPICAL TIEDOWN PROCEDURE AND ONLY COLUMNS 1 THROUGH 27 ARE SHOWN. ITEM BEING SHIPPED CAN BE TIED DOWN AT ANY LOCATION (1-30) APPROVED BY THE LOADMASTER.

Figure 4-1. Typical tiedown diagram for HEMTT in US Air Force C-130 aircraft.

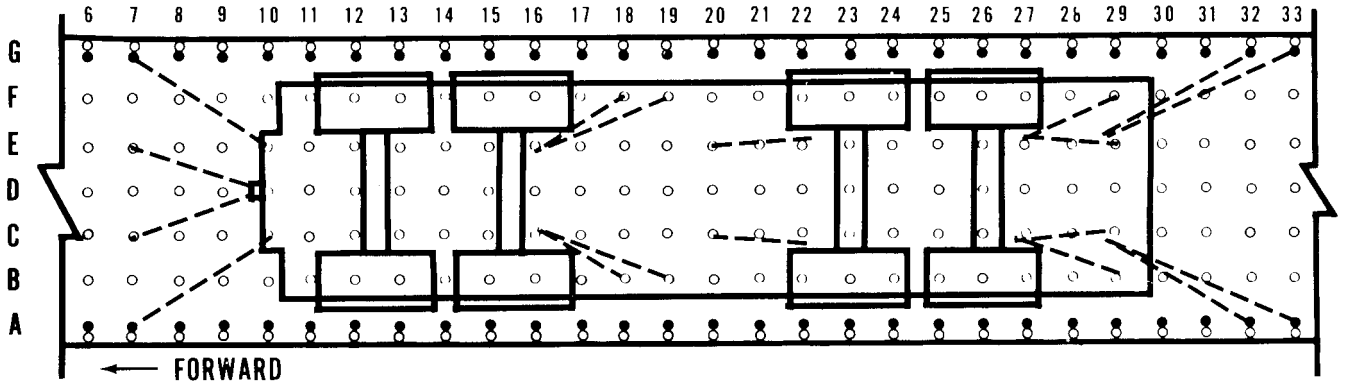

LEGEND: C-141 AIRCRAFT

- ○ 10,000 POUND CAPACITY TIEDOWN FITTING
- ● 25,000 POUND CAPACITY TIEDOWN FITTING

NOTE: TIEDOWN FITTINGS ARE LOCATED IN ROWS A THROUGH G AND AND COLUMNS 1 THROUGH 56. THIS IS A TYPICAL TIEDOWN PROCEDURE AND ONLY COLUMNS 6 THROUGH 33 ARE SHOWN. ITEM BEING SHIPPED CAN BE TIED DOWN AT ANY LOCATION APPROVED BY LOADMASTER.

Figure 4-2. Typical tiedown diagram for HEMMT in US Air Force C-141 aircraft.

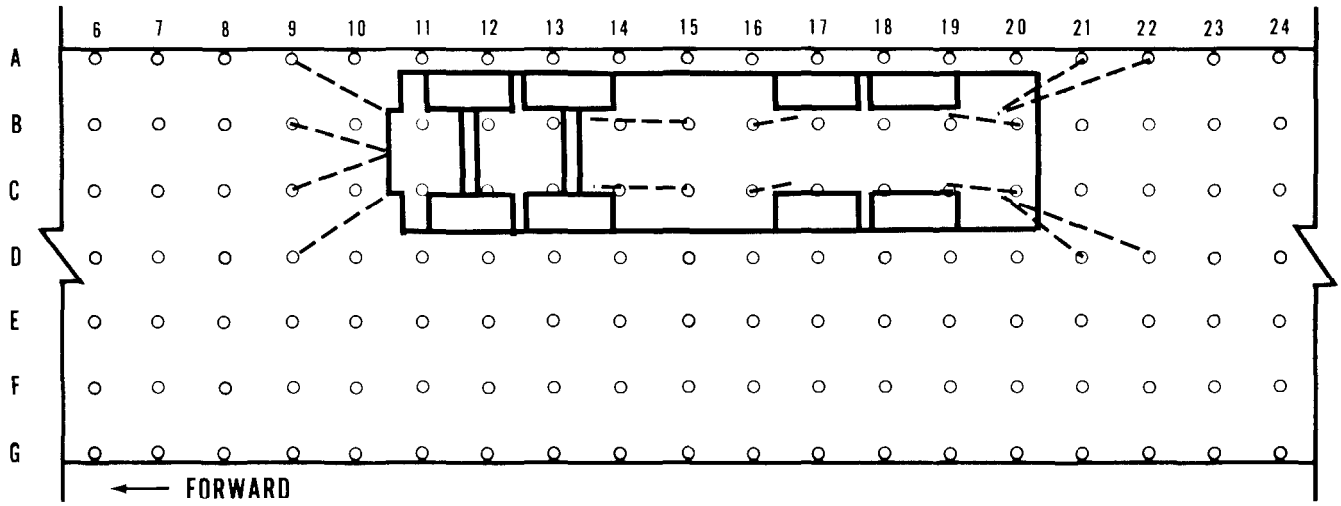

LEGEND: C-5 AIRCRAFT

o ALL CARGO TIEDOWN FITTING RATINGS 25000 LB EACH

NOTE: TIEDOWN FITTINGS ARE LOCATED IN ROWS A THROUGH G AND COLUMNS 1 THROUGH 48. TEN OF THESE ARE LOCATED ON THE RAMPS : FIVE ON THE FORWARD RAMP AND FIVE ON THE AFT RAMP. THIS IS A TYPICAL TIEDOWN PROCEDURE AND ONLY COLUMNS 6 THROUGH 24 ARE SHOWN. ITEM BEING SHIPPED CAN BE TIED DOWN AT ANY LOCATION (1-42) APPROVED BY THE LOADMASTER.

Figure 4-3. Typical tiedown diagram for HEMTT in US Air Force C-5 aircraft.

4-7. Internal and External Transport by US Army Aircraft

The HEMTT exceeds the size and weight limitations for either internal or external transport by US Army fixed-wing aircraft or helicopter.

Table 4-1. Tiedown Data for HEMTT in US Air Force C-130 Aircraft (Fig 4-1)

Tiedown Fitting		Tiedown Device		Attach to Item
Designation	Capacity in 1,000 lb	Type	Capacity in 1,000 lb	
C3	10	MB-1	10	Pintle.
E3	10	MB-1	10	Pintle.
B4	10	MB-1	10	Right rear tiedown fitting.
C4	10	MB-1	10	Pintle.
E4	10	MB-1	10	Pintle.
F4	10	MB-1	10	Left rear tiedown fitting.
B5	10	MB-1	10	Right rear tiedown fitting.
F5	10	MB-1	10	Left rear tiedown fitting.
B14	10	MB-1	10	Right tiedown fitting forward of No. 3 axle.
F14	10	MB-1	10	Left tiedown fitting forward of No. 3 axle.
B15	10	MB-1	10	Right tiedown fitting forward of No. 3 axle.
F15	10	MB-1	10	Left tiedown fitting forward of No. 3 axle.
B16	10	MB-1	10	Right tiedown fitting aft of No. 2 axle.
C16	10	MB-1	10	Right tiedown fitting aft of No. 2 axle.
E16	10	MB-1	10	Left tiedown fitting aft of No. 2 axle.
F16	10	MB-1	10	Left tiedown fitting aft of No. 2 axle.
B25	10	MB-1	10	Right tiedown fitting forward of No. 1 axle.
C25	10	MB-1	10	Right tiedown fitting forward of No. 1 axle.
E25	10	MB-1	10	Left tiedown fitting forward of No. 1 axle.
F25	10	MB-1	10	Left tiedown fitting forward of No. 1 axle.
B27	10	MB-1	10	Right forward tiedown fitting.
B27	25	MB-2	25	Right forward tiedown fitting.
C27	10	MB-1	10	Left forward tiedown fitting.
E27	10	MB-1	10	Right forward tiedown fitting.
F27	25	MB-2	25	Left forward tiedown fitting.
F27	10	MB-1	10	Left forward tiedown fitting.

Table 4-2. Tiedown Data for HEMTT in US Air Force C-141 Aircraft (Fig 4-2)

Tiedown Fitting		Tiedown Device		Attach to Item
Designation	Capacity in 1,000 lb	Type	Capacity in 1,000 lb	
A7	25	MB-2	25	Right rear tiedown fitting.
G7	25	MB-2	25	Left rear tiedown fitting.
C7	25	MB-2	25	Pintle.
E7	25	MB-2	25	Pintle.
B18	10	MB-1	10	Right tiedown fitting forward of No. 3 axle.
F18	10	MB-1	10	Left tiedown fitting forward of No. 3 axle.
B19	10	MB-1	10	Right tiedown fitting forward of No. 3 axle.
F19	10	MB-1	10	Left tiedown fitting forward of No. 3 axle.
C20	10	MB-1	10	Right tiedown fitting aft of No. 2 axle.
E20	10	MB-1	10	Left tiedown fitting aft of No. 2 axle.
B29	10	MB-1	10	Right tiedown fitting forward of No. 1 axle.
C29	10	MB-1	10	Right tiedown fitting forward of No. 1 axle.
E29	10	MB-1	10	Left tiedown fitting forward of No. 1 axle.
F29	10	MB-1	10	Left tiedown fitting forward of No. 1 axle.
A32	25	MB-2	25	Right forward tiedown fitting.
G32	25	MB-2	25	Left forward tiedown fitting.
A33	25	MB-2	25	Right forward tiedown fitting.
G33	25	MB-2	25	Left forward tiedown fitting.

Table 4-3. Tiedown Data for HEMTT in US Air Force C-5 Aircraft (Fig4-3)

Tiedown Fitting		Tiedown Device		Attach to Item
Designation	Capacity in 1,000 lb	Type	Capacity in 1,000 lb	
D9	25	MB-2	25	Right rear tiedown fitting.
A9	25	MB-2	25	Left rear tiedown fitting.
B9	25	MB-2	25	Pintle.
C9	25	MB-2	25	Pintle.
E15	25	MB-2	25	Right tiedown fitting forward of No. 3 axle.
B15	25	MB-2	25	Left tiedown fitting forward of No. 3 axle.
C17	25	MB-2	25	Right tiedown fitting aft of No. 2 axle.
B17	25	MB-2	25	Left tiedown fitting aft of No. 2 axle.
C20	25	MB-2	25	Right tiedown fitting forward of No. 1 axle.
B20	25	MB-2	25	Left tiedown fitting forward of No. 1 axle.
D21	25	MB-2	25	Right forward tiedown fitting.
A21	25	MB-2	25	Left forward tiedown fitting.
D22	25	MB-2	25	Right forward tiedown fitting.
A22	25	MB-2	25	Left forward tiedown fitting.

CHAPTER 5

HIGHWAY TRANSPORTABILITY GUIDANCE

Section II. GENERAL

5-1. Scope

This chapter provides highway transportability guidance for movement of the HEMTTs. It covers technical and physicial characteristics of HEMTTs, as well as safety considerations. It also prescribes the materials and guidance required to prepare, load, tie down, and unload the HEMTTs.

5-2. Safety

In addition to the safety precautions contained in chapter 3, movement is subject to all safety laws, rules, and regulations applicable to commercial carriers. Overseas movements are governed by theater regulations.

CAUTION

Trucks must not exceed 3 mph during loading or unloading operations.

5-3. General

Although overwidth permits are required in most areas, the HEMTTs can be transported under their own power for highway movement in continental United States (CONUS) and overseas areas. The vehicles may also be transported by semitrailers.

Section II. SELF-PROPELLED MOVEMENT

5-4. US Highways

The length, height, weight, and axle loads of the HEMTTs are within the legal limits of the interstate highways and those major highways designated by the Federal Highway Administration (FHWA) for vehicles 102 inches (2.59 m) wide. However, the width of the HEMTTs exceeds the width limitation of 96 inches (2.44 m) on all highways not designated for vehicles 102 inches (2.59 m) wide by the FHWA and will require permits for movement (AR 55–162). With assigned payloads, the trucks will encounter many restrictions for gross vehicle weight and tandem axle loads. However, most restrictions can be resolved by permits. Where maximum permit limits are exceeded, certification as "essential to the national defense" may be required.

5-5. European Highways

Movement restrictions of the HEMTTs (without payloads) will be minimal except for width. However, with assigned payloads, the trucks will encounter numerous restrictions throughout Europe and will require special permits and selective routing. The International Road Federation (IRF), Geneva, Switzerland, publishes maximum legal dimensions and weights for highway vehicles in foreign countries. Since the HEMTTs do not match vehicle configurations established by the IRE, assistance for intheater or incountry clearance for dimensions and vehicle weights can be obtained from the 4th Transportation Command, Oberursel, Germany.

5-6. Other Countries

The HEMTTs (without payloads) may encounter width restrictions in certain countries, but worldwide restrictions are minimal. With assigned payloads, the trucks will encounter numerous restrictions and require permits and selective routing.

Section III. TRANSPORT BY SEMITRAILER

5-7. General

The HEMTTs can be transported over highways by military or commercial semitrailers of adequate size and capacity. This section provides for the movement of a disabled vehicle or the movement of the HEMTT for administrative or logistical purposes. In CONUS and in overseas areas, permits will be required because size and weight limitations will be exceeded. One army semitrailer that can transport the HEMTTs is the M872 towed by the M915 truck-tractor. However, movement of the HEMTT load by semitrailer will be restricted because of the width, gross vehicle weight, and tandem axle weights.

WARNING

Loads with a high center of gravity have a tendency to overturn at normal highway speed. Drivers should exercise extreme caution when entering curves or inclined road conditions. Potholes or uneven pavement will also increase overturning possibilities.

The National Network of Highways (NNH) consists of the US Interstate System and designated portions of highways in the Federal-Aid Primary (FAP) system. For the NNH, the length limitations do not include the total length of the tractor and semitrailer. However, the length limit without permit for semitrailers is 48 feet (14.63 m). The width limit for the NNH is 102 inches (2.59 m).

On highways not included in the NNH, the American Association of State Highway and Transportation Officials (AASHTO) policy limitation without permits for length of truck-tractor and semitrailer is 60 feet (18.29 m). Width and height limitations are 96 inches (2.44 m) and 13 feet 6 inches (4.12 m), respectively.

The axle load limitation without permits for a US highway system, as published by AASHTO, is 20,000 pounds (9072 kg) per single axle and 34,000 pounds (15442 kg) per tandem axle.

5-8. Preparation for Transport

Preparation of the HEMTTs for semitrailer transport includes the following procedures:

a. All basic issue items (BII) should be secured to preclude damage en route.

b. Spare tire should be removed and secured on the vehicle.

c. Each vehicle should be reduced to a cab height of 101 inches, except for the M978 supports, which are on top of the fuel-servicing tank and are 107.7 inches.

d. Communication antennas should be removed and stowed.

e. Personnel should not be allowed on semitrailer during loading or unloading operations.

5-9. Loading and Tiedown on Semitrailer

a. The HEMTTs may be driven on the semitrailer over suitable ramps or a loading deck. They may also be lifted and placed on the semitrailer by a crane of adequate capacity.

b. The bill of materials for blocking and tiedown of the HEMTT on a semitrailer is shown in table 5-1. A blocking and tiedown diagram compatible with standard loading practices that will offer adequate restraint is provided in figure 5-1. Data concerning application of materials are provided in table 5-2.

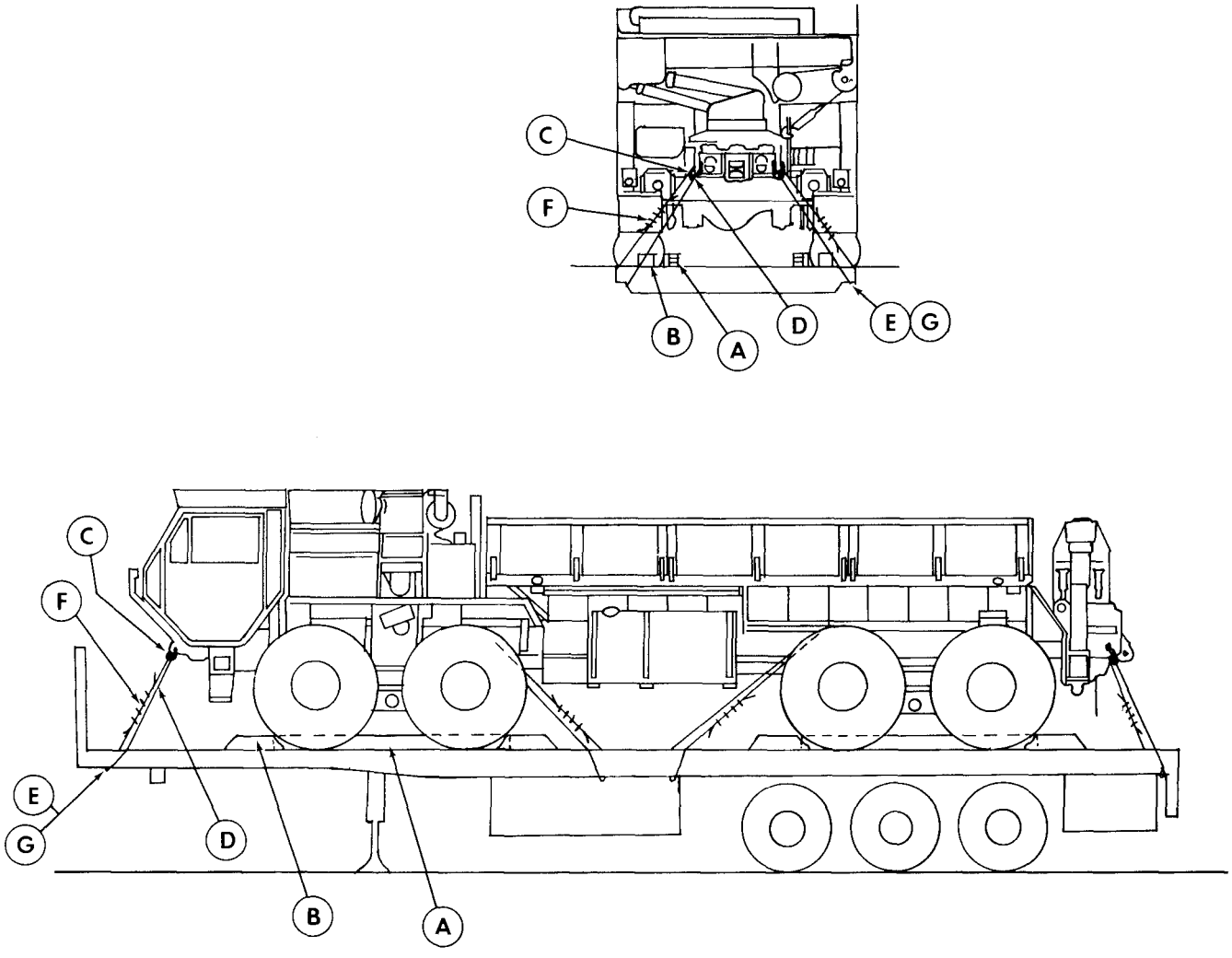

Figure 5-1. Blocking and tiedown diagram of the HEMTTon an M872 semitrailer.

Table 5-1. Bill of Materials for Blocking and Tiedown of the HEMTT on an M872 Semitrailer (Fig 5-1)

Item	Description	Approximate Quantity
Lumber	Douglas-fir, or comparable; straight-grain, free from material defects; Fed Spec MM-L-751H: 6- x 6-inch	12 linear feet
	2- x 4-inch	96 linear feet
	2- x 6-inch	32 linear feet
Nails	Common, steel, flathead; bright or cement-coated; table X1-b, Fed Spec FF-N-105:	
	40d	40
	20d	130
	16d	40
*Wire rope	6 x 19, IWRC; improved plow steel; preformed, regular-lay; Fed Spec RR-W-410C: ⅝-inch	90 feet
*Clamps	Wire rope, U-bolt clips, saddled, single-grip, steel, Crosby heavy-duty, or equal; Fed Spec FF-C-450D: ⅝-inch	32
	¾-inch	8
*Thimbles	Standard, open-type, ⅝-inch	8
Shackles	Anchor, screw-pin; Type IV, Class I; Fed Spec RR-C-271B: 1⅜-inch (1½-inch pin diameter); NSN 4030-00-169-9297 (required if vehicle shackle is missing)	4
Cushioning material	Waterproof, burlap, or other suitable material	as required
Chains	Type I, Grade C, Class 2; welded steel, ¼- to ½-inch wide by 10-foot long; 16,000-pound safe working load; welded steel, high-test chain; Fed Spec RR-C-271; with two grabhooks equal to or better than the strength of the chain.	8
Load binders	Double hook, heavy-duty, eccentric takeup, with chain grabhooks for ¼- to ½-inch chain; 116,000-pound safe working load.	8

*Chains and load binders may be substituted for wire rope and clamps.

Table 5-2. Application of Materials for Blocking and Tiedown of the HEMTT on an M872 Semitrailer (Fig 5-1)

Item	No. Required	Application
A	4	Side blocking. Each consists of one piece of 2- x 6- x 96-inch lumber and three pieces of 2- x 4- x 96-inch lumber. Nail the 2- x 6- x 96-inch piece to the lower 2- x 4- x 96-inch piece with eight 16d nails. Place the 2- x 6- x 96-inch piece against the cushioning material and tires and nail the 2- x 4- x 96-inch piece to the semitrailer with eight 20d nails. Place the second 2- x 4- x 96-inch piece on top of the first and nail to the first 2- x 4- x 96-inch piece with eight 20d nails. Nail the third 2- x 4- x 96-inch in the same manner to the top of the second piece with eight 20d nails. Use a staggered nailing pattern to avoid striking the nails in the piece below.
B	8	Chock blocks. 6- x 6- x 18-inch lumber cut 45 deg at both ends. Place one block against the front of each tire of Nos. 1 and 3 axles and against the rear of each tire of Nos. 2 and 4 axles. Nail the heel of each block with three 40d nails. Toenail each side of each block to the semitrailer floor with two 20d nails.
C	4	Shackles. Place one shackle in each forward and rear tiedown point.
*D	8	Tiedown, ⅝-inch wire rope. Attach wire rope to form a complete loop from the shackle in the tiedown point or tiedown ring to the semitrailer stake pocket. Tension tiedown evenly and apply item F.
*E	8	Thimbles, ⅝-inch. Place one thimble over the bottom edge of the semitrailer stake pocket.
*F	32	Clamps, ⅝-inch. Secure the ends of the wire rope at the overlap area with four clamps spaced 4 inches apart.
*G	8	Clamp, ¾-inch. Secure item E to item D with one ¾-inch clamp.

*Chains and load binders may be substituted for wire rope and clamps.

CHAPTER 6

MARINE AND TERMINAL TRANSPORTABILITY GUIDANCE

Section I. GENERAL

6-1. Scope

This chapter provides marine and terminal transportability guidance for movement of the HEMTTs. It covers technical and physical characteristics of HEMTTs, as well as safety considerations. It also prescribes the materials and guidance required to prepare, load, tie down, and unload the HEMTTs.

6-2. Safety

In addition to the safety precautions contained in chapter 3, the following should be noted, as applicable:

a. If ammunition and/or explosives are to be transported with the vehicles, the activity offering the cargo for transport must notify the carrier in compliance with paragraph 2-7, AR 55-228.

b. Ammunition, explosives, and vehicles will be handled and stowed in accordance with provisions contained in Title 46/Title 49, Code of Federal Regulations.

c. Fire extinguishers must be available during loading and unloading operations.

d. Vehicle fuel tanks must not be more than one-fourth full.

e. All slings, lifting rings, shackles, and other items used in loading and discharge operations should be inspected for their condition and adequate capacity.

f. All personnel should be cautioned not to stand or walk under vehicles being lifted.

g. All lifts should have at least two tag lines attached to control the swing of the vehicles while suspended.

6-3. Water Shipment

Marine transport of the HEMTTs can be accomplished without significant restrictions because of vehicle dimensions or weight. Hold-by-hold analysis for hatch length, stowage, and height and boom capacity is required for cargo ships, with most ships having holds capable of stowing the HEMTTs. Except for the LARC V and LARC XV, logistics-over-the-shore (LOTS) craft can carry the HEMTTs.

NOTE

The methods described in this chapter are recommended procedures for lifting and securing HEMTTs. Other methods of handling and stowing may be used provided they will ensure safe delivery without damage.

Section II. LOADING AND SECURING

6-4. General Rules for Stowing

a. General. Whenever possible, the HEMTTs should receive the protection of below-deck stowage. In general, good stowage of vehicles means vehicles are placed fore and aft as close 'together as practicable with minimum spacing between outer vehicles and sweatboards. Breakable parts are protected, and spare parts are in or near the vehicles. Vehicles are stowed in neutral with brakes set and battery terminals disconnected and are secured with adequate blocking and lashing. Securing includes blocking of wheels on all four sides so that the vehicles cannot move in any direction; bracing of individual vehicle blocks to bulkheads, stanchions, and other vehicle blocks; and lashing of vehicle with wire rope or chain.

NOTE

Department of Transportation Exemption (DOT-E-7280) authorizes DOD to ship vehicles with fuel tanks three-quarters full when vehicles are loaded on vessels that are adequately ventilated by power blowers, such as the roll-on/roll-off (RORO) vessels.

b. Lifting. Lifting points on the HEMTTs are identified in figures 2–2 through 2–5. Forward lifting provisions are the same on all vehicles, but rear lifting provisions are different on each model. The M977 and M985 requires removing the rear cargo bed end panel. The M978 rear lift points are reached by opening access panels on top of the pump and reel compartment and require special shackles (fig 6–2). The M983 lift points are at the rear ends of the frame. The M984E1 lift points are at the top of the recovery crane unit. Each different model will require different sling leg lengths for level lifting. A typical lifting diagram for the HEMTT is shown in figure 6-1, and a drawing of

the special shackles for lifting the M978 is shown in figure 6-2.

WARNING

Early model HEMTT vehicles did not have lifting provision. Should you have to lift a vehicle that has not been modified for lifting provisions use wheel nets under axles number 1 and 4 and 9-foot spreader bars above the vehicle. Place a 4- x 4- x 48-inch piece of lumber at the upper outside half of each tire to keep the net and lifting leg clear of the vehicle. The lumber is manually held as lift is started. When the vehicle's weight is on the sling, friction will hold the lumber in place.

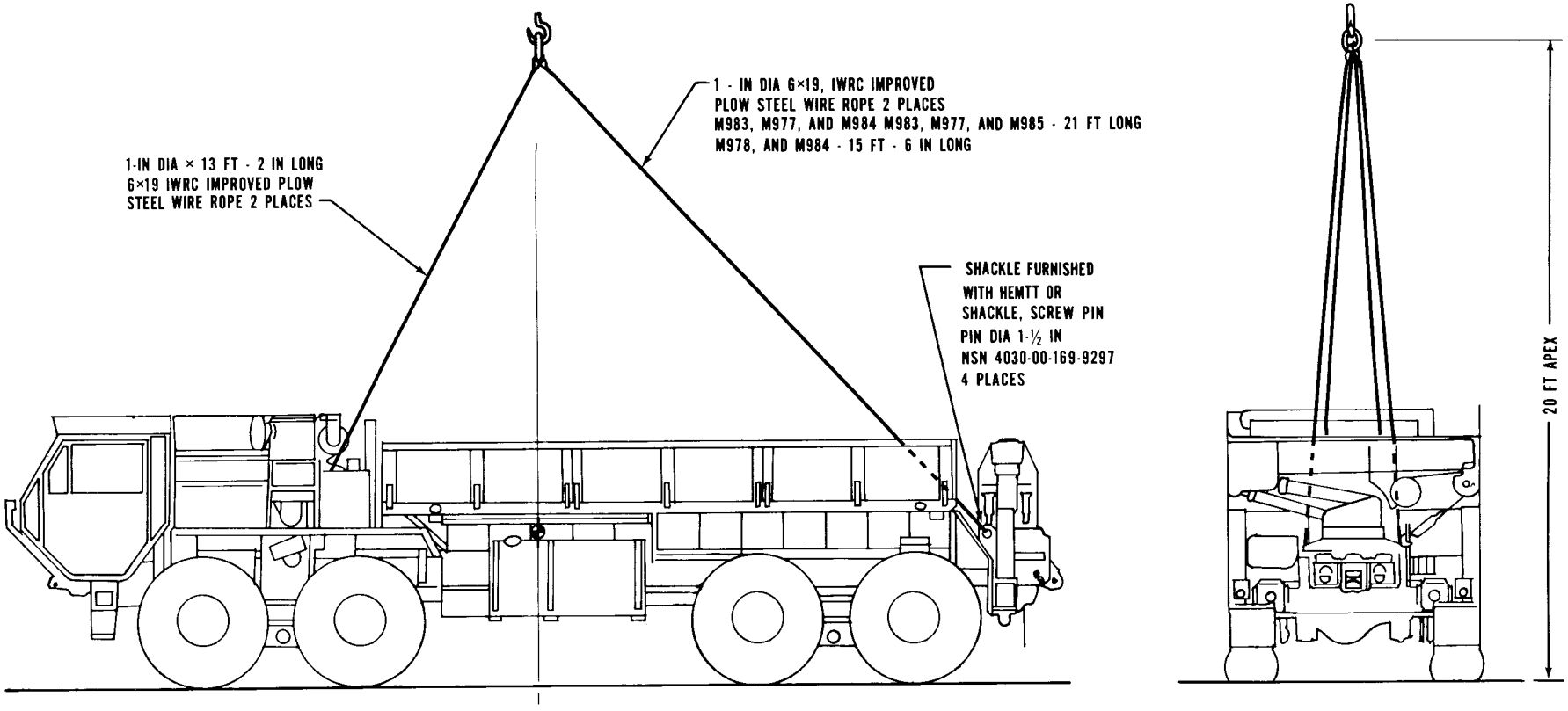

Figure 6-1. Typical lifting diagram for the HEMTT.

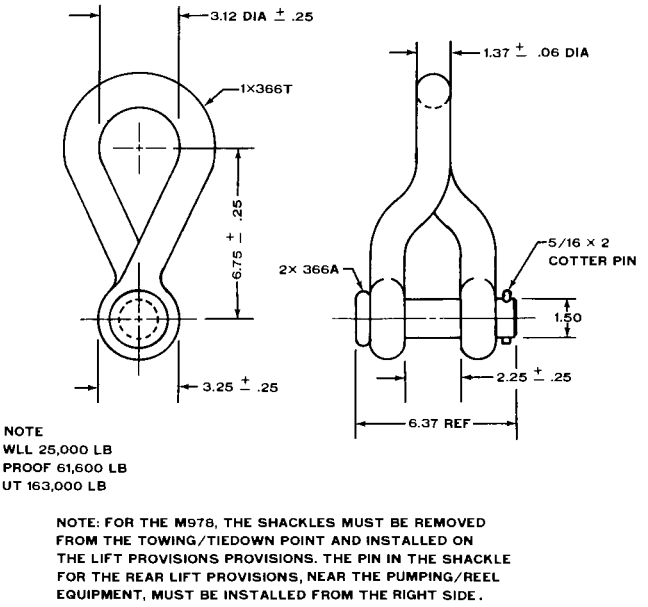

Figure 6-2. Special shackle required for lifting HEMTT M978 vehicle.

c. Loading. Vehicles are always loaded onto vessels in their minimum configuration; that is, reduced height, width, and length, with or without cargo. The vehicles can be lifted by crane of adequate capacity or driven onto landing craft, beach discharge and amphibious lighters, and landing ship tanks. The HEMTTs can also be driven onto the decks of barges from a pier when tidal conditions are suitable and ramps are available. The vehicles can be lifted by shoreside or floating cranes of adequate capacity onto seagoing vessels. Jumbo booms and heavy-lift chip's gear may be used in loading vehicles onto vessels. The vehicles can be driven or towed onto roll-on/roll-off vessels.

d. Tiedown. Typical blocking and tiedown details for the HEMTT are shown in figure 6-3. The bill and application of materials are contained in tables 6-1 and 6-2, respectively.

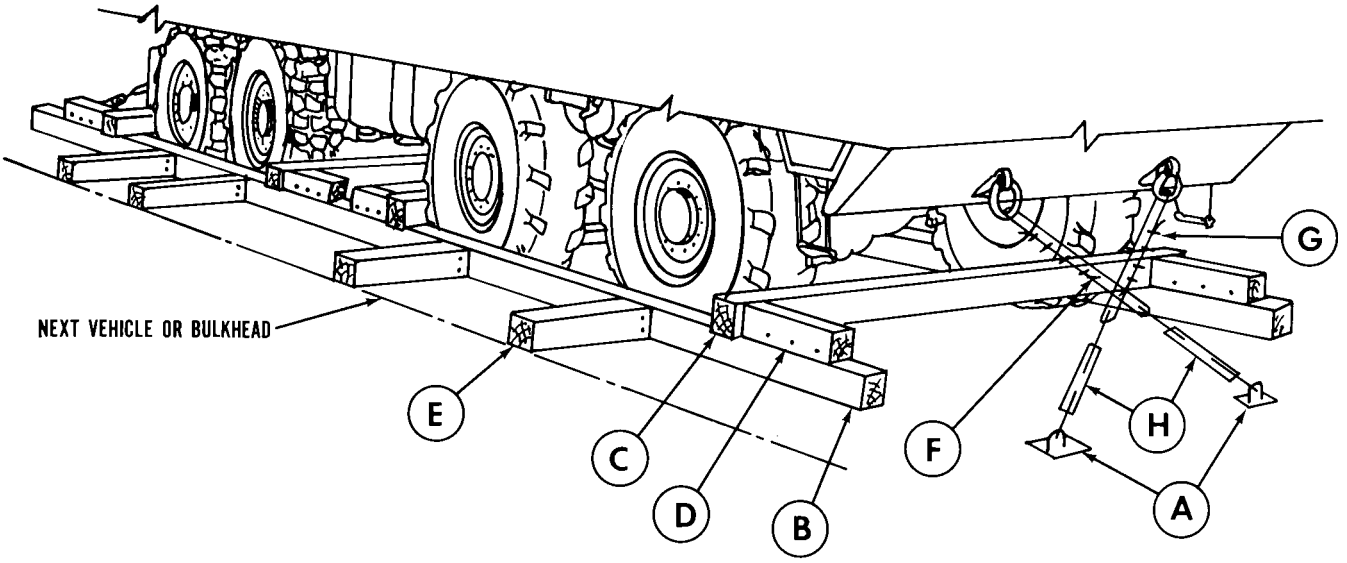

Figure 6-3. Blocking and tiedown of HEMTTs in a general cargo vessel.

6-5. Special Design Ships

Seatrain vessels, roll-on/roll-off (RORC) vessels, landing ships, and attack-cargo vessels are all equipped with patented lashing gear and pre-positioned fittings in the deck. With proper application of lashing gear, blocking and bracing will not be required, Different classes of RORO vessels have different grid patterns for pre-positioned fittings. RORO ships are ideal for transport of the HEMTTs.

6-6. Barges and Lighters

The HEMTTs can be transported in SEABEE barges and LASH lighters, with hatch covers in place. When the HEMTTs are transported by SEABEE barges or LASH lighters, the vehicles must be secured with blocking and tiedowns as shown in figure 6–3 and materials applied as indicated in tables 6–1 and 6–2. Barge stability is noticeably affected by the placement of heavy items; therefore, the HEMTTs should be loaded in a manner to counterbalance variations in the locations of the center of gravity. (After loading one vehicle in one end of a barge or lighter, load another vehicle in the opposite end before loading a vehicle next to the first vehicle.) Shoring is not generally used beneath vehicles equipped with rubber tires. Deck surfaces should be dry and free of grease and/or debris.

Table 6-1. Bill of Materials for Blocking and Tiedown of HEMTT in General Cargo Vessel (Fig 6-3)

Item	Description	Approximate Quantity
Lumber	Douglas-fir, or comparable; straight-grain, free from material defects; Fed Spec MM-L-751H: 6- x 8-inch	116 linear feet
Nails	Common, steel, flathead; bright or cement-coated; table X1-b, Fed Spec FF-N-105: 40d	100
Wire rope	6 x 19, IWRC; improved plow steel; preformed, regular-lay; Fed Spec RR-W-410C: ⅝-inch	80 feet
Clamps	Wire rope, U-bolt clips, saddled, single-grip, steel, Crosby heavy-duty, or equal; Fed Spec FF-C-450D: ⅝-inch	16
Shackles	Anchor, screw pin, Type IV, Class I; Fed Spec RR-C-271B: 1⅜-inch (1½-inch pin diameter); NSN 4030-00-169-9297 (required if vehicle shacle is missing).	4
Turnbuckles	1- x 18-inch with jaw and jaw-end fittings	4
Padeyes	Local manufacturer, from 1-inch steel rod and 4- x 6- x ⅝-inch steel plate. Bore 1-inch holes through plate, and weld U-shaped 1-inch rod ends on top and bottom of plate.	4

Table 6-2. Application of Materials for Blocking and Tiedown of HEMTT in General-Cargo Vessel (Fig 6-3)

Item	No. Required	Application
A	4	Padeyes. Weld padeyes to the deck of vessel if D-rings or deck tiedown fitting are unavailable.
B	4	Side blocks. Each consists of one piece of 6- x 8- x 192-inch lumber. Place one piece centered against outside of each pair of wheels. Place the 8-inch side vertical with the 6-inch side on the deck.
C	4	End blocks. Each consists of one piece of 6- x 8- x 120-inch lumber. Place on top of item B and against wheels as shown in figure 6-3, with 6-inch side on item B. Toenail to item B with four 40d nails at each end of each item C.
D	8	Backup cleats. Each consists of 6- x 8- x 18-inch lumber. Place on top of item B against the joint of each item C. Nail to item B with six 40d nails each.
E	as required	Bracing. Each consists of 6- x 8-inch x length-cut-to-fit lumber. Brace as required against adjacent vehicle cargo, side of vessel, or bulkhead, as appropriate. Materials for this requirement are not included in table 6-1.
F	4	Wire rope, ⅝-inch. Form a complete loop. Secure with clamps (item G). Attach to front and rear tiedown shackle.
G	16	Clamps, ⅝-inch. Install four clamps on each item F with 4-inch spacing between clamps.
H	4	Turnbuckles, 1- x 18-inch. Attach on jaw to wire rope (item F) and one jaw to padeye (item A) or deck fitting. Tighten all turnbuckles evenly.

6-7. Landing Ships, Landing Crafts, and Amphibious Vehicles

When HEMTTs are moved for extended distances or through rough waters, blocking and tiedowns must be used. In most cases, the vessels are equipped with turnbuckles with a sheep's-foot on one end that fits into a deck cloverleaf. On vessels that do not have cloverleaf and patented lashings, a suitable substitute may be used. When the HEMTTs are moved to or from vessels secured to piers or in sheltered anchorages, only tiedowns will be required.

173-131 O - 87 - 3

CHAPTER 7

RAIL TRANSPORTABILITY GUIDANCE

Section I. GENERAL

7-1. Scope

This chapter provides rail transportability guidance for movement of the HEMTTs. It covers technical and physical characteristics of HEMTTs, as well as safety considerations. It also prescribes the materials and guidance required to prepare, load, tie down, and unload the vehicles.

7-2. Maximum Utilization of Railcars

Additional cargo, as approved by the activity offering the vehicles for transport, may be loaded with the vehicles.

7-3. Safety

In addition to the safety precautions contained in chapter 3, the following items should be noted as applicable.

a. The HEMTTs should not exceed 3 mph when on loading ramps and railcars.

b. Guides should be in full view of the vehicle's operator.

c. Guides should maintain a safe distance and location in front of the vehicle or on the next railcar.

d. Cranes, gantries, outriggers, and movable parts should be secured in their shipping position with half-inch wire rope and cable clamps whether equipped or not equipped with positive locking devices for movable components.

Section II. TRANSPORT ON CONUS RAILWAYS

7-4 General

The transportability guidance contained in this section is applicable when the HEMTT is transported on CONUS railways. When loaded on a standard deck-height flatcar, the HEMTTs are within height and width limitations of the Association of American Railroads (AAR) "Outline Diagram for Single Loads Without End Overhang on Open-Top Cars" and can be moved without restriction. No special preparation of the HEMTTs will be required.

7-5. Preparation for loading

The decree of preparation for shipment depends on the operational commitment. As a minimum, the following should be accomplished.

a. Vehicle should be in its minimum shipping configuration.

b. Antennas should be removed and stowed.

c. All basic issue items (BII) should be removed and stowed.

7-6. Loading on General Purpose Flatcars

a. The HEMTTs may be placed in the tiedown position on the flatcar by a crane of adequate capacity, or they may be driven or towed onto the flatcar if a suitable ramp or bridge is available.

b. The load illustrated in figure 7-1 is based on a minimum flatcar width of 9 feet 6 inches. Figure 7-1 provides a tiedown diagram that is compatible with standard loading practices that will offer adequate restraint. Blocking and tiedown details are shown in figure 7-2. The bill and application of materials for blocking and tiedown are provided in tables 7-1 and 7-2, respectively.

NOTE

A staggered nailing pattern should be used when lumber of laminated lumber is nailed to the floor of a railcar. The nailing pattern for an upper piece of lumber should be adjusted as required so that a nail for that piece will not be driven into or against a nail in the lower piece.

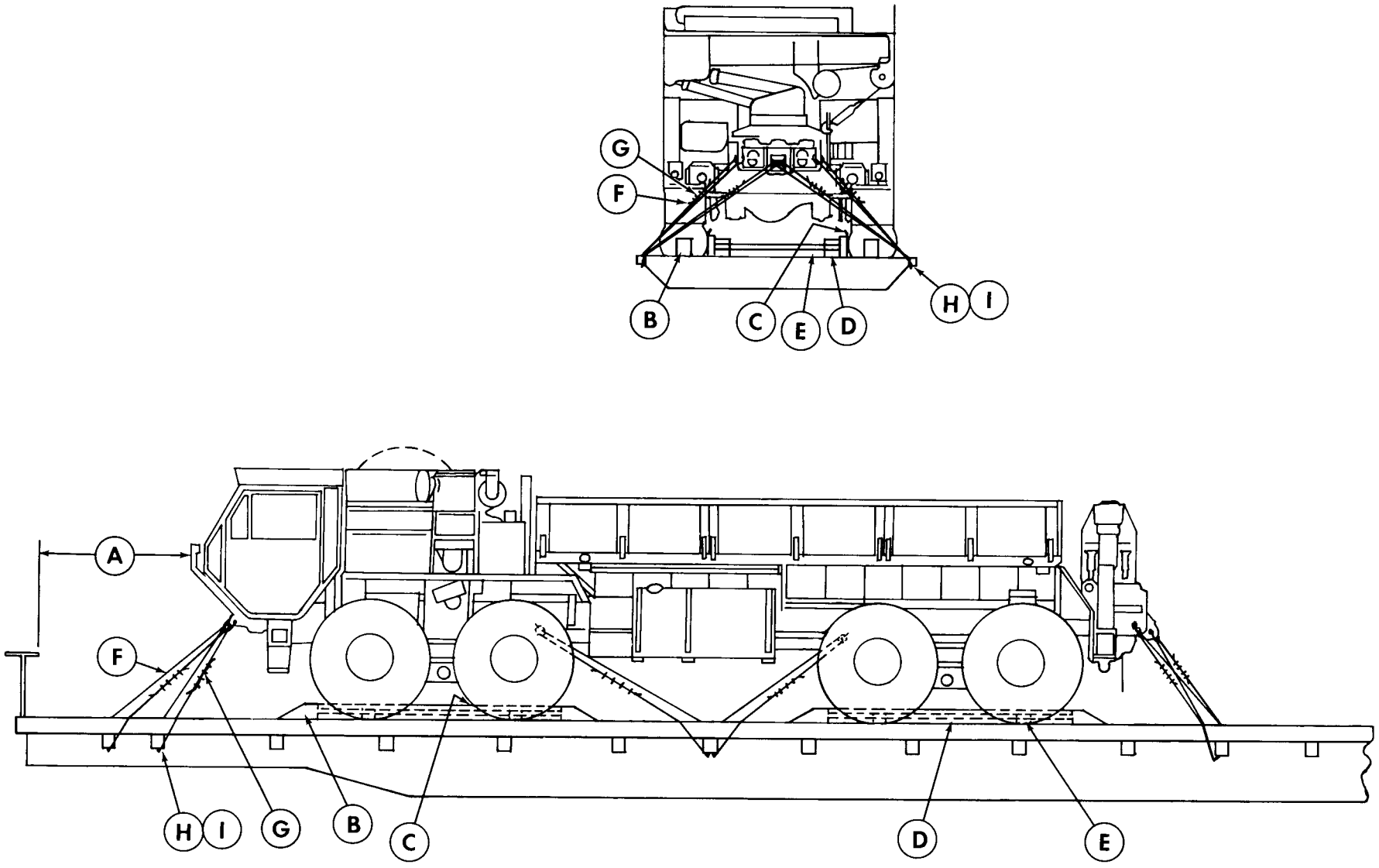

Figure 7-1. Blocking and tiedown of HEMTT on general purpose flatcar.

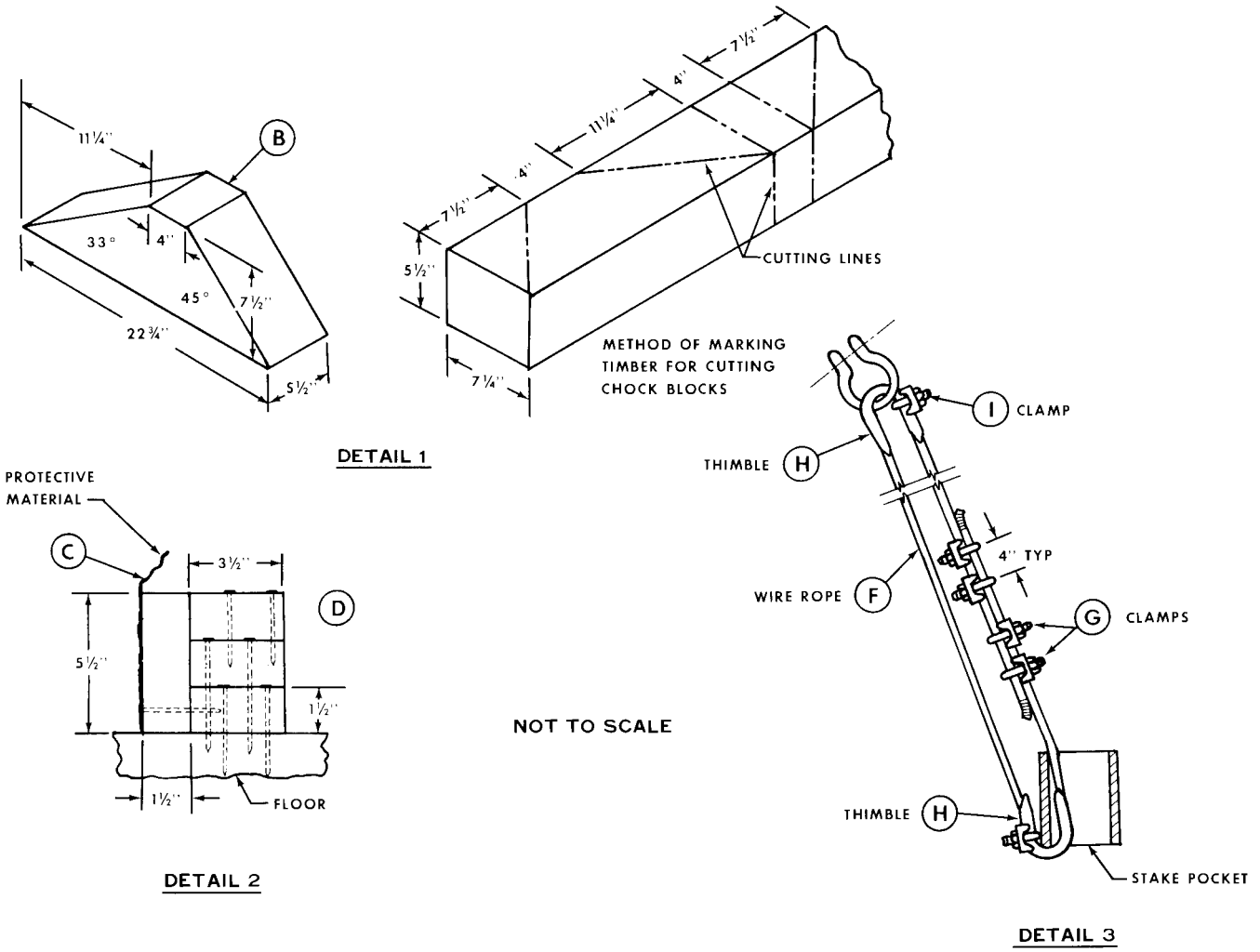

Figure 7-2. Blocking and tiedown details.

7-7 Loading on Special Purpose (Chain Tiedown) Flatcars

a. The load shown in figure 7-3 is based on the use of CONUS center rail chain-tiedown flatcars or similar types of flatcars. The flatcar shown is equipped with special heavy-duty chain tiedown devices and two center tiedown rails running the length of the car on each side of the center sill. Table 7-3 presents materials and their application for securing HEMTTs on center rail chain-tiedown flatcars. These flatcars are for vehicles over 25,000 pounds and vehicles up to 40,000 pounds inclusive.

Table 7-1. Bill of Materials for Blocking and Tiedown of HEMTT on CONUS General-Purpose Flatcar (Figs 7-1 and 7-2)

Item	Description	Approximate Quantity
Lumber	Douglas-fir, or comparable; straight-grain, free from material defects; Fed Spec MM-L-751H: 2- x 4-inch	120 linear feet
	2- x 6-inch	60 linear feet
	6- x 8-inch	12 linear feet
Nails	Common, steel, flathead; bright or cement-coated; Fed Spec FF-N-105	
	12d	75
	16d	40
	20d	210
	30d	30
	40d	40
Thimbles Clamps	Standard, open-type, ⅝-inch Wire rope, U-bolt clips, saddled, single-grip, steel, Crosby heavy-duty, or equal;	22
	Fed Spec FF-C-450D: ⅝-inch	48
	¾-inch	22
Wire rope	6 x 19, IWRC; improved plow steel; preformed, regular-lay; table X, Fed Spec RR-W-410C: ⅝-inch	240 feet
Cushioning material	Waterproof paper, burlap, or other suitable material	as required

Table 7-2. Applications of Materials for Blocking and Tiedown of HEMTT on CONUS Flatcars (Figs 7-1 and 7-2)

Item	No. Required	Application
A		Brake-wheel clearance. Minimum clearance required is 6 inches above, in back of, and on both sides of and 4 inches underneath wheel; 12 inches from end of railcar to load, which extends from center of brake wheel to side of railcar; and 6 feet above railcar floor.
B	8	Blocks. Each consists of one piece of 6- x 8- x 24-inch lumber (detail 1, fig. 7-2). Place one against the front of each wheel of Nos. 1 and 3 axles and one against the rear of each wheel of Nos. 2 and 4 axles. Nail the heel of each block with three 30d nails. Toenail sides of block to railcar floor with two 40d nails on each side.
C	1 per each item D	Cushioning material. Place bottom portion under item D and between the tire and item D so that material extends 2 inches above item D.
D	4	Side blocks. Each consists of one piece of 2- x 6- x 108-inch lumber and three pieces of 2- x 4- x 108-inch lumber (detail 2, fig 7-2). Nail the 2- x 6- x 108-inch piece to the side edge of one 2- x 4- x 108-inch piece with fifteen 12d nails. Place the 2- x 6- x 108-inch piece against the cushioning material and tire, and nail through the 2- x 4- x 108-inch piece to the railcar floor with twelve 20d nails. Nail the other two 2- x 4- x 108-inch pieces to the one below in the same manner with a staggered nailing pattern to avoid striking the nail in the piece below with twelve 20d nails.
E	4	Braces. Each consists of two pieces of 2- x 6-inch x length-cut-to-fit lumber. Place one piece between item D at the base of the tires and nail to railcar floor with eight 16d nails. Place the second piece on top of the first piece and nail with eight 20d nails.
F	12	Wire rope, ⅝-inch. Form a complete loop between tiedown shackle and appropriate stake pocket at a maximum angle of 45 degrees (detail 3, fig 7-3). Ends of wire rope should overlap about 24 inches.
G	48	Clamps, ⅝-inch. Place four clamps on each item F at the overlap area. Space clamps 4 inches apart.
H	22	Thimbles, ⅝-inch. Place one thimble between the wire rope and tiedown shackle (none on pintle).
I	22	Clamps, ¾-inch. Place one clamp on each item H (detail 3, fig 7-2).

GENERAL INSTRUCTIONS

Loading rules, 1A, 2, 3, 4, 5, 7, 9, 12, 13, 14, 15, 19, 19A, 19B, and 19C appearing in section 1 of the General Rules Governing the Loading of Commodities on Open-Top Cars, published by the Association of American Railroads, provide applicable guidelines and are mandatory in application.

CAUTION

Vehicles loaded on center rail chain-tiedown flatcars are loaded with the gearshift lever wire tied in neutral and parking brakes set.

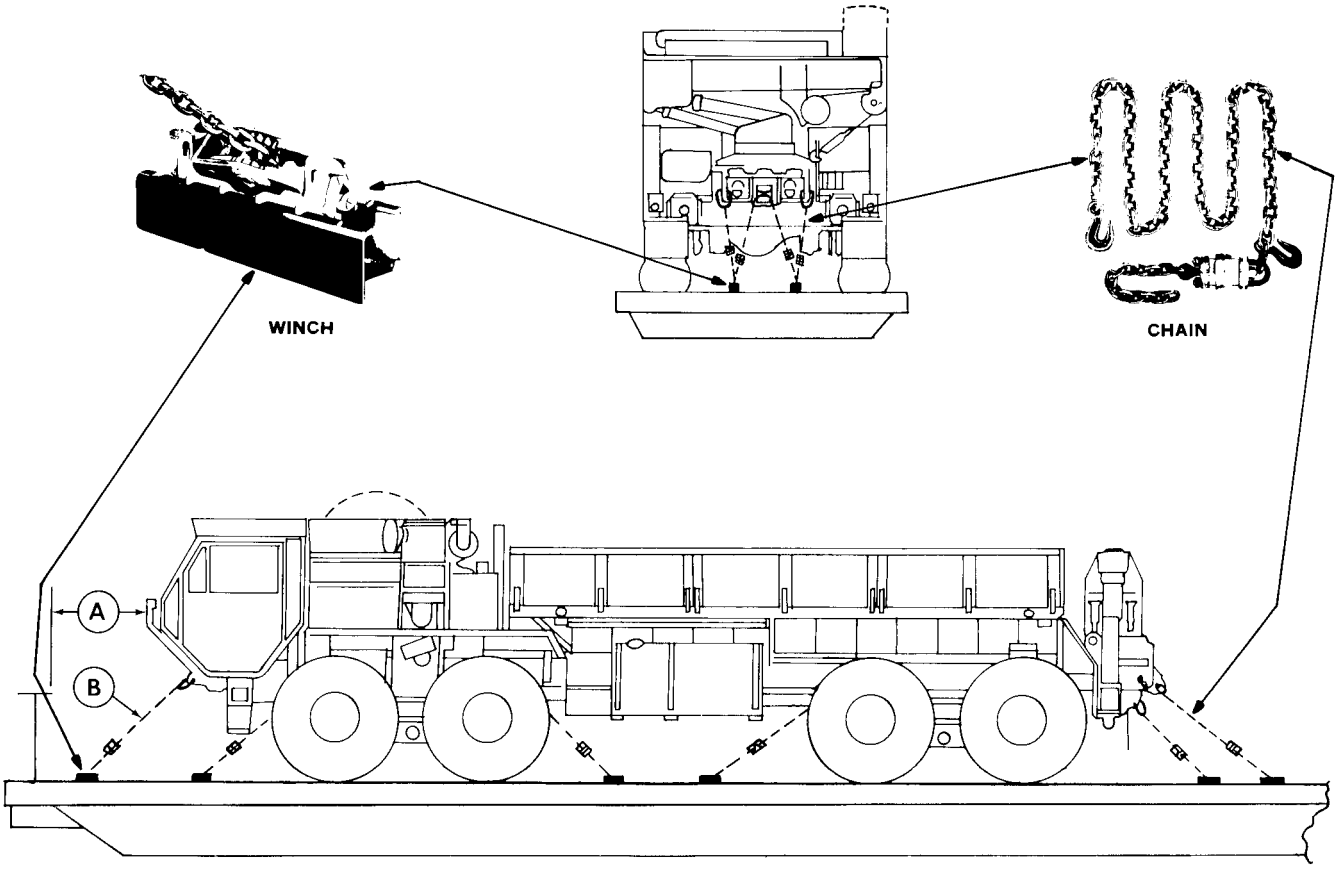

Figure 7-3. Tiedown diagram for HEMTT on CONUS center rail chain-tiedown flatcars.

b. Conventional wood deck chain-tiedown flatcars, including those in the DODX fleet, usually are equipped with four parallel channels that run the full length of the flatcar deck: two channels are about 30 inches apart and two other channels run along the outer edges of the car or just inboard of the tread-way loading area of the car. These channels are recessed so that the top is flush with the deck surface and each channel contains numerous (usually 8 to 12) chain anchors, each of which has an attached 10- to 12-foot chain. The chain anchors can be moved along the channel and locked in place where needed. At the free end of the chain, a hook, which is passed through the tiedown shackle on the vehicle being loaded, is pulled hand-tight and is hooked back onto the chain or may be hooked directly to the shackle. Tension is then applied to the chain by tightening a turnbuckle built into the chain assembly or by turning a ratchet or screw-jack in the anchor block. An open-end wrench is required for tightening the turnbuckles. A ¾-inch squaredrive heavy-duty socket wrench is required to tighten the ratchet at the anchor blocks. Open hooks should be wire-tied to prevent them from becoming disconnected during over-the-road forces encountered en route.

Table 7-3. Application of Materials for Tiedown of Hemtt on Center Rail Chain-Tiedown Flatcar (Fig 7-3)

Item	No. Required	Application
A		Brake-wheel clearance. Minimum clearance required is 6 inches above, in back of, and on both sides of and 4 inches underneath wheel; 12 inches from end of railcar to load, which extends from center of brake wheel to side of railcar; and 6 feet above railcar floor.
B	12	Tiedown chains (furnished with railcar), ½-inch-diameter alloy steel chain, extra strength, proof-tested to a minimum of 27,500 pounds. Attach one to each tiedown provision on each side of vehicle to parallel anchor positions as shown in figure 7-3. Tighten all chains evenly until ⅛-inch space remains between metal rings of the compression unit of the chain tiedown assembly. The angle of the tiedown chain must be as close to 45 degrees as possible.

GENERAL INSTRUCTIONS

Loading rules 4, 5, 7, 11, 15(g), 19, 19A, 19B, and 19C appearing in section 1 of the Rules Governing the Loading of Commodities on Open-Top Cars and Trailers, published by the Association of American Railroads, provides applicable guidelines and are mandatory in application.

CAUTION

Vehicles loaded on conventional wood deck chain-tiedown flat-cars are placed in the tiedown position with the gearshift placed in neutral and the parking brakes set.

The load shown in figure 7-4 depicts the use of conventional wood deck chain-tiedown flatcars. The application of materials for tiedown of the HEMTT on a conventional wood deck chain-tiedown flatcar is provided in table 7-4.

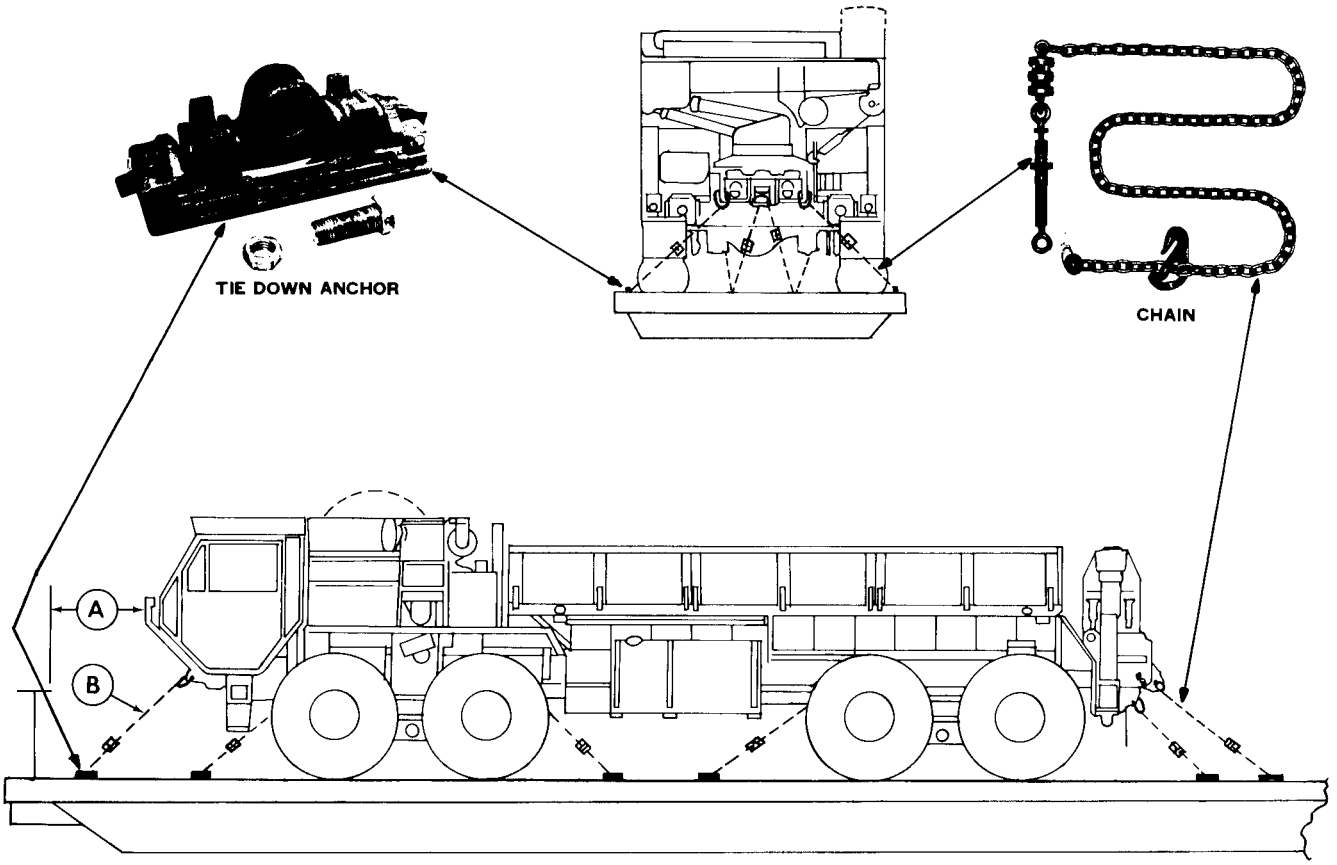

Figure 7-4. Tiedown diagram for HEMTT on conventional wood deck chain-tiedown flatcar.

Table 7-4. Application of Materials for Tiedown of HEMTT on Conventional Wood Deck Chain-Tiedown Flatcar (Fig 7-4)

Item	No. Required	Application
A		Brake-wheel clearance. Minimum clearance required is 6 inches above, in back of, and on both sides of and 4 inches underneath wheel; 12 inches from end of railcar to load, which extends from center of brake wheel to side of railcar; and 6 feet above railcar floor.
B	12	Tiedown chains (furnished with railcar), ½-inch-diameter alloy steel chain, extra strength, proof-tested to a minimum of 27,500 pounds. Attach one to each tiedown provision on each side of vehicle to parallel anchor positions as shown in figure 7-3. Tighten all chains evenly until ⅛-inch space remains between metal rings of the compression unit of the chain tiedown assembly. The angle of the tiedown chain must be as close to 45 degrees as possible.

GENERAL INSTRUCTIONS

Loading rules 4, 5, 7, 11, 15(g), 19, 19A, 19B, and 19C appearing in section 1 of the Rules Governing the Loading of Commodities on Open-Top Cars, published by the Association of American Railroads, provide applicable guidelines and are mandatory in application.

Section III. TRANSPORT OF FOREIGN RAILWAYS

7-8. General

The transportability guidance contained in this section is applicable when the HEMTTs are transported on foreign railways. Consideration is given to single and multiple vehicle movements for the types of flatcars normally used for the movement of this type of vehicle. When loaded on a suitable flatcar, the HEMTT can be transported, with some restrictions, within European countries with the Gabarit International de Chargement (GIC) (formerly PPI) gauge railways; this also applies to the majority of the countries in the Middle East, South America, Australia, India, and Pakistan. In the Middle East and South America, the clearances vary by country, and each country will require a separate check. In Australia, India, and Pakistan, wide or broad railways provide greater clearance and fewer restrictions. Because of the various systems and clearances used by different countries, evaluation of transport capability must be made on an individual basis.

7-9. Transport on Foreign-Service Flatcars

The HEMTTs can be transported on many foreign-service flatcars. To comply with the dimensional requirements of the GIC clearance diagrams, the HEMTTs must be reduced to their minimum shipping configuration. At the reduced configuration, the HEMTTs can be moved, without restrictions, on standard flatcars throughout Europe. The materials required for blocking and tiedown of the vehicles on foreign-service flatcars are essentially the same as those used for rail within CONUS. Detailed guidance is contained in the 4th Transportation Command Pamphlet 55-2, Tiedown Guide of Rail Movement, and may be obtained from the 4th Transportation Command, Oberursel, Germany.

By order of the Secretary of the Army:

JOHN A. WICKHAM, JR.
General, United States Army
Chief of Staff

Official:

R.L. DILWORTH
Brigadier General, United States Army
The Adjutant General

Distribution:

To be distributed in accordance with DA Form 12-38, Organizational Maintenance requirements for Truck, Cargo, 10-Ton, 8x8, Heavy Expanded Mobility Tactical Truck, HEMTT, M977, M978, M983, M984, M985; Truck, Cargo, 10-Ton, 8x8, Heavy Expanded Mobility Tactical Truck, HEMTT: Controls and Equipment for M977 Cargo only; Truck, Cargo, 10-Ton, 8x8, Heavy Expanded Mobility Tactical Truck, HEMTT: Controls and Equipment for M978 Tanker only; Truck, Cargo, 10-Ton, 8x8, Heavy Expanded Mobility Tactical Truck, HEMTT: Controls and Equipment for M983 Tractor only; Truck, Cargo, 10-Ton, 8x8, Heavy Expanded Mobility Tactical Truck, HEMTT: Controls and Equipment for M983 Tractor only with out Crane; Truck, Cargo, 8x8, Heavy Expanded Mobility Tactical Truck, HEMTT: Controls and Equipment for M984E1, Wrecker-Recovery only; Truck, Cargo, 10-Ton, 8x8, Heavy Expanded Mobility Tactical Truck, HEMTT: Controls and Equipment for M985 Cargo only; Truck, Cargo, 10-Ton, 8x8, Heavy Expanded Mobility Tactical Truck, HEMTT: Controls and Equipment for M984, Wrecker-Recovery Cargo only and Truck, Cargo, 10-Ton, 8x8, Heavy Expanded Mobility Tactical Truck, HEMTT: Controls and Equipment for M985E1, only.

U.S. GOVERNMENT PRINTING OFFICE : 1987 0 - 173-131

RECOMMENDED CHANGES TO EQUIPMENT TECHNICAL PUBLICATIONS

SOMETHING WRONG WITH PUBLICATION

FROM: (PRINT YOUR UNIT'S COMPLETE ADDRESS)

DATE SENT

PUBLICATION NUMBER	PUBLICATION DATE	PUBLICATION TITLE

BE EXACT PIN-POINT WHERE IT IS

PAGE NO.	PARA-GRAPH	FIGURE NO.	TABLE NO.

IN THIS SPACE, TELL WHAT IS WRONG AND WHAT SHOULD BE DONE ABOUT IT.

PRINTED NAME, GRADE OR TITLE AND TELEPHONE NUMBER	SIGN HERE

TEAR ALONG PERFORATED LINE

DA FORM 1 JUL 79 2028-2

PREVIOUS EDITIONS ARE OBSOLETE.

P.S.--IF YOUR OUTFIT WANTS TO KNOW ABOUT YOUR RECOMMENDATION MAKE A CARBON COPY OF THIS AND GIVE IT TO YOUR HEADQUARTERS.

THE METRIC SYSTEM AND EQUIVALENTS

'NEAR MEASURE

. Centimeter = 10 Millimeters = 0.01 Meters = 0.3937 Inches
1 Meter = 100 Centimeters = 1000 Millimeters = 39.37 Inches
1 Kilometer = 1000 Meters = 0.621 Miles

'VEIGHTS

Gram = 0.001 Kilograms = 1000 Milligrams = 0.035 Ounces
1 Kilogram = 1000 Grams = 2.2 lb.
1 Metric Ton = 1000 Kilograms = 1 Megagram = 1.1 Short Tons

LIQUID MEASURE

1 Milliliter = 0.001 Liters = 0.0338 Fluid Ounces
1 Liter = 1000 Milliliters = 33.82 Fluid Ounces

SQUARE MEASURE

1 Sq. Centimeter = 100 Sq. Millimeters = 0.155 Sq. Inches
1 Sq. Meter = 10,000 Sq. Centimeters = 10.76 Sq. Feet
1 Sq. Kilometer = 1,000,000 Sq. Meters = 0.386 Sq. Miles

CUBIC MEASURE

1 Cu. Centimeter = 1000 Cu. Millimeters = 0.06 Cu. Inches
1 Cu. Meter = 1,000,000 Cu. Centimeters = 35.31 Cu. Feet

TEMPERATURE

5/9(°F - 32) = °C
212° Fahrenheit is evuivalent to 100° Celsius
90° Fahrenheit is equivalent to 32.2° Celsius
32° Fahrenheit is equivalent to 0° Celsius
9/5C° + 32 =°F

APPROXIMATE CONVERSION FACTORS

TO CHANGE	TO	MULTIPLY BY
Inches	Centimeters	2.540
Feet	Meters	0.305
Yards	Meters	0.914
Miles	Kilometers	1.609
Square Inches	Square Centimeters	6.451
Square Feet	Square Meters	0.093
Square Yards	Square Meters	0.836
Square Miles	Square Kilometers	2.590
Acres	Square Hectometers	0.405
Cubic Feet	Cubic Meters	0.028
Cubic Yards	Cubic Meters	0.765
Fluid Ounces	Milliliters	29.573
ıts	Liters	0.473
arts	Liters	0.946
allons	Liters	3.785
Ounces	Grams	28.349
Pounds	Kilograms	0.454
Short Tons	Metric Tons	0.907
Pound-Feet	Newton-Meters	1.356
Pounds per Square Inch	Kilopascals	6.895
Miles per Gallon	Kilometers per Liter	0.425
Miles per Hour	Kilometers per Hour	1.609

TO CHANGE	TO	MULTIPLY BY
Centimeters	Inches	0.394
Meters	Feet	3.280
Meters	Yards	1.094
Kilometers	Miles	0.621
Square Centimeters	Square Inches	0.155
Square Meters	Square Feet	10.764
Square Meters	Square Yards	1.196
Square Kilometers	Square Miles	0.386
Square Hectometers	Acres	2.471
Cubic Meters	Cubic Feet	35.315
Cubic Meters	Cubic Yards	1.308
Milliliters	Fluid Ounces	0.034
Liters	Pints	2.113
Liters	Quarts	1.057
'ers	Gallons	0.264
.ms	Ounces	0.035
.ograms	Pounds	2.205
Metric Tons	Short Tons	1.102
Newton-Meters	Pounds-Feet	0.738
Kilopascals	Pounds per Square Inch	0.145
'lometers per Liter	Miles per Gallon	2.354
›meters per Hour	Miles per Hour	0.621

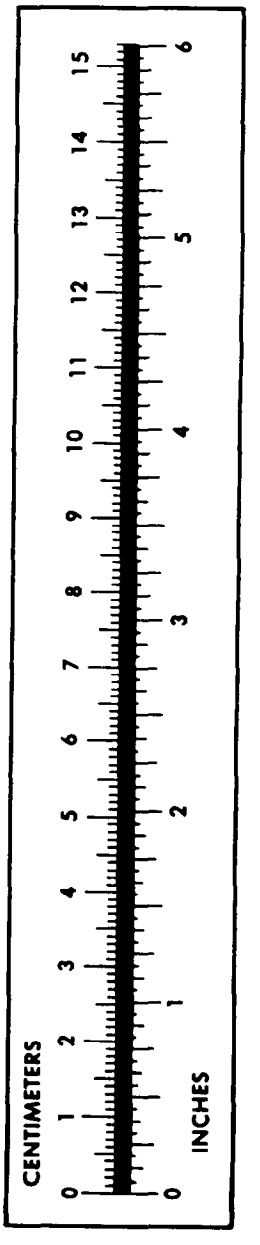

PIN: 061129-000

This fine document...

Was brought to you by me:

Liberated Manuals -- free army and government manuals

Why do I do it? I am tired of sleazy CD-ROM sellers, who take publicly available information, slap “watermarks” and other junk on it, and sell it. Those masters of search engine manipulation make sure that their sites that sell free information, come up first in search engines. They did not create it... They did not even scan it... Why should they get your money? Why are not letting you give those free manuals to your friends?

I am setting this document FREE. This document was made by the US Government and is NOT protected by Copyright. Feel free to share, republish, sell and so on.

I am not asking you for donations, fees or handouts. If you can, please provide a link to liberatedmanuals.com, so that free manuals come up first in search engines:

<A HREF=http://www.liberatedmanuals.com/>Free Military and Government Manuals</A>

- Sincerely
  Igor Chudov
  http://igor.chudov.com/
- Chicago Machinery Movers