TECHNICAL MANUAL

# OPERATOR AND AVIATION UNIT MAINTENANCE INSTRUCTIONS INCLUDING REPAIR PARTS AND SPECIAL TOOLS LIST

FOR

## HELICOPTER INTERNAL CARGO HANDLING SYSTEM

ARMY MODEL CH47 HELICOPTER

PART NUMBER:
18049 J 100

NATIONAL STOCK NUMBER
NSN 1680-01-197-1689

"Approved for public release; distribution is unlimited."

HEADQUARTERS, DEPARTMENT OF THE ARMY

30 SEPTEMBER 1987

CHANGE
NO. 1

**HEADQUARTERS**
**DEPARTMENT OF THE ARMY**
**WASHINGTON, D.C., 31 July 1992**

Operator and Aviation Unit Maintenance
Instructions Including Repair Parts
and Special Tools List
for
Helicopter Internal Cargo Handling System
ARMY MODEL CH47 HELICOPTER

| PART NUMBER | NATIONAL STOCK NUMBER |
|---|---|
| 18049 J 100 | 1680-01-197-1689 |

TM 55-1680-358-12&P, 30 September 1987, is changed as follows:

1. Remove and insert pages as indicated below. New or changed text material is indicated by a vertical bar in the margin. An illustration change is indicated by a miniature pointing hand.

| Remove pages | Insert pages |
|---|---|
| 2-9 through 2-12 | 2-9 through 2-12 |
| ----- | 2-12.1/2-12.2 |
| 3-17 and 3-18 | 3-17 and 3-18 |
| 3-21 and 3-22 | 3-21 and 3-22 |
| 3-35/3-36 | 3-35/3-36 |
| 3-37 and 3-38 | 3-37 and 3-38 |
| C-7 and C-8 | C-7 and C-8 |
| C-13 and C-14 | C-13 and C-14 |
| C-25 through C-30 | C-25 through C-30 |
| C-35 and C-36 | C-35 and C-36 |

2. Retain this sheet in front of manual for reference purposes.

By Order of the Secretary of the Army:

GORDON R. SULLIVAN
*General, United States Army*
*Chief of Staff*

Official:

MILTON H. HAMILTON
*Administrative Assistant to the*
*Secretary of the Army*
02201

DISTRIBUTION:
To be distributed in accordance with DA Form 12-31-E, block no. 1215, AVUM and AVIM maintenance requirements for TM 55-1680-358-12&P.

WARNING AND FIRST AID DATA

For artificial respiration and other first aid data, refer to FM 21-11.

Personnel performing instructions involving operations, procedures, and practives which are included or implied in this technical manual shall observe the following instructions. Disregard of these warning and precautionary information can cause serious injury, illness, death, or an aborted mission.

**WARNING**

An operating procedure, practice, etc., which if not correctly followed, could result in personal injury or loss of life.

**CAUTION**

An operation procedure, practice, etc., which if not strictly observed, could result in damage to or destruction of equipment.

**NOTE**

An operating procedure, condition, etc., which is essential to highlight.

**WARNING**

Some compounds specified in this publication are toxic and/or flammable.

- When working with toxic compounds, protective goggles shall be worn and area shall be properly ventilated. Avoid contact with skin, eyes and clothes and avoid breathing vapors.
- When working with flammable compounds, keep container away from sparks, flames and heat.
- Clean all parts in a well ventilated area. Avoid inhalation of solvent fumes. Avoid prolonged contact of cleaners with skin. Wash skin thoroughly with soap and warm water after contact with solvents. Do not clean parts near open flames.

HEADQUARTERS
DEPARTMENT OF THE ARMY
WASHINGTON, D.C.

No. 55-1680-358-12&P

Operator and Aviation Unit Maintenance
Instructions Including Repair Parts
and Special Tools List
for
Helicopter Internal Cargo Handling System
ARMY MODEL CH47 HELICOPTER

REPORTING OF ERRORS AND RECOMMENDING IMPROVEMENTS

You can help improve this manual. If you find any mistake or if you know of a way to improve the procedure, please let us know. Mail your letter or DA Form 2028 (Recommended Changes to Publications and Blank Forms) direct to: Commander, US Army Aviation Systems Command, ATTN: AMSAV-MPSD, 4300 Goodfellow Blvd., St. Louis, MO 63120-1798. A reply will be furnished to you.

TABLE OF CONTENTS

TABLE OF CONTENTS - CONTINUED

TABLE OF CONTENTS - CONTINUED

## LIST OF ILLUSTRATIONS

LIST OF ILLUSTRATIONS



LIST OF TABLES

# CHAPTER 1
# INTRODUCTION

## SECTION I. GENERAL

**1-1. Scope**. This manual provides descriptive information; service/maintenance instructions; operation, installation and removal instructions; and illustrated parts breakdown for the Helicopter Internal Cargo Handling System (HICHS). This system was manufactured by AAR Brooks & Perkins Corporation, Advanced Structures Division (81868).

**1-2. Purpose**. The Helicopter Internal Cargo Handling System, Part No. 18049 J 100, is shown in Figure 1-1. It is designed for use in the CH47 Helicopter as a means of loading and unloading various configuration cargo. The types of cargo are shown in Table 1-1.

**1-3. Maintenance Forms and Records**. Department of the Army forms and procedures used for equipment maintenance shall be those prescribed in DA PAM 738-751.

**1-4. Reporting Equipment Improvement Recommendations (EIR)**. EIRs will be prepared using SF 368, Quality Deficiency Report. Instructions for preparing EIRs are provided in DA PAM 738-751. User's manual for The Army Maintenance Management System-Aviation (TAMMS-A). EIRs should be mailed directly to: Commander, US Army Aviation Systems Command, ATTN: AMSAV-MPSD, 4300 Goodfellow Blvd., St. Louis, MO 63120-1798. A reply will be furnished directly to you.

**1-5. Destruction of Army Material To Prevent Enemy Use**. For destruction of Army material to prevent enemy use, refer to TM 750-244-1-5.

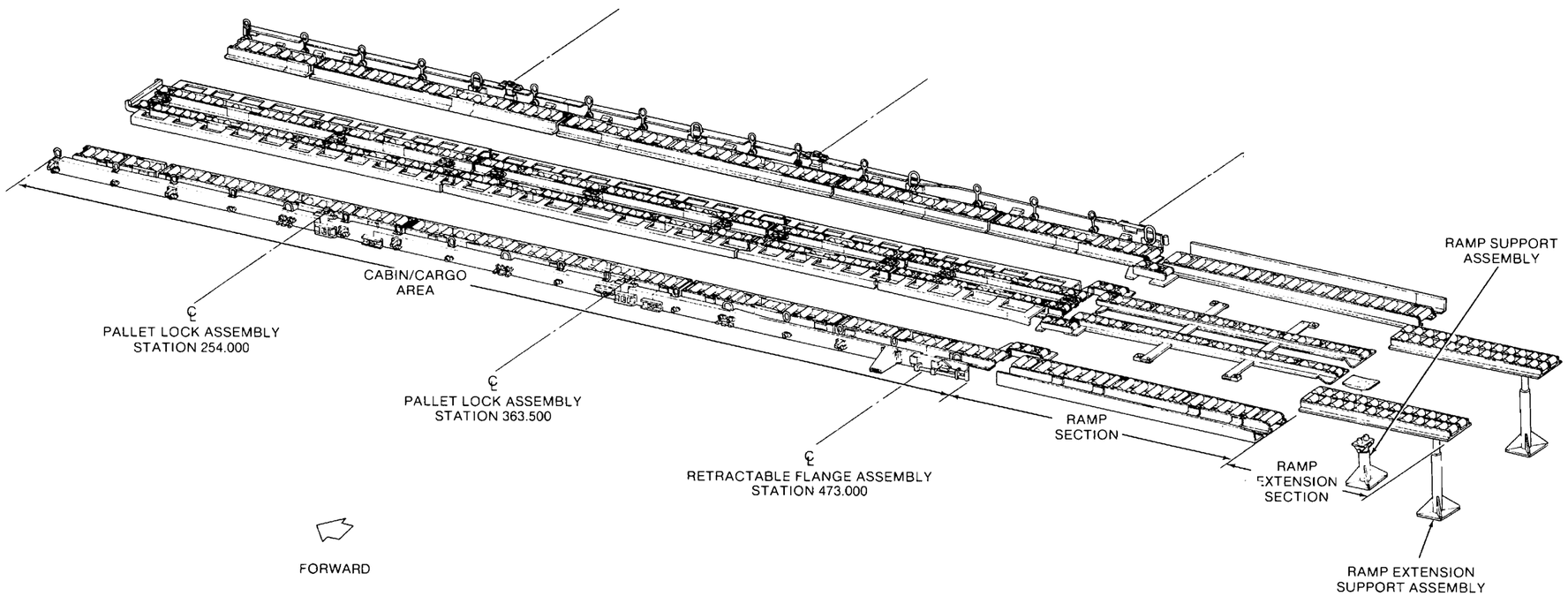


**Figure 1-1. CH47 Helicopter Internal Cargo Handling System**

## SECTION II. DESCRIPTION AND DATA

**1-6. Description**. The functional and physical descriptions of the Helicopter Internal Cargo Handling System are as follows:

a. *Functional Description*. The Helicopter Internal Cargo Handling System provides low-friction, load/unload conveyor ramps. It also includes conveyors for moving cargo within the aircraft.

b. *Physical Description*. The Helicopter Internal Cargo Handling System consists of three major sections. These are the cabin/cargo area, ramp section, and ramp extension section, as shown in Figure 1-1.

(1) *Cabin/Cargo Area*. The cabin section of the Helicopter Internal Cargo Handling System is made up of three outboard rail/roller assemblies on each side of the cabin. These outboard assemblies are identical but symmetrically opposite. These are outboard rail/roller assemblies, stations 158.500 to 274.000, outboard rail/roller assemblies, stations 272.531 to 374.000, and outboard rail/roller assemblies, stations 373.469 to 487.000. These assemblies utilize twenty-six 5k tiedown fitting assemblies, eight 10k fitting assemblies and two tiedown fitting assemblies, station 360.000. Four inboard guide/roller assemblies are mounted in the center of the cabin floor. They are secured with ten centerline ring plug assemblies to the 5k rings in the floor.

(2) *Ramp Section*. The ramp section of the system includes a right-hand ramp guide rail/roller assembly and a right-hand ramp inboard guide/roller assembly. There are also symmetrically opposite assemblies. A separate ramp support assembly is provided for use during loading and unloading.

(3) *Ramp Extension Section*. This section uses two identical ramp extension roller assemblies and separate ramp extension support assemblies.

**1-7. Tabulated Data**. Refer to Table 1-1 for leading particulars pertinent to the Helicopter Internal Cargo Handling System.

**Table 1-1. Leading Particulars**

| | |
|---|---|
| System Nomenclature | Helicopter Internal Cargo Handling System (HICHS) |
| Part Number | 18049 J 100 |
| Manufacturer | AAR Brooks & Perkins Corp. Advanced Structures Division (81868) |
| Weight: | |
| Cabin Section | 647 pounds |
| Ramp Section | 141 pounds |
| Ramp Extension Section | 51 pounds |
| Ramp Extension Supports | 26 pounds |
| Ramp Support | 13 pounds |
| Total Weight | 878 pounds |
| Typical Cargo: | |
| HCU-6/E (88 x 108 inches) | 3 |
| HCU-12/E or HCU-10/C (54 x 88 inches) | 6 |
| Warehouse wooden pallets (40 x 48 inches) | 8-10*** |
| Wheeled vehicles | * |
| Miscellaneous (TOW, Hellfire, etc.) equipment (pallet or skid mounted) | * |
| Personnel | ** |

**Table 1-1. Leading Particulars (Continued)**

System Installation Data:
Time to Install System (Including Tiedown Rings) ..... ..... 8 man/hours
Time to Install System (Excluding Tiedown Rings) ..... ..... 4 man/hours

System Removal Data:
Time to Remove System (Excluding Tiedown Rings) ..... 4 man/hours

* Quantity dependent on size and helicopter capacity.

** System does not provide for personnel transport but it is compatible with personnel.

*** Quantity dependent on weight of pallets.

NOTE
A suitable mix of the above cargo can be handled as required.

# CHAPTER 2
# INSTALLATION AND OPERATING INSTRUCTIONS

## SECTION I. SERVICE UPON RECEIPT OF EQUIPMENT

**2-1. Unpacking and Inspection**. Upon arrival, the crates should be carefully inspected for indications of damage that occurred in transit. Carefully unpack each section to avoid damaging components. Remove shock protective devices installed for shipment. Check to be certain each item listed in Tables 2-1 and 2-2 has been received. It may be helpful to refer to the Illustrated Parts Breakdown, Chapter 3, Section III, in identifying components.

**2-2. Equipment Furnished**. Refer to Tables 2-1 and 2-2 for a complete list of all major components and materials furnished for Helicopter Internal Cargo Handling System installation.

**Table 2-1. System Components**

| Part Number | Description | Qty |
|---|---|---|
| 18049 J 101 | Outboard Rail/Roller Assembly, Stations 158.500 to 274.000 | 1 |
| 18049 J 102 | Outboard Rail/Roller Assembly, Stations 158.500 to 274.000 | 1 |
| 18049 J 103 | Outboard Rail/Roller Assembly, Stations 272.531 to 374.000 | 1 |
| 18049 J 104 | Outboard Rail/Roller Assembly, Stations 272.531 to 374.000 | 1 |
| 18049 J 105 | Outboard Rail/Roller Assembly, Stations 373.469 to 487.000 | 1 |
| 18049 J 106 | Outboard Rail/Roller Assembly, Stations 373.469 to 487.000 | 1 |
| 18049 E 107 | Ramp Guide Rail/Roller Assembly, Left-hand | 1 |
| 18049 E 108 | Ramp Guide Rail/Roller Assembly, Right-hand | 1 |
| 18049 J 121 | Inboard Guide/Roller Assembly, Stations 157.750 to 272.188 | 1 |
| 18049 J 122 | Inboard Guide/Roller Assembly, Stations 272.313 to 377.188 | 1 |
| 18049 J 123 | Inboard Guide/Roller Assembly, Stations 377.313 to 427.188 | 1 |
| 18049 J 124 | Inboard Guide/Roller Assembly, Stations 427.350 to 487.000 | 1 |
| 18049 J 225 | Ramp Inboard Roller Assembly, Left-hand | 1 |
| 18049 J 226 | Ramp Inboard Roller Assembly, Right-hand | 1 |
| 18049 J 140 | Ramp Extension Roller Assembly | 2 |
| 18049 D 227 | Forward Ramp Center Roller Mounting Bar Assembly | 1 |
| 18049 D 228 | Aft Ramp Center Roller Mounting Bar Assembly | 1 |
| 18049 E 150 | Ramp Extension Support Assembly | 2 |
| 18049 E 160 | Ramp Support Assembly | 1 |
| 18049 D 195 | Ramp Skid Pad | 1 |
| 18049 D 117 | 5k Tiedown Fitting Assembly | 26 |
| 18049 E 207 | 10k Fitting Assembly | 8 |
| 18049 C 245 | Tiedown Fitting Assembly, Station 360.000 | 2 |
| 18049 C 299 | Centerline Ring Plug Assembly | 10 |
| 18049 D 130 | Transition Roller Assembly Rest Plate | 2 |
| 18049 D 250 | Outboard Roller Securing Strap Assembly | 34 |

**Table 2-2. Materials Provided**

| Part Number | Description | Qty |
|---|---|---|
| PR-1440 Class B | Sealant | A/R |
| NAS517-4-12 | Countersunk Bolt | 2 |
| NAS6608-14 | Hex Head Bolt | 16 |
| NAS6608-15 | Hex Head Bolt | 8 |
| AN3-10A | Hex Head Bolt | 28 |
| AN960-10 | Flat Washer | 36 |
| AN4-11A | Hex Head Bolt | 6 |
| AN960-416 | Flat Washer | 18 |
| NAS517-4-11 | Countersunk Bolt | 6 |
| AN4-12A | Hex Head Bolt | 4 |
| AN4-5A | Hex Head Bolt | 8 |
| MS21044-N4 | Self-locking Nut | 8 |
| AN3-11A | Hex Head Bolt | 8 |
| MS21250-05028 | 12 Point Bolt | 16 |
| AN960-516 | Flat Washer | 32 |
| 18049 D 555 | Special Bolt | 16 |
| AN960-816 | Flat Washer | 16 |
| AN960-816L | Flat Washer | 8 |

**2-3. Preparation For Use.** The Helicopter Internal Cargo Handling System is shipped ready to use. No specific preparations are necessary.

## SECTION II. INSPECTING AND SERVICING THE EQUIPMENT

**2-4. Inspection**. Inspect the system components as follows:

a. *Intervals*. The Helicopter Internal Cargo Handling System should be inspected prior to each cargo mission or when any of the following events has or will occur.

(1) A new cargo handling system has just been installed.

(2) A cargo system has been removed from storage and installed.

(3) A system has been idle in an out-of-service aircraft.

(4) Maintenance has recently been performed and the system has not been inspected.

(5) A system appears to function improperly.

b. *Inspection Criteria*. A general inspection should be accomplished for any one of the reasons indicated in paragraph 2-4a. Inspect regularly to maintain the Helicopter Internal Cargo Handling System in good working condition. Make certain that all components shown in the table are accounted for in either the installed or stowed locations as applicable. (Refer to Table 2-1.) Then inspect the system against Figures 2-4 through 2-21 to make certain that all system components are properly installed. Check outboard rail/roller assemblies (1 through 6, Figure 3-2), inboard guide/roller assemblies (9 through 12), inboard ramp/roller assemblies (13 and 14), ramp guide rail/roller assemblies (7 and 8), and ramp extension roller assembly (15) for cracks or breaks. No cracks or breaks are allowed.

**2-5. Service**. No pre-installation service is required for the Helicopter Internal Cargo Handling System.

## SECTION III. INSTALLATION

2-6. Tools Required. Table 2-3 provides a list of common tools required to install the Helicopter Internal Cargo Handling System plus two special tools provided with the system.

**NOTE**

Refer to Table 3-2 for standard installation torque values.

**Table 2-3. Tools Required for Installation**

| Tool Description | Quantity |
|---|---|
| C-clamp 6 Inch Throat | 2 |
| 3/8 Inch 12 Point Socket | 1 |
| 7/16 Inch 6 Point Socket | 1 |
| 9/16 Inch 6 Point Socket | 1 |
| Number Three Phillips Drive 3/8 Inch Square Drive Socket Bit | 1 |
| Number Four Phillips Drive 3/8 Inch Square Drive Socket Bit or Screwdriver | 1 |
| 7/32 Inch Hex Drive (Allen) 3/8 Inch Square Drive Socket Bit (*) | 1 |
| 9/16 Inch Open End/Box End | 1 |
| 3/4 Inch Open End/Box End | 1 |
| 3/4 Inch Socket | 1 |
| X Drill (0.397 Diameter) | 1 |
| B 18049 140-MDF Master Drill Fixture (*) | 1 |
| * AAR Brooks & Perkins supplies these items as installation aids even though the system can be installed without the use of these items. | |

**2-7. Aircraft Preparation**. Prepare the aircraft for safe ground maintenance as follows:

a. *Cleaning*. Before attempting to install the Helicopter Internal Cargo Handling System, the floor of the aircraft should be cleaned of all dirt and debris.

b. *Preparation*. After the floor has been cleaned, proceed as follows:

**NOTE**

Loading pole ground able is secured to retaining brackets. Detach the ground cable to aircraft in or near the same location.

**CAUTION**

Ensure loading pole grounding cable is outboard of outboard rail/roller assembly, stations 272.531 to 374.000 (3 and 4, Figure 3-2) at installation.

(1) Remove loading pole retaining brackets located at stations 327.680, 348.980 and 387.680 on right-hand side of aircraft (Figure 2-1) and discard brackets.

(2) Remove the aircraft ramp extensions from the ramp. Locate the master drill fixture, Part No. B 18049 140-MDF, over one of the ramp extensions, as shown in Figure 2-2. Make sure the alignment pins are snug against the ramp extension. Use at least two C-clamps to hold the fixture in position.

**CAUTION**

Drilled holes must be within tolerance, clean and free of burrs to ensure proper engagement of pins.

(3) Drill first two holes (0.396 to 0.403 inch diameter). Drill one at each end, using the fixture drill guide holes (Figure 2-2).

(4) Repeat steps 2 and 3 for remaining ramp extension.

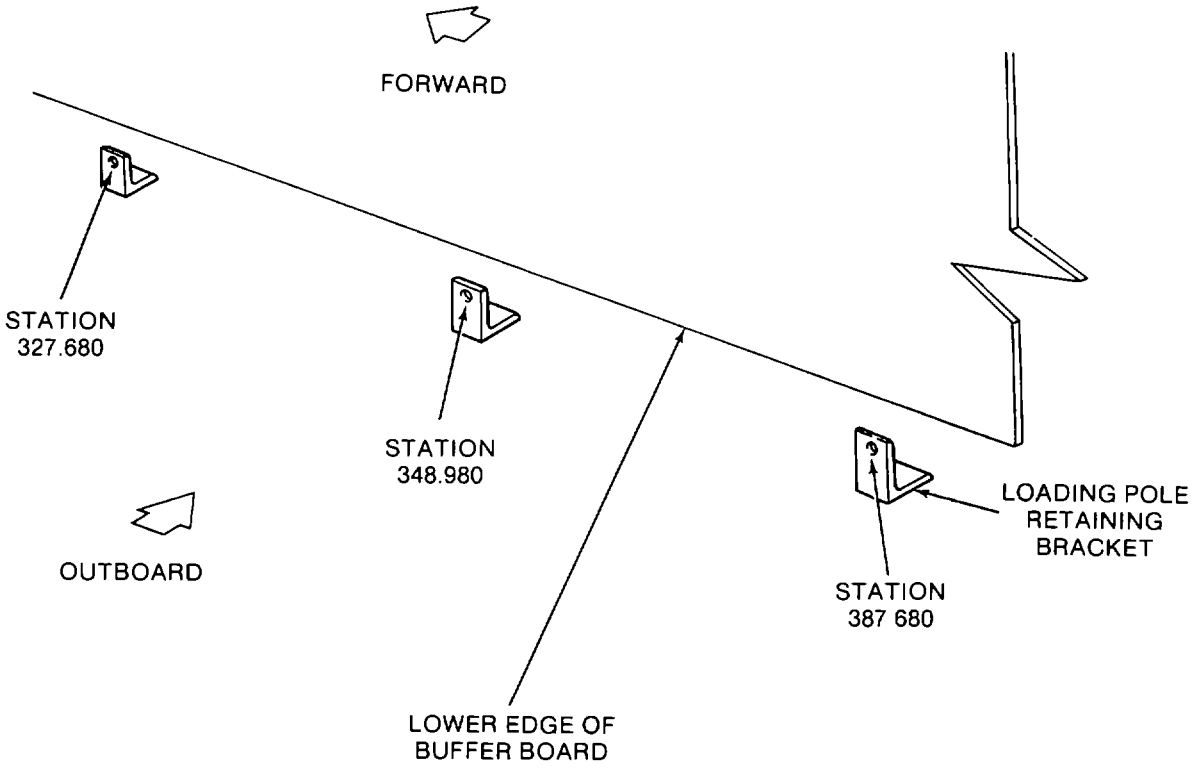


**Figure 2-1. Loading Pole Retaining Bracket Locations**

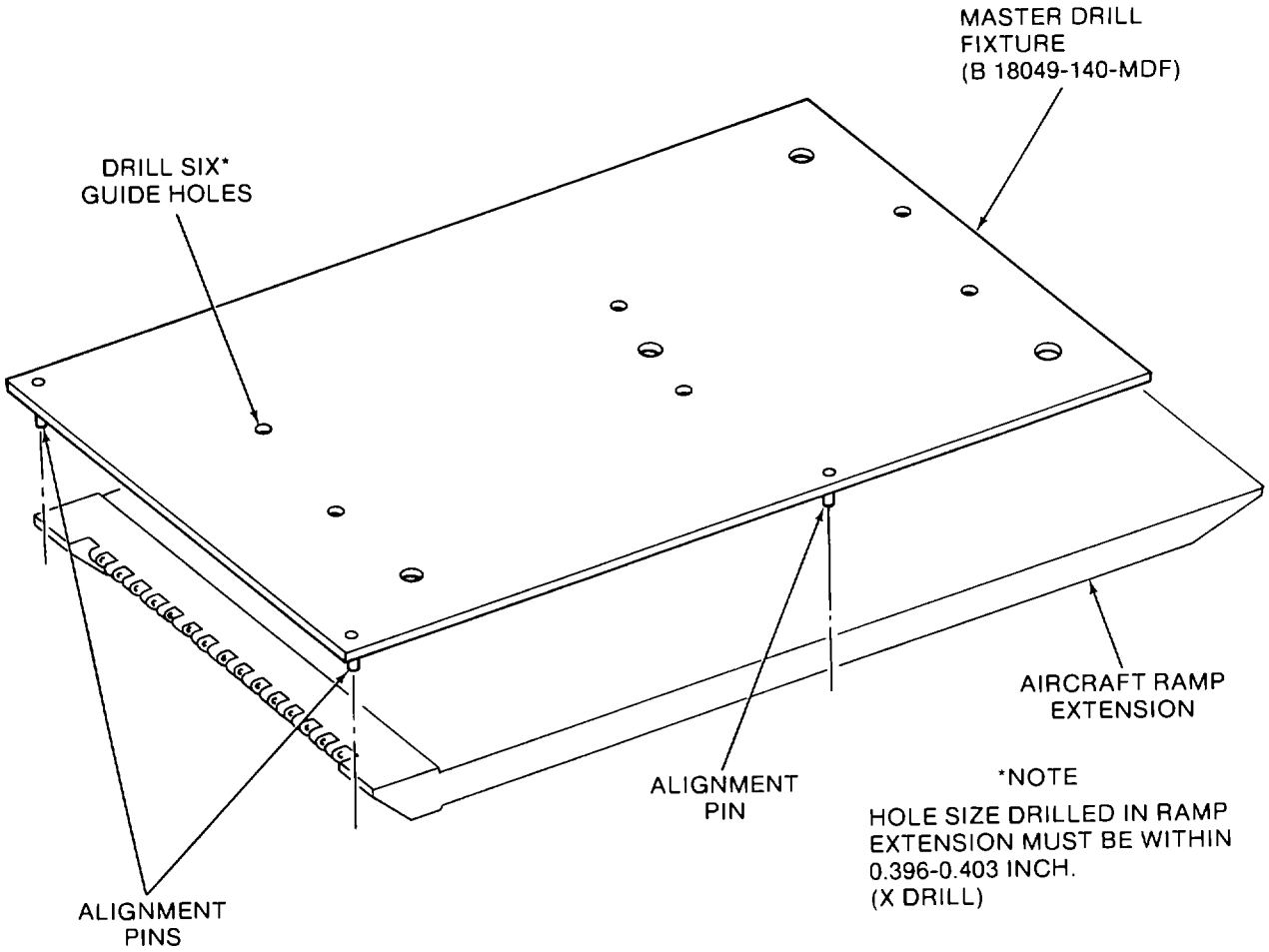


**Figure 2-2. Location of Master Drill Fixture**

**2-8. System Installation - Cabin/Cargo Area**. Install the cabin/cargo area of the Helicopter Internal Cargo Handling System as follows:

a. *General*. The cabin/cargo area of the cargo handling system consists of the following:

(1) Outboard rail/roller assemblies, stations 158.500 to 274.000 (1 and 2, Figure 3-2).

(2) Outboard rail/roller assemblies, stations 272.531 to 374.000 (3 and 4).

(3) Outboard rail/roller assemblies, stations 373.469 to 487.000 (5 and 6).

(4) Inboard guide/roller assembly, stations 157.750 to 272.188 (9).

(5) Inboard guide/roller assembly, stations 272.313 to 377.188 (10).

(6) Inboard guide/roller assembly, stations 377.313 to 427.188 (11).

(7) Inboard guide/roller assembly, stations 427.375 to 487.000 (12).

(8) 10 centerline ring plug assemblies (24).

(9) 34 outboard roller securing strap assemblies (26).

(10) 26 5k tiedown fitting assemblies (21).

(11) 8 10k tiedown fitting assemblies (22).

b. *Outboard Rail/Roller Assemblies*. The following procedure provides the steps necessary to install the outboard rail/roller assemblies (1 through 6, Figure 3-2) on the left and right sides of the helicopter. These steps must be performed in the sequence provided to ensure proper installation of the Helicopter Internal Cargo Handling System.

NOTE

Floor patches will be handled on an individual basis from aircraft to aircraft.

(1) If floor repair patches are present, they could cause interference to Helicopter Internal Cargo Handling System installation. Modification to the rail/ roller assemblies (1 through 6, Figure 3-2) will then be necessary. Refer to paragraph 2-8b.(6)(i) for floor patch modifications, if required, and then complete installation as follows:

NOTE

10k tiedown fitting assemblies are located at stations 240.000, 320.000, 400.000 and 481.780 on both sides of the aircraft.

(2) Remove eight 10k rings by unscrewing from fitting assemblies (Figure 2-3).

(3) The four screws securing each 10k tiedown fitting assembly (Figure 2-3) should be removed. Remove one of the inboard screws holding the 10k tiedown fitting assembly. Install one of the two special bolts (41, Figure 3-2) and flat washer (40) to keep the tiedown adapter aligned with holes.

(4) Remove the remaining screws holding the 10k tiedown fitting assembly. Stow the 10k rings and screws in a secure place aboard the aircraft (Figure 2-3).

NOTE

There may be a protruding round head bolt beneath the aft most 10k tiedown fitting. If so, remove and discard this bolt.

NOTE

Ensure bolts are tightened down snugly so that washers under bolt heads will not rotate.

(5) Install eight 10k fitting assemblies (22, Figure 3-2) at the eight locations from which the 10k rings and screws were removed in Figure 2-3 and steps 2-8b.(2) through 2-8b.(4). Proceed as shown in Figure 2-4. Install inboard special bolts (41, Figure 3-2) and flat washers (40) finger tight. Slide 10k fitting assembly (22) into position (under the washers and bolts) through the open slots of the 10k fitting assembly. After 10k fitting assembly (22) is in place, insert 12-point bolts (39) and flat washers (40) and then tighten all four bolts.

(6) Install outboard rail/roller assemblies (1 through 6) according to the following steps. This procedure is typical for all outboard rail/roller assemblies.

NOTE

Rings of 10k fitting assemblies (22) must be laying flat for installation of outboard rail/roller assemblies (1 through 6).

NOTE

Orient all 5k tiedown fitting assembly (21) rings to face inboard before installing outboard rail/roller assemblies (1 through 6).

(a) Lift outboard rail/roller assembly (1 through 6) over 10k fitting assembly (22).

(b) Angle outboard guide rail (47, Figure 3-3; 24 or 42, Figure 3-4; or 51, Figure 3-5) such that bumper is clear of or just touching buffer board (Figure 2-5). The buffer board may be trimmed, as required, for installation clearance.

**CAUTION**

At station 481.780, self-locking nut (46, Figure 3-5) will not allow excessive movement fore and aft. This prevents interference with 10k fitting assembly (22, Figure 3-2).

(c) Rotate outboard guide rail (47, Figure 3-3; 24 or 42, Figure 3-4; or 51, Figure 3-5) outboard to vertical. Some fore and aft movement may be necessary to do this if interference occurs (Figure 2-5).

(d) Attach both outboard rail/roller assemblies (1 and 2, Figure 3-2) to the two forward 10k fitting assemblies (22), at station 240.000. Refer to Figures 2-5 and 2-6.

**CAUTION**

Ensure loading pole grounding cable is outboard of outboard rail/roller assembly, stations 272.531 to 374.000 (3 or 4, Figure 3-2), at installation.

(e) Attach outboard rail/roller assemblies, stations 272.531 to 374.000 (3 and 4) to 10k fitting assemblies (22) at station 320.000. Refer to Figures 2-5 and 2-6.

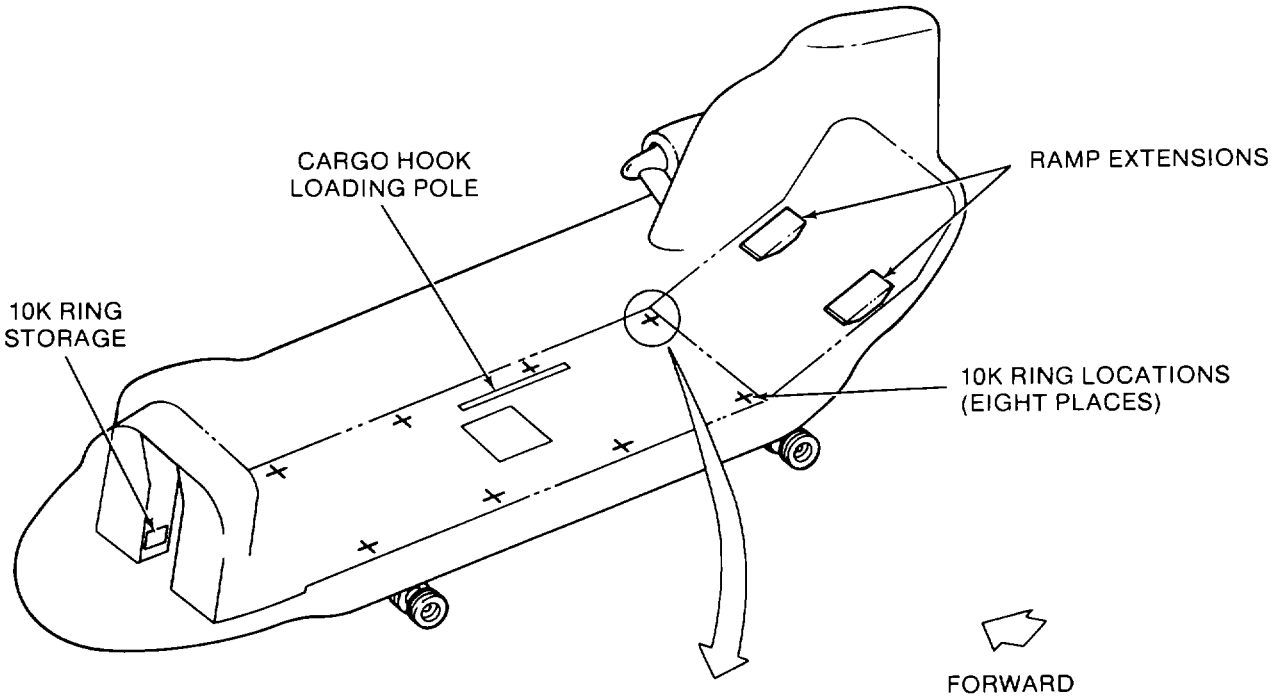


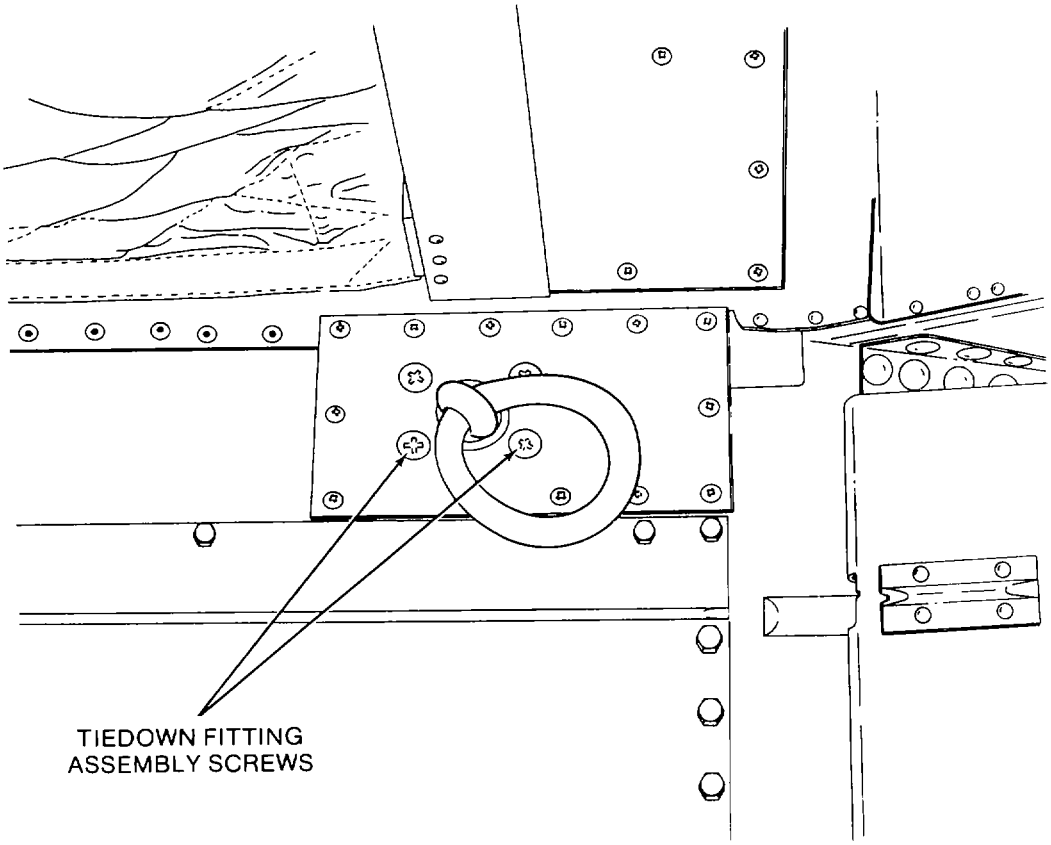


**Figure 2-3. 10k Ring Locations**

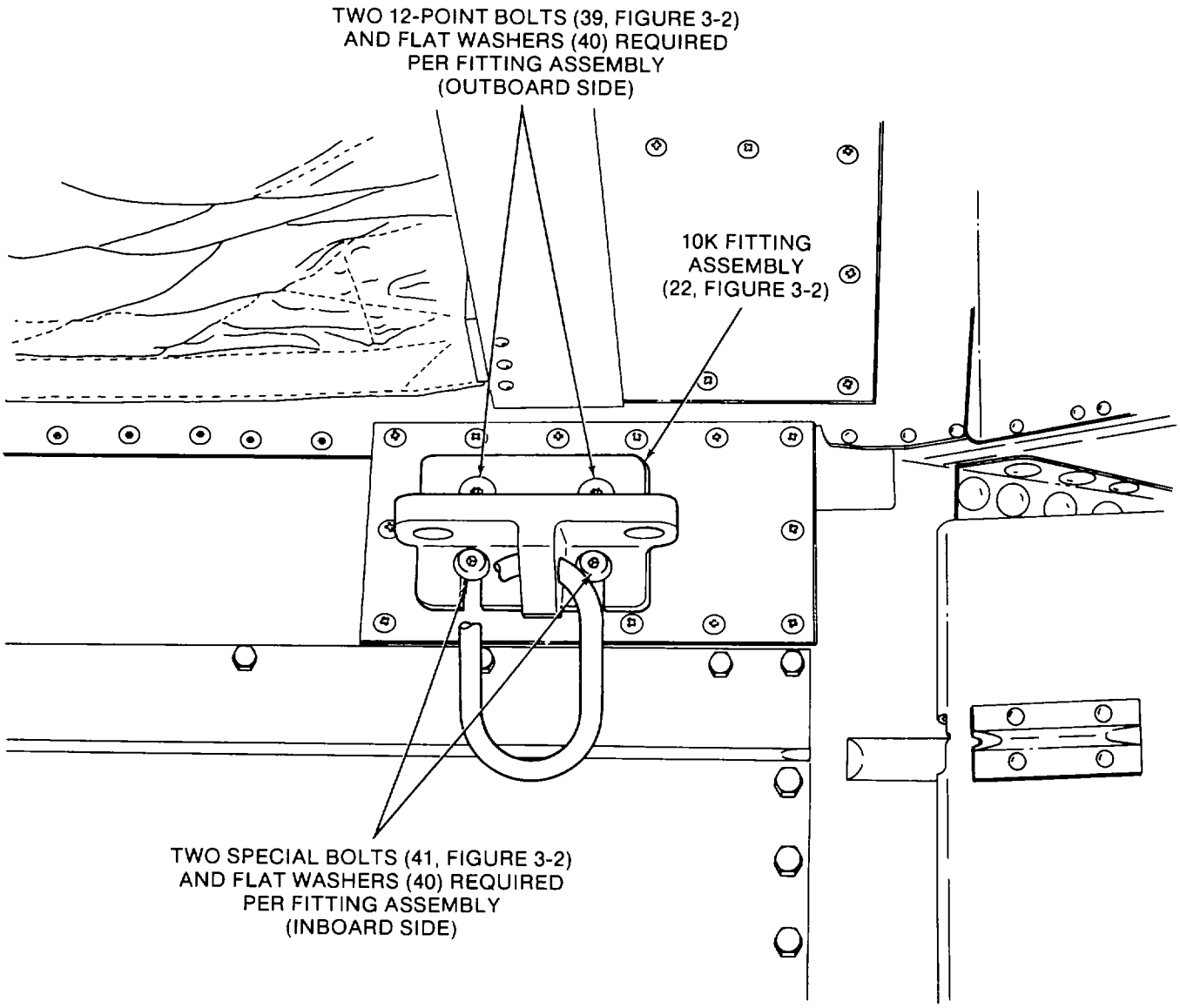


**Figure 2-4. 10k Fitting Assembly Installed**

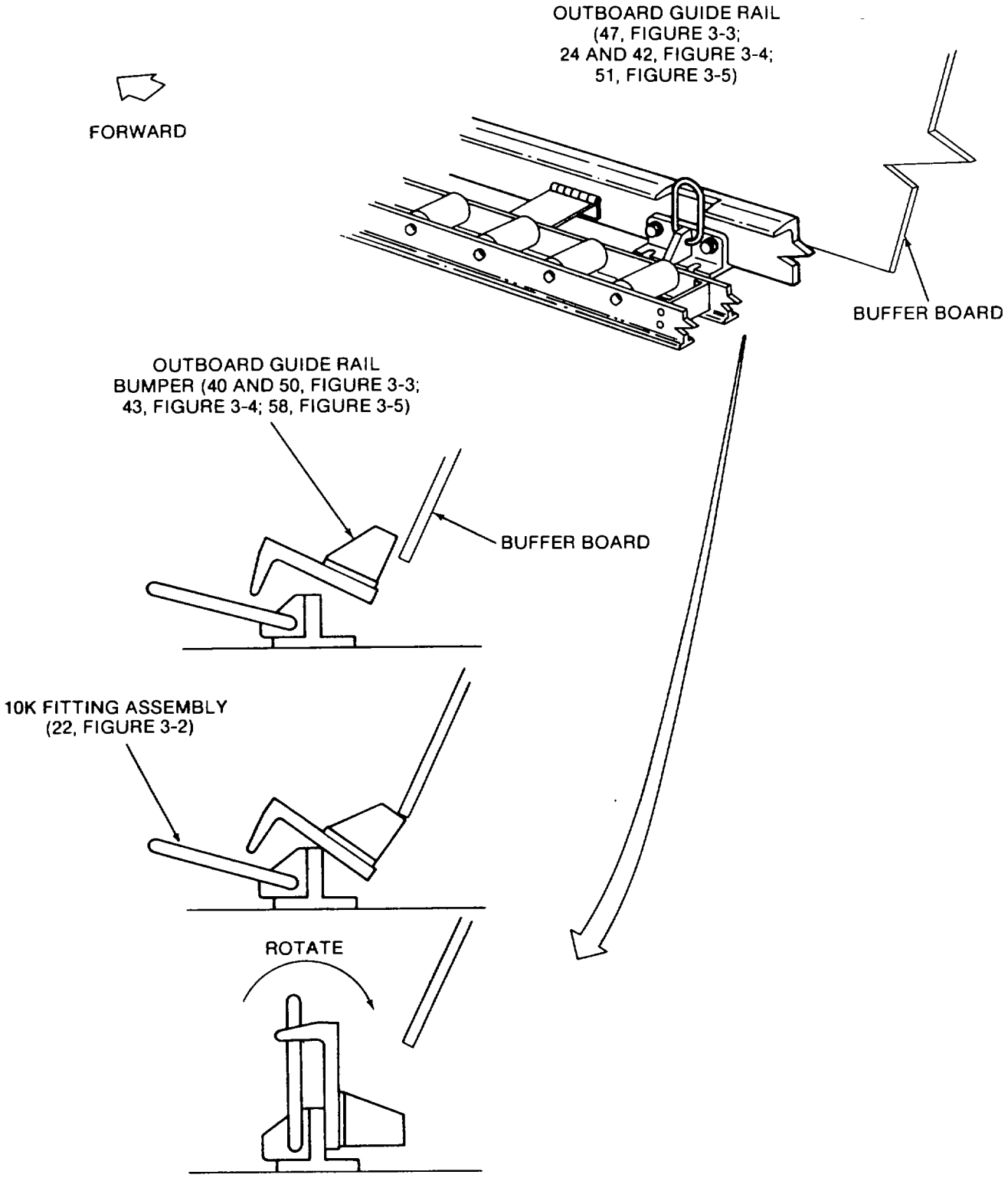


**Figure 2-5. Typical Rail Installation**

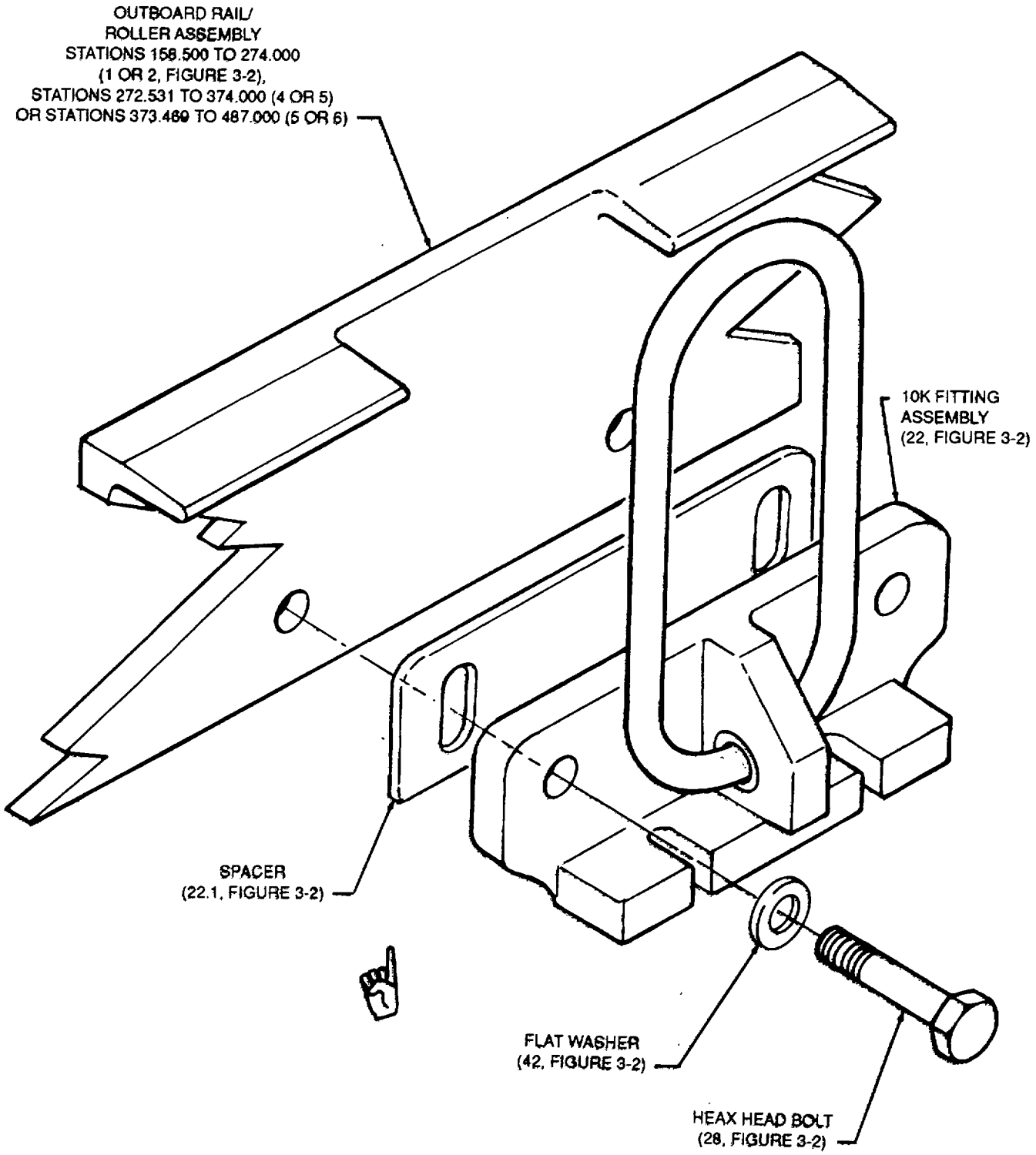


**Figure 2-6. Installing Outboard Rail/Roller Assembly to 10k Fitting Assembly (Including .060 inch spacer if required)**

(f) Attach outboard rail/roller assemblies, stations 373.469 to 487.000 (5 and 6, Figure 3-2) to 10k fitting assemblies (22) at stations 400.00 and 481.780. Refer to Figures 2-5 and 2-6).

NOTE

Due to possible irregularities in aircraft, pallet, and/or cargo system, the main deck outboard rails may have less than the required lateral spacing which must be not less than 88.00 inches. Use spacers in pairs where relief is necessary in order to maintain required separation, i.e., one spacer should be used on either side when required. Do not use two spacers together on a side. Use of more than one shim at a location can jeopardize adequate grip length of the 10k fitting and outboard rail attachment bolts and is not permissible.

(g) Measure lateral spacing of outboard rails at (stations 240.000, 320.000, 400.000, 481.78). If spacing is less than the required 88.00 inches, a 0.060 inch thick spacer (P/N 18049C545) is to be inserted between the 10k fitting and the outboard rail to maintain required rail clearance.

(h) Make splice connections between outboard rail/roller assemblies, stations 158.500 to 274.000 (1 and 2, Figure 3-2), and rail/roller assemblies, stations 272.531 to 374.000 (3 and 4) on both left and right sides. Use two hex head bolts (29) and flat washers (43) per splice. Refer to Figure 2-7.

(i) Make splice connections between outboard rail/roller assemblies, stations 272.531 to 374.000 (3 and 4) and rail/roller assemblies, stations 373.469 to 487.000 (5 and 6), on both left and right sides. Use two hex head bolts (29) and flat washers (43) per splice. Refer to Figure 2-7.

(j) If floor patches cause interference problems with outboard rail/roller assemblies (1 through 6, Figure 3-2), modify as follows. Mark the area on the rail/roller assembly. Remove rail/roller assembly. Machine or relieve the area as necessary to ensure adequate clearance of rail/roller assembly and patched area. In modified area, remove all sharp edges. Have 0.13 inch (approximate) radii where needed (Figure 2-8). Repaint as specified in Chapter 3.

(k) Connect twenty-six floor-mounted tiedown rings in the helicopter to the outboard rail/roller assemblies, stations 158.500 to 274.000 (1 and 2, Figure 3-2) outboard rail/roller assemblies, stations 272.531 to 374.000 (3 and 4), and outboard rail/roller assemblies, stations 373.469 to 487.000 (5 and 6). Use 5k tiedown fitting assemblies (21). There are thirteen symmetrical locations per side. Refer to Figure 2-9 for details.

**CAUTION**

Ensure conical washer (6, Figure 3-16) has flat down when installing 5k tiedown fitting assembly (21, Figure 3-2). (See Figure 2-9 for correct position).

**CAUTION**

At station 360.000, use tiedown fitting assembly, station 360.000 (23) and not 5k tiedown fitting assembly (21). (See Figure 2-10.) Tiedown washer (1, Figure 3-18) should have the flat down.

(1) Connect two floor-mounted tiedown rings on the left and right sides at station 360.000 (23, Figure 3-2) to outboard rail/roller assemblies, stations 272.531 to 374.000 (3 and 4). Use tiedown fitting assemblies, station 360.000 (23) as shown in Figure 2-10.

c. Inboard Guide/Roller Assembly. Install inboard guide/roller assembly, stations 157.750 to 272.188 (9, Figure 3-2); inboard guide/roller assembly, stations 272.313 to 377.188 (10); inboard guide/roller assembly, stations 377.313 to 427.188 (11); and inboard guide/roller assembly, stations 427.375 to 487.000 (12) as follows:

(1) Position inboard guide/roller assembly, station 157.750 to 272.188 (9) on B.L. 0.000. Make sure the forward end is aligned at station 157.750 as shown in Figure 2-11.

(2) Connect three tiedown assemblies (9 through 16, Figure 3-7), as shown in Figure 2-11, to 5k tiedown rings on the helicopter floor. Use centerline ring plug assemblies (24, Figure 3-2).

(3) Position inboard guide/roller assembly, stations 272.313 to 377.188 (10) on B.L. 0.000 directly behind inboard guide/roller assembly, stations 157.750 to 272.188 (9).

(4) Connect three tiedown assemblies (45 through 60, Figure 3-8), as shown in Figure 2-11, to 5k tiedown fitting assemblies (21, Figure 3-2) on the helicopter floor. Use centerline ring plug assemblies (24).

(5) Position inboard guide/roller assembly, stations 377.313 to 427.188 (11) on B.L. 0.000 directly behind inboard guide/roller assembly, stations 272.313 to 377.188 (10).

(6) Connect two tiedown assemblies (40 through 47, Figure 3-9), as shown in Figure 2-11), to 5k tiedown fitting assemblies (21, Figure 3-2) on the helicopter floor. Use centerline ring plug assemblies (24, Figure 3-2).

(7) Position inboard guide/roller assembly, stations 427.375 to 487.000 (12) on B.L. 0.000 directly behind inboard guide/roller assembly, stations 377.313 to 427.188 (11).

(8) Connect two tiedown assemblies (55 through 62 and 66 through 73, Figure 3-10), as shown in Figure 2-11, to 5k tiedown fitting assemblies (21, Figure 3-2) on the helicopter floor. Use centerline ring plug assemblies (24).

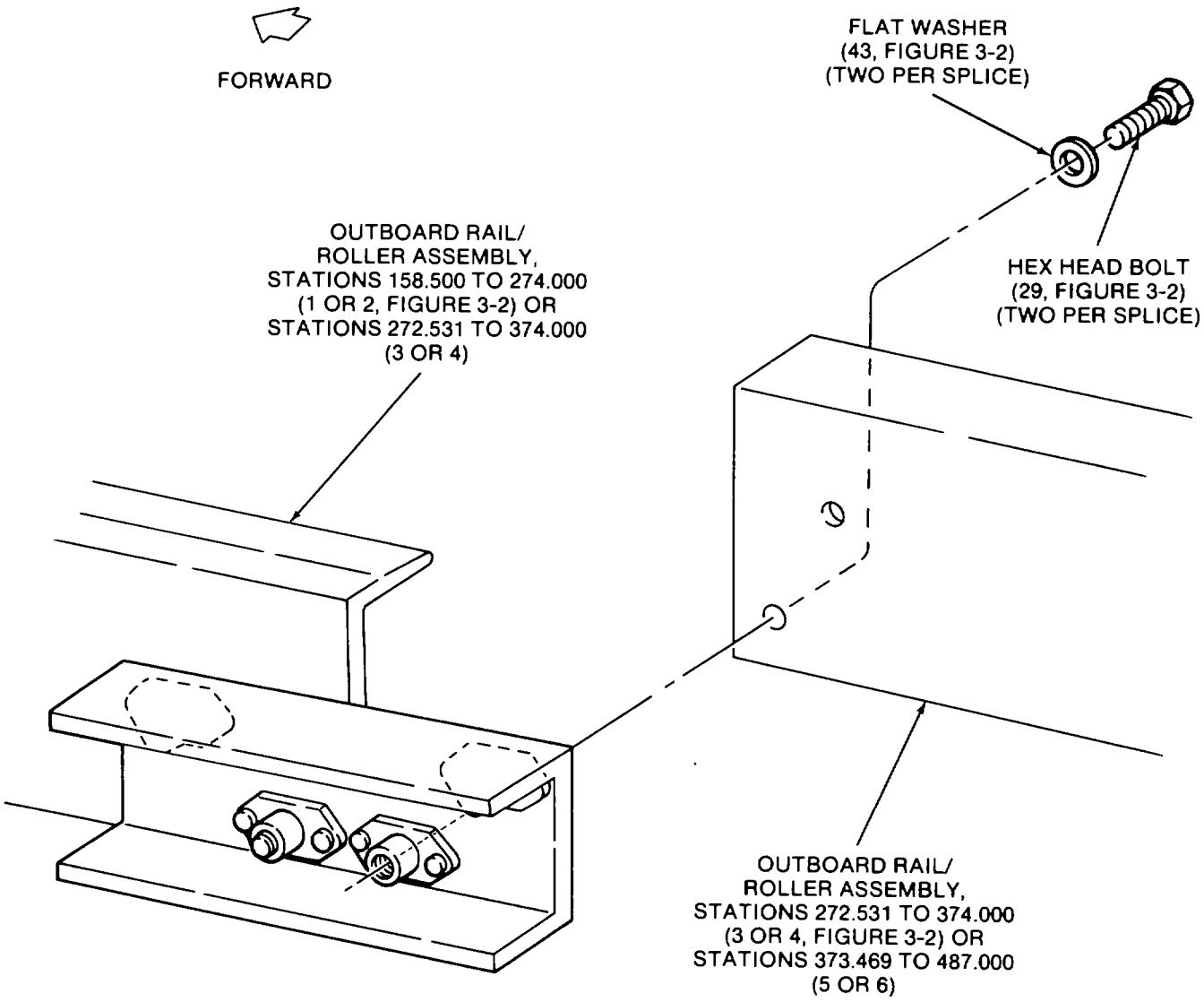


NOTE

LEFT SIDE SHOWN.
RIGHT SIDE OPPOSITE.

**Figure 2-7. Typical Splice Connection**

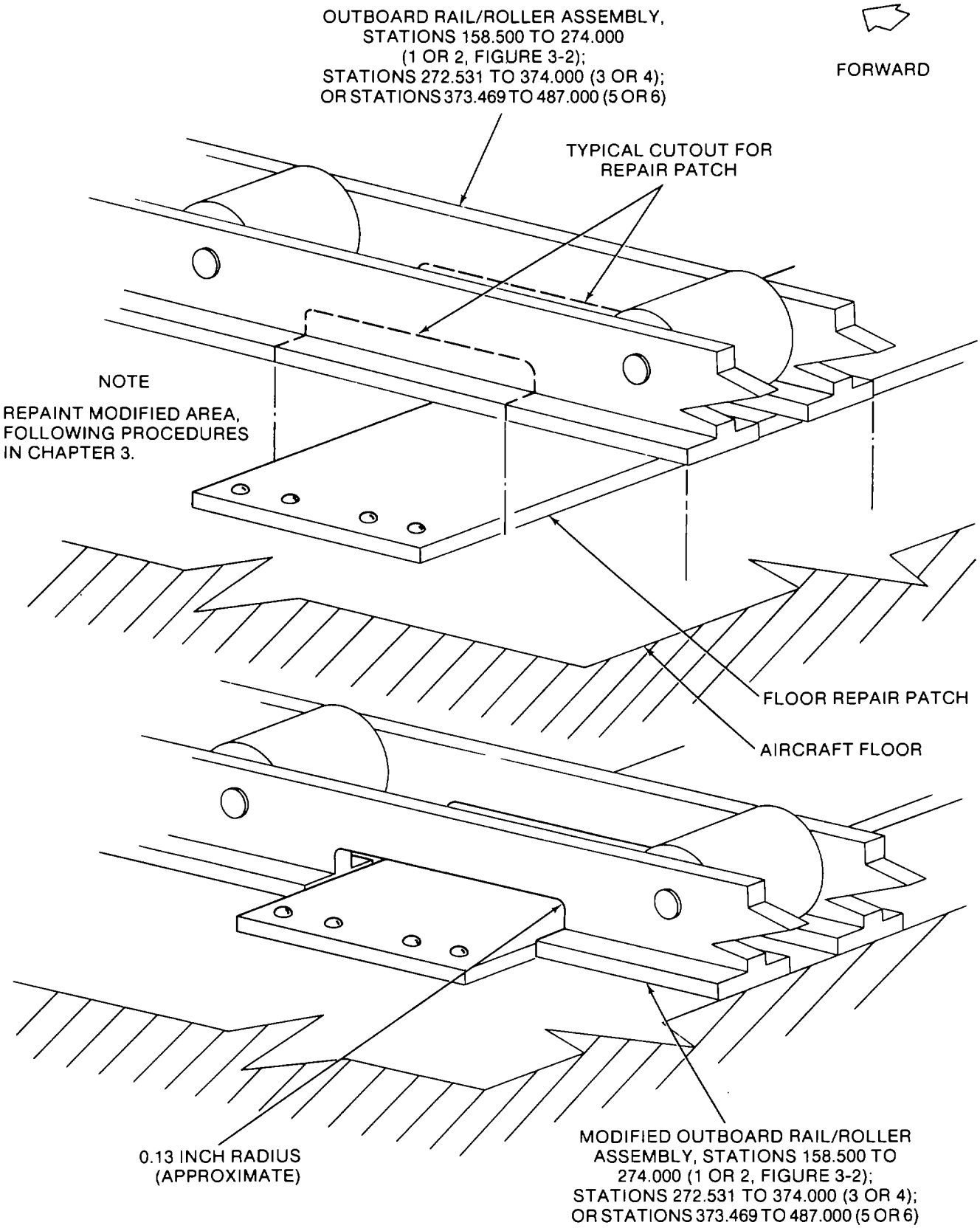


**Figure 2-8. Rail Modifications Required for Floor Repair Patches**

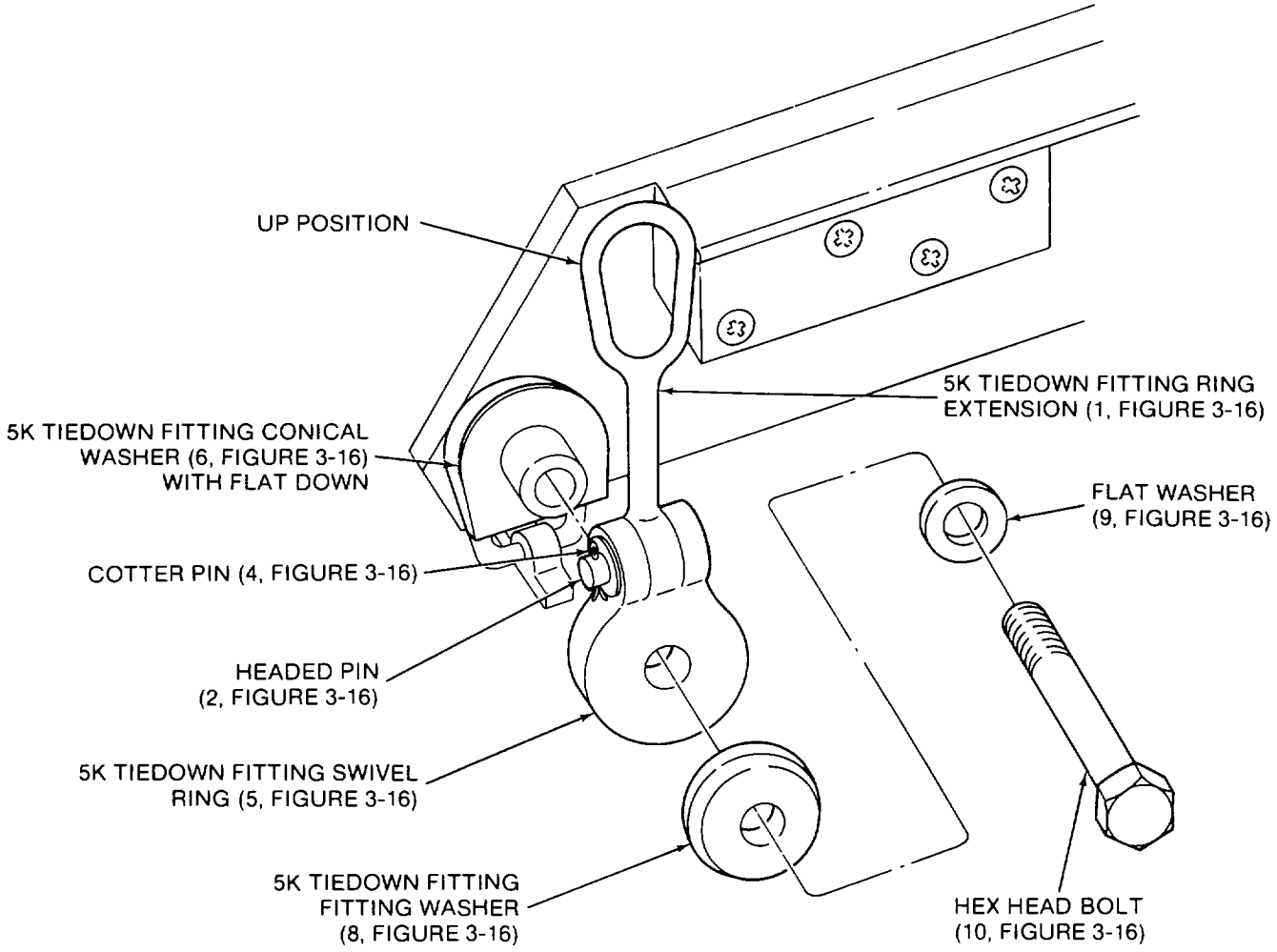


**Figure 2-9. 5k Tiedown Fitting Assembly Installation**

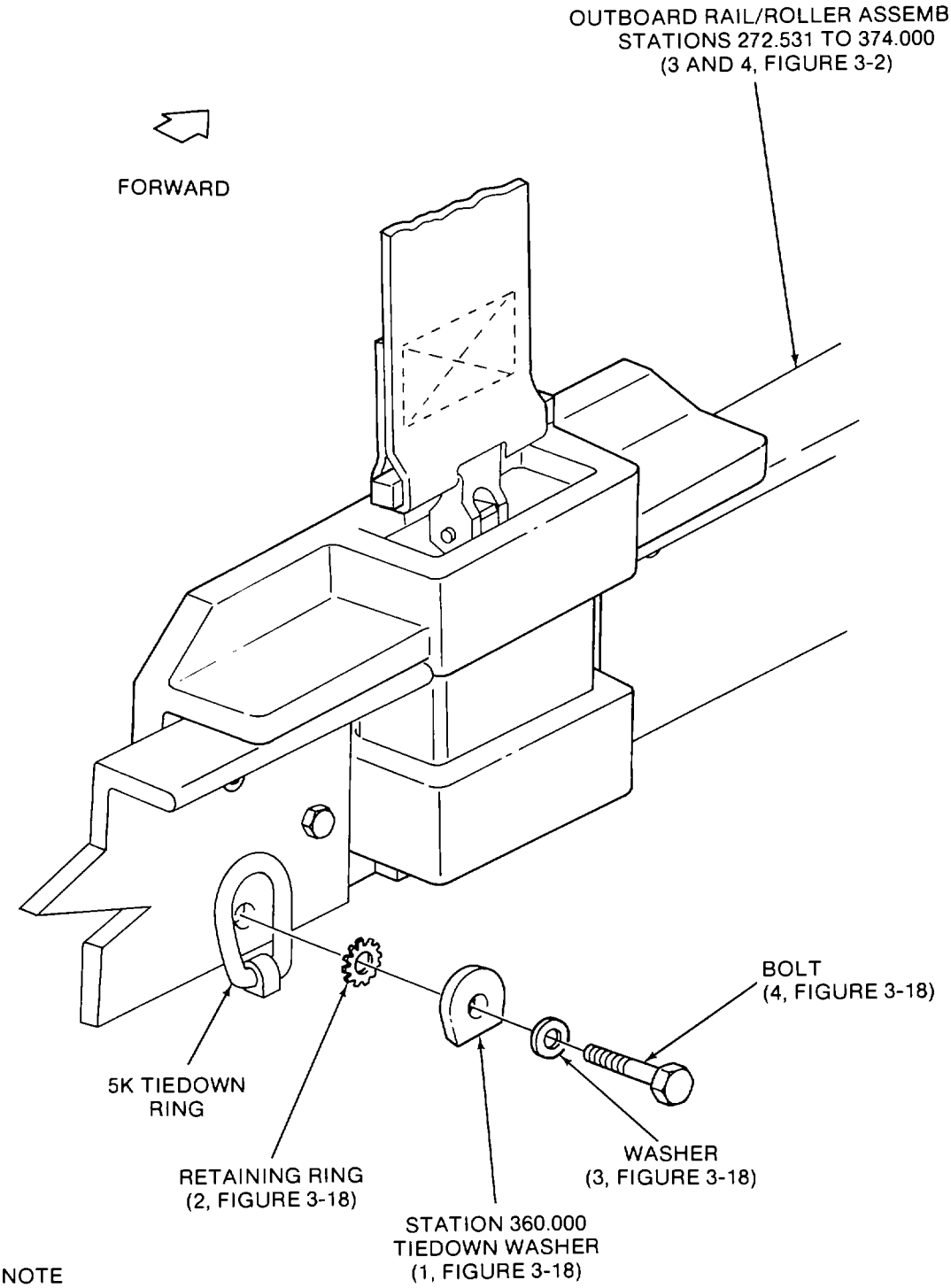


NOTE

RIGHT-HAND SHOWN.
LEFT-HAND OPPOSITE.

**Figure 2-10. Connecting Outboard Rail/Roller Assemblies at Station 360.000**

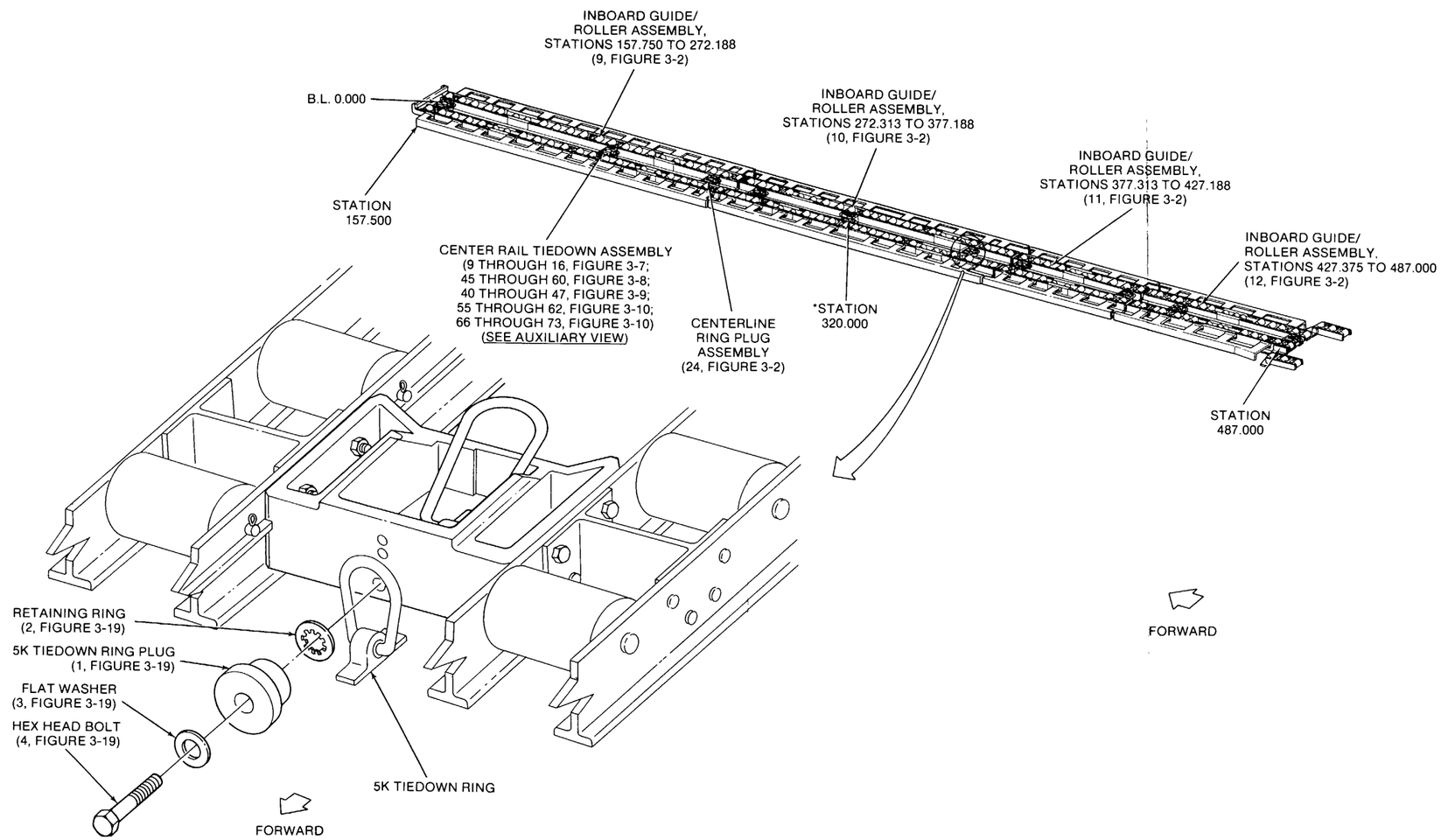


**Figure 2-11. Installing Inboard Guide/Roller Assemblies**

. Install the ramp as follows:

*a. Installation Preparation*. Extend the ramp tongue to gain access to the four screws that attach the center skid pad (Figure 2-12).

**NOTE**

**Step 2-9a.(1) will require two persons. Also, it requires that the screw heads be fully cleaned of any dirt, etc., in order to prevent slippage due to the awkward position.**

(1) One person must clean screw heads and hold the screwdriver (Figure 2-13) while resting on the ramp floor. At the same time, the second person must be under the ramp using a suitable wrench to remove the nuts securing the center skid pad. Retain the hardware removed for reuse during the installation procedure.

(2) Refer to Figure 2-14. Remove fifteen bolts shown from the outboard left side of the helicopter ramp floor. These locations will be used to secure left-hand ramp guide rail/roller assembly (7, Figure 3-2) and transition roller assembly rest plate (25). Place the removed bolts in storage.

(3) Refer to Figure 2-14. Remove the symmetrically opposite fifteen bolts located on the right side of the helicopter ramp floor. These locations will be used to secure right-hand ramp guide rail/roller assembly (8, Figure 3-2) and transition roller assembly rest plate (25). Also place the removed bolts in storage.

(4) Refer to Figure 2-15. Remove 12 bolts shown from the left center area of the helicopter ramp floor. These locations will be used to secure left-hand inboard ramp roller assembly (13, Figure 3-2) and one end of forward ramp center roller mounting bar assembly (16) and aft ramp center roller mounting bar assembly (17). Place the removed bolts in storage.

(5) Refer to Figure 2-15. Remove the symmetrically opposite 12 bolts located in the right center area of the helicopter ramp floor. These locations will be used to secure right-hand inboard ramp roller assembly (14, Figure 3-2) and one end of forward ramp center roller mounting bar assembly (16) and aft ramp center roller mounting bar assembly (17). Place the removed bolts in storage.

**2-9. System Installation - Ramp**

**NOTE**

**Figure 2-16 illustrates the system components and the ramp extension components to be installed on the helicopter ramp. Also, refer to Figure 2-17, 2-18 and 2-19 for locations to install the bolts removed during aircraft preparation (para 2-9), securing these components.**

*b. Left- and Right-Hand Ramp Guide Rail/Roller Assemblies*. Install left-hand Install left-hand ramp guide rail/roller assembly (7, Figure 3-2) and right-hand ramp guide rail/ roller assembly (8) as follows:

(1) Position left- and right-hand ramp guide rails (12, Figure 3-6) on B.L. 41.577 (10 bolts) and B.L. 41.432 (two bolts) (Figure 2-17). Make sure that the bolt holes are aligned with the holes from which bolts were removed in Figure 2-14.

(2) Attach left- and right-hand ramp guide rails (12, Figure 3-6) to the helicopter ramp floor. Use one hex head bolt (32, Figure 3-2) and one flat washer (33) at the most forward bolt location on each ramp guide rail along B.L. 41.432.

(3) Secure left- and right-hand ramp guide rails (12, Figure 3-6) at the remaining bolt locations. Use 11 hex head bolts (30, Figure 3-2) and flat washers (31, Figure 3-2).

(4) Position transition roller assembly rest plates (25) on the three holes located at or near B.L. 32.026 on each side of the helicopter ramp. Secure the rest plates to the floor. Use six countersunk bolts (34). Fit bolts loosely before tightening. Use three bolts per pad.

*c. Forward and Aft Ramp Center Roller Mounting Bar Assemblies*. Install forward ramp center roller mounting bar assembly (16, Figure 3-2) and aft ramp center roller mounting bar assembly (17) as follows:

(1) Position forward and aft ramp center roller mounting bar assemblies (16, and 17, Figure 3-2) on B.L. 17.587 (Figure 2-18) over the bolt locations from which bolts were removed (para 2-9a.(4) and 2-9a.(5)).

(2) Secure forward and aft ramp center roller mounting bar assemblies (16 and 17) to the helicopter ramp floor. Use four hex head bolts (38) and flat washers (31).

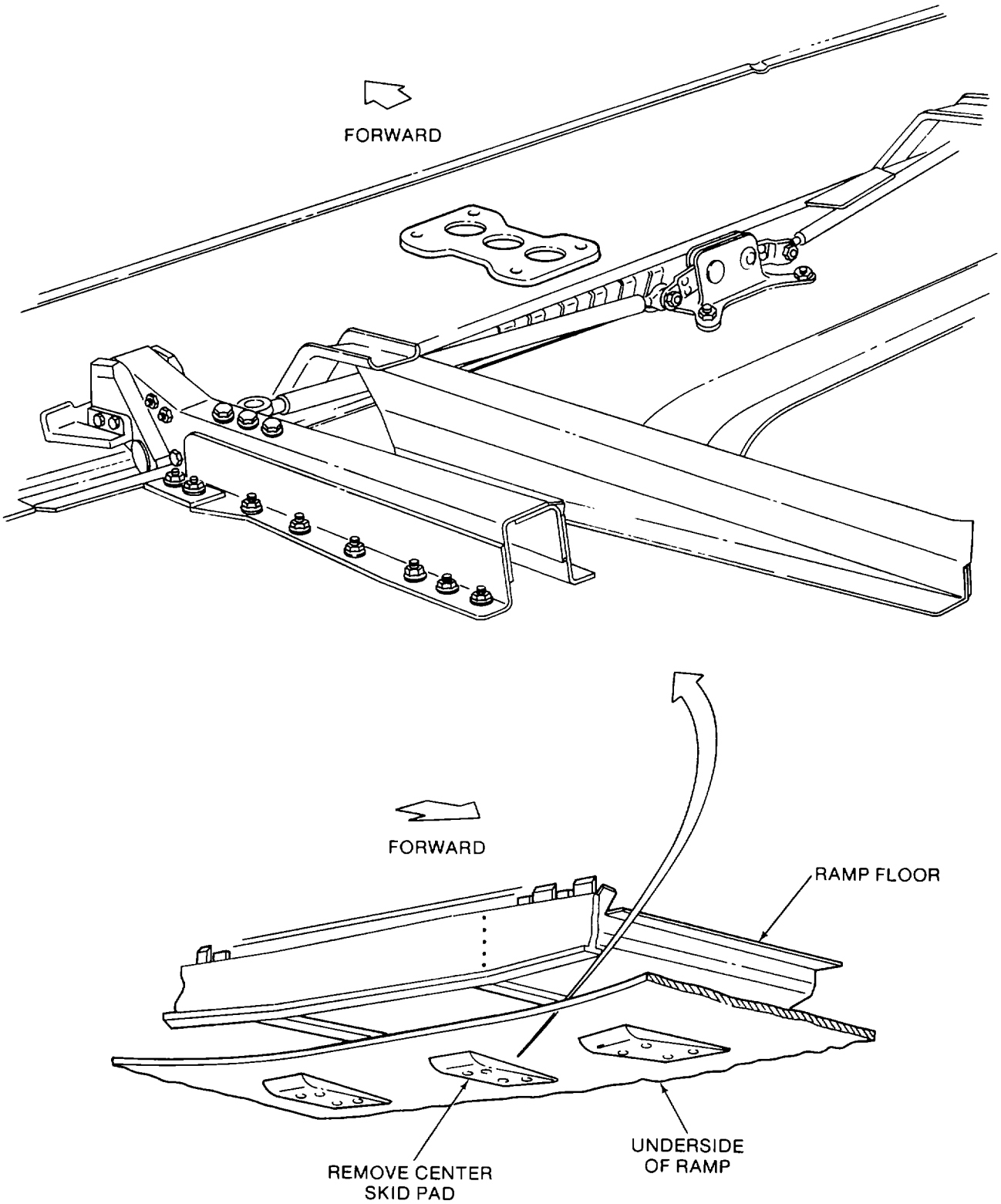


**Figure 2-12. Center Skid Pad Location**

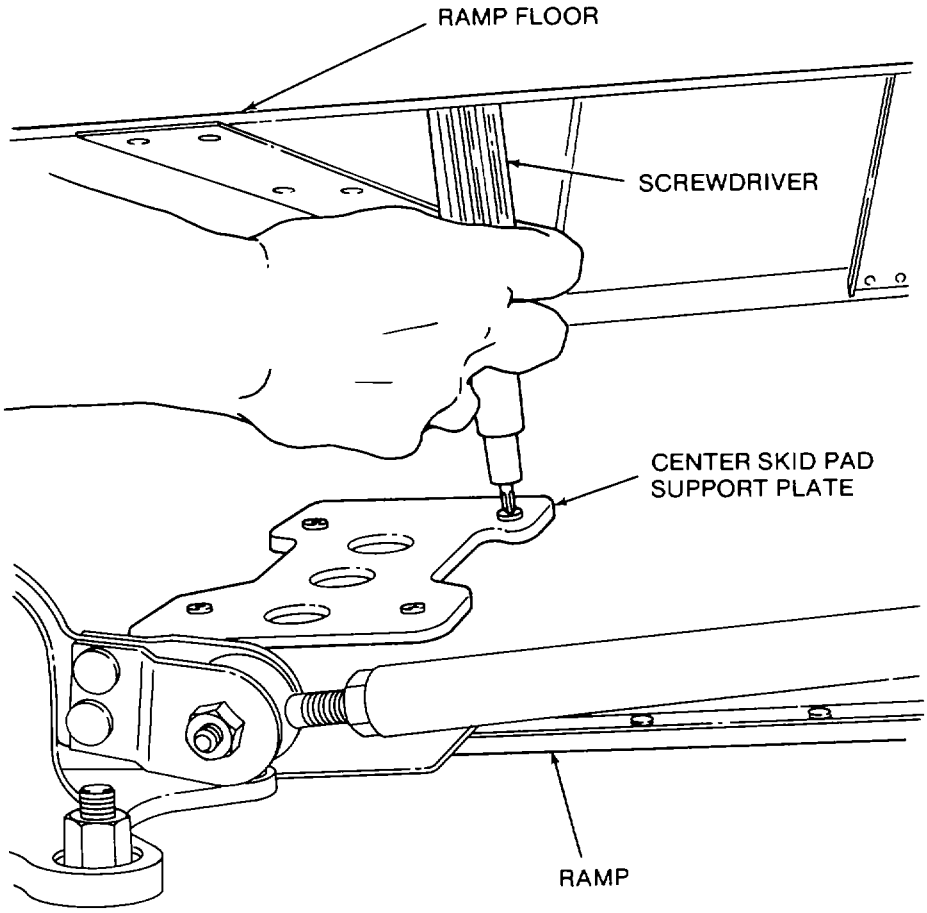


**Figure 2-13. Screwdriver Location to Hold Center Skid Pad Screw Head**

NOTE

LEFT SIDE SHOWN.
REMOVE CORRESPONDING
BOLTS FOR RIGHT SIDE.

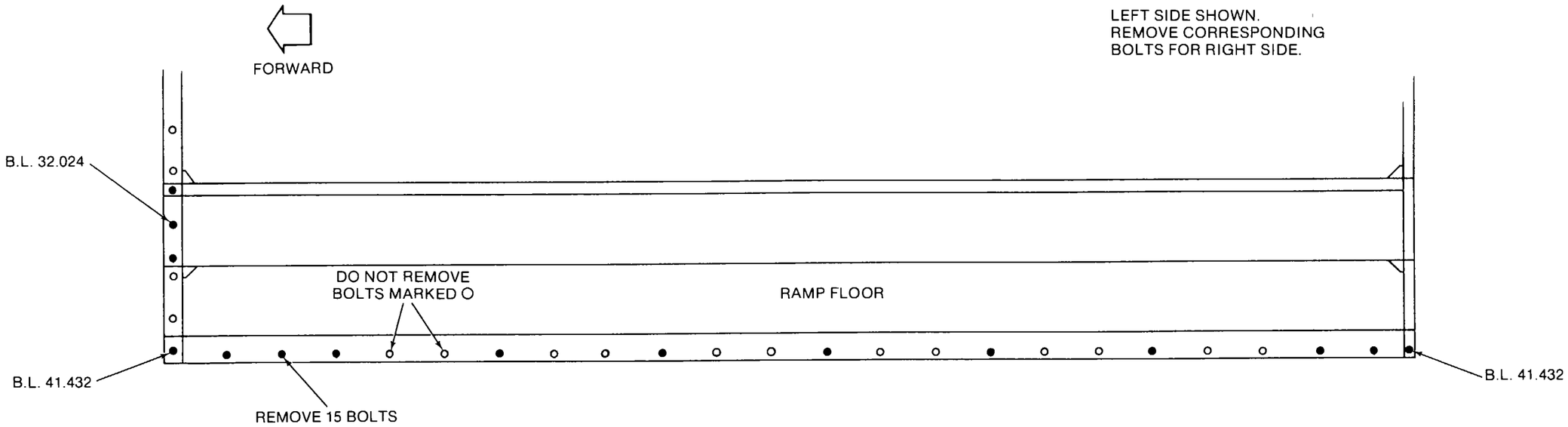


LEGEND

● INDICATES LOCATION OF REMOVED BOLTS (15) TOTAL
o INDICATES LOCATION OF BOLTS NOT REMOVED

**Figure 2-14. Outboard Ramp Bolt Removal Locations**

**LEGEND**

● INDICATES LOCATION OF REMOVED BOLTS (12) TOTAL
o INDICATES LOCATION OF BOLTS NOT REMOVED

NOTE

LEFT SIDE SHOWN. REMOVE CORRESPONDING BOLTS FOR RIGHT SIDE.

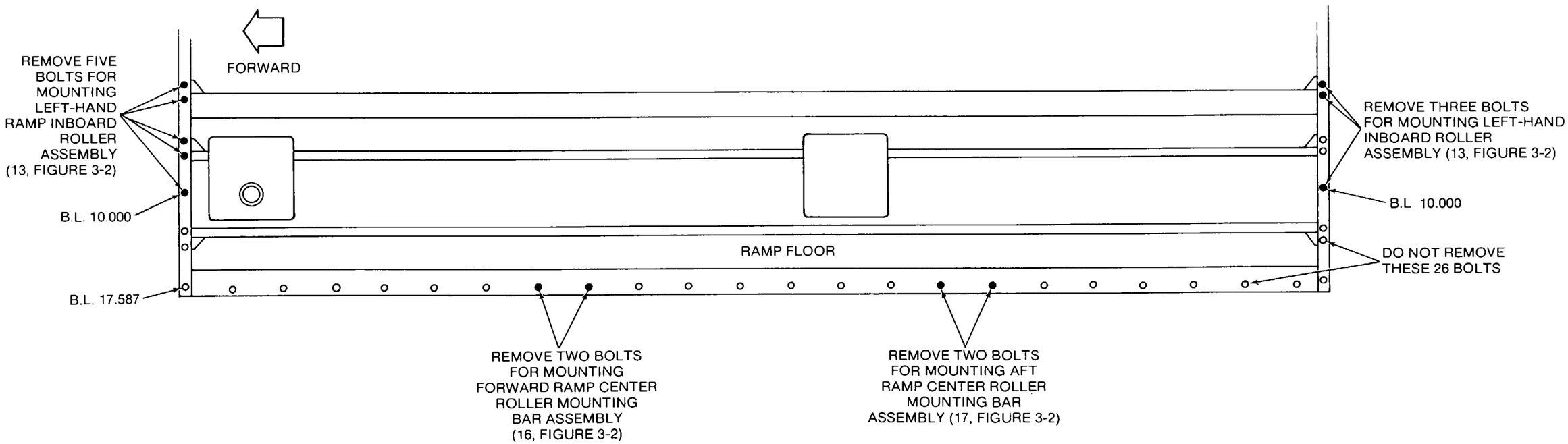


**Figure 2-15. Left and Right-Hand Ramp Inboard Roller Assembly and Forward and Aft Center Roller Mounting Bar Bolt Removal Locations**

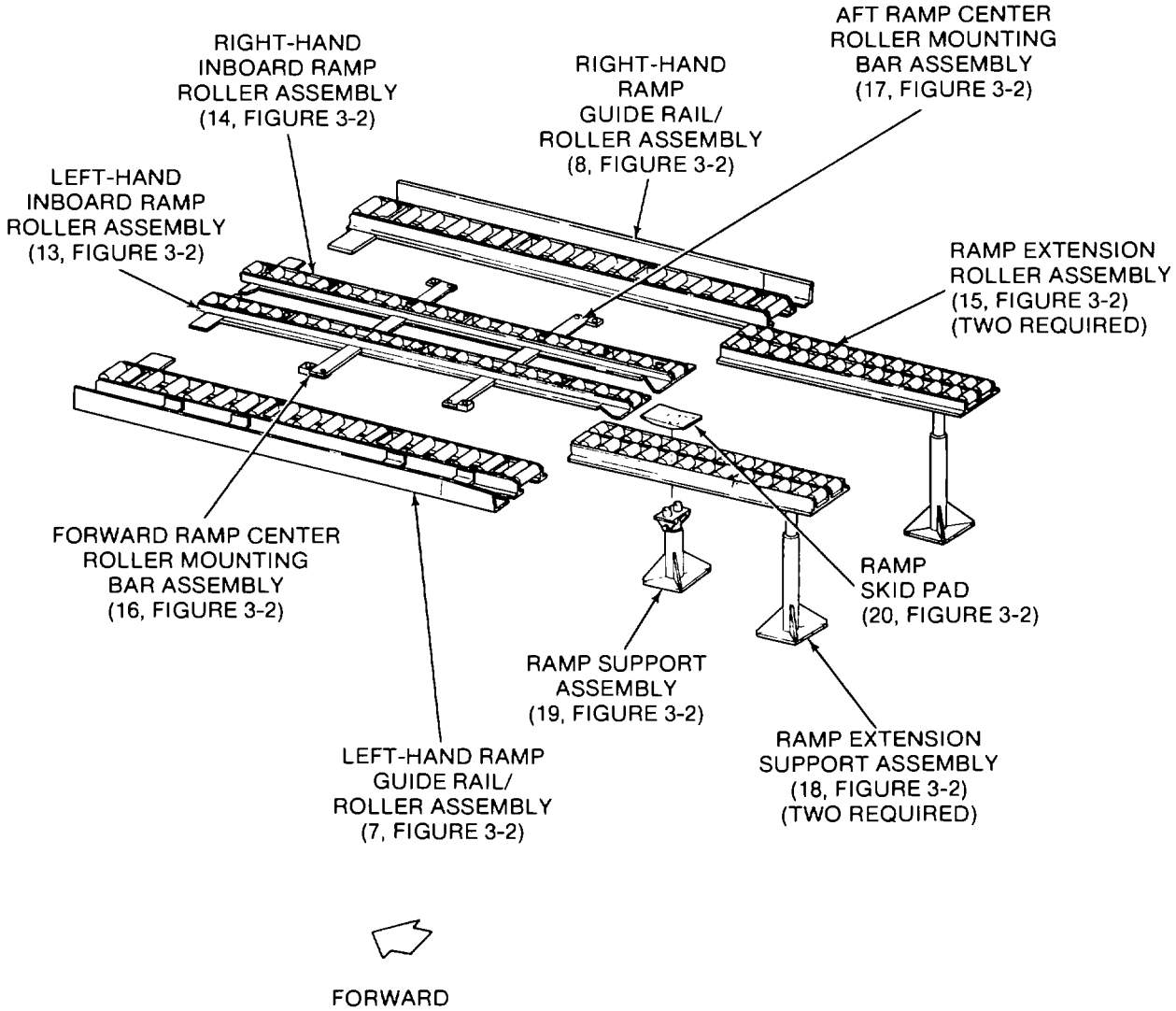


**Figure 2-16. System Components Installed on Ramp**

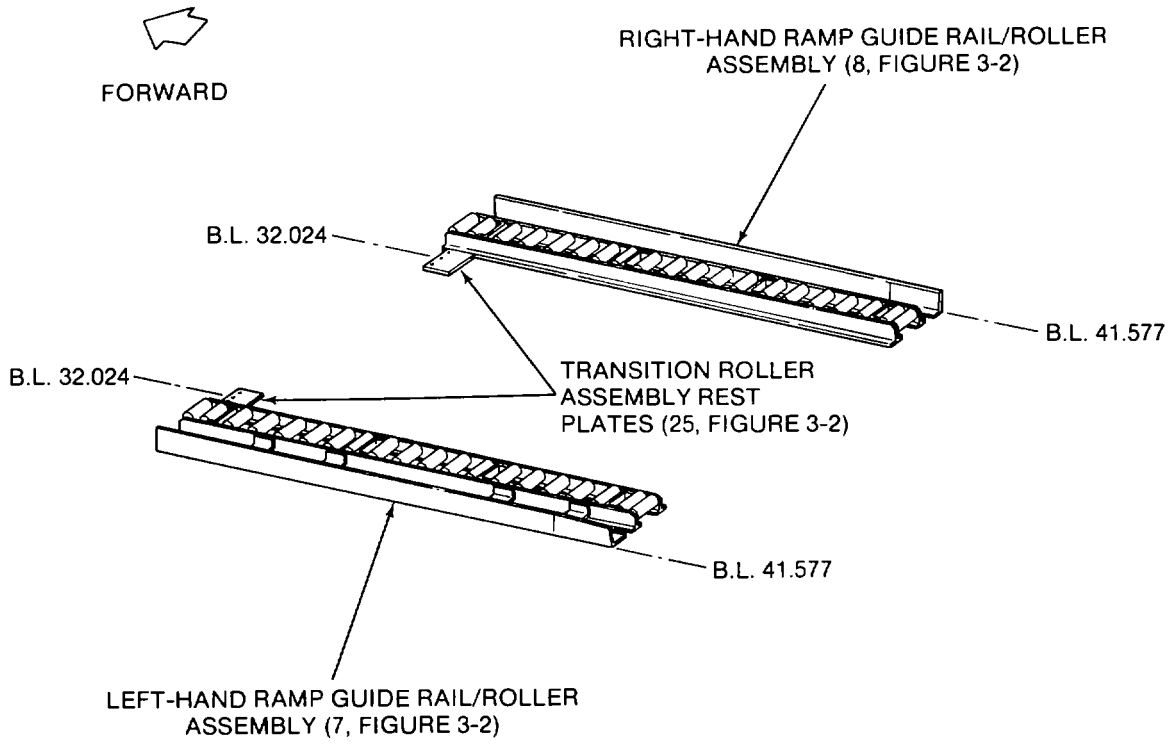


NOTE

REFER TO FIGURE 2-14 FOR LOCATIONS OF BOLTS REMOVED ON THESE BOLT LINES.

Figure 2-17. Locating Ramp Guide Rail/Roller Assemblies

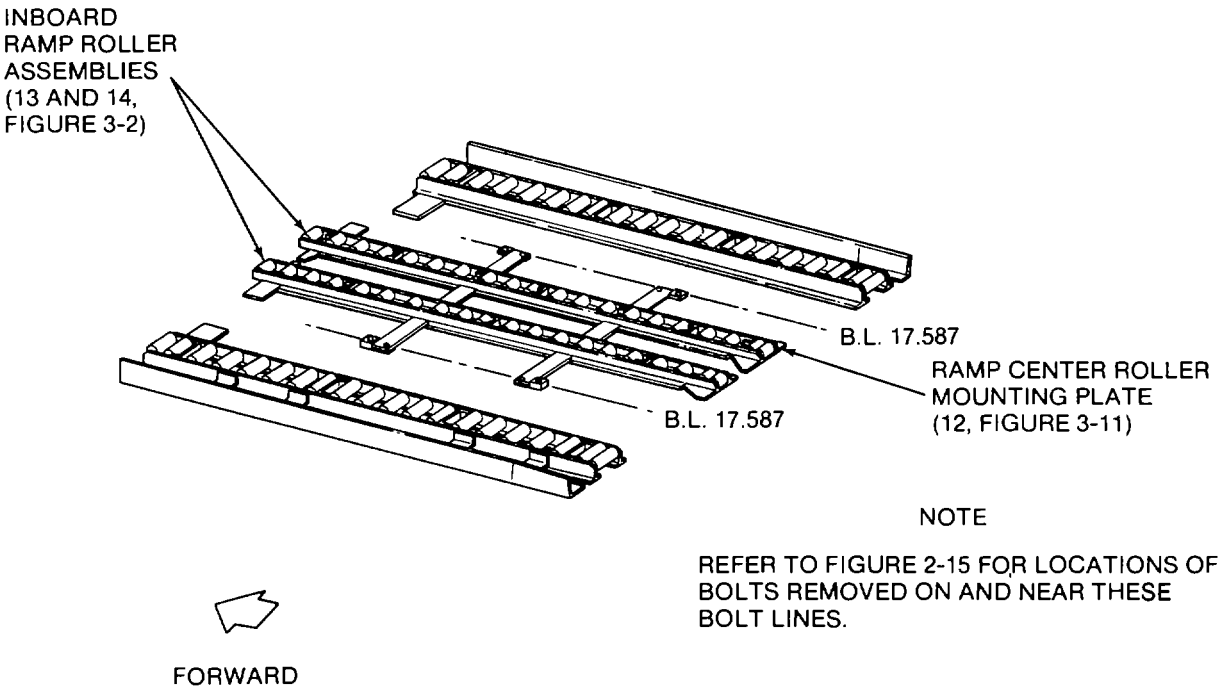


NOTE

REFER TO FIGURE 2-15 FOR LOCATIONS OF BOLTS REMOVED ON AND NEAR THESE BOLT LINES.

**Figure 2-18. Locating Forward and Aft Ramp Center Roller Mounting Bar Assemblies and Inboard Ramp Roller Assemblies**

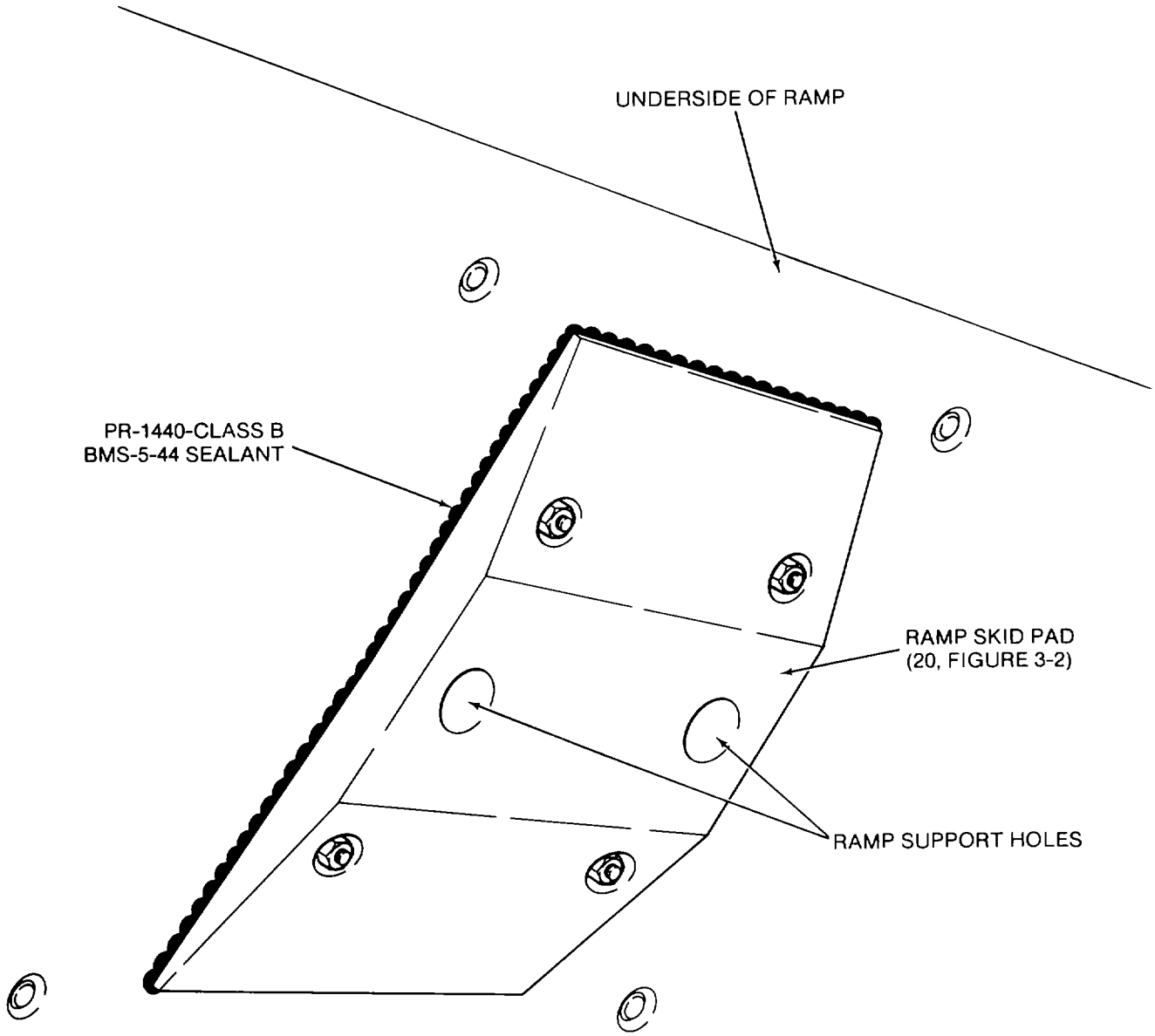


**Figure 2-19. Ramp Skid Pad Installation**

*d. Left- and Right-Hand Inboard Ramp Roller Assemblies*. Install left- and right-hand inboard ramp roller assemblies (13 and 14) as follows:

(1) Position left and right-hand inboard ramp roller assemblies as shown in Figure 2-18 over the locations from which bolts were removed (para 2-9a.(4) and 2-9a.(5)).

(2) Install one countersunk bolt (27, Figure 3-2) at or near B.L. 10.000 through ramp center roller mounting plate (10, Figure 3-11) at transition roller assembly, station 486.625 (19 and 45, Figure 3-10), for each inboard ramp roller assembly (13 and 14, Figure 3-2).

(3) Install two hex head bolts (35) and flat washers (42) at B.L. 7.186 and B.L. 6.057 through ramp center roller mounting plate (10, Figure 3-11) at each inboard ramp roller assembly (13 and 14, Figure 3-2).

(4) Install two hex head bolts (32) and flat washers (42) through the remaining holes in each ramp center roller mounting plate (10, Figure 3-11).

(5) Install three hex head bolts (30, Figure 3-2) and flat washers (31) to secure each ramp center roller mounting plate (12, Figure 3-11) to the helicopter ramp floor.

(6) Attach each inboard ramp roller assembly (13 and 14, Figure 3-2) to forward and aft ramp center roller mounting bar assemblies (16 and 17). Use two hex head bolts (36), flat washers (33) and self-locking nuts (37). Make certain that the flat washers are used under the component which turns, either the nut or bolt.

*e. Ramp Skid Pad*. Install ramp skid pad (20, Figure 3-2) as follows:

(1) Refer to steps 2-9a. and 2-9a.(1) and Figure 2-13 to gain access to screw locations.

(2) Install ramp skid pad (20, Figure 3-2) as shown in Figure 2-19, using previously removed hardware. Seal ramp skid pad periphery with (PR-1440-Class B) BMS-5-44 Sealant.

**2-10. System Installation - Ramp Extension Roller Assembly**. Install ramp extension roller assemblies (15, Figure 3-2) as follows:

*a. Ramp Extension Roller Assemblies.* Install ramp extension roller assemblies (15, Figure 3-2) as follows:

(1) Position a ramp extension roller assembly (15) on the left ramp extension. Make sure that six quick-release pins (1, Figure 3-12) engage the holes drilled in paragraph 2-7 as shown in Figure 2-20.

(2) Install the remaining ramp extension roller assembly (15, Figure 3-2) on right ramp extension as described in paragraph 2-10b.(l).

*b. Ramp and Ramp Extension Support Assemblies*. Install ramp support assembly (19, Figure 3-2) and ramp extension support assembly (18) as follows:

(1) Refer to Figures 2-21 and 2-22 and position ramp support assembly (19, Figure 3-2) so that index support ramp support weldment (1, Figure 3-15) engages both ramp support holes in ramp skid pad (20, Figure 3-2). Adjust support assembly to the proper height.

(2) Refer to Figures 2-21 and 2-22 and position a ramp extension support assembly (18, Figure 3-2) under each ramp extension roller assembly (15) so that ramp extensions support index support (1, Figure 3-14) is engaged. Ensure that FWD/AFT marking on support assembly is oriented parallel with aircraft centerline.

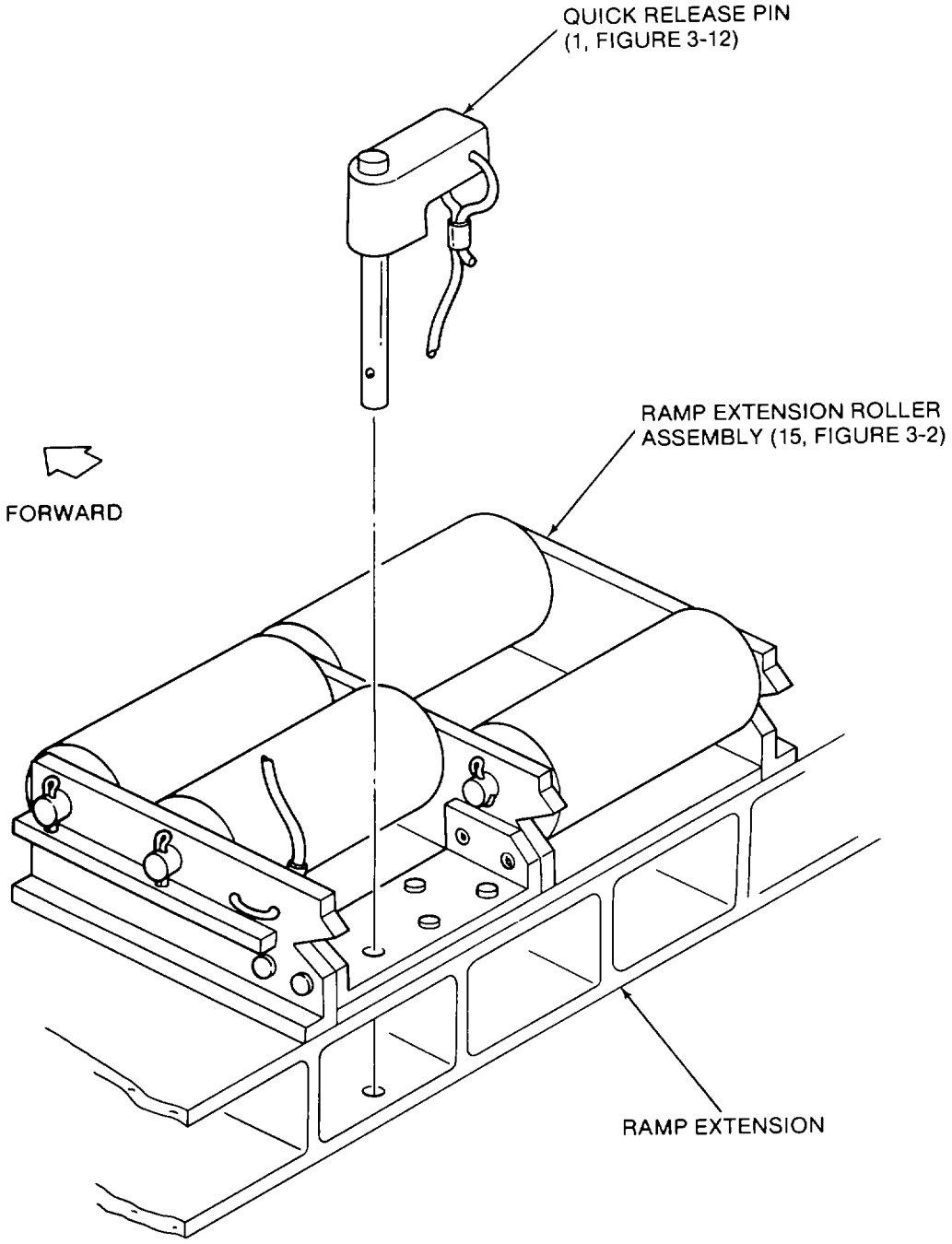


**Figure 2-20. Installation of Ramp Extension Roller Assembly**

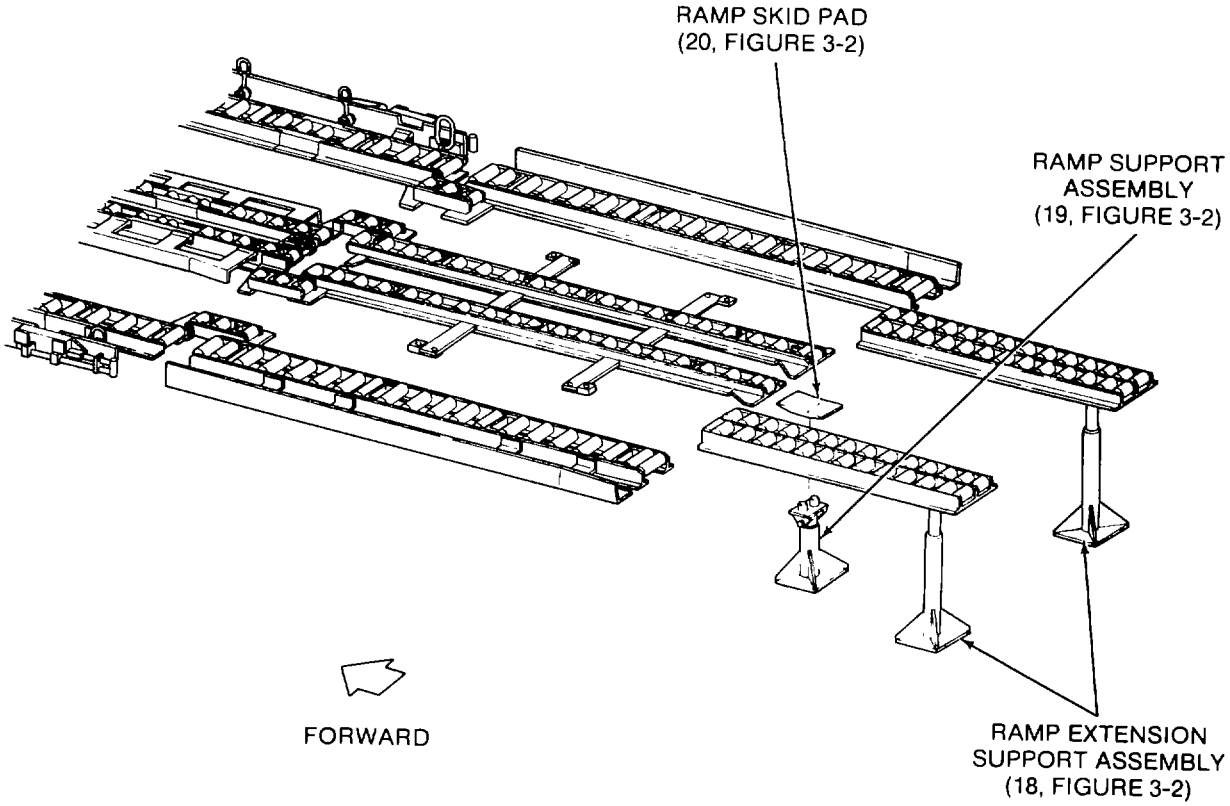


**Figure 2-21. Location of Ramp Support Assemblies**

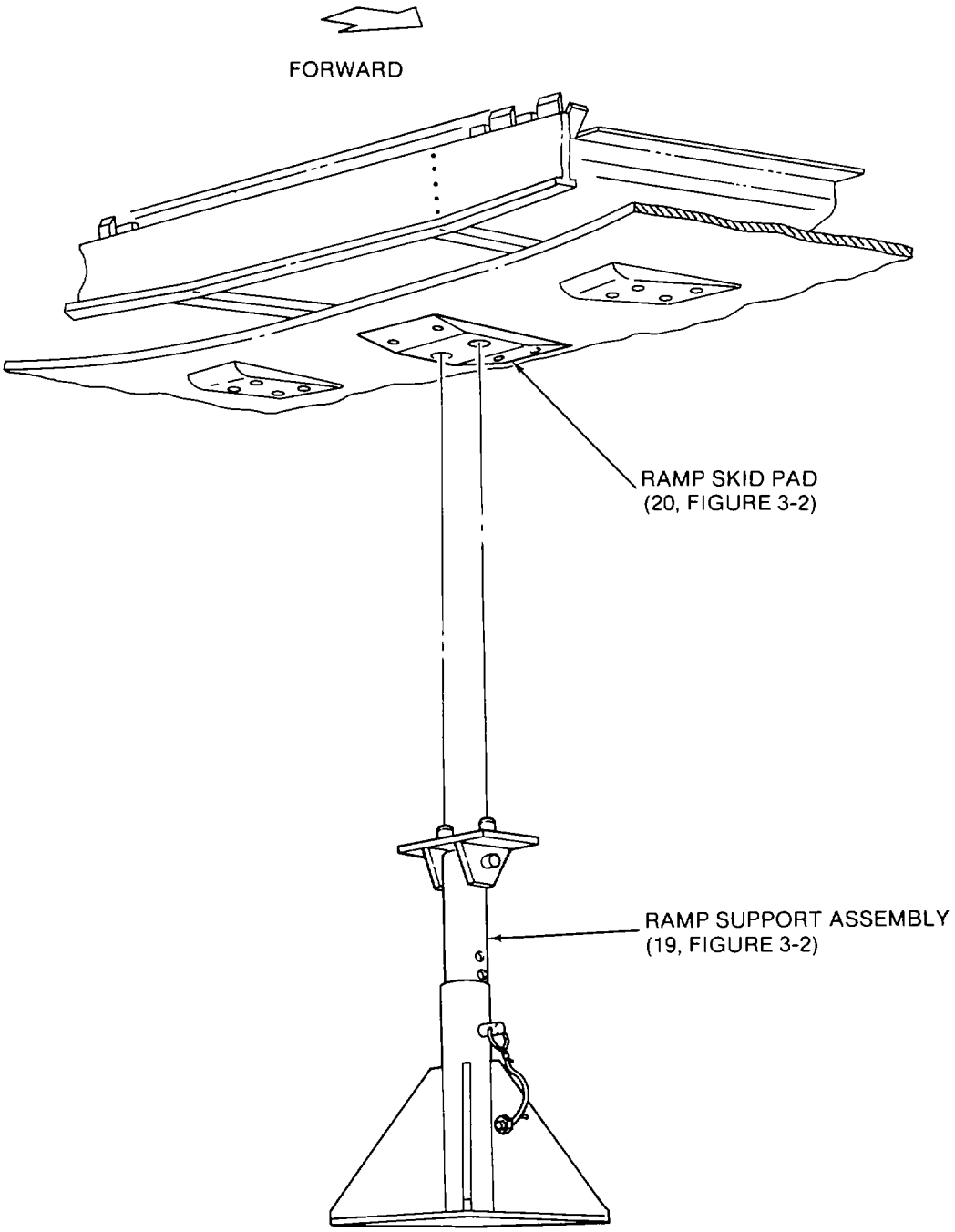


**Figure 2-22. Installation of Ramp Support Assembly**

## SECTION IV
## OPERATING INSTRUCTIONS

**2-11. Cargo Handling**. The Helicopter Internal Cargo Handling System can be used for a variety of cargo.

*a. Cargo Range*. Cargo that can be handled by the Helicopter Internal Cargo Handling System is listed in Table 2-4. A mixture of pallets, personnel and/or vehicles may be combined. However, all cargo must be properly restrained to ensure safe operation of the helicopter and the safety of personnel. Loads must be restrained in accordance with procedures and guidelines set out in TM55-450-15, Air Movement of Troops and Equipment (Nontactical) HQ DA June 1971 and TM55-450-18, Internal and External Loads, CH47 Helicopter, HQ DA August 1970.

*b. Load*. Total load must always be within the normal weight and center-of-gravity limits as specified in the operational technical orders.

**2-12. System Configurations**. The Helicopter Internal Cargo Handling System can be placed in any one of four configurations. These are loading, restraint, flight and unloading. Refer to Tables 2-5, 2-6 and 2-7 for the configurations applicable to 463L Pallets, Warehouse Pallets and Wheeled Vehicles. To accomplish the configurations described above and in the referenced tables, several components must be set in a predetermined position. These components are listed below in conjunction with the illustration that defines the component location and/or position.

(1) Outboard Rail/Roller Assemblies, Stations 158.500 to 274.000, 272.531 to 374.000, and 373.469 to 487.000 - Figure 2-23.
(2) Inboard Center Rail Guide - Figure 2-24.
(3) Ramp Support Assembly - Figure 2-25.
(4) Pallet Lock Assembly - Figure 2-26.
(5) Retractable Flange Assembly - Figure 2-26.
(6) 10k Fitting Assembly - Figure 2-27.
(7) 5k Tiedown Fitting Assembly - Figure 2-28.

**Table 2-4. Applicable Cargo**

| Type of Cargo | Quantity |
|---|---|
| HCU-6/E (88 x 108 inches) | 3 |
| HCU-12/E or HCU-10/C (54 x 88 inches) | 6 |
| Warehouse wooden pallets (40 x 48 inches) | 8-10*** |
| Wheeled vehicles | * |
| Miscellaneous (TOW, Hellfire, etc.) equipment (pallet or skid mounted) | * |
| Personnel | ** |

* Quantity dependent on size and helicopter capacity.
** System does not provide for personnel transport but it is compatible with personnel.
*** Quantity dependent on pallet weight.

**NOTE**
**A suitable mix of the above cargo can be handled as required.**

**Table 2-5. 463L Pallet Configurations**

| Configuration | Component | Comment |
|---|---|---|
| Load | Outboard Rail/Roller Assemblies, Stations 158.500 to 274.000 (1 and 2, Figure 3-2), Stations 272.531 to 374.000 (3 and 4) and Stations 373.469 to 487.000 (5 and 6) | Down |
| | Inboard Center Guide Rails (5 and 21, Figure 3-7; 65 and 68, Figure 3-8; 37 and 39, Figure 3-9; and 53 and 74, Figure 3-10) | Down |
| | Ramp Support Assemblies (19, Figure 3-2)/Ramp Extension Support Assemblies (18, Figure 3-2) | In Place as Required |
| | Ramp Extension/Ramp Extension Roller Assemblies (15) | In Place as Required |
| | Pallet Lock Assemblies (62, Figure 3-3 and 30, Figure 3-4) | Up (Unlock) |
| | Retractable Flange Assemblies (43, Figure 3-5) | Rotate Outboard (Unlock) |
| | Ramp Guide Rail/Roller Assemblies (7 and 8, Figure 3-2) | ---- |
| | 5k Tiedown Fitting Assemblies (21, Figure 3-2) and 10k Fitting Assemblies (22) | Down (Stowed Position) |
| Restraint | Outboard Rail/Roller Assemblies, Stations 158.500 to 274.000 (1 and 2, Figure 3-2), Stations 272.531 to 374.000 (3 and 4) and Stations 373.469 to 487.000 (5 and 6) | ---- |
| | Inboard Center Guide Rails (5 and 21, Figure 3-7; 65 and 68, Figure 3-8; 37 and 39, Figure 3-9; and 53 and 74, Figure 3-10) | ---- |
| | Ramp Support Assemblies (19, Figure 3-2)/Ramp Extension Support Assemblies (18, Figure 3-2) | ---- |
| | Ramp Extension/Ramp Extension Roller Assemblies (15) | ---- |
| | Pallet Lock Assemblies (62, Figure 3-3 and 30, Figure 3-4) | Down (Locked) |
| | Retractable Flange Assemblies (43, Figure 3-5) | Rotate Inboard (Locked) |
| | 5k Tiedown Fitting Assemblies (21, Figure 3-2) and 10k Fitting Assemblies (22) | |
| | Ramp Guide Rail/Roller Assemblies (7 and 8, Figure 3-2) | ---- |
| Flight | Outboard Rail/Roller Assemblies, Stations 158.500 to 274.000 (1 and 2, Figure 3-2), Stations 272.531 to 374.000 (3 and 4) and Stations 373.469 to 487.000 (5 and 6) | ---- |

**Table 2-5. 463L Pallet Configurations - Continued**

| Configuration | Component | Comment |
|---|---|---|
| Flight (Continued) | Inboard Center Guide Rails (5 and 21, Figure 3-7; 65 and 68, Figure 3-8; 37 and 39, Figure 3-9; and 53 and 74, Figure 3-10) | ---- |
| | Ramp Support Assemblies (19, Figure 3-2)/Ramp Extension Support Assemblies (18, Figure 3-2) | Stow in Helicopter |
| | Ramp Extension/Ramp Extension Roller Assemblies (15) | Rotate Ramp Extension on Ramp, Rollers on Underside (Stowed Position) |
| | Pallet Lock Assemblies (62, Figure 3-3 and 30, Figure 3-4) | ---- |
| | Retractable Flange Assemblies (43, Figure 3-5) | ---- |
| | 5k Tiedown Fitting Assemblies (21, Figure 3-2) and 10k Fitting Assemblies (22) | ---- |
| | Ramp Guide Rail/Roller Assemblies (7 and 8, Figure 3-2) | ---- |
| Unload | Outboard Rail/Roller Assemblies, Stations 158.500 to 274.000 (1 and 2, Figure 3-2), Stations 272.531 to 374.000 (3 and 4) and Stations 373.469 to 487.000 (5 and 6) | ---- |
| | Inboard Center Guide Rails (5 and 21, Figure 3-7; 65 and 68, Figure 3-8; 37 and 39, Figure 3-9; and 53 and 74, Figure 3-10) | ---- |
| | Ramp Support Assemblies (19, Figure 3-2)/Ramp Extension Support Assemblies (18, Figure 3-2) | In Place as Required |
| | Ramp Extension/Ramp Extension Roller Assemblies (15) | In Place as Required |
| | Pallet Lock Assemblies (62, Figure 3-3 and 30, Figure 3-4) | Up (Unlock) |
| | Retractable Flange Assemblies (43, Figure 3-5) | Rotate Outboard (Unlock) |
| | 5k Tiedown Fitting Assemblies (21, Figure 3-2) and 10k Fitting Assemblies (22) | ---- |
| | Ramp Guide Rail/Roller Assemblies (7 and 8, Figure 3-2) | ---- |

**Table 2-6. Warehouse Pallet Configurations**

| Configuration | Component | Comment |
|---|---|---|
| Load | Outboard Rail/Roller Assemblies, Stations 158.500 to 274.000 (1 and 2, Figure 3-2), Stations 272.531 to 374.000 (3 and 4) and Stations 373.469 to 487.000 (5 and 6) | Down |
| | Inboard Center Guide Rails (5 and 21, Figure 3-7; 65 and 68, Figure 3-8; 37 and 39, Figure 3-9; and 53 and 74, Figure 3-10) | Up |
| | Ramp Support Assemblies (19, Figure 3-2)/Ramp Extension Support Assemblies (18, Figure 3-2) | In Place as Required |
| | Ramp Extension/Ramp Extension Roller Assemblies (15) | In Place as Required |
| | Pallet Lock Assemblies (62, Figure 3-3 and 30, Figure 3-4) | Down (Locked) |
| | Retractable Flange Assemblies (43, Figure 3-5) | Rotate Inboard (Unlock) |
| | 5k Tiedown Fitting Assemblies (21, Figure 3-2) and 10k Fitting Assemblies (22) | Up |
| | Ramp Guide Rail/Roller Assemblies (7 and 8, Figure 3-2) | ---- |
| Restraint | Outboard Rail/Roller Assemblies, Stations 158.500 to 274.000 (1 and 2, Figure 3-2), Stations 272.531 to 374.000 (3 and 4) and Stations 373.469 to 487.000 (5 and 6) | ---- |
| | Inboard Center Guide Rails (5 and 21, Figure 3-7; 65 and 68, Figure 3-8; 37 and 39, Figure 3-9; and 53 and 74, Figure 3-10) | ---- |
| | Ramp Support Assemblies (19, Figure 3-2)/Ramp Extension Support Assemblies (18, Figure 3-2) | ---- |
| | Ramp Extension/Ramp Extension Roller Assemblies (15) | ---- |
| | Pallet Lock Assemblies (62, Figure 3-3 and 30, Figure 3-4) | ---- |
| | Retractable Flange Assemblies (43, Figure 3-5) | ---- |
| | 5k Tiedown Fitting Assemblies (21, Figure 3-2) and 10k Fitting Assemblies (22) | Using Straps, Secure Cargo to 5k Tiedown Fitting Assemblies and 10k Fitting Assemblies |
| | Ramp Guide Rail/Roller Assemblies (7 and 8, Figure 3-2) | ---- |
| Flight | Outboard Rail/Roller Assemblies, Stations 158.500 to 274.000 (1 and 2, Figure 3-2), Stations 272.531 to 374.000 (3 and 4) and Stations 373.469 to 487.000 (5 and 6) | ---- |

**Table 2-6. Warehouse Pallet Configurations - Continued**

| Configuration | Component | Comment |
|---|---|---|
| Flight (Continued) | Inboard Center Guide Rails (5 and 21, Figure 3-7; 65 and 68, Figure 3-8; 37 and 39, Figure 3-9; and 53 and 74, Figure 3-10) | ---- |
| | Ramp Support Assemblies (19, Figure 3-2)/Ramp Extension Support Assemblies (18, Figure 3-2) | Stow in Aircraft |
| | Ramp Extension/Ramp Extension Roller Assemblies (15) | Rotate Ramp Extension on Ramp, Roller Assemblies on Underside |
| | Pallet Lock Assemblies (62, Figure 3-3 and 30, Figure 3-4) | ---- |
| | Retractable Flange Assemblies (43, Figure 3-5) | ---- |
| | 5k Tiedown Fitting Assemblies (21, Figure 3-2) and 10k Fitting Assemblies (22) | ---- |
| | Ramp Guide Rail/Roller Assemblies (7 and 8, Figure 3-2) | ---- |
| Unload | Outboard Rail/Roller Assemblies, Stations 158.500 to 274.000 (1 and 2, Figure 3-2), Stations 272.531 to 374.000 (3 and 4) and Stations 373.469 to 487.000 (5 and 6) | ---- |
| | Inboard Center Guide Rails (5 and 21, Figure 3-7; 65 and 68, Figure 3-8; 37 and 39, Figure 3-9; and 53 and 74, Figure 3-10) | ---- |
| | Ramp Support Assemblies (19, Figure 3-2)/Ramp Extension Support Assemblies (18, Figure 3-2) | In Place as Required |
| | Ramp Extension/Ramp Extension Roller Assemblies (15) | In Place as Required |
| | Pallet Lock Assemblies (62, Figure 3-3 and 30, Figure 3-4) | ---- |
| | Retractable Flange Assemblies (43, Figure 3-5) | ---- |
| | 5k Tiedown Fitting Assemblies (21, Figure 3-2) and 10k Fitting Assemblies (22) | ---- |
| | Ramp Guide Rail/Roller Assemblies (7 and 8, Figure 3-2) | ---- |

**Table 2-7. Wheeled Vehicle Configurations**

| Configuration | Component | Comment |
|---|---|---|
| Load | Outboard Rail/Roller Assemblies, Stations 158.500 to 274.000 (1 and 2, Figure 3-2), Stations 272.531 to 374.000 (3 and 4) and Stations 373.469 to 487.000 (5 and 6) | Up - Straps on Cabin, Ramp Up |
| | Inboard Center Guide Rails (5 and 21, Figure 3-7; 65 and 68, Figure 3-8; 37 and 39, Figure 3-9; and 53 and 74, Figure 3-10) | Down |
| | Ramp Support Assemblies (19, Figure 3-2)/Ramp Extension Support Assemblies (18, Figure 3-2) | No Ramp Extension Support Assemblies, No Ramp Support Assemblies (Ramp on Ground) |
| | Ramp Extension/Ramp Extension Roller Assemblies (15) | Ramp Extension on Ground, No Roller Assemblies |
| | Pallet Lock Assemblies (62, Figure 3-3 and 30, Figure 3-4) | Down (Locked) |
| | Retractable Flange Assemblies (43, Figure 3-5) | Rotate Outboard (Unlock) |
| | 5k Tiedown Fitting Assemblies (21, Figure 3-2) and 10k Fitting Assemblies (22) | Up |
| | Ramp Guide Rail/Roller Assemblies (7 and 8, Figure 3-2) | ---- |
| Restraint | Outboard Rail/Roller Assemblies, Stations 158.500 to 274.000 (1 and 2, Figure 3-2), Stations 272.531 to 374.000 (3 and 4) and Stations 373.469 to 487.000 (5 and 6) | ---- |
| | Inboard Center Guide Rails (5 and 21, Figure 3-7; 65 and 68, Figure 3-8; 37 and 39, Figure 3-9; and 53 and 74, Figure 3-10) | ---- |
| | Ramp Support Assemblies (19, Figure 3-2)/ Ramp Extension Support Assemblies (18, Figure 3-2) | ---- |
| | Ramp Extension/Ramp Extension Roller Assemblies (15) | ---- |
| | Pallet Lock Assemblies (62, Figure 3-3 and 30, Figure 3-4) | ---- |
| | Retractable Flange Assemblies (43, Figure 3-5) | ---- |
| | 5k Tiedown Fitting Assemblies (21, Figure 3-2) and 10k Fitting Assemblies (22) | Using Straps and/or Chains, Secure Cargo to 5k Tiedown Fitting Assemblies and 10k Fitting Assemblies |
| | Ramp Guide Rail/Roller Assemblies (7 and 8, Figure 3-2) | ---- |

**Table 2-7. Wheeled Vehicle Configurations - Continued**

| Configuration | Component | Comment |
|---|---|---|
| Flight | Outboard Rail/Roller Assemblies, Stations 158.500 to 274.000 (1 and 2, Figure 3-2), Stations 272.531 to 374.000 (3 and 4) and Stations 373.469 to 487.000 (5 and 6) | ---- |
| | Inboard Center Guide Rails (5 and 21, Figure 3-7; 65 and 68, Figure 3-8; 37 and 39, Figure 3-9; and 53 and 74, Figure 3-10) | ---- |
| | Ramp Support Assemblies (19, Figure 3-2)/Ramp Extension Support Assemblies (18, Figure 3-2) | Stow in Helicopter |
| | Ramp Extension/Ramp Extension Roller Assemblies (15) | Rotate Ramp Extension on Ramp, Roller Assemblies on Underside |
| | Pallet Lock Assemblies (62, Figure 3-3 and 30, Figure 3-4) | ---- |
| | Retractable Flange Assemblies (43, Figure 3-5) | ---- |
| | 5k Tiedown Fitting Assemblies (21, Figure 3-2) and 10k Fitting Assemblies (22) | ---- |
| | Ramp Guide Rail/Roller Assemblies (7 and 8, Figure 3-2) | ---- |
| Unload | Outboard Rail/Roller Assemblies, Stations 158.500 to 274.000 (1 and 2, Figure 3-2), Stations 272.531 to 374.000 (3 and 4) and Stations 373.469 to 487.000 (5 and 6) | ---- |
| | Inboard Center Guide Rails (5 and 21, Figure 3-7; 65 and 68, Figure 3-8; 37 and 39, Figure 3-9; and 53 and 74, Figure 3-10) | ---- |
| | Ramp Support Assemblies (19, Figure 3-2)/Ramp Extension Support Assemblies (18, Figure 3-2) | Ramp on Ground |
| | Ramp Extension/Ramp Extension Roller Assemblies (15) | Ramp Extension on Ground |
| | Pallet Lock Assemblies (62, Figure 3-3 and 30, Figure 3-4) | ---- |
| | Retractable Flange Assemblies (43, Figure 3-5) | ---- |
| | 5k Tiedown Fitting Assemblies (21, Figure 3-2) and 10k Fitting Assemblies (22) | ---- |
| | Ramp Guide Rail/Roller Assemblies (7 and 8, Figure 3-2) | ---- |

**NOTE**

**Maximum available width with outboard rail/roller assemblies in stowed position is 85 inches lateral width**

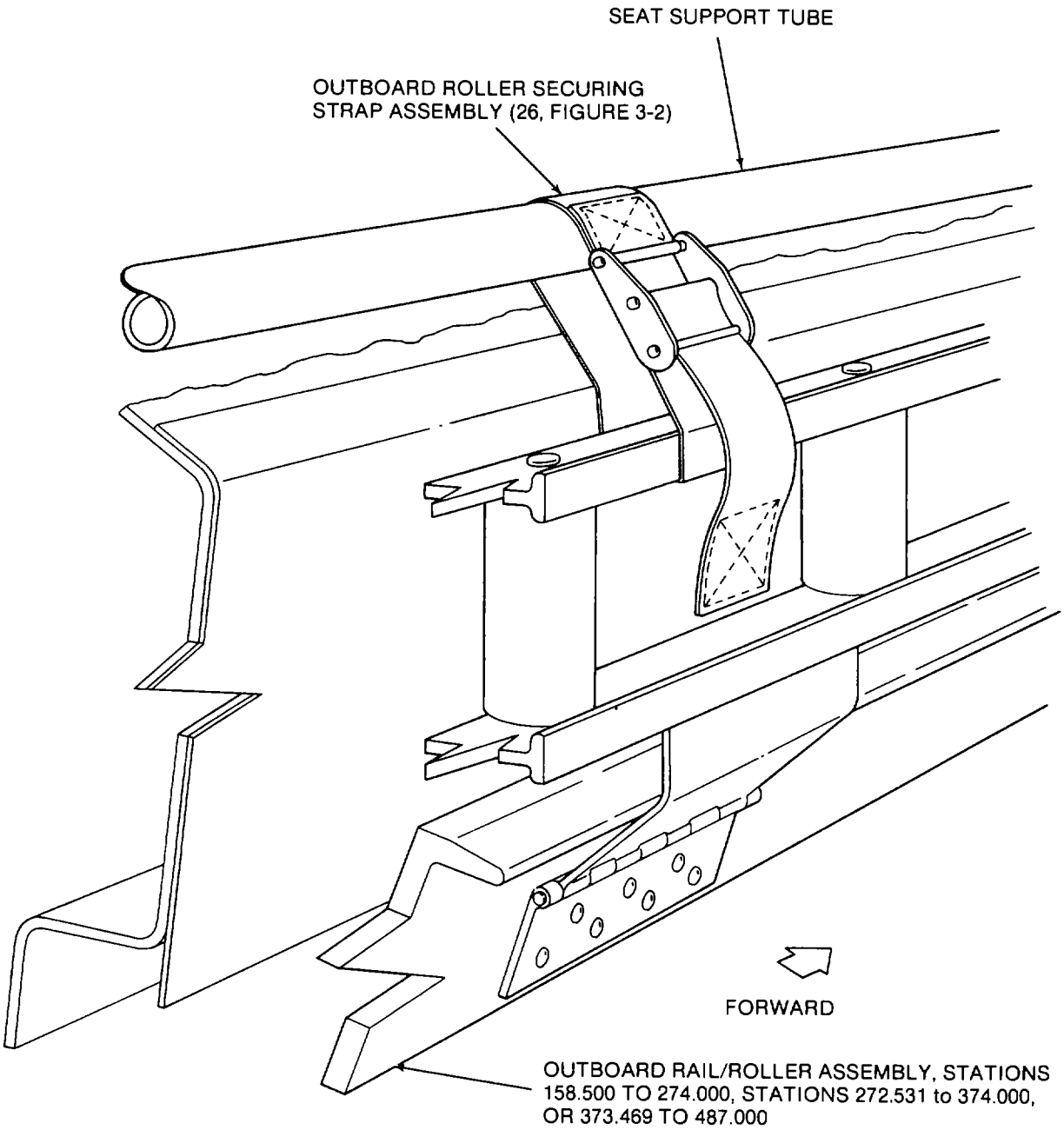


**Figure 2-23. Outboard Rail/Roller Assembly in Stowed (Up) Position**

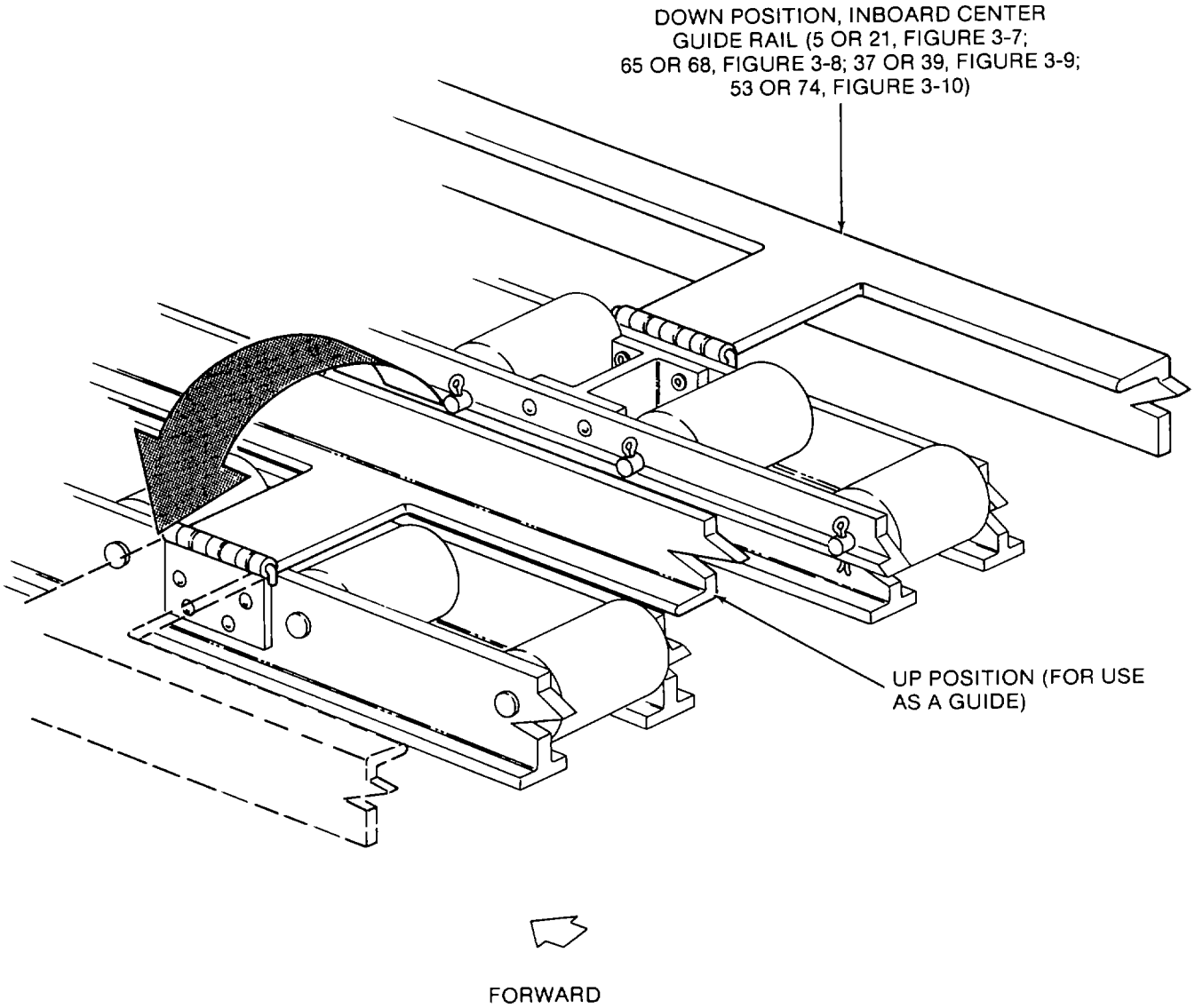


**Figure 2-24. Inboard Center Guide Rail Positions**

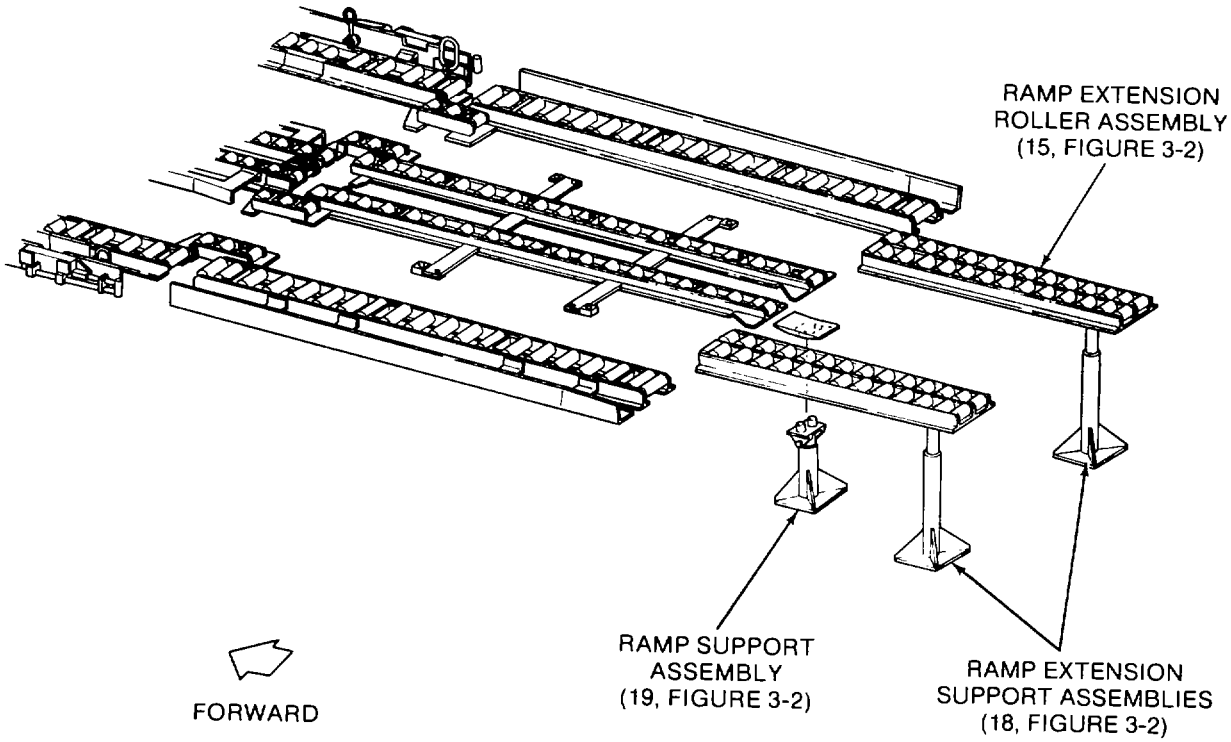


**Figure 2-25. Ramp Extension and Ramp Extension Support Assemblies Installed**

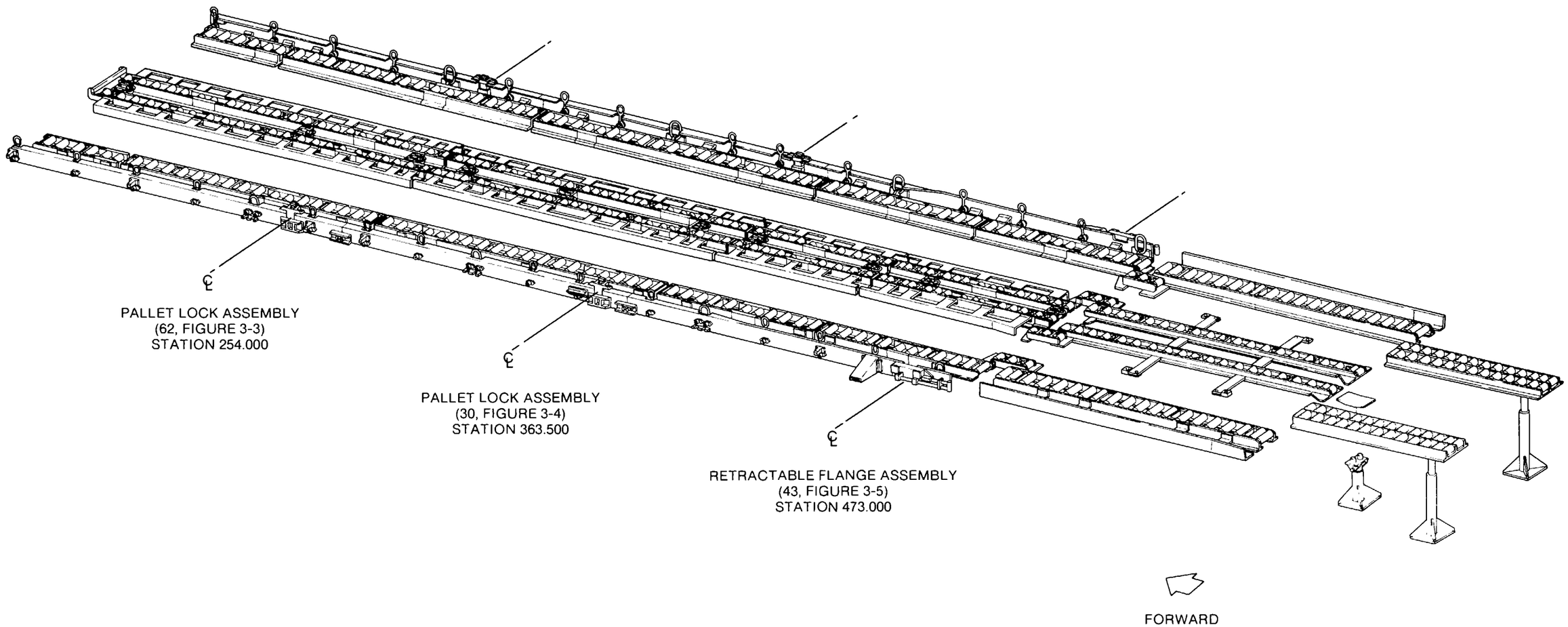


**Figure 2-26. Location of Pallet Lock and Retractable Flange Assemblies**

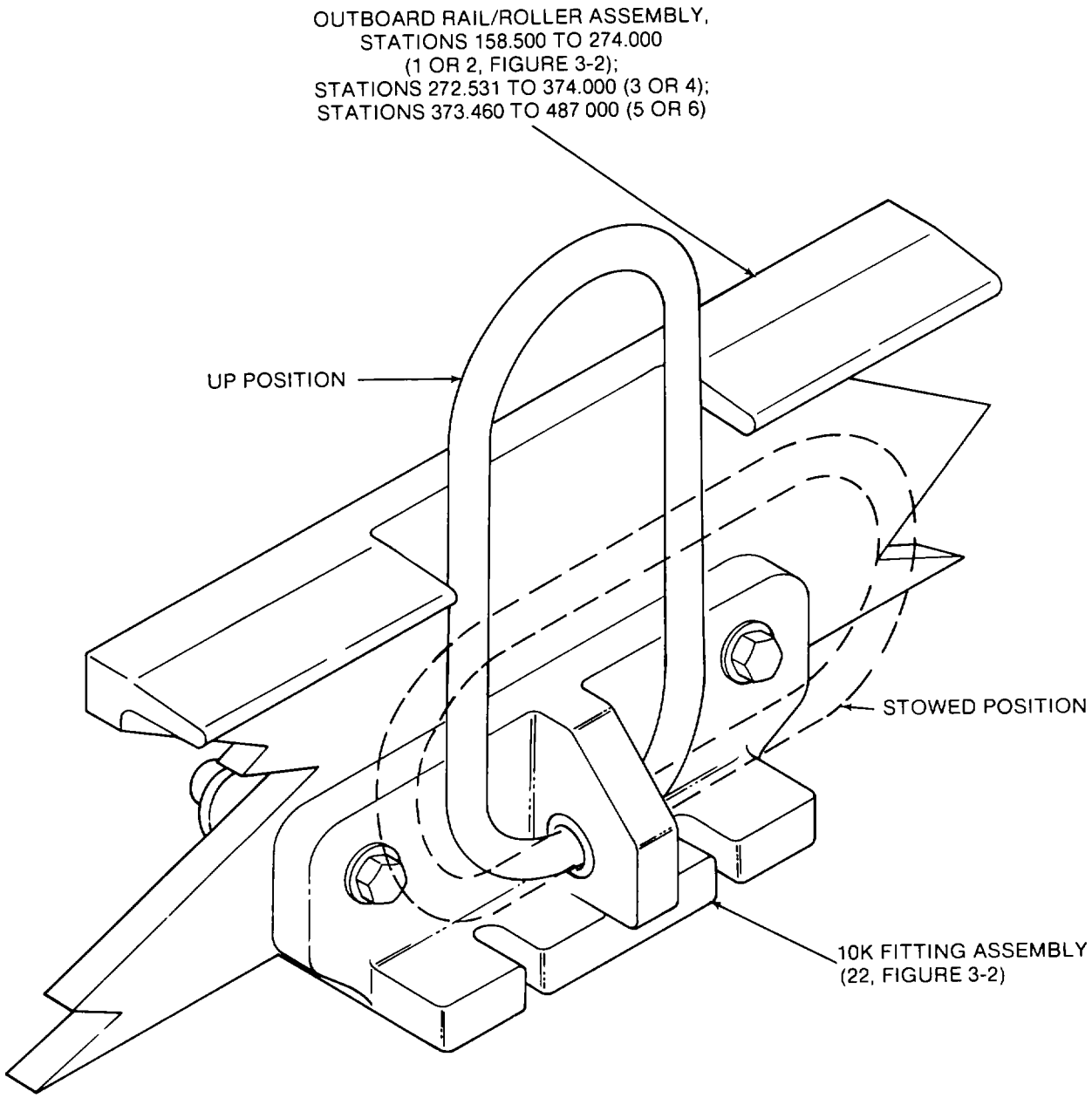


**Figure 2-27. 10k Fitting Assembly**

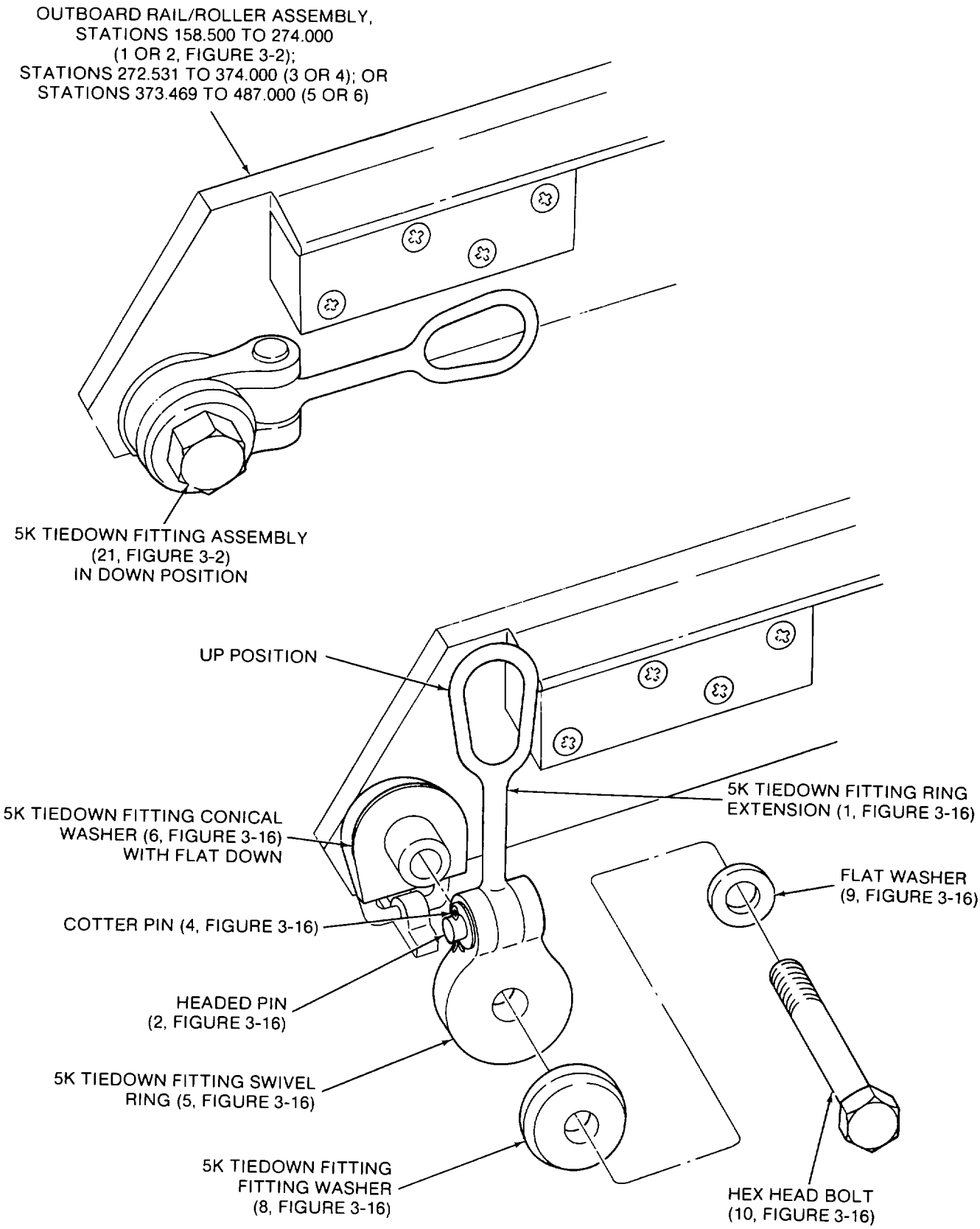


**Figure 2-28. 5k Tiedown Fitting Assembly Installation**

**2-13. Loading Sequence.** Following are loading sequences for the Helicopter Internal Cargo Handling System.

*a. 463L Pallets*. Refer to Table 2-6 to select the proper configuration for cargo system components during loading. Up to three pallets may be winched or manually loaded on the system. Loading configurations and clearances are shown in Figures 2-29, 2-30 and 2-31.

*b. Warehouse Pallets*. Following is the loading sequence for the warehouse pallets.

(1) Refer to Table 2-6 to select the proper configuration for Helicopter Internal Cargo Handling System components during loading. Up to 8 to 10 warehouse pallets can be loaded into the helicopter. However, weight and center-of-gravity requirements must be within the limits specified in paragraph 2-13b.(2). The 40-inch side should be positioned across the handling system so that the 48-inch side is on the ramp guide rail (12, Figure 3-6). Pallets may be winched or manually loaded. During loading, the pallet should be forklifted onto the ramp extension and balanced onto the outboard roller (1). On the ramp, it should be pushed outboard.

(2) Individual warehouse pallets may weigh up to 3,700 pounds. However, in order to maintain floor isolation, the sum of the weights of longitudinally adjacent pallets must not exceed 4,300 pounds. For example, pallets weighing 2,150 pounds or less may be loaded without discrimination. A mix of pallets weighing, for example, 3,000 and 1,200 pounds, would require alternate loading of a 3,000 pound pallet and a 1,200 pound pallet. If the load consists entirely of pallets weighing in excess of 2,150 pounds, the pallets must be spaced longitudinally. The distance, in inches, between the forward edge of one pallet and the forward edge of the subsequent pallet must not be less than W/45.2 when W is the average pallet load in pounds. For example, a load of pallets weighing 3,000 pounds each would need to be spaced 3000/45.2 = 66 inches center to center apart. Pallets that are spaced longitudinally will require tiedowns for longitudinal, lateral and vertical forces. In this situation, there is no requirement to use a barrier system.

*c. Wheeled Vehicles*. Refer to Table 2-7 to select the proper configuration for system components during loading. Winch or manually load the vehicles into the helicopter. For specific procedures, refer to TM-55-450-18, Internal and External Loads, CH47 Helicopter HQ DA, August 1970.

*d. Personnel*. The Helicopter Internal Cargo Handling System is compatible for personnel only or for both cargo and personnel. If both are loaded, the cargo must be forward of the personnel for safety.

*e. Miscellaneous Cargo*. Place on a pallet or skid as desired. If a 6/E Pallet is used, secure the pallet with pallet lock assemblies (62, Figure 3-3 and 30, Figure 3-4) or retractable flange assemblies (43, Figure 3-5). Straps or chains may be used as required.

*f. Mixed Cargo*. Any of the previous cargos may be mixed as desired. The only limitation is space.

**2-14. Hatch Access**. Follow these instructions to gain access to the hatch.

a. Remove, if necessary, any cargo forward of station 377.250 to at least station 157.750.

b. Remove three centerline ring plug assemblies (24, Figure 3-2). This will free the inboard guide/roller assembly, stations 377.313 to 427.188 (11, Figure 3-2). Stow the removed parts ahead of station 272.250 (Figure 2-32).

c. The hatch is now accessible. The removed parts can be re-installed by reversing the preceding steps.

**2-15. Ferry Fuel Port Access**. Follow these instructions to gain access to the ferry fuel port.

a. Remove two hex head bolts (29, Figure 3-2) and two washers (43) from the aft side of the splice connection at station 373.437.

b. Refer to Figure 2-28 and remove 5k tiedown fitting assemblies (21, Figure 3-2) located at stations 380.000, 420.000, 440.000 and 460.000 as shown in Figure 2-33.

c. Refer to Figure 2-6 and remove hex head bolts (28, Figure 3-2) and washers (42, Figure 3-2) at stations 400.000 and 481.780 (Figure 2-33). They secure the 10k fitting assembly (22, Figure 3-2) to the outboard rail/roller assembly, stations 373.469 to 487.000 (6).

d. Stow all of the removed parts and relocate the outboard rail/roller assembly, stations 373.469 to 487.000 (6, Figure 3-2), to the center of the helicopter.

e. Reverse the above procedure to install the outboard rail/roller assembly, stations 373.469 to 487.000 (6).

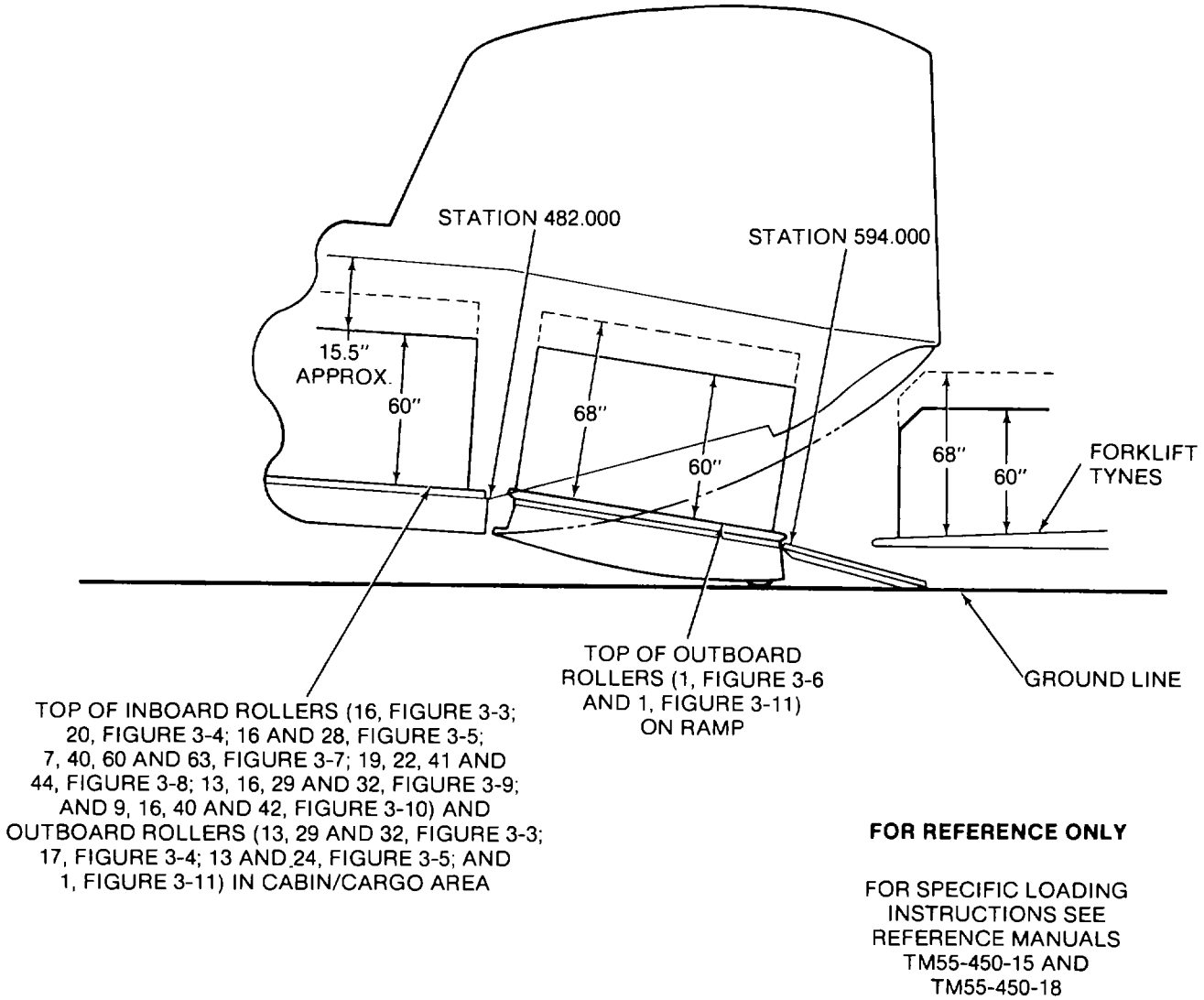


**Figure 2-29. Loading With Ramp Down (Forklift Loading)**

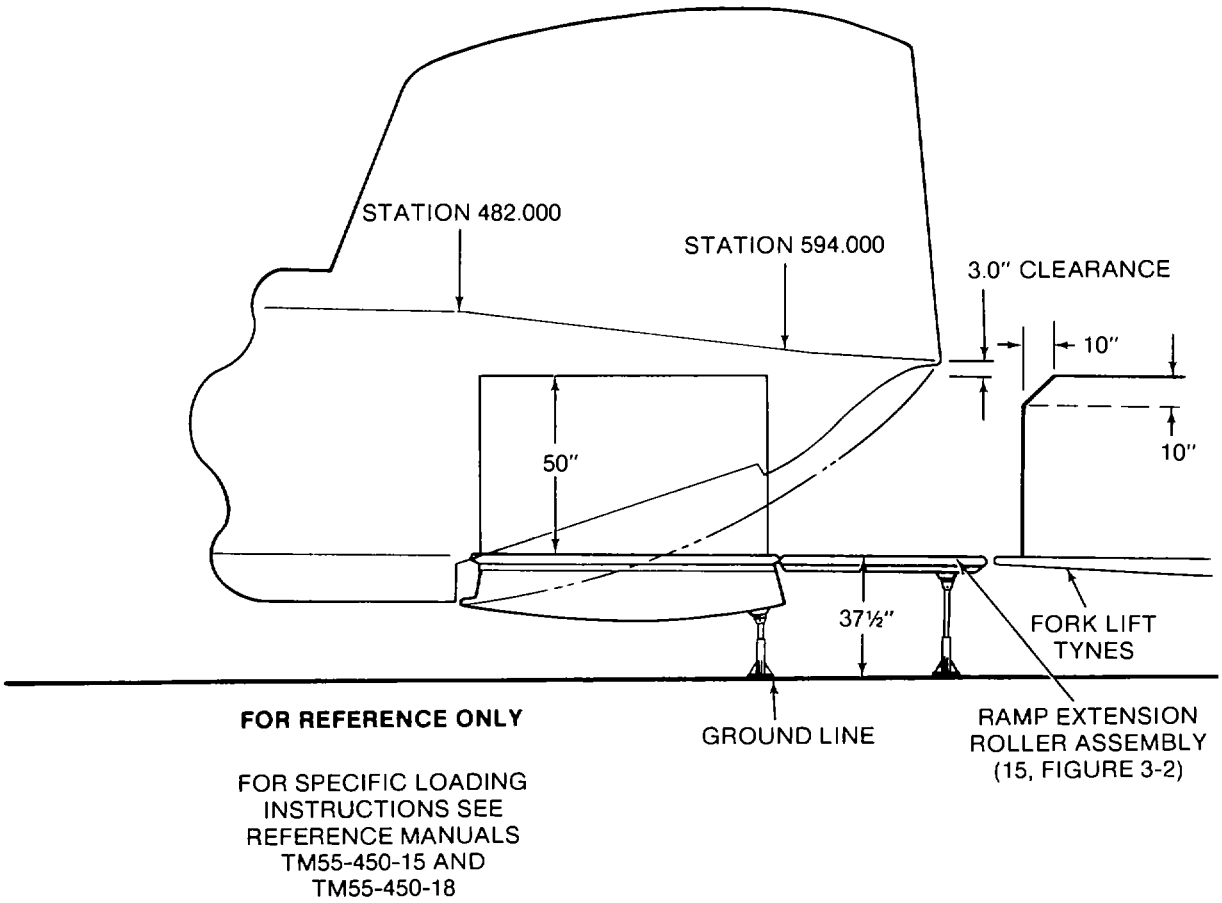


**Figure 2-30. Loading With Ramp in Level Position (K-Loader Configuration)**

**FOR REFERENCE ONLY**

FOR SPECIFIC LOADING
INSTRUCTIONS SEE
REFERENCE MANUALS
TM55-450-15 AND
TM55-450-18

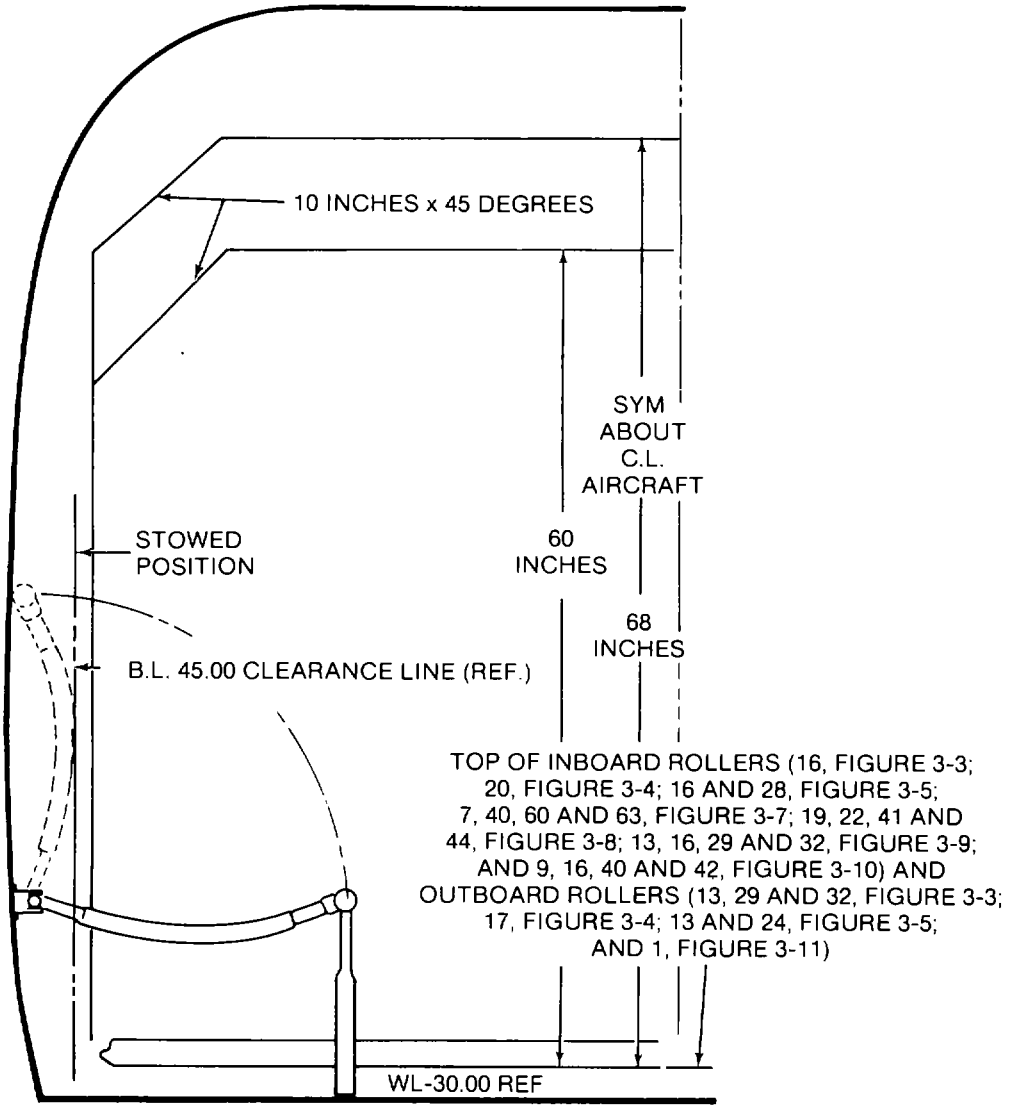


**Figure 2-31. Load Clearances**

**2-16. System Stowage.** Stow the Helicopter Internal Cargo Handling System as follows:

a. Flip up the outboard rail/roller assemblies, stations 158.500 to 274.000 (1 and 2, Figure 3-2), stations 272.531 to 374.000 (3 and 4), and stations 373.469 to 487.000 (5 and 6). Secure them to the seat support tube as shown in Figure 2-22. Refer to Figures 2-34 and 2-35 for the stowage location of cargo system components.

b. Secure loading pole, using outboard rail/roller assemblies, stations 158.500 to 274.000 (1 and 2, Figure 3-2), stations 272.531 to 374.000 (3 and 4), and stations 373.469 to 487.000 (5 and 6). Strap between seat support tube and top of buffer board (Figure 2-35). Locate between station 300.000 and station 400.000 on right-hand side of aircraft.

c. Stow two extension jack stands on aircraft frame on the left-hand side aft of Station 534 above ramp area using two pins provided for this purpose.

d. Stow ramp support stand on aircraft frame on the right-hand side aft of Station 534 above ramp area using two pins provided for this purpose.

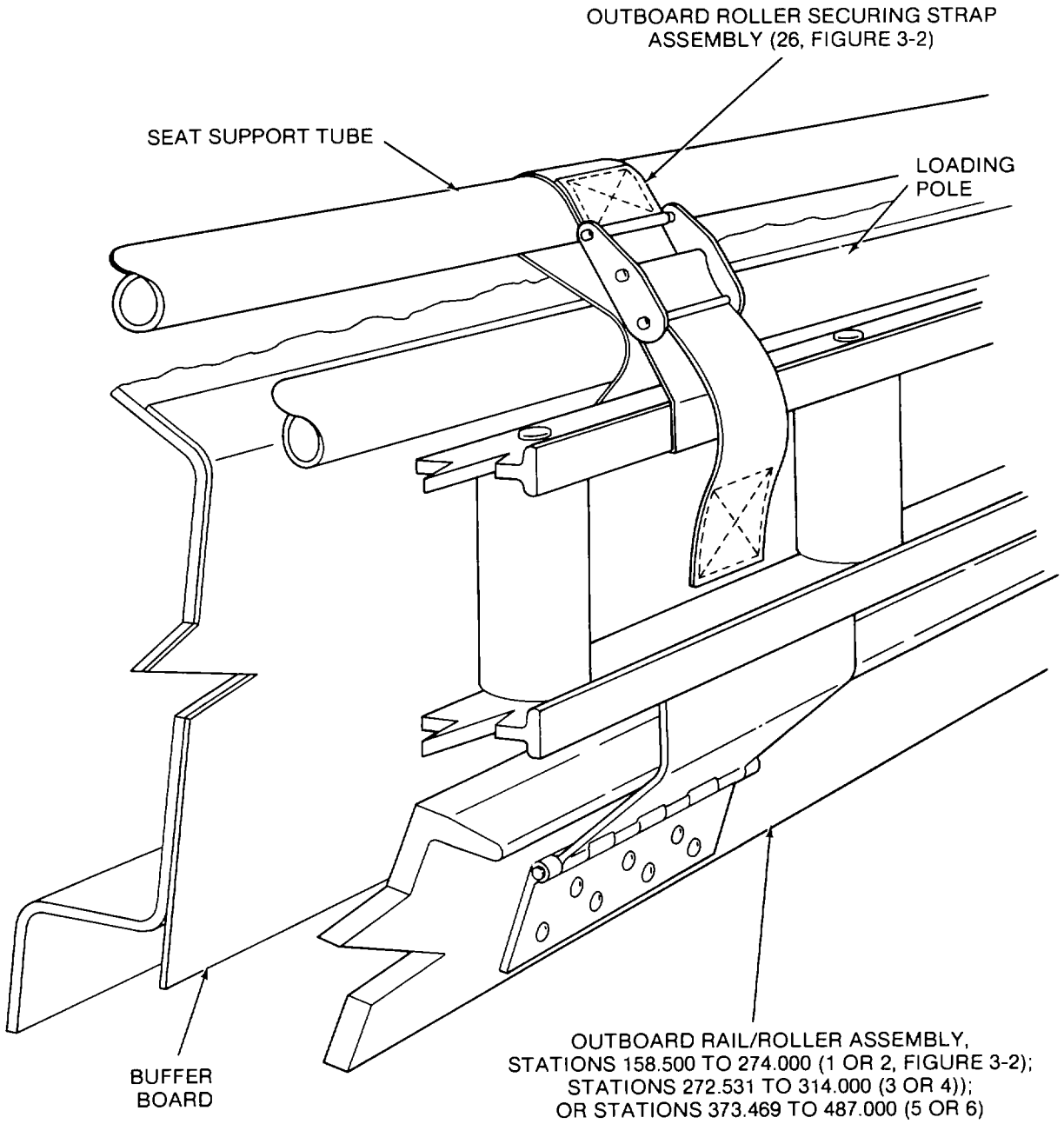


**Figure 2-35. Seat Support Tube Outboard Rail/Roller Assembly Aircraft Loading Pole Stowage**

# CHAPTER 3

# MAINTENANCE INSTRUCTIONS

## SECTION I. GENERAL

**3-1. General.** The Helicopter Internal Cargo Handling System does not require scheduled service and maintenance. However, it must always be inspected prior to use, after storage, after extended periods of non-use, etc., to make certain that the system functions correctly. These instructions are provided in paragraph 3-4.

## SECTION II. MAINTENANCE

**3-2. Periodic Lubrication.** Normally the Helicopter Internal Cargo Handling System requires no periodic lubrication. However, if the cargo system has been used under extreme environmental conditions, assemblies with close-fitting parts may function more efficiently if a dry lubricant is used (Specification MIL-L-46147, NSN 9150-00168-2000).

**WARNING**

**Provide adequate ventilation when using cleaning solvent (Federal Specification P-D-680. Avoid prolonged breathing of vapors and minimize skin contact.**

**CAUTION**

**Do not use cleaning solvent P-D-680 on rollers.**

**3-3. Cleaning.** The Helicopter Internal Cargo Handling System must be kept clean. It may be hosed down. Remove sand, dust, and dirt from all operating parts. If hosing down is not adequate, use dry cleaning solvent, Specification P-D-680, on all components EXCEPT ALL ROLLERS.

**3-4. Inspection.** Inspect the system as follows:

*a. Intervals.* The Helicopter Internal Cargo Handling System should be inspected prior to each cargo mission or when any of the following events has or will occur.

(1) A new cargo handling system has just been installed.

(2) A cargo system has been removed from storage and installed.

(3) A system has been idle in an out-of-service aircraft.

(4) Maintenance has recently been performed and the system has not been inspected.

(5) A system appears to function improperly.

*b. Inspection Criteria.* A general inspection should be accomplished for any one of the reasons indicated in paragraph 3-4a. Inspection also helps to maintain the Helicopter Internal Cargo Handling System in good working condition. Refer to Table 2-1. Make certain that all components shown in the table are accounted for in either the installed or stowed locations as applicable. After this has been accomplished, inspect the Helicopter Internal Cargo Handling System against the illustrations (Figures 2-1 through 2-15). Make certain that all cargo system components are properly installed. Check outboard rail/roller assemblies, stations 158.500 to 274.000 (1 and 2, Figure 3-2); stations 272.531 to 374.000 (3 and 4); stations 373.469 to 487.000 (5 and 6); left-hand ramp guide rail/roller assembly (7); right-hand ramp guide rail/roller assembly (8); inboard guide/roller assemblies, stations 157.750 to 272.188 (9); stations 272.313 to 377.188 (10); stations 377.313 to 427.188 (11); and stations 427.375 to 487.000 (12); left-hand inboard ramp

roller assembly (13); right-hand inboard ramp roller assembly (14); and ramp extension roller assembly (15) for cracks or breaks. No cracks or breaks are allowed.

**3-5. Special Tools and Equipment.** No special tools are required to maintain the Helicopter Internal Cargo Handling System. All common tools required can be found in tool kits available to aircraft maintenance personnel.

**3-6. Disassembly.** Disassembly of the system is not required, except as necessary for replacement of specific components (refer to para 3-7).

**3-7. Repair and Replacement.** The components listed in Table 3-1 may be replaced as required, without the necessity of removal of any other components. Refer to Section III for specific part numbers and locations.

**Table 3-1. Replaceable Parts**

| Description | Location |
|---|---|
| Outboard teeter roller shafts | See Section 3 of Chapter 3 |
| Inboard teeter roller shafts | See Section 3 of Chapter 3 |
| Transition roller shafts | See Section 3 of Chapter 3 |
| Inboard roller shafts | See Section 3 of Chapter 3 |
| Ramp extension shafts | See Section 3 of Chapter 3 |
| Shafts | See Section 3 of Chapter 3 |
| Inboard rollers | See Section 3 of Chapter 3 |
| Outboard rollers | See Section 3 of Chapter 3 |
| Cotter pins | See Section 3 of Chapter 3 |
| Split cotter pins | See Section 3 of Chapter 3 |

**3-8. Tolerances.** There are no wear tolerances that apply to the Helicopter Internal Cargo Handling System. Replace parts only if damaged. (Refer to paragraphs 3-7 and 3-10.)

**3-9. Torque Values.** Table 3-2 lists torque values to be applied to fasteners of the Helicopter Internal Cargo Handling System.

**Table 3-2. Torque Values**

| Part Number | Description | Torque in Inch-Lbs |
|---|---|---|
| 18049 D 555 | Special Bolt | 100 to 140 |
| AN3-10A | Hex Head Bolt | 20 to 25 |
| AN3-11A | Hex Head Bolt | 20 to 25 |
| AN4-5A | Hex Head Bolt | 50 to 70 |
| AN4-11A | Hex Head Bolt | 50 to 70 |
| AN4-12A | Hex Head Bolt | 50 to 70 |
| AN6-13A | Hex Head Bolt | 160 to 190 |
| AN8-17A | Bolt | 480 to 690 |
| MS21250-05028 | Point Bolt | 100 to 140 |
| NAS517-4-11 | Countersunk Bolt | 50 to 70 |
| NAS517-4-12 | Countersunk Bolt | 50 to 70 |
| NAS6608-14 | Hex Head Bolt | 480 to 690 |
| NAS6608-15 | Hex Head Bolt | 480 to 690 |

**3-10. Assembly.** Assembly of the system is not normally required, except when necessary for replacement of specific components. (Refer to paragraph 3-7.) Reassemble in reverse order of disassembly.

**3-11. Preservation.** Refer to Section V.

## SECTION III. ILLUSTRATED PARTS BREAKDOWN

**3-12. General.** This Illustrated Parts Breakdown (IPB) lists, illustrates, and describes the items necessary to support and maintain the Helicopter Internal Cargo Handling System, Part No. 18049 J 100, for the CH47 Helicopter. The purpose of this IPB is to assist personnel with identification and for establishing relationships between parts.

**3-13. Scope.** The scope of the Illustrated Parts Breakdown is as follows:

*a. General.* This paragraph contains descriptive and user information. It provides an overview on how to use the Illustrated Parts Breakdown.

*b. Maintenance Parts List.* This section contains a breakdown of assemblies and parts. It also includes keyed illustrations of the end items that can be disassembled, repaired, obtained from reclamation, supply channels, reinstalled, replaced, and reassembled. The listings for specific systems, components, groups, etc., are, when practical, in a sequence compatible to the order in which such systems, components, groups, etc., are discussed in the maintenance sections. The Maintenance Parts List does not contain:

(1) Parts and assemblies that are not repairable or replaceable.

(2) Parts which lose their identity by being welded, sealed, or joined to other pieces as a permanent assembly.

(3) Parts made of bulk stock, such as lock wire, bonding braid, upholstery, cloth, friction tape, electrical wire, insulation, etc.

(4) Support equipment, such as tools and test equipment.

*c. Numerical Index.* This section contains the part numbers of all parts listed in the Maintenance Parts List.

**3-14. Abbreviations and Symbols.** The abbreviations used in this Illustrated Parts Breakdown are in accordance with Military Standard MII,STD-12.

**3-15. Operation and Maintenance Data.** Refer to Chapter 2 and Chapter 3, Section II for operation and maintenance instructions.

**3-16. Indention.** The items listed in the Maintenance Parts List are indented to indicate item relationship or next higher assembly (NHA). The description of each assembly is followed immediately (except for attaching parts) by the description of the detailed parts indented one column to the right. This indention indicates the relationship of the part to the assembly. To determine the next higher assembly of a part or assembly, note the column in which the first word of the description begins. The first item directly above, which appears one column to the left (except attaching parts) is the next higher assembly.

**3-17. Figure Cross-Reference Notes.** The continuity of the parts listed, and their relationship to the complete assemblies or subassemblies covered by the Maintenance Parts List, are maintained by a parenthetical figure cross-reference note following the description of the part being referenced. These notes are as follows:

*a. (See figure ... for breakdown.)* This statement indicates that the complete or continued detailed breakdown of the part being referenced may be found in the figure reference.

*b. (See figure ... for NHA.)* This statement indicates that the part being referenced may be found in the figure reference, with requirements and relationships to its next higher assembly indicated by column indention.

**3-18. Parts Listed.** In general, the assemblies and parts installed at the time the end item was manufactured are listed and identified in this manual.

**3-19. Attaching Parts.** Screws, bolts, washers, nuts and other items which serve as attaching parts are listed immediately following, and with the same indention as the components they attach. Attaching parts are not listed in disassembly sequence and are not part of the components they attach unless so indicated. The caption (AP) appears in the description column following these attaching parts.

**3-20. Listing of Similar Assemblies.** When similar assemblies contain approximately ninety percent or more identical parts, the assemblies are combined and listed as follows. Otherwise the assemblies are listed separately.

a. All assemblies (figure and index numbers, part numbers, descriptions, quantities, codes) are listed first, followed by the detail parts.

b. A part common to all assemblies in the same quantity is listed once.

c. A part common to all assemblies in different quantities is listed once for each quantity. It is also identified as to which assembly each listing pertains.

d. Peculiar parts are listed once. They are also identified by a usable on code as to which assembly each pertains.

**3-21. Maintenance Parts List.** The following information applies to the Maintenance Parts List.

*a. Federal Supply Codes for Manufacturers (FSCM).* Federal Supply Codes for Manufacturers (FSCM) are listed in the FSCM column. All code numbers are in accordance with the Federal Supply Code for Manufacturers Cataloging Handbook H4-1 and H4-2.

*b. Units per Assembly Column.* The listings in this column indicate the quantity of parts required per next higher assembly. The abbreviation REF indicates that the part is listed for reference purposes only.

*c. Usable On Code.* The usable on code column contains codes to indicate the configurations of similar assemblies listed in and illustrated by a common breakdown. Commonly it is used to differentiate between components of leftand righ-hand assemblies. The absence of a usable on code in this column indicates that parts so shown are usable as replacements on all assemblies covered in the applicable figure.

**3-22. Numerical Index.** This index contains an alpha-numerical listing of all parts described in the Maintenance Parts List.

**3-23. Visual Index.** Figure 3-1 provides an assembled view of the Helicopter Helicopter Internal Cargo Handling System Assembly. A description of each major component is provided. Also included are figure numbers in which that component is broken down. Opposite hand assemblies are shown in the same figure.

**3-24. How To Use This Illustrated Parts Breakdown.** Refer to the following page for instructions in using the Illustrated Parts Breakdown.

# HOW TO USE THE ILLUSTRATED PARTS BREAKDOWN

IF YOU *Don't* KNOW THE PART NUMBER . . .

## *Do This*

1. Refer to illustration list and select the illustration most likely to contain the desired part.
2. Refer to the page number indicated and find desired part on illustration.
3. Note the Figure Number of the illustration and the Index Number of the part. Refer to the corresponding Figure Index Number on the Assembly List page for Part Number, Nomenclature, etc

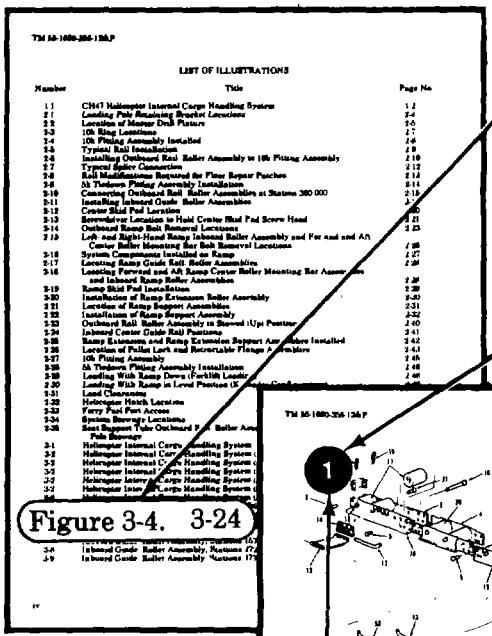


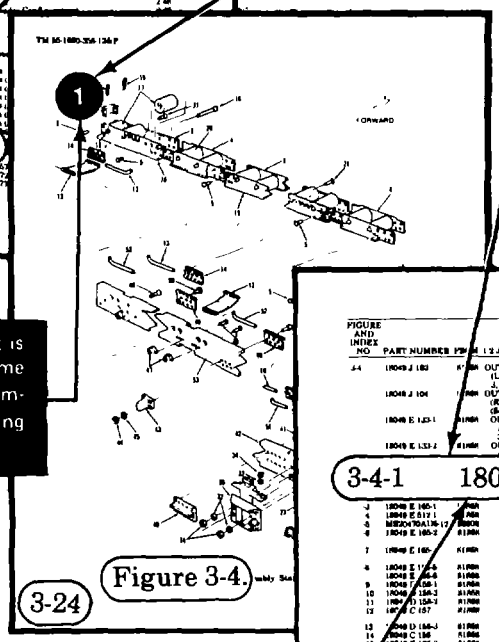


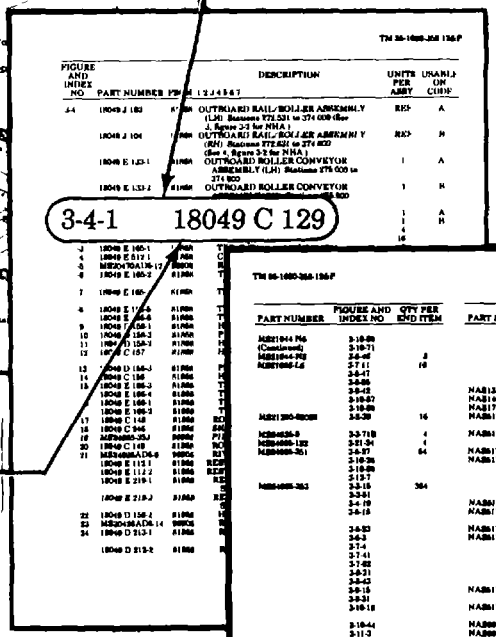


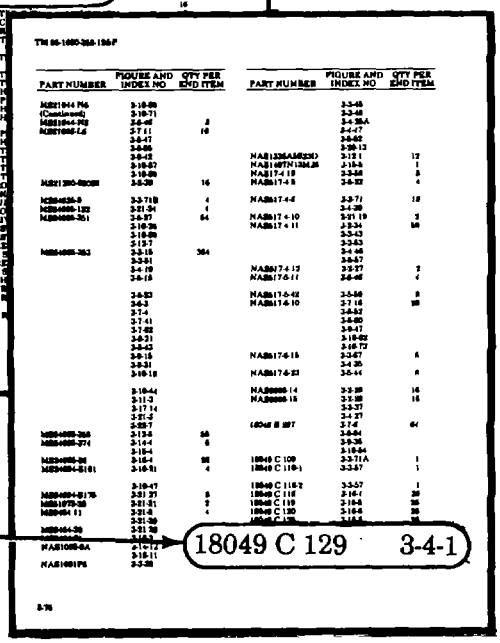


3. If illustration of part is desired, refer to same Figure and Index Number on accompanying illustration.

2. Turn to Figure and Index Number indicated to obtain desired information.

IF YOU *Do* KNOW THE PART NUMBER . . .

## *Do This*

1. Find the Part Number in the Numerical Parts List. Note the Figure and Index Number where the part is called out in Parts List.

(THIS PAGE INTENTIONALLY
LEFT BLANK.)

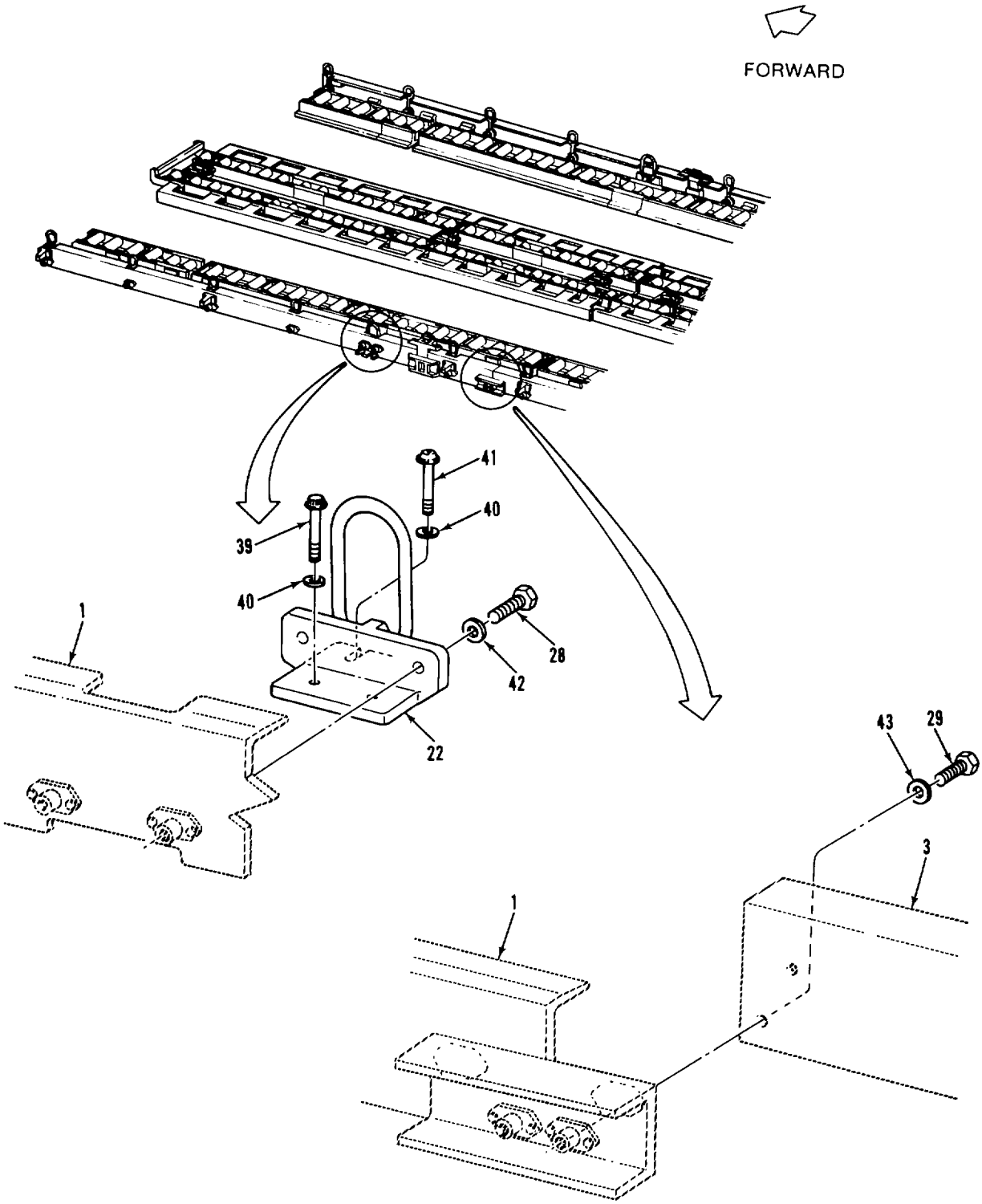


**Figure 3-2. Helicopter Internal Cargo Handling System (Sheet 2 of 6)**

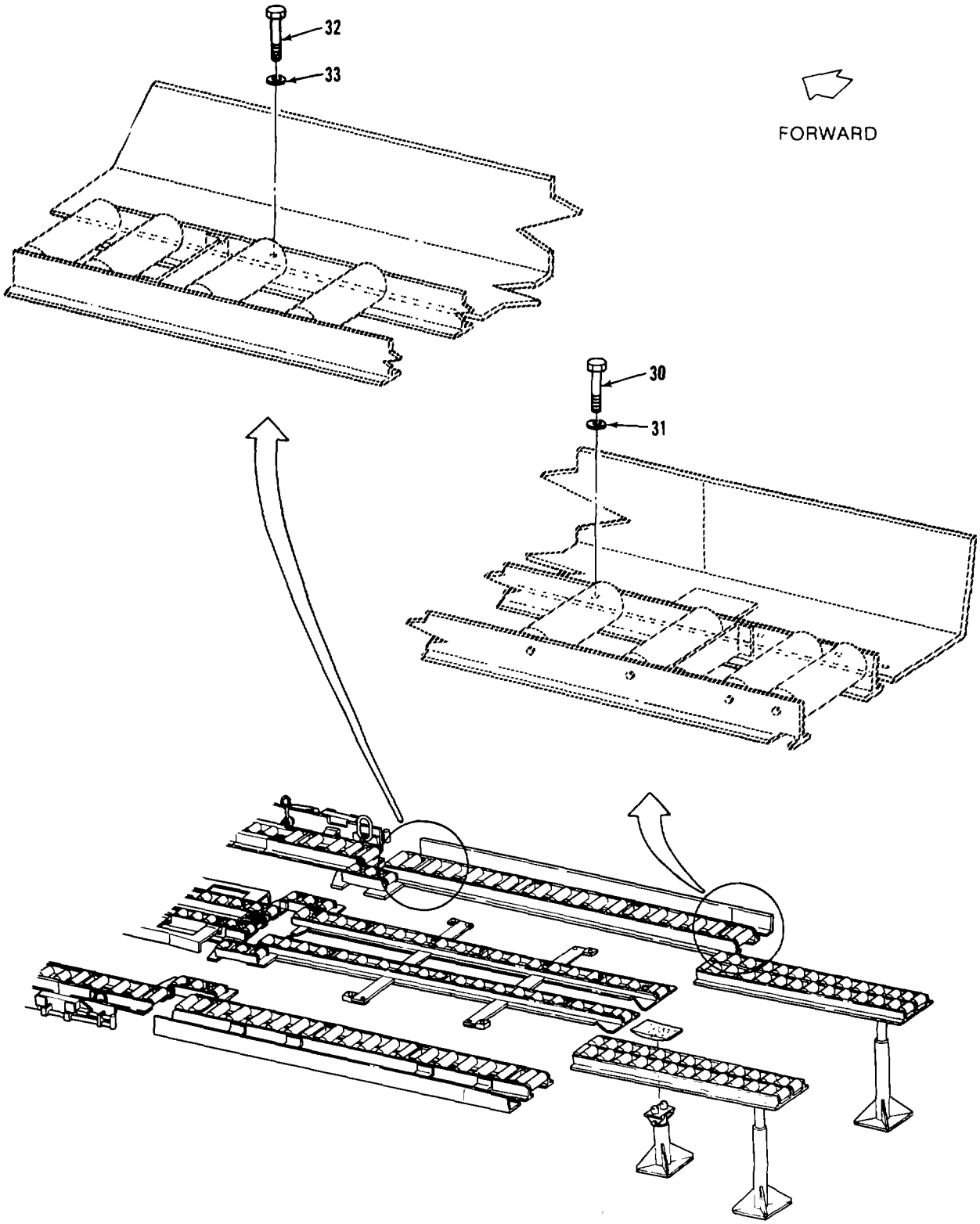


**Figure 3-2. Helicopter Internal Cargo Handling System (Sheet 3 of 6)**

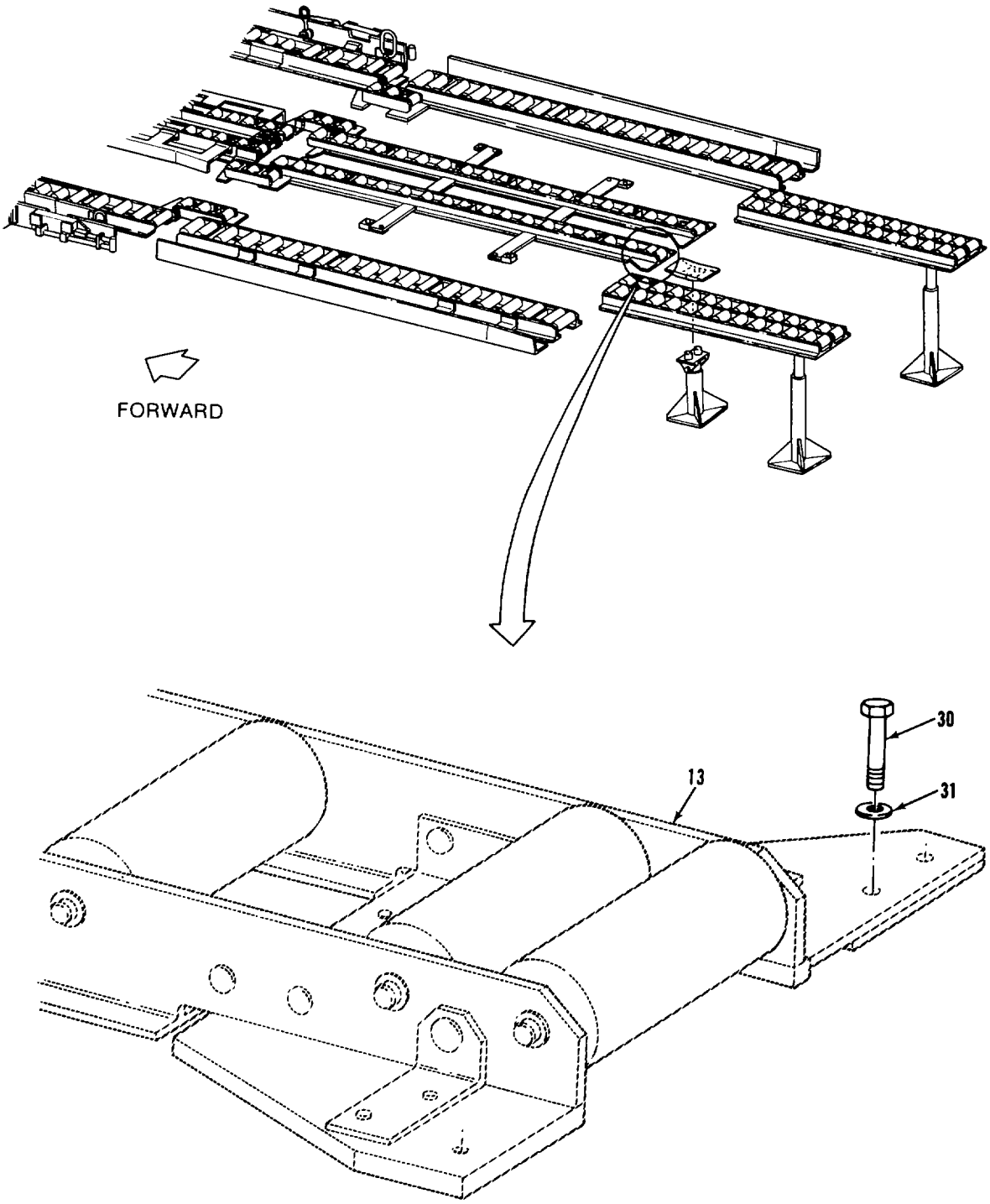


**Figure 3-2. Helicopter Internal Cargo Handling System (Sheet 4 of 6)**

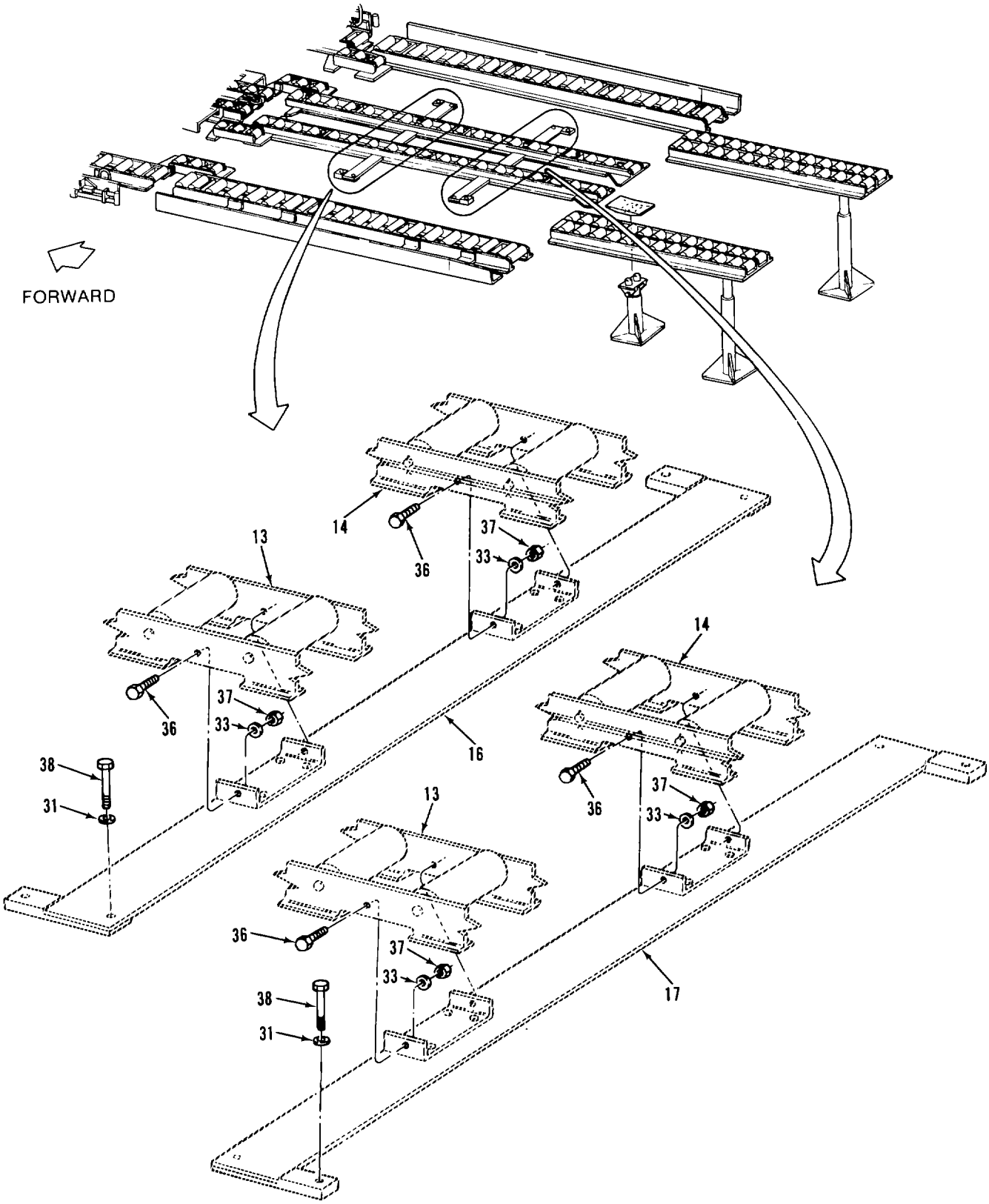


**Figure 3-2. Helicopter Internal Cargo Handling System (Sheet 5 of 6)**

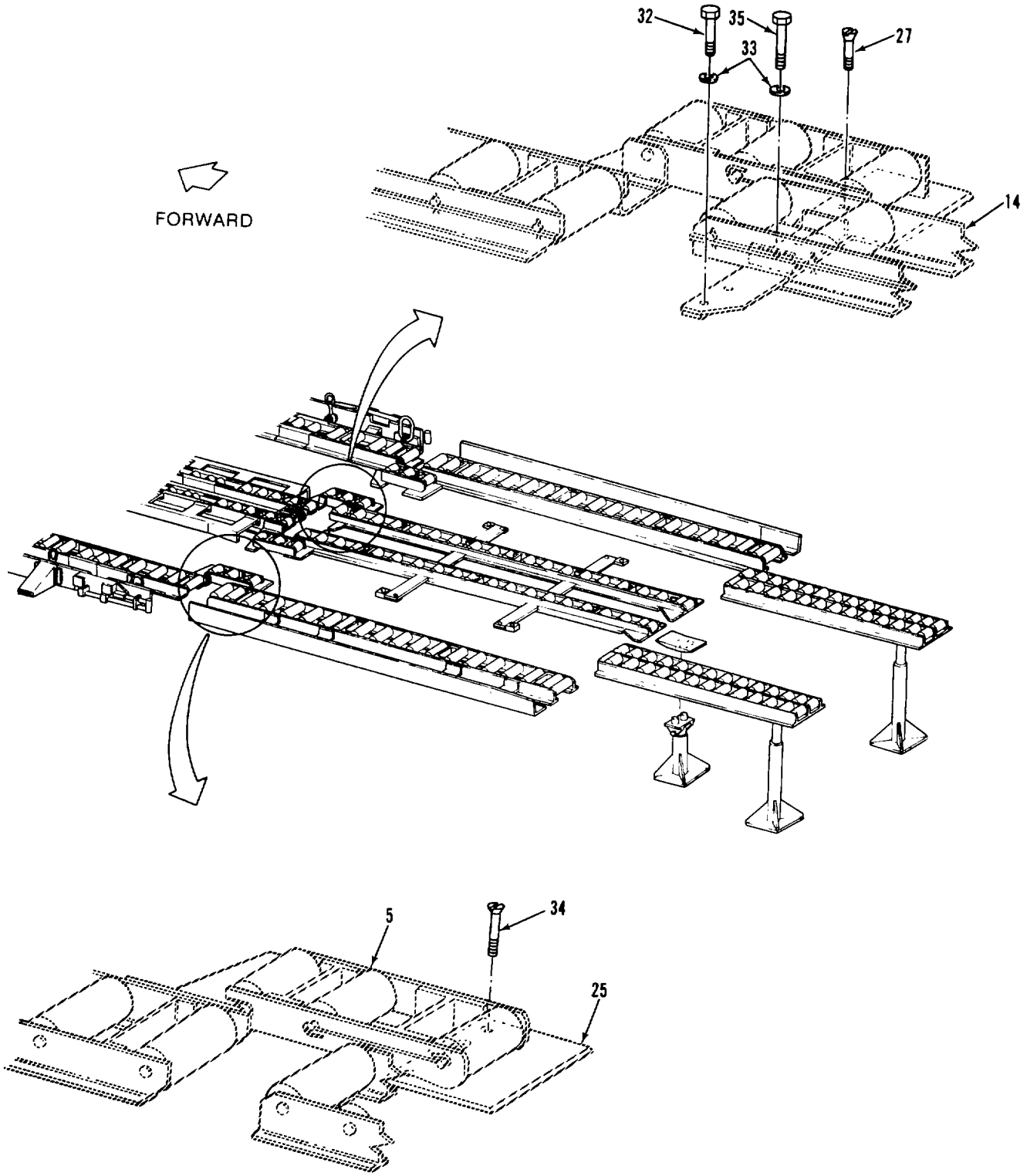


**Figure 3-2. Helicopter Internal Cargo Handling System (Sheet 6 of 6)**

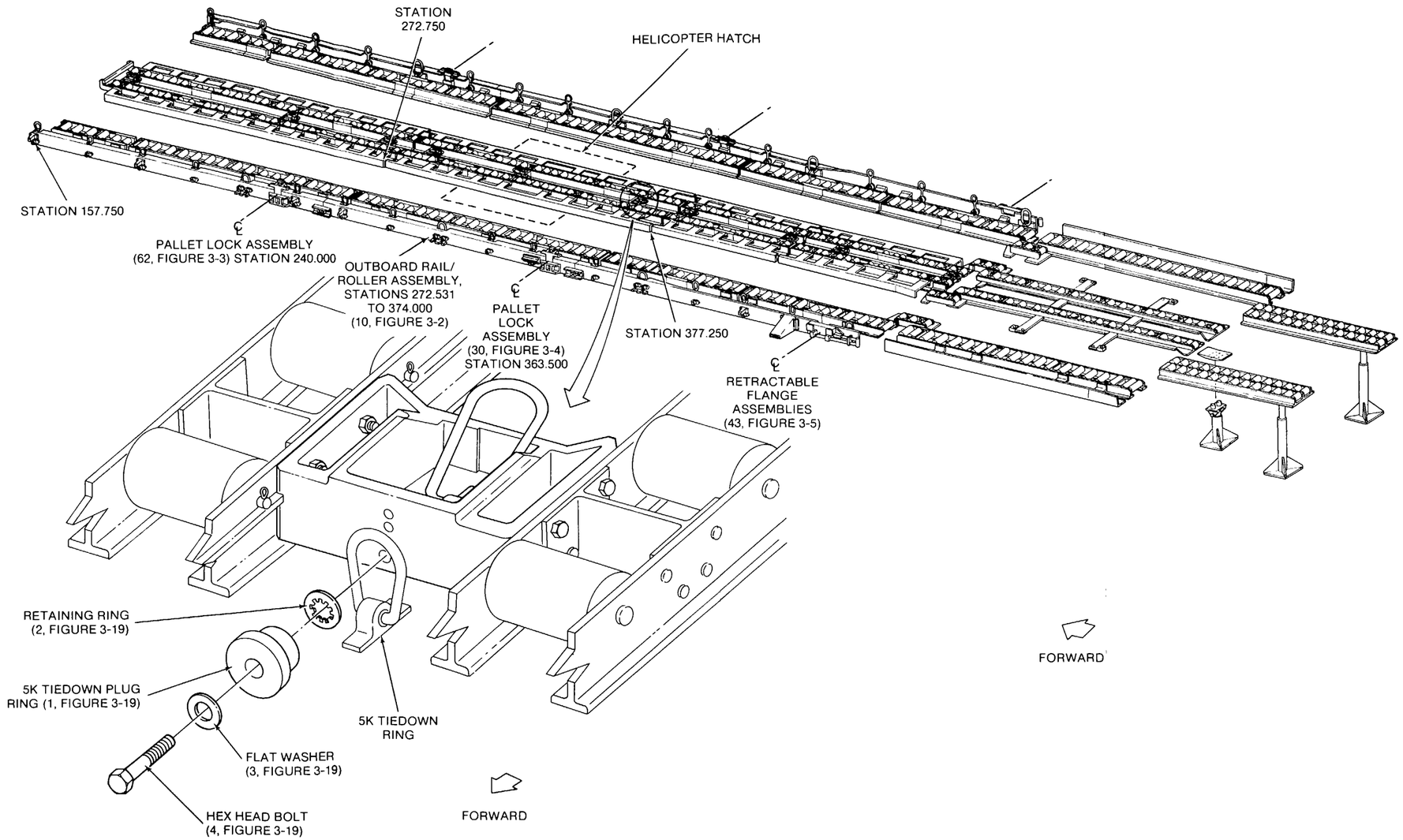


**Figure 2-32. Helicopter Hatch Location**

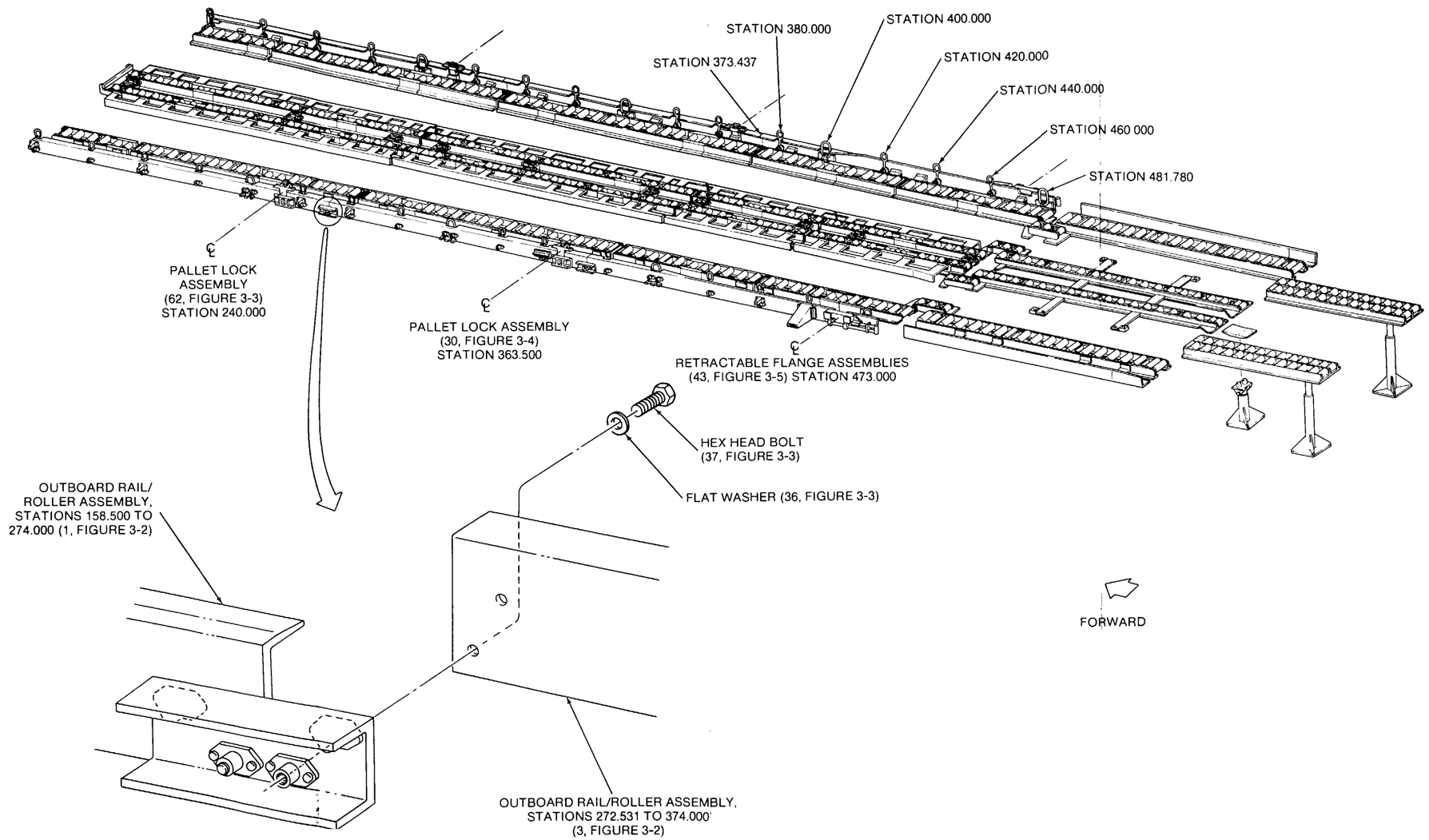


**Figure 2-33. Ferry Fuel Port Access**

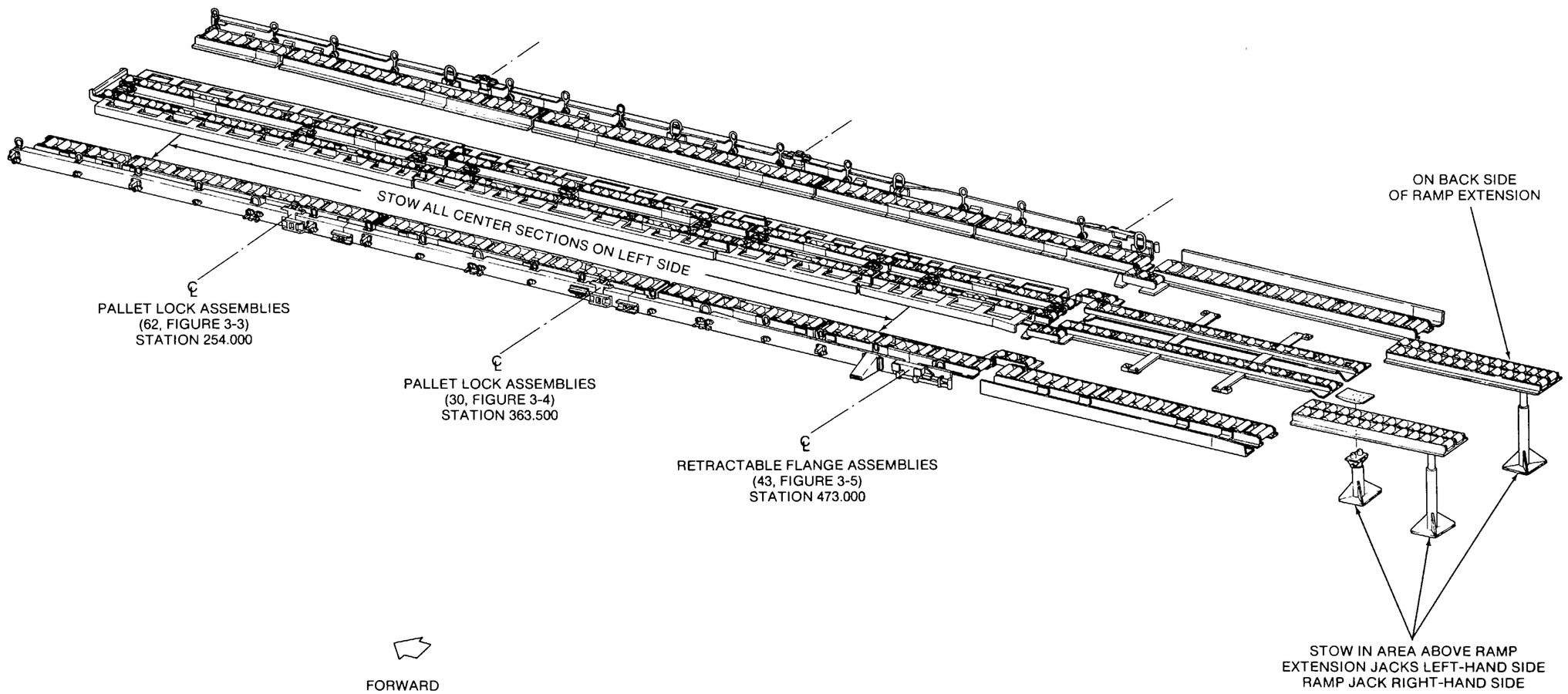


**Figure 2-34. System Stowage Locations**

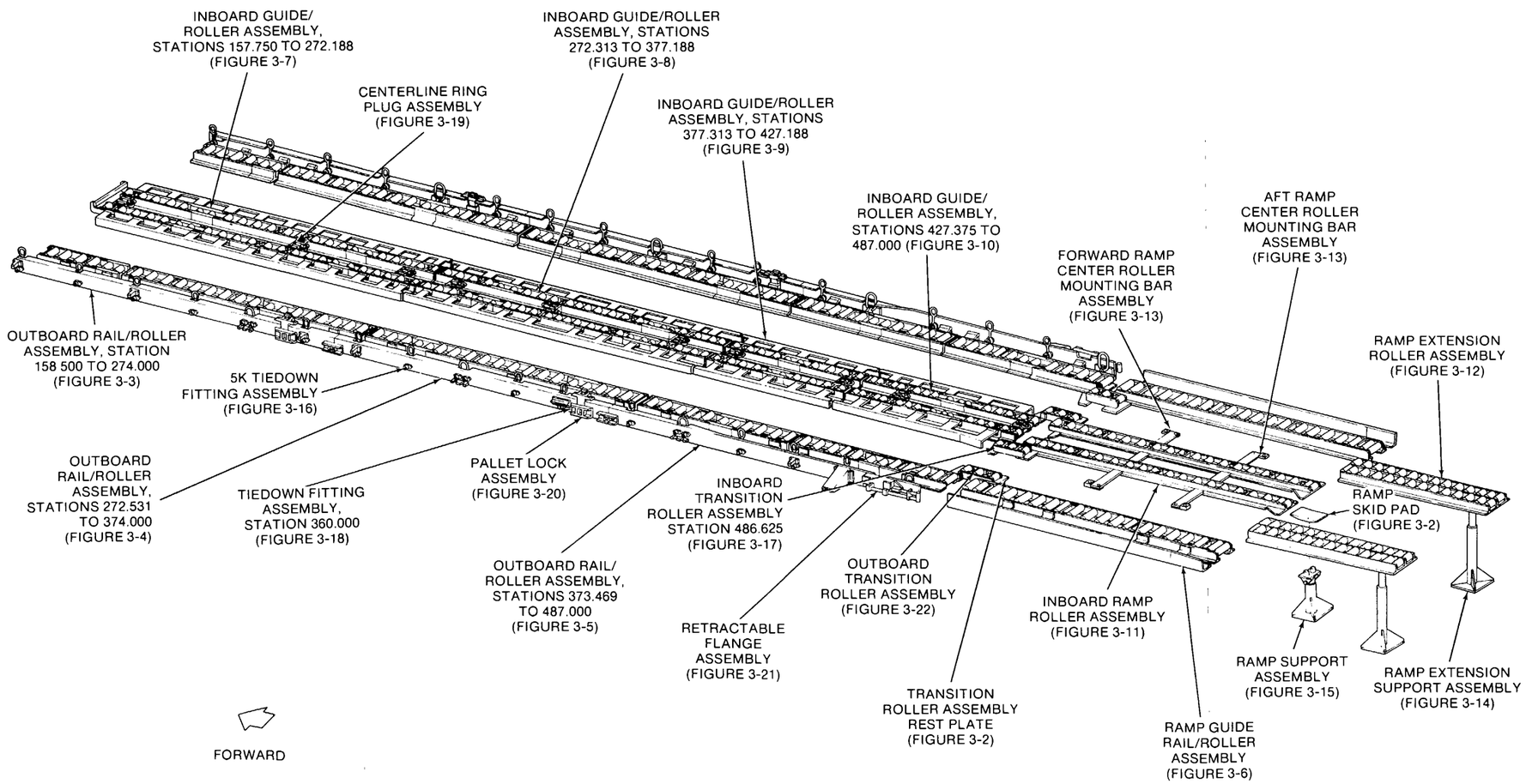


**Figure 3-1. Helicopter Internal Cargo Handling System**

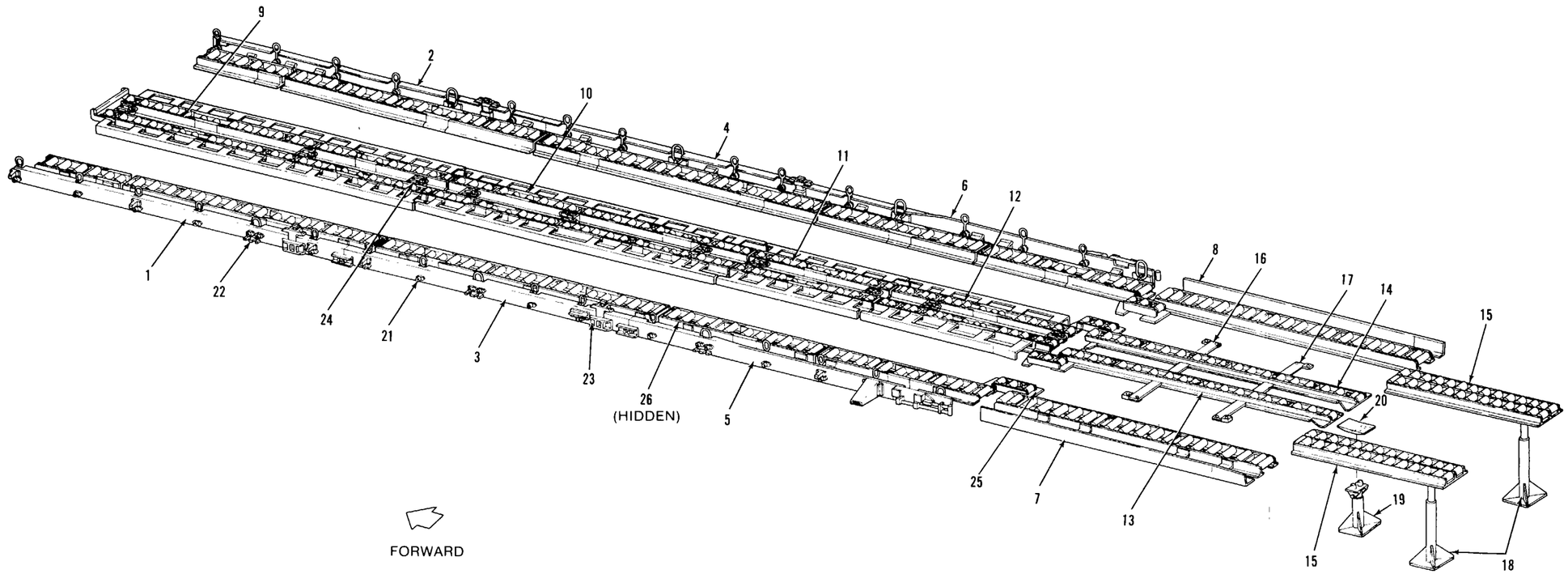


**Figure 3-2. Helicopter Internal Cargo Handling System (Sheet 1 of 6)**

| FIGURE AND INDEX NO | PART NUMBER | FSCM | DESCRIPTION 1 2 3 4 5 6 7 | UNITS PER ASSY | USABLE ON CODE |
|---|---|---|---|---|---|
| 3-2- | 18049 J 100 | 81868 | HELICOPTER INTERNAL CARGO ..... HANDLING SYSTEM, CH47 Helicopter | 1 | |
| -1 | 18049 J 101 | 81868. | OUTBOARD RAIL/ROLLER ASSEMBLY..... (LH), Stations 158.500 to 274.000 (See figure 3-3 for breakdown.) | 1 | |
| -2 | 18049 J 102 | 81868. | OUTBOARD RAIL/ROLLER ASSEMBLY..... (RH), Stations 158.500 to 274.000 (See figure 3-3 for breakdown.) | 1 | |
| -3 | 18049 J 103 | 81868. | OUTBOARD RAIL/ROLLER ASSEMBLY..... (LH), Stations 272.531 to 374.000 (See figure 3-4 for breakdown.) | 1 | |
| -4 | 18049 J 104 | 81868. | OUTBOARD RAIL/ROLLER ASSEMBLY..... (RH), Stations 272.531 to 374.000 (See figure 3-4 for breakdown.) | 1 | |
| -5 | 18049 J 105 | 81868. | OUTBOARD RAIL/ROLLER ASSEMBLY..... (LH), stations 373.469 to 487.000 (See figure 3-5 for breakdown.) | 1 | |
| -6 | 18049 J 106 | 81868. | OUTBOARD RAIL/ROLLER ASSEMBLY..... (RH), Stations 373.469 to 487.000 (See figure 3-5 for breakdown.) | 1 | |
| -7 | 18049 E 107 | 81868. | RAMP GUIDE RAIL/ROLLER ASSEMBLY ..... (LH) (See figure 3-6 for breakdown.) | 1 | |
| -8 | 18049 E 108 | 81868 . | RAMP GUIDE RAIL/ROLLER ASSEMBLY ..... (RH) (See figure 3-6 for breakdown.) | 1 | |
| -9 | 18049 J 121 | 81868. | INBOARD GUIDE/ROLLER ASSEMBLY,..... Stations 157.750 to 272.188 (See figure 3-7 for breakdown.) | 1 | |
| -10 | 18049 J 122 | 81868 . | INBOARD GUIDE/ROLLER ASSEMBLY,..... Stations 272.313 to 377.188 (See figure 3-8 for breakdown.) | 1 | |
| -11 | 18049 J 123 | 81868 . | INBOARD GUIDE/ROLLER ASSEMBLY,..... Stations 377.313 to 427.188 (See figure 3-9 for breakdown.) | 1 | |
| -12 | 18049 J 124 | 81868 . | INBOARD GUIDE/ROLLER ASSEMBLY,..... Stations 427.375 to 487.000 (See figure 3-10 for breakdown.) | 1 | |
| -13 | 18049 J 225 | 81868 . | INBOARD RAMP ROLLER ASSEMBLY..... (LH) (See figure 3-11 for breakdown.) | 1 | |
| -14 | 18049 J 226 | 81868 . | INBOARD RAMP ROLLER ASSEMBLY..... (RH) (See figure 3-11 for breakdown.) | 1 | |
| -15 | 18049 E 140 | 81868 . | RAMP EXTENSION ROLLER ASSEMBLY..... (See figure 3-12 for breakdown.) | 2 | |
| -16 | 18049 D 227 | 81868 . | MOUNTING BAR ASSEMBLY, Forward, ramp center roller (See figure 3-13 for breakdown.) | | |
| -17 | 18049 D 228 | 81868 . | MOUNTING BAR ASSEMBLY, Aft, ramp ..... center roller (See figure 3-13 for breakdown.) | 1 | |
| -18 | 18049 E 150 | 81868 . | RAMP EXTENSION SUPPORT ASSEMBLY..... (See figure 3-14 for breakdown.) | 2 | |
| -19 | 18049 E 160 | 81868 . | RAMP SUPPORT ASSEMBLY (See..... figure 3-15 for breakdown.) | 1 | |
| -20 | 18049 D 195 | 81868 . | PAD, Ramp skid ..... | 1 | |
| -21 | 18049 D 117 | 81868 . | 5k TIEDOWN FITTING ASSEMBLY (See 26 figure 3-16 for breakdown.) | | |

| FIGURE AND INDEX NO | PART NUMBER | FSCM | DESCRIPTION 1 2 3 4 5 6 7 | UNITS PER ASSY | USABLE ON CODE |
|---|---|---|---|---|---|
| 3-2-22 | 18049 E 207 | 81868 | 10k FITTING ASSEMBLY | 8 | |
| -22.1 | 18049 C 545 | 81868 | SPACER | 8 | |
| -23 | 18049 C 245 | 81868 | TIEDOWN Fl'-rIG ASSEMBLY, Station 360.000 (See figure 3-18 for breakdown) | 2 | |
| -24 | 18049 C 299 | 81868 | RING PLUG ASSEMBLY, Centerline (See figure 3-19 for breakdown.) | 10 | |
| -25 | 18049 D 130 | 81868 | PLATE, Rest, transition roller assembly | 2 | |
| -26 | 18049 D 250 | 81868 | STRAP ASSEMBLY, Outboard roller, securing | 34 | |
| -27 | NAS5174-12 | 80206 | BOLT, Conterun (AP) | 2 | |
| -28 | NAS6608-14 | 80206 | BOLT, Hex head (AP) | 16 | |
| -29 | NAS6608-15 | 802065 | BOLT, Hex head (AP) | 8 | |
| -80 | AN3-1OA | 88044 | BOLT, Hex head CAP) | 28 | |
| -31 | AN960-10 | 88044 | WASHER, Flat (AP) | 36 | |
| -32 | AN4-1IA | 88044 | BOLT, Hex head (AP) | 6 | |
| 33 | AN960-416 | 88044 | WASHER, Flat (AP) | 18 | |
| -34 | NAS517-4-11 | 80205 | BOLT, Counternk (AP) | 6 | |
| -35 | AN4-12A | 88044 | BOLT, Hex head (AP) | 4 | |
| -36 | AN4-SA | 88044 | BOLT, Hex head (AP) | 8 | |
| -37 | MS21044-N4 | 96906 | NUT, Self-locing (AP) | 8 | |
| -38 | AN3-1A | 88044 | BOLT, Hex head (AP) | 8 | |
| -39 | MS21250-05028 | 96906 | BOLT, 12 point (AP) | 16 | |
| -40 | AN960-516 | 88044 | WASHER, Flat (AP) | 32 | |
| -41 | 18049 D 555 | 81868 | BOLT, Special (AP) | 16 | |
| -42 | AN960-816 | 88044 | WASHER, Flat (AP) | 16 | |
| -43 | AN960-816L | 88044 | WASHER, Flat AP) | 8 | |

(THIS PAGE INTENTIONALLY
LEFT BLANK.)

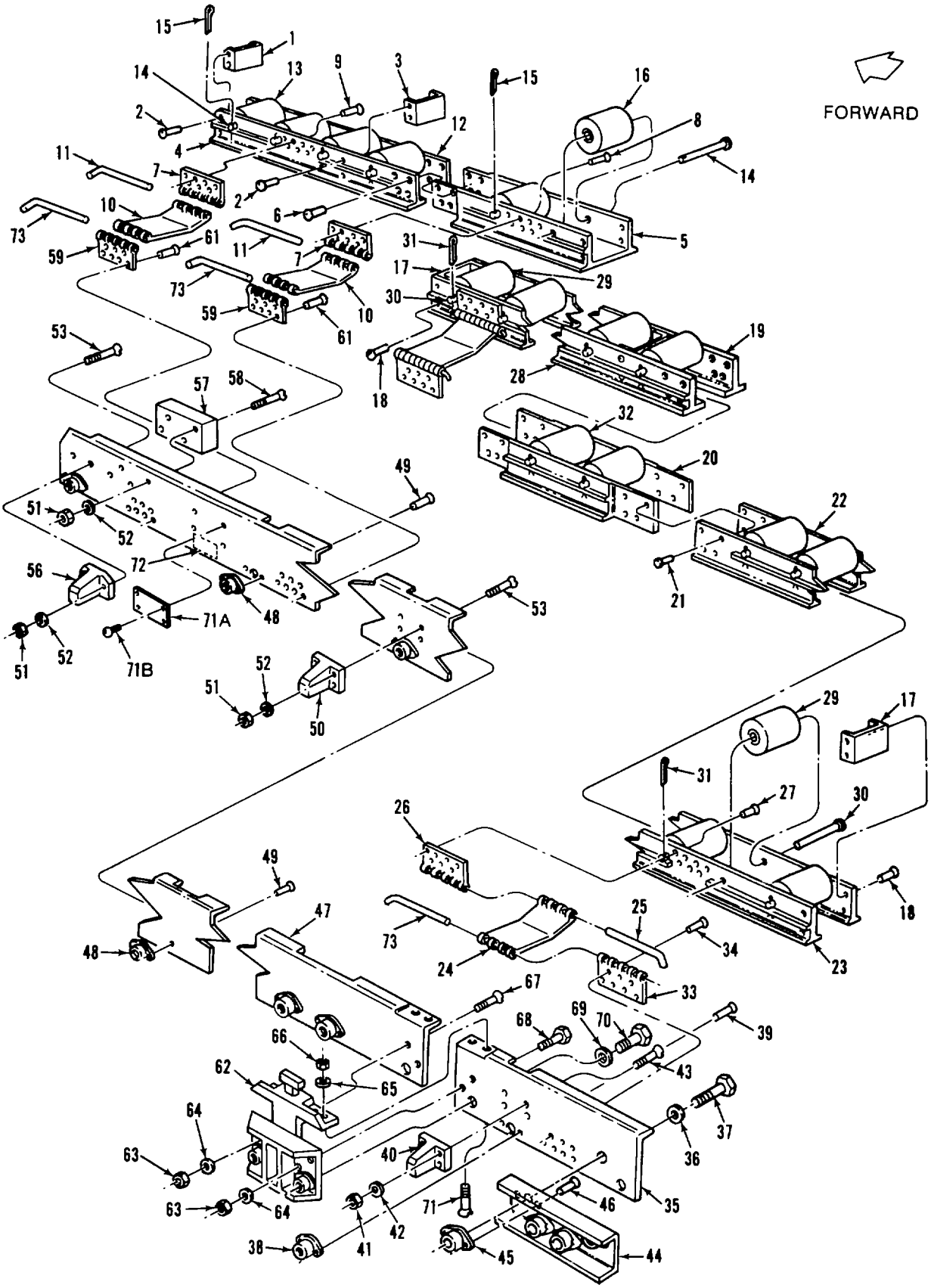


**Figure 3-3. Outboard Rail/Roller Assembly, Stations 158.500 to 274.000**

| FIGURE AND INDEX NO | PART NUMBER | FSCM | DESCRIPTION 1 2 3 4 5 6 7 | UNITS PER ASSY | USABLE ON CODE |
|---|---|---|---|---|---|
| 3-3- | 18049 J 101 | 81868 | OUTBOARD RAIL/ROLLER ASSEMBLY (LH), Stations 158.500 to 274.000 (See 1, figure 3-2 for NHA.) | REF | A |
| | 18049 J 102 | 81868 | OUTBOARD RAIL/ROLLER ASSEMBLY (RH), Stations 158.500 to 274.000 (See 2, figure 3-2 for NHA.) | REF | B |
| | 18049 E 131-1 | 81868 | .FORWARD ROLLER OUTBOARD CONVEYOR ASSEMBLY (LH), Stations 160.000 to 189.000 | 1 | A |
| | 18049 E 131-2 | 81868 | .FORWARD ROLLER OUTBOARD CONVEYOR ASSEMBLY (RH), Stations 160.000 to 189.000 | 1 | B |
| | 18049 E 131-3 | 81868 | ..FRAME ASSEMBLY (LH) | 1 | A |
| | 18049 E 131-4 | 81868 | ..FRAME ASSEMBLY (RH) | 1 | B |
| -1 | 18049 C 206 | 81868 | ...SPACER, Roller tray, outboard | 1 | |
| -2 | MS20470AD8-10 | 96906 | ...RIVET, Solid (AP) | 8 | |
| -3 | 18049 C 129 | 81868 | ...SPACER, Roller tray, outboard | 1 | |
| -4 | 18049 D 161-1 | 81868 | ...TEE, Roller support, outboard, left-hand | 1 | A |
| | 18049 D 161-2 | 81868 | ...TEE, Roller support, outboard, (RH) | 1 | B |
| -5 | 18049 E 511-1 | 81868 | ...CHANNEL, Roller support outboard, left-hand | 1 | A |
| | 18049 E 511-2 | 81868 | ...CHANNEL, Roller support, outboard, right-hand | 1 | B |
| -6 | MS20470AD6-12 | 96906 | ...RIVET, Solid (AP) | 8 | |
| -7 | 18049 C 156 | 81868 | ...HINGE, Offset, outboard roller/ rail, main deck | 2 | |
| -8 | MS20426AD6-14 | 96906 | ...RIVET, Countersunk (AP) | 7 | |
| -9 | MS20426AD6-9 | 96906 | ...RIVET, Countersunk (AP) | 7 | |
| -10 | 18049 C 157 | 81868 | ...HINGE, Offset, outboard roller/ rail, main deck | 2 | |
| -11 | 18049 D 155-3 | 81868 | ...PIN, Hinge (AP) | 2 | |
| -12 | 18049 D 162 | 81868 | ...TEE, Roller support, inboard | 1 | |
| -13 | 18049 C 148 | 81868 | ..ROLLER, Outboard | | |
| -14 | 18049 C 246 | 81868 | ..SHAFT, Teeter roller, outboard | 6 | |
| -15 | MS24665-353 | 96906 | ..PIN, Cotter (AP) | 6 | |
| -16 | 18049 C 149 | 81868 | ..ROLLER, Inboard | 2 | |
| | 18049 E 132-1 | 81868 | .ROLLER OUTBOARD CONVEYOR ASSEMBLY (LH), Stations 190.000 to 274.000 | 1 | A |
| | 18049 E 132-2 | 81868 | .ROLLER OUTBOARD CONVEYOR ASSEMBLY (RH), Stations 190.000 to 274.000 | 1 | B |
| | 18049 E 132-3 | 81868 | ..FRAME ASSEMBLY (LH) | 1 | A |
| | 18049 E 132-4 | 81868 | ..FRAME ASSEMBLY (RH) | 1 | B |
| -17 | 18049 C 129 | 81868 | ...SPACER, Roller tray, outboard | 5 | |
| -18 | MS20470AD8-10 | 96906 | ...RIVET, Solid (AP) | 20 | |
| -19 | 18049 E 164-1 | 81868 | ...TEE, Roller support, inboard | 1 | |
| -20 | 18049 E 512-3 | 81868 | ...CHANNEL, Roller support, outboard, left-hand | 1 | A |
| | 18049 E 512-4 | 86868 | ...CHANNEL, Roller support, outboard, right-hand | 1 | B |
| -21 | MS20470AD6-12 | 96906 | ...RIVET, Solid (AP) | 16 | |
| -22 | 18049 E 164-2 | 81868 | ...TEE, Roller support, inboard | 1 | |

| FIGURE AND INDEX NO | PART NUMBER | FSCM | DESCRIPTION 1 2 3 4 5 6 7 | UNITS PER ASSY | USABLE ON CODE |
|---|---|---|---|---|---|
| 3-3-23 | 18049 E 163-3 | 81868 | TEE, Roller support, outboard, lefthand | 1 | A |
| | 18049 E 163-4 | 81868 | TEE, Roller support, outboard, right-hand | 1 | B |
| -24 | 18049 C 157 | 81868 | HINGE, Offset, outboard roller/rail, main deck | 2 | |
| -25 | 18049 D 155-3 | 81868 | PIN, Hinge (AP) | 2 | |
| -26 | 18049 C 156 | 81868 | HINGE, Offset, outboard roller/rail, main deck | 2 | |
| -27 | MS20426AD6-9 | 96906 | EIVET, Countersunk solid (AP) | 14 | |
| -28 | 18049 E 163-1 | 81868 | TEE, Roller, support, outboard, left-hand | 1 | A |
| | 18049 E 163-2 | 81868 | TEE, Roller support, outboard, right-band | 1 | B |
| -29 | 18049 C 148 | 81868 | ROLLER, Outboard | 15 | |
| 30 | 18049 C 246 | 81868 | SHAFT, Teeter roller, outboard | 17 | |
| -31 | MS24665-33 | 96906 | PIN, Cotter(AP) | 17 | |
| -32 | 18049 C 149 | 81868 | ROLLER ;Ft, Outboard | 2 | |
| | 18049 E 110-1 | 81868 | RESTRAINT RAIL SUBASSEMBLY (LH), Stations 158.500 to 276281 | A | |
| | 18049 E 110-2 | 81868 | RS NTRAIL SUBASSEMBLY (RC), Stations 158.500 to 276.281 | 1 | B |
| | 18049 E 217-1 | 81868 | RESTRAINT RAIL SUBASSEMBLY (LH), Stations 255.875 to 276.000 | 1 | A |
| | 18049 E 217-2 | 81868 | RESTRAINT RAIL SUBASGSFMRLY (RH), Stations 255.875 to 276.000 | 1 | B |
| -33 | 18049 C 156 | 81868 | HINGE, Outboard roller/rail, main deck | 1 | |
| -34 | MS20470AD6-13 | 96906 | RIVET, Solid (AP) | 7 | |
| -35 | 18049 D 211-1 | 81868 | RAIL, Guide, outboard, left-hand | 1 | A |
| | 18049 D 211-2 | 81868 | RAIL, Guide, outboard, right-hand | 1 | B |
| -36 | AN960-816L | 88044 | WASHER, Flat | 2 | |
| -37 | NAS660815 | 80205 | BOLT, Hex head (AP) | 2 | |
| -38 | NAS1031P8 | 80205 | NUT PLATE, Self-locking | 1 | |
| -39 | MS20426AD5-12 | 96906 | RIVET, Countersunk solid (AP) | 2 | |
| -40 | 18049 C 202-3 | 81868 | BUMPER, Outboard guide rail | 1 | |
| -41 | MS21042-4 | 96906 | NUT, Self-locing (AP) | 4 | |
| | MS20364-1032 | 96906 | NUT, Self-locking (Use only with Screw P/N MS27039-1-09) | AR | |
| -42 | AN960-416 | 88044 | WASHER, Flat (AP) | 4 | |
| | AN960-10L | 88044 | WASHER, Flat (Use only with Screw P/N MS27039- 1-11) | AR | |
| -43 | NAS 5174-11 | 80205 | BOLT, Countersunk(AP) | 4 | |
| | MS27039-1-09 | 96906 | SCREW, Machine (Use only with Nut PDI MS20364-1032) | AR | |
| | MS27039-1-11 | 96906 | SCREW (Use only with Washer P/N AN960-10L) | AR | |
| | 18049 C 196 | 81868 | SPLICE PLATE ASSEMBLY, Outboard guide rail | 1 | |
| -44 | 18049 C 196-1 | 81868 | PLATE, Splice | 1 | |
| -45 | NAS1031P8 | 80205 | NUT PLATE, Self-loc-ing (AP) | 4 | |
| -46 | MS20426AD6-12 | 96906 | RIVET, Countersunk sold (AP) | 8 | |
| | 18049 E 216-1 | 81868 | RESTRANT RAIL SUBASSEMBLY (LH) | 1 | A |
| | 18049 E 216-2 | 81868 | RESTRAINT RAIL SUBASSEMBLY(RH) | 1 | B |
| -47 | 18049 E 210-1 | 81868 | GUIDE RAIL, Outboard, left-hand | A | |
| | 18049 E 210-2 | 81868 | GUIDE RAIL, Outboard, right-hand | 1 | B |
| -48 | NAS1031P8 | 80205 | NUT PLATE, Self-loking | 6 | |
| -49 | MS20426AD5-12 | 96906 | RIET, Countersunk solid(AP) | 12 | |
| -50 | 18049 C 202-3 | 81868 | BUMPER, Outboard guide rail | 1 | |
| -51 | MS21042-4 | 96906 | NUT, Self-locking CAP) | 10 | |
| -52 | AN960-416 | 88044 | WASHER, Flat (AP) | 10 | |
| -53 | NAS5171-4-1 | 80205 | BOLT, Countersunk (AP) | 6 | |
| -54 | -- | -- | Deleted | | |
| -55 | -- | -- | Deleted | | |
| -56 | 18049 C 262 | 81868 | ...BUMPER, Outboard guide rail | 1 | |
| -57 | 18049 C 116-1 | 81868 | ...STOP, Pallet, left-hand | 1 | A |
| | 18049 C 116-2 | 81868 | STOP, Pallet, right-hand | 1 | B |

| FIGURE AND INDEX NO | PART NUMBER | FSCM | DESCRIPTION 1 2 3 4 5 6 7 | UNITS PER ASSY | USABLE ON CODE |
|---|---|---|---|---|---|
| 3-3-58 | NAS517-4-19 | 80205 | ...BOLT, Countersunk (AP) | 4 | |
| -59 | 18049 C 156 | 81868 | ...HINGE, Outboard roller/rail, main deck | 3 | |
| -60 | - | - | Deleted | | |
| -61 | MS20470AD6-13 | 96906 | ...RIVET, Solid (AP) | 21 | |
| -62 | 18049 E 400 | 81868 | ..PALLET LOCK ASSEMBLY (See figure 3-20 for breakdown.) | 1 | |
| -63 | MS21042-6 | 96906 | ..NUT, Self-locking (AP) | 4 | |
| -64 | AN960-616 | 88044 | ..WASHER, Flat (AP) | 4 | |
| -65 | AN960-416 | 88044 | ..WASHER, Flat (AP) | 4 | |
| -66 | MS21042-4 | 96906 | ..NUT, Self-locking (AP) | 4 | |
| -67 | NAS517-6-15 | 96906 | ..BOLT, Countersunk (AP) | 2 | |
| -68 | AN6-14A | 80205 | ..BOLT, Hex head (AP) | 2 | |
| -69 | AN960-816 | 88044 | ..WASHER, Flat (AP) | 2 | |
| -70 | AN8-15A | 88044 | ..BOLT, Hex head (AP) | 2 | |
| -71 | NAS517-4-8 | 80205 | ..BOLT, Countersunk (AP) | 4 | |
| -71A | 18049 C 109 | 81869 | ..NAMEPLATE | 1 | A |
| -71B | MS24625-9 | 96906 | ..SCREW, Tapping (AP) | 4 | A |
| -72 | 18133 C 500 | 81868 | ..NAMEPLATE | 1 | |
| -73 | 18049 D 155-3 | 81868 | ..PIN, Hinge (AP) | 4 | |

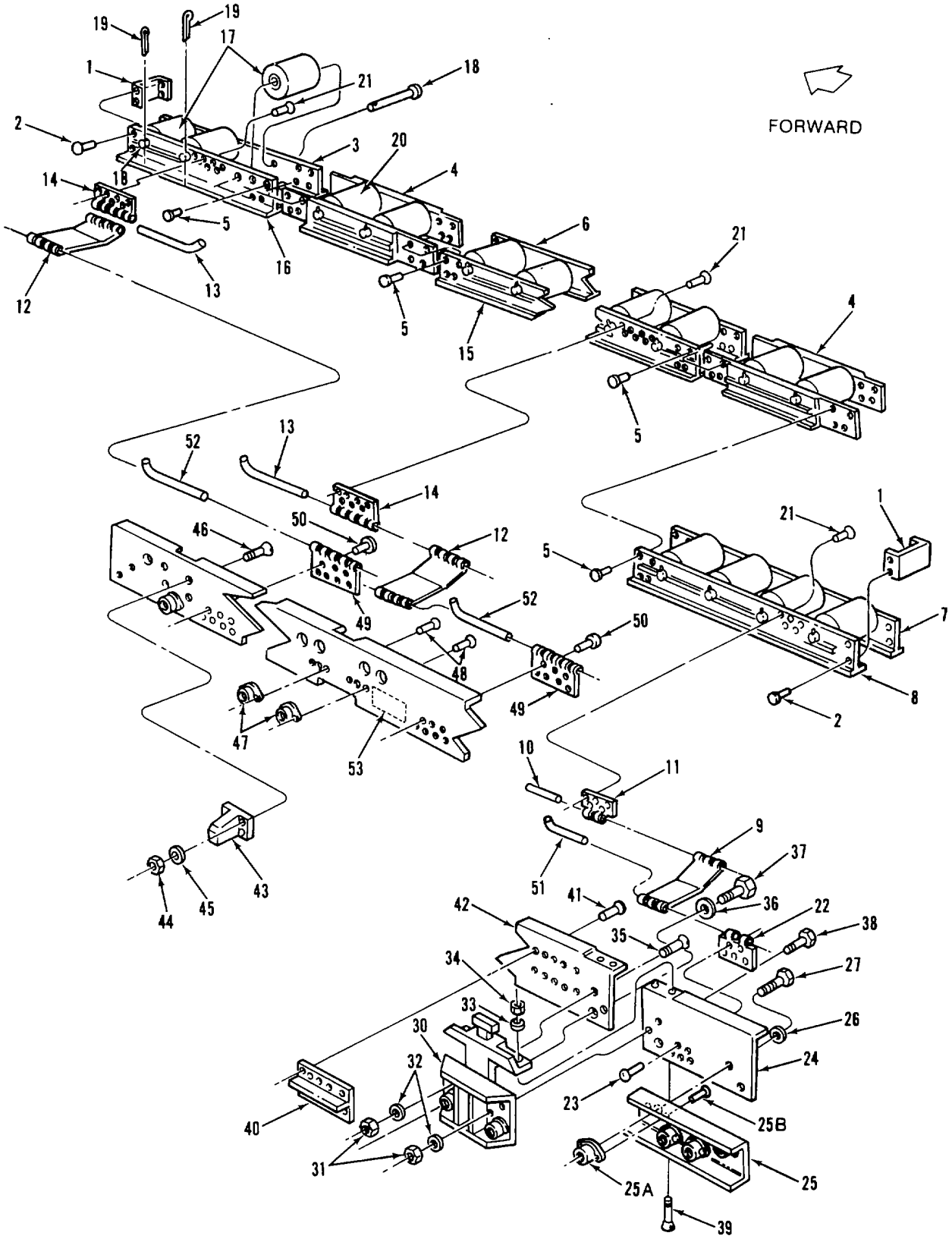


**Figure 3-4. Outboard Rail/Roller Assembly, Stations 272.531 to 374.000**

| FIGURE AND INDEX NO | PART NUMBER | FSCM | DESCRIPTION 1 2 3 4 5 6 7 | UNITS PER ASSY | USABLE ON CODE |
|---|---|---|---|---|---|
| 3-4- | 18049 J 103 | 81868 | OUTBOARD RAIL/ROLLER ASSEMBLY (LH), Stations 272.531 to 374.000 (See 3, figure 3-2 for NHA.) | REFA | |
| | 18049 J 104 | 81868 | OUTBOARD RAIL/ROLLER ASSEMBLY (RH), Stations 272.531 to 374.000 (See 4, figure 3-2 for NHA.) | REF | B |
| | 18049 E 133-1 | 81868 | OUTBOARD ROLLER CONVEYOR ASSEMBLY (LH), Stations 275.000 to 374.000 | 1 | A |
| | 18049 E 133-2 | 81868 | OUTBOARD ROLLER CONVEYOR ASSEMBLY (RH), Stations 275.000 to 374.000 | 1 | B |
| | 18049 E 133-3 | 81868 | ..FRAME ASSEMBLY (LH) | 1 | A |
| | 18049 E 133-4 | 81868 | ..FRAME ASSEMBLY (RH) | 1 | B |
| -1 | 18049 C 129 | 81868 | ...SPACER, Roller tray, outboard | 4 | |
| -2 | MS20470AD8-10 | 96906 | ...RIVET (AP) | 16 | |
| -3 | 18049 E 165-1 | 81868 | ...TEE, Roller support, inboard | 1 | |
| -4 | 18049 E 512-1 | 81868 | ...CHANNEL, Roller support, outboard | 2 | |
| -5 | MS20470AD6-12 | 96906 | ...RIVET, Solid (AP) | 32 | |
| -6 | 18049 E 165-2 | 81868 | ...TEE, Roller support, inboard, stations 275.000 to 374.000 | 1 | |
| -7 | 18049 E 165-3 | 81868 | ...TEE, Roller support, inboard, stations 275.000 to 374.000 | 1 | |
| -8 | 18049 E 166-5 | 81868 | ...TEE, Roller support, outboard, left-hand | 1 | A |
| | 18049 E 166-6 | 81868 | ...TEE, Roller support, outboard, right-hand | 1 | B |
| -9 | 18049 D 158-1 | 81868 | ...HINGE, Offset | 1 | |
| -10 | 18049 D 158-3 | 81868 | ...PIN, Hinge (AP) | 1 | |
| -11 | 18049 D 158-2 | 81868 | ...HINGE, Half | 1 | |
| -12 | 18049 C 157 | 81868 | ...HINGE, Offset, outboard roller/rail, main deck | 2 | |
| -13 | 18049 D 155-3 | 81868 | ...PIN, Hinge (AP) | 2 | |
| -14 | 18049 C 156 | 81868 | ...HINGE, Outboard roller/rail, main deck | 2 | |
| -15 | 18049 E 166-3 | 81868 | ...TEE, Roller support, outboard, left-hand | 1 | A |
| | 18049 E 166-4 | 81868 | ...TEE, Roller support, outboard, right-hand | 1 | B |
| -16 | 18049 E 166-1 | 81868 | ...TEE, Roller support, outboard, left-hand | 1 | A |
| | 18049 E 166-2 | 81868 | ...TEE, Roller support, outboard, right-hand | 1 | B |
| -17 | 18049 C 148 | 81868 | ..ROLLER, Outboard | 16 | |
| -18 | 18049 C 246 | 81868 | ..SHAFT, Teeter roller, outboard | 20 | |
| -19 | MS24665-353 | 96906 | ..PIN, Cotter (AP) | 20 | |
| -20 | 18049 C 149 | 81868 | ..ROLLER, Inboard | 4 | |
| -21 | MS24026AD6-9 | 96906 | ..RIVET, Countersunk solid (AP) | 19 | |
| | 18049 E 112-1 | 81868 | ..RESTRAINT RAIL ASSEMBLY (LH) | 1 | A |
| | 18049 E 112-2 | 81868 | .RESTRAINT RAIL ASSEMBLY (RH) | 1 | B |
| | 18049 E 219-1 | 81868 | .RESTRAINT RAIL SUBASSEMBLY (LH), Stations 365.375 to 377.218 | 1 | A |
| | 18049 E 219-2 | 81868 | ..RESTRAINT RAIL SUBASSEMBLY (RH), Stations 365.375 to 377.218 | 1 | B |
| -22 | 18049 D 158-2 | 81868 | ...HINGE, Half | 1 | |
| -23 | MS20426AD6-14 | 96906 | ...RIVET, Countersunk solid (AP) | 5 | |
| -24 | 18049 D 213-1 | 81868 | ...RAIL, Guide, outboard, left-hand, stations 365.375 to 373.406 | 1 | A |
| | 18049 D 213-2 | 81868 | ...RAIL, Guide, outboard, right-hand, stations 365.375 to 373.406 | 1 | B |

| FIGURE AND INDEX NO | PART NUMBER | FSCM | DESCRIPTION 1 2 3 4 5 6 7 | UNITS PER ASSY | USABLE ON CODE |
|---|---|---|---|---|---|
| 3-4- | 18049 C 196 | 81868 | SPLICE PLATE ASSEMBLY, Outboard guide rail | 1 | |
| -25 | 18049 C 196-1 | 81868 | PLATE, Splice | 1 | |
| -25A | NAS1031P8 | 80205 | NUT PLATE, Self-locking (AP) | 4 | |
| -25B | MS20426AD5-12 | 96906 | RIVET, Countersunk solid (AP) | 8 | |
| -26 | AN960-816L | 88044 . | WASHER, Flat (AP) | 2 | |
| -27 | NAS6608-15 | 80205 . | BOLT, Hex head (AP) | 2 | |
| -28 | - | | Deleted | | |
| -29 | - | - | Deleted | | |
| -30 | 18049 E 400 | 81868 . | PALLET LOCK ASSEMBLY (See figure 3-20 for breakdown.) | 1 | |
| -31 | MS21042-6 | 96906 | NUT, Self-locking (AP) | 4 | |
| -32 | AN960-616 | 88044 | WASHER, Flat (AP) | 4 | |
| -33 | AN960-416 | 88044 | WASHER, Flat (AP) | 4 | |
| -34 | MS21042-4 | 96906 | NUT, Self-locking (AP) | 4 | |
| -35 | NAS517-6-15 | 80205 | BOLT, Countersunk (AP) | 2 | |
| -36 | AN960-816 | 88044 | WASHER, Flat (AP) | 1 | |
| -37 | AN8-15A | 88044 | BOLT, Hex head (AP) | 1 | |
| -38 | AN6-14A | 88044 | BOLT, Hex head (AP) | 2 | |
| -39 | NAS517-4-8 | 80205 | BOLT, Countersunk (AP) | 4 | |
| | 18049 E 218-1 | 81868 | RESTRAINT RAIL SUBASSEMBLY (LH), Stations 272.531 to 361.625 | 1 | A |
| | 18049 E 218-2 | 81868 | RESTRAINT RAIL SUBASSEMBLY (RH), Stations 272.531 to 361.625 | 1 | B |
| -40 | 18049 C 255 | 81868 | TEE, Backup, Station 356.000 | 1 | |
| -41 | MS20426AD8-16 | 96906 | RIVET, Countersunk solid (AP) | 10 | |
| -42 | 18049 E 212-1 | 81868 | RAIL, Guide, outboard, left-hand, stations 272.531 to 361.625 | 1 | A |
| | 18049 E 212-2 | 81868 | RAIL, Guide, outboard, right-hand, stations 272.531 to 361.625 | 1 | B |
| -43 | 18049 C 202-3 | 81868 | BUMPER, Outboard guide rail | 1 | |
| -44 | MS21042-4 | 96906 | NUT, Self-locking (AP) | 4 | |
| -45 | AN960-416 | 88044 | WASHER (AP) | 4 | |
| -46 | NAS517-4-11 | 80205 | BOLT, Countersunk (AP) | 4 | |
| -47 | NAS1031P8 | 80205 | NUT PLATE, Self-locking | 6 | |
| -48 | MS20426AD5-12 | 96906 | RIVET, Countersunk solid (AP) | 12 | |
| -49 | 18049 C 156 | 81868 | HINGE, Outboard roller/rail, main deck | 2 | |
| -50 | MS20470AD6-13 | 96906 | RIVET, Solid (AP) | 14 | |
| -51 | 18049 D 158-3 | 81868 | PIN, Hinge (AP) | 1 | |
| -52 | 18049 D 155-3 | 81868 | PIN, Hinge (AP) | 2 | |
| -53 | 18133 C 500 | 81868 | NAMEPLATE | 1 | |

(THIS PAGE INTENTIONALLY
LEFT BLANK.)

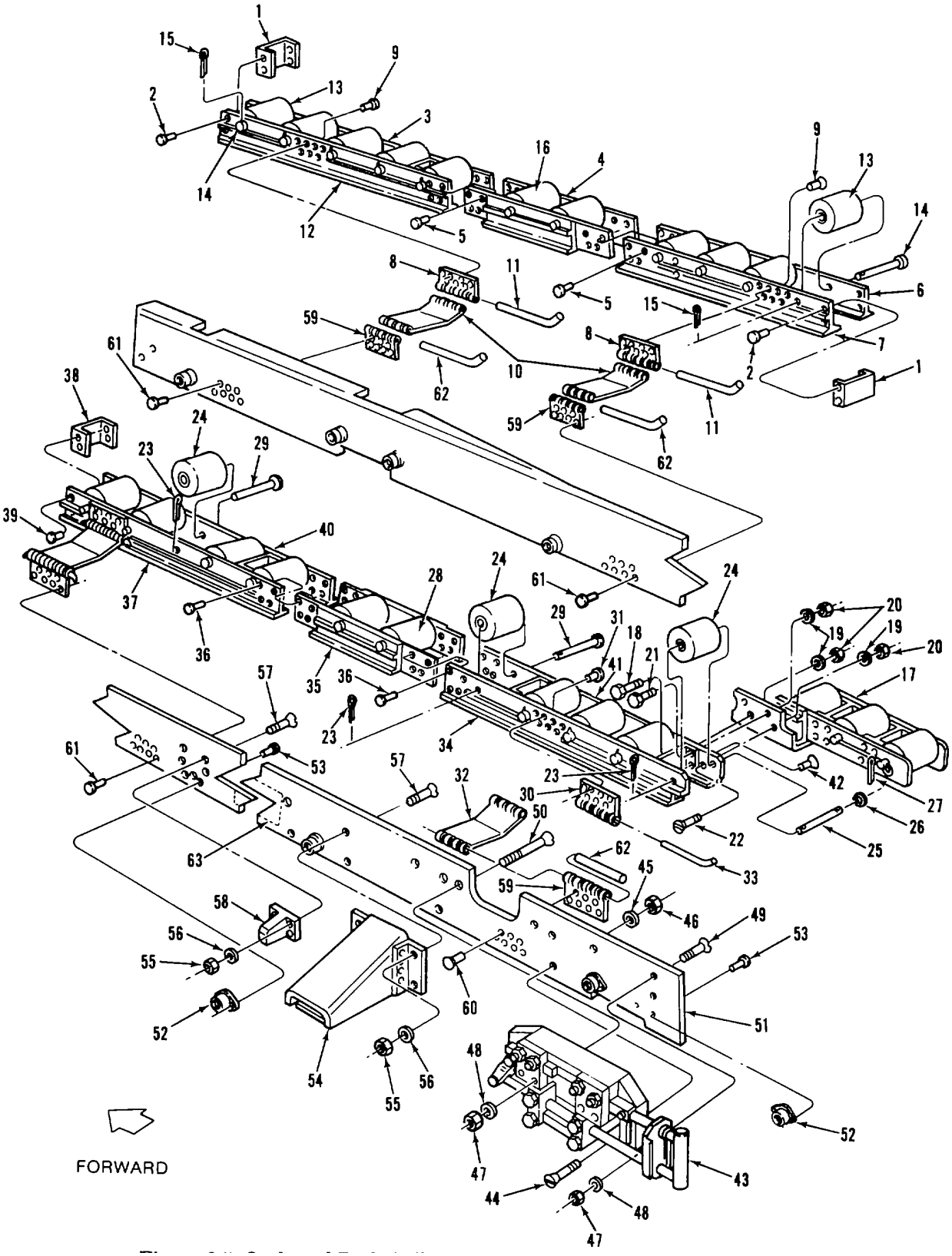


Figure 3-5. Outboard Rail/Roller Assembly, Stations 373.469 to 487.000

| FIGURE AND INDEX NO | PART NUMBER | FSCM | DESCRIPTION 1 2 3 4 5 6 7 | UNITS PER ASSY | USABLE ON CODE |
|---|---|---|---|---|---|
| 3-5- | 18049 J 105 | 81868 | OUTBOARD RAIL/ROLLER ASSEMBLY (LH), Stations 373.469 to 487.000 (See 5, figure 3-2 for NHA.) | REF | A |
| | 18049 J 106 | 81868 | OUTBOARD RAIL/ROLLER ASSEMBLY (RH), Stations 373.469 to 487.000 (See 6, figure 3-2 for NHA.) | REF | B |
| | 18049 E 134-1 | 81868 | OUTBOARD ROLLER CONVEYOR ASSEMBLY (LH), Stations 375.000 to 429.000 | 1 | A |
| | 18049 E 134-2 | 81868 | OUTBOARD ROLLER CONVEYOR ASSEMBLY (RH), Stations 375.000 to 429.000 | 1 | B |
| | 18049 E 134-3 | 81868 | ..FRAME ASSEMBLY (LH) | 1 | A |
| | 18049 E 134-4 | 81868 | ..FRAME ASSEMBLY (RH) | 1 | B |
| -1 | 18049 C 129 | 81868 | ...SPACER, Roller tray, outboard | 3 | |
| -2 | MS20470AD8-10 | 96906 | ...RIVET, Solid (AP) | 12 | |
| -3 | 18049 E 168-1 | 81868 | ...TEE, Roller support, inboard, stations 375.000 to 429.000 | 1 | |
| -4 | 18049 E 512-1 | 81868 | ...CHANNEL, Roller support, outboard | 1 | |
| -5 | MS20470AD6-12 | 96906 | ...RIVET, Solid (AP) | 16 | |
| -6 | 18049 E 168-2 | 81868 | ...TEE, Roller support, inboard, stations 375.000 to 429.000 | 1 | |
| -7 | 18049 E 167-3 | 81868 | ...TEE, Roller support, outboard, left-hand, stations 375.000 to 429.000 | 1 | A |
| | 18049 E 167-4 | 81868 | ...TEE, Roller support, outboard, right-hand, stations 375.000 to 429.000 | 1 | B |
| -8 | 18049 C 156 | 81868 | ...HINGE, Outboard roller/rail, main deck | 2 | |
| -9 | MS20426AD6-9 | 96906 | ...RIVET, Countersunk solid (AP) | 14 | |
| -10 | 18049 C 157 | 81868 | ...HINGE, Offset, outboard roller/rail, main deck | 2 | |
| -11 | 18049 D 155-3 | 81868 | ...PIN, Hinge (AP) | 2 | |
| -12 | 18049 E 167-1 | 81868 | ...TEE, Roller support, outboard, left-hand, stations 375.000 to 429.000 | 1 | A |
| | 18049 E 167-2 | 81868 | ...TEE, Roller support, outboard, right-hand, stations 375.000 to 429.000 | 1 | B |
| -13 | 18049 C 148 | 81868 | ...ROLLER, Outboard | 9 | |
| -14 | 18049 C 246 | 81868 | ..SHAFT, Teeter roller, outboard | 11 | |
| -15 | MS24665-353 | 96906 | ..PIN, Cotter (AP) | 11 | |
| -16 | 18049 C 149 | 81868 | ..ROLLER, Inboard | 2 | |
| | 18049 E 135-1 | 81868 | .OUTBOARD ROLLER CONVEYOR ASSEMBLY (LH), Stations 430.000 to 487.000 | 1 | A |
| | 18049 E 135-2 | 81868 | .OUTBOARD ROLLER CONVEYOR ..ASSEMBLY (RH), Stations 430.000 to 487.000 | 1 | B |
| -17 | 18049 E 280-1 | 81868 | ..OUTBOARD TRANSITION ROLLER ..ASSEMBLY (LH) (See figure 3-22 for breakdown.) | 1 | A |
| | 18049 E 280-2 | 81868 | ..OUTBOARD TRANSITION ROLLER ..ASSEMBLY (RH) (See figure 3-22 for breakdown.) | 1 | B |
| -18 | AN4-6A | 88044 | ..BOLT, Hex head (AP) | 1 | |
| -19 | AN960-416 | 88044 | ..WASHER(AP) | 4 | |
| -20 | MS21042-4 | 96906 | ..NUT (AP) | 4 | |

| FIGURE AND INDEX NO | PART NUMBER | FSCM | DESCRIPTION 1 2 3 4 5 6 7 | UNITS PER ASSY | USABLE ON CODE |
|---|---|---|---|---|---|
| 3-5-21 | AN4-7A | 88044 | ..BOLT, Hex head (AP) | 1 | |
| -22 | NAS517-4-5 | 80205 | ..SCREW, Flat head (AP) | 2 | |
| -23 | MS24665-353 | 96906 | ..PIN, Cotter(AP) | 12 | |
| -24 | 18049 C 148 | 81868 | ..ROLLER, Outboard | 10 | |
| -25 | 18049 C 247-2 | 81868 | ..SHAFT, Teeter roller, inboard | 1 | |
| -26 | AN960-616 | 88044 | ..WASHER, Flat (AP) | 1 | |
| -27 | MS24665-351 | 96906 | ..PIN, Cotter (AP) | 1 | |
| -28 | 18049 C 149 | 81868 | ..ROLLER, Inboard | 2 | |
| -29 | 18049 C 246 | 81868 | ..SHAFT, Teeter roller, outboard | 11 | |
| | 18049 E 135-3 | 81868 | ..FRAME ASSEMBLY (LH) | 1 | A |
| | 18049 E 135-4 | 81868 | ..FRAME ASSEMBLY (RH) | 1 | B |
| -30 | 18049 C 156 | 81868 | ...HINGE, Roller/rail, outboard, main deck | 2 | |
| -31 | MS20426AD6-9 | 96906 | ...RIVET, Countersunk (AP) | 14 | |
| -32 | 18049 C 157 | 81868 | ...HINGE, Offset, outboard roller/rail, main deck | 2 | |
| -33 | 18049 D 155-3 | 81868 | ...PIN, Hinge (AP) | 2 | |
| -34 | 18049 E 169-3 | 81868 | ...TEE, Roller support, outboard, left-hand, stations 430.000 to 487.000 | 1 | A |
| | 18049 E 169-4 | 81868 | ...TEE, Roller support, outboard, right-hand, stations 430.000 to 487.000 | 1 | B |
| -35 | 18049 E 512-1 | 81868 | ...CHANNEL, Roller support, outboard | 1 | |
| -36 | MS20470AD6-12 | 96906 | ...RIVET, Solid (AP) | 16 | |
| -37 | 18049 E 169-1 | 81868 | ...TEE, Roller support, outboard, right-hand, stations 430.000 to 487.000 | 1 | A |
| | 18049 E 169-2 | 81868 | ...TEE, Roller support, outboard, left-hand, stations 430.000 to 487.000 | 1 | B |
| -38 | 18049 C 129 | 81868 | ...SPACER, Roller tray, outboard | 4 | |
| -39 | MS20470AD8-10 | 96906 | ...RIVET, Solid (AP) | 14 | |
| -40 | 18049 E 170-1 | 81868 | ...TEE, Roller support, inboard, stations 430.000 to 487.000 | 1 | |
| | 18049 E 170-3 | 81868 | ...TEE, Roller support, inboard left-hand, stations 430.000 to 487.000 | 1 | A |
| | 18049 E 170-4 | 81868 | ...TEE, Roller support, inboard right-hand, stations 430.000 to 487.000 | 1 | B |
| -42 | MS20426AD8-10 | 96906 | ...RIVET, Countersunk (AP) | 1 | |
| | 18049 E 114-1 | 81868 | .RESTRAINT RAIL ASSEMBLY (LH), Stations 373.469 to 486.930 | 1 | A |
| | 18049 E 114-2 | 81868 | .RESTRAINT RAIL ASSEMBLY (RH), Stations 373.469 to 486.930 | 1 | B |
| -43 | 18049 E 300-1 | 81868 | ..RETRACTABLE FLANGE ASSEMBLY (LH) (See figure 3-21 for breakdown.) | 1 | A |
| | 18049 E 300-2 | 81868 | ..RETRACTABLE FLANGE ASSEMBLY (RH) (See figure 3-21 for breakdown.) | 1 | B |
| -44 | NAS517-8-23 | 80205 | ..BOLT, Countersunk (AP) | 4 | |
| -45 | AN960-816 | 88044 | ..WASHER (AP) | 4 | |
| -46 | MS21044-N8 | 96906 | ..NUT, Self-locking (AP) | 4 | |
| -47 | MS21042-5 | 96906 | ..NUT, Self-locking (AP) | 6 | |
| -48 | AN960-516 | 88044 | ..WASHER (AP) | 6 | |
| -49 | NAS517-5-11 | 80205 | ..BOLT, Countersunk (AP) | 2 | |

| FIGURE AND INDEX NO | PART NUMBER | FSCM | DESCRIPTION 1 2 3 4 5 6 7 | UNITS PER ASSY | USABLE ON CODE |
|---|---|---|---|---|---|
| 3-5-50 | NAS517-5-42 | 80205 | ..BOLT, Countersunk (AP) | 4 | |
| | 18049 E 220-1 | 81868 | ..RESTRAINT RAIL SUBASSEMBLY (LH), Stations 373.469 to 486.930 | 1 | A |
| | 18049 E 220-2 | 81868 | ..RESTRAINT RAIL SUBASSEMBLY (RH), Stations 373.469 to 486.930 | 1 | B |
| -51 | 18049 E 214-1 373.469 to 486.930 | 81868 | ...RAIL, Guide, outboard, stations | 1 | A |
| | 18049 E 214-2 373.469 to 486.930 | 81868 | ...RAIL, Guide, outboard, stations | 1 | B |
| -52 | NAS1031P8 | 80205 | ...NUT PLATE, Self-locking | 8 | |
| -53 | MS20426AD5-12 | 96906 | ...RIVET, Countersunk solid (AP) | 16 | |
| -54 | 18049 E 203 460.000 | 81868 | ...OUTRIGGER ASSEMBLY, Station | 1 | |
| -55 | MS21042-4 | 96906 | ...NUT, Self-locking (AP) | 8 | |
| -56 | AN960-416 | 88044 | ...WASHER (AP) | 8 | |
| -57 | NAS517-4-11 | 80205 | ...BOLT, Countersunk (AP) | 8 | |
| -58 | 18049 C 202-1 | 81868 | ...BUMPER, Guide rail, left-hand, outboard | 1 | A |
| | 18049 C 202-2 | 81868 | ...BUMPER, Guide rail, right-hand, outboard | 1 | B |
| -59 | 18049 C 156 | 81868 | ...HINGE, Outboard roller/rail, main deck | 4 | |
| -60 | MS20426AD6-14 | 96906 | ...RIVET, Countersunk solid (AP) | 7 | |
| -61 | MS20470AD6-13 | 96906 | ...RIVET, Solid (AP) | 21 | |
| -62 | 18049 D 155-3 | 81868 | .PIN, Hinge (AP) | 4 | |
| -63 | 18133 C 500 | 81868 | .NAMEPLATE | 1 | |

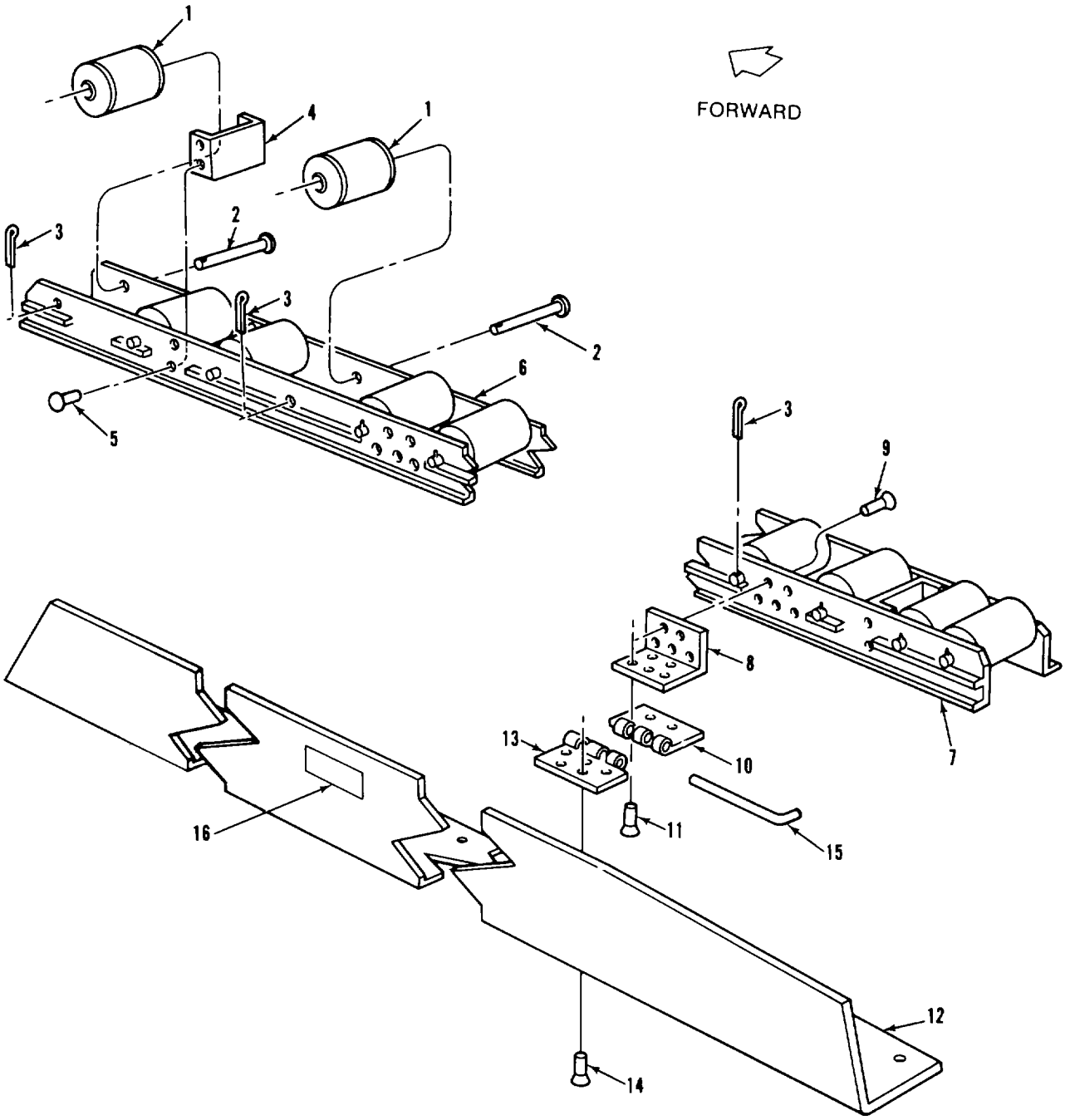


**Figure 3-6. Ramp Guide Rail/Roller Assembly**

| FIGURE AND INDEX NO | PART NUMBER | FSCM | DESCRIPTION 1 2 3 4 5 6 7 | UNITS PER ASSY | USABLE ON CODE |
|---|---|---|---|---|---|
| 3-6- | 18049 E 107 | 81868 | RAMP GUIDE RAIL/ROLLER ASSEMBLY (LH) (See 7, figure 3-2 for NHA.) | REF | A |
| | 18049 E 108 | 81868 | RAMP GUIDE RAIL/ROLLER ASSEMBLY (RH) (See 8, figure 3-2 for NHA.) | REF | B |
| | 18049 E 201-1 | 81868 | .ROLLERCONVEYORRAMPASSEMBLY(LH) | 1 | A |
| | 18049 E 201-2 | 81868 | ..ROLLERCONVEYORRAMPASSEMBLY(RH) | 1 | B |
| -1 | 18049 C 148 | 81868 | ..ROLLER, Outboard | 20 | |
| -2 | 18049 C 246 | 81868 | ..SHAFT, Teeter roller, outboard | 20 | |
| -3 | MS24665-353 | 96906 | ..PIN, Cotter (AP) | 20 | |
| | 18049 E 201-3 | 81868 | ..FRAME ASSEMBLY (LH) | 1 | A |
| | 18049 E 201-4 | 81868 | ..FRAME ASSEMBLY (RH) | 1 | B |
| -4 | 18049 C 129 | 81868 | ...SPACER, Roller tray, outboard | 4 | |
| -5 | MS20470AD8-10 | 96906 | ...RIVET, Solid (AP) | 16 | |
| -6 | 18049 E 198 | 81868 | ...TEE, Roller support, ramp, inboard | 1 | |
| -7 | 18049 E 197-1 | 81868 | ...TEE, Roller support, ramp, outboard, left-hand | 1 | A |
| | 18049 E 197-2 | 81868 | ...TEE, Roller support, ramp, outboard, right-hand | 1 | B |
| -8 | 18049 D 155-2 | 81868 | ...ANGLE, Hinge attachment | 4 | |
| -9 | MS20426AD6-9 | 96906 | ...RIVET, Countersunk solid (AP) | 20 | |
| -10 | 18049 D 155-4 | 81868 | ...HINGE, Half | 4 | |
| -11 | MS20426AD6-8 | 96906 | ...RIVET, Countersunk solid (AP) | 20 | |
| | 18049 E 221-1 | 81868 | .GUIDE RAIL RAMP ASSEMBLY (LH) | 1 | A |
| | 18049 E 221-2 | 81868 | .GUIDE RAIL RAMP ASSEMBLY (RH) | 1 | B |
| -12 | 18049 E 215-1 | 81868 | ..RAMP, Guide rail, left-hand | 1 | A |
| | 18049 E 215-2 | 81868 | ..RAMP, Guide rail, right-hand | 1 | B |
| -13 | 18049 D 155-1 | 81868 | ..HINGE, Half | 4 | |
| -14 | MS20426AD6-12 | 96906 | ..RIVET, Countersunk solid (AP) | 20 | |
| -15 | 18049 D 155-5 | 81868 | .PIN, Hinge (AP) | 4 | |
| -16 | 18133 C 500 | 81868 | .NAMEPLATE | 1 | |

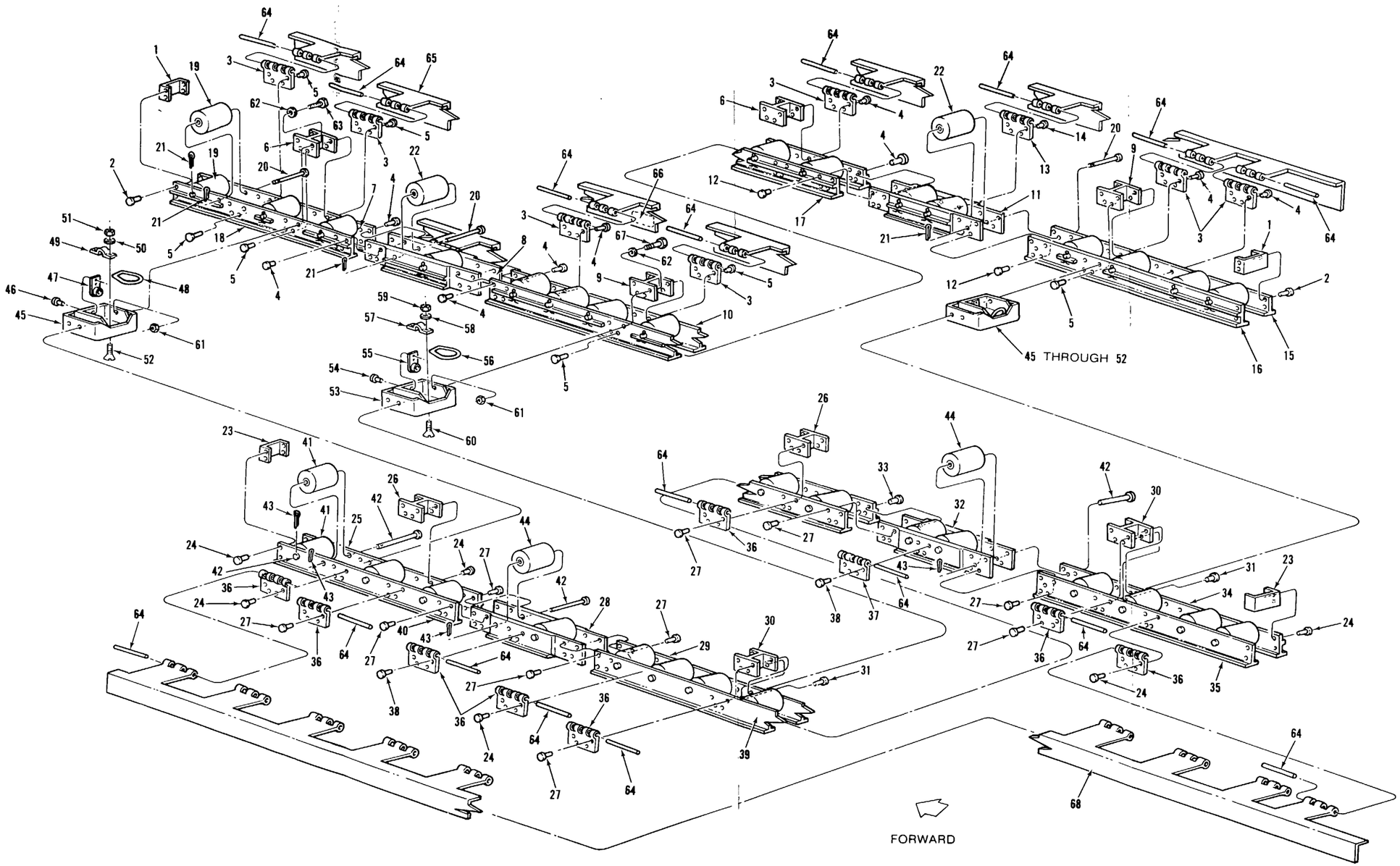


**Figure 3-7. Inboard Guide/Roller Assembly Stations 157.750 to 272.188**
**change 1 3-35/(3-36 Blank)**

| FIGURE AND INDEX NO | PART NUMBER | FSCM | DESCRIPTION 1 2 3 4 5 6 7 | UNITS PER ASSY | USABLE ON CODE |
|---|---|---|---|---|---|
| 3-7- | 18426E1000 | 81868 | CENTERLINE CABLE ROLLER ASSEMBLY, Stations 157.750 to 272.188 (See 9, figure 3-2 for NHA.) | REF | |
| -1 | 18049D260 | 81868 | .Weldment (Pallet Stop) | 1 | |
| | 18049D248 | 81868 | .SHAFT, Roller/pallet stop, inboard | 2 | |
| -2 | 18049D248-1 | 81868 | ..SHAFT | 1 | |
| -2A | 5560-37ZD | 79136 | ..RING, Retaining | 1 | |
| -2B | 18426C1005 | 81868 | .SHAFT | 1 | |
| -2C | MS24665-368 | 96906 | ..PIN, Cotter | 1 | |
| -2D | AN960-816L | 88044 | .WASHER, Flat | 2 | |
| -2E | 18426C1006 | 81868 | .ROLLER | 1 | |
| -2F | AN4-21A | 88044 | .BOLT, Machine | 4 | |
| -2G | MS21044-N4 | 96906 | ..NUT, Self-Locking | 4 | |
| -2H | AN960-416L | 88044 | ..WASHER, Flat | 4 | |
| -3 | AN960-616 | 88044 | .WASHER, Flat (AP) | 4 | |
| 4 | MS24665-353 | 96906 | .PIN, Cotter (AP) | 2 | |
| -5 | 18049 E 187-2 | 81868 | .GUIDE, Center rail, inboard | 1 | |
| -6 | 18049 B 297 | 81868 | .PIN, Hinge, inboard (AP) | 24 | |
| -7 | 18049 C 149 | 81868 | .ROLLER, Inboard | 2 | |
| -8 | 18133 C 500 | 81868 | .NAMEPLATE | 1 | |
| | 18049 D 191-1 | 81868 | .TIEDOWN ASSEMBLY, Center rail | 3 | |
| -9 | 18049 D 192-1 | 81868 | ..TIEDOWN, Center rail | 1 | |
| -10 | MS20426AD4-10 | 96906 | ..RIVET, Solid (AP) | 2 | |
| -11 | MS21052-L6 | 96906 | ..PLATE, Nut | 1 | |
| -12 | 353512-1 | 98897 | ..RING | 1 | |
| -13 | 338018-4 | 98897 | ..STRAP (AP) | 1 | |
| -14 | AN960-616L | 88044 | ..WASHER, Flat (AP) | 2 | |
| -15 | MS21044-N6 | 96906 | ..NUT (AP) | 2 | |
| -16 | NAS517-6-10 | 80205 | ..SCREW, Flat head (AP) | 2 | |
| -17 | AN4-10A | 88044 | .BOLT, Hex head (AP) | 8 | |
| -18 | AN960.416 | 88044 | .WASHER, Flat (AP) | 12 | |
| -19 | MS21044-N4 | 96906 | .NUT, Hex (AP) | 12 | |
| -20 | AN4-7A | 88044 | .BOLT, Hex head (AP) | 4 | |
| -21 | 18049 E 187-1 | 81868 | .GUIDE, Center rail, inboard | 1 | |
| | 10849 E 171-2 | 81868 | .ROLLER CONVEYOR ASSEMBLY (RH), Stations 157.750 to 272.125 | 1 | |
| | 18049 E 171-4 | 81868 | ...FRAME ASSEMBLY (RH) | 1 | |
| -22 | 18049 C 209 | 81868 | ...SPACER, Roller tray, inboard | 1 | |
| -23 | MS20470AD6-10 | 96906 | ...RIVET, Solid (AP) | 36 | |
| -24 | 18049 E 296-2 | 81868 | ...CROSSMEMBER, Roller conveyors, inboard | 2 | |
| -25 | MS20426AD6-10 | 96906 | ...RIVET, Solid countersunk head, (AP) | 4 | |
| -26 | 18049 C 194 | 81868 | ...HINGE, Pallet guide | 12 | |
| -27 | MS20470AD6-12 | 96906 | ...RIVET, Solid (AP) | 40 | |
| -28 | 18049 E 172-1 | 81868 | ...TEE, Roller support, inboard, stations 157.750 to 272.125 | 1 | |
| -29 | MS20470AD6-14 | 96906 | ...RIVET, Solid (AP) | 12 | |
| -30 | 18049 E 515-2 | 81868 | ...CHANNEL, Roller support, inboard | 1 | |
| -31 | 18049 E 296-1 | 81868 | ...CROSSMEMBER, Roller conveyors, inboard | 2 | |
| -32 | 18049 E 173-2 | 81868 | ...TEE, Roller support, inboard, stations 157.750 to 272.125 | 1 | |
| -33 | 18049 E 515-4 | 81868 | ...CHANNEL, Roller support, inboard | 1 | |
| -34 | 18049 E 172-3 | 81868 | ...TEE, Roller support, inboard, stations 157.750 to 272.125 | 1 | |
| 365 | 18049 E 296-3 | 81868 | ...CROSSMEMBER, Roller conveyors, inboard | 1 | |
| -36 | 18049 E 174-6 | 81868 | ...TEE, Roller support, inboard, stations 157.75 to 272.125 | 1 | |

| FIGURE AND INDEX NO | PART NUMBER | FSCM | DESCRIPTION 1 2 3 4 5 6 7 | UNITS PER ASSY | USABLE ON CODE |
|---|---|---|---|---|---|
| 3-7-37 | 18049 E 174-4 | 81868 | ...TEE, Roller support, inboard, stations 157.750 to 272.125 | 1 | |
| -38 | 18049 E 174-2 | 81868 | ...TEE, Roller support, inboard, stations 157.750 to 272.125 | 1 | |
| -39 | 18049 C 249 | 81868 | ..SHAFT, Inboard roller | 22 | |
| -40 | 18049 C 149 | 81868 | ..ROLLER, Inboard | 18 | |
| -41 | MS24665-353 | 96906 | ..PIN, Cotter (AP) | 22 | |
| -42 | 10849 C 510 | 81868 | ..ROLLER, Inboard | 4 | |
| | 18049 E 171-1 | 81868 | .ROLLER CONVEYOR ASSEMBLY (LH), Stations 157.750 to 272.125 | 1 | |
| | 18049 E 171-3 | 81868 | ..FRAME ASSEMBLY (LH) | 1 | |
| -43 | 18049 C 209 | 81868 | ...SPACER, Roller tray, inboard | 1 | |
| -44 | MS20470AD6-10 | 96906 | ...RIVET, Solid (AP) | 36 | |
| -45 | 18049 E 296-2 | 81868 | ...CROSSMEMBER, Roller conveyors, inboard | 2 | |
| -46 | MS20426AD6-10 | 96906 | ...RIVET, Solid, countersunk head (AP) | 4 | |
| -47 | 18049 E 174-1 | 81868 | ...TEE, Roller support, inboard, stations 157.750 to 272.125 | 1 | |
| -48 | 18049 E 515-1 | 81868 | ...CHANNEL, Roller support, inboard | 1 | |
| -49 | MS20470AD6-12 | 96906 | ...RIVET, Solid (AP) | 40 | |
| -50 | 18049 E 174-3 | 81868 | ...TEE, Roller support, inboard, stations 157.750 to 272.125 | 1 | |
| -51 | 18049 E 515-3 | 81868 | ...CHANNEL, Roller support, inboard | 1 | |
| -52 | 18049 E 174-5 157.750 to 272.125 | 81868 | ...TEE, Roller support, inboard, stations | 1 | |
| -53 | 18049 E 296-1 | 81868 | ...CROSSMEMBER, Roller conveyors, | 2 | |
| -54 | 18049 E 296-3 inboard | 81868 | ...CROSSMEMBER, Roller conveyors, | 1 | |
| -55 | 18049 E 172-3 157.750 to 272.125 | 81868 | ...TEE, Roller support, inboard, stations | 1 | |
| -56 | 18049 C 194 | 81868 | ...HINGE, Pallet guide | 12 | |
| -57 | MS20470AD6-14 | 96906 | ...RIVET, Solid (AP) | 12 | |
| -58 | 18049 E 172-2 157.750 to 272.125 | 81868 | ...TEE, Roller support, inboard, stations | 1 | |
| -59 | 18049 E 172-1 157.750 to 272.125 | 81868 | ....TEE, Roller support, inboard, stations | 1 | |
| -60 | 18049 C 149 | 81868 | ..ROLLER, Inboard | 18 | |
| -61 | 18049 C 249 | 81868 | ..SHAFT, Inboard roller | 22 | |
| -62 | MS24665-353 | 96906 | ..PIN, Cotter (AP) | 22 | |
| -63 | 18049 C 510 | 81868 | ..ROLLER, Inboard | 4 | |

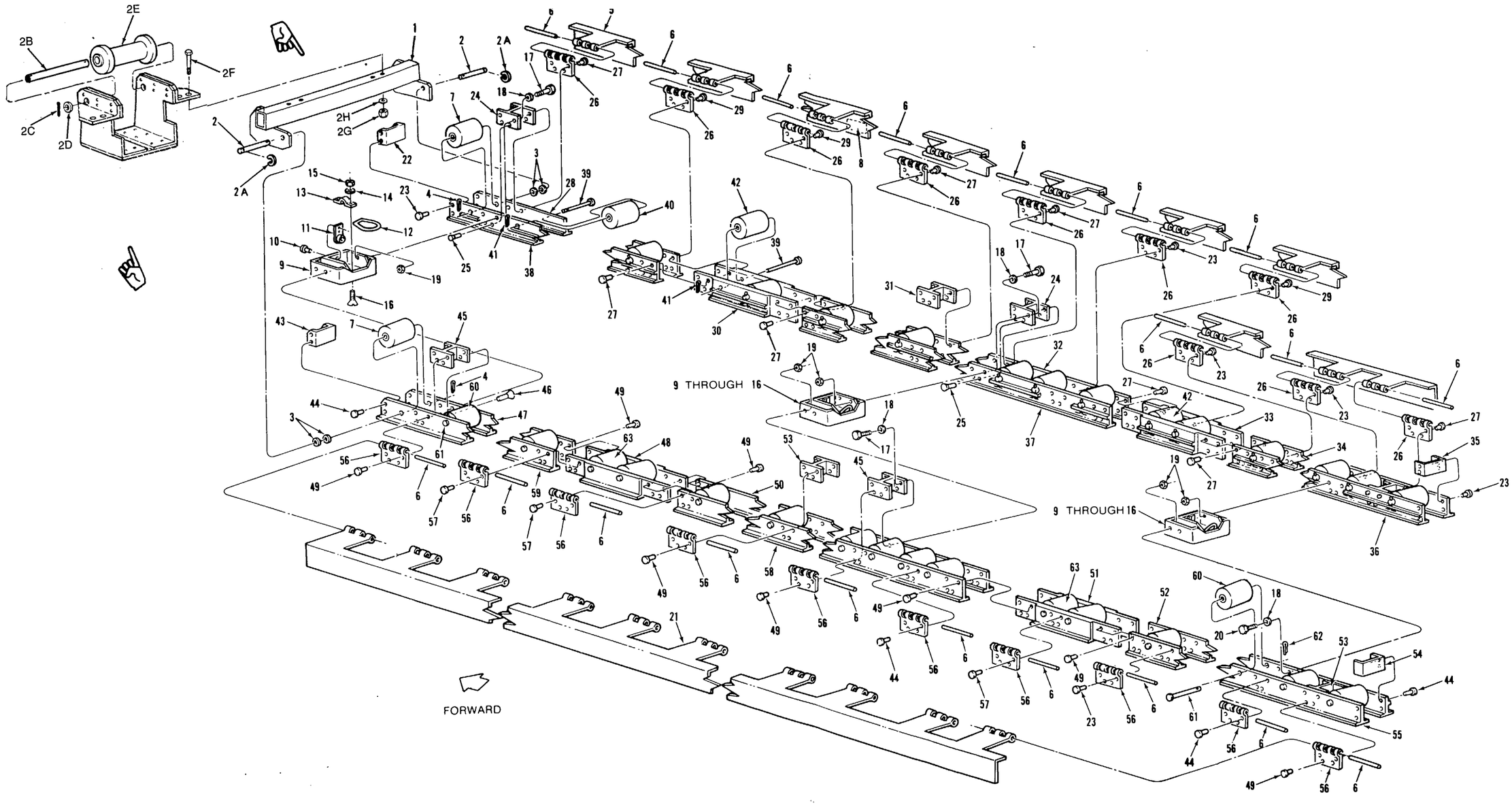


**Figure 3-8. Inboard Guide/Roller Assembly, Stations 272.313 to 377.188**

| FIGURE AND INDEX NO | PART NUMBER | FSCM | DESCRIPTION 1 2 3 4 5 6 7 | UNITS PER ASSY | USABLE ON CODE |
|---|---|---|---|---|---|
| 3-8- | 18049 J 122 | 81868 | INBOARD GUIDE/ROLLER ASSEMBLY, Stations 272.313 to 377.188 (See 10, figure 3-2 for NHA.) | REF | |
| | 18049 E 175-2 | 81868 | .ROLLER CONVEYOR ASSEMBLY (RH), Stations 272.375 to 377.125 | 1 | |
| | 18049 E 175-4 | 81868 | ...FRAME ASSEMBLY (RH) | 1 | |
| -1 | 18049 E 296-3 | 81868 | ...CROSSMEMBER, Roller conveyors, inboard | 2 | |
| -2 | MS20470AD6-10 | 96906 | ...RIVET, Solid (AP) | 32 | |
| -3 | 18049 C 194 | 81868 | ...HINGE, Pallet guide | 9 | |
| -4 | MS20470AD6-12 | 96906 | ...RIVET, Solid (AP) | 40 | |
| -5 | MS20426AD6-10 | 96906 | ...RIVET, Solid, countersunk head (AP) | 4 | |
| -6 | 18049 E 296-1 | 81868 | ...CROSSMEMBER, Roller conveyors, inboard | 2 | |
| -7 | 18049 E 176-1 | 81868 | ...TEE, Roller support, inboard, stations 272.375 to 377.125 | 1 | |
| -8 | 18049 E 515-5 | 81868 | ...CHANNEL, Roller support, inboard | 1 | |
| -9 | 18049 E 296-2 | 81868 | ...CROSSMEMBER, Roller conveyors, inboard | 2 | |
| -10 | 18049 E 177 | 81868 | ...TEE, Roller support, inboard, stations 272.375 to 377.125 | 1 | |
| -11 | 18049 E 516-2 | 81868 | ...CHANNEL, Roller support, inboard, hatch | 1 | |
| -12 | MS20426AD6-12 | 96906 | ...RIVET, Countersunk (AP) | 8 | |
| -13 | 18049 C 517 | 81868 | ...HINGE, Pallet guide, hatch | 1 | |
| -14 | MS20470AD6-14 | 96906 | ...RIVET, Solid (AP) | 8 | |
| -15 | 18049 E 176-3 | 81868 | ...TEE, Roller support, inboard, stations 272.375 to 377.125 | 1 | |
| -16 | 18049 E 178-6 | 81868 | ...TEE, Roller support, inboard, stations 272.375 to 377.125 | 1 | |
| -17 | 18049 E 178-4 | 81868 | ...TEE, Roller support, inboard, stations 272.375 to 377.125 | 1 | |
| -18 | 18049 E 178-2 | 81868 | ...TEE, Roller support, inboard, stations 272.375 to 377.125 | 1 | |
| -19 | 18049 C 149 | 81868 | ...ROLLER, Inboard | 18 | |
| -20 | 18049 C 249 | 81868 | ...SHAFT, Inboard roller | 23 | |
| -21 | MS24665-353 | 96906 | ...PIN, Cotter (AP) | 23 | |
| -22 | 18049 C 510 | 81868 | ..ROLLER, Inboard | 5 | |
| | 18049 E 175-1 | 81868 | ..ROLLER CONVEYOR ASSEMBLY (LH), Stations 272.375 to 377.125 | 1 | |
| | 18049 E 175-3 | 81868 | ..FRAME ASSEMBLY (LH) | 1 | |
| -23 | 18049 E 296-3 | 81868 | ...CROSSMEMBER, Roller conveyors, inboard | 2 | |
| -24 | MS20470AD6-10 | 96906 | ...RIVET, Solid (AP) | 32 | |
| -25 | 18049 E 178-1 | 81868 | ...TEE, Roller support, inboard, stations 272.375 to 377.125 | 1 | |
| -26 | 18049 E 296-1 | 81868 | ...CROSSMEMBER, Roller conveyors, inboard | 2 | |
| -27 | MS20470AD6-12 | 96906 | ...RIVET, Solid (AP) | 40 | |
| -28 | 18049 E 515-5 | 81868 | ...CHANNEL, Roller support, inboard | | |
| -29 | 18049 E 178-3 | 81868 | ...TEE, Roller support, inboard, stations 272.375 to 377.125 | 1 | |
| -30 | 18049 E 296-2 | 81868 | ...CROSSMEMBER, Roller conveyors, inboard | 2 | |
| -31 | MS20426AD6-10 | 96906 | ...RIVET, Solid, countersunk head (AP) | 4 | |

| FIGURE AND INDEX NO | PART NUMBER | FSCM | DESCRIPTION 1 2 3 4 5 6 7 | UNITS PER ASSY | USABLE ON CODE |
|---|---|---|---|---|---|
| 3-8-32 | 18049 E 516-1 | 81868 | ...CHANNEL, Roller support, inboard hatch | 1 | |
| -33 | MS20426AD6-12 | 96906 | ...RIVET, Countersunk (AP) | 8 | |
| -34 | 18049 E 178-5 | 81868 | ...TEE, Roller support, inboard, stations 272.375 to 377.125 | 1 | |
| -35 | 18049 E 176-3 | 81868 | ...TEE, Roller support, inboard, stations 272.375 to 377.125 | 1 | |
| -36 | 18049 C 194 | 81868 | ...HINGE, Pallet guide | 9 | |
| -37 | 18049 C 517 | 81868 | ...HINGE, Pallet guide, hatch | 1 | |
| -38 | MS20470AD6-14 | 96906 | ...RIVET, Solid (AP) | 8 | |
| -39 | 18049 E 176-2 | 81868 | ...TEE, Roller support, inboard, stations 272.375 to 377.125 | 1 | |
| -40 | 18049 E 176-1 | 81868 | ...TEE, Roller support, inboard, stations 272.375 to 377.125 | 1 | |
| -41 | 18049 C 149 | 81868 | ...ROLLER, Inboard | 18 | |
| -42 | 18049 C 249 | 81868 | ...SHAFT, Inboard roller | 23 | |
| -43 | MS24665-353 | 96906 | ...PIN, Cotter (AP) | 23 | |
| -44 | 18049 C 510 | 81868 | ...ROLLER, Inboard | 5 | |
| | 18049 D 191-1 | 81868 | ..TIEDOWN ASSEMBLY, Center rail | 2 | |
| -45 | 18049 D 192-1 | 81868 | ..CENTER, Rail tiedown | 1 | |
| -46 | MS20426AD4-10 | 96906 | ..RIVET, Solid (AP) | 2 | |
| -47 | MS21052-L6 | 96906 | ..PLATE, Nut | 1 | |
| -48 | 353512-1 | 98897 | ..RING | 1 | |
| -49 | 338018-4 | 98897 | ..STRAP | 1 | |
| -50 | AN960-616L | 88044 | ..WASHER, Flat (AP) | 2 | |
| -51 | MS21044-N6 | 96906 | ..NUT (AP) | 2 | |
| -52 | NAS517-6-10 | 80205 | ..SCREW, Flat head (AP) | 2 | |
| | 18049 D 191-2 | 81868 | .TIEDOWN ASSEMBLY, Center rail | 1 | |
| -53 | 18049 D 192-2 | 81868 | ..CENTER, Rail tiedown | 1 | |
| -54 | MS20426AD4-10 | 96906 | ..RIVET, Solid (AP) | 2 | |
| -55 | MS21052-L6 | 96906 | ..PLATE, Nut | 1 | |
| -56 | 353512-1 | 98897 | ..RING | 1 | |
| -57 | 338018-4 | 98897 | ..STRAP | 1 | |
| -58 | AN960-616L | 88044 | ..WASHER, Flat (AP) | 2 | |
| -59 | MS21044-N6 | 96906 | ..NUT (AP) | 2 | |
| -60 | NAS517-6-10 | 80205 | ..SCREW, Flat head (AP) | 2 | |
| -61 | MS21044-N4 | 96906 | .NUT, Hex (AP) | 12 | |
| -62 | AN960-416 | 88044 | .WASHER, Flat (AP) | 12 | |
| -63 | AN4-7A | 88044 | .BOLT, Hex head (AP) | 4 | |
| -64 | 18049 B 297 | 81868 | .PIN, Hinge, inboard (AP) | 20 | |
| -65 | 18049 E 188-2 | 81868 | .GUIDE, Center rail, right-hand | 1 | |
| -66 | 18133 C 500 | 81868 | .NAMEPLATE | 1 | |
| -67 | AN4-1OA | 88044 | .BOLT, Hex head (A P) | 8 | |
| -68 | 18049 E 188-1 | 81868 | .GUIDE, Center rail, left-hand | 1 | |

(THIS PAGE INTENTIONALLY
LEFT BLANK.)

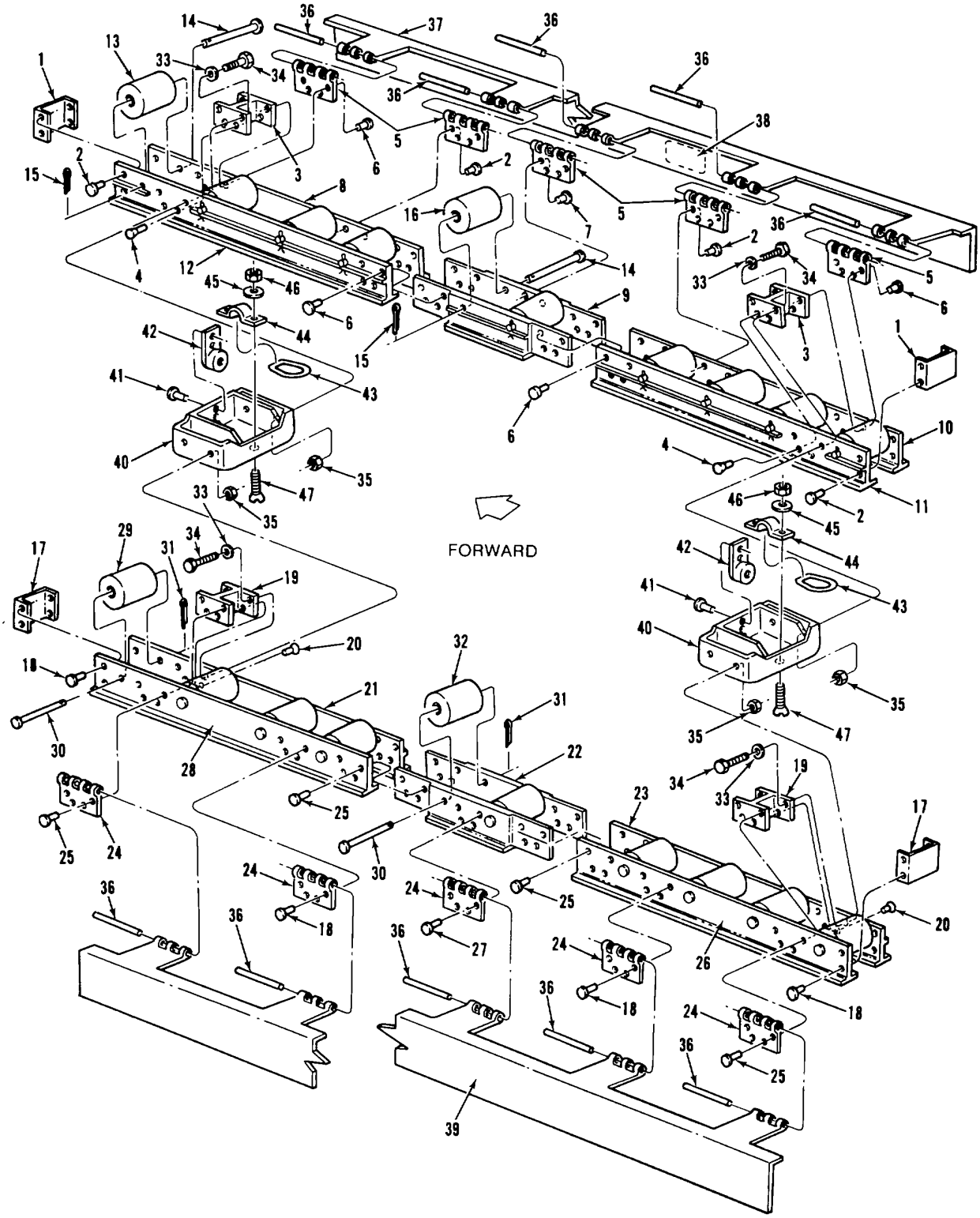


**Figure 3-9. Inboard Guide/Roller Assembly, Stations 377.313 to 427.188**

| FIGURE AND INDEX NO | PART NUMBER | FSCM | DESCRIPTION 1 2 3 4 5 6 7 | UNITS PER ASSY | USABLE ON CODE |
|---|---|---|---|---|---|
| 3-9- | 18049 J 123 | 81868 | INBOARD GUIDE/ROLLER ASSEMBLY, Stations 377.313 to 427.188 (See 11, figure 3-2 for NHA.) | REF | |
| | 18049 E 179-2 | 81868 . | .ROLLER CONVEYOR ASSEMBLY (RH) | 1 | |
| | 18049 E 179-4 | 81868 | ..FRAME ASSEMBLY (RH) | 1 | |
| -1 | 18049 E 296-3 | 81868 . | ...CROSSMEMBER, Roller conveyors, inboard | 2 | |
| -2 | MS20470AD6-10 | 96906 | ...RIVET, Solid (AP) | 16 | |
| -3 | 18049 E 296-2 | 81868 . | ...CROSSMEMBER, Roller conveyors, inboard | 2 | |
| -4 | MS20426AD6-10 | 96906 . | ...RIVET, Solid countersunk (AP) | 4 | |
| -5 | 18049 C 194 | 81868 . | ...HINGE, Pallet guide | 5 | |
| -6 | MS20470AD6-12 | 96906 . | ...RIVET, Solid (AP) | 24 | |
| -7 | MS20470AD6-14 | 96906 . | ...RIVET, Solid (AP) | 4 | |
| -8 | 18049 E 180-1 | 81868 . | ...TEE, Roller support, inboard, stations 377.375 to 427.125 | 1 | |
| -9 | 18049 E 515-8 | 81868 . | ...CHANNEL, Roller support, inboard | 1 | |
| -10 | 18049 E 180-2 | 81868 . | ...TEE, Roller support, inboard, stations 377.375 to 427.125 | 1 | |
| -11 | 18049 E 182-4 | 81868 . | ...TEE, Roller support, inboard, stations 377.375 to 427.125 | 1 | |
| -12 | 18049 E 182-2 | 81868 . | ...TEE, Roller support, inboard, stations 377.375 to 427.125 | 1 | |
| -13 | 18049 C 149 | 81868 | ..ROLLER, Inboard | 8 | |
| -14 | 18049 C 249 | 81868 | ..SHAFT, Inboard roller | 10 | |
| -15 | MS24665-353 | 96906 | ..PIN, Cotter (AP) | 10 | |
| -16 | 18049 C 510 | 81868 | ..ROLLER, Inboard | 2 | |
| | 18049 E 179-1 | 81868 . | .ROLLER CONVEYOR ASSEMBLY (LH), Stations 377.375 to 427.125 | 1 | |
| | 18049 E 179-3 | 81868 | ..FRAME ASSEMBLY (LH) | 1 | |
| -17 | 18049 E 296-3 | 81868 . | ...CROSSMEMBER, Roller conveyors, inboard | 2 | |
| -18 | MS20470AD6-10 | 96906 . | ...RIVET, Solid (AP) | 16 | |
| -19 | 18049 E 296-2 | 81868 . | ...CROSSMEMBER, Roller conveyors, inboard | 2 | |
| -20 | MS20426AD6-10 | 96906 . | ...RIVET, Solid, countersunk (AP) | 4 | |
| -21 | 18049 E 182-1 | 81868 . | ...TEE, Roller support, inboard, stations 377.375 to 427.125 | 1 | |
| -22 | 10849 E 515-7 | 81868 . | ...CHANNEL, Roller support, inboard | 1 | |
| -23 | 10849 E 182-3 | 81868 . | ...TEE, Roller support, inboard, stations 377.375 to 427.125 | 1 | |
| -24 | 18049 C 194 | 81868 . | ...HINGE, Pallet guide | 5 | |
| -25 | MS20470AD6-12 | 96906 . | ...RIVET, Solid (AP) | 24 | |
| -26 | 18049 E 180-2 | 81868 . | ...TEE, Roller support, inboard, stations 377.375 to 427.125 | 1 | |
| -27 | MS20470AD6-14 | 96906 . | ...RIVET, Solid (AP) | 4 | |
| -28 | 18049 E 180-1 | 81868 . | ...TEE, Roller support, inboard, stations 377.375 to 427.125 | 1 | |
| -29 | 18049 C 149 | 81868 | ..ROLLER, Inboard | 8 | |
| -30 | 18049 C 249 | 81868 | ..SHAFT, Inboard roller | 10 | |
| -31 | MS24665-353 | 96906 | ..PIN, Cotter (AP) | 10 | |
| -32 | 18049 C 510 | 81868 | ..ROLLER, Inboard | 2 | |
| -33 | AN960-416 | 88044 . | ..WASHER, Flat (AP) | 8 | |
| -34 | AN4-1OA | 88044 . | .BOLT, Hex head (AP) | 8 | |

| FIGURE AND INDEX NO | PART NUMBER | FSCM | DESCRIPTION 1 2 3 4 5 6 7 | UNITS PER ASSY | USABLE ON CODE |
|---|---|---|---|---|---|
| 3-9-35 | MS21044-N4 | 96906 . | .NUT (AP) | 8 | |
| -36 | 18049 B 297 | 81868 . | .PIN, Hinge (AP) | 10 | |
| -37 | 18049 E 189-2 | 81868 . | .GUIDE, Center rail, inboard, right-hand | 1 | |
| -38 | 18133 C 500 | 81868 . | .NAMEPLATE | 1 | |
| -39 | 18049 E 189-1 | 81868 . | .GUIDE, Center rail, inboard, left-hand | 1 | |
| | 18049 D 191-1 | 81868. | .TIEDOWN ASSEMBLY, Center rail | 2 | |
| -40 | 18049 D 192-1 | 81868 | ..CENTER, Rail tiedown | 1 | |
| -41 | MS20426AD4-10 | 96906 | ..RIVET, Solid (AP) | 2 | |
| -42 | MS21052-L6 | 96906 | ..PLATE, Nut | 1 | |
| -43 | 353512-1 | 98897 | ..RING | 1 | |
| -44 | 338018-4 | 98897 | ..STRAP | 1 | |
| -45 | AN960-616L | 88044 | ..WASHER, Flat (AP) | 2 | |
| -46 | MS21044-N6 | 96906 | ..NUT (AP) | 2 | |
| -47 | NAS517-6-10 | 80205 | ..SCREW, Flat head (AP) | 2 | |

(THIS PAGE INTENTIONALLY

LEFT BLANK.)

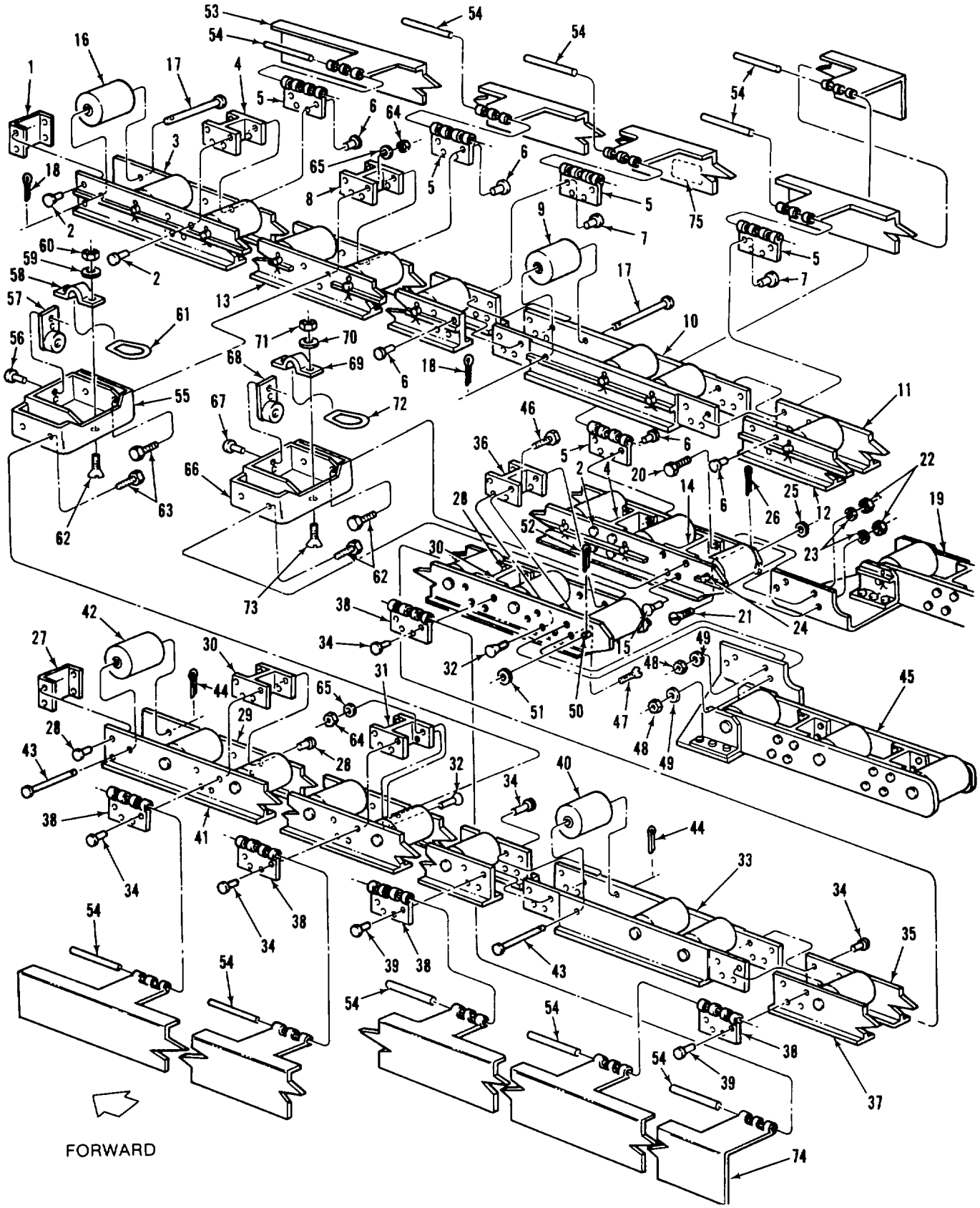


Figure 3-10. Inboard Guide/Roller Assembly, Stations 427.375 to 487.000

| FIGURE AND INDEX NO | PART NUMBER | FSCM | DESCRIPTION 1 2 3 4 5 6 7 | UNITS PER ASSY | USABLE ON CODE |
|---|---|---|---|---|---|
| 3-10- | 18049 J 124 | 81868 | INBOARD GUIDE/ROLLER ASSEMBLY, Stations 427.375 to 487.000 (See 12, figure 3-2 for NHA.) | REF | |
| | 18049 E 183-2 | 81868 . | .ROLLER CONVEYOR ASSEMBLY (RH), Stations 427.375 to 487.000 | 1 | |
| | 18049 E 183-4 | 81868 | ..FRAME ASSEMBLY (RH) | 1 | |
| -1 | 18049 E 296-3 | 81868 . | ...CROSSMEMBER, Roller conveyors, inboard | 1 | |
| -2 | MS20470AD6-10 | 96906 | ...RIVET, Solid (AP) | 12 | |
| -3 | 18049 E 184-1 | 81868 | ..TEE, Roller support, inboard, stations 427.375 to 487.000 | 1 | |
| -4 | 18049 E 296-1 | 81868 . | ...CROSSMEMBER, Roller conveyors, inboard | 2 | |
| -5 | 18049 C 194 | 81868 | ...HINGE, Pallet guide | 5 | |
| -6 | MS20470AD6-12 | 96906 | ...RIVET, Solid (AP) | 20 | |
| -7 | MS20470AD6-14 | 96906 | ...RIVET, Solid (AP) | 8 | |
| -8 | 18049 E 296-2 | 81868 . | ...CROSSMEMBER, Roller conveyors, inboard | 1 | |
| -9 | 18049 C 510 | 81868 . | ...ROLLER, Inboard | 3 | |
| -10 | 18049 E 515- | 81868 . | ...CHANNEL, Roller support, inboard | 1 | |
| -11 | 18049 E 185 | 81868 . | ...TEE, Roller support, inboard, stations 427.375 to 487.000 | 1 | |
| -12 | 18049 E 186-4 | 81868 . | ...TEE, Roller support, inboard, stations 427.375 to 487.000 | 1 | |
| -13 | 18049 E 186-2 | 81868 . | ...TEE, Roller support, inboard, stations 427.375 to 487.000 | 1 | |
| -14 | 18049 C 294 | 81868 . | ...CROSSMEMBER, Weldment, roller conveyor, inboard | 1 | |
| -15 | MS20426AD6-10 | 96906 . | ...RIVET, Solid, countersunk (AP) | 6 | |
| -16 | 18049 C 149 | 81868 | ..ROLLER, Inboard | 12 | |
| -17 | 18049 C 249 | 81868 | ..SHAFT, Inboard roller | 14 | |
| -18 | MS24665-353 | 96906 | ..PIN, Cotter (AP) | 15 | |
| -19 | 18049 E 281-2 | 81868 | ..INBOARD TRANSITION ROLLER ASSEMBLY (RH), Station 486.625 (See figure 3-17 for breakdown) | 1 | |
| -20 | AN4-7A | 88044 | ..BOLT, Hex head (AP) | 2 | |
| -21 | MS24694-S101 | 96906 | ..SCREW, Flat head (AP) | 2 | |
| -22 | MS21044-N4 | 96906 | ..NUT (AP) | 4 | |
| -23 | AN960-416 | 88044 | ..WASHER, Flat (AP) | 4 | |
| -24 | 18049 C 247-1 | 81868 | ..SHAFT, Teeter roller, inboard | 1 | |
| -25 | AN960-616 | 88044 | ...WASHER, Flat (AP) | 1 | |
| -26 | MS24665-351 | 96906 | ...PIN, Cotter (AP) | 1 | |
| | 18049 E 183-1 | 81868. | .ROLLER CONVEYOR ASSEMBLY (LH), Stations 427.375 to 487.000 | 1 | |
| | 18049 E 183-3 | 81868 . | ..FRAME ASSEMBLY (LH) | 1 | |
| -27 | 18049 E 296-3 | 81868 . | ...CROSSMEMBER, Roller conveyors, inboard | 1 | |
| -28 | MS20470AD6-10 | 96906 | ...RIVET, Solid (AP) | 12 | |
| -29 | 18049 E 184-1 | 81868 . | ...TEE, Roller support, inboard, left-hand, stations 427.375 to 487.000 | 1 | |
| -30 | 18049 E 296-1 | 81868 . | ...CROSSMEMBER, Roller conveyors, inboard | 2 | |
| -31 | 18049 E 296-2 | 81868 . | ...CROSSMEMBER, Roller conveyors, inboard | 1 | |

| FIGURE AND INDEX NO | PART NUMBER | FSCM | DESCRIPTION 1 2 3 4 5 6 7 | UNITS PER ASSY | USABLE ON CODE |
|---|---|---|---|---|---|
| 3-10-32 | MS20426AD6-10 | 96906 . | ...RIVET, Solid, countersunk (AP) | 6 | |
| -33 | 18049 E 515-9 | 81868 . | ...CHANNEL, Roller support, inboard | 1 | |
| -34 | MS20470AD6-12 | 96906 . | ...RIVET, Solid (AP) | 20 | |
| -35 | 18049 E 186-3 | 81868 . | ...TEE, Roller support, inboard, stations 427.375 to 487.000 | 1 | |
| -36 | 18049 C 294 | 81868 . | ...CROSSMEMBER, Weldment, roller conveyor, inboard | 1 | |
| -37 | 18049 E 184-2 | 81868 . | ...TEE, Roller support, inboard, stations 427.375 to 487.000 | 1 | |
| -38 | 18049 C 194 | 81868 . | ...HINGE, Pallet guide | 5 | |
| -39 | MS20470AD6-14 | 96906 . | ...RIVET, Solid (AP) | 8 | |
| -40 | 18049 C 510 | 81868 . | ...ROLLER, Inboard | 3 | |
| -41 | 18049 E 184-1 | 81868 . | ...TEE, Roller support, inboard, stations 427.375 to 487.000 | 1 | |
| -42 | 18049 C 149 | 81868 | ..ROLLER, Inboard | 12 | |
| -43 | 18049 C 249 | 81868 | ..SHAFT, Inboard roller | 14 | |
| -44 | MS24665-353 | 96906 | ..PIN, Cotter (AP) | 15 | |
| -45 | 18049 E 281-1 | 81868 | ..INBOARD TRANSITION ROLLER AS-SEMBLY (LH), (See figure 3-17 for breakdown.) | 1 | |
| -46 | AN4-7A | 88044 | ..BOLT, Hex head (AP) | 2 | |
| -47 | MS24694-S101 | 96906 | ..SCREW, Flat head (AP) | 2 | |
| -48 | MS21044-N4 | 96906 | ..NUT (AP) | 4 | |
| -49 | AN960-416 | 88044 | ..WASHER, Flat (AP) | 4 | |
| -50 | 18049 C 247-1 | 81868 | ..SHAFT, Teeter roller inboard | 1 | |
| -51 | AN960-616 | 88044 | ..WASHER, Flat (AP) | 1 | |
| -52 | MS24665-351 | 96906 | ..PIN, Cotter (AP) | 1 | |
| -53 | 18049 E 190-1 | 81868 . | .GUIDE, Center rail, inboard, left-hand | 1 | |
| -54 | 18049 B 297 | 81868 . | .PIN, Hinge, inboard (AP) | 10 | |
| | 18049 D 191-1 | 81868 . | .TIEDOWN ASSEMBLY, Center rail | 1 | |
| -55 | 18049 D 192-1 | 81868 | ..CENTER, Rail tiedown | 1 | |
| -56 | MS20426AD4-10 | 96906 | ..RIVET, Solid (AP) | 2 | |
| -57 | MS21052-L6 | 96906 | ..PLATE, Nut | 1 | |
| -58 | 338018-4 | 98897 | ..STRAP | 1 | |
| -59 | AN960-616L | 88044 | ..WASHER, Flat (AP) | 2 | |
| -60 | MS21044-N6 | 96906 | ..NUT (AP) | 2 | |
| -61 | 353512-1 | 98897 | ..RING | 1 | |
| -62 | NAS517-6-10 | 80205 | ..SCREW, Flat head (AP) | 2 | |
| -63 | AN4-1OA | 88044 . | .BOLT, Hex head (AP) | 8 | |
| -64 | MS21044-N4 | 96906 . | .NUT (AP) | 8 | |
| -65 | AN960-416 | 88044 . | .WASHER (AP) | 8 | |
| | 18049 D 191-3 | 81868 . | .TIEDOWN ASSEMBLY, Center rail | 1 | |
| -66 | 18049 D 192-3 | 81868 | ..CENTER, Rail tiedown | 1 | |
| -67 | MS20426AD4-10 | 96906 | ..RIVET, Solid (AP) | 2 | |
| -68 | MS21052-L6 | 96906 | ..PLATE, Nut | 1 | |
| -69 | 338018-4 | 98897 | ..STRAP | 1 | |
| -70 | AN960-616L | 88044 | ..WASHER, Flat (AP) | 2 | |
| -71 | MS21044-N6 | 96906 | ..NUT (AP) | 2 | |
| -72 | 353512-1 | 98897 | ..RING | 1 | |
| -73 | NAS517-6-10 | 80205 | ..SCREW, Flat head (AP) | 2 | |
| -74 | 18049 E 190-2 | 81868 . | .GUIDE, Center rail, inboard, right-hand | 1 | |
| -75 | 18133 C 500 | 81868 . | .NAMEPLATE | 1 | |

(THIS PAGE INTENTIONALLY

LEFT BLANK.)

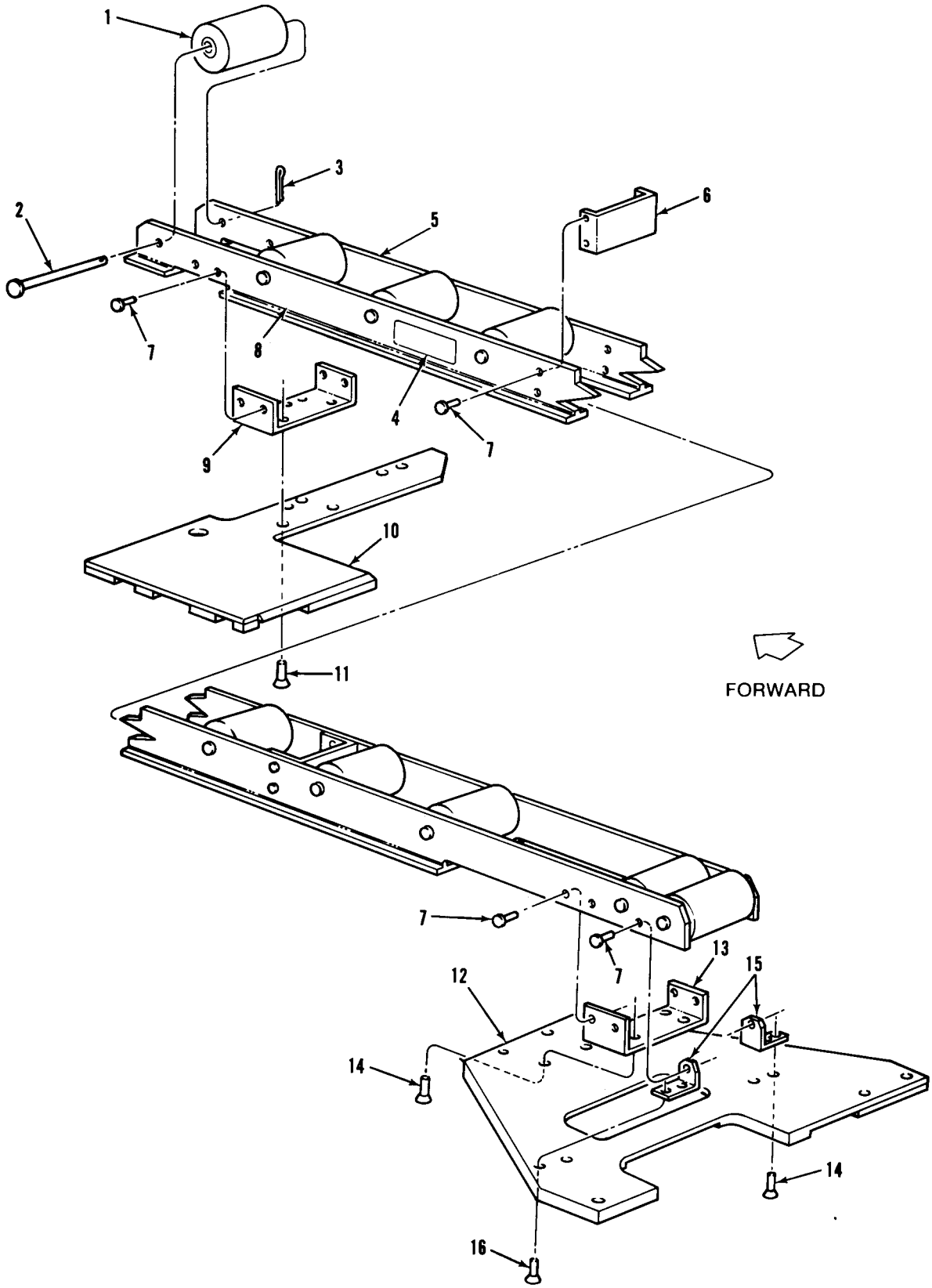


Figure 3-11. Ramp Inboard Roller Assembly

| FIGURE AND INDEX NO | PART NUMBER | FSCM | DESCRIPTION 1 2 3 4 5 6 7 | UNITS PER ASSY | USABLE ON CODE |
|---|---|---|---|---|---|
| 3-11- | 18049 J 225 | 81868 | RAMP INBOARD ROLLER ASSEMBLY (LH) (See 13, figure 3-2 for NHA.) | REF | A |
| | 18049 J 226 | | 81868 RAMP INBOARD ROLLER ASSEMBLY (RH) (See 14, figure 3-2 for NHA.) | REF | B |
| | 18049 J 225-1 | 81868 . | .FRAME ASSEMBLY (LH) | 1 | A |
| | 18049 J 226-1 | 81868. | .FRAME ASSEMBLY (RH) | 1 | B |
| -1 | 18049 C 148 | 81868 . | .ROLLER, Outboard | 20 | |
| -2 | 18049 C 246 | 96906 . | .SHAFT, Teeter roller, outboard | 20 | |
| -3 | MS24665-353 | 96906 . | .PIN, Cotter (AP) | 20 | |
| -4 | 18133 C 500 | 81868 . | .NAMEPLATE | 1 | |
| -5 | 18049 E 239-1 | 81868 | ..TEE, Roller support, inboard, left-hand, ramp center roller | 1 | A |
| | 18049 E 239-2 | 81868 | TEE, Roller support, inboard, right-hand, ramp center roller | 1 | B |
| -6 | 18049 C 129 | 81868 | ..SPACER, Roller tray, outboard | 3 | |
| -7 | MS20470AD8-10 | 96906 | ..RIVET, Solid (AP) | 22 | |
| -8 | 18049 E 240 | 81868 | ..TEE, Roller support, outboard, ramp center roller | 1 | |
| | 18049 D 229-1 | 81868 | ..FORWARD RAMP CENTER ROLLER MOUNTING PLATE ASSEMBLY (LH) | 1 | A |
| | 18049 D 229-2 | 81868 | ..FORWARD RAMP CENTER ROLLER MOUNTING PLATE ASSEMBLY (RH) | 1 | B |
| -9 | 18049 C 231-1 | 81868 . | ...SPACER, Ramp center roller, left-hand | 1 | A |
| | 18049 C 231-2 | 81868 . | ...SPACER, Ramp center roller, right-hand | 1 | B |
| -10 | 18049 D 230-1 | 81868 . | ...PLATE, Mounting, ramp center roller, left-hand | 1 | A |
| | 18049 D 230-2 | 81868 . | ...PLATE, Mounting, ramp center roller, right-hand | 1 | B |
| -11 | MS20426AD8-10 | 96906 | ...RIVET, Countersunk solid (AP) | 2 | |
| | 18049 D 235-1 | 81868 | ..AFT RAMP CENTER ROLLER MOUNTING PLATE ASSEMBLY (LH) | 1 | A |
| | 18049 D 235-2 | 81868 | ..AFT RAMP CENTER ROLLER MOUNTING PLATE ASSEMBLY (RH) | 1 | B |
| -12 | 18049 D 236-1 | 81868 . | ...PLATE, Mounting, ramp center roller, left-hand | 1 | A |
| | 18049 D 236-2 | 81868 . | ...PLATE, Mounting, ramp center roller, right-hand | 1 | B |
| -13 | 18049 C 238 | 81868 . | ...SPACER, Ramp center roller, right-hand | 1 | |
| -14 | MS20426AD8-10 | 96906 . | ...RIVET, Countersunk solid (AP) | 6 | |
| -15 | 18049 C 237-1 | 81868 . | ...ANGLE, Ramp center roller, left-hand | 2 | A |
| | 18049 C 237-2 | 81868 . | ...ANGLE, Ramp center roller, right-hand | 2 | B |
| -16 | MS20426AD8-14 | 96906 | ...RIVET, Countersunk solid (AP) | 2 | |

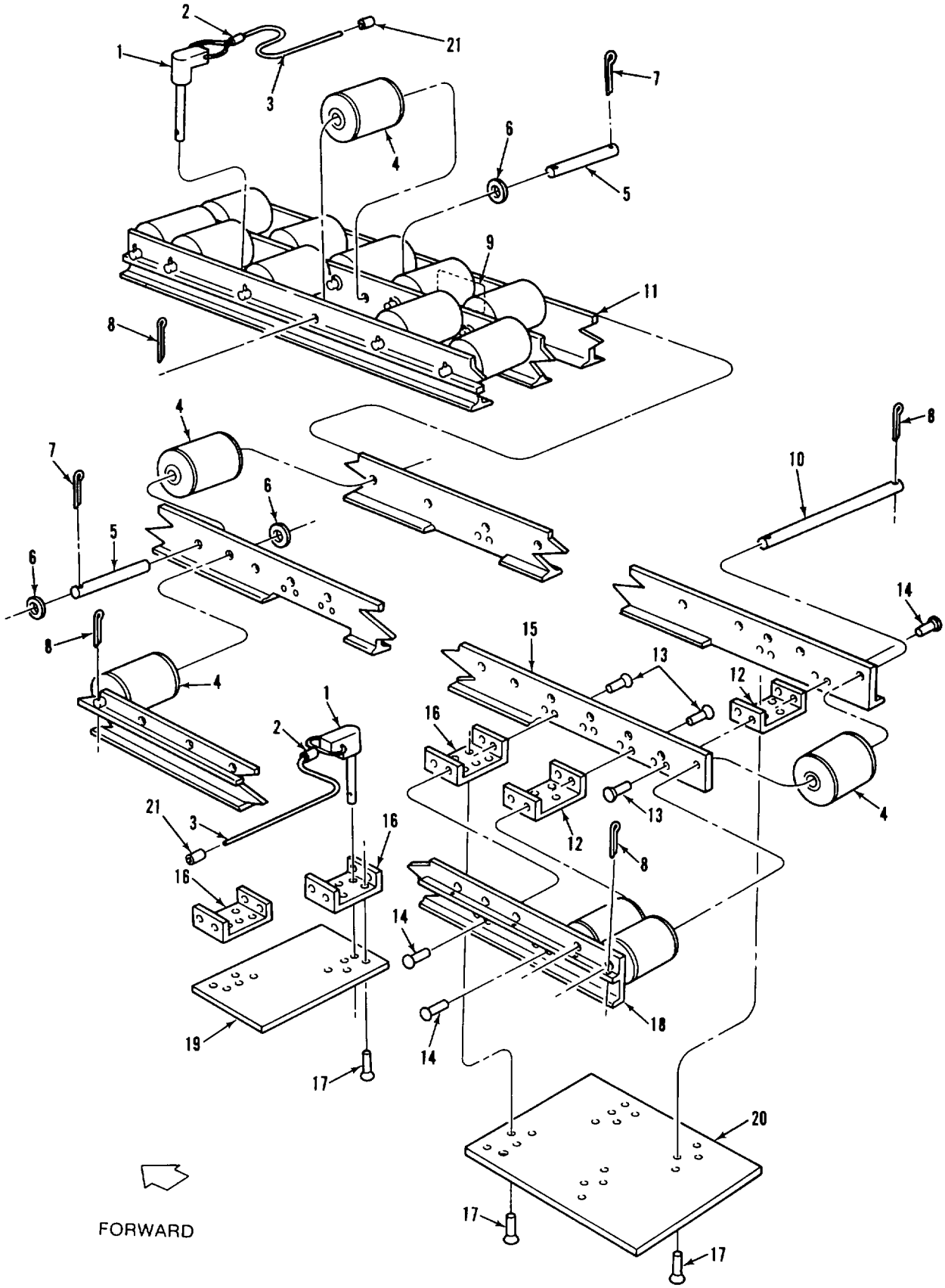


Figure 3-12. Ramp Extension Roller Assembly

| FIGURE AND INDEX NO | PART NUMBER | FSCM | DESCRIPTION 1 2 3 4 5 6 7 | UNITS PER ASSY | USABLE ON CODE |
|---|---|---|---|---|---|
| 3-12- | 18049 E 140 | 81868 | RAMP EXTENSION ROLLER ASSEMBLY (See 15, figure 3-2 for NHA.) | REF | |
| | 18049 C 204 | 81868 | .RAMP EXTENSION CABLE PIN ASSEMBLY | 6 | |
| -1 | NAS1336A5S23D | 80205 | ..PIN, Quick release | 1 | |
| -2 | 28-2-G | 76691 | ..SLEEVE, Splicing, 0.094 inch diameter | 1 | |
| -3 | COML | 72954 | ..CABLE, 7 x 7 inches, 0.062 diameter x 7-1/2 inches long, galvanized, nylon coated, 3/32 od | 1 | |
| -4 | 18049 C 148 | 81868 | .ROLLER, Outboard | 29 | |
| -5 | 18049 C 247-2 | 81868 | .SHAFT, Teeter roller, inboard | 25 | |
| -6 | AN960-616 | 88044 | .WASHER, Flat (AP) | 25 | |
| -7 | MS24665-351 | 96906 | .PIN, Cotter, split (AP) | 25 | |
| -8 | MS24665-355 | 96906 | .PIN, Cotter, split (AP) | 29 | |
| -9 | 18133 C 500 | 81868 | .NAMEPLATE | 1 | |
| -10 | 18049 C 205 | 81868 | .SHAFT, Ramp extension | 2 | |
| | 18049 E 140-1 | 81868 | .FRAME ASSEMBLY | 1 | |
| -11 | 18049 E 142 | 81868 | ..RAIL, Ramp extension, right-hand | 1 | |
| -12 | 18049 C 144 | 81868 | ..SPACER, Ramp extension | 2 | |
| -13 | MS20470AD6-9 | 96906 | ..RIVET, Solid (AP) | 16 | |
| -14 | MS20426AD6-9 | 96906 | ..RIVET, Countersunk solid (AP) | 16 | |
| -15 | 18049 E 143 | 81868 | ..RAIL, Ramp extension, center | 1 | |
| -16 | 18049 C 145 | 81868 | ..SPACER, Ramp extension | 6 | |
| -17 | MS20426AD6-10 | 96906 | ..RIVET, Countersunk solid (AP) | 32 | |
| -18 | 18049 E 141 | 81868 | ..TEE, Roller support, ramp extension, left-hand | 1 | |
| -19 | 18049 D 146 | 81868 | ..PLATE, Ramp extension | 2 | |
| -20 | 18049 D 147 | 81868 | ..PLATE, Ramp extension | 1 | |
| -21 | 28-2-G | 76691 | .SLEEVE, Crimp | 6 | |

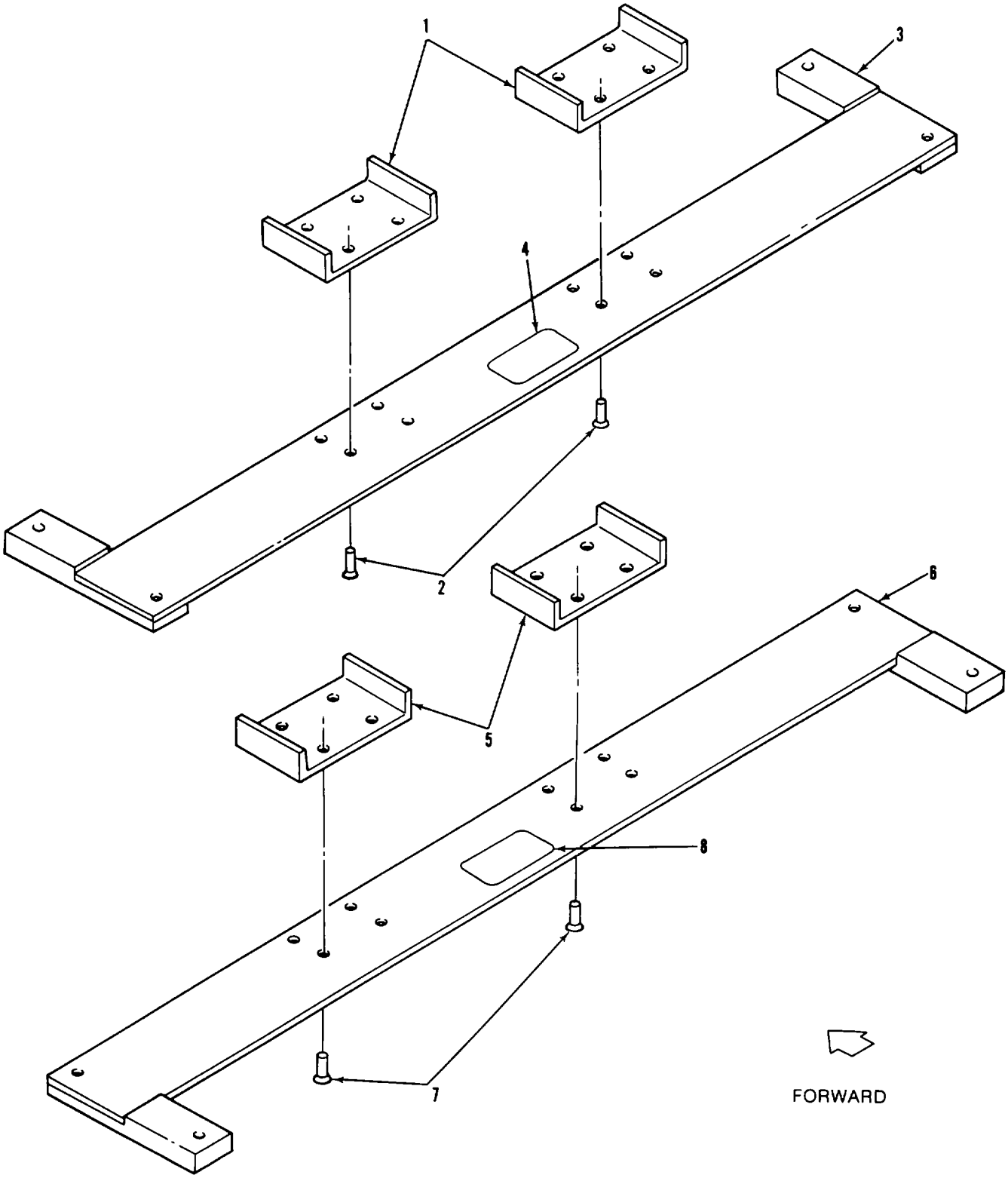


**Figure 3-13. Forward and Aft Ramp Center Roller Mounting Bar Assembly**

| FIGURE AND INDEX NO | PART NUMBER | FSCM | DESCRIPTION 1 2 3 4 5 6 7 | UNITS PER ASSY | USABLE ON CODE |
|---|---|---|---|---|---|
| 3-13- | 18049 D 227 | 81868 | FORWARD RAMP CENTER ROLLER MOUNTING BAR ASSEMBLY (See 17, figure 3-2 for NHA.) | REF | |
| -1 | 18049 C 233 | 81868 | .SPACER, Ramp center roller | 2 | |
| -2 | MS20426AD8-10 | 96906 | .RIVET, Countersunk solid (AP) | 8 | |
| -3 | 18049 D 232 | 81868 | .WELDMENT, Mounting bar, forward ramp center roller | 1 | |
| -4 | 18133 C 500 | 81868 | .NAMEPLATE | 1 | |
| | 10849 D 228 | 81868 | AFT RAMP CENTER ROLLER MOUNTING BAR ASSEMBLY (See 18, figure 3-2 for NHA.) | REF | |
| -5 | 18049 C 233 | 81868 | .SPACER, Ramp center roller | 2 | |
| -6 | 18049 D 234 | 81868 | .WELDMENT, Mounting bar, aft ramp center roller | 1 | |
| -7 | MS20426AD8-10 | 96906 | .RIVET, Countersunk solid (AP) | 8 | |
| -8 | 18133 C 500 | 81868 | .NAMEPLATE | 1 | |

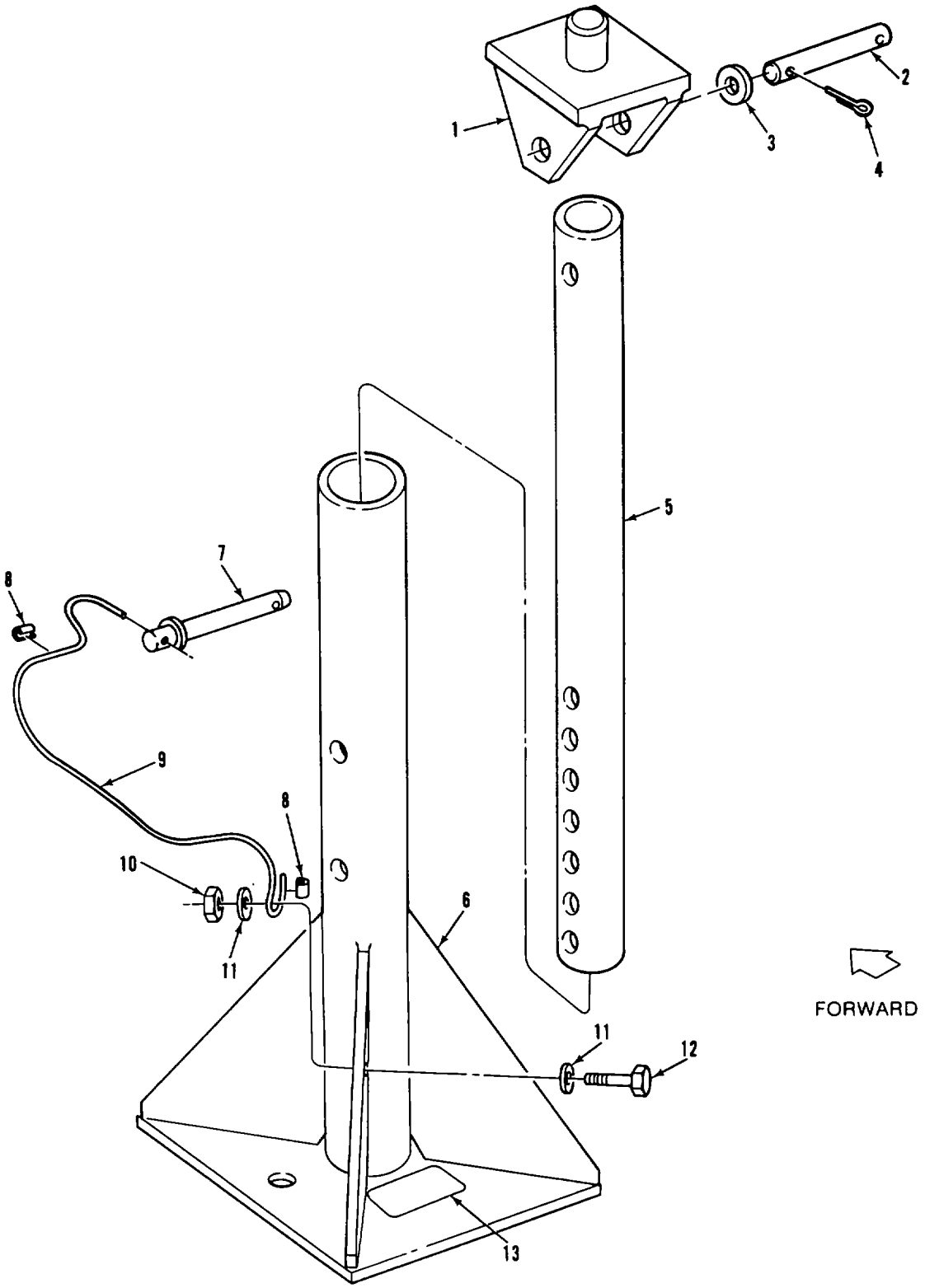


**Figure 3-14. Ramp Extension Support Assembly**

| FIGURE AND INDEX NO | PART NUMBER | FSCM | DESCRIPTION 1 2 3 4 5 6 7 | UNITS PER ASSY | USABLE ON CODE |
|---|---|---|---|---|---|
| 3-14- | 18049 E 150 | 81868 | RAMP EXTENSION SUPPORT ASSEMBLY (See 19, figure 3-2 for NHA.) | REF | |
| -1 | 18049 C 152 | 81868 | .SUPPORT, Index, ramp extension support | 1 | |
| -2 | 18049 C 139-1 | 81868 | .PIN, Headed | 1 | |
| -3 | MS16212-16 | 96906 | .WASHER, Flat, nonmagnetic (AP) | 2 | |
| -4 | MS24665-374 | 96906 | .PIN, Cotter, split (AP) | 2 | |
| -5 | 18049 C 153 | 81868 | .TUBE, Support, ramp extension support | 1 | |
| -6 | 18049 D 151 | 81868 | .WELDMENT, Base, ramp extension support | 1 | |
| | 18049 C 154 | 81868 | PIN ASSEMBLY, Ramp extension support | 1 | |
| -7 | D8-30X-303 | 09332 | ..FASPIN Nonmagnetic | 1 | |
| -8 | 28-2-G | 76691 | ..SLEEVE, Splicing, 0.094 inch diameter (AP) | 2 | |
| -9 | COML | 72954 | ..CABLE, 7 inches x 7 inches, 0.062 inch diameter x 16 inches long, galvanized, nylon coated, 3/32 od | 1 | |
| -10 | MS162285C | 96906 | .NUT, Hex, self-locking, nonmagnetic (AP) | 1 | |
| -11 | MS16212-12 | 96906 | .WASHER, Flat, nonmagnetic (AP) | 2 | |
| -12 | NAS1005-9A | 80205 | .BOLT, Hex head (AP) | 1 | |
| -13 | 18133 C 500 | 81868 | .NAMEPLATE | 1 | |

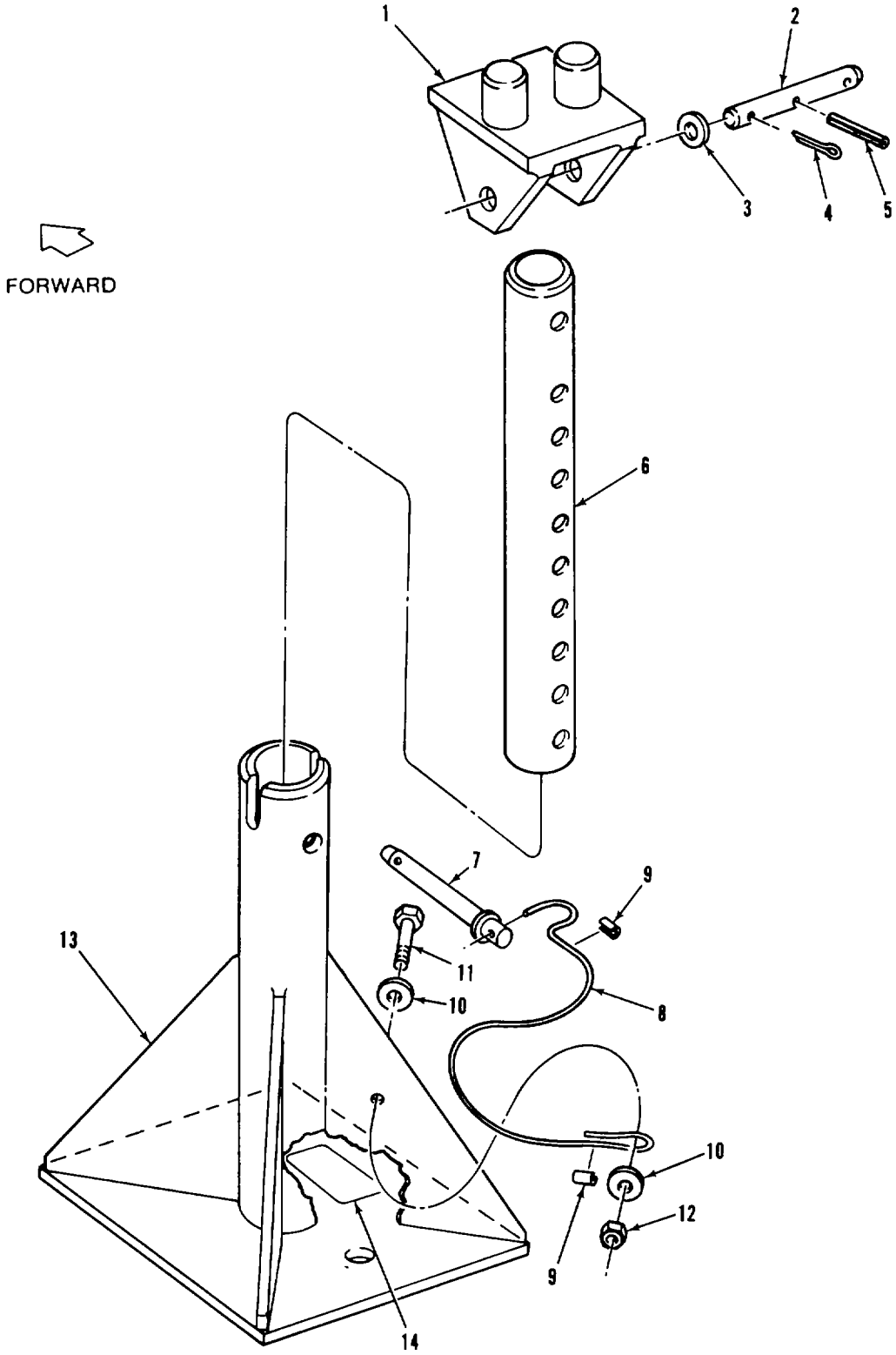


**Figure 3-15. Ramp Support Assembly**

| FIGURE AND INDEX NO | PART NUMBER | FSCM | DESCRIPTION 1 2 3 4 5 6 7 | UNITS PER ASSY | USABLE ON CODE |
|---|---|---|---|---|---|
| 3-15- | 18049 E 160 | 81868 | RAMP EXTENSION SUPPORT ASSEMBLY (See 18, figure 3-2 for NHA.) | REF | |
| -1 | 18049 D 137 | 81868 | .WELDMENT, Index support, ramp support | 1 | |
| -2 | 18049 C 139-2 | 81868 | .PIN, Ramp support | 1 | |
| -3 | MS16212-12 | 96906 | .WASHER, Flat, nonmagnetic | 2 | |
| -4 | MS24665-374 | 96906 | .PIN, Cotter (AP) | 2 | |
| -5 | NAS1407N13M28 | 80205 | .PIN, Spring, coiled, nonmagnetic | 1 | |
| -6 | 18049 C 138 | 81868 | .TUBE, Support, ramp support | 1 | |
| | 18049 C 154 | 81868 | .CABLE PIN ASSEMBLY, Ramp extension support | 1 | |
| -7 | D8-30X-303 | 09332 | ..FASPIN | 1 | |
| -8 | COML | 72954 | ..CABLE, 7 inches x 7 inches, 0.062 inch diameter x 16 inches long, galvanized, nylon coated, 3/32 od | 1 | |
| -9 | 28-2-G | 76691 | .SLEEVE, Splicing, 0.094 inch diameter (AP) | 2 | |
| -10 | MS16212-12 | 96906 | .WASHER, Flat, nonmagnetic (AP) | 2 | |
| -11 | NAS1005-9A | 80205 | .BOLT, Hex head, nonmagnetic | 1 | |
| -12 | MS16228-5C | 96906 | .NUT, Hex, self-locking, nonmagnetic | 1 | |
| -13 | 18049 D 136 | 81868 | .WELDMENT, Base, ramp support | 1 | |
| -14 | 18133 C 500 | 81868 | .NAMEPLATE | 1 | |

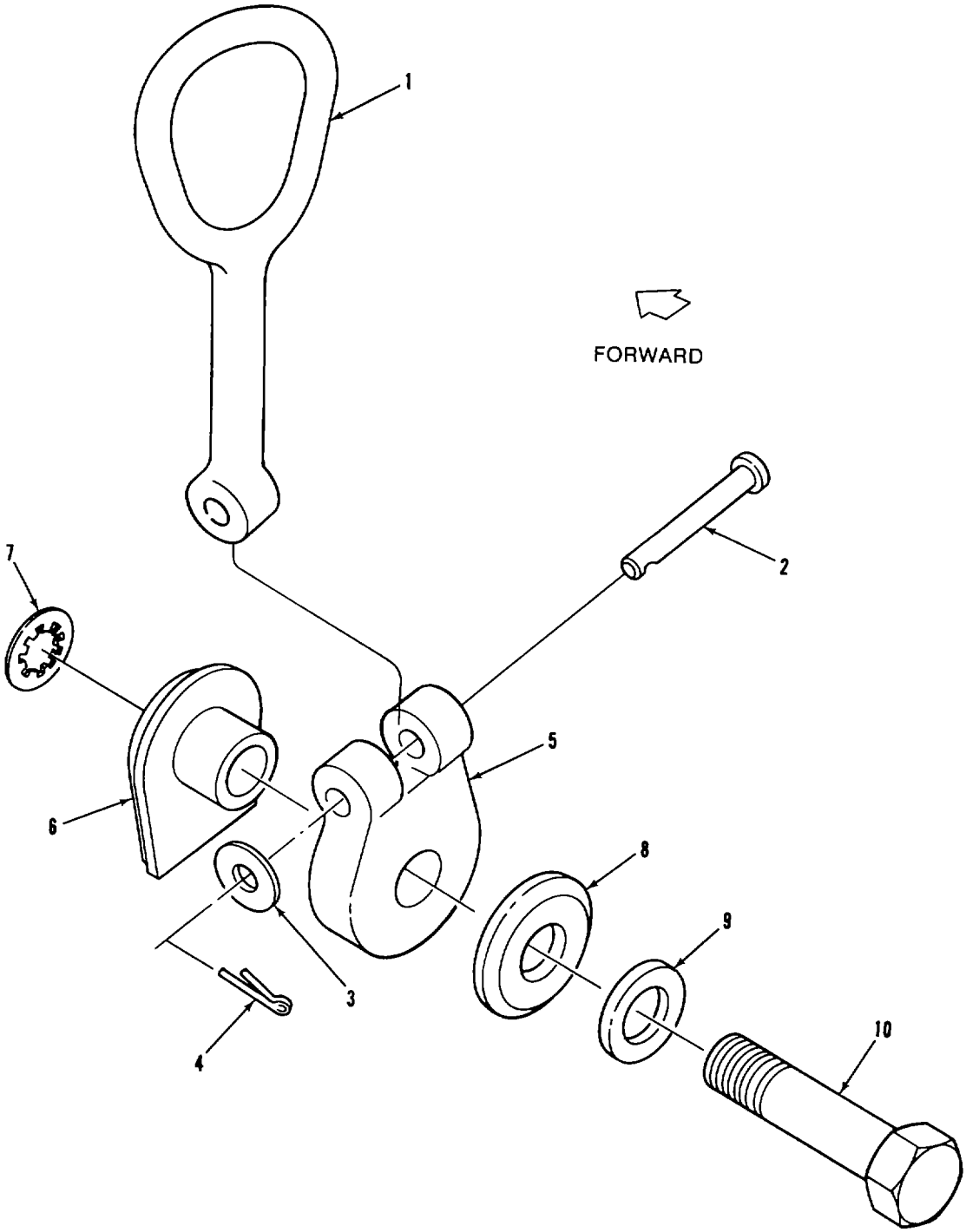


**Figure 3-16. 5k Tiedown Fitting Assembly**

| FIGURE AND INDEX NO | PART NUMBER | FSCM | DESCRIPTION 1 2 3 4 5 6 7 | UNITS PER ASSY | USABLE ON CODE |
|---|---|---|---|---|---|
| 3-16- | 18049 D 117 | 81868 | 5K TIEDOWN FITTING ASSEMBLY (See 21, figure 3-2 for NHA.) | REF | |
| -1 | 18049 C 118 | 81868 | EXTENSION, Ring, 5k tiedown fitting | 1 | |
| -2 | MS9464-21 | 96906 | PIN, Headed (AP) | 1 | |
| -3 | AN960-XC-416L | 88044 | WASHER, Flat (AP) | 1 | |
| -4 | MS24665-86 | 96906 | PIN, Cotter (AP) | 1 | |
| -5 | 18049 C 119 | 81868 | RING, Swivel, 5k tiedown fitting | 1 | |
| -6 | 18049 C 120 | 81868 | WASHER, Conical, 5k tiedown fitting | 1 | |
| -7 | 5115-50-ZD | 79136 | RING, Retaining (AP) | 1 | |
| -8 | 18049 C 125 | 81868 | WASHER, Fitting, 5k tiedown fitting | 1 | |
| -9 | AN960-XC816 | 88044 | WASHER, Flat (AP) | 1 | |
| -10 | AN8-21A | 88044 | BOLT, Hex head (AP) | 1 | |

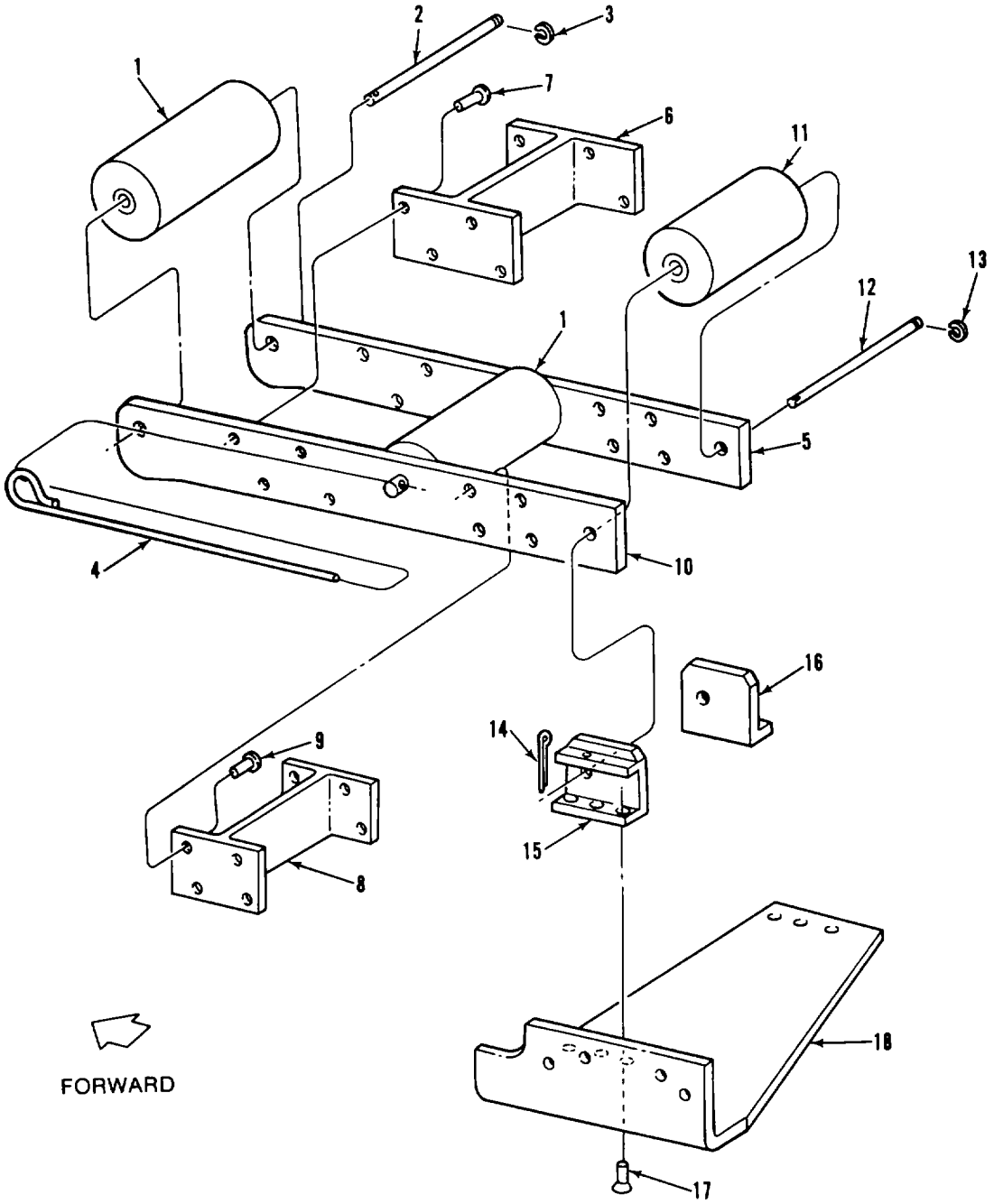


**Figure 3-17. Inboard Transition Roller Assembly, Station 486.625**

| FIGURE AND INDEX NO | PART NUMBER | FSCM | DESCRIPTION 1 2 3 4 5 6 7 | UNITS PER ASSY | USABLE ON CODE |
|---|---|---|---|---|---|
| 3-17- | 18049 E 281-2 | 81868 | INBOARD TRANSITION ROLLER ASSEMBLY (RH), Station 486.625 (See 19, figure 3-10 for NHA.) | REF | A |
| | 18049 E 281-1 | 81868 | INBOARD TRANSITION ROLLER ASSEMBLY (LH), Station 486.625 (See 45, figure 3-10 for NHA.) | REF | B |
| | 18049 E 282-1 | 81868. | .ROLLER FOLLOWER ASSEMBLY (LH) | 1 | A |
| | 18049 E 282-2 | 81868. | .ROLLER FOLLOWER ASSEMBLY (RH) | 1 | B |
| -1 | 18049 C 149 | 81868 | ROLLER, Inboard | 2 | |
| | 18049 C 128 | 81868 | ..SHAFT ASSEMBLY, Transition roller | 2 | |
| -2 | 18049 C 128-1 | 81868 | ...SHAFT, Transition roller | 1 | |
| -3 | 5560-37ZD | 79136 | ...RING, Retaining (AP) | 1 | |
| -4 | AN415-1-7 | 88044 | ..PIN, Lock (AP) | 1 | |
| | 18049 E 282-3 | 81868 | ..FRAME ASSEMBLY | 1 | |
| -5 | 18049 D 283-1 | 81868 | ...PLATE, Side | 1 | |
| -6 | 18049 C 284-2 | 81868 | ...CROSSMEMBER | 1 | |
| -7 | MS20470AD6-10 | 96906 | ...RIVET, Solid (AP) | 12 | |
| -8 | 18049 C 284-1 | 81868 | ...CROSSMEMBER | 1 | |
| -9 | MS20426AD6-10 | 96906 | ...RIVET, Countersunk (AP) | 4 | |
| -10 | 18049 D 283-2 | 81868 | ...PLATE, Side | 1 | |
| -11 | 18049 C 149 | 81868 . | .ROLLER, Inboard | 1 | |
| | 18049 C 295 | 81868 . | .SHAFT/HINGE, Transition roller | 1 | |
| -12 | 18049 C 295-1 | 81868 | ..SHAFT/HINGE, Transition roller | 1 | |
| -13 | 5560-37ZD | 79136 | ..RING, Retaining (AP) | 1 | |
| -14 | MS24665-353 | 96906 . | .PIN, Cotter (AP) | 1 | |
| | 18049 D 285-2 | 81868 . | .SUPPORT ASSEMBLY (RH), Transition roller assembly | 1 | A |
| | 18049 D 285-1 | 81868 . | .SUPPORT ASSEMBLY (LH), Transition roller assembly | 1 | B |
| -15 | 18049 C 287-2 | 81868 | ..CHANNEL, Support, support plate assembly, right-hand | 1 | A |
| | 18049 C 287-1 | 81868 | ..CHANNEL, Support, support plate assembly, left-hand | 1 | B |
| -16 | 18049 C 286-2 | 81868 | ..ANGLE, Support, support plate assembly, right-hand | 1 | A |
| | 18049 C 286-1 | 81868 | ..ANGLE, Support, support plate assembly, left-hand | 1 | B |
| -17 | MS20470AD6-10 | 96906 | ..RIVET, Solid, countersunk (AP) | 6 | |
| -18 | 18049 D 288-2 | 81868 | ..SUPPORT PLATE ASSEMBLY, Inboard, right-hand | 1 | A |
| | 18049 D 288-1 | 81868 | ..SUPPORT PLATE ASSEMBLY, Inboard, left-hand | 1 | B |

| FIGURE AND INDEX NO | PART NUMBER | FSCM | DESCRIPTION 1 2 3 4 5 6 7 | UNITS PER ASSY | USABLE ON CODE |
|---|---|---|---|---|---|
| 3-18- | 18049 C 245 | 81868 | TIEDOWN FITTING ASSEMBLY, Station 360.000 (See 23, figure 3-2 for NHA.) | REF | |
| -1 | 18049 C 244 | 81868 | .WASHER, Tiedown, Station 360.000 | 1 | |
| -2 | 5115-50-ZD | 79136 | .RING, Retaining (AP) | 1 | |
| -3 | AN960-XC816 | 88044 | .WASHER, Flat (AP) | 1 | |
| -4 | AN8-17A | 88044 | .BOLT (AP) | 1 | |

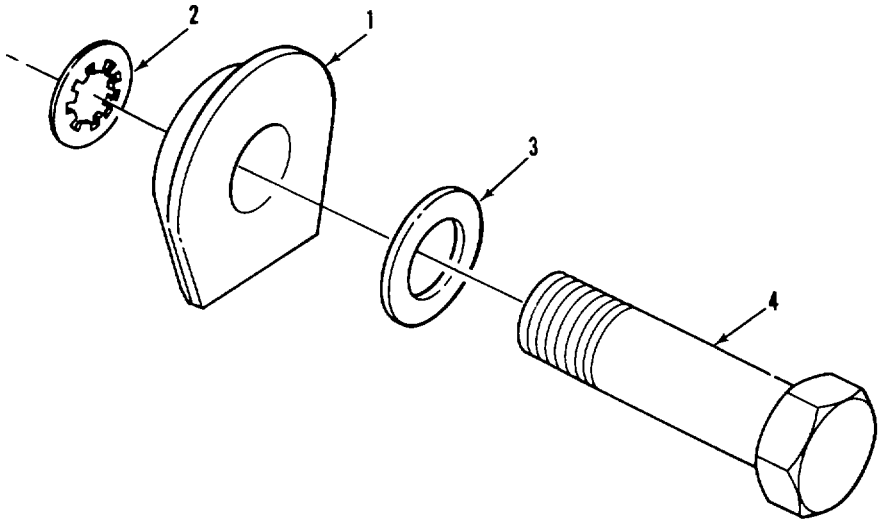


**Figure 3-18. Tiedown Fitting Assembly, Station 360.000**

| FIGURE AND INDEX NO | PART NUMBER | FSCM | DESCRIPTION 1 2 3 4 5 6 7 | UNITS PER ASSY | USABLE ON CODE |
|---|---|---|---|---|---|
| 3-19- | 18049 C 299 | 81868 | CENTERLINE RING PLUG ASSEMBLY (See 24, figure 3-2 for NHA.) | REF | |
| -1 | 18049 C 298 | 81868 | .PLUG, Ring, 5k tiedown | 1 | |
| -2 | 5115-37-015-ZD | 79136 | .RING, Retaining (AP) | 1 | |
| -3 | AN960-616 | 88044 | .WASHER, Flat (AP) | 1 | |
| -4 | AN6-13A | 88044 | .BOLT, Hex head (AP) | 1 | |

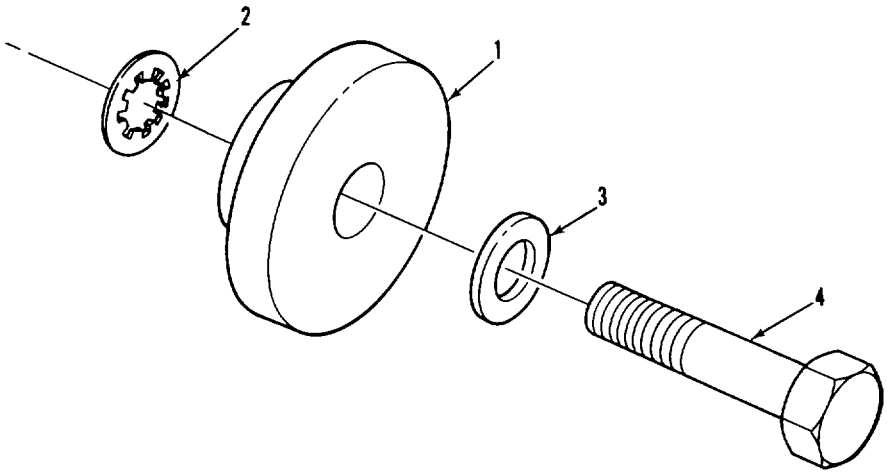


**Figure 3-19. Centerline Ring Plug Assembly**

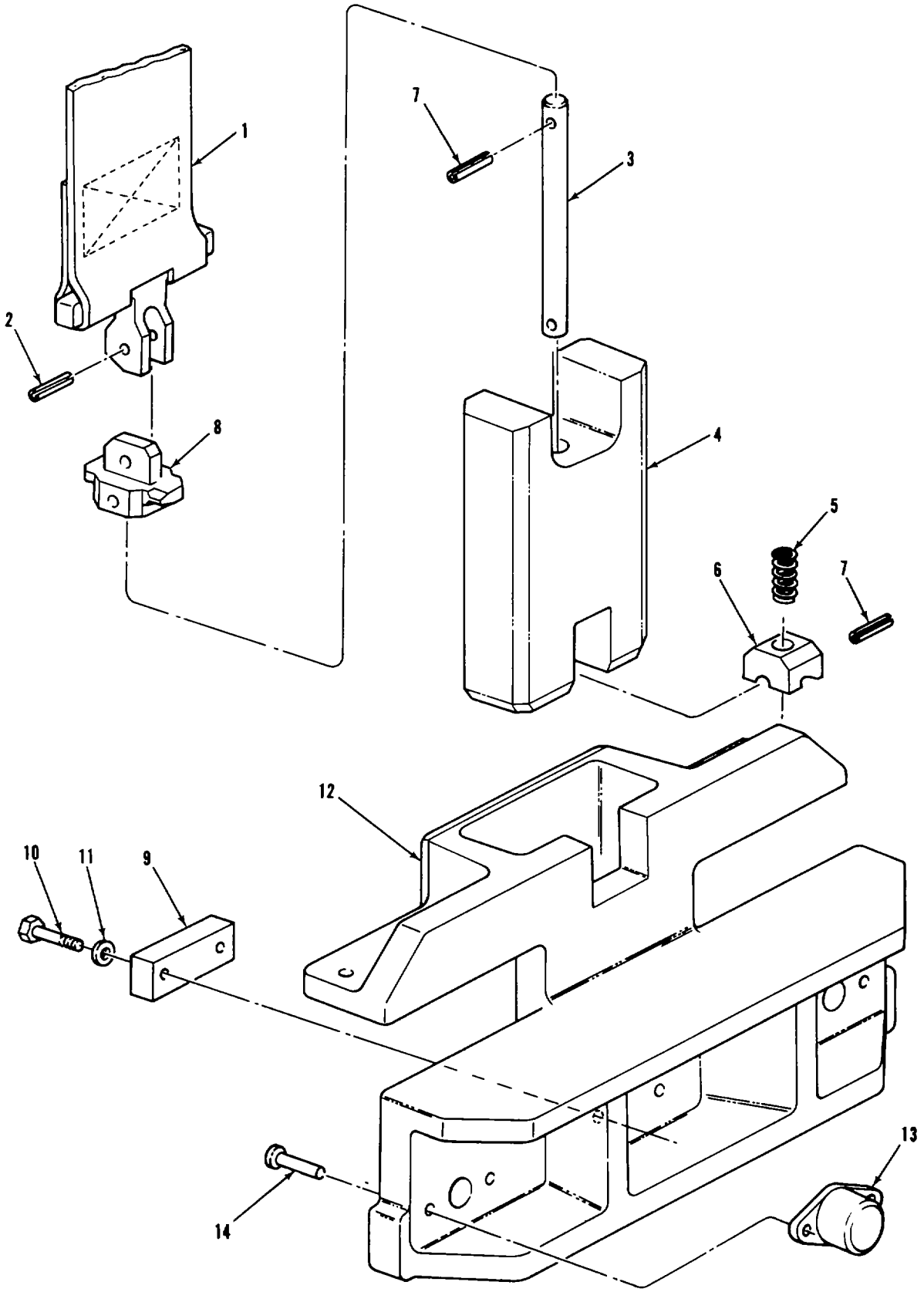


Figure 3-20. Pallet Lock Assembly

| FIGURE AND INDEX NO | PART NUMBER | FSCM | DESCRIPTION 1 2 3 4 5 6 7 | UNITS PER ASSY | USABLE ON CODE |
|---|---|---|---|---|---|
| 3-20- | 18049 E 400 | 81868 | PALLET LOCK ASSEMBLY (See 62, figure 3-3 and 30, figure 3-4 for NHA.) | REF | |
| | 18049 D 403 | 81868 | .SLIDE BAR ASSEMBLY, Pallet lock | 1 | |
| -1 | 18049 C 412 | 81868 | ..STRAP/HANDLE ASSEMBLY, Pallet lock | 1 | |
| -2 | MS16562-235 | 96906 | ..PIN, Roll (AP) | 1 | |
| -3 | 18049 C 411 | 81868 | ..ROD, Actuating, pallet lock | 1 | |
| -4 | 18049 D 407 | 81868 | ..BAR, Slide, pallet lock | 1 | |
| -5 | LC-042-F7 | 84830 | ..SPRING | 1 | |
| -6 | 18049 C 405 | 81868 | ..BLOCK, Cam, pallet lock | 1 | |
| -7 | MS16562-223 | 96906 | ..PIN, Roll (AP) | 2 | |
| -8 | 18049 C 404 | 81868 | ..BLOCK, Actuating, pallet lock | 1 | |
| -9 | 18049 C 410 | 81868 | .STOP, Lock, pallet lock | 1 | |
| -10 | AN3-5A | 88044 | .BOLT, Hex head (AP) | 2 | |
| -11 | AN960-10 | 88044 | .WASHER, Flat (AP) | 2 | |
| -12 | 18049 E 402 | 81868 | .BODY, Pallet lock, machined | 1 | |
| -13 | NAS1031P8 | 80205 | .PLATE, Nut | 2 | |
| -14 | MS20426AD5-14 | 96906 | .RIVET, Countersunk solid (AP) | 4 | |

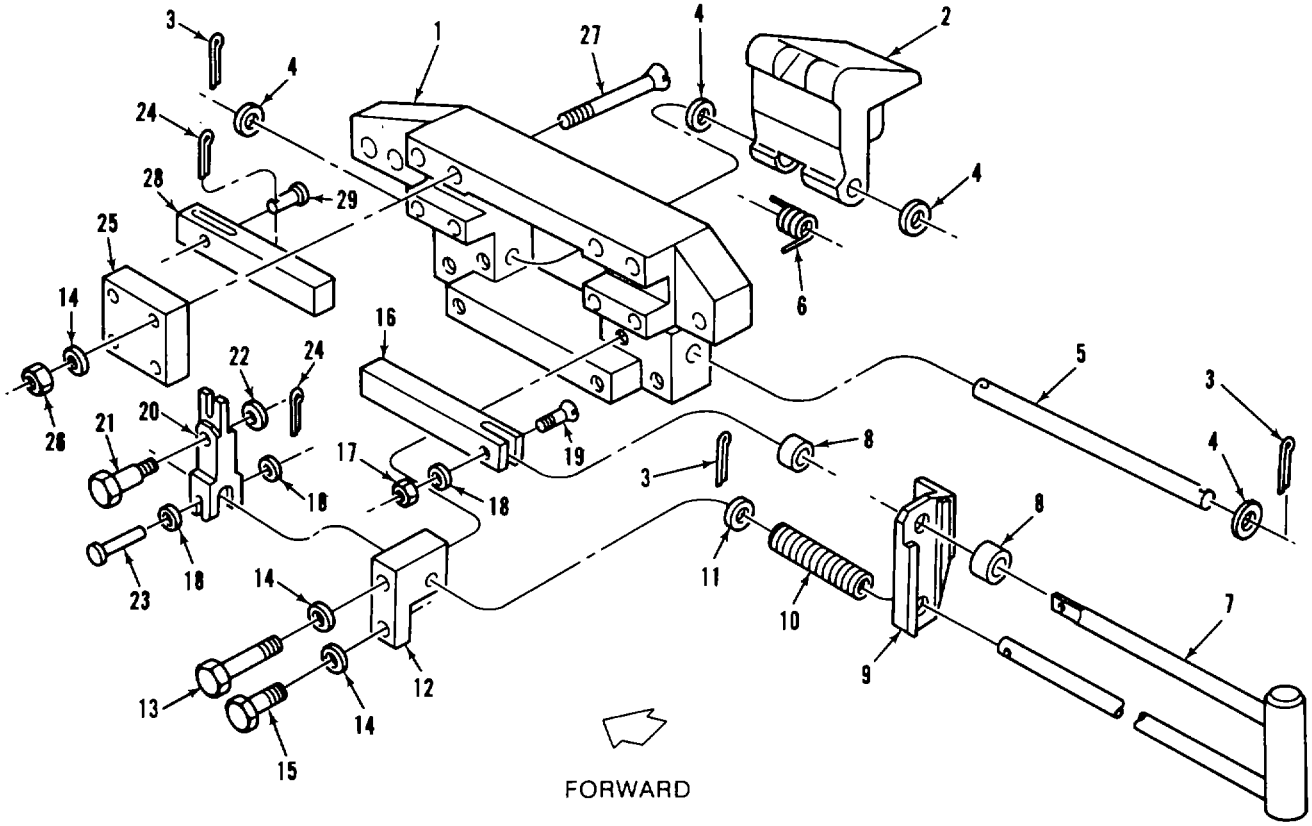


**Figure 3-21. Retractable Flange Assembly**

| FIGURE AND INDEX NO | PART NUMBER | FSCM | DESCRIPTION 1 2 3 4 5 6 7 | UNITS PER ASSY | USABLE ON CODE |
|---|---|---|---|---|---|
| 3-21- | 18049 E 300-1 | 81868 | RETRACTABLE FLANGE ASSEMBLY (LH), (See 43, figure 3-5 for NHA.) | REF | A |
| | 18049 E 300-2 | 81868 | RETRACTABLE FLANGE ASSEMBLY (RH), (See 43, figure 3-5 for NHA.) | REF | B |
| -1 | 18049 E 301-1 | 81868 | .HOUSING, Retractable flange assembly, left-hand | 1 | A |
| | 18049 E 301-2 | 81868 | .HOUSING, Retractable flange assembly, left-hand | 1 | B |
| -2 | 18049 C 302 | 81868 | .FLANGE, Retractable | 1 | |
| -3 | MS24665-353 | 96906 | .PIN, Cotter, split (AP) | 3 | |
| -4 | 18049 C 312 | 81868 | .WASHER, Special, retractable flange assembly (AP) | 4 | |
| -5 | 18049 C 310 | 81868 | .PIN, Retractable flange assembly (AP) | 1 | |
| -6 | 18049 C 311 | 81868 | .SPRING, Torsion, retractable flange assembly | 1 | |
| -7 | 18049 D 305-1 | 81868 | .WELDMENT, Control rod, retractable flange assembly | 1 | |
| -8 | 6434 K30 | 19710 | .COLLAR, Zincal (AP) | 2 | |
| -9 | 18049 C 306-1 | 81868 | .SUPPORT, Retractable flange assembly, left-hand | 1 | A |
| | 18049 C 306-2 | 81868 | .SUPPORT, Retractable flange assembly, right-hand | 1 | B |
| -10 | LC-080J-11 | 84830 | .SPRING, Compression | 1 | |
| -11 | AN960-816 | 88044 | .WASHER, Flat (AP) | 1 | |
| -12 | 18049 C 308 | 81868 | .GUIDE, Retractable flange assembly | 2 | |
| -13 | AN5-17A | 88044 | .SCREW, Hex head (AP) | 2 | |
| -14 | AN960-516 | 88044 | .WASHER, Flat (AP) | 8 | |
| -15 | AN5-5A | 88044 | .SCREW, Hex head (AP) | 2 | |
| -16 | 18049 C 304 | 81868 | .BOLT, Slide, retractable flange assembly | 1 | |
| -17 | MS21044-N4 | 96906 | .NUT, Hex, self-locking (AP) | 1 | |
| -18 | AN960-416 | 88044 | .WASHER, Flat (AP) | 3 | |
| -19 | NAS517-4-10 | 80205 | .SCREW, Flat head (AP) | 1 | |
| -20 | 18049 C 309 | 81868 | .LEVER, Retractable flange assembly | 1 | |
| -21 | MS51975-28 | 96906 | .SCREW, Shoulder, hex socket (AP) | 1 | |
| -22 | AN960-616 | 88044 | .WASHER, Flat (AP) | 1 | |
| -23 | MS9464-20 | 96906 | .PIN (AP) | 1 | |
| -24 | MS24665-132 | 96906 | .PIN, Cotter, split (AP) | 2 | |
| -25 | 18049 C 307 | 81868 | .PLATE, Cover, retractable flange assembly | 2 | |
| -26 | MS21044-N5 | 96906 | .NUT, Hex, self-locking (AP) | 4 | |
| -27 | MS24694-S175 | 96906 | .SCREW, Flat head (AP) | 4 | |
| -28 | 18049 C 303 | 81868 | .BOLT, Slide, retractable flange assembly | 1 | |
| -29 | MS9464-11 | 96906 | .PIN, (AP) | 1 | |

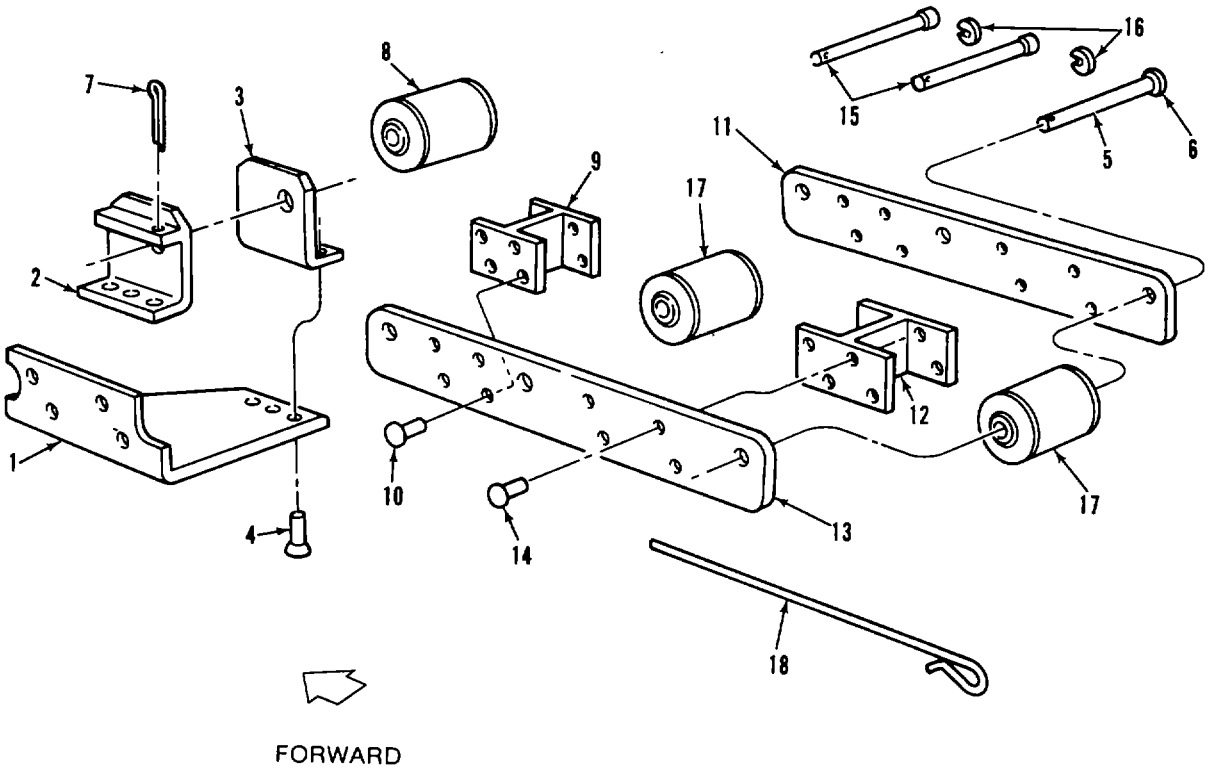


**Figure 3-22. Outboard Transition Roller Assembly**

| FIGURE AND INDEX NO | PART NUMBER | FSCM | DESCRIPTION 1 2 3 4 5 6 7 | UNITS PER ASSY | USABLE ON CODE |
|---|---|---|---|---|---|
| 3-22- | 18049 E 280-1 | 81868 | OUTBOARD TRANSITION ROLLER ASSEMBLY (LH) (See 17, figure 3-5 for NHA.) | REF | A |
| | 18049 E 280-2 | 81868 | OUTBOARD TRANSITION ROLLER ASSEMBLY (RH) (See 17, figure 3-5 for NHA.) | REF | B |
| | 18049 D 291-1 | 81868. | .OUTBOARD SUPPORT ASSEMBLY (LH) | 1 | A |
| | 18049 D 291-2 | 81868. | .OUTBOARD SUPPORT ASSEMBLY (RH) | 1 | B |
| -1 | 18049 D 292-1 | 81868 | ..SUPPORT ASSEMBLY (LH), Support plate assembly | 1 | A |
| | 18049 D 292-2 | 81868 | ..SUPPORT ASSEMBLY (RH), Support plate assembly | 1 | B |
| -2 | 18049 C 287-2 | 81868 | ..CHANNEL, Support, left-hand, support plate assembly | 1 | A |
| | 18049 C 287-1 | 81868 | ..CHANNEL, Support, right-hand, support plate assembly | 1 | B |
| -3 | 18049 C 286-2 | 81868 | ..ANGLE, Support, left-hand, support plate assembly | 1 | A |
| | 18049 C 286-1 | 81868 | ..ANGLE, Support, right-hand, support plate assembly | 1 | B |
| -4 | MS20470B6-11 | 96906 | ..RIVET, Solid (AP) | 6 | |
| | 18049 C 295 | 81868 . | .SHAFT/HINGE, Transition roller | 1 | |
| -5 | 18049 C 295-1 | 81868 | ..SHAFT | 1 | |
| -6 | 5560-37ZD | 79136 | ..RING, Retaining (AP) | 1 | |
| -7 | MS24665-353 | 96906 . | .PIN, Cotter (AP) | 1 | |
| -8 | 18049 C 149 | 81868 . | .ROLLER, Inboard | 1 | |
| | 18049 E 282-1 | 81868 | .ROLLER FOLLOWER ASSEMBLY (LH) | 1 | A |
| | 18049 E 282-2 | 81868. | .ROLLER FOLLOWER ASSEMBLY (RH) | 1 | B |
| | 18049 E 282-3 | 81868 | ..FRAME ASSEMBLY | 1 | |
| -9 | 18049 C 284-1 | 81868 . | ...CROSSMEMBER, Roller follower assembly | 1 | |
| -10 | MS20470AD6-10 | 96906 | ...RIVET, Solid (AP) | 12 | |
| -11 | 18049 D 283-2 | 81868 . | ...PLATE, Side, roller follower assembly | 1 | |
| -12 | 18049 C 284-2 | 81868 . | ...CROSSMEMBER, Roller follower assembly | 1 | |
| -13 | 18049 D 283-1 | 81868 | ...PLATE, Side, roller follower assembly | 1 | |
| -14 | MS20426AD6-10 | 96906 | ...RIVET, Countersunk (AP) | 4 | |
| | 18049 C 128 | 81868 | ..TRANSITION ROLLER SHAFT ASSEMBLY | 2 | |
| -15 | 18049 C 128-1 | 81868 | ...SHAFT | 1 | |
| -16 | 5560-37ZD | 79136 | ...RING, Retaining (AP) | 1 | |
| -17 | 18049 C 149 | 81868 | ..ROLLER, Inboard | 2 | |
| -18 | AN415-1-7 | 88044 | ..PIN, Lock (AP) | 1 | |

**3-25. Numerical Index.** Following is a numerical index for the Helicopter Internal Cargo Handling System.

| PART NUMBER | FIGURE AND INDEX NO. | QTY PER END ITEM |
|---|---|---|
| AN3-10A | 3-2-30 | 28 |
| AN3-11A | 3-2-38 | 8 |
| AN3-5A | 3-20-10 | 8 |
| AN4-10A | 3-7-17 | 32 |
| | 3-8-67 | |
| | 3-9-34 | |
| | 3-10-63 | |
| AN4-11A | 3-2-32 | 6 |
| AN4-12A | 3-2-35 | 4 |
| AN4-5A | 3-2-36 | 8 |
| AN4-6A | 3-5-18 | 2 |
| AN4-7A | 3-5-21 | 14 |
| | 3-7-20 | |
| | 3-8-63 | |
| | 3-10-20 | |
| | 3-10-46 | |
| AN415-1-7 | 3-17-4 | 4 |
| | 3-22-18 | |
| AN5-17A | 3-21-13 | 4 |
| AN5-5A | 3-21-15 | 4 |
| AN6-13A | 3-19-4 | 10 |
| AN6-14A | 3-3-68 | 12 |
| | 3-4-38 | 3-4-26 |
| AN8-15A | 3-3-70 | 6 |
| | 3-4-37 | 3-14-9 |
| AN8-17A | 3-18-4 | 2 |
| AN8-21A | 3-16-10 | 26 |
| AN960-XC-416L | 3-16-3 | 26 |
| AN960-XC816 | 3-16-9 | 28 |
| | 3-18-3 | |
| AN960-10 | 3-2-31 | 44 |
| | 3-20-11 | 3-15-3 |
| AN960-416 | 3-2-33 | 148 |
| | 3-3-42 | |
| | 3-3-52 | |
| | 3-3-65 | |
| | 3-4-33 | |
| | 3-4-45 | |
| | 3-5-19 | |
| | 3-5-56 | |
| | 3-7-18 | |
| | 3-8-62 | |
| | 3-9-33 | |
| | 3-10-23 | |
| | 3-10-49 | |
| | 3-10-65 | |
| | 3-21-18 | |
| AN960-516 | 3-2-40 | 60 |
| | 3-5-48 | |
| | 3-21-14 | |
| AN960-616 | 3-3-64 | 86 |
| | 3-4-32 | |
| | 3-5-26 | |
| | 3-7-3 | |
| | 3-10-25 | |
| | 3-10-51 | |
| | 3-12-6 | |
| | 3-19-3 | |
| | 3-21-22 | |
| AN960-616L | 3-7-14 | 20 |
| | 3-8-50 | |
| | 3-8-58 | |
| | 3-9-45 | |
| | 3-10-59 | |
| | 3-10-70 | |
| AN960-816 | 3-2-42 | 36 |
| | 3-3-69 | |
| | 3-4-36 | |
| | 3-5-45 | |
| | 3-21-11 | |
| AN960-816L | 3-2-43 | 16 |
| | 3-3-36 | |
| CABLE 3-12-3 | 15 | |
| | 3-15-8 | |
| D8-30X-303 | 3-14-7 | 3 |
| | 3-15-7 | |
| LC-042-F7 | 3-20-5 | 4 |
| LC080J-11 | 3-21-10 | 2 |
| MS16212-12 | 3-14-11 | 8 |
| | 3-15-10 | |
| MS16212-16 | 3-14-3 | 4 |
| MS162285C | 3-14-10 | 3 |
| | 3-15-12 | |
| MS16562-223 | 3-20-7 | 8 |
| MS16562-235 | 3-20-2 | 4 |
| MS20426AD6-12 | 3-8-12 | 16 |
| | 3-8-12 | |
| MS20426AD4-10 | 3-7-10 | 20 |
| | 3-8-46 | |
| | 3-8-54 | |
| | 3-9-41 | |
| | 3-10-15 | |
| | 3-10-32 | |
| MS20426AD5-12 | 3-3-39 | 116 |
| | 3-3-49 | |
| | 3-4-25B | |
| | 3-4-48 | |

| PART NUMBER | FIGURE AND INDEX NO. | QTY PER END ITEM |
|---|---|---|
| MS20426AD5-12 | | |
| (Continued) | 3-5-53 | |
| MS20426AD5-14 | 3-20-14 | 16 |
| MS20426AD6-10 | 3-72-5 | 116 |
| | 3-7-46 | |
| | 3-8-5 | |
| | 3-8-31 | |
| | 3-9-4 | |
| | 3-9-20 | |
| | 3-10-15 | |
| | 3-10-32 | |
| | 3-12-17 | |
| | 3-17-9 | |
| | 3-22-15 | |
| MS20426AD6-12 | 3-6-14 | 40 |
| MS20426AD6-14 | 3-3-8 | 38 |
| | 3-4-23 | |
| | 3-5-60 | |
| MS20426AD6-8 | 3-6-11 | 40 |
| MS20426AD6-9 | 3-3-9 | 208 |
| | 3-3-27 | |
| | 3-4-21 | |
| | 3-5-9 | |
| | 3-5-31 | |
| | 3-6-9 | |
| | 3-12-14 | |
| MS20426AD8-10 | 3-4-2 | 66 |
| | 3-5-42 | |
| | 3-11-11 | |
| | 3-11-14 | |
| | 3-13-7 | |
| MS20426AD8-14 | 3-11-16 | 4 |
| MS20426AD8-16 | 3-4-41 | 20 |
| MS20470AD6-10 | 3-7-23 | 252 |
| | 3-7-27 | |
| | 3-8-2 | |
| | 3-8-24 | |
| | 3-9-2 | |
| | 3-9-18 | |
| | 3-10-2 | |
| | 3-10-28 | |
| | 3-17-7 | |
| | 3-17-17 | |
| | 3-22-10 | |
| MS20470AD6-12 | 3-3-6 | 424 |
| | 3-3-21 | |
| | 3-4-5 | |
| | 3-5-5 | |
| | 3-5-36 | |
| | 3-7-27 | |
| | 3-7-49 | |

| PART NUMBER | FIGURE AND INDEX NO. | QTY PER END ITEM |
|---|---|---|
| | 3-8-4 | |
| | 3-8-27 | |
| | 3-9-6 | |
| | 3-9-25 | |
| | 3-10-6 | |
| | 3-10-34 | |
| MS20470AD6-13 | 3-3-34 | 126 |
| | 3-3-61 | |
| | 3-4-50 | |
| | 3-5-61 | |
| MS20470AD6-14 | 3-7-29 | 64 |
| | 3-7-57 | |
| | 3-8-14 | |
| | 3-8-38 | |
| | 3-9-7 | |
| | 3-9-27 | |
| | 3-10-7 | |
| | 3-10-39 | |
| MS20470AD6-9 | 3-12-13 | 32 |
| MS20470AD8-10 | 3-3-2 | 16 |
| | 3-3-18 | |
| | 3-4-2 | |
| | 3-5-2 | |
| | 3-5-39 | |
| | 3-6-5 | |
| | 3-11-7 | |
| MS20470B6-11 | 3-22-4 | 12 |
| MS21042-4 | 3-3-41 | 76 |
| | 3-3-51 | |
| | 3-3-66 | |
| | 3-4-34 | |
| | 3-4-44 | |
| | 3-5-20 | |
| | 3-5-55 | |
| MS21042-5 | 3-5-47 | 12 |
| MS21042-6 | 3-3-63 | 16 |
| | 3-4-31 | |
| MS21044-N4 | 3-2-37 | 58 |
| | 3-7-19 | |
| | 3-8-61 | |
| | 3-9-35 | |
| | 3-10-22 | |
| | 3-10-48 | |
| | 3-10-64 | |
| | 3-21-17 | |
| MS21044-N5 | 3-21-26 | 8 |
| MS21044-N6 | 3-7-15 | 26 |
| | 3-8-51 | |
| | 3-8-59 | |
| | 3-9-46 | |

| PART NUMBER | FIGURE AND INDEX NO. | QTY PER END ITEM | PART NUMBER | FIGURE AND INDEX NO. | QTY PER END ITEM |
|---|---|---|---|---|---|
| MS21044-N6 | 3-10-60 | | | 3-3-45 | |
| (Continued) | 3-10-71 | | | 3-3-48 | |
| MS21044-N8 | 3-5-46 | 8 | | 3-4-25A | |
| MS21052-L6 | 3-7-11 | 10 | | 3-4-47 | |
| | 3-8-47 | | | 3-5-52 | |
| | 3-8-55 | | | 3-20-13 | |
| | 3-9-42 | | NAS1336A5S23D | 3-12-1 | 12 |
| | 3-10-57 | | NAS1407N13M28 | 3-15-5 | 1 |
| | 3-10-68 | | NAS17-4-19 | 3-3-58 | 8 |
| MS21250-05028 | 3-2-39 | 16 | NAS517-4-5 | 3-5-22 | 4 |
| MS24625-9 | 3-3-71B | 4 | NAS517-4-8 | 3-3-71 | 16 |
| MS24665-132 | 3-21-24 | 4 | | 3-4-39 | |
| MS24665-351 | 3-5-27 | 54 | NAS517-4-10 | 3-21-19 | 2 |
| | 3-10-26 | | NAS517-4-11 | 3-2-34 | 50 |
| | 3-10-52 | | | 3-3-43 | |
| | 3-12-7 | | | 3-3-53 | |
| MS24665-353 | 3-3-15 | 364 | | 3-4-46 | |
| | 3-3-51 | | | 3-5-57 | |
| | 3-4-19 | | NAS517-4-12 | 3-2-27 | 2 |
| | 3-5-15 | | NAS517-5-11 | 3-5-49 | 4 |
| | 3-5-23 | | NAS517-5-42 | 3-5-50 | 8 |
| | 3-6-3 | | NAS517-6-10 | 3-7-16 | 20 |
| | 3-7-4 | | | 3-8-52 | |
| | 3-7-41 | | | 3-8-60 | |
| | 3-7-62 | | | 3-9-47 | |
| | 3-8-21 | | | 3-10-62 | |
| | 3-8-43 | | | 3-10-73 | |
| | 3-9-15 | | NAS517-6-15 | 3-3-67 | 8 |
| | 3-9-31 | | | 3-4-35 | |
| | 3-10-18 | | NAS517-8-23 | 3-5-44 | 8 |
| | 3-10-44 | | NAS6608-14 | 3-2-28 | 16 |
| | 3-11-3 | | NAS6608-15 | 3-2-29 | 16 |
| | 3-17-14 | | | 3-3-37 | |
| | 3-21-3 | | | 3-4-27 | |
| | 3-22-7 | | 18049 B 297 | 3-7-6 | 64 |
| MS24665-355 | 3-12-8 | 58 | | 3-8-64 | |
| MS24665-374 | 3-14-4 | 6 | | 3-9-36 | |
| | 3-15-4 | | | 3-10-54 | |
| MS24665-86 | 3-16-4 | 26 | 18049 C 109 | 3-3-71A | 1 |
| MS24694-S101 | 3-10-21 | 4 | 18049 C 116-1 | 3-3-57 | 1 |
| | 3-10-47 | | 18049 C 116-2 | 3-3-57 | 1 |
| MS24694-S175 | 3-21-27 | 8 | 18049 C 118 | 3-16-1 | 26 |
| MS51975-28 | 3-21-21 | 2 | 18049 C 119 | 3-16-5 | 26 |
| MS9464-11 | 3-21-5 | 4 | 18049 C 120 | 3-16-6 | 26 |
| | 3-21-29 | | 18049 C 125 | 3-16-8 | 26 |
| MS9464-20 | 3-21-23 | 2 | 18049 C 128-1 | 3-17-2 | 6 |
| MS9464-21 | 3-16-2 | 26 | | 3-22-12 | |
| NAS1005-9A | 3-14-12 | 3 | 18049 C 129 | 3-3-3 | 48 |
| | 3-15-11 | | | 3-3-17 | |
| NAS1031P8 | 3-3-38 | 66 | | 3-4-1 | |

| PART NUMBER | FIGURE AND INDEX NO. | QTY PER END ITEM |
|---|---|---|
| 18049 C 129 | 3-5-1 | |
| (Continued) | 3-5-38 | |
| | 3-6-4 | |
| | 3-11-6 | |
| 18049 C 138 | 3-15-6 | 1 |
| 18049 C 139-1 | 3-14-2 | 2 |
| 18049 C 139-2 | 3-15-2 | 1 |
| 18049 C 144 | 3-12-12 | 4 |
| 18049 C 145 | 3-12-16 | 12 |
| 18049 C 148 | 3-3-13 | 246 |
| | 3-3-29 | |
| | 3-4-17 | |
| | 3-5-13 | |
| | 3-5-24 | |
| | 3-6-1 | |
| | 3-11-1 | |
| | 3-12-4 | |
| 18049 C 149 | 3-3-16 | 150 |
| | 3-3-32 | |
| | 3-4-20 | |
| | 3-5-16 | |
| | 3-5-28 | |
| | 3-7-7 | |
| | 3-7-40 | |
| | 3-7-60 | |
| | 3-8-19 | |
| | 3-8-41 | |
| | 3-9-13 | |
| | 3-9-29 | |
| | 3-10-16 | |
| | 3-10-42 | |
| | 3-17-1 | |
| | 3-7-11 | |
| | 3-22-8 | |
| | 3-22-17 | |
| 18049 C 152 | 3-14-1 | 2 |
| 18049 C 153 | 3-14-5 | 2 |
| 18049 C 154 | 3-14- | 3 |
| | 3-15- | |
| 18049 C 156 | 3-3-7 | 40 |
| | 3-3-26 | |
| | 3-3-33 | |
| | 3-3-59 | |
| | 3-4-14 | |
| | 3-4-49 | |
| | 3-5-8 | |
| | 3-5-30 | |
| | 3-5-59 | |
| 18049 C 157 | 3-3-10 | 20 |
| | 3-3-24 | |

| PART NUMBER | FIGURE AND INDEX NO. | QTY PER END ITEM |
|---|---|---|
| | 3-4-12 | |
| | 3-5-10 | |
| | 3-5-32 | |
| 18049 C 19 | 3-7-26 | 62 |
| | 3-7-56 | |
| | 3-8-3 | |
| | 3-8-36 | |
| | 3-9-5 | |
| | 3-9-24 | |
| | 3-10-5 | |
| | 3-10-38 | |
| 18049 C 196 | 3-3- | 4 |
| | 3-4- | |
| 18049 C 196-1 | 3-3-44 | 4 |
| | 3-4-25 | |
| 18049 C 202-1 | 3-5-8 | 1 |
| 18049 C 202-2 | 3-5-58 | 1 |
| 18049 C 202-3 | 3-3-40 | 6 |
| | 3-3-50 | |
| | 3-4-43 | |
| 18049 C 204 | 3-12- | 6 |
| 18049 C 205 | 3-12-10 | 4 |
| 18049 C 206 | 3-3-1 | 2 |
| 18049 C 209 | 3-7-22 | 2 |
| | 3-7-43 | |
| 18049 C 231-1 | 3-11-9 | 1 |
| 18049 C 231-2 | 3-11-9 | 1 |
| 18049 C 233 | 3-13-1 | 4 |
| 18049 C 237-1 | 3-11-15 | 4 |
| 18049 C 237-2 | 3-11-15 | 4 |
| 18049 C 238 | 3-11-13 | 2 |
| 18049 C 244 | 3-18-1 | 2 |
| 18049 C 245 | 3-2-23 | 2 |
| | 3-18- | |
| 18049 C 246 | 3-3-14 | 210 |
| | 3-3-30 | |
| | 3-4-18 | |
| | 3-5-14 | |
| | 3-5-29 | |
| | 3-6-2 | |
| | 3-11-2 | |
| 18049 C 247-1 | 3-10-24 | 2 |
| | 3-10-50 | |
| 18049 C 247-2 | 3-5-25 | 52 |
| | 3-12-5 | |
| 18049 C 249 | 3-7-39 | 138 |
| | | 3-7-61 |
| | | 3-8-20 |
| | | 3-8-42 |
| | | 3-9-14 |

| PART NUMBER | FIGURE AND INDEX NO. | QTY PER END ITEM |
|---|---|---|
| 18049 C 249 | 3-9-30 | |
| (Continued) | 3-10-17 | |
| | 3-10-43 | |
| 18049 C 255 | 3-4-40 | 2 |
| 18049 C 262 | 3-3-56 | 2 |
| 18049 C 284-1 | 3-17-8 | 4 |
| | 3-22-9 | |
| 18049 C 284-2 | 3-17-6 | 4 |
| | 3-22-12 | |
| 18049 C 286-1 | 3-17-16 | 2 |
| | 3-22-3 | |
| 18049 C 286-2 | 3-17-16 | 2 |
| | 3-22-3 | |
| 18049 C 287-1 | 3-17-15 | 2 |
| | 3-22-2 | |
| 18049 C 287-2 | 3-17-15 | 2 |
| | 3-22-2 | |
| 18049 C 294 | 3-10-14 | 2 |
| | 3-10-36 | |
| 18049 C 295 | 3-17- | 4 |
| | 3-22- | |
| 18049 C 295-1 | 3-17-12 | 4 |
| | 3-22-5 | |
| 18049 C 298 | 3-19-1 | 10 |
| 18049 C 299 | 3-2-24 | 10 |
| | 3-19- | |
| 18049 C 302 | 3-21-2 | 2 |
| 18049 C 303 | 3-21-28 | 2 |
| 18049 C 304 | 3-21-16 | 2 |
| 18049 C 306-1 | 3-21-9 | 1 |
| 18049 C 306-2 | 3-21-9 | 1 |
| 18049 C 307 | 3-21-25 | 4 |
| 18049 C 308 | 3-21-12 | 4 |
| 18049 C 309 | 3-21-20 | 2 |
| 18049 C 311 | 3-21-6 | 2 |
| 18049 C 312 | 3-21-4 | 8 |
| 18049 C 404 | 3-20-8 | 4 |
| 18049 C 405 | 3-20-6 | 4 |
| 18049 C 410 | 3-20-9 | 4 |
| 18049 C 411 | 3-20-3 | 4 |
| 18049 C 412 | 3-2-1 | 4 |
| 18049 C 510 | 3-7-42 | 18 |
| | 3-7-63 | |
| | 3-9-16 | |
| | 3-9-32 | |
| | 3-10-9 | |
| | 3-10-40 | |
| 18049 C 517 | 3-8-13 | 2 |
| | 3-8-37 | |
| 18049 D 117 | 3-2-21 | 26 |

| PART NUMBER | FIGURE AND INDEX NO. | QTY PER END ITEM |
|---|---|---|
| | 3-16- | |
| 18049 D 130 | 3-2-25 | 2 |
| 18049 D 136 | 3-15-13 | 1 |
| 18049 D 137 | 3-15-1 | 1 |
| 18049 D 146 | 3-12-19 | 4 |
| 18049 D 147 | 3-12-20 | 2 |
| 18049 D 151 | 3-14-6 | 2 |
| 18049 D 155-1 | 3-6-13 | 8 |
| 18049 D 155-2 | 3-6-8 | 8 |
| 18049 D 155-3 | 3-3-11 | 40 |
| | 3-3-25 | |
| | 3-3-73 | |
| | 3-4-13 | |
| | 3-4-52 | |
| | 3-5-11 | |
| | 3-5-33 | |
| | 3-5-62 | |
| 18049 D 155-4 | 3-6-10 | 8 |
| 18049 D 155-5 | 3-6-15 | 4 |
| 18049 D 158-1 | 3-4-9 | 2 |
| 18049 D 158-2 | 3-4-11 | 4 |
| | 3-4-22 | |
| 18049 D 158-3 | 3-4-10 | 4 |
| | 3-4-51 | |
| 18049 D 161-1 | 3-3-4 | 1 |
| 18049 D 161-2 | 3-3-4 | 1 |
| 18049 D 162 | 3-3-12 | 2 |
| 18049 D 191-1 | 3-7- | 8 |
| | 3-8- | |
| | 3-9- | |
| | 3-10- | |
| 18049 D 191-2 | 3-8- | 1 |
| 18049 D 191-3 | 3-10- | 1 |
| 18049 D 192-1 | 3-7-9 | 8 |
| 18049 D 192-2 | 3-8-45 | 1 |
| | 3-9-40 | |
| | 3-10-55 | |
| | 3-8-53 | |
| 18049 D 192-3 | 3-10-66 | 1 |
| 18049 D 195 | 3-2-20 | 1 |
| 18049 D 211-1 | 3-3-35 | 1 |
| 18049 D 211-2 | 3-3-35 | 1 |
| 18049 D 213-1 | 3-4-24 | 1 |
| 18049 D 213-2 | 3-4-24 | 1 |
| 18049 D 227 | 3-2-16 | 1 |
| | 3-13- | |
| 18049 D 228 | 3-2-17 | 1 |
| | 3-3- | |
| 18049 D 229-1 | 3-11- | 1 |
| 18049 D 229-2 | 3-11- | 1 |

| PART NUMBER | FIGURE AND INDEX NO. | QTY PER END ITEM |
|---|---|---|
| 18049 D 230-1 | 3-11-10 | 1 |
| 18049 D 230-2 | 3-11-10 | 1 |
| 18049 D 232 | 3-13-3 | 1 |
| 18049 D 234 | 3-13-6 | 1 |
| 18049 D 235-1 | 3-11- | 1 |
| 18049 D 235-2 | 3-11- | 1 |
| 18049 D 236-1 | 3-11-12 | 1 |
| 18049 D 236-2 | 3-11-12 | 1 |
| 18049 D 248 | 3-7- | 2 |
| 18049 D 248-1 | 3-7-2 | 2 |
| 18049 D 250 | 3-2-26 | 34 |
| 18049 D 260 | 3-7-1 | 1 |
| 18049 D 283-1 | 3-17-5 | 4 |
| | 3-22-14 | |
| 18049 D 283-2 | 3-17-10 | 4 |
| | 3-22-11 | |
| 18049 D 288-1 | 3-17-18 | 1 |
| 18049 D 288-2 | 3-17-18 | 1 |
| 18049 D 291-1 | 3-22- | 1 |
| 18049 D 291-2 | 3-22- | 1 |
| 18049 D 292-1 | 3-22-1 | 1 |
| 18049 D 292-2 | 3-22-1 | 1 |
| 18049 D 305-1 | 3-21- | 2 |
| 18049 D 403 | 3-20- | 4 |
| 18049 D 407 | 3-20-4 | 4 |
| 18049 D 555 | 3-2-41 | 16 |
| 18049 E 107 | 3-2-7 | 1 |
| | 3-6- | |
| 18049 E 108 | 3-2-8 | 1 |
| | 3-6- | |
| 18049 E 110-1 | 3-3- | 1 |
| 18049 E 110-2 | 3-3- | 1 |
| 18049 E 112-1 | 3-4- | 1 |
| 18049 E 112-2 | 3-4- | 1 |
| 18049 E 114-1 | 3-5- | 1 |
| 18049 E 114-2 | 3-5- | 1 |
| 18049 E 131-1 | 3-3- | |
| 18049 E 131-2 | 3-3- | |
| 18049 E 131-3 | 3-3- | |
| 18049 E 131-4 | 3-3- | |
| 18049 E 132-1 | 3-3- | 1 |
| 18049 E 132-2 | 3-3- | 1 |
| 18049 E 132-3 | 3-3- | 1 |
| 18049 E 132-4 | 3-3- | 1 |
| 18049 E 133-1 | 3-4- | 1 |
| 18049 E 133-2 | 3-4- | 1 |
| 18049 E 133-3 | 3-4- | 1 |
| 18049 E 133-4 | 3-4- | 1 |
| 18049 E 134-1 | 3-5- | 1 |
| 18049 E 134-2 | 3-5- | 1 |

| PART NUMBER | FIGURE AND INDEX NO. | QTY PER END ITEM |
|---|---|---|
| 18049 E 134-3 | 3-5- | 1 |
| 18049 E 134-4 | 3-5- | 1 |
| 18049 E 135-1 | 3-5- | 1 |
| 18049 E 135-2 | 3-5- | 1 |
| 18049 E 135-3 | 3-5- | 1 |
| 18049 E 135-4 | 3-5- | 1 |
| 18049 E 140 | 3-2-15 | 2 |
| | 3-12- | |
| 18049 E 140-1 | 3-12- | 2 |
| 18049 E 141 | 3-12-18 | 2 |
| 18049 E 142 | 3-12-11 | 2 |
| 18049 E 143 | 3-12-15 | 2 |
| 18049 E 150 | 3-2-18 | 2 |
| | 3-14- | |
| 18049 E 160 | 3-2-19 | 1 |
| | 3-15- | |
| 18049 E 163-1 | 3-3-28 | 1 |
| 18049 E 163-2 | 3-3-28 | 1 |
| 18049 E 163-3 | 3-3-23 | 1 |
| 18049 E 163-4 | 3-3-23 | 1 |
| 18049 E 164-1 | 3-3-19 | 2 |
| 18049 E 164-2 | 3-3-22 | 2 |
| 18049 E 165-1 | 3-4-3 | 2 |
| 18049 E 165-2 | 3-4-6 | 2 |
| 18049 E 165-3 | 3-4-7 | 2 |
| 18049 E 166-1 | 3-4-16 | 1 |
| 18049 E 166-2 | 3-4-16 | 1 |
| 18049 E 166-3 | 3-4-15 | 1 |
| 18049 E 166-4 | 3-4-15 | 1 |
| 18049 E 166-5 | 3-4-8 | 1 |
| 18049 E 166-6 | 3-4-8 | 1 |
| 18049 E 167-1 | 3-5-12 | 1 |
| 18049 E 167-2 | 3-5-12 | 1 |
| 18049 E 167-3 | 3-5-7 | 1 |
| 18049 E 167-4 | 3-5-7 | 1 |
| 18049 E 168-1 | 3-5-3 | 2 |
| 18049 E 168-2 | 3-5-6 | 2 |
| 18049 E 169-1 | 3-5-37 | 1 |
| 18049 E 169-2 | 3-5-37 | 1 |
| 18049 E 169-3 | 3-5-34 | 1 |
| 18049 E 169-4 | 3-5-34 | 1 |
| 18049 E 170-1 | 3-5-40 | 2 |
| 18049 E 170-3 | 3-5-41 | 1 |
| 18049 E 170-4 | 3-5-41 | 1 |
| 18049 E 171-1 | 3-7- | 1 |
| 18049 E 171-2 | 3-7- | 1 |
| 18049 E 171-3 | 3-7- | 1 |
| 18049 E 171-4 | 3-7- | 1 |
| 18049 E 172-1 | 3-7-28 | 2 |
| | 3-7-59 | |

| PART NUMBER | FIGURE AND INDEX NO. | QTY PER END ITEM | PART NUMBER | FIGURE AND INDEX NO. | QTY PER END ITEM |
|---|---|---|---|---|---|
| 18049 E 172-2 | 3-7-58 | 1 | 18049 E 187-1 | 3-7-21 | 1 |
| 18049 E 172-3 | 3-7-34 | 2 | 18049 E 187-2 | 3-7-5 | 1 |
| | 3-7-55 | | 18049 E 188-1 | 3-8-68 | 1 |
| 18049 E 173-2 | 3-7-32 | 1 | 18049 E 188-2 | 3-8-65 | 1 |
| 18049 E 174-1 | 3-7-47 | 1 | 18049 E 189-1 | 3-9-39 | 1 |
| 18049 E 174-2 | 3-7-38 | 1 | 18049 E 189-2 | 3-9-37 | 1 |
| 18049 E 174-3 | 3-7-50 | 1 | 18049 E 190-1 | 3-10-53 | 1 |
| 18049 E 174-4 | 3-7-37 | 1 | 18049 E 190-2 | 3-10-74 | 1 |
| 18049 E 174-5 | 3-7-52 | 1 | 18049 E 197-1 | 3-6-7 | 1 |
| 18049 E 174-6 | 3-7-36 | 1 | 18049 E 197-2 | 3-6-7 | 1 |
| 18049 E 175-1 | 3-8- | 1 | 18049 E 198 | 3-6-6 | 2 |
| 18049 E 175-2 | 3-8- | 1 | 18049 E 201-1 | 3-6- | 1 |
| 18049 E 175-3 | 3-8- | 1 | 18049 E 201-2 | 3-6- | 1 |
| 18049 E 175-4 | 3-8- | 1 | 18049 E 201-3 | 3-6- | 1 |
| 18049 E 176-1 | 3-8-7 | 2 | 18049 E 201-4 | 3-6- | 1 |
| | 3-8-40 | | 18049 E 203 | 3-5-54 | 2 |
| 18049 E 176-2 | 3-8-39 | 1 | 18049 E 207 | 3-2-22 | 8 |
| 18049 E 176-3 | 3-8-15 | 2 | 18049 E 210-1 | 3-3-47 | 1 |
| | 3-8-35 | | 18049 E 210-2 | 3-3-47 | 1 |
| 18049 E 177 | 3-8-10 | 1 | 18049 E 212-1 | 3-4-42 | 1 |
| 18049 E 178-1 | 3-8-25 | 1 | 18049 E 212-2 | 3-4-42 | 1 |
| 18049 E 178-2 | 3-8-18 | 1 | 18049 E 214-1 | 3-5-51 | 1 |
| 18049 E 178-3 | 3-8-29 | 1 | 18049 E 214-2 | 3-5-51 | 1 |
| 18049 E 178-4 | 3-8-17 | 1 | 18049 E 215-1 | 3-6-12 | 1 |
| 18049 E 178-5 | 3-8-34 | 1 | 18049 E 215-2 | 3-6-12 | 1 |
| 18049 E 178-6 | 3-8-16 | 1 | 18049 E 216-1 | 3-3- | 1 |
| 18049 E 179-1 | 3-9- | 1 | 18049 E 216-2 | 3-3- | 1 |
| 18049 E 179-2 | 3-9- | 1 | 18049 E 217-1 | 3-3- | 1 |
| 18049 E 179-3 | 3-9- | 1 | 18049 E 217-2 | 3-3- | 1 |
| 18049 E 179-4 | 3-9- | 1 | 18049 E 218-1 | 3-4- | 1 |
| 18049 E 180-1 | 3-9-8 | 2 | 18049 E 218-2 | 3-4- | 1 |
| | 3-9-28 | | 18049 E 219-1 | 3-4- | 1 |
| 18049 E 180-2 | 3-9-10 | 2 | 18049 E 219-2 | 3-4- | 1 |
| | 3-9-26 | | 18049 E 220-1 | 3-5- | 1 |
| 18049 E 182-1 | 3-9-21 | 1 | 18049 E 220-2 | 3-5- | 1 |
| 18049 E 182-2 | 3-9-12 | 1 | 18049 E 221-1 | 3-6- | 1 |
| 18049 E 182-3 | 3-9-23 | 1 | 18049 E 221-2 | 3-6- | 1 |
| 18049 E 182-4 | 3-9-11 | 1 | 18049 E 239-1 | 3-11-5 | 1 |
| 18049 E 183-1 | 3-10- | 1 | 18049 E 239-2 | 3-11-5 | 1 |
| 18049 E 183-2 | 3-10- | 1 | 18049 E 240 | 3-11-8 | 2 |
| 18049 E 183-3 | 3-10- | 1 | 18049 E 280-1 | 3-5-17 | 1 |
| 18049 E 183-4 | 3-10- | 1 | | 3-22- | |
| 18049 E 184-1 | 3-10-3 | 3 | 18049 E 280-2 | 3-5-17 | 1 |
| | 3-10-29 | | | 3-22- | |
| | 3-10-41 | | 18049 E 281-1 | 3-10-45 | 1 |
| 18049 E 184-2 | 3-10-37 | 1 | | 3-17- | |
| 18049 E 185 | 3-10-11 | 1 | 18049 E 281-2 | 3-10-19 | 1 |
| 18049 E 186-2 | 3-10-13 | 1 | | 3-17- | |
| 18049 E 186-3 | 3-10-35 | 1 | 18049 E 282-1 | 3-17- | 2 |
| 18049 E 186-4 | 3-10-12 | 1 | | 3-22- | |

| PART NUMBER | FIGURE AND INDEX NO. | QTY PER END ITEM |
|---|---|---|
| 18049 E 282-2 | 3-17- | 2 |
| | 3-22- | |
| 18049 E 282-3 | 3-17- | 4 |
| | 3-22- | |
| 18049 E 285-1 | 3-17- | 1 |
| 18049 E 285-2 | 3-17- | 1 |
| 18049 E 296-1 | 3-7-31 | 12 |
| | 3-7-53 | |
| | 3-8-6 | |
| | 3-8-26 | |
| | 3-10-4 | |
| | 3-10-30 | |
| 18049 E 296-2 | 3-7-24 | 14 |
| | 3-7-45 | |
| | 3-8-9 | |
| | 3-8-30 | |
| | 3-9-3 | |
| | 3-9-19 | |
| | 3-10-8 | |
| | 3-10-31 | |
| 18049 E 296-3 | 3-7-35 | 12 |
| | 3-7-54 | |
| | 3-8-1 | |
| | 3-8-23 | |
| | 3-9-1 | |
| | 3-9-17 | |
| | 3-10-1 | |
| | 3-10-27 | |
| 18049 E 300-1 | 3-5-43 | 1 |
| | 3-21- | |
| 18049 E 300-2 | 3-5-43 | 1 |
| | 3-21- | |
| 18049 E 301-1 | 3-21-1 | 1 |
| 18049 E 301-2 | 3-21-1 | 1 |
| 18049 E 400 | 3-3-62 | 4 |
| | 3-4-53 | |
| | 3-4-30 | |
| | 3-20- | |
| 18049 E 402 | 3-20-12 | 4 |
| 18049 E 511-1 | 3-3-5 | 1 |
| 18049 E 511-2 | 3-3-5 | 1 |
| 18049 E 512-1 | 3-5-4 | 8 |
| | 3-5-35 | |
| | 3-4-4 | |
| 18049 E 512-3 | 3-3-20 | 1 |
| 18049 E 512-4 | 3-3-20 | 1 |
| 18049 E 515-1 | 3-7-48 | 1 |
| 18049 E 515-2 | 3-7-30 | 1 |
| 18049 E 515-3 | 3-7-51 | 1 |
| 18049 E 515-4 | 3-7-33 | 1 |
| 18049 E 515-5 | 3-8-8 | 2 |

| PART NUMBER | FIGURE AND INDEX NO. | QTY PER END ITEM |
|---|---|---|
| 18049 E 515-7 | 3-9-22 | 1 |
| 18049 E 515-8 | 3-9-9 | 1 |
| 18049 E 515-9 | 3-10-33 | 1 |
| 18049 E 515-10 | 3-10-10 | 1 |
| 18049 E 516-1 | 3-8-32 | 1 |
| 18049 E 516-2 | 3-8-11 | 1 |
| 18049 J 100 | 3-2- | 1 |
| 18049 J 101 | 3-2-1 | 1 |
| | 3-3- | |
| 18049 J 102 | 3-2-2 1 | |
| | 3-3- | |
| 18049 J 103 | 3-2-3 | 1 |
| | 3-4- | |
| 18049 J 104 | 3-2-4 | 1 |
| | 3-4- | |
| 18049J 105 | 3-2-5 | 1 |
| | 3-5- | |
| 18049 J 106 | 3-2-6 | 1 |
| | 3-5- | |
| 18049 J 121 | 3-2-9 | 1 |
| | 3-7- | |
| 18049 J 122 | 3-2-10 | 1 |
| | 3-8- | |
| 18049 J 123 | 3-2-11 | 1 |
| | 3-9- | |
| 18049 J 124 | 3-2-12 | 1 |
| | 3-6- | |
| 18049 J 225 | 3-2-13 | |
| | 3-11- | |
| 18049 J 225-1 | 3-11- | 1 |
| 18049 J 226 | 3-2-14 | 1 |
| | 3-11- | |
| 18049 J 226-1 | 3-11- | |
| 18133 C 500 | 3-3-72 | 21 |
| | 3-5-63 | |
| | 3-6-16 | |
| | 3-7-8 | |
| | 3-8-66 | |
| | 3-9-38 | |
| | 3-10-75 | |
| | 3-11-4 | |
| | 3-12-9 | |
| | 3-13-4 | |
| | 3-14-13 | |
| | 3-15-14 | |
| 28-2-G | 3-12-2 | 30 |
| | 3-12-21 | |
| | 3-14-8 | |
| | 3-15-9 | |

| PART NUMBER | FIGURE AND INDEX NO. | QTY PER END ITEM |
|---|---|---|
| 353512-1 | 3-7-12 | 13 |
| | 3-8-48 | |
| | 3-8-56 | |
| | 3-9-43 | |
| | 3-10-61 | |
| | 3-10-72 | |
| 338018-4 | 3-7-13 | 13 |
| | 3-8-49 | |
| | 3-8-57 | |
| | 3-9-44 | |

| PART NUMBER | FIGURE AND INDEX NO. | QTY PER END ITEM |
|---|---|---|
| | 3-10-58 | |
| | 3-10-69 | |
| 5115-37-015ZD | 3-19-2 | 10 |
| 5115-50-ZD | 3-16-7 | 28 |
| | 3-18-2 | |
| 5560-37ZD | 3-7-2A | 12 |
| | 3-17-3 | |
| | 3-17-13 | |
| | 3-22-6 | |
| | 3-22-13 | |
| 6434 K30 | 3-21-2 | 4 |

## SECTION IV. TROUBLESHOOTING

**3-26. General**. The Helicopter Internal Cargo Handling System is a mechanical roller/conveyor type installation. Any malfunction within the system will be due to a few basic causes. The malfunction can be corrected by replacement of missing or damaged components. To determine the cause of a malfunction, isolate the malfunction to a particular area or component. Visually inspect the area for broken or damaged parts. If this does not easily correct the malfunction, refer to Table 3-3.

**3-27. Troubles and Remedies.** Refer to Table 3-3 for suggested remedies to the troubles listed.

**Table 3-3. Troubleshooting**

| Trouble | Probable Cause | Remedy |
|---|---|---|
| Cargo hangs up in one spot. | 1. Inboard rollers or outboard rollers not turning freely.<br><br>Internal Cargo Handling System (See Chapter 3, Section II.) | 1a. Clean Helicopter Internal Cargo Handling System. (See Chapter 3, Section II.)<br>1b. Lubricate Helicopter |
| | 2. Sections of Helicopter Internal Cargo Handling System misaligned. | 2. Tighten or replace attaching hardware as required. |
| | 3. Inboard or outboard roller broken. | 3. Replace roller. |
| | 4. Inboard or outboard roller loose. | 4. Replace roller and/or shaft. |
| | 5. Contact of the main deck outboard guide rail bumper (P/N 18049C202-1, -2, -3) at buffer board attachment bracket screw head. | 5. Replace protruding head mounting screw and washer with lower profile head mounting screw. (See figure 3-3, index 41, 42, and 43 for attaching parts). |
| | 6. Ramp guide rails bent inboard creating an interference restriction 463L pallet movement through the rail. | 6. The vertical leg of the 18325E215 and 18325E216 ramp rails may be bent outboard using appropriate tools (large soft rubber mallet). Rails should not be bent more than necessary in order to achieve 88.00 to 88.09 clearance. |
| Helicopter Internal Cargo Handling System rocks, sways or bows excessively under load. | 1. Loose 5k tiedown fitting assemblies, 10k fitting assemblies or tiedown fitting assembly, station 360.000. | 1. Tighten as required. |
| | 2. Loose or broken outboard rail/roller (main deck) hinge, pallet guide hinge, rail/roller main deck offset (outboard) hinge, offset hinge, half hinge, or pallet guide, hatch hinge. | 2. Reattach or replace. |
| Helicopter Internal Cargo Handling System makes excessive noise. | 1. Excess friction. | 1. Clean or lubricate. (See Chapter 3, Section II.) |

## SECTION V. REMOVAL AND STORAGE INSTRUCTIONS

**3-28. Removal**. Remove the Helicopter Internal Cargo Handling System from the CH47 Helicopter in reverse order of the installation procedures in Chapter 2. The eight 10k fitting assemblies (22, Figure 3-2) and ramp skid pad (20) should be left in place. All removed equipment should be properly tagged and stored to ensure proper installation when desired.

**3-29. Storage**. The Helicopter Internal Cargo Handling System must be protected against deterioration at all times. Direct contact with rain, sand, dust, etc., must be avoided. TEMPORARY storage may be outdoors only if suitable covering is provided to prevent fouling of closely fitted parts. If exposure has taken place, the system must be cleaned, inspected, and checked thoroughly before installation into an aircraft. EXTENDED storage must be indoors, with complete checkout before each use

**3-30. Cleaning**. Refer to Chapter 3, Section II, for instructions on cleaning the Helicopter Internal Cargo Handling System.

**3-31. Painting**. Paint the Helicopter Internal Cargo Handling System in accordance with the following instructions:

**WARNING**

**All spray painting will be accomplished in an exhaust ventilation booth meeting requirements of OSHA 1910.107. Respiratory protective devices will be used when required by local Safety Office and Medical Services Bio-environmental Engineer.**

a. When paint wears or chips off aluminum, the exposed surfaces will be recoated and repainted to prevent corrosion.

b. Apply two coats of MX-P-23377 epoxy primer in accordance with MILC-22751.

c. Then apply one coat of semigloss synthetic enamel in accordance with MILSTD808.

**3-32. Preservation** To preserve the Helicopter Internal Cargo Handling System, refer to paragraphs 3-28, 3-29 and 3-30.

# APPENDIX A

## REFERENCES

The following forms, technical manuals, specifications, etc., are referred to in this manual:

DA Form 2028, Recommended Changes to Publications and Blank Forms

FSCM Cataloging Handbook H4-1 and H4-2

MIL-L46147, Lubricant, Solid Film, Air-Cured

MILSTD-12, Abbreviations for Use on Drawings and in Specifications, Standards and Technical Documents

MIL-STD-808, Finish, Materials and Processes for Corrsion Prevention and Control in Support Equipment

OSHA 1910.107, Spray Finishing Using Flammable and Combustible Materials

P-D-680, Dry Cleaning Solvent

SF 368, Quality Deficiency Report

TM-55-450-15, Air Movement of Troops and Equipment (Nontactical) HQ DA June 1971

TM-55-450-18, Helicopter Internal and External Loads, CH47 Helicopter, HQ DA August 1970

TM-750-244-1-5, Procedures for Destruction of Aircraft and Associated Equipment to Prevent Enemy Use

DA PAM 738-751, User's Manual for the Army Maintenance Management System - Aviation (TAMMS-A)

MIL-P-23377, Primer Coating, Epoxy Polyamide, Chemical and Solvent Resistant

MIL-C-22751, Coating System, Epoxy-Polyamide, Chemical and Solvent Resistant, Process for Application of

FM 21-11, First Aid for Soldiers

# APPENDIX B

# MAINTENANCE ALLOCATION CHART

## SECTION I

## INTRODUCTION

B-1 Maintenance Allocation Chart

a. This Maintenance Allocation Chart (MAC) assigns maintenance functions in accordance with the Three Levels of Maintenance concept for Army aviation. These maintenance levels (categories) Aviation Unit Maintenance (AVUM), Aviation Intermediate Maintenance (AVIM), and Depot Maintenance are depicted on the MAC as:

AVUM, which corresponds to an 0 Code in the Repair Parts and Special Tools List (RPSTL)

AVIM, which corresponds to an F Code in the Repair Parts and Special Tools List (RPSTL)

DEPOT, which corresponds to a D Code in the Repair Parts and Special Tools List (RPSTL)

b. The maintenance to be performed below depot and in the field is described as follows:

(1) Aviation Unit Maintenance (AVUM) activities will be staffed and equipped to perform high frequency "On-Aircraft" maintenance tasks required to retain or return aircraft systems to a serviceable condition. The maintenance capability of the AVUM will be governed by the Maintenance Allocation Chart (MAC) and limited by the amount and complexity of ground support equipment (GSE), facilities required, authorized manning strength, and critical skills available. The range and quantity of authorized spare modules/components will be consistent with the mobility requirements dictated by the air mobility concept. (Assignments of maintenance tasks to divisional company size aviation units will consider the overall maintenance capability of the division, the requirement to conserve personnel and equipment resources, and air mobility requirements).

(a) Company Size Aviation Units: Perform those tasks which consist primarily of preventive maintenance and maintenance repair and replacement functions associated with sustaining a high level of aircraft operational readiness. Perform maintenance inspections and servicing to include preflight, daily, intermediate, periodic (or phased), and special inspections as authorized by the MAC or higher headquarters. Identify the cause of equipment/system malfunctions using applicable technical manual troubleshooting instructions, built-in test equipment (BITE), installed aircraft instruments, or test, measurement, and diagnostic equipment (TMDE). Replace worn or damaged modules/components that do not require complex adjustments or system alinement and which can be removed/installed with available skills, tools, and ground support equipment. Perform operational and continuity checks and make minor repairs to the electrical system. Inspect,

service and make operational, capacity, and pressure checks to hydraulic systems. Perform servicing, functional adjustments, and minor repair/replacement to the flight control, propulsion, power train, and fuel systems. Accomplish air frame repair that does not require extensive disassembly, jigging, or alinement. The manufacture of air frame parts will be limited to those items which can be fabricated with tools and equipment found in current air mobile tool and shop sets. Evacuate unserviceable modules/components and end items beyond the repair capability of AVUM to the supporting AVIM.

(b) Less than Company Size Aviation Units: Aviation elements organic to brigade, group, battalion headquarters, and detachment size units are normally small and have less than ten aircraft assigned. Maintenance taks performed by these units will be those which can be accomplished by the aircraft crew chief or assigned aircraft repairman and will normally be limited preventive maintenance, inspections, servicing, spot painting, stop drilling, application of nonstress patches, minor adjustments, module/component fault diagnosis, and replacement of selected modules/compononts. Repair functions will normally be accomplished by the supporting AVIM unit.

(2) Aviation Intermediate Maintenance (AVIM) provides mobile, responsive "One-stop" maintenance support. (Maintenance functions which are not conducive to sustaining air mobility will be assigned to depot maintenance). AVIM may perform all maintenance functions authorized to be done at AVUM. Repair of equipment for return to user will emphasize support or operational readiness requirements. Authorized maintenance includes replacement and repair of modules/components and end items which can be accomplished efficiently with available skills, tools, and equipment. AVIM established the Direct Exchange (DX) program for AVUM units by repairing selected items for return to stock when such repairs cannot be accomplished at the AVUM level. The AVIM level inspects, troubleshoots, performs diagnostic tests, repairs, adjust, calibrates and alines aircraft system modules/components. AVIM units will have capability to determine the serviceability of specified modules/components removed prior to the expiration of the Time Between Overhaul (TBO) or finite life. Module/component disassembly and repair will support the DX program and will normally be limited to tasks requiring cleaning and the replacement of seals, fittings, and items of common hardware. Air frame repair and fabrication of parts will be limited to those maintenance tasks which can be performed with available tools and test equipment. Unserviceable reparable modules/components and end items which are beyond the capability of AVIM to repair will be evacuated to Depot Maintenance. AVIM will perform aircraft weight and balance inspections and other special inspections which exceed AVUM capability. Provides quick response maintenance support, including aircraft recovery and air evacuation, on-the-job training, and technical assistance through the use of mobile maintenance contact teams. Maintains authorized operational readiness float aircraft. Provides collection and classification services for serviceable/unserviceable material. Operates a cannibalization activity in accordance with AR 750-50. (The aircraft maintenance company within the maintenance battalion of a division will perform AVIM functions consistent with air mobility requirements and conservation of personnel and equipment resources. Additional intermediate maintenance support will be provided by the supporting nondivisional AVIM unit.)

B-2 Use of the Maintenance Allocation Chart (Section II)

a. The Maintenance Allocation Chart assigns maintenance functions to the lowest

category of maintenance based on past experience and the following considerations:

(1) Skills available

(2) Work time required.

(3) Tools and test equipment required and/or available.

b. Only the lowest category of maintenance authorized to perform a maintenance function is indicated. If the lowest maintenance category cannot perform all tasks of any single maintenance function (e.g., test repair), then the higher maintenance level(s) that can accomplish additional tasks will also be indicated.

c. A maintenance function assigned to a maintenance category will automatically be authorized to be performed at any higher maintenance category.

d. A maintenance function that cannot be performed at the assigned category of maintenance for any reason may be evacuated to the next higher maintenance category. Higher maintenance categories will perform the maintenance functions of lower maintenance categories when required or directed by the commander that has the authority to direct such tasking.

e. The assignment of a maintenance function will not be construed as authorization to carry the related repair parts or spares in stock. Information to requisition or otherwise secure the necessary repair parts will be as specified in the associated Repair Parts and Special Tools List (RPSTL).

f. Normally there will be no deviation from the assigned level of maintenance. In cases of operational necessity, maintenance functions assigned to a maintenance level may, on a one-time basis and at the request of the lower maintenance level, be specifically authorized by the maintenance officer of the level of maintenance to which the function is assigned. The special tools, equipment, etc., required by the lower level of maintenance to perform this function will be furnished by the maintenance level to which the function is assigned. This transfer of a maintenance function to a lower maintenance level does not relieve the higher maintenance level of the responsibility for the function. The higher level of maintenance will provide technical supervision and inspection of the function being performed at the lower level.

g. Changes to the Maintenance Allocation Chart will be based on continuing evaluation and analysis by responsible technical personnel and on reports received from field activities.

B-3 Maintenance functions. Maintenance functions will be limited to and defined as follows:

a. Inspect. To determine the serviceability of an item by comparing its physical, mechanical, and/or electrical characteristics with established standards through examination (e.g., by sight, sound, or feel).

b. Test. To verify serviceability by measuring the mechanical, pneumatic, hydraulic, or electrical characteristics of an item and comparing those characteristics with prescribed standards.

c. Service. Operations required periodically to keep an item in proper operating condition, i.e., to clean (includes decontaminate, when required), to preserve, to drain, to paint, or to replenish fuel, lubricants, chemical fluids, or gases.

d. Adjust. To maintain or regulate within prescribed limits, by bringing into proper or exact position, or by setting the operating characteristics to specified parameters.

e. Aline. To adjust specified variable elements of an item to bring about optimum or desired performance.

f. Calibrate. To determine and cause corrections to be made or to be adjusted on instruments or test, measuring, and diagnostic equipments used in precision measurement. Consists of comparisons of two instruments, one of which is a certified standard of known accuracy, to detect and adjust any discrepancy in the accuracy of the instrument being compared.

g. Remove/Install. To remove and install the same item when required to perform service or other maintenance functions. Install may be the act of emplacing, seating, or fixing into position a spare, repair part, or module (component or assembly) in a manner to allow the proper functioning of an equipment or system.

h. Replace. To remove an unserviceable item and install a serviceable counterpart in its place. "Replace" is authorized by the MAC and is shown as the 3d position code of the SMR code.

i. Repair. The application of maintenance services', including fault location/troubleshooting[2], removal/installation, and disassembly/assembly procedures[3], and maintenance actions[4] to identify troubles and restore serviceability to an item by correcting specific damage, fault, malfunction, or failure in a part, subassembly, module (component or assembly), end item, or system.

j. Overhaul. That maintenance effort (service/action) prescribed to restore an item to a completely serviceable/operational condition as required by maintenance standards in appropriate technical publications (i.e., DMWR). Overhaul is normally the highest degree of maintenance performed by the Army. Overhaul does not normally return an item to like new condition.

k. Rebuild. Consists of those services/actions necessary for the restoration of unserviceable equipment to a like new condition in accordance with original manufacturing standards. Rebuild is the highest degree of materiel maintenance applied to Army equipment. The rebuild operation includes the act of returning to zero those age measurements (hours/miles, etc.) considered in classifying Army equipment/components.

---

[1] Services - inspect, test, service, adjust, aline, calibrate, and/or replace.

[2] Fault locate/troubleshoot The process of investigating and detecting the cause of equipment malfunctioning; the act of isolating a fault within a system or unit under test (UUT).

[3] Disassemble/assemble - encompasses the step-by-step taking apart (or breakdown)

of a spare/functional group coded item to the level of its least componency identified as maintenance significant (i.e., assigned an SMR code) for the category of maintenance under consideration.

[4] Actions - welding, grinding, riveting, straightening, facing, remachnining and/or resurfacing.

B-4 Functional Groups. (Columns 1 and 2.) Not Applicable.

B-5 Maintenance Function. (Column 3). Column 3 lists the functions to be performed on the items listed in column 2.

B-6 Maintenance categories and work times. (Column 4)

The maintenance categories (levels) AVUM, AVIM, and DEPOT are listed on the Maintenance Allocation Chart with individual columns that include the work times for maintenance functions at each maintenance level. Work time presentations such as "0.1" indicate the average time it requires a maintenance level to perform a specified maintenance function. If a work time has not been established, the columnar presentation shall indicate " ." Maintenance levels higher than the level of maintenance indicated are authorized to perform the indicated function.

B-7 Tools and test equipment. (Column 5 Section III)

Common tool sets (not indicidual tools), special tools, test, and support equipment required to perform maintenance functions are listed alphabetically in Section III with a reference number to permit cross-referencing to column 5 in the MAC. In addition, the maintenance category authorized to use the device is listed along with the item National stock number (NSN) and, if applicable, the tool number to aid in identifying the tool/device.

B-8 Remarks. (Column 6 and Section IV) Not Applicable.

## SECTION II

### MAINTENANCE ALLOCATION CHART

NOMENCLATURE OF END ITEMS
HELICOPTER INTERNAL CARGO HANDLING SYSTEM (HICHS)
P/N 18049 J 100

| (1) GROUP NUMBER | (2) COMPONENT/ ASSEMBLY | (3) MAINTENANCE FUNCTION | (4) MAINTENANCE CATEGORY | | | (5) TOOLS AND EQUIPMENT | (6) REMARKS |
|---|---|---|---|---|---|---|---|
| | | | AVUM | AVIM | DEPOT | | |
| | ROLLER CONVEYOR ASSEMBLY | Inspect<br>Replace<br>Repair | | | | 102<br>102<br>102 | |

Section III. Tool and Test Equipment Requirements

Helicopter Internal Cargo Handling System

| (1) Tool or Test Equipment Ref Code | (2) Maintenance Category | (3) Nomenclature | (4) National/NATO Stock Number | (5) Tool Number |
|---|---|---|---|---|
| 102 | AVUM | Tool Kit, Air-craft Mechanics-General | 5180-00-323-4692 | SC518099CLA01 |

# APPENDIX C

## OPERATOR'S AND AVIATION UNIT MAINTENANCE

## REPAIR PARTS AND SPECIAL TOOLS LIST

## SECTION I. INTRODUCTION

1. Scope.
This RPSTL lists and authorizes spares and repair parts required for performance of Aviation Unit maintenance of the Helicopter Internal Cargo Handling Systems (HICHS). It authorizes the requisitioning, issue, and disposition of spares and repair parts as indicated by source, maintenance, and recoverability (SMR) codes.

2. General.
In addition to Section I, Introduction, this Repair Parts and Special Tools List is divided into the following sections:

a. Section II Repair Parts List. A list of spares and repair parts authorized by this RPSTL for use in the performance of maintenance. Parts lists are composed of illustration figures in ascending numerical sequence.

b. Section III - Special Tools List. Not applicable.

c. Section IV National Stock Number and Part Number Index. A list, in National item identification number (NIIN) sequence, of all National stock numbers (NSN) appearing in the listings, followed by a list in alphanumeric sequence of all part numbers appearing in the listings. National stock numbers and part numbers are cross-referenced to each illustration figure and item number appearance.

3. Explanation of Columns (Sections II and III).

a. ITEM NO. (Column (1)). Indicates the number used to identify items called out in the illustration.

b. SMR CODE (Column (2)). The Source, Maintenance, and Recoverability (SMR) code is a 5-position code containing supply/requisitioning information, maintenance category authorization criteria, and disposition instruction, as shown in the following breakout:

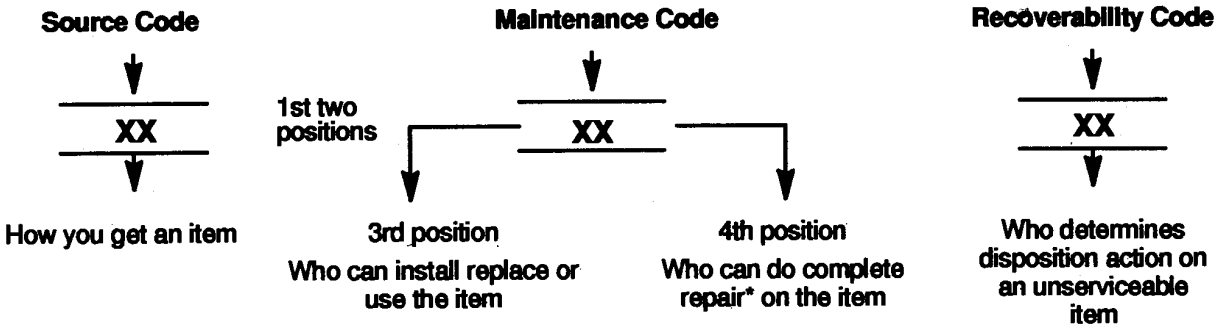

* Complete Rear: Maintenance capacity, capability, and authority to perform all corrective maintenance tasks of the "Repair" function in a use/user environment in order to restore serviceability to a failed item.

(1) Source Code. The source code tells you how you get an item needed for maintenance, repair, or overhaul of an end item/equipment. Explanations of source codes follow.

| Code | Explanation |
|---|---|
| PA | |
| PB | Stocked items; use the applicable NSN to request/requisition items with these |
| PC** | source codes. They are authorized to the category indicated by the code |
| PD | entered in the 3rd position of the SMR code. |
| PE | |
| PF | **NOTE : Items coded PC are subject to deterioration. |
| PG | |

XA - - Do not requisition an "XA"-coded item. Order its next higher assembly. (Also, refer to the NOTE below.)
XB - - If an "XB" item is not available from salvage, order it using the CAGE Code and part number given.
XC - - Installation drawing, diagram, instruction sheet, field service drawing, that is identified by manufacturer's part number.
XD - - Item is not stocked. Order an "XD"-coded item through normal supply channels using the CAGE Code and part number given, if no NSN is available.

**NOTE**

**Cannibalization or controlled exchange, when authorized, may be used as a source of supply for items with the above source codes, except for those source coded "XA" or those aircraft support items restricted by requirements of AR 700-42.**

(2) Maintenance Code. Maintenance codes tells you the level(s) of maintenance authorized to USE and REPAIR support items. The maintenance codes are entered in the third and fourth positions of the SMR Code as follows:

(a) The maintenance code entered in the third position tells you the lowest maintenance level authorized to remove, replace, and use an item. The maintenance code entered in te third position will indicate authorization to one of the following levels of maintenance.

| Code | Application/Explanation |
|---|---|
| C | -Crew or operator maintenance done within aviation unit maintenance. |
| 0 | -Aviation unit category can remove, replace, and use the item. |

(b) The maintenance Code entered in the fourth position tells whether or not the item is to be repaired and identifies the lowest maintenance level with the capability to do complete repair (i.e., perform all authorized repair functions.) (NOTE: Some limited repair may be done on the item at a lower level of maintenance, if authorized by the Maintenance Allocation Chart (MAC) and SMR codes.) This position will contain one of the following maintenance codes.

| CODE | Application/Explanation |
|---|---|
| 0 | -Aviation unit is the lowest level that can do complete repair of the item. |

(3) Recoverability Code. Recoverability codes are assigned to items to indicate the disposition action on unserviceable items. The recoverability code is entered in the fifth position of the SMR Code as follows:

| Recoverability Codes | Application/Explanation |
|---|---|
| Z | -Nonreparable item. When unserviceable, condemn and dispose of the item at the level of maintenance shown in 3d position of SMR Code. |
| O | -Reparable item. When uneconomically reparable, condemn and dispose of the item at aviation unit level. |

c. FSCM (Column (3). The Federal Supply Code for Manufacturer (FSCM) is a 5-digit numeric code which is used to identify the manufacturer, distributor, or Government agency, etc., that supplies the item.

d. PART NUMBER (Column (4). Indicates the primary number used by the manufacturer (individual, company, firm, corporation, or Government activity), which controls the design and characteristics of the item by means of its engineering drawings, specifications standards, and inspection requirements to identify an item or range of items.

**NOTE**

**When you use a NSN to requisition an item, the item you receive may have a different part number from the part ordered.**

e. DESCRIPTION AND USABLE ON CODE (UOC) (Column (5). This column includes the following information:

(1) The Federal item name and, when required, a minimum description to identify the item.

(2) The statement "END OF FIGURE" appears just below the last item description in Column 5 for a given figure in Section II.

f. QTY (Column (6)). The QTY (quantity per figure column) indicates the quantity of the item used in the breakout shown on the illustration figure, which is prepared for an assembly. A "V" appearing in this column in lieu of a quantity indicates that the quantity is variable and quantity may vary from application to application.

4. Explanation of Columns (Sect. IV).

a. NATIONAL STOCK NUMBER (NSN) INDEX.

(1) STOCK NUMBER column. This column lists the NSN by National item identification number (NIIN) sequence. The NIIN consists of the last nine NSN digits of the NSN (i.e., 5305-01-674-1467). When using this column to NIIN

locate an item, ignore the first 4 digits of the NSN. However the complete NSN should be used when ordering items by stock number.

(2) FIG. Column. This column lists the number of the figure where the item is identified/located. The figures are in numerical order in Section II.

(3) ITEM column. The item number identifies the item associated with the figure listed in the adjacent FIG. column. This item is also identified by the NSN listed on the same line.

b. PART NUMBER INDEX. Part numbers in this index are listed by part number in ascending alphanumeric sequence (i.e., vertical arrangement of letter and number combination which places the first letter or digit of each group in order A through Z, followed by the numbers 0 through 9 and each following letter or digit in like order).

(1) FSCM column. The Federal Supply Code for Manufacturer (FSCM) is a 5-digit numeric code used to identify the manufacturer, distributor, or Government agency, etc., that supplies the item.

(2) PART NUMBER column. Indicates the primary number used by the manufacturer (individual, firm, corporation, or Government activity), which controls the design and characteristics of the item by means of its engineering drawings, specifications standards, and inspection requirements to identify an item or range of items.

(3) STOCK NUMBER column. This column lists the NSN for the associated part number and manufacturer identified in the PART NUMBER and FSCM columns to the left.

(4) FIG. column. This column lists the number of the figure where the item is identified/located in Section II.

(5) ITEM column. The item number is that number assigned to the item as it appears in the figure referenced in the adjacent figure number column.

5. Special Information. Not applicable.

6. How to Locate Repair Parts

a. When National Stock Number or Part Number is Not Known.

(1) First. Using the table of contents, determine the assembly group or subassembly group to which the item belongs. This is necessary since figures are prepared for assembly groups and subassembly groups, and listings are divided into the same groups.

(2) Second. Find the figure covering the assembly group or subassembly group to which the item belongs.

(3) Third. Identify the item on the figure and note the item number.

(4) Fourth. Refer to the Repair Parts List for the figure to find the part number for the item number noted on the figure.

(5) Fifth. Refer to the Part Number Index to find the NSN, if assigned.

b. When National Stock Number or Part Number is Known:

(1) First. Using the Index of National Stock Number and Part Numbers find the pertinent National Stock Number or Part Number. The NSN index is in National Item Identification Number (NIIN) sequence (see 4.1(1)). The part numbers in the Part Number index are listed in ascending alphanumeric sequence (see 4.b). Both indexes cross-reference you to the illustration figure and item number of the item you are looking for.

(2) Second. After finding the figure and item number, verify that the item is the one you're looking for, then locate the item number in the repair parts list for the figure.

7. Abbreviations. Not applicable.

| (1) ITEM NO | (2) SMR CODE | (3) FSCM | (4) PART NUMBER | (5) DESCRIPTION AND USABLE ON CODES (UOC) | (6) QTY |
|---|---|---|---|---|---|
| | | | | FIG. 3-2 HELICOPTER INTERNAL CARGO HANDLING SYSTEM | |
| 1 | XDOOO | 81868 | 18049 J 101 | LH FWD O.B. ..... RAIL/ROLLER ASSY SEE FIG.3-3 FOR BKDN ..... | 1 |
| 2 | XDOOO | 81868 | 18049 J 102 | RH FWD O.B..... RAIL/ROLLER ASSY SEE FIG. 3-3 FOR BKDN..... | 1 |
| 3 | XDOOO | 81868 | 18049 J 103 | CENTER LH O.B. RAIL/ROLLER ASSY SEE FIG.3-4 FOR BKDN ..... | 1 |
| 4 | XDOOO | 81868 | 18049 J 104 | CENTER RH O.B.RAIL/ROLLER ASSY SEE FIG.3-4 FOR BKDN ..... | 1 |
| 5 | XDOOO | 81868 | 18049 J 105 | LH AFT O.B.RAIL/ROLLER ASSY SEE FIG.3-5 FOR BKDN ..... | 1 |
| 6 | XDOOO | 81868 | 18049 J 106 | RH AFT O.B.RAIL/ROLLER ASSY SEE FIG.3-5 FOR BKDN ..... | 1 |
| 7 | XDOOO | 81868 | 18049 E 107 | LH O.B. ..... GUIDE RAIL/ROLLER ASSY SEE FIG.3-6 FOR BKDN ..... | 1 |
| 8 | XDOOO | 81868 | 18049 E 108 | RH O.B..... GUIDE RAIL/ROLLER ASSY SEE FIG.3-6 FOR BKDN ..... | 1 |
| 9 | XDOOO | 81868 | 18049 J 121 | FWD I.B. ..... GUIDE/ROLLER ASSY SEE FIG.3-7 FOR BKDN ..... | 1 |
| 10 | XDOOO | 81868 | 18049 J 122 | FWD I.B. ..... GUIDE/ROLLER ASSY SEE FIG.3-8 FOR BKDN ..... | 1 |
| 11 | XDOOO | 81868 | 18049 J 123 | CENTER I.B. ..... GUIDE/ROLLER ASSY SEE FIG.3-9 FOR BKDN ..... | 1 |
| 12 | XDOOO | 81868 | 18049 J 124 | AFT I.B..... GUIDE/ROLLER ASSY SEE FIG.3-10 FOR BKDN ..... | 1 |
| 13 | XDOOO | 81868 | 18049 J 225 | LH RAMP I.B. .....ROLLER ASSY SEE FIG. 3-11 ..... | 1 |
| 14 | XDOOO | 81868 | 18049 J 226 | RH RAMP I.B. .....ROLLER ASSY SEE FIG. 3-11 FOR BKDN ..... | 1 |
| 15 | XDOOO | 81868 | 18049 E 140 | RAMP EXTENSION ROLLER ASSY SEE FIG. 3-12 FOR BKDN..... | 2 |
| 16 | XDOZZ | 81868 | 18049 D 227 | MOUNTING BAR ASSY, FWD ..... | 1 |
| 17 | XDOZZ | 81868 | 18049 D 228 | MOUNTING BAR ASSY, AFT ..... | 1 |
| 18 | XDOZZ | 81868 | 18049 E 150 | RAMP EXTENSION SUPPORT ASSY ..... | 2 |
| 19 | XDOZZ | 81868 | 18049 E 160 | RAMP SUPPORT ASSY ..... | 1 |
| 20 | XDOZZ | 81868 | 18049 D 195 | RAMP SKID RAD ..... | 1 |
| 21 | PAOZZ | 81868 | 18049 D 117 | 5K TIEDOWN FITTING ASSY ..... | 1 |
| 22 | XDOZZ | 81868 | 18049 E 207 | 10K FITTING ASSY ..... | 8 |
| 23 | PAOZZ | 81868 | 18049 C 245 | BOLT ASSEMBLY, TIE DOWN ..... | 2 |
| 24 | PAOZZ | 81868 | 18049 C 299 | RING PLUG ASSEMBLY, CENTERLINE ..... | 10 |
| 25 | PBOOZ | 81868 | 18049 D 130 | REST PLATE ..... | 2 |
| 26 | PAOZZ | 81868 | 18049 D 250 | STRAP ASSEMBLY, ROLLER ..... | 34 |
| 27 | PAOZZ | 80205 | NAS517-4-12 | SCREW, MACHINE ..... | 2 |
| 28 | PAOZZ | 80205 | NAS6608-14 | BOLT, SHEAR ..... | 16 |
| 29 | PAOZZ | 80205 | NAS6608-15 | BOLT, SHEAR ..... | 16 |
| 30 | PAOZZ | 88044 | AN3-1OA | BOLT, MACHINE ..... | 28 |
| 31 | PAOZZ | 88044 | AN960-10 | WASHER, FLAT ..... | 36 |
| 32 | PAOZZ | 88044 | AN4-11A | BOLT, MACHINE ..... | 6 |
| 33 | PAOZZ | 88044 | AN960-416 | WASHER, FLAT ..... | 18 |

SECTION II

| (1) ITEM NO | (2) SMR CODE | (3) FSCM | (4) PART NUMBER | (5) DESCRIPTION AND USABLE ON CODES (UOC) | (6) QTY |
|---|---|---|---|---|---|
| 34 | PAOZZ | 80205 | NAS334CPAll | SCREW, CLOSE TOLERANCE | 6 |
| 35 | PAOZZ | 88044 | AN4-12A | BOLT, MACHINE | 4 |
| 36 | PAOZZ | 88044 | AN4-5A | BOLT, MACHINE | 8 |
| 37 | PAOZZ | 96906 | MS21044-N4 | NUT, SELF-LOCKING | 8 |
| 38 | PAOZZ | 88044 | AN3-11A | BOLT, MACHINE | 8 |
| 39 | PAOZZ | 96906 | MS21250-05028 | BOLT, SHEAR | 16 |
| 40 | PAOZZ | 88044 | AN960-516 | WASHER, FLAT | 32 |
| 41 | XDOZZ | 81868 | 18049 D 555 | BOLT, SPECIAL | 16 |
| 42 | PAOZZ | 88044 | AN960-816 | WASHER, FLAT | 16 |
| 43 | PAOZZ | 88044 | AN960-816L | WASHER, FLAT | 8 |

END OF FIGURE

## SECTION II

| (1) ITEM NO | (2) SMR CODE | (3) FSCM | (4) PART NUMBER | (5) DESCRIPTION AND USABLE ON CODES (UOC) | (6) QTY |
|---|---|---|---|---|---|
| | | | | FIG. 3-3 OUTBOARD RAIL/ROLLER ASSY, FWD, RIGHT & LEFT HAND | |
| | XDOOO | 81868 | 18049 J 101 | LH FWD O.B. RAIL/ROLLER ASSY | 1 |
| | XDOOO | 81868 | 18049 J 102 | RH FWD O.B. RAIL/ROLLER ASSY | 1 |
| 1 | XDOZZ | 81868 | 18049 C 206 | .SPACER, ROLLER TRAY | 1 |
| 3 | XDOZZ | 81868 | 18049 C 129 | .SPACER, ROLLER TRAY | 1 |
| 7 | XDOZZ | 81868 | 18049 C 156 | .HINGE, OUTBOARD | 2 |
| 10 | XDOZZ | 81868 | 18049 C 157 | .HINGE, OFFSET | 2 |
| 11 | XDOZZ | 81868 | 18049 D 155-3 | .PIN, HINGE | 2 |
| 13 | PAOZZ | 81868 | 18049 C 148 | .ROLLER, OUTBOARD | 4 |
| 14 | PAOZZ | 81868 | 18049 C 246 | .SHAFT ASSEMBLY | 6 |
| 15 | PAOZZ | 96906 | MS24665-353 | .PIN, COTTER | 6 |
| 16 | PAOZZ | 81868 | 18049 C 149 | .ROLLER, INBOARD | 2 |
| 17 | XDOZZ | 81868 | 18049 C 129 | .SPACER, ROLLER TRAY | 5 |
| 24 | XDOZZ | 81868 | 18049 C 157 | .HINGE, OFFSET | 2 |
| 25 | XDOZZ | 81868 | 18049 D 155-3 | .PIN, HINGE | 2 |
| 26 | XDOZZ | 81868 | 18049 C 156 | .HINGE, OUTBOARD | 2 |
| 29 | PAOZZ | 81868 | 18049 C 148 | .ROLLER, OUTBOARD | 15 |
| 30 | PAOZZ | 81868 | 18049 C 246 | .SHAFT ASSEMBLY | 17 |
| 31 | PAOZZ | 96906 | MS24665-353 | .PIN, COTTER | 17 |
| 32 | PAOZZ | 81868 | 18049 C 149 | .ROLLER, INBOARD | 2 |
| 33 | XDOZZ | 81868 | 18049 C 156 | .HINGE, OUTBOARD | 1 |
| 36 | PAOZZ | 88044 | AN960-816L | .WASHER, FLAT | 2 |
| 37 | PAOZZ | 80205 | NAS6608-15 | .BOLT, SHEAR | 2 |
| 38 | XDOZZ | 80205 | NAS1031P8 | .NUT PLATE, SELF-LOCKING | 1 |
| 40 | XDOZZ | 81868 | 18049 C 202-3 | .BUMPER, O.B. GUIDE RAIL | 1 |
| 41 | PAOZZ | 96906 | MS21042-4 | .NUT, SELF-LOCKING | 4 |
| 42 | PAOZZ | 88044 | AN960-416 | .WASHER, FLAT | 4 |
| 43 | PAOZZ | 80205 | NAS334CPAll | .SCREW, CLOSE TOLERANCE | 4 |
| | XDOOO | 81868 | 18049 C 196 | .SPLICE PLATE ASSY | 1 |
| 45 | XDOZZ | 80205 | NAS10O31P8 | ..NUT PLATE, SELF-LOCKING | 4 |
| 48 | XDOZZ | 80205 | NAS1031P8 | .NUT PLATE, SELF LOCKING | 6 |
| 50 | XDOZZ | 81868 | 18049 C 202-3 | .BUMPER, O.B. GUIDE RAIL | 1 |
| 51 | PAOZZ | 96906 | MS21042-4 | .NUT, SELF-LOCKING | 10 |
| 52 | PAOZZ | 88044 | AN960-416 | .WASHER, FLAT | 10 |
| 53 | PAOZZ | 80205 | NAS334CPAll | .SCREW, CLOSE TOLERANCE | 6 |
| 56 | PAOZZ | 81868 | 18049 C 262 | .BUMPER, O.B. GUIDE RAIL | 1 |
| 57 | XDOZZ | 81868 | 18049 C 116-2 | .STOP, PALLET, RH | 1 |
| 57 | XDOZZ | 81868 | 18049 C 116-1 | .STOP, PALLET, LH | 1 |
| 58 | PAOZZ | 80205 | NAS517-4-19 | .SCREW, MACHINE | 4 |
| 59 | XDOZZ | 81868 | 18049 C 156 | .HINGE, OUTBOARD | 3 |
| 62 | PAOOO | 81868 | 18049 E 400 | .PALLET LOCK ASSY | |
| | | | | SEE FIG. 3-20 FOR BKDN | 1 |
| 63 | PAOZZ | 96906 | MS21042-6 | .NUT, SELF-LOCKING | 4 |
| 64 | PAOZZ | 88044 | AN960-616 | .WASHER, FLAT | 4 |
| 65 | PAOZZ | 88044 | AN960-416 | .WASHER, FLAT | 4 |
| 66 | PAOZZ | 96906 | MS21042-4 | .NUT, SELF-LOCKING | 4 |
| 67 | PAOZZ | 80205 | NAS517-6-15 | .SCREW, MACHINE | 2 |

## SECTION II

| (1) ITEM NO | (2) SMR CODE | (3) FSCM | (4) PART NUMBER | (5) DESCRIPTION AND USABLE ON CODES (UOC) | (6) QTY |
|---|---|---|---|---|---|
| 68 | PAOZZ | 88044 | AN6-14A | .BOLT, MACHINE ..... | 2 |
| 69 | PAOZZ | 88044 | AN960-816 | .WASHER, FLAT ..... | 2 |
| 70 | PAOZZ | 88044 | AN8-15A | .BOLT, MACHINE ..... | 2 |
| 71 | PAOZZ | 80205 | NAS517-4-8 | .SCREW, MACHINE ..... | 4 |
| 71A | PAOZZ | 81868 | 18049 C 109 | .NAMEPLATE..... | 1 |
| 71B | PAOZZ | 96906 | MS24625-9 | .SCREW, TAPPING ..... | 4 |
| 72 | XDOZZ | 81868 | 18133 C 500 | .NAMEPLATE..... | 1 |
| 73 | XDOZZ | 81868 | 18049 D 155-3 | .PIN, HINGE ..... | 4 |

END OF FIGURE

## SECTION II

| (1) ITEM NO | (2) SMR CODE | (3) FSCM | (4) PART NUMBER | (5) DESCRIPTION AND USABLE ON CODES (UOC) | (6) QTY |
|---|---|---|---|---|---|
| | | | | FIG. 3-4 OUTBOARD RAIL/ROLLER ASSY, CENTER RIGHT & LEFT HAND | |
| | XDOOO | 81868 | 18049 J 103 | CENTER LH O.B. RAIL/ROLLER ASSY | 1 |
| | XDOOO | 81868 | 18049 J 104 | CENTER RH O.B. RAIL/ROLLER ASSY | 1 |
| 1 | XDOZZ | 81868 | 18049 C 129 | .SPACER, ROLLER TRAY | 4 |
| 9 | XDOZZ | 81868 | 18049 D 158-1 | .HINGE, OFFSET | 1 |
| 10 | XDOZZ | 81868 | 18049 D 158-3 | .PIN, HINGE | 1 |
| 11 | XDOZZ | 81868 | 18049 D 158-2 | .HINGE, O.B. SHORT | 1 |
| 12 | XDOZZ | 81868 | 18049 C 157 | .HINGE, OFFSET | 2 |
| 13 | XDOZZ | 81868 | 18049 D 155-3 | .PIN, HINGE | 2 |
| 14 | XDOZZ | 81868 | 18049 C 156 | .HINGE, OUTBOARD | 2 |
| 17 | PAOZZ | 81868 | 18049 C 148 | .ROLLER, OUTBOARD | 16 |
| 18 | PAOZZ | 81868 | 18049 C 246 | .SHAFT ASSEMBLY | 20 |
| 19 | PAOZZ | 96906 | MS24665-353 | .PIN, COTTER | 20 |
| 20 | PAOZZ | 81868 | 18049 C 149 | .ROLLER, INBOARD | 4 |
| 22 | XDOZZ | 81868 | 18049 D 158-2 | .HINGE, O.B. SHORT | 1 |
| | XDOOO | 81868 | 18049 C 196 | .SPLICE PLATE ASSY | 1 |
| 25A | XDOZZ | 80205 | NAS10O31P8 | ..NUT PLATE, SELF LOCKING | 4 |
| 26 | PAOZZ | 88044 | AN960-816L | .WASHER, FLAT | 2 |
| 27 | PAOZZ | 80205 | NAS6608-15 | .BOLT, SHEAR | 2 |
| 30 | PAOOO | 81868 | 18049 E 400 | .PALLET LOCK ASSY | |
| | | | | SEE FIG. 3-20 FOR BKDN | 1 |
| 31 | PAOZZ | 96906 | MS21042-6 | .NUT, SELF-LOCKING | 4 |
| 32 | PAOZZ | 88044 | AN960-616 | .WASHER, FLAT | 4 |
| 33 | PAOZZ | 88044 | AN960-416 | .WASHER, FLAT | 4 |
| 34 | PAOZZ | 96906 | MS21042-4 | .NUT, SELF-LOCKING | 4 |
| 35 | PAOZZ | 80205 | NAS517-6-15 | .SCREW, MACHINE | 2 |
| 36 | PAOZZ | 88044 | AN960-816 | .WASHER, FLAT | 1 |
| 37 | PAOZZ | 88044 | AN8-15A | .BOLT, MACHINE | 1 |
| 38 | PAOZZ | 88044 | AN6-14A | .BOLT, MACHINE | 2 |
| 39 | PAOZZ | 80205 | ANS517-4-8 | .SCREW, MACHINE | 4 |
| 40 | XDOZZ | 81868 | 18049 C 255 | .TEE, BACKUP | 1 |
| 43 | XDOZZ | 81868 | 18049 C 202-3 | .BUMPER, O.B. GUIDE RAIL | 1 |
| 44 | PAOZZ | 96906 | MS21042-4 | .NUT, SELF-LOCKING | 4 |
| 45 | PAOZZ | 88044 | AN960-416 | .WASHER, FLAT | 4 |
| 46 | PAOZZ | 80205 | NAS334CPAll | .SCREW, CLOSE TOLERANCE | 4 |
| 47 | XDOZZ | 80205 | NAS1031P8 | .NUT PLATE, SELF-LOCKING | 6 |
| 49 | XDOZZ | 81868 | 18049 C 156 | .HINGE, OUTBOARD | 2 |
| 51 | XDOZZ | 81868 | 18049 D 158-3 | .PIN, HINGE | 1 |
| 52 | XDOZZ | 81868 | 18049 D 155-3 | .PIN, HINGE | 2 |
| 53 | XDOZZ | 81868 | 18133 C 500 | .NAMEPLATE | 1 |

END OF FIGURE

SECTION II

| (1) ITEM NO | (2) SMR CODE | (3) FSCM | (4) PART NUMBER | (5) DESCRIPTION AND USABLE ON CODES (UOC) | (6) QTY |
|---|---|---|---|---|---|
| | | | | FIG. 3-5 OUTBOARD RAIL/ROLLERY ASSY, AFT RIGHT & LEFT HAND | |
| | XDOOO | 81868 | 18049 J 105 | LH AFT O.B. RAIL/ROLLER ASSY | 1 |
| | XDOOO | 81868 | 18049 J 106 | RH AFT O.B. RAIL/ROLLER ASSY | 1 |
| 1 | XDOZZ | 81868 | 18049 C 129 | .SPACER, ROLLER TRAY | 3 |
| 8 | XDOZZ | 81868 | 18049 C 156 | .HINGE, OUTBOARD | 2 |
| 10 | XDOZZ | 81868 | 18049 C 157 | .HINGE, OFFSET | 2 |
| 11 | XDOZZ | 81868 | 18049 D 155-3 | .PIN, HINGE | 2 |
| 13 | PAOZZ | 81868 | 18049 C 148 | .ROLLER, OUTBOARD | 9 |
| 14 | PAOZZ | 81868 | 18049 C 246 | .SHAFT ASSEMBLY | 11 |
| 15 | PAOZZ | 96906 | MS24665-353 | .PIN, COTTER | 11 |
| 16 | PAOZZ | 81868 | 18049 C 149 | .ROLLER, INBOARD | 2 |
| 17 | XDOOO | 81868 | 18049 E 280-1 | .LH O.B. TRANSITION ROLLER ASSY SEE FIG. 3-22 FOR BKDN | 1 |
| 17 | XDOOO | 81868 | 18049 E 280-2 | .RH O.B. TRANSITION ROLLER ASSY SEE FIG. 3-22 FOR BKDN | 1 |
| 18 | PAOZZ | 88044 | AN4-6A | .BOLT, MACHINE | 1 |
| 19 | PAOZZ | 88044 | AN960-416 | .WASHER, FLAT | 4 |
| 20 | PAOZZ | 96906 | MS21042-4 | .NUT, SELF-LOCKING | 4 |
| 21 | PAOZZ | 88044 | AN4-7A | .BOLT, MACHINE | 1 |
| 22 | PAOZZ | 36659 | LS9365-517-4-5 | .SCREW, MACHINE | 2 |
| 23 | PAOZZ | 96906 | MS24665-353 | .PIN, COTTER | 12 |
| 24 | PAOZZ | 81868 | 18049 C 148 | .ROLLER, OUTBOARD | 10 |
| 25 | PAOZZ | 81868 | 18049 C 247-2 | .SHAFT ASSEMBLY | 1 |
| 26 | PAOZZ | 88044 | AN960-616 | .WASHER, FLAT | 1 |
| 28 | PAOZZ | 81868 | 18049 C 149 | .ROLLER, INBOARD | 2 |
| 29 | PAOZZ | 81868 | 18049 C 246 | .SHAFT ASSEMBLY | 11 |
| 30 | XDOZZ | 81868 | 18049 C 156 | .HINGE, OUTBOARD | 2 |
| 32 | XDOZZ | 81868 | 18049 C 157 | .HINGE, OFFSET | 2 |
| 33 | XDOZZ | 81868 | 18049 D 155-3 | .PIN, HINGE | 2 |
| 38 | XDOZZ | 81868 | 18049 C 129 | .SPACER, ROLLER TRAY | 4 |
| 43 | XDOZZ | 81868 | 18049 E 300-1 | .LH RETRACT FLANGE ASSY | 1 |
| 43 | XDOZZ | 81868 | 18049 E 300-2 | .RH RETRACT FLANGE ASSY | 1 |
| 44 | PAOZZ | 80205 | NAS517-8-23 | .SCREW, MACHINE | 4 |
| 45 | PAOZZ | 88044 | AN960-816 | .WASHER, FLAT | 4 |
| 46 | PAOZZ | 96906 | MS21044-N8 | .NUT, SELF-LOCKING | 4 |
| 47 | PAOZZ | 96906 | MS21042-5 | .NUT SELF-LOCKING | 6 |
| 48 | PAOZZ | 88044 | AN960-516 | .WASHER, FLAT | 6 |
| 49 | PAOZZ | 80205 | NAS517-5-11 | .SCREW, MACHINE | 2 |
| 50 | PAOZZ | 80205 | NAS517-5-42 | .SCREW, MACHINE | 4 |
| 52 | XDOZZ | 80205 | NAS1031P8 | .NUT PLATE, SELF-LOCKING | 8 |
| 54 | XDOOO | 81868 | 18049 E 203 | .OUTRIGGER ASSY | 1 |
| 55 | PAOZZ | 96906 | MS21042-4 | .NUT, SELF-LOCKING | 8 |
| 56 | PAOZZ | 88044 | AN960-416 | .WASHER, FLAT | 8 |
| 57 | PAOZZ | 80205 | NAS334CPA11 | .SCREW, CLOSE TOLERANCE | 8 |
| 58 | XDOZZ | 81868 | 18049 C 202-1 | .BUMPER, O.B. GUIDE RAIL, LH | 1 |
| 58 | XDOZZ | 81868 | 18049 C 202-2 | .BUMPER, O.B. GUIDE RAIL, RH | 1 |
| 59 | XDOZZ | 81868 | 18049 C 156 | .HINGE, OUTBOARD | 4 |
| 62 | XDOZZ | 81868 | 18049 D 155-3 | .PIN, HINGE | 4 |
| 63 | XDOZZ | 81868 | 18133 C 500 | .NAMEPLATE | 1 |
| | | | | END OF FIGURE | |

| (1) ITEM NO | (2) SMR CODE | (3) FSCM | (4) PART NUMBER | (5) DESCRIPTION AND USABLE ON CODES (UOC) | (6) QTY |
|---|---|---|---|---|---|
| | | | | FIG. 3-6 RAMP GUIDE RAIL/ROLLER ASSY, RIGHT AND LEFT HAND | |
| | XDOOO | 81868 | 18049 E 107 | LH O.B. GUIDE RAIL/ROLLER ASSY ..... | 1 |
| | XDOOO | 81868 | 18049 E 108 | RH O.B. GUIDE RAIL/ROLLER ASSY ..... | 1 |
| 1 | PAOZZ | 81868 | 18049 C 148 | ROLLER, OUTBOARD ..... | 20 |
| 2 | PAOZZ | 81868 | 18049 C 246 | .SHAFT ASSEMBLY ..... | 20 |
| 3 | PAOZZ | 96906 | MS24665-353 | .PIN, COTTER ..... | 20 |
| 4 | XDQZZ | 81868 | 18049 C 129 | .SPACER, ROLLER TRAY ..... | 4 |
| 8 | XDOZZ | 81868 | 18049 D 155-2 | .ANGLE, HINGE ..... | 4 |
| 10 | XDOZZ | 81868 | 18049 D 155-4 | .HINGE,HALF..... | 4 |
| 13 | XDOZZ | 81868 | 18049 D 155-1 | .HINGE, HALF ..... | 4 |
| 15 | XDOZZ | 81868 | 18049 D 155-5 | .PIN, HINGE ..... | 4 |
| 16 | XDOZZ | 81868 | 18133 C 500 | .NAMEPLATE ..... | 1 |

END OF FIGURE

## SECTION II

| (1) ITEM NO | (2) SMR CODE | (3) FSCM | (4) PART NUMBER | (5) DESCRIPTION AND USABLE ON CODES (UOC) | (6) QTY |
|---|---|---|---|---|---|
| | | | | FIG. 3-7 CENTERLINE CABLE ROLLER ASSEMBLY..... | |
| | PAOOO | 81868 | 18426E1000 | CENTERLINE CABLE ROLLER ASSEMBLY ..... | 1 |
| 1 | XAOZZ | 81868 | 18049D260 | .WELDMENT, PALLET STOP ..... | 1 |
| 2 | XDOZZ | 81868 | 18426C1005 | .SHAFT ..... | 1 |
| 2A | PAOZZ | 96906 | MS24665-368 | .PIN, COTTER..... | 2 |
| 2B | PAOZZ | 88044 | AN960-816L | .WASHER, FLAT..... | 2 |
| 2C | PAOZZ | 81868 | 18426C1006 | .ROLLER ..... | 1 |
| 2D | PAOZZ | 88044 | AN4-21A | .BOLT, MACHINE ..... | 4 |
| 2E | PAOZZ | 96906 | MS21044-N4 | .NUT, SELF-LOCKING ..... | 4 |
| 2F | PAOZZ | 88044 | AN960-416L | .WASHER, FLAT..... | 4 |
| 3 | PAOZZ | 88044 | AN960-616 | .WASHER, FLAT..... | 4 |
| 4 | PAOZZ | 96906 | MS24665-353 | .PIN, COTTER..... | 2 |
| 6 | XDOZZ | 81868 | 18049 B 297 | .PIN, HINGE ..... | 24 |
| 7 | PAOZZ | 81868 | 18049 C 149 | .ROLLER, INBOARD ..... | 2 |
| 8 | XDOZZ | 81868 | 18133 C 500 | .NAMEPLATE ..... | 1 |
| | XDOOO | 81868 | 18049 D 191-1 | .TIEDOWN ASSY, CENTER RAIL..... | 3 |
| 9 | XDOZZ | 81868 | 18049 D 192-1 | ..CENTER, TIEDOWN..... | 1 |
| 12 | XDOZZ | 98897 | 353512-1 | ..RING ..... | 1 |
| 13 | XDOZZ | 98897 | 338018-4 | ..STRAP ..... | 1 |
| 14 | PAOZZ | 88044 | AN960-616L | ..WASHER, FLAT..... | 2 |
| 15 | PAOZZ | 96906 | MS21044-N6 | ..NUT, SELF-LOCKING ..... | 2 |
| 16 | PAOZZ | 80205 | NAS517-6-10 | ..SCREW, MACHINE..... | 2 |
| 17 | PAOZZ | 88044 | AN4-1OA | .BOLT, MACHINE ..... | 8 |
| 18 | PAOZZ | 88044 | AN960-416 | .WASHER, FLAT..... | 12 |
| 19 | PAOZZ | 96906 | MS21044-N4 | .NUT, SELF-LOCKING ..... | 12 |
| 20 | PAOZZ | 88044 | AN4-7A | .BOLT, MACHINE ..... | 4 |
| 22 | XDOZZ | 81868 | 18049 C 209 | .SPACER, ROLLER TRAY ..... | 1 |
| 24 | XDOZZ | 81868 | 18049 E 296-2 . | .CROSSMEMBER..... | 2 |
| 26 | PAOZZ | 81868 | 18049 C 194 | .LEAF, BUTT HINGE..... | 12 |
| 31 | XDOZZ | 81868 | 18049 E 296-1 | .CROSSMEMBER ..... | 2 |
| 35 | XDOZZ | 81868 | 18049 E 296-3 | .CROSSMEMBER..... | 1 |
| 39 | PAOZZ | 81868 | 18049 C 249 | .SHAFT ASSEMBLY ..... | 22 |
| 40 | PAOZZ | 81868 | 18049 C 149 | .ROLLER, INBOARD ..... | 18 |
| 41 | PAOZZ | 96906 | MS24665-353 | .PIN, COTTER..... | 22 |
| 42 | XDOZZ | 81868 | 18049 C 510 | .ROLLER, INBOARD ..... | 4 |
| 43 | XDOZZ | 81868 | 18049 C 209 | .SPACER, ROLLER TRAY ..... | 1 |
| 45 | XDOZZ | 81868 | 18049 E 296-2 | .CROSSMEMBER ..... | 2 |
| 53 | XDOZZ | 81868 | 18049 E 296-1 | .CROSSMEMBER..... | 2 |
| 54 | XDOZZ | 81868 | 18049 E 296-3 | .CROSSMEMBER..... | 1 |
| 56 | PAOZZ | 81868 | 18049 C 194 | .LEAF, BUTT HINGE ..... | 12 |
| 60 | PAOZZ | 81868 | 1.8049 C 149 | .ROLLER, INBOARD ..... | 18 |
| 61 | PAOZZ | 81868 | 18049 C 249 | .SHAFT ASSEMBLY ..... | 22 |
| 62 | PAOZZ | 96906 | MS24665-353 | .PIN, COITER..... | 22 |
| 63 | XDOZZ | 81868 | 18049 C 510 | .ROLLER, INBOARD ..... | 4 |

END OF FIGURE

SECTION II

| (1) ITEM NO | (2) SMR CODE | (3) FSCM | (4) PART NUMBER | (5) DESCRIPTION AND USABLE ON CODES (UOC) | (6) QTY |
|---|---|---|---|---|---|
| | | | | **FIG. 3-8 INBOARD GUIDE/ROLLER ASSY, FWD** | |
| | XDOOO | 81868 | 18049 J 122 | FWD I.B. GUIDE/ROLLER ASSY | 1 |
| 1 | XDOZZ | 81868 | 18049 E 296-3 | .CROSSMEMBER | 2 |
| 3 | PAOZZ | 81868 | 18049 C 194 | LEAF, BUTT HINGE | 9 |
| 6 | XDOZZ | 81868 | 18049 E 296-1 | .CROSSMEMBER | 2 |
| 9 | XDOZZ | 81868 | 18049 E 296-2 | .CROSSMEMBER | 2 |
| 13 | XDOZZ | 81868 | 18049 C 517 | .LEAF, BUTT HINGE | 1 |
| 19 | PAOZZ | 81868 | 18049 C 149 | .ROLLER, INBOARD | 18 |
| 20 | PAOZZ | 81868 | 18049 C 249 | .SHAFT ASSEMBLY | 23 |
| 21 | PAOZZ | 96906 | MS24665-353 | .PIN, COTTER | 23 |
| 22 | XDOZZ | 81868 | 18049 C 510 | .ROLLER, INBOARD | 5 |
| 23 | XDOZZ | 81868 | 18049 E 296-3 | .CROSSMEMBER | 2 |
| 26 | XDOZZ | 81868 | 18049 E 296-1 | .CROSSMEMBER | 2 |
| 30 | XDOZZ | 81868 | 18049 E 296-2 | .CROSSMEMBER | 2 |
| 36 | PAOZZ | 81868 | 18049 C 194 | .LEAF, BUTT HINGE | 9 |
| 37 | XDOZZ | 81868 | 18049 C 517 | .LEAF, BUTT HINGE | 1 |
| 41 | PAOZZ | 81868 | 18049 C 149 | .ROLLER, INBOARD | 18 |
| 42 | PAOZZ | 81868 | 18049 C 249 | .SHAFT ASSEMBLY | 23 |
| 43 | PAOZZ | 96906 | MS24665-353 | .PIN, COTTER | 23 |
| 44 | XDOZZ | 81868 | 18049 C 510 | .ROLLER, INBOARD | 5 |
| | XDOOO | 81868 | 18049 D 191-1 | .TIEDOWN ASSY, CENTER RAIL | 2 |
| 45 | XDOZZ | 81868 | 18049 D 192-1 | ..CENTER, TIEDOWN | 1 |
| 48 | XDOZZ | 98897 | 353512-1 | ..RING | 1 |
| 49 | XDOZZ | 98897 | 338018-4 | ..STRAP | 1 |
| 50 | PAOZZ | 88044 | AN960-616L | ..WASHER, FLAT | 2 |
| 51 | PAOZZ | 96906 | MS21044-N6 | ..NUT, SELF-LOCKING | 2 |
| 52 | PAOZZ | 80205 | NAS517-6-10 | ..SCREW, MACHINE | 2 |
| | XDOOO | 81868 | 18049 D 191-2 | .TIEDOWN ASSY CENTER RAIL | 1 |
| 53 | XDOZZ | 81868 | 18049 D 192-2 | ..CENTER, TIEDOWN | 1 |
| 56 | XDOZZ | 98897 | 353512-1 | ..RING | 1 |
| 57 | XDOZZ | 98897 | 338018-4 | ..STRAP | 1 |
| 58 | PAOZZ | 88044 | AN960-616L | ..WASHER, FLAT | 2 |
| 59 | PAOZZ | 96906 | MS21044-N6 | ..NUT, SELF-LOCKING | 2 |
| 60 | PAOZZ | 80205 | NAS517-6-10 | ..SCREW, MACHINE | 2 |
| 61 | PAOZZ | 96906 | MS21044-N4 | .NUT, SELF-LOCKING | 12 |
| 62 | PAOZZ | 88044 | AN960-416 | .WASHER, FLAT | 12 |
| 63 | PAOZZ | 88044 | AN4-7A | .BOLT, MACHINE | 4 |
| 64 | XDOZZ | 81868 | 18049 B 297 | .PIN, HINGE | 20 |
| 66 | XDOZZ | 81868 | 18133 C 500 | .NAMEPLATE | 1 |
| 67 | PAOZZ | 88044 | AN4-1OA | .BOLT, MACHINE | 8 |

**END OF FIGURE**

SECTION II

| (1) ITEM NO | (2) SMR CODE | (3) FSCM | (4) PART NUMBER | (5) DESCRIPTION AND USABLE ON CODES (UOC) | (6) QTY |
|---|---|---|---|---|---|
| | | | | **FIG. 3-9 INBOARD GUIDE/ROLLER ASSY, CENTER** | |
| | XDOOO | 81868 | 18049 J 123 | CENTER I.B.GUIDE/ROLLER ASSY | 1 |
| 1 | XDOZZ | 81868 | 18049 E 296-3 | .CROSSMEMBER | 2 |
| 3 | XDOZZ | 81868 | 18049 E 296-2 | .CROSSMEMBER | 2 |
| 5 | PAOZZ | 81868 | 18049 C 194 | .LEAF, BUTT HINGE | 4 |
| 13 | PAOZZ | 81868 | 18049 C 149 | .ROLLER, INBOARD | 8 |
| 14 | PAOZZ | 81868 | 18049 C 249 | .SHAFT ASSEMBLY | 10 |
| 15 | PAOZZ | 96906 | MS24665-353 | .PIN, COTTER | 10 |
| 16 | XDOZZ | 81868 | 18049 C 510 | .ROLLER, INBOARD | 2 |
| 17 | XDOZZ | 81868 | 18049 E 296-3 | .CROSSMEMBER | 2 |
| 19 | XDOZZ | 81868 | 18049 E 296-2 | .CROSSMEMBER | 2 |
| 24 | PAOZZ | 81868 | 18049 C 194 | .LEAF, BUTT HINGE | 5 |
| 29 | PAOZZ | 81868 | 18049 C 149 | .ROLLER, INBOARD | 8 |
| 30 | PAOZZ | 81868 | 18049 C 249 | SHAFT ASSEMBLY | 10 |
| 31 | PAOZZ | 96906 | MS24665-353 | .PIN, COTTER | 10 |
| 32 | XDOZZ | 81868 | 18049 C 510 | .ROLLER, INBOARD | 2 |
| 33 | PAOZZ | 88044 | AN960-416 | .WASHER, FLAT | 8 |
| 34 | PAOZZ | 88044 | AN4-1OA | .BOLT, MACHINE | 8 |
| 35 | PAOZZ | 96906 | MS21044-N4 | .NUT, SELF-LOCKING | 8 |
| 36 | XDOZZ | 81868 | 18049 B 297 | .PIN, HINGE | 10 |
| 38 | XDOZZ | 81868 | 18133 C 500 | .NAMEPLATE | 1 |
| | XDOOO | 81868 | 18049 D 191-1 | .TIEDOWN ASSY, CENTER RAIL | 2 |
| 40 | XDOZZ | 81868 | 18049 D 192-1 | ..CENTER, TIEDOWN | 1 |
| 43 | XDOZZ | 98897 | 353512-1 | ..RING | 1 |
| 44 | XDOZZ | 98897 | 338018-4 | ..STRAP | 1 |
| 45 | PAOZZ | 88044 | AN960-616L | ..WASHER, FLAT | 2 |
| 46 | PAOZZ | 96906 | MS21044-N6 | ..NUT, SELF-LOCKING | 2 |
| 47 | PAOZZ | 80205 | NAS517-6-10 | ..SCREW, MACHINE | 2 |

**END OF FIGURE**

SECTION II

| (1) ITEM NO | (2) SMR CODE | (3) FSCM | (4) PART NUMBER | (5) DESCRIPTION AND USABLE ON CODES (UOC) | (6) QTY |
|---|---|---|---|---|---|
| | | | | **FIG. 10 INBOARD GUIDE/ROLLER ASSY, AFT** | |
| | XDOOO | 81868 | 18049 J 124 | AFT I.B. GUIDE/ROLLER ASSY | 1 |
| 1 | XDOZZ | 81868 | 18049 E 296-3 | .CROSSMEMBER | 1 |
| 4 | XDOZZ | 81868 | 18049 E 296-1 | .CROSSMEMBER | 2 |
| 5 | PAOZZ | 81868 | 18049 C 194 | .LEAF, BUTT HINGE | 5 |
| 8 | XDOZZ | 81868 | 18049 E 296-2 | .CROSSMEMBER | 1 |
| 14 | XDOZZ | 81868 | 18049 C 294 | .CROSSMEMBER | 1 |
| 16 | PAOZZ | 81868 | 18049 C 149 | .ROLLER, INBOARD | 12 |
| 17 | PAOZZ | 81868 | 18049 C 249 | .SHAFT ASSEMBLY | 14 |
| 18 | PAOZZ | 96906 | MS24665-353 | .PIN, COTTER | 15 |
| 19 | XDOOO | 81868 | 18049 E 281-2 | .RH I.B.TRANSITION ROLLER ASSY | 1 |
| 20 | PAOZZ | 88044 | AN4-7A | .BOLT, MACHINE | 2 |
| 21 | PAOZZ | 96906 | MS24694-S101 | .SCREW, MACHINE | 2 |
| 22 | PAOZZ | 96906 | MS21044-N4 | .NUT, SELF-LOCKING | 4 |
| 23 | PAOZZ | 88044 | AN960-416 | .WASHER, FLAT | 4 |
| 24 | PAOZZ | 81868 | 18049 C 247-1 | .SHAFT ASSEMBLY | 1 |
| 25 | PAOZZ | 88044 | AN960-616 | .WASHER, FLAT | 1 |
| 27 | XDOZZ | 81868 | 18049 E 296-3 | .CROSSMEMBER | 1 |
| 30 | XDOZZ | 81868 | 18049 E 296-1 | .CROSSMEMBER | 2 |
| 31 | XDOZZ | 81868 | 18049 E 296-2 | .CROSSMEMBER | 1 |
| 36 | XDOZZ | 81868 | 18049 C 294 | .CROSSMEMBER | 1 |
| 38 | PAOZZ | 81868 | 18049 C 194 | .LEAF, BUTT HINGE | 5 |
| 40 | XDOZZ | 81868 | 18049 C 510 | .ROLLER, INBOARD | 3 |
| 42 | PAOZZ | 81868 | 18049 C 149 | .ROLLER, INBOARD | 12 |
| 43 | PAOZZ | 81868 | 18049 C 249 | .SHAFT ASSEMBLY | 14 |
| 44 | PAOZZ | 96906 | MS24665-353 | .PIN, COTTER | 15 |
| 45 | XDOOO | 81868 | 18049 E 281-1 | .LH I.B. TRANSITION ROLLER ASSY | 1 |
| 46 | PAOZZ | 88044 | AN4-7A | .BOLT, MACHINE | 2 |
| 47 | PAOZZ | 96906 | MS24694-S101 | .SCREW, MACHINE | 2 |
| 48 | PAOZZ | 96906 | MS21044-N4 | .NUT, SELF-LOCKING | 4 |
| 49 | PAOZZ | 88044 | AN960-416 | .WASHER, FLAT | 4 |
| 50 | PAOZZ | 81868 | 18049 C 247-1 | .SHAFT ASSEMBLY | 1 |
| 51 | PAOZZ | 88044 | AN960-616 | .WASHER, FLAT | 1 |
| 54 | XDOZZ | 81868 | 18049 B 297 | .PIN, HINGE | 1 |
| | XDOOO | 81868 | 18049 D 191-1 | .TIEDOWN ASSY, CENTER RAIL | 1 |
| 55 | XDOZZ | 81868 | 18049 D 192-1 | ..CENTER, TIEDOWN | 1 |
| 58 | XDOZZ | 98897 | 338018-4 | ..STRAP | 1 |
| 59 | PAOZZ | 88044 | AN960-616L | ..WASHER, FLAT | 2 |
| 60 | PAOZZ | 96906 | MS21044-N6 | ..NUT, SELF-LOCKING | 2 |
| 61 | XDOZZ | 98897 | 353512-1 | ..RING | 1 |
| 62 | PAOZZ | 80205 | NAS517-6-10 | ..SCREW, MACHINE | 2 |
| 63 | PAOZZ | 88044 | AN4-1OA | .BOLT, MACHINE | 8 |
| 64 | PAOZZ | 96906 | MS21044-N4 | .NUT, SELF-LOCKING | 8 |
| 65 | PAOZZ | 88044 | AN960-416 | .WASHER, FLAT | 8 |
| | XDOOO | 81868 | 18049 D 191-3 | .TIEDOWN ASSY, CENTER RAIL | 1 |
| 66 | XDOZZ | 81868 | 18049 D 192-3 | ..CENTER, TIEDOWN | 1 |
| 69 | XDOZZ | 98897 | 338018-4 | ..STRAP | 1 |
| 70 | PAOZZ | 88044 | AN960-616L | ..WASHER, FLAT | 2 |

SECTION II

| (1) ITEM NO | (2) SMR CODE | (3) FSCM | (4) PART NUMBER | (5) DESCRIPTION AND USABLE ON CODES (UOC) | (6) QTY |
|---|---|---|---|---|---|
| 71 | PAOZZ | 96906 | MS21044-N6 | ..NUT, SELF-LOCKING | 2 |
| 72 | XDOZZ | 98897 | 353512-1 | ..RING | 2 |
| 73 | PAOZZ | 80205 | NAS517-6-10 | ..SCREW, MACHINE | 2 |
| 75 | XDOZZ | 81868 | 18133 C 500 | .NAMEPLATE | 1 |

END OF FIGURE

SECTION II

| (1) ITEM NO | (2) SMR CODE | (3) FSCM | (4) PART NUMBER | (5) DESCRIPTION AND USABLE ON CODES (UOC) | (6) QTY |
|---|---|---|---|---|---|
| | | | | **FIG. 3-11 RAMP INBOARD ROLLER ASSY, LEFT AND RIGHT HAND** | |
| | XDOOO | 81868 | 18049 J 225 | LH RAMP I.B. ROLLER ASSY | 1 |
| | XDOOO | 81868 | 18049 J 226 | RH RAMP I.B. ROLLER ASSY | 1 |
| 1 | PAOZZ | 81868 | 18049 C 148 | .ROLLER, OUTBOARD | 20 |
| 2 | PAOZZ | 81868 | 18049 C 246 | .SHAFT ASSEMBLY | 20 |
| 3 | PAOZZ | 96906 | MS24665-353 | .PIN, COTTER | 20 |
| 4 | XDOZZ | 1868 | 18133 C 500 | .NAMEPLATE | 1 |
| 6 | XDOZZ | 81868 | 18049 C 129 | .SPACER | 3 |
| 9 | XDOZZ | 81868 | 18049 C 231-1 | .LH SPACER | 1 |
| 9 | XDOZZ | 81868 | 18049 C 231-2 | .RH SPACER | 1 |
| 10 | XDOZZ | 81868 | 18049 D 230-1 | .LH WELDMENT MOUNTING | 1 |
| 10 | XDOZZ | 81868 | 18049 D 230-2 | .RH WELDMENT MOUNTING | 1 |
| 12 | XDOZZ | 81868 | 18049 D 236-1 | .LH PLATE MOUNTING | 1 |
| 12 | XDOZZ | 81868 | 18049 D 236-2 | .RH PLATE MOUNTING | 1 |
| 13 | XDOZZ | 81868 | 18049 C 238 | .SPACER | 1 |
| 15 | XDOZZ | 81868 | 18049 C 237-1 | .LH ANGLE | 2 |
| 15 | XDOZZ | 81868 | 18049 C 237-2 | .RH ANGLE | 2 |

**END OF FIGURE**

SECTION II

| (1) ITEM NO | (2) SMR CODE | (3) FSCM | (4) PART NUMBER | (5) DESCRIPTION AND USABLE ON CODES (UOC) | (6) QTY |
|---|---|---|---|---|---|
| | | | | **FIG. 3-12 RAMP EXTENSION ROLLER ASSY** | |
| | XDOOO | 81868 | 18049 E 140 | RAMP EXTENSION ROLLER ASSY | 2 |
| | PAOZZ | 81868 | 18049 C 204 | .PIN, QUICK RELEASE ASSY | 6 |
| 2 | PAOZZ | 76691 | 28-2G | ..SWAGING SLEEVE, WIRE | 1 |
| 3 | XDOZZ | 72954 | COML | ..CABLE, 7X7 IN. 0.062 IN.DIA, 7-½ IN.LG, GALVANIZED.NYLON COATED, 3/32 IN.OD | 1 |
| 4 | PAOZZ | 81868 | 18049 C 148 | .ROLLER, OUTBOARD | 29 |
| 5 | PAOZZ | 81868 | 18049 C 247-2 | .SHAFT ASSEMBLY | 25 |
| 6 | PAOZZ | 88044 | AN960-616 | .WASHER, FLAT | 25 |
| 9 | XDOZZ | 81868 | 18133 C 500 | .NAMEPLATE | 1 |
| 10 | PAOZZ | 81868 | 18049 C 205 | .SHAFT ASSEMBLY | 2 |
| 12 | XDOZZ | 81868 | 18049 C 144 | .SPACER | 2 |
| 16 | XDOZZ | 81868 | 18049 C 145 | .SPACER | 6 |
| 19 | XDOZZ | 81868 | 18049 D 146 | .PLATE | 2 |
| 20 | XDOZZ | 81868 | 18049 D 147 | .PLATE | 1 |
| 21 | PAOZZ | 76691 | 28-2G | .SWAGING SLEEVE, WIRE | 6 |

**END OF FIGURE**

SECTION II

| (1) ITEM NO | (2) SMR CODE | (3) FSCM | (4) PART NUMBER | (5) DESCRIPTION AND USABLE ON CODES (UOC) | (6) QTY |
|---|---|---|---|---|---|
| | | | | **FIG. 3-17 INBOARD TRANSITION ROLLER ASSY, RIGHT AND LEFT HAND** | |
| | XDOOO | 81868 | 18049 E 281-2 | RH I.B. TRANSITION ROLLER ASSY ..... | 1 |
| | XDOOO | 81868 | 18049 E 281-1 | LH I.B. TRANSITION ROLLER ASSY..... | 1 |
| | XDOZZ | 81868 | 18049 E 282-1 | .LH ROLLER FOLLOWER ASSY ..... | 1 |
| | XDOZZ | 81868 | 18049 E 282-2 | .RH ROLLER FOLLOWER ASSY ..... | 1 |
| 1 | PAOZZ | 81868 | 18049 C 149 | ..ROLLER, INBOARD ..... | 2 |
| | PAOZZ | 81868 | 18049 C 128 | ..SHAFT ASSEMBLY ..... | 2 |
| 3 | PAOZZ | 79136 | 5560-37-ZD | ..RING, RETAINING ..... | 1 |
| 11 | PAOZZ | 81868 | 18049 C 149 | .ROLLER, INBOARD ..... | 1 |
| | PAOZZ | 81868 | 18049 C 295 | .SHAFT ASSEMBLY ..... | 1 |
| 13 | PAOZZ | 79136 | 5560-37-ZD | ..RING, RETAINING ..... | 1 |
| 14 | PAOZZ | 96906 | MS24665-353 | .PIN, COTTER ..... | 1 |

**END OF FIGURE**

SECTION II

| (1) ITEM NO | (2) SMR CODE | (3) FSCM | (4) PART NUMBER | (5) DESCRIPTION AND USABLE ON CODES (UOC) | (6) QTY |
|---|---|---|---|---|---|
| | | | | **FIG. 3-20 PALLET LOCK ASSEMBLY** | |
| | PAOOO | 81868 | 18049 E 400 | PALLET LOCK ASSY | 1 |
| | PAOOO | 81868 | 18049 D 403 | SLIDE BAR ASSEMBLY | 1 |
| 1 | XDOZZ | 81868 | 18049 C 412 | HANDLE ASSEMBLY | 1 |
| 2 | PAOZZ | 96906 | MS16562-235 | PIN, SPRING | 1 |
| 3 | XDOZZ | 81868 | 18049 C 411 | ROD, ACTUATING | 1 |
| 4 | XDOZZ | 81868 | 18049 D 407 | BAR, SLIDE | 1 |
| 5 | XDOZZ | 84830 | LC-042F-7 | SPRING | 1 |
| 6 | XDOZZ | 81868 | 18049 C 405 | BLOCK, LOCK CAM | 1 |
| 7 | PAOZZ | 96906 | MS16562-223 | PIN, SPRING | 2 |
| 8 | XDOZZ | 81868 | 18049 C 404 | BLOCK, ACTUATING | 1 |
| 10 | PAOZZ | 88044 | AN3-5A | BOLT, MACHINE | 2 |
| 11 | PAOZZ | 88044 | AN960-10 | WASHER, FLAT | 2 |
| 13 | XDOZZ | 80205 | NAS1031P8 | NUT PLATE, SELF-LOCKING | 2 |

**END OF FIGURE**

SECTION II

| (1) ITEM NO | (2) SMR CODE | (3) FSCM | (4) PART NUMBER | (5) DESCRIPTION AND USABLE ON CODES (UOC) | (6) QTY |
|---|---|---|---|---|---|
| | | | | **FIG. 3-22 OUTBOARD TRANSITION ROLLER ASSY, RIGHT AND LEFT HAND** | |
| | XDOOO | 81868 | 18049 E 280-1 | LH O.B.TRANSITION ROLLER ASSY ..... | 1 |
| | XDOOO | 81868 | 18049 E 280-2 | RH O.B.TRANSITION ROLLER ASSY ..... | 1 |
| 1 | XDOZZ | 81868 | 18049 D 292-1 | .SUPPORT PLATE ASSY ..... | 1 |
| | PAOZZ | 81868 | 18049 C 295 | .SHAFT ASSEMBLY ..... | 1 |
| 6 | PAOZZ | 79136 | 5560-37-ZD | ..RING, RETAINING ..... | 1 |
| 7 | PAOZZ | 96906 | MS24665-353 | .PIN, COTTER ..... | 1 |
| 8 | PAOZZ | 81868 | 18049 C 149 | .ROLLER, INBOARD ..... | 1 |
| | XDOZZ | 81868 | 18049 E 282-1 | .LH ROLLER FOLLOWER ASSY ..... | 1 |
| | XDOZZ | 81868 | 18049 E 282-2 | .RH ROLLER FOLLOWER ASSY ..... | 1 |
| | PAOZZ | 81868 | 18049 C 128 | ..SHAFT ASSEMBLY ..... | 2 |
| 16 | PAOZZ | 79136 | 5560-37-ZD | ...RING, RETAINING ..... | 1 |
| 17 | PAOZZ | 81868 | 18049 C 149 | .ROLLER, INBOARD ..... | 2 |

**END OF FIGURE**

SECTION III
SPECIAL TOOLS LIST

NOT APPLICABLE

## SECTION IV

## NATIONAL STOCK NUMBER AND PART NUMBER INDEX

### NATIONAL STOCK NUMBER INDEX

## SECTION IV

## ATIONAL STOCK NUMBER INDEX (CONT)

| STOCK NUMBER | FIG | ITEM |
|---|---|---|
| | 3-5 | 20 |
| | 3-5 | 55 |
| 5310-00-807-1469 | 3-5 | 47 |
| 5310-00-810-1786 | 3-3 | 63 |
| | 3-4 | 31 |
| 5315-00-826-3251 | 3-20 | 7 |
| 5315-00-839-5822 | 3-3 | 15 |
| | 3-3 | 31 |
| | 3-4 | 19 |
| | 3-5 | 15 |
| | 3-5 | 23 |
| | 3-6 | 3 |
| | 3-7 | 4 |
| | 3-7 | 41 |
| | 3-7 | 62 |
| | 3-8 | 21 |
| | 3-8 | 43 |
| | 3-9 | 15 |
| | 3-9 | 31 |
| | 3-10 | 18 |
| | 3-10 | 44 |
| | 3-11 | 3 |
| | 3-17 | 14 |
| | 3-22 | 7 |
| 5310-00-877-5795 | 3-5 | 46 |
| 5310-00-877-5796 | 3-2 | 37 |
| | 3-7 | 19 |
| | 3-7 | 2E |
| | 3-8 | 61 |
| | 3-9 | 35 |
| | 3-10 | 22 |
| | 3-10 | 48 |
| | 3-10 | 64 |
| 5306-00-935-7528 | 3-2 | 39 |
| 5310-00-950-0039 | 3-7 | 15 |
| | 3-8 | 51 |
| | 3-8 | 59 |
| | 3-9 | 46 |
| | 3-10 | 60 |
| | 3-10 | 71 |
| 5306-01-109-8071 | 3-2 | 28 |
| 1680-01-220-7083 | 3-3 | 13 |
| | 3-3 | 29 |
| | 3-4 | 17 |
| | 3-5 | 13 |
| | 3-5 | 24 |

| STOCK NUMBER | FIG | ITEM |
|---|---|---|
| | 3-6 | 1 |
| | 3-11 | 1 |
| | 3-12 | 4 |
| 1680-01-220-7086 | 3-2 | 21 |
| | 3-16 | |
| 1680-01-220-7087 | 3-17 | |
| | 3-22 | |
| 1680-01-220-7088 | 3-7 | 1 |
| 1680-01-220-7089 | 3-7 | |
| 1680-01-220-7090 | 3-2 | 23 |
| | 3-18 | |
| 1680-01-220-7091 | 3-2 | 24 |
| | 3-19 | |
| 1680-01-220-7092 | 3-20 | |
| 1680-01-220-7093 | 3-12 | 10 |
| 1680-01-220-7094 | 3-2 | 26 |
| 1680-01-220-7095 | 3-5 | 25 |
| | 3-12 | 5 |
| 1680-01-220-7096 | 3-10 | 24 |
| | 3-10 | 50 |
| 1680-01-220-7097 | 3-3 | 14 |
| | 3-3 | 30 |
| | 3-4 | 18 |
| | 3-5 | 14 |
| | 3-5 | 29 |
| | 3-6 | 2 |
| | 3-11 | 2 |
| 5340-01-220-7099 | 3-7 | 26 |
| | 3-7 | 56 |
| | 3-8 | 3 |
| | 3-8 | 36 |
| | 3-9 | 5 |
| | 3-9 | 24 |
| | 3-10 | 5 |
| | 3-10 | 38 |
| 1680-01-220-8045 | 3-17 | |
| | 3-22 | |
| 5365-01-221-1759 | 3-17 | 3 |
| | 3-17 | 13 |
| | 3-22 | 6 |
| | 3-22 | 16 |
| 5340-01-221-1760 | 3-12 | |
| 1680-01-231-9136 | 3-7 | 39 |
| | 3-7 | 61 |
| | 3-8 | 20 |
| | 3-8 | 42 |

## SECTION IV

## NATIONAL STOCK NUMBER INDEX (CONT)

| STOCK NUMBER | FIG | ITEM | STOCK NUMBER | FIG | ITEM |
|---|---|---|---|---|---|
| | 3-9 | 14 | | 3-8 | 19 |
| | 3-9 | 30 | | 3-8 | 41 |
| | 3-10 | 17 | | 3-9 | 13 |
| | 3-10 | 43 | | 3-9 | 29 |
| 1680-01-232-1151 | 3-3 | 16 | | 3-10 | 16 |
| | 3-3 | 32 | | 3-10 | 42 |
| | 3-4 | 20 | | 3-17 | 1 |
| | 3-5 | 16 | | 3-17 | 11 |
| | 3-5 | 28 | | 3-22 | 8 |
| | 3-7 | 7 | | 3-22 | 17 |
| | 3-7 | 40 | 3910-01-304-9044 | 3-7 | - |
| | 3-7 | 60 | 3990-01-319-6857 | 3-7 | 2C |
| | | | 5315-01-328-3891 | 3-7 | 2 |

## SECTION IV

## NATIONAL STOCK NUMBER AND PART NUMBER INDEX

### PART NUMBER INDEX

| FSCM | PART NUMBER | STOCK NUMBER | FIG. | ITEM |
|---|---|---|---|---|
| 88044 | ANS-1OA | 5306-00-161-0784 | 3-2 | 30 |
| 88044 | AN3-11A | 6306-00-685-3027 | 3-2 | 38 |
| 88044 | AN3-5A | 5306-00-274-2119 | 3-20 | 10 |
| 88044 | AN4-10A | 5306-00-151-1424 | 8-7 | 17 |
| | | | 3-8 | 67 |
| | | | 3-9 | 34 |
| | | | 3-10 | 63 |
| 88044 | AN4-11A | 6306-00-151-1423 | 3-2 | 32 |
| 88044 | AN4-12A | 5306-00-151-1422 | 3-2 | 35 |
| 88044 | AN4-21A | 6306-00-151-1415 | 3-7 | 2D |
| 88044 | AN4-5A | 5306-00-151-1427 | 3-2 | 36 |
| 88044 | AN4-6A | 6306-00-151-1426 | 3-5 | 18 |
| 88044 | AN4-7A | 5306-00-515-8064 | 3-5 | 21 |
| | | | 3-7 | 20 |
| | | | 3-8 | 63 |
| | | | 3-10 | 20 |
| | | | 3-10 | 46 |
| 88044 | AN6-14A | 5306-00-206-2865 | 3-3 | 68 |
| | | | 3-4 | 38 |
| 88044 | AN8-15A | 5306-00-208-3645 | 3-3 | 70 |
| | | | 3-4 | 37 |
| 88044 | AN960-10 | 5310-00-167-0818 | 3-2 | 31 |
| | | | 3-20 | 11 |
| 88044 | AN960.416 | 5310-00-141-1795 | 3-2 | 33 |
| | | | 3-3 | 42 |
| | | | 3-3 | 52 |
| | | | 3-3 | 65 |
| | | | 3-4 | 33 |
| | | | 3-4 | 45 |
| | | | 3-5 | 19 |
| | | | 3-5 | 56 |
| | | | 3-7 | 18 |
| | | | 3-8 | 62 |
| | | | 3-9 | 33 |
| | | | 3-10 | 23 |
| | | | 3-10 | 49 |
| | | | 3-10 | 65 |
| 88044 | AN960-416L | 5310-00-167-0835 | 3-7 | 2F |
| 88044 | AN960-516 | 5310-00-167-0820 | 3-2 | 40 |
| | | | 3-5 | 48 |
| 88044 | AN960-616 | 5310-00-167-0821 | 3-3 | 64 |
| | | | 3-4 | 32 |
| | | | 3-5 | 26 |
| | | | 3-7 | 3 |
| | | | 3-10 | 25 |
| | | | 3-10 | 51 |
| 88044 | AN960-616L | 5310-00-167-0837 | 3-7 | 14 |
| | | | 3-8 | 50 |
| | | | 3-8 | 58 |

## SECTION IV

## PART NUMBER INDEX (CONT)

| FSCM | PART NUMBER | STOCK NUMBER | FIG. | ITEM |
|---|---|---|---|---|
| | | | 3-9 | 45 |
| | | | 3-10 | 59 |
| | | | 3-10 | 70 |
| 88044 | AN960-816 | 5310-00-167-0823 | 3-2 | 42 |
| | | | 3-3 | 69 |
| | | | 3-4 | 36 |
| | | | 3-5 | 45 |
| 88044 | AN960-816L | 5310-00-167-0839 | 3-2 | 43 |
| | | | 3-3 | 36 |
| | | | 3-4 | 26 |
| | | | 3-7 | 2B |
| 72954 | COML | | 3-12 | 3 |
| 84830 | LC-042F-7 | | 3-20 | 5 |
| 36659 | LS9365-517-4-5 | 5305-00-206-3642 | 3-5 | 22 |
| 96906 | MS16562-223 | 5315-00-826-3251 | 3-20 | 7 |
| 96906 | MS16562-235 | 5315-00-058-9780 | 3-20 | 2 |
| 96906 | MS210424 | 5310-00-807-1468 | 3-3 | 41 |
| | | | 3-3 | 51 |
| | | | 3-3 | 66 |
| | | | 3-4 | 34 |
| | | | 3-4 | 44 |
| | | | 3-5 | 20 |
| | | | 3-5 | 55 |
| 96906 | MS21042-5 | 5310-00-807-1469 | 3-5 | 47 |
| 96906 | MS21042-6 | 5310-00-810-1786 | 3-3 | 63 |
| | | | 3-4 | 31 |
| 96906 | MS21044-N4 | 5310-00-877-5796 | 3-2 | 37 |
| | | | 3-7 | 2E |
| | | | 3-7 | 19 |
| | | | 3-8 | 61 |
| | | | 3-9 | 35 |
| | | | 3-10 | 22 |
| | | | 3-10 | 48 |
| | | | 3-10 | 64 |
| 96906 | MS21044-N6 | 5310-00-950-0039 | 3-7 | 15 |
| | | | 3-8 | 51 |
| | | | 3-8 | 59 |
| | | | 3-9 | 46 |
| | | | 3-10 | 60 |
| | | | 3-10 | 71 |
| 96906 | MS21044-N8 | 5310-00-877-5795 | 3-5 | 46 |
| 96906 | MS21250-05028 | 5306-00-935-7528 | 3-2 | 39 |
| 96906 | MS24625-9 | 5305-00-051-8493 | 3-3 | 71B |
| 96906 | MS24665-353 | 5315-00-839-5822 | 3-3 | 15 |
| | | | 3-3 | 31 |
| | | | 3-4 | 19 |
| | | | 3-5 | 15 |
| | | | 3-5 | 23 |
| | | | 3-6 | 3 |

## SECTION IV

## PART NUMBER INDEX (CONT)

| FSCM | PART NUMBER | STOCK NUMBER | FIG. | ITEM |
|---|---|---|---|---|
| | | | 3-7 | 4 |
| | | | 3-7 | 41 |
| | | | 3-7 | 62 |
| | | | 3-8 | 21 |
| | | | 3-8 | 43 |
| | | | 3-9 | 15 |
| | | | 3-9 | 31 |
| | | | 3-10 | 18 |
| | | | 3-10 | 44 |
| | | | 3-11 | 3 |
| | | | 3-17 | 14 |
| | | | 3-22 | 7 |
| 96906 | MS24665-368 | 5315-00-236-8357 | 3-7 | 2A |
| 96906 | MS24694-S101 | 5305-00-045-3180 | 3-10 | 21 |
| | | | 3-10 | 47 |
| 80205 | NAS1031P8 | | 3-3 | 38 |
| | | | 3-3 | 45 |
| | | | 3-3 | 48 |
| | | | 3-4 | 25A |
| | | | 3-4 | 47 |
| | | | 3-5 | 52 |
| | | | 3-20 | 13 |
| 80205 | NAS334CPA11 | 5305-00-531-0438 | 3-2 | 34 |
| | | | 3-3 | 43 |
| | | | 3-3 | 53 |
| | | | 3-4 | 46 |
| | | | 3-5 | 57 |
| 80205 | NAS5174-12 | 5305-00-637-7032 | 3-2 | 27 |
| 80205 | NAS5174-19 | 5305-00-207-1785 | 3-3 | 58 |
| 80205 | NAS5174-8 | 5305-00-207-3738 | 3-3 | 71 |
| | | | 3-4 | 39 |
| 80205 | NAS517-5-11 | 5305-00-206-3686 | 3-5 | 49 |
| 80205 | NAS617-5-42 | | 3-5 | 50 |
| 80205 | NAS517-6-10 | 5305-00-637-6950 | 3-7 | 16 |
| | | | 3-8 | 52 |
| | | | 3-8 | 60 |
| | | | 3-9 | 47 |
| | | | 3-10 | 62 |
| | | | 3-10 | 73 |
| 80205 | NAS517-6-15 | 5305-00-206-3649 | 3-3 | 67 |
| | | | 3-4 | 35 |
| 80205 | NAS517-8-23 | | 3-5 | 44 |
| 80205 | NAS6608-14 | 5306-01-109-8071 | 3-2 | 28 |
| 80205 | NAS6608-15 | | 3-2 | 29 |
| | | | 3-3 | 37 |
| | | | 3-4 | 27 |
| | | | 3-7 | 6 |
| | | | 3-8 | 64 |
| | | | 3-9 | 36 |
| | | | 3-10 | 54 |

## SECTION IV

## PART NUMBER INDEX (CONT)

| FSCM | PART NUMBER | STOCK NUMBER | FIG. | ITEM |
|---|---|---|---|---|
| 81868 | 18049 C 109 | | 3-3 | 71A |
| 81868 | 18049 C 116-1 | | 3-3 | 57 |
| 81868 | 18049 C 116-2 | | 3-3 | 57 |
| 81868 | 18049 C 128 | 1680-01-220-8045 | 3-17 | |
| | | | 3-22 | |
| 81868 | 18049 C 129 | | 3-3 | 3 |
| | | | 3-3 | 17 |
| | | | 3-4 | 1 |
| | | | 3-5 | 1 |
| | | | 3-5 | 38 |
| | | | 3-6 | 4 |
| | | | 3-11 | 6 |
| 81868 | 18049 C 144 | | 3-12 | 12 |
| 81868 | 18049 C 145 | | 3-12 | 16 |
| 81868 | 18049 C 148 | 1680-01-220-7083 | 3-3 | 13 |
| | | | 3-3 | 29 |
| | | | 3-4 | 17 |
| | | | 3-5 | 13 |
| | | | 3-5 | 24 |
| | | | 3-6 | 1 |
| | | | 3-11 | 1 |
| | | | 3-12 | 4 |
| 81868 | 18049 C 149 | 1680-01-232-1151 | 3-3 | 16 |
| | | | 3-3 | 32 |
| | | | 3-4 | 20 |
| | | | 3-5 | 16 |
| | | | 3-7 | 7 |
| | | | 3-7 | 40 |
| | | | 3-7 | 60 |
| | | | 3-8 | 19 |
| | | | 3-8 | 41 |
| | | | 3-9 | 13 |
| | | | 3-9 | 29 |
| | | | 3-10 | 16 |
| | | | 3-10 | 42 |
| | | | 3-17 | 1 |
| | | | 3-17 | 11 |
| | | | 3-22 | 8 |
| | | | 3-22 | 17 |
| 81868 | 18049 C 156 | | 3-3 | 7 |
| | | | 3-3 | 26 |
| | | | 3-3 | 33 |
| | | | 3-3 | 59 |
| | | | 3-4 | 14 |
| | | | 3-4 | 49 |
| | | | 3-5 | 8 |
| | | | 3-5 | 30 |
| | | | 3-5 | 59 |

## SECTION IV

## PART NUMBER INDEX (CONT)

| FSCM | PART NUMBER | STOCK NUMBER | FIG. | ITEM |
|---|---|---|---|---|
| 81868 | 18049 C 157 | | 3-3 | 10 |
| | | | 3-3 | 24 |
| | | | 3-4 | 12 |
| | | | 3-5 | 10 |
| | | | 3-5 | 32 |
| 81868 | 18049 C 194 | 5340-01-220-7099 | 3-7 | 26 |
| | | | 3-7 | 56 |
| | | | 3-8 | 3 |
| | | | 3-8 | 36 |
| | | | 3-9 | 5 |
| | | | 3-9 | 24 |
| | | | 3-10 | 5 |
| | | | 3-10 | 38 |
| 81868 | 18049 C 196 | | 3-3 | |
| | | | 3-4 | |
| 81868 | 18049 C 202-1 | | 3-5 | 58 |
| 81868 | 18049 C 202-2 | | 3-3 | 40 |
| 81868 | 18049 C 202-3 | | 3-3 | 50 |
| | | | 3-4 | 43 |
| 81868 | 18049 C 204 | 5340-01-221-1760 | 3-12 | |
| 81868 | 18049 C 205 | 1680-01-220-7093 | 3-12 | 10 |
| 81868 | 18049 C 206 | | 3-3 | 1 |
| 81868 | 18049 C 209 | | 3-7 | 22 |
| | | | 3-7 | 43 |
| 81868 | 18049 C 231-1 | | 3-11 | 9 |
| 81868 | 18049 C 231-2 | | 3-11 | 9 |
| 81868 | 18049 C 237-1 | | 3-11 | 15 |
| 81868 | 18049 C 237-2 | | 3-11 | 15 |
| 81868 | 18049 C 238 | | 3-11 | 13 |
| 81868 | 18049 C 245 | 1680-01-220-7090 | 3-2 | 23 |
| | | | 3-18 | |
| 81868 | 18049 C 246 | 1680-01-220-7097 | 3-3 | 14 |
| | | | 3-3 | 30 |
| | | | 3-4 | 18 |
| | | | 3-5 | 14 |
| | | | 3-5 | 29 |
| | | | 3-6 | 2 |
| | | | 3-11 | 2 |
| 81868 | 18049 C 247-1 | 1680-01-220-7096 | 3-10 | 24 |
| | | | 3-10 | 50 |
| 81868 | 18049 C 247-2 | 1680-01-220-7095 | 3-5 | 25 |
| | | | 3-12 | 5 |
| 81868 | 18049 C 249 | 1680-01-231-9136 | 3-7 | 39 |
| | | | 3-7 | 61 |
| | | | 3-8 | 20 |
| | | | 3-8 | 42 |
| | | | 3-9 | 14 |
| | | | 3-9 | 30 |

## SECTION IV

## PART NUMBER INDEX (CONT)

| FSCM | PART NUMBER | STOCK NUMBER | FIG. | ITEM |
|---|---|---|---|---|
| | | | 3-10 | 17 |
| | | | 3-10 | 43 |
| 81868 | 18049 C 255 | | 3-4 | 40 |
| 81868 | 18049 C 262 | | 3-3 | 56 |
| 81868 | 18049 C 294 | | 3-10 | 14 |
| | | | 3-10 | 36 |
| 81868 | 18049 C 295 | 1680-01-220-7087 | 3-17 | |
| | | | 3-22 | |
| 81868 | 18049 C 299 | 1680-01-220-7091 | 3-2 | 24 |
| 81868 | 18049 C 404 | | 3-20 | 8 |
| 81868 | 18049 C 405 | | 3-20 | 6 |
| 81868 | 18049 C 411 | | 3-20 | 3 |
| 81868 | 18049 C 412 | | 3-20 | 1 |
| 81868 | 18049 C 510 | | 3-7 | 42 |
| | | | 3-7 | 63 |
| | | | 3-8 | 22 |
| | | | 3-8 | 44 |
| | | | 3-9 | 16 |
| | | | 3-9 | 32 |
| | | | 3-10 | 40 |
| 81868 | 18049 C 517 | | 3-8 | 13 |
| | | | 3-8 | 37 |
| 81868 | 18049 D 117 | 1680-01-220-7086 | 3-2 | 21 |
| 81868 | 18049 D 130 | | 3-2 | 25 |
| 81868 | 18049 D 146 | | 3-12 | 19 |
| 81868 | 18049 D 147 | | 3-12 | 20 |
| 81868 | 18049 D 155-1 | | 3-6 | 13 |
| 81868 | 18049 D 155-2 | | 3-6 | 8 |
| 81868 | 18049 D 155-3 | | 3-3 | 11 |
| | | | 3-3 | 25 |
| | | | 3-3 | 73 |
| | | | 3-4 | 13 |
| | | | 3-4 | 52 |
| | | | 3-5 | 11 |
| | | | 3-5 | 33 |
| | | | 3-5 | 62 |
| 81868 | 18049 D 155-4 | | 3-6 | 10 |
| 81868 | 18049 D 155-5 | | 3-6 | 15 |
| 81868 | 18049 D 158-1 | | 3-4 | 9 |
| 81868 | 18049 D 158-2 | | 3-4 | 11 |
| | | | 3-4 | 22 |
| 81868 | 18049 D 158-3 | | 3-4 | 10 |
| | | | 3-4 | 51 |
| 81868 | 18049 D 191-1 | | 3-7 | |
| | | | 3-8 | |
| | | | 3-9 | |
| | | | 3-10 | |

## SECTION IV

## NATIONAL STOCK NUMBER AND PART NUMBER INDEX

### PART NUMBER INDEX

| FSCM | PART NUMBER | STOCK NUMBER | FIG. | ITEM |
|---|---|---|---|---|
| 81868 | 18049 D 191-2 | | 3-8 | |
| 81868 | 18049 D 191-3 | | 3-10 | |
| 81868 | 18049 D 192-1 | | 3-7 | 9 |
| | | | 3-8 | 45 |
| | | | 3-9 | 40 |
| | | | 3-10 | 55 |
| 81868 | 18049 D 192-2 | | 3-8 | 53 |
| 81868 | 18049 D 192-3 | | 3-10 | 66 |
| 81868 | 18049 D 195 | | 3-2 | 20 |
| 81868 | 18049 D 227 | | 3-2 | 16 |
| 81868 | 18049 D 228 | | 3-2 | 17 |
| 81868 | 18049 D 230-1 | | 3-11 | 10 |
| 81868 | 18049 D 230-2 | | 3-11 | 10 |
| 81868 | 18049 D 236-1 | | 3-11 | 12 |
| 81868 | 18049 D 236-2 | | 3-11 | 12 |
| 81868 | 18049 D 248 | 1680-01-220-7089 | 3-7 | |
| 81868 | 18049 D 250 | 1680-01-220-7094 | 3-2 | 26 |
| 81868 | 18049 D 260 | 1680-01-220-7088 | 3-7 | 1 |
| 81868 | 18049 D 292-1 | | 3-22 | 1 |
| 81868 | 18049 D 403 | 1680-01-220-7092 | 3-20 | |
| 81868 | 18049 D 407 | | 3-20 | 4 |
| 81868. | 18049 D 555 | | 3-2 | 41 |
| 81868 | 18049 E 107 | | 3-2 | 7 |
| | | | 3-6 | |
| 81868 | 18049 E 108 | | 3-2 | 8 |
| | | | 3-6 | |
| 81868 | 18049 E 140 | | 3-2 | 15 |
| | | | 3-12 | |
| 81868 | 18049 E 150 | | 3-2 | 18 |
| 81868 | 18049 E 160 | | 3-2 | 19 |
| 81868 | 18049 E 203 | | 3-5 | 54 |
| 81868 | 18049 E 207 | | 3-2 | 22 |
| 81868 | 18049 E 280-1 | | 3-5 | 17 |
| | | | 3-22 | |
| 81868 | 18049 E 280-2 | | 3-5 | 17 |
| | | | 3-22 | |
| 81868 | 18049 E 281-1 | | 3-10 | 45 |
| | | | 3-17 | |
| 81868 | 18049 E 282-2 | | 3-10 | 19 |
| | | | 3-17 | |
| 81868 | 18049 E 282-1 | | 3-17 | |
| | | | 3-22 | |
| 81868 | 18049 E 282-2 | | 3-17 | |
| | | | 3-22 | |
| 81868 | 18049 E 296-1 | | 3-7 | 31 |
| | | | 3-7 | 53 |
| | | | 3-8 | 6 |
| | | | 3-8 | 26 |

## SECTION IV

## PART NUMBER INDEX (CONT)

| FSCM | PART NUMBER | STOCK NUMBER | FIG. | ITEM |
|---|---|---|---|---|
| | | | 3-10 | 4 |
| | | | 3-10 | 30 |
| 81868 | 18049 E 296-2 | | 3-7 | 24 |
| | | | 3-7 | 45 |
| | | | 3-8 | 9 |
| | | | 3-8 | 30 |
| | | | 3-9 | 3 |
| | | | 3-9 | 19 |
| | | | 3-10 | 8 |
| | | | 3-10 | 31 |
| 81868 | 18049 E 296-3 | | 3-7 | 35 |
| | | | 3-7 | 54 |
| | | | 3-8 | 1 |
| | | | 3-8 | 23 |
| | | | 3-9 | 1 |
| | | | 3-9 | 17 |
| | | | 3-10 | 1 |
| | | | 3-10 | 27 |
| 81868 | 18049 E 300-1 | | 3-5 | 43 |
| 81868 | 18049 E 300-2 | | 3-5 | 43 |
| 81868 | 18049 E 400 | | 3-3 | 62 |
| | | | 3-4 | 30 |
| | | | 3-20 | |
| 81868 | 18049 J 101 | | 3-2 | 1 |
| | | | 3-3 | |
| 81868 | 18049 J 102 | | 3-2 | 2 |
| | | | 3-3 | |
| 81868 | 18049 J 103 | | 3-2 | 3 |
| | | | 3-4 | |
| 81868 | 18049 J 104 | | 3-2 | 4 |
| | | | 3-4 | |
| 81868 | 18049 J 105 | | 3-2 | 5 |
| | | | 3-5 | |
| 81868 | 18049 J 106 | | 3-2 | 6 |
| | | | 3-5 | |
| 81868 | 18049 J 121 | | 3-2 | 9 |
| | | | 3-7 | |
| 81868 | 18049 J 122 | | 3-2 | 10 |
| | | | 3-8 | |
| 81868 | 18049 J 123 | | 3-2 | 11 |
| | | | 3-9 | |
| 81868 | 18049 J 124 | | 3-2 | 12 |
| | | | 3-10 | |
| 81868 | 18049 J 225 | | 3-2 | 13 |
| | | | 3-11 | |
| 81868 | 18049 J 226 | | 3-2 | 14 |
| | | | 3-11 | |
| 81868 | 18133 C 500 | | 3-3 | 72 |

## SECTION IV

## PART NUMBER INDEX (CONT)

| FSCM | PART NUMBER | STOCK NUMBER | FIG. | ITEM |
|---|---|---|---|---|
| | | | 3-4 | 53 |
| | | | 3-5 | 63 |
| | | | 3-6 | 16 |
| | | | 3-7 | 8 |
| | | | 3-8 | 66 |
| | | | 3-9 | 38 |
| | | | 3-10 | 75 |
| | | | 3-11 | 4 |
| | | | 3-12 | 9 |
| 81868 | 18426C1005 | 5315-01-328-3891 | 3-7 | 2 |
| 81868 | 18426C1006 | 3990-01-319-6587 | 3-7 | 2C |
| 81868 | 18426E1000 | 3910-01-304-9044 | 3-7 | -- |
| 76691 | 28-2G | 4030-00-431-5537 | 3-12 | 2 |
| | | | 3-12 | 21 |
| 98897 | 338018-4 | | 3-7 | 13 |
| | | | 3-8 | 49 |
| | | | 3-8 | 57 |
| | | | 3-9 | 44 |
| | | | 3-10 | 58 |
| | | | 3-10 | 69 |
| 98897 | 353512-1 | | 3-7 | 12 |
| | | | 3-8 | 48 |
| | | | 3-8 | 56 |
| | | | 3-9 | 43 |
| | | | 3-10 | 61 |
| | | | 3-10 | 72 |
| 79136 | 5560-37-ZD | 5365-01-221-1759 | 3-7 | 2A |
| | | | 3-17 | 3 |
| | | | 3-17 | 13 |
| | | | 3-22 | 6 |
| | | | 3-22 | 16 |

*U.S. GOVERNMENT PRINTING OFFICE: 1992 - 654-028/60369

PIN: 062827-001

**By Order of the Secretary of the Army:**

**CARL E. VUONO**
***General, United States Army***
***Chief of Staff***

**Official:**

**R. L. DILWORTH**
***Brigadier General, United States Army***
***The Adjutant General***

DISTRIBUTION:
To be distributed in accordance with DA Form 12-31, AVUM and AVIM requirements for CH-47D Helicopter, Cargo Transport.

*U.S. GOVERNMENT PRINTING OFFICE: 1987 754-122/60005

RECOMMENDED CHANGES TO EQUIPMENT TECHNICAL PUBLICATIONS

*THEN...JOT DOWN THE DOPE ABOUT IT ON THIS FORM. CAREFULLY TEAR IT OUT, FOLD IT AND DROP IT IN THE MAIL.*

## SOMETHING WRONG WITH PUBLICATION

FROM: (PRINT YOUR UNIT'S COMPLETE ADDRESS)

DATE SENT

| PUBLICATION NUMBER | PUBLICATION DATE | PUBLICATION TITLE |
|---|---|---|
| | | |

BE EXACT PIN-POINT WHERE IT IS

| PAGE NO. | PARA-GRAPH | FIGURE NO. | TABLE NO. |
|---|---|---|---|
| | | | |

IN THIS SPACE, TELL WHAT IS WRONG AND WHAT SHOULD BE DONE ABOUT IT.

| PRINTED NAME, GRADE OR TITLE AND TELEPHONE NUMBER | SIGN HERE |
|---|---|
| | |

DA FORM 1 JUL 79 2028-2

PREVIOUS EDITIONS ARE OBSOLETE.

P.S.--IF YOUR OUTFIT WANTS TO KNOW ABOUT YOUR RECOMMENDATION MAKE A CARBON COPY OF THIS AND GIVE IT TO YOUR HEADQUARTERS.

## The Metric System and Equivalents

### *Linear Measure*

1 centimeter = 10 millimeters = .39 inch
1 decimeter = 10 centimeters = 3.94 inches
1 meter = 10 decimeters = 39.37 inches
1 dekameter = 10 meters = 32.8 feet
1 hectometer = 10 dekameters = 328.08 feet
1 kilometer = 10 hectometers = 3,280.8 feet

### *Weights*

1 centigram = 10 milligrams = .15 grain
1 decigram = 10 centigrams = 1.54 grains
1 gram = 10 decigram = .035 ounce
1 decagram = 10 grams = .35 ounce
1 hectogram = 10 decagrams = 3.52 ounces
1 kilogram = 10 hectograms = 2.2 pounds
1 quintal = 100 kilograms = 220.46 pounds
1 metric ton = 10 quintals = 1.1 short tons

### *Liquid Measure*

1 centiliter = 10 milliters = .34 fl. ounce
1 deciliter = 10 centiliters = 3.38 fl. ounces
1 liter = 10 deciliters = 33.81 fl. ounces
1 dekaliter = 10 liters = 2.64 gallons
1 hectoliter = 10 dekaliters = 26.42 gallons
1 kiloliter = 10 hectoliters = 264.18 gallons

### *Square Measure*

1 sq. centimeter = 100 sq. millimeters = .155 sq. inch
1 sq. decimeter = 100 sq. centimeters = 15.5 sq. inches
1 sq. meter (centare) = 100 sq. decimeters = 10.76 sq. feet
1 sq. dekameter (are) = 100 sq. meters = 1,076.4 sq. feet
1 sq. hectometer (hectare) = 100 sq. dekameters = 2.47 acres
1 sq. kilometer = 100 sq. hectometers = .386 sq. mile

### *Cubic Measure*

1 cu. centimeter = 1000 cu. millimeters = .06 cu. inch
1 cu. decimeter = 1000 cu. centimeters = 61.02 cu. inches
1 cu. meter = 1000 cu. decimeters = 35.31 cu. feet

## Approximate Conversion Factors

| *To change* | *To* | *Multiply by* | *To change* | *To* | *Multiply by* |
|---|---|---|---|---|---|
| inches | centimeters | 2.540 | ounce-inches | Newton-meters | .007062 |
| feet | meters | .305 | centimeters | inches | .394 |
| yards | meters | .914 | meters | feet | 3.280 |
| miles | kilometers | 1.609 | meters | yards | 1.094 |
| square inches | square centimeters | 6.451 | kilometers | miles | .621 |
| square feet | square meters | .093 | square centimeters | square inches | .155 |
| square yards | square meters | .836 | square meters | square feet | 10.764 |
| square miles | square kilometers | 2.590 | square meters | square yards | 1.196 |
| acres | square hectometers | .405 | square kilometers | square miles | .386 |
| cubic feet | cubic meters | .028 | square hectometers | acres | 2.471 |
| cubic yards | cubic meters | .765 | cubic meters | cubic feet | 35.315 |
| fluid ounces | milliliters | 29,573 | cubic meters | cubic yards | 1.308 |
| pints | liters | .473 | milliliters | fluid ounces | .034 |
| quarts | liters | .946 | liters | pints | 2.113 |
| gallons | liters | 3.785 | liters | quarts | 1.057 |
| ounces | grams | 28.349 | liters | gallons | .264 |
| pounds | kilograms | .454 | grams | ounces | .035 |
| short tons | metric tons | .907 | kilograms | pounds | 2.205 |
| pound-feet | Newton-meters | 1.356 | metric tons | short tons | 1.102 |
| pound-inches | Newton-meters | .11296 | | | |

## Temperature (Exact)

| | | | | |
|---|---|---|---|---|
| °F | Fahrenheit temperature | 5/9 (after subtracting 32) | Celsius temperature | °C |

PIN: 062827-000

# This fine document...

Was brought to you by me:

## Liberated Manuals -- free army and government manuals

Why do I do it? I am tired of sleazy CD-ROM sellers, who take publicly available information, slap “watermarks” and other junk on it, and sell it. Those masters of search engine manipulation make sure that their sites that sell free information, come up first in search engines. They did not create it... They did not even scan it... Why should they get your money? Why are not letting you give those free manuals to your friends?

I am setting this document FREE. This document was made by the US Government and is NOT protected by Copyright. Feel free to share, republish, sell and so on.

I am not asking you for donations, fees or handouts. If you can, please provide a link to liberatedmanuals.com, so that free manuals come up first in search engines:

<A HREF=http://www.liberatedmanuals.com/>Free Military and Government Manuals</A>

- Sincerely
  Igor Chudov
  http://igor.chudov.com/
- Chicago Machinery Movers