TECHNICAL MANUAL

OPERATOR'S, UNIT, INTERMEDIATE DIRECT SUPPORT AND GENERAL SUPPORT MAINTENANCE MANUAL (INCLUDING REPAIR PARTS AND SPECIAL TOOLS LISTS)

POWER UNIT PU-405A/M (NSN 6115-00-394-9577) MEP-004A 15 KW 60 HZ GENERATOR SET M200A1 2-WHEEL, 4-TIRE, MODIFIED TRAILER

This manual supersedes Chapter 2 of TM 5-6115-594-14&P, 25 September 1984.

HEADQUARTERS, DEPARTMENT OF THE ARMY

13 JUNE 1988

CHANGE

NO. 2

HEADQUARTERS
DEPARTMENT OF THE ARMY
WASHINGTON, D.C., 9 NOVEMBER 1992

Operator's, Unit, Intermediate Direct Support and General Support
Maintenance Manual
(Including Repair Parts and Special Tools List)
for

POWER UNIT
PU—405A/M (NSN 6115-00-394-9577)
MEP—004A, 15 kW, 60 HZ, GENERATOR SET
M200A1, 2—WHEEL, 4—TIRE, MODIFIED TRAILER

Approved for public release; Distribution is unlimited

TM 5-6115-625-14&P, 13 June 1988 is changed as follows:

1. Remove and insert pages as indicated below. New or changed text material is indicated by a vertical bar in the margin. An illustration change is indicated by a miniature pointing hand.

Remove pages	Insert pages
D-13 and D-14/(D-15 blank)	D-13 and D-14/(D-15 blank)
D-31 and D-32	D-31 and D-32

2. Retain this sheet in front of manual for reference purposes.

By Order of the Secretary of the Army:

GORDON R. SULLIVAN
General, United States Army
Chief of Staff

Official:

MILTON H. HAMILTON
Administrative Assistant to the
Secretary of the Army
02868

DISTRIBUTION:
To be distributed in accordance with DA Form 12-25-E, block no. 3862, requirements for TM 5-6115-625-14&P.

CHANGE

No. 1

HEADQUARTERS
DEPARTMENT OF THE ARMY
WASHINGTON, D.C., 29 January 1990

OPERATOR'S, UNIT, INTERMEDIATE DIRECT SUPPORT AND GENERAL SUPPORT MAINTENANCE MANUAL (INCLUDING REPAIR PARTS AND SPECIAL TOOLS LISTS)

for

POWER UNIT
PU-405A/M (NSN 6115-00-394-9577)
MEP-004A 15 KW 60 HZ GENERATOR SET
M200A1 2-WHEEL, 4-TIRE, MODIFIED
TRAILER

Approved for public release. Distribution is unlimited.

TM 5-6115-625-14&P, 13 June 1988 is changed as follows.

1. Remove and insert pages as indicated below. New or changed text material is indicated by a vertical bar in the margin. An illustration change is indicated by a miniature pointing hand.

Remove pages	Insert pages
iii/iv	iii/iv
3-17 and 3-18	3-17 and 3-18
4-7 through 4-12	4-7 through 4-12
D-27/D-28	D-27 and D-28
D-29 and D-30	D-29/D-30
---	D-31 and D-32

2. Retain this sheet in front of manual for reference purposes:

By Order of the Secretary of the Army:

CARL E. VUONO
General, United States Army
Chief of Staff

Official:

WILLIAM J. MEEHAN, II
Brigadier General, United States Army
The Adjutant General

DISTRIBUTION:
To be distributed in accordance with DA Form 12-25A, Operator's, Unit, Direct Support and General Support Maintenance requirements for Generator Set, Diesel Engine Driven, Trailer Mounted.

SAFETY STEPS TO FOLLOW IF SOMEONE IS THE VICTIM OF ELECTRICAL SHOCK

DO NOT TRY TO PULL OR GRAB THE INDIVIDUAL

IF POSSIBLE, TURN OFF THE ELECTRICAL POWER

IF YOU CANNOT TURN OFF THE ELECTRICAL POWER, PULL, PUSH, OR LIFT THE PERSON TO SAFETY USING A WOODEN POLE OR A ROPE OR SOME OTHER INSULATING MATERIAL

SEND FOR HELP AS SOON AS POSSIBLE

AFTER THE INJURED PERSON IS FREE OF CONTACT WITH THE SOURCE OF ELECTRICAL SHOCK, MOVE THE PERSON A SHORT DISTANCE AWAY AND IMMEDIATELY START ARTIFICIAL RESUSCITATION

WARNING

All specific cautions and warnings contained in this manual shall be strictly adhered to. Otherwise, severe injury, death and/or damage to the equipment may result.

HIGH VOLTAGE

is produced when this power unit is in operation.

DEATH

or severe burns may result if personnel fail to observe safety precautions. Do not operate this power unit until the ground terminal stud has been connected to a suitable ground. Disconnect the battery ground cable on the generator set before removing and installing components on the engine or in the electrical control panel system. Remove all rings, watches, and other jewelry when performing maintenance on this equipment. Loose fitting clothing should be secured to prevent it catching in moving parts. Do not attempt to service or otherwise make any adjustments, connections or reconnection of wires or cables until generator set is shut down and completely de-energized.

DANGEROUS GASES

Batteries generate explosive gas during charging: therefore, utilize extreme caution. Do not smoke, or use open flame in the vicinity of the generator set when servicing batteries.

Exhaust discharge contains noxious and deadly fumes. Do not operate power unit generator set in enclosed areas unless exhaust discharge is properly vented to the outside.

To avoid sparking between filler nozzle and fuel tank, always maintain metal to metal contact between filler nozzle and fuel tank when filling generator set fuel tank.

Do not smoke or use open flame in the vicinity of the generator set while fueling.

LIQUIDS UNDER HIGH PRESSURE

are generated as a result of operation of the power unit generator set, Do not expose any part of the body to a high pressure leak in the fuel injection system.

NOISE

Operating noise level of the generator set can cause hearing damage. Ear protectors, as recommended by the medical or safety officer, must be worn when working near this power unit.

WARNING

Clean parts in a well-ventilated area. Avoid inhalation of solvent fumes and prolonged exposure of skin to cleaning solvent. Wash exposed skin thoroughly. Dry cleaning solvent (P-D-680) used to clean parts is potentially dangerous to personnel and property. Do not use near open flame or excessive heat. Flash point of solvent is 100°F. to 138°F. (38°C. to 59°C.).

TECHNICAL MANUAL 5-6115-625-14&P

HEADQUARTERS
DEPARTMENT OF THE ARMY
WASHINGTON, DC, 13 June 1988

Operator's, Unit, Intermediate, Direct Support and General Support Maintenance Manual (Including Repair Parts and Special Tools Lists) for POWER UNIT, PU-405A/M (NSN 6115-00-394-9577) MEP-004 15 KW 60 HZ GENERATOR SET M200A1 2-WHEEL, 4-TIRE, MODIFIED TRAILER

Approved for public release; distribution is unlimited.

Page

This manual supersedes Chapter 2 of TM 5-6115-594-14&P dated 25 September 1984.

LIST OF ILLUSTRATIONS

LIST OF TABLES

CHAPTER 1
INTRODUCTION

Section I. GENERAL

1-1. Scope. This manual is for use in operating and maintaining the Power Unit, PU-405A/M. The PU-405A/M is a mobile power unit used to supply power to any system or equipment requiring up to 15 KW of 50/60 Hz input operating power. In addition to operating instructions and operator, unit, and intermediate direct support and general support maintenance procedures, this manual contains a Repair Parts and Special Tools List for the power unit.

1-2. Limited Applicability. Some portions of this publications are not applicable to both services. These portions are prefixed to indicate the service to which they pertain: (A) for Army, and (F) for Air Force. Portions not prefixed are applicable to both services.

1-3. Maintenance Forms and Records.

a. (A) Maintenance forms and records used by Army personnel are prescribed by DA Pam 738-750.

b. (F) Maintenance forms and records used by Air Force personnel are prescribed in AFM66-1 and the applicable 00-20 Series Technical Orders.

1-4. Reporting of Errors. Reporting of errors and omissions and recommendations for improvement of this publication by the individual user is encouraged. Reports should be submitted as follows:

a. (A) Army – DA Form 2028 directly to: Commander, US Army Troop Support Command, ATTN: AMSTR-MCTS, 4300 Goodfellow Boulevard, St. Louis, MO, 63120-1798.

b. (F) Air Force – AFTO Form 22 directly to: Commander, Sacramento Air Logistics Center, ATTN: MMEDT, McClellan Air Force Base, CA, 95652, in accordance with TO-00-5-1.

1-5. Reporting Equipment Improvement Recommendations (EIR). EIR's will be prepared using SF 368 Product Quality Deficiency Report. Instructions for preparing EIR's are provided in DA Pam 738-750, The Army Maintenance Management System. EIR's should be mailed directly to: Commander, US Army Troop Support Command, ATTN: AMSTR-QX, 4300 Goodfellow Boulevard, St. Louis, MO, 63120-1798.

1-6. Levels of Maintenance Accomplishment.

a. (A) Army users shall refer to the Maintenance Allocation Chart (MAC) for tasks and levels of maintenance to be performed.

b. (F) Air Force users shall accomplish maintenance at the user level consistent with their capability in accordance with policies established in AFM 66-1.

1-7. (A) Destruction of Army Materiel. Destruction of Army materiel to prevent enemy use shall be in accordance with TM 750-244-3.

1-8. Administrative Storage.

a. Army equipment placed in administrative storage will have preventive maintenance performed in accordance with the PMCS tables before storage. When equipment is removed from storage, PMCS will be performed to ensure operational readiness.

b. (F) For administrative storage procedures for Air Force equipment, refer to TO 35-1-4, Pro cessing and Inspection of Aerospace Ground Equipment for Storage and Shipment.

1-9. Preparation for Shipment and Storage.

(F) Air Force - Refer to TO 35-1-4 for component of end item generator sets and TO 38-1-5 for installed engine.

Section II. DESCRIPTION AND DATA

1-10. Description. Power Unit PU-405A/M (figures 1-1 and 1-2) is made up of one Tactical Utility Generator Set, DOD Model MEP-004A, mounted on a modified M200A1 trailer. The generator set is a liquid-cooled, diesel engine-driven unit with a load capacity of 15 KW at 50/60 Hz. The trailer is a two-wheeled unit with dual tires mounted. The trailer has a 2-1/2-ton carrying capacity. The modifications to the basic trailer provide stowage for the accessories and all equipment necessary for mobile operation as well as providing a work platform for the operator and maintenance personnel.

1-11. Tabulated Data. The tabulated data provides operator and unit level personnel with the dimensions and weights for Power Unit, PU-405A/M. These specifications are computed from the combined dimensions and weights of the generator set and trailer as modified for use with the power unit. Specifications of the individual components can be found in their respective technical publications. For additional information concerning Generator Set, DOD Model MEP-004A, refer to TM 5-6115.464-12 and – 34. For additional information on the M200A1 trailer, refer to TM 9-2330-205-14&P. The tabulated data also includes the location and content of all data plates unique to the power unit.

a. Identification and Instruction Plates.

(1) /identification P/ate.

(a) Location. This plate is located on the front roadside frame between the trailer body and the drawbar ring.

(b) Content.

US
POWER UNIT
PU 405A/M
KW15
HERTZ 50/60
NSN 6115-00-394-9577

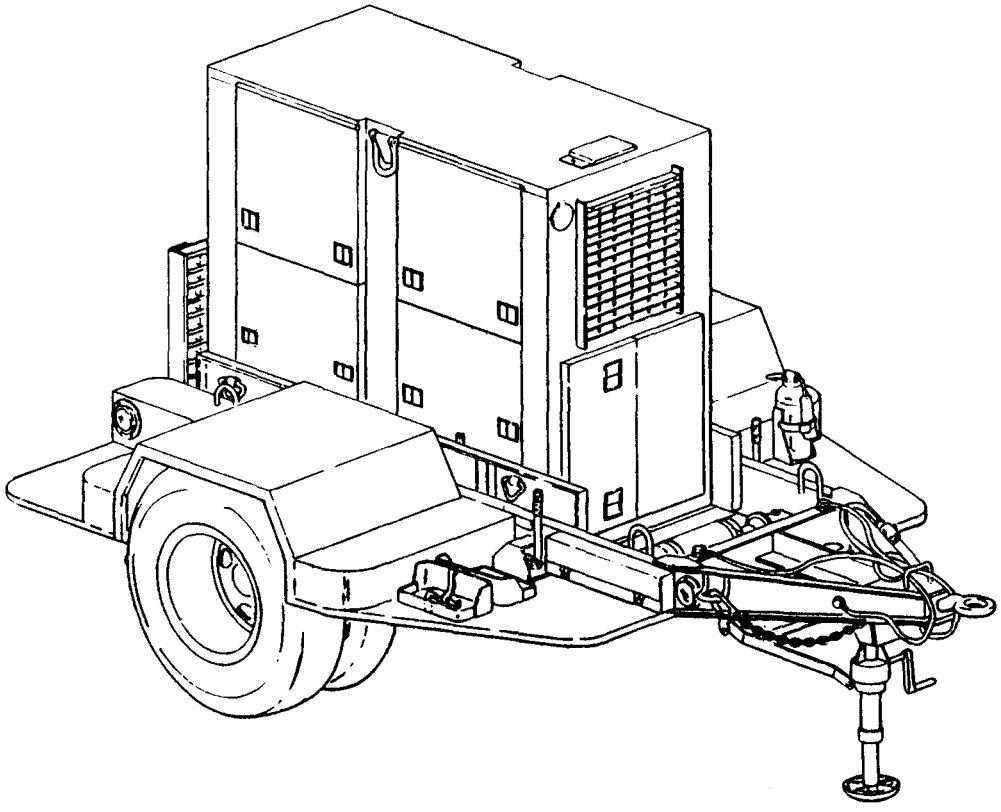

Figure 1-1. Power Unit, Curbside Front, Three-Quarter View.

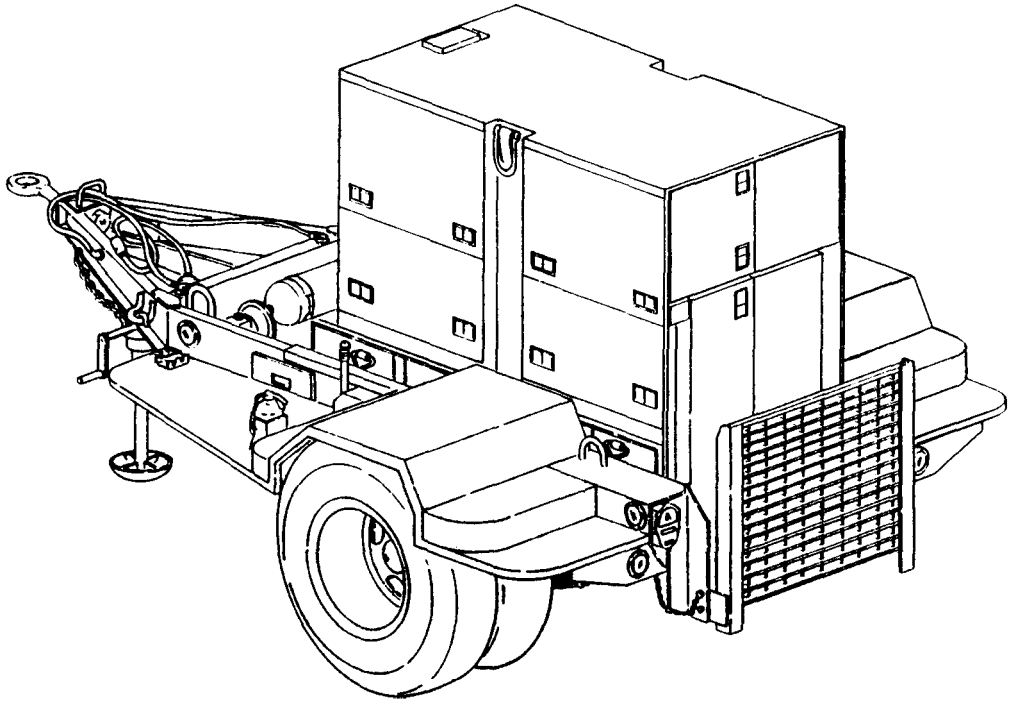

Figure 1-2. Power Unit, Roadside Rear, Three-Quarter View.

(2) *Instruction Plate*

(a) Location. This plate is located near the ground stud on the front, roadside corner of the trailer body.

(b) Content.

GROUND TERMINAL

b. Tabulated Data for Power Unit.

Overall Length	166 3/8 inches (423.6 centimeters)
Overall Width	95 1/2 inches (242.6 centimeters)
Overall Height	84 inches (213.4 centimeters)
Net Weight (empty)	5,490 pounds (2490 kilograms)
Net Weight (filled)	5,670 pounds (2571 kilograms)
Shipping Weight	5,660 pounds (2567 kilograms)
Cubage	788 cubic feet (22.3 cubic meters)

1-12. Differences Between Models. There are no differences between models, serial numbers, or serial number groups applicable to this equipment.

CHAPTER 2
OPERATING INSTRUCTIONS

Section I. OPERATING PROCEDURES

2-1. Operating Procedures. Before the power unit generator can be turned on and operated, the power unit must be towed to a worksite and installed. installation instructions are provided in paragraph 4-2. instructions for dismantling the power unit for movement are given in paragraph 4-3. Detailed prestarting, startup, operating and shutdown procedures for the generator set can be found on the "Operating instructions" data plate located inside the right hand control cubicle door at the rear of the power unit, and in the generator set technical manual, TM 5-6115-464-12.

WARNING

Do not operate generator set until it is properly grounded (paragraph 4-2, b.) Serious injury or death by electrocution can result from operating an ungrounded generator set.

Operating noise level of generator set can cause hearing damage. Ear protectors, as recommended by medical or safety officer, must be worn when working near power unit.

Section II. OPERATION OF AUXILIARY EQUIPMENT

2-2. Operation of Auxiliary Equipment. There is no auxiliary equipment supplied with the power unit.

Section III. OPERATION UNDER UNUSUAL CONDITIONS

2-3. Operation Under Unusual Conditions. When operating the power unit under unusual conditions such as extremes in temperature or difficult terrain, there are steps that must be taken to protect the equipment.

a. Refer to TM 5-6115-464-12 for special procedures when operating the generator set under unusual conditions.

b. Refer to TM 9-2330-205-14&P for special procedures when operating the trailer under unusual conditions.

CHAPTER 3

OPERATOR/CREW MAINTENANCE INSTRUCTIONS

Section I. CONSUMABLE OPERATING AND MAINTENANCE SUPPLIES

3-1. Consumable Supplies. Consumable supplies used in the maintenance and operation of the power unit are listed in Table 3-1.

Table 3-1. Consumable Operating and Maintenance Supplies.

(1) Component application	(2) National stock number	(3) Description	(4) Qty required for initial operation	(5) Qty required 8 hours operation	(6) Notes
General Cleaning	6850-00-664-5685	Solvent, Drycleaning, P-D-680	1 quart	As required	
Personnel Platform	9150-00-186-6681	Oil, Lubricating, OE/HDO-30 WT	1 quart	As required	
	9150-00-402-4478	Oil, Lubricating, OEA	1 quart	As required	

Section II. LUBRICATION INSTRUCTIONS

3-2. General. Detailed instructions for the lubrication of the major components of the power unit are contained in the applicable Lubrication Orders (LO's). Refer to DA Pam 310-1 to ensure the latest editions of the LO's are used.

3-3. Generator Lubrication. Refer to TM 5-6115-464-12 for generator set Lubrication Order.

3-4. Trailer Lubrication. There are no operator/crew lubrication requirements for the power unit trailer.

Section III. PREVENTIVE MAINTENANCE CHECKS AND SERVICES (PMCS)

NOTE

The PMCS chart in this section contains all necessary Operator/Crew preventive maintenance checks and services for this equipment.

3-5. General. The preventive maintenance checks and services listed in Table 3-2 are grouped according to stages of equipment operation or time intervals. Using the following as a guide, do the checks and services at the intervals shown.

a. Before you operate, perform your before (B) PMCS. Observe all CAUTIONS and WARNINGS.

b. While you operate, perform your during (D) PMCS. Observe all CAUTIONS and WARNINGS.

c. After you operate, be sure to perform your after(A) PMCS.

d. Do (W) PMCS weekly.

e. Do (M) PMCS monthly.

f. If equipment fails to operate, refer to Section IV Troubleshooting. If the problem cannot be corrected, see paragraph 3-8, Reporting Deficiencies.

3-6. Purpose of PMCS Table. The purpose of the PMCS table is to provide a systematic method of inspecting and servicing the equipment. In this way, small defects can be detected early before they become a major problem causing the equipment to fail to complete its mission. The PMCS table is arranged with the individual PMCS procedures listed in sequence under assigned intervals. The most logical time (before, during, or after operation) to perform each procedure determines the interval to which it is assigned. Make a habit of doing the checks and services in the same order each time and anything wrong will be seen quickly. See paragraph 3-7 for an explanation of the columns in table 3-2.

3-7. Explanation of Columns. The following is a list of the PMCS table column headings with a description of the information found in each column.

a. Item No. This column shows the sequence in which the checks and services are to be performed, and is used to identify the equipment area on the Equipment Inspection and Maintenance Worksheet, DA Form 2404.

b. IntervaL This column shows when each check is to be done.

c. Itern to be Inspected/Procedures. This column identifies the general area or specific part where the check or service is to be done, and the checks or services to be done, and explains how to do them.

d. Equipment is Not Ready/Available If. This column lists conditions that make the equipment unavailable for use because it is unable to perform its mission or because it would represent a safety hazard. Do not acceptor operate equipment with a condition in the “Equipment is Not Ready/Available If” column.

3-8. Reporting Deficiencies. If you discover any problem with the equipment during PMCS or while operating it that you are unable to correct, it must be reported. Refer to DA Pam 738-750 and report the deficiency using the proper forms.

3-9. Special Instructions. Preventive maintenance is not limited to performing the checks and services listed in the PMCS table. Covering unused receptacles, stowing unused equipment and other routine procedures such as equipment inventory, cleaning components, and touch-up painting are not listed in the PMCS table. These are things you should do any time you see they need to be done. If a routine check is listed in the PMCS table it is because other operators have reported problems with this item. Take along tools and cleaning cloths needed to perform the required checks and services. Use the information in the following paragraphs to help you identify problems at any time.

a. Routine Inspections, Use the following information to help identify potential problems before and during checks and services.

WARNING

Drycleaning solvent P-D-680 is both toxic and flammable. Wear safety goggles and gloves and use in a well-ventilated area. Avoid prolonged breathing of vapors and avoid skin contact. Do not use near open flame or excessive heat. Flash point of solvent is 100°F to 138°F (38°C to 59°C). If you become dizzy while using P-D-680, get fresh air immediately and get medical aid. If P-D-680 contacts eyes, flush with water and get medical aid immediately.

(1) Keep it clean. Dirt, grease, and oil get in the way and may cover up a serious problem. Use drycleaning solvent P-D-680, to clean metal surfaces. Use soap and water to clean rubber or plastic parts and material.

(2) Bolts, nuts, and screws. Check them all to make sure they're not loose, missing, bent, or broken. Don't try to check them all with a tool, but look for chipped paint, bare metal, or rust around bolt heads. If you find one loose, tighten it or report it to unit maintenance.

(3) Welds. Look for loose or chipped paint, rust, or gaps where parts are welded together. If a broken weld is found, report it to higher level of maintenance.

(4) Electrical wires, connectors, terminals and receptacles. Look for cracked or broken insulation, bare wires, and loose or broken connectors. Tighten loose connectors and make sure the wires are in good condition. Examine terminals and receptacles for serviceability.

(5) Hoses and fluid lines. Look for wear, damage, and leaks. Make sure clamps and fittings are tight. Wet spots and stains around a fitting or connector can mean a leak. If a leak comes from a loose connector, tighten it. If something is broken or worn out, report it to unit maintenance.

b. Leakage Definitions. It is necessary for you to know how fluid leakage affects the status of your equipment. The following are definitions of the types/classes of leakage you need to know to be able to determine the status of your equipment. Learn and be familiar with them. When in doubt, NOTIFY YOUR SUPERVISOR!

Leakage Definitions:

Class I	Seepage of fluid (as indicated by wetness or discoloration) not great enough to form drops.
Class II	Leakage of fluid great enough to form drops but not enough to cause drops to drip from item being checked/inspected.
Class III	Leakage of fluid great enough to form drops that fall from the item being checked/inspected.

CAUTION

Equipment operation is allowable with minor leakage (Class I or II) of any fluid except fuel. Of course, consideration must be given to the fluid capacity in the item being checked/inspected. When in doubt, notify your supervisor.

When operating with Class I or II leaks, continue to check fluid level more often than required in the PMCS. Parts without fluid will stop working and/or cause equipment damage.

Class III leaks should be reported to your supervisor or unit maintenance.

Table 3-2. Operator/Crew Preventive Maintenance Checks and Services (PMCS)

NOTE

If the equipment must be kept in continuous operation, check and service only those items that can be checked and serviced without disturbing operation. Make the complete checks and services when the equipment can be shut down.

Within designated interval, these checks are to be performed in the order listed.

B - Before D - During A – After W – Weekly M – Monthly

Item no.	Interval B	D	A	W	M	Item to be inspected. Procedure: check for and have repaired, filled, or adjusted as needed	Equipment is not ready/available if:
						WARNING Before performing any maintenance that requires climbing on or under trailer, set trailer handbrakes, chock wheels, and lower rear leveling jacks. Injury to personnel could result from trailer suddenly rolling or tipping. **NOTE** Perform weekly as well as before PMCS if: You are the assigned operator but have not operated the equipment since the last weekly inspection. You are operating the equipment for the first time.	

Table 3-2. Operator/Crew Preventive Maintenance Checks and Services(PMCS) – CONT.

B - Before D - During A – After W - Weekly M - Monthly

Item no.	Interval B	D	A	W	M	Item to be inspected. Procedure: check for and have repaired, filled, or adjusted as needed	Equipment is not ready/available if:
1	●					GENERATOR SET EXTERIOR	
						a. Check on, around, and beneath generator set for fuel or oil and coolant leaks.	A Class III coolant or lubrication oil leak or any class fuel leak is detected.
						b. Check that generator set ground is properly installed and grounding connections are tight.	Not properly grounded.
						c. Manually open and close radiator louver doors to check for proper operation.	
2	●	●	●			FUEL GAGE	
						Check fuel gage (1) for sufficient fuel for continuous operation.	
						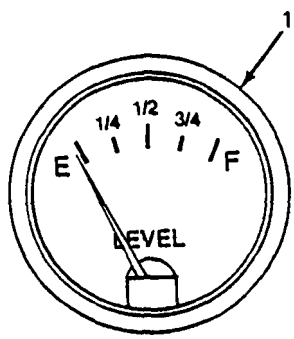 FUEL LEVEL	
3	●					ENGINE OIL LEVEL	
						Check oil filler dipstick (2) for proper oil level. Add oil as required.	

Table 3-2. Operator/Crew Preventive Maintenance Checks and Services(PMCS) - CONT.

B – Before D – During A – After W - Weekly M – Monthly

Item no.	Interval B	D	A	W	M	Item to be inspected. Procedure: check for and have repaired, filled, or adjusted as needed	Equipment is not ready/available if
3	●					ENGINE OIL LEVEL - CONT 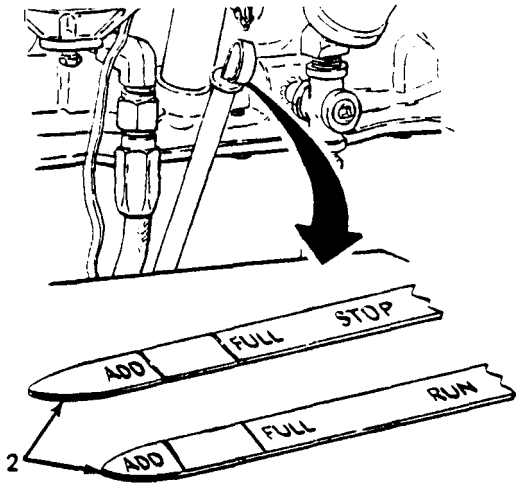	
4	●					ACCESSORIES Check that the following accessories are not missing. a. Sledge hammer b. Fire extinguisher c. Driver/puller d. Ground rods	 Fire extinguisher is missing. Ground rods are missing.
5	●					BRACKETS Check fire extinguisher and fuel can mounting brackets for loose hardware and broken fittings.	
6	●					TIRES a. Check for cuts, foreign objects or unusual tread wear. Remove any stones from between the treads.	 One tire is flat, missing or unserviceable.

Table 3-2. Operator/Crew Preventive Maintenance Checks and Services (PMCS) – CONT.

B - Before D – During A – After W - Weekly M - Monthly

Item no.	Interval B	D	A	W	M	Item to be inspected. Procedure: check for and have repaired, filled, or adjusted as needed	Equipment is not ready/available if:
6	●					TIRES – CONT	
						b. Check that tire pressure is 35 psi (241.22 kPa) when tires are cool.	
7	●					WHEELS	
						Check for wheel damage and for loose or missing stud nuts (3).	One wheel is damaged. One stud nut is loose or missing.
						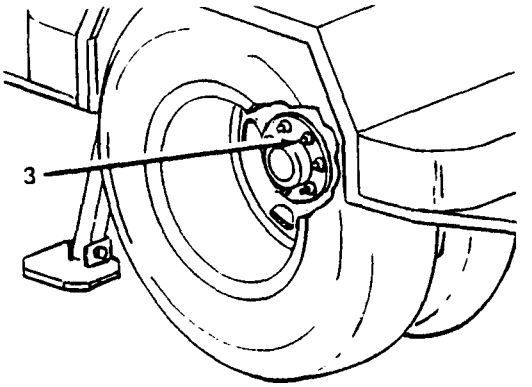	
8	●					LUNETTE EYE	
						Check lunette eye (4) for insecure mounting and obvious damage.	Lunette eye is loose or bent.
9	●					INTERVEHICULAR CABLE	
						Check cable (5) and connector for cuts and breaks.	InterVehicular cable is broken or missing.
10	●					SAFETY CHAINS	
						Check safety chains (6) for insecure mounting and obvious damage.	Safety chains are missing or unsecured.

Table 3-2. Operator/Crew Preventive Maintenance Checks and Services (PMCS) - CONT.

B - Before D - During A – After W – Weekly M – Monthly

Item no.	Interval B	D	A	W	M	Item to be inspected. Procedure: check for and have repaired, filled, or adjusted as needed	Equipment is not ready/available if:
10	●					SAFETY CHAINS - CONT 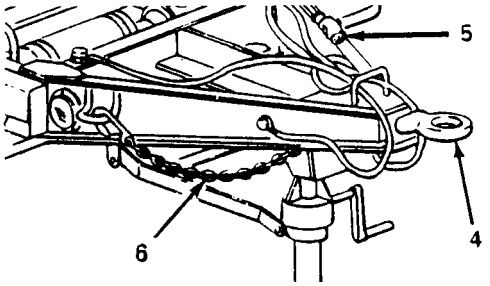	
11	●					AIR HOSES, FITTINGS AND BRAKE AIR CHAMBER Check air hoses (7), fittings (8) and brake air chamber (9) for signs of damage or leaks. 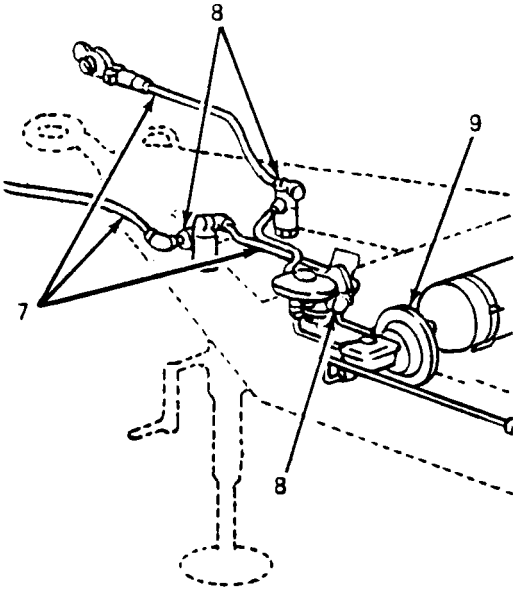	Damage or leaks are detected.

Table 3-2. Operator/Crew Preventive Maintenance Checks and Services (PMCS) – CONT.

B - Before D – During A – After W – Weekly M – Monthly

Item no.	Interval B	D	A	W	M	Item to be inspected. Procedure: check for and have repaired, filled, or adjusted as needed	Equipment is not ready/available if:
12	●					HYDRAULIC HOSES, FITTINGS AND MASTER CYLINDER Check brake system hoses (10) and fittings (11) and master cylinder (12), and check under vehicle for signs of brake fluid leaks. 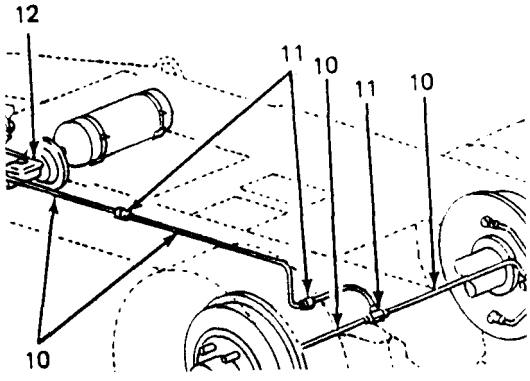	A class III brake fluid leak is detected.
13		●				LANDING LEG Check condition of landing leg (13). 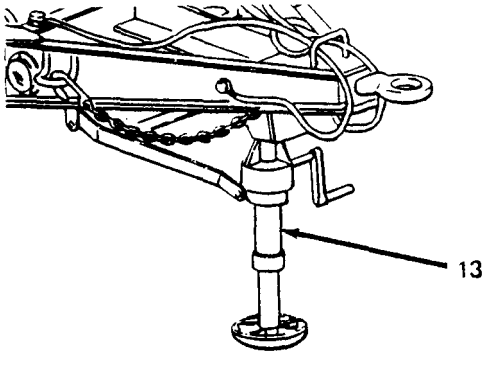	There is Indication that leg might collapse.

Table 3-2. Operator/Crew Preventive Maintenance Checks and Services (PMCS) - CONT.

B - Before D- During A - After W – Weekly M - Monthly

Item no.	Interval B	D	A	W	M	Item to be inspected. Procedure: check for and have repaired, filled, or adjusted as needed	Equipment is not ready/available if:
14		●				LEVELING JACK Check condition of leveling jack (14).	There is indication that a jack might collapse.
15	●	●				LIGHTS a. With intervehicular cable connected to towing vehicle, operate vehicle light switch through all settings and check lights (15). **NOTE** An assistant is required while checking brake lights. b. Step on brake pedal and check brake lights (15).	

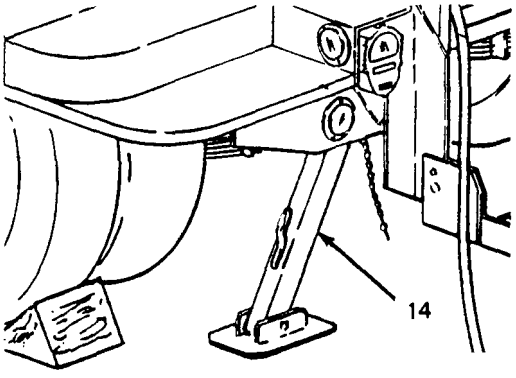

Table 3-2. Operator/Crew Preventive Maintenance Checks and Services (PMCS) – CONT.

B – Before D – During A – After W – Weekly M – Monthly

Item no.	Interval B	D	A	W	M	Item to be inspected. Procedure: check for and have repaired, filled, or adjusted as needed	Equipment is not ready/available if:
15.		●				LIGHTS – CONT 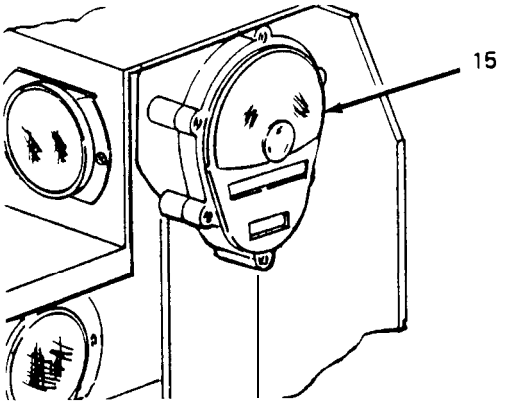	
16		●				BRAKE SYSTEM Test brake system by hooking trailer to towing vehicle and applying brakes.	Service brakes fail to operate.
17		●				TRAILER OPERATION a. Be alert for any unusual noises while towing trailer. Stop and investigate any unusual noises. b. Ensure that trailer is tracking/following correctly behind towing vehicle with no side pull.	
18		●				GENERATOR SET GAGES AND INSTRUMENTS a. Check that air cleaner condition indicator (16) does not indicate a clogged air cleaner. Press-to-test. b. Check that battery charging ammeter (17) is in green area during normal operation.	Light remains on during operation. Battery indicator not in green area.

Table 3-2. Operator/Crew Preventive Maintenance Checks and Services (PMCS) – CONT.

B - Before D – During A – After W – Weekly M - Monthly

Item no.	Interval B	D	A	W	M	Item to be inspected. Procedure: check for and have repaired, filled, or adjusted as needed	Equipment is not ready/available if:
18		●				GENERATOR SET GAGES AND INSTRUMENTS – CONT	
						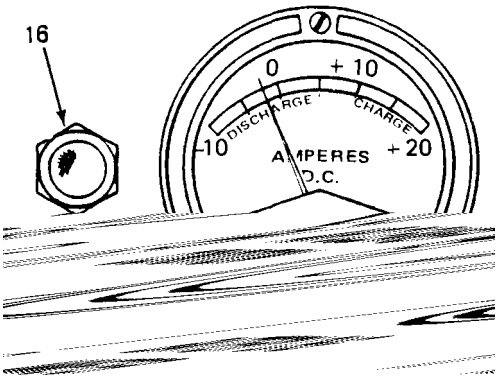	
						c. Check that frequency meter (18) indicates 60 Hz (red line) when generator is operating under load.	Correct frequency cannot be maintained.
						d. Check that kilowatt meter (19) reading does not exceed 100%.	
						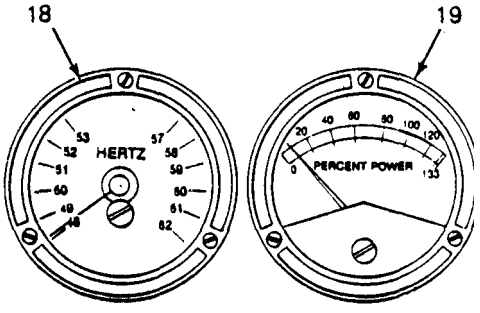	
						e. Check that A.C. ammeter (20) reading does not exceed 100% of rated current or more than 5% load difference between phases.	No indication when load is applied.

Table 3-2. Operator/Crew Preventive Maintenance Checks and Services (PMCS) – CONT.

B - Before D – During A – After W – Weekly M – Monthly

Item no.	Interval B	D	A	W	M	Item to be inspected. Procedure: check for and have repaired, filled, or adjusted as needed	Equipment is not ready/available if:
18		●				GENERATOR SET GAGES AND INSTRUMENTS – CONT	
						f. Check that A.C. voltmeter (21) indicates desired output voltage as determined by load connections and amps-volts selector switch.	Desired voltage cannot be obtained and maintained.
						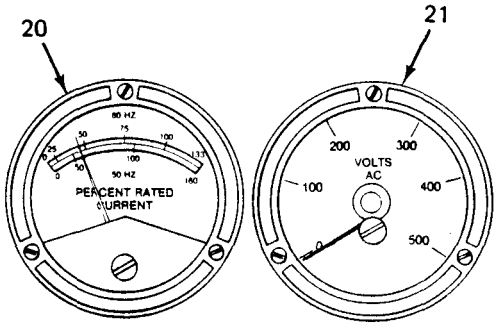	
						g. Check engine oil pressure gage (22) for 30 to 55 psig indication.	Oil pressure drops below 30 psig.
						h. Check coolant temperature gage (23) for 170° to 200°F (76.7° to 93.3°C) indication.	Temperature exceeds 200°F (93.3°C).
						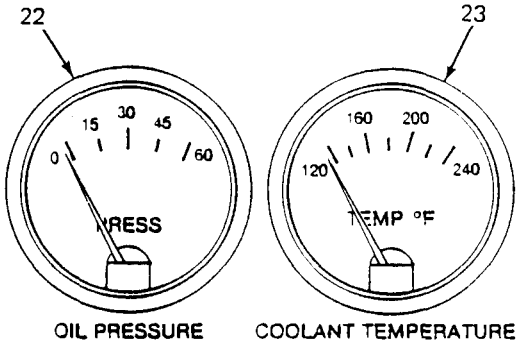	

Table 3-2. Operator/Crew Preventive Maintenance Checks and Services (PMCS) - CONT.

B - Before D – During A – After W - Weekly M - Monthly

Item no.	Interval B	D	A	W	M	Item to be inspected. Procedure: check for and have repaired, filled, or adjusted as needed	Equipment is not ready/available if:
18		●				GENERATOR SET GAGES AND INSTRUMENTS – CONT i. Check that all lights on fault indicator panel (24) are out during operation. Check bulb operation . with TEST or RESET switch on panel. 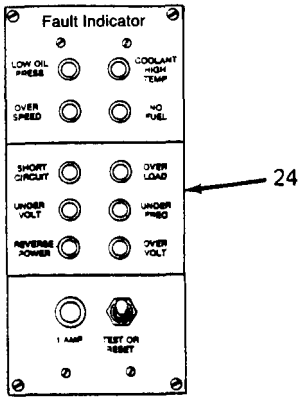 	Fault light will not go out when switch is set to TEST or RESET position, then released. All bulbs should be lit when switch is in TEST or RESET position.
19			●			FUEL TANK a. Fill tank (25) upon completion of operation. **NOTE** Fuel system temperature must be above freezing when draining water and sediment. b. Open drain (26) and drain water and sediment from fuel tank. Allow to drain until fuel runs clean.	

Table 3-2. Operator/Crew Preventive Maintenance Checks and Services (PMCS) – CONT.

B – Before D - During A – After W - Weekly M – Monthly

Item no.	Interval B	D	A	W	M	Item to be inspected. Procedure: check for and have repaired, filled, or adjusted as needed	Equipment is not ready/available if:
19			●			FUEL TANK – CONT 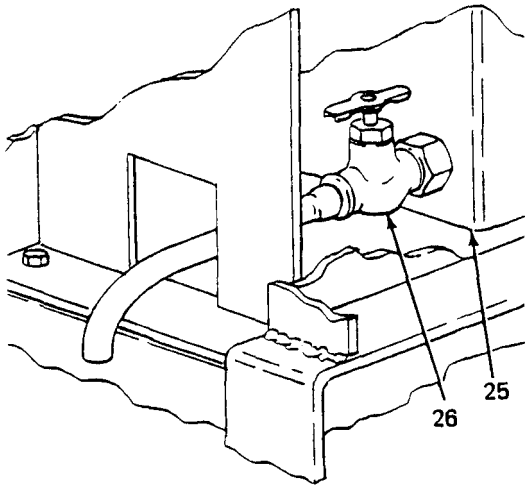	
20			●			FUEL STRAINER AND FILTERS Drain water and sediment from strainer (27), primary (28) and secondary (29) filters. Allow to drain until fuel runs clean. 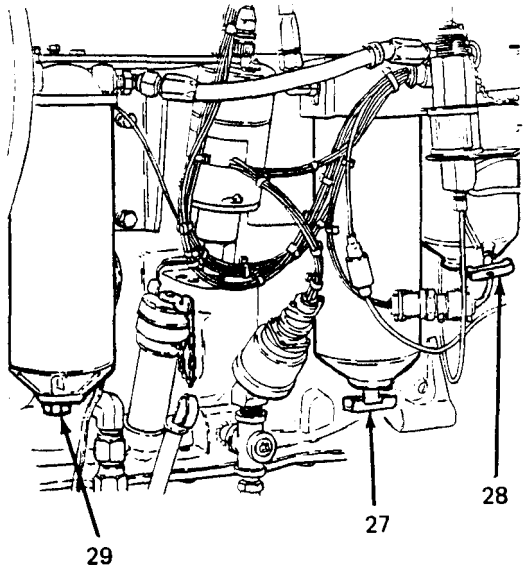	

Table 3-2. Operator/Crew Preventive Maintenance Checks and Services (PMCS) – CONT.

B - Before D – During A – After W - Weekly M – Monthly

Item no.	Interval B	D	A	W	M	Item to be inspected. Procedure: check for and have repaired, filled, or adjusted as needed	Equipment is not ready/available if:
21			●			BATTLE SHORT INDICATOR LIGHT Push in on lens housing. Light (30) should illuminate. If not, replace bulb.	
22			●			CIRCUIT BREAKER INDICATOR LIGHT Push in on lens housing. Light (31) should illuminate. If not, replace bulb. 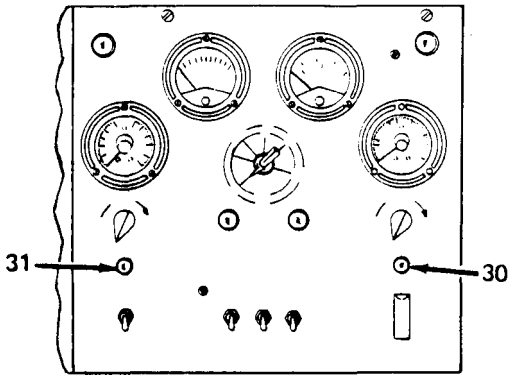 	
23			●			BRAKE DRUMS AND HUBS WARNING A defect in the operation of the brake or hub can cause these parts to get hot enough to cause serious burns. Use extreme caution when attempting to detect heat in this area. Feel drums and hubs for overheating to detect dragging or binding.	Brakes or hub are dragging or binding.
24			●			AIR RESERVOIR Open draincock (32) to drain moisture from air reservoir (33) and close when finished.	

Table 3-2. Operator/Crew Preventive Maintenance Checks and Services (PMCS) - CONT.

B - Before D - During A – After W – Weekly M – Monthly

Item no.	Interval B	D	A	W	M	Item to be inspected. Procedure: check for and have repaired, filled, or adjusted as needed	Equipment is not ready/available if:
24			●			AIR RESERVOIR – CONT 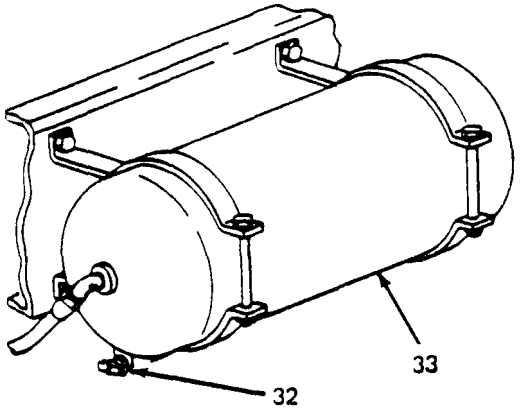	
25			●			HANDBRAKES With trailer hooked to towing vehicle, handbrakes (34). Move trailer slightly to see if handbrakes hold wheels. Adjust as requ i red. 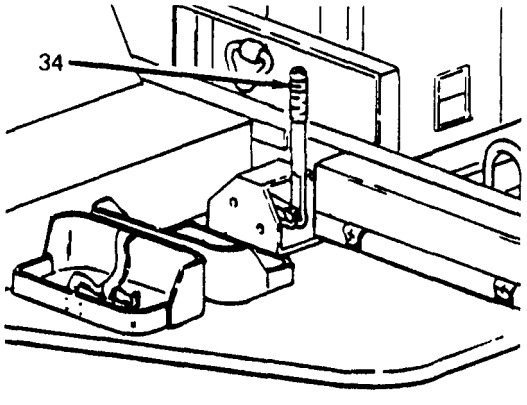	Handbrakes cannot be adjusted.

Table 3.2. Operator/Crew Preventive Maintenance Checks and Services ()MCS) – CONT.

B -- Before D – During A – After W – Weekly M - Monthly

Item no.	Interval B	D	A	W	M	Item to be inspected. Procedure: check for and have repaired, filled, or adjusted as needed.	Equipment is not ready/available if:
26				●		REFLECTORS Check for damaged or missing reflectors,	
27				●		BATTERIES Check battery (35) electrolyte level, Level should be about 3/4 inch above top of plates. Add water if level is low. Use clean water (distilled water if available). 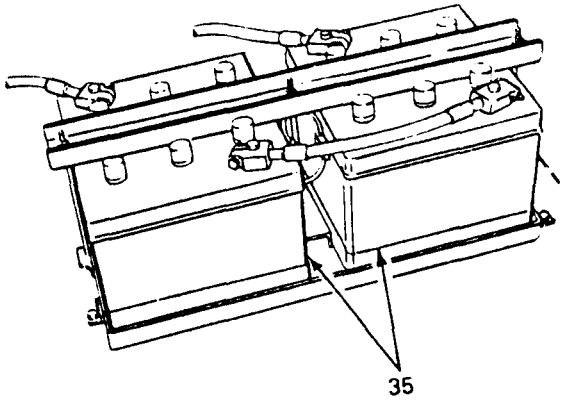 	
28				●		FIRE EXTINGUISHER Inspect and weigh fire extinguisher. (See paragraph 3-1 1).	
29				●		TRAILER FRAME Inspect entire chassis frame for damage, cracks, and broken welds.	Frame is obviously broken or cracked,
30	●					COOLANT LEVEL Check level of fluid in cooling system, Proper level is 2 inches below over flow pipe. Add coolant as required.	

Section IV. TROUBLESHOOTING

3-10. Power Unit Troubleshooting. There are no troubleshooting procedures authorized at operator level for the power unit end item. Troubleshooting procedures for the individual generator set and trailer are contained in their respective technical manuals referenced below.

a. Generator Set Troubleshooting. Refer to TM 5-6115-464-12 for troubleshooting procedures applicable to the generator set.

b. Trailer Troubleshooting. Refer to TM 9-2330-205-14&P for troubleshooting procedures applicable to the trailer.

Section V. OPERATOR/CREW MAINTENANCE

3-11. Fire Extinguisher Maintenance.

CAUTION

Do not attempt to verify readiness of fire extinguisher by partially discharging unit. Any discharge of contents will require refilling.

The PU-405A/M Power Unit is equipped with a 5 lb C02 fire extinguisher. Maintenance is limited to weighing the fire extinguisher monthly to insure that it is sufficiently charged. Fully charged, the fire extinguisher weighs 13 lbs. Send the unit to specialized activity for recharging if it weighs 12.5 lb or less.

CHAPTER 4

UNIT MAINTENANCE

Section I. SERVICE UPON RECEIPT OF EQUIPMENT

4-1. Inspecting and Servicing Equipment. The power unit is unpacked, inspected, and serviced as described in the following paragraphs. Unpacked equipment must be checked against the Equipment Packing List to ensure completeness. Discrepancies must be reported in accordance with instructions in DA Pam 736-750.

a. Unpacking Power Unit. (See figures 4-1 and 4-2.) The generator set is packed in place on the trailer frame. Before beginning the unpacking procedure, locate, remove, and save the waterproof envelopes marked Depreservation Guide.

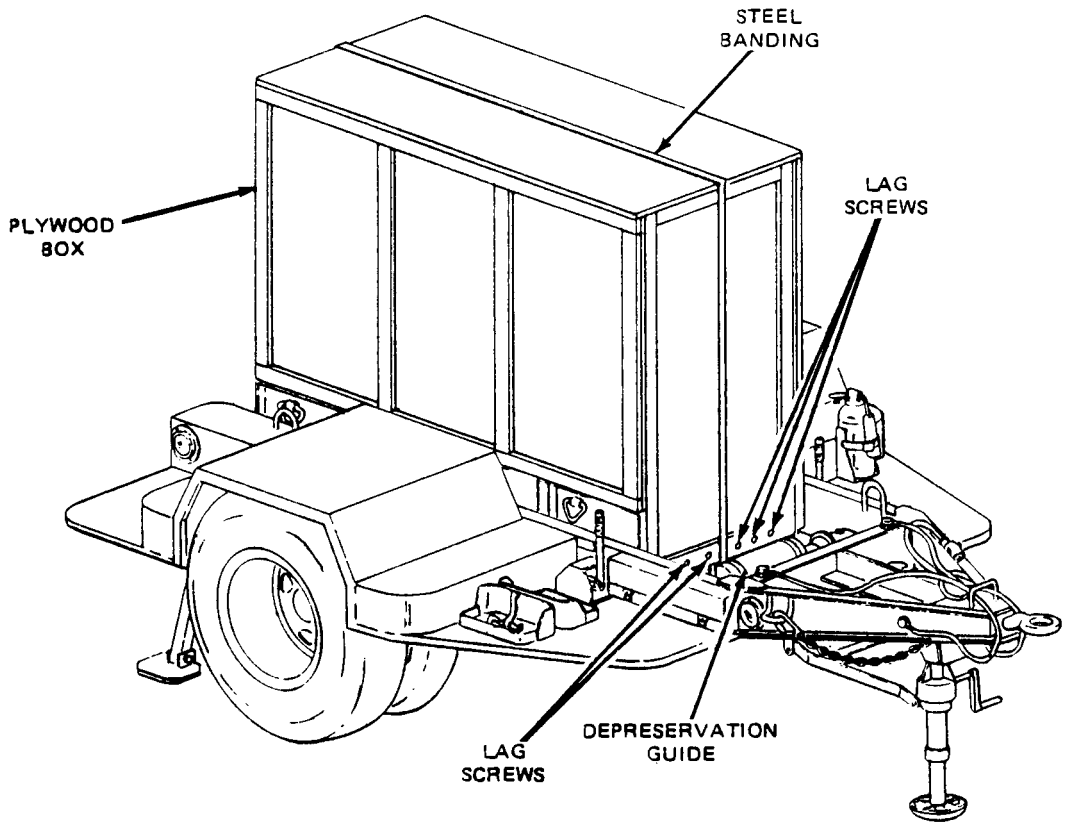

Figure 4-1. Power Unit Packed for Shipment.

WARNING

The steel banding used in packaging of power unit has sharp edges. Care should be taken when cutting and handling banding to avoid injury to personnel.

(1) Remove steel banding around plywood box covering generator set.

(2) Remove lag screws securing plywood box cover over generator set and lift cover off generator.

(3) Remove wooden wedges and spacers from around generator set base.

(4) Remove and save package of technical manuals secured to barrier material covering generator.

(5) Remove four sets of attaching hardware and drop plywood cover from beneath generator set.

(6) Remove barrier material and fiberboard caps from generator set.

(7) Remove packaged fire extinguisher from within generator set enclosure. Unpack and secure fire extinguisher in bracket on front roadside step.

(8) Remove steel banding around accessory box, unpack, and inventory contents.

(9) Refer to DA Form 2258, Depreservation Guide for Vehicles and Equipment, packed with power unit and follow instructions given for putting unit in service.

(Io) Stow technical manuals in box on inside of generator set enclosure rear curbside door.

(11) Stow all authorized accessories in accessory box.

b. Inspection and Servicing ot Generator Set. Refer to Servicing Upon Receipt of Materiel in TM 5-6115-464-12 for initial inspection and servicing procedures.

c. *Inspection and Servicing of Trailer.* Refer to Servicing Upon Receipt of Materiel in TM 9-2330-205-14&P for initial inspection and servicing procedures.

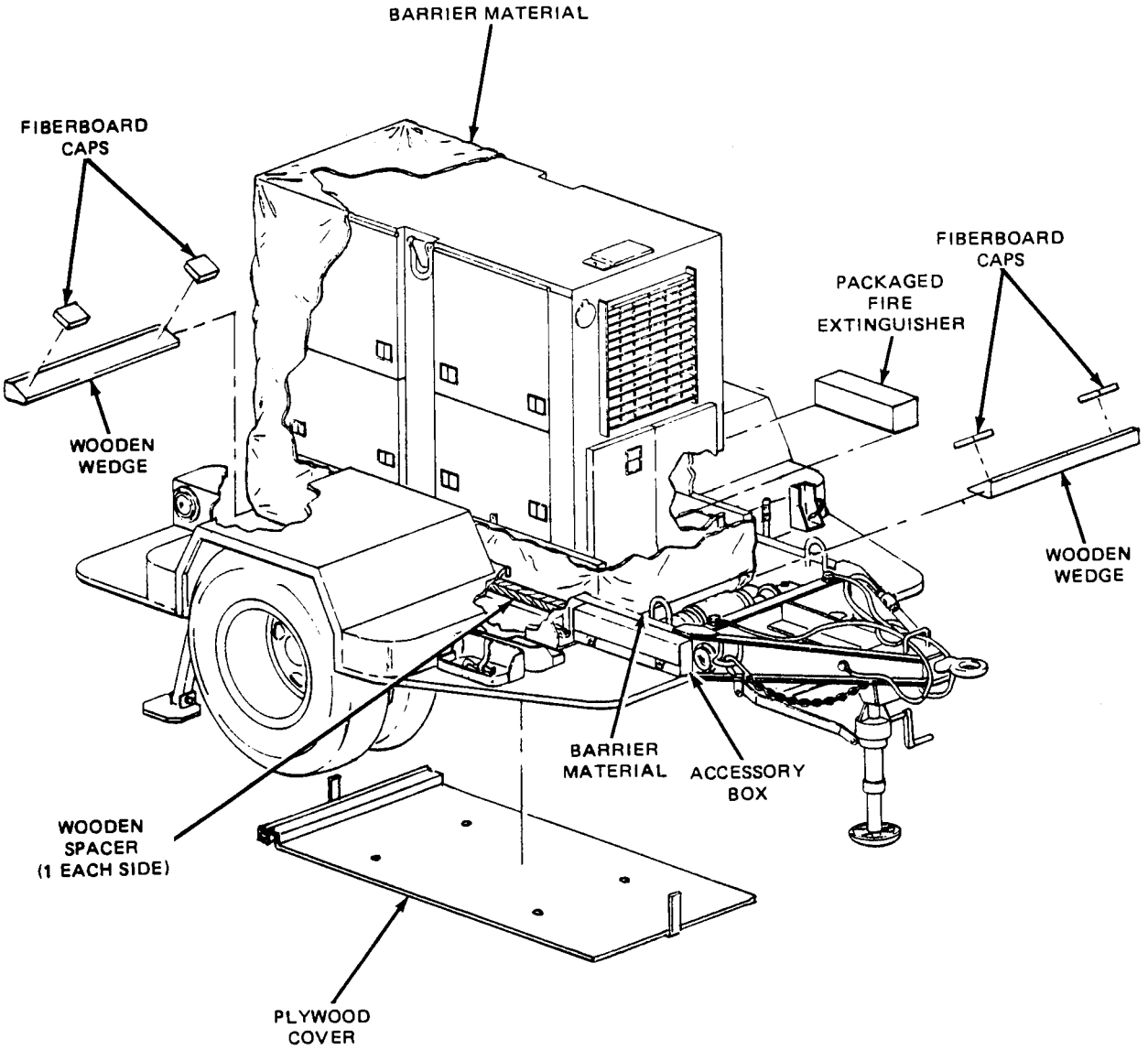

Figure 4-2. Unpacking Power Unit.

4-2. Installation. (See figure 4-3.) Installation of the power unit at a worksite involves positioning the trailer and grounding the power unit.

a. Positioning Power Unit. Position the power unit on the worksite as follows:

(1) Select an area as level as possible to install power unit and position trailer,

(2) Set trailer handbrakes and lower trailer landing leg.

(3) Chock both sets of wheels.

(4) Lower both rear leveling jacks, secure leveling jacks with lockpins, and extend lower tubes by stepping on hinged pads.

WARNING

Remove fire extinguisher and fuel cans from power unit when generator set is in operation. This will insure that in the event of fire extra fuel will not be involved and extinguisher will remain accessible.

(5) Locate fuel cans and fire extinguisher on ground away from power unit.

WARNING

Do not operate generator set until power unit is properly grounded (paragraph 4-2, b.). Serious injury or death by electrocution can result from operating an ungrounded power unit.

CAUTION

To avoid damage to equipment, make certain of voltage, frequency, and phase requirements of load being connected to generator set.

(6) Connect power unit to system or equipment to be powered. Refer to TM5-6115-464-12 and generator set load terminal board data plate. Data plate is located on inside of generator enclosure door near load terminals.

(7) Remove two platform anchor quick-release pins and lower personnel platform.

(8) Close all doors on generator set enclosure except control panel doors and the two doors immediately below the control panel.

b. Grounding. Check that generator set is grounded to GROUND TERMINAL stud on trailer frame. Using ground wire supplied with power unit, connect power unit GROUND TERMINAL to a suitable ground as described below. The following sources of a good ground are listed in order of preference.

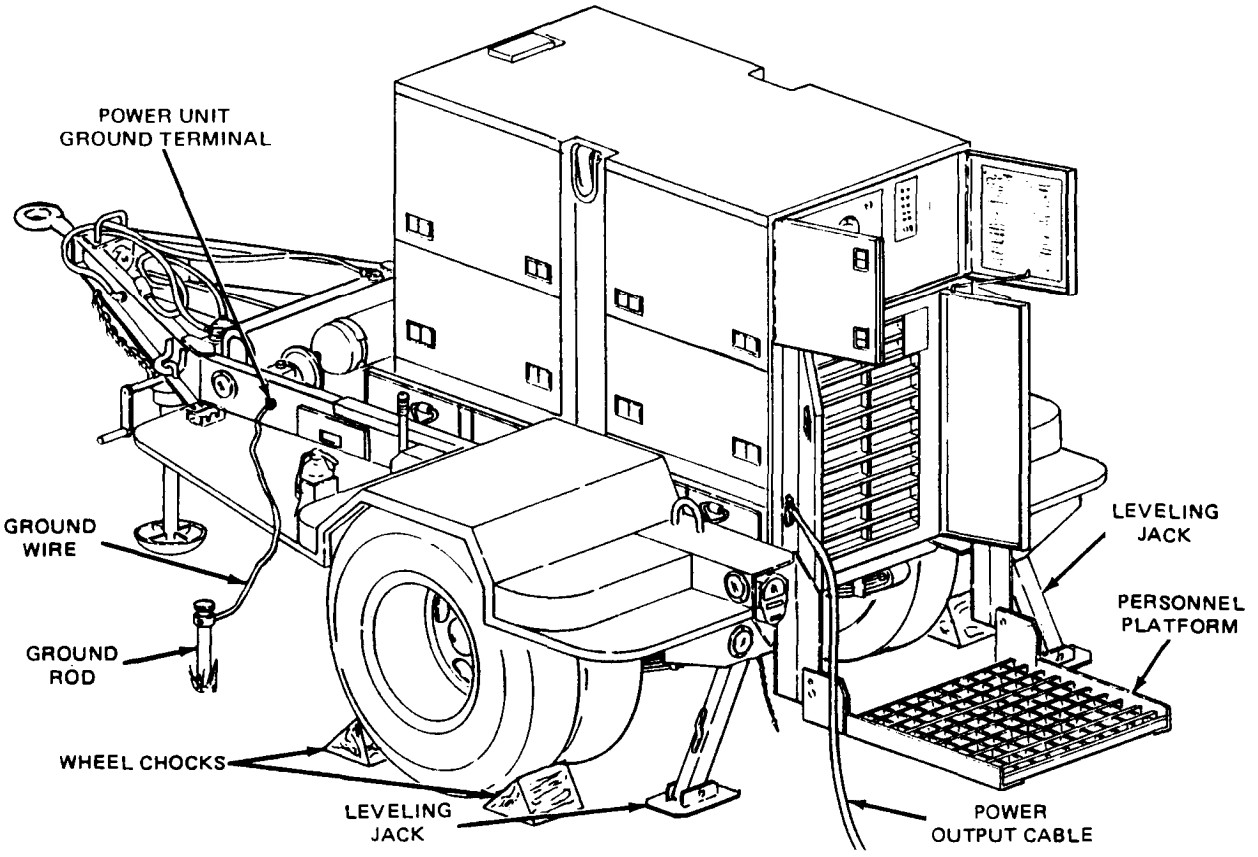

Figure 4-3. Installing Power Unit.

NOTE

As a substitute for the supplied ground wire, any copper wire of at least No. 6 AWG maybe used.

(1) Underground water system. Ground power unit to one of the accessible pipes in an underground water system. Make certain underground pipe is made of metal and there is no insulation, such as a water meter, between ground wire and the earth.

(2) Ground rod. Drive ground rod a minimum of eight feet into earth. A ground rod must have a minimum diameter of 5/8-inch, if solid, or 3/4-inch if pipe.

NOTE

It maybe necessary to saturate the area around ground rod with water if soil conditions are dry.

(3) Ground plate. Ground power unit to a metal plate buried four feet deep. Ground plate should cover a minimum area of nine square feet.

c. *External Fuel Line Connection. (See* figure 4-4). The power unit generator set can be fueled from an external source such as a five-gallon fuel can or 55 gallon drum. This eliminates the need for frequent refilling of the generator's fuel tank during long intervals of operation.

(1) Remove fuel can adapter and fuel pickup tube from storage locations on power unit and assemble by threading pickup tube into adapter.

(2) Thread one end of auxiliary fuel line onto fuel can adapter fitting and tighten.

(3) Connect free end of auxiliary fuel line to AUXILIARY FUEL CONNECTION. This connection is located next to the fuel filler above the trailer roadside fender.

(4) Insert fuel can adapter in external fuel source and secure by pressing down on lever.

(5) Set FUEL SELECTOR VALVE beneath fuel filler, to AUXILIARY position.

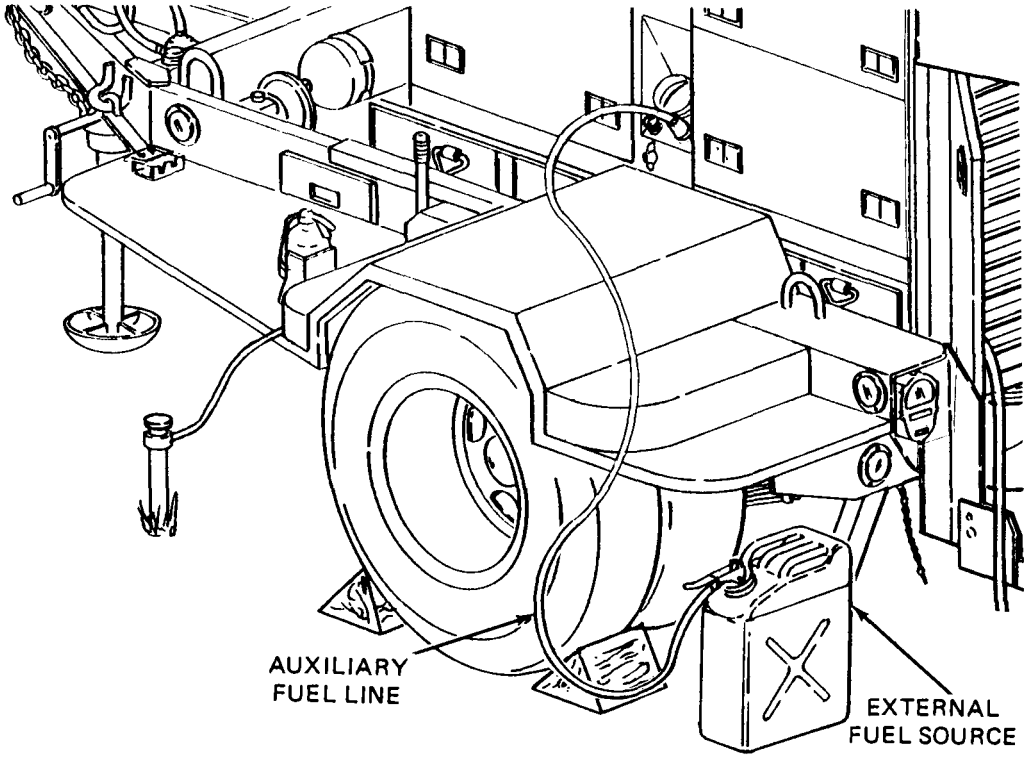

Figure 4-4. External Fuel Line Connection.

Section II. MOVEMENT TO A NEW WORKSITE

4-3. Dismantling for Movement. Because the power unit is designed to be mobile, a minimum amount of effort is required to relocate to a new worksite. Procedures are as follows:

a. Disconnect power unit from system or equipment being powered.

b. Disconnect ground cable from source of ground and from power unit GROUND TERMINAL. Roll up cable and store in accessory box.

c. Using slide hammer, remove ground rod. Disassemble, clean, and stow ground rod in accessory box.

d. Disconnect power unit from external fuel source, if applicable.

e. Stow any remaining authorized equipment in accessory box.

f. Secure fire extinguisher and fuel cans in their respective mounting brackets.

g. Close all doors on the generator set enclosure.

h. Swing personnel platform up into traveling position and secure with two platform anchor quick-release pins.

WARNING

Use care when releasing spring-loaded lower tube of leveling jacks. The lower tube will return to retracted position with considerable force and can cause injury.

i. Retract lower tubes of leveling jacks. Swing leveling jacks up into traveling position and secure with lockpins.

j. Remove wheel chocks.

k. Attach power unit to towing vehicle. Refer to TM 9-2330-205-14&P.

l Release trailer handbrakes.

4-4. Reinstallation After Movement. After movement to a new worksite, install power unit in accordance with paragraph 4-2.

Section III. REPAIR PARTS, SPECIAL TOOLS, SPECIAL TEST, MEASUREMENT AND DIAGNOSTIC EQUIPMENT (TMDE)

4-5. Tools and Equipment. There are no special tools or equipment required to maintain the PU 405A/M power unit.

4-6. **Maintenance Repair Parts.** Repair parts and equipment for maintenance of this power unit are listed and illustrated in the repair parts and special tools list in Appendix D of this manual.

Section IV. LUBRICATION INSTRUCTIONS

4-7. **General.** Detailed instructions for the lubrication of the major components of the power unit are contained in the applicable Lubrication Orders (LO's). Refer to DA Pam 310-1 to ensure that the latest editions of the L.O.'S are used. This section contains lubrication instructions that are not included in the Lubrication Orders.

4-6. **Generator Lubrication.** Refer to TM 5-6115-464-12 for generator set Lubrication Order.

a. Trailer Lubrication. Refer to TM 9-2330-205-14&P fort tailer Lubrication Order.

4-9. Trailer Assembly Lubrication.

b. Personnel Platform Lubrication. The personnel platform is a modification to the standard M200A1 trailer and, as such, does not appear in the associated L.O. Lubricate the personnel platform semiannually as follows:

WARNING

Clean parts in a well-ventilated area. Avoid inhalation of solvent fumes and prolonged exposure of skin to cleaning solvent. Wash exposed skin thoroughly. Dry cleaning solvent (P-D-680) used to clean parts is potentially dangerous to personnel and property. Do not use near open flame or excessive heat. Flash point of solvent is 100° F. to 138° F. (38° C. to 59° C.).

(1) Using P-D-680, or equivalent, clean area to be lubricated.

(2) Apply OE lubricating oil to personnel platform pivot points and to platform anchor quick-release pins.

Section V. PREVENTIVE MAINTENANCE CHECKS AND SERVICES

NOTE

The PMCS chart in this section contains all necessary Unit preventive maintenance checks and services for this equipment.

4-10. General. The trailer assembly and generator set must be inspected and serviced systematically to insure that the power unit is ready for operation at all times. Inspection will allow defects to be discovered and corrected before they result in serious damage or failure. Table 4-1 contains a tabulated list of preventive maintenance checks and services to be performed by unit maintenance personnel. All of the unit PMCS on the trailer is scheduled to be performed semiannually. Unit PMCS on the generator set is scheduled weekly or on a per-hours-of-operation basis. The running time meter on the control panel is used to determine the generator set operating time. Using the following as a guide, do the checks and services at the intervals shown. Observe all CAUTIONS and WARNINGS.

a. For PMCS performed on an operating time basis, perform your hourly (H) PMCS as close as possible to the time intervals indicated.

NOTE

For units in continuous operation, perform PMCS before starting operation if continuous operation will extend service interval past that which is shown.

b. Perform your weekly (W) PMCS every week or 40 hours of generator set operating time.

c. Perform your monthly (M) PMCS every month or 100 hours of generator set operating time.

d. Do your semiannual (S) PMCS once every six months or 500 hours of generator set operating time.

e. Do your annual (A) PMCS once every year or 500 hours of generator set operating time.

f. If you discover a problem with the equipment, refer to Section VI, Troubleshooting, If you cannot correct the problem, refer to paragraph 4-12, Reporting Deficiencies.

4-11. Explanation of Columns. The following is a list of the PMCS table column headings with a description of the information found in each column,

a. Item No. This column shows the sequence in which the checks and services are to be done, identify the equipment area on the Equipment Inspection and Maintenance Worksheets, DA Form 2404.

b . Interva/. This column shows when each check is to be done.

c. *Item to be Inspected.* This column identifies the generai area or specific part where the check or service is to be done.

d. Procedures. This column lists the checks or services you have to do and explains how to do them.

4-12. Reporting Deficiencies. If you discover any problem with the equipment during PMCS that you are unable to correct, it must be reported. Refer to DA Pam 738-750 and report the deficiency using the proper forms.

Table 4-1. Unit Preventive Maintenance Checks and Services (PMCS).

H – Hours of operation (As indicated) **W -- Weekly (40 hours)** **M – Monthly (100 hours)** **S – Semiannually (500 hours)** **A – Annuallv (10000 hours)**

Item no.	Interval					Item to be Inspected	Procedures
	H	W	M	S	A		
							WARNING Before performing any maintenance that requires climbing on or under trailer, set trailer handbrakes, chock wheels and lower rear leveling jacks. Injury to personnel could result from trailer suddenly rolling or tipping.
1			●			Generator Set Exterior	Inspect generator for fuel and oil leaks leaks, loose or missing components and hardware, and unusual wear or deterioration. Clean generator set.

Table 4-1. Unit Preventive Maintenance Checks and Services (PMCS). – CONT.

H - Hours of operation (As indicated) W -- Weekly (40 hours) M – Monthly (100 hours) S – Semiannually (500 hours) A – Annually (1000 hours)

Item no.	Interval					Item to be Inspected	Procedures
	H	W	M	S	A		
							NOTE Fuel system must be above freezing temperature when draining water and sediment from strainer, filters and than.
2			●			Fuel Strainer and Filters	Open drainings on fuel strainer and primary and secondary fuel filters. Drain water and sediment. Allow to drain until fuel runs clean.
3			●			Fuel Tanks	Open drains on main fuel tank and day tank. Drain water and sediment. Allow to drain until fuel runs clean.
4				●		Fuel Pumps	Clean or replace, as necessary, fuel strainer in bottom of fuel pump.
5	100		●			Batteries	Perform a hydrometer test on batteries every 100 hours. Refer to TM 5-611-5-464-12 for test procedures.
6	100					V-Belt	Inspect for worn, frayer, cracked or oil-soaked belt. Check adjustment. If necessary, adjust for a 1/2-inch deflection when belt is depressed at a point midway between alternator and water pump pulley.
7	100					Fuel Filters	Replace filter elements every 100 hours of operation,
8	300					Fuel Strainer	Clean fuel strainer every 300 hours of operation.
9	300					Lubricating Oil and Filters	Change lubricating oil and filters every 300 hours of operation or six months.
10	300					Breather and Breather Tube	Inspect for damage. Clean breather and tube at oil change interval.

Table 4-1. Unit Preventive Maintenance Checks and Services (PMCS). – CONT.

H. – Hours of operation (As indicated) | W -- Weekly (40 hours) | M - Monthly (100 hours) | S – Semiannually (500 hours) | A - Annually (1000 hours)

Item no.	Interval					Item to be Inspected	Procedures
	H	W	M	S	A		
11	AR					Air Cleaner	Clean air cleaner element whenever necessary as indicated by air filter condition indicator light.
12				●		Taillights	Replace any broken or cracked lenses or defective bulbs.
13				●		Intervehicular Cable	Check for cuts, breaks, frayed wires and damaged plug.
14				●		Lunette Eye	Check security of mounting. Inspect for excessive wear.
15				●		Safety Chains	Inspect for broken links or missing chains(s).
16				●		Reflectors	Replace any cracked, broken or missing reflectors.
17				●		Data Plates and Markings	Make sure data plates are legible and securely mounted. Replace illegible data plates.
18				●		Landing Leg	Inspect landing leg and brace for bent or broken parts.
19				●		Leveling Jacks	Inspect leveling jacks for bent or broken parts.
20				●		Suspension Assemblies	a. Inspect shackles, bearings, pins, leaf springs and spring eyes for damage and broken parts. b. Inspect mounting brackets for cracks or loose or missing hardware.
21				●		Axle	a. Check for damaged axle tube. b. Check for loose or missing U-bolts or nuts.

Table 4-1. Unit Preventive Maintenance Checks and Services (PMCS). –CONT.

H – Hours of operation (As indicated) W -Weekly (40 hours) M - Monthly (100 hours) S - Semiannually (500 hours) A - Annually (1000 hours)

Item no.	Interval					Item to be Inspected	Procedures
	H	W	M	S	A		
22				●		Wheels and Tires	a. Check serviceability of tires as indicated in TM 9-2610-220-24. b. Tighten wheel stud nuts to 450 to 500 ft-lb (611 to 678 N.m).
23				●		Brakes	a. Inspect brake linings for wear. Replace if brake shoe lining is less than 1/8-inch (3.2 mm) thick. b. Inspect brake adjusting screw, retaining pins, springs, and clips for corrosion and wear. c. Inspect hydraulic wheel cylinders for leaks, d. Adjust brakes.
24					●	Wheel Bearings	Clean and repack wheel bearings.
25				●		Hydraulic Brake Hoses and Fittings	Inspect for dents, cracks, loose connections and leaks.
27				●		Brake Master	Check fluid level. Fill to 1/2 inch from top.
28				●		Trailer Road Test	Perform road test paying special attention to items that were repaired or adjusted, in accordance with TM 9-2330-205-14&P.

Section VI. TROUBLESHOOTING

4-13. Power Unit Troubleshooting. There are no troubleshooting procedures authorized at unit level for the power unit end item. Troubleshooting procedures for the individual generator set and trailer are contained in their respective technical manuals referenced below.

a. *Generator Set Troubleshooting.* Refer to TM 5-6115-464-12 for troubleshooting procedures applicable to the generator set.

b. Trailer Troubleshooting. Refer to TM 9-2330-205-14&P for troubleshooting procedures applicable to the trailer.

Section VII. RADIO INTERFERENCE SUPPRESSION

4-14. General Methods Used to Attain Proper Suppression. Essentially, suppression is attained by providing a low resistance path to ground for stray currents. The methods used include shielding ignition and high-frequency wires, grounding the frame with bonding straps, and using filtering systems.

4-15. **Radio interference Suppression Components.** All component parts on the power unit end item, whose primary or secondary function is radio interference suppression, are on the generator set. Refer to TM 5-6115-464-12 for location of radio interference suppression components.

Section VIII. MAINTENANCE OF POWER UNIT TRAILER

4-16. General. This section of the manual contains unit level maintenance procedures for components of the M200A1 trailer added when the trailer is used as part of the PU-405A/M power unit. These components are not covered in the overall trailer maintenance manual. For all other unit maintenance procedures on the trailer, refer to TM 9-2330-205-14&P.

WARNiNG

Before performing any maintenance that requires climbing on or under trailer, set trailer handbrakes, chock both wheels, and lower rear leveling jacks. injury to personnel could result from trailer suddenly rolling or tipping.

4-17. Fuel Can Bracket Replacement. (See figure 4-5.) There are two fuel can brackets supplied with the PU-405A/M. The brackets are mounted on top of the curbside front step. Replacement procedures described below are the same for both.

a. Removal.

(1) Remove four screws (1, figure 4-5) four nuts (2) and four flat washers (3) securing bracket (4) to step (5).

(2) Remove bracket (4) from step (5).

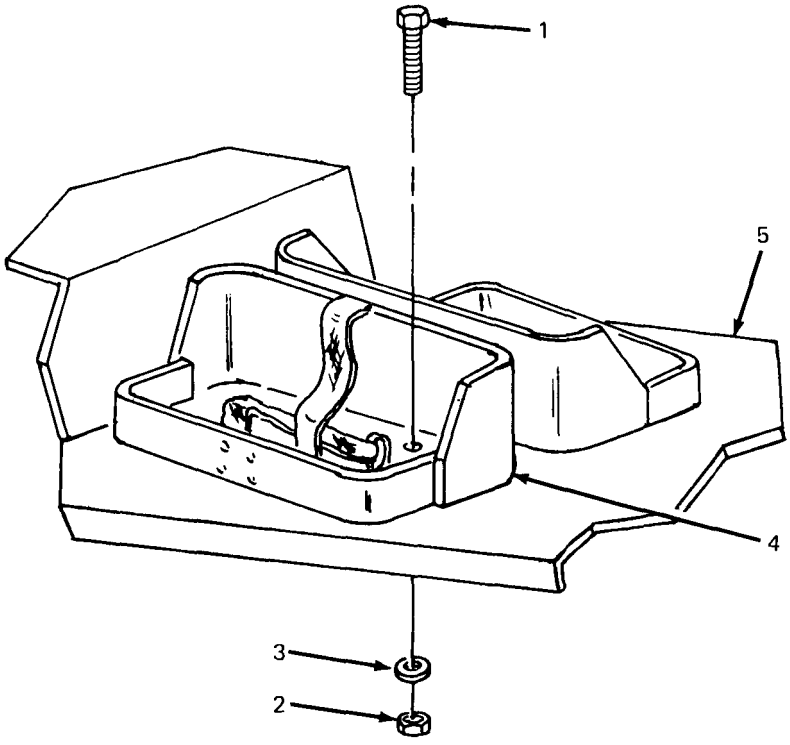

Figure 4-5. Fuel Can Bracket Replacement.

b. Installation.

(1) Position fuel can bracket *(4)* on step (5).

(2) Insert four screws (1) down through bracket (4) and through step (5).

(3) Install one washer (3) and one nut (2) on each screw (1). Tighten hardware to secure bracket (4).

4-18. Accessory Box Replacement. (See figure 4-6). The accessory box is mounted to the trailer frame at the curbside front step.

a. Removal.

(1) Remove three screws (1, figure 4-6), three flat washers (2), and three nuts (3) securing accessory box (4) to trailer frame (5).

(2) Slide accessory box (4) forward and off of front step (6).

b. Installation.

(1) Position accessory box (4) on front trailer step (6) with narrow end between handbrake lever (7) and trailer frame (5).

(2) Lift accessory box (4) so that top of box contacts lip of trailer frame (5).

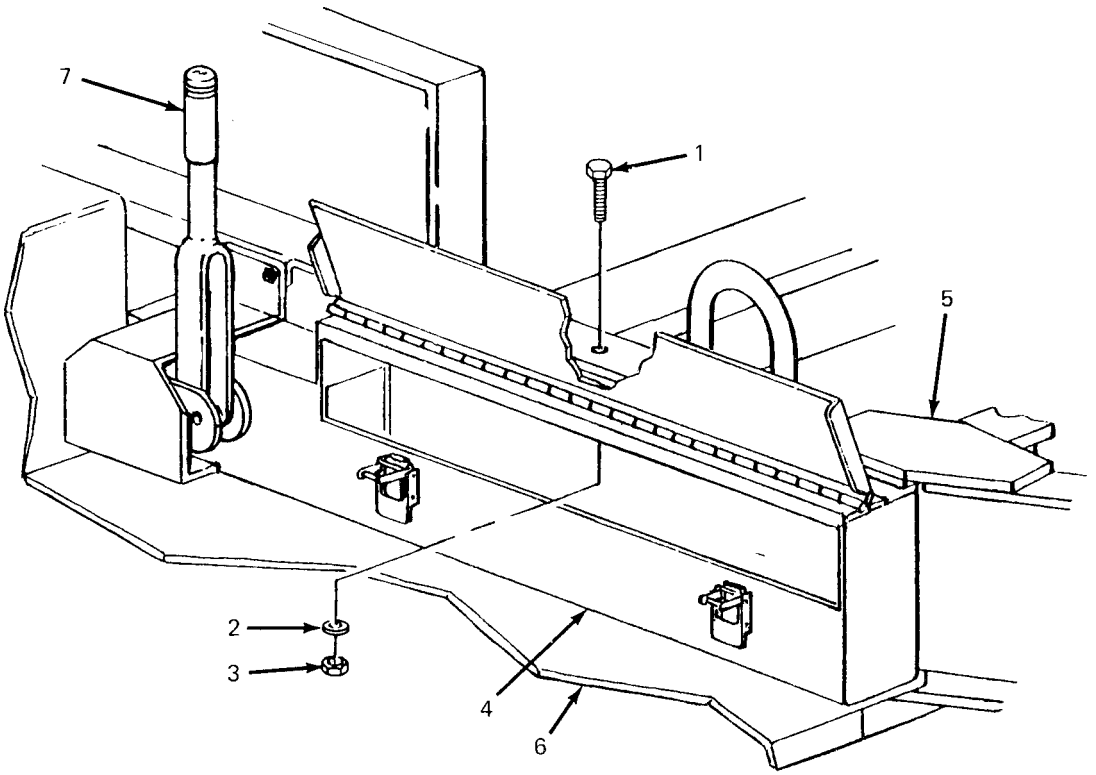

Figure 4-6. Accessory Box Replacement.

(3) Insert three screws (1) down through trailer frame (5) into accessory box (4).

(4) Install one nut (3) and one washer (2) on each screw (1) and tighten.

4-19. Fire Extinguisher Bracket Replacement. (See figure 4-7.) The fire extinguisher supplied with the power unit is carried in a bracket mounted on the trailer front roadside step.

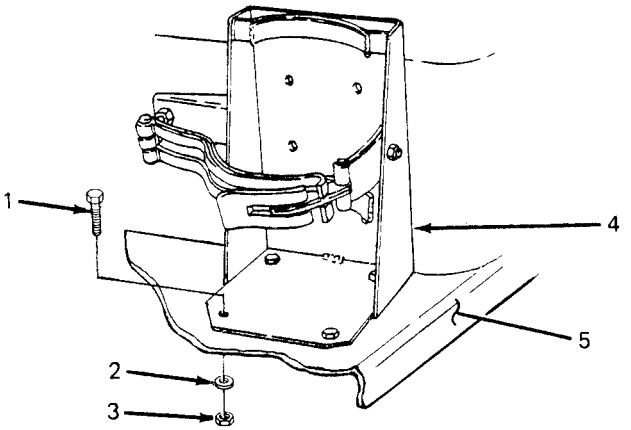

Figure 4-7. Fire Extinguisher Bracket Replacement.

a. Removal.

(1) Remove four screws (1, figure 4-7), four flat washers (2), and four nuts (3) securing bracket (4) to step (5).

(2) Remove bracket (4) from step (5).

b. Installation.

(1) Position fire extinguisher bracket (4) on step (5).

(2) Insert four screws (1) down through bracket (4) and through step (5).

(3) Install one washer (2) and one nut (3) on each screw (1). Tighten hardware to secure bracket (4).

4-20. Front Steps Replacement. (See figure 4-8.) The roadside and curbside front steps are symmetrical, and replacement procedures are the same except where noted in the steps below.

a. Removal.

NOTE

When removing roadside front step, omit steps (1) and (2).

(1) Remove fuel can brackets (paragraph 4-17, a).

(2) Remove accessory box (paragraph 4-18, a).

(3) Remove cotter pin (1, figure 4-8) and clevis pin (2) securing handbrake cable (3) to handbrake lever mechanism (4).

(4) Remove two screws (5), two flat washers (6) and two nuts (7) securing handbrake bracket (8) to trailer frame (9).

(5) Remove two screws (10), two flat washers (11) and two nuts (12) securing handbrake cable bracket (13) to front step (14).

NOTE

There are two screws, flat washers, and nuts securing handbrake bracket to front step. It is only necessary to remove one set of attaching hardware to remove front step from trailer frame.

(6) Remove screw (15), flat washer (16), lockwasher (17) and nut (18) directly beneath pivot point of handbrake lever (4).

(7) Remove seven screws (19), 14 flat washers (20) and seven nuts (21) securing front step (14) to front edge of fender (22).

(8) Remove four screws (23, 24 and 25), eight flat washers (26) and four nuts (27) securing front step (14) to edge of trailer frame (9).

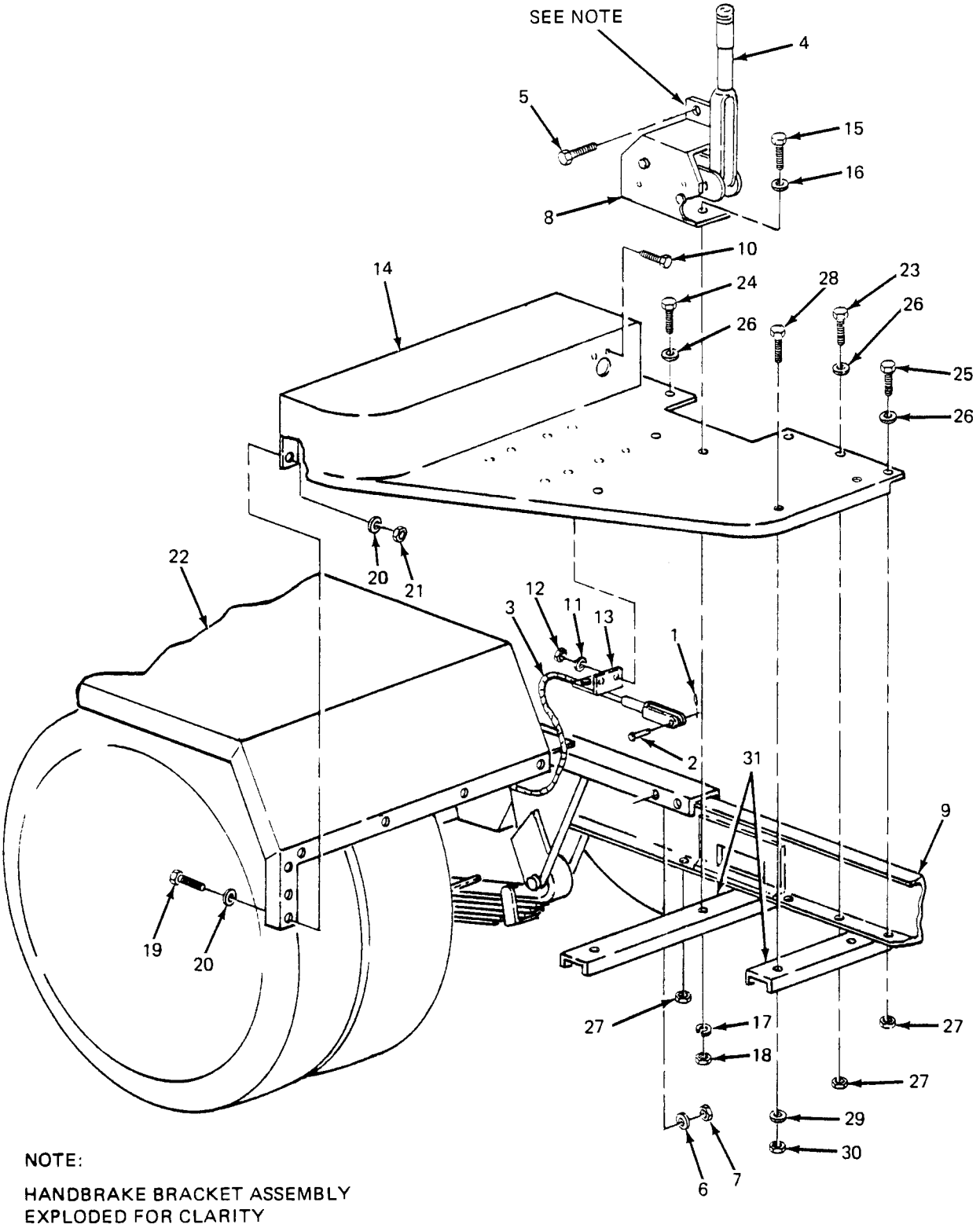

NOTE:

HANDBRAKE BRACKET ASSEMBLY
EXPLODED FOR CLARITY

Figure 4-8. Front Steps Replacement.

(9) Remove three screws (28), three flat washers (29) and three nuts (30) securing front step (14) to trailer cross braces (31) and remove front step.

b. Installation.

NOTE

Three different size screws are used to mount the front step. Screws with index numbers (5), (10), (18) and (23) in figure 4-8 are one inch long. Screw with index number (24) is 1-1/4 inch long. Screws with index numbers (15), (22) and (27) are 1-3/4 inch long. Observe lengths and locations when installing hardware.

(1) Position front step (14) on cross braces (31) and trailer frame (9). Insert handbrake cable with clevis (3) through hole in front step (14).

(2) Insert four screws (23, 24 and 25) with flat washers (26) through front step (14) and trailer frame (9).

(3) Insert three screws (28) with flat washers (29) through front step (14) and trailer cross braces (31).

(4) Working under step, install one nut (30) on each screw (28) securing front step (14) to cross braces (31), and install one flat washer (26) and one nut (27) on each screw (23, 24 and 25) securing step to trailer frame (9). Tighten seven sets of hardware.

(5) Secure front step (14) to fender (22) with seven screws (19), 14 flat washers (20) and seven nuts (21).

(6) Insert screw (15) with flat washer (16) through handbrake bracket (8), front step (14) and cross brace (31). Install lockwasher (17) and nut (18) on screw from underneath and tighten.

(7) Insert two screws (5) with flat washers (6) through handbrake bracket (8) and trailer frame (9). Install one nut (7) on each screw and tighten.

(8) Insert two screws (10) through front step (14) and handbrake cable bracket (13). Install one flat washer (11) and one nut (12) on each screw and tighten.

(9) Position clevis on handbrake cable (3) on handbrake lever mechanism (4). Insert clevis pin (2) and secure with cotter pin (1).

NOTE

When installing roadside front step, omit steps (10) and (11).

(10) Install accessory box (paragraph 4-18, b).

(11) Install fuel can brackets (paragraph 4-17, b).

4-21. Rear Steps Replacement. (See figure 4-9.) The roadside and curbside rear steps are symmetrical, and replacement procedures are the same for each.

a. Removal.

(1) Remove two screws (1, figure 4-9), two flat washers (2) and two nuts (3) securing rear step bracket (4) and platform anchor (5) to trailer frame (6) under taillight (7).

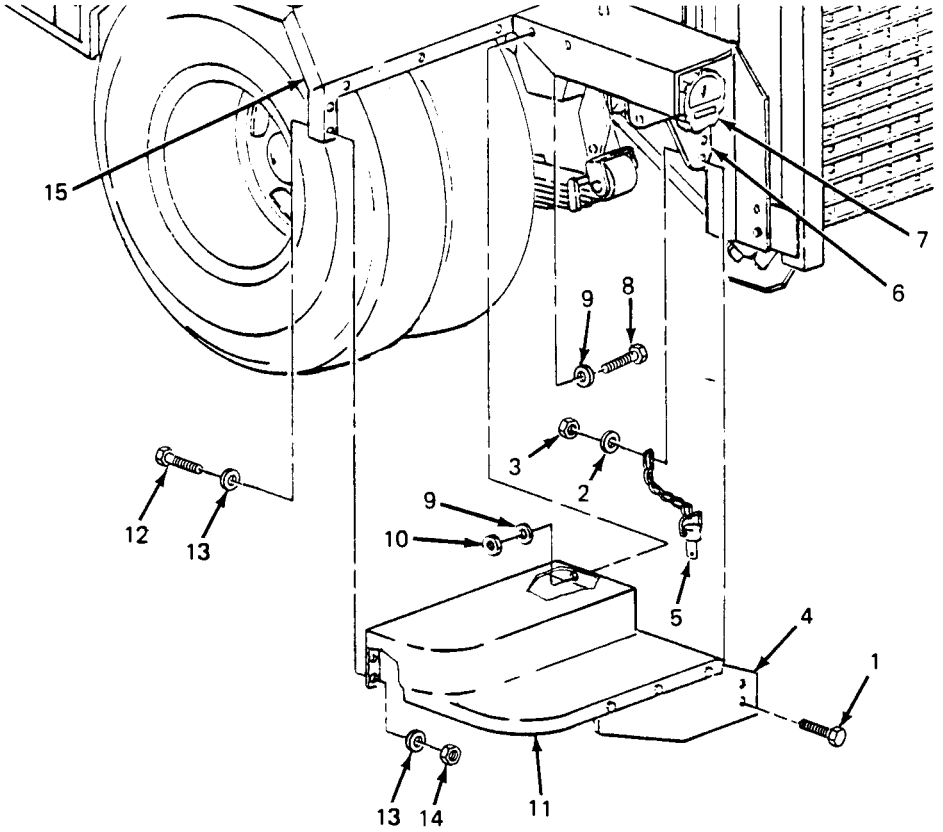

Figure 4-9. Rear Steps Replacement.

(2) Remove two screws (8), four flat washers (9) and two nuts (10) securing rear step (11) to trailer frame (6).

(3) Remove five screws (12), ten flat washers (13) and five nuts (14) securing rear step (11) to fender (15). Remove rear step from trailer.

b. Installation.

(1) Position rear step (11) on trailer frame (6).

(2) Secure rear step (11) to trailer frame (6) with two screws (8), four flat washers (9) and two nuts (10).

(3) Secure rear step (11) to fender (15) with five screws (12), ten flat washers (13) and five nuts (14).

(4) Aline two mounting holes in rear step bracket (4) with holes in trailer frame (6) under taillight (7') and insert two screws (1).

(5) Slide S-hook at chain end of platform anchor (5) onto threaded end of lower screw (1) inside trailer frame (6).

(6) Install one flat washer (2) and one nut (3) on each screw (1) and tighten.

4-22. Fender Replacement. (See figure 4-10.) The trailer assembly fenders are symmetrical, and replacement procedures are the same for each.

a. Removal.

(1) Remove five screws (1, figure 4-10), ten flat washers (2) and five nuts (3) securing fender (4) to trailer frame (5).

WARNING

There are five sets of hardware securing fender to rear step and seven sets of hardware securing fender to front step. This hardware should be removed in sequence from trailer frame outward. In this way, last two screws on front and rear lower fender edge will support fender until you are out from underneath.

(2) Remove six screws (6), 12 flat washers (7) and six nuts (8) securing fender (4) to front step (9).

(3) Remove fours screws (10), eight flat washers (11) and four nuts (12) securing fender (4) to rear step (1 3).

WARNING

Support fender while removing remaining two screws. When screws are removed, fender will drop.

(4) Remove one screw (6), two flat washers (7) and one nut (8) securing fender (4) to front step (9).

(5) Remove one screw (10), two flat washers (11) and one nut (12) securing fender (4) to rear step (13).

(6) Remove fender (4).

b. Installation.

(1) Position fender (4) on trailer.

(2) Insert one screw (10) with flat washer (11) through lower outside edge of fender (4) into rear step (13), and insert one screw (6) with flat washer (7) through lower outside edge of fender (4) into front step (9).

(3) Install one washer (11) and one nut (12) on screw (10), and one washer (7) and one nut (8) on screw (6). Tighten hardware.

(4) Insert five screws (1) with flat washers (2) down through fender (4) into trailer frame (5).

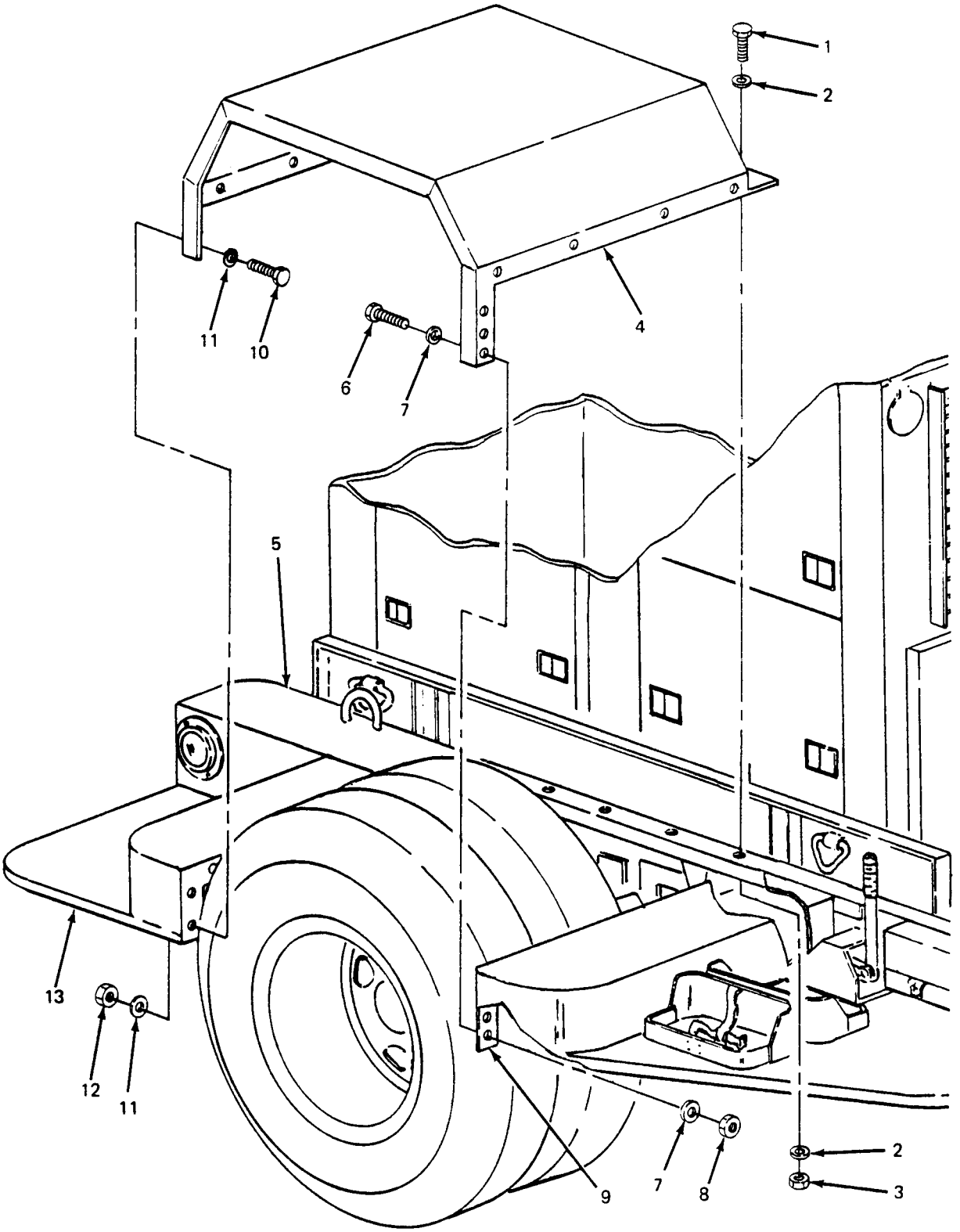

Figure 4-10. Fender Replacement.

(5) Working under fender, install one flat washer (2) and one nut (3) on each screw (1) and tighten.

(6) Insert six screws (6) with flat washers (7) through fender (4) into front step (9). Install one washer (7) and one nut (8) on each screw (6) and tighten.

(7) Insert four screws (10) with flat washers (11) through fender (4) into rear step (13). Install one washer (11) and one nut (12) on each screw (10) and tighten.

4-23. Personnel Platform Replacement. (See figure 4-1 1). The platform is mounted to the rear of the trailer to facilitate access to the generator set controls and indicators.

a. Removal.

(1) Remove two screws (1, figure 4-1 1), four flat washers (2) and two nuts (3) securing platform (4) to mounting brackets (5).

WARNING

Support platform while removing anchors. When anchors are removed, platform will drop.

(2) Remove two platform anchors (6) by pushing in on button on head of pin while pulling pin out of mounting hole.

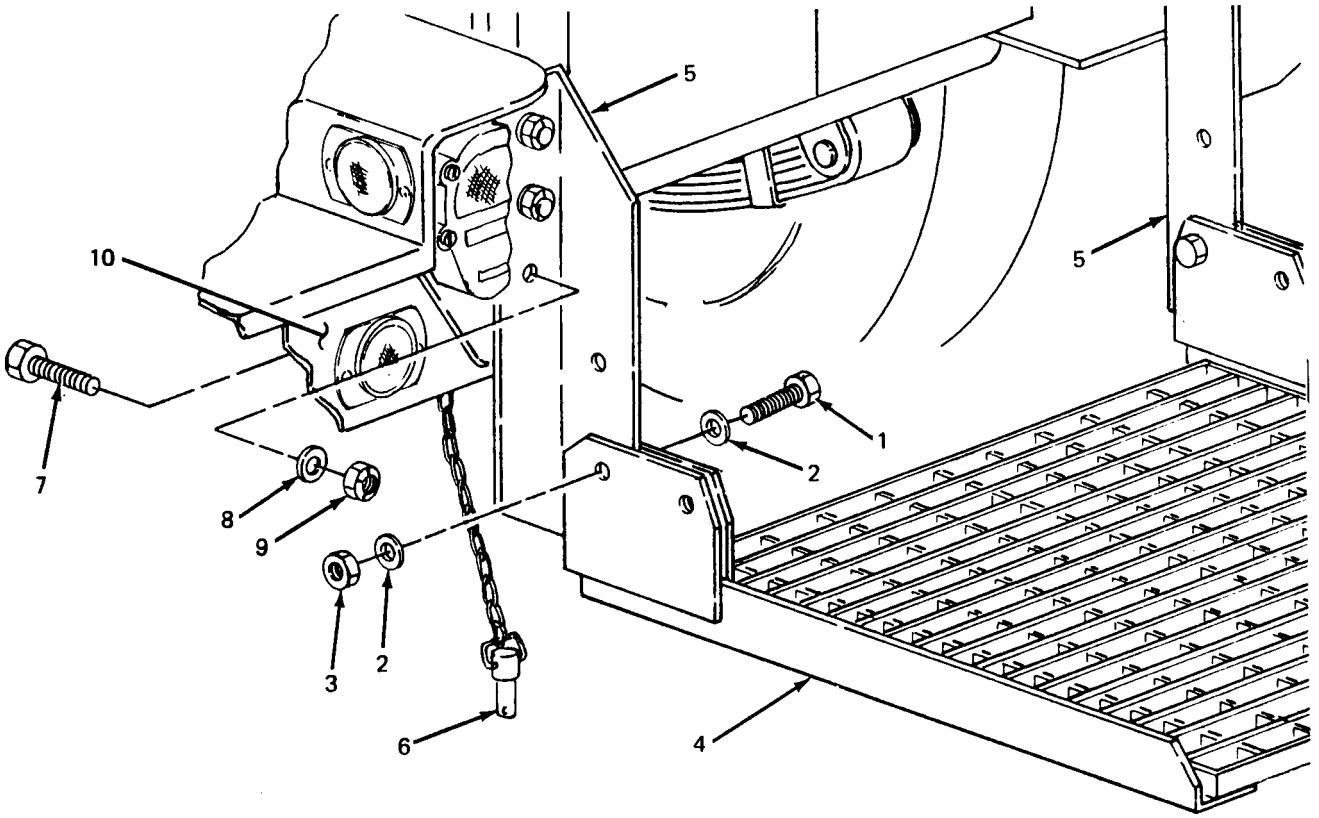

Figure 4-11. Personnel Platform Replacement.

NOTE

Mounting brackets are fastened with lock nuts. Removal may damage locking capability when reinstalled. Do not remove mounting brackets unless they are damaged.

(3) Remove three screws (7), three flat washers (8) and three nuts (9) from each mounting bracket (5) and take mounting brackets off of trailer frame (10).

b. Installation.

NOTE

If mounting brackets have not been removed, omit step (1).

(1) Position each mounting bracket (5) on trailer frame (10). Insert three screws (7) through frame into each bracket. Install one washer (8) and one nut (9) on each screw and tighten.

(2) Holding platform (4) in vertical position, position platform on mounting brackets (5) so that holes in platform line up with holes in brackets and install platform anchors (6) in upper mounting holes on each side of platform.

(3) Secure platform (4) to brackets (5) with two screws (1), four flat washers (2) and two nuts (3).

CHAPTER 5

INTERMEDIATE (FIELD) (DIRECT SUPPORT AND GENERAL SUPPORT) MAINTENANCE INSTRUCTIONS

Section I. INTRODUCTION

5-1. General. This chapter contains Intermediate Direct Support and General Support level maintenance procedures for components of the M200A1 trailer added when the trailer is used as part of the PU-405A/M power unit. These components are not covered in the overall trailer maintenance manual. For all other intermediate direct and general support maintenance procedures on the trailer, refer to TM 9-2330-205-14&P. For intermediate direct and general support maintenance procedures on the generator set, refer to TM 5-6115-464-34.

WARNING

Before performing any maintenance that requires climbing on or under trailer, set trailer handbrakes, chock wheels, and lower rear leveling jacks. Injury to personnel could result from trailer suddenly rolling or tipping.

Section II. MAINTENANCE OF POWER UNIT TRAILER.

5-2. Step and Fender Repair. Repair of the front and rear steps and the fenders is limited to straightening, welding and repainting. If required, repaint in accordance with MIL-T-704, Type F, Color Green, No. 383 of MIL-C-46168.

5-3. Accessory Box Repair. (See figure 5-1.) The accessory box is repaired by replacing the latch and strike assemblies. The box itself may be straightened, welded and repainted. If required, repaint in accordance with MIL-T-704, Type F, Color Green, No. 383 of MIL-C-46168. Replace latch and strike assemblies as follows:

a. Grind off or drill out solid rivets (1, figure 5-1) securing latch and strike assembly (2) to accessory box (3).

b. Position new latch and strike assembly (2) on accessory box (3) and secure with solid rivets (1).

c. Touch up with paint as required.

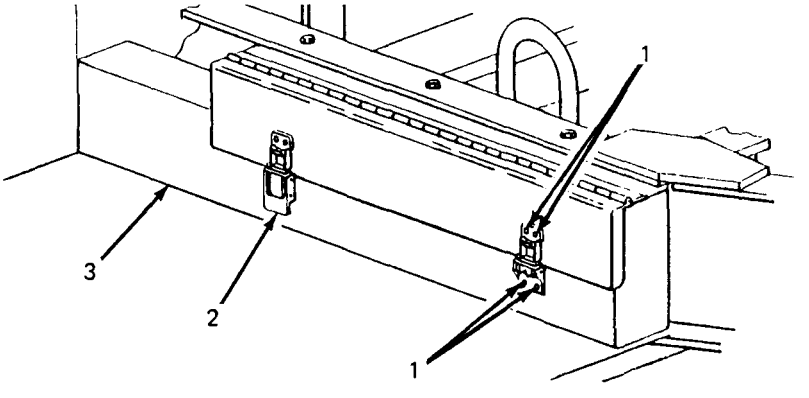

Figure 5-1. Accessory Box Repair.

5-4. Marking. (See figure 5-2.) The power unit four-digit registration number, preceded by the prefix "VD" and the words "U.S. ARMY", is marked in three places on the trailer. Marking is done in accordance with MIL-STD-642. On the fender, over each wheel, "T.P. 35 PSI" is marked in 1.00 ± .12 inch high characters in accordance with MIL-STD-130. Figure 5-2 shows the approximate location of markings on the power unit. If required, touch-up painting of the base color shall be done in accordance with MIL-T-704, Type F, Color Green, No. 383 of MIL-C-46168.

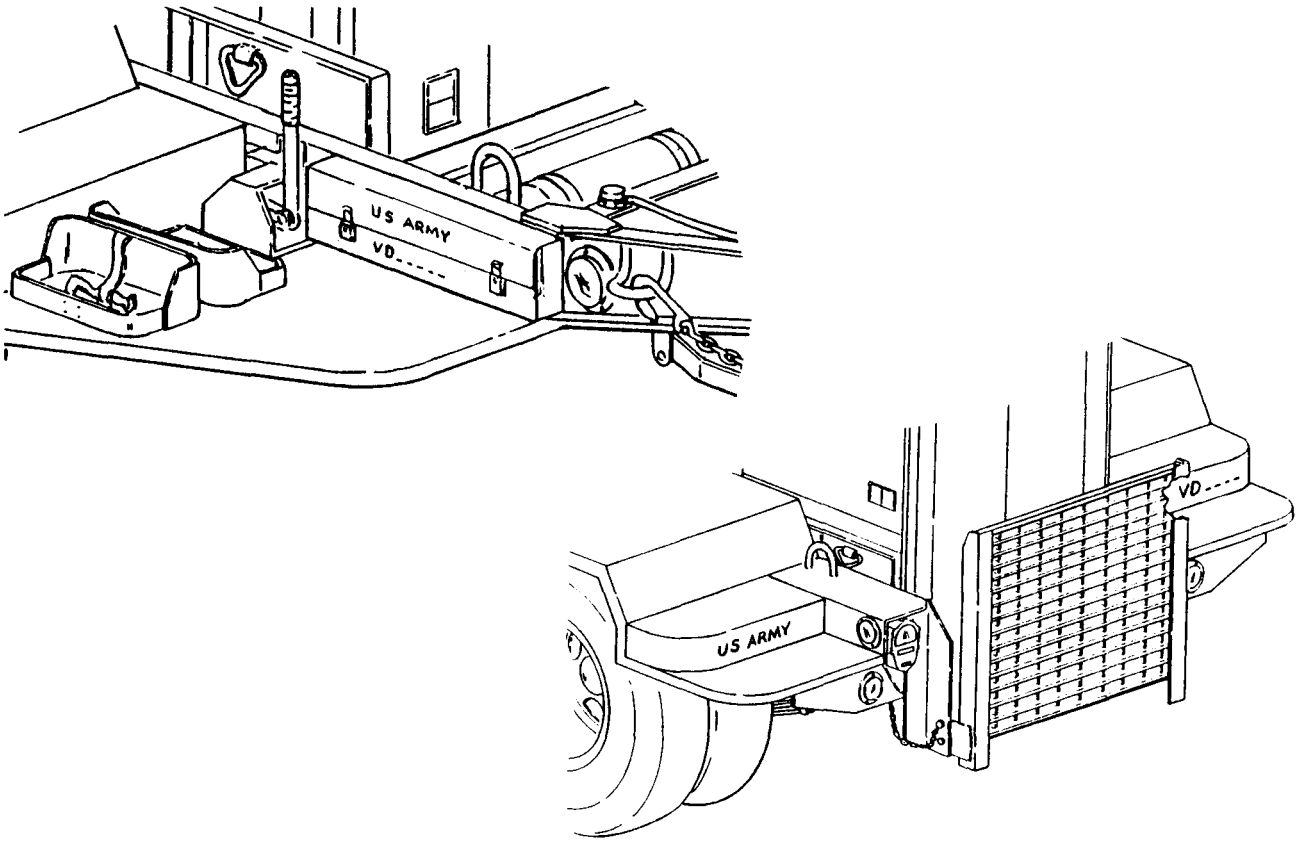

Figure 5-2. Power Unit Markings.

Section III. GENERATOR SET

5-5. Generator Set Replacement. (See figures 5-3 and 5-4.)

a. *Removal.*

(1) Disconnect ground wire (1, figure 5-3) from generator set (2) to GROUND TERMINAL stud (3) on trailer.

NOTE

Two center mounting screws on each side can be reached through cutouts in trailer frame under each fender.

The beveled washers (5) may have been welded in place.

(2) Remove eight screws *(4),* eight beveled washers (5), eight flat washers (6) and eight nuts (7) securing generator set (2) to trailer.

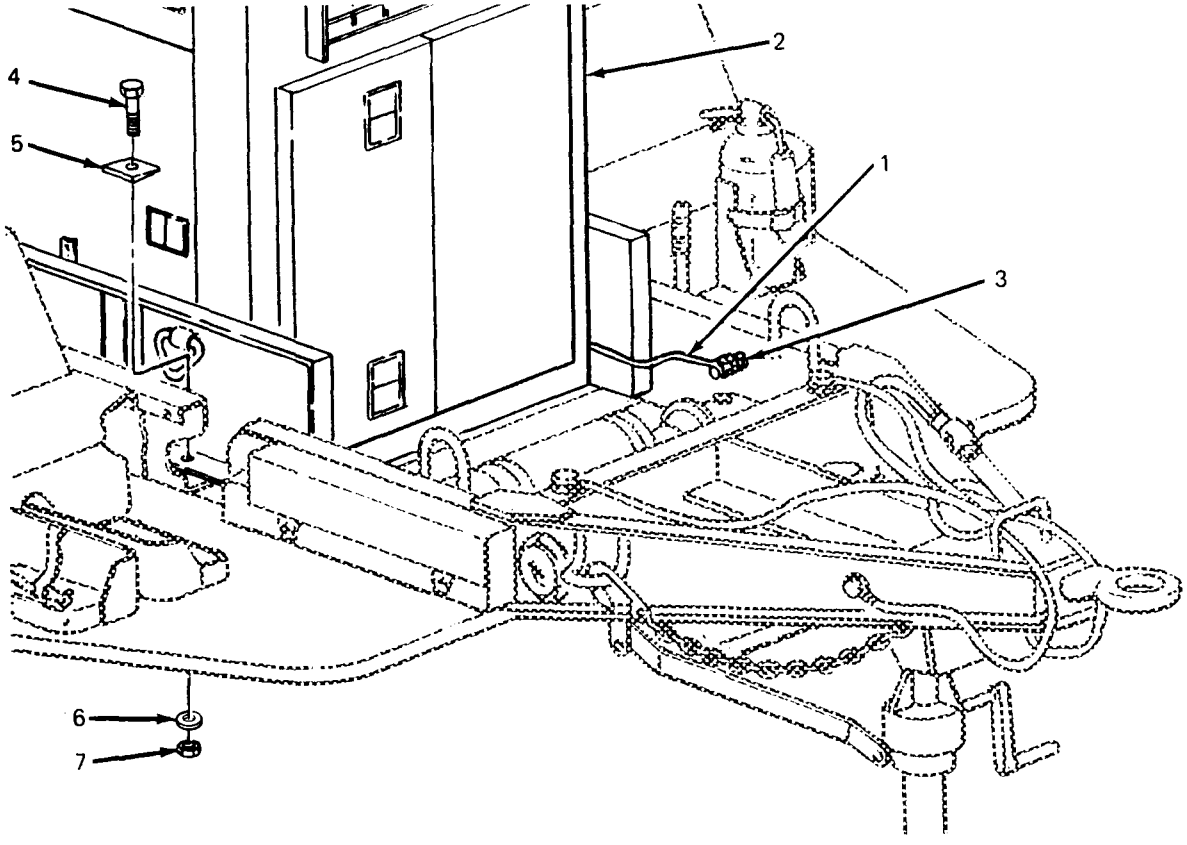

Figure 5-3. Detaching Generator Set from Trailer.

WARNING

When lifting generator set, use lifting equipment with a minimum lifting capacity of 3500 lb. Do not stand under generator while it is being lifted. Do not permit generator set to swing. Failure to observe these precautions can cause injury to personnel or damage to equipment.

(3) Attach lifting equipment with a minimum lifting capacity of 3500 lb. (1, figure 5-4) to both lifting eyes (2) on top edges of generator set (3). Insert a rope (4) through each of four tiedown rings (5) on generator set.

(4) With one person at each rope to steady and guide generator set (3), lift generator set off of trailer.

b. Installation.

WARNING

When lifting generator set, use lifting equipment with a minimum lifting capacity of 3500 lb. Do not stand under generator set while it is being lifted. Do not permit generator set to swing. Failure to observe these precautions can cause injury to personnel or damage to equipment.

(1) Attach lifting equipment with a minimum lifting capacity of 3500 lb (1, figure 5-4) to lifting eyes (2) on top edges of generator set (3). Insert a rope (4) through each of four tiedown rings (5) on generator set.

(2) With one person at each rope to steady and guide generator set (3), lift generator set and carefully lower it onto trailer.

NOTE

Two center mounting screws on each side can be reached through cutouts in trailer frame under each fender.

(3) Insert eight screws (4, figure 5-3) with beveled washers (5) down through generator set skids into trailer.

(4) Working under trailer install one flat washer (6) and one nut (7) on each screw (4).

(5) Position beveled washers (5) so that screw heads are parallel to tops of washers. While holding beveled washers in position, tighten hardware.

(6) Connect generator set ground wire (1) to trailer GROUND TERMINAL stud (3).

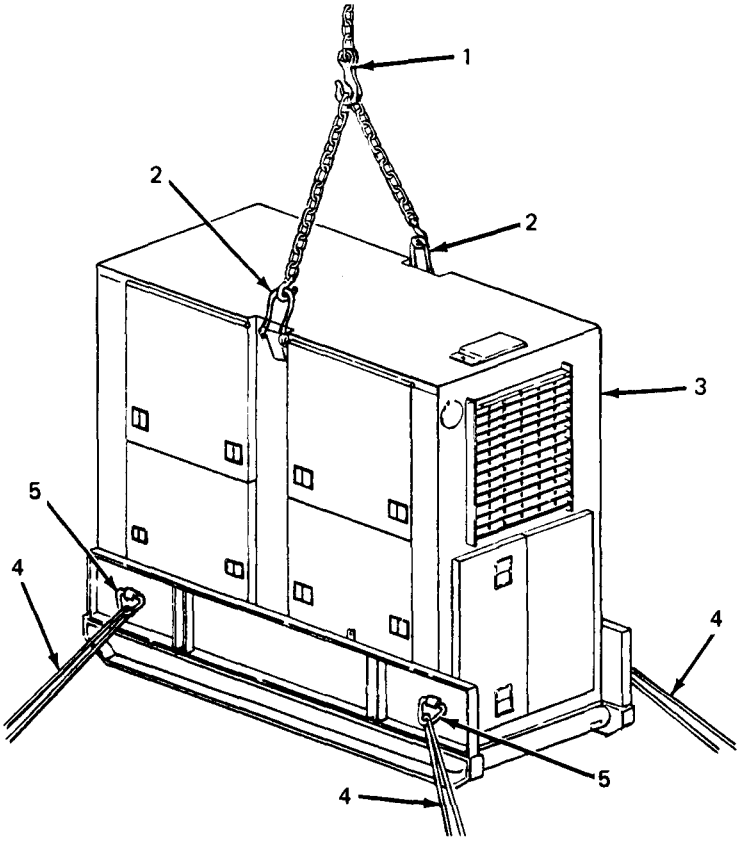

Figure 5-4. Lifting Generator Set.

CHAPTER 6

TEST AND INSPECTION AFTER REPAIR

Section I. GENERAL REQUIREMENTS

6-1. General Requirements. The activity performing the repair is responsible for the performance of all applicable tests and inspections specified in the technical manuals referenced below. Activities performing maintenance on any component of the power unit must perform those tests and inspections required by the applicable component or system repair instruction.

Section II. INSPECTION

6-2. Generator Set Inspections. Refer to TM 5-6115-464-12 and -34 for inspections required following repair of the generator set.

6-3. Trailer Inspections. Refer to TM 9-2330-205-14&P for inspections required following repair of the trailer.

Section III. OPERATIONAL TESTS

6-4. Generator Set Operational Tests. Refer to TM 5-6115-464-12 and -34 for operational tests required to verify satisfactory performance of the generator set.

6-5. Trailer Operational Tests. Refer to TM 9-2330-205-14 for operational tests required to verify satisfactory performance of the trailer.

APPENDIX A
REFERENCES

A-1. Scope. This appendix lists all pamphlets, forms, technical manuals, specifications and miscellaneous publications referenced in this manual.

A-2. Forms and Records.

Air Force Maintenance Management Program	AFM 66-1
Technical Order System Publication Improvement Report and Reply	AFTO Form 22
Recommended Changes to Publications and Blank Forms	DA Form 2028
Depreservation Guide for Vehicles and Equipment	DA Form 2258
Equipment Inspection and Maintenance Worksheet	DA Form 2404
Maintenance Request	DA Form 2407
Consolidated Index of Army Publications	DA PAM 310-1
The Army Maintenance Management System (TAMMS)	DA PAM 738-750
Product Quality Deficiency Report	SF 368

A-3. Military Specifications.

Chemical Agent Resistant Aliphatic Polyurethane Coating	MIL-C-46168
Identification Marking of U.S. Military Property	MIL-STD-130
Identification Marking of Combat and Tactical Transport	MIL-STD-642
Treatment and Painting of Materiel	MIL-T-704

A-4. Technical Manuals.

Operator and Organizational Maintenance Manual: Generator Set, Diesel Engine Driven, Tactical Skid Mounted, 15 KW, 3 Phase, 4 Wire; 120/208 and 240/416V (DOD Model MEP-004A) Utility Class, 50/60 Hz (NSN 6115-00-118-1241), (Model MEP-103A), Precise Class, 50/60 Hz (6115-00-118-1245), (Model MEP-113A), Precise Class, 400 Hz (6115-00-1 18-1244)	TM 5-6115-464-12
Organizational, Intermediate (Field) (Direct Support and General Support and Depot Maintenance Repair Parts and Special Tools List): Generator Set, Diesel Engine Driven, Tactical Skid Mounted, 15 KW, 3 Phase, 4 Wire, 120/208 and 240/416 V (DOD Models MEP-004A) Utility Class, 50/60 HZ (NSN 6115-00-118-1241); (Model MEP-103A), Precise Class, 50/60 HZ (6115-00-118-1245); (Model MEP-113A), Precise Class, 400 H Z (6115-00-118-1244)	TM 5-6115-464-24P
Intermediate (Field) Direct and General Support and Depot Level Maintenance Manual; Generator Set, Diesel Engine Driven, Tactical Skid Mtd, 15 KW, 3 Phase, 4 Wire, 120/208 and 240/416 Volts DOD Model MEP-004A, Utility Class, 50/60 HZ (NSN 6115-00-118-1241); Model MEP-103A, Precise Class, 50/60 HZ (6115-00-118-1245); Model MEP-113A, Precise Class, 400 HZ(6115-00-1 18-1244)	TM 5-6115-464-34
Procedures for Destruction of Equipment to Prevent Enemy Use (Mobility Equipment Command)	TM 750-244-3

Operator's, Organizational, Direct Support and General Support Maintenance Manual Including Repair Parts and Special Tools List for Chassis, Trailer, Generator, 2-1/2 Ton, 2-Wheel M200A1 (NSN 2330-00-331-2307) ..... TM 9-2330-205-14&P

Organizational Direct Support, and General Support Care Maintenance and Repair of Pneumatic Tires and inner Tubes ..... TM 9-2610-200-24

Air Force Technical Order System TO-00-5-1

Painting and Marking of USAF Aerospace Ground Equipment ..... TO 35-1-3

Processing and Inspection of Aerospace Ground Equipment for Storage and Shipment ..... TO 35-1-4

Processing and Inspection of Non-Mounted, Non-Aircraft Gasoline and Diesel Engines for Storage and Shipment ..... TO 38-1-5

A-5. Technical Bulletins.

Preservation of USAMECOM Mechanical Equipment for Shipment and Storage ..... TB 740-97-2

APPENDIX B

COMPONENTS OF END ITEM AND BASIC ISSUE ITEMS LISTS

Section I. INTRODUCTION

B-1. Scope. This appendix lists components of end item and basic issue items for the power unit to help you inventory items required for safe and efficient operation.

B-2. General. The Components of End Item and Basic Issue Items Lists are divided into the following sections:

a. Section II. Components of End Item. This listing is for informational purposes only, and is not authority to requisition replacements. These items are part of the end item, but are removed and separately packaged for transportation or shipment. As part of the end item, these items must be with the end item whenever it is issued or transferred between property accounts. Illustrations are furnished to assist you in identifying the items.

b. Section III. Basic Issue Items. These are the minimum essential items required to place the power unit in operation, to operate it, and to perform emergency repairs. Although shipped separately packaged, BII must be with the power unit during operation and whenever it is transferred between property accounts. The illustrations will assist you with hard-to-identify items. This manual is your authority to request/requisition replacement BII, based on TOE/MTOE authorization of the end item.

B-3. Explanation of Columns. The following provides an explanation of columns found in the tabular listings:

a. Column (1), Illustration Number (Illus No.). This *column* indicates the number assigned to the item.

b. Column (2), *National Stock Number.* Indicates the National stock number assigned to the item.

c. Column (3), *Description.* Indicates the federal item name and, if required, a minimum description to identify and locate the item. The last line for each item indicates the FSCM (in parentheses) followed by the part number.
If item needed differed for different models of this equipment, the model would be shown under the "Usable on Code" heading in this column. The Usable On Code is not applicable for this equipment.

d. Column (4), *Unit of Measure (U/M).* Indicates the measure used in performing the actual operational/maintenance function. This measure is expressed by a two-character alphabetical abbreviation (eg, ea, in, pr).

e. *Column* (5), *Quantity Required (Qty Req'd).* Indicates the quantity of the item authorized to be used with/on the equipment.

Section II. COMPONENTS OF END ITEM

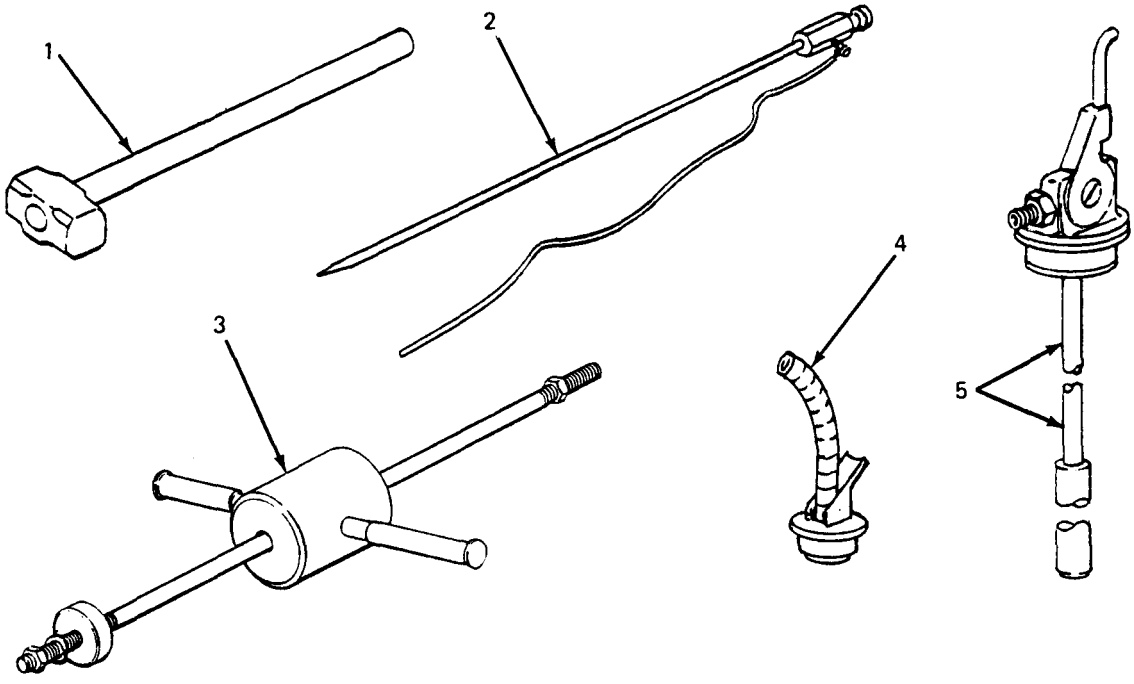

(1) Illus no.	(2) National stock number	(3) Description FSCM and part number	Usable on code	(4) U/M	(5) Qty'd req'd
1	5120-00-243-2957	Hammer, Hand, Engineers 8 lb. (3.6 kg) (81348) GGG-H-86		EA	1
2	5975-00-878-3791	Rod, Ground, Driven, Sectional, 9 ft (2.7 m) (81349) MIL-R-11461		EA	2
3	5120-01-013-1676	Hammer, Slide (97403) 13226E7741		EA	1
4	7240-00-177-6154	Spout, Can, Flexible (81349) MIL-S-1285		EA	1
5	2910-00-066-1235	Adapter Assy, Fuel Drum (97403) 13214E7541		EA	1

Section III. BASIC ISSUE ITEMS

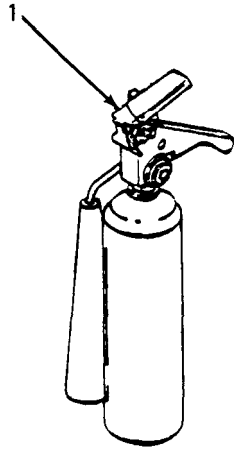

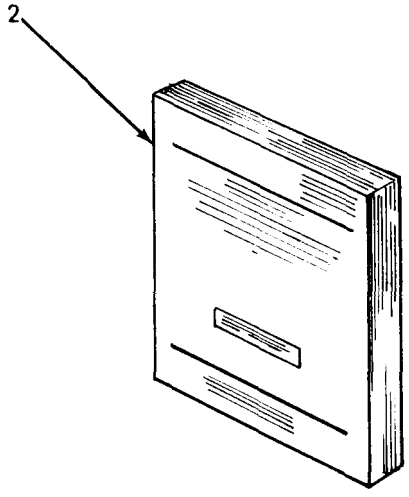

(1) Illus no.	(2) National stock number	(3) Description FSCM and part number	Usable on code	(4) U/M	(5) Qty'd req'd
1	4210-00-270-4512	Extinguisher, Fire, Hand, 5 lb. (2.3 kg) (81348) O-E-910		EA	1
2		Manual, Technical TM 5-6115-625-14&P/		EA	1

APPENDIX C
MAINTENANCE ALLOCATION CHART

Section I. INTRODUCTION

C-1. General.

a. This section provides a general explanation of all maintenance and repair functions authorized at various maintenance levels.

b. Section II designates overall responsibility for the performance of maintenance functions on the identified end item or component. The implementation of the maintenance functions upon the end item or component will be consistent with the assigned maintenance functions.

c. Section III lists the tools and test equipment required for each maintenance function as referenced from Section II.

d. Section IV contains supplemental instructions, explanatory notes and/or illustrations required for a particular maintenance functions.

C-2. Explanation of Columns in Section II.

a. Group Number. Column 1. The assembly group is a numerical group assigned to each assembly in a top down breakdown sequence. The applicable assembly groups are listed on the MAC in disassembly sequence beginning with the first assembly removed in a top down disassembly sequence.

b. Assemb/y Group. Column 2. This column contains a brief description of the components of each assembly group.

c. Maintenance Functions. Column 3. This column lists the various maintenance functions (A through K) and indicates the lowest maintenance category authorized to perform these functions. The symbol designations for the various maintenance categories are as follows:

C – Operator or crew
O - Unit maintenance
F - Intermediate direct support maintenance
H – Intermediate general support maintenance
D - Depot maintenance

The maintenance functions are defined as follows:

A - Inspect. To determine serviceability of an item by comparing its physical, mechanical, and electrical characteristics with established standards.

B - Test. To verify serviceability and to detect electrical or mechanical failure by use of test equipment.

C - Service. To clean, to preserve, to charge, and to add fuel, lubricants, cooling agents, and air. If it is desired that elements, such as painting and lubricating, be defined separately, they may be so listed.

D - Adjust. To rectify to the extent necessary to bring into proper operating range.

E - Aline. To adjust specified variable elements of an item to bring to optimum performance.

F - Calibrate. To determine the corrections to be made in the readings of instruments or test equipment used in precise measurement. Consists of the comparison of two instruments, one of which is a certified standard of known accuracy, to detect and adjust any discrepancy in the accuracy of the instrument being compared with the certified standard.

G – Install. To set up for use in an operational environment such as an emplacement, site, or vehicle.

H - Replace. To replace unserviceable items with serviceable like items.

I - Repair. Those maintenance operations necessary to restore an item to serviceable condition through correction of material damage or a specific failure. Repair may be accomplished at each category of maintenance.

J – Overhaul. Normally, the highest degree of maintenance performed by the Army in order to minimize time work in process is consistent with quality and economy of operation. It consists of that maintenance necessary to restore an item to completely serviceable condition as prescribed by maintenance standard in technical publications for each item of equipment. Overhaul normally does not return an item to like new, zero mileage, or zero hour condition.

K — Rebuild. The highest degree of material maintenance. It consists of restoring equipment as nearly as possible to new conditions in accordance with original manufacturing standards. Rebuild is performed only when required by operational considerations or other paramount factors and then only at the depot maintenance category. Rebuild reduces to zero the hours or miles the equipment, or component thereof, has been in use.

d. Symbols. The uppercase letter placed in the appropriate column indicates the lowest level at which that particular maintenance function is to be performed.

e. Tools and Equipment. Column 4. This column is provided for referencing by code, the special tools and test equipment, (Section III) required to perform the maintenance functions (Section II).

f. Remarks. Column 5. This column is provided for referencing by code, the remarks (Section IV) pertinent to the maintenance functions.

C-3. Explanation of Columns in Section III. Section III, Tools, Test, and Support Equipment Requirements is not applicable.

C-4. Explanation of Columns in Section IV. Section IV, Remarks, is not applicable.

Section II. MAINTENANCE ALLOCATION CHART

(1) Group no.	(2) Assembly group	(3) Maintenance functions A Inspect	B Test	C Service	D Adjust	E Align	F Calibrate	G Install	H Replace	I Repair	J Overhaul	K Rebuild	(4) Tools and equipment	(5) Remarks
01	GENERATOR SET	C 0.2		C 2.0					F 3.0					See TM 5-6115-464-12, –34 for generator set maintenance.
02	ACCESSORIES													
	Sledge Hammer	C 0.1							C 0.1					
	Fire Extinguisher	C 0.1							C 0.1					
	Slide Hammer	C 0.1							C 0.1					
	Ground Rods	C 0.1							C 0.1					
03	TRAILER ASSEMBLY	C 0.5	O 1.0	C 0.5										See TM 9-2330-205-14&P for trailer maintenance.
	Accessory Box								O 0.5	F 2.0				
	Fuel Can/Fire Extinguisher Brackets	C 0.1							O 0.5					
	Steps/Platforms	C 0.1							O 0.1					
	Fenders								O 1.0					
	Reflectors	C 0.1							O 0.5					

(1)	(2)	(3) Maintenance functions											(4)	(5)
Group no.	Assembly group	A Inspect	B Test	C Service	D Adjust	E Align	F Calibrate	G Install	H Replace	I Repair	J Overhaul	K Rebuild	Tools and equipment	Remarks
03	TRAILER ASSEMBLY – CONT													
	Data Plates								O 0.2					
	Leveling Jacks	C 0.1												
	Lighting	C 0.1	O 0.3						O 1.0	O 0.5				
	Handbrake	C 0.1		O 0.2					F 0.5	F 0.5				

APPENDIX D

UNIT, INTERMEDIATE (FIELD) (DIRECT SUPPORT AND GENERAL SUPPORT) AND DEPOT MAINTENANCE REPAIR PARTS AND SPECIAL TOOLS LIST

Section I. INTRODUCTION

D-1. Scope. This joint Army and Air Force manual lists repair parts and special tools required for the performance of unit, intermediate (field) (direct and general support) and depot maintenance of the power unit. The following paragraphs are keyed to applicable users. All users should read paragraph 4, Special Information, prior to using this manual.

D-2. General. Repair Parts and Special Tools List is divided into the following sections:

a. *(ALL) Repair Parts - Section II.* A list of repair parts authorized for the performance of maintenance at the unit, intermediate (field) (direct and general support) and depot level in figure and item number sequence.

b. (ALL) Special Tools, Test and Support Equipment – Section Ill. A list of special tools, test and support equipment authorized for the performance of maintenance at the unit, intermediate (field) (direct and general support) and depot level.

c. National Stock Number and Reference Number Index – Section IV. A list of National stock numbers in numerical sequence, followed by a list of reference numbers appearing in all the listings, in alphanumeric sequence, cross-referenced to the illustration figure number and item number.

d. Reference Designator Index - Section V. The reference Designator Column includes all assigned reference designators arranged first in alphabetical order, second in numeric order. Opposite each symbol is listed the figure and item number of the part in Section II and the reference number.

D-3. Explanation of columns. The following provides an explanation of columns in the tabular lists in Sections II and III.

a. *(ALL) Illustrations, (Column 1).* This column is divided as follows:

(1) *Figure Number.* Indicates the figure number of the illustration on which the item is shown.

(2) *Item Number.* Indicates the number used to identify the item on the illustration.

b. (ALL) Source, Maintenance, and Recoverability Codes (SMR), (Column 2).

(1) *Uniform Source Codes applicable to all Military Services.*

GENERAL Source Codes are assigned to support items to indicate the manner of acquiring support items for maintenance, repair, or overhaul of end items. Source codes are entered in the first and second positions of the Uniform SMR Code format as follows:

Code	Definition
PA	Item procured and stocked for anticipated or known usage.
PB	Item procured and stocked for insurance purposes because essentiality dictates that a minimum quantity be available in the supply systems.
PC	Item procured and stocked and which otherwise would be coded PA except that it is deteriorative in nature.
PD	Support item, excluding support equipment, procured for initial issue or outfitting and stocked only for subsequent or additional initial issues or outfittings. Not subject to automatic replenishment.
PE	Support equipment procured and stocked for initial issue or outfittings to specified maintenance repair activities.
PF	Support equipment which will not be stocked but which will be centrally procured on demand.
PG	Item procured and stocked to provide for sustained support for the life of the equipment. It is applied to an item peculiar to the equipment which because of probable discontinuance or shutdown of production facilities would prove uneconomical to reproduce at a later time.
KD	An item of depot overhaul/repair kit and not purchased separately. Depot kit defined as a kit that provides items required at the time of overhaul or repair.
KF	An item of maintenance kit and not purchased separately. Maintenance kit defined as a kit that provides an item that can be replaced at unit or intermediate levels of maintenance.
KB	Item included in both a depot overhaul/repair kit and a maintenance kit.
MO	Item to be manufactured or fabricated at unit level.

Code	Definition
MF	Item to be manufactured or fabricated at intermediate maintenance levels. Air Force – Intermediate (*) Army - General Support (*)
MD	Item to be manufactured or fabricated at depot maintenance level.
AO	Item to be assembled at unit level.
AF	Item to be assembled at intermediate maintenance levels. Air Force – Intermediate (*) Army – Direct Support (*)
AH	Item to be assembled at intermediate maintenance levels. Air Force – Intermediate (*) Army – General Support (*)
AD	Item to be assembled at depot maintenance level.
XA	Item is not procured or stocked because the requirements for the item will result in the replacement of the next higher assembly.
XB	Item is not procured or stocked. If not available through salvage, requisition.
XC	Installation drawings, diagram, instruction sheet, field service drawing, that is identified by manufacturer's part number.
XD	A support item that is not stocked. When required, item will be procured through normal supply channels.

(*) NOTE

For USAF and the USA Safeguard Program, only Code "F" will be used to denote intermediate maintenance. On joint programs, use of either code F or H by the jointing service will denote intermediate maintenance to USAF and USA Safeguard Program.

(2) *Uniform Maintenance Codes applicable to all Military Services:* GENERAL: Maintenance Codes are assigned to indicate the levels of maintenance authorized to USE and REPAIR support items. The Maintenance Codes are in the third and fourth position of the Uniform SMR Code Format.

(a) Use (Third Position): The Maintenance Code entered in the third position indicates the lowest level maintenance level authorized to remove, replace, and use the support item. The Maintenance Code entered in the third position indicates one of the following levels of maintenance.

Code	Application/Explanation
O	Support item is removed, replaced, used at the unit level of maintenance.
F	Support item is removed, replaced, used at the following intermediate levels: USAF – Intermediate (*) USA – Direct Support (*)
H	Support item is removed, replaced, used at the following intermediate levels: USAF - Intermediate (*) USA – General Support (*)

Code	Definition
D	Support items that are removed, replaced, used at Depot only: USAF - Depot, Mobile Depot and Specialized Repair Activity. USA – Depot, Mobile Depot and Specialized Repair Activity

(b) Repair (Fourth Position): The maintenance code entered in the fourth position indicates whether the item is to be repaired and identifies the lowest maintenance level with the capability to perform complete repair (i.e., all authorized maintenance functions).

O	The lowest maintenance level capable of complete repair of the support item is the unit level.
F	The lowest maintenance level capable of complete repair of the support item is the following intermediate level: USAF - Intermediate (*) USA - General Support (*)
H	The lowest maintenance level capable of complete repair of the support item is the following intermediate level: USAF - Intermediate (*) USA – General Support (*)

(*) NOTE

For USAF programs and the USA Safeguard Program, Code F will be used to denote intermediate mmaintenance. On joint programs, use either Code F or H by the joining Service will denote intermediate to USAF and the USA Safeguard Program.

Code	Definition
D	The lowest maintenance level capable of complete repair of the support item is the depot level. USAF – Depot, Mobile Depot, and Specialized Repair Activity. USA - Depot, Mobile Depot, and Specialized Repair Activity.

Code	Application/Explanation
L	Repair restricted to designated Specialized Repair Activity.
Z	Nonreparable. No repair is authorized.
B	No repair is authorized. The item maybe reconditioned by adjusting, lubricating, etc., at the user level. No parts or special tools are procured for the maintenance of this item.

(3) *Uniform Recoverability Codes applicable to all Military Services:* GENERAL: Recoverability Codes are assigned to support items to indicate the disposition action on unserviceable items. The recoverability code is entered in the fifth position of the uniform SMR Code Format as follows:

Recoverability Codes	Definition
z	Nonreparable item. When unserviceable, condemn and dispose at the level indicated in column 3.
O	Reparable item. When uneconomically reparable, condemn and dispose at unit level.
F	Reparable item. When uneconomically reparable, condemn and dispose at the following intermediate levels: USAF – Intermediate (*) USA - Direct Support (*)
H	Reparable item. When uneconomically reparable, condemn and dispose at the following levels: USAF – Intermediate (*) USA - General Support (*)

(*) NOTE

For USAF programs and the USA Safeguard Program, Code F will be used to denote intermediate maintenance. On joint programs, use of either Code F or H by the joining Service will denote intermediate level of USAF and the USA Safeguard Program.

Recoverability Codes	Definition
D	Reparable item. When beyond lower level repair capability, return to depot. Condemnation and disposal not authorized below depot level.
L	Reparable item. Repair, condemnation and disposal not authorized below depot/Specialized Repair Activity level.
A	Item requires special handling or condemnation procedure because of specific reasons (i.e., precious metal content, high-dollar value, critical material or hazardous material). Refer to appropriate manuals/directives for specific instructions.

c. (ALL) National Stock Number (Column 4). Indicates the National Stock Number assigned to the item and will be used for requisitioning purposes.

d (ALL) Description (Column 5). Indicates the Federal item name and any additional descriptions of the item required. The abbreviation "w/e" when used as part of the nomenclature, indicates that the National Stock Number includes all armament, equipment, accessories and repair parts issued with the item. A part number or other reference number is followed by the applicable five digit Federal Supply Code for manufacturer in parentheses. If two reference numbers and Federal Supply Codes for manufacturer are listed, the first listing refers to the Department of Defense Drawing Number, the second listing refers to the actual part manufacturer. Items that are included in kits and sets are listed below the name of the kit or set with the quantity of each item in the kit or set indicated in the quantity incorporated in unit column.

e. (ALL) Unit of Measure (U/M) (Column 6). Indicates the standard of the basic quantity of the listed item as used in performing the actual maintenance function. This measure is expressed by a two-character alphabetical abbreviation (e.g., ea, in, pr, etc.). When the unit of measure differs from the unit of issue, the lowest unit of issue that will satisfy the required units of measure will be requisitioned.

f. (ALL) Quantity Incorporated in Unit (Column 7) Indicates the quantity of the item used in the assembly group. A "V" appearing in this column in lieu of a quantity indicates that a definite quantity cannot be indicated (e.g., shims, spacers, etc.).

D-4. Special Information.

a. (ALL) identification of Usable On Codes for this Manual is not applicable.

b, Army unit maintenance personnel will extract the items which they require from Section II, 3rd or 4th position of column 2 of the intermediate direct and general support RPSTL. Parts which are manufactured or assembled at a higher level than that authorized to install the part are indicated by the use of higher level code in the source column.

c. Stockage Information.

(1) Air Force stockage information is contained in Initial Supply Support Lists issued separately from this publication by Sacramento Air Logistics Center in accordance with AFM 67-1, part 1, chapter 12.

(2) Army stockage is demand based in accordance with AR 710-2. Repair parts listed in this publication represent those authorized for use at indicated maintenance levels and will be requisitioned on an as-required basis until stockage is justified in accordance with AR 710-2.

d. In the parts list, some items are indented to show that they are a component of the item under which they are indented.

D-5. How to Locate Repair Parts.

a. (ALL) When National Stock Number or reference number is unknown:

(1) Using the table of contents, determine the functional group; i.e., batteries and related parts, exhaust and breather pipes, within which the repair part belongs. This is necessary since illustrations are prepared for functional groups.

(2) Find the illustration covering the functional group to which the repair part belongs.

(3) Identify the repair part on the illustration and note the illustration figure and item number of the repair part.

(4) Using the Repair Parts Listing, find the figure and item number noted on the illustration.

b. (ALL) When national stock number or reference number is known:

(1) Using the Index of National Stock Numbers and Reference Numbers, find the pertinent national stock number or reference number. This index is in ascending NSN sequence followed by a list of reference numbers in alphanumeric sequence, cross-referenced to the illustration figure number and item number.

(2) After finding the figure and item number, locate the figure and item number in the repair parts list.

D-6. (F) Use of the Reference Designator Index Section. This Section (Section V) is used when the reference designator is known or identified by other technical manuals supporting this equipment. The reference number is given in this section. If description or location is desired, note the figure and item number. Turn to Section II to the noted figure and item number. The location of the part and description is given in this listing.

D-7. Abbreviations.

Abbreviations	Explanation
Not Applicable	

D-8. Federal Supply Codes for Manufacturers.

Code	Manufacturer
Not Applicable	

D-9. Recommendation for Maintenance Publication improvements. Report of errors, omissions, and recommendations for improving this publication by the individual user is encouraged. Reports should be submitted as follows:

a. Air Force AFTO Form 22 in accordance with T.O. 00-5-1, directly to: Commander, Sacramento Air Logistics Center, ATTN: MMEDT, McClellan AFB, CA 95652.

b. Army DA Form 2028, directly to: Commander, US Army Troop Support Command, ATTN: AMSTR-MCTS, 4300 Goodfellow Boulevard, St. Louis, MO 63120-1798.

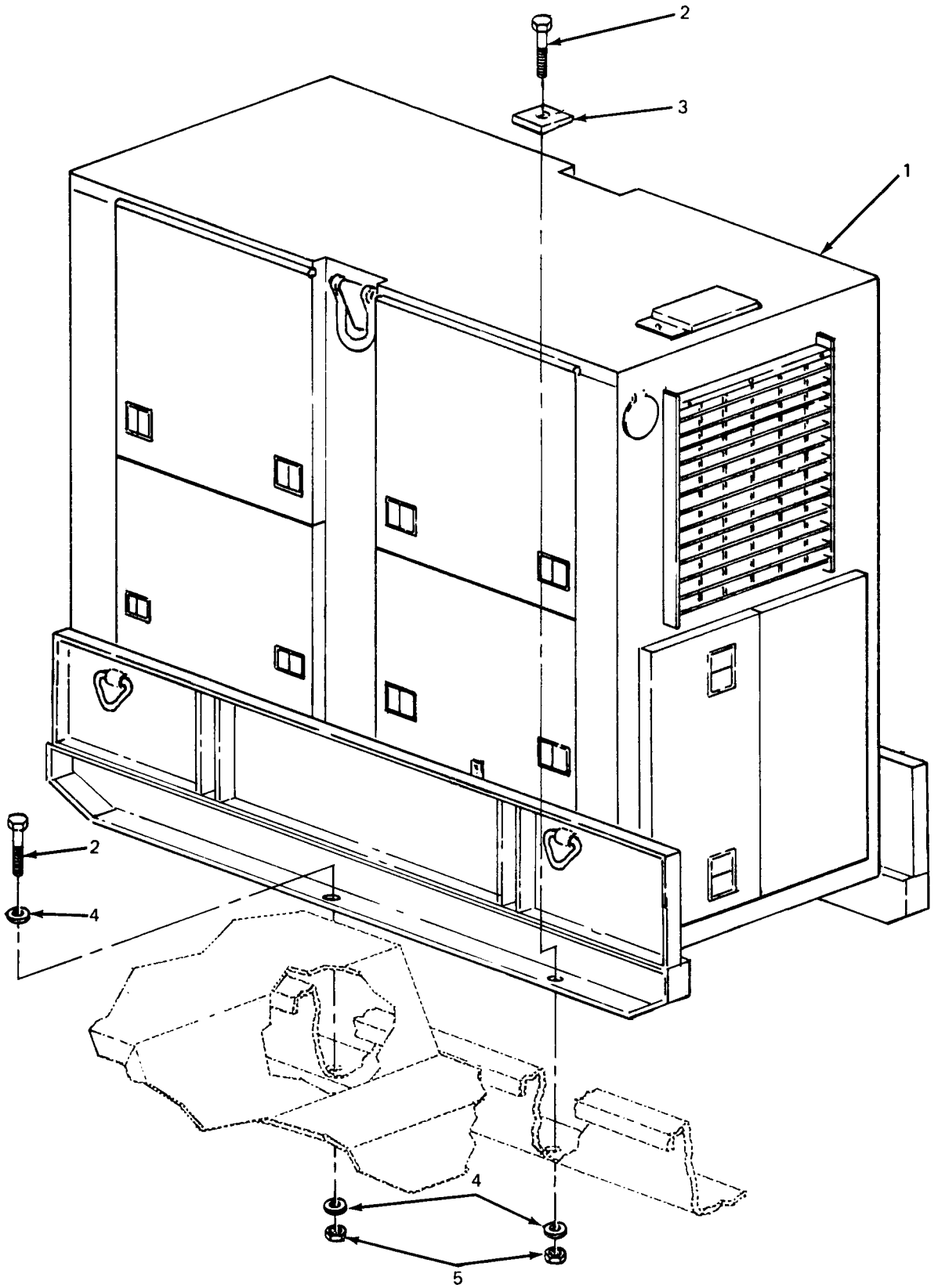

Figure D-1. Generator Set.

(1) ILLUS-TRATION A FIG NO.	B ITEM NO.	(2) SMR CODE A ARMY	B AIR FORCE	C NAVY	D USMC	(3) USMC A SSI	B REPL FACTOR	(4) NATIONAL STOCK NUMBER	(5) DESCRIPTION REF NUMBER & MFR CODE	USABLE ON CODE	(6) U/M	(7) QTY INC IN UNIT	(8) USMC QTY PER EQUIP
									GROUP 01 - GENERATOR				
D-1	1							6115-00-118-1241	GENERATOR SET, DIESEL MEP-004A 30554		EA	1	
D-1	2	PAFZZ						5305-00-724-7222	SCREW, CAP, HEX MS90728-164 96906		EA	8	
D-1	3	PAFZZ						5310-01-185-0586	WASHER, BEVELED 13206E4482-3 97403		EA	4	
D-1	4	PAFZZ						5310-00-823-8803	WASHER, FLAT MS27183-21 96906		EA	8	
D-1	5	PAFZZ						5310-00-269-4040	NUT, SELF-LOCKING MS51922-49 96906		EA	8	

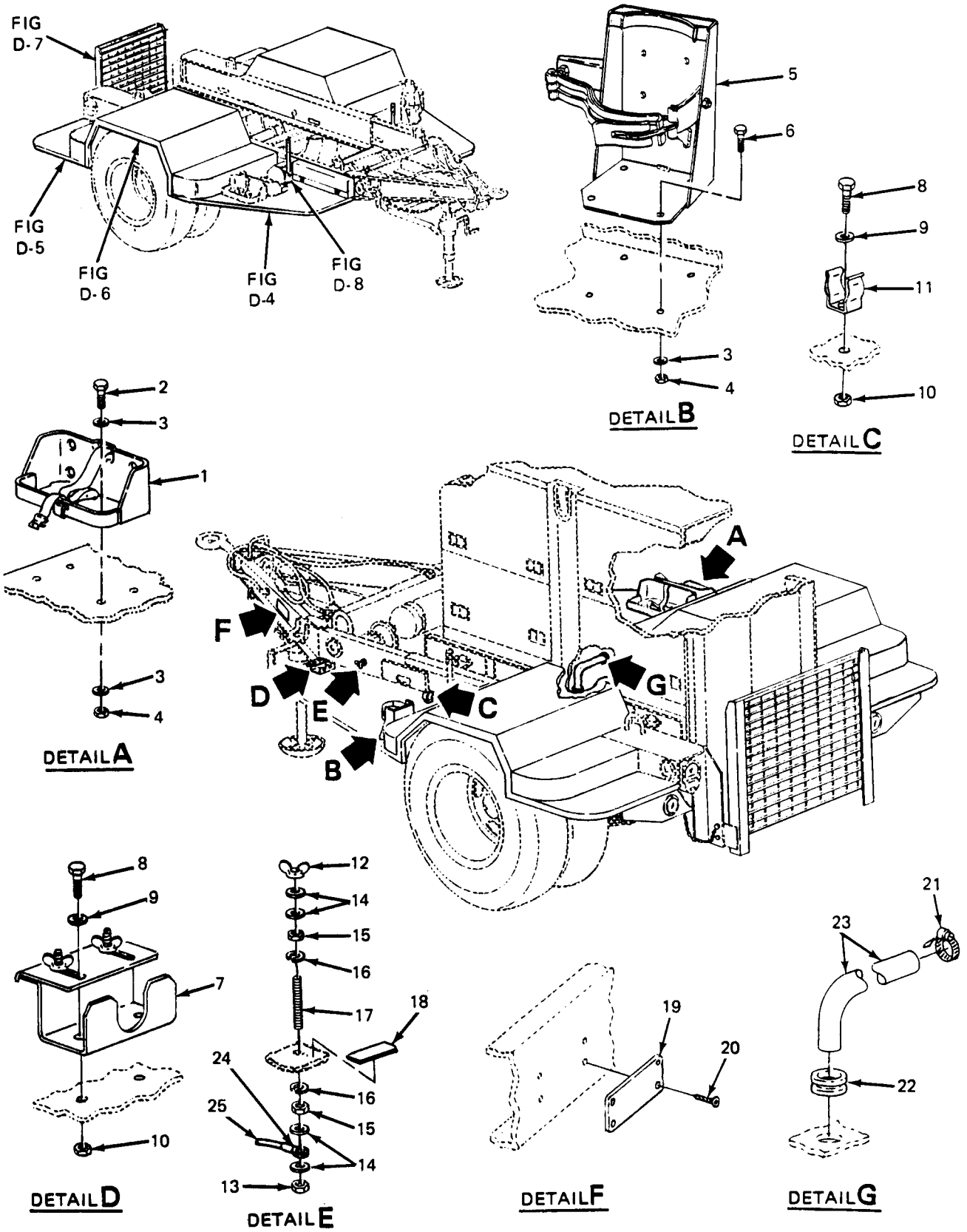

Figure D-2. Trailer Body.

(1) ILLUS-TRATION A FIG NO.	B ITEM NO.	(2) SMR CODE A ARMY	B AIR FORCE	C NAVY	D USMC	(3) USMC A SSI	B REPL FACTOR	(4) NATIONAL STOCK NUMBER	(5) DESCRIPTION REF NUMBER & MFR CODE	USABLE ON CODE	(6) U/M	(7) QTY INC IN UNIT	(8) USMC QTY PER EQUIP
									GROUP 03 - TRAILER 03 - BODY				
D-2	1	XBOZZ							BRACKET ASSEMBLY, LIQUID CONTAINER MS53052-1 96906		EA	2	
D-2	2	PAOZZ						5305-00-269-3210	SCREW, CAP, HEX MS90725-62 96906		EA	8	
D-2	3	PAOZZ						5310-00-080-6004	WASHER, FLAT MS27183-14 96906		EA	20	
D-3	4	PAOZZ						5310-00-087-4652	NUT, SELF-LOCKING MS51922-17 96906		EA	12	
D-3	5	PAOZZ						4210-00-223-4857	BRACKET, FIRE EXTINGUISHER 13214E1235 97403		EA	1	
D-3	6	PAOZZ						5305-00-984-5691	SCREW, MACHINE MS35206-311 96906		EA	4	
D-3	7	PAOZZ						5340-00-999-6277	BRACKET ASSEMBLY 13214E214 97403		EA	1	
D-3	8	PAOZZ						5305-00-068-0502	SCREW, CAP, HEX MS90725-6 96906		EA	3	
D-3	9	PAFZZ						5310-00-809-4058	WASHER, FLAT MS27183-10 96906		EA	3	
D-3	10	PAOZZ						5310-00-088-1251	NUT, SELF-LOCKING MS51922-1 96906		EA	3	
D-3	11	PAOZZ						5304-00-914-2578	CLIP, SPRING 13214E1213-1 97403		EA	1	
D-3	12	PAOZZ						5310-00-543-4717	NUT, PLAIN, WING MS35425-28 96906		EA	1	
D-3	13	PAOZZ						5310-00-584-7995	NUT, PLAIN, HEX MS16203-27 96906		EA	1	
D-3	14	PAOZZ						5310-00-004-9129	WASHER, FLAT AN961-616S 88044		EA	4	
		PAOZZ						5310-00-187-2413	WASHER, FLAT AN961-616T 81352		EA	4	

(1) ILLUS-TRATION a FIG NO.	b ITEM NO.	(2) SMR CODE a ARMY	b AIR FORCE	c NAVY	d USMC	(3) USMC a SSI	b REPL FACTOR	(4) NATIONAL STOCK NUMBER	(5) DESCRIPTION REF NUMBER & MFR CODE	USABLE ON CODE	(6) U/M	(7) QTY INC IN UNIT	(8) USMC QTY PER EQUIP
									Group 03- TRAILER 03- Body- Cont				
D-2	15	PAOZZ						5310-00-026-5824	NUT, PLAIN, HEX MS16203-39 96906		EA	2	
D-2	16	PAOZZ						5310-00-022-8847	LOCKWASHER MS35333-110 96906		EA	2	
D-2	17	PAOZZ						5307-00-227-1741	STUD 13214E1223 97403		EA	1	
D-2	18	MDOZZ						9905-01-085-7703	PLATE, IDENTIFICATION 13205E4918 97403		EA	1	
D-2	19	MDOZZ							PLATE, IDENTIFICATION 13228E6394-1 97403		EA	1	
D-2	20	PAOZZ						5305-00-253-5615	SCREW, DRIVE MS21318-21 96906		EA	6	
D-2	21	PAOZZ						4730-00-908-3193	CLAMP, HOSE MS35842-12 96906		EA	1	
D-2	22	PAOZZ						5325-00-290-1960	GROMMET MS35489-27 96906		EA	1	
D-2	23	MHOZZ							HOSE ZZ-H-428 81348		EA	1	
D-2	24	PAOZZ						5940-00-115-4992	TERMINAL, LUG MS20659-110 96906		EA	2	
D-2	25	PAOZZ						6145-00-395-8799	WIRE, NO. 6AWG QQ-W-343 81348		FT	AR	

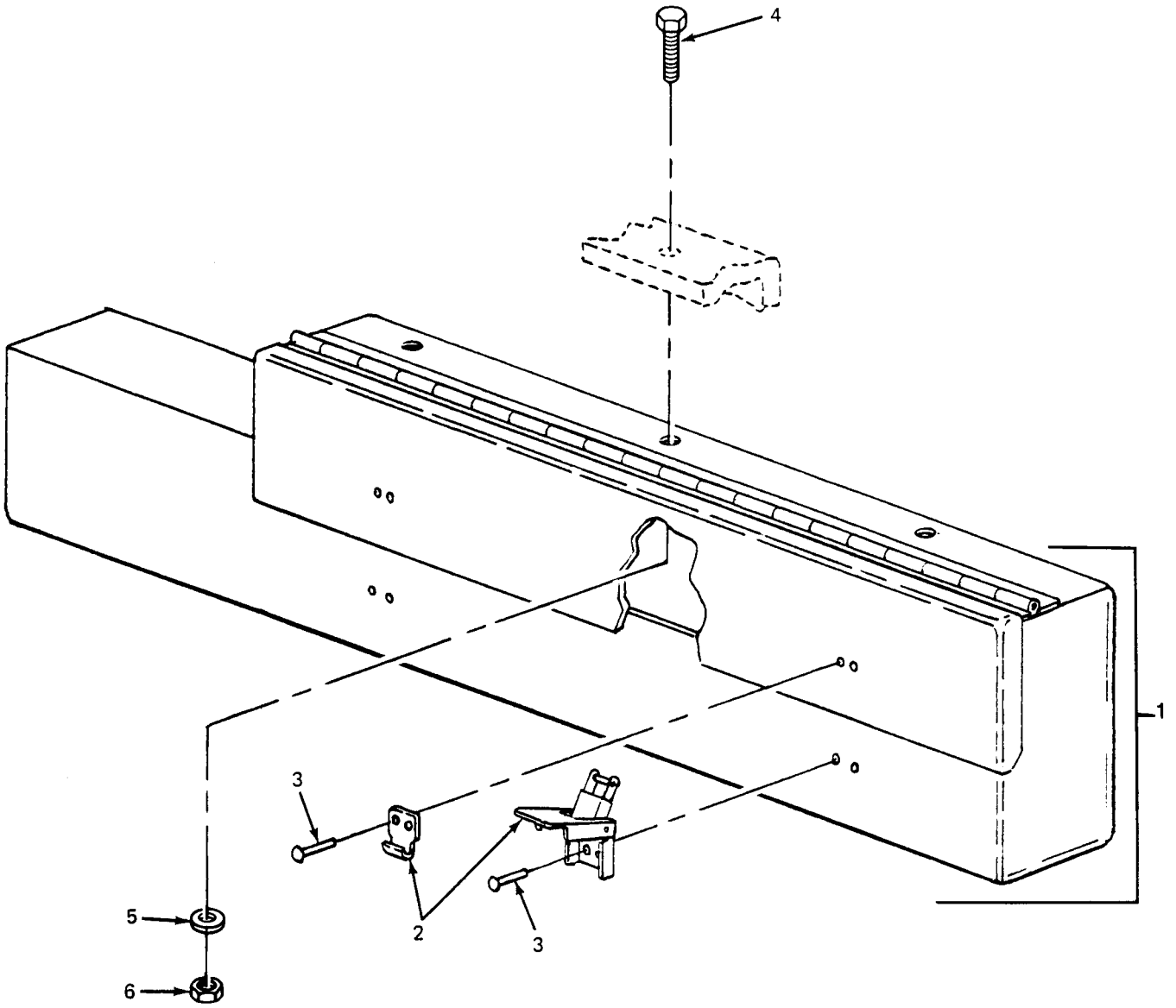

Figure D-3. Accessory Box.

(1) ILLUS-TRATION A FIG NO.	B ITEM NO.	(2) SMR CODE A ARMY	B AIR FORCE	C NAVY	D USMC	(3) USMC A SSI	B REPL FACTOR	(4) NATIONAL STOCK NUMBER	(5) DESCRIPTION REF NUMBER & MFR CODE	USABLE ON CODE	(6) U/M	(7) QTY INC IN UNIT	(8) USMC QTY PER EQUIP
									03 - ACCESSORY BOX				
D-3	1	XBFZZ						2450-00-903-3503	ACCESSORY BOX 13214E1256 97403		EA	1	
D-3	2	PAFZZ						5340-00-975-2126	CATCH, CLAMPING AND STRIKE ASSEMBLY MS18015-1 96906		EA	2	
D-3	3	PAFZZ						5320-00-753-3830	RIVET MS20613-4P5 96906		EA	8	
D-3	4	PAOZZ						5306-00-225-8498	SCREW, CAP, HEX MS90725-33 96906		EA	3	
D-3	5	PAOZZ						5310-00-087-7493	WASHER, FLAT MS27183-13 96906		EA	3	
D-3	6	PAOZZ						5310-00-985-3806	NUT, SELF-LOCKING MS51922-9 96906		EA	3	

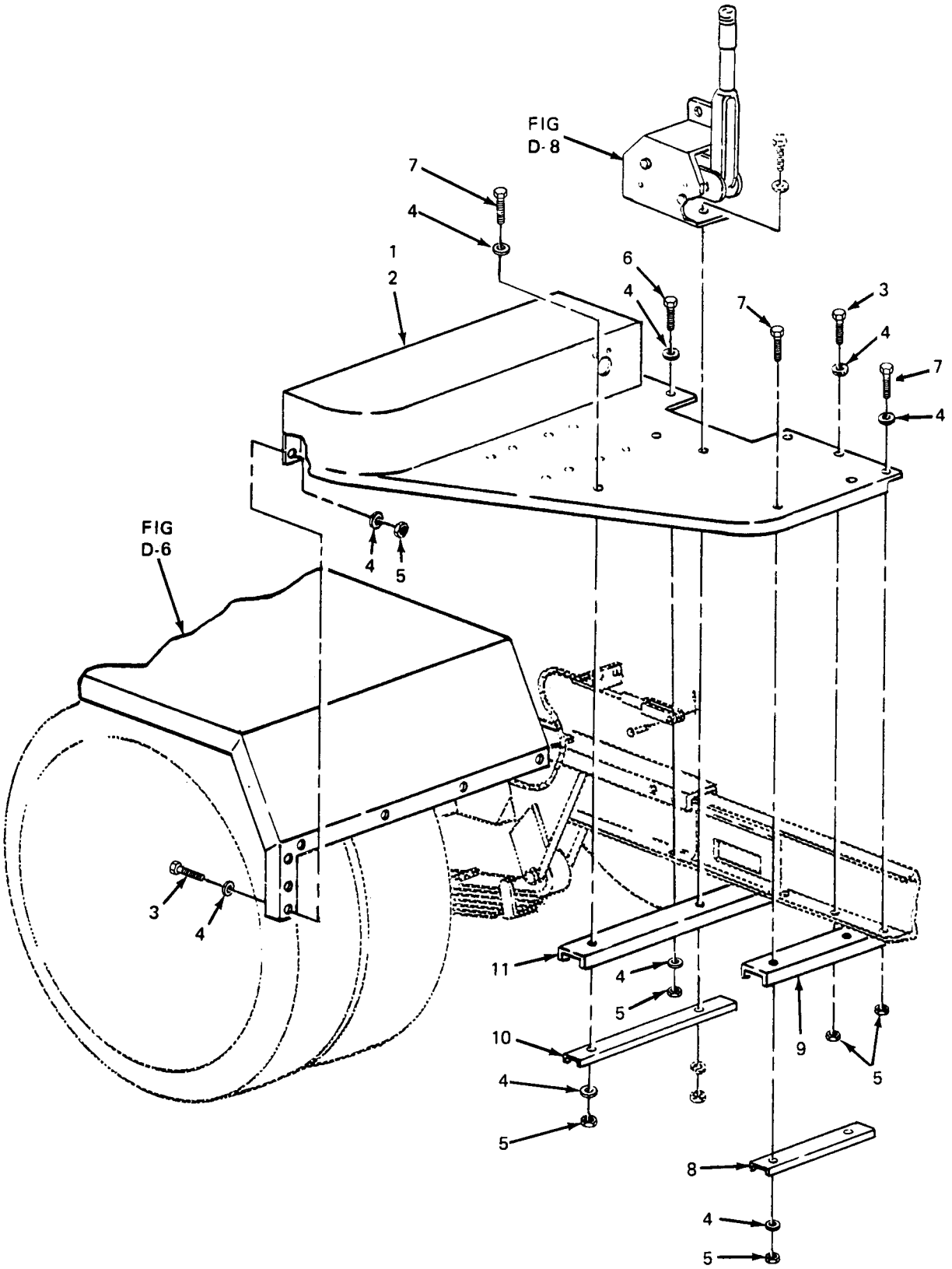

Figure D-4. Front Steps.

(1) ILLUS-TRATION A FIG NO.	B ITEM NO.	(2) SMR CODE A ARMY	B AIR FORCE	C NAVY	D USMC	(3) USMC A SSI	B REPL FACTOR	(4) NATIONAL STOCK NUMBER	(5) DESCRIPTION REF NUMBER & MFR CODE	USABLE ON CODE	(6) U/M	(7) QTY INC IN UNIT	(8) USMC QTY PER EQUIP
									03 - FRONT STEPS				
D-4	1	XBOZZ						2330-01-150-9864	STEP, FRONT, CURBSIDE 13214E1461 97403		EA	1	
D-4	2	XBOZZ						2510-00-196-4682	STEP, FRONT, ROADSIDE 13214E1462 97403		EA	1	
D-4	3	PAOZZ						5306-00-225-8499	SCREW, CAP, HEX MS90725-34 96906		EA	18	
D-4	4	PAOZZ						5310-00-081-4219	WASHER, FLAT MS27183-12 96906		EA	60	
D-5	5	PAOZZ						5310-00-984-3806	NUT, SELF-LOCKING MS51922-9 96906		EA	30	
D-4	6	PAOZZ						5305-00-225-9081	SCREW, CAP, HEX MS90725-36 96906		EA	2	
D-4	7	PAOZZ						5306-00-225-8503	SCREW,CAP,HEX MS90725-39 96906		EA	10	
D-4	8	XDFZZ						5365-00-944-2692	SPACER 13214E1267-1 97403		EA	2	
D-4	9	XBFZZ							CHANNEL 13214E1268 97403		EA	1	
D-4	10	XDFZZ						5365-00-945-5998	SPACER 13214E1267-2 97403		EA	2	
D-4	11	XBFZZ							CHANNEL 13214E1463 97403		EA	1	

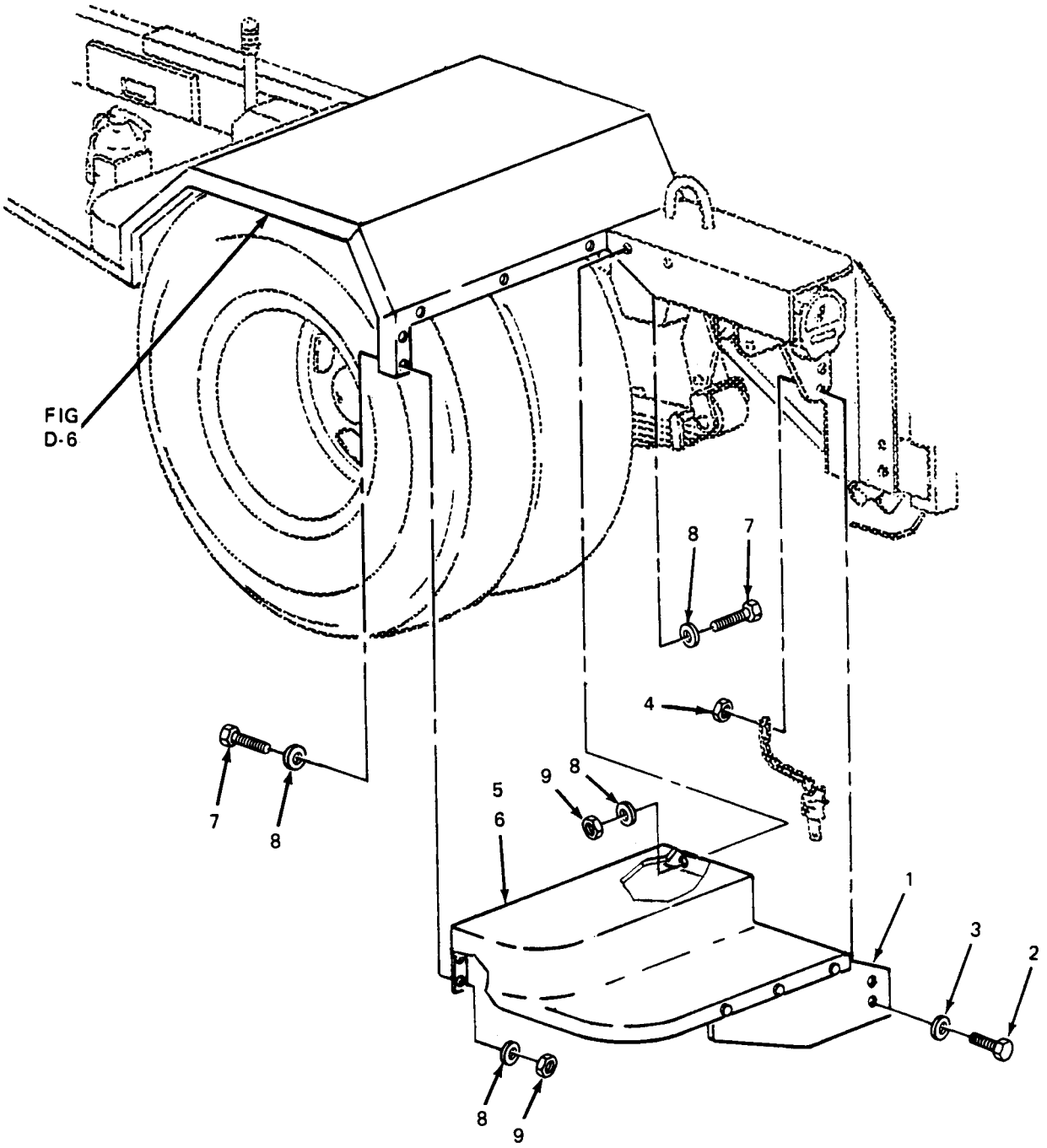

Figure D-5. Rear Steps.

(1) ILLUS-TRATION A FIG NO.	B ITEM NO.	(2) SMR CODE A ARMY	B AIR FORCE	C NAVY	D USMC	(3) UCMC A SSI	B REPL FACTOR	(4) NATIONAL STOCK NUMBER	(5) DESCRIPTION REF NUMBER & MFR CODE	USABLE ON CODE	(6) U/M	(7) QTY INC IN UNIT	(8) USMC QTY PER EQUIP
									03 - REAR STEPS				
D-5	1	XBFZZ						5340-01-875-8820	BRACKET, STEP, REAR 13214E1309-1 97403		EA	2	
D-5	2	PAOZZ						5305-00-269-3213	SCREW, CAP, HEX MS90725-62 96906		EA	6	
D-5	3	PAOZZ						5310-00-080-6004	WASHER, FLAT MS27183-14 96906		EA	6	
D-5	4	PAOZZ						5310-00-087-4652	NUT, SELF-LOCKING MS51922-17 96906		EA	6	
D-5	5	XGFZZ						2510-01-N73-0729	STEP, REAR, ROADSIDE 13214E1261 97403		EA	1	
D-5	6							2510-01-N73-0794	STEP, REAR, CURBSIDE 13214E1259 97403		EA	1	
D-5	7	PAOZZ						5306-00-225-8499	SCREW, CAP, HEX MS90725-34 96906		EA	20	
D-5	8	PAOZZ						5310-00-081-4219	WASHER, FLAT MS27183-12 96906		EA	40	
D-5	9	PAOZZ						5310-00-984-3806	NUT, SELF-LOCKING MS51922-9 96906		EA	20	

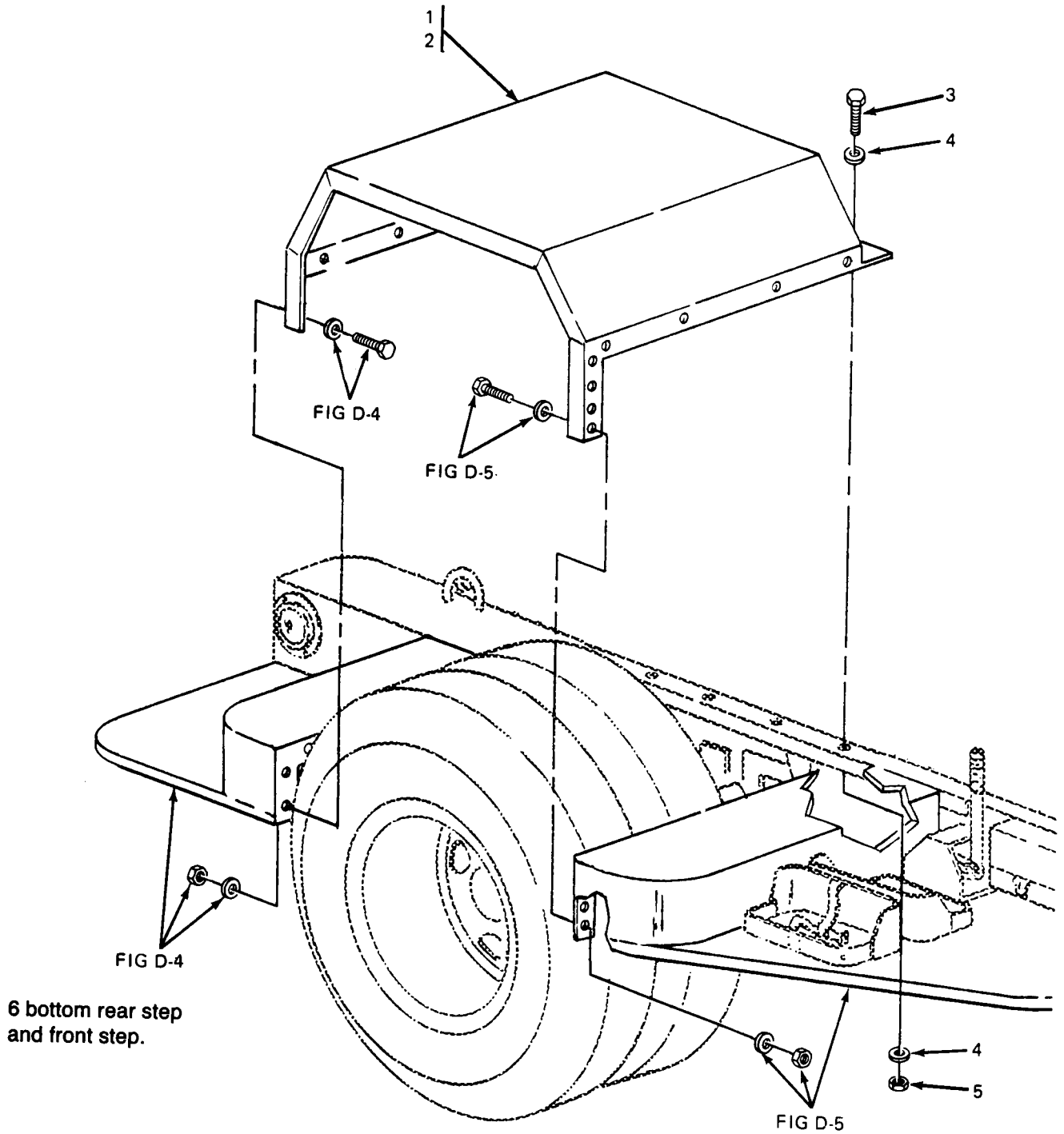

Figure D-6. Fenders.

(1) ILLUS-TRATION A FIG NO.	B ITEM NO.	(2) SMR CODE A ARMY	B AIR FORCE	C NAVY	D USMC	(3) USMC A SSI	B REPL FACTOR	(4) NATIONAL STOCK NUMBER	(5) DESCRIPTION REF NUMBER & MFR CODE	USABLE ON CODE	(6) U/M	(7) QTY INC IN UNIT	(8) USMC QTY PER EQUIP
									03 - FENDERS				
D-6	1	XDFZZ						2510-01-213-3242	FENDER, ROADSIDE 13214E1264 97403		EA	1	
D-6	2	XBFZZ						2510-01-195-4273	FENDER, CURBSIDE 13214E1263 97403		EA	1	
D-6	3	PAOZZ						5306-00-225-8500	SCREW, CAP, HEX MS90725-35 96906		EA	10	
D-6	4	PAOZZ						5310-00-081-4219	WASHER, FLAT MS27183-12 96906		EA	20	
D-6	5	PAOZZ						5310-00-984-3806	NUT, SELF-LOCKING MS51922-9 96906		EA	10	

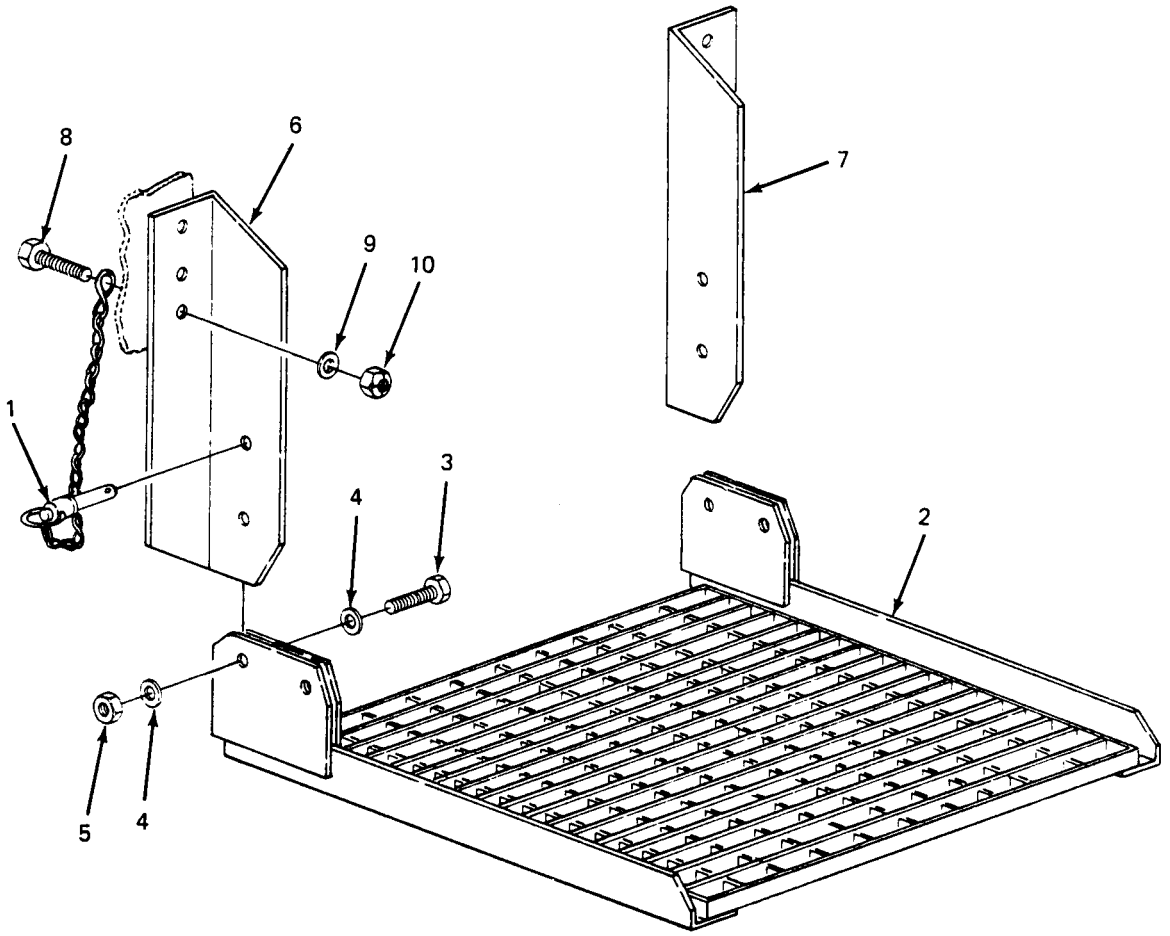

Figure D-7. Personnel Platform.

(1) ILLUSTRATION A FIG NO.	B ITEM NO.	(2) SMR CODE A ARMY	B AIR FORCE	C NAVY	D USMC	(3) USMC A SSI	B REPL FACTOR	(4) NATIONAL STOCK NUMBER	(5) DESCRIPTION REF NUMBER & MFR CODE	USABLE ON CODE	(6) U/M	(7) QTY INC IN UNIT	(8) USMC QTY PER EQUIP
									03 - PERSONNEL PLATFORM				
D-7	1	PAOZZ						5340-01-156-6142	ANCHOR, PLATFORM 13214E1303 97403		EA	2	
D-7	2	XBOZZ						2510-00-926-3517	PLATFORM, PERSONNEL 13214E1298 97403		EA	1	
D-7	3	PAOZZ						5305-00-939-9204	SCREW, CAP, HEX MS90725-187 96906		EA	2	
D-7	4	PAOZZ						5310-00-809-8533	WASHER, FLAT MS27183-23 96906		EA	4	
D-7	5	PAOZZ						5310-00-067-6356	NUT, SELF-LOCKING MS51922-57 96906		EA	2	
D-7	6	PAOZZ						5340-00-087-7676	BRACKET, LEFT 13214E1299 97403		EA	1	
D-7	7	PAOZZ						5340-00-999-6441	BRACKET, RIGHT 13214E1300 97403		EA	1	
D-7	8							5305-00-042-6417	SCREW, CAP, HEX MS90725-113 96906		EA	6	
D-7	9	PAOZZ						5310-00-809-5998	WASHER, FLAT MS27183-18 96906		EA	6	
D-7	10	PAOZZ						5310-00-225-6993	NUT, SELF-LOCKING MS51922-33 96906		EA	6	

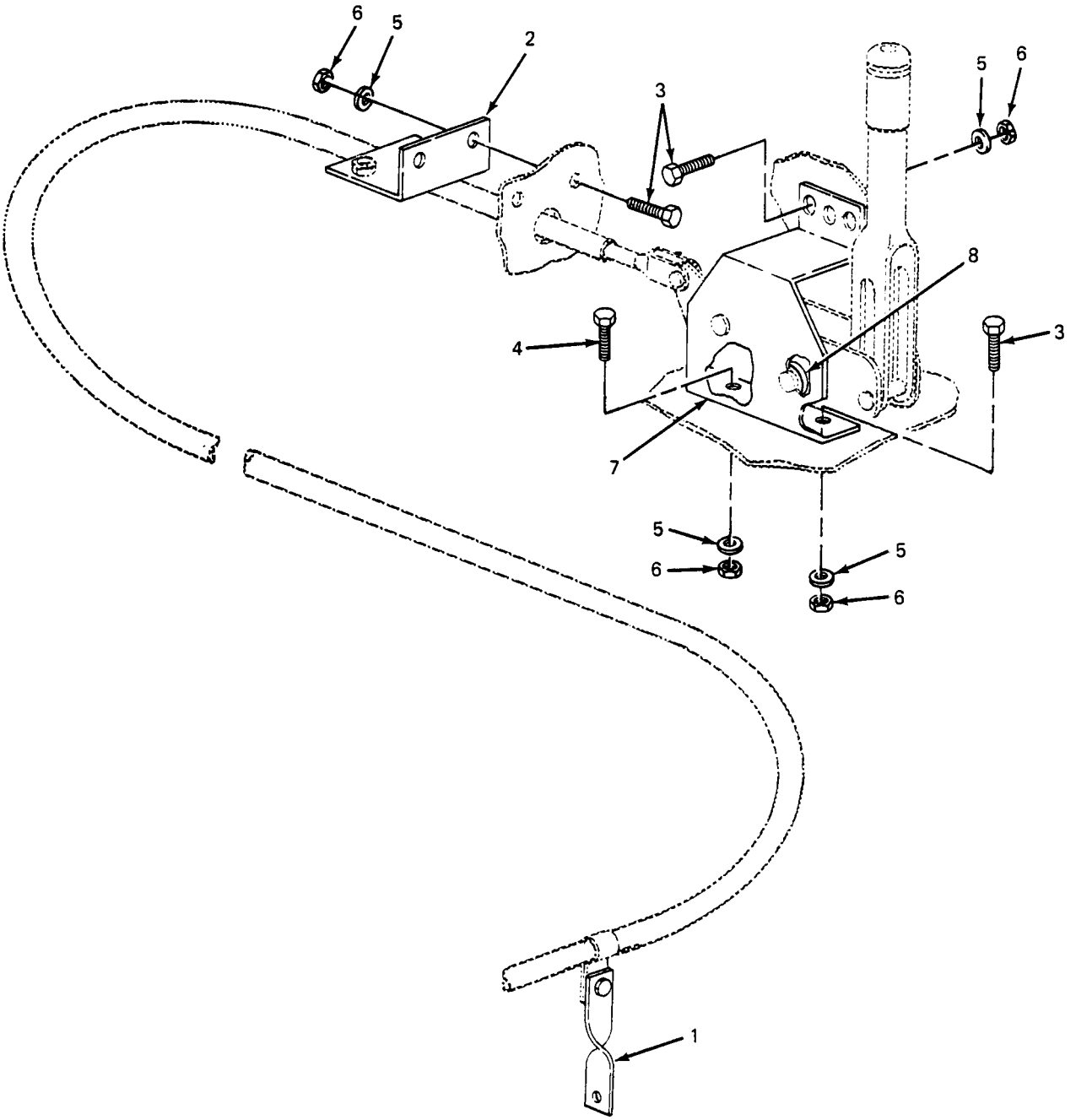

Figure D-8. Handbrakes.

(1) ILLUS-TRATION A FIG NO.	B ITEM NO.	(2) SMR CODE A ARMY	B AIR FORCE	C NAVY	D USMC	(3) USMC A SSI	B REPL FACTOR	(4) NATIONAL STOCK NUMBER	(5) DESCRIPTION REF NUMBER & MFR CODE	USABLE ON CODE	(6) U/M	(7) QTY INC IN UNIT	(8) USMC QTY PER EQUIP
									03 - HANDBRAKES				
D-8	1	XBOZZ						6115-01-876-2084	STRAP,BRAKE CABLE 13214E1271 97403		EA	2	
D-8	2	PAFZZ						5340-00-761-7280	BRACKET,BRAKE CABLE 13214E1271 97403		EA	2	
D-8	3	PAOZZ						5306-00-225-8499	SCREW, CAP, HEX MS90725-34 96906		EA	10	
D-8	4	PAOZZ						5306-00-225-8500	SCREW,CAP,HEX MS90725-35 96906		EA	2	
D-8	5	PAOZZ						5310-00-081-4219	WASHER, FLAT MS27183-12 96906		EA	20	
D-8	6	PAOZZ						5310-00-984-3806	NUT, SELF-LOCKING MS51922-9 96906		EA	12	
D-8	7	XBOZZ						5340-01-226-5766	BRACKET,BRAKE 13214E1269 97403		EA	2	
D-8	8	XDOZZ						5365-00-989-3304	SPACER 13214E1272 97403		EA	4	

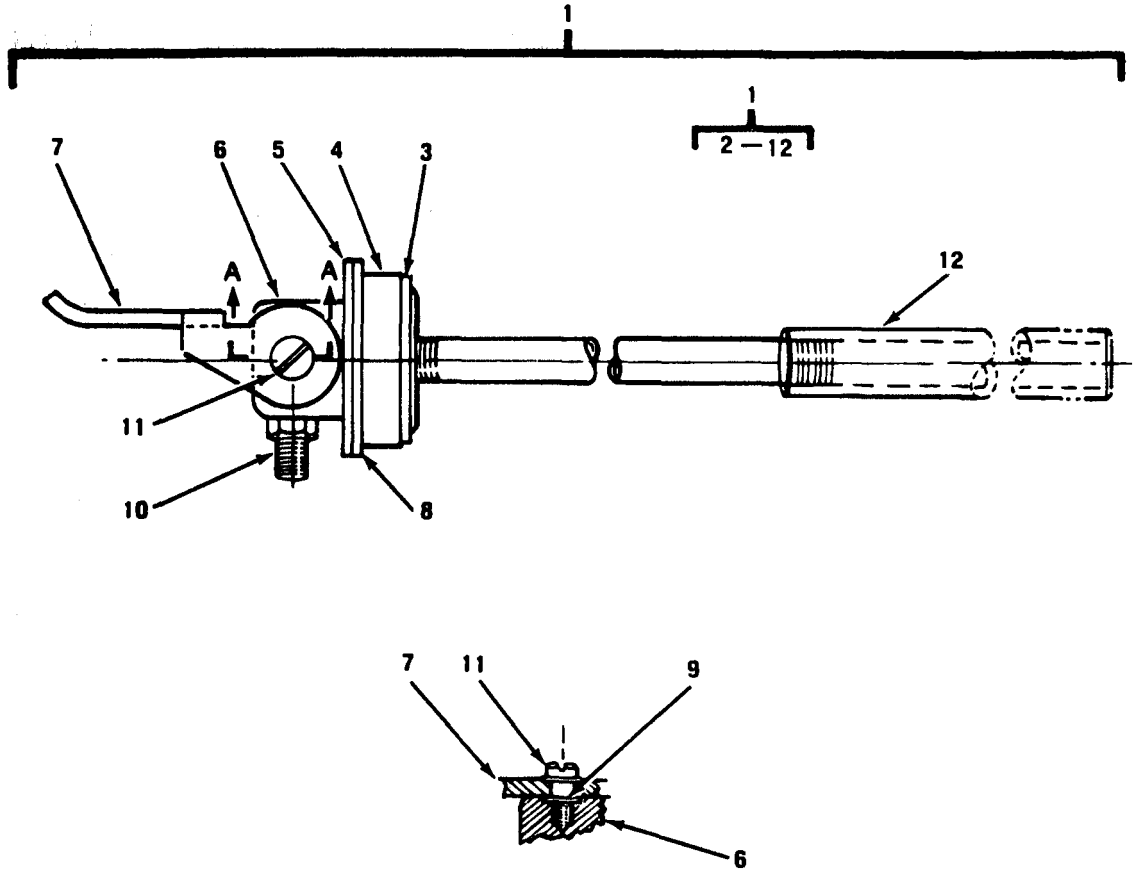

Figure D-9. Adapter Assembly.

(1) ILLUSTRATION A FIG NO.	B ITEM NO.	(2) SMR CODE A ARMY	B AIR FORCE	C NAVY	D USMC	(3) USMC A SSI	B REPL FACTOR	(4) NATIONAL STOCK NUMBER	(5) DESCRIPTION REF NUMBER & MFR CODE	USABLE	USABLE ON CODE	(6) U/M	(7) QTY INC IN UNIT	(8) USMC QTY PER EQUIP
D-9	1	PAOOO						2910-00-666 -1235	ADAPTER,ASSEMBLY 13211E7541 97403			EA	1	
D-9	2	PAOZZ						4710-00-185 -6949	PIPE 13211E7543 97403			EA	1	
D-9	3	PAOZZ						5310-00-566 -9502	WASHER 13211E7544 97403			EA	1	
D-9	4	PAOZZ						5330-00-402 -8125	RING,SEALING 13211E7546 97403			EA	1	
D-9	5	PAOZZ							WASHER 13220E6361 97403			EA	1	
D-9	6	PAOZZ							HEAD 13211E7548 97403			EA	1	
D-9	7	PAOZZ						3740-00-902 -1481	CLAMP 13200E6363 97403			EA	1	
D-9	8	PAOZZ						5310-00-408 -2561	WASHER 13211E7547 97403			EA	1	
D-9	9	PAOZZ						5310-00-209 -1239	WASHER M535335-60 96906			EA	2	
D-9	10	PAOZZ						4730-00-277 -5115	ADPATER AN816-55 81352			EA	1	
D-9	11	PAOZZ						5305-60-891 -2631	SCREW 13211E7845 97403			EA	1	
D-9	12	PAOZZ						4710-00-597	PIPE,EXTENSION 13211E7542 97403			EA	1	

SECTION III. SPECIAL TOOLS, TEST AND SUPPORT EQUIPMENT
NOT APPLICABLE

SECTION IV. NATIONAL STOCK NUMBER AND REFERENCE NUMBER INDEX

NSN	FIGURE NO.	ITEM NO.	NSN	FIGURE NO.	ITEM NO.
2330-01-150-9864	D-4	1	5310-00-081-4219	D-8	5
2450-00-903-3503	D-3	1	5310-00-087-4652	D-2	4
2510-00-926-3517	D-7	2	5310-00-087-4652	D-5	4
2510-00-N73-0729	D-5	5	5310-00-087-7493	D-3	5
2510-01-N73-0794	D-5	6	5310-00-088-1251	D-2	10
2510-01-195-4273	D-6	2	5310-00-185-0586	D-1	3
2510-01-196-4682	D-4	2	5310-00-187-2413	D-2	14
2510-01-213-3242	D-6	1	5310-00-209-1239	D-9	9
2910-00-066-1235	D-9	1	5310-00-225-6993	D-7	10
3743-00-902-1481	D-9	7	5310-00-269-4040	D-1	5
4210-00-223-4857	D-2	5	5310-00-408-2561	D-9	8
4710-00-185-6949	D-9	2	5310-00-543-4717	D-2	12
4710-00-597-8731	D-9	12	5310-00-566-9502	D-9	3
4730-00-277-5115	D-9	10	5310-00-584-7995	D-2	13
5304-00-914-2578	D-2	11	5310-00-809-4058	D-2	9
5305-00-042-6417	D-7	8	5310-00-809-5998	D-7	9
5305-00-068-0502	D-2	8	5310-00-809-8533	D-7	4
5305-00-225-9081	D-4	6	5310-00-823-8803	D-1	4
5305-00-269-3210	D-2	2	5310-00-984-3806	D-4	5
5305-00-269-3213	D-5	2	5310-00-984-3806	D-5	9
5305-00-724-7222	D-1	2	5310-00-984-3806	D-6	5
5305-00-841-2631	D-9	11	5310-00-984-3806	D-8	6
5305-00-939-9204	D-7	3	5310-00-985-3806	D-3	6
5305-00-984-5691	D-2	6	5320-00-753-3830	D-3	3
5306-00-225-8498	D-3	4	5330-00-402-5125	D-9	4
5306-00-225-8499	D-4	3	5340-00-087-7676	D-7	6
5306-00-225-8499	D-5	7	5340-00-975-2126	D-3	2
5306-00-225-8499	D-8	3	5340-00-999-6277	D-2	7
5306-00-225-8500	D-6	3	5340-00-999-6441	D-7	7
5306-00-225-8500	D-8	4	5340-01-156-6142	D-7	1
5306-00-225-8503	D-4	7	5340-01-226-5766	D-8	7
5310-00-004-9129	D-2	14	5340-01-875-8820	D-5	1
5310-00-067-6356	D-7	5	5365-00-944-2692	D-4	8
5310-00-080-6004	D-2	3	5365-00-945-5998	D-4	10
5310-00-080-6004	D-5	3	5365-00-989-3304	D-8	8
5310-00-081-4219	D-4	4	6115-00-118-1241	D-1	1
5310-00-081-4219	D-5	8	6115-01-876-2084	D-8	1
5310-00-081-4219	D-6	4			

Section IV. NATIONAL STOCK NUMBER AND REFERENCE NUMBER INDEX (CONT)

Reference Number	FSCM	Fig. No.	Item No.
AN816-55	81352	D-9	10
AN961-616S	88044	D-2	14
AN961-616T	81352	D-2	14
MEP-004A	30554	D-1	1
MS16203-27	96906	D-2	13
MS18015-1	96906	D-3	2
MS20613-4P5	96906	D-3	3
MS27183-10	96906	D-2	9
MS27183-12	96906	D-4	4
MS27183-12	96906	D-5	8
MS27183-12	96906	D-6	4
MS27183-12	96906	D-8	5
MS27183-13	96906	D-3	5
MS27183-14	96906	D-2	3
MS27183-14	96906	D-5	3
MS27183-18	96906	D-7	9
MS27183-21	96906	D-1	4
MS27183-23	96906	D-7	4
MS35335-60	96906	D-9	
MS35206-311	96906	D-2	12
MS35425-28	96906	0-2	12
MS35335-60	96906	D-9	
MS51922-1	96906	D-2	10
MS51922-9	96906	D-3	6
MS51922-9	96906	D-4	5
MS51922-9	96906	D-5	9
MS51922-9	96906	D-6	5
MS51922-9	96906	D-8	6
MS51922-17	96906	D-2	4
MS51922-17	96906	D-5	4
MS51922-33	96906	D-7	10
MS61922-49	96906	D-1	5
MS51922-57	96906	D-7	5
MS53052-1	96906	D-2	1
MS90725-6	96906	D-2	8
MS90725-33	96906	D-3	4
MS90725-34	96906	D-4	3
MS90725-34	96906	D-5	7
MS90725-34	96906	D-8	3
MS90725-35	96906	D-6	3
MS90725-35	96906	D-8	4
MS90725-36	96906	D-4	6
MS90725-39	96906	D-4	7
MS90725-62	96906	D-2	2
MS90725-62	96906	D-5	2
MS90725-113	96906	D-7	8
MS90725-187	96906	D-7	3
MS90728-164	96906	D-1	2
13200-E6363	87403	D-9	7
13206E4482-3	97403	D-1	3
13211E7541	97403	D-9	1
13211E7542	97403	D-9	12
13211E7543	97403	D-9	2
13211E7544	97403	D-9	3
13211E7545	92403	D-9	11
13211E7546	97403	D-9	4
13211E7547	97403	D-9	8
13211E7548	97403	D-9	6
13214E1213-1	97403	D-2	11
13214E1214	97403	D-2	7
13214E1235	97403	D-2	5
13214E1256	97403	0-3	1
13214E1259	97403	D-5	6
13214E1261	97403	D-5	5
13214E1263	97403	D-6	2
13214E1264	97403	D-6	1
13214E1267-1	97403	D-4	8
13214E1267-2	97403	D-4	10
13214E1268	97403	D-4	9
13214E1269	97403	D-8	7
13214E1270	97403	D-8	2
13214E1271	97403	D-8	1
13214E1272	97403	D-8	8
13214E1298	97403	D-7	2
13214E1299	97403	D-7	6
13214E1300	97403	D-7	7
13214E303	97403	D-7	1
13214E309-1	97403	D-5	1
13214E1461	97403	D-4	1
13214E1462	97403	D-4	2
13214E1463	97403	D-4	11
13220E6361	97403	D-9	5
13228E6394-1	97403	D-2	19

Section V. REFERENCE DESIGNATOR INDEX

Not Applicable

☆D-32 Change 2 *U.S. GOVERNMENT PRINTING OFFICE: 1992 - 755-028/60444

By Order of the Secretary of the Army:

CARL E. VUONO
General, United States Army
Chief of Staff

Official:

R. L. DILWORTH
Brigadier General, United States Army
The Adjutant General

DISTRIBUTION:
To be distributed in accordance with DA Form 12-25A, re-quirements for Generator Set, Diesel Engine Driven, Operator Maintenance Trailer Mounted

☆U.S. GOVERNMENT PRINTING OFFICE, 1988 554-169/87034

RECOMMENDED CHANGES TO EQUIPMENT TECHNICAL PUBLICATIONS

THEN... JOT DOWN THE DOPE ABOUT IT ON THIS FORM, CAREFULLY TEAR IT OUT, FOLD IT AND DROP IT IN THE MAIL!

SOMETHING WRONG WITH THIS PUBLICATION?

FROM: (PRINT YOUR UNIT'S COMPLETE ADDRESS)

DATE SENT

PUBLICATION NUMBER	PUBLICATION DATE	PUBLICATION TITLE
TM 5-6115-625-14&P	13 Jun 88	POWER UNIT PU-405A/M

BE EXACT... PIN-POINT WHERE IT IS

PAGE NO	PARA-GRAPH	FIGURE NO	TABLE NO

IN THIS SPACE TELL WHAT IS WRONG AND WHAT SHOULD BE DONE ABOUT IT:

PRINTED NAME, GRADE OR TITLE, AND TELEPHONE NUMBER

SIGN HERE:

TEAR ALONG PERFORATED LINE

DA FORM 1 JUL 79 2028-2

PREVIOUS EDITIONS ARE OBSOLETE.

DRSTS-M Overprint 2, 1 Nov 80.

P.S.--IF YOUR OUTFIT WANTS TO KNOW ABOUT YOUR RECOMMENDATION MAKE A CARBON COPY OF THIS AND GIVE IT TO YOUR HEADQUARTERS.

The Metric System and Equivalents

Linear Measure

1 centimeter = 10 millimeters = .39 inch
1 decimeter = 10 centimeters = 3.94 inches
1 meter = 10 decimeters = 39.37 inches
1 dekameter = 10 meters = 32.8 feet
1 hectometer = 10 dekameters = 328.08 feet
1 kilometer = 10 hectometers = 3,280.8 feet

Weights

1 centigram = 10 milligrams = .15 grain
1 decigram = 10 centigrams = 1.54 grains
1 gram = 10 decigram = .035 ounce
1 dekagram = 10 grams = .35 ounce
1 hectogram = 10 dekagrams = 3.52 ounces
1 kilogram = 10 hectograms = 2.2 pounds
1 quintal = 100 kilograms = 220.46 pounds
1 metric ton = 10 quintals = 1.1 short tons

Liquid Measure

1 centiliter = 10 milliters = .34 fl. ounce
1 deciliter = 10 centiliters = 3.38 fl. ounces
1 liter = 10 deciliters = 33.81 fl. ounces
1 dekaliter = 10 liters = 2.64 gallons
1 hectoliter = 10 dekaliters = 26.42 gallons
1 kiloliter = 10 hectoliters = 264.18 gallons

Square Measure

1 sq. centimeter = 100 sq. millimeters = .155 sq. inch
1 sq. decimeter = 100 sq. centimeters = 15.5 sq. inches
1 sq. meter (centare) = 100 sq. decimeters = 10.76 sq. feet
1 sq. dekameter (are) = 100 sq. meters = 1,076.4 sq. feet
1 sq. hectometer (hectare) = 100 sq. dekameters = 2.47 acres
1 sq. kilometer = 100 sq. hectometers = .386 sq. mile

Cubic Measure

1 cu. centimeter = 1000 cu. millimeters = .06 cu. inch
1 cu. decimeter = 1000 cu. centimeters = 61.02 cu. inches
1 cu. meter = 1000 cu. decimeters = 35.31 cu. feet

Approximate Conversion Factors

To change	*To*	*Multiply by*	*To change*	*To*	*Multiply by*
inches	centimeters	2.540	ounce-inches	newton-meters	.007062
feet	meters	.305	centimeters	inches	.394
yards	meters	.914	meters	feet	3.280
miles	kilometers	1.609	meters	yards	1.094
square inches	square centimeters	6.451	kilometers	miles	.621
square feet	square meters	.093	square centimeters	square inches	.155
square yards	square meters	.836	square meters	square feet	10.764
square miles	square kilometers	2.590	square meters	square yards	1.196
acres	square hectometers	.405	square kilometers	square miles	.386
cubic feet	cubic meters	.028	square hectometers	acres	2.471
cubic yards	cubic meters	.765	cubic meters	cubic feet	35.315
fluid ounces	milliliters	29,573	cubic meters	cubic yards	1.308
pints	liters	.473	milliliters	fluid ounces	.034
quarts	liters	.946	liters	pints	2.113
gallons	liters	3.785	liters	quarts	1.057
ounces	grams	28.349	liters	gallons	.264
pounds	kilograms	.454	grams	ounces	.035
short tons	metric tons	.907	kilograms	pounds	2.205
pound-feet	newton-meters	1.356	metric tons	short tons	1.102
pound-inches	newton-meters	.11296			

Temperature (Exact)

°F	Fahrenheit temperature	5/9 (after subtracting 32)	Celsius temperature	°C

This fine document...

Was brought to you by me:

Liberated Manuals -- free army and government manuals

Why do I do it? I am tired of sleazy CD-ROM sellers, who take publicly available information, slap “watermarks” and other junk on it, and sell it. Those masters of search engine manipulation make sure that their sites that sell free information, come up first in search engines. They did not create it... They did not even scan it... Why should they get your money? Why are not letting you give those free manuals to your friends?

I am setting this document FREE. This document was made by the US Government and is NOT protected by Copyright. Feel free to share, republish, sell and so on.

I am not asking you for donations, fees or handouts. If you can, please provide a link to liberatedmanuals.com, so that free manuals come up first in search engines:

<A HREF=http://www.liberatedmanuals.com/>Free Military and Government Manuals</A>

- Sincerely
  Igor Chudov
  http://igor.chudov.com/
- Chicago Machinery Movers