OPERATOR'S, ORGANIZATIONAL, DIRECT SUPPORT AND GENERAL SUPPORT MAINTENANCE MANUAL

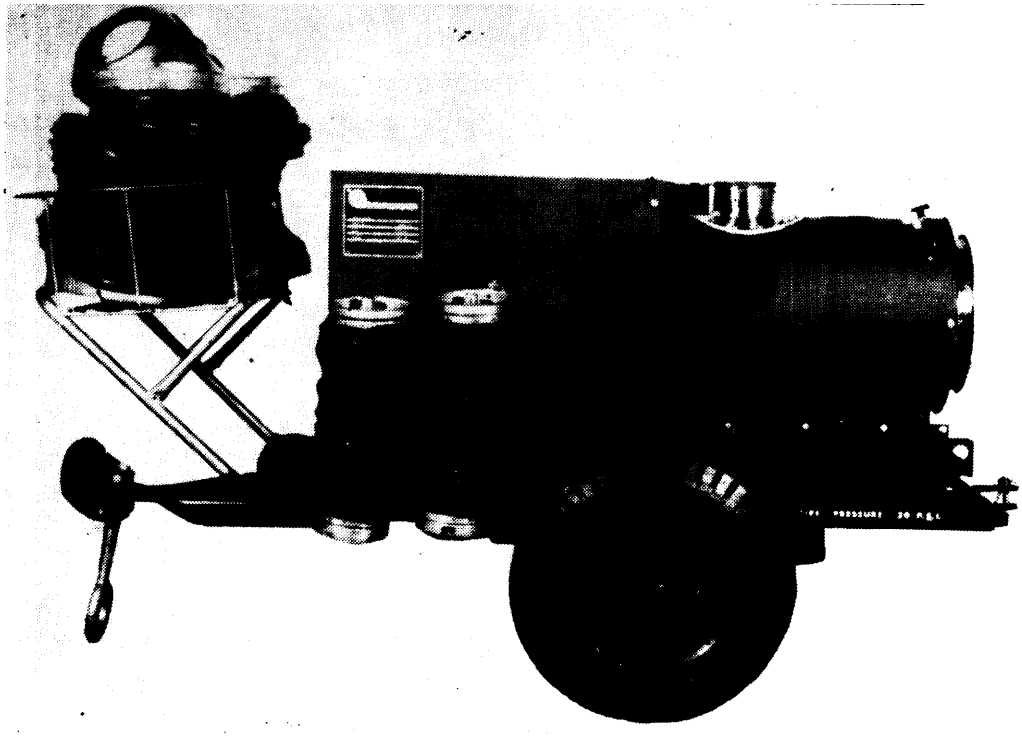

HEATER, DUCT TYPE, PORTABLE, TRAILER MOUNTED, 400,000 BTU/HR FIESTA MODEL FC-400-1

(4520-01-071-7191)

HEADQUARTERS, DEPARTMENT OF THE ARMY

11 JULY 1980

This copy is a reprint which includes current pages from Changes 1 through 4.,5

CHANGE

NO. 6

HEADQUARTERS
DEPARTMENT OF THE ARMY
WASHINGTON, D. C., 10 October 1990

Operator's, Organizational, Direct Support
and General Support Maintenance Manual

HEATER, DUCT TYPE, PORTABLE, TRAILER MOUNTED,
400,000 BTU/HR FIESTA MODEL FC--400-1
(4520-01-071-7191)

Approved for public release; distribution is unlimited

TM 5-4520-244-14, 11 July 1980, is changed as follows:

1. Remove and insert pages as indicated below. New or changed text material is indicated by a vertical bar in the margin. An illustration change is indicated by a miniature pointing hand.

Remove pages	Insert pages
2–7 and 2–8	2–7 and 2–8
4–61 and 4–62	4–61 and 4–62

2. Retain this sheet in front of manual for reference purposes.

By Order of the Secretary of the Army:

CARL E. VUONO
General, United States Army
Chief of Staff

Official:

THOMAS F. SIKORA
Brigadier General, United States Army
The Adjutant General

DISTRIBUTION:

To be distributed in accordance with DA Form 12-25E, (qty rqr block no. 0981)

CHANGE

NO. 5

HEADQUARTERS
DEPARTMENT OF THE ARMY
WASHINGTON, D.C., 30 April 1990

Operator's, Organizational, Direct Support
and General Support Maintenance Manual

HEATER, DUCT TYPE, PORTABLE,
TRAILER MOUNTED 400,000 BTU/HR
FIESTA MODEL FC-400-1
NSN 4520-01-071-7191

Approved for public release; distribution is unlimited

TM 5-4520-244-14, 11 July 1980, is changed as Follows:

1. Remove and insert pages as indicated below. New or changed text material is indicated by a vertical bar in the margin. An illustration change is indicated by a miniature pointing hand.

Remove pages	Insert pages
a and b	a and b
2-1 through 2-10	2-1 through 2-10

2. Retain this sheet in front of manual for reference purposes.

By order of the Secretary of the Army:

CARL E. VUONO
General, UnitedStates Army
Chief of Staff

Official:

WILLIAM J. MEEHAN, II
Brigadier General, United States Army
The Adjutant General

DISTRIBUTION:
To be distributed in accordance with DA Form 12-25A, Operator, Unit, Direct Support and General Support Maintenance Requirements for Heater, Duct Type, Portable, Trailer Mounted MTD, 400,000 BTU/HR (FC-400-l); Gas 250,000 BTU (VBM-250, VBM-250A).

CHANGE No. 4

HEADQUARTERS
DEPARTMENT OF THE ARMY
WASHINGTON, D.C.,20 January 1988

Operator's, Organizational, Direct Support
and General Support Maintenance Manual

HEATER, DUCT TYPE, PORTABLE, TRAILER MOUNTED,
400,000 BTU/HR FIESTA MODEL FC-400-1
(4520-01-071-7191)

TM 5-4520-244-14, 11 July 1980, is changed as follows:

1. Remove and insert pages as indicated below. New or changed text material is indicated by a vertical bar in the margin. An illustration change is indicated by a miniature pointing hand.

Remove pages	Insert pages
i and ii	i and ii
4-61 and 4-62	4-61 and 4-62

2. Retain this sheet in front of manual for reference purposes.

By order of the Secretary of the Army:

CARL E. VUONO
General, United States Army
Chief of Staff

official:

R. I,. DILWORTH
Brigadier General, United States Army
The Adjutant General

DISTRIBUTION:
To be distributed in accordance with DA Form 12-25A , Operator, Unit, Direct Support and General Support Maintenance requirements for Heater, Duct Type, Portable, Trailer MTD, 400,000 BTU (FC-400-l); Gas 250,000 BTU (VBM-250, VBM-250A).

URGENT

TM 5-4520-244-14
C 3

CHANGE No. 3

HEADQUARTERS
DEPARTMENT OF THE ARMY
WASHINGTON, D.C., 4 March 1987

Operator's, Organizational, Direct Support
and General Support Maintenance Manual

HEATER, DUCT TYPE, PORTABLE, TRAILER MOUNTED,
400,000 BTU/HR FIESTA MODEL FC-400-1
(4520-01-071-7191)

TM 5-4520-244-14, 11 July 1980, is changed as follows:

1. Remove and insert pages as indicated below. New or changed text material is indicated by a vertical bar in the margin. An illustration change is indicated by a miniature pointing hand.

Remove pages	Insert pages
a and b	a and b
2-1 and 2-2	2-1 and 2-2

2. Retain this sheet in front of manual for reference purposes.

By order of the Secretary of the Army:

JOHN A.WICKHAM, JR.
General, United States Army
Chief of Staff

Official:

R.L.DILWORTH
Brigadier General, United States Army
The Adjutant General

DISTRIBUTION:
To be distributed in accordance with DA Form 12-25A , Operator, Unit, **Direct** Support and General Support Maintenance requirements for Heater, Duct Type, Portable, Trailer MTD, 400,000 BTU (FC-400-l); Gas 250,000 BTU (VBM-250, VBM-250A).

CHANGE No. 2

HEADQUARTERS
DEPARTMENT OF THE ARMY
WASHINGTON, D.C., 30 December 1986

Operator's, Organizational, Direct Support and
General Support Maintenance Manual

HEATER, DUCT TYPE, PORTABLE,
TRAILER MOUNTED, 400,000 BTU/HR
FIESTA MODEL FC-400-1
(4520-01-071-7191)

TM 5-4520-244-14, **11** July 1980, is changed as follows:

1. Remove and insert pages as indicated below. New or changed text material is indicated by a vertical bar in the margin. An illustration change is indicated by a miniature pointing hand.

Remove pages	Insert pages
i and ii	i and ii
1-1 and 1-2	1-1 and 1-2
2-3 and 2-4	2-3 and 2-4
A-1/A-2	A-1/A-2

2. Retain this sheet in front of manual for reference purposes.

By Order of the Secretary of the Army:

JOHN A.WICKHAM, JR.
General, United States Army
Chief of Staff

Official:

R.L. DILWORTH
Brigadier General, United States Army
The Adjudant General

distribution;
To be distributed in accordance with DA Form 12-25A, Operator's, Organizational, Direct Support and General Support Maintenance requirements for Heater, Duct Type, Portable, Trailer Mounted, 400,000 BTU (FC-400-1).

CHANGE NO. 1

HEADQUARTERS
DEPARTMENT OF THE ARMY
WASHINGTON, D.C., 27 June 1983

OPERATOR'S, ORGANIZATIONAL, DIRECT SUPPORT
AND GENERAL SUPPORT MAINTENANCE MANUAL

HEATER, DUCT TYPE, PORTABLE, TRAILER MOUNTED
400,000 BTU/HR, FIESTA MODEL FC-400-1 (4520-01-071-7191)

TM 5-4520-244-14, 11 July 1980, is changed as follows:

1. Remove and insert pages as indicated below:

	Remove pages	Insert pages
	Warning	a and b
Table of Contents	i and ii	i and ii
Chapter 2	2-1 and 2-2	2-1 and 2-2

2. New or changed text material is indicated by a vertical bar in the margin. An illustration change is indicated by a miniature pointing hand,

3. Retain this sheet in front of manual for reference purposes.

By Order of the Secretary of the Army:

E.C.MEYER
General, United States Army
Chief of Staff

official:

ROBERT M. JOYCE
Major General,United States Army
The Adjutant General

DISTRIBUTION:
To be distributed in accordance with DA Form 12-25C, Operator Maintenance requirements for Heaters, Space: 400,000 BTU.

WARNING

DO NOT OPERATE HEATER IN EXPLOSIVE VAPOR AREA

WARNING

EXHAUST FUMES

Do not operate heater in enclosed space
Adequate ventilation is required to prevent buildup of exhaust fumes which can be toxic in concentrated amounts

WARNING

GASOLINE

Gasoline used in operating this heater is explosive
Do not refuel during operation
Avoid open flame near gas tank filler neck
Keep cap on gas tank except during refueling
Make sure a wheeled Class 20-B:C fire extinguisher is in easy reach

WARNING

HIGH TEMPERATURE

Heat exchanger casing may become dangerously hot during operation
DO NOT TOUCH:
Perform maintenance only after heater has cooled off

WARNING

SOLVENT

Dry cleaning solvent, P-D-680, used to clean parts
is potentially dangerous to personnel and property
Avoid repeated and prolonged skin contact
Do not use near open flame or excessive heat
Flash point of solvent is 100° - 138°F (380 - 59°C)

WARNING

CARBON MONOXIDE

DO NOT use gasoline engine driven heaters to heat personnel areas, such as hospital wards and other living and sleeping quarters. Exposure to fumes usually exceeds eight hours and ventilation is frequently inadequate. Therefore, DEATH OR SERIOUS INJURY COULD RESULT FROM CARBON MONOXIDE SUFFOCATION.

Gasoline heaters are designed for use in warehouses and maintenance shops where personnel exposure is usually limited to eight hours and ventilation is adequate. DO NOT SLEEP IN ANY AREA WHILE HEATER IS IN OPERATION.

WARNING

Heaters were not designed to be towed over highways at high speeds, and to do so is considered unsafe. Movement of short distances should be made by hand. For movements of longer distances, the heater should be loaded into a truck, 2 1/2-5 tons.

TECHNICAL MANUAL

No. 5-4520-244-14

HEADQUARTERS
DEPARTMENT OF THE ARMY
WASHINGTON, D.C., 11 July 1980

OPERATOR'S, ORGANIZATIONAL, DIRECT SUPPORT AND GENERAL SUPPORT MAINTENANCE MANUAL

HEATER,DUCT TYPE,PORTABLE, TRAILER MOUNTED 400,000 BTU/HR, FIESTA MODEL FC-400-1(4520-01-071-7191)

REPORTING ERRORS AND RECOMMENDING IMPROVEMENTS

You can help improve this manual. If you find any mistake or if you know of a way to improve the procedures, please let us know. Mail your letter, DA Form 2028 (Recommended Changes to Publications and Blank Forms, or DA Form 2028-2 located in the back of this manual direct to: Commander, U.S. Army Troop Support Command, ATTN: AMSTR-MCTS, 4300 Goodfellow Boulevard, St. Louis, MO 63120-1798. A reply will be furnished directly to you.

TABLE OF CONTENTS

Chapter I

INTRODUCTION

1-1 OVERVIEW

Chapter 1 of this TM is intended to give you a general idea of the type of equipment, its" 'use and the main characteristics of the heater covered by this manual .

SECTION I

GENERAL INFORMATION

1-2 SCOPE

This TM Chapter applies to Fiesta Model FC-400-1 Portable Duct Type Heater which delivers 400,000 BTU per hour of heated air. Included in this manual are :

a. Information on operating the heater.

b. The theory of operation of the heater.

c. Troubleshooting and servicing information,

(1) For the operator
(2) For organizational maintenance
(3) For direct support maintenance
(4) For general support maintenance

The information in this manual is primarily intended for use by Army personnel having the responsibility of operating and maintaining the Model FC-400-1 heater.

1-3 MAINTENANCE FORMS, RECORDS AND REPORTS

Department of the Army forms and procedures used for equipment maintenance will be those prescribed by DA Pam 738-750, The Army Maintenance Management System.

1-4 REPORTING EQUIPMENT IMPROVEMENTS, RECOMMENDATIONS

If your heater needs improvement, let us know. Send us an EIR. You, the user, are the only one who can tell us what you don't like about your equipment. Let us know why you don't like the design. Tell us why a procedure is hard to perform. Put it on an SF 368 (Quality Deficiency Report). Mail it to us at: Commander, Headquarters , U. S. Army Troop Support Command, ATTN: AMSTR-QX, 4300 Goodfellow Blvd., St. Louis, MO 63120-1798. We'll send you a reply.

1-5 HAND RECEIPT

Hand receipts for Components of End Item (COEI), Basis Issue Items (BII), and additional Authorization List (AAL) items are published in a Hand Receipt Manual, TM5-4520-224-14-HR. This manual is published to aid in property accountability and is available through: Commander, U.S. Army Adjutant General Publication Center, ATTN: AGDL-OD, 2800 Eastern Boulevard, Baltimore, MD 21220.

SECTION II

EQUIPMENT DESCRIPTION AND DATA

1-6 DESCRIPTION

Model FC-400-l burns gasoline to generate fresh, uncontaminated heated air. heater is shown in figure l-l.

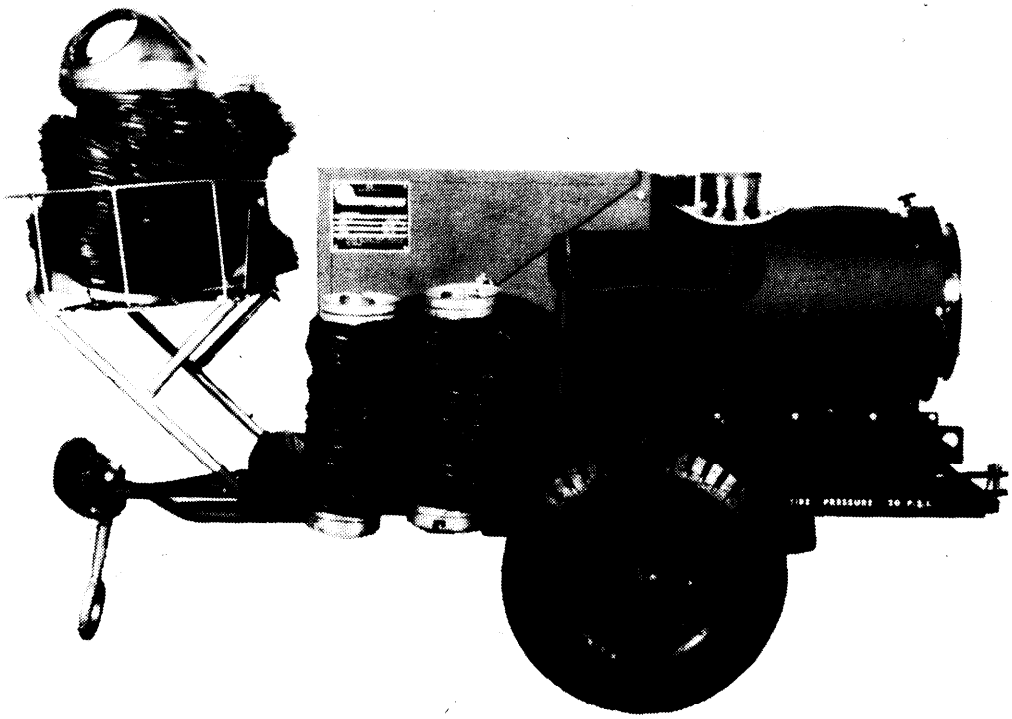

Figure 1-1. *Model FC 400-1 Heater*

Figure l-4 describes the operation of the fuel system. The gasoline is pumped from a fuel tank, forced through a spray nozzle, ignited, and burned in the combustion chamber of a heat exchanger. A fan blows air through the heat exchanger where it is heated and delivered through ducts to the area to be heated.

1-7 PURPOSE

Model FC–400-1 is used in the following applications.

a. To preheat aircraft engines and fuselage.

b. To heat up ground vehicles.

c. To heat maintenance building, field shelter, and temporary structures.

Also for forced fresh air ventilation without heating.

1-8 CAPABILITIES AND FEATURES

- Fully-enclosed, self-contained unit
- Trailer mounted - ground portable
- Gasoline fuel - gasoline engine driven
- Variable temperature range
- With exhaust properly vented, heater delivers uncontaminated air through the flexible duct

1-9 LOCATION AND DESCRIPTION OF MAJOR COMPONENTS

Refer to figure 1-.? f-or the location and description of the major components of the Model FC-400-1 heater.

1-10 EQUIPMENT DATA

See Table 1-1.

MAJOR COMPONENTS

1 CABINET TOP, open for access to prime mover.

2 FAN . Provides combustion air and ventilating air.

3 PRIME MOVER. Gasoline engine to drive fan, fuel pump and magneto.

4 FUEL PUMP. Pumps gasoline from fuel tank to combustor.

5 FUEL FILTER. Insures that only clean fuel is fed to combustor.

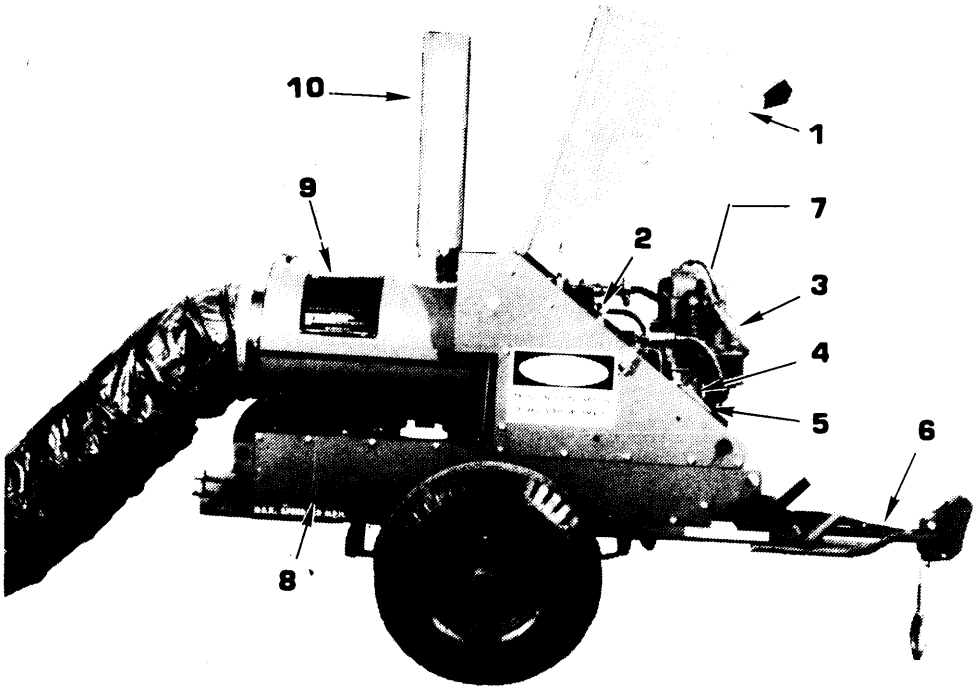

6 SKID . Provides mounting for heater assembly and a means of transporting heater to location of use.

7 MAGNETO . Provides high-voltage spark for igniting fuel.

8 FUEL TANK. Holds supply of gasoline for combustor flame and for operation of prime mover.

9 HEAT EXCHANGER. Fuel burns inside heat exchanger. Fan blows air over exterior of heat exchanger. Heated air is blown out of heat exchanger.

10 EXHAUST STACK. Expels burned gasoline fumes to exterior of heater.

Figure 1-2. Location and Description of Major Components

Table 1-1. Equipment Data, Model FC-400-1

Manufacturer	Fiesta Corporation
Model	FC-400-1
Heated Air Output:	
Maximum	400,000 BTUH @-65-degrees F ambient
Minimum	400,000 BTUH @ 70-degrees F ambient
Heated Air Temperature Range:	
Maximum	280 F (138-degrees C)
Minimum	150 F (65.5-degrees C)
Air Delivery Rate:	
Maximum	1500 CFM
Minimum	600 CFM
Fuel	Gasoline. IAW MIL-G-3506
Fuel Tank Capacity	16 gal (nominal)
Overall Dimensions:	
Length	78 inches
Height	39 inches
Width	40 inches
Shipping Cubit	70.3 cu.ft.
Weight, Empty	295 lbs.
Prime Mover (Gasoline Engine)	MS Model 1 A08-III
Engine Speed, factory set	3450-3750 RPM

SECTION III
TECHNICAL PRINCIPLES OF OPERATION

1-11 HEATER OPERATING PRINCIPLES

Basic heater operating principles are given in Figures 1-3 and 1-4.

HEATER OPERATION

A Gasoline engine (1) is set into operation by means of a starter rope. The engine speed is 3450 to 3750 rpm.

B The engine is direct-coupled to fan (2). A portion of the fan air is used for the burning fuel, the remainder is heated and forced out as hot air,

C A belt from the engine drives fuel pump (3) and magneto (4). Fuel pump (3) pumps gasoline from tank (5) into the combustor section of the heat exchanger (6). Engine (1) has its own fuel pump which pulls gasoline from tank (5) for engine operation.

D In the combustor section of the heat exchanger, fuel is sprayed through a nozzle. Alongside the nozzle is an igniter, which is similar to a spark plug. Magneto (4) delivers high voltage to the igniter to produce an electric arc. The arc keeps the gasoline burning at the nozzle.

E A combustion plate in the heat exchanger separates the heated air from the air used for burning fuel. Burning fuel fumes and the gasoline engine exhaust are expelled through exhaust stack (7). Clean, heated air blows out of heat exchanger (6). Ducts carry heated air to the location to be heated,

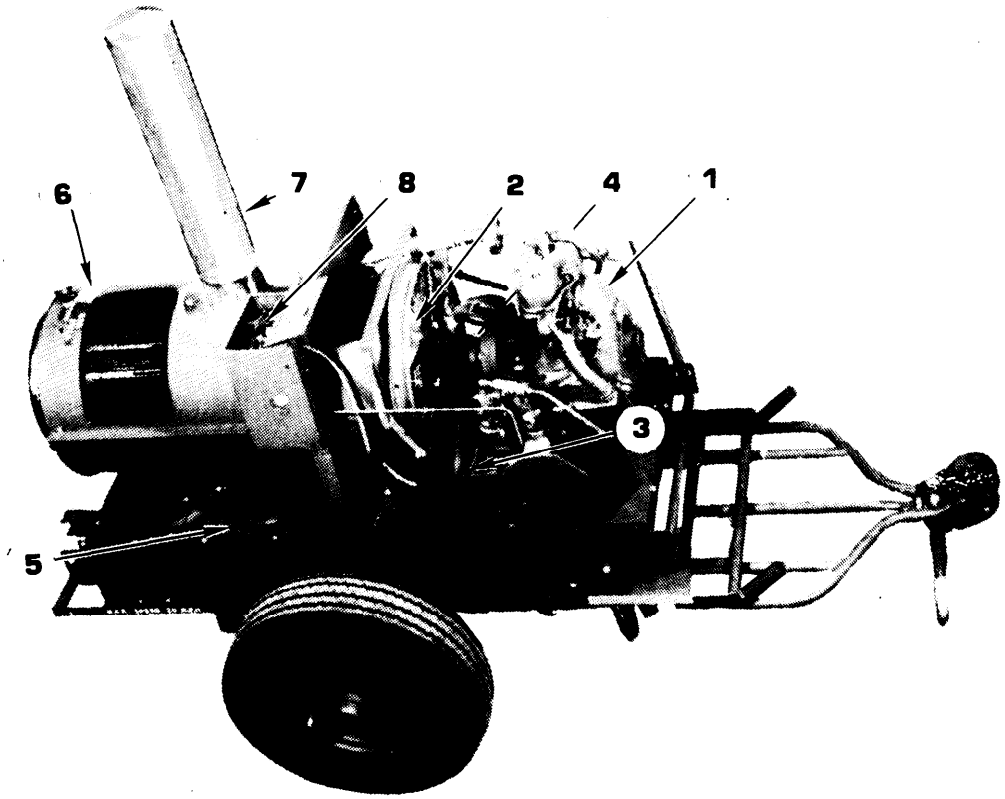

F Controls (8) allow adjustment of the combustion flame for various outlet air temperatures. Gages indicate air-temperature and fuel level in the gasoline tank,

Figure 1-3. Heater Operating Principles

HOW THE HEATER FUEL SYSTEM OPERATES

1. ENGINE
   Fuel pump on gasoline engine draws fuel from tank to run engine.

2. HEATER FUEL PUMP
   Belt driven by engine. Runs continuously. Delivers fuel to nozzle for burning to produce heat.

3. NOZZLE
   Fuel sprays out from nozzle and is ignited by igniter plug.

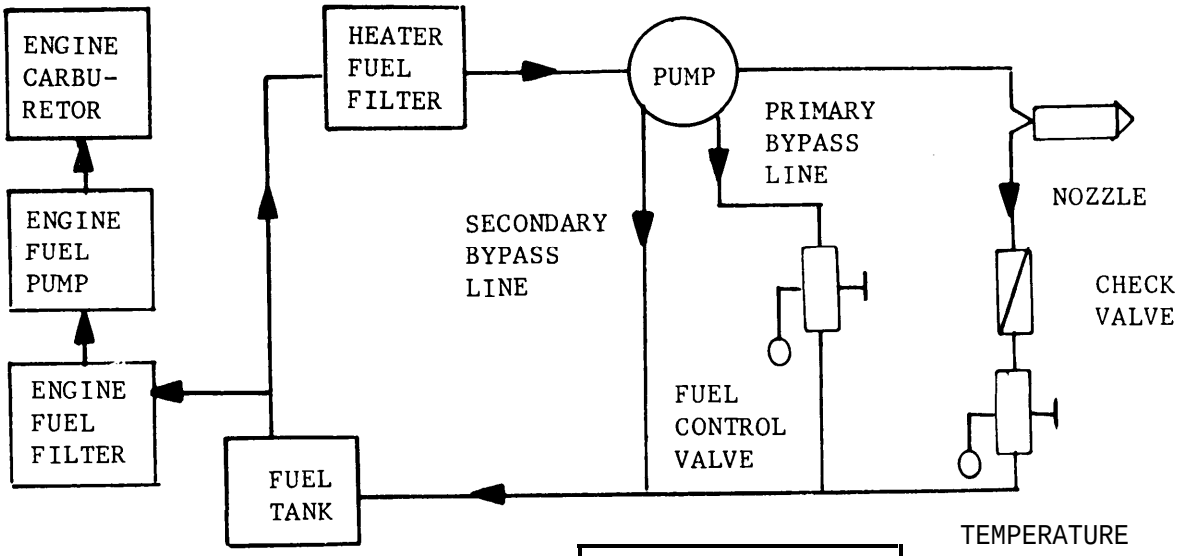

6. SECONDARY BYPASS LINE
   Pump supplies more fuel than needed for full flow thru nozzle.
   Excess returns to tank thru secondary bypass line.

5. TEMPERATURE SELECTOR VALVE
   Adjusts fuel flow thru nozzle.
   VALVE CLOSED: Full flow thru nozzle.
   VALVE OPEN: Fuel goes back into tank.

4. CHECK VALVE
   Allows flow only in direction shown by arrow.

7. FUEL CONTROL VALVE
   Turns heater flame on and off.
   VALVE OPEN: Fuel goes into tank, not to nozzle.
   VALVE CLOSED: Fuel goes to nozzle for burning.

Figure 1-4. Fuel System Operation

CHAPTER 2

OPERATING INSTRUCTIONS

WARNING

CARBON MONOXIDE

DO NOT use gasoline engine driven heaters to heat personnel areas, such as hospital wards and other living and sleeping quarters. Exposure to fumes usually exceeds eight hours and ventilation is frequently inadequate. Therefore, DEATH OR SERIOUS INJURY COULD RESULT FROM CARBON MONOXIDIE SUFFOCATION. These heaters may be used to heat warehouses and for maintenance shop applications, if the personnel exposure is limited to not more than eight hours and ventilation is adequate. DO NOT SLEEP IN ANY AREA WHILE HEATER IS IN OPERATION.

WARNING

Heaters were not designed to be towed over highways at high speeds and to do so is considered unsafe. Movement of short distances should be made by hand. For movements of longer distances, the heater should be loaded into a truck, 21/2-5 tons.

2-1. OVERVIEW

This chapter presents the instructions needed by the operator to effectively use the heater.

Section I.
CONTROLS AND INDICATORS

2-2. CONTROLS, DESCRIPTION AND USE

(See Figure 2-1 for illustration and description of operator controls and indicators)

1. FUEL GAGE, Needle indicates E (Empty) 1/4, 1/2, 3/4 and F (Full).

2. FUEL CONTROL VALVE. An off-on valve. When open (ON) fuel goes to tank, when closed (OFF) fuel goes to nozzle.

3. TEMPERATURE SELECTOR. Pointer on knob indicates selected temperature in 25-degree steps from low of 150-degrees to high of 280-degrees F.

4. TEMPERATURE SELECTOR VALVE. Turn knob clockwise for hotter air, counterclockwise for cooler air.

5. TEMPERATURE GAGE. Needle points to actual temperature of discharge air in degrees Fahrenheit.

6. DAMPER CONTROL. When facing hot air outlet, turn LEFT to close, RIGHT to open.

7. ENGINE STOP. Switch that stops engine by grounding spark plug voltage.

8. CHOKE. Control on carburetor allows operator to adjust fuel mix for cold starting.

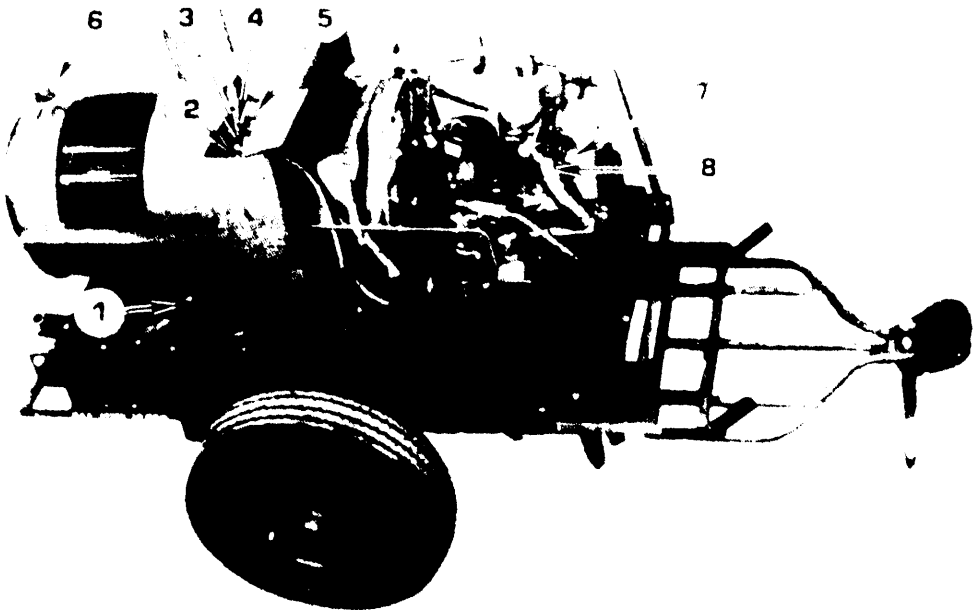

Figure 2-1. Heater Controls and Indicators.

Section II.
PREVENTIVE MAINTENANCE CHECKS AND SERVICES

2-3. PREVENT MAINTENANCE CHECKS AND SERVICES

Before you operate. Always keep in mind the WARNINGS and CAUTIONS. Perform your before (B) PMCS.

b. ***While you operate.*** Always keep in mind the WARNINGS and CAUTIONS. Perform your during (D) PMCS.

c. ***After you operate.*** Be sure to perform your after (A) PMCS.

d. ***If your equipment fails to operate.*** Troubleshoot with proper equipment. Report any deficiencies using the proper forms. See DA Pam 738-750.

e. Perform Operator's Preventive Maintenance Checks and Services in accordance with Table 2-1.

Table 2-1, Operator/Crew Preventive Maintenance Check sand Service

LEGEND

B-Before
D-During
A-After
W-Weekly
M-Monthly

Item No.	Interval B	D	A	W	M	Item to be Inspected	Procedures Check for and have repaired or adjusted as necessary	For readiness reporting equipment is not ready/ available
1	•	•				Ducts	Check for torn areas or faulty connectors	Fabric torn or connectors defective
2	•					Adapter	Bent or Worn	Bent or worn beyond satisfactory use
3					•	Basket	Inspect for distortion or broken welds	Basket damaged beyond use
4					•	Handles	Bent, broken or missing	Replacement not made
5				•		Cabinet Top	Dented or distorted	Damage interferes with opening and closing
6	•					Access Door	Inspect latch, hinge, metal surface	Door will not open and close properly
7	•					Air Inlet Door	Inspect latch, hinge, metal surface	Door will not open and close properly
8	•					Air Inlet Screen	Inspect for attachment, torn screening	Damage prevents proper heater operation
9	•	•				Gasoline Engine	Inspect for operable condition	Preservative oil must be replaced with engine oil
10	•	•				Fuel Hose and Lines	Inspect for damage or fuel leakage	Obviously defective, or if fuel leaks
11	•	•				Fuel Line Fittings	Inspect for damage or fuel leakage	Obviously defective, or if fuel leaks
12	•	•				Fuel Filter	Inspect for damage or fuel leakage	Obviously defective, or if fuel leaks
13	•	•				Burner Fuel Control Valve	Inspect for damage or fuel leakage	Obviously defective, or if fuel leaks

Table 2-1. Operator/Crew Preventive Maintenance Checks and Service (Cont)

Item No.	Interval B	D	A	W	M	Item to be Inspected	Procedures Check for and have repaired or adjusted as necessary	For readiness reporting equipment is not ready/ available
14	•					Ignition Cable	Insulation damage, severed cable	Cable is damaged or defective
15	•					Magneto	Proper mounting — obvious damage	Damaged or defective
16	•					Drive V-Belt	Torn or frayed. Inspect for proper tension Deflection is 3/4 to 1 -inch midway between pulleys.	Damaged, defective, slipping
17	•	•				Indicators	Inspect fuel and temperature for proper operation	Damaged or defective
18	•					Damper Control	Smooth operation, bent or damaged parts	Damaged or if does not adjust properly
19	•					Exhaust Stack	Bent, corroded or leaky pipes	Pipes are damaged or cannot he installed
20				•		Side Panels	Inspect for dents, corrosion	Condition of panels interferes with proper heater operatlon
21					•	Information Plates	Inspect for defaced, illegible or loose condition	
22					•	wheels and Drums, Tires and Tubes	Inspect for damage, wear, proper inflation	Condition prevents proper utilization of heater
23				•		Wheel Hubs and Bearings	Inspect for damage Listen for bearing noise	Condition prevents proper proper utilization of heater

Section III.
OPERATING UNDER USUAL CONDITIONS

2-4. OPERATING UNDER USUAL CONDITIONS

WARNING

DO NOT use gasoline engine driven heaters to heat personnel areas, such as hospital wards and other living and sleeping quarters. Exposure to fumes usually exceeds eight hours and vcntilation is frequently inadequate. Therefore, DEATH OR SERIOUS INJURY COULD RESULT FROM CARBON MONOXIDE SUFFOCATION.

Gasoline heaters are designed for use in warehouses and maintenance shops where personnel exposure is usually limited to eight hours and ventilation is adequate. DO NOT SLEEP IN ANY AREA WHILE HEATER IS IN OPERATION.

- See figure 2-2 for duct attachment
- See figure 2-3 for start up and operating procedures
- See figure 24 for shutdown procedures

Section IV
OPERATING UNDER UNUSUAL CONDITIONS

2-5. EXTREME COLD

a. ***Precautions***

(1) Carefully clean ice and snow from filler cap before adding fuel.
(2) Keep fuel tank full to prevent condensation.
(3) Use low-temperature lubricant in engine.
(4) Empty engine and heater fuel filters daily.
(5) Immediately after use, clean all snow, ice and mud from heater.
(6) In extreme cold, remove engine and store in a heated location.
(7) Cover heater when not in use.

b, ***Cold Weather Starting***

(1) Using a winterization torch, apply heat to engine block, head and flywheel. If after 3-minutes heating engine will not start, continue to preheat.

(2) Fully open choke, give long steady pull on starter rope, close choke to 1/2 open, pull on starter rope rapidly to start engine.

NOTE

If another working heater is available, use hot air discharge to warm up heater to be started.

2-6. DUSTY OR SANDY CONDITIONS

a. *Precautions*

(1) When operating in high velocity winds, protect heater components with tarpaulins, being careful not to close off air intake. Keep dust and sand wiped from the heater. Take advantage of natural barriers as much as possible.

(2) Protect fuel supply from dust and dirt contamination. Wipe dust and sand from around the fuel filler cap.

(3) When not in operation, close and cover the heater as tightly as possible, Clean filter frequently.

(4) Wipe excess fuel and oil from metal parts of the heater.

b. *Starting and Operation*

(1) Start up and ruining - See figure 2-3.

(2) Shut down - See figure 24.

2-7. MOVEMENT TO A NEW WORK SITE

WARNING

Heaters were not designed to be towed over highways at high speeds, and to do so is considered unsafe. Movement of short distances should be made by hand. For movements of longer distances, the heater should be loaded into a truck, 2 1/2-5 tons.

a. Follow normal shut-down procedures.

b. Prepare heater for movement (See Fig 1–1).

c. Move heater according to warning notice.

d. Follow normal start-up and operating instructions at new work site according to Fig 2–3

HOW TO INSTALL AIR DELIVERY DUCTS

A. USING ONE 12-INCH DUCT

Remove discharge outlet cover. Hook 12-inch duct directly to the duct adapter on the heater.

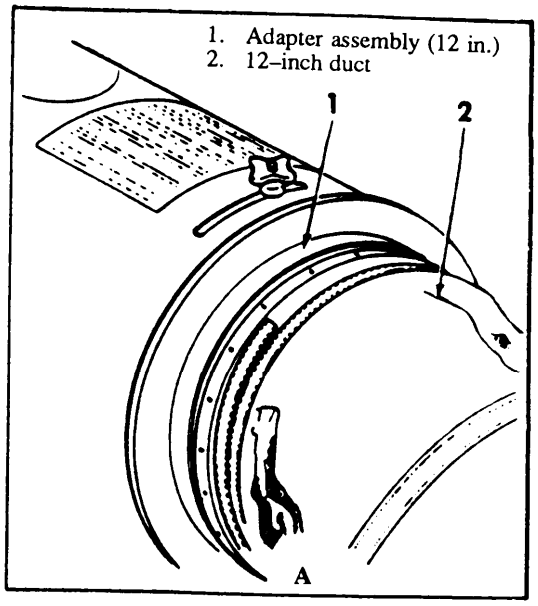

B. USING THREE 6-INCH DUCTS.

Install 3-outlet duct adapter on to heater duct adapter. Install 6-inch ducts on adapter.

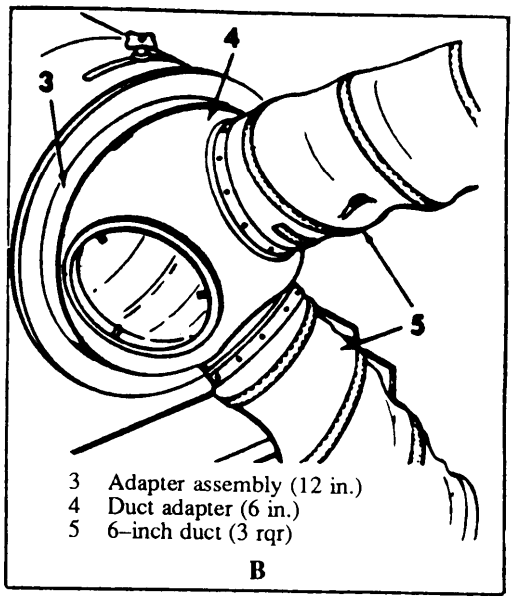

C. USING 12-INCH AND 6-INCH DUCTS.

Install 12-inch duct on heater adapter. Install duct adapter on 12-inch duct. Install 6-inch ducts on adapter.

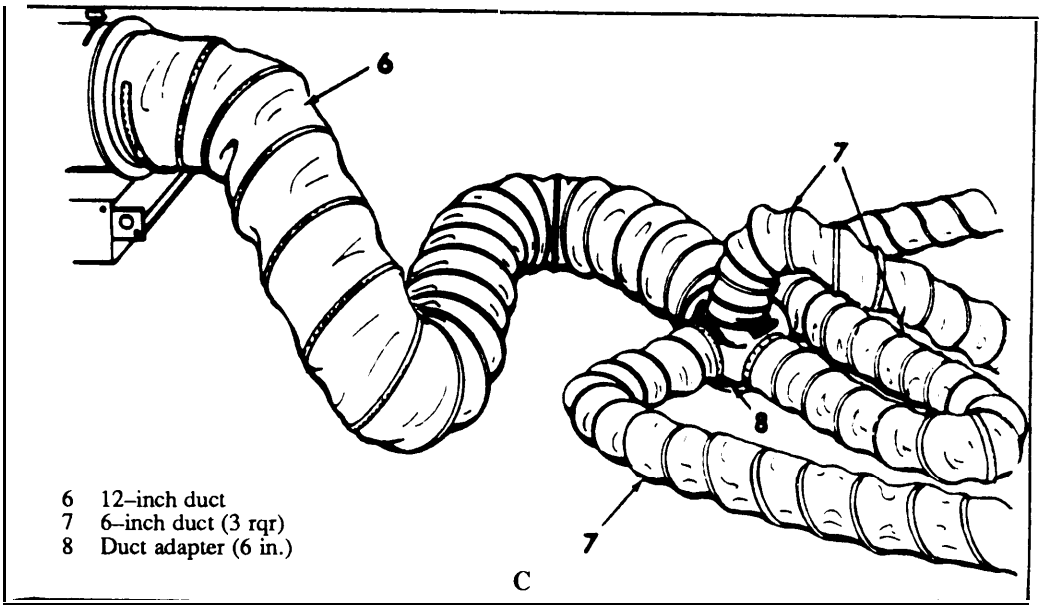

Figure 2-2.

Duct Attachment

TO START

A. Disengage latches and open cabinet cover.

B. Insert exhaust pipe into exhaust stack.

C. Open exhaust and cover, open damper to FULL.

D. Attach air duct or ducts.

E. Remove fuel tank cap. Pump in gasoline until gage reads FULL. Put cap back on tank.

F. Place choke lever left of vertical 45-degree (FULL closed).

H. Wrap starter rope around engine fly wheel flange. Pull quickly to start engine.

I. As engine warms up, gradually move CHOKE to right 45 degrees to horizontal (OPEN) position.

J. Adjust damper to desired air flow.

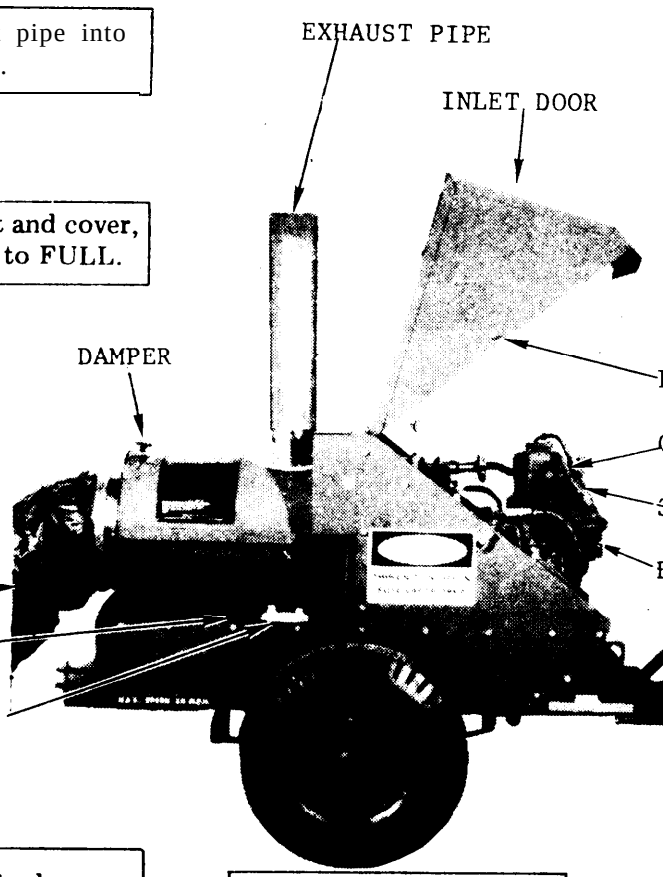

TO RUN

A. Close and latch cabinet cover. Open air inlet door.

B. Press fuel control valve to admit fuel to burner.

C. Rotate temperature selector knob to desired temperature.

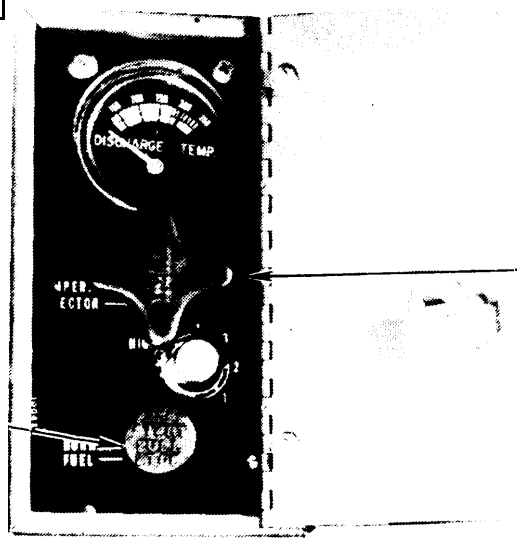

Figure 2-3. How to Start Up and Run Heater

TO SHUT DOWN

A. Turn temperature selecter valve knob fully counterclockwise until temperature indicating knob points to LOW.

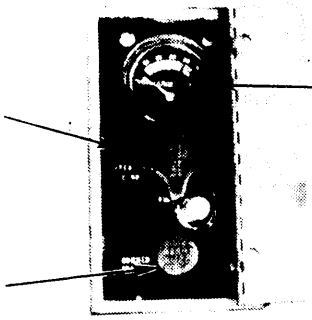

D. Allow engine to run until temperature gage points to COOL

B. Pull fuel valve control knob UP.

C. Turn damper control to full OPEN.

E. Open access cover on top of heater and turn engine switch OFF.

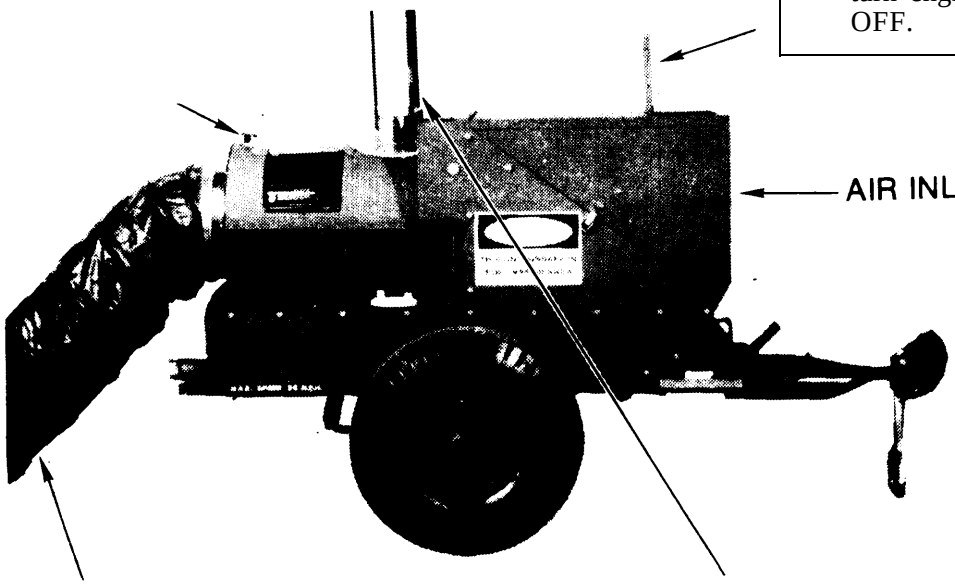

F. Remove duct and put end cover in place.

H. When exhaust pipe has cooled, remove and store as shown in Figure 1-1.

G. Fold and clamp ducts. Store as shown in Figure 1-1.

I. Close air inlet door.

Figure 2-4. How to Shut Down Heater.

*U.S. GOVERNMENT PRINTING OFFICE: 1990- 7S4-029/20082

Chapter 3

OPERATOR'S MAINTENANCE INSTRUCTIONS

3-1 OVERVIEW

This chapter contains instructions for troubleshooting and maintenance that are the responsibility of the heater operator.

SECTION I
LUBRICATION INSTRUCTIONS

3-2 LUBRICATION

The operator is not responsible for heater lubrication.
See Chapter 4 for Lubrication Instructions.

SECTION II
TROUBLESHOOTING

3-3 OPERATOR'S TROUBLESHOOTING PROCEDURES

See table 3-1

SECTION III
MAINTENANCE PROCEDURES

3-4 OPERATOR MAINTENANCE PROCEDURES

a. Engine Removal and Installation. See figure 3-1.

Table 3-1. Operator's Troublteshooting Chart

MALFUNCTION TEST OR INSPECTION	CORRECTIVE ACTION
1. ENGINE WILL NOT START	
Step 1. Check on-off switch	Position to ON
Step 2. Check fuel supply	Add fuel
Step 3. If engine still will not start:	Report condition to organizational maintenance
2. HEATER WILL NOT IGNITE	
Step 1. Check position of fuel valve control knob	Ensure that knob is down
Step 2. Check condition of fuel lines	Report defective condition to organizational maintenance
Step 3. Check drive belt: Is belt broken or missing?" Is belt too loose?	Report condition to organizational maintenance
Step 4. Heater still will not ignite	Report condition to organizational maintenance
3. EXCESSIVE SMOKE IN HEATER EXHAUST	
Step 1. Refer to NOTE on figure 4-1.	No corrective action required
Step 2. Inspect for closed air inlet door or clogged screen	Open air inlet door, clean screen
Step 3. Check exhaust stack for obstruction	Remove obstruction

Table 3-1. Operator's Troubleshooting Chart...Cont

MALFUNCTION TEST OR INSPECTION CORRECTIVE ACTION
4. COMBUSTOR FLAME CUTS OUT ON OVERHEAT Step 1. Inspect for unobstructed air inlet Open inlet door or remove obstruction Step 2. Check for discharge air restriction Straighten air duct for free air flow 5. INCORRECT DISCHARGE AIR TEMPERATURE Step 1. Inspect setting of Temperature Selector Valve Adjust to proper setting Step 2. Condition Continues Report to Organizational Maintenance 6. MAXIMUM HEAT OUTPUT NOT OBTAINABLE Step 1. Report condition to Organizational Maintenance

TO REMOVE ENGINE

A. Disconnect engine fuel line at quick disconnect coupling.

B. Remove three thumb screws holding engine to resilient mountings.

D. Lift engine (30 lbs.) and pull back and away from fan drive coupling.

C. Unlatch exhaust pipe coupling

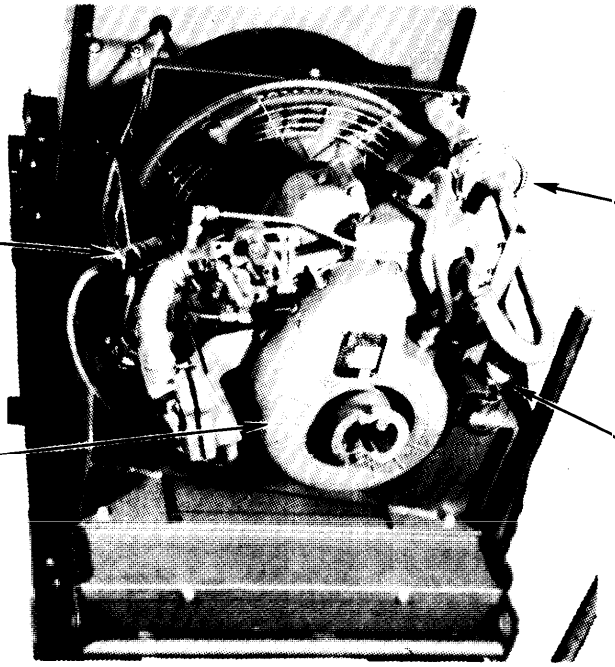

TO INSTALL ENGINE

A. Place engine in position shown. Ensure that engine coupling properly engages fan coupling.

B. Connect engine fuel hose to heater fuel supply at quick disconnect coupling.

C. Ensure that engine exhaust pipe is properly inserted into exhaust extension pipe. Latch coupling.

D. Tighten engine mounting screw securely hand tight.

Figure 3-1. Engine Removal and Installation

b. *Engine Oil Level.* If oil is below full mark on dipstick, report condition to Organizational Maintenance

c. *Tires and Tubes.* Ensure that tire air pressure is in accordance with Air Pressure stenciled on heater.

3-5 ADMINISTRATIVE STORAGE

Refer to TM750-244-3

Chapter 4

ORGANIZATIONAL MAINTENANCE INSTRUCTIONS

4-1 OVERVIEW

This chapter contains maintenance and servicing procedures that are the responsibility of Organizational Maintenance. Operator maintenance tasks given in Chapter 3 are not repeated in this chapter.

SECTION I

REPAIR PARTS AND SPECIAL TOOLS

4-2 REPAIR PARTS

See TM5-4520-244-25P for a listing of spare parts required for maintaining the heater.

4-3 SPECIAL TOOLS

See procedure 4-20 for the special tool required for maintenance of the temperature selector valve.

SECTION II
SERVICE UPON RECEIPT

4-4 SERVICE UPON RECEIPT

4-5. Service Upon Receipt Check List

See Table 4-1.

4-6 SPECIAL SERVICES

4-7. Removing Preservative from Fuel Tank

See figure 4-1.

SECTION III
PREVENTIVE MAINTENANCE CHECKS AND SERVICES (PMCS)

4-8 ORGANIZATIONAL PMCS

See Table 4-2.

Table 4-1. Heater Service-Upon-Receipt Checklist

LOCATION	ITEM	ACTION	REMARKS
(1) In crate with assembled heater	Contents of crate	Check crate for following contents: . Trailer assembly and wheels . Two 12-inch ducts . Three 6-inch ducts . One duct adapter . One duct basket . One exhaust stack . Engine technical manual . This technical manual	Notify Supply Officer of any missing or damaged parts
(2) Heater Package and Contents	Packing Materials	Remove all blocks and packing	Save if heater is to be shipped to different site
	Heater Parts	Check parts received against packing list	Report deficiencies to Supply Officer
		Check all parts for damage	Report damage to Supply Officer
(3) Assembled Heater	(a) To assemble heater	(a) Assemble components per instruction sheets attached to inside of carton	
	(b) To prepare heater for use	(b) Prepare unit for use as follows:	

Table 4-1. Heater Service-Upon-Receipt Checklist ... Cont

LOCATION	ITEM	ACTION	REMARKS
		. Drain preser - vative oil from fuel tank and engine . Fill tank with fuel. Fill engine with engine oil.	Ref. paragraph 4–6.
		. Place heater into operation	Ref. Figure 2–2.

TO REMOVE PRESERVATIVE OIL

A. Procure a suitable container to catch oil drained from fuel tank

D. Procure a suitable container to catch oil drained from engine

B. Remove pipe plug from back of fuel tank and drain contents

E. Remove drain plug from engine and drain contents

C. Put pipe plug back into tank and fill tank with gasoline

F . Put drain plug back in engine and add oil in accordance with L05-2805-256-12 (approx. 1/2 quart SAE 30)

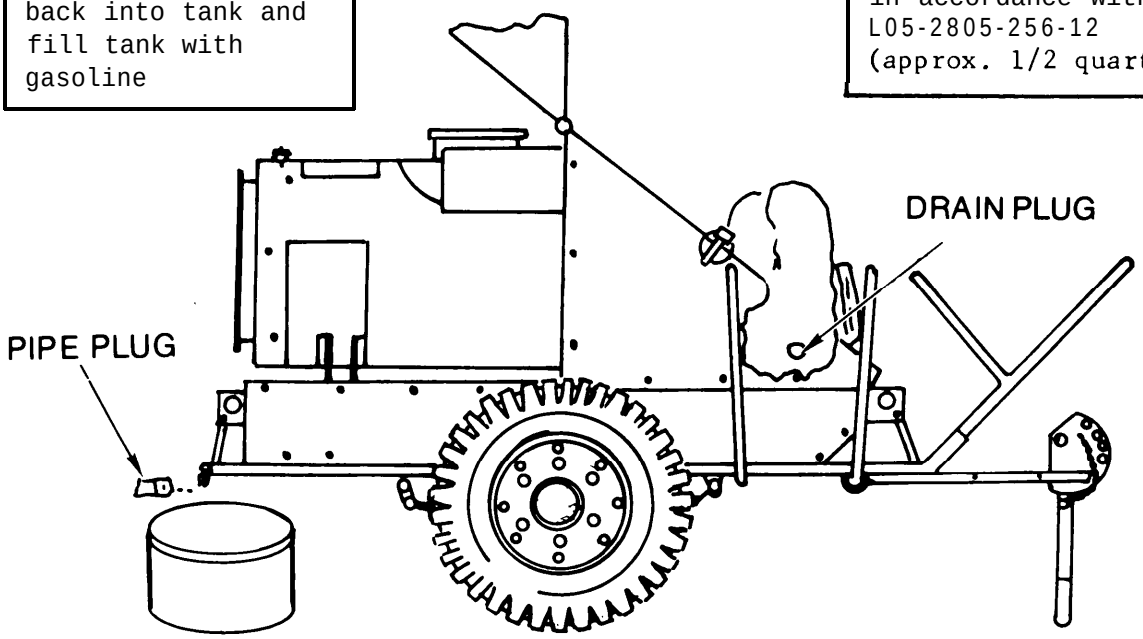

NOTE : When heater is started up, heavy white smoke will be expelled from exhaust stack until remaining preservative oil has been "burned up". This condition will not interfere with heater operation.

Figure 4-1. How to Remove Preservative Oil

Table 4-2 Organizational Preventive Maintenance Checks and Service

Legend

W-Weekly
M-Monthly
Q-Quarterly
S-Semiannually
A-Annually
B-Biennially

Item No.	Interval W	M	Q	S	A	B	Item to be Inspected	Procedures	Equipment will be reportcd NOT ready,/ available if:
1		●					Ducts	Inspect for wear or damage . Repair or replace if defective	RNA*
2				●			Duct Adapter, Basket , Handles	Inspect for corrosion or damage. Repair or replace as necessary	RNA
3				●			Cabinet Top , Access Door, Air Inlet Door, Air Inlet Screen	Inspect for damage, Repair or replace as necessary.	RNA
4	●						Gasoline Engine	Inspect and Service: . Oil supply - replenish or change . Fuel Filter . Spark Plug and wiring	RNA
5		●					Fuel System	Inspect, Service and Replace: . Hose . Lines and Fittings . Fuel Filter . Fuel Pump To test fuel pump, see Figure 4-8	RNA
6			●				Controls and Instruments	Test and Replace as necessary: . Burner Fuel Control Valve . Temperature Selector Valve	RNA
7		●					Ignition System	Test, Repair or Replace as necessary: . Magneto . Ignition Cable	RNA

Table 4-2. Organizational Preventive Maintenance Checks and Service... Cont

Item No.	Interval W	M	Q	S	A	B	Item to be Inspected	Procedures	Equipment will be reported NOT ready/ available if:
8				●			Air System	Inspect, Service and Replace as necessary: . Drive Coupling . Fan Ring . Vaneaxial Fan . Air Vane	RNA
9		●					Drive Belt	Adjust to l/2-inch deflection with 10 lb. pressure at midpoint	---
10				●			Combustion System	Inspect, Service and Replace as necessary: . Tubing . Fittings	RNA
11				●			Ignition Plug	Adjust for 5/32-inch gap. Replace if irreparable.	---
12					●		Heat Exchanger and Damper Control	Inspect and Replace if irreparable: . Damper Control . Air Control . Exhaust Stack	RNA
13					●		Side Panels	Inspect and Replace if irreparable: . Side Panels . Information Plates	RNA
14					●		Trailer Assembly	Inspect and Replace if necessary: . Wheels . Wheel Drums . Tires and Tubes . Wheel Hubs and Bearings	RNA

*RNA - Usable replacement for irreparable part is not available.

SECTION IV
TROUBLESHOOTING

4-9 ORGANIZATION MAINTENANCE TROUBLESHOOTING CHART

See Table 4-3. This table does not repeat operator's maintenance procedures given in Table 3-1. Perform tests , inspections and corrective actions in the order listed.

Table 4-3 Organizational Maintenance Troubleshooting Chart

MALFUNCTION	TEST OR INSPECTION	CORRECTIVE ACTION
1. ENGINE FAILS TO START		
	Step 1. Check for correct operating mode (See Table 3-1)	
	Step 2. If engine still will not start	Refer to TM5-2805-256-14 for troubleshooting procedures on Model 1A08-111 engine.
2. ENGINE STARTS, BUT WILL NOT CONTINUE TO RUN		
	Step 1. Inspect for adequate fuel supply	Replenish fuel supply
	Step 2.	Refer trouble to Direct Support Maintenance
3. HEATER WILL NOT IGNITE		
	Step 1. Check for faulty magneto (See para. 4-15).	Repair or replace magneto (See para. 4-14)
	Step 2. Inspect igniter plug for dirt or damage	Clean thoroughly. Replace if irreparable.
	Step 3. Measure igniter plug gap	Set gap at 5/32-inch (See para. 4-22)
	Step 4. Inspect for defective magneto cable	Replace if defective
4. BURNER WILL NOT IGNITE (MAGNETO satisfactory)		
	Step 1. Ensure that fuel pump is delivering fuel to burner	Check for gasoline wetness at combustor nozzle
	Step 2. Inspect filter, lines, nozzle for clogged condition	Clean to remove obstruction. Replace filter element
	Step 3. Test for faulty fuel pump. (See Figure 4-8)	Repair or replace fuel pump
	Step 4. Test for faulty fuel control valve. (See Para. 4-20) or temperature selector valve.	Repair or replace defective component
5. CONTAMINATED FUEL - DIRT, ICE, WATER		
	Step 1. Inspect fuel filter for signs of fuel contamination	Drain and flush tank. Refill. Replace fuel filter element.

Table 4-3 Organizational Maintenance Troubleshooting Chart. .. Cont

MALFUNCTION TEST OR INSPECTION	CORRECTIVE ACTION
6. EXCESSIVE SMOKE IN HEATER EXHAUST	
Step 1. Possible cause: incorrect nozzle spray pattern	Clean nozzle, or replace if defective
Step 2. Engine operating below specified speed	Refer to TM5-2805-14 and adjust engine to speed range between 3450-3750 rpm
Step 3. Check for correct air/fuel mixture (high altitude)	Refer to TM5-2805-14 for high altitude carburetor adjustment
Step 4. Check fuel pump discharge pressure	(Ref. fig. 4-8)
7. COMBUSTOR FLAME-QUT ON OVERHEAT	
Step 1. Inspect for damaged capillary on heat sensor	Replace heat sensor
Step 2. Fuel control valve sensor improperly positioned in air stream	Adjust sensor to correct position
Step 3. Inspect for icing in burner nozzle bypass	Remove nozzle, clean, reinstall
8. INCORRECT OR FLUCTUATING DISCHARGE AIR TEMPERATURE	
Step 1. Inspect for defective temperature gage	Replace with functioning component
Step 2. Inspect for defective temperature selector valve	Replace with functioning component
9. MAXIMUM HEAT OUTPUT NOT OBTAINABLE	
Step 1. Check for fuel system leak	Tighten all fittings
Step 2. Test for defective fuel pump (See fig. 4-8)	Repair or replace fuel pump
Step 3. Check fuel filter for clogged condition	Replace filter element

SECTION V
MAINTENANCE PROCEDURES

4-10 SUMMARY AND DETAILED PROCEDURES

SUMMARY PROCEDURES

PARAGRAPH	PROCEDURE	RELATED ILLUSTRATIONS
4-11	Ducts, Adapter, Basket and Support Handles	4-2
4-12	Hood Assembly	4-3
4-13	Power Unit	3-1
4-14	Magneto and Ignition Cable	4-4
4-15	Magneto Repairs	4-5
4-16	How to Adjust Magneto Points	4-6
4-17	Fuel Lines and Fittings and Fuel Pump Test	4-7,4-8
4-18	Servicing Heater Fuel Filter	4-9
4-19	Controls and Instruments	4-10
4-20	Fuel Control Valve and Temperature Selector Valve	4-11,4-12, 4-13
4-21	Drive Belt, Drive Coupling and Fan	4-14
4-22	Combustion System	4-15
4-23	Damper control, Air Control and Exhaust Stack	4-16
4-24	Bulkheads, Side Panels and Casing	4-17
4-25	Trailer Assembly	4-18
4-26	Lubrication	4-19

4-11 DUCTS, ADAPTER, BASKET AND SUPPORT HANDLE

This task covers:
a. Removal
b. Inspection
c. Installation

INITIAL SETUP

Test Equipment
None

References
Figure 4-2

Materials/Parts
Serviceable replacement parts

Equipment Condition
Completely assembled

Personnel Required
1

LOCATION	ITEM	ACTION	REMARKS
REMOVAL			
1. Ducts and adapter.	a. Ducts (1), (2)	Lift from holders (11) and basket (7)	
	b. Adapter (3)	Remove from basket (7)	
2. Duct holders	Holders (11)	Remove nut (8) Washer (9) and Screw (10) from holders (11). Remove holders (11)	
3. Basket	Basket (7)	Remove nuts (12), washers (5) and J-bolts (6). Remove basket (7)	
4. Handle assembly	Handle (15)	Remove nuts (12), washers (13) and screws (14). Lift handle (15) from socket in frame (16)	

INSPECTION

- Unlock duct clamps, extend ducts to full length and examine for holes and damaged adapter ends.
- Examine all parts for serviceable condition. Replace all broken, damaged or worn out parts with a serviceable like item.

LOCATION	ITEM	ACTION	REMARKS
INSTALLATION			
5.	Handle assembly	Use screws (14), washers (13) and nuts (12)	Install handle (15) in socket in frame (16)
6.	Basket	Use J-bolts (6) washers (5) and nuts (4)	Install basket (7) in handle (15)
7.	Duct holders	Use screw (10), washer (9) and nut (8)	Install holders (11) in socket on frame (16)
8.	Ducts and adapter	Ducts	Close and store 6-inch air ducts on holders (11). Store 12-inch duct and adapter in basket (7)

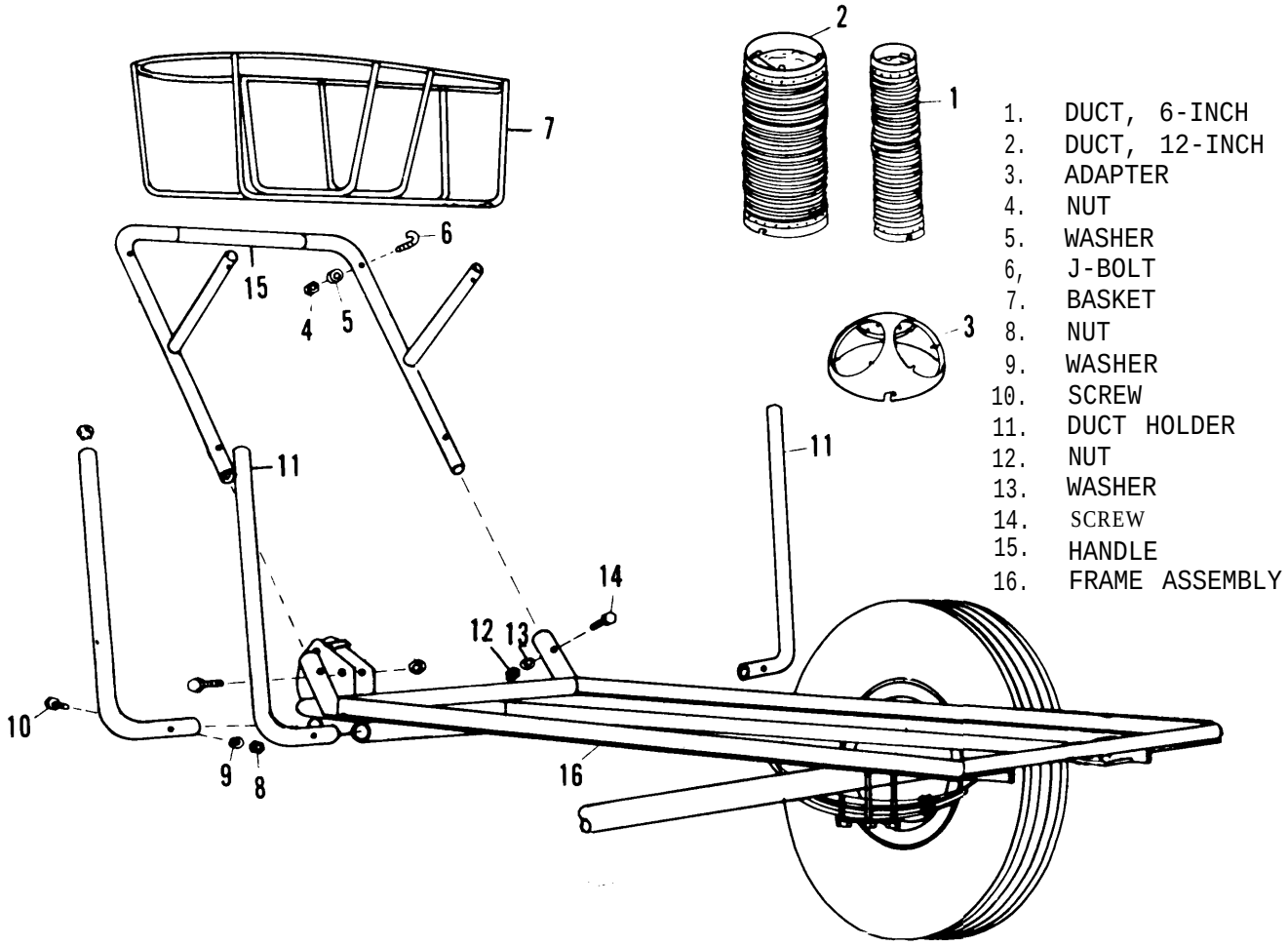

Figure 4-2.Ducts, Adapter, Basket and Support Handles

4-12 HOOD ASSEMBLY

This task covers:

a. Removal
b. Repair
c. Installation

INITIAL SETUP

Test *Equipment*
None

Materials/Parts
None

Personnel Required
1

References
Figure 4-3

Equipment condition
Fully assembled

LOCATION		ITEM	ACTION	REMARKS
REMOVAL				
1.	Hood assembly	Hood assembly (3)	Remove screws (1) and washers (2). Lift hood from heater	
2.	Access door	Access door (9)	Remove screws (7), and washers (8). Lift access door from hood	
3.		Catch (14)	Remove screws (13) and washers (12). Remove catch from access door.	
4.		Air inlet door (17)	Remove screws (15), and washers (16). Remove inlet door from hood assembly	
5.		Catch (22)	Remove screws (21), washers (20), nuts (19). Remove catch from inlet door	
6.		Screen (27)	Remove screws (25), and washers (26). Remove screen from hood assembly	

REPAIR Replace any of preceding parts that are rusted or damaged such as to be beyond repair by straightening or hammering out minor dents.

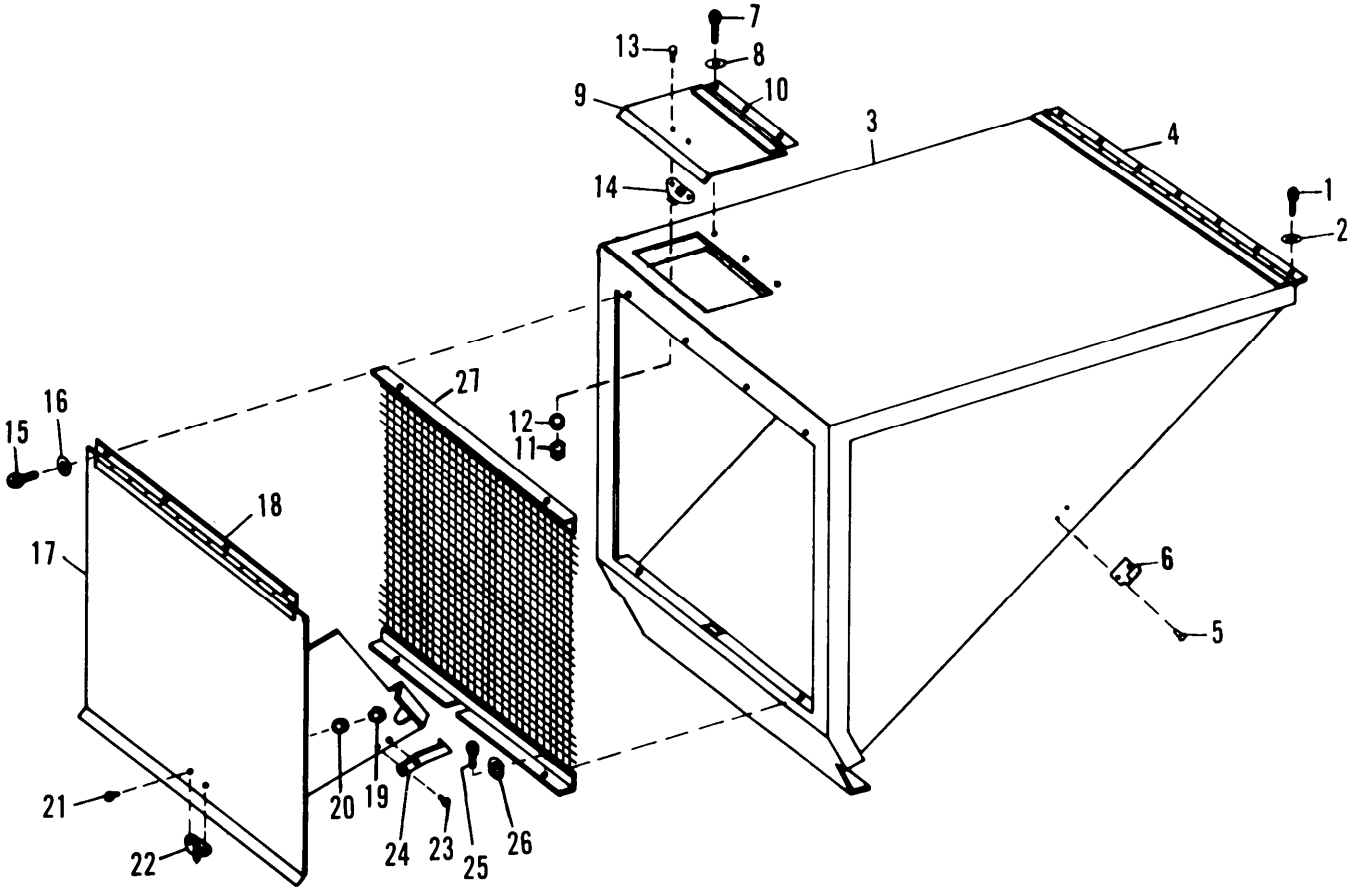

1. SCREW
2. WASHER
3. HOOD ASSEMBLY
4. HINGE
5. SCREW
6. CATCH
7. SCREW
8. WASHER
9. ACCESS DOOR
10. HINGE
11. NUT
12. WASHER
13. SCREW
14. CATCH
15. SCREW
16. WASHER
17. AIR INLET DOOR
18. HINGE
19. NUT
20. WASHER
21. SCREW
22. CATCH
23. SCREW
24. LATCH
25. SCREW
26. WASHER
27. SCREEN

Figure 4-3. Hood Assembly

LOCATION	ITEM	ACTION	REMARKS
7.	Catch (14)	Use screws (13), washers (12), nuts (11). Install catch on access door.	
8.	Access door (9)	Use screws (7), and washers (8). Install access door (9) on hood assembly	
9.	Screen (27)	Use screws (25), and washers (26). Install screen on hood assembly	
10.	Air Inlet door catch (22)	Use screws (21), washers (20), nuts (19). Install catch on air inlet door.	
11.	Air inlet door (17)	Use screws (15), and washers (16). Install air inlet door on hood assembly	
12.	Hood assembly (3)	Use screws (l), and washers (2). Install hood assembly on heater	

4-13 POWER UNIT (Gasoline Engine)

This task covers:
a. Servicing

INITIAL SETUP

Test Equipment
None

Materials / Parts
Lubricant

Personnel& Required
1

References
L05-2805-256-12

Equipment Condition
Fully assembled

LOCATION	ITEM	ACTION	REMARKS
SERVICING			
1. Oil supply	a. Check oil level on dipstick.	a. Add lubricant as required	Use lubricant specified in L05-2805-256-12
	b. Change oil	b. Remove drain plug, empty oil, install plug, add new oil.	
2. Air cleaner	Service every 50 hours	Disassemble, clean, reoil , reassemble	Use procedure in L05-2805-256-12
3. Spark plug	Remove and replace every 100 hours	Discard. Install equivalent replacement plug.	

4-14 MAGNETO AND IGNITION CABLE

This task covers:
a. Removal
b. Installation

INITIAL SETUP

Test Equipment
None

Materials / Parts
None

Personnel Rquired
1

References
Figure 4-4

Equipment Condition
Hood assembly removed (para. 4-12)

Engine removed (Figure 3-1)

LOCATION	ITEM	ACTION	REMARKS
REMOVAL (Figure 4-4)			
1. V-Belt	V-Belt (9)	Rotate Pulley (5) and disengage V-belt (9)	Or loosen fuel pump. Refer to 4-17
2.	Ignition cable (1)	Disconnect from magneto (8) and Igniter	Discard if defective
3.	Magneto (8)	Remove screw (6) washers (7). Remove magneto for mounting	
INSTALLATION (Figure 4-4)			
4. Magneto (8)		use screws (6), washers (7). Install magneto	See 4-15 for magneto servicing
5.	Ignition cable (1)	Connect to magneto and igniter	
6.	V-belt (9)	Engage over magneto, fan and fuel pump pulleys.	

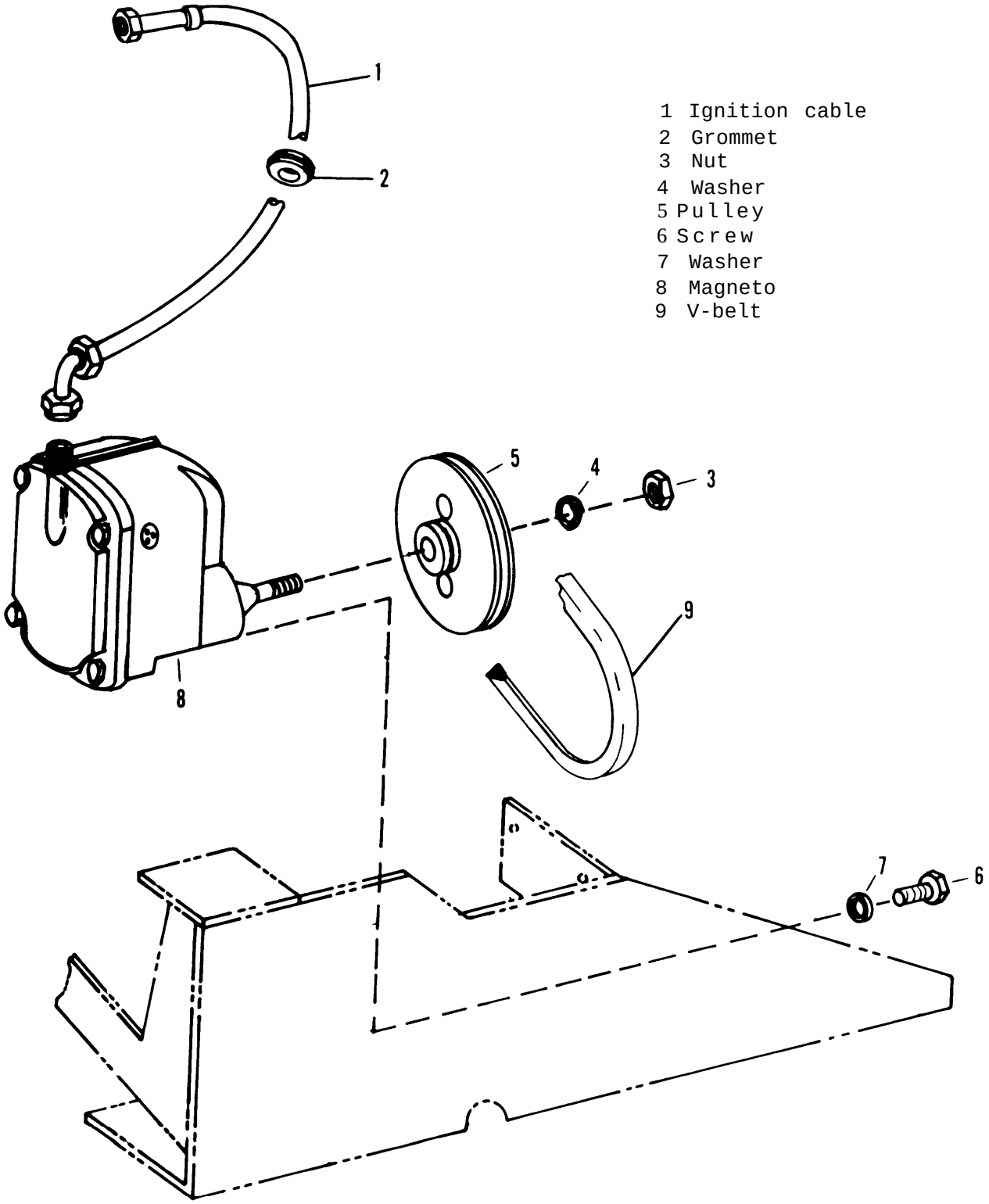

Figure 4-4. Magneto and Ignition *Cable*

4-15 MAGNETO REPAIR

This task covers:

a. Disassembly
b. Inspection
c. Parts replacement
d. Reassembly

INITIAL SETUP

Test Equipment
None

Materials/ Parts
Magneto Repair Parts

Personnel Required
1

References
Figure 4-5

Equipment Condition
Magneto removed from heater using procedure given in 4-13

LOCATION	ITEM	ACTION	REMARKS
DISASSEMBLY			
1.	Cover (3)	Remove screws (1) and washers (2). Remove cover (3) and gasket (4). Remove cable outlet (5) from cover (3).	
2.	Spring (11)	Remove screw (9). Remove capacitor wire, field coil wire and contact spring.	
3.	Movable contact (11)	Remove clip (10). Remove movable contact assembly (11)	Discard burned contact
4.	Capacitor (8)	Remove screw (6). Remove capacitor (18).	Discard faulty capacitor
5.	Camwick and Holder (15)	Remove screw (12) and washer (13). Remove camwick and holder (15)	

LOCATION	ITEM	ACTION	REMARKS
6.	Adjustable contact (17)	Remove screw (9), washers (7) and (16). Remove adjustable contact assembly (17).	Discard burned contact
7.	Field coil (29)	Loosen set screws (28). Remove coil (29)	
8. Bearing (19)	Remove screws (12)	Remove plate (18) Remove bearing (19)	
9. Housing (25)	a. Packing (21)	Remove washer (12), packing (21) washer (22), clip (23).	
	b. Use arbor press	press out rotor (24)	
	c. Clip (26)	Remove clip (26). Press out bearing (27)	
	d. Screw (6)	Remove screw (6). Remove vent hood (31) and screen (32).	

INSPECTION AND PARTS REPLACEMENT

- Inspect all parts for serviceable condition. Replace all faulty parts with a serviceable like item.
- Test capacitor as described in TM5-764. Replace if faulty.

10. Vent	Use screw (6)	Install vent screen (32) and hood (31).	
11. Housing (25)	a. Bearing (27)	Install bearing (27), install clip (26).	
	b. Rotor (24)	Install rotor (24) into bearing (27).	
	c. Packing	Install clip (23), washer (22), packing (21), washer (20).	Crimp edge of housing to retain packing and washer

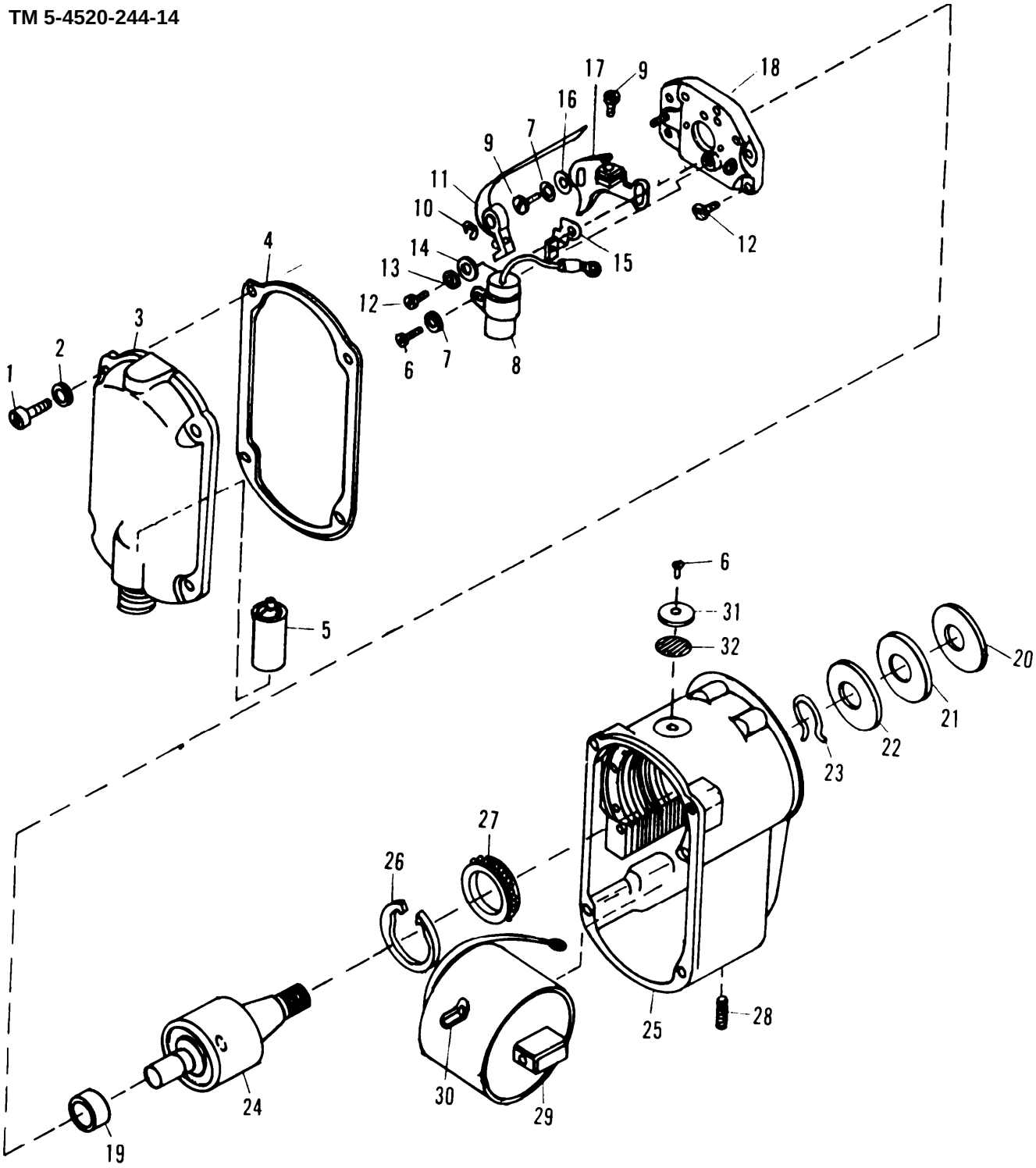

1	SCREW	9	TERMINAL SCREW	17	CONTACT ASSEMBLY	25	HOUSING
2	WASHER	10	RETAINING CLIP	18	BEARING SUPPORT PLATE	26	CLIP
3	COVER	11	CONTACT ASSEMBLY	19	BEARING	27	BEARING
4	GASKET	12	SCREW	20	WASHER	28	SETSCREW
5	CABLE OUTLET	13	WASHER	21	PACKING	29	FIELD COIL
6	SCREW	14	WASHER	22	WASHER	30	ELECTRICAL CONTACT
7	WASHER	15	CAMWICK & HOLDER	23	CLIP	31	VENT HOOD
8	CAPACITOR	16	WASHER	24	ROTOR	32	VENTSCREEN

Figure 4-5. Magneto Assembly

LOCATION	ITEM	ACTION	REMARKS
12. Bearing (19)	Use screws (12)	Install bearing (19) in plate (18). Install plate (18)	
13. Field Coil (29)	Setscrews (28)	Install field coil and secure with setscrews	
14. Contact (17)	Use screw (9), washers (7) and (16)	Install contact assembly (17)	
15. Camwick	Use screw (12) and washer (13, 14)	Install camwick and holder (15)	
16. Capacitor	use screw (6) and washer (7)	Install capacitor (8)	
17. Contact	Use clip (10)	Install contact assembly (11)	
18. Spring	Use screw (9)	Connect capacitor wire , field coil and spring. Contact assembly (11) and screw (9)	
19. End Cover	a. Cable outlet	Install cable outlet in cover	
	b. Use screws (1) and washers (2)	Attach cover (3) and gasket (4) to housing (25)	

ADJUSTMENT

Adjust points as described in 4-16.

4-16 HOW TO ADJUST MAGNETO POINTS

This task covers:
a. Adjustment
b. Test

INITIAL SETUP

Test Equipment
None

Materials/Parts
None

Personnel Required
1

References
Figure 4-6

Equipment Condition
Magneto removed from heater using procedure given in 4–14. Magneto cover and gasket removed using procedure given in 4-15.

LOCATION	ITEM	ACTION	REMARKS
ADJUSTMENT			
1. Magneto Cover		Remove four screws. Remove magneto cover and gasket.	
2, Measure gap	V-belt	Rotate until arm (6) is on high point of cam (9). Insert feeler gage	Correct gap is between 0.015 and 0.018
3. Adjust gap		Loosen screws (3). Move bracket (8) to correct gap spacing	
4. Secure gap		Tighten screws (3). Recheck gap	
5. Magneto Cover	Use four screws	Install cover and gasket	
INSTALLATION			
6. Magneto	Substitute magneto cable	Disconnect cable at magneto. In its place connect an insulated test cable. Remove	

LOCATION	ITEM	ACTION	REMARKS
		insulation from last l/4-inch of unconnected end of cable. Tape cable in a position to hold bare end 5/8-inch from frame of heater (ground). Start up engine. If the magneto is operating properly, an arc will jump from wire to frame.	

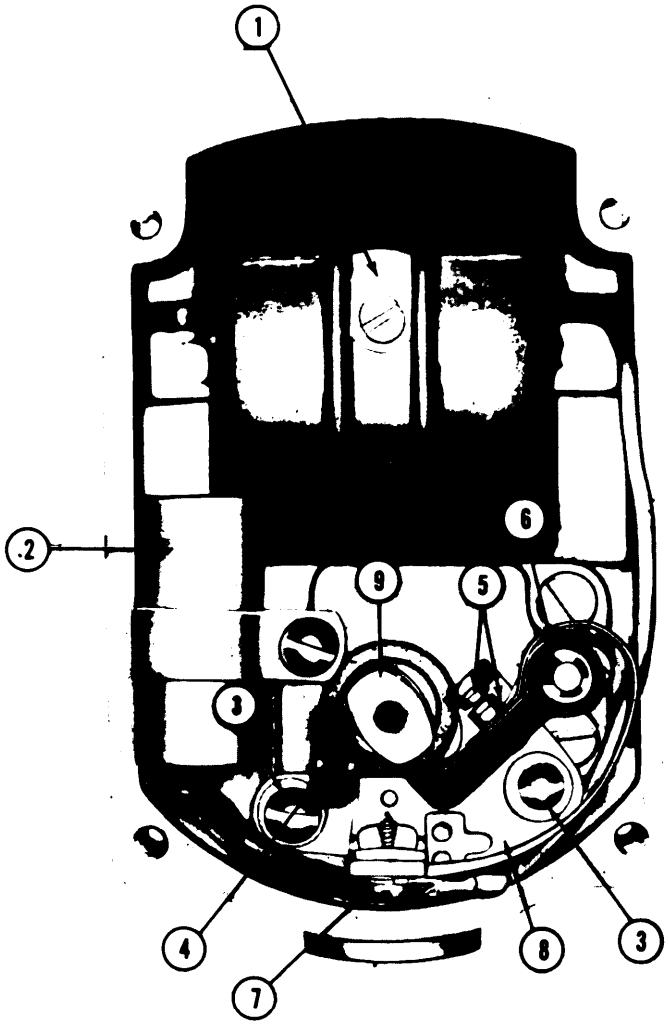

1. COIL ADAPTER
2. CAPACITOR
3. ADJUSTING SCREW
4. CAMWICK
5. CONTACT POINTS
6. RETAINING ARM
7. TERMINAL SCREW
8. STATIONARY CONTACT ASSEMBLY
9. CAM

Figure 4-6. Magnato Point Adjustment

4-17 FUEL LINES AND FITTINGS

This task covers:
a. Removal
b. Inspection
c. Installation

INITIAL SETUP

Test Equipment
None

Materials/Parts
Replacement fuel lines and fittings

Personnel Required
1

References
Figures 4-7 and 4-8

Equipment Condition

LOCATION	ITEM	ACTION	REMARKS
REMOVAL			
1. Fuel lines and fittings	a. Fuel line (l), elbows (2)	Remove fuel lines from fittings	Remove fittings only if necessary
	b. Fuel filter (21)	Remove filter (21), nipple (12) and elbow (22)	See procedure 4-18 for fuel filter servicing
	c. Fuel line (11), and adapter (lo)	Remove fuel line (11) from fittings	Remove fittings only if necessary
	d. V-belt	Remove	Loosen fuel pump mounting screw (16) and slip belt off pulley (19).
2. Fuel pump removal	Fuel pump (20)	Remove screw (16), and washer (17). Remove fuel pump (20)	See figure 4-8 for fuel pump test

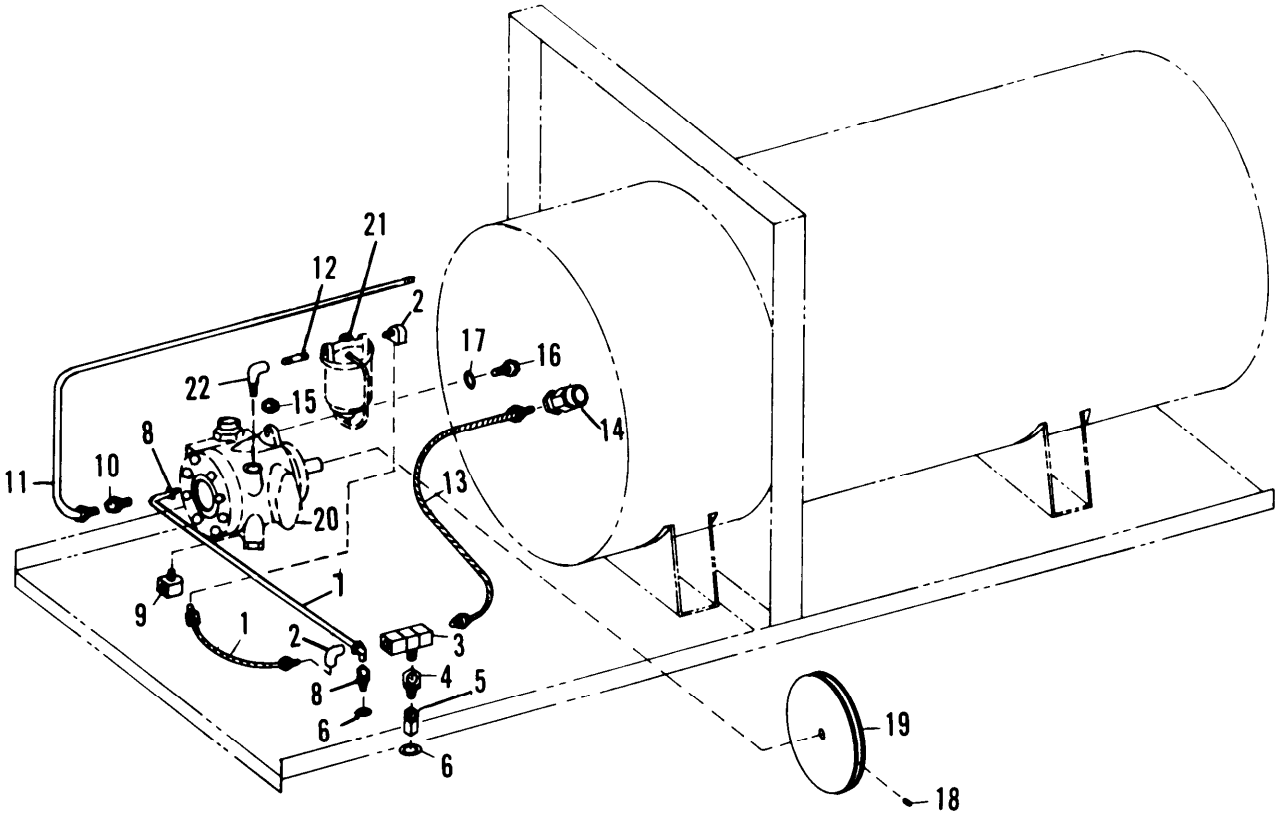

1	FLEXIBLE HOSE	12	NIPPLE
2	ELBOW	13	FUEL LINE
3	TEE	14	COUPLING
4	REDUCER	15	NUT
5	COUPLING	16	SCREW
6	GASKET	17	WASHER
7	FUEL LINE	18	SETSCREW
8	ADAPTER	19	PULLEY
9	ELBOW	20	FUEL PUMP
10	ADAPTER	21	FUEL FILTER
11	FUEL LINE	22	ELBOW

Figure 4-7. Fuel Lines and Fittings

LOCATION		ITEM	ACTION	REMARKS
3. Fuel lines	a.	Fuel line (1) and adapter (8)	Remove fuel line from fittings	Remove fittings only if necessary
	b.	Engine fuel Supply line (13)	Remove fuel line (13) from tee (3)	Remove fittings only if necessary

INSPECTION AND PARTS REPLACEMENT

Inspect all parts for serviceable condition. Replace any faulty part with a serviceable like item.

INSTALLATION

4. Fuel lines	a.	Engine fuel line (13)	Install in tee (3)	
	b.	Fuel line (7)	Install in fitting (8)	
5. Fuel pump	a.	Fuel pump (20)	Install, using screws (16) and washers (17)	Leave fuel pump mounting loose to put on V-belt
	b.	V-belt	Install V-belt. Position fuel pump for correct belt tension, then tighten fuel pump mounting screw (16)	
6. Fuel lines	a.	Fuel line (11)	Install fuel line (11) and adapter (10) in fittings	
	b.	Fuel filter	Install elbow (22) nipple (12) and fuel filter (21)	
	c.	Fuel line (1)	Install elbows (2) and fuel line (1)	

LOCATION	ITEM	ACTION	REMARKS

TEST

With fuel lines, fuel filter, and fuel pump in place, install engine.
Test fuel pump as shown in HOW TO TEST THE HEATER FUEL PUMP, Figure 4-8.
If fuel pump cannot be adjusted, replace with a serviceable like item.

HOW TO TEST THE HEATER FUEL PUMP

- PRESSURE TEST -

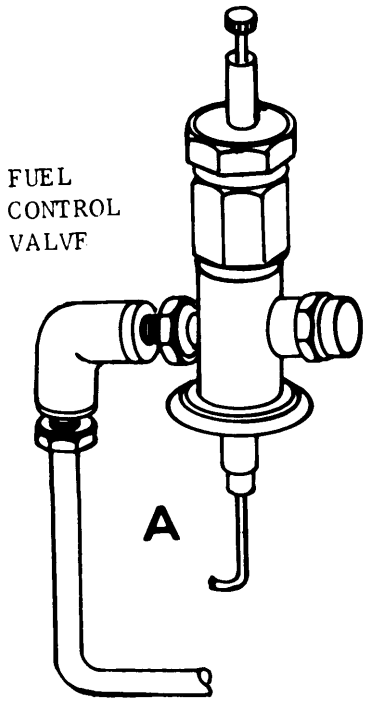

1. Disconnect elbow from fuel line (A) and install tee (B). Install 200 psi gage in tee.

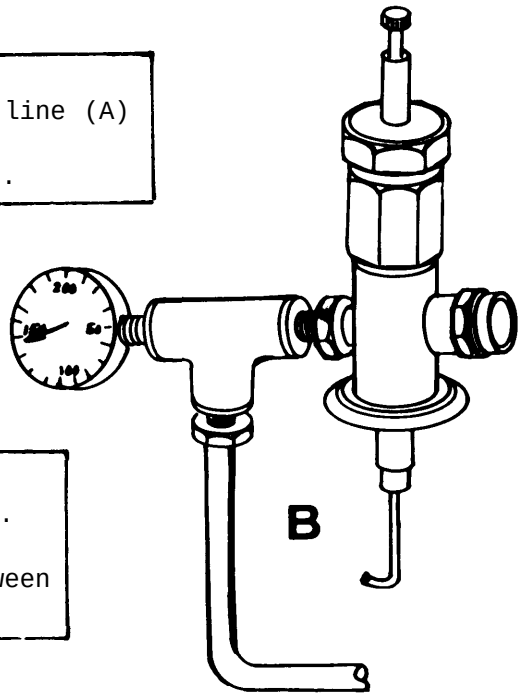

2. Start up heater and observe pressure gage. For proper operation, gage should read between 140 psi and 150 psi.

3, To adjust pressure--
Remove nut
Turn screw:
. clockwise to increase
. counterclockwise to decrease

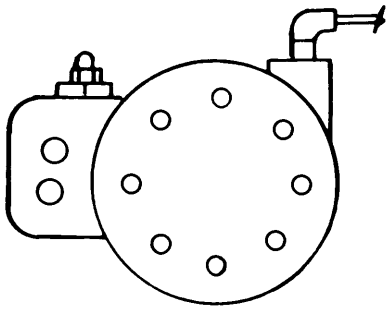

4. Install pump nut.
Stop heater.
Remove gage and tee (B).
Reconnect elbow and line (A).

Figure 4-8. Fuel Pump Pressure Test.

HOW TO TEST THE HEATER FUEL PUMP

- FLOW TEST -

1. Remove the engine (see figure 3-1) .

2, Disconnect fuel tank end of bypass tube from fuel pump to tank,

3. Disconnect the tube which is right by the fuel tank cap,

4. Connect a flexible tube or hose to each of the tubes disconnected in steps 2 and 3.

5. Obtain two containers, each able to hold at least one gallon, one of them having a mark at the one-gallon line, Place ends of both flexible lines into unmarked container,

6. Install the engine, Close heater outlet-air damper by loosening knob and turning completely to the left,

7* Set the temperature selector indicator knob to 150-degrees F. Start the heater, Readjust if necessary to get 150-degrees F on temperature gage,

8. When temperature is stable, transfer flexible hoses to the container having a gallon mark, Measure the time for one gallon of fuel flow, Stop the heater,

9. If it takes more than five minutes for the pump to deliver one gallon, replace the pump,

10. Remove the engine. Reconnect the fuel lines. Install the engine,

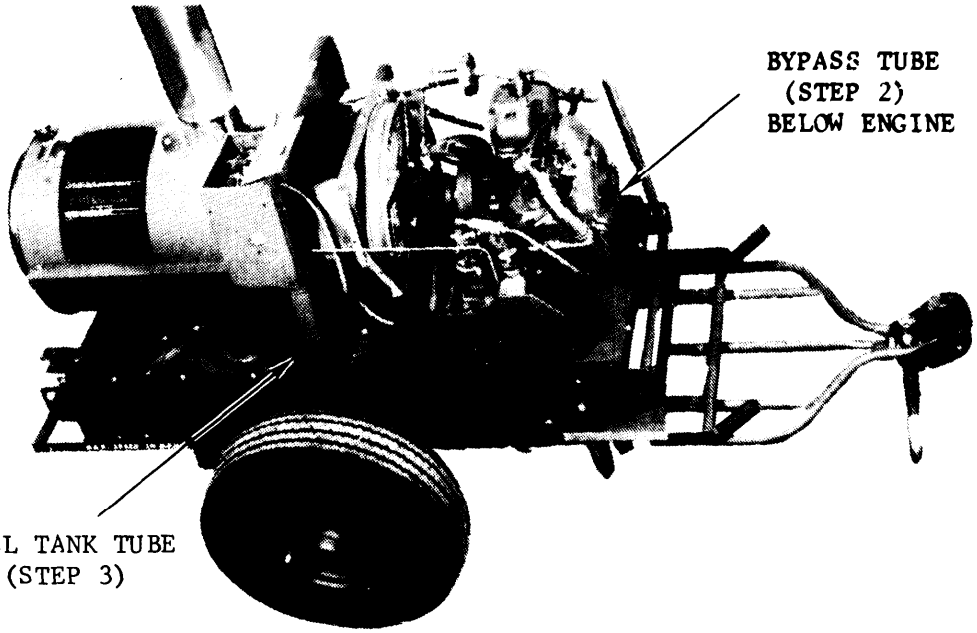

4-18 SERVICING HEATER FUEL FILTER

This task covers:

a. Disassembly
b. Inspection
c. Cleaning
d. Reassembly

INITIAL SETUP

Test Equipment
None

Materials/Parts
Fuel filter element

Personnel Required
1

References
Figure 4-9

Equipment Condition
Fuel filter removed from heater as described in procedure 4-18 and shown in Figure 4-9

LOCATION	ITEM	ACTION	REMARKS
DISASSEMBLY			
1. Fuel filter	a. Filter	Unscrew bowl (6) from top casting (3)	
	b. Filter element	Remove element (5) and gasket (4)	
INSPECTION			
2. Filter element	Inspect for accumulated debris	Clean element using an approved solvent, or replace element	See WARNING inside front cover
3. Gasket	Inspect for serviceability	If faulty, replace with a serviceable like item	
REASSEMBLY FILTER	Element and gasket	Install element and gasket. Screw bowl into top casting	

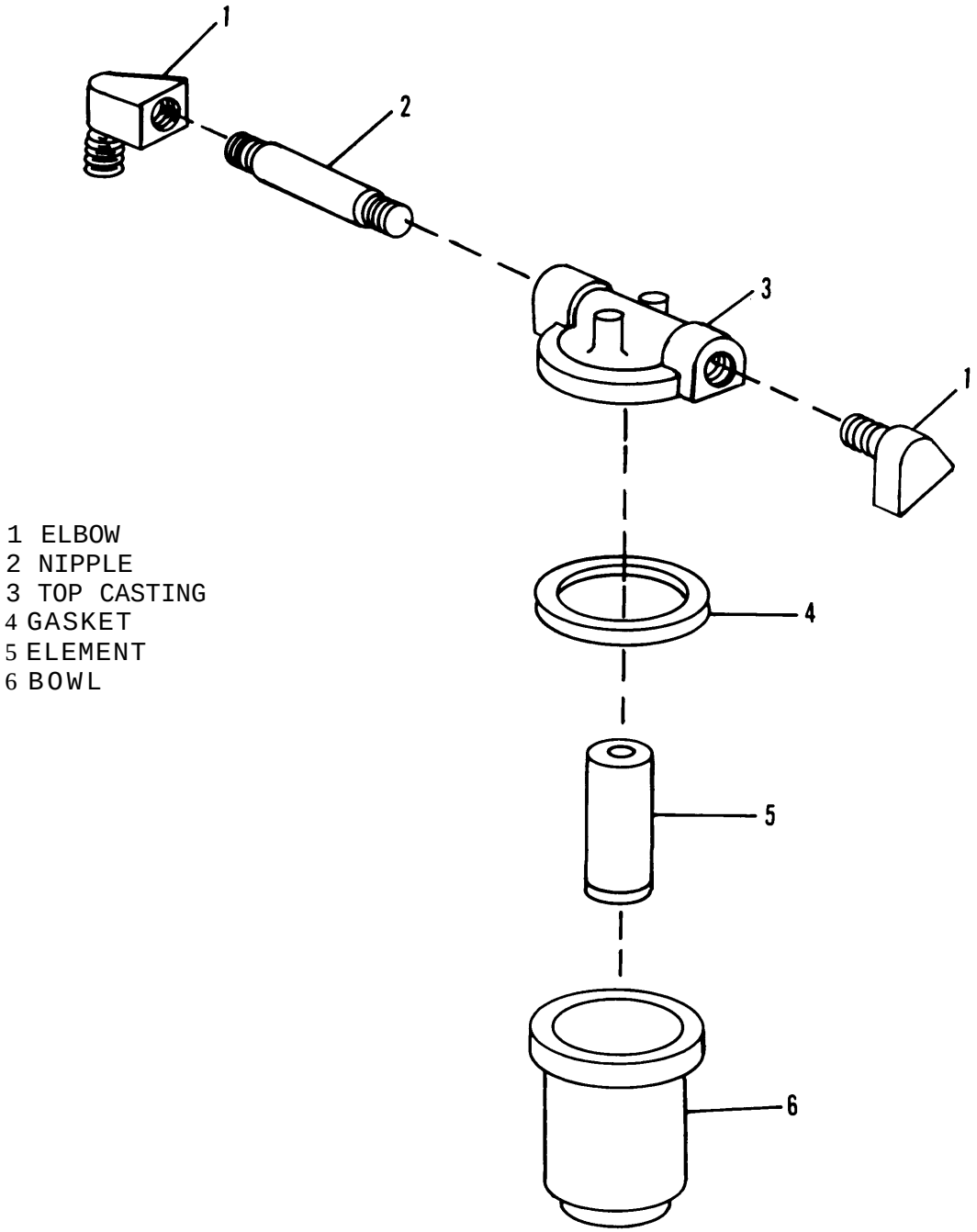

Figure 4-9. Fuel Filter Assembly

4-19 CONTROLS AND INSTRUMENTS

This task covers:
a. Removal
b. Testing
c. Installation

INITIAL SETUP

Test Equipment
None

Materials/Parts
None

Personnel Required
1

References
Figure 4-10

Equipment Condition
Hood Assembly Removed (para. 4-12)
Engine Removed (Figure 3-1)

LOCATION	ITEM	ACTION	REMARKS
REMOVAL			
1.	Control box (10)	a. Remove screws (8), lockwashers (9), screws (2), nuts (1), lock-washers (3), washer (4). Remove control box (10),	
		b. Remove screws (2), nuts (l), lock washers (3), washer (4), Remove door (5) from control box(l0),	
2.	Lines and Tubes	a. Disconnect lines (29). Remove line from heater.	Remove fitting only if' necessary
		b. Remove elbows (27) and (28). Remove tube assembly from bulkhead	

LOCATION	ITEM	ACTION	REMARKS
		c. Disconnect tube assembly (23) from elbow (25)	
3.	Controls (26)	a. Remove screws (2), lock washers (3), nuts (l), washers (4). Remove mounting plate (17) from bulkhead.	
		b. Remove set screws (11) from knobs (12), (13) and (14). Remove knobs .	
		c. Remove screws (2), washers (3), nuts (1) and nut (19). Remove control bracket (22) from plate (17).	See 4-19 for servicing controls

INSPECTION

WARNING: Cleaning solvent, Federal Specification P-D-680, Type II, is flammable and gives off poisonous vapors. Use only in a well ventilated area. Avoid prolonged breathing of vapors. Keep solvent and vapors away from open flame. DO NOT use in excessive amounts.

Clean all lines and fittings as necessary to examine and to remove foreign matter that would interfere with proper operation of heater. Inspect for serviceable condition. Replace all damaged, defective or worn out parts with a serviceable like item.

INSTALLATION

4. Controls	a. Use nut (19)	Attach controls (26) to bracket (22)	
	b. Use screws (2), washers (4), lock washers (3). nuts (l).	Attach plate (17) to bracket (22)	
	c. Use set screws (11)	Attach knobs (12), (13), (14)	

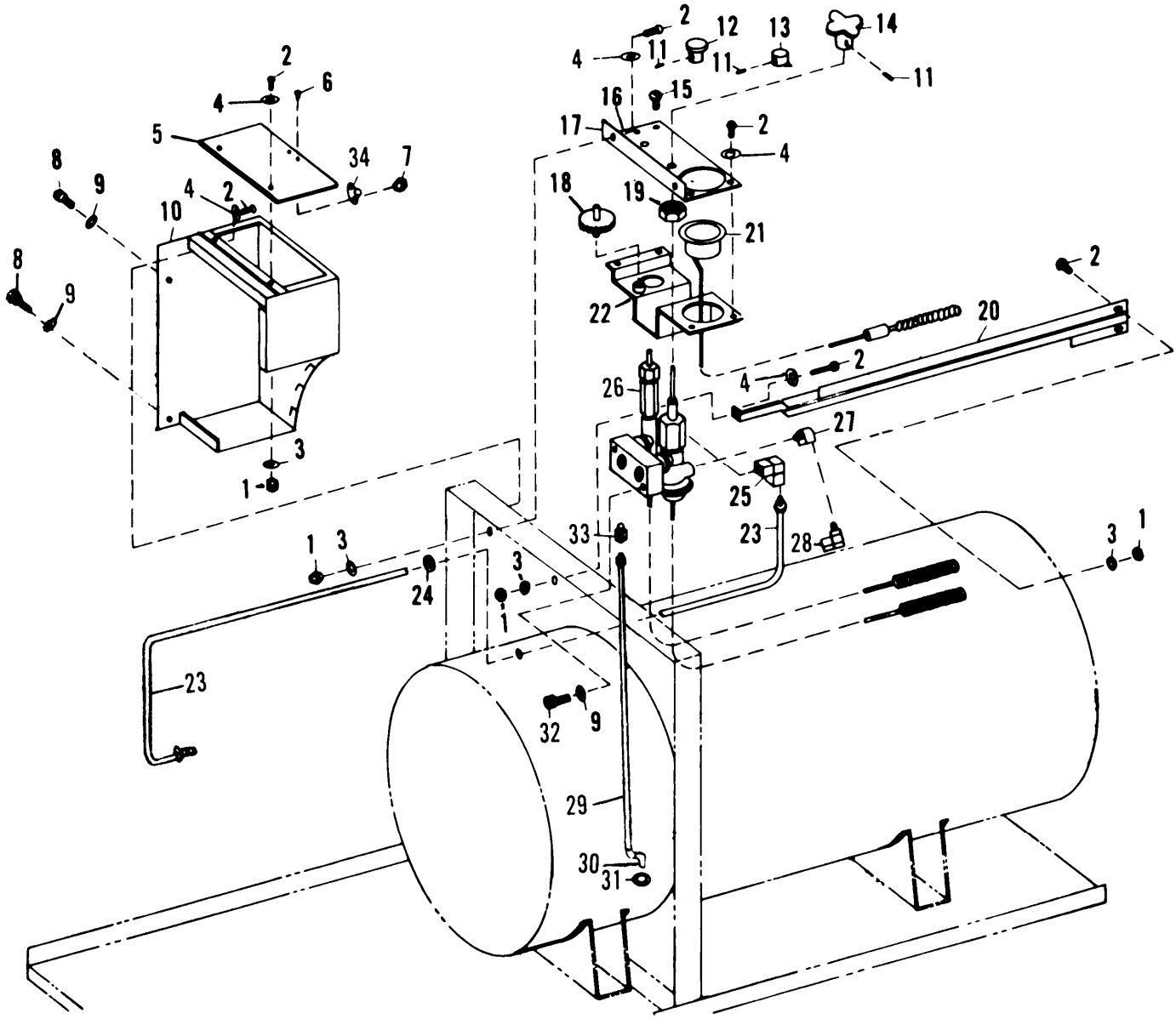

1	NUT	13	KNOB	24	GROMMET
2	SCREW	14	KNOB	25	ELBOW
3	LOCK WASHER	15	SCREW	26	CONTROL VALVES
4	WASHER	16	CONTROL PANEL	27	ELBOW
5	CONTROL BOX DOOR	17	MOUNTING PLATE	28	ELBOW
6	SCREW	18	TEMPERATURE SELECTOR GEAR	29	TUBE ASSEMBLY
7	NUT			30	ELBOW
8	SCREW	19	NUT	31	PACKING
9	WASHER	20	BRACKET	32	SCREW
10	CONTROL BOX	21	TEMPERATURE GAGE	33	ADAPTER
11	SET SCREW	22	CONTROL BRACKET	34	CATCH
12	KNOB	23	TUBE ASSEMBLY		

Figure 4-10. Controls and Instruments

LOCATION		ITEM	ACTION	REMARKS
	d.	Use screws (2), washers (4), lock washers (3), nuts (1)	Attach mounting plate (17) to bulkhead	
5. Lines and Tubes	a.	Tube assembly (29)	Install adapter (33). Install tube assembly (29)	
	b.	Tube assembly (23)	Install grommet (24). Install tube assembly (23) in elbow (25).	
6. Control Box			Use screws (2), lockwashers (3), washer (4), nut (l). Install door (5) on control box (10)	
			Use screws (8), lockwashers (9), screws (2), nuts (l), lockwashers (3), washers (4). Mount control box (10) on heater.	

4-20 FUEL CONTROL VALVE AND TEMPERATURE SELECTOR VALVE

This task covers:
a. Test
b. Disassembly
c. Reassembly

INITIAL SETUP

Test Equipment
0-200 psi pressure gage

Materials / Parts
None

Personnel Required
1

References
Figure 4-11

Equipment Condition
Hood assembly removed (para 4-12)
Engine removed (Figure 3-1)

LOCATION	ITEM	ACTION	REMARKS
TEST			
. Test and adjust fuel controls as described in HOW TO TEST AND ADJUST TEMPERATURE SELECTOR VALVE.			
REMOVAL			
. Disassemble heater as described in procedure 4-19. Then disassemble fuel control valve and temperature selector valve as follows:			
DISASSEMBLE (Figure 4-11)			
1. Air Outlet	a. Sensing elements	Remove sensing elements (11), (12), (13) from clips (14)	
	b. Duct adapter (15)	Remove screws (16), washers (17), nuts (18). Remove duct adapter (15)	
	c. Capillary tube shield (22)	Remove screws (19), washers (20), nuts (21). Remove shield (22)	
	d. Capillary tubes	Carefully pull capillary tubes and sensing elements (11), (12), (13) through casing	CAUTION DO NOT kink or damage capillary tubes while removing

LOCATION	ITEM	ACTION	REMARKS
2.	Fuel Control. Valve (4)	Remove screw (l), and packing (2). Remove fuel control valve (4) from block (9)	DO NOT attempt to repair fuel control valve (4). If faulty, replace with a service-able like item
3.	Temperature Selector Valve (8)	Remove screw (1), and packing (2). Remove temperature selector valve (8) from block (9)	

INSPECTION

Inspect valves for indications of defect or leakage. Repair temperature selector valve stem leak as described in HOW TO REPAIR TEMPERATURE SELECTOR VALVE PACKING LEAK.

REPLACE

Replace defective valve with a serviceable like item.

INSTALLATION

4,	Temperature Selector Valve (8)	Use screw (1)	Install packings (2), (3) and valve (8)	
5.	Fuel Control Valve (4)	Use screw (1)	Install packings (2), (3) and valve (4)	
6,	Air Outlet	a, Capillary tubes	Carefully feed sensing elements (11), (12), (13) through casing into location shown in Figure 4-10.	CAUTION: DO NOT kink or damage capillary tubes while installing

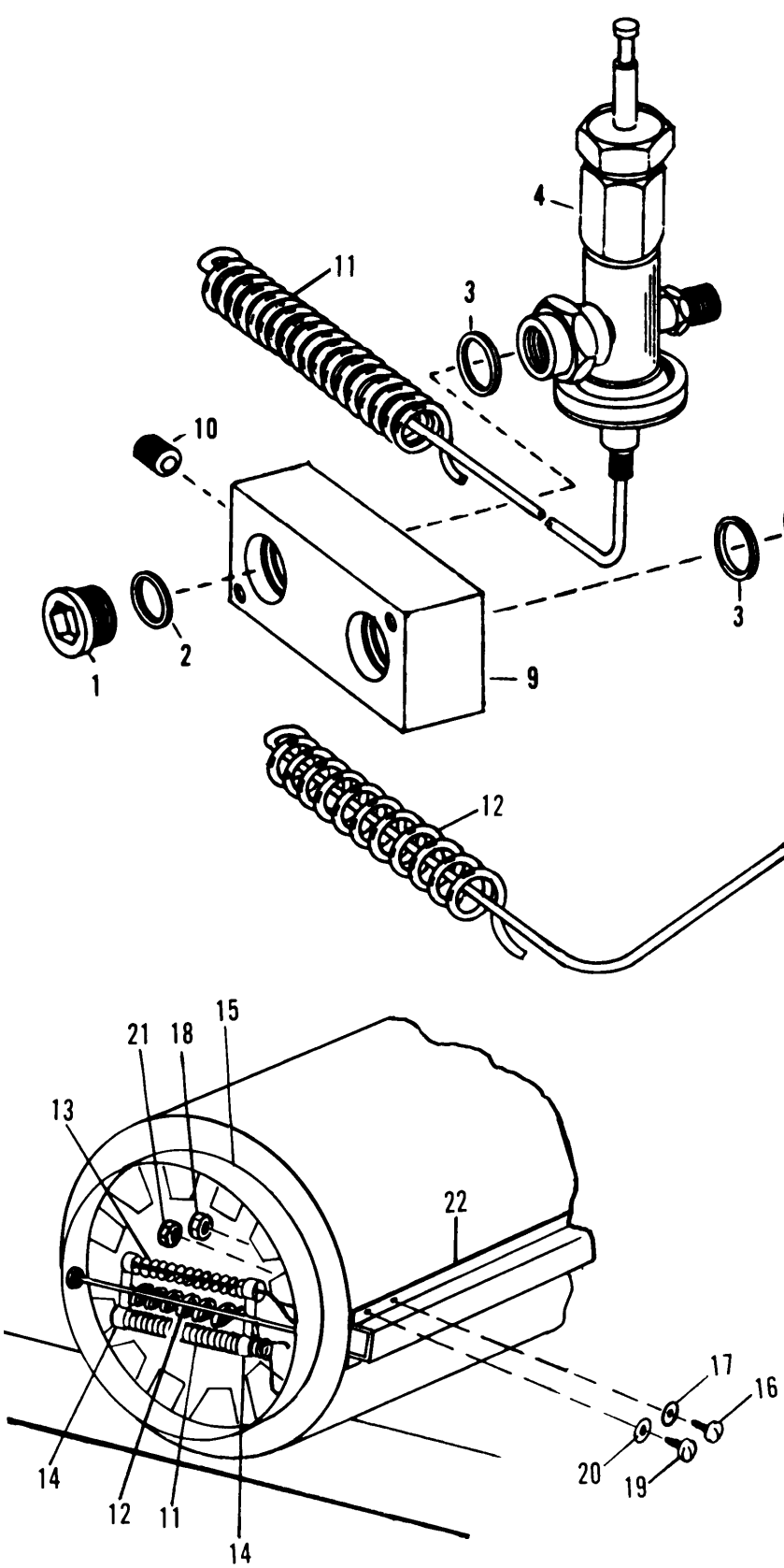

1 SCREW
2 PACKING
3 PACKING (2)
4 FUEL CONTROL VALVE
5 SPRING PIN
6 VALVE STEM
7 NUT
8 TEMPERATURE SELECTOR VALVE
9 BLOCK
10 PIPE PLUG
11 TEMPERATURE SELECTOR VALVE SENSING ELEMENT
12 FUEL CONTROL VALVE SENSING ELEMENT
13 TEMPERATURE GAGE SENSING ELEMENT
14 CLIP
15 DUCT ADAPTER
16 SCREW
17 WASHER
18 NUT
19 SCREW
20 WASHER
21 NUT
22 CAPILLARY TUBE SHIELD

Figure 4-11. Control Valve and Temperature Selector Valve

LOCATION	ITEM	ACTION	REMARKS
b.	Capillary tube shield (22)	Install shield using screws (19), washers (20), nuts (21)	Ensure that capillary tubes are correctly inside shield
c.	Duct adapter (15)	Install adapter using screws (16), washers (17), nuts (18)	
d.	Sensing elements	Snap sensing elements (11), (12), (13) into clips (14)	

HOW TO TEST AND ADJUST THE

1. Attach a 12-inch duct to heater outlet. Make small hole in duct 2 feet from heater. Insert thermometer in hole and affix.

5. Read thermometer in duct. A temperature of 280-degrees F is desirable.

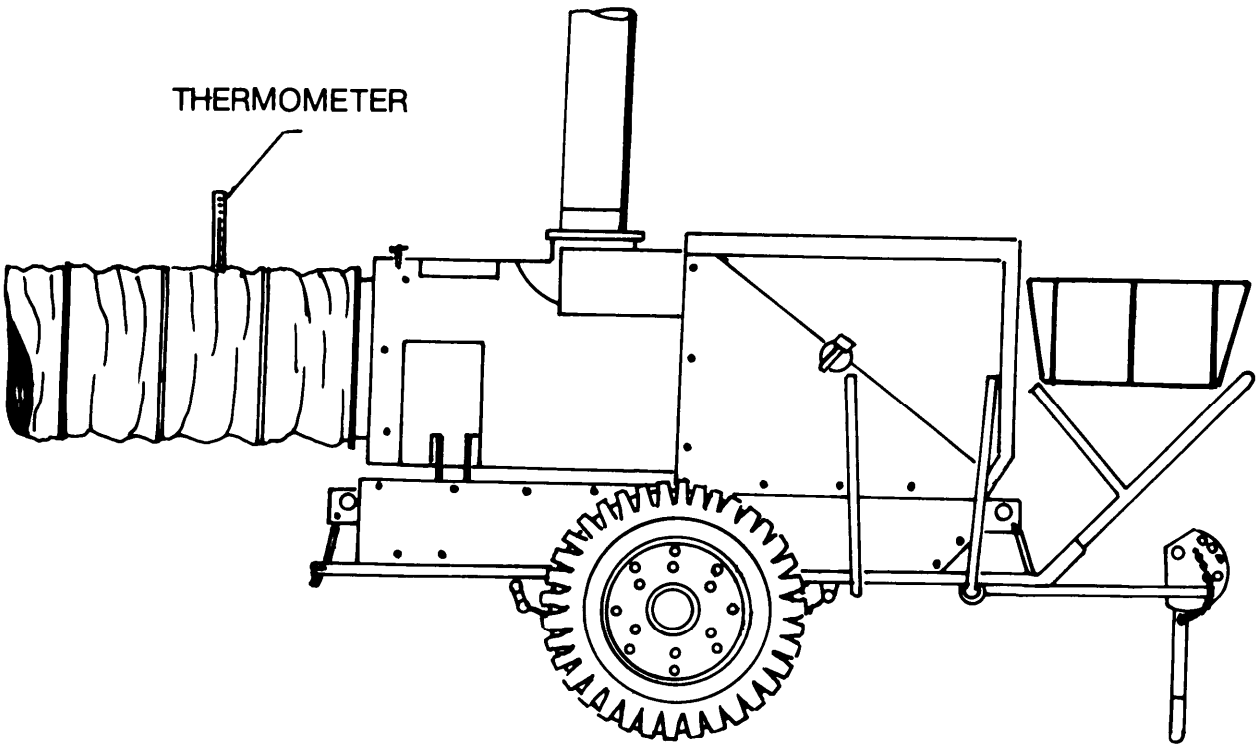

9. Stop heater. Remove thermometer from duct and patch hole with PPP-T-60, Type III, Class I adhesive tape.

TEMPERATURE SELECTOR VALVE

3. Turn temperature selection knob clockwise as far as it will go, then turn counterclockwise 3 turns.

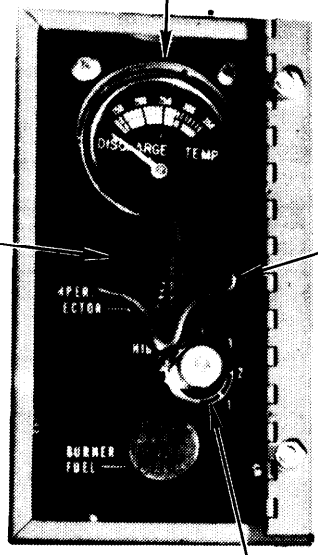

2. Loosen setscrew on temperature indicator knob.

4. Start and run heater until temperature gage reading is stable. Run 5 minutes more .

6. If thermometer does not read 280-degrees plus/ minus 10-degrees F, turn temperature selector knob 1/4 turn, to left to decrease temperature. Each time allow 5 minutes for temperature to stabilize.

7. When temperature is correct according to thermometer in duct, compare with temperature gage. Agreement should be within 10-degrees. Large difference indicates faulty temperature gage.

8. With temperature at 280° F, set temperature indicator knob to HIGH and tighten setscrew. Turn temperature selector knob until temperature indicator knob points to "l". When temperature stabilizes, thermometer should read 150° F plus or minus 10° F.

Figure 4-12. Temperature Selector Valve Adjustment

HOW TO REPAIR TEMPERATURE

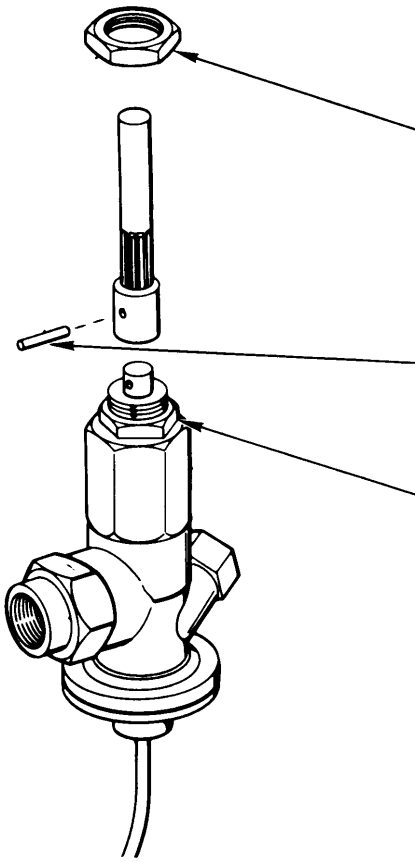

1. Remove nut as described in procedure 4-19.

2. Drive out rollpin. Remove valve stem.

3. Using tool shown in insert, remove valve packing nut.

4. Put one turn of graphite string packing NSN 5330-00-171-6560 or equal on top of packing in stuffing box.

Figure 4-13. Temperture Selector Valve Leak Repair

SELECTOR VALVE PACKING LEAK

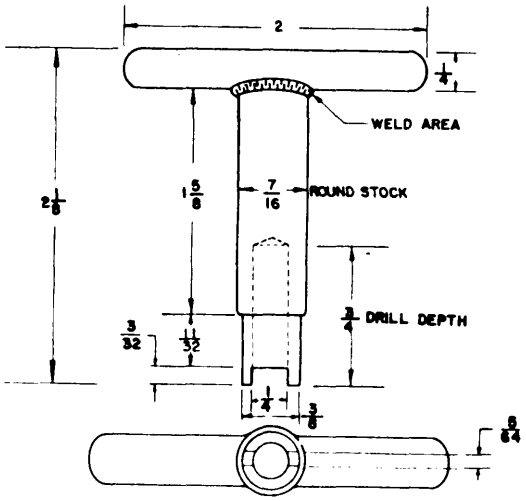

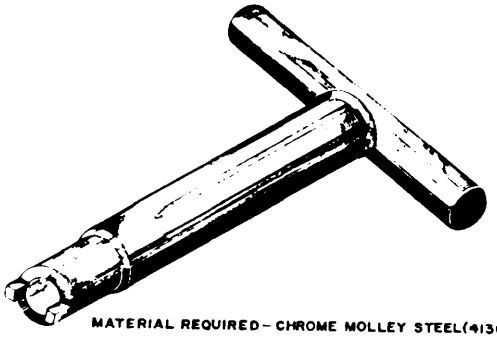

MATERIAL REQUIRED – CHROME MOLLEY STEEL(4130)

5. Use tool to install packing nut .

6. Put valve stem in place and drive **in** rollpin.

7. Reassemble into heater as described in procedures 4-18 and 4-19.

4-21 DRIVE BELT, DRIVE COUPLING AND FAN

This tasl covers:
a. Removal
b. Inspection
c. Installation
d. Belt adjustment

INITIAL SETUP

Test *Equipment*
None

Materials / Parts
Serviceable replacement parts

Personnel Required
1

References
Figure 4-14

Equipment Condition
Hood assembly removed (procedure 4-12)
Engine removed (Figure.3-1)

LOCATION	ITEM	ACTION	REMARKS
REMOVAL			
1.	V-Belt (1)	Remove. Loosen fuel pump mounting screws and slip belt off pulleys	See also instructions given in 4-14
2.	Exhaust Pipe (36)	Remove screws (12), washers (8), (9). Remove exhaust pipe (36), pipe support (11) and bracket (13)	Disassemble exhaust pipe supports only if necessary for repair or replacement
3.	Fan Mounting Ring (17),	Remove screws (16) and washers. Remove fan assembly	
4.	a. Fan Assembly	Remove screws (16) and lockwashers (22). Remove blade (23) from hub (28)	
	b. Fan hub (28)	Remove hub (28) from bearing (29) using a suitable puller	

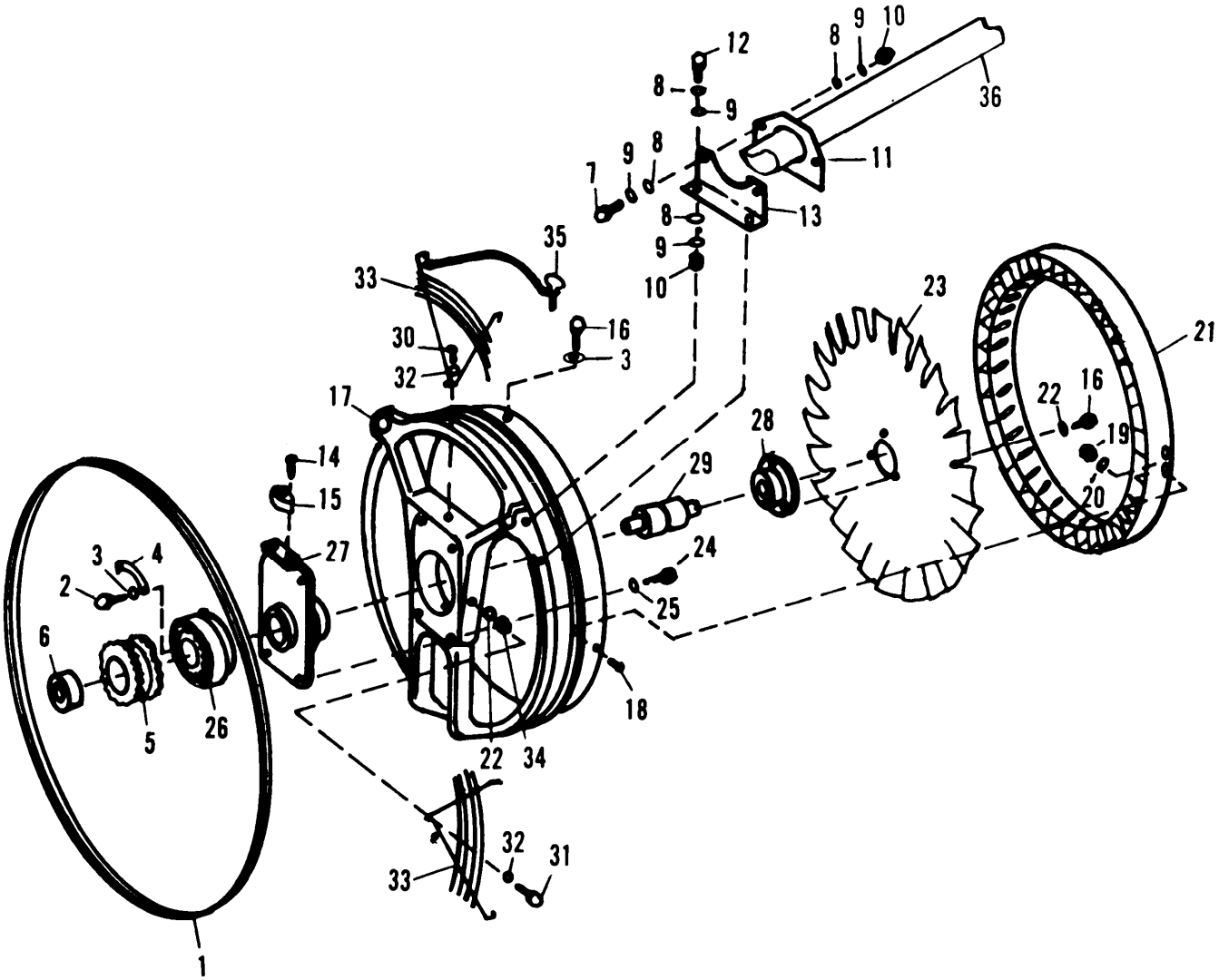

1	V-BELT	13	ANGLE BRACKET	25	WASHER
2	SCREW	14	SCREW	26	COUPLING HALF
3	WASHER	15	RESILIENT MOUNT	27	FAN BEARING SUPPORT
4	RETAINER	16	SCREW	28	FAN HUB
5	SLEEVE BUSHING	17	FAN MOUNTING RING	29	FAN SHAFT BEARING
6	SLEEVE COUPLING	18	SCREW	30	SCREW
7	SCREW	19	NUT	31	SCREW
8	WASHER	20	WASHER	32	WASHER
9	WASHER	21	AIR STRAIGHTENING VANE	33	FAN GUARD
10	NUT	22	WASHER	34	NUT
11	EXHAUST PIPE SUPPORT	23	FAN BLADE	35	THUMB SCREW
12	SCREW	24	SCREW	36	EXHAUST PIPE

Figure 4-14. Drive Belt, Drive Coupling and Fan

LOCATION		ITEM	ACTION	REMARKS
	c.	Fan guards	Remove screws (30), (31), washers (32), nuts (34) and washers (22). Remove fan guards (33) from mounting ring (17)	If necessary, remove screws (35)
	d.	Air straight-ening valve	Remove screws (18), nuts (19) and washers (20). Remove air straight-ening vane (21) from ring (17)	
	e.	Coupling half	Remove screws (2), and washers (3). Remove retainers (4). Remove sleeve (6) and bushing (5) from coupling half (26)	
	f.	Coupling and bearing	Using a suitable puller, remove coupling (26) from bearing (29)	
	g.	Support	Remove screws (14). Remove mount (15) from support (27)	
	h.	Bearing	Remove bearing (29) from support (27)	
INSPECTION				
5. Fan assembly	a.	Fan shaft bearing	Install bearing (29) in support (27). Press coupling half (26) on end of bearing (29)	
	b.	Bearing support (27)	position support (27) on fan mounting ring (17) and secure with screws (24) and washers (25)	

LOCATION		ITEM	ACTION	REMARKS
	c.	Air straightening vane (21)	Install vane (21) in mounting ring (17) and secure with screws (18), washers (20) and nuts (19).	
	d.	Fan hub and bearing	Press fan hub (28) on bearing (29)	
	e.	Fan blade (23)	Install blade (23) on hub (28) using screws (16) and washers (22)	
	f.	Resilient mount	Install mount (15) on fan bearing support (27) using screws (14)	
	g.	Fan guards (33)	Install guards (33) on fan mounting ring (17) and secure with screws (30) and washers (32)	
6. Coupling	a.	Coupling sleeve (6)	Install coupling sleeve (6) in bushing (5). Place bushing (5) in coupling half (26)	
	b.	Retainers (4)	Install retainers (4) in coupling half (26) using screws (2) and washers (22)	
7. Fan assembly		Fan ring (17)	Install fan ring (17) and attached parts in casing using screws (16) and washers (3)	
8. Exhaust pipe (36)		Bracket (13)	Install bracket (13) using screws (12) and washers (8), (9)	
9. V-belt		V-belt	Install V-belt over pulleys and tighten fuel pump screws	See also instructions given in 4-14

4-22 COMBUSTION SYSTEM

This task covers:

a. Remove
b. Inspect and test
c. Service or adjust
d. Install

INITIAL SETUP

Test Equipment
None

Materials/Parts
Serviceable replacement parts

Personel Required
1

References
Figure 4-15 except as otherwise indicated

Equipment Condition
Hood assembly removed (para 4-12)
Engine removed (Figure 3-1)
Air system removed (para 4-21)

LOCATION	ITEM	ACTION	REMARKS
REMOVAL			
1.	Ignition Cable	Disconnect. Unscrew cable (l), Figure 4-4) from igniter plug (12, Figure 4-15)	
2,	Fuel lines	Disconnect. Unscrew fuel lines (1) and (2) from nozzle holder (7). Remove check valve 17) from fuel line (1)	
3. Combustion plate assembly	a. Plate (11)	Rotate combustor clamp (6) to the left and unhook from combustor (15)	
	b. Screws (5)	Remove screws (5). Remove clamp (6) from holder (17) and plate (11)	
	c. Nozzle (8)	Unscrew nozzle (8), strainer (9) and seal (10) from nozzle holder (7)	
	d. Igniter Plug (12)	Unscrew plug (12) from plate (11)	

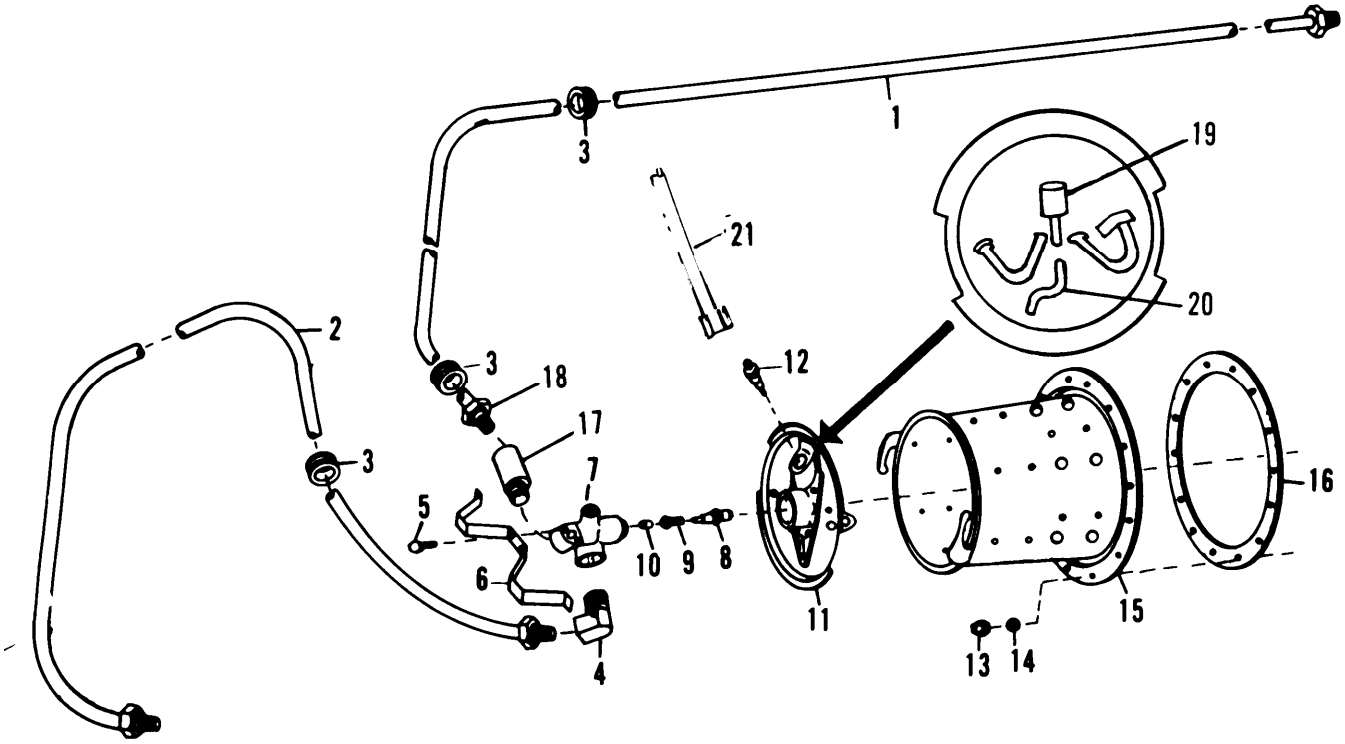

1 FUEL LINE
2 FUEL LINE
3 GROMMET
4 ELBOW
5 SCREW
6 COMBUSTOR CLAMP
7 NOZZLE HOLDER
8 NOZZLE
9 STRAINER
10 SEAL
11 COMBUSTION PLATE
12 IGNITER PLUG
13 NUT
14 WASHER
15 COMBUSTOR ASSEMBLY
16 GASKET
17 CHECK VALVE
18 ADAPTER
19 IGNITION PLUG
20 GROUNDED ELECTRODE
21 , IGNITER CABLE

Figure 4-15. Combustion System

LOCATION	ITEM	ACTION	REMARKS

INSPECTION

. Inspect all parts for serviceable condition. Replace any broken, damaged or worn out parts with a serviceable like item. Inspect ignition plug for indication of excessive heat damage.

INSTALL

4.	Combustor assembly	Use nuts (13) and washers (14)	Install gasket (16) and combustor (15)
		Ignition plug	Screw plug (12) into plate (11)

ADJUST

Using the shank of a 5/32-inch drill bit, measure the spacing (gap) between the ignition plug electrode (19) and the grounded electrode (20). Bend the grounded electrode to the correct gap as indicated by the 5/32-inch drill bit shank.

INSTALL

5.	Nozzle components	a. Strainer and seal	Screw seal (10), strainer (9) and nozzle (8) into holder (7)
		b. Clamp (6)	Install nozzle holder (7) into plate (11) and clamp (6) on plate (11) using screws (5)
		c* Combustor plate assembly	Install plate assembly into combustor (15) by engaging tabs
6.		Check valve (17)	Install check valve (17) into adapter (18) on line (1)
7.		Fuel lines	Screw fuel lines (1) and (2) into nozzle holder (7)
8.		Ignition cable	Screw cable (21) to to igniter plug (12)

4-23 DAMPER CONTROL, AIR CONTROL AND EXHAUST STACK

This task covers:

a. Removal
b. Inspect
c. Install

INITIAL SETUP

Test Equipment
None

Materials/Parts
Serviceable replacement parts

Personel Required
1

References
Figure 4-16

Equipment Condition
As described in procedure 4-19

LOCATION	ITEM	ACTION	REMARKS
REMOVAL			
1.	a. Stack cap (1)	Remove exhaust stack cap	
	b. Exhaust stack	Remove nuts (2) and washers (3). Remove exhaust stack (4) and gasket (5)	
2. Duct adapter assembly (6)	Remove three sensors (Figure 4-11)	Remove duct adapter assembly as described in procedure 4-20	
3.	Damper	Remove cotter pin (7). Remove knob (8), washer (9), rubber washer (10) and damper control (11)	
4.	Air control baffles	Remove nuts (12) and washers (13). Remove four air control baffles (14)	
5.	Air control	Remove screws (15), washers (16), nuts (17). Remove air control (18)	

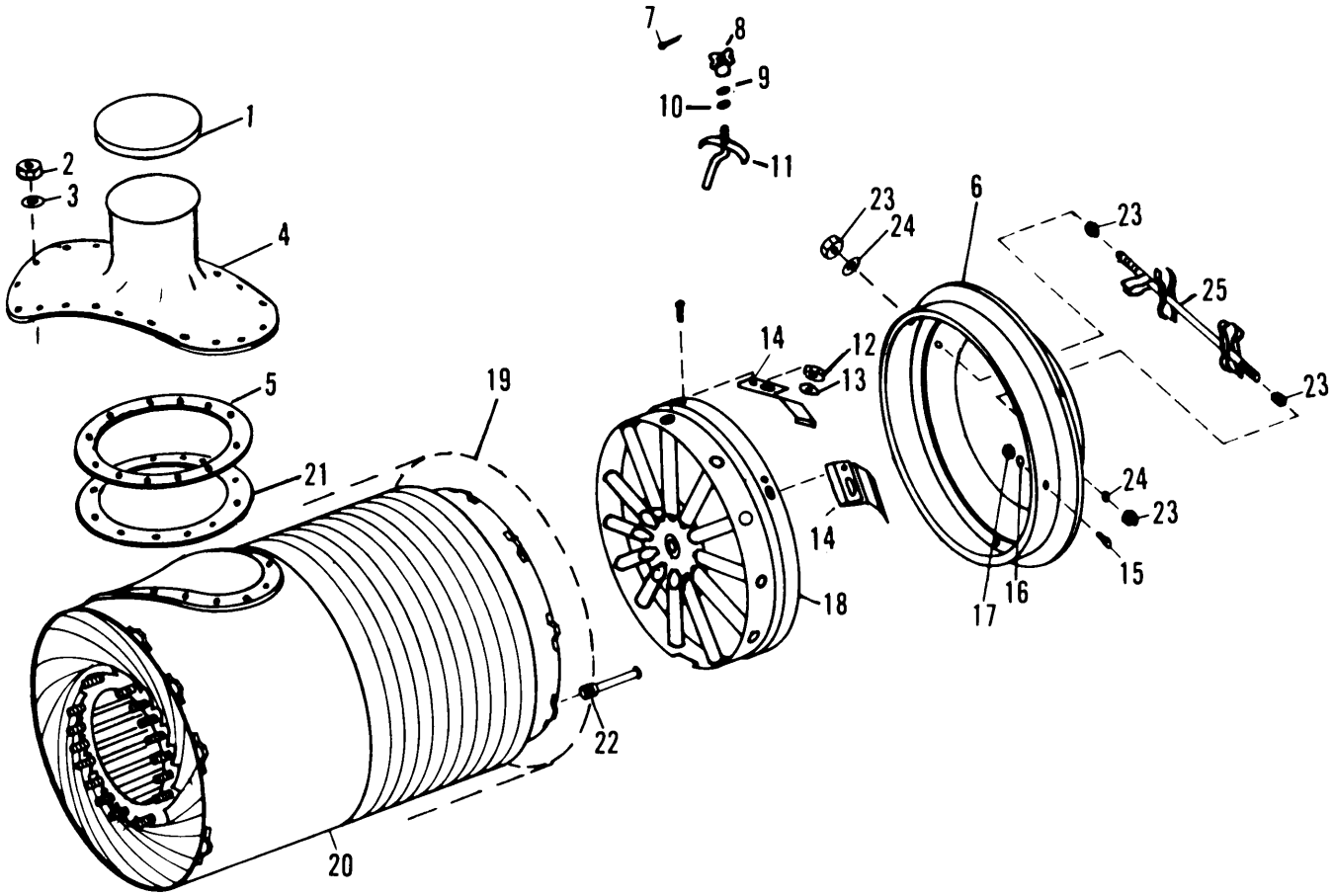

1 CAP
2 NUT
3 WASHER
4 EXHAUST STACK
5 GASKET
6 DUCT ADAPTER ASSEMBLY
7 COTTER PIN
8 KNOB
9 WASHER
10 RUBBER WASHER
11 DAMPER CONTROL
12 NUT
13 WASHER
14 AIR CONTROL BAFFLE
15 SCREW
16 WASHER
17 NUT
18 AIR CONTROL
19 CASING
20 HEAT EXCHANGER
21 GASKET
22 DRAIN TUBE
23 NUT
24 WASHER
25 BULB SUPPORT

Figure 4-16. Damper Control, Air Control and Exhaust stack

LOCATION	ITEM	ACTION	REMARKS
INSPECTION			
Inspect all parts for serviceable condition. Replace any broken, damaged or worn out parts with a serviceable like item.			
INSTALLATION			
6.	Air control	Use screws (15), washers (16), nuts (17). Install air control (18) into casing (19)	
7.	Air control baffles	Use nuts (12) and washers (13). Install four baffles (14) on air control (18)	
8. Damper assembly		Use cotter pin (7). Install damper control (11), washers (10), (9). Install knob (8) on damper control shaft and secure with cotter pin (7)	
9. Duct adapter assembly (6) and sensors		Refer to procedure 4-20 and install duct adapter and sensors	
10.	Exhaust stack	Use nuts (2) and washers (3). Install gasket (5) and stack (4)	If necessary, place cap (1) on stack (4)

4-24 BULKHEAD, SIDE PANELS AND CASING

This task covers:

a. Removal
b. Inspection
c. Installation

INITIAL SETUP

Test Equipment
None

Materials/Parts
Serviceable replacement parts

Personel Required
2

References
Figure 4-17

Equipment Condition
Hood assembly removed (procedure 4-12)
Engine removed (Figure 3-1)

LOCATION	ITEM	ACTION	REMARKS
REMOVE			
	Side panels	Remove screws (2) and washers (3). Remove side panel (1) Remove side panel (11)	
	Information plate	Drill out rivet (4). Remove information plate (5)	Remove only if damaged or illegible

INSPECTION

- Inspect bulkheads (6) (7), information plates (9) (10) and casing (8) for serviceable condition. Report damage, defect or worn out condition to General Support Maintenance.
- Inspect side panels (l), (11) and plate (5) for serviceable condition. If damaged, defective or worn out, replace with a serviceable like item.

INSTALLATION

	Information plate	Use l/2-inch pop rivets. Install plates (5) on panels (l), (11)
	Side panels	Use screws (2) and washers (3). Install side panels on heater.

1 SIDE PANEL
2 SCREW
3 WASHER
4 RIVET
5 INFORMATION PLATE
6 TOP BULKHEAD
7 BOTTOM BULKHEAD
8 CASING
9 INFORMATION PLATE
10 INFORMATION PLATE
11 SIDE PANEL

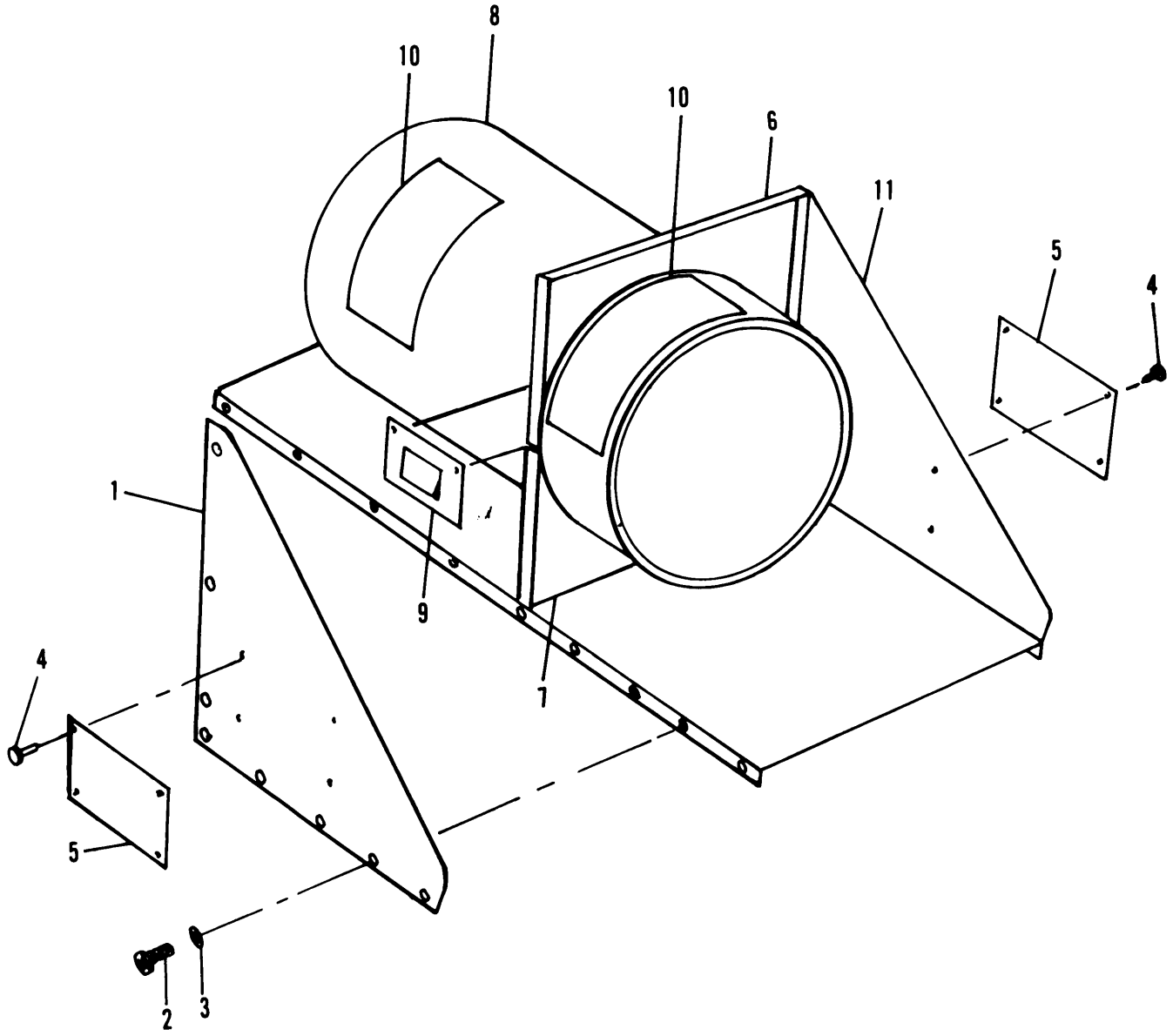

Figure 4-17. Bulkheads, side Panels and Casings

4-25 TRAILER ASSEMBLY

This task covers:
- a. Remove
- b. Inspect
- c. Repair
- d. Install
- e. Adjust

INITIAL SETUP

Test Equipment
None

Materials/Parts
Compressor air supply

Personnel Required
1

References
Figure 4-18

Equipment Condition
Fully assembled

LOCATION	ITEM	ACTION	REMARKS
REMOVE			
1. Wheel assembly	a. Grease Cap (1)	Remove cap	
	b. Cotter pin (2)	Remove pin	
	c. Nut (3)	Remove nut	
	d. Washer (4)	Remove washer	
	e. Outer bearing (5)	Remove bearing	
	f. Wheel	Remove nuts (7), washers (8) and bolts (9). Remove wheel (14), (15) from hub (10). Remove tire (19). Remove hub (10).	
2. Tire assembly	a. Tire	Remove cap (16) and core (17) from tube (18). Allow air to escape.	
	b. Wheel	Remove bolts (11), washers (13) and nuts (12). Separate outer rim (14) from inner rim (15). Remove tire (19) and tube (18).	

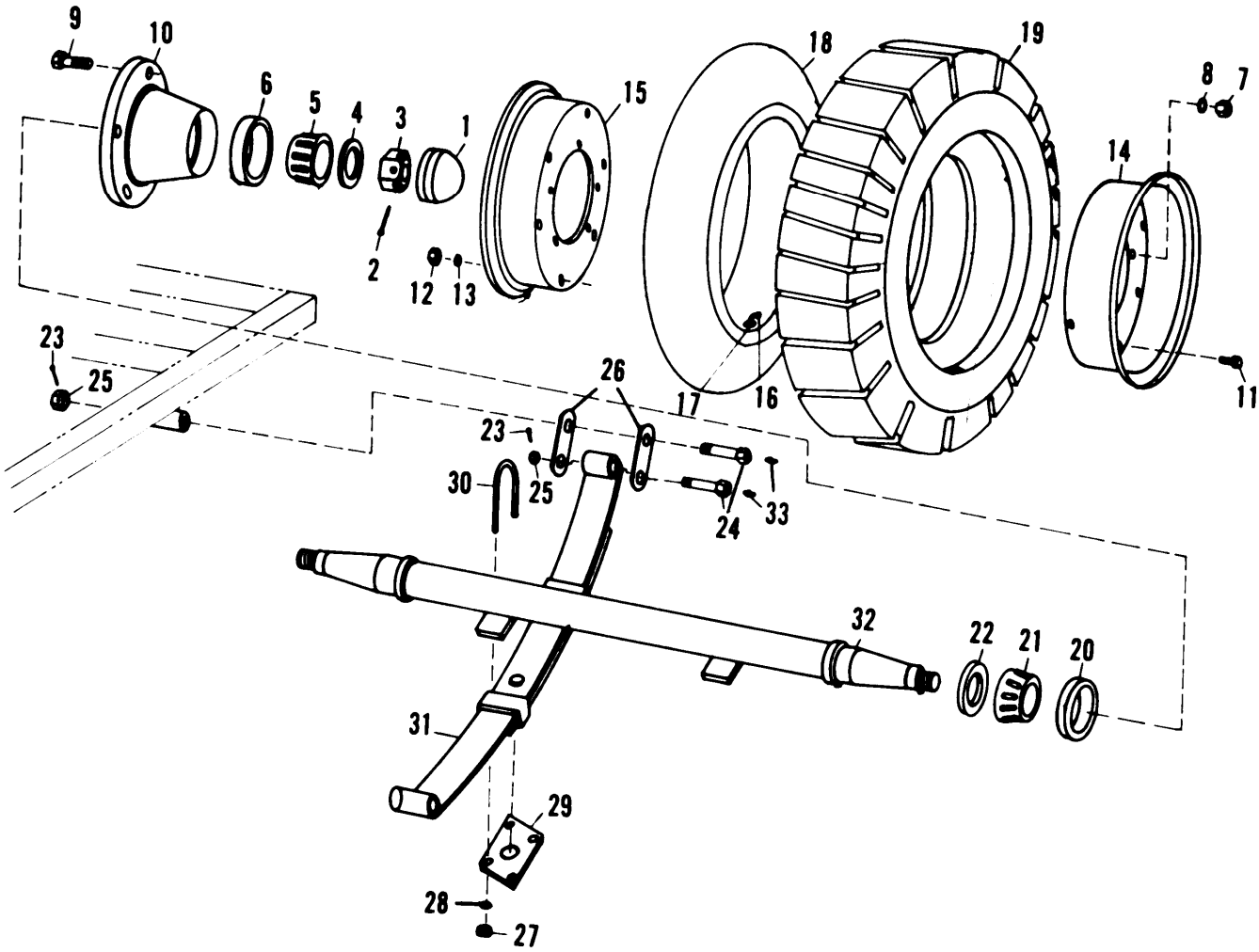

1	GREASE CAP	12	NUT	23	COTTER PIN
2	COTTER PIN	13	WASHER	24	SHACKLE BOLT
3	NUT	14	OUTER RIM	25	NUT
4	WASHER	15	INNER RIM	26	SHACKLE
5	BEARING	16	VALVE CAP	27	NUT
6	OUTER BEARING CONE	17	vALVE CORE	28	WASHER
7	NUT	18	TUBE	29	PLATE
E	WASHER	19	TIRE	30	U-BOLT
9	HUB BOLT	20	INNER BEARING CONE	31	SPRING
10	HUB ASSEMBLY	21	BEARING	32	AXLE
11	RIM BOLT	22	SEAL	33	LUBRICANT FITTING

Figure 4-18. Trailer Assembly

LOCATION	ITEM	ACTION	REMARKS
Remove and disassemble other wheel assembly in the same manner.			
INSPECT			
Inspect all parts for serviceable condition. Replace all defective, broken or worn out parts with a serviceable like item.			
INSTALL			
3. Wheel assembly	a. Tire and tube	Install core (17) in valve stem. Install tube (18) in tire (19), and partly inflate tire.	
	b. Wheel	Use bolts (9), washers (8) and nuts (7). Position inner rim (15) and outer rim (14) on tire and tube with valve stem thru hole in rim (14). Position hub (10) in rims and secure with bolts (9), washers (8) and nuts (7).	
4. Bearings	Lubricate	Lubricate bearings (5) and (21) in accordance with lubrication chart.	
	Install, in the order given	a. Seal (22)	
		b. Bearing (21)	Take caution to keep lubricated bearing clean
		c. Cone (20)	
		d. Hub and wheel (10) and (19)	
		e. Cone (6)	
		f. Bearing (5)	
		g. Washer (4)	
		h. Nut (3)	

LOCATION	ITEM	ACTION	REMARKS

ADJUST

Rotate wheel while tightening nut (3). When wheel binds, back off nut (3) one-half turn and install cotter pin (2). Attach cap (l).

INSPECT

Inspect spring (31) and axle (32) for serviceable condition. Report condition of any damaged, broken, or worn parts to Direct Support Maintenance.

4-26 LUBRICATION

ENGINE. Lubricate in accordance with LO 5–2805–25612.

NOTE

In addition to fording requirements, normal lubrication interval is semiannual, for unusual operations, lubricate quarterly.

CHASSIS. Lubricate manually as directed in Figure 4-19 or as soon as practical after fording bodies of water or operating in extreme conditions.

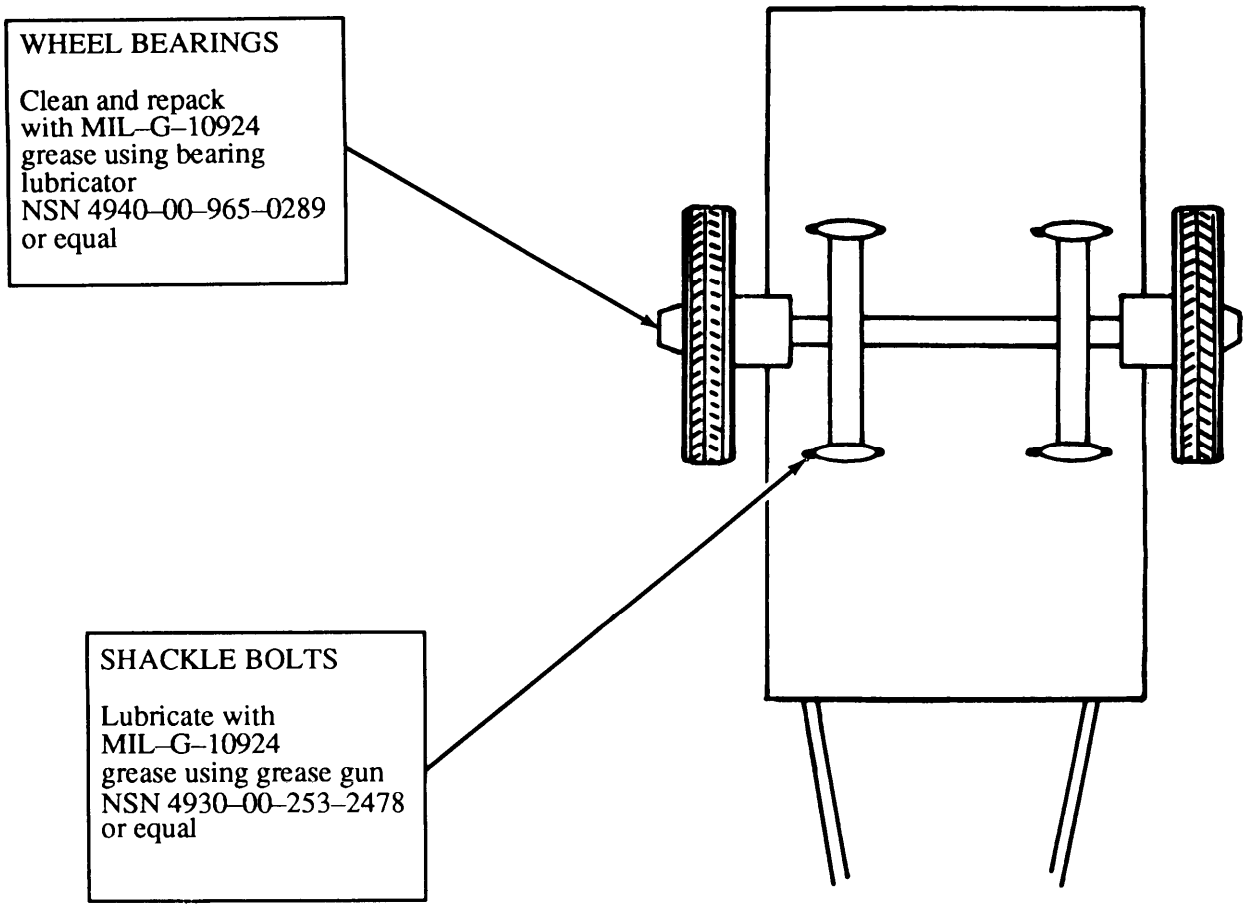

Figure 4–19. Chassis Lubrication Points

*U.S. GOVERNMENT PRINTING OFFICE, 1991 554-123/20077

LUBRICATION ORDER
TO 38G2-102-2LC-1

L 0 5 = 2 8 0 5 - 2 5 6 - 1 2
27 JULY 1978 (Supersedes LO 5-2805-256-12, 21 February 1977)

ENGINE, GASOLINE, 1-1/2 HP, MILITARY STANDARD MODELS

(MODEL 1A08-1) (MODEL 1A08-2) (MODEL 1A08-3)

Reference: TM 5-2805-256-14 and C9100-IL

Intervals and related task-hour times are based on normal hours of operation. The task-hour time specified is the time ywu need to do all the services prescribed for a particular interval. Change the interval if your lubricants are contaminated or if you ● re operating the equipment under adverse operating conditions, including longer-than-usual operating hours. You may extend the interval during periods of low activity, but you must take adequate preservation precautions.

"The time specified is the time required to perform all services at the particular interval.

Clean fittings before lubricating. Clean parts with SOLVE NT dry cleaning, or with 01L, fuel, diesel Dry before lubrieating. Drain crankcase when HOT Fill and check level, The lowest level of maintenance authorized to lubricate a point is indicated by one of the following (C) Operator/crew; or (0) Organizational Maintenance

You can help improve this publicatlon. If you find any mistake or if you know of a way to improve the procedures, please let us know. Your letter or DA Form 2028 (Recommended Changes to Publications and Blank Forms) should be mailed directly to: Commander, U S Army Troop Sup. port & Aviation Materiel Readiness Command, ATTN DRSTS-MTPS, 4300 Goodfellow Blvd St Louis, MO 63120. A reply will be furnished to you

"TOTAL TASK-HR INTERVAL	TASK-HR
8	0.5
50	1.5

'TOTAL TASK-HR INTERVAL	TASK-HR
500	0.3

LUBRICANT ● INTERVAL

INTERVAL ● LUBRICANT

Crankcase Fill and Level (Check level) (See key) CAUTION: When OES oil is used the level will be checked more (C) often. — OE/HDO 8

500 OE/HDO Ignition Cam Wick (Sparingly) (O)

50 OE/HDO Crankcase Drain (Drain and refill) (O)

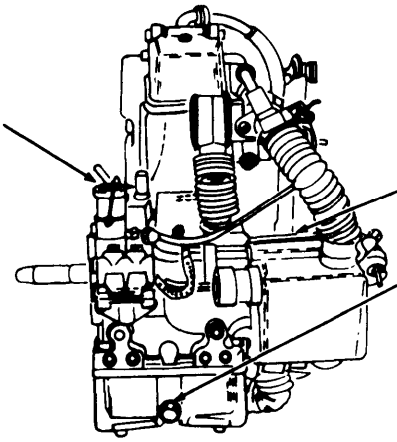

Model 1A08-3

LUBRICANT ● INTERVAL

INTERVAL ● LUBRICANT

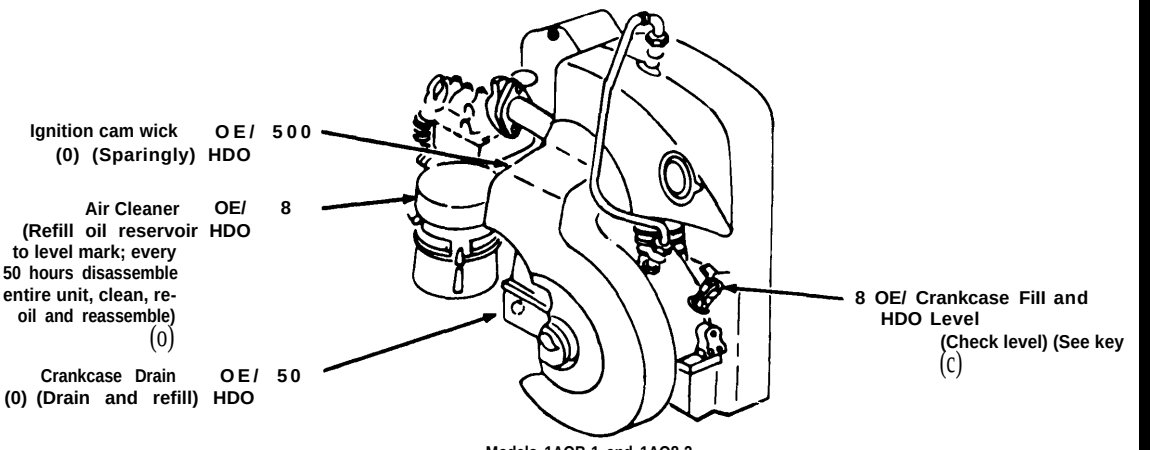

Models 1AOB-1 and 1AO8-2

NOTES:

1. FOR OPERATION OF EQUIPMENT IN PROTRACTED COLD TEMPERATURES BELOW -1O°F (-23°C). Remove lubricants *prescribed* in the key for temperatures ● bove –1O°F (–23°C). Clean parts with SOLVENT, dry-cleaning. Relubricate with lubricants specified in the key for temperatures below –1O°F (-23°C).

2. 0IL CAN POINTS. Every 50 hours clean and lightly coat door hinges and latches, and throttle controls with OE/HDO.

Distribution: To be distributed in accordance with DA Form 12-25A, Operator maintenance requirements for Engines, Gasoline: 1 1/2 HP MIL STD.

Copy of this Lubrication Order will remain with the equipment at all times; Instructions contained herein are mandatory.

BY ORDER OF THE SECRETARY OF THE ARMY:
BERNARD W. ROGERS
General, United States Army
Chief of Staff

OFFICIAL:
J. C. PENNINGTON
Brigadier General, United States Army
The Adjutant General

— KEY –

LUBRICANTS		REFILL CAPACITY (APP)	EXPECTED TEMPERATURES: Above +32°F Above 0°C	+40°F to -10°F + 5°C to -23°C	0°F to -65°F -18°C to -50°C	FOR ARCTIC OPERATION REFER TO TM 9-207	INTERVALS
OE/HDO (MIL-L-2104C)	LUBRICATING OIL, Engine		OE/HDO 30	OEA/APG-PD-1	OEA/APG-PD-1		Intervals given are in hours of normal operation.
	Crankcase 1-1/2 HP	1/2 qt or (0.4731L)					
	Air Cleaner -1 and -2 only	1/8 qt or (0.1182L)					
OEA/APG-PD-1	OIL, Engine, Subzero						

Chapter 5

DIRECT SUPPORT MAINTENANCE

5-1 OVERVIEW

This chapter describes the heater repairs and parts replacement that are the responsibility of Direct Support Maintenance. Operator maintenance tasks given in Chapter 2 and Organizational Maintenance tasks given in Chapter 4 are not repeated in this chapter.

SECTION 1

REPAIR PARTS AND SPECIAL TOOLS

5-2 REPAIR PARTS

See TM-4520-244-24P for a listing of repair parts required for maintaining the heater .

5-3 SPECIAL TOOLS

See TM5-4520-244-24P Section III for the special tools required for maintenance of the heater.

SECTION II SERVICE UPON RECEIPT

5-4 SERVICE UPON RECEIPT CHECK LIST

See Table 4-1

5-5 SPECIAL SERVICES

Not applicable

SECTION III OPERATIONAL CHECKS

5-6 OPERATIONAL CHECKS

Refer to Table 4-2

SECTION IV

PREVENTIVE MAINTENANCE CHECKS AND SERVICES

5-7 DIRECT SUPPORT PMCS

See Table 5--1

SECTION V

TROUBLESHOOTING

5-8 DIRECT SUPPORT MAINTENANCE TROUBLESHOOTING CHART

See Table 5-2. This table does not repeat the maintenance procedures given in Tables 3-1 and 4-3. Perform tests, inspections and corrective actions in the order listed.

SECTION VI

MAINTENANCE PROCEDURES

5-9 SUMMARY AND DETAILED PROCEDURES

SUMMARY PROCEDURES

PARAGRAPH	PROCEDURE	RELATED ILLUSTRATIONS
5-10	Fuel Pump Repairs	5-1
5-11	Combustion and Nozzle	5-2, 5--3
5--12	Heat Exchanger Inspection	4-16
5-13	Bulkhead, Side Panels and Casing	5-4
5-14	Spring and Axles	4-18

Table 5-1. Direct Support Preventive Maintenance Checks and Services

Legend

W-Weekly
M-Monthly
Q-Quarterly
S-Semiannually
A-Annua1ly
B-Biennelly

Item No.	Interval W	M	Q	S	A	B	Item to be Inspected	Procedure	Equipment will be reported NOT ready/ available if:
1			●				Gasoline Engine	Start and operate engine; observe for proper starting and smooth running. Replace if operation is unsatisfactory.	
2			●				Fuel Pump	Test for pressure and flow as described in Figure 4-8. Replace if operation is unsatisfactory.	RNA
3			●				Check Valve	observe for unburned fuel in combustor. Replace check valve if defective.	RNA
4			●				Drive Belt	Inspect for serviceable condition. Replace if necessary.	RNA
5				●			Combustion Nozzle	Inspect for serviceable condition. Replace if necessary.	RNA
6				●			Heat Exchanger	Inspect visible parts for signs of damage or wear. If in unsatisfactory condition, report to General Support Maintenance.	Heat exchanger is damaged or "burned".
7					●		Bulk heads and Casings	Inspect for wear, defect or damage. Replace if unsatisfactory.	RNA

*RNA - Usable replacement for irreparable part is not available.

Table 5-1. Direct Support Preventive Maintenance Checks and Services ...Cont

Item No.	Interval* W	M	Q	S	A	B	Item to be Inspected	Procedure	Equipment will be reported NOT ready/ available if:
8					●		Fuel Tank	Inspect for wear, holes, damage. Replace if unsatisfactory.	RNA
9					●		Skid and Skid Cover	Inspect for damage. Repair or replace unserviceable item.	RNA
10					●		Springs and Axles	Inspect for damage or breakage. Replace if unserviceable.	RNA

Table 5-2. Direct Maintenance Troubleshooting Chart

MALFUNCTION

TEST OR INSPECTION

CORRECTIVE ACTION

1. ENGINE FAILS TO START

Step 1. Verify that fuel is reaching engine
. Replenish fuel supply
. Clean fuel filter

Step 2. If engine still will not start.
Refer to TM-5-2805-256-14 troubleshooting procedures on the Model 1A08-III engine

Step 3. If repairs are not feasible
Replace engine

2. ENGINE STARTS BUT WILL NOT CONTINUE TO RUN

Step 1. Inspect fan, magneto and fuel pump for frozen shaft condition
Repair or replace defective component

Step 2. Refer to TM5-2805-256-14 for troubleshooting procedures on the Model 1A08-III engine

5-10 FUEL PUMP REPAIR

This task covers:
a. Disassembly
b. Inspection
c. Reassembly

INITIAL SETUP

Test Equipment
None

Materials/Parts
Fuel pump repair parts

Personnel Required
1

References
Figure 5-1

Equipment Condition
Fuel pump removed from heater as described in procedure 4-17

LOCATION	ITEM	ACTION	REMARKS
DISASSEMBLE			
1. Fuel pump	Fuel pump cover	Remove screws (20). Remove cover (19), gasket (18) and strainer (16).	
	Rotor	Remove screws (17). Remove rotor assembly (24). Remove key (15), roller and rotor from rotor housing. Remove port housing (25) and gasket (26).	
	Bearing shaft-and-seal assembly	Remove screws (9) and washers (10).	
		a. Evenly pry shaft-and-seal assemtbly (8) from pump body (27)	
		b. Coat sleeve with MIL-L-2104A oil	
		c. Insert sleeve (11) in pump body (27) until sleeve contacts adjusting screw in end plug (1),	

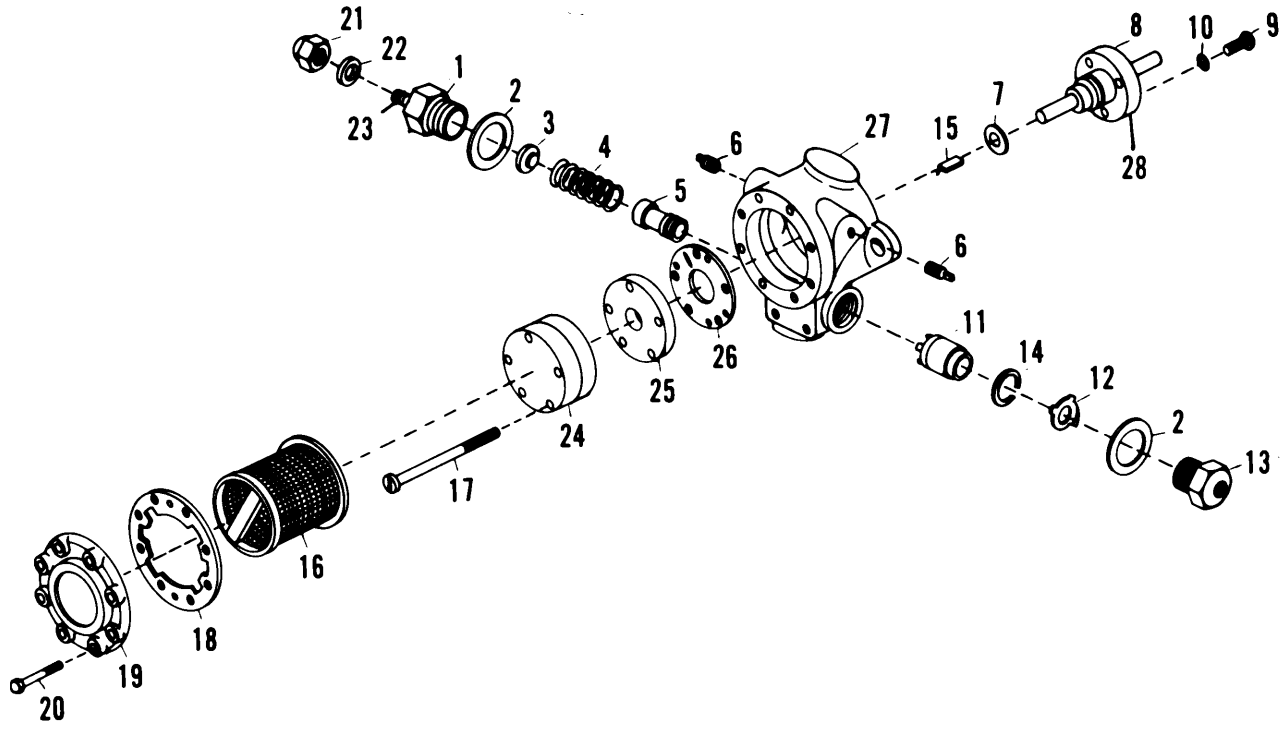

1 END PLUG
2 WASHER
3 SPRING SEAT
4 SPRING
5 PISTON SLEEVE
6 PIPE PLUG
7 WASHER
8 BEARING SHAFT-AND-SEAL ASSEMBLY
9 SCREW
10 WASHER
11 PISTON
12 SLEEVE RETAINER
13 NOZZLE AND PLUG
14 PACKING
15 DRIVE KEY
16 STRAINER
17 SCREW
18 GASKET
19 COVER
20 SCREW
21 END CAP NUT
22 GASKET
23 ADJUSTING SCREW
24 ROTOR ASSEMBLY
25 PORT HOUSING
26 GASKET
27 PUMP BODY
28 PACKING

Figure 5-1. Fuel Pump

LOCATION	ITEM	ACTION	REMARKS
	Spring	a. Remove adjusting screw (23) and plug (l). Install piston (5), spring (4) seat (3), gasket (2). Install plug (1) to secure parts. b. Position retainer (12) and washer (14) on piston (11) and washer (2) on plug (13). Install plug in pump body. c. Install adjusting screw (23) in plug (1) all the way, then turn out six full turns	
2. Spring	End plug (1)	Remove plug (1), washer (2), spring seat (3) and spring (4)	
3. Piston	Nozzle end plug (13)	a. Remove plug (13), washer (2), and retainer (12). b. Press piston (5) and sleeve out through nozzle port end of pump body (27) c. Remove and discard packing (14)	

LOCATION	ITEM	ACTION	REMARKS
INSPECTION			
Inspect all pump parts for serviceable condition. Replace all defective, broken or worn out parts with a serviceable like item.			
REASSEMBLY			
4. Piston	a. End plug	Install washer (2) and end plug (1) in pump body	
	b. Piston sleeve	a. Install new packing (14) on piston {11)	
5. Rotor	Port housing	Install gasket (26) on port housing (25) and position housing on pump body (27). Locate port housing to align holes in housing with holes in pump body	
	Rotor	a. Reassemble rotor assembly (24) and install key (15)	
		b. Install rotor assembly (24) and port housing (25) on pump body (27) using one screw (17), then install remaining four screws (17) leaving all five screws only hand tight	

LOCATION	ITEM	ACTION	REMARKS
6. Bearing and shaft-and-seal assembly	Bearing	a. Install washer (7) in pump body (27)	
		b. Coat packing (28) with MIL-G–10924 lubricant. Install shaft-and-seal assembly (8) in pump body (27) Rotate shaft to ensure that key (15) engages slot in shaft Ensure that bearing shaft-and-seal assembly enters pump body evenly to avoid damage to packing as it passes by bearing recess shoulders on pump body	
	a. Use screws (9) and washers (10)	Secure bearing shaft-and-seal assembly. Torque screws to 40-to-50 inch pounds	
	b. Connect electric drill to pump shaft using flexible coupling to rotate shaft	While rotating shaft tighten screw (17) in star pattern, a little at a time, until all are torqued to 40–to-50 inch pounds	Ensure that shaft rotates freely while screws are tightened
7. Cover	Cover (19)	Use screws (20). Position strainer (16) gasket (18) and cover (19) on pump body and install using screws (20)	Torque screws (20) to 84-to-96 inch pounds

5-11 COMBUSTOR AND NOZZLE

This task covers:

a. Removal
b. Inspection
c. Inspection/Test
d. Install

INITIAL SETUP

Test Equipment
None

Materials/Parts
Maintenance Repair Parts

Personnel Required
1

References
Figure 5-2
Figure 5-3

Equipment Condition
Hood assembly removed (para 4-12)
Engine removed (Fig. 3-1)
Air system removed (para 4-21)

LOCATION	ITEM	ACTION	REMARKS
REMOVAL (Figure 5-2)			
Combustor	Nozzle holder	Disengage clamp (1) from notches in combustor (8). Remove clamp (1). Remove nozzle holder (2) from combustor plate	
	Nozzle	Unscrew nozzle (5) from holder (2). Separate: nozzle (5) strainer (4), and seal (3) from holder (2)	
	Combustor	Remove nuts (9) and washers (10). Remove combustor (8) and gasket (11) from heat exchanger.	
INSPECTION			
	Clamp (1)	Inspect for damage.	
	Nozzle holder (2)	Inspect for cracks, damaged threads	
	Seal (3)	Replace if not in serviceable condition	

NOTE : Compressed air used for blowing dirt off parts must NOT exceed 15 psi. Wear suitable eye protectors.

LOCATION	ITEM	ACTION	REMARKS
	Strainer (4)	Blow clean with compressed air. Replace if not in service-able condition.	
	Combustor plate (7)	Clean with approved solvent. Inspect for signs of burn-ing or for damage. Replace if not in serviceable condi-tion.	See WARNING inside front cover about flammable cleaning fluids
	Combustor assembly (8)	Clean with an approved solvent. Inspect for signs of burning or for damage. Replace if not in service-able condition.	See WARNING inside front cover about flammable cleaning fluids
	Nozzle (5)	Clean with an approved solvent, Assemble and test as follows:	See WARNING inside front cover about using flammable cleaning fluids.

ASSEMBLE

Nozzle holder	Seal , strainer, nozzle	Install seal (3), strainer (4) and nozzle (5) into nozzle holder (2)	

TEST

. Examine Figure 5-3 for fuel flow direction. Using low pressure air applied at fuel inlet, determine that all passages in nozzle assembly offer unobstructed flow in accordance with direction shown by arrows.

SERVICE

. Replace parts in nozzle assembly that prevent unobstructed flow in accordance with the preceding test.

1 COMBUSTOR CLAMP
2 NOZZLE HOLDER
3 SEAL
4 STRAINER
5 NOZZLE
6 IGNITER PLUG
7 COMBUSTOR PLATE
8 COMBUSTOR ASSEMBLY
9 NUT
10 WASHER
11 GASKET

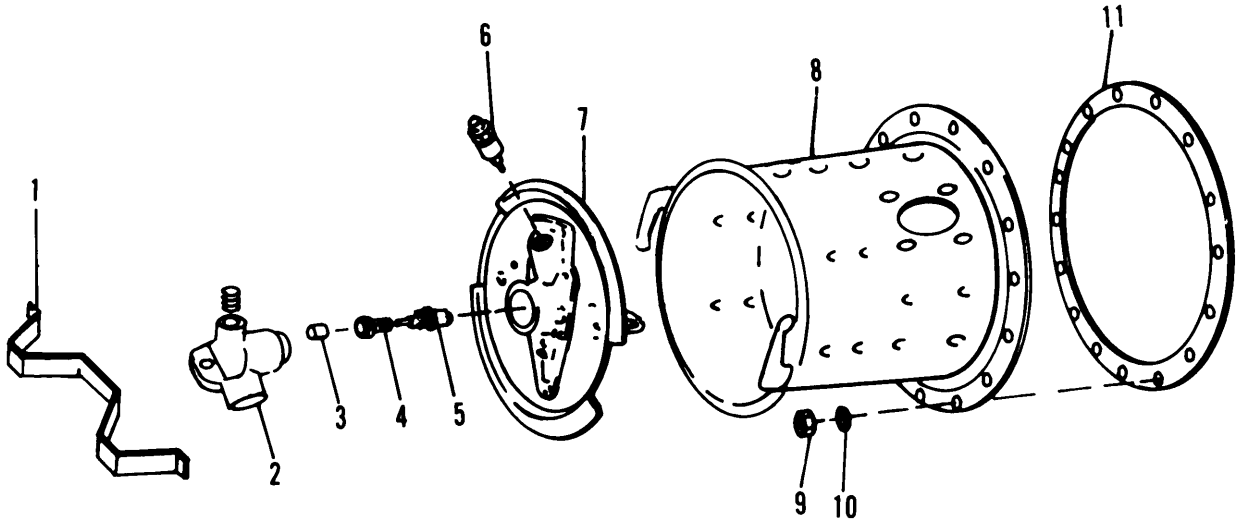

Figure 5-2. Combustor and Nozzle

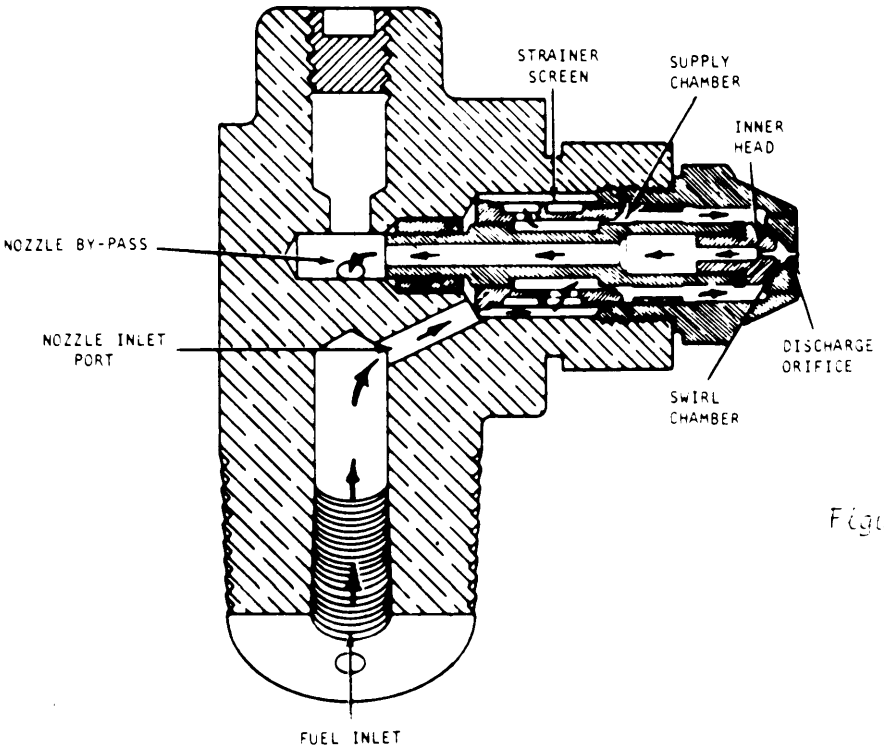

Figure 5-3. Fuel Flow Through Nozzle

LOCATION	ITEM	ACTION	REMARKS
ASSEMBLE (Figure 5-2)			
Combustor	Combustor	Use nuts (9) and washers (10). Install gasket (11) and combustor (8).	
	Nozzle	Use clamp (l). Install nozzle holder (2) in plate (7). Install plate (7) in combustor (8) with clamp (l). Hook clamp into notches on combuster.	

5-12 HEAT EXCHANGER INSPECTION

This task covers:

a. Inspection only

INITIAL SETUP

Test Equipment
None

Materials/Parts
None

Personnel Required
1

References
Figure 4-16

Equipment Condition
a. As in procedure 5-11
b. Following shut down

LOCATION	ITEM	ACTION	REMARKS
INSPECTION			
1. During combustor servicing	Visible faults	With combustor removed as described in procedure 5-11 inspect all visible parts of heat exchanger (20, Figure 4-16) for visible defects, burning or damaged studs. Report damage to General Support Maintenance	
2. After shutdown	With ducts removed operate heater for 5 minutes, then shut down	Inspect interior of heat exchanger through open damper. Cracks are indicated by bright areas inside still-hot heat exchanger. Report damaged condition to General Support Maintenance.	

5-13 BULKHEAD, SIDE PANELS AND CASING

This task covers:
a. Servicing

INITIAL SETUP

Test Equipment
None

Materials/Parts
Serviceable replacement parts

Personnel Required
2

References
Figure 5-4

Equipment Condition
Disassembled as described in procedure 4-24

LOCATION	ITEM	ACTION	REMARKS
SERVICING			
Panels, bulkhead and casing	a. Side panels (12) and (13) b. Bulkheads (61) and (63) c. Casing (62)	Clean items (12), (13) (61), (62) and (63) in accordance with T.O. 35-1-12. Spot paint in accordance with T.O. 35-1-3. Replace any damaged defective or worn out parts with a serviceable like item.	See WARNING inside front cover about using flammable cleaning fluids

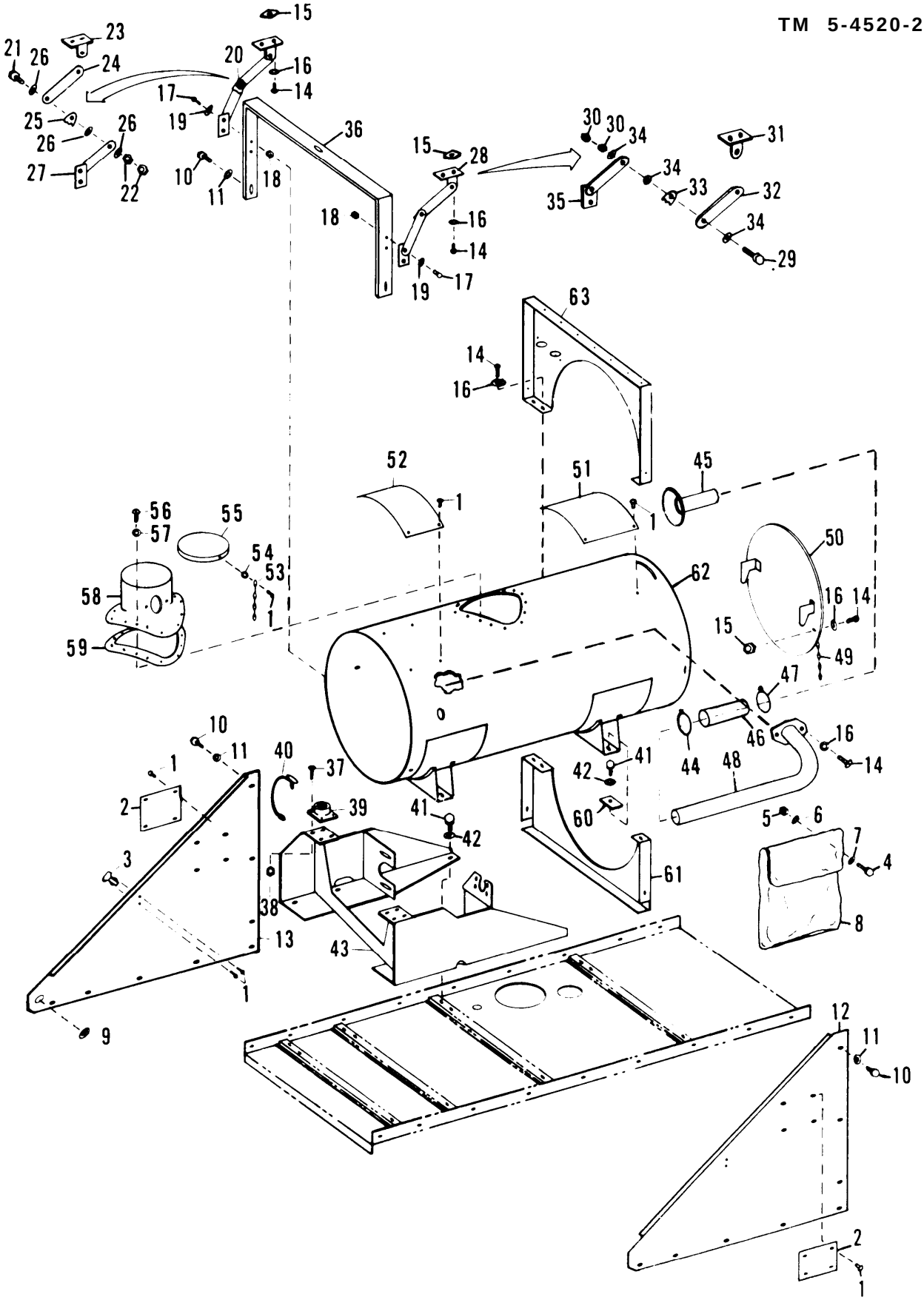

Figure 5-4. Bulkheads, Side Panels and Casing

INDEX, Figure 5-4.

1 SCREW
2 IDENTIFICATION PLATE
3 LATCH
4 SCREW
5 NUT
6 WASHER
7 WASHER
8 PUBLICATIONS CASE
9 GROMMET
10 SCREW
11 WASHER
12 LEFT SIDE PANEL
13 RIGHT SIDE PANEL
14 SCREW
15 NUT
16 WASHER
17 SCREW
18 NUT
19 WASHER
20 SUPPORT STOP, R.H.
21 SCREW
22 NUT
23 SUPPORT BRACKET
24 REMOVABLE BAR, R.H.
25 SUPPORT STOP
26 WASHER
27 BAR ASSEMBLY, R.H.
28 TOP DOOR SUPPORT, R.H.
29 SCREW
30 NUT
31 SUPPORT BRACKET
32 REMOVABLE BAR, L.H.
33 SUPPORT STOP, L.H.
34 WASHER
35 BAR ASSEMBLY, L.H.
36 HINGE SUPPORT BRACKET
37 SCREW
38 NUT
39 RESILIENT MOUNT
40 THUMBSCREW
41 SCREW
42 WASHER
43 ENGINE SUPPORT
44 CLAMP
45 EXHAUST PIPE
46 FLEX DUCT
47 CLAMP
48 EXHAUST EXTENSION
49 CHAIN"
50 ADAPTER OUTLET COVER
51 INSTRUCTION PLATE
52 FUEL SYSTEM DIAGRAM
53 CHAIN
54 WASHER
55 EXHAUST STACK CAP
56 SCREW
57 WASHER
58 EXHAUST STACK
59 GASKET
60 SQUARE WASHER
61 BOTTOM BULKHEAD
62 CASING
63 TOP BULKHEAD

5-14 SPRINGS AND AXLES

This task covers:

a. Removal
b. Inspection
c. Replace/install

INITIAL SETUP

Test/ Equipment
None

Materials/Parts
Maintenance Repair Parts

Personnel Required
2

References
Figure 4-18)

Equipment Condition
Disassembled as described in procedure 4-25

LOCATION	ITEM	ACTION	REMARKS
REMOVE			
	Wheels	Remove wheels and bearings as described in procedure 4-25	
	Axle	Remove nuts (27), washers (28) and U-bolts (30). Remove plate (29) Separate axle (32) from springs (31)	
	Springs	Remove cotter pins (23), shackle bolts (24) and nuts (25). Remove spring (31) from shackles (26). Remove shackles (26) from frame. Remove lubrication fittings (33) from shackle bolts (24)	

INSPECTION

Inspect axle and springs as described in procedure 4-25.

REPLACE/INSTALL

Springs	Lubricant fittings	Install lubricant fittings (33) in shackle bolts (24)	

LOCATION	ITEM	ACTION	REMARKS
	Axle	Use U-bolts (30), washers (28) and nuts (27). Install plate (29) and axle (32) on springs (31).	
	Wheels	Install wheels as described in procedure 4-25	

Chapter 6

GENERAL SUPPORT MAINTENANCE

6-1 OVERVIEW

This chapter describes the heater repairs and parts replacement that are the responsibility of General Support Maintenance. Maintenance tasks given in Chapters 3, 4 and 5 are not repeated in this chapter.

SECTION 1

REPAIR PARTS AND SPECIAL TOOLS

6-2 REPAIR PARTS

See TM5-4520-244-24P for a listing of repair parts required for maintaining the heater.

6-3 SPECIAL TOOLS

See TM5-4520-244-24P Section III for the special tools required for maintenance of the heater.

SECTION II

SERVICE UPON RECEIPT

Not applicable.

SECTION III

OPERATIONAL CHECKS

6-4 OPERATIONAL CHECKS

Not applicable

SECTION IV

PREVENTIVE MAINTENANCE CHECKS AND SERVICES

Not applicable

SECTION V

TROUBLESHOOTING

Not applicable

SECTION VI

MAINTENANCE PROCEDURES

6-5 SUMMARY AND DETAILED PROCEDURES

SUMMARY PROCEDURES

PARAGRAPH	PROCEDURE	RELATED ILLUSTRATIONS
6-6	Heat Exchanger Repair	4-16
6-7	Skid Base, Buel Tank and Skid Cover	6-1
6-8	Bulkheads, Side Panels and Casing	5-4

6-6 HEAT EXCHANGER REPAIR

This task covers:

a. Removal
b. Repair
c. Installation

INITIAL SETUP

Test Equipment
None

Materials/Parts
Stainless Steel

Personnel Required
2

References
Figure 4-16

Equipment Condition
Fully assembled

LOCATION	ITEM	ACTION	REMARKS
REMOVAL			
	Remove gasoline engine	Refer to Figure 3-1	
	Remove combustion system	Refer to procedure 4-22	
	Remove dampers, air control and stack	Refer to procedure 4-23	
	Remove heat exchanger	Slide heat exchanger (20, Figure 4-16) from casing (19)	
REPAIR			
	Cracks in heat exchanger	Repair by welding	DO NOT REPAIR: . if crack is longer than l-inch . if cracks are convergent . if heat exchanger has more than six cracks

LOCATION	ITEM	ACTION	REMARKS
	Sheared or stripped nuts around opening	Fabricate stainless steel patch, 6"x6" curved to fit, with exhaust hole and weld nuts. Remove damaged part of heat exchanger to accept patch. Weld in patch.	
INSTALLATION			
New or repaired heat exchanger		Slide heat exchanger (20, Figure 4-16) into casing (19)	
	Install damper, air control and stack	Refer to procedure 4-23	
	Install combustor system	Refer to procedure 4-22	
	Install gasoline engine	Refer to Figure 3-1	

6-7 SKID BASE, FUEL TANK AND SKID COVER

This task covers:

a. Fuel drain
b. Disassembly
c. Service
d. Repair
e. Reassemble

INITIAL SETUP

Test Equipment
None

Materials/Parts
Serviceable repair parts

Personnel Required
2

References
Figure 6-1

Equipment Condition
Heater disassembled as described in procedure 5-11.

LOCATION	ITEM	ACTION	REMARKS
FUEL DRAIN			
(Procure suitable container)		Remove pipe plug (7) and gasket (8). Drain residual fuel into a suitable container.	See CAUTION inside front cover about fuel spillage
DISASSEMBLY			
1. Hose assemblies	Engine fuel	Disconnect engine fuel metal hose assembly from pipe-to-tube tee	
	Fuel hose	Disconnect fuel hose assembly from pipe elbow. Remove tee, elbow, reducer bushing and pipe coupling from fuel tank	
2. Tank attachments	Gasket	Remove gaskets (2), (6), (16) from fuel tank (15).	

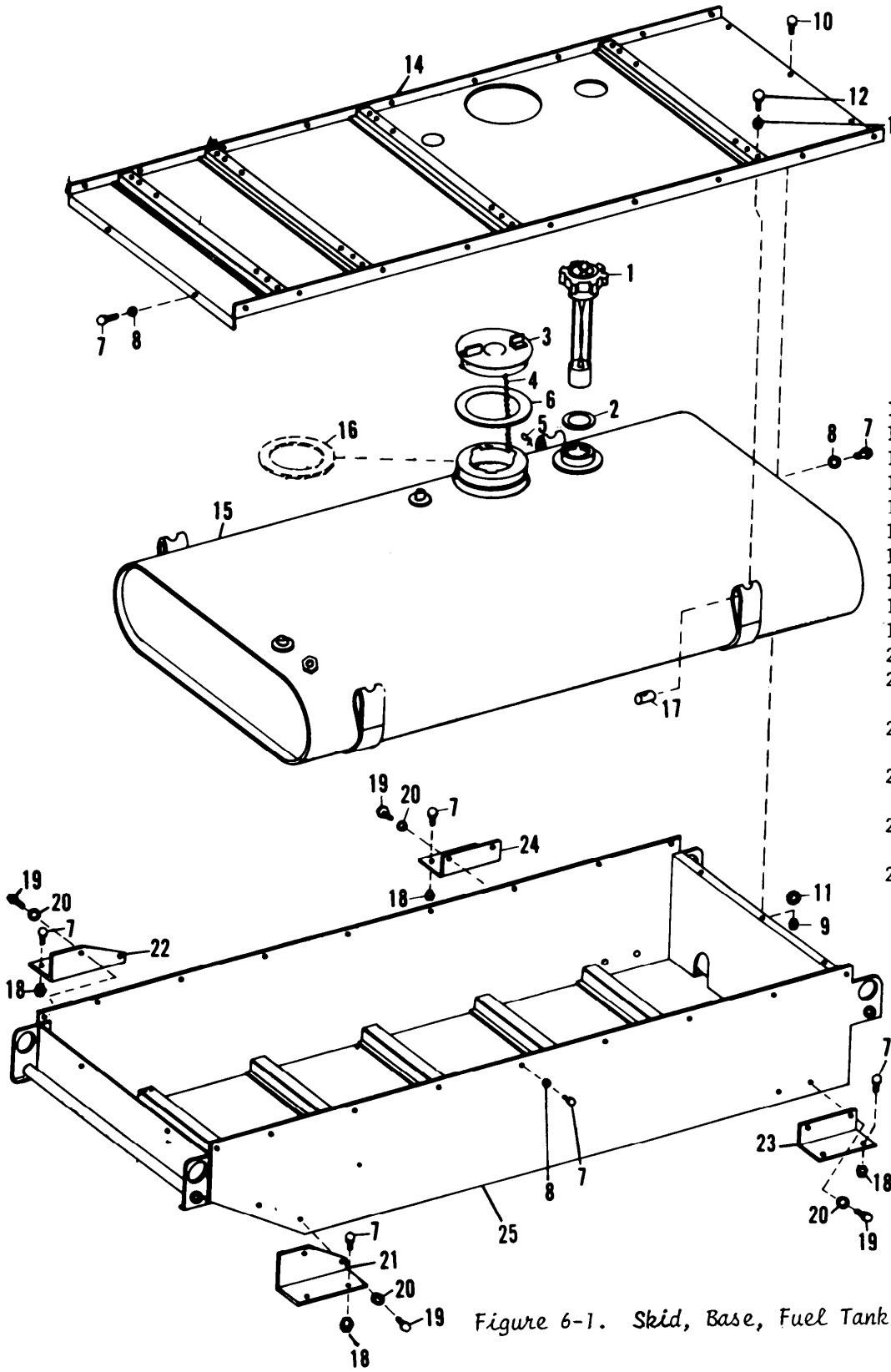

Figure 6-1. Skid, Base, Fuel Tank and Skid Cover

LOCATION	ITEM	ACTION	REMARKS
	Gage	Remove fuel gage (1) from tank (15)	
	Heater	Remove screws (14), nuts (9) and washers (11), also screws (7) and washers (8). Lift heater from skid base. Set on supports to suspend fuel tank.	
	Fuel Tank	Remove screws (12) nnd washers (13). Remove fuel tank (15). Remove nuts (17) from tank supports. Remove pre-formed packings from tank.	
	Fuel Gage	Remove fuel gage (1) from tank	
SERVICE			
3. Skid cover and skid base	a. Skid cover (1.4)	Clean items (14) and (25) in accordance with T.O. 35--1-12. Spot paint in accordance with T.O. 35-1-3. Replace unservice-able item.	See WARNING inside front cover about using flammable cleaning fluids
4. Fuel Tank	Inspect for leaks	Replace drain plug. Fill tank half full wth approved solvent. Agitate, allow to settle and in-spect tank for leaks. Drain solvent. Flush tank with fresh solvent until solvent comes out clean and clear.	

LOCATION	ITEM	ACTION	REMARKS
REPAIR			
5. Fuel tank		Use epoxy patch N.S.N.8040-00-777-0631. Remove paint around leak. Clean area with sandpaper. Mix and apply epoxy as instructed in patch kit. Allow epoxy to cure for 30 minutes or as specified in manufacturer's instructions.	
		Paint surface in accordance with T.O.35-1-3.	
REASSEMBLE			
6. Fuel tank	Fuel gage	Install fuel gage (1) and gasket (2) in tank 15).	
	Pipe plug	Install packing (8) and plug (7) in tank (15).	
	Barrel nuts	Position barrel nuts (17) in tank support straps.	
	Tank	Position fuel tank below heater and attach by installing screws (12) and washers (13) in barrel nuts (17).	
7. Skid base		Lift heater with attached fuel tank and position on steel base. Install screws (10), washers (11) and nuts (9).	

LOCATION	ITEM	ACTION	REMARKS
8. Hose assemblies	Fuel lines.	Install fuel lines as described in procedure 4-17	

6-8 BULKHEAD, SIDE PANELS AND CASING

This task covers:

a. Removal
b. Inspection
c. Reassemble
d. Test

INITIAL SETUP

Test Equipment
None

References
Figure 5-4

Materials/Parts
None

Equipment Condition
Heater fully assembled

Personnel Required

LOCATION	ITEM	ACTION	REMARKS
REMOVAL			
	Remove hood assembly	Refer to procedure 4-12	
	Remove gasoline engine	Refer to Figure 3-1	
	Remove engine fuel hose	Refer to procedure 4-17	
	Remove heater fuel filter	Refer to procedure 4-18	
	Remove engine exhaust pipe	Refer to procedure 4-21	
	Remove fuel and heater controls	Refer to procedure 4-19	
	Remove magneto and ignition cable	Refer to procedure 4-14	
	Remove air control	Refer to procedure 4-21	
	Remove heat exchanger	Refer to procedure 6-6	

LOCATION	ITEM	ACTION	REMARKS
	Side panels	Remove screws (10), washers (11). Remove panels (12) and (13), Figure 5-4.	
	Top bulkhead	Remove screw (14), washers (16) and nuts (15). Remove top bulkhead (63)	
	Casing and bottom bulkhead	Remove screws (41) and washers (42) . Remove casing (62) from skid top. Remove bottom bulkhead (61).	
	Engine support	a. Remove screws (37) and nuts (38). Remove thumb screws (40) and mounts (39) b. Remove screws (41) and washers (42). Remove engine support (43).	

INSPECTION

Inspect all removed parts for serviceable condition. Replace damaged, broken or worn out parts with a serviceable like item.

Inspect information plates for adequate legibility. Replace aged, defaced or worn beyond ease of readability.

INSTALLATION (Figure 5-4)

	Engine support	Use screws (41) and washers (42). Install engine support (43) Use screws (37) and nuts (38). Install mounts (39) and thumb screws (40).

LOCATION	ITEM	ACTION	REMARKS
	Casing and bottom bulkhead	Use screws (41) and washers (42). Install bottom bulkhead (61) and casing (62) on skid top.	
	Top bulkhead	Use screws (14), washers (16) and nuts (15). Install top bulkhead (63).	
	Side panels	Use screws (10) and washers (11). Install panels (12) and (13)	
	Install heat exchanger	Refer to procedure 6-6	
	Install air control	Refer to procedure 4-21	
	Install magneto and ignition cable	Refer to procedure 4-14	
	Install fuel and heater controls	Refer to procedure 4-19	
	Install engine exhaust pipe	Refer to procedure 4-21	
	Install heater fuel filter	Refer to procedure 4-17	
	Install gasoline engine	Refer to Figure 3-1	
	Install hood assembly	Refer to procedure 4-12	

TEST

Start up engine and operate heater as described in Figure 2-3.

APPENDIX A

REFERENCES

A-1 SCOPE

This appendix lists all forms, field manuals, and technical manuals referenced in this manual.

A-2 FORMS

Equipment Inspection and Maintenance Work Sheet . . . . . .DA Form 2404

Quality Deficiency Report . . . . . SF 368

Recommended Changes to DA Publications . . . . . DA Form 2028

A-3 TECHNICAL MANUALS

Operator, Organizational, DS and GS Maintenance Manual, Engine, Gasoline, 1-1/2 HP Military Standard . . . .TM 5-2805-256-14

Organizational, DS and GS and Depot Maintenance Repair Parts and Special Tools Lists, Engine, Gasoline, 1-1/2 HP Military Standard . . . . . TM 5-2805-256-24P

Organizational, DS and GS Maintenance Repair Parts and Special Tools Lists, Heater, Duct Type, Portable, Trailer Mounted, 400,000 BTU/HR . . . . . .TM 5-4520-244-24P

Corrosion Prevention, Painting and Marking of USAF Support Equipment . . . .TO 35-1-3

Compounds and Procedures for Cleaning Support Equipment . . . .TO 35-1-12

The Army Maintenance Management System (TAMES) . . . . . DA Pam 738-750

A-4 MISCELLANEOUS PUBLICATIONS

Lubrication Order, Engine, Gasoline . . . .LO 5-2805-256-12

APPENDIX B

COMPONENTS OF END ITEM LIST

Section I INTRODUCTION

B-1. Scope.

This appendix lists Integral Components of and Basic Issue Items (BID) for the Heater to help you inventory items required for safe and efficient operation.

B-2 . General.

The components of end item list are divided into the following sections:

a. Section II. Integral Components of the End Item. These items, when assembled, comprise the heater and must accompany it whenever it is transferred or turned in. These illustrations will help you identify these items.

b. *Section III. Basic Issue Items.* These are minimum essential item's required to place the heater in operation, to operate it and to perform emergency repairs. Although shipped separately packed, they must accompany the heater during operation and whenever it is transferred between accountable officers. The illustrations will assist you with hard-to-identify items. This manual is your authority to requisition replacement BII based on Table(s) of Organization and Equipment (TOE)/ Modification Table of Organization and Equipment (MTOE) authorization of the end item.

B-3. Explanation of Columns.

a. Illustration. This column is divided as follows:

(1) *Figure Number.* Indicates the figure number Of the illustration on which the item is shown (if applicable).

(2) *Item Number.* The number used to identify item called out in the illustration.

b. *National Stock Number (NSN). Indicates* the national stock number assigned to the end item which will be used for requisitioning.

c. *Part Number (P/N).* Indicates the primary number used by the manufacturer which controls the design and characteristics of the item by means of its engineering drawings, specifications, standards and inspection requirements to identify an item or range of items .

d. *Description.* Indicates the federal item name and, if required, a minimum description to identify the item.

e. *Location.* The physical location of each item listed is given in this column, The lists are designed to inventory all items in one area of the major item before moving on to an adjacent area.

f. *Usable on Code.* "Usable On" codes are included to help you identify which component items are used on the different models. Identification of the cldes used in this list are:

Code	Used On
	Model FC-400-1

g. *Quanity Required (Qty Reqd).* This column lists the quantity of each item required for a complete major item.

h. *Quantity.* This column is left blank for use during inventory. Under the received column, list the quantity you actually receive on your major item. The date columns are for use when you inventory the major item at a later date, such as for shipment to another site.

Section II. INTEGRAL COMPONENTS OF END ITEM

(1) Illus Number	(2) National Stock Number	(3) Description FSCM and Part Number	(4) U/M	(5) Qty Rqr
Fig. 2-2 Item 8		Hose Adapter; 6 inch (57386) 10003	Ea	1
Fig. 2-2 Item 7		Hose, Duct; 6 inch (57386) 10001	Ea	3
Fig. 2-2 Item 6		Hose, Duct; 12 inch (57386) 10002	Ea	1
Fig. 1-3. Item 7		Pipe, Exhaust, with screen (57386) 40016	Ea	1

Section III. BASIC ISSUE ITEMS

(1) Illus Number	(2) National Stock Number	(3) Description FSCM and Part Number	(4) U/M	(5) Qty Rqr
	7220 -00-559-9618	Case, Manual Department of Army Technical Manual; Operator, Organizational, Direct and General Support Maintenance Manual TM 5-4520-244-14 Department of Army Technical Manual; Operator, Organizational, Intermediate (Field) (Direct Support and General Support) and Depot Maintenance Manual TM 5-2805-256-14 Lubrication Order LO-2805-256-12		

APPENDIX C

MAINTENANCE ALLOCATION CHART

Section 1 INTRODUCTION

C-1. General

a. This section provides a general explanation of all maintenance and repair functions authorized at various maintenance levels.

b. Section II designates overall responsibility for the performance of maintenance functions on the identified end item or component and the work measurement time required to perform the functions by the designated maintenance level. The implementation of the maintenance functions upon the end item or components will be consistent with the assigned maintenance functions.

c. Section III lists the tools and test equipment required for each maintenance function as referenced from Section II (Not Applicable).

C-2. Explanation of Columns in Section II

a. *Column (1), Group Number. Column 1* lists group numbers to identified related components, assemblies, subassemblies, and modules with their next higher assembly. The applicable groups are listed in the MAC in disassembly sequence beginning with the first group removed.

b. *Column (2), Component/;Assembly.* This column contains the noun mames of components, assemblies, subassemblies and modules for which maintenance is authorized.

c. *Column(3), Maintenance Functions. This* column lists the functions to be performed on the item listed in Column 2. The maintenance functions are defined as follows:

(1)Inspect. To determine serviceability of an item by comparing its physical, mechanical, or electrical charateristics with established standards through examination.

(2) Tut. To verify serviceability of an item by comparing its physical, mechanical , or electrical characteristics of an item, and comparing those characteristics with prescribed standards.

(3) Service. Operations required periodically to keep an item in proper operating condition, i.e. , to clean (decontaminate), to preserve, to drain, to paint, or to replenish fuel, lubricants, hydraulic fluids, or compressed air supplies.

(4) Adjust. To maintain within prescribed limits, by bringing into proper or exact position, or by setting the operating characteristics to specified parameters.

(5) *Align.* To ad-just specified variable elements of an item to bring about optimum or desired performance.

(6) *Calibrate.* To determine and cause corrections to be adjusted on instruments or test measuring and diagnostic equipments used in precision measurement. Consist of comparison of two instruments, one of which is a certified standard of known accuracy, to detect and adjust any discrepancy in the accuracy of the instrument being compared.

(7) Install. The act of emplacing, seating, or fixing into position an

item, part, or module (component or assembly) in a manner to allow the proper functioning of an equipment or system.

(8) Replace The act of substituting a serviceable like type part, subassembly, or module (component or assembly) for an unservice able counterpart.

(9) Repair. The application of maintenance services (inspect, test, service, adjust, align, calibrate, or replace) or other maintenance actions (welding, grinding, riveting, straightening, facing remachining, or resurfacing) to restore serviceability to an item by correcting specific damage, fault, malfunction, or failure in a part, sub-assembly, module (component or assembly), end item, or system.

(10) Overhaul. That maintenance effort (service/action) necessary to restore an item to a completely serviceable/operational condition as prescribed by maintenance standards in appropriate technical manuals. Overhaul is normally the highest degree of maintenance performed by the Army. Overhaul does not normally return an item to a like new condition.

(11) Rebuild. Consists of those services/actions necessary for the restoration of unserviceable equipment to a like new condition in accordance with original manufacturing standards. Rebuild is the highest degree of material maintenance applied to Army equipment. The rebuild operation includes the act of returning to zero those age measurements (hours/miles, etc.) considered in classifying Army equipments/components.

d. Column (4), Maintenance Category. This column is made up of sub-columns for each category of maintenance. Work time figures are listed in these sub-columns for the lowest level of maintenance authorized to perform the function listed in column 3. These figures indicate the average active time required to perform the maintenance function at the indicated category of maintenance under typical field operating conditions.

e. Column (5), Tools and Equipment. This column is provided for referencing by code, the common tool sets (not individual tools) special tools, test and support equipment required to perform the designated functions (Not Applicable).

Section II MAINTENCE ALLOCATION CHART

O-Organizational Maintenance
F-Direct Support Maintenance
H-General Support Maintenance
D-Depot Maintenance
C-Operator Crew

Group No.	Component/Assembly	Maintenance Function	Maintenance Category C	O	F	H	D	Tools and Equipment	Remarks
01	Hose, Adapter, Basket and Support Handles								
	Hose	Inspect	0.1						
		Install	0.1						
		Replace		0.1					
	Adapter	Inspect	0.1						
		Install	0.1						
		Replace		0.1					
	Basket	Inspect	0.1						
		Replace		0.1					
	Handles	Inspect	0.1						
		Replace		0.1					
02	Hood Assembly								
	Cabinet Top	Inspect	0.1						
		Replace		0.2					
	Access Door	Inspect	0.1						
		Replace		0.1					
	Door, Air Inlet	Inspect	0.1						
		Adjust	0.1						
		Replace		0.1					
	Screen, Air Inlet	Inspect	0.1						
		Service	0.1						
		Replace		0.1					
03	Power Unit								
	Gasoline Engine	Inspect	0.1						
		Service		0.2					
		Install	0.1						

MAINTENANCE ALLOCATION CHART

Group No.	Component/Assembly	Maintenance Function	Maintenance Category C	O	F	H	D	Tools and Equipment	Remarks
04	Fuel System								
	Hose	Inspect	0.1						
		Replace		0.1					
	Lines and Fittings	Inspect	0.1						
		Replace		0.1					
	Fuel Filter	Inspect	0.1						
		Service		0.1					
		Replace		0.1					
	Fuel Pump	Inspect		0.1					
		Test		0.5					
		Repair			1.0				
		Replace		0.2					
05	Control and Instruments								
	Burner Fuel Control Valve	Inspect	0.1						
		Adjust	0.1						
		Test		0.8					
		Replace		0.5					
	Temperature Selector Valve	Inspect	0.1						
		Adjust	0.1						
		Test		0.5					
		Replace		0.5					
	Check Valve	Inspect	0.1						
		Test	0.2						
		Replace		0.5					
	Tubings and Fittings	Inspect		0.2					
		Replace		0.2					
06	Ignition System								
	Ignition Cable	Inspect	0.1						
		Replace		0.5					

MAINTENANCE ALLOCATION CHART

Group No.	Component/Assembly	Maintenance Function	Maintenance Category					Tools and Equipment	Remarks
			C	O	F	H	D		
06 cont.	Magneto	Inspect	0.2						
		Test		0.3					
		Repair		0.5					
		Replace		0.5					
07	Air System								
	Drive Belt	Inspect	0.1						
		Adjust		0.1					
		Replace		0.3					
	Drive Coupling	Inspect							
		Replace		0.2					
				0.8					
	Fan Ring	Inspect		0.1					
		Replace		0.5					
	Fan, Vaneaxial	Inspect		0.2					
		Service		0.3					
		Replace		0.5					
	Air Vane	Inspect		0.2					
		Replace		0.6					
08	Combustion System								
	Tubing and Fittings	Inspect	0.2						
		Replace		0.5					
	Igniter Plug	Inspect	0.2						
		Test		0.2					
		Service		0.2					
		Adjust		0.2					
		Replace		0.5					
	Combustor	Inspect		0.2					
		Service		0.5					
		Replace		0.8					

MAINTENANCE ALLOCATION CHART

Group No.	Component/Assembly	Maintenance Function	Maintenance Category C	0	F	H	D	Tools and Equipment	Remarks
08 cont.	Nozzle	Inspect		0.3					
		Test		0.2					
		Service		0.3					
		Replace		0.5					
09	Heat Exchanger and Damper Control								
	Damper Control	Inspect	0.1						
		Adjust	0.1						
		Replace		0.5					
	Air Control	Inspect		0.2					
		Replace		0.5					
	Exhaust Stack	Inspect	0.1						
		Replace		0.2					
	Heat Exchanger	Inspect			0.3				
		Replace				0.8			
10	Bulkhead, Side Panels, and Casing								
	Side Panels	Inspect	0.1						
		Service		0.3					
		Replace		0.5					
	Informa-tion Plates	Inspect		0.1					
		Service			0.2				
		Replace				0.3			
11	Skid, Cover and Fuel Bank								
	Skid Cover	Inspect		0.3					
		Service			0.5				
		Replace				0.8			

MAINTENANCE ALLOCATION CHART

Group No.	Component/Assembly	Maintenance Function	Maintenance Category C	O	F	H	D	Tools and Equipment	Remarks
11 cent.	Fuel Tank	Inspect							
		Service		0.5					
		Repair			0.5				
		Replace				0.8			
	Skid	Service			0.5				
		Replace				0.6			
12	Trailer Assembly								
	Wheels	Inspect	0.2						
		Replace		0.5					
	Wheel Drums	Inspect	0.3						
		Repair		0.5					
		Replace		0.5					
	Tires and Tubes	Inspect	0.2						
		Repair		0.5					
		Replace		0.6					
	Wheel Hubs and Bearings	Inspect	0.2						
		Adjust		0.3					
		Replace		0.5					
	Axle	Inspect		0.2					
		Replace			0.3				
	Springs	Inspect		0.2					
		Replace			0.3				

APPENDIX D

ADDITIONAL AUTHORIZATION LIST

Section 1 INTRODUCTION

D-1 . Scope.

This appendix lists additional items you are authorized for the support of the Heater.

D-2 . General

This list identifies items that do not have to accompany the Heater and that do not have to be turned in with it. These items are authorized to you by CTA, MTOE, TDA or JTA.

D-3 . Explanation of Listing

National stock number, descriptions, and quantities are provided to help you identify and request the additional items you reqire to support this equipment. "USABLE ON" codes are identified as follows:

CODE	USED ON
	Model FC-400-1

(1) NATIONAL STOCK NUMBER	(2) PARTS NUMBER & FSCM	DESCRIPTION	(3) USABLE ON CODE	(4) U/M	QTY AUTH
		NONE			

APPENDIX E

EXPENDABLE MATERIALS LIST

Section I INTRODUCTION

E-1. Scope

This appendix lists expendable supplies and materials you will need to operate and maintain the Heater.

These items are authorized to you by CTA50-970, Expendable Items (Except Medical, Class V, Repair Parts, and Heraldic Items).

E-2. Explanation of Columns.

a. Column 1 -- Item number. This number is assigned to the entry in the listing and is referenced in the narrative instructions to identify the material (e.g., "use cleaning compound, item 5,App.D").

b. *Column 2 -- level.* This column identifies the lowest level of maintenance that requires the listed item.

(enter as *applicable)*

C -- Operator/Crew
O -- Organizational Maintenance
F -- Direct Support Maintenance
H -- General Support Maintenance

c. column 3 -- National Stock Number. This is the National stock number assigned to the item: use it to request or requisition the item.

d. *Column 4 -- Description.* Indicates the Federal item name and, if required, a description to identify the item. The last line for each item indicates the part number followed by the Federal Supply Code for Manufacturer (FSCM) in parentheses, if applicable.

Column 5 -- Unit of Measure (U/M). Indicates the measure used in performing the actual maintenance function. This measure is expressed by a two-character alphabetical abbreviation (e.g. , ea, in, pr). If the unit of measure differs from the unit of issue, requisition the lowest unit of issue that will satisfy your requirements.

Section II EXPENDABLE SUPPLIES AND MATERIALS LIST

(1) ITEM NUMBER	(2) LEVEL	(3) NATIONAL STOCK NUMBER	(4) DESCRIPTION	(5) U/M
1	O	6850-00-264-9037	Dry Clean Solvent, PD-680 (81348), 1 Gal. Can	EA
2	C	9130-00-160-1818	Gasoline, Combat, MIL-G-3056, Type I (_____Gallons required for 8 hour operation)	BULK
3	O	9150-00-961-8995	Lubricant Grease, MIL-G-27617 (81349), 8 Ounce Tube	EA

ALPHABETICAL INDEX

Subject, Para

ALPHABETICAL INDEX Cent

Subject, Para

H Cent

Page

I

L

M

N

O

P

Page

R

ALPHABETICAL INDEX Cent

Subject, Para

S

T

V

W

By Order of the Secretary of the Army:

E. C. MEYER
General, United states Army
Chief of Staff

Official:

J. C. PENNINGTON
Major General, United States Army
The Adjutant General

DISTRIBUTION:
To be distributed in accordance with DA Form 12-25C, Operator Requirements for Heaters, Space, 400,000 BTU.

* U. S. GOVERNMENT PRINTING OFFICE: 1988 - 554169 / 87153

RECOMMENDED CHANGES TO EQUIPMENT TECHNICAL MANUALS

SOMETHING WRONG WITH THIS MANUAL?

THEN. . .JOT DOWN THE DOPE ABOUT IT ON THIS FORM, TEAR IT OUT, FOLD IT AND DROP IT IN THE MAIL!

FROM: (YOUR UNIT'S COMPLETE ADDRESS)
PFC JOHN DOE
COA, 3d ENGINEER BN
FT. LEONARD WOOD MO 63108

DATE

PUBLICATION NUMBER	DATE	TITLE
TM 5-4520-244-14	11 July 1980	Heater, Duct Type, Portable, Trailer Mounted, 400,000 BTU/HR

BE EXACT. . .PIN-POINT WHERE IT IS

PAGE NO.	PARA-GRAPH	FIGURE NO.	TABLE NO.	IN THIS SPACE TELL WHAT IS WRONG AND WHAT SHOULD BE DONE ABOUT IT:
6	2-1 a			In line 6 of paragraph 2-1a the manual states the engine has 6 cylinders. The engine on my set only has 4 cylinders. Change the manual to show 4 cylinders.
81		4-3		Callout 16 on figure 4-3 is pointing at a bolt. In the key to fig. 4-3, item 16 is called a shim. Please correct one or the other
125	line 20			I ordered a gasket, item 19 on figure B-16 by NSN 2910-00-762-3001. I got a gasket but it doesn't fit. Supply says I got what I ordered so the NSN is wrong. Please give me a good NSN.

SAMPLE

TEAR ALONG DOTTED LINE

TYPED NAME, GRADE OR TITLE, AND TELEPHONE NUMBER
JOHN DOE, PFC (268) 317-7111

SIGN HERE: John Doe

DA FORM 1 AUG 74 2028-2

P.S.--IF YOUR OUTFIT WANTS TO KNOW ABOUT YOUR MANUAL "FIND," MAKE A CARBON COPY OF THIS AND GIVE IT TO YOUR HEADQUARTERS.

DRSTS-M Overprint 1, 1 Nov 78

RECOMMENDED CHANGES TO EQUIPMENT TECHNICAL MANUALS

SOMETHING WRONG WITH THIS MANUAL?

THEN. . .JOT DOWN THE DOPE ABOUT IT ON THIS FORM, TEAR IT OUT, FOLD IT AND DROP IT IN THE MAIL!

FROM: (YOUR UNIT'S COMPLETE ADDRESS)

DATE

PUBLICATION NUMBER	DATE	TITLE
TM 5-4520-244-14	11 July 1980	Heater, Duct Type, Portable, Trailer Mounted, 400,000 BTU/HR

BE EXACT. . .PIN-POINT WHERE IT IS

PAGE NO.	PARA-GRAPH	FIGURE NO.	TABLE NO.

IN THIS SPACE TELL WHAT IS WRONG AND WHAT SHOULD BE DONE ABOUT IT:

TYPED NAME, GRADE OR TITLE, AND TELEPHONE NUMBER

SIGN HERE:

TEAR ALONG DOTTED LINE

DA FORM 1 AUG 74 2028-2

P.S.--IF YOUR OUTFIT WANTS TO KNOW ABOUT YOUR MANUAL "FIND," MAKE A CARBON COPY OF THIS AND GIVE IT TO YOUR HEADQUARTERS.

FILL IN YOUR UNIT'S ADDRESS

FOLD BACK

DEPARTMENT OF THE ARMY

OFFICIAL BUSINESS

PENALTY FOR PRIVATE USE, $300

POSTAGE AND FEES PAID
DEPARTMENT OF THE ARMY
DOD-314

Commander
US Army Troop Support and Aviation
Materiel Readiness Command
ATTN: DRSTS-MTPS
4300 Goodfellow Boulevard
St. Louis, MO 63120

TEAR ALONG DOTTED LINE

FOLD BACK

REVERSE OF DA FORM 2028-2

The Metric System and Equivalents

Linear Measure

1 centimeter = 10 millimeters = .39 inch
1 decimenter = 10 centimeters = 3.94 inches
1 meter = 10 decimeters = 39.37 inches
1 dekameter = 10 meters = 32.8 feet
1 hectometer = 10 dekameters = 328.08 feet
1 kilometer = 10 hectometers = 3,280.8 feet

Weights

1 centigram = 10 milligrams = .15 grain
1 decigram = 10 centigrams = 1.54 grains
1 gram = 10 decigrams = .035 ounce
1 dekagram = 10 grams = .35 ounce
1 hectogram = 10 dekagrams = 3.52 ounces
1 kilogram = 10 hectograms = 2.2 pounds
1 quintal = 100 kilograms = 220.46 pounds
1 metric ton = 10 quintals = 1.1 short tons

Liquid Measure

1 centiliter = 10 milliters = .34 fl. ounce
1 deciliter = 10 centiliters = 3.38 fl. ounces
1 liter = 10 deciliters = 38.82 fl. ounces
1 dekaliter = 10 liters = 2.64 gallons
1 hectoliter = 10 dekaliters = 26.42 gallons
1 kiloliter = 10 hectoliters = 264.18 gallons

Square Measure

1 sq. centimeter = 100 sq. millimeters = .155 sq. inch
1 sq. decimenter = 100 sq. centimeters = 15.5 sq. inches
1 sq. meter (centare) = 100 sq. decimeters = 10.76 sq. feet
1 sq. dekameter (are) = 100 sq. meters = 1,076.4 sq. feet
1 sq. hectometer (hectare) = 100 sq. dekameters = 2.47 acres
1 sq. kilometer = 100 sq. hectometers = .386 sq. mile

Cubic Measure

1 cu. centimeter = 1000 cu. millimeters = .06 cu. inch
1 cu. decimeter = 1000 cu. centimeters = 61.02 cu. inches
1 cu meter = 1000 cu. decimeters = 35.31 cu. feet

Approximate Conversion Factors

To change	*To*	*Multiply by*	*To change*	*To*	*Multiply by*
inches	centimeters	2.540	ounce-inches	newton meters	.007062
feet	meters	.305	centimeters	inches	.394
yards	meters	.914	feet	meters	3.280
miles	kilometers	1.609	meters	yards	1.094
square inches	square centimeters	6.451	kilometers	miles	.621
square feet	square meters	.093	square centimeters	square inches	.155
square yards	square meters	.836	square meters	square feet	10.764
square miles	square kilometers	2.590	square meters	square yards	1.196
acres	square hectometers	.405	square kilometers	square miles	.386
cubic feet	cubic meters	.028	square hectometers	acres	2.471
cubic yards	cubic meters	.765	cubic meters	cubic feet	35.315
fluid ounces	milliliters	29,573	cubic meters	cubic yards	1.308
pints	liters	.473	milliliters	fluid ounces	.034
quarts	liters	.946	liters	pints	2.113
gallons	liters	3.785	liters	quarts	1.057
ounces	grams	28.349	liters	gallons	.264
pounds	kilograms	.454	grams	ounces	.035
short tons	metric tons	.907	kilograms	pounds	2.205
pound-feet	newton-meters	1.365	metric tons	short tons	1.102
pound-inches	newton-meters	.11375			

Temperature (Exact)

°F	Fahrenheit temperature	5/9 (after subtracting 32)	Celsius temperature	°C

PIN: 045667-006

This fine document...

Was brought to you by me:

Liberated Manuals -- free army and government manuals

Why do I do it? I am tired of sleazy CD-ROM sellers, who take publicly available information, slap “watermarks” and other junk on it, and sell it. Those masters of search engine manipulation make sure that their sites that sell free information, come up first in search engines. They did not create it... They did not even scan it... Why should they get your money? Why are not letting you give those free manuals to your friends?

I am setting this document FREE. This document was made by the US Government and is NOT protected by Copyright. Feel free to share, republish, sell and so on.

I am not asking you for donations, fees or handouts. If you can, please provide a link to liberatedmanuals.com, so that free manuals come up first in search engines:

<A HREF=http://www.liberatedmanuals.com/>Free Military and Government Manuals</A>

- Sincerely
  Igor Chudov
  http://igor.chudov.com/
- Chicago Machinery Movers