TECHNICAL MANUAL

OPERATOR, ORGANIZATIONAL, DIREC
AND
GENERAL SUPPORT MAINTENANCE MANUAL
INCLUDING
REPAIR PARTS AND SPECIAL TOOLS LIST
COMPRESSOR, AIR; TANK-MOUNTED; EI,EC'T1'IC
MOTOR DRIVEN; 25CFM AT 175 PSI

CHAMPION MODEL NO. HR10-8M-1 AND HR10-8M-4

NSN 4310-00-133-3512 AND NSN 4310-01-020-7773

AND

C&H MODEL NO. 20-277M

NSN 4310-01-037-2441

This copy is a reprint which includes current pages from Changes 1 through 3

HEADQUARTERS, DEPARTMENT OF THE ARMY

AUGUST 1974

SAFETY PRECAUTIONS

WARNING

Compressed air and electricity are dangerous.

When operating the compressor, deenergize the input power leads at their source before changing connections or performing maintenance on the unit. The voltage generated by the incoming power source can cause death by electrocution.

Never attempt to service any of the air compressor components until the unit is relieved of all air pressure.

During operation personnel should keep hands away from manifolds, after-cooler tubes, and compressor as these parts get quite hot and if touched can result in burns.

Be extremely careful when using a carbon tetrachloride fire extinguisher in an enclosed area. A poisonous gas is generated by the contact of carbon tetrachloride with a heated metallic surface. Provide adequate ventilation before entering an enclosed area where carbon tetrachloride has been used.

This compressor is NOT SUITABLE for the supply of air for charging cylinders with BREATHABLE AIR.

Cleaning solvent, PD-680, used for cleaning is POTENTIALLY DANGEROUS CHEMICAL. Do not use near open flame. Flash point of solvent is 100-138F (38-59C).

CHANGE NO. 3

HEADQUARTERS
DEPARTMENT OF THE ARMY
WASHINGTON, D.C., *5 February 1985*

OPERATOR'S, ORGANIZATIONAL, DIRECT
AND GENERAL SUPPORT MAINTENANCE MANUAL
INCLUDING
REPAIR PARTS AND SPECIAL TOOLS LIST
COMPRESSOR, AIR; TANK-MOUNTED; ELECTRIC
MOTOR DRIVEN; 25 CFM AT 175 PSI
(CHAMPION MODEL NO. HR 10-8I-1 AND HR 10-8M-4)
NSN 4310-00-133-3512 AND NSN 4310-01-020-7773
AND
(C&H MODEL NO. 20-277M)
NSN 4310-01-037-2441

TM 5-4310-349-14, 22 August 1974, is changed as follows:

1. Remove and insert pages as indicated below. New or changed text material is indicated by a vertical bar in the margin. An illustration change is indicated by a miniature pointing hand.

Remove pages	Insert pages
B-3	B-3/B-4
C-17 and C-18	C-17 and C-18
C-21 and C-22	C-21 and C-22
C-29 through C-32	C-29 through C-32
C-35 through C-38	C-35 through C-38

2. Retain this sheet in front of manual for reference purposes.

By Order of the Secretary of the Army:

JOHN A. WICKHAM, JR.
General, United States Army
Chief of Staff

Official:

ROBERT M. JOYCE
Major General, United States Army
The Adjutant General

DISTRIBUTION:
To be distributed in accordance with DA Form 12-25A, Operator's, Organizational, and Direct and General Support Maintenance Requirements for Air Compressor, 25 CFM.

CHANGE NO. 2

HEADQUARTERS
DEPARTMENT OF THE ARMY
WASHINGTON, D.C., 19 November 1982

OPERATOR'S, ORGANIZATIONAL, DIRECT
AND GENERAL SUPPORT MAINTENANCE MANUAL
INCLUDING
REPAIR PARTS AND SPECIAL TOOLS LIST
COMPRESSOR, AIR; TANK-MOUNTED; ELECTRIC
MOTOR DRIVEN; 25 CFM AT 175 PSI
(CHAMPION MODEL NO. HR 10-8M-1 AND HR 10-8M-4)
NSN 4310-00-133-3512 AND NSN 4310-01-020-7773
AND
(C & H MODEL NO. 20-277M)
NSN 4310-01-037-2441

TM 5-4310-349-14, 22 August 1974, is changed as follows:

1. Title is changed as shown above.

2. Remove and insert pages as indicated below.

	Remove pages	Insert pages
Table of Contents	i thru iv	i thru iv
Chapter 1	1-1 thru 1-5	1-1 thru 1-8
Chapter 2	2-1 and 2-2	2-1 and 2-2
Chapter 3	3-3 thru 3-4.1	3-3 thru 3-4.1/3-4.2
	3-5 thru 3-7	3-5 thru 3-7/3-8
Chapter 4	4-3 and 4-4	4-3 thru 4-4.1/4-4.2
	4-5 thru 4-8	4-5 thru 4-8
	4-11 and 4-12	4-11 thru 4-14
Chapter 5	5-3 thru 5-4.1	5-3 thru 5-4.1/5-4.2
	5-5 thru 5-10	5-5 thru 5-10
	5-11 and 5-11.1	5-11 and 5-12
	5-11.2 and 5-12	5-12.1 thru 5-12.4
	5-13 and 5-14	5-13 thru 5-14.1/5-14.2
Appendix A	A-1	A-1/A-2
Appendix C	C-1 thru C-22	C-1 thru C-38
Index	I-1 and I-2	I-1 and I-2

3. New or changed text material is indicated by a vertical bar in the margin. An illustration change is indicated by a miniature pointing hand.

4. Retain these sheets in front of manual for reference purposes.

By Order of the Secretary of the Army:

E. C. MEYER
General, United States Army
Chief of Staff

Official:

ROBERT M. JOYCE
Major General, United States Army
The Adjutant General

DISTRIBUTION:
To be distributed in accordance with DA Form 12-25A, Operator's maintenance requirements for Air Compressors, 25 CFM.

CHANGE NO. 1

**HEADQUARTERS
DEPARTMENT OF THE ARMY
WASHINGTON, D.C., *10 May 1977***

Operator, Organizational. Direct and

General Support Maintenance Manual Including

Repair Parts And Special Tools List

Compressor, Air; Tank Mounted; Electric

Motor Driven: 25 CFM at 175 PSI

(Champion Model No. HR10-8M-1 and HR10-8M-4)

NSN 4310-00-133-3512 and NSN 4310-01-020-7773

TM 5-4310-349-14, August 1974, is changed as follows:
1. Remove old pages and insert new pages as indicated below.
2. New or changed material is indicated by a vertical bar in the margin of the page.
3. Added or revised illustrations are indicated by a vertical bar adjacent to the illustration identification number.

Remove Pages	Insert Pages	Remove Pages	Insert Pages
iii and iv	iii and iv	5-11 and 5-12	5-11 and 5-11.1
1-1 and 1-2	1-1 and 1-2		5-11.2 and 5-12
1-3 and 1-4	1-3 and 1-4	C-3 and C-4	C-3 and C-4
	3-4.1	C-5 and C-6	C-5 and C-6
3-5 and 3-6	3-5 and 3-6	C-7 and C-8	C-7 and C-8
5-3 and 5-4	5-3 and 5-4	C-9 and C-10	C-9 and C-10
	5-4.1	C-11 and C-12	C-11 and C-12
5-5 and 5-6	5-5 and 5-6		C-14.1 and C-14.2
5-7 and 5-8	5-7 and 5-8		C-18.1 and C-18.2
5-9 and 5-10	5-9 and 5-10	C-21 and C-22	C-21 and C-22

File this change sheet in front of the publication for reference purposes.

By Order of the Secretary of the Army:

BERNARD W. ROGERS
General, United States Army
Chief of Staff

Official:

PAUL T. SMITH
Major General, United States Army
The Adjutant General

Distribution:
To be distributed in accordance with DA Form 12-25A, Operator's maintenance requirements for Air Compressors, 25CFM.

TECHNICAL MANUAL
No. 5-4310-349-14

HEADQUARTERS
DEPARTMENT OF THE ARMY
WASHINGTON, D.C., *22August 1974*

OPERATOR'S, ORGANIZATIONAL, DIRECT AND GENERAL SUPPORT MAINTENANCE MANUAL INCLUDING REPAIR PARTS AND SPECIAL TOOLS LIST

COMPRESSOR, AIR; TANK-MOUNTED; ELECTRIC MOTOR DRIVEN; 25 CFM AT 175 PSI (CHAMPION MODEL NO. HR 10-8M-1 AND HR 10-8M-4) NSN 4310-00-133-3512 AND NSN 4310-01-020-7773 AND (C & H MODEL NO. 20-277M) NSN 4310-01-037-2441

Current as of 21 June 1974

REPORTING ERRORS AND RECOMMENDING IMPROVEMENTS

You can help improve this manual. If you find any mistake or if you know of a way to improve the procedures, please let us know. Mail your letter or DA Form 2028 (Recommended Changes to Publications and Blank Forms) direct to: Commander, US Army Troop Support and Aviation Materiel Readiness Command, ATTN: DRSTS-MPSD, 4300 Goodfellow Boulevard, Saint Louis, MO 63120. A reply will be furnished directly to you.

			Paragraph	Page
CHAPTER	1.	INTRODUCTION		
Section	I.	General		
		Scope	1-1	1-1
		Maintenance Forms and Records	1-2	1-1
		Reporting Errors	1-3	1-1
		Equipment Serviceability Criteria (ESC)	1-4	1-1
		Destruction of Army Material to Prevent Enemy Use	1-5	1-1
		Administrative Storage	1-6	1-1
	II.	DESCRIPTION AND DATA		
		Description	1-7	1-1
		Identification	1-8	1-1
		Difference in Models	1-9	1-6
		Tabulated Data	1-10	1-6
CHAPTER	2.	OPERATING INSTRUCTIONS		
Section	I.	OPERATING PROCEDURES		
		Controls and Instruments	2-1	2-1
		Operation Under Usual Conditions	2-2	2-1
	II.	OPERATION OF AUXILIARY EQUIPMENT		
	III.	OPERATION UNDER UNUSUAL CONDITIONS		
		Operation in Extreme Cold (Below 0° F)	2-3	2-2
		Operation in Extreme Heat	2-4	2-2
		Operation in Dusty or Sandy Areas	2-5	2-2
		Operation in Salt Water or High Humidity Areas	2-6	2-2

			Paragraph	Page
CHAPTER	3.	OPERATION/CREW MAINTENANCE INSTRUCTIONS		
Section	I.	LUBRICATION INSTRUCTION		
		General Instructions	3-1	3-1
		Lubrication Instructions	3-2	3-1
	II.	PREVENTIVE MAINTENANCE CHECKS AND SERVICES		
	III.	TROUBLESHOOTING		
		General	3-3	3-2
		Troubleshooting	3-4	3-2
SECTION	IV.	MAINTENANCE PROCEDURES		
		Belt Guard Assembly	3-5	3-3
		Motor	3-6	3-5
		V-Belts (Set of 3)	3-7	3-5
		Air Compressor	3-8	3-5
		Air Intake Mufflers	3-9	3-5
		Air Receiver	3-10	3-5
CHAPTER	4.	ORGANIZATIONAL MAINTENANCE INSTRUCTIONS		
Section	I.	SERVICE UPON RECEIPT OF MATERIEL		
		Unloading the Air Compressor	4-1	4-1
		Unpacking the Air Compressor	4-2	4-1
		Inspection and Servicing Equipment	4-3	4-1
		Installation of Separately Packed Components	4-4	4-1
		Installation or Set-up Instructions	4-5	4-1
	II.	REPAIR PARTS, SPECIAL TOOLS, AND EQUIPMENT		
		Special Tools and Equipment	4-6	4-5
		Maintenance Repair Parts	4-7	4-5
	III.	LUBRICATION INSTRUCTIONS		
	V.	TROUBLESHOOTING		
		General	4-8	4-8
		Troubleshooting	4-9	4-6
	VI.	MAINTENANCE OF THE ELECTRIC MOTOR AND COMPRESSOR		
		General	4-10	4-6
		Electric Motor	4-11	4-6
		Compressor Assembly	4-12	4-7
		V-Belts	4-13	4-7
		Release Valve Assembly Replacement	4-14	4-7
		Air Intake Mufflers	4-15	4-7
		Air Receiver Repair	4-16	4-7
CHAPTER	5.	DIRECT AND GENERAL SUPPORT MAINTENANCE INSTRUCTIONS		
Section	I.	REPAIR PARTS SPECIAL TOOLS AND EQUIPMENT		
		Special Tools and Equipment	5-1	5-1
		Maintenance Repair Parts	5-2	5-1
	II.	TROUBLESHOOTING		
		General	5-3	5-1
	III.	REPAIR AND OVERHAUL INSTRUCTIONS AIR COMPRESSOR ASSEMBLY AND ELECTRIC MOTOR		
		Pistons, Piston Rings, Connecting Rods, and Cylinder Block	5-4	5-4
		Crankshaft and Crankcase	5-5	5-5
		Electric Motor	5-6	5-5
		Magnetic Starter	5-7	5-8
		Pressure Switch	5-8	5-8
		Air Pressure Adjustment	5-9	5-8

					Page	Illus Figure
APPENDIX	A.	REFERENCES			A-1	
	B.	MAINTENANCE ALLOCATION CHART			B-1	
Section	I.	INTRODUCTION			B-1	
	II.	MAINTENANCE ALLOCATION CHART			B-3	
APPENDIX	C.	OPERATOR'S ORGANIZATIONAL, DIRECT SUPPORT AND GENERAL SUPPORT MAINTENANCE REPAIR PARTS AND SPECIAL TOOLS LIST				
Section	I.	INTRODUCTION			C-1	
	II.	PRESCRIBED LOAD ALLOWANCE LIST (Not Applicable)				
	III.	REPAIR PARTS LIST				
		Group	01	Belt Guard Assembly		
				Drive Belt Guard Assembly, (Champion models HR10-8M-1 and HR10-8M-4)	C-6	C-1
				Drive Belt Guard Assembly (C&H model 20-277M)	C-8	C-2
		Group	02	Electric Motor and Related Parts		
				Pulley and Electric Motor (Champion models HR10-8M-1 and HR10-8M-4)	C-10	C-3
				Pulley and Electric Motor (C&H model 20-277M)	C-12	C-4
		Group	03	Air Compressor Assembly		
				Pressure Switch Assembly	C-14	C-5
				Starter Assembly, exploded view (Champion models HR10-8M-1 and HR10-8M-4)	C-16	C-6
				Starter (C&H model 20-277M)	C-18	C-7
				Air Compressor assembly, cylinders, manifolds, and related components, exploded view	C-20	C-8
				Crankcase, crankshaft, pistons, connecting rods and related assemblies, exploded view	C-24	C-9
		Group	04	Air Receiver Tank and Related Parts		
				Air Receiver tank and related parts (Champion models HR10- 8M-1 and HR10-8M-4)	C-28	C-10
				Air Receiver tank and related parts (C&H model 20277M)	C-30	C-11
				Inflator Gauge and Hose	C-32	C-12
	IV.	SPECIAL TOOLS LIST (Not applicable)				
	V.	NATIONAL STOCK NUMBER AND PART NUMBER INDEX			C-35	
INDEX					I-1	

LIST OF ILLUSTRATIONS

Figure No.	Title	Page
1-1	Air compressor, model HR10-8M-1 or HR10-8M-4, right side view	1-2
1-1.1	Air compressor, model 20-277M, right side view	1-3
1-2	Air compressor, model HR10-8M-1 or HR10-8M-4, left side view	1-4
1-2.1	Air compressor, model 20-277M, left side view	1-5
1-3	Wiring diagram, model HR10-8M-1 or HR1 0-8M-4	1-7
1-3.1	Wiring diagram, model 20-277M	1-8
3-1	Belt guard assembly, model HR10-8M-1 or HR10-8M-4, exploded view	3-4
3-1.1	Belt guard assembly, model 20-277M, exploded view	3-4.1
3-2	Electric motor and compressor cleaning, V-belt removal and installation	3-6
3-3	Air intake mufflers, exploded view	3-7
4-1	Shipping tie-downs	4-1
4-2	Air hose assembly, removal points	4-2
4-3	Magnetic starter (cover removed)	4-4
4-3.1	Magnetic starter (cover removed), model 20-277M	4-4.1
4-4	Electric motor and compressor assembly, removal and installation.	4-8
4-5	Compressor components and V-belt drive	4-9
4-6	Release valve assembly, exploded view	4-10
4-7	Air receiver, lines and fittings, model HR1 0-8M-1 or HR1 0-8M-4	4-11
4-7.1	Air receiver, lines and fittings, model 20-277M	4-12
4-8	Check valve assembly, exploded view, model HR1 0-8M-1 or HR1 0-8M-4	4-13
4-8.1	Check valve assembly, model 20-277M	4-14
5-1	Air compressor assembly, cylinders, manifolds and related components, exploded view	5-6
5-2	Compressor valve assemblies, disassembly and reassembly	5-9
5-3	Crankcase, crankshaft, pistons, connecting rods and related assemblies, exploded view (HR10-8M-1 and 20-277M)	5-10
5-3.1	Crankcase, crankshaft, pistons, connecting rods and related components, exploded view (model HR10-8M4)	5-12
5-4	Electric motor assembly (model HR10 -8M-1)	5-12.1
5-4.1	Electric motor assembly (model HR10 -8M-4)	5-12.2
5-4.2	C&H electric motor assembly	5-12.3
5-5	Champion pneumatic magnetic starter removal (shown with cover removed)	5-12.4
5-5.1	C&H magnetic starter removal (shown with cover removed)	5-13
5-6	Champion Pneumatic starter assembly, exploded view	5-14
5-6.1	C&H starter assembly, exploded view	5-14.1
5-7	Pressure switch assembly removal (shown with cover removed)	5-15
5-8	Pressure switch assembly, removal and installation	5-16
5-9	Pressure switch adjusting and differential screws	5-16
C-1	Drive belt guard assembly, exploded view (Champion models HR10-8M-1 and HR10-8M-4)	C-6
C-2	Drive belt guard assembly, exploded view (C&H model 20-277M)	C-8
C-3	Pulley and electric motor (Champion models HR1 0-8M-1 and HR1 0-8M-4)	C-10
C-4	Pulley and electric motor (C&H mode l 20-277M)	C-12
C-5	Pressure switch, assembly	C-14
C-6	Starter assembly, exploded view (Champion models HR10-8M-1 or HR10-8M-4)	C-16
C-7	Starter (C&H model 20-277M)	C-18
C-8	Air compressor assembly, cylinders, manifolds, and related components, exploded view	C-20
C-9	Crankcase, crankshaft, pistons, connecting rods and related assemblies, exploded view	C-24
C-10	Air receiver tank and related parts (Champion models HR10-8M-1 and HR10-8M-4)	C-28
C-11	Air receiver tank and related parts (C&H model 20-277M)	C-30
C-12	Inflator gauge and hose	C-32

LIST OF TABLES

Table No.	*Title*	*Page*
3-1	Operator/crew preventive maintenance checks and services	3-1
3-2	Operator/crew preventive maintenance checks and services	3-1
3-3	Troubleshooting	3-3
4-1	Organizational preventive maintenance checks and services	4-5
4-2	Troubleshooting	4-6
5-1	Troubleshooting	5-1
5-2	Compressor repair and replacement standards	5-3

CHAPTER 1

INTRODUCTION

Section I. GENERAL

1-1. Scope

a. These instructions are published for the use of the personnel to whom the air compressors, Champion Pneumatic Models HR10-8M-1, HR10-8M-4, and C&H Model 20-277M are issued. They provide information on the operation and maintenance of the air compressor at the organizational, direct and general support levels.

b. Appendix A contains a list of publications applicable to this manual. Appendix B contains the Maintenance Allocation Chart. Appendix C contains the organizational, direct and general support maintenance repair parts listings.

1-2. Maintenance Forms and Records

Maintenance forms and records that you are required to use are explained in TM 38-750.

1-3. Reporting of Errors

See Table of Contents.

1-4. Equipment Serviceability Criteria (ESC)

This equipment is not covered by an ESC.

1-5. Destruction of Army Materiel to Prevent Enemy Use

Refer to TM 750-244-3 covering destruction of Army materiel to prevent use.

1-6. Administrative Storage

Refer to TM 740-90-1 covering administrative storage.

Section II. DESCRIPTION AND DATA

1-7. Description

a. The HR10-8M-1, HR10-8M-4 (fig. 1-1 and 1-2); and the 20-277M (fig. 1-1.1 and 1-2.1) are four cylinder, reciprocating type air compressors capable of delivering 25 cubic feet of air per minute. The compressor assembly and associated electric motor are mounted on a frame which is welded to the air receiver on an 80-gallon steel tank. An electric motor drives the compressor assembly by means of a matched pair of V-belts.

b. The pressure switch assembly determines cut-in and cut-out pressure for the compressor' assembly. The switch can be adjusted for cut-out pressure over the range of 140- to 175-psi. The switch can also be adjusted for a 35 psi to 65 psi differential between cut-in and cut-out pressure. The safety valve assembly releases when air receiver pressure exceeds 200 psi.

1-8. Identification

a. Identification plate, mounted on the top of the air receiver platform of the air compressor, specifies the name of the manufacturer, make, model number, date of manufacture, serial number, and federal stock number, or national stock number.

b. The compressor identification plate, mounted on the governor housing, specifies the name of the manufacturer and the model and serial numbers of the compressor.

c. The electric motor identification plate, mounted on the electric motor housing, specifies the name of the manufacturer, model number, and data.

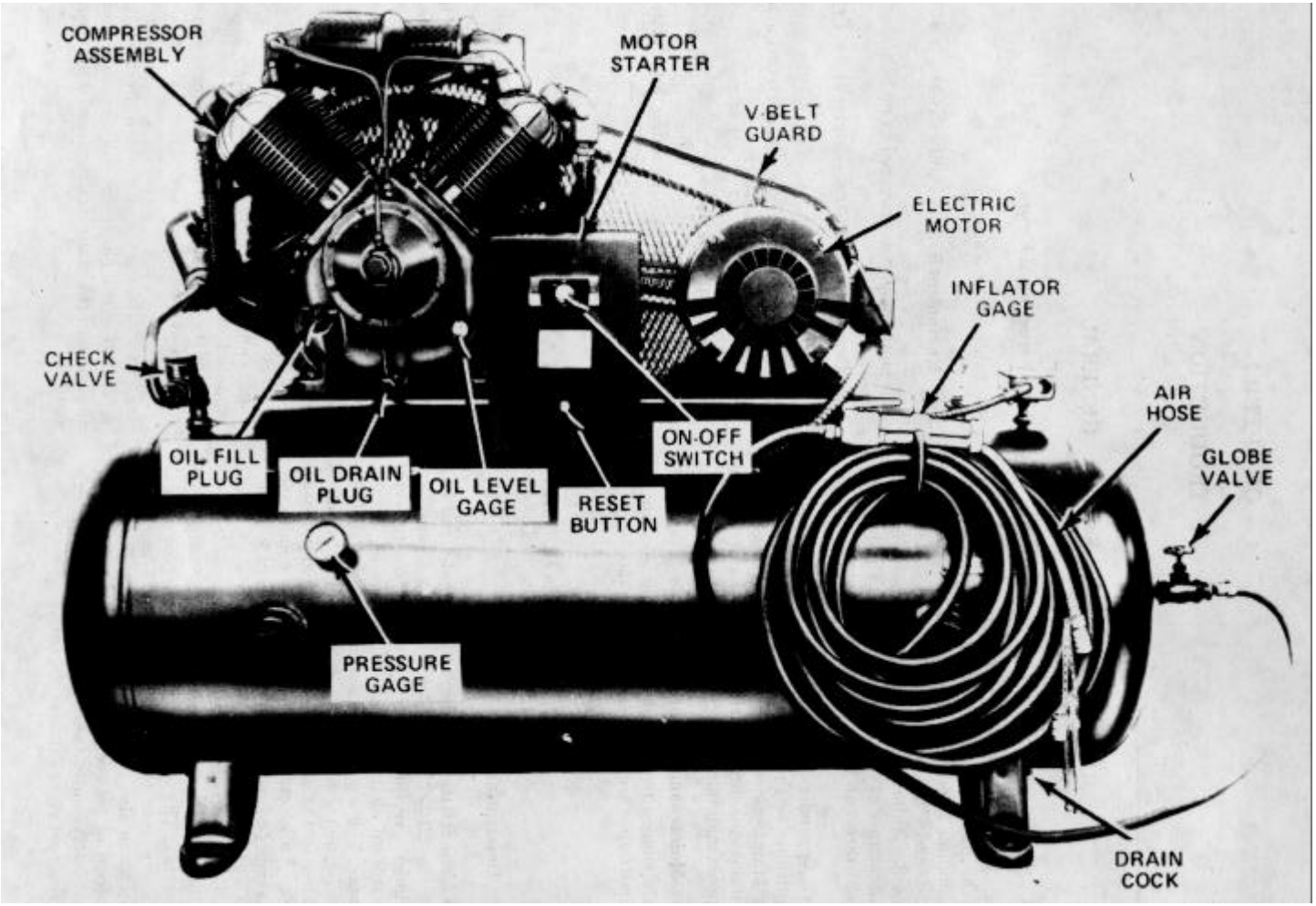

ME 4310-133-3512-14/1 1

Figure 1-1. HR10-8M-1 or HR10-8M-4, Air compressor, right side view.

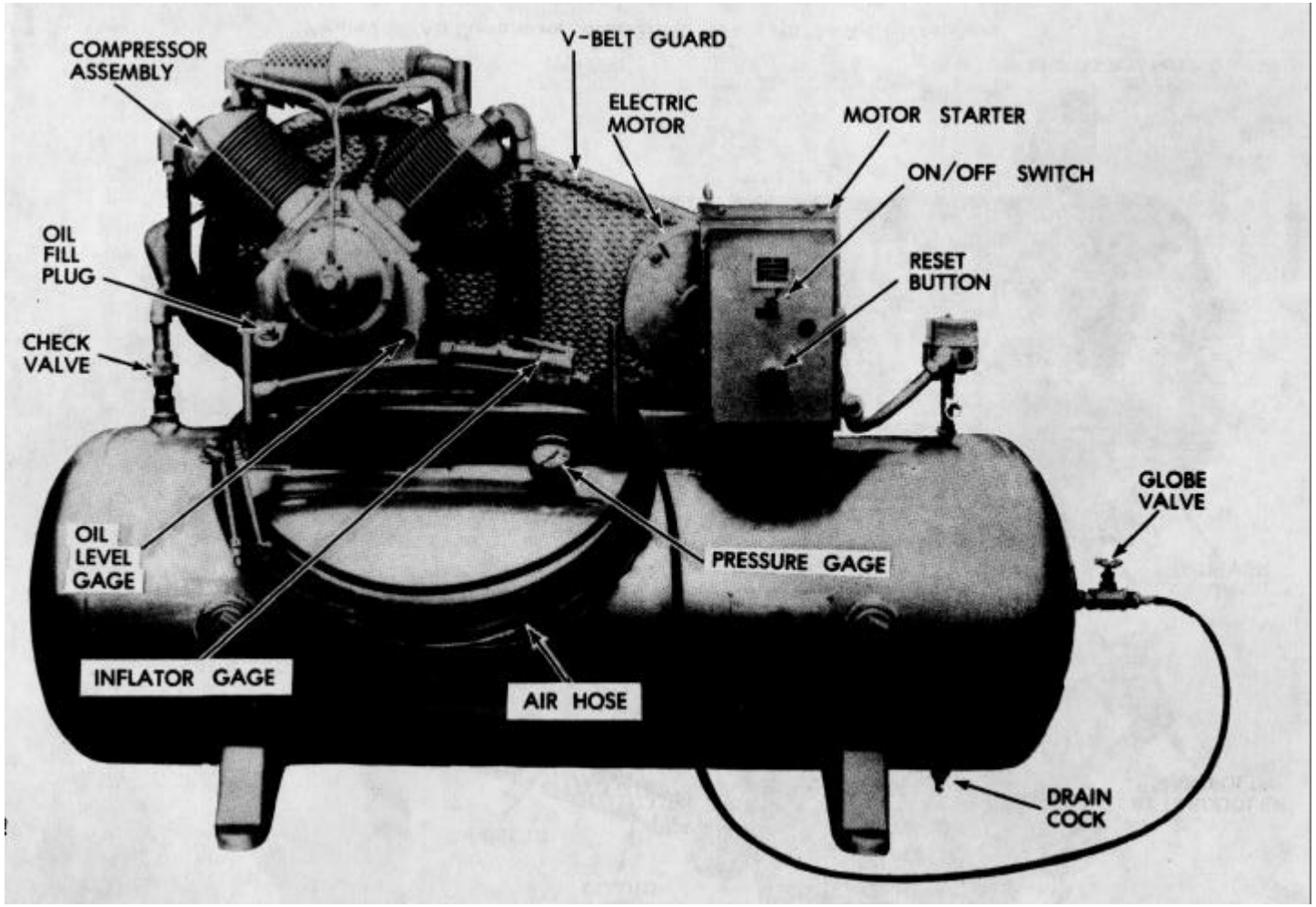

ME 4310-133-4512-14/1-1.1

Figure 1-1.1. Air compressor, model 20-277M, right side view

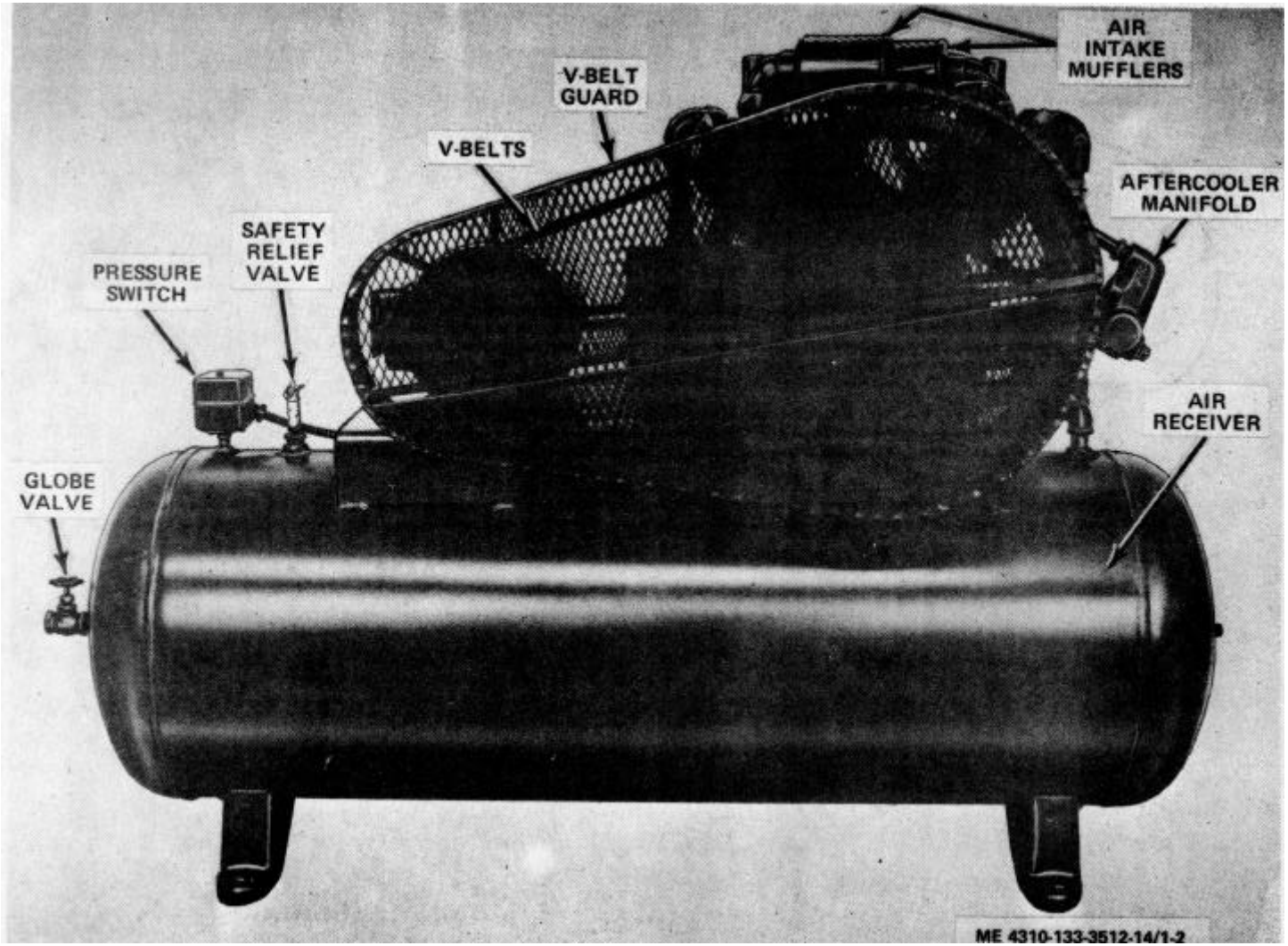

Figure 1-2. Air Compressor, Model HR10-8M-1 or HR10-8M-4, left side view

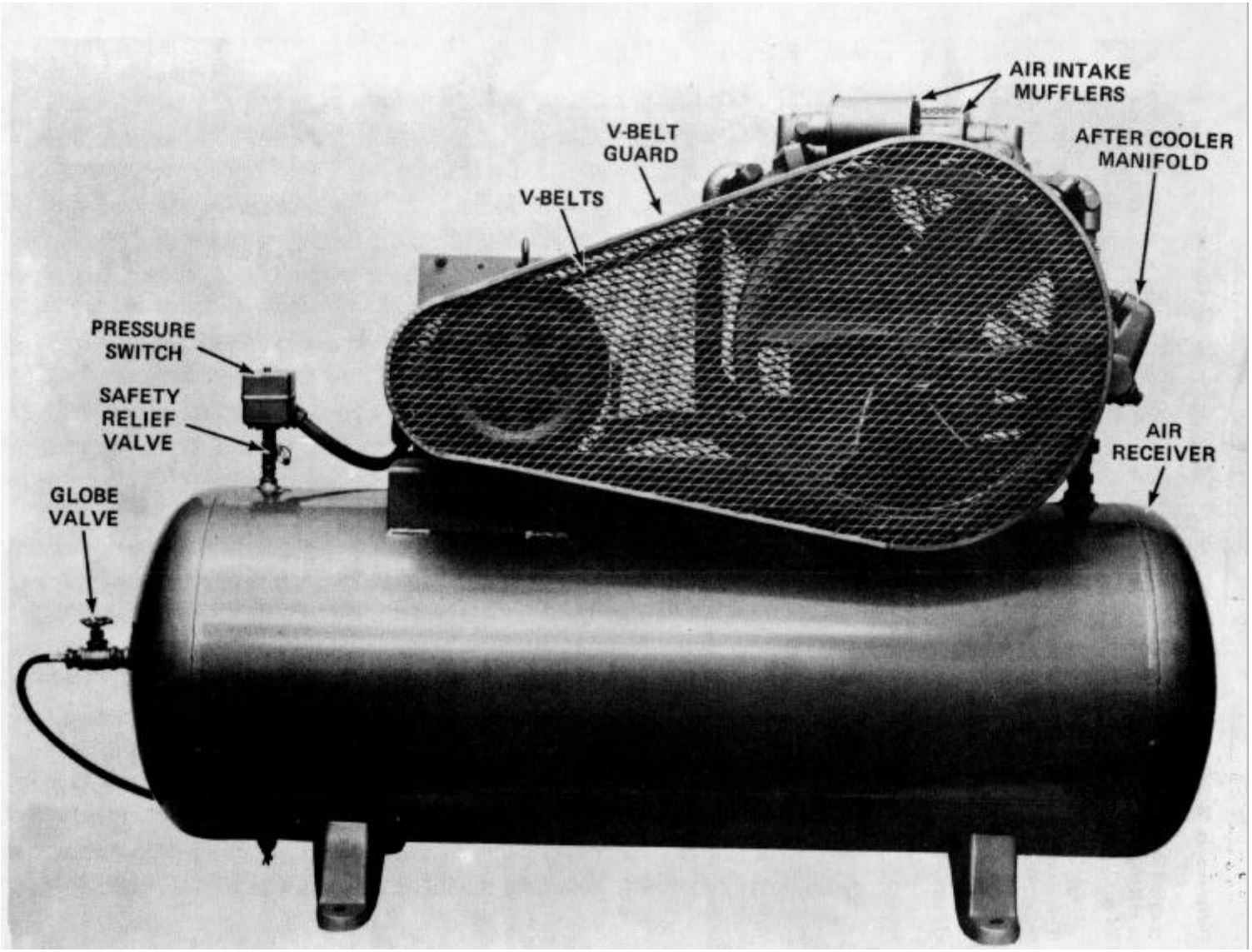

ME 4310-133-3512-14/1-2.1

Figure 1-2.1. Air compressor, model 20-277M, left side view

1-9. Difference in Models

This manual covers both Champion Pneumatic Models HR10-8M-1, HR10-8M-4, and C&H Model 20-277M Air Compressors.

NOTE

Where no model number is shown, the information applies to all three models.

1-10. Tabulated Data

a. General.

Manufacturer..... Champion Pneumatic Machinery Co.
Models .....HR10-8M-1 and HR10-8M-4
Manufacturer..... C&H Distributors
Model.....20-277M
Output..... 25 cfm at 175 psi

b. Electric Motor

Manufacturers (HR10-8M-1 and HR10-8M-4) .....Doerr
(20-277M) .....Leeson
Models (HR10-8M-1 and HR10-8M-4) 91560
(20-277M) N215T17DB1B
Type (HR10-8M-1 and HR10-8M-4).....P
(20-277M) .....TD
Hertz 60
Phase..... 3
Horsepower..... 10
Volts (HR10-8M-1 and HR10-8M-4).....220/440
(20-277M) 230/460
Duty .....Continuous
Rated Speed 1740
Frame (HR10-8M-1 and HR10-8M-4) 215T
(20-277M) H215T
Temperature rise (HR10-8M-1 and HR10-8M-4).. 40°C
(20-277M) .....40°C-72°F
Amperes:
At 220 volts (HR10-8M-1 and HR10-8M-4).. 28.2
At 440 volts (HR10-8M-1 and HR10-8M-4).. 14.1
At 230 volts (20-277M) 27
At 460 volts (20-277M) 13.5

c. Compressor.

Manufacturer..... Champion Pneumatic Machinery Co.
Model..... R-30A
Type..... 2-stage vertical

d. Compressor Air Cleaner.

Manufacturer..... Champion Pneumatic Machinery Co.
Type.....Dry

e. Magnetic Starter Switch Assembly.

Manufacturer (HR10-8M-1 and
HR10-8M-4) .....ITE Imperial Corp.
(20-277M) .....Furnas Electric
Style (HR10-8M-1 and HR10-8M-4).....MC-DA-645
(20-277M) ..... 14 EF 32AC

f. Pressure Switch.

Manufacturer.....Furnas Electric
Type.....69HA1
Maximum pressure.....250 psi
Minimum differential .....80 psi

g. Capacities.

Compressor crankcase..... 4 qt. (quart)
Air receiver tank.....4.0 cu ft

h. Air Receiver.

Manufacturer.....Kargard
Working pressure .....200 psi

i. AirHose.

Size .....5/16 in. x 50 ft

j. Dimensions and Weight.

Shipping weight.....775 lbs
Shipping cube ..... 60 ft
Length.....64 in
Height .....46 in
Width .....23 in
Net Weight.....650 lbs

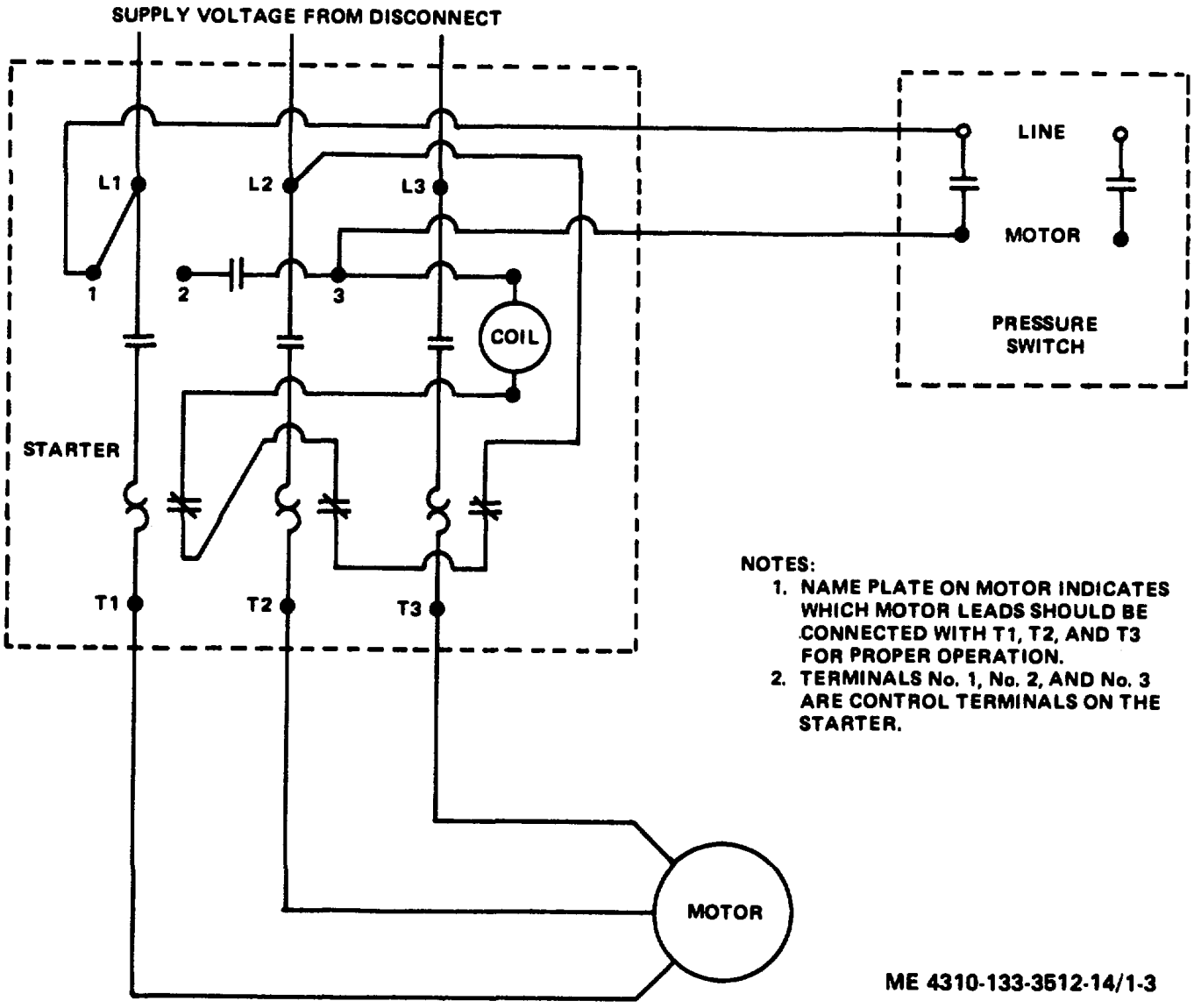

Figure 1-3. Wiring diagram, model HR10-8M-1 or HR10-8M-4

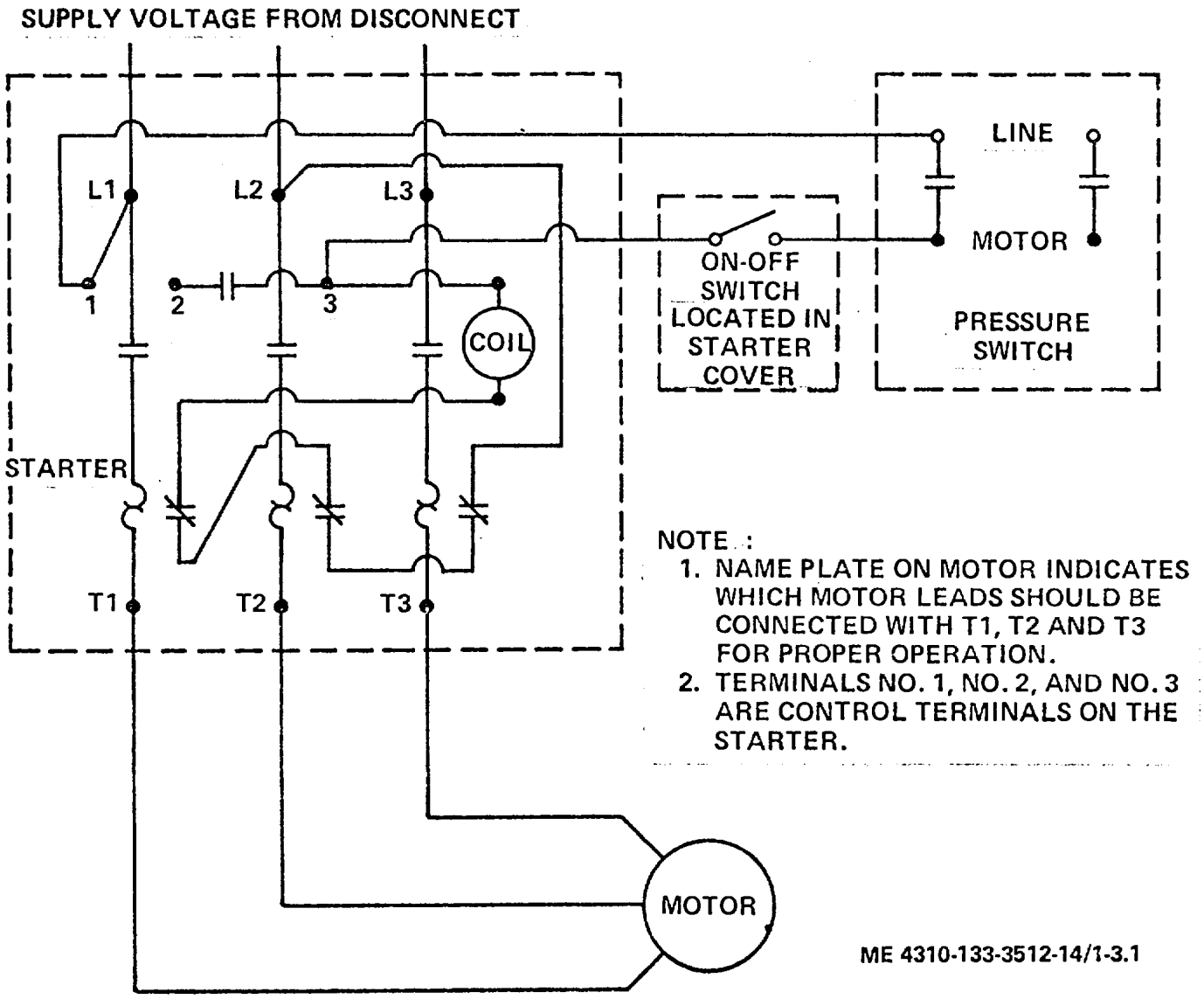

Figure 1-3.1. Wiring diagram, model 20-277M

CHAPTER 2

OPERATING INSTRUCTIONS

WARNING
If equipment fails to operate, refer to troubleshooting procedures in Chapter 3.

Section I. OPERATING PROCEDURES

2-1. Controls and Instruments

a. General. This section describes, locates, illustrates, and furnishes the operator sufficient information pertaining to the various controls and instruments provided for the proper operation of the air compressor.

b. Globe Valve. The globe valve (fig. 1-1 or 1-1.1) mounted on the end of the air receiver tank is a manually operated valve that opens the flow of compressed air to the air hose.

c. Drain Cock. The drain cock (fig. 1-1) mounted on the underside of the air receiver tank is a manually operated valve used to drain com- pressed air and condensation from the air receiver tank. Receiver should be drained daily when the air compressor is in use.

d. Oil Level Gage. The oil level gage mounted in the compressor crankcase (fig. 1-1) is a direct-reading, glass-covered gage used to check the level of the oil in the compressor crankcase.

e. Air Receiver Tank Pressure Gage. The air receiver tank pressure gage (fig. 1-1 or 1-1.1) mounted on the side of the air receiver tank, is a needle-indicating, direct-reading, pressure operated gage graduated from 0- to 300-psi in increments of 5 psi. The gage indicates the air pressure in the air receiver tank. Normal operating pressure is 140- to 175-psi.

f. Safety Relief Valve. The safety relief valve (fig. 1-2 or 1-2.1) mounted on top of the air receiver tank at the motor end. It is preset valve that is actuated when the air receiver tank receives a pressure of 200 or more psi. This valve can be tripped manually by pulling up on the ring. It is manually tripped to release pressure in the air receiver tank and to test the valve.

g. On-off Starter Switch. The on-off starter switch (fig. 1-1 or 1-1.1) is a manually actuated switch located top center of the magnetic switch box cover. In OFF position the compressor motor will not operate. When the selector is turned to ON position the compressor will operate until pressure in air receiver tank reaches 175 psi, then the pressure switch automatically shuts off the motor. The compressor will recycle again automatically when pressure drops below 140 psi, and continue to cycle automatically in this ON position.

h. Reset Button. The reset button (fig. 1-1 or 1-1.1) mounted on the cover of the magnetic starter, below the ON-OFF switch, is a manually operated button, which when pushed, resets the thermal relay in the magnetic starter.

2-2. Operation Under Usual Conditions

a. General. The instructions in this section are published for the operation of the air compressor. It is essential that the operator know how to perform every operation of which the air compressor is capable. This section gives instructions on star- ting and stopping, and air-pressure adjustment.

b. Starting.

(1) Inspect the electric motor to make sure it is properly wired from incoming power source and that power is on.

(2) Turn ON-OFF switch (fig. 1-1 or 1-1.1) to "ON" position.

NOTE
Should the compressor fail to start, depress the reset button.

c. Stopping.

(1) Close globe valve (fig. 1-1 or 1-1.1).

(2) Turn ON-OFF switch (fig. 1-1 or 1-1.1) to "OFF" position.

(3) Open the drain cock (fig. 1-1 or 1-1.1) in the bottom of air receiver tank to release the compressed air and condensate from the air receiver tank.

(4) Close drain cock.

Section II. OPERATION OF AUXILIARY EQUIPMENT

There is no auxiliary equipment with this end item.

Section III. OPERATION UNDER UNUSUAL CONDITIONS

2-3. Operation in Extreme Cold (Below 0°F.)

a. Locate the air compressor in a shed or building whenever possible. If the unit is operated outdoors, protect it from prevailing winds and cover it with a tarpaulin when not in use.

b. Lubricate the air compressor according to the Lubrication Order.

c. Avoid excessive handling, kinking, and sharp bending of the air hose, which will become brittle at low temperatures.

d. Clean and tighten all wiring connections. Make sure there are no short circuits. As wiring insulation tends to become brittle at low temperatures, avoid excessive handling and sharp bending of wires. Protect the electric motor and magnetic starter from snow and ice.

2-4. Operation in Extreme Heat

a. Locate the air compressor in an operating area that is well ventilated or provide intake and exhaust fans to ventilate enclosed areas.

b. Lubricate the compressor in accordance with the Lubrication Order.

c. Check the drive-belt tension frequently. Improper drive-belt tension often results in over-heating.

d. Keep the electric motor, compressor, and air receiver tank clean.

2-5. Operation in Dusty or Sandy Areas

a. Lubricate the air compressor in accordance with the Lubrication Order, making sure that all lubrication points are free from dirt and sand before applying lubricant. Keep all lubricant containers clean and tightly closed. Do not lubricate excessively as dirt and sand will adhere to excess lubricant and may work into moving parts. Wipe off all lubrication points after lubricating.

b. Keep the motor, magnetic starter, compressor, and air receiver tank free from accumulations of dirt and sand. Use compressed air for cleaning or a stiff brush where deposits are oily, gummy, or heavy.

c. Protect the air compressor from dust with screens, shelters built from tarpaulins, or other dustproof material. Keep the unit covered when not in use.

d. Clean the compressor air cleaner more often than when operating under normal conditions.

2-6. Operation in Salt Water or High Humidity Areas

a. Protect the unit with a shelter of some kind. Keep the sides of the shelter open for ventilation.

b. Wipe the unit dry at frequent intervals, with particular emphasis on the electric motor and magnetic starter. If the unit becomes encrusted with salt, wash it with fresh water, taking care not to damage the electric system with water.

c. Make sure all surfaces requiring lubrication are clean and dry before applying lubricant. Lubricate the unit in accordance with the Lubrication Order.

d. Coat exposed polished or machined metal surfaces with a suitable rustproof material after first removing any accumulations of rust.

e. Open the drain cock frequently to blow condensate from the air receiver tank.

CHAPTER 3

OPERATOR/CREW MAINTENANCE INSTRUCTIONS

Section I. LUBRICATION INSTRUCTIONS

3-1. General Instructions

a. The motor issued with this air compressor has been factory lubricated for its lifetime.

b. Check compressor crankcase oil level frequently, since excessive oil consumption is the principal method of determining the compressor's need for repairs.

3-2. Lubrication instructions

a. *General.* Keep all lubricants in closed containers and store in a clean dry place away from external heat. Allow no dust, dirt, or other foreign material to mix with equipment. Keep all lubrication equipment clean.

b. *Cleaning.* Wipe lubricating points free of dirt. Clean lubrication points after lubricating to prevent accumulation of foreign matter.

c. *Service.* Service lubrication points at proper intervals as shown in LO 54810-849-12.

Section II. PREVENTIVE MAINTENANCE CHECKS AND SERVICES

Because all required inspections must be made daily, or more frequently, operator/crew personnel will refer to tables 3-1 and 3-2, for procedures to be followed during their periodic inspection.

Table 3-1. Operator/Crew Preventive Maintenance Checks and Services

B-Before Operation
Time Required:0.1

D-During Operation

A-After Operation
Time Required:

Interval			Item to be Inspected Procedure	Work Time (man-hour)
B	**D**	**A**		
1			**NOTE** **Visually inspect for evidence of lubricant leak concurrently with daily service checks** INSPECT OIL LEVEL IN COMPRESSOR FRAME Remove fill plug in crankcase (fig. ,1-1), (LO 5-4310-49-12)	
		1	OBSERVE PRESSURE GAGE OPERATION Watch pressure gage reading when the motor starts and stops. Motor should start when gage reads 140 psi. Motor should stop when gage reads 175 psi. When gage operation is improper, notify organizational maintenance.	

Table 3-2. Operator/Crew Preventive Maintenance Checks and Services

D - Daily
Time required: 0.2

W - Weekly
Time required: 0.4

Interval and Sequence No.		Item to be Inspected procedure	Work time (M/H)
D	**W**		
	1	CLEANLINESS OF EQUIPMENT Inspect the exterior of the air compressor. The belt guard, motor, V-belts, compressor, and the receiver should be clean and free of dust, dirt or oil.	

D - Daily
Time required: 0.2

W - Weekly
Time required: 0.4

Interval and Sequence No. D	Interval and Sequence No. W	Item to be Inspected procedure	Work time (M/H)
		WARNING **Compressed air and electricity are dangerous. Before performing any maintenance, or adjustment, be sure electrical power has been shut off and lockout. Never depend on the ON-OFF switch on the motor starter. Turn power off at the source, and avoid injury should the unit start running.** **CAUTION** **Always use cleaning solvent Fed Spec P-D-680 to wipe away oil or grease from the compressor frame, intercooler, or aftercooler tubes.** **NOTE** **Always wipe away oil and grease first, in order that power may be turned on and compressor air used to remove dust from cylinder cooling fins, and cooling tubes. Use cleaning solvent Fed. Spec. P-D-680 to remove excess oil or grease from the compressor, receiver, or belt guard assembly. Then use blasts of air to remove dust and dirt from the assembly.**	
1		CHECK THE FRAME OIL LEVEL AND DRAIN CONDENSATE FROM AIR RECEIVER Inspect oil level. Fill to the overflow point if necessary. Open draincock at bottom of air receiver (fig. 1-1) long enough to drain condensate, then close the draincock.	0.1
	2	INSPECT HOSES AND FITTINGS Inspect for leaks or loose connections. Notify organizational maintenance of defective fittings.	0.1
2		SWITCHES AND CONTROLS Check for loose wires on switches, motor starter, or motor. Notify organizational maintenance of defects.	
	3	DRIVE BELTS Check for wear and proper tension of drive belts (para 3-7c)	0.1
	4	SAFETY RELIEF VALVE Check for proper operation by lifting lever (fig. 1-2) until air escapes.	0.1
	5	AIR INTAKE MUFFLER Clean (para 3-9)	0.1

Section III. TROUBLESHOOTING

3-3. General

a. This section contains troubleshooting information for locating and correcting most of the trouble that may develop in the air compressor. Each malfunction for an individual component is followed by a list of test or inspections which will help you to determine probable causes and corrective actions to take. You should perform the test/inspections and corrective actions in the order listed.

b. This manual cannot list all malfunctions that may occur, nor all tests or inspections and corrective actions. If a malfunction is not listed or is not corrected by listed corrective action, notify your Supervisor.

3-4. Troubleshooting

Refer to Table 3-3 below for malfunctions, test or inspection, and corrective actions.

Table 3-3. Troubleshooting

MALFUNCTION
TEST OR INSPECTION
CORRECTIVE ACTION

NOTE
Before you use this Table, be sure you have performed all applicable operating checks.

1. COMPRESSOR PUMPING OIL.
   Step 1. Check for a clogged intake filter.
   Service the intake filter (para 3-9).
   Step 2. Check for low oil level.
   Fill with proper oil. (LO 54310349-12).

2. KNOCKS OR RATTLES.
   Step 1. Check for loose belt pulley or motor with excessive end play in shaft.
   Notify organizational maintenance.
   Step 2. Check for leaking valves or restricted air passage.
   Notify organizational maintenance.

3. AIR DELIVERY DROPPING.
   Step 1. Check for clogged inlet filter.
   Service the intake filter (para 3-9).
   Step 2. Check for air leaks in piping.
   Make a solution of soapy water and apply at fittings. If leak is found, notify organizational maintenance.

4. MOTOR OVERLOAD RELAY TRIPS.
   Step 1. Check compressor for proper weight oil.
   Service with proper oil (para 3-2).
   Step 2. Check V-belts for too light adjustment.
   Adjust V-belts (para 3-7).

5. EXCESSIVE STARTING AND STOPPING.
   Step 1. Check the receiver drain.
   Drain the receiver (para 3-10).
   Step 2. Check for air leaks in piping.
   Repeat Step 2 of Paragraph 3 above
   Step 3. Pressure switch not set properly.
   Notify organizational maintenance.

6. COMPRESSOR RUNNING HOT.
   Step 1. Check for blockage of air to fan wheel.
   Move any foreign object that is blocking air passage. Use compressed air to remove any accumulation of dust or dirt.
   Step 2. Check for low oil level.
   Fill to proper level (LO 5-4310-349-12).
   Step 3. Check for clogged inlet filter.
   Service the inlet filter (para 3-9).

7. COMPRESSOR RUNNING SLOW;
   Step 1. Check motor terminal board for loose connection.
   Tighten loose terminals. Clean the terminal board with blast of air.

Section IV. MAINTENANCE PROCEDURES

3-5. Belt Guard Assembly

a. General. The belt guard assembly (fig. 3-1 or 3-1.1) is a two piece guard that totally encloses the drive belts and pulleys. The mesh screening covers the flywheel fan used to circulate air for cooling the compressor unit.

b. Inspection. Inspect for damage to screen, bends, dents, or other damage to belt guard panels. Check for accumulation of grease soaked dust, dirt, or other foreign matter. Remove dirty guard for cleaning. Remove a damaged guard for straightening or replacement.

c. Removal. Turn off power at source and lock it out. Refer to figure 3-1 or 3-1.1 and remove belt guard in numerical sequence as shown.

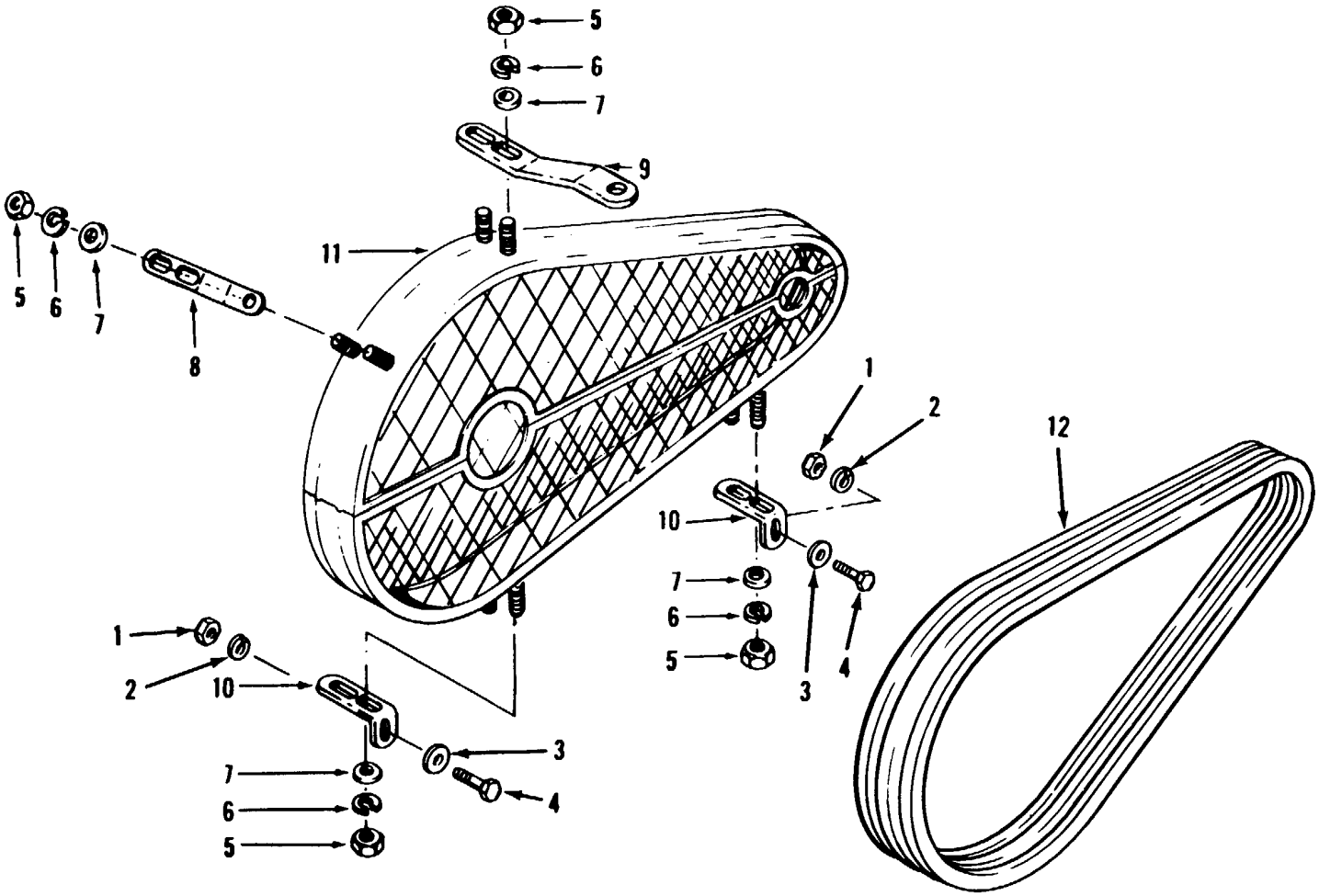

ME 4310-133-3512-14/3-1

1.	Nut, hex	3.	Flat washer	5.	Nut, hex	7.	Flat washer	9.	Bracket	11.	Guard assembly
2.	Lockwasher	4.	Capscrew	6.	Lockwasher	8.	Bracket	10.	Bracket		

Figure 3-1. Belt guard assembly, model HR10-8M-1 or HR10-8M-4, exploded view

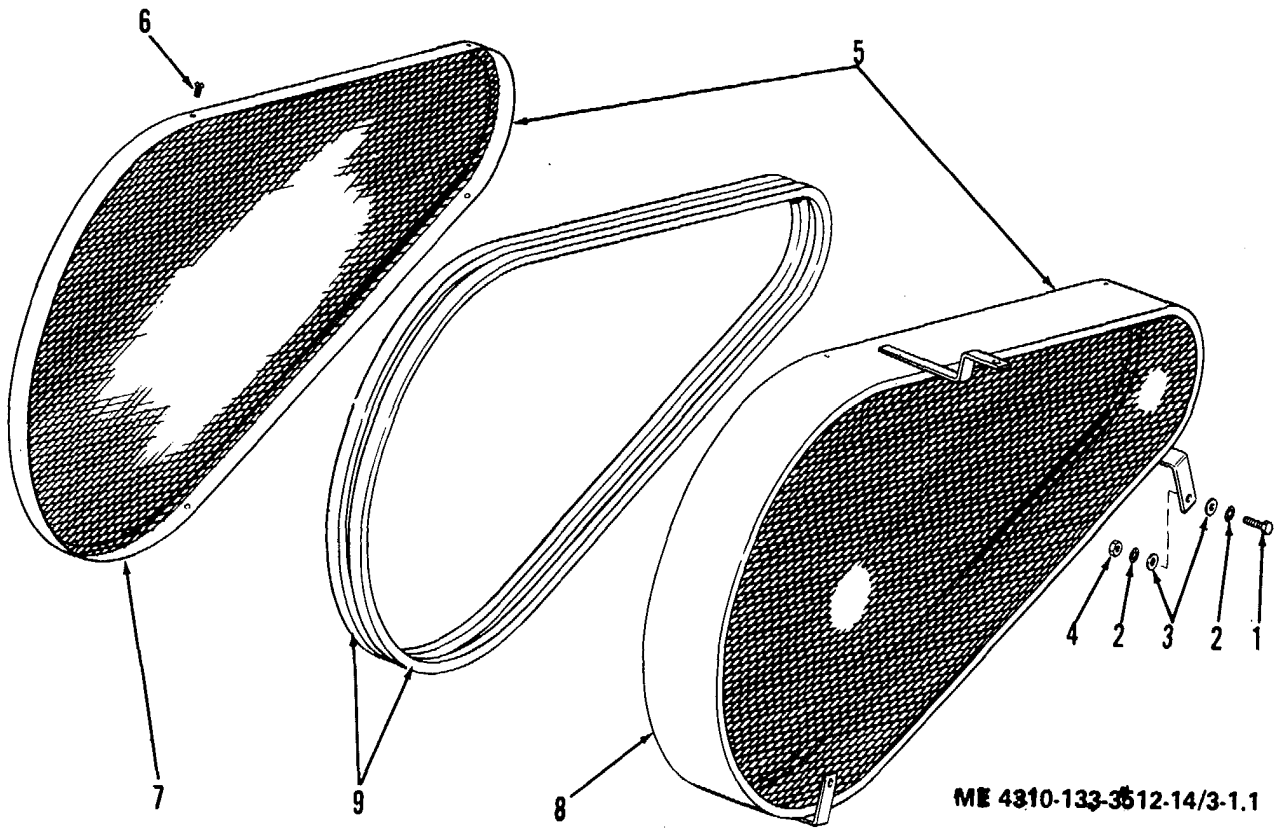

1.	Capscrew	4.	Nut, hex	7.	Guard cover
2.	Lockwasher	5.	Belt guard assembly	8.	Guard base
3.	Flat washer	6.	Machine screw	9.	V-belt

Figure 3-1.1. Belt guard assembly, model 20-277M, exploded view

d. Cleaning and Repair.

(1) Clean belt guard with a rag dipped in cleaning solvent Fed. Spec. P-D-680, then wipe dry.

(2) Smooth out any dents or bends. Replace the damaged part that is beyond repair.

e. Installation. Install the belt guard by reversing the removal procedure in c. above.

3-6. Motor

a. Cleaning.

(1) Remove dust and dirt from motor with compressed air. Use a cloth dampened in cleaning solvent, Fed Spec P-D-680 to wipe off the stator frame.

(2) Use the same method of cleaning on end covers and the motor starter. Refer to figure 3-2 for locations.

b. Inspection.

(1) Inspect the shaft for movement (end play),

(2) Notify organizational maintenance of a defective motor.

3-7. V-BELTS (Set of 3 used on Model HR10-8M-1, Set of 2 used on HR10-8M-4, and Set of 2 used on C&H.)

a. Inspection. Make a visual inspection of belts condition to determine if the belts require removal for cleaning and deglazing. If deglazing appears necessary, report to organizational maintenance.

b. Adjustment.

NOTE

When installing new belts, never pry the belts over the pulley grooves.

(1) Move the motor away from the compressor until there is tension on the V-belts.

(2) Depress one of the V-belts midway between the pulley and flywheel; when the top lines up with the bottom of the belt next to it under normal thumb pressure the tension is correct.

CAUTION

Do not adjust the V-belts too tightly as this will overload motor and compressor bearings. Also check and be sure pulley alinement is maintained.

(3) Tighten motor mounting bolts securely.

3-8. Air Compressor

a. General. The compressor unit part of the assembly, kept clean and lubricated, should be relatively free of maintenance. However, if the on-off cycles are too frequent because of heavy use, and accumulations of dust and dirt cover the frame, intercooler, or aftercooler, the compressor will run hot. Excessive heat consumes compressor oil. Low oil causes ring wear, or cylinder scoring. Therefore, frequent inspections are necessary.

b. Inspection.

(1) Visually inspect for excess accumulations of dust, dirt, or film of oil.

(2) Test for heat by touching intercooler tube, aftercooler tube, or cylinder head.

(3) Check release valve for signs of leaking.

(4) Listen for excessive start-stop cycling.

(5) Listen carefully for a knock or rattle that might signify internal damage.

(6) When any of these inspections disclose abnormal conditions, refer to table 3-3.

3-9. Air Intake Mufflers

a. General. The air intake mufflers are designed to clean the air entering the first stage cylinders. Should the operating area be exceptionally dusty, it must be serviced more frequently. A clogged intake muffler reduces the efficiency of the compressor.

b. Cleaning and Inspection.

(1) Wipe off the outside of the muffler body then refer to figure 3-3 and disassemble the air intake muffler as shown.

(2) Wash all parts of the muffler and wipe dry. Wash element and blow dry with low compressed air.

(3) Inspect element for excessive wear or loss of capacity to retain dust and dirt. Replace a defective element.

CAUTION

Use cleaning solvent Fed. Spec. P-D-680 for cleaning. Never use gasoline or similar fluids to clean the air intake muffler.

(4) Reassemble the air intake muffler in reverse order of the numerical sequence shown in figure 3-3.

3-10. Air Receiver

a. General. The air receiver stores compressed air at a pressure between 140- and 175-psi. Compressed air, moving from first stage to second stage of the compressor through the inter-cooler tube, then through the aftercooler tube to the air receiver, carrier

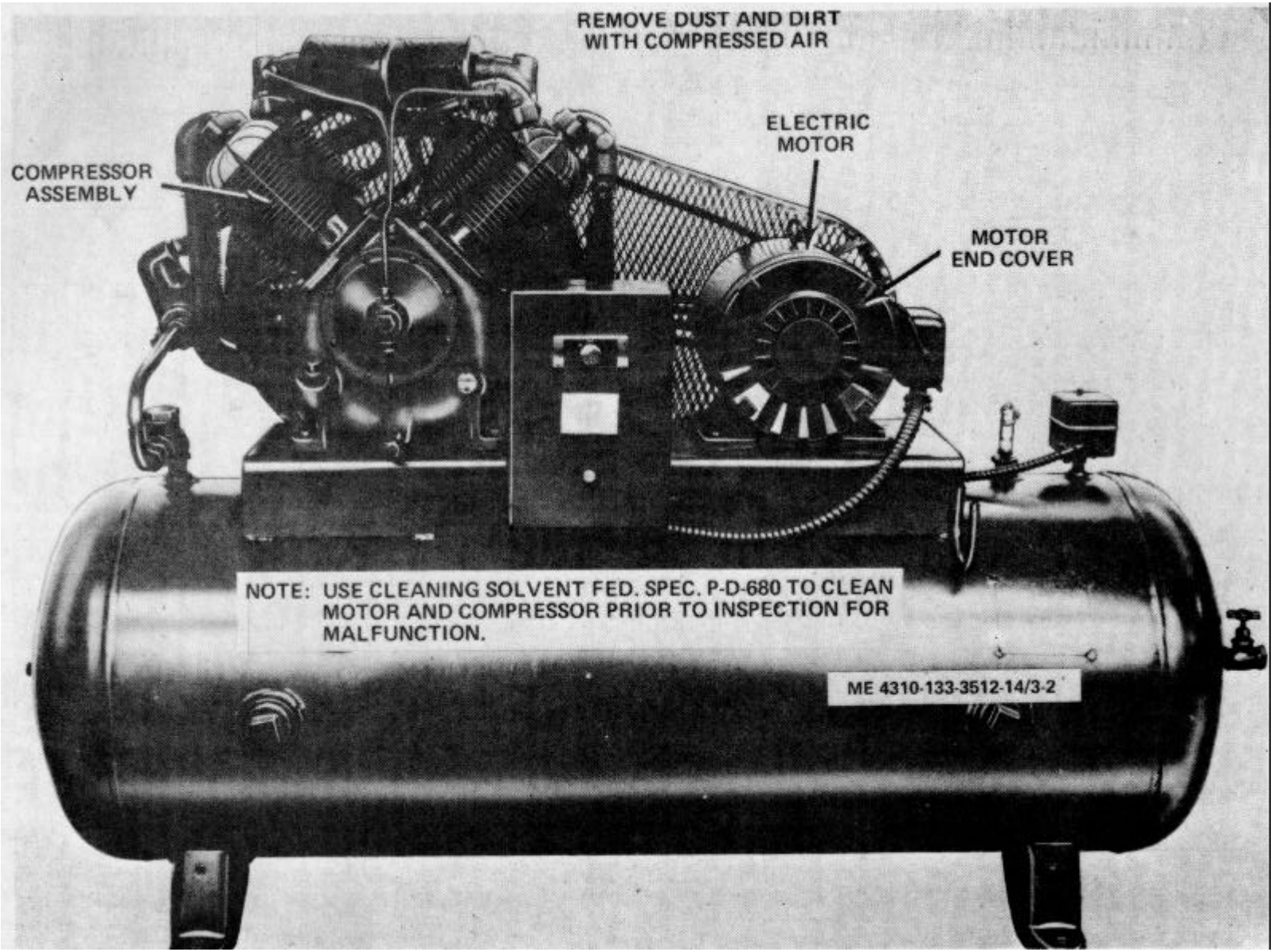

Figure 3-2. Electric motor and compressor cleaning, V-belt removal and installation.

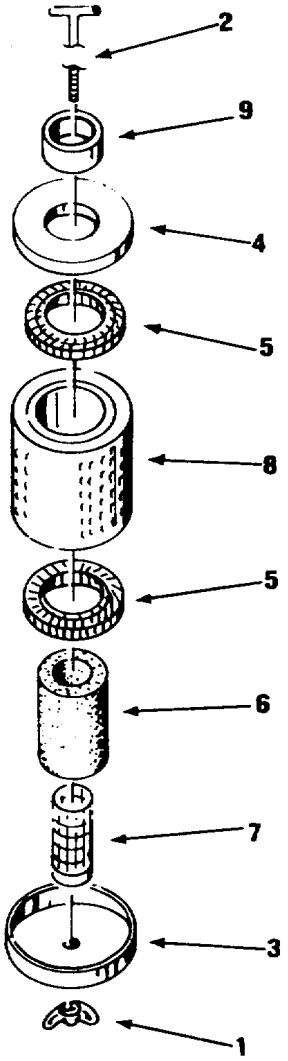

NOTE: MUFFLERS ARE INTERCHANGEABLE

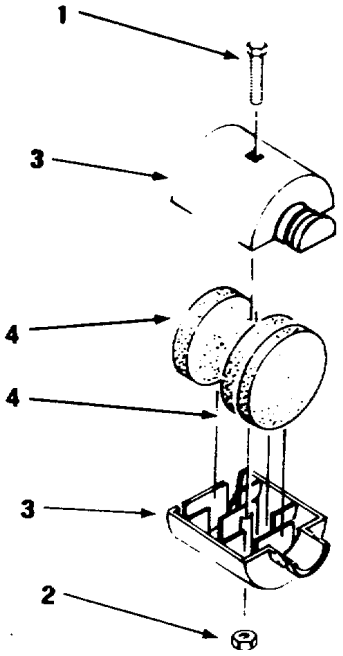

B. MUFFLER PART NO. Z828

1. SCREW MACHINE
2. PLAIN
3. INTAKE, AIR
4. FILTER ELEMENT

A. MUFFLER PART NO. Z66A

1. T-STUD
2. NUT, WING
3. COVER, LOWER
4. COVER, UPPER
5. SEPARATOR
6. ELEMENT
7. SCREEN
8. PLATE
9. FERRULE

ME 4310-133-3512-14/3-3

Figure 3-3. Air intake mufflers, exploded view

moisture (condensate) into the receiver. Frequent inspection and service is necessary.

b. Inspection and Cleaning.

(1) Inspect the receiver for excessive accumulation of dust, and leaking or spilled compressor oil.

(2) Check air lines and the service line for leaking joints or damaged lines. Tighten loose fittings, replace a damaged line.

(3) Use compressed air to blow dust off the receiver and all components mounted thereon. Wipe off all oil spots, then dry, to avoid further accumulations.

c. Draining Condensate from Air Receiver.

(1) TURN ON-OFF switch to OFF.

(2) Open draincock at bottom of the air receiver (fig. 1-1) under the service line.

(3) When air has escaped, leave draincock open for a few minutes for more of the condensate to escape.

(4) Close draincock.

(5) Be sure that all cloths, tools, etc., have been removed from the air receiver, then move ON-OFF switch to ON.

CHAPTER 4

ORGANZATIONAL MAINTENANCE INSTRUCTIONS

Section I. SERVICE UPON RECEIPT OF MATERIEL

4-1. Unloading The Air Compressor

a. Remove tie-downs and blocking that secure the crate to carrier. Refer to figure 4-1.

b. A forklift truck, pipe rollers, or a suitable hoist must be used when removing the air compressor from the carrier. When using a hoist, center the lifting 'hook above the center of the crate; place slings about ten inches in from both ends of the crate, and lift the unit from the carrier.

4-2. Unpacking The Air Compressor

a. Place the crated air compressor as close to the point of installation as possible. Remove the crate from the base being careful not to dam- age the air compressor while removing the crate. Remove the air hose, electric cable, tire gage, and publications. Remove the compressor from the base

b. Remove the tape and protective covering from electric motor, compressor, and air receiver tank.

4-3. Inspection and Servicing Equipment

a. Make a thorough inspection of the air compressor for any loss or damage that may have occurred during shipping or handling.

b. Inspect for dents, breaks, loose mounting bolts, or other defects. Inspect for loose connections, damaged wiring, or other defects.

c. Turn the electric motor and compressor several times by hand to be sure the motor and compressor do not bind. Prepare a written report of all damage incurred as a result of shipping or vandalism. Report any unrepairable damage immediately to the proper authority.

4-4. Installation of Separately Packed Components

Connect air hose (figure 4-2) to globe valve assembly and connect inflator gage assembly to air hose.

4-5. Installation or Set-up Instructions

a. Location and Leveling. Locate the air compressor as near to the electrical power source as

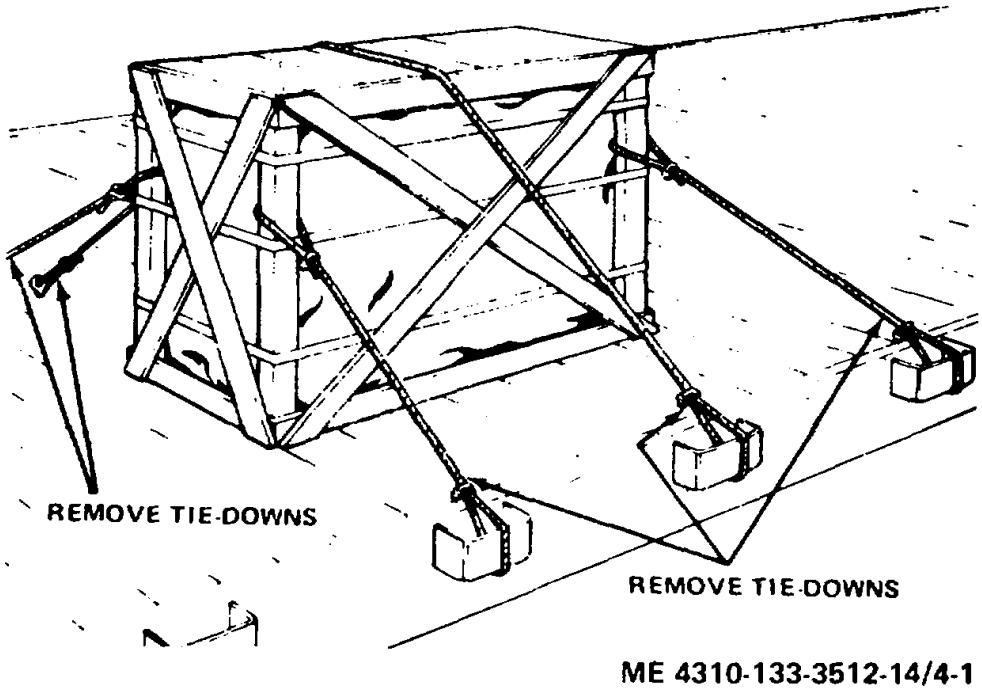

Figure 4-1. Shipping tie-downs.

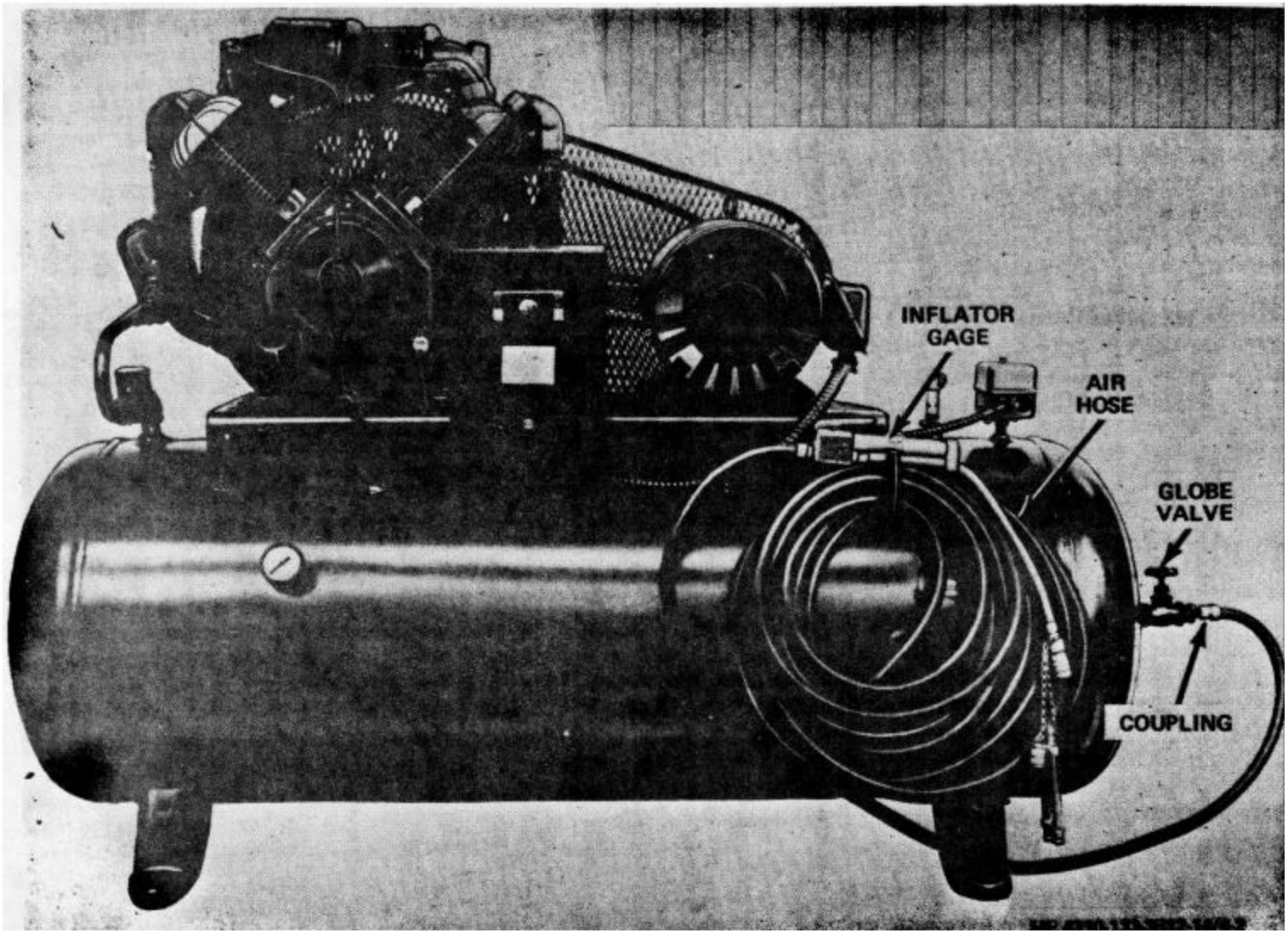

Figure 4-2. Air hose assembly, removable points.

possible. Avoid muddy, sandy or dusty locations if possible. If it is necessary to use the unit on soft ground, provide a suitable, level foundation of planking.

b. Grounding. The air compressor must be grounded prior to operation. The ground lead may be connected to an under-ground water system if the water system is constructed of metallic pipe. A ground may be fabricated from a metallic rod driven not less than 4 feet into the ground. The ground lead must be securely bolted or clamped to the water pipe or ground rod, and the feet or motor platform of the air receiver tank of the air compressor.

c. Connecting the Incoming Power Source.

(1) Remove the cover from the magnetic starter (fig. 4-3 or 4-3.1).

(2) Remove knockout plug from the starter box and insert the incoming power source wires through the opening.

WARNING

Be sure the incoming power lines are connected to disconnect switch that is locked in the OFF position before handling the wires.

(3) Insert the bare ends of the incoming power source wires in the L-1 power line connector and L-2 power line connector and tighten the terminal screws.

(4) Install cover on the magnetic starter.

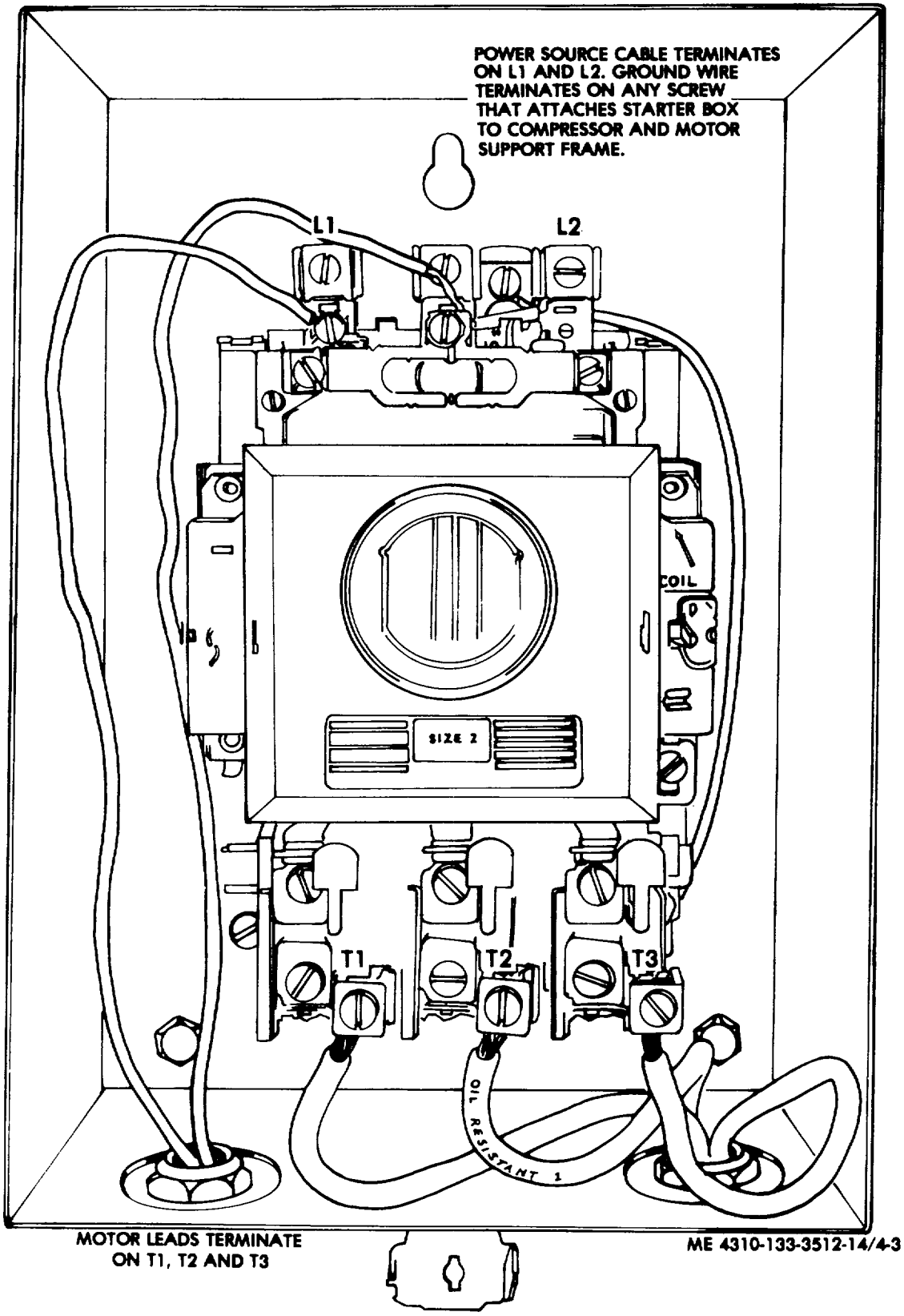

Figure 4-3. Magnetic Starter (Shown with Cover Removed), Model HR10-8M-1 or HR10-8M-4

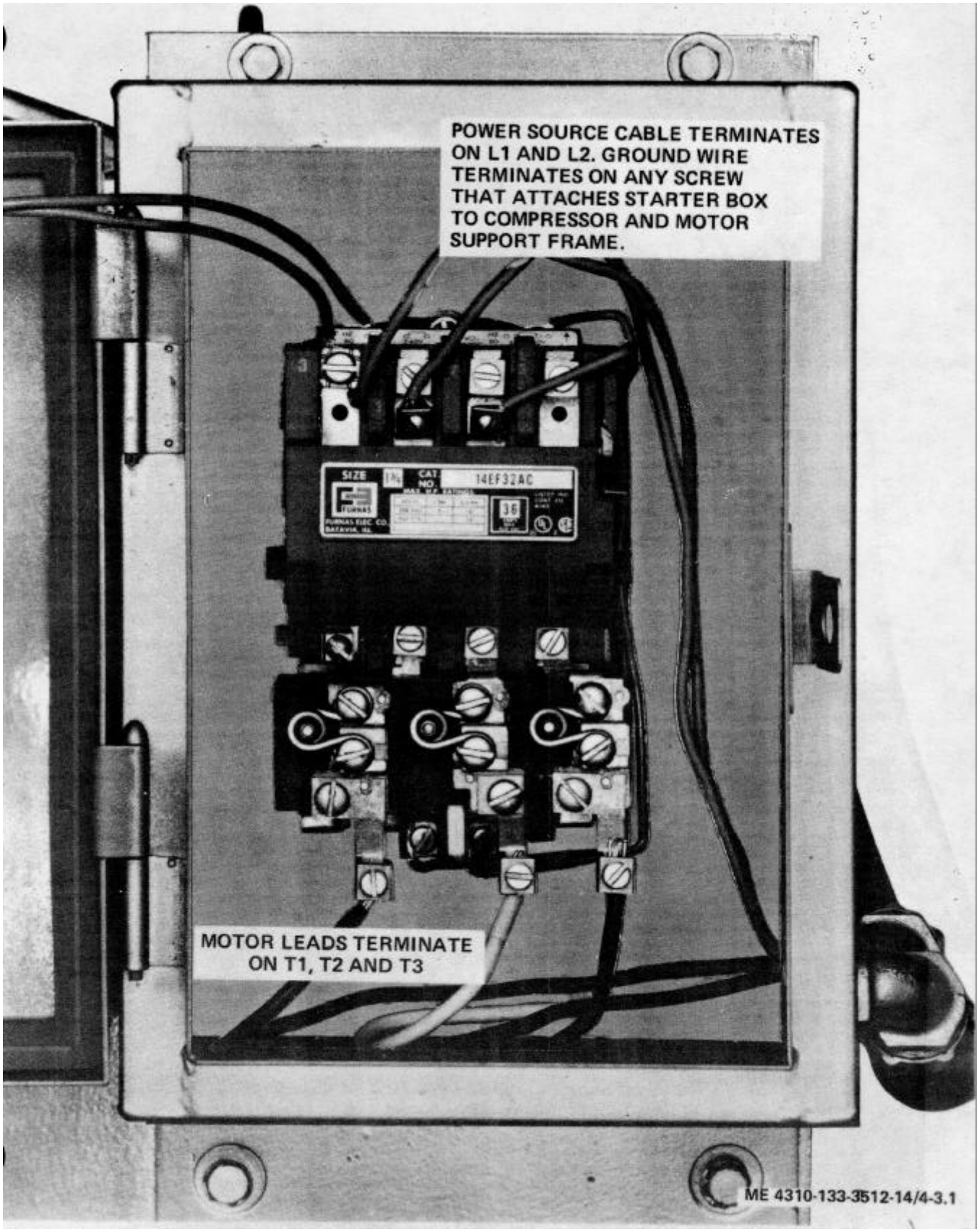

Figure 4-3.1. Magnetic starter (cover removed), model 20-277M

Section II. REPAIR PARTS, SPECIAL TOOLS, AND EQUIPMENT

4-6. Special Tools and Equipment

There are no special tools or equipment required to perform maintenance on the air compressor.

4-7. Maintenance Repair Parts

Repair parts and equipment are listed and illustrated in Appendix C of this manual.

Section III. LUBRICATION INSTRUCTIONS

Refer to Paragraph 3-2 for lubrication instruction for this air compressor.

Section IV. PREVENTIVE MAINTENANCE CHECKS AND SERVICES

Because all required inspections must be made daily, or more frequently, organizational maintenance personnel will refer to table 4-1, for procedures to be followed during their periodic inspection.

Table 4-1. Organizational Preventive Maintenance Checks and Services

Q—Quarterly
Total man-hours required: 3.0

Sequence Number	Item to be inspected procedure	Work time (M/H)
	NOTE **Use Tables 3-1 and 3-2 for preventive maintenance checks and service, then return to this Table for expansion of checks and services**	
1	COMPRESSOR FRAME OIL Refer to LO 5-10-84912 for type, then drain and change ail. Check that all capscrew, screws, and bolts are tight	
2	CAPSCREWS, SCREWS, AND BOLTS Check that all capscrews, screws, and bolts are tight.	0.3

Section V. TROUBLESHOOTING

4-8. General

a. This section contains troubleshooting information for locating and correcting most of the trouble that may develop in the air compressor Each malfunction for an individual component is followed by a list of tests or inspections which will help you to determine probable causes and corrective actions to take. You should perform the tests/inspections and corrective actions in the order listed.

b. This manual cannot list all malfunctions that may occur, nor all tests or inspections and corrective actions. If a malfunction is not listed or is not corrected by listed corrective action, notify your supervisor.

4-9. Troubleshooting

Refer to Table 4-2 below for malfunctions, tests, or inspections, and corrective actions.

Table 4-2. Troubleshooting.

MALFUNCTION
TEST OR INSPECTION
CORRECTIVE ACTION

NOTE

Before you see this Table, be sure you have performed all operating checks

1. COMPRESSOR PUMPING OIL
   Step 1. Check for a leaking release valve.
   Replace a leaking release valve (para 4-14).
   Step 2. Check for a hot cylinder head. If one seems hotter than the other, there could be damaged rings on piston.
   Notify direct support maintenance.
2. KNOCKS OR RATTLES
   Step 1. Check for loose belt wheel or motor pulley.
   Replace motor if pulley is loose (para 4-11).
   Step 2. Check for leaking release valve or restrictions in piping system.
   Replace a leaking release valve. Replace restricted piping (para 4-14).
3. AIR DELIVERY DROPPING
   Step 1. Check for air leaks in piping.
   Make a soapy solution with warm water. Paint on fittings and watch for signs of air leaks. Replace leaking fittings, if tightening does not stop the bubbles. (para 4-16).
   Step 2. Check for a leaking release valve.
   Replace a defective release valve (para 4-14).
   Step 3. Check for restricted air passages or leaking or broken valves.
   Notify Direct Support Maintenance.
4. MOTOR OVERLOAD RELAY TRIPS
   Step 1. Check line voltage, or motor terminals loose connections, or defective starter heaters.
   Notify Direct Support Maintenance.
5. EXCESSIVE STARTING OR STOPPING
   Step 1. Check receiver for condensate.
   Drain the condensate (para 3-10)
   Step 2. Check for air leaks in piping or receiver check valve leaking.
   Repeat Step 1. in Paragraph 3 above.
   Step 3. Check for leaking, broken, or worn pressure switch (fig. 1-2)
   Notify Direct Support Maintenance.
6. COMPRESSOR RUNNING HOT
   Step 1. Check that air passage is not blocked at fan wheel.
   Move any foreign object that may block ventilation.
   Step 2. Test for a leaking check valve (para 4-16).
   Replace a defective check. valve.
7. COMPRESSOR RUNNING SLOW
   Step 1. Check for low line voltage or a defective motor starter heater.
   Tighten loose terminals. If still running slow, notify Direct Support Maintenance.
   Step 2. Check for leaking release valve.
   Tighten leaking fittings.
8. LIGHTS FLICKER WHEN COMPRESSOR RUNS.
   Check terminals of motor.
   If bad connections cannot be rectified, notify Direct Support Maintenance.

Section VI. MAINTENANCE OF THE ELECTRIC MOTOR AND COMPRESSOR

4-10. General

The electric motor can be removed from the air receiver tank as a unit after removal of the V-belt guard, belts, conduit, and mounting brackets. The air compressor assembly can be removed as a unit after the V-belt guard, belts, and aftercooler tube are removed.

4-11. Electric Motor

a. Removal. Remove the electric motor as instructed on figure 4-4.

b. Installation. Install the electric motor as instructed on figure 4-4.

4-12. Compressor Assembly

a. Removal. Remove the compressor assembly as instructed on figure 4-4.

b. Installation. Install the compressor assembly as instructed on figure 4-4.

4-13. V-belts

a. Removal.

(1) Remove V-belt drive guard, figure 4-5.

(2) Remove the V-belts as instructed on figure 4-5.

b. Cleaning.

(1) Use a cloth dampened in cleaning solvent, Fed. Spec. P-D-680, to remove oil and dust film. If the belts appear to have been saturated, and the heat has glazed the surfaces of the vee's, proceed as follows:

(2) Use a medium grade of grit paper (not emery cloth) and rough up the surfaces with strokes of uneven direction.

(3) Wipe off all grit particles. When surface has been deglazed, install the belts on pulleys.

c. Installation.

(1) Install V-belts as instructed on figure 4-5, and adjust tension as described (b, para 3-7).

(2) Install V-belt drive guard.

4-14. Release Valve Assembly Replacement

a. Removal and Disassembly. Refer to figure 4-6 and disassemble release valve assembly as shown.

b. Cleaning, Inspection, and Repair.

(1) Clean all parts and wipe dry with a lint free cloth.

(2) Check the spring (2) for disfiguration or less of tension. Replace a defective spring.

(3) Check ball (3), body (4), plunger sleeve (6), and plunger (7) for excessive wear, burred threads, and general condition. Replace damaged or defective parts as necessary.

(4) Replace deteriorated gaskets.

c. Reassembly and Installation.

(1) Refer to figure 4-6 and reverse the disassembly procedures.

4-15. Air Intake Mufflers

a. Removal. Refer to figure 4-6 and remove air intake mufflers as shown.

b. Cleaning. Refer to paragraph 3-9.

c. Installation. Reverse removal procedure shown in figure 4-5.

4-16. Air Receiver Repair

a. Refer to figure 4-7 or 4-7.1 and remove the defective components in numerical sequence.

b. The check valve (5) can be disassembled for cleaning (fig. 4-8 or 4-8.1).

c. Replace defective or damaged components in reverse order of their removal.

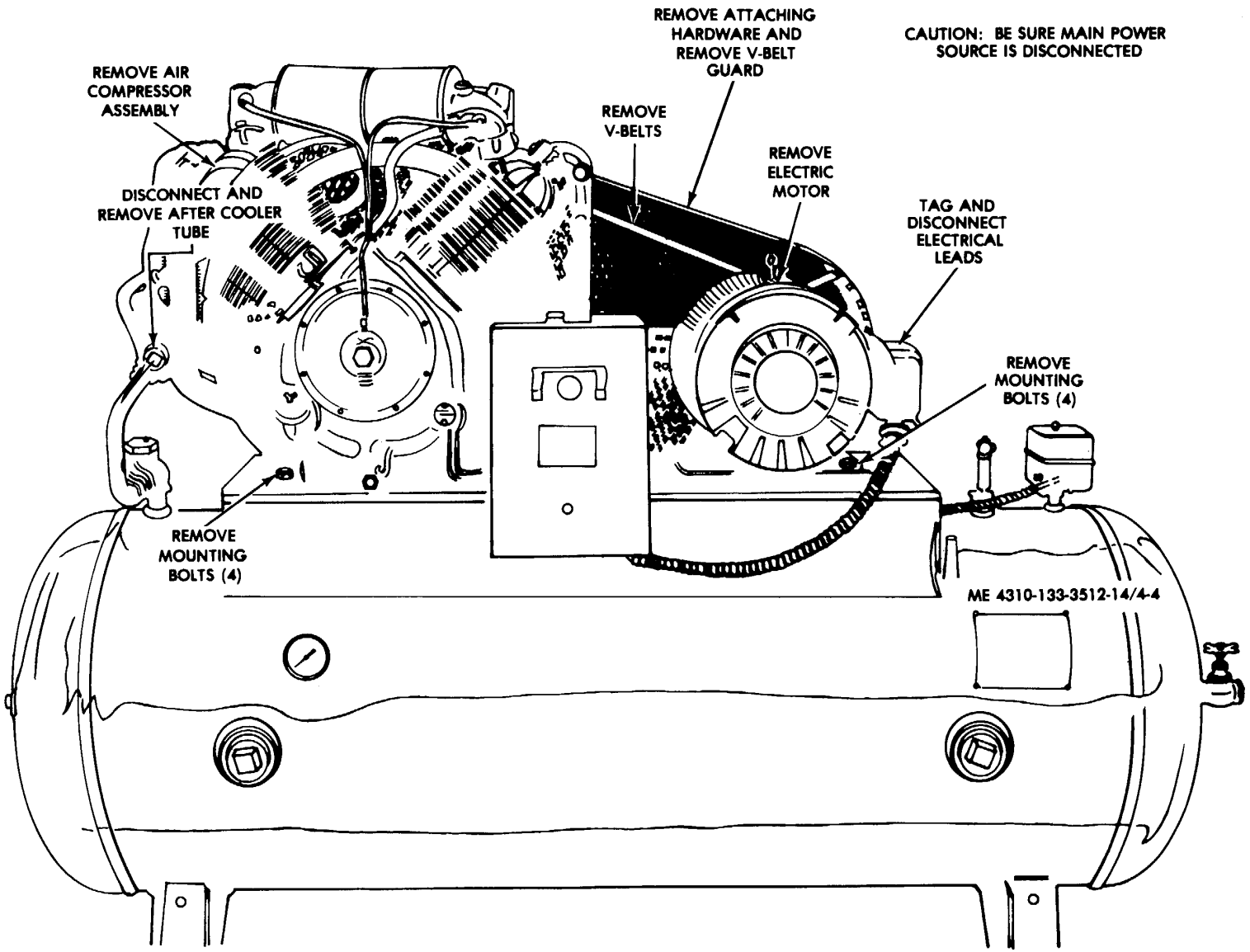

Figure 4-4. Electric Motor and Compressor Assembly, Removal and Installation.

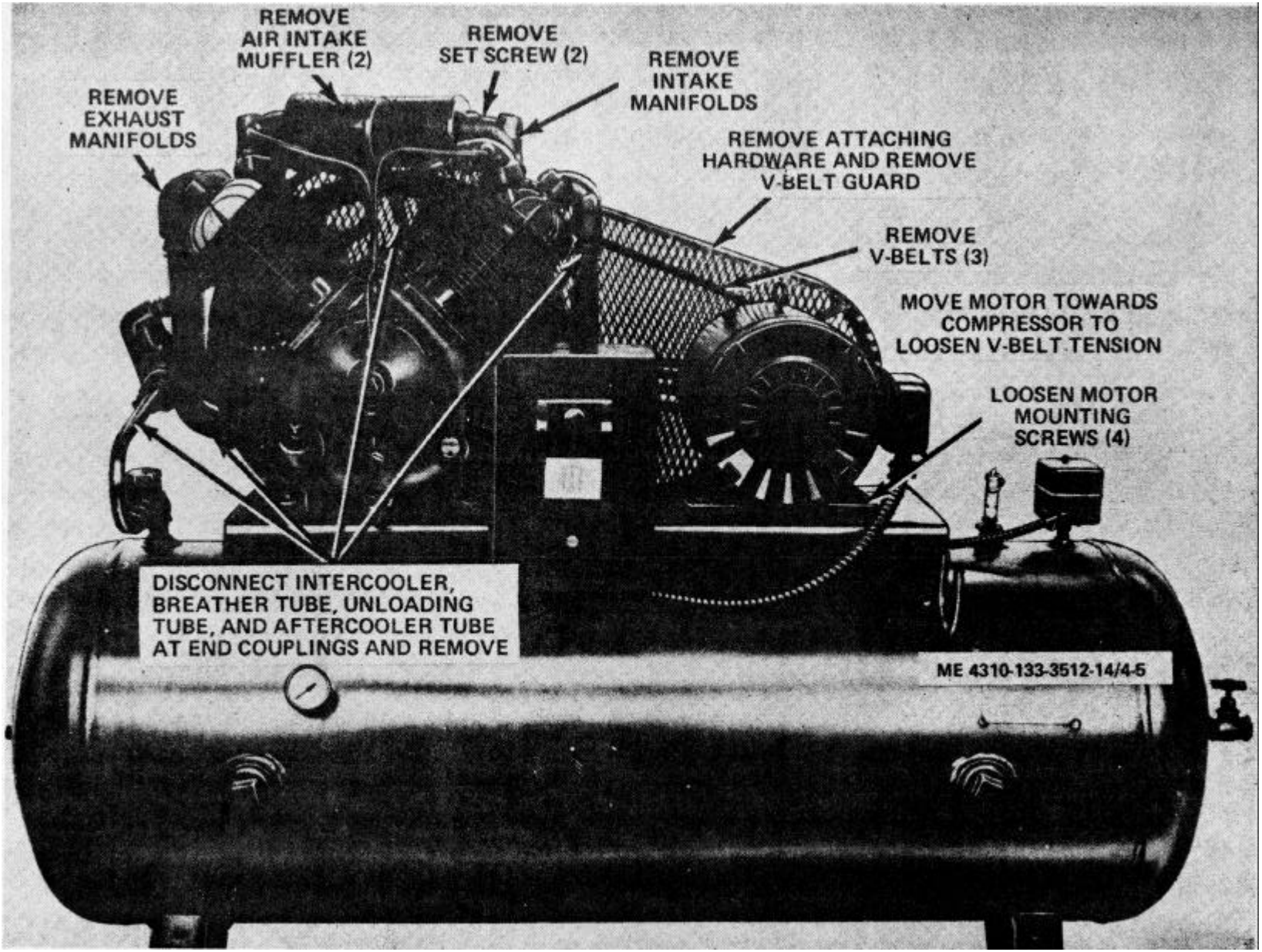

Figure 4-5. Compressor components and V-belt drive

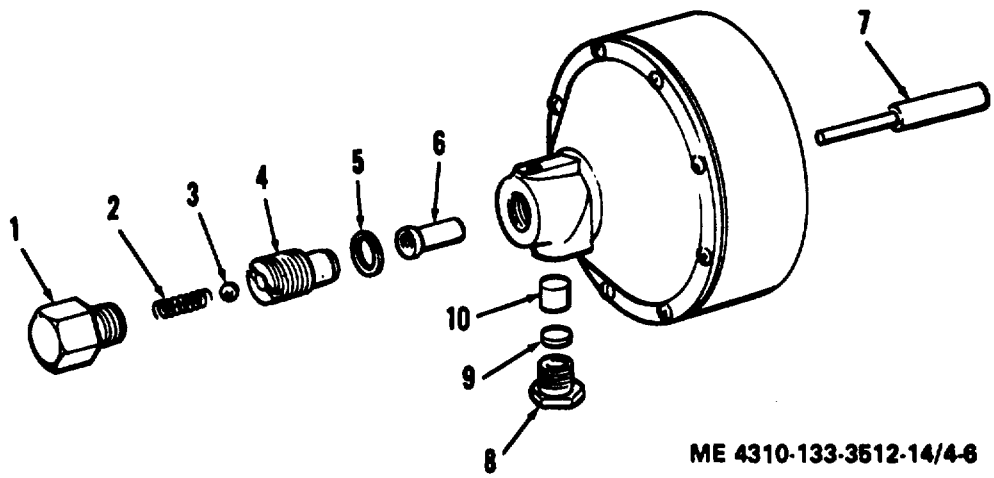

1. Cap, release valve
2. Spring, release
3. Ball, release valve
4. Body, release valve
5. Gasket, release valve
6. Sleeve, plunger, release
7. Plunger, release valve
8. Body, unloader
9. Screen
10. Felt

Figure 4-6. Release valve assembly, exploded view.

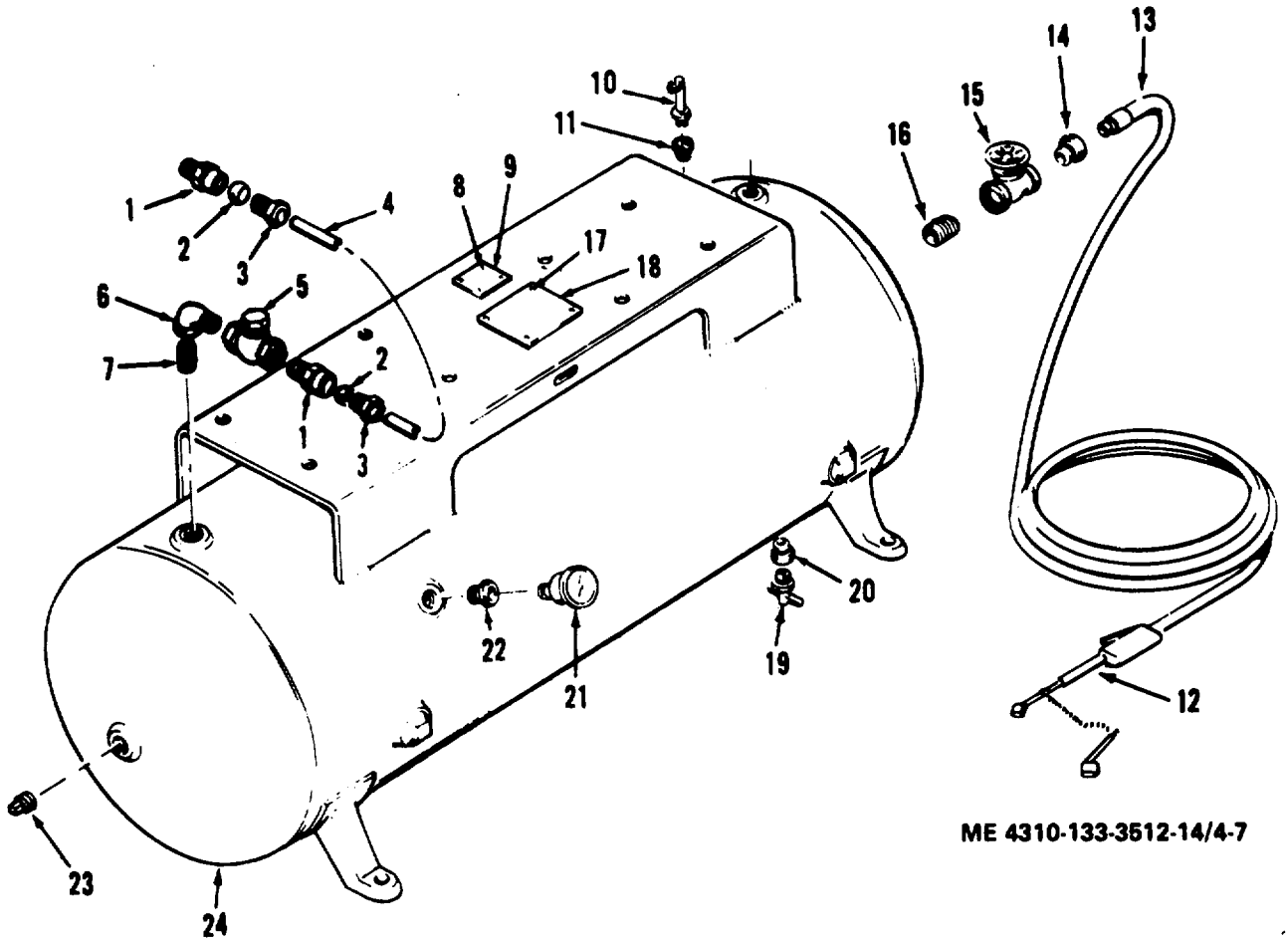

1. Body, compression fitting
2. Ferrule, compression fitting
3. Nut, compression fitting
4. Tube, exhaust
5. Valve, check
6. Elbow, street
7. Nipple, pipe
8. Screw, drive
9. Plate
10. Valve, safety
11. Bushing, pipe
12. Gage, inflator
13. Air hose assembly
14. Bushing, pipe
15. Valve, globe
16. Nipple, pipe
17. Screw, drive
18. Plate
19. Cock, drain
20. Bushing, pipe
21. Gage, pressure
22. Bushing, pipe
23. Plug, pipe
24. Air receiver

Figure 4-7. Air receiver, lines and fittings, model HR10-8M-1 or HR10-8M-4

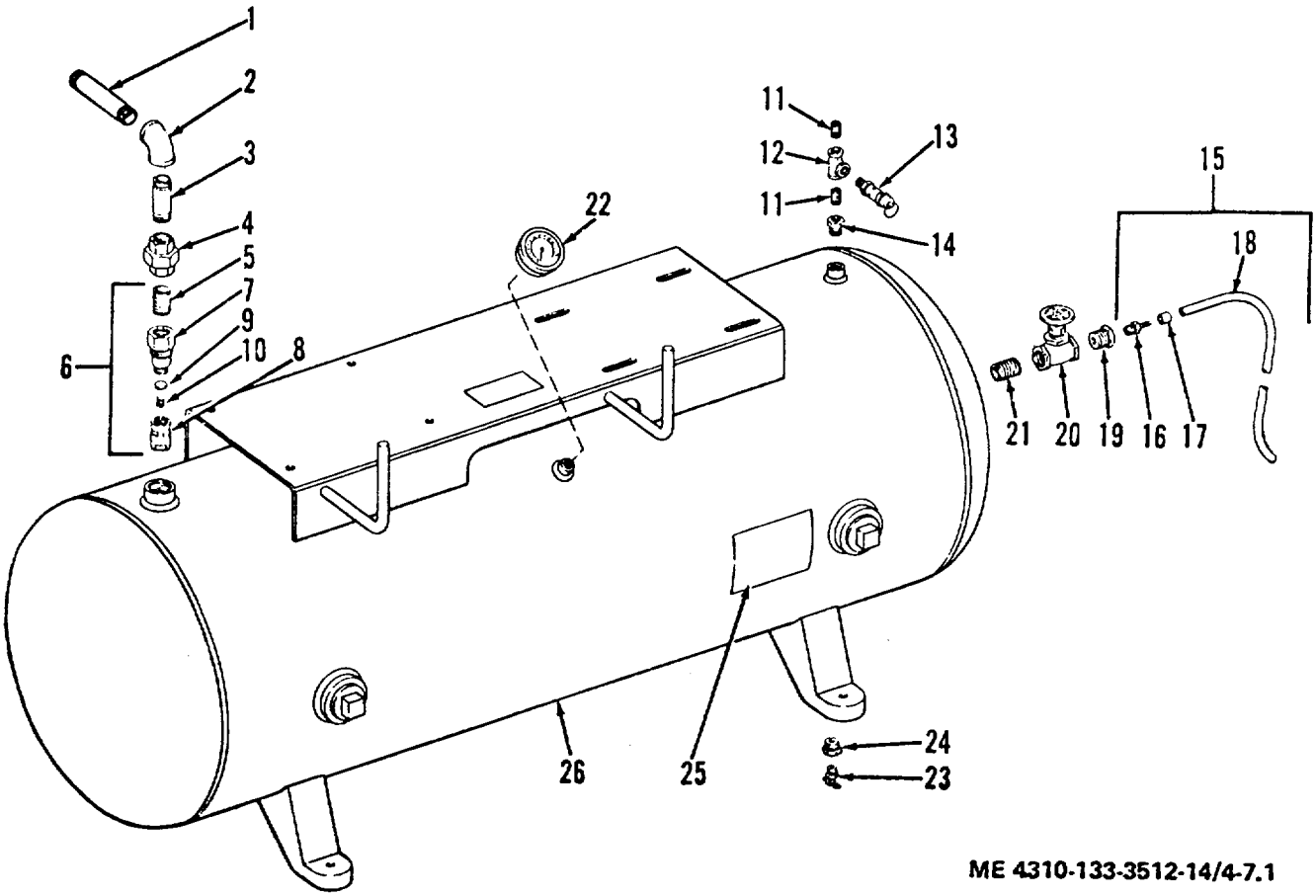

1. Nipple, pipe
2. Elbow
3. Nipple, pipe
4. Union
5. Nipple, pipe
6. Check valve assembly
7. Valve body
8. Valve cage
9. Valve disc
10. Valve spring
11. Nipple, pipe
12. Tee
13. Safety valve
14. Bushing, pipe
15. Air hose assembly
16. Connector
17. Ferrule
18. Hose
19. Bushing, pipe
20. Valve, globe
21. Nipple, pipe
22. Gage, pressure
23. Valve, drain
24. Bushing pipe
25. Plate, identification
26. Receiver, air

Figure 4-7.1. Air receiver, lines and fittings, model 20-277M

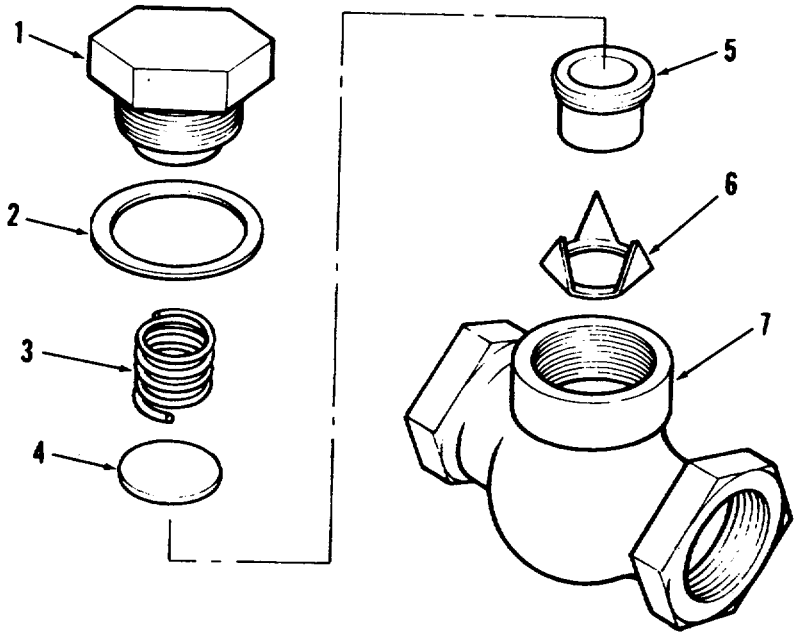

ME 4310-133-3512-14/4-8

1. Cap
2. Gasket
3. Spring
4. Disc
5. Seat
6. Guide
7. Body

Figure 4-8. Check valve assembly, exploded view, model HR10-8M-1 or HR10-8M-4

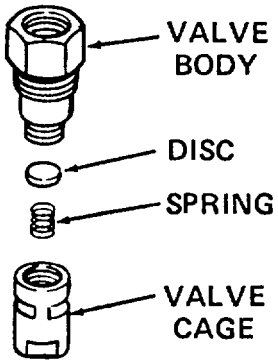

ME 4310-133-3512-14/4-8.1

Figure 4-8.1. Check valve assembly, model 20-277M

CHAPTER 5

DIRECT AND GENERAL SUPPORT MAINTENANCE INSTRUCTIONS

Section I. REPAIR PARTS SPECIAL TOOLS AND EQUIPMENT

5-1. Special Tools and Equipment

There are no special tools or equipment required for maintenance of the air compressor assembly.

5-2. Maintenance Repair Parts

Repair parts and equipment covering direct and general support maintenance of the air compressor assembly are listed and illustrated in Appendix C.

Section II. TROUBLESHOOTING

5-3. General

This section provides information useful in diagnosing and correcting unsatisfactory operation or failure of the air compressor and its components. Each trouble symptom stated is followed by a list of probable causes of trouble. The possible remedy recommended is described opposite the probable cause. Any operational trouble noted that is beyond the scope of operator or crew maintenance must be reported to field maintenance. Table 5-1 contains the troubleshooting procedures.

Table 5-1. Troubleshooting

MALFUNCTION TEST OR INSPECTION CORRECTIVE ACTION
1. ELECTRIC MOTOR FAILS TO START OR FAILS TO RUN
Step 1. Leads not properly connected in conduit box.
Connect leads properly (fig. 1-3).
Step 2. Magnetic starter not wired properly.
Connect leads properly (fig. 1-3).
Step 3. Magnetic starter switch or pressure switch defective.
Replace or repair a defective magnetic starter (para 5-7) or pressure switch (para 5-8).
Step 4. Line voltage of incoming source incorrect
Determine incoming power source and make correct connections
Step 5. Motor defective.
Repair or replace motor (para 5-6).
2. ELECTRIC MOTOR REVERSED.
Step 1. Wiring incorrect.
Correct wiring (Refer to fig. 1-3).
3. ELECTRIC MOTOR OVERHEATS.
Step 1. Line voltage low from power source.
Connect to proper power source.
Step 2. V-belts out of alinement.
Aline V-belts (para 3-7).
Step 3. Compressor faulty.
Refer to compressor troubles (6-11 below).
Step 4. Ventilation insufficient.
Provide proper ventilation.
Step 5. Insufficient lubrication.
Lubricate the air compressor directed in the Lubrication Order LO 5410-349-12.

Table 5-1. Troubleshooting (Continued)

MALFUNCTION
TEST OR INSPECTION
CORRECTIVE ACTION

4. ELECTRIC MOTOR NOISY.
   - Step 1. Electric motor mounting bolts or brackets loose.
     - Tighten mounting bolts and brackets
   - Step 2. Electric motor interior dirty.
     - Clean electric motor.
   - Step 3. Electric motor bearings worn
     - Repair electric motor (para 5-6).
   - Step 4. V-belts improperly adjusted.
     - Adjust V-belts (para 3-7).
5. ELECTRIC MOTOR DOES NOT CUT IN AT 140 PSI, AND CUT OUT AT 175 PSI
   - Step 1. Pressure switch not set properly.
     - Adjust pressure switch (para 5-8).
   - Step 2. Pressure switch defective.
     - Replace or repair pressure switch (para 5-8).
   - Step 3. Incoming power source disconnected.
     - Connect air compressor incoming power source.
6. COMPRESSOR PUMPS TOO SLOWLY
   - Step 1. Intake air muffler clogged.
     - Service intake air muffler (para 3-9).
   - Step 2. V-belts improperly adjusted.
     - Adjust V-belts (para 3-7).
   - Step 3. Oil level low.
     - Check oil level in crankcase and fill in accordance with Lubrication Order LO 5-4310-349-12
   - Step 4. Intake and exhaust valves faulty.
     - Clean or replace valves (para 5-4).
   - Step 5. Air leakage in unit.
     - Tighten connection.
   - Step 6. Load too great for compressor.
     - Reduce load requirements of compressor.
7. COMPRESSOR OVERHEATS.
   - Step 1. Flywheel defective
     - Replace flywheel.
   - Step 2. V-belts slipping.
     - Adjust V-belts (para 3-7).
   - Step 3. Intake and exhaust valves faulty.
     - Clean or replace valves (para 5-4).
   - Step 4. Intake air muffler dirty.
     - Service intake air muffler (para 3-9).
   - Step 5. Oil level low.
     - Inspect oil level in crankcase and fill in accordance with Lubrication Order LO 5-4310-349-12.
   - Step 6. Improper rotation flywheel.
     - Check wiring of electric motor (fig. 1-3).
8. COMPRESSOR FAILS TO PUMP TO PRESSURE.
   - Step 1. Air leakage in unit.
     - Eliminate by tightening connections.
   - Step 2. Pressure switch defective.
     - Replace or repair pressure switch (para 5-8).
   - Step 3. V-belts improperly adjusted.
     - Adjust V-belts (para 3-7).
   - Step 4. Intake and exhaust valves defective.
     - Clean or replace valves (para 5-4).
   - Step 5. Governor leaking.
     - Repair or replace governor (para 5-4).
   - Step 6. Motor defective.
     - Repair or replace motor.
   - Step 7. Intake air muffler clogged.
     - Clean or replace intake air muffler (para 3-9).

Table 5-1. Troubleshooting (continued)

MALFUNCTION TEST OR INSPECTION CORRECTIVE ACTION
Step 8. Intercooler leaks. Replace defective intercooler.
9. COMPRESSOR NOISY.
Step 1. Flywheel loom Tighten nut on flywheel bolt.
10. COMPRESSOR VIBRATES EXCESSIVELY.
Step 1. Mounting insecure Tighten mounting bolts.
Step 2. Drive pulley out of line. Inspect and adjust alinement of drive pulley.
Step 3. Foundation insecure. Strengthen foundation or relocate air compressor on solid base.
11. COMPRESSOR FAILS TO SHUT DOWN.
Step 1. Pressure switch not properly adjusted Adjust pressure switch (para 5-8).
Step 2. Load requirement excessive for air compressor capacity. Replace check valve assembly (para 3-10).
12. BELTS WEAR EXCESSIVELY.
Step 1. Flywheel loosed Tighten nut on flywheel bolt.
Step 2. V-belts improperly adjusted. Adjust V-belts (para 3-7).
Step 3. Oil or grease on belts. Clean belts or replace damaged belts (para 3-7).
Step 4. Flywheel and pulley misaligned. Align flywheel and pulley to eliminate side pull on V-belts.
13. SAFETY RELIEF VALVE BLOWS AT TOO LOW PRESSURE.
Step :1. Valve not properly seated. Drain air and valve will reseat.
Step 2. Valve defective. Replace valve.
14. MAGNETIC STARTER SWITCH FAILS TO OPERATE.
Step 1. Magnetic starter switch defective. Replace or repair starter switch (para 5-7).
Step 2. Thermal relay heater defective. Install a new thermal relay heater.

Section III. REPAIR AND OVERHAUL INSTRUCTIONS
AIR COMPRESSOR ASSEMBLY AND ELECTRIC MOTOR

Table 5-2. Compressor Repair And Replacement Standards

	Manufacturer's dimensions and tolerances in inches	Desired clearance		Maximum allowable wear and clearance	
	Min.	Max.	Min.	Max.	
Cylinders					
Bore, low - pressure -	4.6245	4.6255	.....	.....	0.004
Bore, high - pressure -	64995	2.5005	.....	.....	0.002
Out-of-round -	.....	.....	.....	.....	0.001
Taper					0.001
Crankshaft					
Journal (rod) size -	1.628	1.6265			
Taper.....	.....	.....	.....	.....	0.001

Table 5-2. Compressor Repair And Replacement Standards (Continued)

	Manufacturer's dimensions and tolerances in inches	Desired clearance			Maximum allowable wear and clearance
	Min.	Max.	Min.	Max.	
Out-of-round.....	.....	.....	.....	.....	0.005
End play	.....	.....	0.000	0.002	
Pistons and Pins					
Piston, low-pressure -	4.619	4.620	0.003	0.005	0.005
Piston, high-pressure -	2.4965	2.4975	0.0015	0.0035	0.003
Pin, low-pressure	2.125	2.135	0.0001	0.0005	
Pin, high-pressure	2.125	2,135	0.0001	0.0005	
Bearings, Connecting Rod					
Bearing, I. D	.8125	.8130	0.001	0.007	
Bearing, side clearance			0.010	0.017	

5-4. Pistons, Piston Rings, Connecting Rods, and Cylinder Block (Model HR10-8M-1 and Model 20-277M)

a. Removal and Disassembly.

(1) Remove the compressor assembly.

(2) Refer to figure 5-1 and disassemble tube assemblies, cooler tubes, manifolds, and air cleaner as shown.

(3) Refer to figure 5-2 and disassemble intake and exhaust valves as shown.

(4) Refer to figure 5-3 and remove handhole plate.

(5) Refer to figure 5-3 and remove connecting rod bearing caps.

CAUTION

Mark the connecting rod from which the caps were removed, and reassemble caps on the same rod. Do not intermix the connecting rods and caps.

(6) Disassemble cylinder block from crankcase as shown in figure 5-1.

(7) Disassemble connecting rods, pistons and rings as shown in figure 5-3.

NOTE

Mark connecting rod and piston to assure correct relationship at reassembly.

NOTE

Do not remove the connecting rod bushings unless inspection reveals them defective.

b. Cleaning, Inspection and Repair.

(1) Clean all parts with cleaning solvent and dry thoroughly.

(2) Inspect the cylinder block for broken cooling fins and cracks. Inspect the cylinder bore for wear, scoring, pitting, or other damage. Replace the block if defective.

(3) Measure the clearance of the piston pin to the piston pin bushing. Check for proper fit. Aline or replace connecting rods if necessary.

(4) Place the piston rings in the cylinder bore with the piston ring square in the cylinder bore about 1/2 inch from the top.

(5) If the ring gap is less than the specified width, file across butt ends of the rings to increase the gap to the required tolerance. If the ring gap is greater than required, replace the entire set of rings.

(6) Measure the ring groove in the piston for wear. Replace piston if necessary.

c. Reassembly and Installation.

(1) Refer to figures 5-1, 5-2, and 5-3 and reassemble and install the pistons, piston rings, connecting rods, and cylinder block, taking the following precautions:

(*a*) If new connecting rod bushings are to be installed and are not prefitted, ream the bushings.

(*b*) When installing piston rings expand them carefully and sufficiently to allow the ring to slide freely over the piston to the proper position. Starting with the bottom ring, install piston rings in their proper grooves. Stagger ring gaps so that they are not lined up.

(*c*) Lubricate each piston and connecting rod assembly with a light coat of engine oil before installing in cylinder block. Compress the piston rings carefully when installing in cylinder.

(*d*) When installing cylinder block to crankcase always use new flange gasket and torque nuts to 45 ft.-lbs. torque.

(*e*) Torque connecting rods nuts to 25 ft.-lbs. torque.

(*f*) When reassembling intake and exhaust valves be sure to seat large diameter of the spring in the cage of all valves.

5-4.1 Pistons, Piston Rings, Connecting Rods, and Cylinder Block (Model HR10-8M4)

a. Removal and Disassembly.

(1) Remove the compressor assembly.

(2) Refer to figure 5-1 and disassemble tubes, manifolds, and air cleaner as shown.

(3) Refer to figure 5-2 and disassemble intake and exhaust valves as shown.

(4) Refer to figure 5-1 and remove cylinder assembly.

(5) Access to connecting rod attachment bolt is reached from above. Refer to figure 5-3.1 and remove connecting rod bolts and withdraw connecting rod cap, connecting rod and piston assembly from top of crankcase.

CAUTION

Mark the connecting rod from which the caps were removed, and reassemble caps on the same rod. Do not intermix the connecting rods and caps.

(6) Disassemble connecting rods, pistons and rings as shown in figure 5-3.1.

NOTE

Mark connecting rod and piston to assure correct relationship at reassembly.

NOTE

Do not remove the connecting rod bushings unless inspection reveals them defective.

b. Cleaning, Inspection and Repair.

(1) Clean all parts with cleaning solvent and dry thoroughly.

(2) Inspect the cylinder block for broken cooling fins and cracks. Inspect the cylinder bore for wear, scoring, pitting, or other damage. Replace the block if defective.

(3) Measure the clearance of the piston pin bushing. Check for proper fit. Aline or replace connecting rods if necessary.

(4) Place the piston rings in the cylinder bore with the piston ring square in the cylinder bore about 1/2 inch from the top.

(5) If the ring gap is less than the specified width, file across butt ends of the rings to increase the gap to the required tolerance. If the ring gap is greater than required, replace the entire set of rings.

(6) Measure the ring groove in the piston for wear. Replace piston if necessary.

c. Reassembly and Installation.

(1) Refer to figures 5-1, 5-2, and 5-3.1 and reassemble and install the pistons, piston rings, connecting rods, and cylinder block, taking the following precautions:

(a) If new connecting rod bushings are to be installed and are not prefitted, ream the bushings.

(b) When installing piston rings expand them carefully and sufficiently to allow the ring to slide freely over the piston to the proper position. Starting with the bottom ring, install piston rings in their proper grooves. Stagger ring gaps so that they are not lined up.

(c) Lubricate each piston and connecting rod assembly with a light coat of engine oil before installing. Install the connecting rod and piston assembly from the top of the crankcase. Positioning of the connecting rod bearing surface to the crankshaft is accomplished from the top of the crankcase by reaching down along side connecting rod to install lower connecting rod cap as shown in figure 5-3.1.

(d) Install connecting rod bolts, from the top, and torque to 25 ft. lbs. torque.

(e) When installing cylinder block, compress the piston rings carefully. Always use new flange gasket and torque capscrews to 45 ft.-lbs. torque.

(f) When reassembling intake and exhaust valves be sure to seat large diameter of the spring in the cage of all valves.

5-5. Crankshaft and Crankcase (Model HR108M-1 and Model 20-277M)

a. Removal and Disassembly.

(1) Refer to figure 5-1 and remove the unloader assembly.

(2) Remove the handhole plate and flywheel.

(3) Remove bearing caps (fig. 5-3) and push connecting rods and pistons up to the top of the cylinder bore. Remove the capscrews that secure unloader housing to crankcase.

(4) Drive the crankshaft, bearings, and unloader housing from the crankcase.

a.1. Removal and Disassembly (Model HR10-8M4)

(1) Refer to figure 5-1 and remove the unloader assembly.

(2) Remove piston and connecting rod assemblies as described in paragraph 5-4.1.

(3) Remove the capscrews that secure unloader housing to crankcase.

(4) Drive the crankshaft, bearings, and unloader housing from the crankcase.

CAUTION

Before driving the crankshaft from the crankcase, be sure the connecting rod journals are in an upright position.

(5) Using suitable puller remove the unloader housing and bearing from the shaft.

(6) Remove the oil seal from the crankcase.

NOTE

Do not remove the oil level gage from the crankcase unless the gage is leaking or defective.

b. Cleaning, Inspection, and Repair.

(1) Clean all parts in cleaning solvent and dry thoroughly.

(2) Inspect the crankshaft for cracks, scores, and distortion. Measure the crankshaft journals for wear. If the connecting rod journals measure 0.0005 inch out-of-round, replace the crankshaft.

(3) Inspect the crankshaft bearings for rough, pitted, or scored rollers. Replace a defective bearing.

(4) Inspect the crankcase for cracks, breaks, or other defects. Replace the crankcase if defective.

c. Reassembly and Installation.

(1) Refer to figures 5-1 and 5-3 reassemble and install crankshaft in crankcase using the following procedures:

(*a*) Always install new oil seal in crankcase.

(b) Press bearing cup in the unloader housing.

(c) Install new gasket on the unloader housing.

c.1. Reassembling and Installation (Model HR10-8M4)

(1) Refer to figures 5-1.1 and 5-3.1 reassemble and install crankcase using the above procedures:

(2) Refer to figure 5-4 or 5-4.1, depending on model of compressor, and disassemble electric motor.

5-6. Electric Motor

a. Removal and Disassembly.

(1) Refer to paragraph 4-11 and remove the electric motor.

(2) Refer to figure 5-4, 5-4.1, or 5-4.2, depending on model of compressor, reversing the procedures and reassemble the electric motor as shown.

b. Cleaning Inspection and Repair.

(1) Clean all parts except rotor, bearings, and stator in cleaning solvent and wipe dry with a lint free cloth.

(2) Use compressed air to clean dust and dirt off rotor, bearings, and stator, then wipe with a cloth dampened in cleaning solvent.

(3) Inspect bearings and rotor shaft for excessive wear, and rough or scored surfaces. Replace defective bearings. Replace a defective rotor shaft.

c. Reassembly and Installation.

(1) Refer to figure 5-4, 5-4.1, or 5-4.2 reversing the procedures and reassemble the electric motor as shown.

(2) Refer to paragraph 4-11 and install the electric motor.

5-7. Magnetic Starter

a. Removal and Disassembly.

(1) Refer to figure 5-5 or 5-5.1 and remove the magnetic starter as shown.

(2) Refer to figure 5-6 or 5-6.1 and disassemble starter as shown.

b. Cleaning, Inspection and Repair.

(1) Use compressed air and remove all dust or dirt from magnetic starter components.

(2) Check continuity of heater coil, operating coil, relay overload contact carrier and interlock assembly. Replace defective parts.

(3) Check on-off switch continuity and stem action. Replace a defective on-off switch.

c. Reassembly and installation.

(1) Refer to figure 5-6 or 5-6.1 and reassemble starter.

NOTE: Items 20 and 30 are interchangeable.

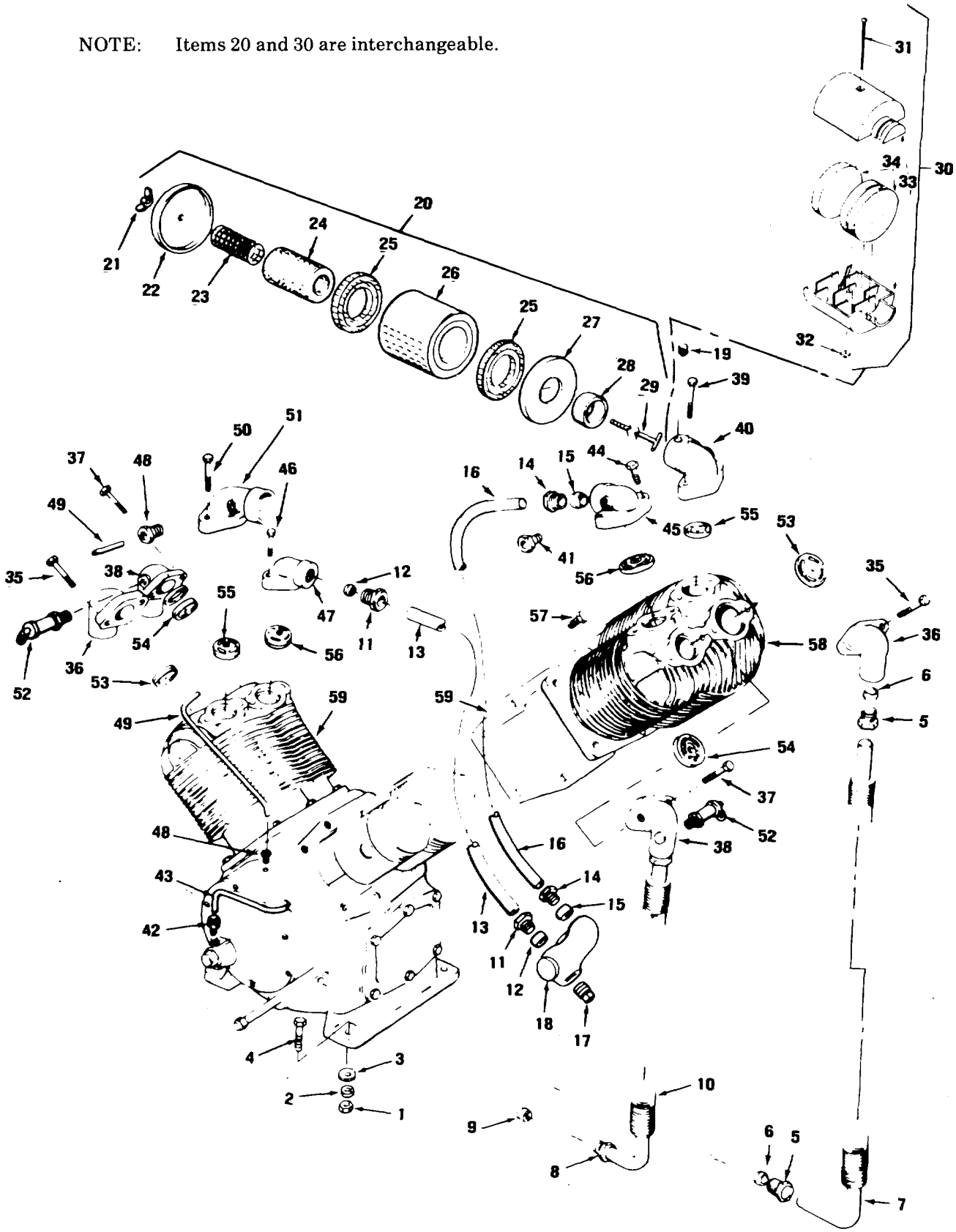

Figure 5-1. Air compressor assembly, cylinders, manifolds and related components, exploded view

1. Nut, hex
2. Washer, lock
3. Washer, flat
4. Capscrew
5. Nut, compression
6. Ferrule, compression
7. Tube, intercooler
8. Nut, compression
9. Ferrule, compression
10. Tube, intercooler
11. Nut, compression
12. Ferrule, compression
13. Tube, aftercooler
14. Nut, compression
15. Ferrule, compression
16. Tube, aftercooler
17. Plug, pipe
18. Manifold, aftercooler
19. Screw, set
20. Muffler assembly
21. Nut, wing
22. Cover, lower
23. Screen
24. Element
25. Separator
26. Plate
27. Cover, upper
28. Ferrule
29. T-bolt
30. Muffler assy
31. Screw Machine
32. Nut, plain, square
33. Intake, air
34. Filter element
35. Capscrew
36. Manifold, exhaust
37. Capscrew
38. Manifold, exhaust
39. Capscrew
40. Manifold, intake
41. Fitting, tube
42. Fitting, tube
43. Fitting, release
44. Capscrew
45. Manifold
46. Capscrew
47. Manifold
48. Fitting, tube
49. Tube, breather
50. Capscrew
51. Manifold, intake
52. Valve, interstage safety
53. Valve assembly
54. Valve assembly
55. Valve assembly
56. Valve assembly
57. Capscrew
58. Cylinder
59. Gasket, cylinder

Figure 5-1. Continued

(2) Refer to figure 5-5 and install the magnetic starter in reverse order of the removal procedure.

5-8. Pressure Switch

a. Removal and Disassembly.

(1) Refer to figure 5-7 and remove the pressure switch as shown.

(2) Refer to figure 5-8 and disassemble the pressure switch as shown.

b. Cleaning, Inspection and Repair.

(1) Use compressed air and remove all dust and dirt from pressure switch components, then wipe with a cloth dampened in cleansing solvent.

(2) Inspect the contact board contacts for pitting or burring.

(3) Inspect diaphragm for cracks or breaks and general condition.

(4) Inspect all threaded parts for damaged or defective threads.

(5) Repair or replace damaged or defective parts as necessary.

c. Reassembly and installation.

(1) Refer to figure 5-8 and reassemble the pressure switch.

(2) Refer to figure 5-7 and install pressure switch in reverse order of the removal procedure.

5-9. Air Pressure Adjustment

a. Start the air compressor (para 2-15) to determine adjustment. The pressure switch is preset by manufacture at 140 psi CUT-IN, and 175 psi CUT-OUT setting. If adjustment is necessary shut off the outside power source.

b. Remove cover from pressure switch.

c. To raise the CUT-IN and CUT-OUT pressure turn the pressure adjusting screw clockwise. Refer to figure 5-9.

d. To decrease the difference between the CUT-IN and CUT-OUT pressure, turn the differential screw counter-clockwise. Refer to figure 5-9.

CAUTION

When adjusting the differential screw, do not turn it farther than it will turn easily.

e. To increase the differential and maintain the same CUT-OUT pressure, turn the differential screw clockwise and, at the same time, turn the pressure-adjusting screw counterclockwise.

NOTE

If the differential is increased only by turning the differential screw clockwise, the CUT-IN pressure changes only slightly, and the CUTOUT pressure rises.

f. Turn on the outside power source to check the adjustment. To check the CUT-IN pressure, open the drain cock and allow air pressure to fall below 140 psi. Close the drain cock, and the compressor should start immediately.

g. Install the cover on the pressure switch.

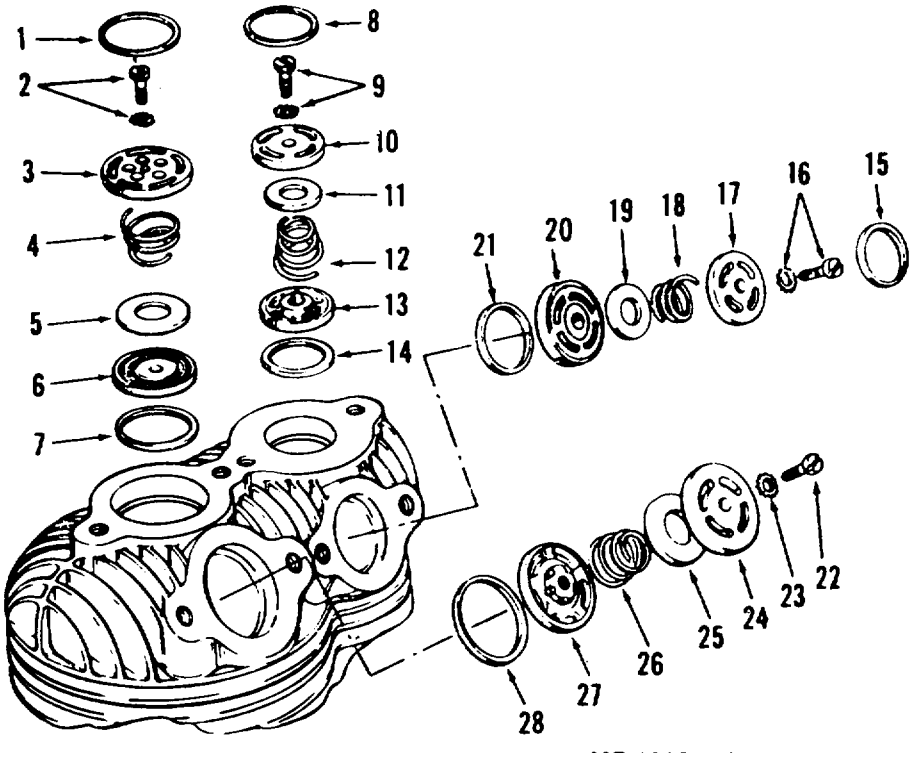

ME 4310-133-3512-14/5-2

1.	Gasket, valve	8.	Gasket, valve	15.	Gasket, valve	22.	Screw, machine
2.	Screw, machine	9.	Screw, machine	16.	Screw, machine	23.	Lockwasher
3.	Cage, exhaust	10.	Seat, intake	17.	Cage, exhaust	24.	Seat, intake
4.	Spring, valve	11.	Disc, valve	18.	Spring, valve	25.	Disc, valve
5.	Disc, valve	12.	Spring, valve	19.	Disc, valve	26.	Spring, valve
6.	Seat, exhaust	13.	Cage, intake	20.	Seat, exhaust	27.	Cage, intake
7.	Gasket, valve	14.	Gasket, valve	21.	Gasket, valve	28.	Gasket, valve

Figure 5-2. Compressor valve assemblies, disassembly and reassembly.

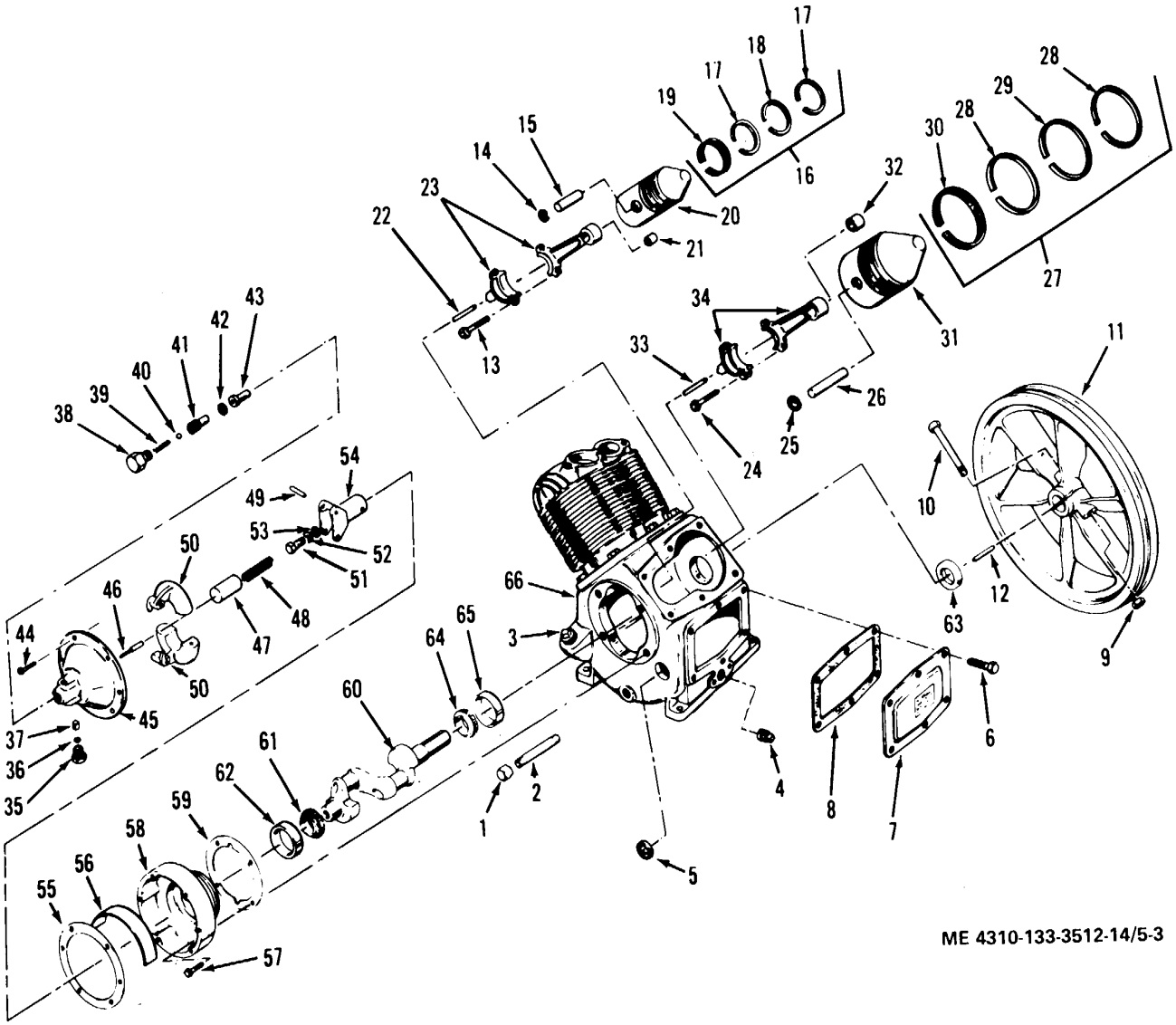

Figure 5-3. Crankcase, crankshaft, pistons, connecting rods and related assemblies, exploded view (Models HR10-8M-1 and 20-277M)

1. Cap, pipe
2. Nipple, pipe
3. Plug, pipe
4. Plug, pipe
5. Gage, oil level
6. Capscrew
7. Plate, hand hole
8. Gasket, handhole plate
9. Nut, hex
10. Capscrew
11. Flywheel
12. Key, machine
13. Bolt, connecting rod
14. Ring, piston pin
15. Pin, piston
16. Piston ring set
17. Ring, piston
18. Ring, piston
19. Ring, piston
20. Piston
21. Bearing, piston
22. Dipper, oil
23. Rod, connecting
24. Bolt, connecting rod
25. Ring, piston pin
26. Pin, piston
27. Piston ring set
28. Ring, piston
29. Ring, piston
30. Ring, piston
31. Piston
32. Bearing, piston
33. Dipper, oil
34. Rod, connecting
35. Body, unloader
36. Screen
37. Felt
38. Cap, release valve
39. Spring, release valve
40. Ball, release valve
41. Body, release valve
42. Gasket, release valve
43. Sleeve, plunger
44. Screw, machine
45. Cover, governor
46. Plunger, release valve
47. Sleeve, governor
48. Spring, governor
49. Pin, governor
50. Weight, governor
51. Capscrew
52. Lockwasher
53. Washer, flat
54. Spindle
55. Gasket, governor
56. Plate, baffle
57. Capscrew
58. Housing, governor
59. Gasket, governor
60. Crankshaft
61. Cone & roller, main bearing
62. Cup, main bearing
63. Seal, oil
64. Cone & roller, main bearing
65. Cup, main bearing
66. Crankshaft

Figure 5-3 - Continued

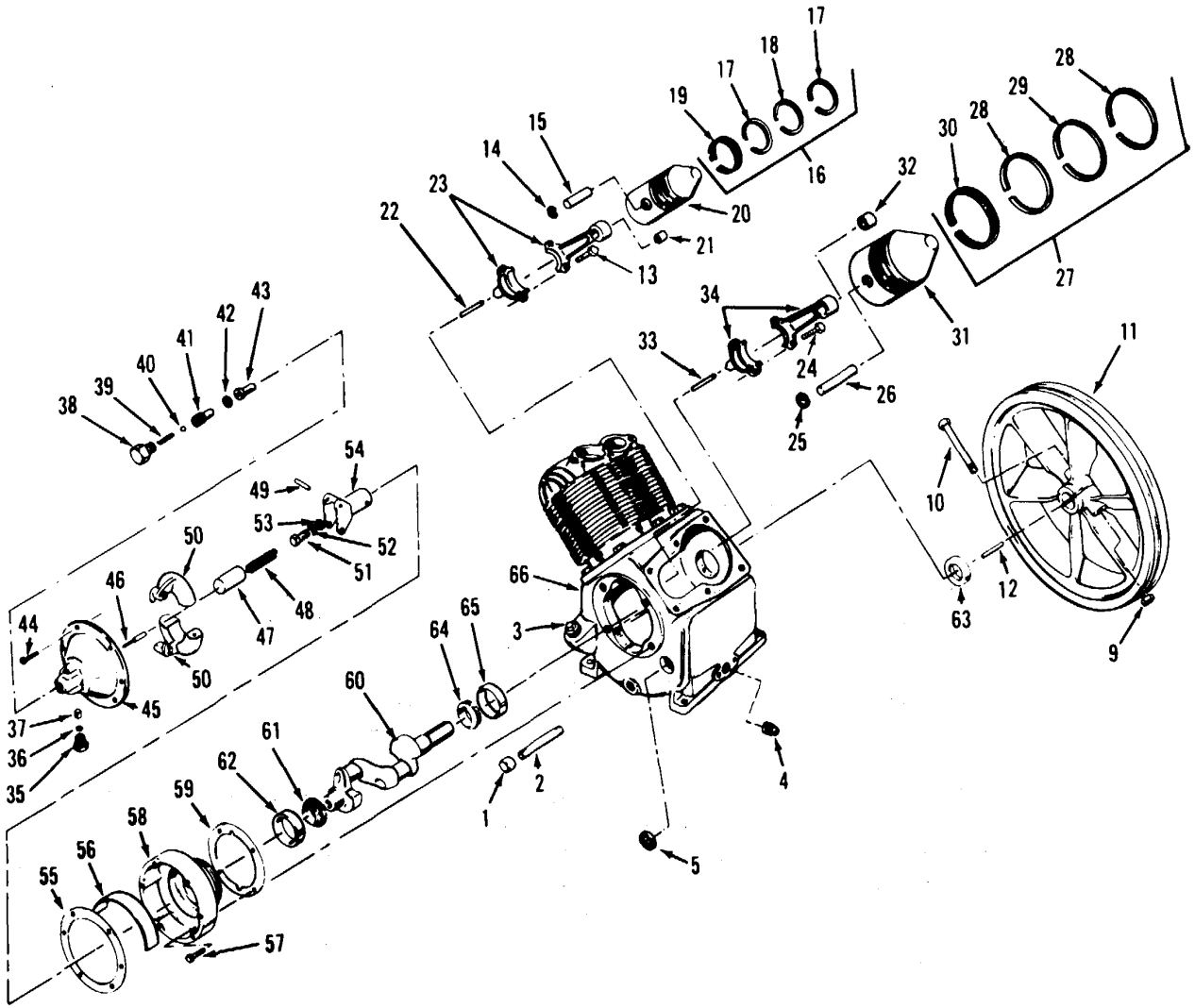

Figure 5-3.1. Crankcase, crankshaft, pistons, connecting rods and related components, exploded view. (Model HR 10-8M-4)

1. Cap, pipe
2. Nipple, pipe
3. Plug, pipe
4. Plug, pipe
5. Gage, oil level
6. Not used
7. Not used
8. Not used
9. Nut, hex
10. Capscrew
11. Flywheel
12. Key, machine
13. Bolt, connecting rod
14. Ring, piston pin
15. Pin, piston
16. Piston ring set
17. Ring, piston
18. Ring, piston
19. Ring, piston
20. Piston
21. Bearing, piston
22. Dipper, oil
23. Rod, connecting
24. Bolt, connecting rod
25. Ring, piston pin
26. Pin, piston
27. Piston ring at
28. Ring, piston
29. Ring, piston
30. Ring, piston
31. Piston
32. Bearing, piston
33. Dipper, oil
34. Rod, connecting
35. Body, unloader
36. Screen
37. Felt
38. Cap, release valve
39. Spring, release valve
40. Ball, release valve
41. Body, release valve
42. Gasket, release valve
43. Sleeve, plunger
44. Screw, machine
45. Cover, governor
46. Plunger, release valve
47. Sleeve, governor
48. Spring, governor
49. Pin, governor
50. Weight, governor
51. Capscrew
52. Lockwasher bearing
53. Washer, flat
54. Spindle
55. Casket, governor
56. Plate, baffle
57. Capscrew
58. Housing, governor
59. Gasket, governor
60. Crankshaft
61. Cone & roller, main bearing
62. Cup, main bearing
63. Seal, oil
64. Cone & roller, main
65. Cup, main bearing
66. Crankcase

Figure 5-3.1. - Continued.

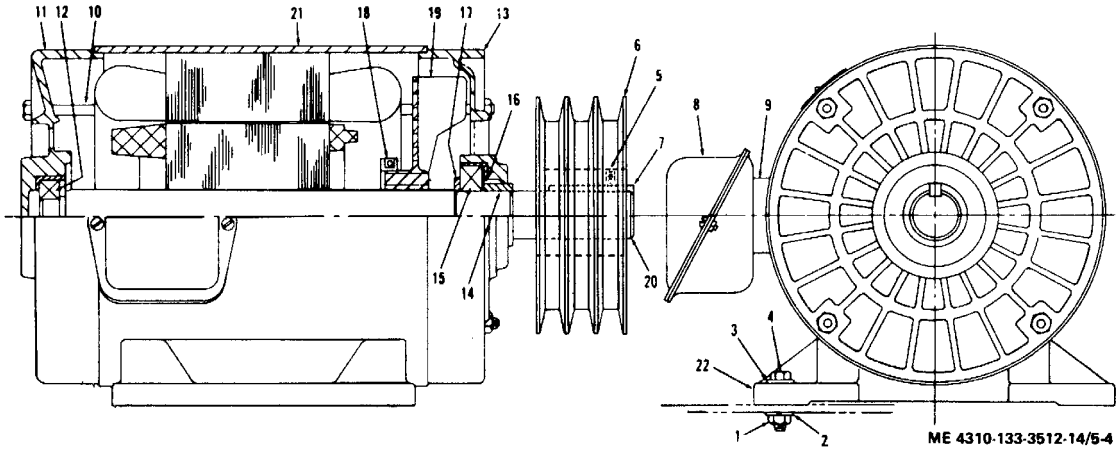

1. Nut, hex
2. Washer, lock
3. Washer, flat
4. Capscrew
5. Screw, set
6. Pulley
7. Key, machine
8. Box, conduit
9. Spacer, conduit box
10. Bolt, thru
11. End, shied, opposite
12. Bearing, opposite shaft end
13 End shield, shat end
14. Collar, bearing
15. Bearing, shaft end
16. Spring
17. Spacer
18. Clamp
19. Fan
20. Rotor
21. Stator with fame
22. Base

Figure 5-4. Electric Motor Assembly (Model HR10-8M-1)

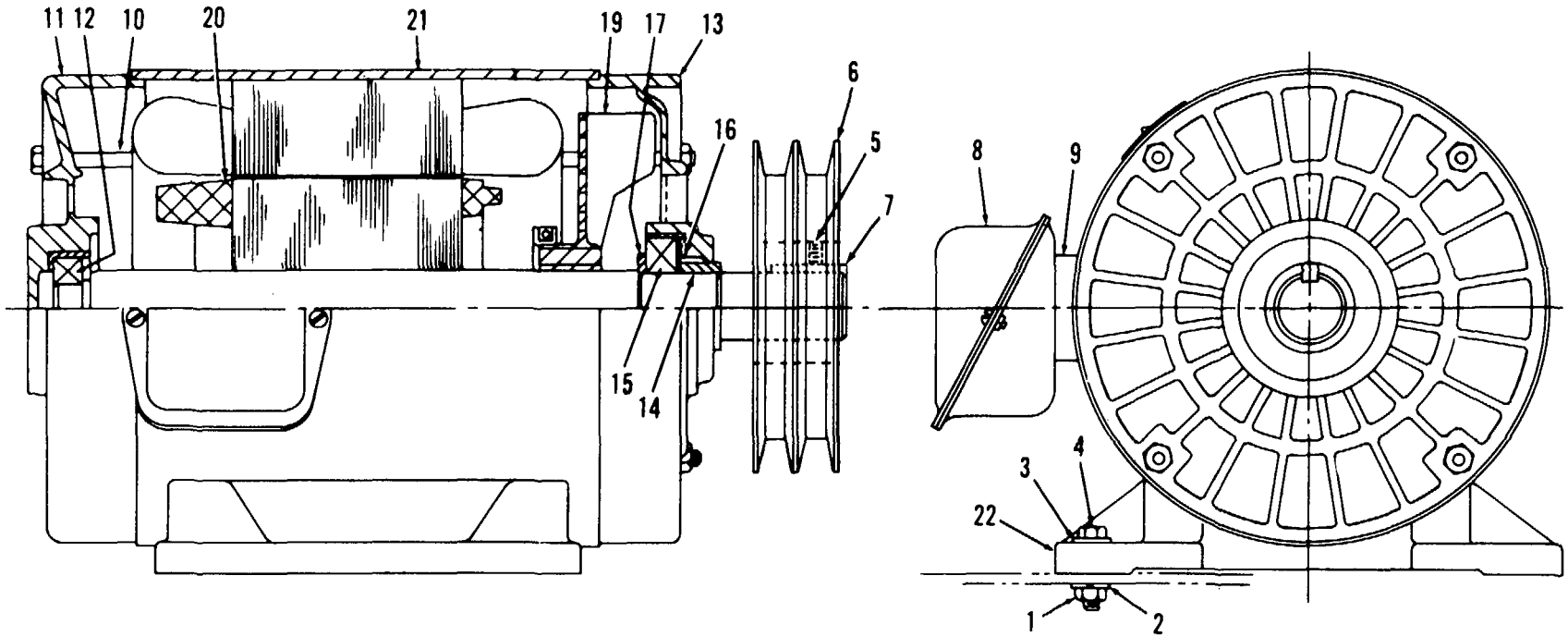

1.	Nut, hex	9.	Spacer, conduit box	16.	Spring
2.	Washer, lock	10.	Bolt, thru	17.	Spacer
3.	Washer, flat	11.	End, shield, opposite shaft end	18.	Clamp
4.	Capscrew	12.	Bearing, opposite shaft end	19.	Fan
5.	Screw, set	13.	End shield, shaft end	20.	Rotor
6.	Pulley	14.	Collar, bearing	21.	Stator with frame
7.	Key, machine	15.	Bearing, shaft end	22.	Base
8.	Box, conduit				

Figure 5-4.1. Electric motor assembly (Model HR10-8M-4)

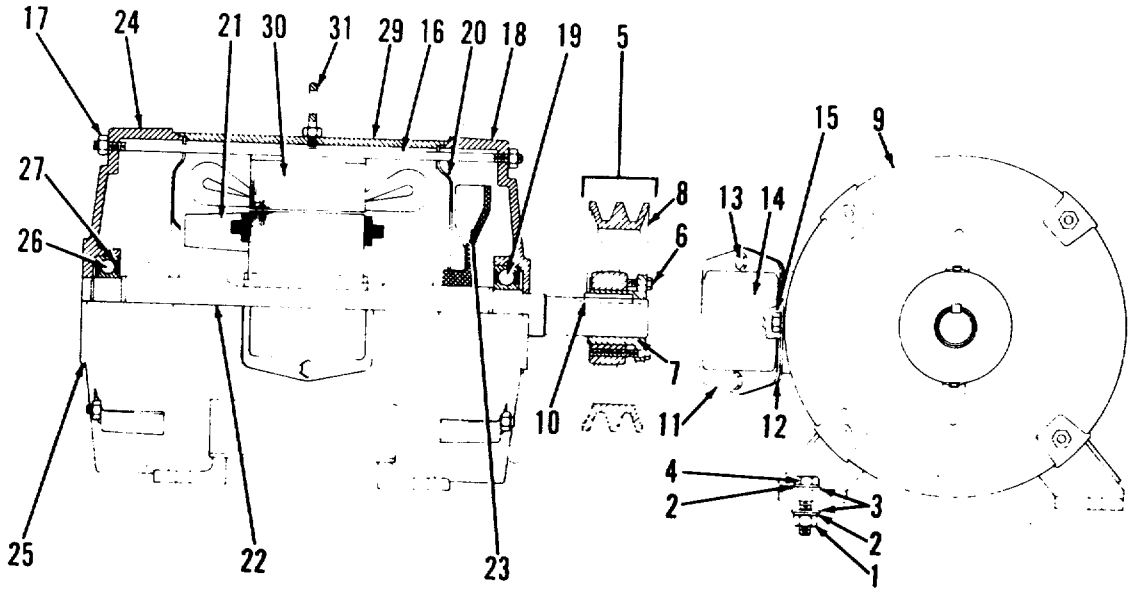

ME 4310-133-3512-14/C2.1

1. Nut, hex
2. Lockwasher
3. Flat washer
4. Capscrew
5. Pulley assembly
6. Capscrew
7. Bushing
8. Pulley
9. Motor
10. Key, pulley
11. Mounting half
12. Gasket
13. Screw, self-locking
14. Cover
15. Screw, self-locking
16. Rod, threaded
17. Nut, hex
18. Bracket, front
19. Bearing
20. Baffle
21. Rotor assembly
22. Shaft, rotor
23. Fan, rotor
24. Bracket, rear
25. Plug, drain
26. Bearing
27. Spring, loading
28. Body assembly
29. Frame assembly
30. Stator assembly
31. Bolt, eye

Figure 5-4.2. C&H electric motor assembly

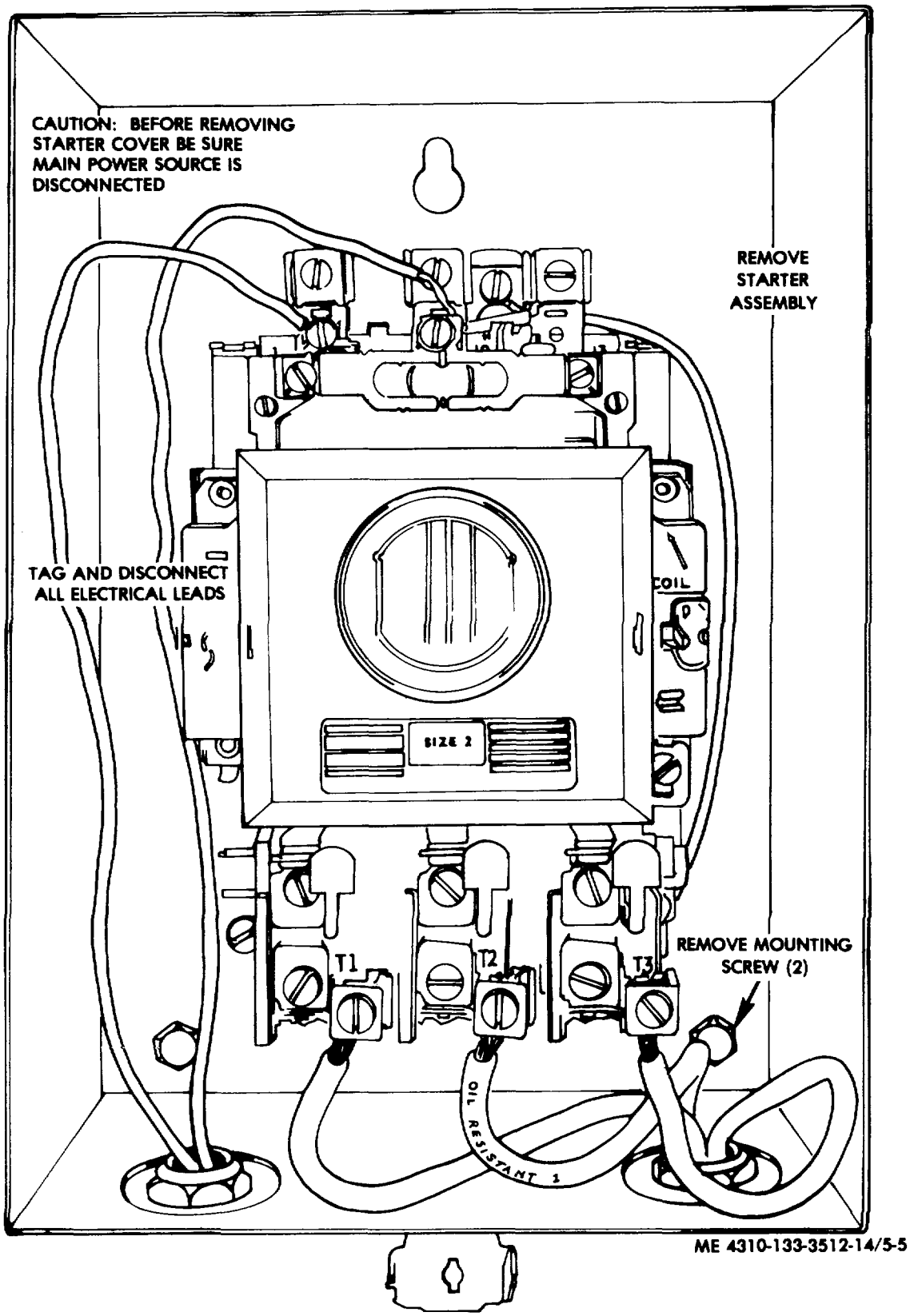

Figure 5-5. Champion pneumatic magnetic starter removal (shown with cover removed)

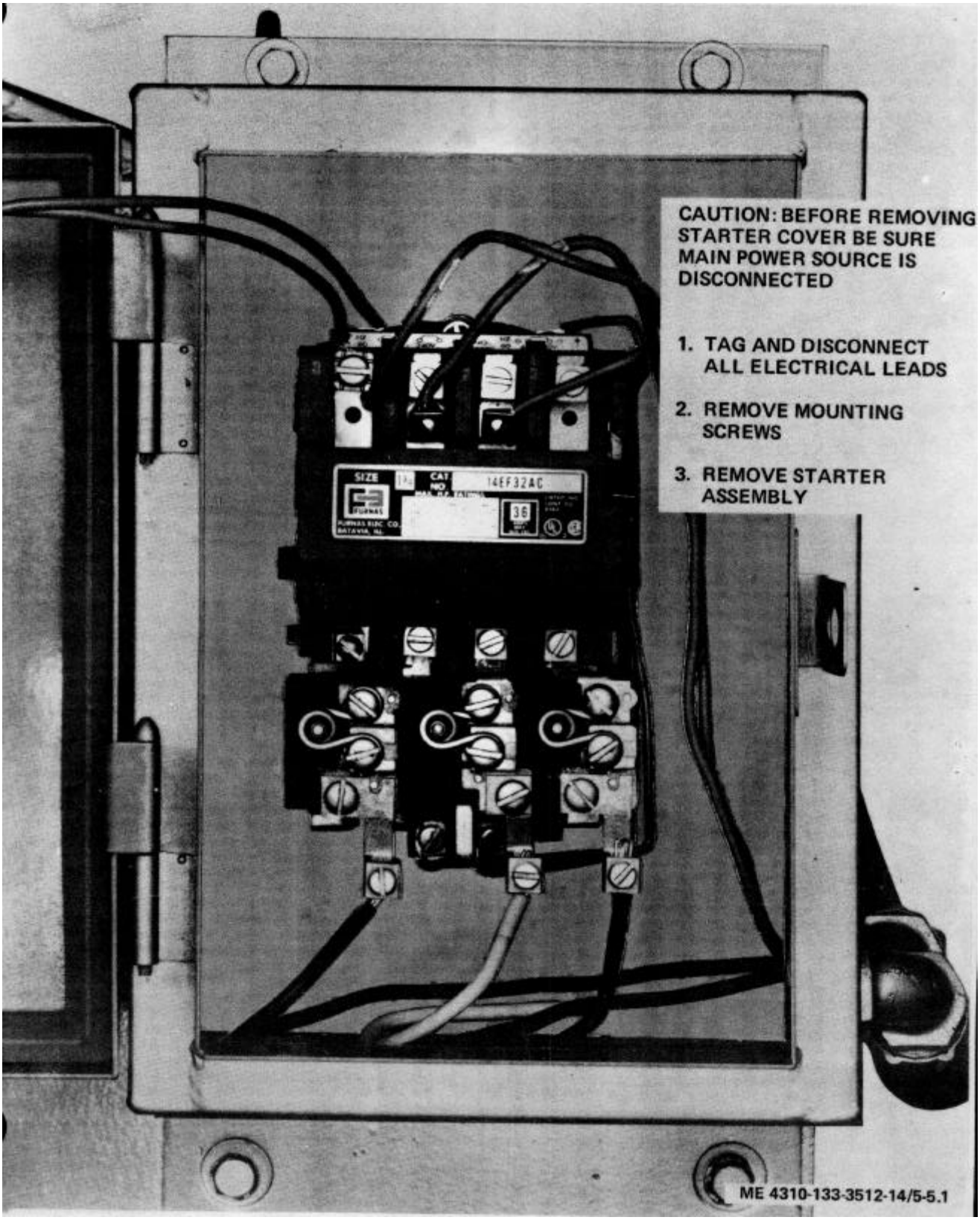

Figure 5-5.1. C&H magnetic starter removal (shown with cover removed)

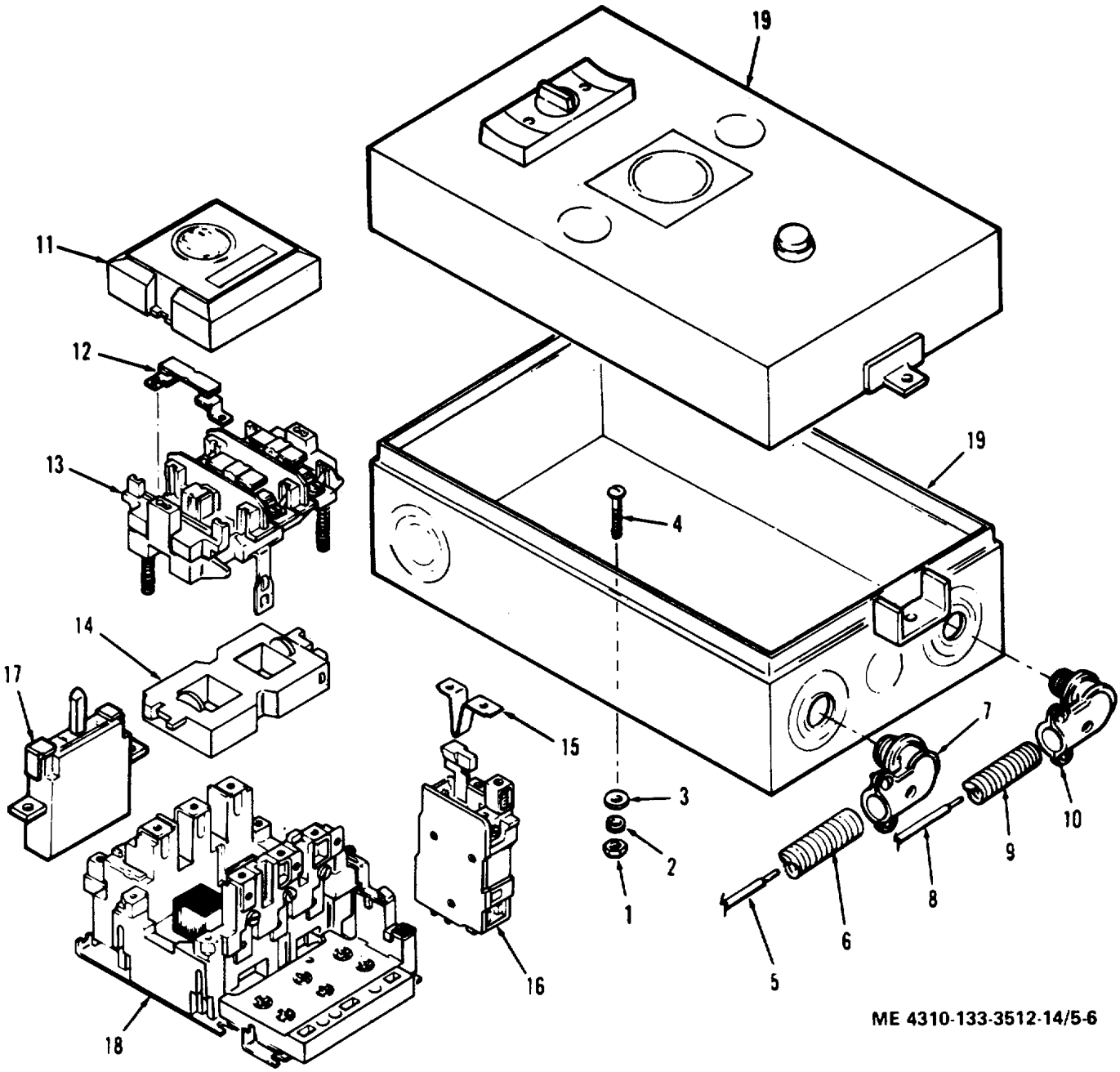

1.	Nut, hex	6.	Conduit, electrical	11.	Cap, cover	16.	Relay, overload
2.	Washer, lock	7.	Connector	12.	Contact, main	17.	Switch, on-off
3.	Washer, flat	8.	Wire, electrical	18.	Carrier, contact	18.	Interlock assembly
4.	Capscrew	9.	Conduit, electrical	14.	Coil, operating	19.	Enclosure, starter
5.	Wire, electrical	10.	Connector	15.	Coil, heater		

Figure 5-6. Champion pneumatic starter assembly, exploded view.

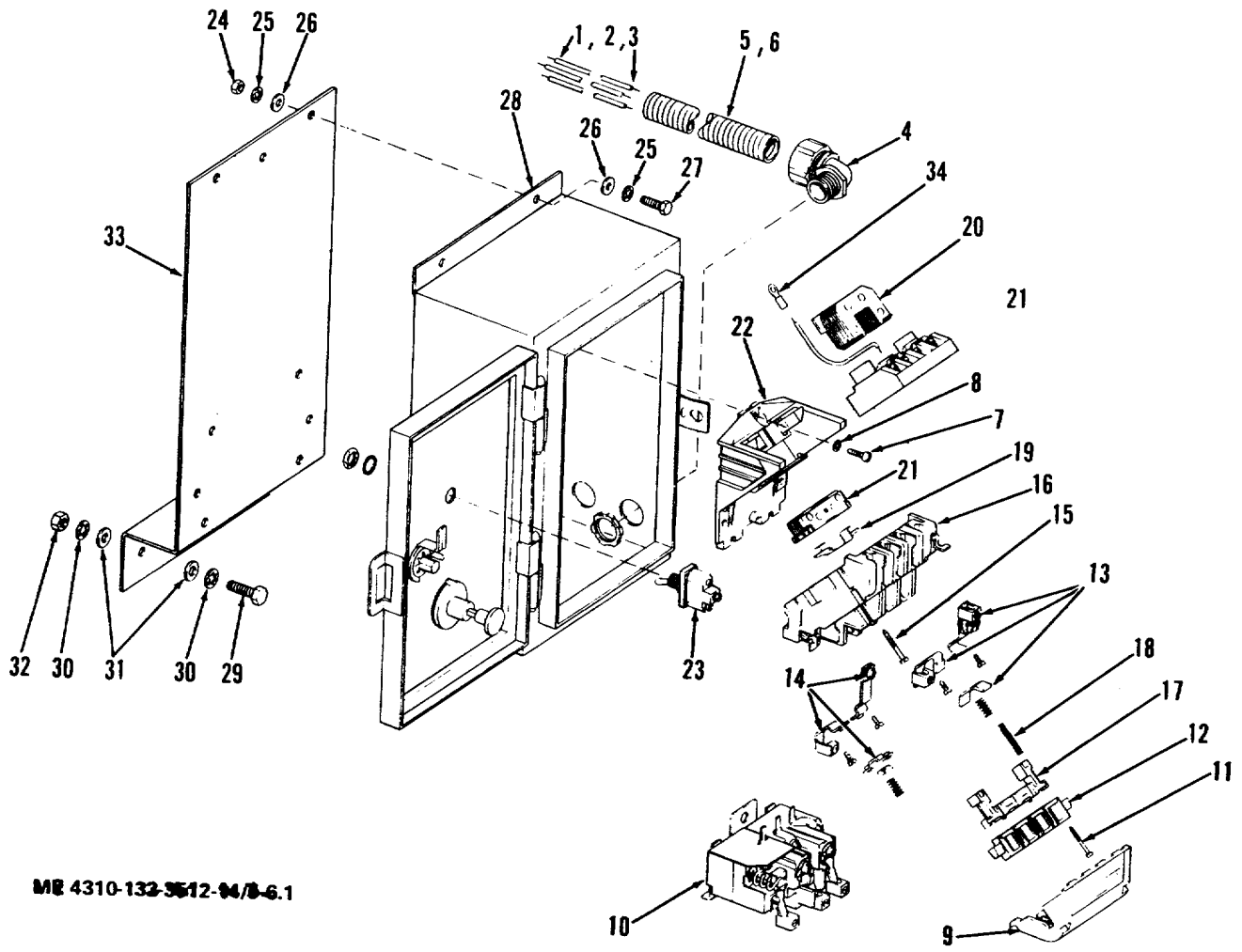

1. Wire, black
2. Wire, white
3. Wire, red
4. Connector
5. Conduit
6. Conduit
7. Screw, machine
8. Lockwasher
9. Cover, contact board
10. Relay, overload
11. Screw
12. Cross arm
13. Contacts & spring, power pole
14. Contacts & spring, interlock pole
15. Screw
16. Contact board
17. Cross arm base
18. Spring
19. Armature clip
20. Magnet & armature
21. Magnetic coil
22. Base
23. Toggle switch
24. Nut, hex
25. Lockwasher
26. Washer, flat
27. Capscrew
28. Enclosure
29. Capscrew
30. Lockwasher
31. Washer, flat
32. Nut, hex
33. Bracket
34. Terminal, lug

Figure 5-6.1. C&H starter assembly, exploded view.

Figure 5-7. Pressure switch assembly removal (shown with cover removed).

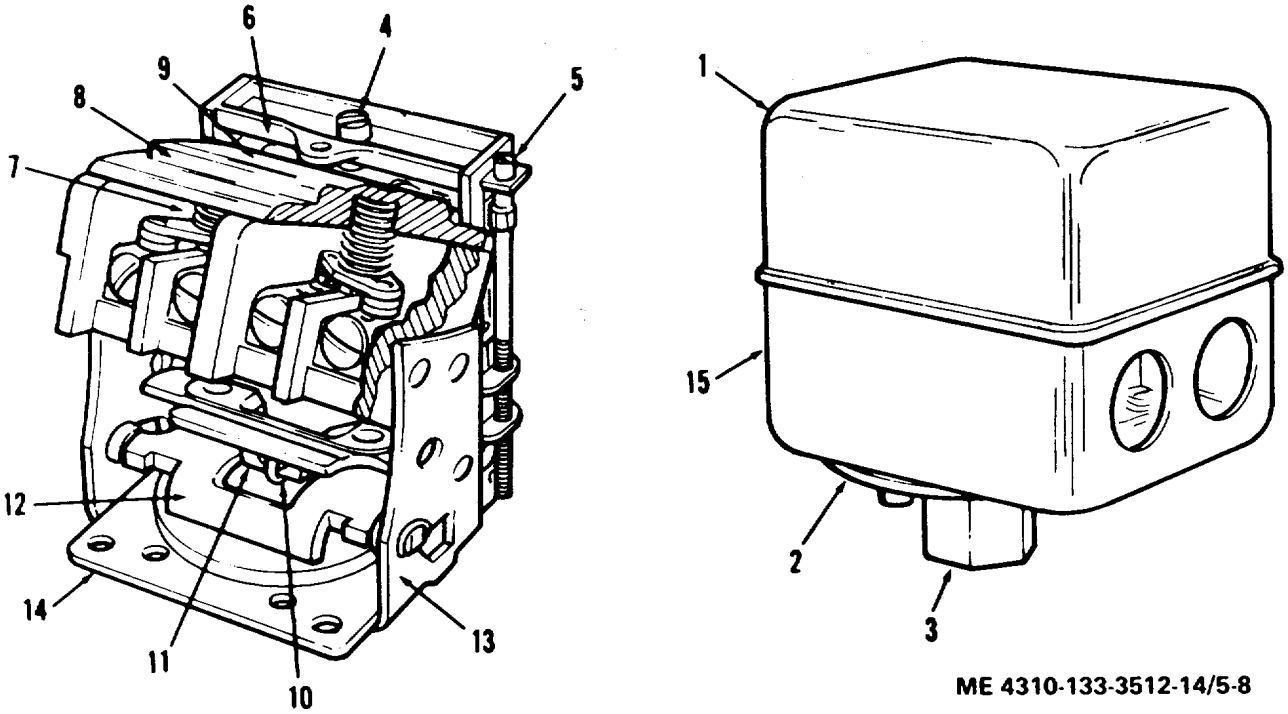

1. Cover, enclosurer
2. Diaphragm
3. Spring, pressure-adjusting
4. Screw, pressure-adjusting
5. Screw & nut, differential adjusting
6. Bar, top
7. Contact board assembly
8. Spring, equalizer
9. Spring, main
10. Spring, toggle
11. Toggle
12. Lever
13. Plate, diaphragm
14. Frame assembly
15. Enclosure

Figure 5-8. Pressure switch assembly..

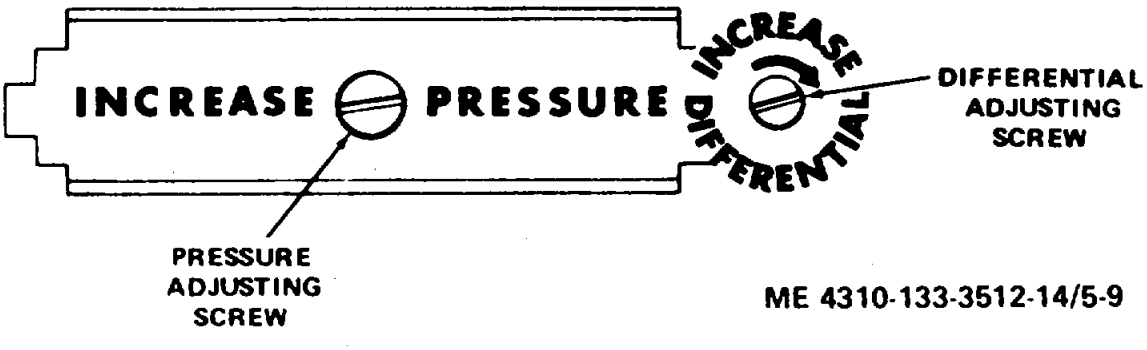

Figure 5-9. Pressure switch adjusting and differential screws.

APPENDIX A

REFERENCES

A-1. Fire Protection

TM 5-4200-200-10	Hand Portable Fire Extinguishers Approved for Army Users

A-2. Lubrication

LO 5-4310-349-12	Lubrication Order
C91001L	Fuel, Lubricants, Oils and Waxes

A-3. Painting

TM 43-0139	Painting Instructions for Field Use

A-4. Maintenance

TM 38-750	The Army Maintenance Management System (TAMMS)
TB 742-93-1	Inspection and Text of Air and Other Gas Compressors

A-5. Shipment and Storage

TB 740-93-2	Preservation of USAMEC Mechanical Equipment for Shipment and Storage.
TM 740-90-1	Administrative Storage of Equipment.

A-6. Destruction of Army Material

TM 750-244-3	Procedures for Destructions of Equipment to Prevent Enemy Use.

APPENDIX B

MAINTENANCE ALLOCATION CHART

Section I. INTRODUCTION

B-1. General

a. This section provides a general explanation of all maintenance and repair functions authorized at various maintenance levels.

b. Section II designates overall responsibility for the performance of maintenance functions on the identified end item or component and the work measurement time required to perform the functions by the designated maintenance level. The implementation of the maintenance functions upon the end item or component will be consistent with the assigned maintenance functions.

c. Section III lists the special tools and test equipment required for each maintenance function as referenced from Section II. (Not applicable).

d. Section IV contains supplemental instructions or explanatory notes for a particular maintenance function (Not applicable).

B-2. Explanation of Columns in Section II

a. Column (1), Group Number. A number is assigned to each group in a top down breakdown sequence. The applicable groups are listed on the MAC in disassembly sequence beginning with the first group removed.

b. Column (2), Assembly Group. This column contains a brief description of the components of each numerical group.

c. Column (3), Maintenance Functions. This column lists the various maintenance functions (A-through K). The lowest maintenance level authorized to perform these functions is indicated by a symbol in the appropriate column. Work measurement time standards (the active repair time required to perform the maintenance function) are shown directly below the symbol identifying the maintenance level. The symbol designations for the various maintenance levels are as follows:

C - Operator or crew
0 - Organizational maintenance
F - Direct support maintenance

The maintenance functions are defined as follows:

A - Inspect: To determine serviceability of an item by comparing its physical, mechanical, and electrical characteristics with established standards through examination.

B - Test: To verify serviceability and detect incipient failure by measuring the mechanical or electrical characteristics of an item and comparing those characteristics with prescribed standards.

C - Service: Operations required periodically to keep an item in proper operating condition, i.e., to clean, to preserve, to drain, to paint, or to replenish fuel, lubricants, hydraulic fluids, or compressed air supplies.

D - Adjust: To maintain within prescribed limits, by bringing into proper or exact position, or by setting the operating characteristics to specified parameters.

E - Aline: To adjust specified variable elements of an item to bring about optimum or desired performance.

F - Calibrate: To determine and Pause corrections to be made or to be adjusted on instruments or test measuring and diagnostic equipments used in precision measurement. Consists of comparisons of two instruments, one of which is a certified standard of known accuracy, to detect and adjust any discrepancy in the accuracy of the instrument being compared.

G - Install: The act of emplacing, seating, or fixing into position an item, part, or module (component or assembly) in a manner to allow the proper functioning of an equipment or system.

H - Replace: The act of substituting a serviceable like type part, subassembly, or module (component or assembly) for an unserviceable counterpart.

I - Repair: The application of maintenance services (inspect, test, service, adjust, align, calibrate, or replace) or other maintenance actions (welding, grinding, riveting, straightening, facing, remaching or resurfacing) to restore serviceability to an item by correcting specific damage, fault, malfunction, or failure in a part, subassembly modure (component or assembly), end item, or system.

J - Overhaul: That maintenance effort (service/action) necessary to restore an item to a completely serviceable/operational condition as prescribed by maintenance standards (i.e., DMWR) in appropriate technical publication. Overhaul is normally the highest degree of maintenance performed by the Army. Overhaul does not normally return an item to like new condition.

K - Rebuild: Consists of those services/actions necessary for the restoration of unserviceable equipment to a like new condition in accordance with original manufacturing standards. Rebuild is the highest degree of materiel maintenance applied to Army equipment. The rebuild operation includes the act of returning to zero those age measurement (hours/miles, etc.) considered in classifying Army equipment/components.

d. Column (4), Tools and Equipment. This column is provided for referencing by code the special tools and test equipment (sec. III), required to perform the maintenance functions (sec. II).

e. Column (5), Remarks. This column is provided for referencing by code the remarks (sec. IV) pertinent to the maintenance functions.

Section II. Maintenance Allocation Chart

(1) GROUP NUMBER	(2) ASSEMBLY GROUP	(3) MAINTENANCE FUNCTIONS A INSPECT	B TEST	C SERVICE	D ADJUST	E ALIGN	F CALIBRATE	G INSTALL	H REPLACE	I REPAIR	J OVERHAUL	K REBUILD	(4) TOOLS AND EQUIPMENT	(5) REMARKS
	01 Group, Guard Belt.....													
0101	Belt Guard	C 0.1							0 0.5					
	V-Belts.....	C 0.5		0 0.8					0 0.9					
	02 Group, Electric Motor and Related Components.....													
0201	Electric Motor.....			C 0.3					0 1.0	F 4.0				
0202	Rotor	F 0.1							F 2.0					
0203	Starter	F 0.1							F 1.0	F 1.0				
0204	Pressure Switch.....				F 0.5				F 0.8					
	03 Group, Air Compressor Assembly.....													
0302	Air Compressor.....	C 0.3						O 0.4	O 1.5	F 4.0	H 8.0			
0303	Valve, Pilot				C 0.3				0 0.5					
0304	Filter, Inlet			C 0.3					0 0.2					
0305	Rod Assembly	F 0.2							F 3.0					
0306	Crankshaft.....	F 0.2							F 3.0					
0401	04 Group, Receiver Receiver Tank and Related Parts, Air	C 0.2		C 0.2					F 8.0					

APPENDIX C

REPAIR PARTS AND SPECIAL TOOLS LIST

Section I. INTRODUCTION

C-1. Scope. This manual lists spares and repair parts; special tools; special test, measurements, and diagnostic equipment (TMDE), and other special support equipment required for performance of organizational, direct support, and general support of the Air Compressor. It authorizes the requisitioning and issue of spares and repair parts as indicated by the source and maintenance codes.

C-2. General. This Repair Parts and Special Tools List is divided into the following sections:

a. Section II. Repair Parts List. A list of spares and repair parts authorized for use in the performance of maintenance. The list also includes parts which must be removed for replacement of the authorized parts. Parts lists are composed of functional groups in ascending numeric sequence, with the parts in each group listed in figure and item number sequence. Bulk materials are listed in NSN sequence.

b. Section III. Special Tools List. Not applicable.

c. Section IV. National Stock Number and Part Number Index. A list, in National Item Identification Number (NIIN) sequence, of all National Stock Numbers (NSN) appearing in the listings, followed by a list in alphanumeric sequence of all part numbers appearing in the listings. National stock numbers and part numbers are cross- referenced to each illustration figure and item number appearance.

C-3. Explanation of Columns.

a. Illustration. This column is divided as follows:

(1) Figure Number. Indicates the figure number of the illustration on which the item is shown.

(2) Item Number. The number used to identify item called out in the illustration.

b. Source, Maintenance and Recoverability (SMR) Codes.

(1) Source Code. Source codes indicate the manner of acquiring support items for maintenance, repair or overhaul of end items. Source codes are entered in the first and second positions of the Uniform SMR Code format as follows:

Code	Definition
PA	Item procured and stocked for anticipated or known usage.
PB	Item procured and stocked for insurance purposes because essentiality dictates that a minimum quantity be available in the supply system.
PC	Item procured and stocked and which otherwise would be coded PA except that it is deteriorative in nature.
PD	Support item, excluding support equipment, procured for initial issue or outfitting and stocked only for subsequent or additional initial issues or outfittings. Not subject to automatic replenishment.
PE	Support equipment procured and stocked for initial issue or outfitting to specified maintenance repair activities.
PF	Support equipment which will not be stocked but which will be centrally procured on demand.
PG	Item procured and stocked to provide for sustained support for the life of the equipment. It is applied to an item peculiar to the equipment which, because of probable discontinuance or shutdown of production facilities, would prove uneconomical to reproduce at a later time.
KD	An item of a depot overhaul/repair kit and not purchased separately. Depot kit defined as a kit that provides items required at the time of overhaul or repair.

Code	Definition
KF	An item of a maintenance kit and not purchased separately. Maintenance kit defined as a kit that provides an item that can be replaced at organizational or intermediate levels of maintenance.
KB	Item included in both a depot overhaul/repair kit and a maintenance kit.
MO	Item to be manufactured or fabricated at the organizational level.
MF	Item to be manufactured or fabricated at the direct support maintenance level.
MH	Item to be manufactured or fabricated at the general support maintenance level.
MD	Item to be manufactured or fabricated at the depot maintenance level.
AO	Item to be assembled at organizational level.
AF	Item to be assembled at the direct support maintenance level.
AH	Item to be assembled at general support maintenance level.
AD	Item to be assembled at depot maintenance level.
XA	Item is not procured or stocked because the requirements for the item will result in the replacement of the next higher assembly.
XB	Item is not procured or stocked. If not available through salvage, requisition.
XC	Installation drawing, diagram, instruction sheet, field service drawing, that is identified by manufacturer's part number.
XD	A support item that is not stocked. When required, item will be procured through normal supply channels.

NOTE

Cannibalization or salvage may be used as a source of supply for any items source coded above except those coded XA and aircraft support items as restricted by AR 700-42.

(2) Maintenance Code. Maintenance codes are assigned to indicate the levels of maintenance authorized to USE and REPAIR support items. The maintenance codes are entered in the third and fourth positions of the Uniform SMR Code format as follows:

(a) The maintenance code entered in the third position will indicate the lowest maintenance level authorized to remove, replace, and use the support item. The maintenance code entered in the third position will indicate one of the following levels of maintenance:

Code	Definition
C	Crew or operator maintenance performed within organizational maintenance.
O	Support item is removed, replaced, used at the organizational level.
F	Support item is removed, replaced, used at the direct support level.
H	Support item is removed, replaced, used at the general support level.
D	Support items that are removed, replaced, used at depot, mobile depot, or specialized repair activity only.

(b) The maintenance code entered in the fourth position indicates whether the item is to be repaired and identifies the lowest maintenance level with the capability to perform complete repair (i.e., all authorized maintenance functions). This position will contain one of the following maintenance codes:

Code	Application/Explanation
O	The lowest maintenance level capable of complete repair of the support item is the organizational level.
F	The lowest maintenance level capable of complete repair of the support item is the direct support level.
H	The lowest maintenance level capable of complete repair of the support item is the general support level.
D	The lowest maintenance level capable of complete repair of the support item is the depot level.
L	Repair restricted to designated Specialized Repair Activity.
Z	Nonreparable. No repair is authorized.
B	No repair is authorized. The item may be reconditioned by adjusting, lubricating, etc., at the user level. No parts or special tools are procured for the maintenance of this item.

(3) Recoverability Code. Recoverability codes are assigned to support items to indicate the disposition action on unserviceable items. The recoverability code is entered in the fifth position of the Uniform SMR Code format as follows:

Code	Definition
Z	Nonreparable item. When unserviceable, condemn and dispose at the level indicated in position 3.
O	Reparable item. When uneconomically reparable, condemn and dispose at organizational level.
F	Reparable item. When uneconomically reparable, condemn and dispose at the direct support level.
H	Reparable item. When uneconomically reparable, condemn and dispose at the general support level.
D	Reparable item. When beyond lower level repair capability, return to depot. Condemnation and disposal not authorized below depot level.
L	Reparable item. Repair, condemnation, and disposal not authorized below depot/specialized repair activity level.
A	Item requires special handling or condemnation procedures because of specific reasons (i.e., precious metal content, high dollar value, critical material or hazardous material). Refer to appropriate manuals/directives for specific instructions.

c. National Stock Number. Indicates the National stock number assigned to the item and which will be used for requisitioning purposes.

d. Part Number. Indicates the primary number used by the manufacturer which controls the design and characteristics of the item by means of its engineering drawings, specifications standards, and inspection requirements to identify an item or range of items.

NOTE

When a stock numbered item is requisitioned, the repair part received may have a different part number than the part being replaced.

e. Federal Supply Code for Manufacturer (FSCM). The FSCM is a 5-digit numeric code listed in SB 708-42 which is used to identify the manufacturer, distributor, or Government agency, etc.

f. Description. Indicates the Federal item name and, if required, a minimum description to identify the item. Items that are included in kits and sets are listed below the name of the kit or set, with the quantity of each item in the kit or set indicated in the quantity incorporated in unit column. When the part to be used differs between serial numbers of the same model, the effective serial numbers are shown as the last line of the description. In the Special Tools List, the initial basis of issue (BOI) appears as the last line in the entry for each special tool, special TMDE, and other special support equipment. When density of equipments supported exceeds density spread indicated in the basis of issue, the total authorization is increased accordingly.

g. Unit of Measure (U/M). Indicates the standard of the basic quantity of the listed item as used in performing the actual maintenance function. This measure is expressed by a two-character alphabetical abbreviation (e.g., ea, in., pr, etc.). When the unit of measure differs from the unit of issue, the lowest unit of issue that will satisfy the required units of measure will be requisitioned.

h. Quantity Incorporated in Unit. Indicates the quantity of the item used in the breakout shown on the illustration figure, which is prepared for a functional group, subfunctional group, or an assembly. A "V" appearing in this column in lieu of a quantity indicates that no specific quantity is applicable (e.g., shims, spacers, etc.).

C-4. Special Information.

a. Usable on codes are shown in the description column. Uncoded items are applicable to all models. Identification of the usable codes in this publication are:

Code	Used on
BXC	Champion Model HR10-8M-1
CVW	Champion Model HR10-8M-4
CYE	C&H Model 20-277M

b. Some items are indented to show that they are a component or components of the items under which they are indented.

c. Repair parts kits and gasket sets appear as the last entries in the repair parts listing for the figure in which its parts are listed as repair parts.

C-5. How to Locate Repair Parts.

a. When National Stock Number or Part Number is Unknown:

(1) First. Using the table of contents, determine the functional group within which the repair part belongs. This is necessary since illustrations are prepared for functional groups, and listings are divided into the same groups.

(2) Second. Find the illustration covering the functional group to which the repair part belongs.

(3) Third. Identify the repair part on the illustration and note the illustration figure and item number of the repair part.

(4) Fourth. Using the Repair Parts Listing, find the figure and item number noted on the illustration.

b. When the National Stock Number or Part Number is Known.

(1) First. Using the Index of National Stock Numbers and Part Numbers, find the pertinent National stock number or part number. This index is in NIIN sequence followed by a list of part numbers in alphanumeric sequence, cross-referenced to the illustration figure number and item number.

(2) Second. After finding the figure and item number, locate the figure and item number in the repair parts list.

C-6. Abbreviations.

(Not applicable).

Page C-5 is blank

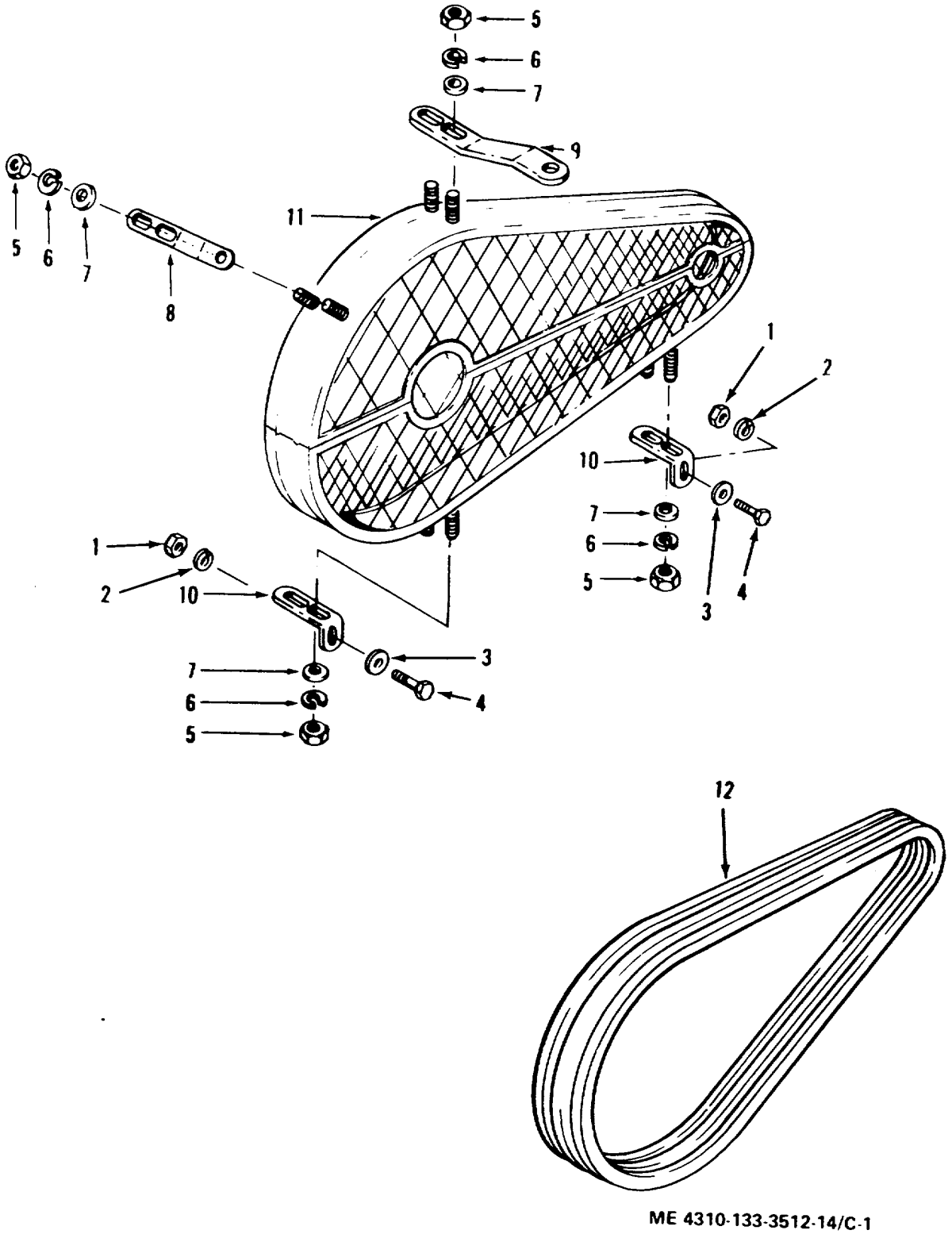

Figure C-1. Drive belts guard assembly, exploded view. (Champion Models HR10-8M-1 and HR10-8M-4)

(1) ILLUSTRATION (a) FIG NO.	(b) ITEM NO.	(2) SMR CODE	(3) NATIONAL STOCK NUMBER	(4) FSCM	(5) PART NUMBER	(6) DESCRIPTION USABLE ON CODE	(7) U/M	(8) QTY INC IN UNIT
						GROUP 01 BELT GUARD ASSEMBLY		
C1	1	PAOZZ	5310-00-448-7227	11568	M939A	NUT, PLAIN, HEXAGON BELT GUARD MTG .....BXC, CVW	EA	2
C1	2	PAOZZ	5310-01-009-7208	11568	M919A	WASHER, LOCK: BELT GUARD MTG .....BXC, CVW	EA	2
C1	3	PAOZZ	5310-00-230-7725	11568	M905A	WASHER, FLAT-1/4 INCH SCREW SIZE: BELT GUARD MTGBXC,CVW	EA	2
C1	4	PAOZZ	5305-00-068-0502	11568	M696	SCREW, CAP, HEX HEAD, ¼-20 UNC X ¾ IN.: BELT GUARD MTG.. BXC, CVW	EA	2
C1		XBOOO		11568	Z650	GUARD ASSY, BELT .....BXC, CVW	EA	1
C1	5	PAOZZ	5310-01-017-3842	11568	M935A	.NUT, HEX, 5/16 UNC GUARD BRACKET MTG.....BXC, CVW	EA	8
C1	6	XDOZZA		96906	MS35338-45	.WASHER, LOCK, 5/16 IN. GUARD BRKT MTG .....BXC, CVW	EA	8
C1	7	PAFZZ	5310-00-230-7342	11568	M912A	.WASHER, FLAT GUARD BRACKET MTG .....BXC, CVW	EA	8
C1	8	XBOZZ		11568	M864	.BRACKET.....BXC, CVW	EA	1
C1	9	XBOZZ		11568	M1566	.BRACKET.....BXC, CVW	EA	1
C1	10	XBOZZ		11568	M865	.BRACKET.....BXC, CVW	EA	2
C1	11	XBOZZ		11568	M1628	.GUARD BELT.....BXC, CVW	EA	1
C1	12	PAOZZ	3030-00-529-0474	74851	881	V-BELT ..... BXC	EA	3
C1	13	PAOZZ	3030-00-529-0474	74851	B81	V-BELT ..... CVW	EA	2

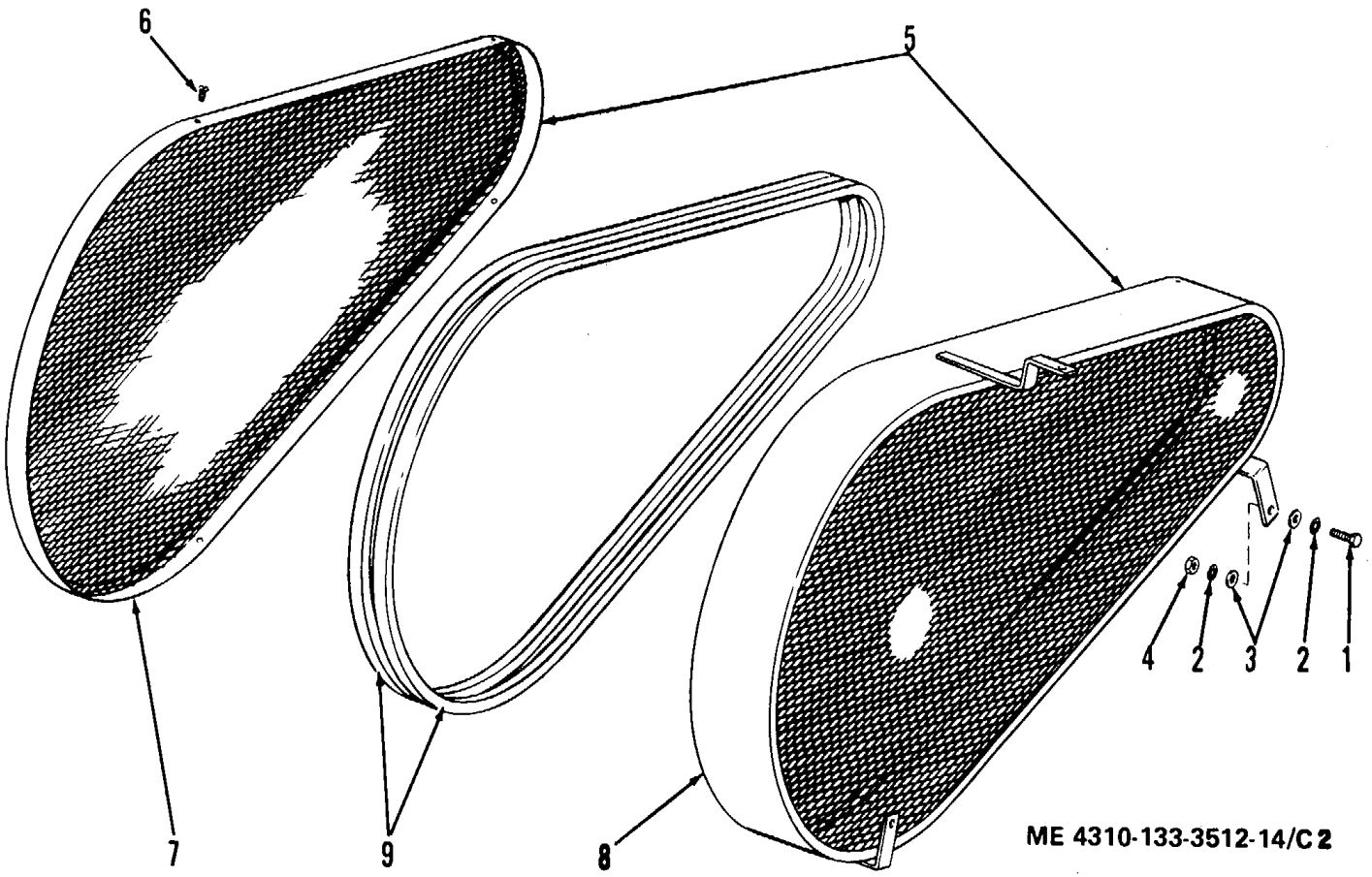

Figure C-2. Drive belt guard assembly, exploded view. (C. & H. Model 20-277M)

(1) ILLUSTRATION (a) FIG NO.	(b) ITEM NO.	(2) SMR CODE	(3) NATIONAL STOCK NUMBER	(4) FSCM	(5) PART NUMBER	(6) DESCRIPTION USABLE ON CODE	(7) U/M	(8) QTY INC IN UNIT
C2	1	PAOZZ	5306-00-225-8499	96906	MS90725-34	SCREW, CAP, HEXAGON HEAD, 5/16-18X1 IN. :BELT GUARD MTG..... CYE	EA	4
C2	2	PAOZZ	5310-00-407-9566	96906	MS35338-45	WASHER, LOCK: BELT GUARD MTG ..... CYE	EA	4
C2	3	PAOZZ	5310-00-081-4219	96906	MS27183-12	WASHER, FLAT: BELT GUARD MTG ..... CYE	EA	4
C2	4	PAOZZ	5310-00-880-7744	96906	MS51967-5	NUT, PLAIN HEXAGON: BELT GUARD MTG ..... CYE	EA	4
C2	5	XBOZZ		04718	88-462	GUARD ASSY, BELT ..... CYE	EA	1
C2	6	PAOZZ	5305-00-984-6193	96906	MS35206-245	.SCREW, MACHINE: COVER MTG..... CYE	EA	4
C2	7	XAOZZ		04718	88-462A	.COVER, GUARD..... CYE	EA	1
C2	8	XAOZZ		04718	88-462B	.BASE, GUARD ..... CYE	EA	1
C2	9	PAOZZ	3030-00-529-0474	71176	B81	V-BELT ..... CYE	EA	2

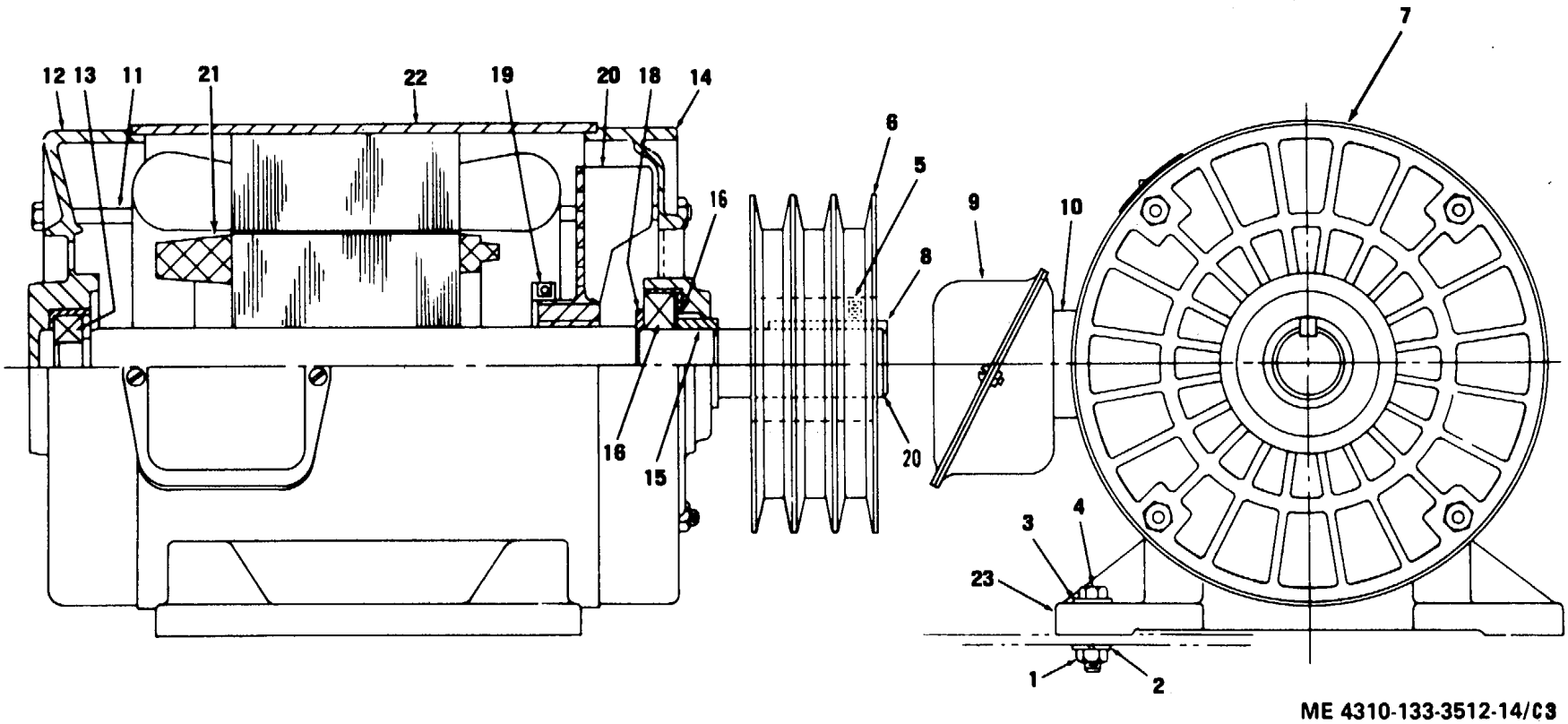

Figure C-3. Pulley and electric motor. (Champion Models HR10-8M1 and HR10-8M-4)

(1) ILLUSTRATION (a) FIG NO.	(b) ITEM NO.	(2) SMR CODE	(3) NATIONAL STOCK NUMBER	(4) FSCM	(5) PART NUMBER	(6) DESCRIPTION USABLE ON CODE	(7) U/M	(8) QTY INC IN UNIT
						GROUP 02 ELECTRIC MOTOR AND RELATED PARTS		
C3	1	PAOZZ	5310-00-665-9544	11568	M909A	NUT, HEX, 3/8-16.....BXC, CVW	EA	4
C3	2	PAOZZ	5310-00-224-0772	11568	M914A	WASHER, LOCK.....BXC, CVW	EA	4
C3	3	PAOZZ	5310-00-224-0765	11568	SE5-88	WASHER, FLAT.....BXC, CVW	EA	1
C3	4	PAOZZ	5305-00-269-3214	11568	M1460	SCREW, CAP, HEXAGON.....BXC, CVW	EA	4
C3	5	PAFZZ	5305-00-015-3345	11568	M568	SETSCREW.....BXC, CVW	EA	1
C3	6	XBOZZ		11568	P4089A	PULLEY..... BXC	EA	1
C3	6	XBFZZ		11568	M70110	PULLEY..... CVW	EA	1
C3	7	PBOFF	6105-00-554-2718	92940	91560	MOTOR, ALTERNATING.....BXC, CVW	EA	1
C3	8	XBFZZ		92940	23A02741-39-00	.KEY, PULLEY.....BXC, CVW	EA	1
C3	9	XBFZZ		92940	09C01042-01-00	.BOX, CONDUIT.....BXC, CVW	EA	1
C3	10	XBFZZ		92940	29A01631-01-00	.SPACER, CONDUIT.....BXC, CVW	EA	1
C3	11	XBFZZ		92940	19A03502-23-01	.BOLT, THRU.....BXC, CVW	EA	4
C3	12	XBFZZ		92940	07D00291-05-01	.END, SHIELD.....BXC, CVW	EA	1
C3	13	XBFZZ		92940	04A09101-04-00	.BEARING.....BXC, CVW	EA	1
C3	14	XBFZZ		92940	07DC0350-07-02	.END, SHIELD.....BXC, CVW	EA	1
C3	15	XBFZZ		92940	28A03103-04-00	.COLLAR BEARING.....BXC, CVW	EA	1
C3	16	XBFZZ		92940	04A9101-06-00	.BEARING.....BXC, CVW	EA	1
C3	17	XBFZZ		92940	22A0229-05-00	.SPRING.....BXC, CVW	EA	1
C3	18	XBFZZ		92940	28A08786-01-00	.SPACER.....BXC, CVW	EA	1
C3	19	XBFZZ		92940	28AC9407-01-00	.CLAMP.....BXC, CVW	EA	2
C3	20	XBFZZ		92940	12C02769-03-00	.FAN.....BXC, CVW	EA	1
C3	21	XBFZZ		92940	91560R0T	.ROTOR.....BXC, CVW	EA	1
C3	22	XBFZZ		92940	91560STA	.STATOR, W/FRAME.....BXC, CVW	EA	1
C3	23	XBFZZ		92940	10DC0267-00-01	.BASE.....BXC, CVW	EA	1

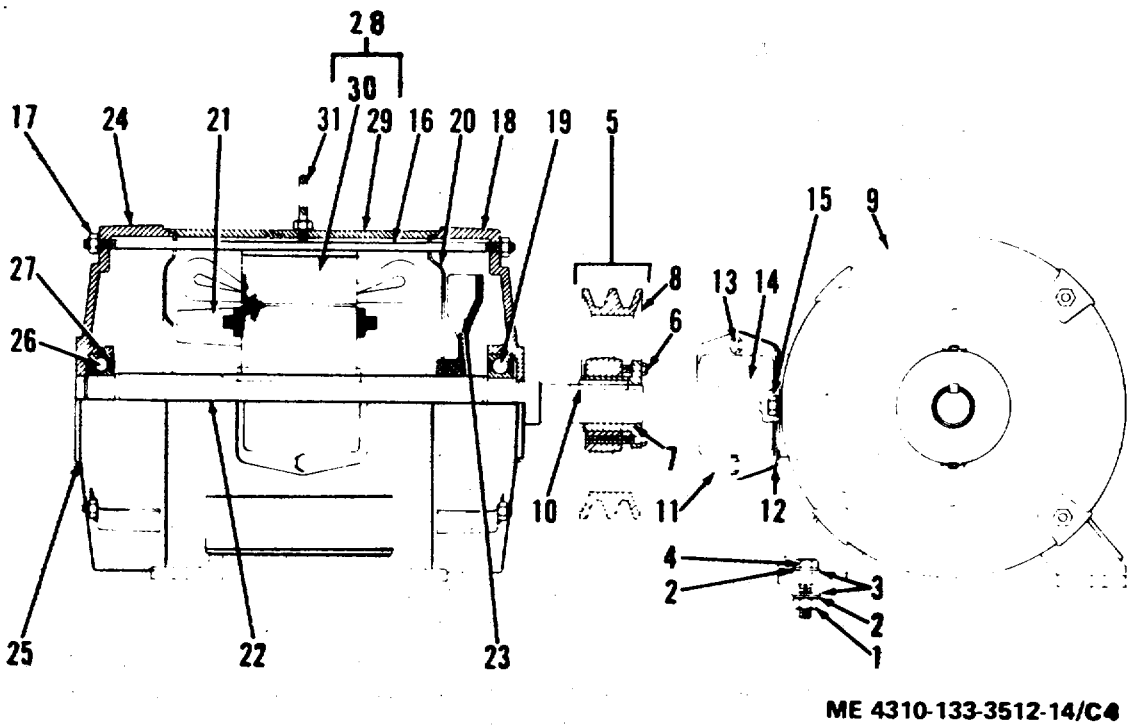

Figure C-4. Pulley and electric Motor. (C & H. Model 20-77)

(1) ILLUSTRATION (a) FIG NO.	(b) ITEM NO.	(2) SMR CODE	(3) NATIONAL STOCK NUMBER	(4) FSCM	(5) PART NUMBER	(6) DESCRIPTION USABLE ON CODE	(7) U/M	(8) QTY INC IN UNIT
C4	1	PAOZZ	5310-00-732-0558	96906	MS51967-8	NUT, PLAIN, HEXAGON ..... CYE	EA	4
C4	2	PAOZZ		96906	MS35338-46	WASHER, LOCK ..... CYE	EA	8
C4	3	PAOZZ	5310-00-080-6004	96906	MS27183-14	WASHER, FLAT ..... CYE	EA	8
C4	4	PAOZZ	5305-00-269-3214	96906	MS90725-64	SCREW, CAP. HEXAGON ..... CYE	EA	4
C4	5	XBOZZ		71176	2BK70H1-3/8	PULLEY ASSEMBLY ..... CYE	EA	1
C4	6	PAOZZ	5306-00-225-8497	96906	MS90725-32	.SCREW, CAP: HEXAGON tA ..... CYE	EA	2
C4	7	XBOZZ		71176	H1-3/8	.BUSHING, PULLEY ..... CYE	EA	1
C4	8	XBOZZ		71176	2BK70H	.PULLEY ..... CYE	EA	1
C4	9	PBOFL	6105-01-225-6530	56065	C215T17DB1	MOTOR, ALTERNATING ..... CYE	EA	1
C4	10	XBFZZ		56065	E-7729-25	.KEY, PULLEY ..... CYE	EA	1
C4	11	XBOZZ		56065	B-61534-C	.HALF, MOUNTING. CONDUIT BOX ..... CYE	EA	1
C4	12	XDOZZ		56065	E-61823-1	.GASKET ..... CYE	EA	1
C4,	13	PAOZZ	5305-00-988-1721	96906	MS35206-277	.SCREW, SELF-LOCKING ..... CYE	EA	2
C4	14	XBOZZ		56065	B-61535-C	.COVER, CONDUIT BOX ..... CYE	EA	1
C4	15	PAFZZ	5305-01-075-6374	56065	A-9646-37S	.SCREW, SELF-LOCKING ..... CYE	EA	2
C4	16	XBFZZ		56065	A-11956-13375	.ROD, THREADED ..... CYE	EA	4
C4	17	XBFZZ		56065	A7551-25	.NUT, PLAIN HEXAGON ..... CYE	EA	8
C4	18	XBOZZ		56065	A-83440AC	.BRACKET, FRONT ..... CYE	EA	1
C4	19	PAFZZ	3110-00-144-8648	52676	6207-2Z	.BEARING, BALL ..... CYE	EA	1
C4	20	XBOZZ		56065	A-83008-2C	.BAFFLE, REAR ..... CYE	EA	1
C4	21	XBFZZ		56065	A-A104P32CA-1	.ROTOR ASSEMBLY ..... CYE	EA	1
C4	22	XBFZZ		56065	A-83437-875	..SHAFT, ROTOR ..... CYE	EA	1
C4	23	XBFZZ		56065	B-84788A	..FAN, ROTOR ..... CYE	EA	1
C4	24	XBOZZ		56065	A-83011A-C	.BRACKET, REAR ..... CYE	EA	1
C4	25	XBFZZ		56065	E-4850-1	.PLUG, DRAIN ..... CYE	EA	2
C4	26	PAFZZ	3110-0-144-8622	52676	6205-2Z	.BEARING, BALL ..... CYE	EA	1
C4	27	XBFZZ		56065	A-7661-25	.SPRING, LOADING ..... CYE	EA	1
C4	28	XBFZZ		56065	A-C82911-5	.BODY ASSEMBLY ..... CYE	EA	1
C4	29	XBFZZ		56065	1A-C82011T-7C	.FRAME ASSEMBLY ..... CYE	EA	1
C4	30	XBFZZ		56065	A-S10T4DY-32G-1A	..STATOR ASSEMBLY ..... CYE	EA	1
C4	31	XBOZZ		56065	A-7575-1S	.BOLT, EYE ..... CYE	EA	1

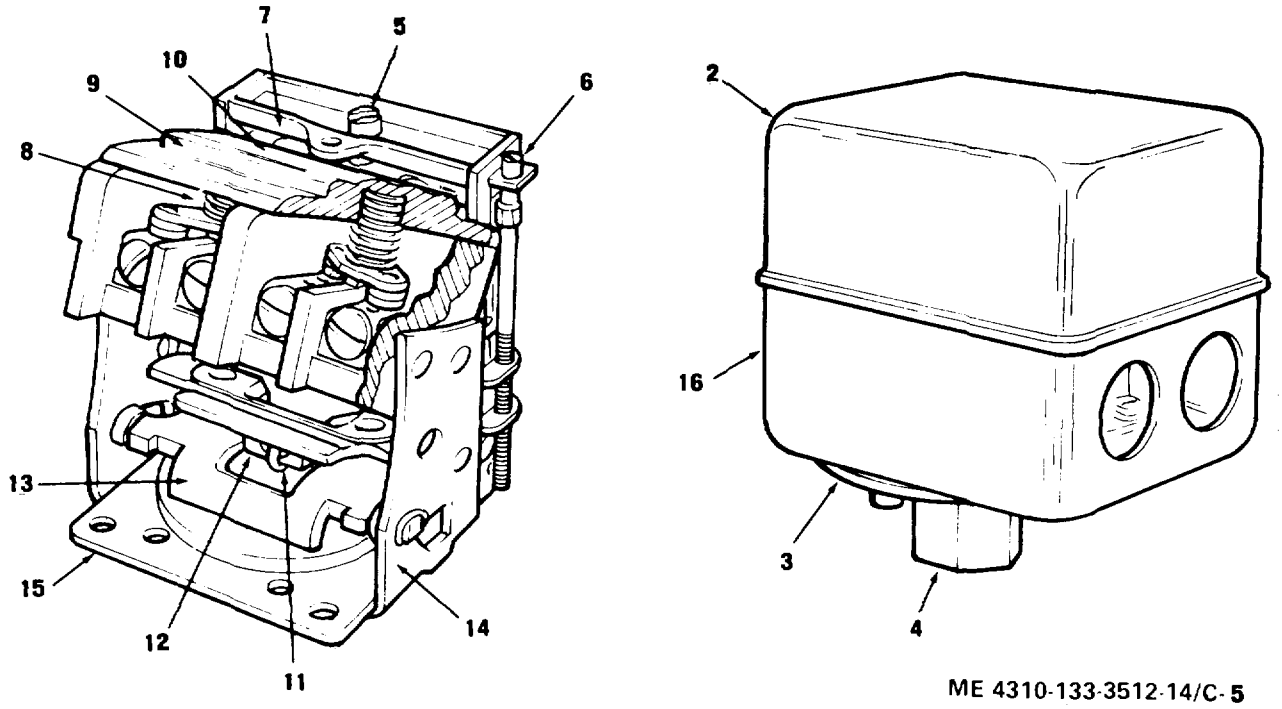

Figure C-5. Pressure switch assembly.

(1) ILLUSTRATION (a) FIG NO.	(b) ITEM NO.	(2) SMR CODE	(3) NATIONAL STOCK NUMBER	(4) FSCM	(5) PART NUMBER	(6) DESCRIPTION USABLE ON CODE	(7) U/M	(8) QTY INC IN UNIT
C5	1	PAFZZ	5930-00-087-4027	23826	69HA1	.SWITCH, PRESSURE	EA	1
C5	2	XBFZZ	5930-00-426-6670	23826	09211-15	.ENCLOSURE	EA	1
C5	3	PAFZZ	5930-00-772-6081	23826	D274-1	.DIAPHRAGM	EA	1
C5	4	XBFZZ	5360-00-530-4936	23826	D461-1	.SPRING, HELICAL	EA	1
C5	5	PAFZZ	5305-01-042-2554	23826	0323-1	.SCREW PRESS	EA	1
C5	6	XDFZZ	5305-01-042-2555	23826	09096-	.SCREW & NUT	EA	1
C5	7	XBFZZ		23826	09935-1	.BAR, TOP	EA	1
C5	8	XBFZZ		23826	D1673-1	.BOARD, ASSEMBLY	EA	1
C5	9	PAFZZ	5360-01-040-3845	23826	D276-1	.SPRING	EA	1
C5	10	PAFZZ	5340-00-805-0825	23826	D010037-1	.SPRING, MAIN	EA	1
C5	11	PAFZZ	5360-00-756-9452	23826	D357-1	.SPRING, TOGGLE	EA	1
C5	12	PAFZZ	6110-00-881-5005	23826	D317-2	.TOGGLE BAR	EA	1
C5	13	XBFZZ		23826	D1366-1	.LEVER	EA	1
C5	14	PAFZZ	4310-01-085-2547	23826	D10456-1	.FLAT, DIAPHRAGM	EA	1
C5	15	XBFZZ		23826	D9078-1	.FRAME	EA	1
C5	16	PAFZZ	4310-00-275-2804	23826	D9943-10	.COVER ENCLOSURE *	EA	1

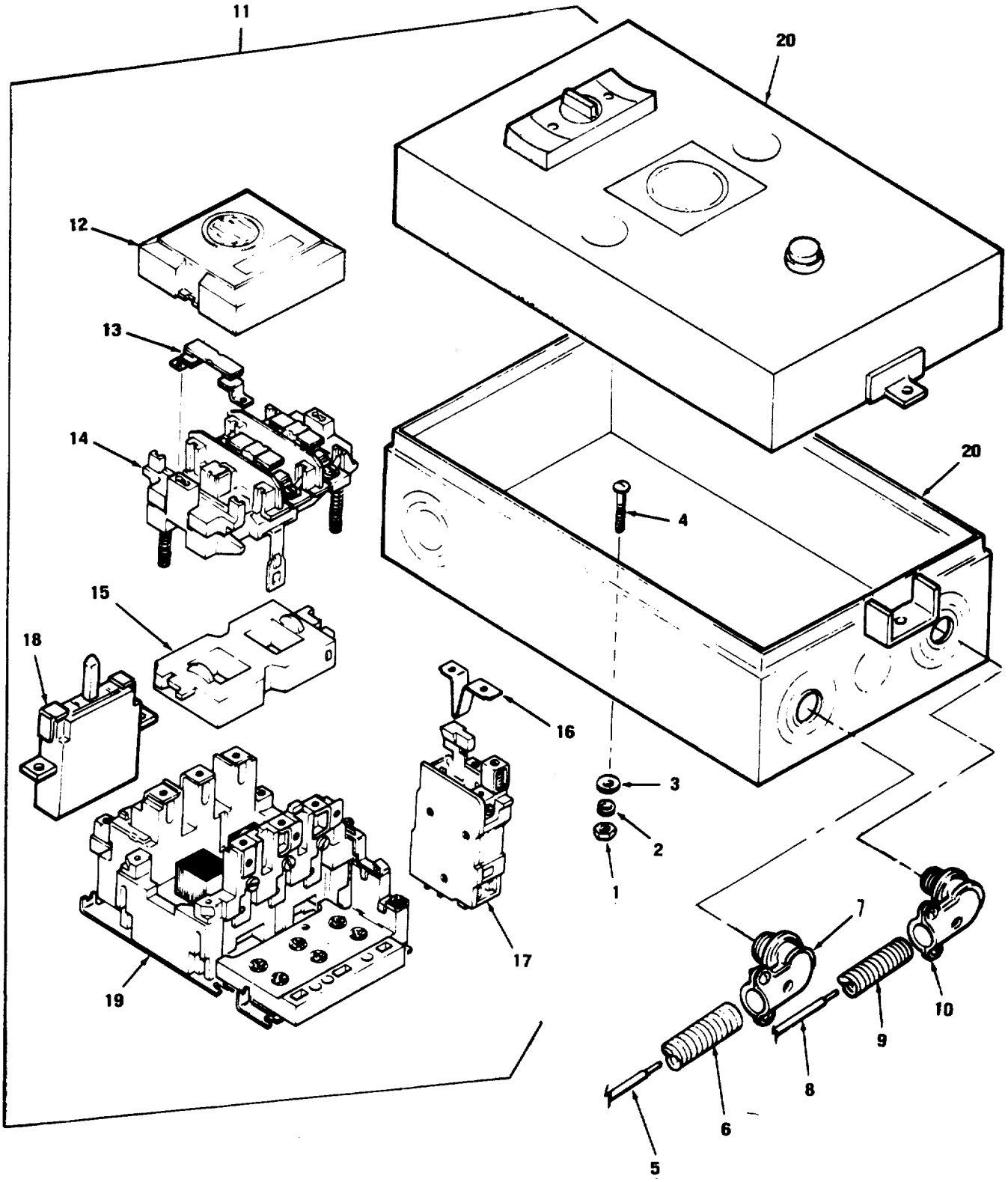

ME 4310-133-3512.14/C 6

Figure C-6. Starter assembly, exploded view. (Champion Models HR10-8M-1 and HR10-8M-4)

(1) ILLUSTRATION (a) FIG NO.	(b) ITEM NO.	(2) SMR CODE	(3) NATIONAL STOCK NUMBER	(4) FSCM	(5) PART NUMBER	(6) DESCRIPTION USABLE ON CODE	(7) U/M	(8) QTY INC IN UNIT
C6	1	PAOZZ	5310-00-448-7227	11568	M939A	NUT, PLAIN, HEXAGON.....BXC, CVW	EA	4
C6	2	PAOZZ	5310-01-009-7208	11568	M919A	WASHER, LOCK.....BXC, CVW	EA,	4
C6	3	PAFZZ		11568	M905A	WASHER, FLAT.....BXC, CVW	EA	4
C6	4	PAFZZ	5305-00-068-0502	11568	M696	SCREW, CAP, HEXAGON HEAD .....BXC, CVW	EA	4
C6		PAOZZ		11568	G8-14	NUT WIRE.....CVW	EA	4
C6	5	XBOZZ		11568	8TWSTRDX32	WIRE ..... BXC	EA	3
C6	5	XBOZZ		11568	10TWSTRDX32	WIRE .....CVW	EA	3
C6	6	XBFZZ		11568	M1882	CONDUIT 1/2X20.....BXC, CVW	EA	1
C6	7	XBFZZ		11568	M1883	CONNECTOR .....BXC, CVW	EA	2
C6	8	XBFZZ		11568	14TWX41	WIRE .....BXC, CVW	EA	2
C6	9	XBFZZ		11568	M1881	CONDUIT, 3/8X29.....BXC, CVW	EA	1
C6	10	XBFZZ		11568	M1606	CONNECTOR .....BXC, CVW	EA	1
C6	11	ABPA	6110-01-158-0971	30086	A203D22D2C	STARTER, ASSEMBLY.....BXC, CVW	EA	1
C6	12	XBFZZ		30086	G213D	.CAP, COVER.....BXC, CVW	EA	1
C6	13	XBFZZ		30086	G203D	.CONTACT, MAIN .....BXC, CVW	EA	1
C6	14	XBFZZ		30086	G223D	.CARRIER, CONTACT .....BXC, CVW	EA	1
C6	15	ABWM	5950-00-449-6725	30086	G103D126	.COIL, ELECTRICAL .....BXC, CVW	EA	1
C6	16	ABQA	4310-01-041-0886	30086	G30T52	.COIL, HEATER.....BXC, CVW	EA	3
C6	17	PAFZZ		30086	E20D0L1	.RELAY, OVERLOAD.....BXC, CVW	EA	1
C6	18	PAFZZ		30086	E11EPB	.SWITCH, ON-OFF .....BXC, CVW	EA	1
C6	19	XBFZZ		30086	F11NOC	.INTERLOCK .....BXC, CVW	EA	1
C6	20	XBFZZ		30086	D1	.ENCLOSURE .....BXC, CVW	EA	1

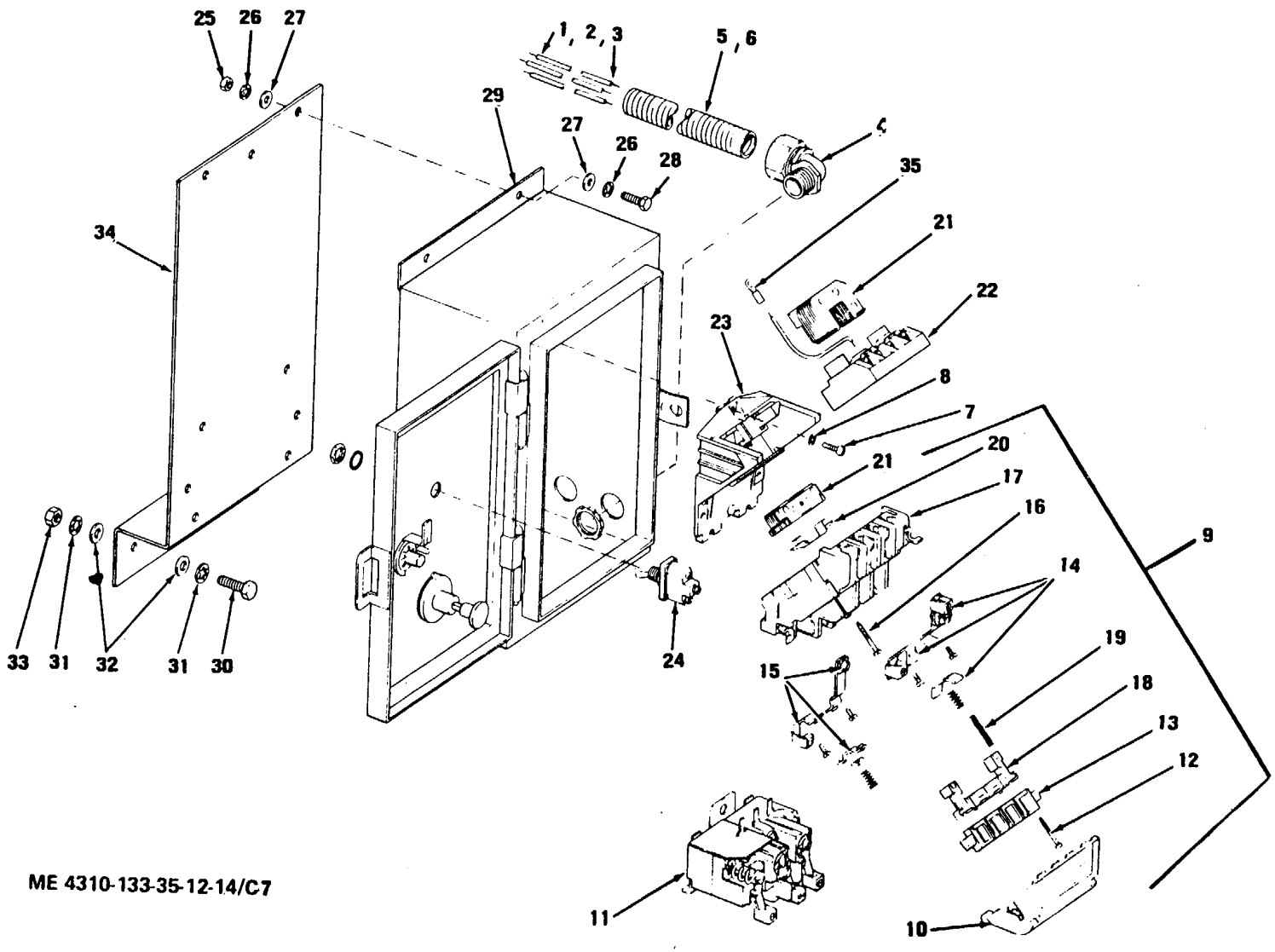

Figure C-7. Starter. (C&H Model 20-277M)

(1) ILLUSTRATION (a) FIG NO.	(b) ITEM NO.	(2) SMR CODE	(3) NATIONAL STOCK NUMBER	(4) FSCM	(5) PART NUMBER	(6) DESCRIPTION	USABLE ON CODE	(7) U/M	(8) QTY INC IN UNIT
C7	1	PAOZZ		81349	M5086/2-10-0	WIRE, ELECTRICAL	CYE	RL	1
C7	2	PAOZZ	6145-00-578-6604	81349	M5086/2-14-9	WIRE, ELECTRICAL	CYE	RL	1
C7	3	PAOZZ		81349	M5086-2-16-2	WIRE, ELECTRICAL	CYE	RL	1
C7	4	XBFZZ		04718	5252	CONNECTOR CONDUIT	CYE	EA	4
C7	5	XBFZZ		04718	177	CONDUIT FLEX	CYE	EA	1
C7	6	XBFZZ -		04718	178	CONDUIT, FLEX	CYE	EA	1
C7	7	PAFZZ		96906	MS35223-81	SCREW MACHINE START	CYE	EA	2
C7	8	PAFZZ	5310-00-582-5565	96906	MS35338-44	WASHER, LOCK	CYE	EA	2
C7	9	PAFFF	6110-01-113-9148	23826	14EF320CX26	STARTER, MOTOR MAGNETIC	CYE	EA	1
C7	10	XBFZZ		23826	D73062-001	.COVER, CONTACT	CYE	EA	1
C7	11	PBFZZ	5945-01-089-5312	23826	48EC31A2	.RELAY, OVERLOAD	CYE	EA	1
C7	12	PAFZZ	5305-01-088-5848	23826	D25013-001	.SCREW .CROSS ARM	CYE	EA	2
C7	13	XBFZZ		23826	054670-001	.ARM CROSS,	CYE	EA	1
C7	14	PBFZZ	5999-01-043-4510	23826	75EF14	.CONTACTS SPRING: POWER POLE	CYE	EA	1
C7	15	PBFZZ	6110-01-007-6028	23826	75AF14	.CONTACT SPRING: INTERLOCK POLE	CYE	EA	1
C7	16	PAFZZ	5305-01-085-7495	23826	D24827-001	.SCREW, CONTACT BOARD.,;	CYE	EA	2
C7	17	XBFZZ		23826	D73116-021	.BOARD, CONTACT	CYE	EA	1
C7	18	XBFZZ		23826	D54813-001	.BASE, CROSS ARM	CYE	EA	1
C7	19	PBFZZ	5360-01-078-2739	23826	D24826-001 SIZED	.SPRING, HELICAL: CROSS ARM	CYE	EA	2
C7	20	XBFZZ		23826	D24817-001	.CLIP, ARMATURE	CYE	EA	1
C7	21	XBFZZ		23826	D255551-001	.MAGNET AND ARMATURE	CYE	EA	1
C7	22	PAFZZ	5950-00-577-0590	23826	75073070C	.COIL, MAGNETIC	CYE	EA	1
C7	23	XBFZZ		23826	073060-001	.BASE	CYE	EA	1
C7	24	PAOZZ	5930-00-683-1628	96906	M524523-22	SWITCH TOGGLE	CYE	EA	1
C7	25	PAOZZ	5310-00-761-6A82	96909	MS51967-2	NUT. PLAIN, HEXAGON	CYE	EA	4
C7	26	PAOZZA	5310-00-582-5965	96906	MS35338-44	WASHER, LOCK	CYE	EA	4
C7	27	PAOZZ	5310-00-823-8804	96906	MS27183-9	WASHER, FLAT	CYE	EA	8
C7	28	PAOZZ	5305-00-068-0506	96906	MS90726-6	SCREW, CAP, HEXAGON	CYE	EA	4
C7	29	XBOZZ		23826	49EA14EF0	ENCLOSURE, MAGNETIC STARTER	CYE	EA	1
C7	30	PAOZZ	5306-00-225-8499	96906	MS90725-34	BOLT, MACHINE	CYE	EA	2
C7	31	PAOZZ	5310-00-407-9566	96906	MS35338-45	WASHER. LOCK	CYE	EA	4
C7	32	PAOZZ	5310-00-081-4219	96906	MS27183-12	WASHER, FLAT	CYE	EA	4
C7	33	PAOZZ	5310-00-880-7744	96906	MS51967-5	NUT, PLAIN, HEXAGON	CYE	EA	2
C7	34	XBFZZ		04718	86-073	BRACKET STARTER	CYE	EA	1
C7	35	PAFZZ	5940-00-473-8025	59130	RC10-8F	TERMINAL, LUG	CYE	EA	4

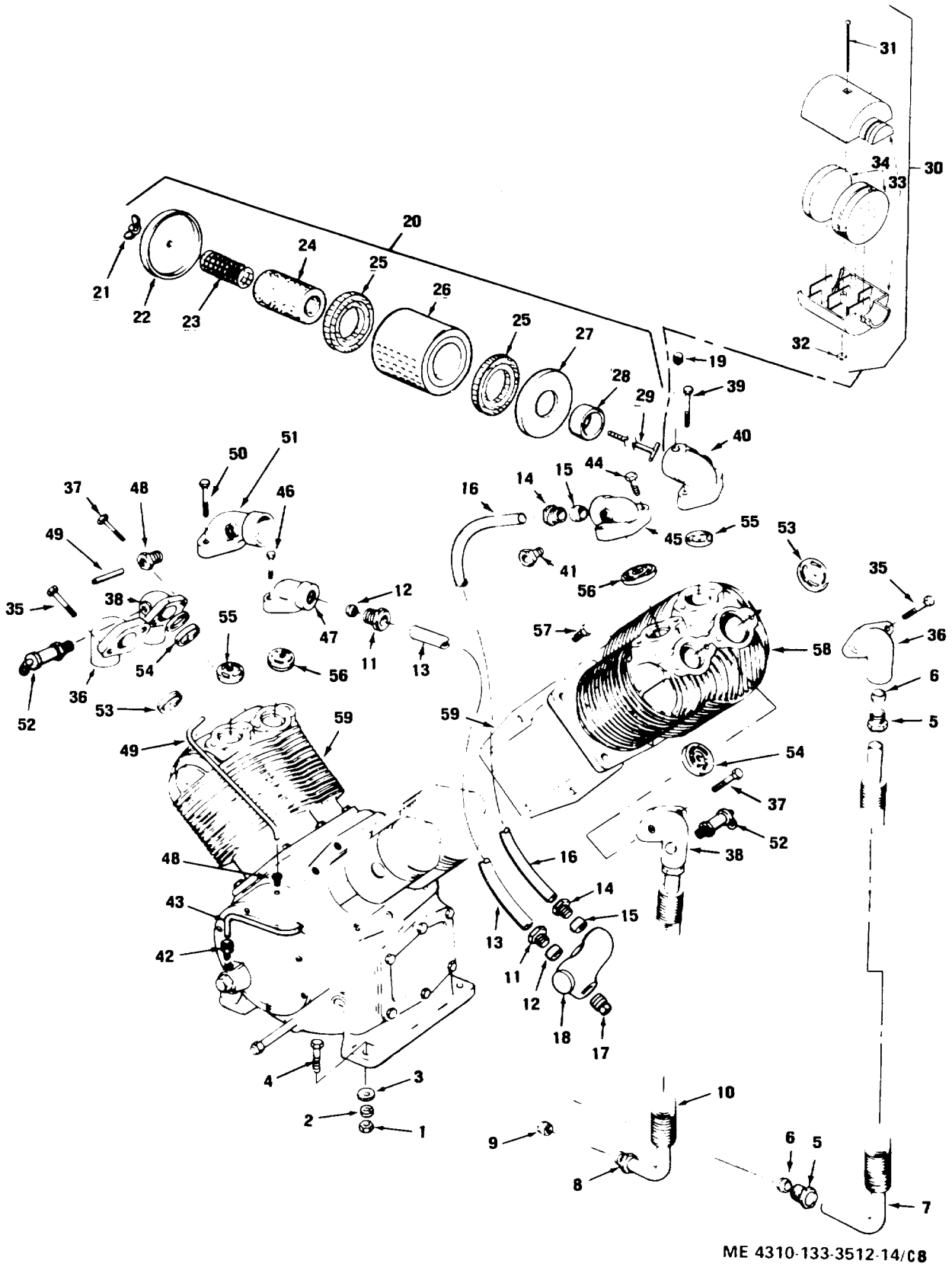

Figure C-8. Air compressor assembly, cylinders, manifolds and related components, exploded view.

(1) ILLUSTRATION (a) FIG NO.	(b) ITEM NO.	(2) SMR CODE	(3) NATIONAL STOCK NUMBER	(4) FSCM	(5) PART NUMBER	(6) DESCRIPTION USABLE ON CODE	(7) U/M	(8) QTY INC IN UNIT
						GROUP 03 AIR COMPRESSOR		
C8	1	PAOZZ	5310-01-005-2297	11568	M649	NUT, PLAIN, HEXAGON	EA	4
C8	2	PAOZZ	5310-00-237-6749	11568	M466	WASHER, LOCK	EA	4
C8	3	PAOZZ	5310-01-042-2333	11568	M1884	WASHER, FLAT	EA	4
C8	4	PAOZZ	5305-30-042-9478	96906	MS90725-90	SCREW, CAP, HEXAGON	EA	4
C8	5	PBOFH	4310-00-513-9913	11568	R30A	COMPRESSOR, RECIPROC	EA	1
C8	5	PAOZZ	4730-00-850-7971	11568	SE5-41	.NUT, COMPRESSOR	EA	8
C8	6	PAOZZ	4730-00-270-6113	11568	SE5-42	.SLEEVE, COMPRESSION	EA	8
C8	7	XBOZZ		11568	M1480	.TUBE INTER	EA	1
C8	8	PAOZZ	4730-00-850-7971	11568	SE5-41	.INVERTED NUT, TUBE	EA	1
C8	9	PAOZZ	4730-00-270-6113	11568	SE5-42	.SLEEVE, COMPRESSION	EA	1
C8	10	XBOZZ		11568	M1481	.TUBER, INTER	EA	1
C8	11	PAOZZ	4730-00-850-7971	11568	SE5-41	.INVERTED NUT, TUBE	EA	1
C8	12	PAOZZ	4730-00-270-6113	11568	SE5-42	.SLEEVE, COMPRESSION	EA	1
C8	13	XBOZZ		11568	M1591	.TUBE, AFTER	EA	1
C8	14	PAOZZ	4730-00-850-7971	11568	SE5-41	.INVERTED NUT, TUBE	EA	1
C8	15	PAOZZ	4730-00-270-6113	11568	SE5-42	.SLEEVE, COMPRESSION	EA	1
C8	16	XBOZZ		11568	M1592	.TUBE, AFTER	EA	1
C8	17	PBOZZ	4730-00-247-9463	11568	M459	.PLUG, PIPE	EA	1
C8	18	XBOZZ	4310-00-477-7986	11568	NR36-44	.MANIFOLD, AFTERCOOLE	EA	1
C8	19	PAOZZ	5305-01-011-3072	11568	M432	.SCREW, SET	EA	2
C8	20	PAOOO	4310-00-450-9213	11568	Z66A	.MUFFLER ASSEMBLY, INTAKE (REPLACED BY PART NO Z828... AS AN ASSEMBLY ON ALL MODELS)	EA	2
C8	21	PAOZZ	5310-01-005-4336	11568	M1712	..NUT, WING	EA	1
C8	22	XAOZZ		11568	M30	..COVER, LOWER	EA	1
C8	23	XAOZZ		11568	M674	..SCREEN	EA	1
C8	24	PAOZZ	4130-00-351-7387	11568	M673	..ELEMENT, AIR INTAKE	EA	1
C8	25	PBOZZ	4310-00-689-3024	11568	M62	..SEPARATOR	EA	2
C8	26	XAOZZ		11568	M54C	..PLATE	EA	1
C8	27	XAOZZ		11568	M31A	..COVER, UPPER	EA	1
C8	28	XAOZZ		11568	M32A	..FERRULE	EA	1
C8	29	XAOZZ		11568	M1711	..T-STUD, MUFFLER	EA	1
C8	30	PAOZZ	4310-00-450-9213	11568	Z-828	.MUFFLER ASSY INTAKE (ALTERNATE FOR P/N Z66A)	EA	1
C8	31	PAOZZ	5305-01-088-6824	11568	P-4751	..SCREW, MACHINE 10-24X3-1/2 IN	EA	1
C8	32	PAOZZ	5310-01-088-4027	11568	P-4752	..NUT, PLAIN, SQUARE 10-24	EA	1
C8	33	XBOZZ		11568	P4576C	..INTAKE, AIR	EA	1
C8	34	PAOZZ	4310-01-101-7195		Z-837	..FILTER ELEMENT, FLUID	EA	1
C8	35	PAOZZ	5305-00-331-4856	11568	M1737	.SCREW, CAP. HEXAGON	EA	4
C8	36	PAOZZ	4730-00-195-5708	11568	RE10-2E	.MANIFOLD	EA	2
C8	37	PAOZZ	5305-00-331-4856	11568	M1737	.SCREW, CAP, , HEXAGON	EA	2
C8	38	PBOZZ	4310-00-283-3288	11568	NR2B	.MANIFOLD, COMPRESS OR	EA	2
C8	39	PAOZZ	5305-00-331-4856	11568	M1737	.SCREW, CAP, HEXAGON	EA	2

(1) ILLUSTRATION (a) FIG NO.	(b) ITEM NO.	(2) SMR CODE	(3) NATIONAL STOCK NUMBER	(4) FSCM	(5) PART NUMBER	(6) DESCRIPTION USABLE ON CODE	(7) U/M	(8) QTY INC IN UNIT
C8	40	PAOZZ	4730-01-041-9946	11568	R30-2	.ELBOW, FLANGE TO TUBE	EA	1
C8	41	PBOZZ	4730-00-278-4575	11568	Z441	.ADAPTER, STRAIGHT	EA	1
C8	42	PBOZZ	4730-00-403-0882	11568	Z508	.ADAPTER, STRAIGHT	EA	1
C8	43	XBOZZ		11568	SB250B	.TUBE, RELEASE	EA	1
C8	44	PAOZZ	5305-00-331-4856	11568	M1737	.SCREW, CAP, HEXAGON	EA	2
C8	45	PAOZZ	2815-00-928-6078	11568	SE5-2A	.MANIFOLD, INTAKE	EA	1
C8	46	PAOZZ	5305-00-331-4856	11568	M1737	.SCREW, CAP, HEXAGON	EA	2
C8	47	PAOZZ	4730-00-430-9672	11568	SE5-2B	.MANIFOLD, PRESSURE	EA	1
C8	48	PAOZZ	4730-00-273-8561	96906	MS39169-15	.ADAPTER, STRAIGHT	EA	2
C8	49	XBOZZ		11568	UB375	.TUBE, BREATHER	EA	1
C8	50	PAOZZ	5305-00-331-4856	11568	M1737	.SCREW, CAP, HEXAGON	EA	2
C8	51	PAOZZ	4730-00-279-8122	11568	R10B2	.BREATHER, INTAKE	EA	1
C8	52	PAOZZ	4820-00-421-6984	75336	125B1-4-75 PSI	.VALVE, SAFETY RELIEF BXC, CYE	EA	2
C8	52	PAOZZ	4820-00-421-6984	11568	Z67-75	.VALVE, INTERSTAGE SAFETY CVW	EA	2
C8	53	PAFFF	4310-00-631-3398	11568	Z117	.VALVE ASSEMBLY	EA	2
C8	54	PAFZZ	4310-00-631-3397	11568	Z113	.VALVE ASSEMBLY	EA	2
C8	55	PAFFF	4310-00-631-3399	11568	Z118	.VALVE ASSEMBLY	EA	2
C8	56	PAFZZ	4310-00-631-3396	11568	Z115	.VALVE ASSEMBLY	EA	2
C8	57	XDFZZ		11569	M817	.SCREW, CAP, HEXAGON HEAD	EA	12
C8	58	XBFZZ		11568	NR14-6A	.CYLINDER	EA	2
C8	59		5330-00-450-4130	11568	NR29A	.GASKET, CYLINDER	EA	2

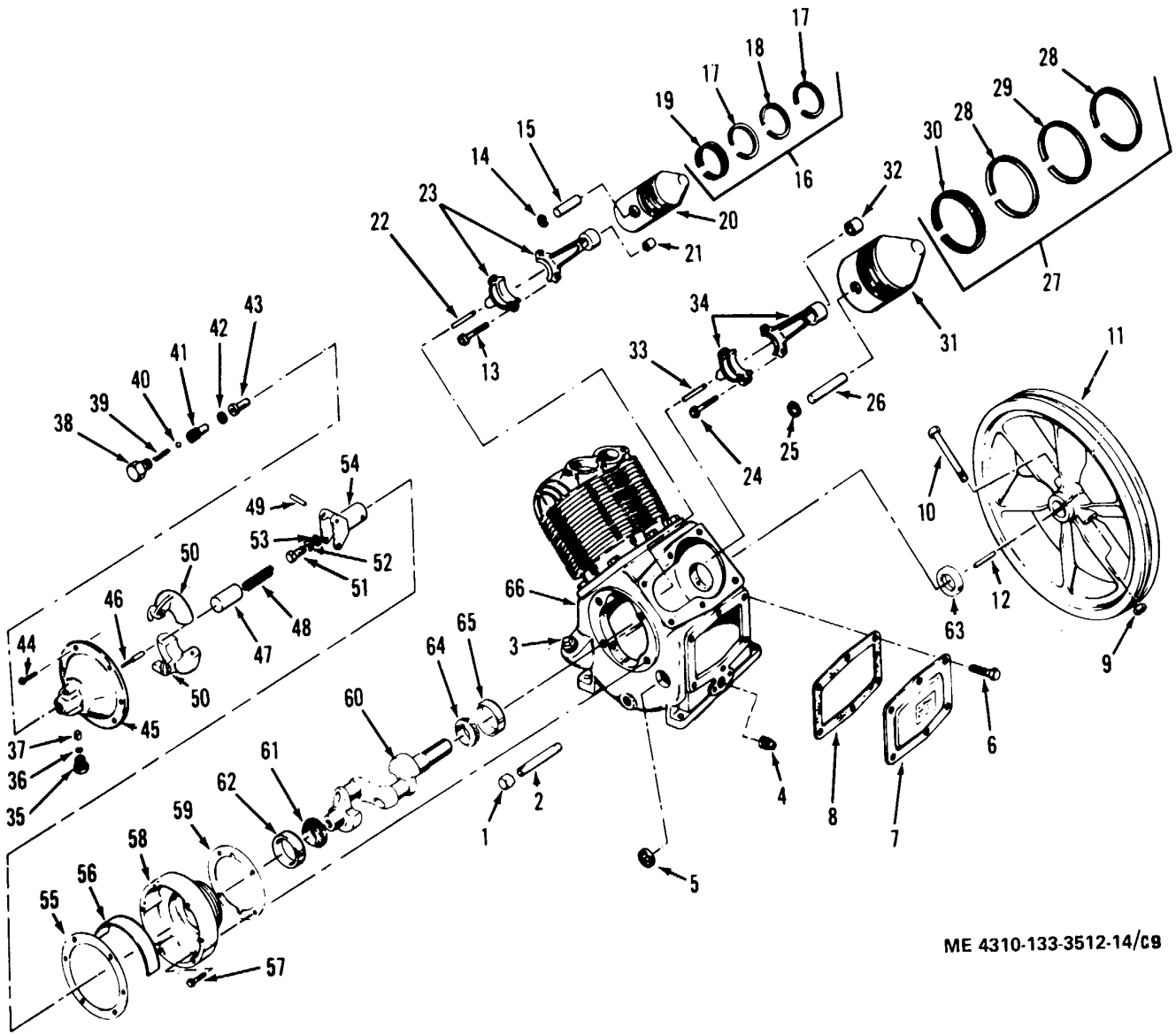

Figure C-9. Crankcase, crankshaft,- pistons, connecting rods and related assemblies, exploded view.

(1) ILLUSTRATION (a) FIG NO.	(b) ITEM NO.	(2) SMR CODE	(3) NATIONAL STOCK NUMBER	(4) FSCM	(5) PART NUMBER	(6) DESCRIPTION USABLE ON CODE	(7) U/M	(8) QTY INC IN UNIT
C9	1	PAFZZ	4730-00-213-0651	11568	M461	CAP, PIPE	EA	1
C9	2	PAFZZ	4730-00-188-1874	11568	M460	NIPPLE, PIPE BXC,CYE	EA	1
C9	2	PAFZZ		11568	M492	NIPPLE, PIPE CVW	EA	1
C9	3	PAOZZ	4730-00-247-9463	11568	M459	PLUG, PIP, ¾	EA	1
C9	4	PAFZZ	4730-00-834-8187	11568	M998B	PLUG, PIPE BXC,CYE	EA	1
C9	4	PAFZZ		11568	M504	PIPE, PLUG CVW	EA	1
C9	5	PAOZZ	6680-00-377-4915	11568	RE7-14	GAUGE, OIL LEVEL	EA	1
C9	6	XDOZZ		11568	M567	BOLT, MACHINE BXC,CYE	EA	12
C9	7	XBOZZ		11568	NR15A	PLATE, HANDHOLE BXC, CYE	EA	2
C9	8	XBOZZ	5330-00-197-2792	11568	NR31B	.GASKET BXC,CYE	EA	2
C9	9	PAOZZ	5310-00-768-0318	11568	M465	.NUT, HEXAGON	EA	1
C9	10	PAOZZ	5305-00-071-1776	11568	M738	.SCREW, CAP, HEXAGON	EA	1
C9	11	XBFZZ		11568	NR36-7A	.FLYWHEEL BXC,CYE	EA	1
C9	11	XBFZZ		11568	NR-36-7B	.FLYWHEEL CVW	EA	1
C9	12	XBFZZ		11568	RE20-8	.KEY, MACHINE	EA	1
C9	13	XDFZZ		11568	R10-20	.BOLT, CONNECTING BXC,CYE	EA	4
C9	13	PAFZZ	5306-01-004-9473	11568	M1583	.BOLT, CONNECTING ROD BOLT CONNECTING ROD CVW	EA	4
C9	14	XBFZZ		11568	R10-102	.RING, PISTON PIN	EA	4
C9	15	PBFZZ	5315-01-014-4456	11568	R10-21	.PIN, PISTON	EA	2
C9	16	PAFZZ	4310-00-477-9775	11568	Z189C	.RING, SET, PISTON	EA	1
C9	17	KFFZZ		11568	R10-10B	..RING, PISTON	EA	4
C9	18	KFFZZ		11568	R10-10A	..RING, PISTON	EA	2
C9	19	KFFZZ		11568	RE36-10D	..RING, PISTON	EA	2
C9	20	XBFZZ		11568	R10-4	.PISTON	EA	2
C9	21	XDFZZ		11568	R10-37	.BEARING, PISTON PIN	EA	4
C9	22	XBFZZ		11568	R10-24	.DIPPER, OIL	EA	4
C9	23	XBFZZ		11568	R30-3	.ROD, CONNECTING BXC,CYE	EA	4
C9	23	XBFZZ		11568	M1584	.ROD CONNECTING ROD ASSEMBLY CONNECTING CVW	EA	4
C9	24	XBFZZ		11568	R10-20	.BOLT, CONNECTING BXC,CYE	EA	4
C9	24	PAFZZ	5306-01-004-9473	11568	M1583	.BOLT, CONNECTING CVW	EA	4
C9	25	XBFZZ		11568	R10-102	.RING, PISTON PIN	EA	4
C9	26	XBFZZ		11568	R10-21	.PIN, STRAIGHT, HEADLE	EA	2
C9	27	PAFZZ	4310-00-773-7986	11568	Z179C	.RING SET, PISTON	EA	1
C9	28	KFFZZ		11568	R15-10B	..RING, PISTON	EA	4
C9	29	KFFZZ		11568	R15-10A	..RING, PISTON	EA	2
C9	30	KFFZZ		11568	RE14-10D	..RING, PISTON	EA	2
C9	31	XBFZZ		11568	R15-4	.PISTON, COMPRESSOR	EA	2
C9	32	XDFZZ		11568	R10-37	.BEARING, PISTON PIN	EA	2
C9	33	XBFZZ		11568	R10-24	.DIPPER, OIL	EA	4
C9	34	XBFZZ		11568	R30-3	.ROD, CONNECTING, BXC,CYE	EA	4
C9	34	XBFZZ		11568	M1584	.ROD, CONNECTING CVW	EA	4

(1) ILLUSTRATION (a) FIG NO.	(b) ITEM NO.	(2) SMR CODE	(3) NATIONAL STOCK NUMBER	(4) FSCM	(5) PART NUMBER	(6) DESCRIPTION USABLE ON CODE	(7) U/M	(8) QTY INC IN UNIT
C9	35	XAFZZ		11568	M1046	.BODY UNLOADER	EA	1
C9	36	XBFZZ		11568	M97A	.SCREEN MUFFLER	EA	1
C9	37	XDOZZ		11568	M98A	.BELT	EA	1
C9	38	PBFZZ	5310-00-102-8328	11568	SE5-85	.CAP, RELEASE	EA	1
C9	39	PAFZZ	5360-00-616-4373	11568	SE5-91	.SPRING, HELICAL, COMP	EA	1
C9	40	XBFZZ	3110-00-198-1050	11568	SE5-95	.BALL RELEASE	EA	1
C9	41	XBFZZ		11568	SE30-101	.BODY, RELEASE	EA	1
C9	42	PAFZZ	5330-01-050-1547	11568	H122	.GASKET	EA	1
C9	43	PBFZZ	3120-00-625-6748	11568	SE5-97	.SLEEVE, PLUNGER	EA	1
C9	44	PAFZZ	5305-00-151-6876	11568	SE14-84	.SCREW, MACHINE	EA	8
C9	45	XDFZZ		11568	SE30-100	.COVER, GOVERNOR	EA	1
C9	46	PBFZZ	2815-00-625-6747	11568	SE5-86B	.PLUNGER, RELEASE	EA	1
C9	47	PBFZZ	4310-00-884-4582	11568	SE5-87	.SLEEVE, GOVERNOR	EA	1
C9	48	PAFZZ	5360-00-850-5541	11568	SE5-90	.SPRING HELICAL	EA	1
C9	49	PAFZZ	5315-00-168-2969	11568	SE5-92A	.PIN, SPRING	EA	2
C9	50	PAFZZ	4310-00-896-2105	11568	SE5-82	.WEIGHT, GOVERNOR	EA	2
C9	51	XDFZZ		11568	RE14-94	.SCREW, CAP, HEXAGON	EA	1
C9	52	PAOZZ	5310-00-237-6749	11568	M466	.WASHER, LOCK	EA	1
C9	53	PAFZZ	5310-00-230-7342	11568	M912A	.WASHER, FLAT	EA	1
C9	54	PAFZZ	2990-00-863-0926	11568	SE5-83B	.SPINDLE, GOVERNOR	EA	1
C9	55	PAFZZ	5330-00-584-9005	11568	SE30-89	.GASKET	EA	1
C9	56	XBFZZ		11568	NR36-104	.PLATE, BAFFLE	EA	1
C9	57	PAFZZ	5305-00-045-1988	11568	RE20-106	.SCREW, CAP, HEXAGON	EA	4
C9	58	XBFZZ		11568	NR36-113	.HOUSING	EA	1
C9	59	PAFZZ	5330-00-584-9012	11568	SE30-30	.GASKET	EA	1
C9	60	XBFZZ		11568	R30-5	.CRANKSHAFT	EA	1
C9	61	PAFZZ	3110-00-100-3543	60038	25584	.CONE AND ROLLERS	EA	1
C9	62	PAFZZ	3110-00-100-0544	60038	25520	.CUP, TAPPERED ROLLER	EA	1
C9	63	PAFZZ	5330-00-999-0623	76680	4500291	.SEAL, PLAIN ENCASED	EA	1
C9	64	PAFZZ	3110-00-100-0744	60038	2789	.BEARING, ROLLER, TAPE	EA	1
C9	65	PAFZZ	3110-00-100-0359	60038	2720	.CUP, TAPERED ROLLER	EA	1
C9	66	XBFZZ		11568	NR36-9A	.CRANKCASE BXC,CYE	EA	1
C9	66	XBFZZ		11568	M1898	.CRANKCASE CVW	EA	1

Page C-27 is blank

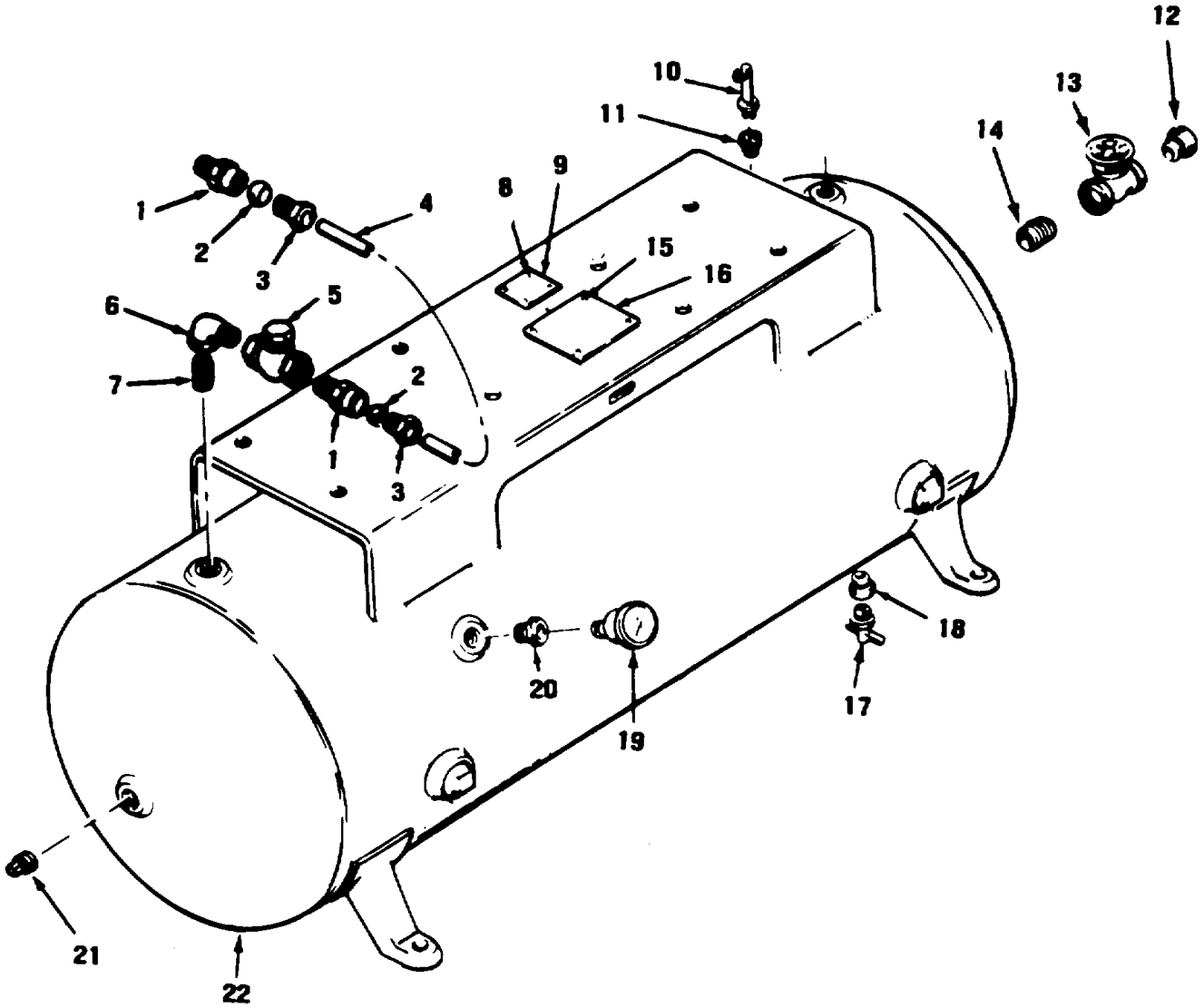

ME 4310133-3512/C10

Figure C-10. Air receiver tank and related parts. (Champion Models HR10-8M-1 and HR10-8M-4)

(1) ILLUSTRATION (a) FIG NO.	(b) ITEM NO.	(2) SMR CODE	(3) NATIONAL STOCK NUMBER	(4) FSCM	(5) PART NUMBER	(6) DESCRIPTION USABLE ON CODE	(7) U/M	(8) QTY INC IN UNIT
						GROUP 04 AIR RECEIVER TANK AND RELATED PARTS		
C10	1	PAOZZ	4730-00-103-5461	11568	RE10-99	BODY, COMPRESSION..... BXC,CVW..	EA	2
C10	2	PAFZZ	4730-00-270-6113	11568	SE5-42	SLEEVE, COMPRESSION ..... BXC,CVW..	EA	2
C10	3	PAFZZ	4730-00-850-7971	11568	SE5-41	INVERTED NUT, TUBE ..... BXC,CVW..	EA	2
C10	4	XBOZZ		11568	P4086A	TUBE, EXHAUST ..... BXC,CVW..	EA	1
C10	5	PAOZZ	4820-01-014-4402	11568	Z57C	VALVE, CHECK ASY..... BXC, CVW..	EA	1
C10	6	PBFZZ	4730-00-246-9218	11568	M1296	ELBOW, STREET ¾ IN.X90 DEGREE..... BXC,CVW..	EA	1
C10	7	PAOZZ	4730-00-196-1468	96906	MS51953-97	NIPPLE, CLOSE..... BXC,CVW..	EA	1
C10	8	PAOZZ	5305-00-253-5615	11568	M1058A	SCREW, DRIVE ..... BXC,CVW..	EA	4
C10	9	XBOZZ		11568	M811	PLATE ..... BXC,CVW..	EA	1
C10	10	PAOZZ	4820-00-844-8636	11568	Z206-200	VALVE, SAFETY RELIEF..... BXC,CVW..	EA	1
C10	11	PAOZZ	4730-00-363-4138	96906	MS51887-17	BUSHING, PIPE ..... BXC,CVW..	EA	1
C10	12	PAOZZ	4730-00-363-4138	96906	MS51887-17	BUSHING,3/4X1/4 ..... BXC,CVW..	EA	1
C10	13	PAOZZ	4820-00-209-1775	11568	M524	VALVE, GLOBE, ¾..... BXC,CVW..	EA	1
C10	14	PAOZZ	4730-00-196-1468	96906	MS51953-97	NIPPLE, CLOSE..... BXC,CVW..	EA	1
C10	15	PAOZZ	5305-01-004-9376	11568	M835	SCREW, DRIVE ..... BXC,CVW..	EA	4
C10	16	XBOFF		11568	P4033A	PLATE, IDENTIFICATION..... BXC..	EA	1
C10	16	XBFZZ		11568	P4531A	PLATE, IDENTIFICATION.....CVW..	EA	1
C10	17	PBFZZ	4820-00-849-1220	11568	M629	COCK, DRAIN ..... BXC,CVW..	EA	1
C10	18	PAOZZ	4730-00-204-3481	96906	MS51887-9	BUSHING, 1/2X1/4 ..... BXC,CVW..	EA	1
C10	19	PAOZZ	6685-00-425-2373	11568	M519C	GAGE, PRESSURE, DIAL..... BXC,CVW..	EA	1
C10	20	XBOZZ		11568	M470	BUSHING, 2/8X1/4 ..... BXC,CVW..	EA	1
C10	21	PBOZZ	4730-00-247-9463	11568	M459	PLUG, PIPE..... BXC,CVW..	EA	1
C10	22	XBFZZ		11568	P4034D	AIR RECEIVER..... BXC,CVW..	EA	1

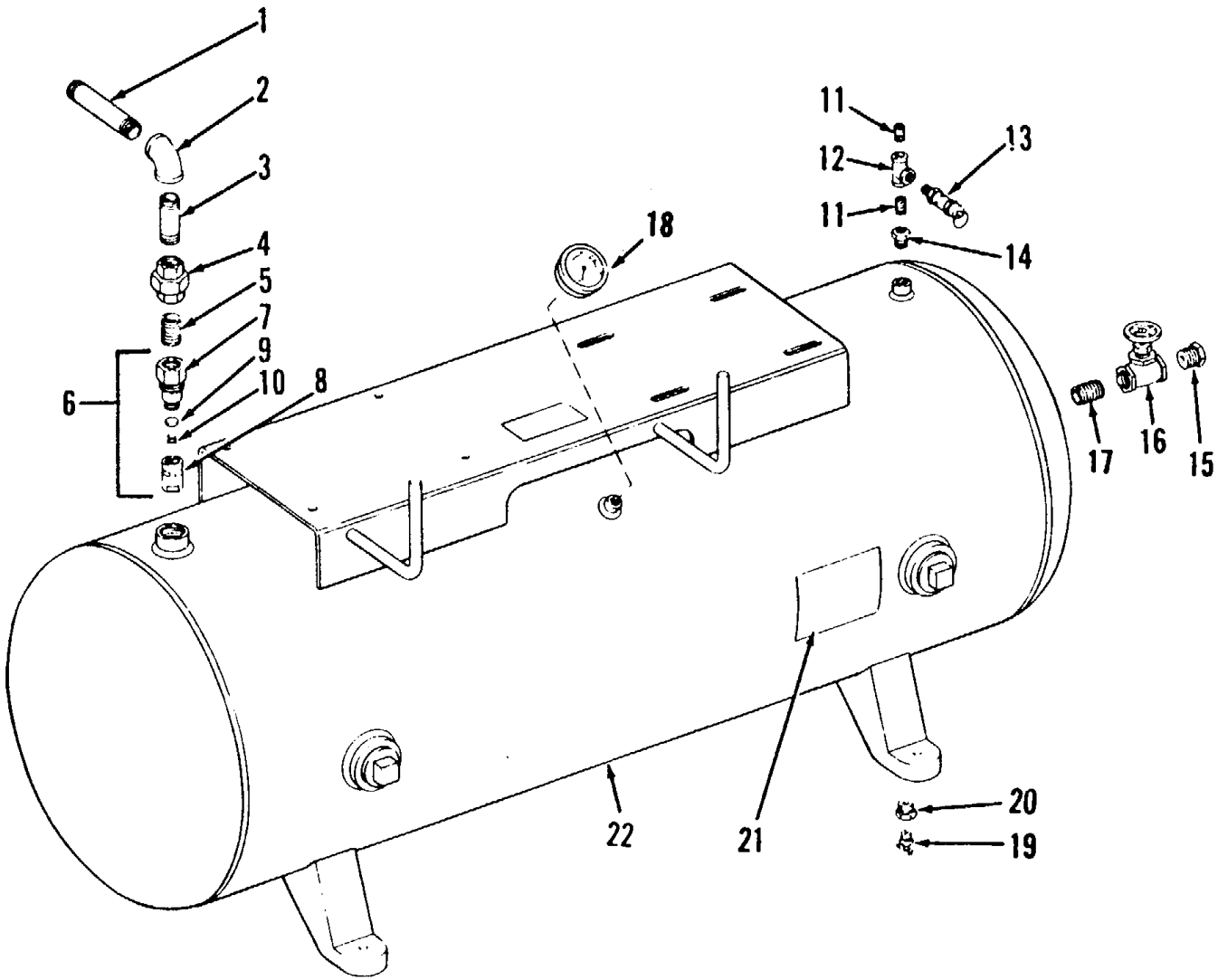

ME 4310-133-3512-14/C11

Figure C-11. Air receiver tank and related parts. (C. & H. Model 20-277M)

(1) ILLUSTRATION (a) FIG NO.	(b) ITEM NO.	(2) SMR CODE	(3) NATIONAL STOCK NUMBER	(4) FSCM	(5) PART NUMBER	(6) DESCRIPTION USABLE ON CODE	(7) U/M	(8) QTY INC IN UNIT
C11	1	XBFZZ		96906	MS51953-108	NIPPLE PIPE 3/4X5-1/2 IN .....CYE	EA	1
C11	2	PAOZZ	4730-01-076-7261	96906	MS14303-5BQUZ	ELBOW PIPE ¾.....CYE	EA	1
C11	3	PAOZZ	4730-00-196-1497	96906	MS51953-102	NIPPLE,PIPE.....CYE	EA	1
C11	4	XBFZZ		81348	WWU531-04TA	UNION,PIPE 3/4 IN .....CYE	EA	1
C11	5	PAOZZ	4730-00-196-1468	96906	MS51953-97	NIPPLE,PIPE.....CYE	EA	1
C11	6	PAOZZ	4820-01-077-7205	75336	224A-3/4X1	VALVE,ASSY,CHECK.....CYE	EA	1
C11	7	XBFZZ		75336	224A-1-3/4X1	.BODY VALVE.....CYE	EA	1
C11	8	XBFZZ		75336	224A-2-3/4X1	.CAGE VALVE.....CYE	EA	1
C11	9	XBFZZ		75336	224A-3-3/4-1	.DISC .....CYE	EA	1
C11	10	XBFZZ		75336	224A-4-3/4-1	.SPRING VALVE .....CYE	EA	1
C11	11	XBOZZ		96906	MS51953-25	NIPPLE,PIPE.....CYE	EA	2
C11	12	PAOZZ	4730-01-036-7466	96906	MS14303-2BRU	TEE,PIPE .....CYE	EA	1
C11	13	PAOZZ	4820-00-844-8636	75336	112C1/4-200	VALVE,SAFETY .....CYE	EA	1
C11	14	PAOZZ	4730-00-193-0869	96906	MS51887-3	BUSHING PIPE.....CYE	EA	1
C11	15	PAOZZ	4730-00-363-4138	96906	MS51887-17	BUSHING,PIPE.....CYE	EA	1
C11	16	XBOZZ		76364	1500-314	VALVE,GLOBE.....CYE	EA	1
C11	17	PAOZZ	4730-00-196-1468	96906	MS51953-97	NIPPLE,PIPE,CLOSE,3/4 INCH .....CYE	EA	1
C11	18	PAOZZ	6685-01-078-7556	38508	J5458	GAUGE,PRESSURE .....CYE	EA	1
C11	19	PAOZZ	4310-01-068-5819	08752	DC604-4	COCK,DRAIN.....CYE	EA	1
C11	20	PAFZZ	4730-00-204-3481	96906	MS51887-9	BUSHING,PIPE REDUCING 1/4X1/2.....CYE	EA	1
C11	21	XBOZZ		04718	88-440	PLATE IDENTIFICATION.....CYE	EA	1
C11	22	XBFZZ		04718	86-280	RECEIVER, AIR .....CYE	EA	1

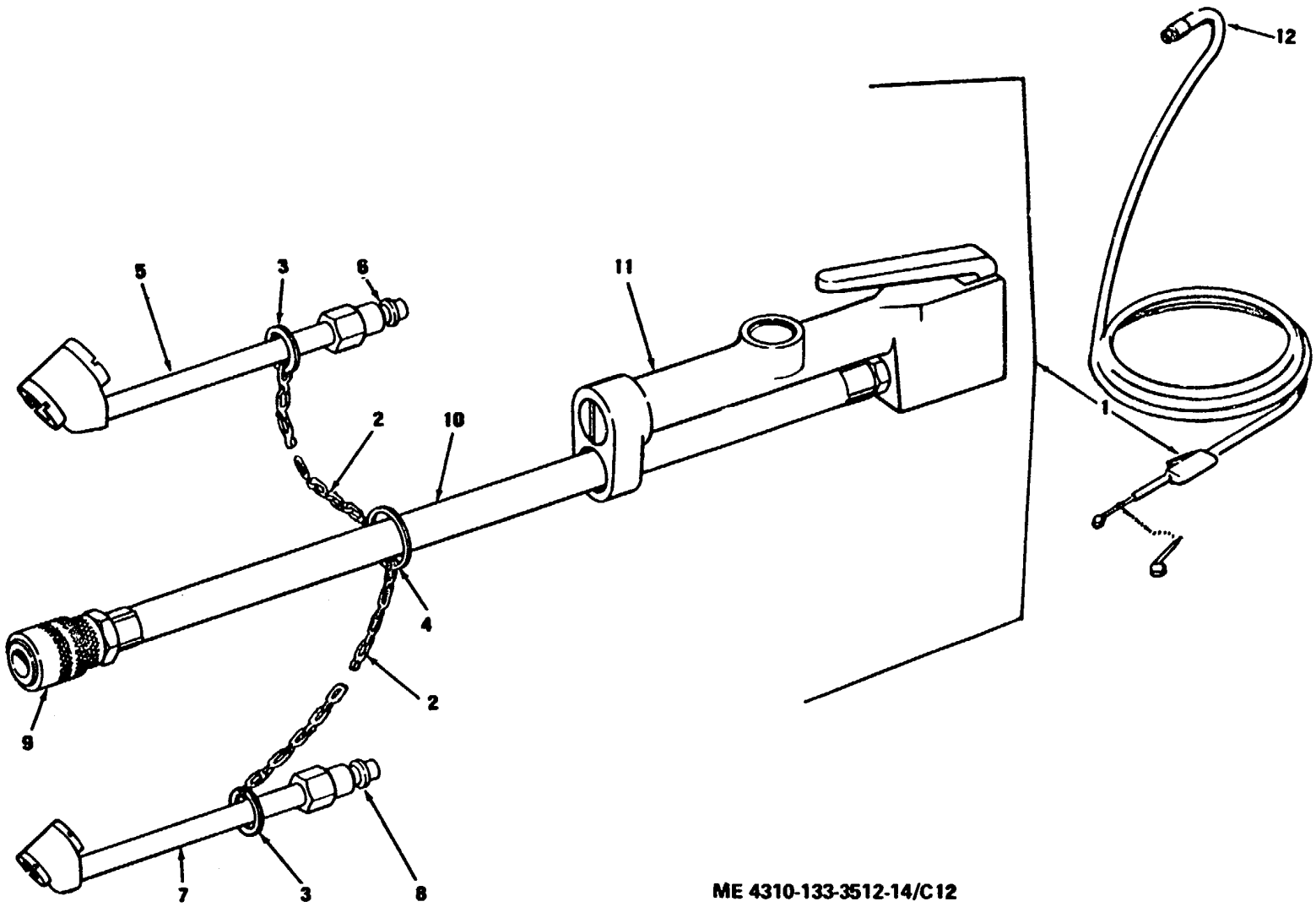

Figure C-12. Inflator Gauge and Hose.

(1) ILLUSTRATION (a) FIG NO.	(b) ITEM NO.	(2) SMR CODE	(3) NATIONAL STOCK NUMBER	(4) FSCM	(5) PART NUMBER	(6) DESCRIPTION USABLE ON CODE	(7) U/M	(8) QTY INC IN UNIT
C12	1	PAOZZ		94894	61-J2-1506	INFLATOR, GAGE	EA	2
C12	2	XBFZZ		94894	1507	.CHAIN LINK 11 LINKS	EA	2
C12	3	XBOZZ		94894	1509	.RING KEY ½ IN.	EA	2
C12	4	XBOZZ		94894	1508	.RING KEY 7/8 IN	EA	1
C12	5	XB0ZZ		94894	5004	.PROBE STANDARD	EA	1
C12	6	XAOZZ		94894	729	..PLUG	EA	1
C12	7	XBOZZ		94894	1506	.PROBE, JUMBO	EA	1
C12	8	XAOZZ		94894	729	..PLUG	EA	1
C12	9	XAOZZ		94894	61FI-715	.COUPLER, SPECIAL	EA	1
C12	10	XBOZZ		94894	506-32	.HOSE WHIP	EA	1
C12	11	XAOZZ		94894	506	.GAGE LESS HOSE	EA	1
C12	12	PAOZZ	4720-00-874-3179	11568	Z538A	HOSE ASSEMBLY, AIR 5/16 IN X 50 FT	FT	1

Page C-34 is blank

NATIONAL STOCK NUMBER AND PART NUMBER INDEX

STOCK NUMBER	FIGURE NO.	ITEM NO.
5330-00-003-9273	C4	12
5305-00-045-1988	C9	57
5305-00-068-0502	C1	4
5305-00-068-0502	C6	4
5305-00-068-0506	C7	28
5310-00-080-6004	C4	3
5310-00-081-4219	C2	3
5310-00-081-4219	C7	32
5930-00-087-4027	C5	1
3110-00-100-0359	C9	65
3110-00-100-0544	C9	62
3110-00-100-0744	C9	64
3110-00-100-3543	C9	61
5310-00-102-8328	C9	38
4730-00-103-5461	C10	1
3110-00-144-8622	C4	26
3110-00-144-8648	C4	19
5305-00-151-6876	C9	44
5315-00-168-2969	C9	49
4730-00-188-1874		
4730-00-193-0869	C11	14
4730-00-195-5708	C8	36
4730-00-196-1465	C11	11
4730-00-196-1468	C11	5
4130-00-196-1497	C11	3
5330-00-197-2792	C9	8
3110-00-198-1050	C9	40
4910-00-204-2644	C12	7
4310-00-208-7126	C9	31
4820-00-209-1775	C10	13
4820-00-209-5018	C10	5
4730-00-213-0651		
5310-00-224-0765	C3	3
5310-00-224-0772	C3	2
5306-00-225-8497	C4	6
5306-00-225-8499	C2	1
5310-00-230-7342	C1	7
5310-00-230-7342	C9	53
5310-00-230-7725	C1	3
5310-00-230-7725	C6	3
5306-00-231-0980		
5310-00-237-6749	C8	2
5310-00-237-6749	C9	52
4730-00-246-9218	C10	6
4730-00-247-9463		
4730-00-247-9463	C10	21
4730-00-247-9463	C8	17
5305-00-253-5615	C10	8
4730-00-266-3906	C10	4
5305-00-269-3214	C3	4
5305-00-269-3214	C4	4
4730-00-270-6113	C10	2
4130-00-270-6113	C8	6
4730-00-270-6113	C8	9
4730-00-270-6113	C8	12
4730-00-270-6113	C8	15
4730-00-278-4575	C8	41
4310-00-279-2804	C5	16
4730-00-279-8122	C8	51
4310-00-283-3288	C8	38
5305-00-331-4856	C8	35
5305-00-331-4856	C8	44
5305-00-331-4856	C8	50
4730-00-363-4138	C10	11
4730-00-363-4138	C10	12
4730-00-363-4138	C11	15
6680-00-377-4915		
4730-00-403-0882	C8	42
5310-00-407-9566	C2	2
5310-00-401-5566	C7	31
4820-00-421-6984	5	37
6685-00-425-2313	C10	19
5930-00-426-6670	C5	2
4130-00-430-9672	C8	47
5310-00-448-7227	C1	1
5310-00-448-7227	C6	1
5306-00-449-2717	C9	13
5306-00-449-2717	C9	24
5950-00-449-6725	C6	15

STOCK NUMBER	FIGURE NO.	ITEM NO.
5330-00-450-4130		
4310-00-450-9213	C8	20
5940-00-473-8025	C7	35
4310-00-477-7986	C8	18
4310-00-477-7989	C9	45
4310-00-477-9775	C9	16
3120-00-493-3912	C9	21
3120-00-493-3912	C9	32
4310-00-513-9913	C8	
3030-00-529-0474	C1	12
5360-00-530-4536	C5	4
6105-00-554-2718	C3	7
5950-00-577-0590	C7	22
6145-00-578-6604	C7	2
5310-00-582-5965	C7	8
5330-00-584-9005	C9	55
5330-00-584-9012	C9	59
5360-00-616-4313	C9	39
2815-00-625-6147	C9	46
3120-00-625-6748	C9	43
4310-00-631-3396	C8	56
4310-00-631-3397	C8	54
4310-00-631-3398	C8	53
4310-00-631-3399	C8	55
5310-00-655-9544	C3	1
5930-00-683-1628	C7	24
5305-00-710-4192	C8	57
5305-00-710-4192	C9	51
5310-00-732-0558	C4	1
5360-00-756-9452	C5	11
5310-00-761-6882	C7	25
5310-00-768-0318	C9	9
5930-00-772-6081	C5	3
4310-00-773-7986	C9	27
5340-00-805-0825	C5	10
5310-00-823-8804	C7	27
4130-00-834-6187		
4820-00-844-8636	C10	10
4820-00-844-8636	C11	13
4820-00-849-1220	C10	17
5360-00-850-5541	C9	48
4730-00-850-7971	C10	3
4730-00-850-7971	C8	5
4730-00-850-7971	C8	8
4730-00-850-7971	C8	11
4730-00-850-7971	C8	14
2990-00-863-0926	C9	54
4720-00-874-3179	C12	12
5310-00-880-7744	C2	4
5310-00-880-7744	C7	33
4310-00-884-4582	C9	47
6110-00-887-5005	C5	12
4310-00-896-2105	C9	50
2815-00-928-6078	C8	45
5305-00-984-6193	C2	6
5305-00-988-1721	C4	13
5330-00-999-0623	C9	63
3020-01-003-5174	C9	11
5305-01-004-9316	C10	15
5306-01-004-9473	C9	13
5306-01-004-9473	C9	25
5310-01-005-2297	C8	1
6110-01-001-6028	C7	15
5310-01-009-7208	C1	2
5310-01-009-7208	C6	2
5305-01-011-3072	C8	19
4820-01-014-4402	C10	5
5315-01-014-4456	C9	15
5315-01-014-4456	C9	26
5305-01-015-3345	C3	5
5310-01-017-3842	C1	5
4730-01-036-7466	C11	12
5360-01-040-3845	C5	9
4310-01-041-0886	C6	16
4130-01-041-9946	C8	40
5310-01-042-2333	C8	3
5305-01-042-2554	C5	5

NATIONAL STOCK NUMBER AND PART NUMBER INDEX

STOCK NUMBER	FIGURE NO.	ITEM NO.	STOCK NUMBER	FIGURE NO.	ITEM NO.
5305-01-042-2555	C5	6	4310-01-085-254	C5	14
5999-01-043-4910	C7	14	5310-01-088-4027	C8	32
5330-01-050-1547	C9	42	5305-01-088-5848	C7	12
4310-01-068-5819	C11	19	5305-01-088-6624	C8	31
4730-01-076-7261	C11	2	5945-01-089-5312	C7	11
4820-01-077-7205	C11	6	5305-01-089-7495	C7	16
5360-01-078-2739	C7	19	6105-01-105-6530	C4	9
6685-01-078-7556	C11	18	6110-01-113-9148	C7	9
5305-01-079-6374	C4	15	5330-01-120-4402	C9	37

FSCM	PART NUMBER	FIGURE NO.	ITEM NO.	FSCM	PART NUMBER	FIGURE NO.	ITEM NO.
56065	A-A 1O4 32CA-1	C4	21	96906	MS35206-245	C2	6
56065	A-C 82911-5	C4	28	96906	MS35206-277	C4	13
56065	A-S10T4DY-32G-1A	C4	30	96906	MS35223-81	C7	7
56065	A-11956-13375	C4	16	96906	MS35338-44	C7	8
56065	A-7575-1S	C4	31	96906	MS35338-45	C2	2
56065	A-7661-25	C4	27	96906	MS35338-45	C7	31
56065	A-83008-20	C4	20	96906	MS35338-46	C4	2
56065	A-83011A-C	C4	24	96906	MS51887-17	C10	1
56065	A-83431-875	C4	22	96906	MS51887-17	C10	12
56065	A-83440AC	C4	18	96906	MS51887-17	C11	15
56065	A-9646-375	C4	15	96906	MS51887-3	C11	14
56065	A7551-25	C4	17	96906	MS51887-9	C11	20
56065	B-61534-C	C4	11	96906	MS51953-102	C11	3
56065	B-61535-C	C4	14	96906	MS51953-108	C11	1
56065	B-84788A	C4	23	96906	MS51953-25	C11	11
74851	B81	C1	12	96906	MS51953-97	C11	5
56065	C215T17DB1	C4	9	96909	M551967-2	C7	5
08752	DC604-4	C11	19	96906	MS51967-5	C2	4
30086	D1	C6	20	96906	MS51967-5	C7	33
23826	D10037-1	C5	10	96906	MS51967-8	C4	1
23826	D10456-1	C5	14	96906	MS90725-32	C4	6
23826	D1366-1	C5	13	96906	MS90725-34	C2	1
23826	D1673-1	C5	8	96906	MS90725-64	C4	4
23826	D24817-C01	C7	20	96906	MS90726-6	C7	28
23826	D24826-001 SIZEC	C7	19				
23826	D24827-001	C7	16				
23826	D25013-001	C7	12	11568	M1046	C9	35
23826	D255551-001	C7	21	11568	M1058A	C10	8
23826	D274-1	C5	3	11568	M1296	C10	6
23826	D276-1	C5	9				
23826	D317-2	C5	12				
23826	D323-1	C5	5	11568	M1460	C3	4
23826	D357-1	C5	11	11568	M1480	C8	7
23826	D467-1	C5	4	11568	M1481	C8	10
23826	D54670-001	C7	13	11568	M1566	C1	9
23826	D54873-001	C7	18	11568	M1583	C9	13
23826	D73060-001	C7	23	11568	M1583	C9	25
23826	D73062-001	C7	10	11568	M1584	C9	23
23826	D73116-021	C7	17	11568	M1584	C9	34
23826	D9078-1	C5	15	11568	M1591	C8	13
23826	D9096-1	C5	6	11568	M1592	C8	16
23826	D9271-15	C5	2	11568	M1606	C6	10
23826	D9935-1	C5	7	11568	M1628	C1	11
23826	D9943-10	C5	16	11568	M1737	C8	35
56065	E-4850-1	C4	25	11568	M1737	C8	44
56065	E-61823-1	C4	12	11568	M1737	C8	50
56065	E-7729-25	C4	10	11568	M1881	C6	9
30086	E11EPB	C6	18	11568	M1882	C6	6
30086	E20D0L1	C6	17	11568	M1883	C6	7
30086	F11NOC	C6	19	11568	M1884	C8	3
30086	G103D126	C6	15	11568	M1898	C9	66
30086	G203D	C6	13	11568	M432	C8	19
30086	G213D	C6	12	11568	M459		
30086	G30T52	C6	16	11568	M459	C10	21
11568	G8-14	C6		11568	M459	C8	17
71176	H1-3/8	C4	7	11568	M460		
11568	H122	C9	42	11568	M461		
38508	J5458	C11	18	11568	M465	C9	9
				11568	M466	C8	2
96906	MS14303-2BRU	C11	12	11568	M466	C9	52
96906	MS14303-5BQUZ	C11	2	11568	M470	C10	20
96906	MS24523-22	C7	24	81349	M5086-2-16-2	C7	3
96906	MS27183-12	C2	3	81349	M5086/12-10-0	C7	1
96906	MS27183-12	C7	32	81349	M5086/2-14-9	C7	2
96906	MS27183-14	C4	3	11568	M519C	C10	19
96906	MS27183-9	C7	27	11568	M524	C10	13

NATIONAL STOCK NUMBER AND PART NUMBER INDEX

FSCM	PART NUMBER	FIGURE NO.	ITEM NO.	FSCM	PART NUMBER	FIGURE NO.	ITEM NO.
11568	M567			11568	SE5-22	C8	47
11568	M568	C3	5	11568	SE5-41	C10	3
11568	M629	C10	17	11568	SE5-41	C8	5
11568	M649	C8	1	11568	SE5-41	C8	8
11568	M696	C1	4	11568	SE5-41	C8	11
11568	M696	C6	4	11568	SE5-41	C8	14
11568	M7011D	C3	6	11568	SE5-42	C10	2
11568	M811	C10	9	11568	SE5-42	C8	6
11568	M817	C8	57	11568	SE5-42	C8	9
11568	M835	C10	15	11568	SE5-42	C8	12
11568	M864	C1	8	11568	SE5-42	C9	15
11568	M865	C1	10	11568	SE5-82	C9	50
11568	M905A	C1	3	11568	SE5-83B	C9	54
11568	M905A	C6	3	11568	SE5-85	C9	38
11568	M909A	C3	1	11568	SE5-86B	C9	46
11568	M912A	C1	7	11568	SE5-87	C9	47
11568	M912A	C9	53	11568	SE5-88	C3	3
11568	M914A	C3	2	11568	SE5-90	C9	48
11568	M919A	C1	2	11568	SE5-91	C9	39
11568	M919A	C6	2	11568	SE5-92A	C9	49
11568	M935A	C1	5	11568	SE5-95	C9	40
11568	M939A	C1	1	11568	SE5-97	C9	43
11568	M939A	C6	1	11568	U8375	C8	49
11568	M97A	C9	36	81348	WWU531-04TA	C10	4
11568	M98A	C9	37	11568	Z113	C8	54
11568	M998B			11568	Z115	C8	56
11568	NR-36-7B	C9	11	11568	Z117	C8	53
11568	NR 14- 6A			11568	Z118	C8	55
11568	NR 15A			11568	Z179C	C9	27
11568	NR2B	C8	38	11568	Z189C	C9	16
11568	NR29A			11568	Z206-200	C10	10
11568	NR31B	C9	8				
11568	NR36-104	C9	56	11568	Z441	C8	41
11568	NR36-113	C9	58	11568	Z508	C8	42
11568	NR 36-44	C8	18				
11568	NR 36-7A	C9	11	11568	Z538A	C12	12
11568	NR 36-9A	C9	66	11568	Z57B	C10	5
11568	P-4751	C8	31	11568	Z57C	C10	5
11568	P-4752	C8	32	11568	Z650	C1	
11568	P4033A	C10	16	11568	Z66A	C8	20
11568	P4034D	C10	22	11568	Z67-75	5	37
11568	P4086A	C10	4	92940	04A09101-04-00	C3	13
11568	P4089A	C3	6	92940	04A09101-06-00	C3	16
11568	P4531A	C10	16	92940	07000291-05-01	C3	12
11568	P4576C	C8	33	92940	07000350-07-02	C3	14
59730	RC10-8F	C7	35	56065	1A-C82011T-7C	C4	29
11568	RE10 2E	C8	36	92940	10D00267-00-01	C3	23
11568	RE10-99	C10	1	11568	10TWSTR0X32	C6	5
11568	RE14-10D	C9	30	75336	112C1/4-200	C11	13
11568	RE14-94	C9	51	92940	12C02765-C3-00	C3	20
11568	RE20-106	C9	57	23826	14EF320CX26	C7	9
11568	RE20-8	C9	12	11568	14TWX41	C6	8
11568	RE36-10D	C9	19	76364	1500-314	C11	16
11568	RE7-14			94894	1506	C12	7
11568	R10-10A	C9	18	94894	1507	C12	2
11568	R10-10B	C9	17	94894	1508	C12	4
11568	R10-102	C9	14	94894	1509	C12	3
11568	R10-102	C9	25	04718	177	C7	5
11568	R10-20	C9	13	04718	178	C7	6
11568	R10-20	C9	24	92940	19A03502-23-01	C3	11
11568	R10-21	C9	15	71176	2BK70H	C4	8
11568	R10-21	C9	26	71176	2EK70H1-3/8	C4	5
11568	R10-24	C9	22	92940	22A0229-05-00	C3	17
11568	R10-37	C9	21	75336	224A-1-3/4x1	C11	7
11568	R10-37	C9	32	75336	224A-2-3/4X1	C11	8
11568	R10-4	C9	20	75336	2242-3-3/4-1	C11	9
11568	R10B2	C8	51	75336	224A-3/4X1	C11	6
11568	R15-10A	C9	29	75336	224A-4-3/4-1	C11	10
11568	R15-10B	C9	28	60038	25520	C9	62
11568	R15-4	C9	31	60038	25584	C9	61
11568	R30-2	C8	40	60038	2720	C9	65
11568	R30-3	C9	23	60038	2789	C9	64
11568	R30-5	C9	60	92940	28A03101-04-00	C3	15
11568	R30A	C8		92940	28A08786-01-00	C3	18
11568	SB250B	C8	43	92940	28A09407-01-00	C3	19
11568	SE14-84	C9	44	92940	29A01631-01-00	C3	10
11568	SE30-100	C9	45	76680	450291	C9	63
11568	SE30-30	C9	59	23826	48E031A2	C7	11
11568	SE30-89	C9	55	23826	49EA14EF0	C7	29
11568	SE5-2A	C8	45	94894	5004	C12	5

SUPPLEMENTAL NATIONAL STOCK NUMBER AND PART NUMBER INDEX

STOCK NUMBER	FIGURE NO.	ITEM NO.	STOCK NUMBER	FIGURE NO.	ITEM NO.
5305-00-042-9478	C8	4	4730-00-273-8561	C8	48
4730-00-196-1468	C10	7	4820-00-421-6984	C5	47
4730-00-196-1468	C10	14	4820-00-421-6984	C8	52
4730-00-204-3481	C10	18	4310-00-450-9213	C8	30
4730-00-204-3481	C11	20			

FSCM	PART NUMBER	FIGURE NO.	ITEM NO.	FSCM	PART NUMBER	FIGURE NO.	ITEM NO.
30086	A203D22D2C	C6	11	96906	MS51953-97	C10	7
96906	MS39169-15	C8	48	96906	MS90725-90	C8	4
96906	MS51887-9	C10	18	11568	Z67-75	C8	52
96906	MS51953-97	C10	14	75336	125B1-4-75PSI	C5	47

INDEX

	Paragraph	Pages
A		
Administrative storage	1-6	1-1
Air compressor	3-8	3-5
Air intake mufflers	3-9, 4-15	3-6, 4-7
Air pressure switch	5-8	5-8
Air receiver	3-10	3-5
Air pressure adjustment	5-9	5-8
Army material, destruction of	1-5	1-1
Air hose assembly	4-4	4-1
B		
Belt guard assembly	3-5	3-3
C		
Compressor assembly	4-12	4-7
Controls and instruments	2-1	2-1
Crankshaft and crankcase	5-5	5-5
Connecting incoming power source	4-5	4-1
D		
Data, tabulated	1-10	1-6
Description	1-7	1-1
Destruction of Army material	1-5	1-1
Drain cock	2-1	2-1
E		
Electric motor	4-11, 5-6	4-6, 5-5
Equipment serviceability criteria	1-4	1-1
Errors, reporting of	1-3	1-1
F		
Forms and records, maintenance of	1-2	1-1
G		
Gage, air pressure	2-1	2-1
Grounding	4-5	4-1
I		
Identification	1-8	1-1
Inspection and servicing equipment	4-3	4-1
Installation or set-up instructions	4-5	4-1
Installation of separately packed components	4-4	4-1
L		
Lubrication	3-2	3-1
M		
Maintenance forms and records	1-2	1-1
Maintenance, repair parts	4-7, 5-2	4-5, 5-1

	Paragraph	Pages
0		
Operating procedures:		
Operation:		
In extreme cold	2-3	2-2
In extreme heat	2-4	2-2
In dusty or sandy area	2-5	2-2
In salt water or high humidty areas	2-6	2-2
P		
Preventive maintenance checks and services	3-3, 4-8	3-2, 4-5
Pistons, piston rings, connecting rods, and cylinder block	5-5	5-5
Pressure switch	5-8	5-8
R		
Repair parts, maintenance	4-7, 5-2	4-5, 6-1
Reporting errors	1-1	1-1
Release valve assembly	4-14	4-7
S		
Scope	1-1	1-1
Servicing equipment and inspecting	4-3	4-1
Special tools and equipment	4-6, 5-1	4-5, 5-1
T		
Tabulated data	1-10	1-6
Troubleshooting	3-4, 4-9	3-2, 4-5
U		
Unloading the air compressor	4-1	4-1
Unpacking the air compressor	4-2	4-1
V		
V-belts	3-7, 4-13	3-5, 4-7

By Order of the Secretary of the Army:

FREDERICK C. WEYAND
General, United State Army,
Chief of Staff

Official:
VERNE L. BOWERS
Major General, United States Army,
The Adjutant General.

Distribution:

To be distributed in accordance with DA Form -12-2A, (qty rqr block no. 21) Operator maintenance requirements for Compressors, 25 CFM.

*U.S. GOVERNMENT PRINTING OFFICE: 1991 - 281-486/42103

TEAR ALONG PERFORATED LINE

RECOMMENDED CHANGES TO EQUIPMENT TECHNICAL PUBLICATIONS

SOMETHING WRONG WITH THIS PUBLICATION?

FROM: (PRINT YOUR UNIT'S COMPLETE ADDRESS)

DATE SENT

PUBLICATION NUMBER	PUBLICATION DATE	PUBLICATION TITLE

BE EXACT. . .PIN-POINT WHERE IT IS

PAGE NO.	PARA-GRAPH	FIGURE NO	TABLE NO.	IN THIS SPACE TELL WHAT IS WRONG AND WHAT SHOULD BE DONE ABOUT IT:

PRINTED NAME, GRADE OR TITLE, AND TELEPHONE NUMBER	SIGN HERE:

DA FORM 1 JUL 70 2028-2

PREVIOUS EDITIONS • ARE OBSOLETE.

P.S.—IF YOUR OUTFIT WANTS TO KNOW ABOUT YOUR RECOMMENDATION MAKE A CARBON COPY OF THIS AND GIVE IT TO YOUR HEADQUARTERS.

PIN: 026853-000

This fine document...

Was brought to you by me:

Liberated Manuals -- free army and government manuals

Why do I do it? I am tired of sleazy CD-ROM sellers, who take publicly available information, slap “watermarks” and other junk on it, and sell it. Those masters of search engine manipulation make sure that their sites that sell free information, come up first in search engines. They did not create it... They did not even scan it... Why should they get your money? Why are not letting you give those free manuals to your friends?

I am setting this document FREE. This document was made by the US Government and is NOT protected by Copyright. Feel free to share, republish, sell and so on.

I am not asking you for donations, fees or handouts. If you can, please provide a link to liberatedmanuals.com, so that free manuals come up first in search engines:

<A HREF=http://www.liberatedmanuals.com/>Free Military and Government Manuals</A>

- Sincerely
  Igor Chudov
  http://igor.chudov.com/
- Chicago Machinery Movers