TECHNICAL MANUAL

DIRECT SUPPORT AND GENERAL SUPPORT MAINTENANCE

REPAIR PARTS AND SPECIAL TOOLS LISTS

(INCLUDING DEPOT MAINTENANCE REPAIR PARTS AND SPECIAL TOOLS)

DETECTOR UNIT, CHEMICAL AGENT AUTOMATIC ALARM, M43 (FSN 6665-859-2201)

ALARM UNIT, CHEMICAL AGENT AUTOMATIC ALARM, M42 [FSN 6665-859-2215]

This copy is a reprint which includes current pages from Changes 1 and 2.

HEADQUARTERS DEPARTMENT OF THE ARMY

12 SEPTEMBER 1973

CHANGE No. 2

HEADQUARTERS
DEPARTMENT OF THE ARMY
WASHINGTON, DC *30 December 1977*

Direct Support and General Support Maintenance Repair Parts and Special Tools Lists (Including Depot Maintenance Repair Parts and Special Tools)

DETECTOR UNIT, CHEMICAL AGENT AUTOMATIC ALARM, M43 (NSN 6665-00-859-2201)

ALARM, UNIT, CHEMICAL AGENT AUTOMATIC ALARM, M42 (NSN 6665-00-859-2215)

Current as of July 1977

TM 6625-302-34P, 12 September 1973, is changed as follows:

The title of this manual is changed as shown above.

Page 15, fig 3, Item 14, Column (2). Change FSN to 5305-054-6655. Column (3), line 2, change 0.562 to 0.625. Line 3 change reference number and manufacturers code to MS 51957-31 (96906). Place "C" in left-hand margin.

Page 16, figures 3, Item 22. Column (2). Change FSN to 5305-054-5642, column (3) line 2, change #1-72 to #2-56. Line 3 change reference number and manufacturers code to MS 51957-8 (96906). Place "C" in left-hand margin.

Figure 3, Item 23, Delete in entirety.

Page 22, Figure 5, Item 26. Column (2) delete FSN, column (3) Line 1 change to Gasket, lines 2 and 3 change to read, silicone rubber approx. 1.50 in. x 1.66 in. x .015 in. thk. Line 4 change reference number and manufacturers code to 2419620 (23667). Place "C" in lefthand margin.

Page 26, figure 5, Item 52. Column (2) change FSN to 5305-054-5651. Column (3) line 2 change to read #4-40 x 0.500 in. lg. Line 3 change reference number to MS 51957-17. PLACE "C" in left-hand margin.

Page 28, figure 6, *Item* 7. Delete in entirety.

Page 38, *BULK MATERIAL.* Last line item, column (2) change FSN to 6920-991-6676. Line 2 change reference number 1000. Place "C" in left-hand margin.

Page 41, figure 3. Delete in entirety. Add new illustration *figure* 3.

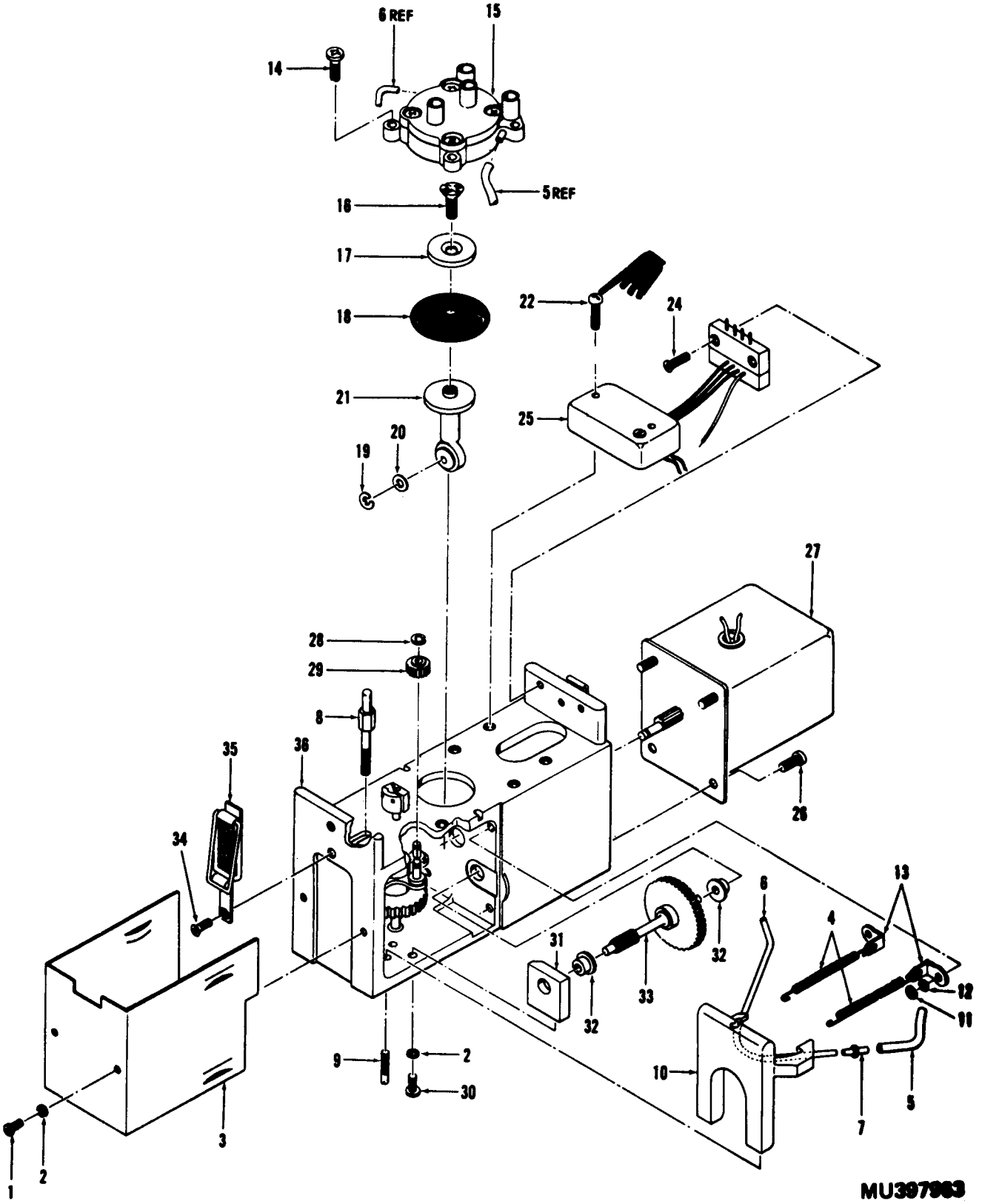

Figure 3. Fluid-vacuum pump assembly.

Page 43, figure 5 ①. Delete in entirety. Add new illustration figure 5 ①.

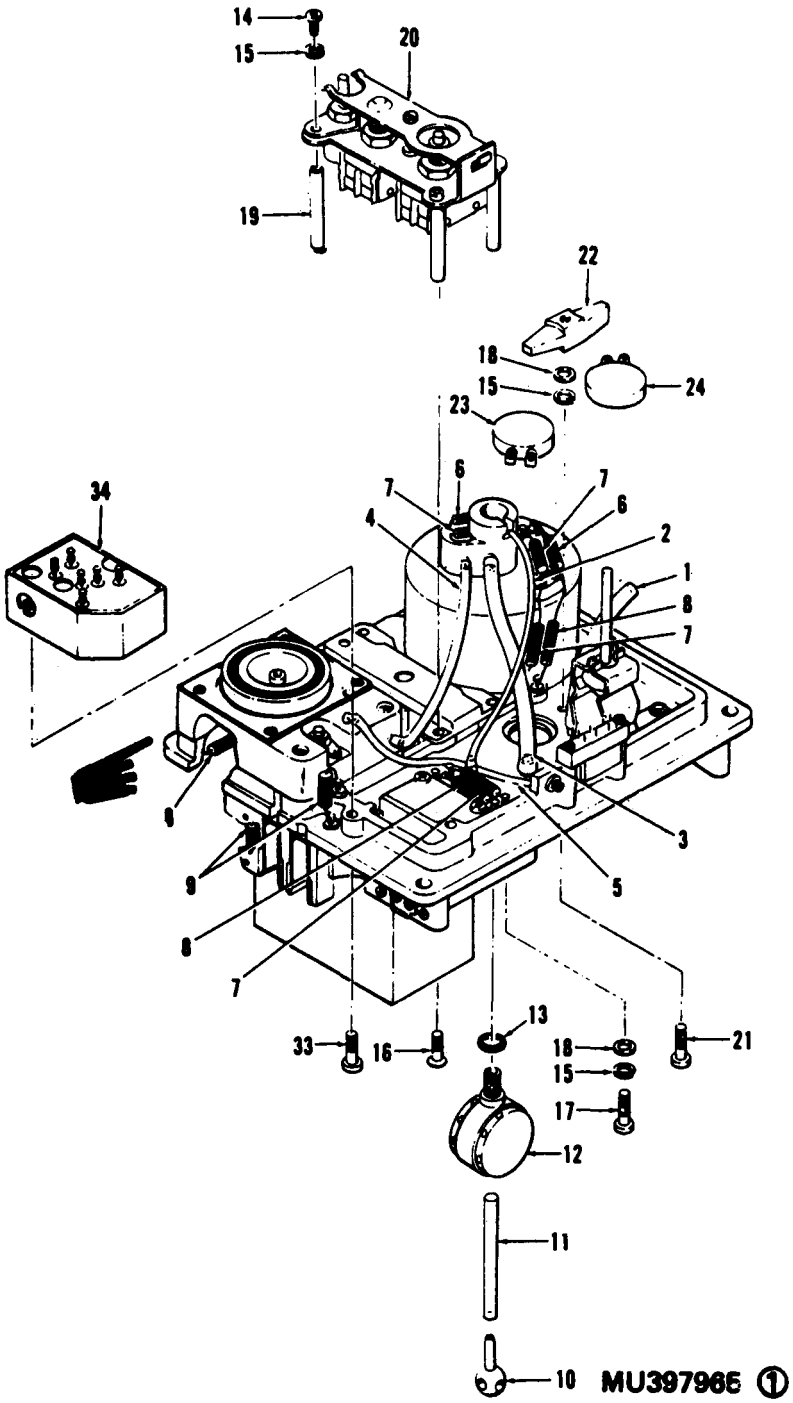

Figure 5 ①. *Chassis assembly (sheet 1 of 2).*

Page 44, figure 5 ②. Delete in entirety. Add new illustration figure 5 ②.

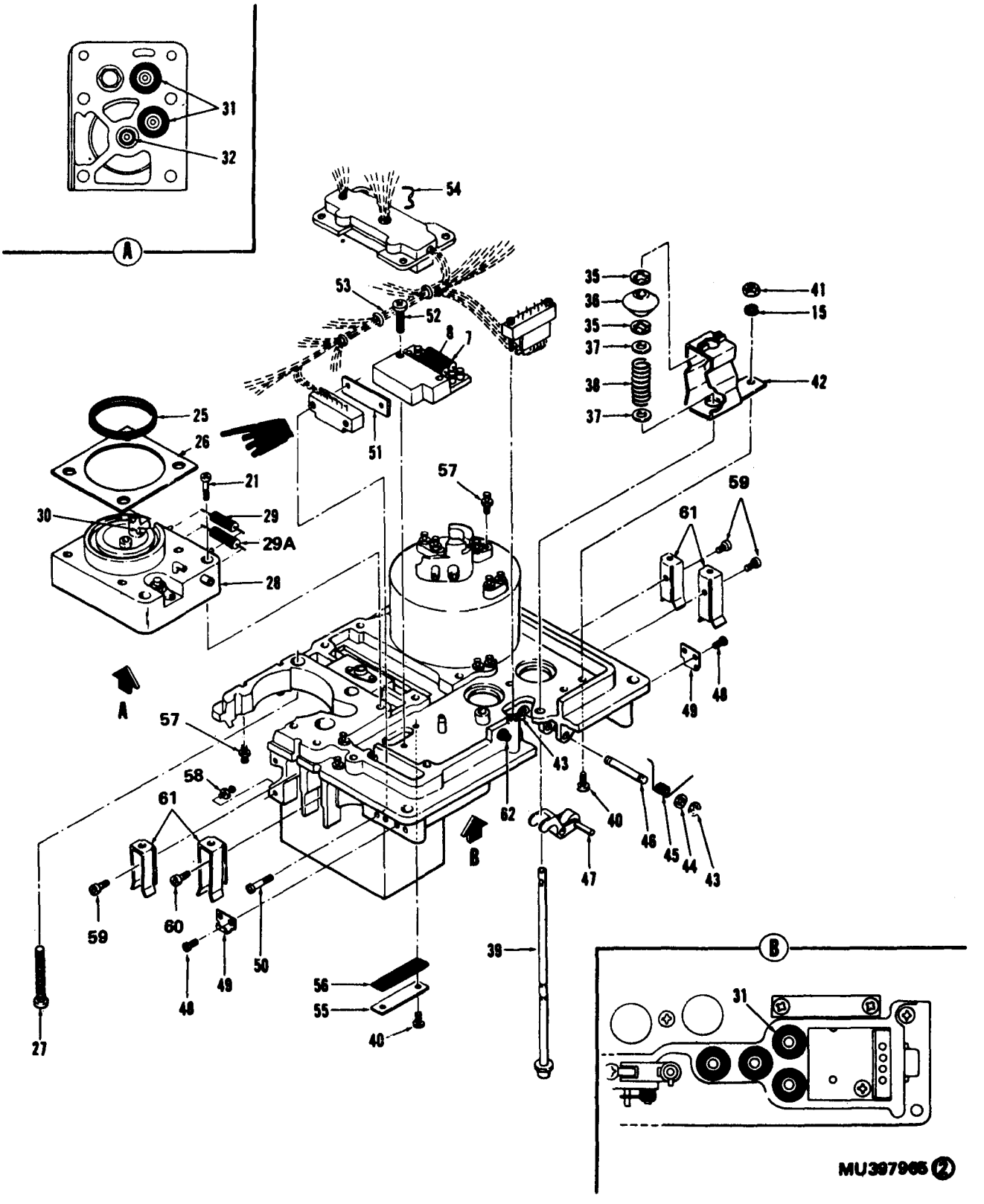

Figure 5 ②. Chassis assembly (sheet 2 of 2).

Page 45, figure 6. Delete in entirety. Add new illustration figure 6.

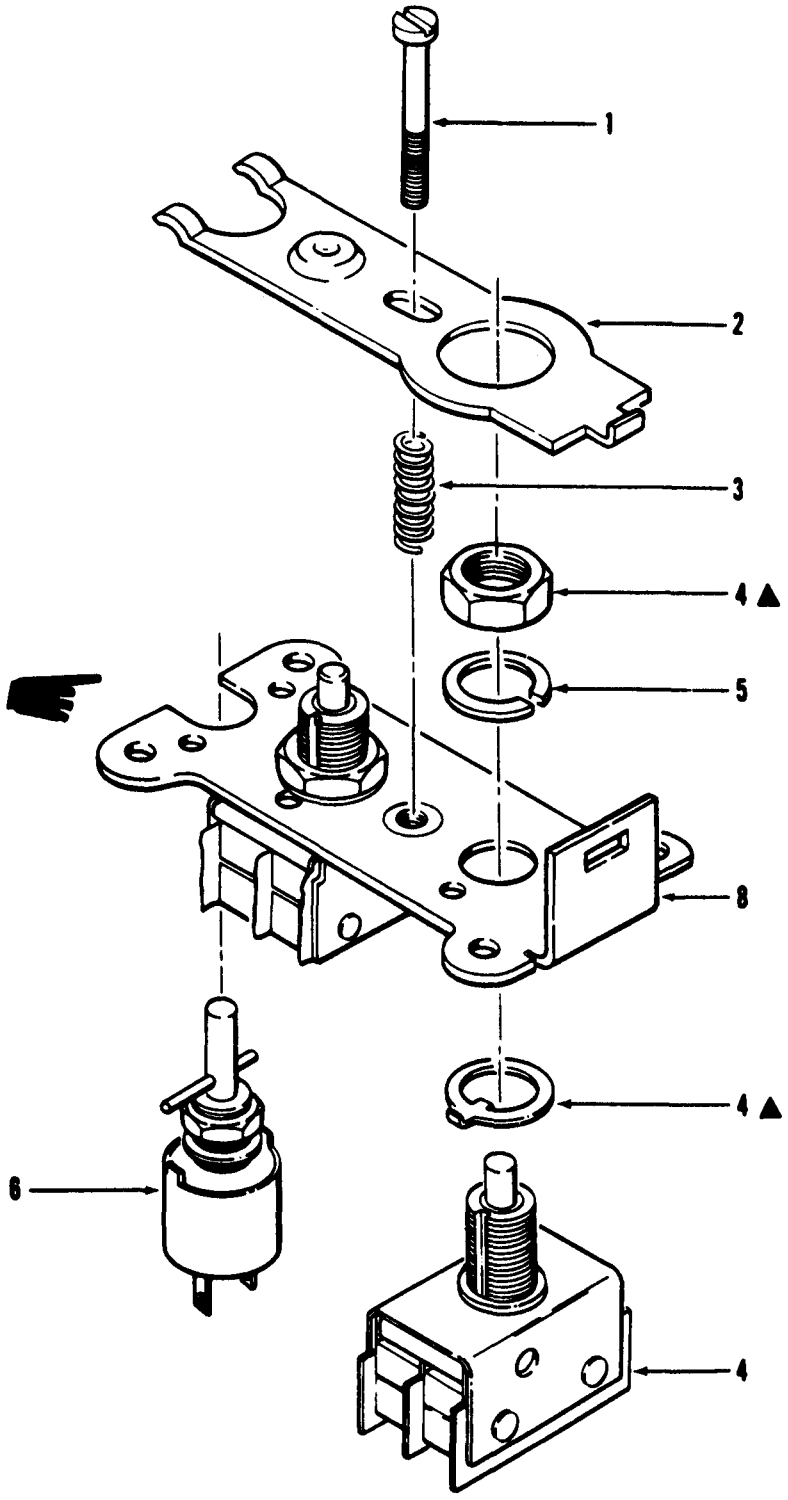

▲ INDICATES ITEMS FURNISHED WITH BASIC PART

MU397966

Figure 6. Switch assembly.

PAGE 49. DELETE IN ENTIRETY. ADD NEW PAGE.

SECTION IV. INDEX-FEDERAL STOCK NUMBER AND REFERENCE NUMBER CROSS-REFERENCE TO FIGURE AND ITEM NUMBER

NATIONAL STOCK NUMBER AND PART NUMBER INDEX

STOCK NUMBER	FIGURE NO.	ITEM NO.	STOCK NUMBER	FIGURE NO.	ITEM NO.
3110-555-7470	3	32	5305-054-5651	5	33
				5	52
3120-133-3933	3	29		7	2
				9	6
4720-453-8962	3	5			
			5305-054-5653	5	21
4720-453-8963	5	5			
			5305-054-6650	2	26
4720-454-4902	5	11			
			5305-054-6652	2	18
4720-454-4905	5	2			
			5305-054-6653	7	6
4720-456-9788	3	6			
			5305-054-6654	9	28
4730-229-5239	3	7			
			5305-054-6655	3	14
5305-054-5635	5	60			
			5305-068-5287	2	12
5305-054-5636	5	59			
			5305-443-4686	6	1
5305-054-5637	7	33			
			5305-456-1048	2	10
5305-054-5638	1	4			
			5305-456-5494	7	21
5305-054-5641	5	50		9	32
5305-054-5642	3	22	5305-462-0206	8	1
5305-054-5646	3	26	5305-616-2080	2	42
5305-054-5647	3	1	5305-720-8613	5	17
	5	14			
	7	10	5305-727-8833	1	7
5305-054-5648	3	30	5305-763-3356	3	24
	5	40			
			5305-763-7822	3	16
5305-054-5649	7	24			
			5305-764-2966	3	34
				5	48

NATIONAL STOCK NUMBER AND PART NUMBER INDEX

STOCK NUMBER	FIGURE NO.	ITEM NO.
5305-768-0336	5	16
5305-800-7261	2	16
5305-946-9847	2	20
	5	27
5305-948-4152	9	1
5305-980-3934	7	17
5310-125-5662	3	20
5310-167-1374	3	11
5310-183-4354	5	44
5310-209-2948	2	43
5310-229-5242	5	37
5310-246-2548	3	17
5310-410-3025	9	20A
5310-595-6211	5	18
	9	7
5310-619-1148	9	2
5310-655-9631	3	12
5310-722-5998	2	19
5310-928-2690	1	5
	7	34
5310-929-6395	7	7
	9	29
5310-933-8118	3	2
	5	15
	7	3
	9	8
5310-933-8120	9	4
5310-933-8121	6	5
5310-934-9748	5	41
	9	9
5310-934-9765	9	5
5315-442-9723	3	8
5315-454-4906	3	9
5330-220-3873	2	9
5330-220-3874	5	13
5330-220-3875	7	29
5330-228-6945	7	5
5330-228-9384	2	3
	2	7A
5330-229-2745	1	3
5330-248-3840	2	6
	2	32A
		7

Page 51. Delete FSN 5330-631-1342, Figure 5, item 26.

Page 52. Delete FSN 6665-133-3934, figure 7, item 8. Add FSN 6350-133-3934, figure 7, item 8.

Page 56. Delete C5-15-5233, 81361, figure 6, item 7.

Page 57. Delete FFS92TYPE 1, 81361, STYLE 9S, figure 3, item 22.

Page 58. Delete MS28775-026, 96906, figure 5, item 26, and delete MS51957-16, 96906, figure 5, item 52. Add figure 5, item 52 to MS51957-17.

NATIONAL STOCK NUMBER AND PART NUMBER INDEX

STOCK NUMBER	FIGURE NO.	ITEM NO.	STOCK NUMBER	FIGURE NO.	ITEM NO.
5930-997-8196	6	4	6665-133-0688	8	3
5935-135-4377	7	1	6665-133-0690	2	31
5935-401-9746	5	62	6665-133-0691	1	2
5935-893-7952	7	25	6665-133-0692	2	25
				5	--
5940-159-1290	9	16			
			6665-133-0693	5	12
5940-442-9722	7	22			
			6665-133-3932	7	31
5940-937-5237	9	20			
			6665-133-3935	2	14
5940-954-1412	3	13			
			6665-133-3936	7	12
5965-133-0694	9	19			
			6665-133-5527	6	2
5975-681-4609	7	15			
			6665-133-5528	3	10
5975-727-5153	5	54			
	9	12	6665-133-5529	3	15
5975-982-9261	7	19	6665-135-6197	5	61
5975-987-8829	9	23	6665-135-6199	2	29
6105-442-5697	3	27	6665-135-6200	2	1
6110-535-4212	3	25	6665-135-6201	5	10
6135-465-1571	9	33	6665-135-8801	2	17
6210-251-2086	9	25	6665-136-1925	5	38
6210-400-5102	9	27	6665-136-1926	5	31
6240-155-8706	9	26	6665-136-4358	6	3
6350-133-3934	7	8			
6625-247-9772	7	4			

SECTION IV. INDEX - FEDERAL STOCK NUMBER AND REFERENCE NUMB

CROSS-REFERENCE TO FIGURE AND ITEM NUMBER

REFERENCE NO.	MFG CODE	FIG NO.	ITEM NO.
MS15795-808	96906	9	2
MS16624-4037	96906	2	33
MS16632-4015	96906	4	2
MS16633-4009	96906	3	28
		5	43
MS16633-4012	96906	3	19
		5	35
MS17821-4-9	96906	5	54
	9	12	
MS18064-1	96906	7	17
MS24585-1390	96906	2	35
MS24693PC49	96906	2	12
MS27039-1-13	96906	9	1
MS29513-010	96906	2	4
MS29513-014	96906	2	6
		2	32A
MS3112E14-5S	96906	7	25
MS35338-134	96906	1	5
		7	34
MS35338-135	96906	3	2
		5	15
		7	3
		9	8

REFERENCE NO.	MFG CODE	FIG NO.	ITEM NO.
MS35338-136	96906	7	7
		9	29
MS35338-138	96906	9	4
MS35338-139	96906	6	5
MS35649-244	96906	5	41
		9	9
MS35650-304	96906	9	5
MS35650-305T	96906	9	20A
MS51021-9	96906	2	16
MS51957-1	96906	5	60
MS51957-12	96906	3	26
MS51957-13	96906	3	1
		5	14
		7	10
MS51957-14	96906	3	16
		3	30
		5	40
MS51957-15	96906	7	24
MS51957-17	96906	5	33
		5	52
		7	2
		9	6
MS51957-19	96906	5	21
MS51957-2	96906	5	59

SECTION IV. INDEX - FEDERAL STOCK NUMBER AND REFERENCE NUMB
CROSS-REFERENCE TO FIGURE AND ITEM NUMBER

REFERENCE NO.	MFG CODE	FIG. NO.	ITEM NO.
MS51957-26	96906	2	26
MS51957-28	96906	2	18
MS51957-29	96906	7	6
MS51957-3	96906	7	33
MS51957-30	96906	9	28
MS51957-4	96906	1	4
MS51957-7	96906	5	50
MS51957-8	96906	3	22
MS51959-14	96906	3	16
MS51959-17	96906	5	16
MS51959-2	96906	3	34
		5	48
MS51959-3	96906	1	7
MS51959-31	96906	3	14
MS51959-5	96906	3	24
MS77066-4	96906	9	16
MS91528-0P2B	96906	9	22
M5423-09-03	81349	7	13
NAS1598D08Y	80205	8	2
NAS1598D3Y	80205	9	3
NAS1635-06-18	80205	2	20
		5	27
NAS1635-06-9	80205	3	14

REFERENCE NO.	MFG CODE	FIG NO.	ITEM NO.
PB08NA01	81349	9	20
PSI-1321-14	06887	7	26
RCR20G203JS	81349	9	15
RW70U24R3F	81349	5	6
RW70U24R9F	81349	5	29
RW70U30R1F	81349	5	7
		5	29A
RW70U39R2F	81349	5	9
RW70U47R5F	81349	5	8
SFR2-5SS4G2	70854	3	32
SR1032CA6	97539	7	21
		9	32
VHC340-2SS	98003	1	8
		3	35
		5	49
113B4362-1	89954	3	20
2419620	23667	5	26
748765-1	19315	2	43

By Order of the Secretary of the Army:

BERNARD W. ROGERS
General, *United States Army*
Chief of Staff

Official:

J. C. PENNINGTON
Brigadier General, United States Army
The Adjutant General

Distribution:
To be distributed in accordance with DA Form 12-28, Direct and General Support maintenance requirements for Detection and Warning Systems for Alarms.

CHANGE NO. 1

HEADQUARTERS
DEPARTMENT OF THE ARMY
WASHINGTON, DC, *6 February 1975*

Direct Support and General Support Maintenance Repair Parts and Special Tools Lists (Including Depot Maintenance Repair Parts and Special Tools) DETECTOR UNIT, CHEMICAL AGENT AUTOMATIC ALARM, M43 (FSN 6665-859-2201) ALARM UNIT, CHEMICAL AGENT AUTOMATIC ALARM, M42 (FSN 6665-859-2215)

TM 3-6665-302-34P, 12 September 1973, is changed as follows:

Page 4, paragraph 4, add subparagraph c.

c. Action change codes indicated in the left-hand margin of the listing page denote the following:

N—Indicates an added item
C—Indicates a change in data
R–Indicates a change in FSN only

Page 17, section II. Column (2), the FSN "5305-054-5646" is changed to "5305-054-5647". Place "C" in left-hand margin.

Column (3). So much as reads "0.188 in. lg MS51957-12 (96906)" is changed to read "0.250 in. lg MS51957-13 (96906)".

Page 49, section IV. Delete line "5305-054-5646 3 26" and add "3" under "Figure No." and "26" under "Item No." after FSN "5305-054-5647." Place "C" in left-hand margin.

By Order of the Secretary of the Army:

FRED C. WEYAND
General, United States Army
Chief of Staff

Official:
VERNE L. BOWERS
Major General, United States Army
The Adjutant General

Distribution:

To be distributed in accordance with DA Form 12-28(qty rqr block no. 197),Direct/General Support requirements for Detection and Warning Systems, Alarms.

TECHNICAL MANUAL
No. 3-6665-302-34P

HEADQUARTERS
DEPARTMENT OF THE ARMY
WASHINGTON D.C., *12 September 1973*

Direct Support and General Support Maintenance
Repair Parts and Special Tools List
(Including Depot Maintenance Repair Parts and Special Tools)

DETECTOR UNIT, CHEMICAL AGENT AUTOMATIC ALARM, M43 (FSN 6665-859-2201)
ALARM UNIT, CHEMICAL AGENT AUTOMATIC ALARM, M42 (FSN 6665-859-2215)

Current as of 12 March 1973

		Page	Illus figure
SECTION I.	INTRODUCTION	2	
II.	REPAIR PARTS LIST	7	
Group 100.	M43 detector unit	7	1
	Detector unit assembly section	8	2
	Fluid-vacuum pump assembly section	13	3
	Electronic module assembly section	18	4
	Chassis assembly section	19	5
	Switch assembly section	27	6
	Case top assembly section	28	7
200.	M42 alarm unit	33	8
	Panel assembly section	33	9
300.	Bulk materials	38	
SECTION III.	SPECIAL TOOLS LIST—Not applicable.		
IV.	INDEX-FEDERAL STOCK NUMBER AND REFERENCE NUMBER CROSS-REFERENCE TO FIGURE AND ITEM NUMBER	49	

SECTION I

INTRODUCTION

1. Scope

This manual lists repair parts required for the performance of direct support, general support, and depot maintenance of the M43 detector unit and M42 alarm unit.

2. General

This Repair Parts and Special Tools List is divided into the following sections:

a. Repair Parts List—Section II. A list of repair parts authorized at the direct support, general support, and depot levels for the performance of maintenance. The list also includes parts which must be removed for the replacement of the authorized parts. Parts list is composed of functional groups in ascending numerical sequence, with parts in each group listed in figure and item number sequence.

b. Special Tools List—Section III. Not applicable.

c. Index-Federal Stock Number and Reference Number Cross-Reference to Figure and Item Number—Section IV. A list, in ascending numerical sequence, of all Federal stock numbers appearing in the listings, followed by a list, in alphameric sequence, of all reference numbers appearing in the listings. Federal stock numbers and reference numbers are cross-referenced to each illustration figure and item number appearance.

3. Explanation of Columns

The following provides an explanation of columns found in the tabular listings.

a. Source, Maintenance, and Recoverability Codes (SMR).

(1) *Source code.* Source codes are assigned to support items to indicate the manner of acquiring support items for maintenance, repair, or overhaul of end items. Source codes are entered in the first and second positions of the Uniform SMR Code Format as follows:

Code	*Definition*
PA	Item procured and stocked for anticipated or known usage.
PB	Item procured and stocked for insurance purpose because essentiality dictates that a minimum quantity be available in the supply systems.
PC	Item procured and stocked which otherwise would be coded PA except that it is deteriorative in nature.
PD	Support item, excluding support equipment, procured for initial issue or outfitting and stocked only for subsequent or additional initial issues or outfittings. Not subject to automatic replenishment.
PE	Support equipment procured and stocked for initial issue or outfitting to specified maintenance repair activities.
PF	Support equipment which will not be stocked but which will be centrally procured on demand.
PG	Item procured and stocked to provide for sustained support for the life of the equipment. It is applied to an item peculiar to the equipment which because of probable discontinuance or shutdown of production facilities would prove uneconomical to reproduce at a later time.
KD	An item of depot overhaul/repair kit and not purchased separately. Depot kit defined as a kit that provides items required at the time of overhaul or repair.
KF	An item of a maintenance kit and not purchased separately. Maintenance kit defined as a kit that provides an item that can be replaced at organizational or intermediate levels of maintenance.
KB	Item included in both a depot overhaul/repair kit and a maintenance kit.
MO	Item to be manufactured or fabricated at organizational level.
MF	Item to be manufactured or fabricated at the direct support maintenance level.
MH	Item to be manufactured or fabricated at the general support maintenance level.
MD	Item to be manufactured or fabricated at the depot maintenance level.
AO	Item to be assembled at organizational level.
AF	Item to be assembled at direct support maintenance level.
AH	Item to be assembled at general support maintenance level.
AD	Item to be assembled at depot maintenance level.
XA	Item is not procured or stocked because the requirements for the item will result in the replacement of the next higher assembly.

Code	Definition
XB	Item is not procured or stocked. If not available through salvage, requisition.

NOTE

Cannibalization or salvage may be used as a source of supply for any items source coded above except those coded XA and aircraft support items as restricted by AR 700–42.

(2) *Maintenance code.* Maintenance codes are assigned to indicate the levels of maintenance authorized to USE and REPAIR support items. The maintenance codes are entered in the third and fourth positions of the Uniform SMR Code Format as follows:

USE (THIRD POSITION): The maintenance code entered in the third position indicates the lowest maintenance level authorized to remove, replace, and use the support item. The maintenance code entered in the third position will indicate one of the following levels of maintenance:

code	*Application/explanation*
C	Crew or operator maintenance performed within organizational maintenance.
O	Support item is removed, replaced, used at the organizational level.
F	Support item is removed, replaced, used at the direct support level.
H	Support item is removed, replaced, used at the general support level.
D	Support items that are removed, replaced, used at Depot, Mobil Depot, Specialized Repair Activity only.

REPAIR (FOURTH POSITION): The maintenance code entered in the fourth position indicates whether the item is to be repaired and identifies the lowest maintenance level with the capability to perform complete repair (i.e., all authorized maintenance functions). This position contains one of the following maintenance codes:

Code	*Application/explanation*
O	The lowest maintenance level capable of complete repair of the support item is the organizational level.
F	The lowest maintenance level capable of complete repair of the support item is the direct support level.
H	The lowest maintenance level capable of complete repair of the support item is the general support level.
D	The lowest maintenance level capable of complete repair of the support item is the depot level.
L	Repair restricted to designated Specialized Repair Activity.
Z	Non-repairable. No repair is authorized.
B	No repair is authorized. The item may be reconditioned by adjusting, lubricating, etc., at the user level. No parts or special tools are procured for the maintenance of this item.

(3) *Recoverability code.* Recoverability codes are assigned to support items to indicate the disposition action on unserviceable items. The recoverability code is entered in the fifth position of the Uniform SMR Code Format as follows:

Recoverability codes	*Definition*
Z	Non-repairable item. When unserviceable, condemn and dispose at the level indicated in position 3.
O	Repairable item. When uneconomically repairable, condemn and dispose at organizational level.
F	Repairable item. When uneconomically repairable, condemn and dispose at the direct support level.
H	Repairable item. When uneconomically repairable, condemn and dispose at the general support level.
D	Repairable item. When beyond lower level repair capability, return to depot. Condemnation and disposal not authorized below deport level.
L	Repairable item. Repair, condemnation and disposal not authorized below Depot/Specialized Repair Activity level.
A	Item requires special handling or condemnation procedures because of specific reasons (i.e., precious metal content, high dollar value, critical material or hazardous material). Refer to appropriate manuals/directives for specific instructions.

b. Federal Stock Number. Indicates the Federal stock number assigned to the item and will be used for requisitioning purposes.

c. Description. Indicates the Federal item name and a minimum description required to identify the item. The last line indicates the reference number followed by the applicable Federal Supply Code for Manufacturer (FSCM) in parentheses. The FSCM is used as an element in item identification to designate manufacturer or distributor or Government agency, etc., and is identified in SB 708–42.

d. Unit of Measure (U/M). Indicates the standard or basic quantity by which the listed item is used in performing the actual maintenance function. This measure is expressed by a two-character alphabetical abbreviation. e.g., ea, in., pr, etc., and is the basis used to indicate quantities and allowances in subsequent columns. When the unit of measure differs from the unit of issue, the lowest unit of issue that will satsify the required units of measure will be requisitioned.

e. Quantity Incorporated in Unit. Indicates the quantity of the item used in the breakout shown on the illustration figure, which is prepared for a functional group, subfunctional group, or an assembly. A “V” appearing in this column in lieu of a quantity indicates that no specific quantity is applicable, e.g., shims, spacers, etc.

f. 30-Day DS/GS Maintenance Allowances.

(1) Repair parts source coded PA, PB, PC, PD, PE, PF, and/or PG authorized for use at the direct support (DS) and/or general support (GS) levels will be requisitioned on an "as required" basis.

(2) The repair parts authorized at the DS/GS levels are for the maintenance mission at these levels.

(3) Requirements for repair parts stockage and for distribution to supported units will be based on demand and determined in accordance with AR 710–2.

g. *1-Year Allowances Per 100 Equipments/Contingency Planning Purposes.* Total quantities of repair parts required for distribution and contingency planning purposes will be based on demand data.

h. Depot Maintenance Allowance Per 100 Equipments. Repair parts authorized for use at the depot level will be requisitioned on an "as required" basis.

i. *Illustration.* This column is divided as follows:

(1) *Figure number.* Indicates the figure number of the illustration on which the item is shown.

(2) *Item number.* Indicates the callout number used to reference the item on the illustration.

4. Special Information

a. Detailed assembly instructions for items source coded "AF" and "AH" are found in TM 3–6665–302–34. Assembly components are listed immediately following the item to be assembled.

b. The following publications pertain to the M43 detector unit the M42 alarm unit and their components:

TM 3–6665–225–12 . . Operator's and Organizational Maintenance Manual: Alarm, Chemical Agent Automatic: Portable Manpack M8, etc.

TM 3-6665–302–20P. . Organizational Maintenance Repair Parts and Special Tools List: Detector unit, Chemical Agent Automatic Alarm M43.

TM 3-6665–302–34P. . Direct Support, General Support and Depot Maintenance Manual (Including Depot Maintenance Repair Parts and Special Tools) Detector unit, Chemical Agent Automatic Alarm, M42, Alarm Unit M42.

5. How to Locate Repair Parts

a. When Federal stock number or reference number is unknown:

(1) *First.* Using the Table of Contents, determine the functional group or section within which the repair part belongs, i.e., M43 detector unit, detector unit assembly section, electronic module assembly section, etc. This is necessary since illustrations are prepared for functional groups and sections and listings are divided into the same groups.

(2) *Second.* . Find the illustration covering the group or section to which the repair part belongs.

(3) *Third.* Identify the repair part on the illustration and note the illustration figure and item number of the repair part.

(4) *Fourth.* Using the Repair Parts Listing, find the functional group or section to which the repair part belongs and locate the illustration figure and item number noted on the illustration.

b. When Federal stock number or reference number is known:

(1) *First.* Using the Index of Federal Stock Numbers and Reference Numbers, find the pertinent Federal stock number or reference number. This index is in ascending FSN sequence followed by a list of reference numbers in ascending alphameric sequence, cross-referenced to the illustration figure number and item number.

(2) *Second.* Using the Repair Parts Listing, find the functional group or section of the repair part and the illustration figure number and item number referenced in the Index of Federal Stock Number and Reference Numbers.

6. Abbreviations

Abbreviations	Explanation
appl	application
cres	corrosion resisting steel
csk	countersunk
PCT	percent
PF	picofarad
porm	plus or minus
w	watt(s) or wide, width
w/	with

7. Recommendations for Maintenance Publication Improvements

The reporting of errors, omissions, and recommendations for improving this manual by the individual user is encouraged. Reports should be submitted on DA Form 2028 (Recommended Changes to Publications) and forwarded direct to Commander, Edgewood Arsenal, ATTN: SAREA–DE–ET, Aberdeen Proving Ground, MD 21010.

SECTION II. REPAIR PARTS LIST

(1) SMR Code	(2) Federal Stock Number	(3) DESCRIPTION Reference Number & Mfr. Code Usable On Code	(4) UNIT of meas	(5) Qty inc. in Unit	(6) 30-day DS maint allowance (a) 1-20	(b) 21-50	(c) 51-100	(7) 30-day GS maint allowance (a) 1-20	(b) 21-50	(c) 51-100	(8) 1-yr alw per 100 equip cnt-gcy	(9) Depot maint alw per 100 equip	(10) Illustration (a) Figure No.	(b) Item No.
		GROUP 100-M43 DETECTOR UNIT												
XA F D		DETECTOR UNIT ASSEMBLY (1A2) D5-15-4440 (81361)		1									1 2	1
PA FF D	6665-133-0691	CASE ASSEMBLY, BOTTOM (1A1) D5-15-5230 (81361)	EA	1									1	2
PA FZ Z	5330-229-2745	SEAL, RUBBER ROUND SECTION SYN, 6 IN. ID B5-15-4343 (81361)	EA	1									1	3
PA FZ Z	5305-054-5638	SCREW, MACHINE CRES, PAN HD, #2-56, 0.312 IN. LG MS51957-4 (96906)	EA	8									1	4
PA FZ Z	5310-928-2690	WASHER, LOCK CRES, SPLIT RING, #2 SCREW SIZE MS35338-134 (96906)	EA	8									1	5
PA FZ Z	5340-812-5393	CATCH, CLAMPING C5-15-4341-1 (81361)	EA	4									1	6
PA FZ Z	5305-727-8833	SCREW, MACHINE CRES, FLAT CSK HD, #2-56, 0.250 IN. LG MS51959-3 (96906)	EA	4									1	7
PA FZ Z	5340-947-6959	CATCH VHC340-2SS (98003)	EA	2									1	8

(1) SMR Code	(2) Federal Stock Number	(3) DESCRIPTION Reference Number & Mfr. Code Usable On Code	(4) UNIT of meas	(5) Qty inc. in Unit	(6) 30-day DS maint allowance (a) 1-20	(b) 21-50	(c) 51-100	(7) 30-day GS maint allowance (a) 1-20	(b) 21-50	(c) 51-100	(8) 1-yr alw per 100 equip cnt-gcy	(9) Depot maint alw per 100 equip	(10) Illustration (a) Figure No.	(b) Item No.
PA FZ Z	9905-220-3865	PLATE, INSTRUCTION D5-15-4342 (81361)	EA	1									1	9
		DETECTOR UNIT ASSEMBLY SECTION												
PA CF F	6665-135-6200	RAINSHIELD ASSEMBLY C5-15-4360 (81361)	EA	1									2	1
XA		RAINSHIELD ASSEMBLY C5-15-4520 (81361)		1									2	2
PA OZ Z	5330-228-9384	GASKET SYN RUBBER, 0.880 IN. ID, 1.120 IN. OD, 0.040 IN .THK C5-15-4432-2 (813610	EA	1									2	3
XA		PACKING, PREFORMED MS29513-010 (96906)		1									2	4
PA OZ Z	6665-136-7180	ADAPTER, SHIELD, RAIN D5-15-4368 (81361)	EA	1									2	5
PA OZ Z	5330-248-3840	PACKING, PREFORMED SYN RUBBER, 0.489 IN. ID, 0.070 IN. H MS29513-014 (96906)	EA	1									2	6
PA CF F	6680-136-1929	METER, FLOW RATE INDICATING, FLOAT TYPE D5-15-4340 (81361)	EA	1									2	7

(1) SMR Code	(2) Federal Stock Number	(3) DESCRIPTION Reference Number & Mfr. Code Usable On Code	(4) UNIT of meas	(5) Qty inc. in Unit	(6) 30-day DS maint allowance (a) 1-20	(b) 21-50	(c) 51-100	(7) 30-day GS maint allowance (a) 1-20	(b) 21-50	(c) 51-100	(8) 1-yr alw per 100 equip cnt-gcy	(9) Depot maint alw per 100 equip	(10) Illustration (a) Figure No.	(b) Item No.
PA OZ Z	5330-228-9384	GASKET SYN RUBBER, 0.880 IN. ID, 1.120 IN. OD, 0.040 IN. THK C5-15-4432-2 (81361)	EA	1									2	7A
XB FZ Z		ADAPTER ASSEMBLY, METER C5-15-5291 (813610	EA	1									2	8
PA FZ Z	5330-220-3873	GASKET SYN RUBBER, 0.500 IN. ID, 0.760 IN. OD. 0.031 IN. THK B5-15-4716 (81361)	EA	1									2	9
PA FZ Z	5305-456-1048	SCREW, SHOULDER CRES, #8-32, 0.230 IN. LG C5-15-4381 (81361)	EA	2									2	10
XB FZ Z		LOOP, STRAP FASTENER AL ALLOY C5-15-4357 (81361)	EA	2									2	11
PA FZ Z	5305-068-5287	SCREW, MACHINE CRES, FLAT CSK HD, #8-32, 7/16 IN. LG MS24693PC49 (96906)	EA	2									2	12
XB FZ Z		SPACER, PLATE AL ALLOY, 0.076 IN. THK C5-15-4519 (81361)	EA	2									2	13
PA FZ Z	6665-133-3935	HANDLE, DETECTOR UNIT D5-15-4352 (81361)	EA	1									2	14

(1) SMR Code	(2) Federal Stock Number	(3) DESCRIPTION Reference Number & Mfr. Code Usable On Code	(4) UNIT of meas	(5) Qty inc. in Unit	(6) 30-day DS maint allowance (a) 1-20	(b) 21-50	(c) 51-100	(7) 30-day GS maint allowance (a) 1-20	(b) 21-50	(c) 51-100	(8) 1-yr alw per 100 equip cnt-gcy	(9) Depot maint alw per 100 equip	(10) Illustration (a) Figure No.	(b) Item No.
		RESERVOIR ASSEMBLY D5-15-5630 (81361) NOTE: THIS ITEM IS DISCARDED AFTER INITIAL SERVICING OF DETECTOR UNIT.		1									2	15
PA FZ Z	5305-800-7261	SETSCREW CRES, HEADLESS, HEX SOCKET INT DRIVE, #4-40, 1/8 IN. LG MS51021-9 (96906)	EA	1									2	16
PA FZ Z	6665-135-8801	CRANK, HAND C5-15-4395 (81361)	EA	1									2	17
PA FZ Z	5305-054-6652	SCREW, MACHINE CRES, PAN HD, #6-32, 3/8 IN. LG MS51957-28 (96906)	EA	3									2	18
PA FZ Z	5310-722-5998	WASHER, FLAT CRES, #6 SCREW SIZE MS15795-805 (96906)	EA	3									2	19
PA FZ Z	5305-946-9847	SCREW, MACHINE CRES, PAN HD, #6-32, 1.125 IN. LG NAS1635-06-18 (80205)	EA	2									2	20
PA FZ Z	6665-439-1665	BAIL, CELL C5-15-5489 (81361)	EA	1									2	21
PA CZ Z	6665-198-5687	DETECTOR CELL, CHEMICAL AGENT D5-15-4500 (81361)	EA	1									2	22

(1) SMR Code	(2) Federal Stock Number	(3) DESCRIPTION Reference Number & Mfr. Code Usable On Code	(4) UNIT of meas	(5) Qty inc. in Unit	(6) 30-day DS maint allowance (a) 1-20	(b) 21-50	(c) 51-100	(7) 30-day GS maint allowance (a) 1-20	(b) 21-50	(c) 51-100	(8) 1-yr alw per 100 equip cnt-gcy	(9) Depot maint alw per 100 equip	(10) Illustration (a) Figure No.	(b) Item No.
PA CH D	6665-220-3872	PUMP ASSEMBLY, FLUID VACUUM (1A2A1) E5-15-4600 (81361)	EA	1									2 3	23 -
PA CF D	6665-400-5098	ELECTRONIC MODULE ASSEMBLY (1A2A4) D5-15-4550 (81361)	EA	1									2 4	24 -
PA FH D	6665-133-0692	CHASSIS ASSEMBLY (1A2A2) E5-15-4490 (81361)	EA	1									2 5	25 -
PA FZ Z	5305-054-6650	SCREW, MACHINE CRES, PAN HD, #6-32, 0.250 IN. LG MS51957-26 (81361)	EA	2									2	26
PA FZ Z	5365-228-0647	PLUG, MACHINE THREAD PLASTIC, 9/16-18 THD C5-15-5299 (81361)	EA	1									2	27
PA FZ Z	5330-369-7388	PACKING, PREFORMED SYN RUBBER, 1.484 IN. ID, 1.762 IN. OD, 0.139 IN. H C5-15-4442-5 (81361)	EA	1									2	28
PA FF F	6665-135-6199	AIR INTAKE ASSEMBLY C5-15-4370 (81361)	EA	1									2	29
AF FF F		THUMBSCREW ASSEMBLY C5-15-5292 (81361)	EA EA	1 1									2 2	30 30
PA FZ Z	6665-133-0690	LEASH, THUMBSCREW B5-15-4448 (81361)	EA	1									2	31
PA FZ Z	5365-246-3117	PLUG, MACHINE THREAD PLASTIC, 9/16-18 THD C5-15-4399 (81361)	EA	1									2	32

(1) SMR Code	(2) Federal Stock Number	(3) DESCRIPTION Reference Number & Mfr. Code Usable On Code	(4) UNIT of meas	(5) Qty inc. in Unit	(6) 30-day DS maint allowance (a) 1-20	(b) 21-50	(c) 51-100	(7) 30-day GS maint allowance (a) 1-20	(b) 21-50	(c) 51-100	(8) 1-yr alw per 100 equip cnt-gcy	(9) Depot maint alw per 100 equip	(10) Illustration (a) Figure No.	(b) Item No.
PA FZ Z	5330-248-3840	PACKING, PREFORMED SYN RUBBER, 0.489 IN. ID, 0.070 IN. H MS29513-014 (96906)	EA	1									2	32A
XA		RING, RETAINING MS16624-4037 (96906)		1									2	33
XA		WASHER, FLAT CRES, 0.385 IN. ID C5-15-4398-1 (81361)		1									2	34
XA		SPRING, HELICAL, COMPRESSION MS24585-1390 (96906)		1									2	35
XA		WASHER, FLAT CRES, 0.458 IN. ID C5-15-4398-2 (81361)		1									2	36
XA		COVER, AIR INTAKE D5-15-4384 (81361)		1									2	37
PA FZ Z	5330-369-7383	PACKING, PREFORMED SYN RUBBER, 0.674 IN. ID, 0.103 IN. H C5-15-4442-1 (81361)	EA	1									2	38
XA		HOUSING, AIR INTAKE D5-15-4374 (813610		1									2	39

(1) SMR Code	(2) Federal Stock Number	(3) DESCRIPTION Reference Number & Mfr. Code Usable On Code	(4) UNIT of meas	(5) Qty inc. in Unit	(6) 30-day DS maint allowance (a) 1-20	(b) 21-50	(c) 51-100	(7) 30-day GS maint allowance (a) 1-20	(b) 21-50	(c) 51-100	(8) 1-yr alw per 100 equip cnt-gcy	(9) Depot maint alw per 100 equip	(10) Illustration (a) Figure No.	(b) Item No.
PA FZ Z	5330-369-7384	PACKING, PREFORMED SYN RUBBER, 1.239 IN. ID.,0.070 IN. H C5-15-4442-2 (81361)	EA	1									2	40
PA FZ Z	5330-453-5284	PACKING, PREFORMED PLASTIC C5-15-5256 (81361)	EA	1									2	41
PA FZ Z	5305-616-2080	SCREW, MACHINE CRES, RD HD, #1-72, 0.188 IN. LG AN520C1R3 (88044)	EA	2									2	42
PA FZ Z	5310-209-2948	WASHER, LOCK CRES, SPLIT RING, 0.078 IN. ID, 0.109 IN. OD, 0.015 IN. THK 748765-1 (19315)	EA	2									2	43
PA FZ Z	6665-136-7177	HEATER ASSEMBLY (1A2HR1) D5-15-4380 (81361)	EA	1									2	44
PA FZ Z	6665-198-5731	RING, PRESSURE C5-15-4726 (81361)	EA	1									2	45
		FLUID-VACUUM PUMP ASSEMBLY SECTION												
PA FZ Z	5305-054-5647	SCREW, MACHINE CRES, PAN HD, #4-40, 0.250 IN. LG MS51957-13 (96906)	EA	2									3	1

(1) SMR Code	(2) Federal Stock Number	(3) DESCRIPTION Reference Number & Mfr. Code Usable On Code	(4) UNIT of meas	(5) Qty inc. in Unit	(6) 30-day DS maint allowance (a) 1-20	(b) 21-50	(c) 51-100	(7) 30-day GS maint allowance (a) 1-20	(b) 21-50	(c) 51-100	(8) 1-yr alw per 100 equip cnt-gcy	(9) Depot maint alw per 100 equip	(10) Illustration (a) Figure No.	(b) Item No.
PA HZ Z	5310-933-8118	WASHER, LOCK CRES, SPLIT RING, 0.118 IN. ID, 0.209 IN. OD, 0.028 IN. THK MS35338-135 (96906)	EA	4									3	2
PA FZ Z	6665-228-6943	COVER, DUST D5-15-4611 (81361)	EA	1									3	3
PA FZ Z	5360-229-5230	SPRING, HELICAL, EXTENSION CRES, 0.725 IN. FREE O/A LG, 0.086 IN. ID C5-15-4647 (81361)	EA	2									3	4
PA FZ Z	4720-453-8962	TUBING, RUBBER SILICONE, 0.031 IN. ID, 0.093 IN. OD, 2.150 IN. LG C5-15-4603-3 (813610	EA	1									3	5
PA FZ Z	4720-456-9788	TUBING, RUBBER SILICONE, 0.031 IN. ID, 0.093 IN. OD, 3.97 IN. LG C5-15-4603-1 (81361)	EA	1									3	6
PA FZ Z	4730-229-5239	TUBE COUPLING C5-15-4617 (81361)	EA	1									3	7
PA FZ Z	5315-442-9723	PIN, SHOULDER, HEADLESS CRES, #4-40 THD, 1.250 IN. LG C5-15-4648 (81361)	EA	1									3	8

(1) SMR Code	(2) Federal Stock Number	(3) DESCRIPTION Reference Number & Mfr. Code Usable On Code	(4) UNIT of meas	(5) Qty inc. in Unit	(6) 30-day DS maint allowance (a) 1-20	(b) 21-50	(c) 51-100	(7) 30-day GS maint allowance (a) 1-20	(b) 21-50	(c) 51-100	(8) 1-yr alw per 100 equip cnt-gcy	(9) Depot maint alw per 100 equip	(10) Illustration (a) Figure No.	(b) Item No.
PA FZ Z	5315-454-4906	PIN, STRAIGHT, THREADED CRES, #4-40 THD, 0.439 IN. LG C5-15-4651 (81361)	EA	2									3	9
PA FZ Z	6665-133-5528	GUIDE, TUBE D5-15-4621 (81361)	EA	1									3	10
PA FZ Z	5310-167-1374	NUT, PLAIN, HEXAGON CRES, #3-48 AN340C3 (88044)	EA	2									3	11
PA FZ Z	5310-655-9631	WASHER, LOCK CRES, SPLIT RING, #3 BOLT SIZE FFW84CLASSBSTYLEB (81348)	EA	2									3	12
PA FZ Z	5940-954-1412	TERMINAL, LUG SOLDER, BRASS, ACCOMMODATES #14 AWG CONDUCTOR C5-15-4633 (81361)	EA	2									3	13
PA FZ Z	5305-935-3051	SCREW, MACHINE CRES, PAN HD, #6-32, 0.562 IN. LG NAS1635-06-9 (80205)	EA	4									3	14
PA FZ Z	6665-133-5529	HEAD ASSEMBLY, VACUUM PUMP D5-15-4630 (81361)	EA	1									3	15
PA FZ Z	5305-763-7822	SCREW, MACHINE CRES, FLAT CSK HD, #4-40, 0.312 IN. LG MS51959-14 (96906)	EA	1									3	16

(1) SMR Code	(2) Federal Stock Number	(3) DESCRIPTION Reference Number & Mfr. Code Usable On Code	(4) UNIT of meas	(5) Qty inc. in Unit	(6) 30-day DS maint allowance (a) 1-20	(b) 21-50	(c) 51-100	(7) 30-day GS maint allowance (a) 1-20	(b) 21-50	(c) 51-100	(8) 1-yr alw per 100 equip cnt-gcy	(9) Depot maint alw per 100 equip	(10) Illustration (a) Figure No.	(b) Item No.
PA FZ Z	5310-246-2548	WASHER, RECESSED RESIN, 0.130 IN. ID, 0.650 IN. OD, 0.090 IN. THK C5-15-4662 (81361)	EA	1									3	17
PA FZ Z	6665-136-7179	DIAPHRAGM, VACUUM PUMP C5-15-4638 (81361)	EA	1									3	18
PA FZ Z	5365-598-1138	RING, RETAINING CRES, EXT APPL, 0.094 IN. ID MS16633-4012 (96906)	EA	1									3	19
PA FZ Z	5310-125-5662	WASHER, FLAT CRES, 0.126 IN. ID 113B4362-1 (89954)	EA	1									3	20
PA HZ Z	6665-220-3871	CONNECTING ROD ASSEMBLY C5-15-5275 (81361)	EA	1									3	21
PA FZ Z	5305-871-7893	SCREW, MACHINE CRES, PAN HD, #1-72, 0.625 IN. LG FFS92TYPE1STYLE9S (81348)	EA	2									3	22
PA FZ Z	5310-804-0141	WASHER, FLAT CRES, 0.075 IN. ID, 0.186 IN. OD, 0.020 IN. THK MS15795-801 (96906)	EA	2									3	23
PA FZ Z	5305-763-3356	SCREW, MACHINE CRES, FLAT CSK HD, #2-56, 0.375 IN. LG MS51959-5 (96906)	EA	2									3	24

(1) SMR Code	(2) Federal Stock Number	(3) DESCRIPTION Reference Number & Mfr. Code	Usable On Code	(4) UNIT of meas	(5) Qty inc. in Unit	(6) 30-day DS maint allowance (a) 1-20	(b) 21-50	(c) 51-100	(7) 30-day GS maint allowance (a) 1-20	(b) 21-50	(c) 51-100	(8) 1-yr alw per 100 equip cnt-gcy	(9) Depot maint alw per 100 equip	(10) Illustration (a) Figure No.	(b) Item No.
PA FZ Z	6110-435-4212	REGULATOR, VOLTAGE (1A2A1A1) D5-15-4660 (81361)		EA	1									3	25
PA HZ Z	5305-054-5646	SCREW, MACHINE CRES, PAN HD, #4-40, 0.188 IN. LG MS51957-12 (96906)		EA	2									3	26
PA HZ Z	6105-442-5697	MOTOR, DIRECT CURRENT (1A2A1B1) D5-15-4602 (81361)		EA	1									3	27
PA FZ Z	5365-543-3981	RING, RETAINING CRES, EXT APPL, 0.073 IN. ID MS16633-4009 (96906)		EA	4									3	28
PA FZ Z	3120-133-3933	ROLLER, LINEAR-ROTARY MOTION C5-15-4646 (81361)		EA	4									3	29
PA HZ Z	5305-054-5648	SCREW, MACHINE CRES, PAN HD, #4-40, 5/16 IN. LG MS51957-14 (96906)		EA	2									3	30
XB HZ Z		HOUSING, BEARING UNIT, PILLOW BLOCK AL ALLOY D5-15-4663 (81361)		EA	1									3	31
PA HZ Z	3110-555-7470	BEARING, BALL, ANNULAR GROUND, SINGLE-ROW RADIAL, FLANGED OUTER RING, 0.125 IN. BORE, 0.3125 IN. OD RING, 0.359 IN. OD FLANGE, 0.1406 IN. O/A W, 2 SHIELDS SFR2-5SS4G2 (70854)		EA	2									3	32

(1) SMR Code	(2) Federal Stock Number	(3) DESCRIPTION Reference Number & Mfr. Code	Usable On Code	(4) UNIT of meas	(5) Qty inc. in Unit	(6) 30-day DS maint allowance (a) 1-20	(b) 21-50	(c) 51-100	(7) 30-day GS maint allowance (a) 1-20	(b) 21-50	(c) 51-100	(8) 1-yr alw per 100 equip cnt-gcy	(9) Depot maint alw per 100 equip	(10) Illustration (a) Figure No.	(b) Item No.
XB HZ Z		GEAR ASSEMBLY C5-15-4625 (81361)		EA	1									3	33
PA FZ Z	5305-764-2966	SCREW, MACHINE CRES, FLAT CSK HD, #2-56,0.188 IN. LG MS51959-2 (96906)		EA	4									3	34
PA FZ Z	5340-947-6959	CATCH VHC340-2SS (98003)		EA	2									3	35
XA		PUMP UNIT SUBASSEMBLY D5-15-5338 (81361)			1									3	36
		ELECTRONIC MODULE ASSEMBLY SECTION													
XB FZ Z		PIN, STRAIGHT, HEADLESS B5-15-4667 (81361)		EA	1									4	1
XB FZ Z		RING, RETAINING CRES, EXT APPL MS16632-4015 (96906)		EA	1									4	2
XB FZ Z		SHIM BRASS, LAMINATED, 0.032 IN. THK B5-15-5251-2 (81361)		EA	1									4	3
XB FZ Z		STUD, TURNLOCK FASTENER D5-15-4545 (81361)		EA	1									4	4

(1) SMR Code	(2) Federal Stock Number	(3) DESCRIPTION Reference Number & Mfr. Code	Usable On Code	(4) UNIT of meas	(5) Qty inc. in Unit	(6) 30-day DS maint allowance (a) 1-20	(b) 21-50	(c) 51-100	(7) 30-day GS maint allowance (a) 1-20	(b) 21-50	(c) 51-100	(8) 1-yr alw per 100 equip cnt-gcy	(9) Depot maint alw per 100 equip	(10) Illustration (a) Figure No.	(b) Item No.
		CHASSIS ASSEMBLY SECTION													
PA FZ Z	9330-436-1386	TUBING, PLASTIC CLEAR, 0.187 IN. ID, 0.311 IN. OD, 0.381 IN. LG C5-15-4604-5 (81361)		EA	1									5	1
PA FZ Z	4720-454-4905	TUBING, RUBBER SILICONE, TRANSLUCENT AMBER, 0.031 IN. ID, 0.093 IN. OD. 3.812 IN. LG C5-15-4603-5 (81361)		EA	1									5	2
PA FZ Z	9330-436-1384	TUBING, PLASTIC CLEAR, 0.187 IN. ID.,0.311 IN. OD, 3.312 IN. LG C5-15-4604-4 (81361)		EA	1									5	3
PA FZ Z	9330-436-1383	TUBING, PLASTIC CLEAR, 0.093 IN. ID, 0.156 IN. OD, 4.312 IN. LG C5-15-4604-3 (81361)		EA	1									5	4
PA FZ Z	4720-453-8963	TUBING, RUBBER SILICONE, TRANSLUCENT AMBER, 0.031 IN. ID, 0.093 IN. OD, 25 IN. LG C5-15-4603-4 (81361)		EA	1									5	5
PA HZ Z	5905-880-2964	RESISTOR, FIXED, WIRE WOUND (1A2A2R6, R9) 24.3 OHMS, PORM 1 PCT, 1 W, WIRE LEADS RW70U24R3F (81349)		EA	2									5	6

(1) SMR Code	(2) Federal Stock Number	(3) DESCRIPTION Reference Number & Mfr. Code	Usable On Code	(4) UNIT of meas	(5) Qty inc. in Unit	(6) 30-day DS maint allowance (a) 1-20	(b) 21-50	(c) 51-100	(7) 30-day GS maint allowance (a) 1-20	(b) 21-50	(c) 51-100	(8) 1-yr alw per 100 equip cnt-gcy	(9) Depot maint alw per 100 equip	(10) Illustration (a) Figure No.	(b) Item No.
PA HZ Z	5905-943-9100	RESISTOR, FIXED, WIRE WOUND (1A2A2R3, R4, R5, 1A2A2A5R1) 30.1 OHMS, PORM 1 PCT, 1 W, WIRE LEADS RW70U30R1F (813490		EA	4									5	7
PA HZ Z	5905-120-9163	RESISTOR, FIXED, WIRE WOUND (1A2A2R2, R8, 1A2A2A5R2) 47.5 OHMS, PORM 1 PCT, WIRE LEADS RW70U47R5F (81349)		EA	3									5	8
PA HZ Z	5905-564-9239	RESISTOR, FIXED, WIRE WOUND (1A2A2R1, R7) 39.2 OHMS, PORM 1 PCT, 1 W, WIRE LEADS RW70U39R2F (81349)		EA	2									5	9
PA FZ Z	6665-135-6201	WEIGHT ASSEMBLY C5-15-4475 (81361)		EA	1									5	10
PA FZ Z	4720-454-4902	TUBING, RUBBER SILICONE, TRANSLUCENT AMBER, 0.031 IN. ID, 0.093 IN. OD, 4.75 IN. LG C5-15-4603-2 (81361)		EA	1									5	11
PA FZ Z	6665-133-0693	SEPARATOR, GAS-LIQUID C5-15-4430 (81361)		EA	1									5	12
PA FZ Z	5330-220-3874	GASKET SYN RUBBER, 0.235 IN. ID, 0.380 IN. OD, 0.032 IN. THK B5-15-4481 (81361)		EA	1									5	13

(1) SMR Code	(2) Federal Stock Number	(3) DESCRIPTION Reference Number & Mfr. Code Usable On Code	(4) UNIT of meas	(5) Qty inc. in Unit	(6) 30-day DS maint allowance (a) 1-20	(b) 21-50	(c) 51-100	(7) 30-day GS maint allowance (a) 1-20	(b) 21-50	(c) 51-100	(8) 1-yr alw per 100 equip cnt-gcy	(9) Depot maint alw per 100 equip	(10) Illustration (a) Figure No.	(b) Item No.
PA HZ Z	5305-054-5647	SCREW, MACHINE CRES, PAN HD, #4-40, 0.250 IN. LG MS51957-13 (96906)	EA	4									5	14
PA HZ Z	5310-933-8118	WASHER, LOCK CRES, SPLIT RING, 0.118 IN. ID, 0.209 IN. OD, 0.028 IN. THK MS35338-135 (96906)	EA	9									5	15
PA HZ Z	5305-768-0336	SCREW, MACHINE CRES, FLAT CSK HD, #4-40, 0.560 IN. LG MS51959-17 (96906)	EA	2									5	16
PA HZ Z	5305-720-8613	SCREW, MACHINE CRES, PAN HD, #4-40, 0.562 IN. LG FFS92TYPE3STYLE9C (81348)	EA	2									5	17
PA HZ Z	5310-595-6211	WASHER, FLAT CRES, 0.125 IN. ID, 0.250 IN. OD, 0.022 IN. THK MS15795-803 (96906)	EA	3									5	18
PA HZ Z	5340-461-3585	POST, ELECTRICAL-MECHANICAL EQUIPMENT AL ALY, 4-40 THD, 1.060 IN. LG B5-15-4722 (81361)	EA	4									5	19
AH HH H		SWITCH ASSEMBLY (1A2A2A1) D5-15-5240 (81361)	EA	1									5 6	20 -

(1) SMR Code	(2) Federal Stock Number	(3) DESCRIPTION Reference Number & Mfr. Code Usable On Code	(4) UNIT of meas	(5) Qty inc. in Unit	(6) 30-day DS maint allowance (a) 1-20	(b) 21-50	(c) 51-100	(7) 30-day GS maint allowance (a) 1-20	(b) 21-50	(c) 51-100	(8) 1-yr alw per 100 equip cnt-gcy	(9) Depot maint alw per 100 equip	(10) Illustration (a) Figure No.	(b) Item No.
PA HZ Z	5305-054-5653	SCREW, MACHINE CRES, PAN HD, #4-40, 0.750 IN. LG MS51957-19 (969060	EA	3									5	21
XB HZ Z		BAR, THEROSTAT RETAINING C5-15-5488 (81361)	EA	1									5	22
PA HZ Z	5930-369-7391	SWITCH, THERMOSTATIC (1A2A2S2) SPST, NORMALLY OPEN, 0.015 OHMS, 2 AMP, 2 SOLDER LUG TERMINALS C5-15-4426-2 (81361)	EA	1									5	23
PA HZ Z	5930-369-7392	SWITCH, THERMOSTATIC (1A2A2S1) SPST, NORMALLY CLOSED, 0.015 OHMS, 2 AMP, 2 SOLDER LUG TERMINALS C5-15-4426-3 (81361)	EA	1									5	24
PA FZ Z	5330-369-7387	PACKING, PREFORMED SILICONE RUBBER, 0.796 IN. ID, 1.074 IN. OD, 0.139 IN. H C5-15-4442-4 (81361)	EA	1									5	25
PA FZ Z	5330-631-1342	PACKING, PREFORMED SYN RUBBER, 1.239 IN. ID, 1.379 IN. OD, 0.070 IN. H MS28775-026 (96906)	EA	1									5	26
PA FZ Z	5305-946-9847	SCREW, MACHINE CRES, PAN HD, #6-32, 1.125 IN. LG NAS1635-06-18 (80205)	EA	2									5	27

(1) SMR Code	(2) Federal Stock Number	(3) DESCRIPTION Reference Number & Mfr. Code Usable On Code	(4) UNIT of meas	(5) Qty inc. in Unit	(6) 30-day DS maint allowance (a) 1-20	(b) 21-50	(c) 51-100	(7) 30-day GS maint allowance (a) 1-20	(b) 21-50	(c) 51-100	(8) 1-yr alw per 100 equip cnt-gcy	(9) Depot maint alw per 100 equip	(10) Illustration (a) Figure No.	(b) Item No.
PA HH H	6665-136-7181	CELL BLOCK ASSEMBLY (1A2A2A3) D5-15-4390 (81361)	EA	1									5	28
PA HZ Z	5905-997-8332	RESISTOR, FIXED, WIRE WOUND (1A2A2A3R2) 24.9 OHMS, PORM 1 PCT, 1 W, WIRE LEADS RW70U24R9F (81349)	EA	1									5	29
PA HZ Z	5905-943-9100	RESISTOR, FIXED, WIRE WOUND (1A2A2A3R1) 30.1 OHMS, PORM 1 PCT, 1 W, WIRE LEADS RW70U30R1F (813490	EA	1									5	29A
PA HZ Z	5905-656-9992	RESISTOR, THERMAL (1A2A2A3RT1) C5-15-4388 (81361)	EA	1									5	30
PA FZ Z	6665-136-1926	FLUID FITTING B5-15-4571 (81361)	EA	6									5	31
PA FZ Z	5330-455-5515	PACKING, PREFORMED SYN RUBBER, 0.176 IN. ID, 0.317 IN. OD, 0.070 IN. H C5-15-4442-3 (81361)	EA	1									5	32
PA HZ Z	5305-054-5651	SCREW, MACHINE CRES, PAN HD, #4-40, 0.500 IN. LG MS51957-17 (96906)	EA	2									5	33
PA HZ Z	6665-136-4359	HEATER MODULE (1A2A2A2) D5-15-4450 (81361)	EA	1									5	34

(1) SMR Code	(2) Federal Stock Number	(3) DESCRIPTION Reference Number & Mfr. Code Usable On Code	(4) UNIT of meas	(5) Qty inc. in Unit	(6) 30-day DS maint allowance (a) 1-20	(b) 21-50	(c) 51-100	(7) 30-day GS maint allowance (a) 1-20	(b) 21-50	(c) 51-100	(8) 1-yr alw per 100 equip cnt-gcy	(9) Depot maint alw per 100 equip	(10) Illustration (a) Figure No.	(b) Item No.
PA HZ Z	5365-598-1138	RING, RETAINING CRES, EXT APPL, 0.094 IN. ID MS16633-4012 (96906)	EA	2									5	35
XB HZ Z		DETENT C5-15-4488 (96906)	EA	1									5	36
PA HZ Z	5310-229-5242	WASHER, FLAT CRES, 0.135 IN. ID B5-15-4396-2 (81361)	EA	2									5	37
PA HZ Z	6665-136-1925	SPRING, HELICAL, COMPRESSION CRES, 0.750 IN. FREE O/A LG, 0.179 IN. FREE OD C5-15-4575 (81361)	EA	1									5	38
PA HZ Z	6665-198-5787	SHAFT ASSEMBLY, PRIME C5-15-4577 (81361)	EA	1									5	39
PA HZ Z	5305-054-5648	SCREW, MACHINE CRES, PAN HD, #4-40, 5/16 IN. LG MS51957-14 (96906)	EA	4									5	40
PA HZ Z	5310-934-9748	NUT, PLAIN, HEXAGON CRES, #4-40 MS35649-244 (96906)	EA	2									5	41
XB HZ Z		CLIP, SPRING TENSION D5-15-4489 (81361)	EA	1									5	42

(1) SMR Code	(2) Federal Stock Number	(3) DESCRIPTION Reference Number & Mfr. Code Usable On Code	(4) UNIT of meas	(5) Qty inc. in Unit	(6) 30-day DS maint allowance (a) 1-20	(b) 21-50	(c) 51-100	(7) 30-day GS maint allowance (a) 1-20	(b) 21-50	(c) 51-100	(8) 1-yr alw per 100 equip cnt-gcy	(9) Depot maint alw per 100 equip	(10) Illustration (a) Figure No.	(b) Item No.
PA HZ Z	5365-543-3981	RING, RETAINING CRES, EXT APPL, 0.073 IN. OD MS16633-4009 (96906)	EA	2									5	43
PA HZ Z	5310-183-4354	WASHER, FLAT CRES, 0.105 IN. ID, 0.258 IN. OD, 0.016 IN. THK AN960C3L (88044)	EA	1									5	44
PA HZ Z	5360-135-6194	SPRING, HELICAL, TORSION CRES C5-15-4496 (81361)	EA	1									5	45
XB HZ Z		PIN, GROOVED, HEADLESS CRES, 0.756 IN. LG C5-15-4397 (81361)	EA	1									5	46
PA HZ Z	6665-198-5695	BELLCRANK ASSEMBLY C5-15-4535 (81361)	EA	1									5	47
PA FZ Z	5305-764-2966	SCREW, MACHINE CRES, FLAT CSK HD, #2-56, 0.188 IN. LG MS51959-2(96906)	EA	4									5	48
PA FZ Z	5340-947-6959	CATCH VHC340-2SS (98003)	EA	2									5	49
PA HZ Z	5305-054-5641	SCREW, MACHINE CRES, PAN HD, #2-56, 0.500 IN. LG MS51957-7 (96906)	EA	2									5	50

(1) SMR Code	(2) Federal Stock Number	(3) DESCRIPTION Reference Number & Mfr. Code Usable On Code	(4) UNIT of meas	(5) Qty inc. in Unit	(6) 30-day DS maint allowance (a) 1-20	(b) 21-50	(c) 51-100	(7) 30-day GS maint allowance (a) 1-20	(b) 21-50	(c) 51-100	(8) 1-yr alw per 100 equip cnt-gcy	(9) Depot maint alw per 100 equip	(10) Illustration (a) Figure No.	(b) Item No.
XB HZ Z		NUT, STRIP CRES, #2-56 B5-15-4573 (81361)	EA	1									5	51
PA HZ Z	5305-054-5650	SCREW, MACHINE CRES, PAN HD, #6-32, 0.437 IN. LG MS51957-16 (96906)	EA	2									5	52
PA HH H	6665-400-5099	WIRING HARNESS, BRANCHED (1A2A2A5) E5-15-4480 (81361)	EA	1									5	53
PA HZ Z	5975-727-5153	STRAP, TIEDOWN, ELECTRICAL MS17821-4-9 (96906)	EA	12									5	54
XB FZ Z		PLATE, COVER B5-15-5411 (81361)	EA										5	55
XB FZ Z		GASKET SYN RUBBER, 1 IN. LG, 0.045 IN. THK C5-15-5352 (81361)	EA	1									5	56
XB HZ Z		TERMINAL, STUD BRASS B5-15-4572 (81361)	EA	13									5	57
XB KZ Z		TERMINAL, STUD B5-15-4721 (81361)	EA	1									5	58
PA FZ Z	5305-054-5636	SCREW, MACHINE CRES, PAN HD, #2-56, 3/16 IN. LG MS51957-2 (96906)	EA	3									5	59

(1) SMR Code	(2) Federal Stock Number	(3) DESCRIPTION Reference Number & Mfr. Code Usable On Code	(4) UNIT of meas	(5) Qty inc. in Unit	(6) 30-day DS maint allowance (a) 1-20	(b) 21-50	(c) 51-100	(7) 30-day GS maint allowance (a) 1-20	(b) 21-50	(c) 51-100	(8) 1-yr alw per 100 equip cnt-gcy	(9) Depot maint alw per 100 equip	(10) Illustration (a) Figure No.	(b) Item No.
PA FZ Z	5305-054-5635	SCREW,MACHINE CRES, PAN HD, #2-56, 0.125 IN. LG MS51957-1(96906)	EA	1									5	60
PA FZ Z	6665-135-6197	CONTACT,ELECTRICAL C5-15-4498 (81361)	EA	4									5	61
PA HZ Z	5935-401-9746	JACK,TIP B5-15-5576 (81361)	EA	1									5	62
		SWITCH ASSEMBLY SECTION												
PA HZ Z	5305-443-4686	SCREW,MACHINE CRES, #4-40, 0.810 IN. LG C5-15-5238 (81361)	EA	1									6	1
PA HZ Z	6665-133-5527	LEVER, SWITCH ASSEMBLY C5-15-5239 (81361)	EA	1									6	2
PA HZ Z	6665-136-4358	SPRING, HELICAL, COMPRESSION CRES, 0.560 IN. FREE O/A LG, 0.179 IN. FREE OD C5-15-5237 (81361)	EA	1									6	3
PA HZ Z	5930-997-8196	SWITCH, PUSH (1A2A2A1S1, S2) C5-15-5234 (81361)	EA	2									6	4
PA HZ Z	5310-933-8121	WASHER, LOCK CRES, SPLIT RING, 0.259 IN. ID, 0.489 IN. OD, 0.067 IN. THK MS35338-139 (96906)	EA	2									6	5

(1) SMR Code	(2) Federal Stock Number	(3) DESCRIPTION Reference Number & Mfr. Code	Usable On Code	(4) UNIT of meas	(5) Qty inc. in Unit	(6) 30-day DS maint allowance (a) 1-20	(b) 21-50	(c) 51-100	(7) 30-day GS maint allowance (a) 1-20	(b) 21-50	(c) 51-100	(8) 1-yr alw per 100 equip cnt-gcy	(9) Depot maint alw per 100 equip	(10) Illustration (a) Figure No.	(b) Item No.
PA HZ Z	5905-494-6547	RESISTOR, VARIABLE, NONWIRE WOUND (1A2A2A1R1) 20K OHMS, PORM 10 PCT C5-15-5236 (81361)		EA	1									6	6
XB HZ Z		STOP, RESISTOR C5-15-5233 (81361)		EA	1									6	7
XB HZ Z		BRACKET ASSEMBLY C5-15-5235 (81361)		EA	1									6	8
		CASE TOP ASSEMBLY SECTION													
AF FF H		CASE TOP ASSEMBLY (1A2A5) D5-15-5313 (81361)		EA	1									7	-
PA FZ Z	5935-135-4377	COVER, ELECTRICAL CONNECTOR C5-15-4563-1 (81361)		EA	1									7	1
PA FZ Z	5305-054-5651	SCREW,MACHINE CRES, PAN HD, #4-40, 0.500 IN. LG MS51957-17 (96906)		EA	4									7	2
PA FZ Z	5310-933-8118	WASHER, LOCK CRES, SPLIT RING, 0.118 IN. ID, 0.209 IN. OD, 0.028 IN. THK MS35338-135 (96906)		EA	12									7	3
PA FZ Z	6625-247-9772	METER, ARBITRARY SCALE (1A2A5M1) D5-15-4452 (81361)		EA	1									7	4

(1) SMR Code	(2) Federal Stock Number	(3) DESCRIPTION Reference Number & Mfr. Code Usable On Code	(4) UNIT of meas	(5) Qty inc. in Unit	(6) 30-day DS maint allowance (a) 1-20	(b) 21-50	(c) 51-100	(7) 30-day GS maint allowance (a) 1-20	(b) 21-50	(c) 51-100	(8) 1-yr alw per 100 equip cnt-gcy	(9) Depot maint alw per 100 equip	(10) Illustration (a) Figure No.	(b) Item No.
PA FZ Z	5330-228-6945	GASKET RUBBER, 1.500 IN. DIA APERTURE, 1.750 IN LG AND W, 0.030 IN. THK C5-15-4513 (81361)	EA	1									7	5
PA FZ Z	5305-054-6653	SCREW,MACHINE CRES, PAN HD, #6-32, 7/16 IN. LG MS51957-29 (96906)	EA	6									7	6
PA FZ Z	5310-929-6395	WASHER, LOCK CRES, SPLIT RING, 0.144 IN. ID, 0.250 IN OD, 0.024 IN. THK MS35338-136 (96906)	EA	6									7	7
PA FZ Z	6665-133-3934	HORN, ELECTRICAL (1A2A5A2) D5-15-4350 (81361)	EA	1									7	8
PA FZ Z	5330-442-5699	GASKET SYN RUBBER, 2.610 IN. ID, 3.005 IN. OD, 0.030 IN. THK C5-15-4351 (81361)	EA	1									7	9
PA FZ Z	5305-054-5647	SCREW,MACHINE CRES, PAN HD, #4-40, 0.250 IN. LG MS51957-13 (96906)	EA	4									7	10
PA FZ Z	9905-435-7192	PLATE, IDENTIFICATION C5-15-4326 (81361)	EA	1									7	11
PA FH D	6665-133-3936	TOP SUBASSEMBLY, CASE D5-15-4530 (81361)	EA EA	1 1									7 7	12 12

(1) SMR Code	(2) Federal Stock Number	(3) DESCRIPTION Reference Number & Mfr. Code Usable On Code	(4) UNIT of meas	(5) Qty inc. in Unit	(6) 30-day DS maint allowance (a) 1-20	(b) 21-50	(c) 51-100	(7) 30-day GS maint allowance (a) 1-20	(b) 21-50	(c) 51-100	(8) 1-yr alw per 100 equip cnt-gcy	(9) Depot maint alw per 100 equip	(10) Illustration (a) Figure No.	(b) Item No.
PA FZ Z	5930-892-9026	BOOT, DUST AND MOISTURE SEAL SILICONE RUBBER M5423-09-03 (81349)	EA	1									7	13
PA FZ Z	5355-357-2862	KNOB B5-15-5515 (81361)	EA	1									7	14
PA FZ Z	5975-681-4609	BOOT, DUST AND MOISTURE SEAL SILICONE RUBBER MILB19257TYPEC (81349)	EA	1									7	15
PA FZ Z	6665-490-5368	HOUSING ASSEMBLY D5-15-5549 (81361)	EA	1									7	16
PA FZ Z	5305-980-3934	SETSCREW CRES, HEX SOCKET, #4-40, 0.125 IN. LG MS18064-1 (96906)	EA	1									7	17
PA FZ Z	5355-198-7383	KNOB PLASTIC D5-15-4416 (81361)	EA	1									7	18
PA FZ Z	5975-982-9261	BOOT, DUST AND MOISTURE SEAL SILICONE RUBBER MILB5423-9-2 (81349)	EA	1									7	19
XB FZ Z		PLUNGER, SWITCH D5-15-4582 (81361)	EA	1									7	20
PA FZ Z	5305-456-5494	SCREW, MACHINE CRES, PAN HD, #10-32, 0.375 IN. LG, W/RUBBER RING SR1032CA6 (97539)	EA	1	30								7	21

(1) SMR Code	(2) Federal Stock Number	(3) DESCRIPTION Reference Number & Mfr. Code	Usable On Code	(4) UNIT of meas	(5) Qty inc. in Unit	(6) 30-day DS maint allowance (a) 1-20	(b) 21-50	(c) 51-100	(7) 30-day GS maint allowance (a) 1-20	(b) 21-50	(c) 51-100	(8) 1-yr alw per 100 equip cnt-gcy	(9) Depot maint alw per 100 equip	(10) Illustration (a) Figure No.	(b) Item No.
PA FZ Z	5940-442-9722	POST, BINDING, ELECTRICAL (1A2A5A1E1, E2) SINGLE POST, BRASS BASE B5-15-5432 (81361)		EA	2									7	22
PA FZ Z	5930-369-7390	SWITCH, THERMOSTATIC (1A2A5A1S1) SPST, 120 VAC, 2 AMP C5-15-4426-1 (81361)		EA	1									7	23
PA FZ Z	5305-054-5649	SCREW, MACHINE CRES, PAN HD, #4-40, 0.375 IN. LG MS51957-15 (96906)		EA	4									7	24
PA FZ Z	5935-893-7952	CONNECTOR, RECEPTACLE, ELECTRICAL (1A2A5A1J1) 5 CONTACT MS3112E14-5S (96906)		EA	1									7	25
PA FZ Z	5330-585-1591	GASKET SYN RUBBER, 7/8 IN. DIA APERTURE, 1-1/8 IN. SQUARE, 0.020 IN. THK PSI-1321-14 (06887)		EA	1									7	26
PA FZ Z	6665-136-7178	CAP, AIR OUTLET D5-15-4449 (81361)		EA	1									7	27
PA FZ Z	6665-400-6348	NUT, AIR OUTLET HEATER C5-15-4447 (81361)		EA	1									7	28
PA FZ Z	5330-220-3875	GASKET SYN RUBBER, 0.437 IN. ID, 0.625 IN. OD, 0.025 IN. THK B5-15-5480 (81361)		EA	1	31								7	29

(1) SMR Code	(2) Federal Stock Number	(3) DESCRIPTION Reference Number & Mfr. Code	Usable On Code	(4) UNIT of meas	(5) Qty inc. in Unit	(6) 30-day DS maint allowance (a) 1-20	(b) 21-50	(c) 51-100	(7) 30-day GS maint allowance (a) 1-20	(b) 21-50	(c) 51-100	(8) 1-yr alw per 100 equip cnt-gcy	(9) Depot maint alw per 100 equip	(10) Illustration (a) Figure No.	(b) Item No.
PA FZ Z	5330-369-7389	PACKING,PREFORMED SYN RUBBER, 0.551 IN. ID, 0.691 IN. OD, 0.070 IN. THK C5-15-4442-6 (81361)		EA	1									7	30
PA FZ Z	6665-133-3932	HEATER ASSEMBLY (1A2A5A1HR1) C5-15-4420 (81361)		EA	1									7	31
XB FZ Z		SCREW, MACHINE CRES #4-40, 0.312 IN. LG, W/ O-RING C5-15-4382-2 (81361)		EA	5									7	32
PA FZ Z	5305-054-5637	SCREW, MACHINE CRES, PAN HD, #2-56, 0.250 IN. LG MS51957-3 (96906)		EA	8									7	33
PA FZ Z	5310-928-2690	WASHER, LOCK CRES, SPLIT RING, #2 SCREW SIZE MS35338-134 (96906)		EA	8									7	34
XB FZ Z		STRIKE, CATCH C5-15-4341-2		EA	4									7	35

(1) SMR Code	(2) Federal Stock Number	(3) DESCRIPTION Reference Number & Mfr. Code	Usable On Code	(4) UNIT of meas	(5) Qty inc. in Unit	(6) 30-day DS maint allowance (a) 1-20	(b) 21-50	(c) 51-100	(7) 30-day GS maint allowance (a) 1-20	(b) 21-50	(c) 51-100	(8) 1-yr alw per 100 equip cnt-gcy	(9) Depot maint alw per 100 equip	(10) Illustration (a) Figure No.	(b) Item No.
		GROUP 200-M42 ALARM UNIT													
PA OF D	6665-859-2215	ALARM UNIT, CHEMICAL AGENT AUTOMATIC ALARM, M42 D5-15-4826 (81361)		EA	1									8	-
PA OZ Z	5305-462-0206	SCREW, EXTERNALLY RELIEVED BODY CRES, #8-32, 1.180 IN. LG C5-15-4794 (81361)		EA	4									8	1
PA OZ Z	5330-952-0302	PACKING WITH RETAINER RUBBER PACKING, AL RETAINER, 0.156 IN. ID, #8 SCREW SIZE NAS1598D08Y (80205)		EA	4									8	2
PA OZ Z	6665-133-0688	HOUSING, ALARM UNIT, CHEMICAL AGENT AUTOMATIC ALARM D5-15-4824 (81361)		EA	1									8	3
		PANEL ASSEMBLY SECTION													
PA FZ Z	5305-948-4152	SCREW, MACHINE STL, PLTD, PAN HD, #10-32, 0.875 IN. LG MS27039-1-13 (96906)		EA	4									9	1
PA FZ Z	5310-619-1148	WASHER, FLAT CRES, 0.220 IN. ID, 0.443 IN. OD, 0.050 IN. THK MS15795-808 (96906)		EA	8									9	2

(1) SMR Code	(2) Federal Stock Number	(3) DESCRIPTION Reference Number & Mfr. Code Usable On Code	(4) UNIT of meas	(5) Qty inc. in Unit	(6) 30-day DS maint allowance (a) 1-20	(b) 21-50	(c) 51-100	(7) 30-day GS maint allowance (a) 1-20	(b) 21-50	(c) 51-100	(8) 1-yr alw per 100 equip cnt-gcy	(9) Depot maint alw per 100 equip	(10) Illustration (a) Figure No.	(b) Item No.
PA FZ Z	5330-778-2736	PACKING WITH RETAINER RUBBER PACKING, AL RETAINER, 0.180 IN. ID, #10 SCREW SIZE NAS1598D3Y (80205)	EA	4									9	3
PA FZ Z	5310-933-8120	WASHER, LOCK CRES, 0.198 IN. ID, 0.334 IN. OD, 0.050 IN. THK MS35338-138 (96906)	EA	4									9	4
PA FZ Z	5310-934-9765	NUT, PLAIN, HEXAGON CRES, #10-32 MS35650-304 (96906)	EA	4									9	5
PA FZ Z	5305-054-5651	SCREW, MACHINE CRES, PAN HD, #4-40, 0.500 IN. LG MS51957-17 (96906)	EA	2									9	6
PA FZ Z	5310-595-6211	WASHER, FLAT CRES, 0.125 IN. ID, 0.250 IN. OD, 0.022 IN. THK MS15795-803 (96906)	EA	2									9	7
PA FZ Z	5310-933-8118	WASHER, LOCK CRES, SPLIT RING, 0.118 IN. ID, 0.209 IN. OD, 0.028 IN. THK MS35338-135 (96906)	EA	2									9	8
PA FZ Z	5310-934-9748	NUT, PLAIN, HEXAGON CRES, #4-40 MS35649-244 (96906)	EA	2									9	9

(1) SMR Code	(2) Federal Stock Number	(3) DESCRIPTION Reference Number & Mfr. Code	Usable On Code	(4) UNIT of meas	(5) Qty inc. in Unit	(6) 30-day DS maint allowance (a) 1-20	(b) 21-50	(c) 51-100	(7) 30-day GS maint allowance (a) 1-20	(b) 21-50	(c) 51-100	(8) 1-yr alw per 100 equip cnt-gcy	(9) Depot maint alw per 100 equip	(10) Illustration (a) Figure No.	(b) Item No.
PA FF F	6665-400-5100	WIRING HARNESS, BRANCHED D5-15-4799 (81361)		EA	1									9	10
XA		CONNECTOR, RECEPTACLE, ELECTRICAL (J1) C5-15-4822 (81361)			1									9	11
PA FZ Z	5975-727-5153	STRAP, TIEDOWN, ELECTRICAL MS17821-4-9 (96906)		EA	5									9	12
PA FZ Z	5910-854-9958	CAPACITOR, FIXED, CERAMIC (C12, C13) 4700 PF, 200 VDC, PORM 10 PCT, WIRE LEADS CK06BX472K (81349)		EA	2									9	13
PA FZ Z	5910-777-6920	CAPACITOR, FIXED, MICA (C14,C15) 560 PF, 500 VDC, PORM 2 PCT, WIRE LEADS CM06FD561G03 (81349)		EA	2									9	14
PA FZ Z	5905-141-1187	RESISTOR, FIXED, COMPOSITION (R28, R29) 2 OK OHMS, PORM 5 PCT, WIRE LEADS RCR20G203JS (81349)		EA	2									9	15
PA FZ Z	5940-159-1290	TERMINAL LUG BRONZE, TINNED, #10 SCREW SIZE MS77066-4 (96906)		EA	2									9	16
PA FZ Z	6665-229-5231	GRILLE, METAL CRES, OXIDIZED, BAR TYPE, 4.350 IN. DIA, 4 MTG HOLES C5-15-4812 (81361)		EA	1									9	17

(1) SMR Code	(2) Federal Stock Number	(3) DESCRIPTION Reference Number & Mfr. Code	Usable On Code	(4) UNIT of meas	(5) Qty inc. in Unit	(6) 30-day DS maint allowance (a) 1-20	(b) 21-50	(c) 51-100	(7) 30-day GS maint allowance (a) 1-20	(b) 21-50	(c) 51-100	(8) 1-yr alw per 100 equip cnt-gcy	(9) Depot maint alw per 100 equip	(10) Illustration (a) Figure No.	(b) Item No.
PA FZ Z	6665-198-5688	MOUNTING PLATE ASSEMBLY C5-15-4814 (81361)		EA	1									9	18
PA FZ Z	5965-133-0694	LOUDSPEAKER, PERMANENT MAGNET (LS1) C5-15-4873 (81361)		EA	1									9	19
PA FZ Z	5940-937-5237	POST, BINDING, ELECTRICAL (E3,E4) SINGLE POST, #10-32 THD PB08NA01 (81349)		EA	2									9	20
PA FZ Z	5310-410-3025	NUT, PLAIN, HEXAGON BRASS, TIN COATED, #10-32 MS35650-305T (96906)		EA	2									9	20A
XB FZ Z		TERMINAL BOARD PLASTIC, 2 TERMINALS, 3.340 IN. LG C5-15-4876 (81361)		EA	1									9	21
PA OZ Z	5355-980-5647	KNOB PLASTIC MS91528-OP2B (96906)		EA	1									9	22
PA FZ Z	5975-987-8829	BOOT, DUST AND MOISTURE SEAL C5-15-4866 (81361)		EA	1									9	23
PA FZ Z	5930-442-5707	SWITCH, ROTARY (S1) C5-15-4865 (81361)		EA	1									9	24
PA OZ Z	6210-251-2086	LENS, INDICATOR LIGHT PLASTIC, RED, TRANSPARENT C5-15-4869-2 (81361)		EA	1									9	25

(1) SMR Code	(2) Federal Stock Number	(3) DESCRIPTION Reference Number & Mfr. Code	Usable On Code	(4) UNIT of meas	(5) Qty inc. in Unit	(6) 30-day DS maint allowance (a) 1-20	(b) 21-50	(c) 51-100	(7) 30-day GS maint allowance (a) 1-20	(b) 21-50	(c) 51-100	(8) 1-yr alw per 100 equip cnt-gcy	(9) Depot maint alw per 100 equip	(10) Illustration (a) Figure No.	(b) Item No.
PA OZ Z	6240-155-8706	LAMP, INCANDESCENT (DS1) CLEAR, 6.3 V, 0.15 AMP MS15571-2 (96906)		EA	1									9	26
PA FZ Z	6210-400-5102	LIGHT, INDICATOR (XDS1) BLACK, NICKEL PLTD C5-15-4869-1 (81361)		EA	1									9	27
PA FZ Z	5305-054-6654	SCREW, MACHINE CRES, PAN HD, #6-32, 0.500 IN. LG MS51957-30 (96906)		EA	1									9	28
PA FZ Z	5310-929-6395	WASHER, LOCK CRES, SPLIT RING, 0.144 IN. ID, 0.250 IN. OD, 0.034 IN. THK MS35338-136 (96906)		EA	1									9	29
PA FZ Z	6665-400-5101	CIRCUIT CARD ASSEMBLY (A1) D5-15-4805 (81361)		EA	1									9	30
PA FZ Z	9905-435-7207	PLATE, INDENTIFICATION D5-15-4832 (81361)		EA	1									9	31
PA FZ Z	5305-456-5494	SCREW, MACHINE CRES, PAN HD, #10-32, 0.375 IN. LG, W/RUBBER RING SR1032CA6 (97539)		EA	4									9	32
PA FZ Z	6135-465-1571	RETAINER ASSEMBLY, BATTERY D5-15-5553 (81361)		EA	1									9	33
PA FZ Z	5330-436-4227	GASKET SYN RUBBER C5-15-4808 (81361)		EA	1	37								9	34

(1) SMR Code	(2) Federal Stock Number	(3) DESCRIPTION Reference Number & Mfr. Code	Usable On Code	(4) UNIT of meas	(5) Qty inc. in Unit	(6) 30-day DS maint allowance (a) 1-20	(b) 21-50	(c) 51-100	(7) 30-day GS maint allowance (a) 1-20	(b) 21-50	(c) 51-100	(8) 1-yr alw per 100 equip cnt-gcy	(9) Depot maint alw per 100 equip	(10) Illustration (a) Figure No.	(b) Item No.
		GROUP 300-BULK MATERIALS													
PA FZ Z	5970-832-4300	INSULATION TAPE PLASTIC, WHITE, 1.500 IN. W, 0.006 IN. THK, 54 FT ROLL 253-1027P5 (49956)		RO	V										
PA HZ Z	6145-686-5162	WIRE, ELECTRICAL INSULATED, STRANDED, SILVE COATED, 26 AWG, 600 V, COLOR CODED RED MIL-W-16878 (81349)		FT	4										
PA HZ Z	6145-841-2343	WIRE, ELECTRICAL INSULATED, STRANDED, SILVER COATED, 26 AWG, 600 V, COLOR CODED WHITE W/GRAY TRACER MILW16878TYPEE26 (81349)		FT	4										
PA HZ Z	6145-842-8927	WIRE, ELECTRICAL INSULATED, STRANDED, SILVER COATED, 26 AWG, 600 V, COLOR COATED WHITE W/GREEN TRACER MILW16878TYPEE26 (81349)		FT	5										
PA HZ Z	6665-974-7350	KIT, PATCH 2680 (90237)		EA	-										

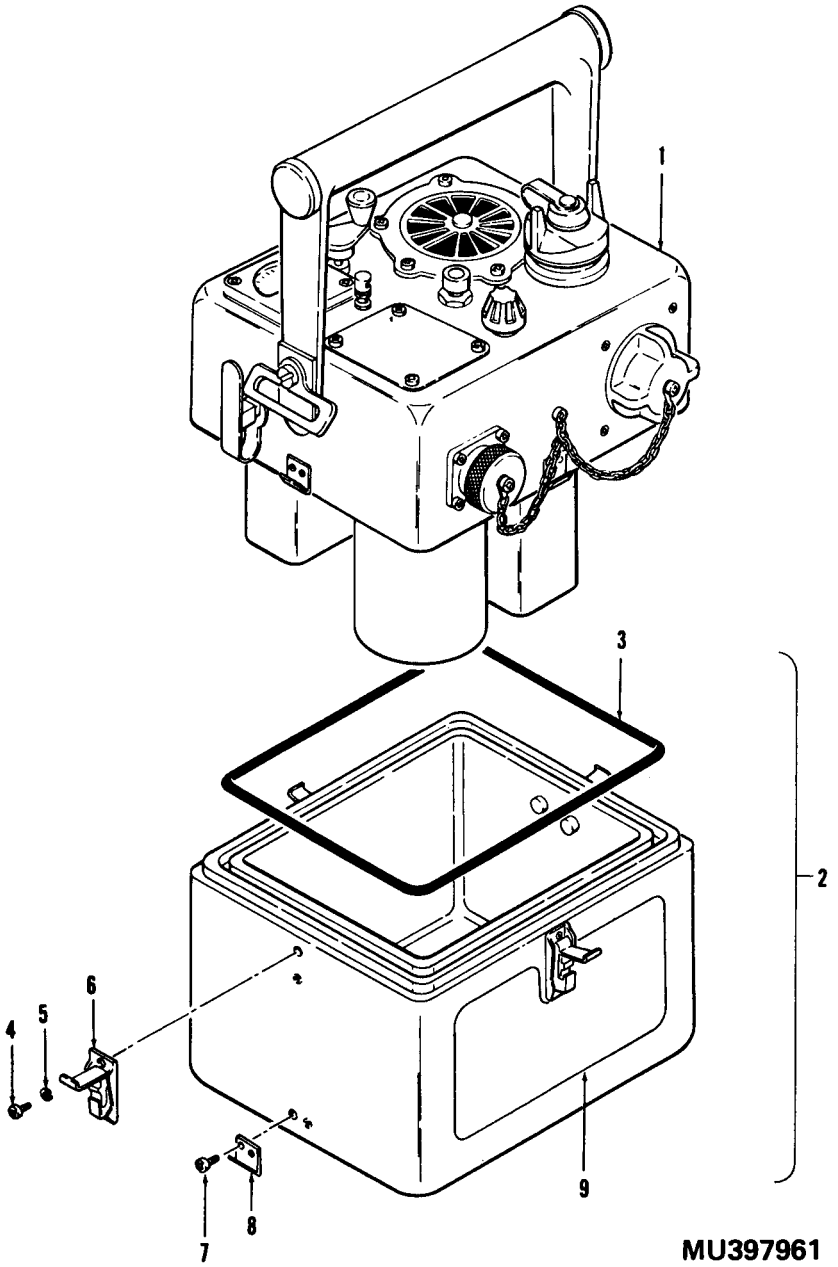

Figure 1. M43 detector unit.

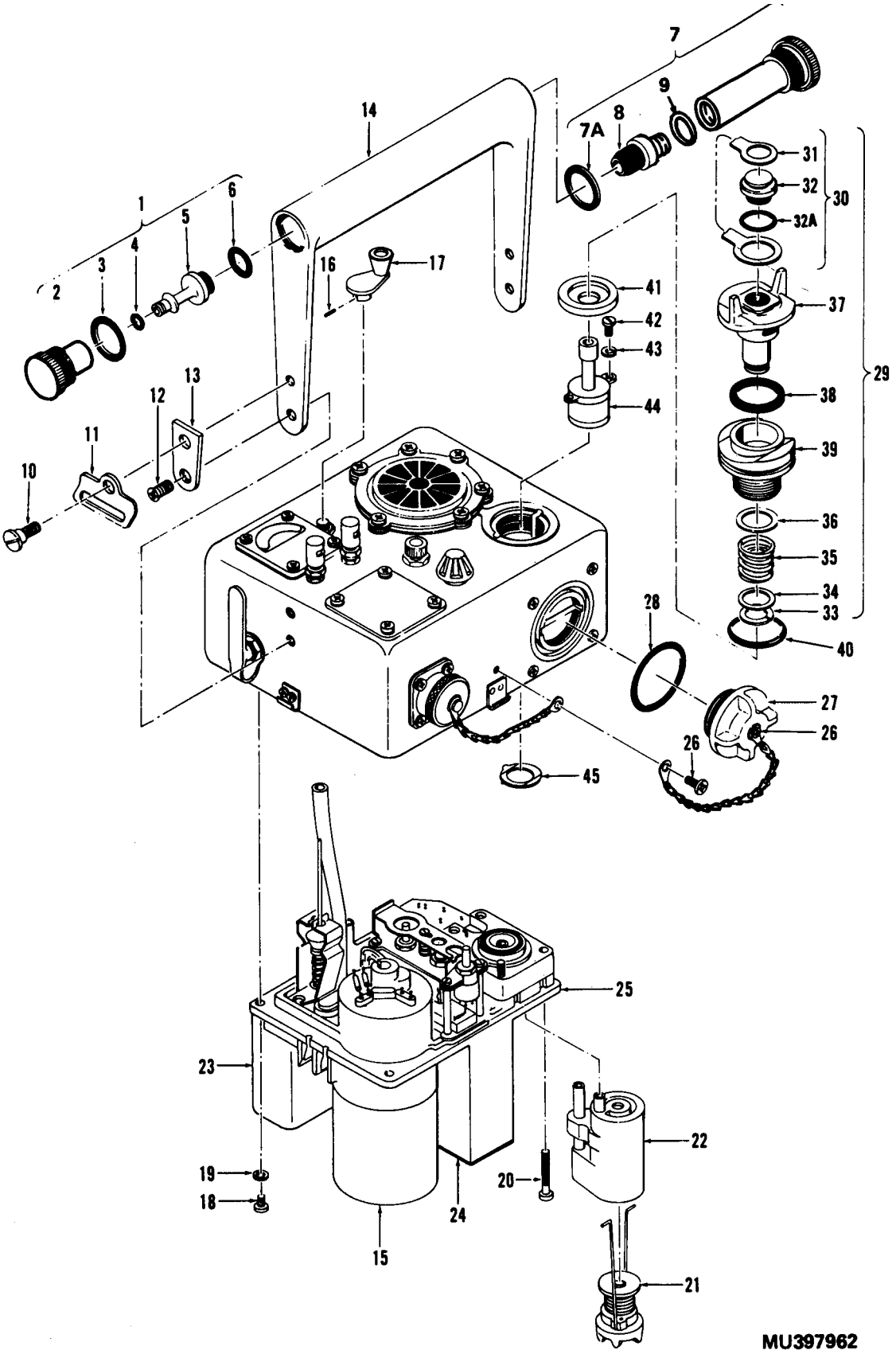

Figure 2. Detector unit assembly.

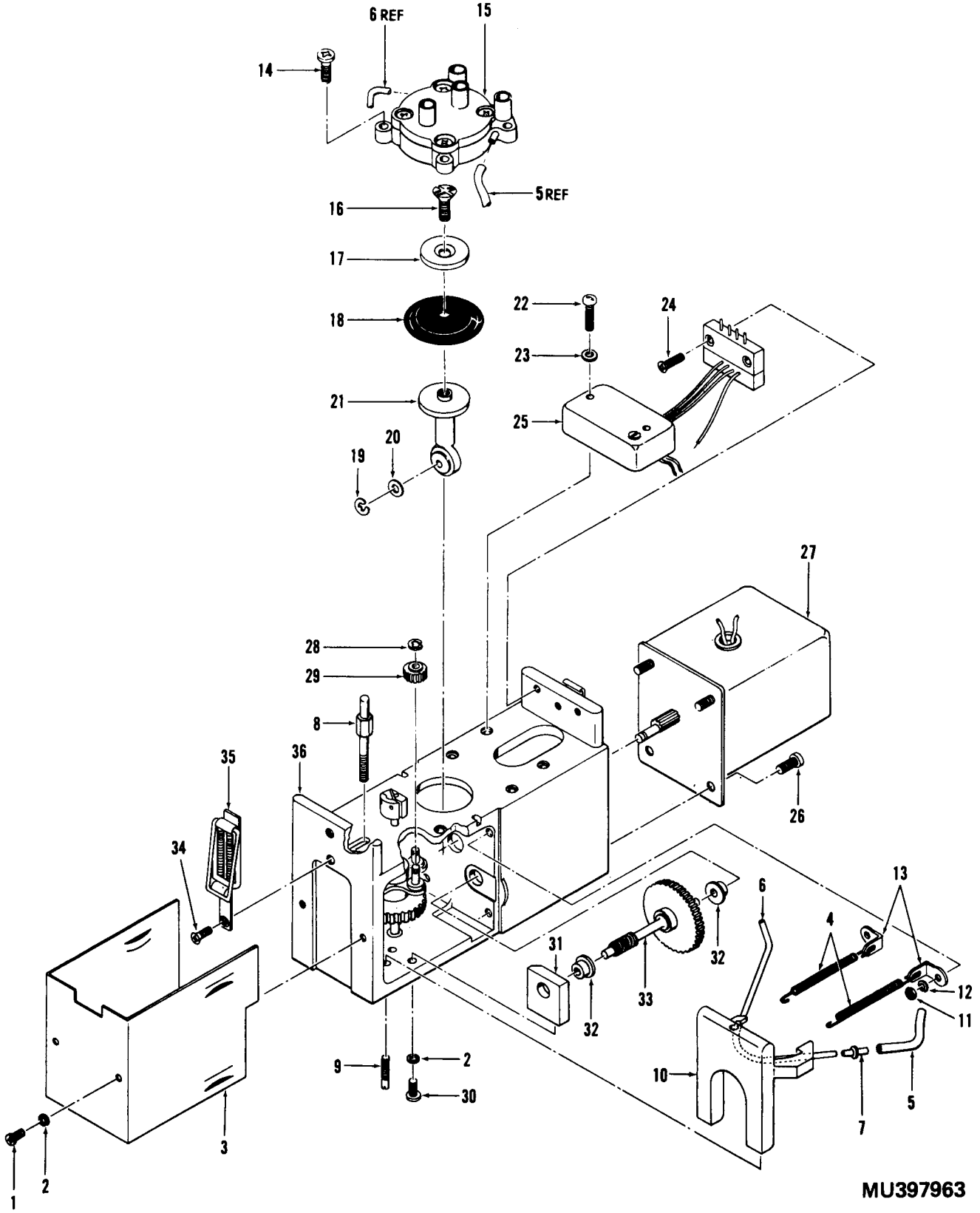

Figure 3. Fluid-vacuum pump assembly

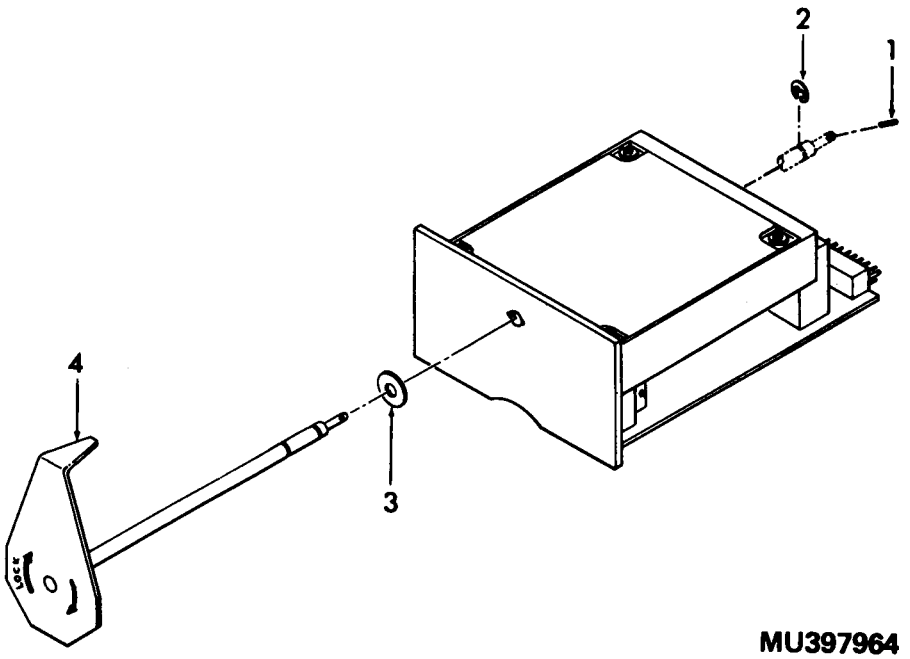

Figure 4. Electronic module assembly.

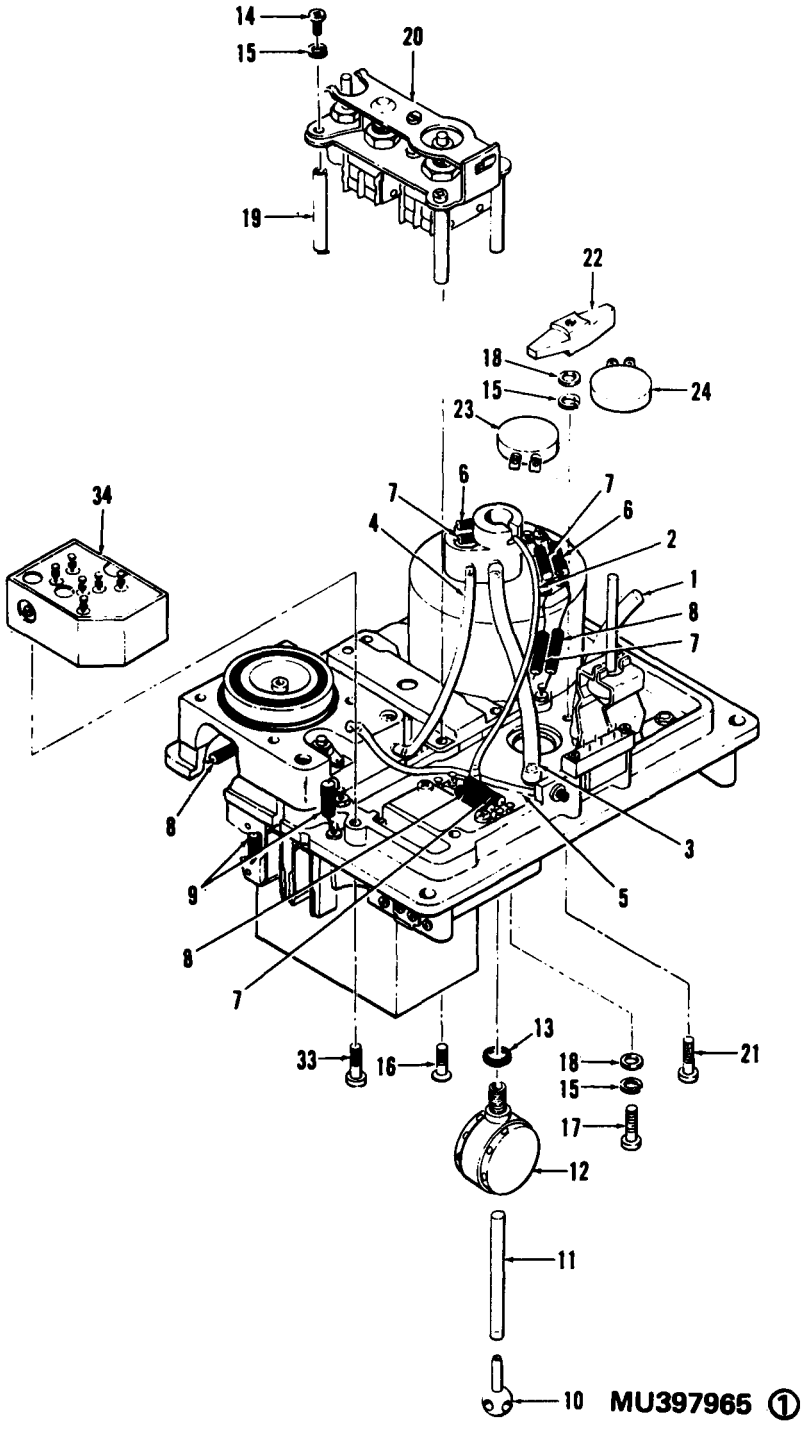

Figure 5. Chassis assembly (sheet 1 of 2).

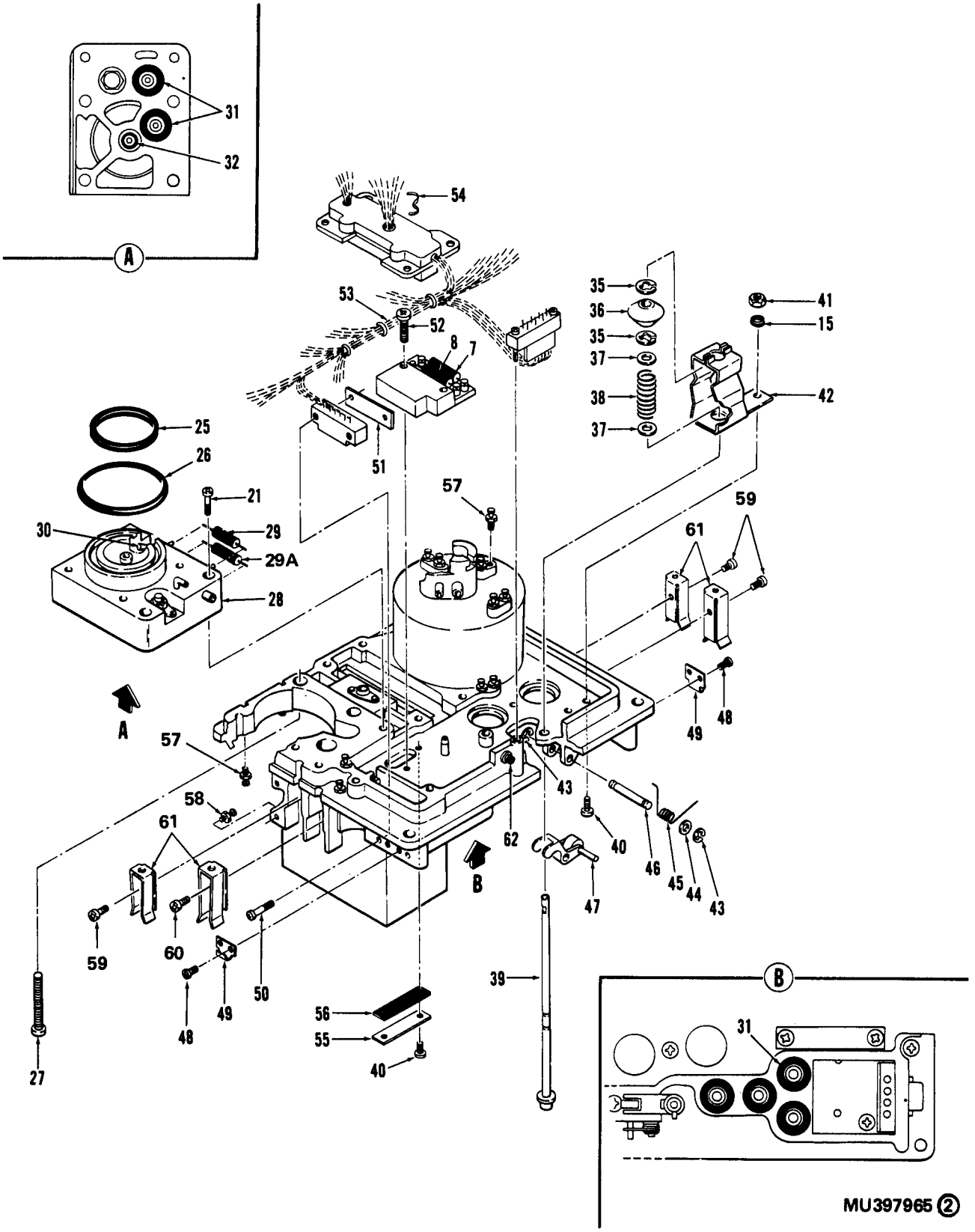

Figure 5. Chassis assembly (sheet 2 of 2).

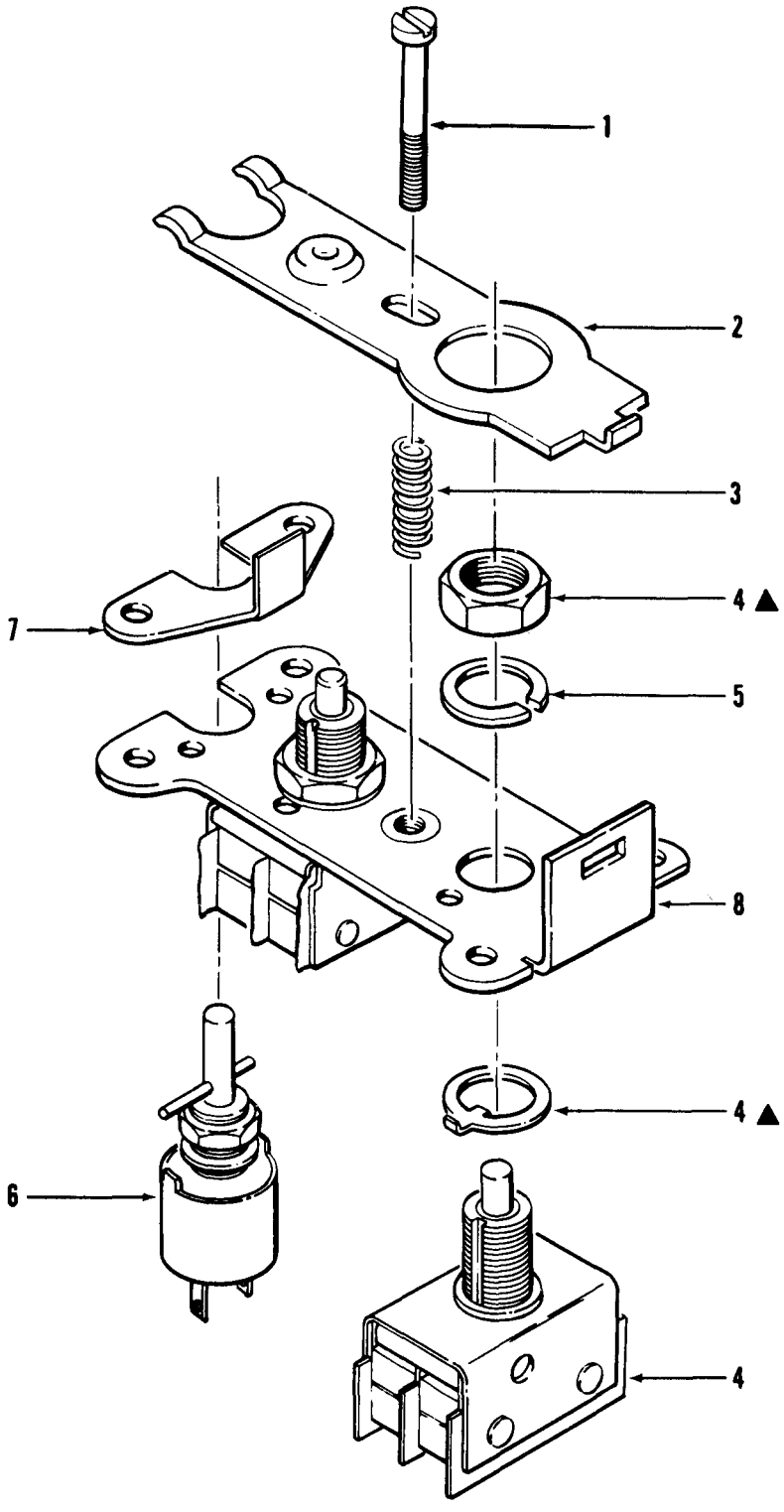

▲ INDICATES ITEMS FURNISHED WITH BASIC PART

MU397966

Figure 6. Switch assembly

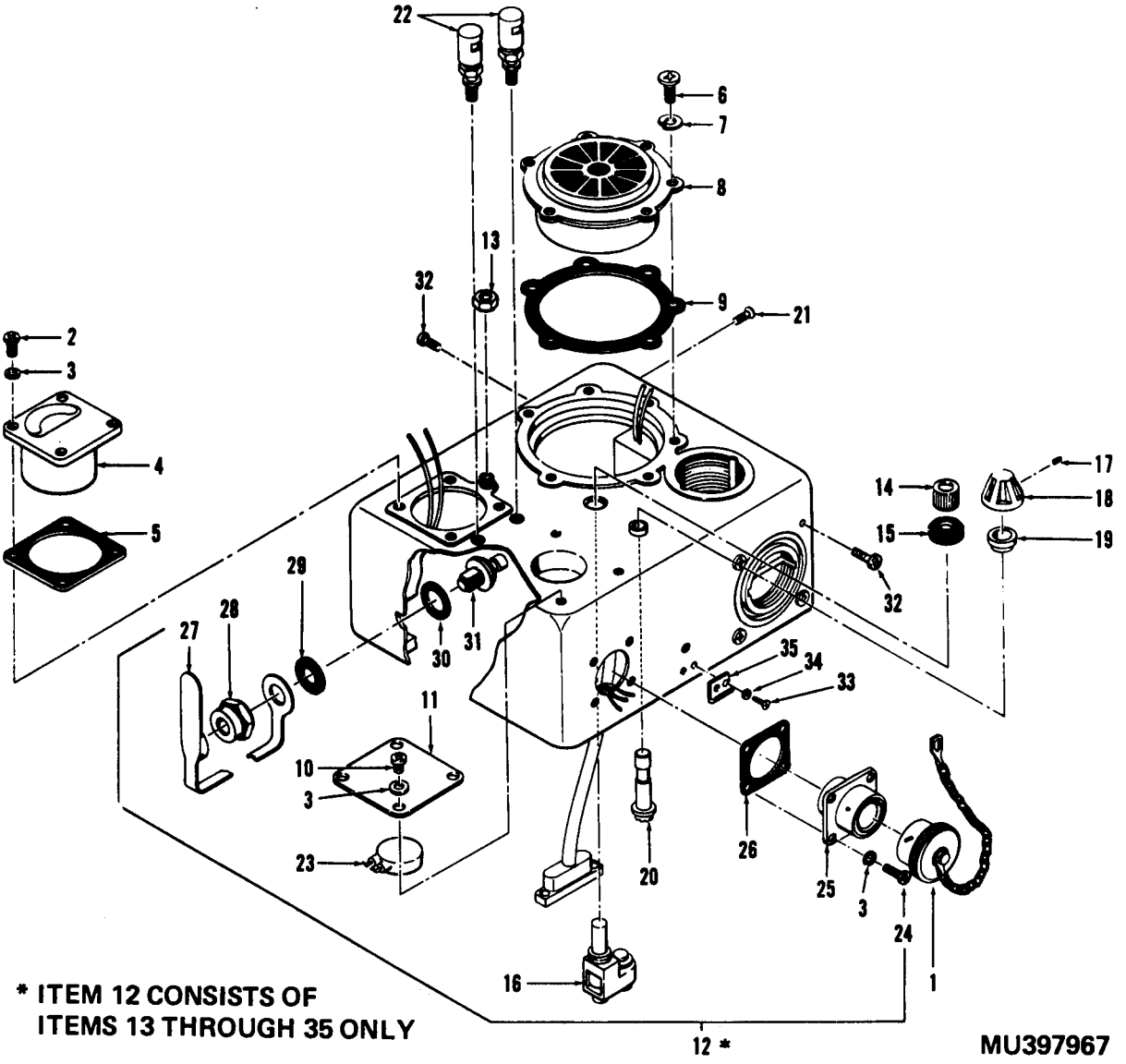

Figure 7. Case top assembly.

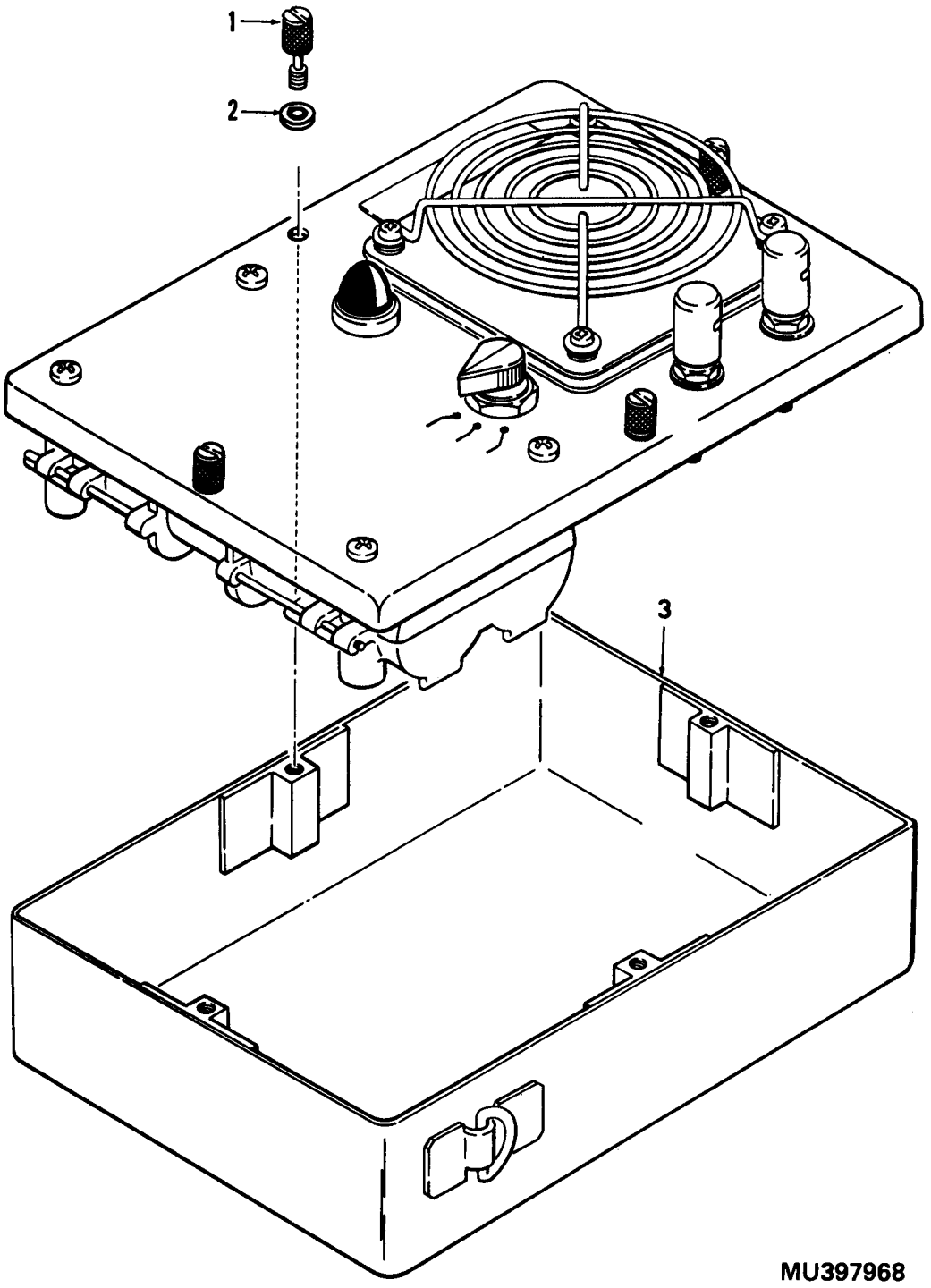

Figure 8. M42 alarm unit.

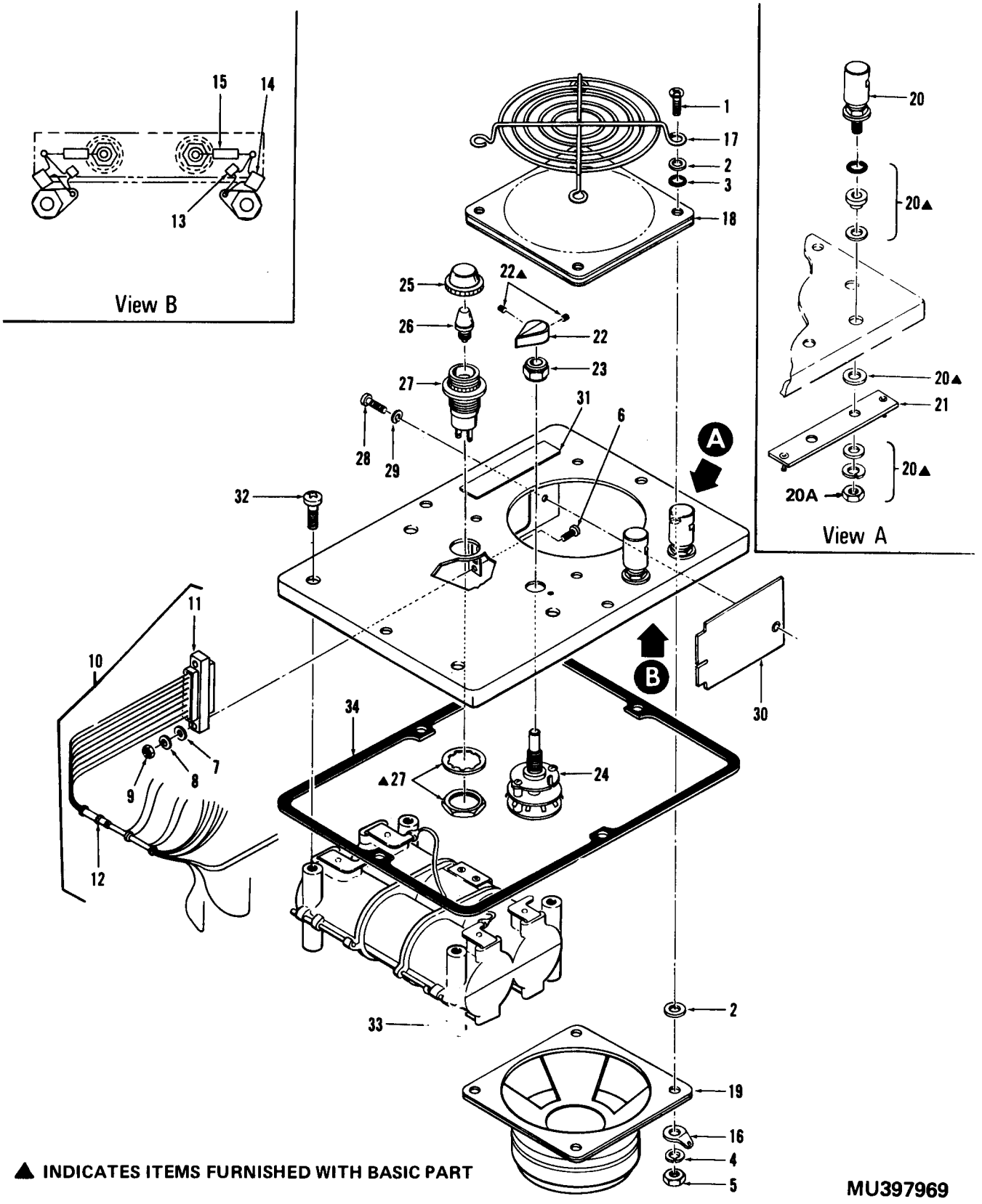

Figure 9. Panel assembly.

SECTION IV. INDEX - FEDERAL STOCK NUMBER AND REFERENCE NUMBER CROSS-REFERENCE TO FIGURE AND ITEM NUMBER

STOCK NUMBER	FIGURE NO	ITEM NO
3110-555-7470	3	32
3120-133-3933	3	29
4720-453-8962	3	5
4720-453-8963	5	5
4720-454-4902	5	11
4720-454-4905	5	2
4720-456-9788	3	6
4730-229-5239	3	7
5305-054-5635	5	60
5305-054-5636	5	59
5305-054-5637	7	33
5305-054-5638	1	4
5305-054-5641	5	50
5305-054-5646	3	26
5305-054-5647	3	1
	5	14
	7	10
5305-054-5648	3	30
	5	40
5305-054-5649	7	24
5305-054-5650	5	52
5305-054-5651	5	33
	7	2
	9	6
5305-054-5653	5	21
5305-054-6650	2	26
5305-054-6652	2	18
5305-054-6653	7	6
5305-054-6654	9	28
5305-068-5287	2	12
5305-443-4686	6	1
5305-456-1048	2	10
5305-456-5494	7	21
	9	32
5305-462-0206	8	1
5305-616-2080	2	42
5305-720-8613	5	17
5305-727-8833	1	7
5305-763-3356	3	24
5305-763-7822	3	16
5305-764-2966	3	34
	5	48

SECTION IV. INDEX - FEDERAL STOCK NUMBER AND REFERENCE NUMB
CROSS-REFERENCE TO FIGURE AND ITEM NUMBER

STOCK NUMBER	FIGURE NO	ITEM NO
5305-768-0336	5	16
5305-800-7261	2	16
5305-871-7893	3	22
5305-935-3051	3	14
5305-946-9847	2	20
	5	27
5305-948-4152	9	1
5305-980-3934	7	17
5310-125-5662	3	20
5310-167-1374	3	11
5310-183-4354	5	44
5310-209-2948	2	43
5310-229-5242	5	37
5310-246-2548	3	17
5310-410-3025	9	20A
5310-595-6211	5	18
	9	7
5310-619-1148	9	2
5310-655-9631	3	12
5310-722-5998	2	19
5310-804-0141	3	23

STOCK NUMBER	FIGURE NO	ITEM NO
5310-928-2690	1	5
	7	34
5310-929-6395	7	7
	9	29
5310-933-8118	3	2
	5	15
	7	3
	9	8
5310-933-8120	9	4
5310-933-8121	6	5
5310-934-9748	5	41
	9	9
5310-934-9765	9	5
5315-442-9723	3	8
5315-454-4906	3	9
5330-220-3873	2	9
5330-220-3874	5	13
5330-220-3875	7	29
5330-228-6945	7	5
5330-228-9384	2	3
	2	7A
5330-229-2745	1	3
5330-248-3840	2	6
	2	32A

SECTION IV. INDEX - FEDERAL STOCK NUMBER AND REFERENCE NUMB
CROSS-REFERENCE TO FIGURE AND ITEM NUMBER

STOCK NUMBER	FIGURE NO	ITEM NO
5330-369-7383	2	38
5330-36	2	40
5330-369-7387	5	25
5330-369-7388	2	28
5330-369-7389	7	30
5330-436-4227	9	34
5330-442-5699	7	9
5330-453-5284	2	41
5330-455-5515	5	32
5330-585-1591	7	26
5330-631-1342	5	26
5330-778-2736	9	3
5330-952-0302	8	2
5340-461-3585	5	19
5340-812-5393	1	6
5340-947-6959	1	8
	3	35
	5	49
5355-198-7383	7	18
5355-357-2862	7	14
5355-980-5647	9	22
5360-135-6194	5	45
5360-229-5230	3	4
5365-228-0647	2	27
5365-246-3117	2	32
5365-543-3981	3	28
	5	43
5365-598-1138	3	19
	5	35
5905-120-9163	5	8
5905-141-1187	9	15
5905-494-6547	6	6
5905-564-9239	5	9
5905-656-9992	5	30
5905-880-2964	5	6
5905-943-9100	5	7
	5	29A
5905-997-8332	5	29
5910-777-6920	9	14
5910-854-9958	9	13
5930-369-7390	7	23
5930-369-7391	5	23
5930-442-5707	9	24
5930-892-9026	7	13

SECTION IV. INDEX - FEDERAL STOCK NUMBER AND REFERENCE NUMB
CROSS-REFERENCE TO FIGURE AND ITEM NUMBER

STOCK NUMBER	FIGURE NO	ITEM NO
5930-997-8196	6	4
5935-135-4377	7	1
5935-401-9746	5	62
5935-893-7952	7	25
5940-159-1290	9	16
5940-442-9722	7	22
5940-937-5237	9	20
5940-954-1412	3	13
5965-133-0694	9	19
5975-681-4609	7	15
5975-727-5153	5	54
	9	12
5975-982-9261	7	19
5975-987-8829	9	23
6105-442-5697	3	27
6110-435-4212	3	25
6135-465-1571	9	33
6210-251-2086	9	25
6210-400-5102	9	27
6240-155-8706	9	26
6625-247-9772	7	4
6665-133-0688	8	3
6665-133-0690	2	31
6665-133-0691	1	2
6665-133-0692	2	25
	5	-
6665-133-0693	5	12
6665-133-3932	7	31
6665-133-3934	7	8
6665-133-3935	2	14
6665-133-3936	7	12
6665-133-5527	6	2
6665-133-5528	3	10
6665-133-5529	3	15
6665-135-6197	5	61
6665-135-6199	2	29
6665-135-6200	2	1
6665-135-6201	5	10
6665-135-8801	2	17
6665-136-1925	5	38
6665-136-1926	5	31
6665-136-4358	6	3

SECTION IV. INDEX - FEDERAL STOCK NUMBER AND REFERENCE NUMB
CROSS-REFERENCE TO FIGURE AND ITEM NUMBER

STOCK NUMBER	FIGURE NO	ITEM NO	STOCK NUMBER	FIGURE NO	ITEM NO
6665-136-4359	5	34	6665-439-1665	2	21
6665-136-7177	2	44	6665-490-5368	7	16
6665-136-7178	7	27	6665-859-2215	8	-
6665-136-7179	3	18	6680-136-1929	2	7
6665-136-7180	2	5	9330-436-1383	5	4
6665-136-7181	5	28	9330-436-1384	5	3
6665-198-5687	2	22	9330-436-1386	5	1
6665-198-5688	9	18	9905-220-3865	1	9
6665-198-5695	5	47	9905-435-7192	7	11
6665-198-5731	2	45	9905-435-7207	9	3
6665-198-5787	5	39			
6665-220-3871	3	21			
6665-220-3872	2	23			
	3	-			
6665-228-6943	3	3			
6665-229-5231	9	17			
6665-400-5098	2	24			
	4	-			
6665-400-5099	5	53			
6665-400-5100	9	10			
6665-400-5101	9	30			
6665-400-6348	7	28			

SECTION IV. INDEX - FEDERAL STOCK NUMBER AND REFERENCE NUMBE
CROSS-REFERENCE TO FIGURE AND ITEM NUMBER

REFERENCE NO.	MFG CODE	FIG NO.	ITEM NO.	REFERENCE NO.	MFG CODE	FIG NO.	ITEM NO.
AN340C3	88044	3	11	CK06BX472K	81349	9	13
AN520C1R3	88044	2	42	CM06FD561G03	81349	9	14
AN960C3L	88044	5	44	C5-15-4326	81361	7	11
B5-15-4343	81361	1	3	C5-15-4341-1	81361	1	6
B5-15-4396-2	81361	5	37	C5-15-4341-2	81361	7	35
B5-15-4448	81361	2	31	C5-15-4351	81361	7	9
B5-15-4481	81361	5	13	C5-15-4357	81361	2	11
B5-15-4571	81361	5	31	C5-15-4360	81361	2	1
B5-15-4572	81361	5	57	C5-15-4370	81361	2	29
B5-15-4573	81361	5	51	C5-15-4381	81361	2	10
B5-15-4667	81361	4	1	C5-15-4382-2	81361	7	32
B5-15-4716	81361	2	9	C5-15-4388	81361	5	30
B5-15-4721	81361	5	58	C5-15-4395	81361	2	17
B5-15-4722	81361	5	19	C5-15-4397	81361	5	46
B5-15-5251-2	81361	4	3	C5-15-4398-1	81361	2	34
B5-15-5411	81361	5	55	C5-15-4398-2	81361	2	36
B5-15-5432	81361	7	22	C5-15-4399	81361	2	32
B5-15-5480	81361	7	29	C5-15-4420	81361	7	31
B5-15-5515	81361	7	14	C5-15-4426-1	81361	7	23
B5-15-5576	81361	5	62	C5-15-4426-2	81361	5	23

REFERENCE NO.	MFG CODE	FIG NO.	ITEM NO.
C5-15-4426-3	81361	5	24
C5-15-4430	81361	5	12
C5-15-4432-2	81361	2	3
		2	7A
C5-15-4442-1	81361	2	38
C5-15-4442-2	81361	2	40
C5-15-4442-3	81361	5	32
C5-15-4442-4	81361	5	25
C5-15-4442-5	81361	2	28
C5-15-4442-6	81361	7	30
C5-15-4447	81361	7	28
C5-15-4475	81361	5	10
C5-15-4488	81361	5	36
C5-15-4496	81361	5	45
C5-15-4498	81361	5	61
C5-15-4513	81361	7	5
C5-15-4519	81361	2	13
C5-15-4520	81361	2	2
C5-15-4535	81361	5	47
C5-15-4563-1	81361	7	1

REFERENCE NO.	MFG CODE	FIG NO.	ITEM NO.
C5-15-4575	81361	5	38
C5-15-4577	81361	5	39
C5-15-4603-1	81361	3	6
C5-15-4603-2	81361	5	11
C5-15-4603-3	81361	3	5
C5-15-4603-4	81361	5	5
C5-15-4603-5	81361	5	2
C5-15-4604-3	81361	5	4
C5-15-4604-4	81361	5	3
C5-15-4604-5	81361	5	1
C5-15-4617	81361	3	7
C5-15-4625	81361	3	33
C5-15-4633	81361	3	13
C5-15-4638	81361	3	18
C5-15-4646	81361	3	29
C5-15-4647	81361	3	4
C5-15-4648	81361	3	8
C5-15-4651	81361	3	9
C5-15-4662	81361	3	17
C5-15-4726	81361	2	45

SECTION IV. INDEX - FEDERAL STOCK NUMBER AND REFERENCE NUMB
CROSS-REFERENCE TO FIGURE AND ITEM NUMBER

REFERENCE NO.	MFG CODE	FIG NO.	ITEM NO.
C5-15-4794	81361	8	1
C5-15-4808	81361	9	34
C5-15-4812	81361	9	17
C5-15-4814	81361	9	18
C5-15-4822	81361	9	11
C5-15-4865	81361	9	24
C5-15-4866	81361	9	23
C5-15-4869-1	81361	9	27
C5-15-4869-2	81361	9	25
C5-15-4873	81361	9	19
C5-15-4876	81361	9	21
C5-15-5233	81361	6	7
C5-15-5234	81361	6	4
C5-15-5235	81361	6	8
C5-15-5236	81361	6	6
C5-15-5237	81361	6	3
C5-15-5238	81361	6	1
C5-15-5239	81361	6	2
C5-15-5256	81361	2	41
C5-15-5275	81361	3	21
C5-15-5291	81361	2	8
C5-15-5292	81361	2	30
C5-15-5299	81361	2	27
C5-15-5352	81361	5	56
C5-15-5488	81361	5	22
C5-15-5489	81361	2	21
D5-15-4340	81361	2	7
D5-15-4342	81361	1	9
D5-15-4350	81361	7	8
D5-15-4352	81361	2	14
D5-15-4368	81361	2	5
D5-15-4374	81361	2	39
D5-15-4380	81361	2	44
D5-15-4384	81361	2	37
D5-15-4390	81361	5	28
D5-15-4416	81361	7	18
D5-15-4440	81361	1 2	1 -
D5-15-4449	81361	7	27
D5-15-4450	81361	5	34
D5-15-4452	81361	7	4

SECTION IV. INDEX - FEDERAL STOCK NUMBER AND REFERENCE NUMB
CROSS-REFERENCE TO FIGURE AND ITEM NUMBER

REFERENCE NO.	MFG CODE	FIG NO.	ITEM NO.
D5-15-4489	81361	5	42
D5-15-4500	81361	2	22
D5-15-4530	81361	7	12
D5-15-4545	81361	4	4
D5-15-4550	81361	2	24
		4	-
D5-15-4582	81361	7	20
D5-15-4602	81361	3	27
D5-15-4611	81361	3	3
D5-15-4621	81361	3	10
D5-15-4630	81361	3	15
D5-15-4660	81361	3	25
D5-15-4663	81361	3	31
D5-15-4799	81361	9	10
D5-15-4805	81361	9	30
D5-15-4824	81361	8	3
D5-15-4826	81361	8	-
D5-15-4832	81361	9	31
D5-15-5230	81361	1	2
D5-15-5240	81361	5	20
		6	-
D5-15-5313	81361	7	-
D5-15-5338	81361	3	36
D5-15-5549	81361	7	16
D5-15-5553	81361	9	33
D5-15-5630	81361	2	15
E5-15-4480	81361	5	53
E5-15-4490	81361	2	25
E5-15-4600	81361	2	23
		3	-
FFS92TYPE1-STYLE9S	81348	3	22
FFS92TYPE3-STYLE9C	81348	5	17
FFW84CLASSB-STYLE B	81348	3	12
MILB19257-TYPEC	81349	7	15
MILB5423-9-2	81349	7	19
MS15571-2	96906	9	26
MS15795-801	96906	3	23
MS15795-803	96906	5	18
		9	7
MS15795-805	96906	2	19

SECTION IV. INDEX - FEDERAL STOCK NUMBER AND REFERENCE NUMB
CROSS-REFERENCE TO FIGURE AND ITEM NUMBER

REFERENCE NO.	MFG CODE	FIG NO.	ITEM NO.
MS15795-808	96906	9	2
MS16624-4037	96906	2	33
MS16632-4015	96906	4	2
MS16633-4009	96906	3	28
		5	43
MS16633-4012	96906	3	19
		5	35
MS17821-4-9	96906	5	54
		9	12
MS18064-1	96906	7	17
MS24585-1390	96906	2	35
MS24693PC49	96906	2	12
MS27039-1-13	96906	9	1
MS28775-026	96906	5	26
MS29513-010	96906	2	4
MS29513-014	96906	2	6
		2	32A
MS3112E14-5S	96906	7	25
MS35338-134	96906	1	5
		7	34
MS35338-135	96906	3	2
		5	15
		7	3
		9	8
MS35338-136	96906	7	7
		9	29
MS35338-138	96906	9	4
MS35338-139	96906	6	5
MS35649-244	96906	5	41
		9	9
MS35650-304	96906	9	5
MS35650-305T	96906	9	20A
MS51021-9	96906	2	16
MS51957-1	96906	5	60
MS51957-12	96906	3	26
MS51957-13	96906	3	1
		5	14
		7	10
MS51957-14	96906	3	30
		5	40
MS51957-15	96906	7	24
MS51957-16	96906	5	52
MS51957-17	96906	5	33
		7	2
		9	6
MS51957-19	96906	5	21
MS51957-2	96906	5	59

SECTION IV. INDEX - FEDERAL STOCK NUMBER AND REFERENCE NUMBE
CROSS-REFERENCE TO FIGURE AND ITEM NUMBER

REFERENCE NO.	MFG CODE	FIG NO.	ITEM NO.
MS51957-26	96906	2	26
MS51957-28	96906	2	18
MS51957-29	96906	7	6
MS51957-3	96906	7	33
MS51957-30	96906	9	28
MS51957-4	96906	1	4
MS51957-7	96906	5	50
MS51959-14	96906	3	16
MS51959-17	96906	5	16
MS51959-2	96906	3	34
		5	48
MS51959-3	96906	1	7
MS51959-5	96906	3	24
MS77066-4	96906	9	16
MS91528-OP2B	96906	9	22
M5423-09-03	81349	7	13
NAS1598D08Y	80205	8	2
NAS1598D3Y	80205	9	3
NAS1635-06-18	80205	2	20
		5	27
NAS1635-06-9	80205	3	14

REFERENCE NO.	MFG CODE	FIG NO.	ITEM NO.
PB08NA01	81349	9	20
PSI-1321-14	06887	7	26
RCR20G203JS	81349	9	15
RW70U24R3F	81349	5	6
RW70U24R9F	81349	5	29
RW70U30R1F	81349	5	7
		5	29A
RW70U39R2F	81349	5	9
RW70U47R5F	81349	5	8
SFR2-5SS4G2	70854	3	32
SR1032CA6	97539	7	21
		9	32
VHC340-2SS	98003	1	8
		3	35
		5	49
113B4362-1	89954	3	20
748765-1	19315	2	43

By Order of the Secretary of the Army:

CREIGHTON W. ABRAMS
General, United States Army
Chief of Staff

Official:

VERNE L. BOWERS
Major General, United States Army
The Adjutant General

Distribution:

To be distributed in accordance with DA Form 12-28 (qty rqr block No. 51) direct and general support maintenance for Detection and Warning Systems.

* U.S. GOVERNMENT PRINTING OFFICE : 1994 O - 300-421 (00031)

RECOMMENDED CHANGES TO EQUIPMENT TECHNICAL PUBLICATIONS

SOMETHING WRONG WITH PUBLICATION

FROM: (PRINT YOUR UNIT'S COMPLETE ADDRESS)

DATE SENT

PUBLICATION NUMBER	PUBLICATION DATE	PUBLICATION TITLE

BE EXACT PIN-POINT WHERE IT IS

PAGE NO.	PARA-GRAPH	FIGURE NO.	TABLE NO.

IN THIS SPACE, TELL WHAT IS WRONG AND WHAT SHOULD BE DONE ABOUT IT.

PRINTED NAME, GRADE OR TITLE AND TELEPHONE NUMBER	SIGN HERE

TEAR ALONG PERFORATED LINE

DA FORM 1 JUL 79 2028-2

PREVIOUS EDITIONS ARE OBSOLETE.

P.S.--IF YOUR OUTFIT WANTS TO KNOW ABOUT YOUR RECOMMENDATION MAKE A CARBON COPY OF THIS AND GIVE IT TO YOUR HEADQUARTERS.

THE METRIC SYSTEM AND EQUIVALENTS

'NEAR MEASURE

. Centimeter = 10 Millimeters = 0.01 Meters = 0.3937 Inches
1 Meter = 100 Centimeters = 1000 Millimeters = 39.37 Inches
1 Kilometer = 1000 Meters = 0.621 Miles

'VEIGHTS

Gram = 0.001 Kilograms = 1000 Milligrams = 0.035 Ounces
1 Kilogram = 1000 Grams = 2.2 lb.
1 Metric Ton = 1000 Kilograms = 1 Megagram = 1.1 Short Tons

LIQUID MEASURE

1 Milliliter = 0.001 Liters = 0.0338 Fluid Ounces
1 Liter = 1000 Milliliters = 33.82 Fluid Ounces

SQUARE MEASURE

1 Sq. Centimeter = 100 Sq. Millimeters = 0.155 Sq. Inches
1 Sq. Meter = 10,000 Sq. Centimeters = 10.76 Sq. Feet
1 Sq. Kilometer = 1,000,000 Sq. Meters = 0.386 Sq. Miles

CUBIC MEASURE

1 Cu. Centimeter = 1000 Cu. Millimeters = 0.06 Cu. Inches
1 Cu. Meter = 1,000,000 Cu. Centimeters = 35.31 Cu. Feet

TEMPERATURE

5/9(°F - 32) = °C
212° Fahrenheit is evuivalent to 100° Celsius
90° Fahrenheit is equivalent to 32.2° Celsius
32° Fahrenheit is equivalent to 0° Celsius
9/5C° + 32 =°F

APPROXIMATE CONVERSION FACTORS

TO CHANGE	TO	MULTIPLY BY
Inches	Centimeters	2.540
Feet	Meters	0.305
Yards	Meters	0.914
Miles	Kilometers	1.609
Square Inches	Square Centimeters	6.451
Square Feet	Square Meters	0.093
Square Yards	Square Meters	0.836
Square Miles	Square Kilometers	2.590
Acres	Square Hectometers	0.405
Cubic Feet	Cubic Meters	0.028
Cubic Yards	Cubic Meters	0.765
Fluid Ounces	Milliliters	29.573
ıts	Liters	0.473
arts	Liters	0.946
allons	Liters	3.785
Ounces	Grams	28.349
Pounds	Kilograms	0.454
Short Tons	Metric Tons	0.907
Pound-Feet	Newton-Meters	1.356
Pounds per Square Inch	Kilopascals	6.895
Miles per Gallon	Kilometers per Liter	0.425
Miles per Hour	Kilometers per Hour	1.609

TO CHANGE	TO	MULTIPLY BY
Centimeters	Inches	0.394
Meters	Feet	3.280
Meters	Yards	1.094
Kilometers	Miles	0.621
Square Centimeters	Square Inches	0.155
Square Meters	Square Feet	10.764
Square Meters	Square Yards	1.196
Square Kilometers	Square Miles	0.386
Square Hectometers	Acres	2.471
Cubic Meters	Cubic Feet	35.315
Cubic Meters	Cubic Yards	1.308
Milliliters	Fluid Ounces	0.034
Liters	Pints	2.113
Liters	Quarts	1.057
'ers	Gallons	0.264
.ms	Ounces	0.035
.ograms	Pounds	2.205
Metric Tons	Short Tons	1.102
Newton-Meters	Pounds-Feet	0.738
Kilopascals	Pounds per Square Inch	0.145
'lometers per Liter	Miles per Gallon	2.354
›meters per Hour	Miles per Hour	0.621

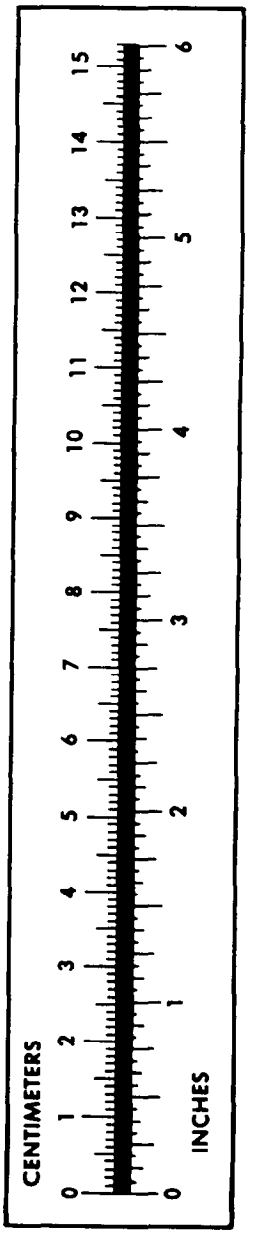

PIN: 025870-002

This fine document...

Was brought to you by me:

Liberated Manuals -- free army and government manuals

Why do I do it? I am tired of sleazy CD-ROM sellers, who take publicly available information, slap “watermarks” and other junk on it, and sell it. Those masters of search engine manipulation make sure that their sites that sell free information, come up first in search engines. They did not create it... They did not even scan it... Why should they get your money? Why are not letting you give those free manuals to your friends?

I am setting this document FREE. This document was made by the US Government and is NOT protected by Copyright. Feel free to share, republish, sell and so on.

I am not asking you for donations, fees or handouts. If you can, please provide a link to liberatedmanuals.com, so that free manuals come up first in search engines:

<A HREF=http://www.liberatedmanuals.com/>Free Military and Government Manuals</A>

- Sincerely
  Igor Chudov
  http://igor.chudov.com/
- Chicago Machinery Movers