TECHNICAL MANUAL
No. 3-4940-200-15

HEADQUARTERS
DEPARTMENT OF THE ARMY
WASHINGTON, D. C., *29 June 1964*

OPERATORS. ORGANIZATIONAL, DIRECT SUPPORT, GENERAL SUPPORT.

AND DEPOT MAINTENANCE MANUAL

MECHANISM, VALVE REPLACEMENT, M1

(END ITEM CODE 643)

***This manual supersedes so much of TM 3-255, 16 September 1955, as pertains to the M1 valve replacement mechanism.**

This reprint includes all changes in effect at the time of publication; change 1

Change No. 1

HEADQUARTERS
DEPARTMENT OF THE ARMY
Washington, D.C., *27June 1972*

Operator's, Organizational, Direct Support, General Support, and Depot Maintenance Manual
MECHANISM, VALVE REPLACEMENT, M1
(END ITEM CODE 643)

TM 3-4940-200-15, 29 June 1964. is changed as follows:

Page 30. Appendix III is superseded as follows:

APPENDIX III
BASIC ISSUE ITEMS LIST AND ITEMS TROOP INSTALLED OR AUTHORIZED LIST

Section I. INTRODUCTION. Not required.
Section II. BASIC ISSUE ITEMS LIST. There are no basic issue items for the M1 valve replacement mechanism.
Section III. ITEMS TROOP INSTALLED OR AUTHORIZED LIST. There are no items troop installed or authorized for the M1 valve replacement mechanism.

By Order of the Secretary of the Army:

W. C. WESTMORELAND,
General, States United Army
Chief of Staff

Official:
VERNE L. BOWERS,
Major General, United States Army
The Adjutant General

Distribution:
To be distributed in accordance with DA Form 12-28 (qty rqr block No. 69), Operator requirements for maintenance equipment.

SECTION I

GENERAL

1. Scope

This manual is published for the use of personnel responsible for operator's, organizational, direct support, general support, and depot maintenance of the M1 valve replacement mechanism. It contains information on the repair, replacement, and overhaul of major units as well as detailed lubrication, cleaning, and painting information applicable to each level of maintenance, as authorized in the maintenance allocation chart.

2. Appendixes

Appendix I contains a list of current references. Appendix II contains the maintenance allocation chart. Appendix III contains a basic issue item list.

3. Record and Report Forms

a. Use the appropriate forms prescribed in TM 38-750.

b. The direct reporting by the individual user of errors, omissions, and recommendations for improving this manual is authorized and encouraged. DA Form 2028 will be used for reporting these improvements. This form will be completed in triplicate using pencil, pen, or typewriter. The original and one copy will be forwarded direct to Commanding General, U.S. Army Edgewood Arsenal, ATTN: SMUEA-EISEM-EP, Edgewood Arsenal, Md., 21010. One information copy will be provided to the individual's immediate supervisor (e.g., officer, noncommissioned officer, supervisor, etc.).

c. Use DD Form 6 to report damaged or improper shipment of materiel.

4. Allocation of Maintenance

Refer to the maintenance allocation chart (app. II) to determine maintenance services authorized for organizational maintenance personnel. Report any maintenance beyond the scope of organizational maintenance to direct support maintenance personnel.

SECTION II

USE AND DESCRIPTION

5. Use

The M1 valve replacement mechanism is used to remove faulty Chlorine Institute valves from type A and type D one-ton containers, and to replace them with new Chlorine Institute valves. With this mechanism, a well trained two-man crew can remove a faulty valve from a one-ton container and insert a new valve against internal pressure in the container in 10 seconds.

6. Overall Description

The M1 valve replacement mechanism (fig. 1) consists of two old valve socket wrench assemblies (6), two new valve socket wrench assemblies (5), a ball and socket assembly (3), a valve socket lever assembly (4), a shield assembly (7), an adjustable chain coupling assembly (1), and a container gage assembly. One old valve socket and one new valve socket supplied with the mechanism are no longer used. They fit a Mark II liberty valve which is obsolete. The other old valve socket and new valve socket fit either a 3/4-inch or a one-inch Chlorine Institute valve. The socket wrench assemblies are held in operating position by the ball and socket assembly which is mounted in a hole in the shield assembly. The adjustable chain coupling assembly fastens the valve replacement mechanism to the front of a one-ton container. The container gage assembly is used to determine whether the valve replacement mechanism will fit the one-ton container.

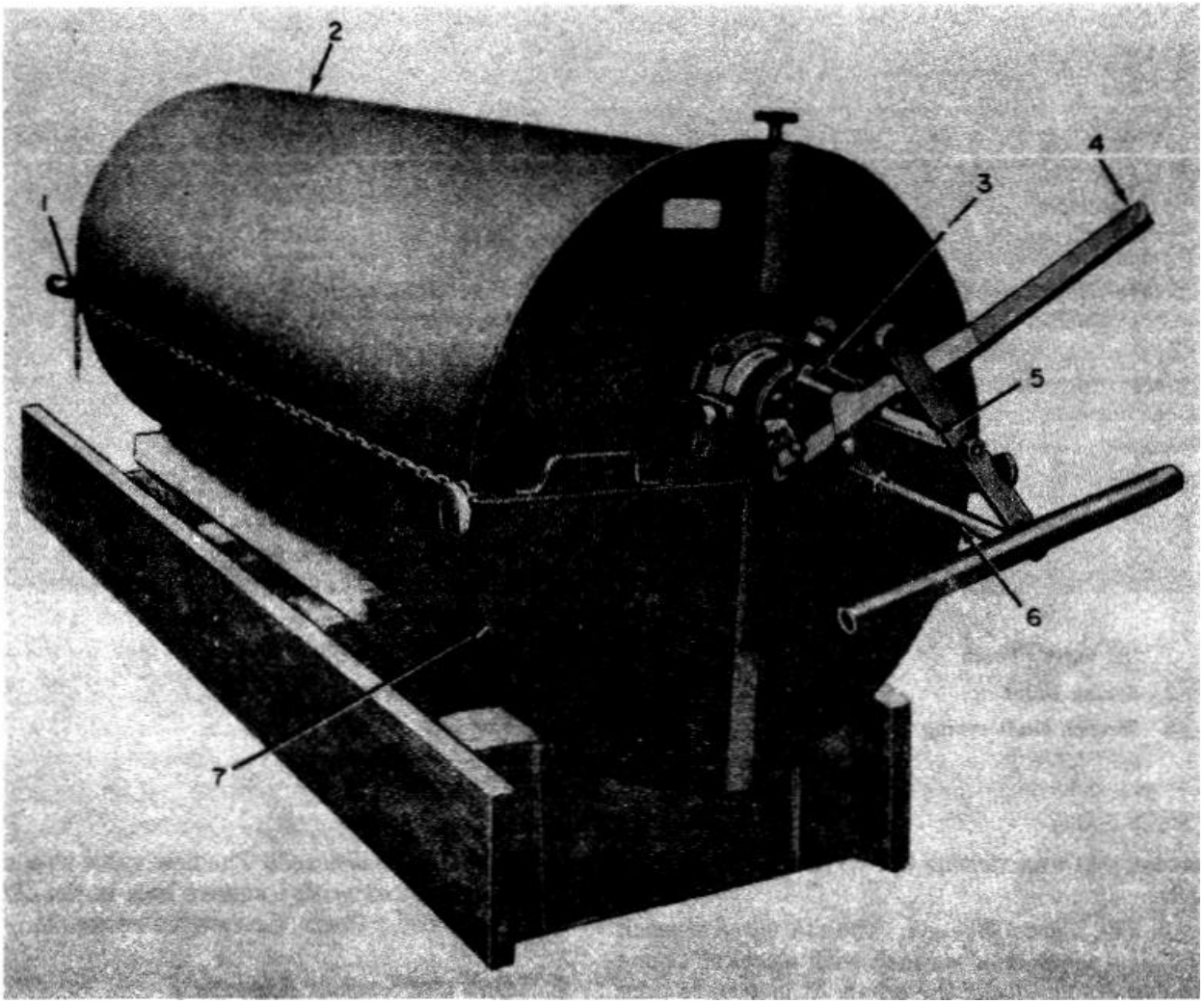

1 Adjustable chain coupling assembly.
2 One-ton container
3 Ball and socket assembly
4 Valve socket lever assembly
5 New valve socket wrench assembly
6 Old valve socket wrench assembly
7 Shield assembly

Figure 1. Ml valve replacement mechanism in operating position.

7. Old Valve Socket Wrench Assembly

The old valve socket wrench assembly (fig. 2) consists of an old valve socket (4), a socket cap (6), a wrench shaft spring (8), a spring collar (2), and an old valve wrench (1).

a. Old Valve Socket. The old valve socket (4) is shaped at one end to fit the valve on a one-ton container. The other end is square in cross section to fit the socket on the old valve wrench. Immediately below the square end of the old valve socket are threads to which the spring collar (2) is screwed. The socket cap (6) is screwed to the old valve socket and holds the valve in the socket.

b. Wrench Shaft Spring. The wrench shaft spring (3) is a coil spring which forces the old valve socket away from the front of the one-ton container after the old valve is unscrewed.

c. Spring Collar. The spring collar (2) screws to the threads on the end of the old valve

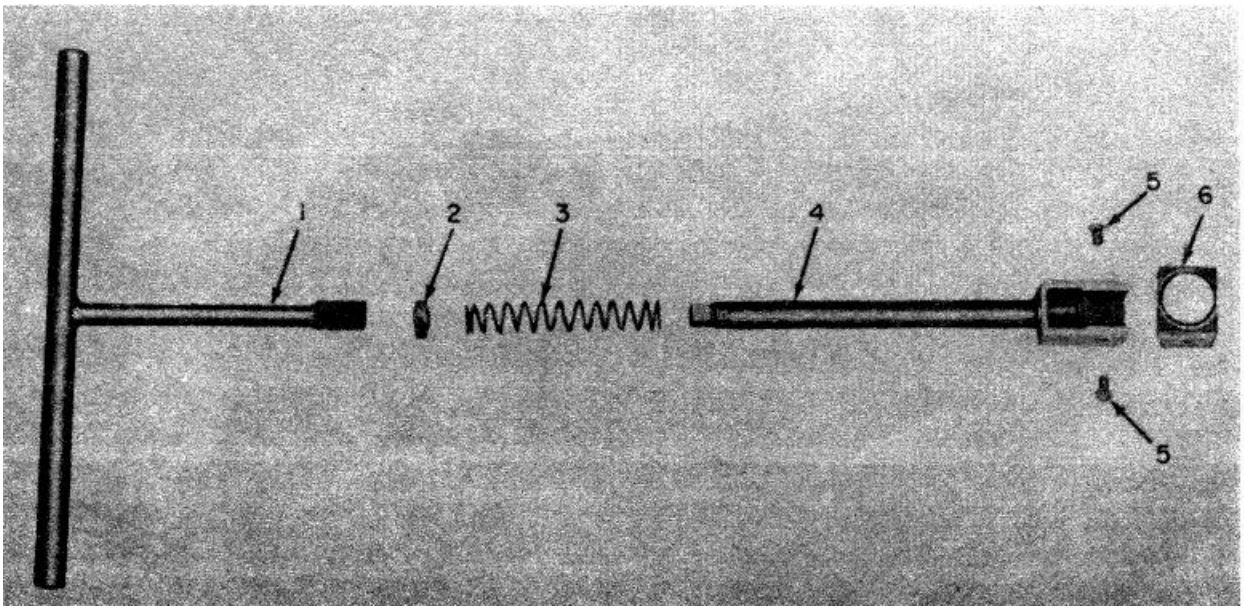

1 Old valve wrench
2 Spring collar
3 Wrench shaft spring
4 Old valve socket
5 Socket cap sew
6 Socket cap

Figure 2. Old valve socket wrench assembly.

socket (4) and retains the wrench shaft spring (3).

d. Old Valve Wrench. The old valve wrench (1) is a tee-shaped wrench with a socket at one end and a handle at the other. It is used to turn the old valve socket (4).

8. New Valve Socket Wrench Assembly

The new valve socket wrench assembly (fig. 3) consists of a new valve socket (3), a socket cap (1), a yoke collar (4), and a new valve wrench (5).

a. New Valve Socket. One end of the new valve socket (3) is shaped to fit the valve on the one-ton container. The other end is square in cross section to fit into a square hole in the new valve wrench (5). The middle of the shaft of the new valve socket is threaded to screw into the yoke collar (4). The socket cap (1) holds the new valve in the socket.

b. Yoke Collar. The yoke collar (4) is threaded internally and is grooved on the outside to receive two steel pins that are part of the valve socket lever assembly (para. 10).

c. New Valve Wrench. The new valve wrench (5) is a steel bar with a square hole in the center. It is used to turn the new valve socket.

9. Ball Socket Assembly

The ball and socket assembly (fig. 4) consists of an inner socket (2), an outer socket (1), a ball (4), a wrench holder (5), and a wrench holder plate (6).

a. Inner Socket. The inner socket (2) is made of cast bronze. It forms the inner half of the socket that holds the ball (4).

b. Outer Socket. The outer socket (1), made of bronze, forms the outer half of the socket that holds the ball (4). The outer socket and the inner socket, with the ball between them, are bolted to the shield (3). Three ball screws (11) and two lug screws (10) are screwed into projections on the outer socket. The ball screws prevent angular motion of the ball; the lug screws prevent the ball from rotating.

c. Ball. The ball (4) is a hollow bronze casting. The special part of the ball is held in the inner and outer sockets (1 and 2) and is free to

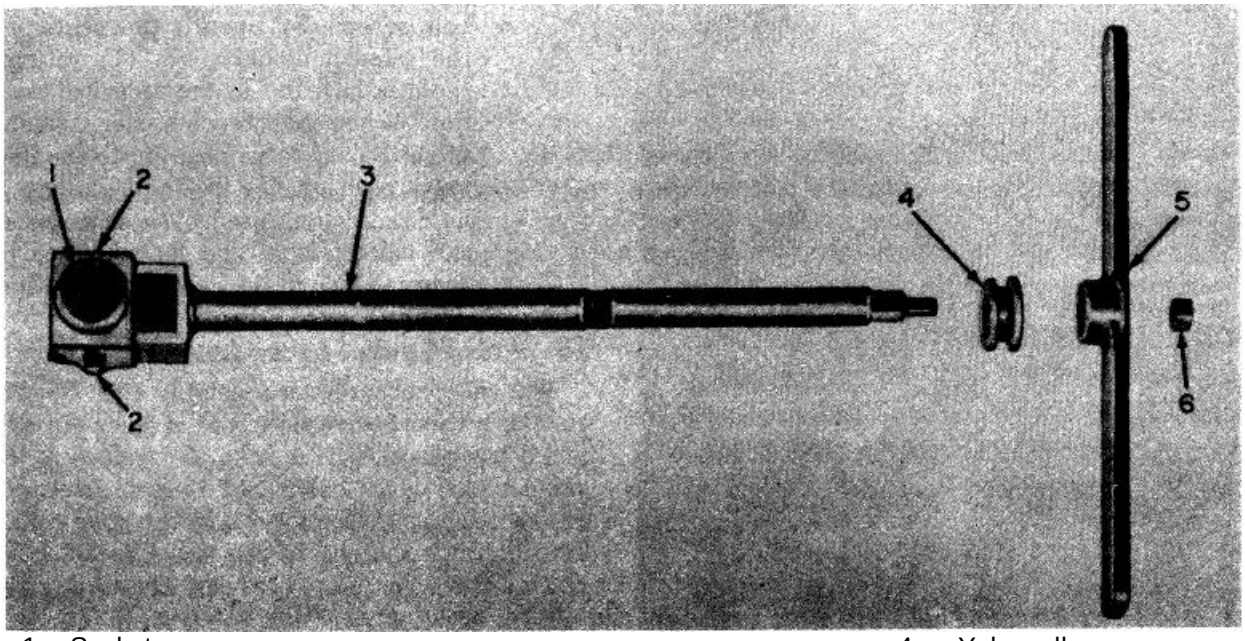

1	Socket cap	4	Yoke collar
2	Socket cap screw	3	New valve socket
3	New Valve socket	6	Nut

Figure 3. New valve socket wrench assembly.

rotate in any direction. The hollow interior of the ball serves as a holder and bearing for the wrench holder (5). A groove extending 180° around the inside of the end of the cylindrical projection of the ball terminates at each end in a rectangular lock bolt hole (8). A steel ball lug (7) screwed to the side of the ball provides a surface to which the lug screws (10) are clamped.

d. Wrench Holder. The wrench holder (5) is a cylindrical bronze casting through which the shafts of the old valve socket and the new valve socket are inserted. A raised shoulder on one end of the wrench holder and the wrench holder plate on the other end retain the wrench holder in the ball (4). A slot in the outer end of the wrench holder contains the lock bolt assembly (*e*(4) below). The wrench holder can turn in the ball through 1800 from the old valve position to the new valve position. It is locked in either position when the lock bolt engages the lock bolt hole (8) in the ball.

e. Wrench Holder Plate. The wrench holder plate (6) is screwed to the front of the wrench holder. It forms the front cover of the ball and socket assembly, and provides a mounting surface for the lever bracket (12), the wrench plate lug (14), the lock bolt screw (13), and the plunger collar (15).

(1) *Lever bracket.* The lever bracket (12) is bolted to the wrench holder plate. It is the pivot on which the valve socket lever assembly (par. 10) turns.

(2) *Wrench plate lug.* The wrench plate lug (14) is a flat piece of brass, painted red. When the valve holder is in the new valve position, the wrench plate lug bears against the ball lug indicating that the valve holder has been moved to the correct position.

(3) *Ball pointer.* The ball pointer (9) is a curved brass arrow, painted red. It indicates the direction to turn the wrench holder from the old valve position to the new valve position.

(4) *Lock bolt assembly.* The lock bolt assembly (fig. 5) consists of a lock bolt

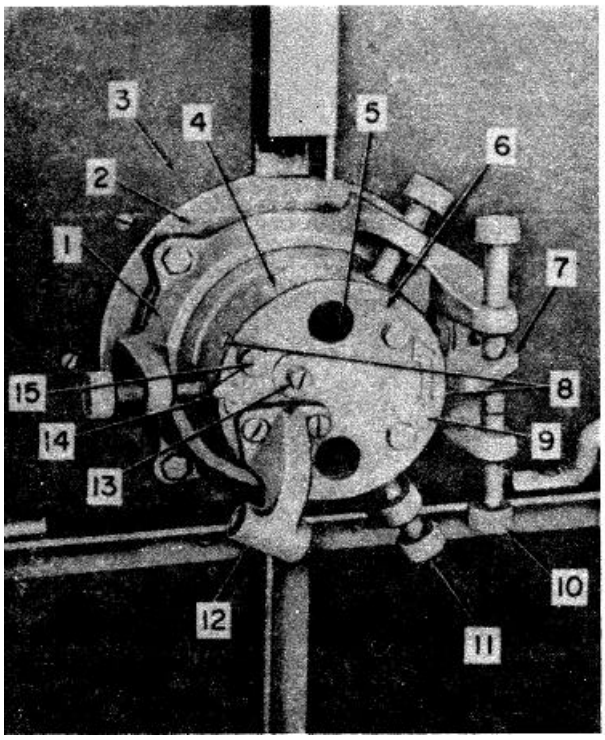

1	**Outer socket**	**8**	**Lock bolt hole**
2	**Inner socket**	**9**	**Ball pointer**
8	**Shield**	**10**	**Lug screw**
4	**Ball**	**11**	**Ball screw**
5	**Wrench holder**	**12**	**Lever bracket**
6	**Wrench holder plate**	**13**	**Lock bolt screw**
7	**Ball lug**	**14**	**Wrench plate lug**
		15	**Plunger collar**

Figure 4. Ball and socket assembly.

(1), a lock bolt screw (5), a plunger (3), a plunger collar (4), and a spring (6). It locks the wrench holder (8) to the ball in the new valve position or the old valve position. The lock bolt screw (5) and plunger collar (4), which are controls for the lock bolt (1) are located on the wrench holder plate (7). The lock bolt (1), is located in a slot in the top of the wrench holder. The outer end of the lock bolt rides in the slot in the cylindrical projection of the ball and locks the wrench holder to the ball when it is forced by the spring (6) into one of the two lock bolt holes. Lifting the plunger collar (4) raises the plunger (3) and allows the spring (6) to force the lock bolt (1) outward into the locked position. Moving the lock bolt screw (5) toward the center of the wrench holder plate (7) returns the lock bolt (1) to the unlocked position. When the wrench holder is swung from the old valve position to the new valve position, the lock bolt plunger is automatically raised by a shoulder in the ball causing the lock bolt to be ready to lock in the new valve position.

10. Valve Socket Lever Assembly

The valve socket lever assembly (fig. 6) consists of a valve socket lever (4), a lever pin (1), and a lever lock (6). A yoke (3) welded to the valve socket lever holds two 3/8-inch steel pins (2) which engage the groove in the yoke collar. Two holes in the end of the valve socket lever receive the lever pin (1) when assembling the

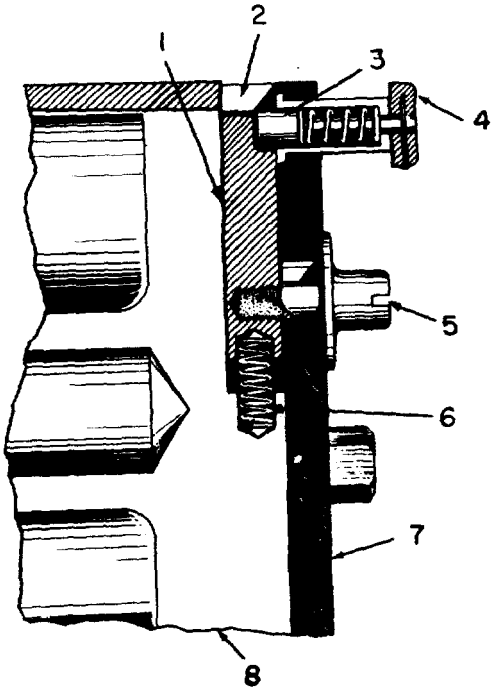

1 Lock bolt
2 Lock bolt hole
3 Plunger
4 Plunger collar
5 Lock bolt screw
6 Spring
7 Wrench holder plate
8 Wrench holder

Figure 5. Lock bolt assembly.

valve socket lever to the lever bracket (para. 9*e*(1)). The lever lock (6) holds the lever pin in position by engaging the groove in the pin. A lever lock knob (5) controls the lever lock.

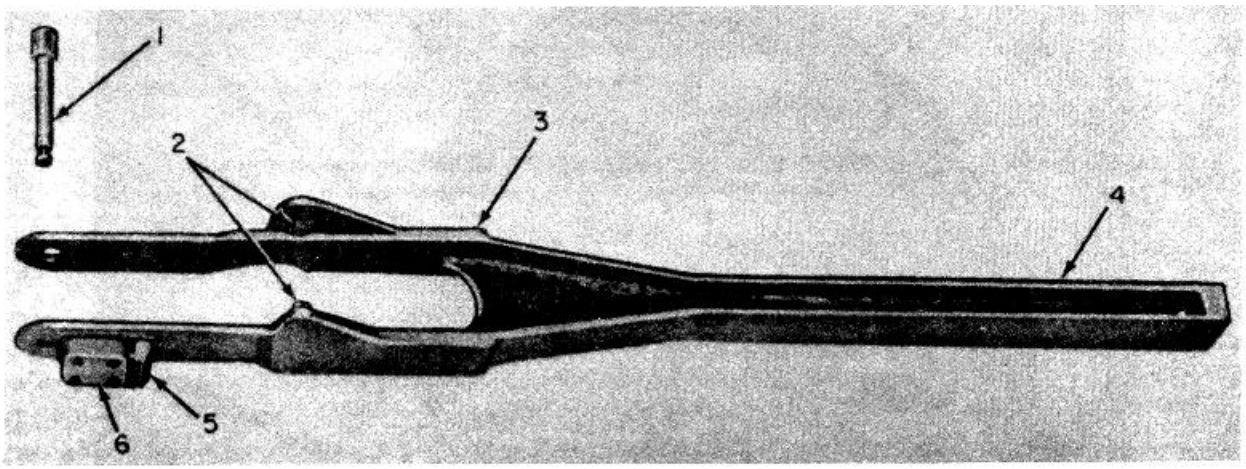

1 Lever pin
2 Steel pins
3 Yoke
4 Valve socket lever
5 Lever lock knob
6 Lever lock

Figure 6. Valve socket lever assembly.

11. Shield Assembly

The shield assembly (fig. 7) consists of a shield (1), a shield adjusting mechanism and two handles (9).

a. Shield. The shield (1) is a steel disk 33 inches in diameter and 7/64-inch thick. A hole in the shield, 85/8-inches in diameter, holds the ball and socket assembly. A nameplate (2) riveted to the front of the shield shows the manufacturer's identification number, the serial number, and the lot number. A marker plate (4), painted red and stamped with the word TOP, is riveted to the front of the shield. Four slots in the shield act as guides for four adjusting keys.

b. Shield Adjusting Mechanism. The shield adjusting mechanism consists of three guides (5, 7, and 10), four adjusting screws, four adjusting knobs (3 and 8), and four screw covers (6).

(1) *Key guides.* The key guides (1, fig. 8) are slotted steel angles that are bolted to the outer side of the shield. They form supports for the adjusting screws and give rigidity to the shield. A hole is drilled near the end of the center key guide for fastening the coupling chains (para. 12*b)* to the shield assembly.

(2) *Adjusting screws.* The four adjusting screws (5, fig. 9) are steel screws supported by the key guides.

(3) *Adjusting keys.* The adjusting keys (4) are wedge-shaped pieces of steel that are threaded onto the adjusting screws and protrude through slots to the inner side of the shield. Key clamps (3), bolted to the adjusting keys on the inner side of the shield, hold the adjusting keys perpendicular to the shield. The adjusting keys are moved away from or toward the center of the shield by turning the adjusting knobs (2) clockwise or counterclockwise.

(4) *Adjusting knobs.* Knurled adjusting knobs (2) on the ends of the adjusting screws (5) are used to turn the adjusting screws.

(5) *Screw covers.* Steel covers (3, fig. 8), screwed to the key guides (1), cover the slots and retard the escape of gas through the slots.

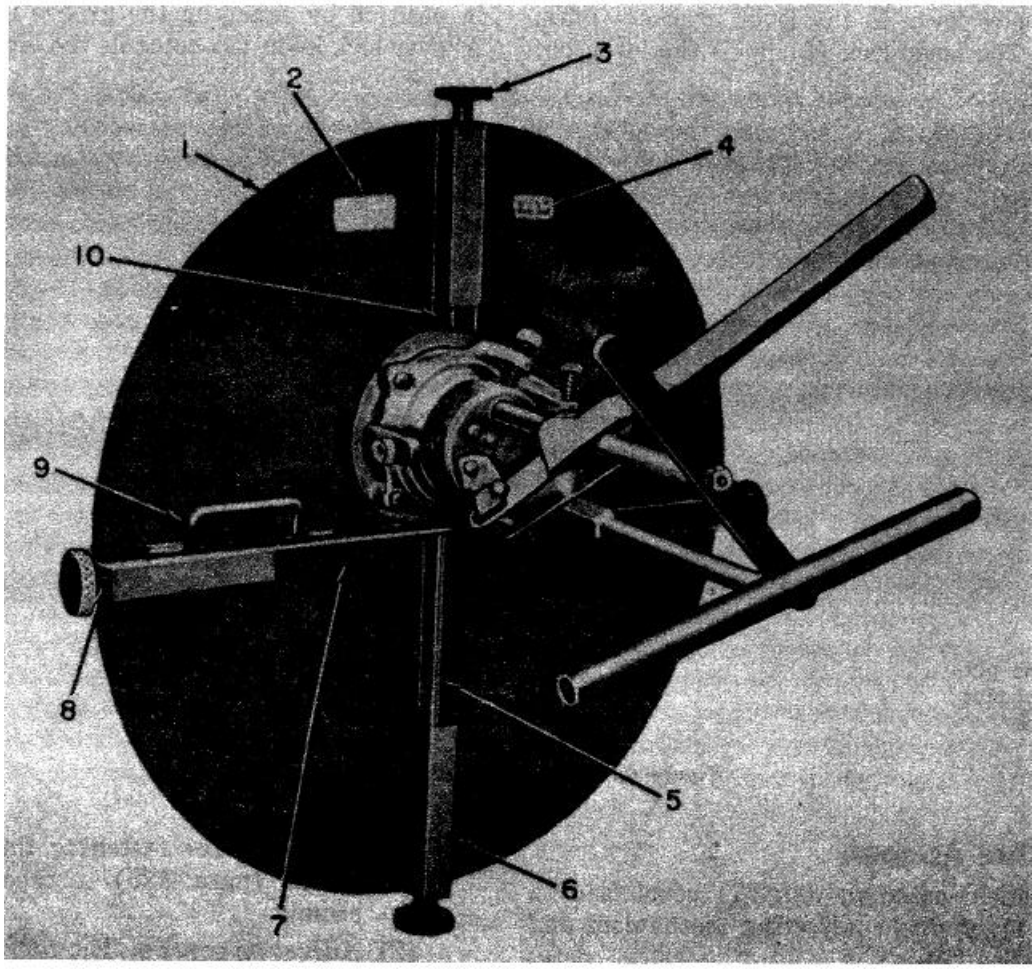

1	**Shield**	**6**	**Screw cover**
2	**Nameplate**	**7**	**Center key guide**
3	**Adjusting knob**	**8**	**Adjusting knob**
4	**Marker plate**	**9**	**Handle**
5	**Lower key guide**	**10**	**Upper key guide**

Figure 7. Shield assembly.

c. Handles. Two handles (9, fig. 7), bolted to the center key guide (7), provide grips for moving the shield.

12. Adjustable Chain Coupling Assembly

The adjustable chain coupling assembly (figs. 10 and 11) consists of two adjustable chain couplings and two coupling chains.

a. Adjustable Chain Couplings. Each adjustable chain coupling consists of a coupling body (1, fig. 10), coupling hook (3), and coupling knob (4). The coupling body hooks over the rear rim of a one-ton container. The coupling hook hooks to a link of one of the coupling chains. The coupling knob regulates the position of the coupling hook. Turning the coupling knob moves the coupling hook into or out of the coupling body (1).

b Coupling Chains. The coupling chains (4, *fig.* 11) are seven-foot long steel chains, each with a chain hook (1) at one end. A chain hook hooks into each hole in the end of the center key guide (2). The ends of the coupling chains opposite from the chain hooks are engaged by the coupling hooks on the adjustable chain couplings.

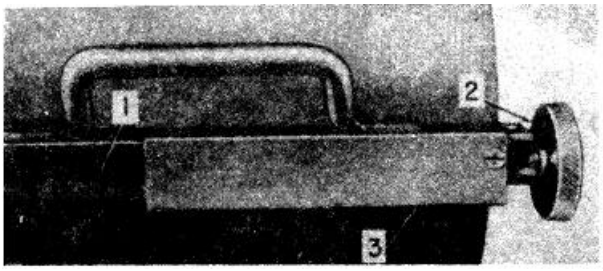

1 Key guide **2 Adjusting knob**
3 Screw cover

Figure 8. Shield adjusting mechanism, outer side.

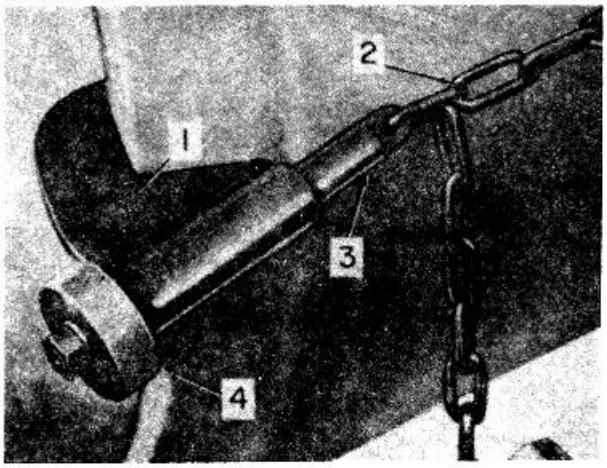

1 Coupling body **3 Coupling hook**
2 Coupling chain **4 Coupling knob**

Figure 10. Adjustable chain coupling assembly, rear end.

13. Container Gage Assembly

The container gage assembly (fig. 12) consists of a container gage (3), a depth rod (2), and a clearance rod (1). The container gage and depth rod are used together to gage the depth of the eduction tube outlet below the rim of the one-ton container. The clearance rod is used to gage the clearance between the valve being replaced and the shipping bonnet nearest to it.

a. Container Gage. The container gage is made of 11/2- by 1/8-inch structural steel angles welded together to form a 27-inch square with opposite corners joined by diagonals. A sight

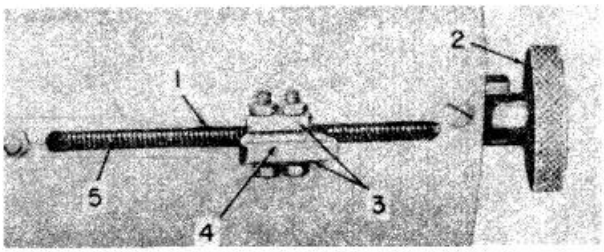

1 Slot **3 Key clamps**
2 Adjusting knob **4 Adjusting key**
5 Adjusting screw

Figure 9. Shield mechanism, inner side.

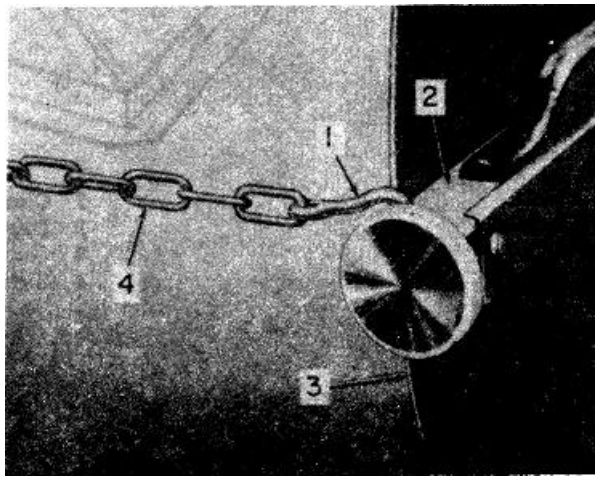

1 Chain hook **3 Shield**
2 Center key guide **4 Coupling chain**

Figure 11. Adjustable chain coupling assembly, front end.

block (4) is welded to the intersection of the diagonals. A hole drilled in one of the diagonals is used for bolting the depth rod (2) and the clearance rod (1) to the container gage for storage and shipment.

b. Depth Rod. The depth rod (2) is a steel rod 1¼ inches wide by 12-inches long by 3/8-inch thick. One end is rounded and drilled to permit easy handling; the other end is square. A beveled notch in one edge near the rounded end is marked MAX at one end and MIN at the other.

c. Clearance Rod. The clearance rod (1) is a flat steel bar, 3 15/16 inches long, concave at one end and convex at the other.

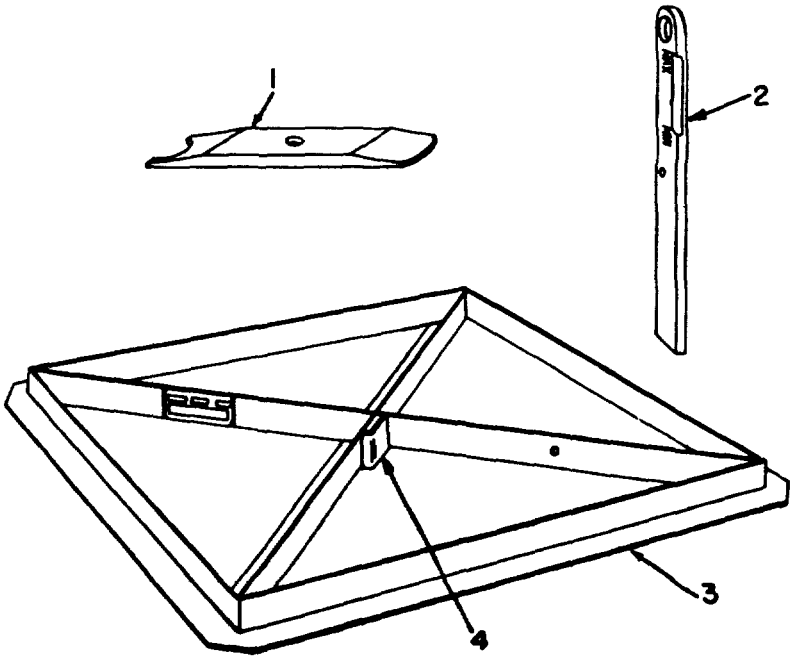

1 Clearance rod
2 Depth rod
3 Container gage
4 Sight block

Figure 12. Container gage assembly.

14. General

This section contains instructions for operating the M1 valve replacement mechanism under normal conditions of climate and service. Normal conditions are considered to be operational in warm weather (50° F. and above).

a. Personnel. An operator and an assistant operator are required to install and operate the M1 valve replacement mechanism.

b. Practice. Operating personnel should practice replacing a valve on a container filled with compressed air before using the M1 valve replacement mechanism to replace a faulty valve on a filled one-ton container.

c. Preparation.

Warning.
Field protective masks and protective clothing (TM 3-304) must be worn by all operating personnel. In addition, a decontaminating apparatus should be standing by.

(1) Measure the pressure of the gas in the one-ton container by connecting a pressure gage to the topmost valve.

(2) Vent the one-ton container to reduce internal pressure or to relieve a vacuum as given in TM 3-4730-200-15.

(3) Lay the one-ton container on its side on a support that will hold the front of the container at least six inches above the surface on which the support is resting.

(4) Roll the container until the two valves are alined vertically, with the faulty valve on top.

(5) Chock the container to prevent rolling.

15. Container Gage Assembly

a. Measure the perpendicular distance from the front rim of the container to the eduction tube outlet that holds the faulty valve as follows:

(1) Hold the container gage (3, fig. 12) with the flat sides of the structural steel angles against the front rim of the container.

(2) Move the container gage until the sight block (4) is opposite the edge of the eduction tube holding the faulty valve.

(3) Insert the square end of the depth rod (2) through the sight block until it touches the head of the container next to the eduction tube outlet. If there is a boss (raised portion) around the eduction tube outlet, the end of the depth rod should touch the boss.

(4) Check that the outer edge of the sight block comes between the MAX and MIN ends of the beveled notch in the depth rod. If the edge of the sight block is outside the notch, the M1 valve replacement mechanism cannot be used.

b. Gage the distance between the faulty valve and the bonnet clip nearest to it. To do this, hold the clearance rod (1) against the front head of the container with the concave end against the faulty valve. If there is no clearance, the M1 valve replacement mechanism cannot be used.

16. Installing M1 Valve Replacement Mechanism

a. Assemble the new valve to the new valve socket (3, fig. 3) and screw the socket cap (1) to the new valve socket using the two socket cap screws (2).

b. Unscrew the faulty valve one-quarter turn with an M2 valve removing wrench. This frees the valve in the eduction tube outlet, making it easier to operate the M1 replacement mechanism. If there is leakage around the valve threads, screw the valve in until the leakage stops.

c. Assemble the old valve socket (4, fig. 2) to the faulty valve while the faulty valve remains in the container. Screw the socket cap (6) to the old valve socket using the two socket cap screws (5).

d. Turn the adjusting knobs (2, fig. 9) on the shield adjusting mechanism counterclockwise until all four adjusting keys (4) are as close to the center of the shield as they will go.

e. Lock the wrench holder (5, fig. 4) in the old valve position as follows:

(1) Stand the M1 valve replacement mechanism on edge with the marker plate (4, fig. 7) uppermost.

(2) Hold the lock bolt screw (13, fig. 4) in the unlocked position.

(3) Using the lever bracket (12) as a handle, turn the wrench holder clockwise as far as it will go to the old valve position.

(4) Lift the plunger collar (15), allowing the lock bolt (1, fig. 5) to lock the wrench holder to the ball (4, fig. 4).

f. Unscrew the three ball screws (11) until they no longer project from the holes. This will permit free movement of the ball (4).

g. Unscrew the two lug screws (10) several turns to permit free rotary movement of the ball (4).

h. With the M1 valve replacement mechanism on edge with the marker plate (4, fig. 7) uppermost, the working from the inner side of the shield, shove the shaft of the new valve socket (3, fig. 3) through the upper hole in the wrench holder (5, fig. 4). Screw the yoke collar (4, fig. 3) to the threads on the new valve socket.

i. Install the valve socket lever assembly (fig. 6) as follows:

(1) Insert the steel pins (2) of the yoke (3) into the groove of the yoke collar (4, fig. 3).

(2) Aline the holes in the valve socket lever (4, fig. 6) with the holes through the lever bracket (12, fig. 4), and insert the grooved end of the valve socket lever pin (1, fig. 6) into the hole in the lever opposite the lever lock (6).

(3) Slide the lever lock knob (5) as far as it will go toward the handle of the new valve socket lever.

(4) Push the lever pin (1) all the way into the valve socket lever (4), then release the lever lock knob (5) to lock the lever pin in position.

j. Bolt the new valve wrench (5, fig. 3) to the new valve socket (3), using the nut (6).

k. Position the M1 valve replacement mechanism as follows:

(1) Lift the M1 valve replacement mechanism by the handles and place it over the front of the one-ton container so that the shaft of the old valve socket slides into the lower hole in the valve holder.

(2) Push the M1 valve replacement mechanism tightly against the front rim of the one-ton container until the weight of the mechanism is resting on the shaft of the old valve socket.

(3) Tighten the lower adjusting knob (3, fig. 7) until the adjusting key comes into contact with the rim of the one ton container.

(4) While the assistant operator lifts the M1 valve replacement mechanism by the handles, tighten the lower adjusting knob approximately two more turns until the entire weight of the mechanism is carried by the adjusting key resting on the rim of the one-ton container.

(5) Tighten the two center adjusting knobs (8) until the center adjusting keys bear against the rim of the one ton container.

(6) Tighten the upper adjusting knob.

(7) Test for free play around the shaft of the old valve socket in the wrench holder by moving the ball slightly in all directions.

(8) If there is no free play, adjust the mechanism to obtain free play by tightening the proper adjusting knob while loosening the knob opposite it. After free play has been obtained, tighten all adjusting knobs by hand.

(9) Move the ball in the socket until the shaft of the old valve socket is centered in the hole in the wrench holder.

(10) Without disturbing the position of the ball, tighten the ball screws (11, fig. 4) until they just touch the ball.

(11) Without disturbing the position of the ball, tighten both lug screws (10) until they just touch the ball lug (7).

(12) Test for free play around the shaft of the old valve socket by moving the old valve socket slightly in all directions. If the socket is not free in the wrench holder, repeat steps (3) through (11) above until there is free play with the ball screws and lug screws clamped.

l. Install the adjustable chain coupling assembly as follows:

(1) Hook the chain hooks (1, fig. 11) on the coupling chains (4) into the holes in the ends of the center key guide (2).

(2) Stretch the chains (4) toward the rear head of the one-ton container.

(3) Extend the coupling hook (3, fig. 10) to its maximum length by turning the coupling knob (4) counterclockwise.

(4) Attach the coupling body (1) to the rear rim of the one-ton container, and connect a link of the appropriate coupling chain (2) to the coupling hook (3). Stretch the chain as tightly as possible.

(5) Repeat step (4) for the second adjustable chain coupling.

(6) Tighten the coupling chains equally by turning the coupling knobs clockwise until the chains are taut.

(7) Test the old valve wrench for free play (step k (12) above). Adjust if necessary.

m. Slide the wrench shaft spring (3, fig. 2) onto the shaft of the old valve socket (4), compress the spring, and screw the spring collar (2) to the end of the old valve socket.

n. Unlock the lock bolt (1, fig. 5) by moving the lock bolt screw (5) toward the center of the wrench holder plate (7) until the plunger (3) latches the lock bolt in the unlocked position.

o. Fit the socket on the old valve wrench (1, fig. 2) to the old valve socket (4).

17. Changing Valve

Change the valve quickly to keep the escape of gas to a minimum. Before changing the valve on a container filled with a toxic agent, the operator and assistant operator should be familiar with each step in the procedure and should rehearse the entire operation.

a. Unscrewing Faulty Valve. Slowly unscrew the faulty valve with the old valve wrench (1, fig. 2), while the assistant operator holds the valve socket lever (4, fig. 6) away from the shield. When gas begins to escape from around the faulty valve, unscrew it as rapidly as possible. When the valve is free of the eduction tube outlet, the wrench shaft spring (3, fig. 2) will force the old valve wrench away from the shield. Immediately drop the old valve wrench to the ground.

b. Positioning New Valve. As soon as the faulty valve is free of the eduction tube outlet, the assistant operator turns the valve holder counterclockwise to the new valve position with the valve socket lever (4, fig. 6), while holding the valve socket lever away from the shield. The wrench holder (5, fig. 4) will lock in the new valve position automatically. Check that the red wrench plate lug (14) is against the ball lug (7) when the wrench holder is in the new valve position.

c. Installing New Valve.

(1) When the assistant operator feels the wrench holder in the new valve position, he must quickly push the valve socket lever hard toward the front of the one-ton container and hold it there as firmly as possible. Screw the new valve in the empty eduction tube outlet while the assistant operator has it seated.

(2) Begin turning the new valve clockwise as soon as the faulty valve is free of the eduction tube outlet, and continue turning while the assistant operator swings the wrench holder into the new position.

(3) While the assistant operator holds the valve socket lever toward the shield, turn the new valve wrench until the new valve is tightened into the eduction tube outlet.

d. Tightening New Valve. Tighten the new valve into position with an M2 valve removing wrench after the M1 valve replacement mechanism has been removed from the one-ton container.

18. Returning Faulty Valve to Container

If the new valve cannot be screwed into place, the faulty valve must be reinstalled.

a. Unlock the wrench holder (5, fig. 4) by holding the lock bolt screw (13) in the unlocked position.

b. Hold the new valve socket away from the shield (3) with the valve socket lever (4, fig. 6).

c. Turn the wrench holder clockwise to the old valve position and lock in place by releasing the lock bolt screw.

d. Attach the old valve wrench to the old valve socket and screw in the old valve.

Note.

The operator may need help to catch the valve threads while working against escaping gas pressure. The assistant operator must push the old valve wrench toward the one-ton container while the operator is screwing in the old valve.

e. After reinstalling the old valve, correct the condition that prevented insertion of the new valve and repeat the valve changing procedure (para. 17).

19. Removing M1 Valve Replacement Mechanism

a. Loosen and remove the adjustable chain couplings and the coupling chains.

b. Remove the new valve wrench assembly, the valve socket assembly, and the yoke collar.

c. Loosen the adjusting keys by turning the adjusting knobs clockwise.

d. Slide the M1 valve replacement mechanism off the new valve socket.

e. Remove the new valve socket cap and socket from the new valve socket.

f. Unscrew the spring collar from the old valve socket and remove the wrench shaft spring.

g. Withdraw the old valve socket from the wrench holder.

h. Remove the old valve socket cap and socket from the old valve.

i. Decontaminate the mechanism if necessary (para. 22*d*(1)).

20. Tools and Spare Parts

a. Tools. An engineer's wrench, to be used when tightening the socket cap screws, is packed with the M1 valve replacement mechanism.

b. Spare Parts. Four spare socket cap screws are packed with the M1 valve replacement mechanism.

21. Lubrication

Lubricate the M1 valve replacement mechanism with engine oil (OE) after each use. Use SAE 30 at temperatures above 32°F., SAE 10 at temperatures between 32° and zero° F., and use special preservative lubricating oil (PL-special) at temperatures below zero° F. Cover all unpainted surfaces with a thin film of oil. Oil all moving parts and threaded parts including socket cap screws, ball screws, lug screws, the ball, the outer and inner ends of the wrench holder, the lever lock, the adjustable screws, and the adjustable chain coupling.

Note.

Do not allow the lubricant to become contaminated by sand, dust, or moisture. Make certain the lubricant containers are tightly closed when not in use.

22. Operator's Preventive Maintenance Services

a. Inspections. Inspect the equipment before and after operation. Correct any condition which may result in improper functioning or damage to the equipment.

b. Reporting Deficiencies. Report all deficiencies that cannot be corrected to the next higher maintenance level.

c. Before-Operation Services. The purpose of before-operation services is to determine whether the equipment is in good operating condition. Deficiencies must be corrected or reported to organizational maintenance personnel for correction before the equipment is placed in operation.

(1) *Visual inspection.* Make a thorough visual inspection of the apparatus and check for loose or missing nuts and bolts. When necessary, tighten or replace hardware. Inspect the apparatus to see that all parts are present. Replace missing parts authorized for replacement by the operator. Check to see that no objects obstruct moving parts. Inspect for rust, distortion, cracks, breaks, and stripped or damaged threads. Remove rust with a wire brush or sandpaper. Repair or replace faulty parts authorized for repair or replacement by the operator.

(2) *Old valve and new valve socket wrench assemblies.* Check shafts of sockets for straightness. Replace bent sockets.

(3) Ball and socket assembly. Tighten loose screws and bolts. Test the ball for freedom of motion in the socket. Check ball screws and lug screws for proper operation. Test the valve holder for free movement from the old valve position to the new valve position. Check the lock bolt assembly to see that the lock bolt fastens the wrench holder in both positions, that the plunger holds the lock bolt unlocked when it is in the old valve position, and that the lock bolt falls automatically when the value holder is in the new valve position. Repair or replace faulty parts.

(4) *Valve socket lever assembly.* Test the lever lock to see that it locks the lever pin in the assembled position.

(5) Shield assembly. Tighten loose screws and bolts. Test adjusting keys for ease of operation. Clean, repair, or replace parts to correct faulty operation.

(6) *Adjustable chain coupling assemblies.* Check that there are no damaged links

in the coupling chains. Test each adjustable chain coupling by turning the coupling hook in and out of the coupling body. Replace the chain if any links are damaged. Repair or replace the coupling hook if damaged.

(7) *Container gage assembly.* Test the container gage for flatness by putting it against a flat surface. A bent gage may be used temporarily if allowance is made for the error in measurement caused by a bent part. Replace the bent gage as soon as possible.

d. Trial Exercise. Before using the M1 valve replacement mechanism on a filled one-ton container, practice replacing the valve on a container filled with compressed air.

e. After-Operation Services.

(1) *Decontamination*. If the M1 valve replacement mechanism is contaminated with a liquid chemical agent, disassemble the equipment (pars. 26 through 30), decontaminate (TM 3-220), and reassemble.

(2) *Correcting Deficiencies*. Correct any deficiencies noticed during operation.

(3) *Lubrication*. Lubricate the equipment (para. 21).

23. Service Upon Receipt of Equipment

a. General. The M1 valve replacement mechanism is packed in a hinged-front wooden box 39½-inches square and 16½-inches high (fig. 13). The box has two shelves, the lower one for the container gage assembly and the upper one for the valve replacement mechanism and accessories. Wrenches, chains, and accessories are packed in a drawer in the upper right side of the box. The box is shipped in a nailed wooden crate fastened with nailess strapping.

b. Inspection. Unpack the M1 valve replacement mechanism and inspect for condition and completeness of components.

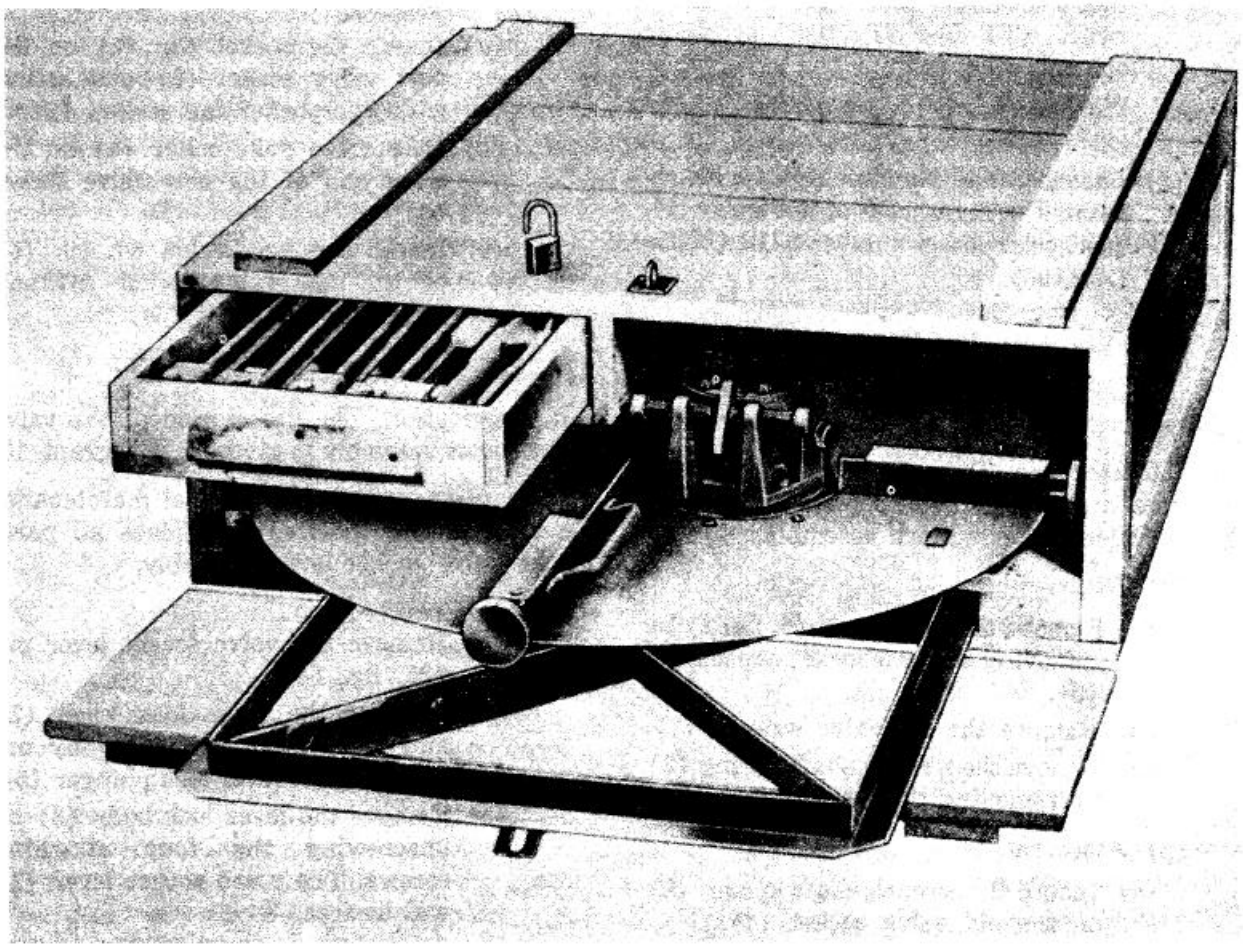

Figure 13. M1 valve replacement mechanism packed.

24. Painting

a. General. Organizational maintenance personnel are authorized to retouch the paint on the M1 valve replacement mechanism. When necessary, thoroughly clean the surface and repair See TM 9-213 for general instructions for cleaning and methods of painting.

b. Paints to be Used.

(1) *Primer*. Prime all worn and scratched surfaces with one coat of synthetic paint primer (TT-P-636). Use rust inhibiting lacquer primer (MIL-P-11414) when repainting with lacquer.

(2) *Enamel*. Repaint with one coat of synthetic enamel, color green number 3412 (TT-E-527) use synthetic enamel, color red number 3115, when repainting the marker plate, the ball pointer, and the wrench plate lug.

(3) *Lacquer*. The equipment may be repainted with one coat of hot spray lacquer, color green number 3412 (MIL-L-11195).

25. Old Valve Socket Wrench Assembly

a. Description. The description of the old valve wrench assembly is given in paragraph 7.

b. Maintenance. Organization maintenance personnel are authorized to replace all parts of the old valve socket wrench assembly.

(1) Disassembly.

(a) Remove the socket cap (6, fig. 2) by removing the two socket cap screws (5).

(b) Remove the old valve wrench (1).

(c) Remove the wrench shaft spring (3) by removing the spring collar (2).

(2) *Assembly.*

(a) Install the wrench shaft spring (3) on the old valve socket (4).

(b) Install the spring collar (2) over the wrench shaft spring (3) and install the old valve wrench (1).

(c) Install the socket cap (6) on the old valve socket (4) and secure with two socket cap screws. (5)

26. New Valve Socket Wrench Assembly

a. Description. The description of the new valve socket wrench assembly is given in paragraph 8.

b. Maintenance. Organizational maintenance personnel are authorized to replace all parts of the new valve socket wrench assembly.

(1) *Disassembly.*

(a) Remove the new valve wrench (5, fig. 3) by removing the nut (6).

(b) Remove the yoke collar (4).

(c) Remove the socket cap (1) by removing the two socket cap screws (2).

(2) *Assembly.*

(a) Install the socket cap (1) on the new valve socket (3) and secure with two socket cap screws (2).

(b) Install the yoke collar (4) on the other end of the new valve socket (3).

(c) Install the new valve wrench (5) on the new valve socket (3) and secure with the nut (6).

27. Valve Socket Lever Assembly

a. Description. The description of the valve socket lever assembly is given in paragraph 10.

b. Maintenance. Organizational maintenance personnel are authorized to replace all parts of the valve socket lever assembly.

(1) *Disassembly.*

(a) Remove the valve socket lever pin (25, fig. 14).

(b) Remove the lever lock knob (2) and lever lock spring (4) by unscrewing the lever lock plunger (5).

(c) Remove the lever lock body (3) by unscrewing the four attaching screws. The valve socket lever (1) will be free.

(2) *Assembly.*

(a) fasten the lever lock body (3) to the valve socket lever (1) with four screws.

(b) Slide the lever lock plunger (5) through the lever lock spring (4)

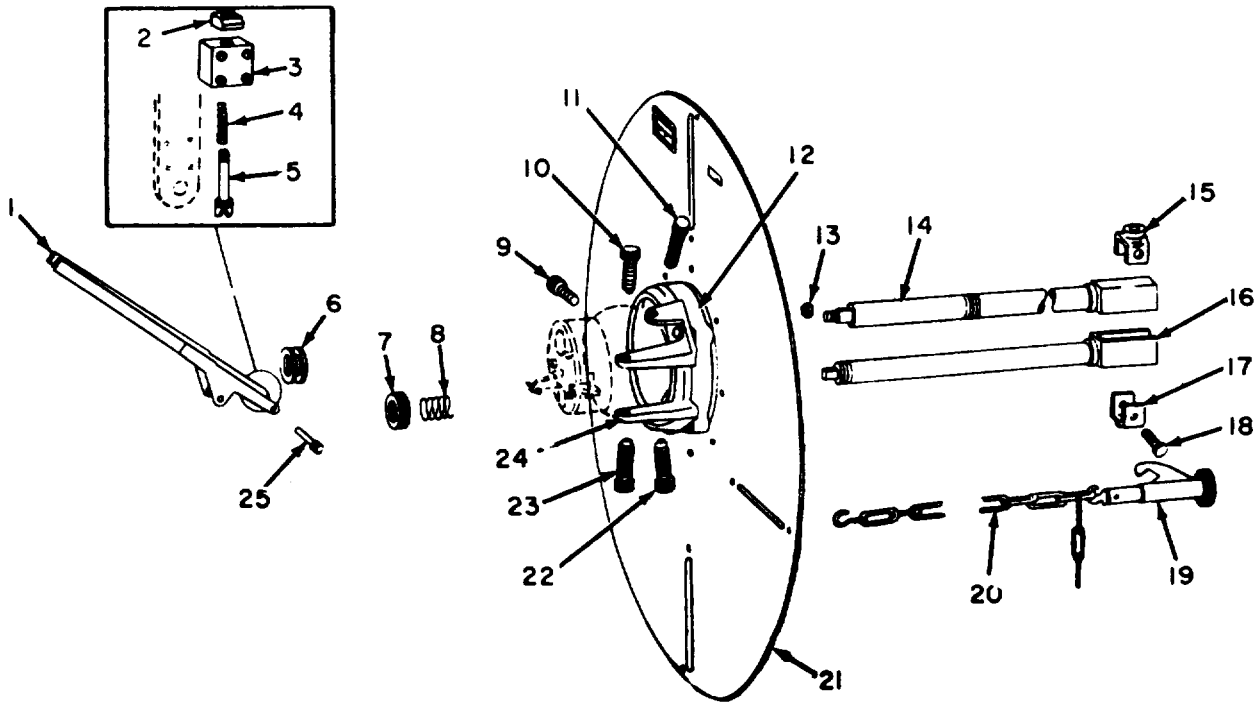

1	Valve socket lever	9	Ball screw	17	Socket cap
2	Lever lock knob	10	Lug screw	18	Socket cap screw
8	Lever lock body	11	Ball screw	19	Chain coupling assembly
4	Lever lock spring	12	Inner socket	20	Chain
5	Lever lock plunger	13	Nut	21	Shield
6	Yoke collar	14	New valve socket	22	Ball screw
7	Spring collar	15	Socket cap	28	Lug crew
8	Wrench shaft spring	16	Old valve socket	24	Outer socket
		25	Valve socket lever pin		

Figure 14. Lever, ball, socket, and shield assembly.

and lever lock body (3) and screw the plunger into the lever lock knob (2).

(c) Install the lever lock pin (25).

28. Shield Adjustment Assembly

a. Description. The description of the shield adjustment assembly is given in paragraph 11.

b. Maintenance. Organizational maintenance personnel are authorized to replace the key clamps (6, fig. 15) on the shield adjustment assembly.

(1) *Removal.* Remove the two key clamps (6) from each of the four adjusting keys (14) by removing two nuts (7) and screws (4) from each set of key clamps.

(2) *Installation.* Place a key clamp (6) on each side of the leg of the adjusting key (14) and after alining the holes in the key clamps and adjusting key, secure each pair of key clamps to each adjusting key with two screws (4) and nuts (7).

29. Assembly

a. Description. The description of the ball assembly is given in paragraph 9.

b. Maintenance. Organizational maintenance personnel are authorized to replace certain parts of the ball assembly. These parts include the plate screws (1, fig. 16), lock bolt (10), lock bolt spring (11), and ball lug (14). The other components are either not stocked, or are authorized for replacement by direct support maintenance personnel. In removing the ball

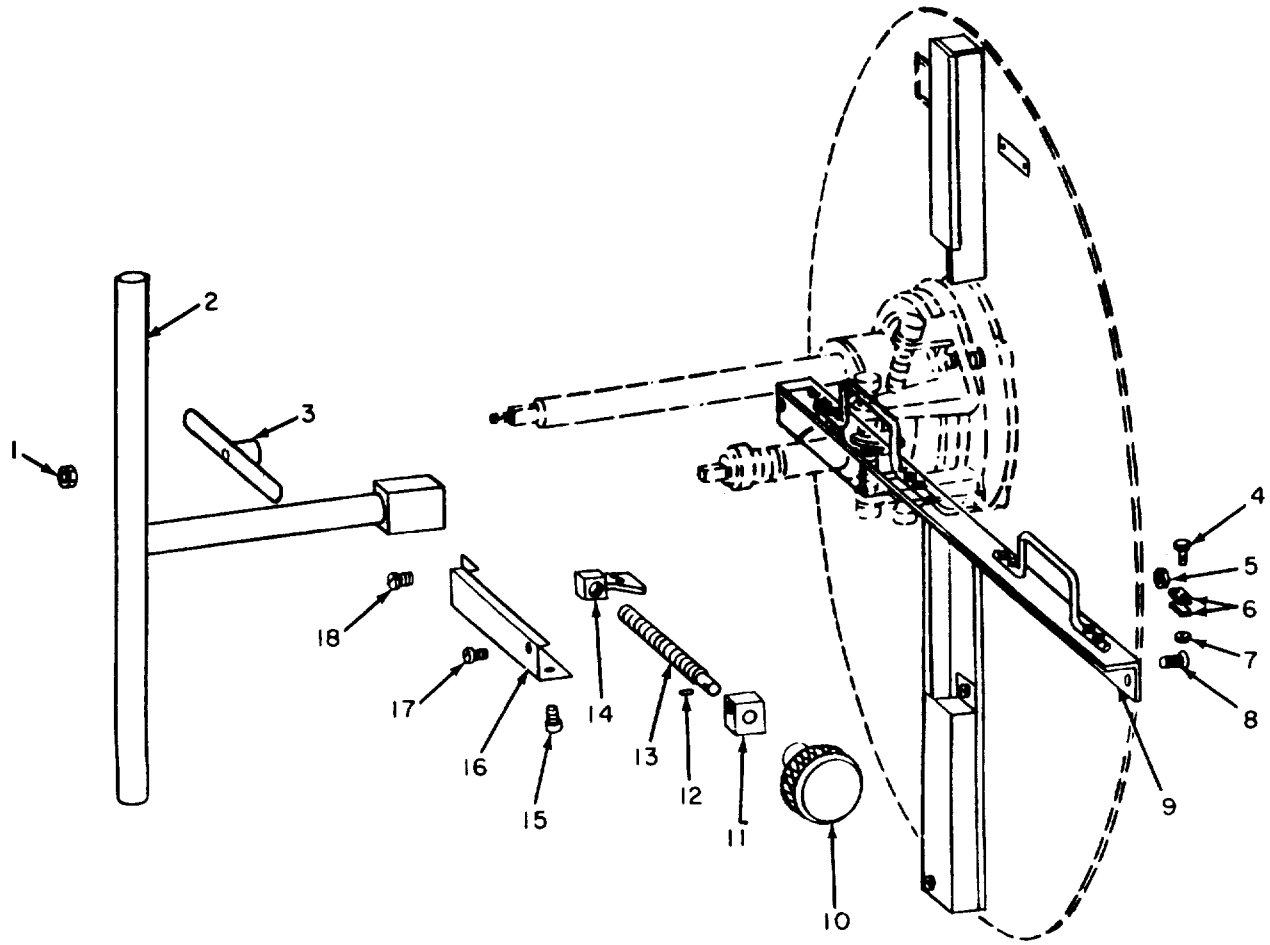

1	Nut	7	Nut	13	Adjusting screw
2	Old valve wrench	8	Screw	14	Adjusting key
3	New valve wrench	9	Key guide	15	Screw
4	Screw	10	Adjusting knob	16	Screw cover
5	Nut	11	Adjusting screw retainer	17	Screw
6	Key clamp	12	Pin	18	Screw

Figure 15. Shield adjustment assembly.

assembly, the inner socket (12, fig. 14) and outer socket (24) are not replaceable. However, the three ball screws (9, 11, and 22) and the two lug screws (10 and 23) are replaceable by organizational maintenance personnel.

(1) Removal.

(a) Turn the wrench holder (12, fig. 16) clockwise to the old valve position and lock the lock bolt (10) before removing the ball assembly.

(b) Remove the old Valve wrench (2, fig. 15), the spring collar (7, fig. 14), and wrench shaft spring (8) from the old valve socket (16) and remove the old valve socket wrench assembly.

(c) Remove the nut (1, fig. 15), new valve wrench (3) and yoke collar (6, fig. 14) from the new valve socket (14) and remove the new valve socket wrench assembly.

(d) Remove four nuts (13) and screws ,which hold the outer socket (24) to tile inner socket (12).

(e) Loosen the three ball screws (9, 11, and 22) and two lug screws (10 and 23) and lift the outer socket (24) over the ball assembly.

Note

Do not remove the ball screws or lug screws unless they are damaged.

(f) Lift the ball assembly from the inner socket.

(2) *Disassembly.*

(a) Stand the ball (9, fig. 16) on a flat surface with the wrench holder plate (5) uppermost and remove the lock bolt screw (2).

(b) Remove the two plate screws (1) and carefully lift the wrench holder plate (5) off the ball (9).

(c) Slide the lock bolt (10) out of the lock bolt hole in the ball (9) and carefully lift the ball off the wrench holder (12).

(d) Remove the lock bolt spring (11). The wrench holder is now free.

(e) Remove the two screws (13) and ball lug (14) from the ball (9).

(3) *Assembly.*

(a) Install the ball lug (14) on the ball and secure with two screws (13).

(b) Insert the lock bolt (10) and lock bolt spring (11) in the slot in the end of the wrench holder (12). Seat the spring in the hole at the end of the slot and in the end of the lock bolt. Place the lock bolt so that the notch that engages the plunger (8) is at the outer end of the wrench holder.

(c) Slide the lock bolt (10) toward the center of the wrench holder (12) and insert the lock bolt end of the wrench holder into the spherical end of the ball (9). Push the wrench holder into the ball until the lock bolt drops into the groove around the inside of the ball. Turn the wrench holder clockwise in the ball until the lock bolt engages the lock bolt hole at the old valve position.

(d) Put the wrench holder plate (5) over the end of the ball and screw the lock bolt screw (2) through the slot in the wrench holder plate into the hole in the lock bolt (10). Unlock the lock bolt and secure the wrench holder plate (5) to the wrench holder (12) with the two plate screws (1).

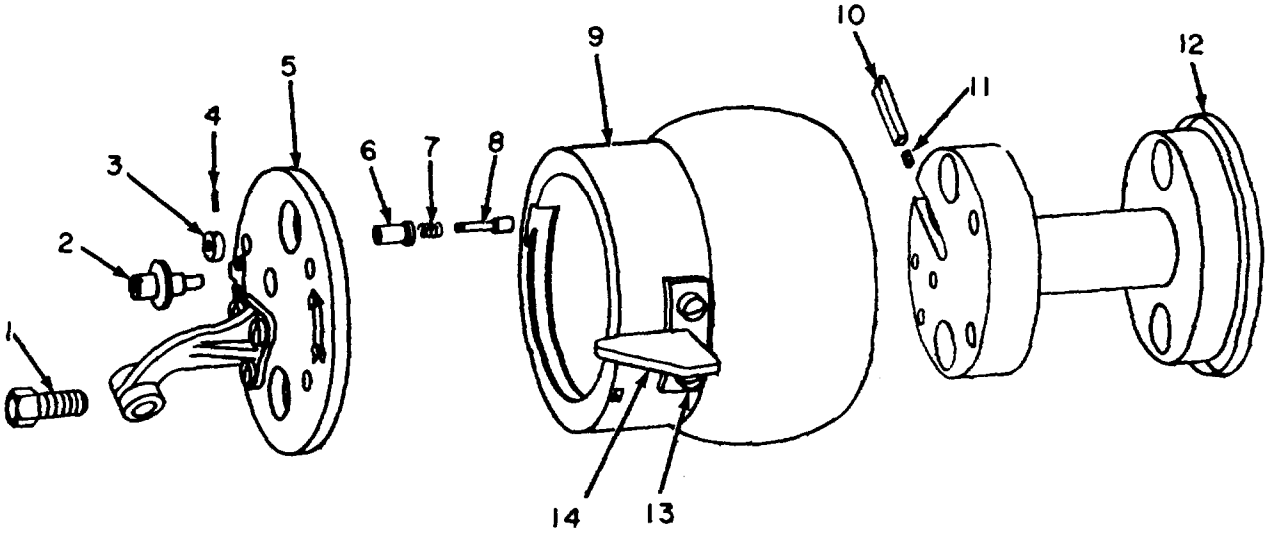

1	Plate screw	8	Plunger
2	Lock bolt screw	9	Ball
3	Plunger collar	10	Lock bolt
4	Pin	11	Lock bolt spring
5	Wrench holder plate	12	Wrench holder
6	Plunger housing	13	Screw
7	Plunger spring	14	Ball lug

Figure 16. Ball assembly.

(4) *Installation.*

(a) Put the spherical end of the ball (9) into the inner socket (12, fig. 14).

(b) Install the outer socket (24) over the cylindrical part of the ball so that the ball lug (14, fig. 16) slides between the ball screws (11 and 22, fig. 14).

(c) Turn the outer socket (24) and the ball so the ball screws (11 and 22) are at the right hand side of the shield (21).

(d) Bolt the outer socket (24) to the inner socket (12) with four screws and nuts (13).

(e) Install the new valve socket (14) in its hole in the ball assembly and install the yoke collar (6), new valve wrench (3, fig. 15) and nut (1) on the new valve socket.

(f) Install the old valve socket (16, fig. 14) in its hole in the ball assembly and install the wrench shaft spring (8), spring collar (7), and old valve wrench (2, fig. 15) on the old valve socket.

30. Destruction to Prevent Enemy Use

a. General. When capture by or abandonment of the M1 valve replacement mechanism to the enemy is imminent, the responsible unit commander must make the decision to render the unit inoperative.

b. Mechanical Means. Use sledge hammers, crowbars, picks, axes, or any other heavy tools which may be available to destroy the container gage and the components mounted on the shield assembly.

c. Scattering and Concealment. Remove all easily accessible vital parts, such as the wrench assemblies, ball assembly, and valve socket lever assembly. Scatter and conceal the parts in most inaccessible places available.

SECTION VI

DIRECT AND GENERAL SUPPORT AND

DEPOT MAINTENANCE INSTRUCTIONS

31. General

Direct support, general support, and depot maintenance personnel are authorized to perform all the maintenance services performed by operator and organizational maintenance personnel. In addition, they are authorized to perform the maintenance cited in the succeeding paragraphs.

32. Direct Support Maintenance

a. Shield Adjustment Assembly.

(1) *General.* Direct support maintenance personnel are authorized to replace the four adjusting screws (13, fig. 15).

(2) *Removal.*

(a) Remove the four screw covers (16) by removing the two screws (15 and 17) and the nut (5) and screw (18) in each cover.

(b) Remove the screw (8) from each adjusting screw retainer (11).

(c) Unscrew the adjusting screw (13) from the adjusting key (14).

(d) Remove the adjusting knob (10) from the adjusting screw (13) by removing the pin (12).

(e) Slide the adjusting screw (13) from the adjusting screw retainer (11).

(3) *Installation.*

(a) Slide the adjusting screw (13) into the adjusting screw retainer (11).

(b) Aline the hole in the adjusting knob (10) with the hole in the adjusting screw (13) and fasten with the pin (12).

(c) Screw the adjusting screw (13) into the adjusting key (14).

(d) Aline the hole in the adjusting screw retainer (11) with the hole in the shield and fasten the retainer to the shield with the screw (8).

(e) Aline the holes in each of the four screw covers (16) with the holes in the key guide (9) and secure with the screws (18) and nuts (5).

(f) Aline the holes in the screw covers (16) with the holes in the adjusting screw retainers (11) and fasten with the screws (15 and 17).

b. Ball Assembly.

(1) *General*. Direct support maintenance personnel are authorized to replace the plunger collar (3, fig. 16) and plunger spring (7).

(2) *Removal*.

(a) Remove the ball assembly (para. 28*b*).

(b) Stand the ball (9, on a flat surface with the wrench holder plate (5) uppermost and remove the lock bolt screw (2).

(c) Remove the two plate screws (1) and carefully lift the wrench holder plate (5) off the ball (9).

(d) Remove the plunger collar (3) from the plunger (8) by removing the pin (4).

(e) Remove the plunger (8), plunger spring (7), and plunger housing (6) from the wrench holder plate (5).

(3) *Installation.*

(a) Install the plunger housing (6) in the wrench holder plate (5) and insert the plunger spring (7) and plunger (8) in the plunger housing (6).

(b) Install the plunger collar (3) over the plunger (8) and aline the holes in the collar and plunger. Secure col-

lar (3) to the plunger (8) with the pin (4).

(c) Position the wrench holder plate (5) on the ball (9) so that the plunger (8) is alined with the lock bolt (10). Screw the lock bolt screw (2) through the wrench holder plate into the hole in the lock bolt.

(d) Unlock the lock bolt (10) and secure the wrench holder plate (5) to the wrench holder (12) with the two plate screws (1).

(e) Install the ball assembly (para. 28e).

33. General Support Maintenance

General support maintenance personnel are authorized to overhaul the M1 valve replacement mechanism. The procedures described under operator's, organizational, and direct support maintenance are applicable to overhaul.

34. Depot Maintenance

Depot maintenance personnel are authorized to perform all the maintenance functions previously described. No special maintenance is designated for depot maintenance personnel.

APPENDIX I

REFERENCES

TM 3-220	Chemical, Biological, and Radiological (CBR) Decontamination
TM 3-304	Protective Clothing Accessories
TM 3-522-15	Mask, Protective, Field, M9 and Mask, Protective, Field, M9A1
TM 3-4940-200-25P	Organizational, Field and Depot Maintenance Repair Parts and Special Tool List, Mechanism, Valve Replacement, M1
TM 9-213	Painting Instructions for Field Use
TM 38-750	Army Equipment Record Procedures

APPENDIX II

MAINTENANCE ALLOCATION CHART

1. Explanation of Columns

a. Column 1, Index Number. Column 1 lists the number which is assigned to each group, component, assembly, or subassembly to facilitate references. The numbers are identical to and in the same sequence as those assigned to the same group, component, assembly, or subassembly in the repair parts and special tool lists.

b. Column 2, Components and Related Maintenance Operations. Column 2 lists groups, components, assemblies, and subassemblies on which maintenance can be performed; and the maintenance operations which are authorized to be performed on each.

c. Columns 3, 4, 5, 6, and 7, Maintenance Echelon. Columns 3, 4, 5, 6, and 7 indicate by an X the lowest echelon authorized to perform the prescribed maintenance operation.

d. Column 8, Remarks. Column 8 is used for special instructions.

2. Use of Chart

Determine from the chart the echelon that is authorized to perform the required maintenance operation. Refer to the text in the appropriate part of the maintenance manual for instructions in performing the authorized maintenance operations defined below:

ADJUST	To regulate periodically to prevent malfunction.
INSPECT	To verify serviceability and to detect incipient electrical or mechanical failure by scrutiny.
REPLACE	To substitute serviceable assemblies and subassemblies for unserviceable component parts.
REPAIR	To restore an item to serviceable condition through correction of a specific failure or unserviceable condition. This function includes but is not limited to, inspecting, cleaning, preserving, adjusting, replacing, welding, riveting, and straightening.
OVERHAUL	To restore an item to completely serviceable condition as prescribed by serviceability standards developed and published by heads of technical services. This is accomplished through employment of the technique of "Inspect and Repair Only as Necessary" (IROAN). Maximum utilization of diagnostic and test equipment is combined with minimum disassembly of the item during the overhaul process.

Index No. (1)	Component and related maintenance operation (2)	Maintenance echelon 1st (3)	2nd (4)	3rd (5)	4th (6)	5th (7)	Remarks (8)
1	Mechanism, Valve Replacement, M1						
	Inspect	X					
	Adjust	X					
	Repair		X				
	Overhaul				X		
10	Coupling, Adjustable Chain						
	Adjust	X					
	Repair		X				
	Replace		X				
12	Gauge, Container						
	Repair		X				
	Replace		X				
15	Lever, Valve Socket						
	Repair		X				
	Replace		X				

APPENDIX III

BASIC ISSUE ITEM LIST

Section I. INTRODUCTION

1. Purpose and Scope

This appendix furnishes the user of the Mechanism, Valve Replacement, M1 with a list of the major components and the supplies, tools, and repair parts that comprise the end item.

2. Explanation of Columns

a. Federal Stock Number. Federal stock numbers are assigned by the Federal Cataloging Program and are to be used in accordance with AR 708-15.

b. Description. The approved Federal item name appears in upper case letters. Modifiers necessary for proper identification appear in lower case letters.

c. Unit of Issue. The unit of issue for each item is indicated in this column.

d. Expendability. The symbol NX indicates that an item is nonexpendable. When no symbol appears, the item is expendable.

e. Quantity Authorized. Quantities listed represent the repair parts, spare assemblies, supplies, and special tools authorized for first echelon maintenance. The authorized quantities for each item must be on hand or on order at all times.

f. Illustrations. This column contains the figure number of each illustration and the item number on that illustration for indicated components.

3. Abbreviations

ea.	each
fig.	figure
in.	inch
lg	length
No.	number
NX	nonexpendable
o/a	overall

Section II. BASIC ISSUE ITEM LIST

Federal stock No.	Description	Unit of issue	Expendability	Authorized Quantify	Fig. No
4940-368-6190	MECHANISM, VALVE REPLACEMENT, M1	ea	NX		1
	MAJOR COMPONENTS				
	BALL AND SOCKET ASSEMBLY				4
4940-325-2887	GAGE, CONTAINER				12
	SHIELD ASSEMBLY				7
	ACCESSORIES GROUP				
5120-357-8457	WRENCH, ENGINEERS, open end, 9/16 in. and ¾ in. openings	ea	NX	1	
5120-368-6401	WRENCH , SOCKET, 1-1/8 in. o/a lg	ea		1	
5120-368-6400	WRENCH ,SOCKET	ea		1	
	REPAIR PARTS AND SPECIAL TOOLS-NONE				

By Order of the Secretary of the Army:

EARLE G. WHEELER,
General, United States Army,
Chief of Staff.

Official:
J.C. LAMBERT,
Major General, United States Army,
The Adjutant General.

Distribution:
Active Army:
CNGB (1)
Army Maint Bd (2)
USACBRCDA (2)
USAADCDA (2)
USAARMCDA (2)
USAARTYCDA (2)
USAAVNCDA (2)
USAICDA (2)
USASWCDA (2)
USACDC (2)
USCONARC (10)
USAMC (5)
USASMCOM (1)
USAMUCOM (5)
ARADCOM (5)
ARADCOM Rgn (3)
OS Maj Comd (5)
USAAMC (2)
USA Engr Cen (2)
USAIC (2)
Instl (2)
USA Corps (1)
USMA (10)
Svc Colleges (10)
Br Svc Sch (10) except
USACMLCSCH (50)
GENDEP (5)
Dep (OS) (5)
Army Dep (5)
POE (1)
USA Tml Comd (1)
Army Tml (1)
USAOSA (2)
Arsenals (3) except
Edgewood (50)
PG (5)
Units org under fol TOE:
3-67 (1)
3-117 (1)
3-147 (1)
3-500(Tms AA-AB) (1)

NG: State AG (3); Unit-Div (1).
USAR: None.
For explanation of abbreviations used see AR 320-50.

☆U.S. GOVERNMENT PRINTING OFFICE : 1993 0 - 342-421 (63350)

RECOMMENDED CHANGES TO EQUIPMENT TECHNICAL PUBLICATIONS

THEN...JOT DOWN THE DOPE ABOUT IT ON THIS FORM. CAREFULLY TEAR IT OUT, FOLD IT AND DROP IT IN THE MAIL.

SOMETHING WRONG WITH PUBLICATION

FROM: (PRINT YOUR UNIT'S COMPLETE ADDRESS)

DATE SENT

PUBLICATION NUMBER	PUBLICATION DATE	PUBLICATION TITLE

BE EXACT PIN-POINT WHERE IT IS

PAGE NO.	PARA-GRAPH	FIGURE NO.	TABLE NO.

IN THIS SPACE, TELL WHAT IS WRONG AND WHAT SHOULD BE DONE ABOUT IT.

PRINTED NAME, GRADE OR TITLE AND TELEPHONE NUMBER	SIGN HERE

DA FORM 1 JUL 79 2028-2

PREVIOUS EDITIONS ARE OBSOLETE.

P.S.--IF YOUR OUTFIT WANTS TO KNOW ABOUT YOUR RECOMMENDATION MAKE A CARBON COPY OF THIS AND GIVE IT TO YOUR HEADQUARTERS.

The Metric System and Equivalents

Linear Measure

1 centimeter = 10 millimeters = .39 inch
1 decimeter = 10 centimeters = 3.94 inches
1 meter = 10 decimeters = 39.37 inches
1 dekameter = 10 meters = 32.8 feet
1 hectometer = 10 dekameters = 328.08 feet
1 kilometer = 10 hectometers = 3,280.8 feet

Weights

1 centigram = 10 milligrams = .15 grain
1 decigram = 10 centigrams = 1.54 grains
1 gram = 10 decigram = .035 ounce
1 dekagram = 10 grams = .35 ounce
1 hectogram = 10 dekagrams = 3.52 ounces
1 kilogram = 10 hectograms = 2.2 pounds
1 quintal = 100 kilograms = 220.46 pounds
1 metric ton = 10 quintals = 1.1 short tons

Liquid Measure

1 centiliter = 10 milliters = .34 fl. ounce
1 deciliter = 10 centiliters = 3.38 fl. ounces
1 liter = 10 deciliters = 33.81 fl. ounces
1 dekaliter = 10 liters = 2.64 gallons
1 hectoliter = 10 dekaliters = 26.42 gallons
1 kiloliter = 10 hectoliters = 264.18 gallons

Square Measure

1 sq. centimeter = 100 sq. millimeters = .155 sq. inch
1 sq. decimeter = 100 sq. centimeters = 15.5 sq. inches
1 sq. meter (centare) = 100 sq. decimeters = 10.76 sq. feet
1 sq. dekameter (are) = 100 sq. meters = 1,076.4 sq. feet
1 sq. hectometer (hectare) = 100 sq. dekameters = 2.47 acres
1 sq. kilometer = 100 sq. hectometers = .386 sq. mile

Cubic Measure

1 cu. centimeter = 1000 cu. millimeters = .06 cu. inch
1 cu. decimeter = 1000 cu. centimeters = 61.02 cu. inches
1 cu. meter = 1000 cu. decimeters = 35.31 cu. feet

Approximate Conversion Factors

To change	*To*	*Multiply by*	*To change*	*To*	*Multiply by*
inches	centimeters	2.540	ounce-inches	newton-meters	.007062
feet	meters	.305	centimeters	inches	.394
yards	meters	.914	meters	feet	3.280
miles	kilometers	1.609	meters	yards	1.094
square inches	square centimeters	6.451	kilometers	miles	.621
square feet	square meters	.093	square centimeters	square inches	.155
square yards	square meters	.836	square meters	square feet	10.764
square miles	square kilometers	2.590	square meters	square yards	1.196
acres	square hectometers	.405	square kilometers	square miles	.386
cubic feet	cubic meters	.028	square hectometers	acres	2.471
cubic yards	cubic meters	.765	cubic meters	cubic feet	35.315
fluid ounces	milliliters	29.573	cubic meters	cubic yards	1.308
pints	liters	.473	milliliters	fluid ounces	.034
quarts	liters	.946	liters	pints	2.113
gallons	liters	3.785	liters	quarts	1.057
ounces	grams	28.349	liters	gallons	.264
pounds	kilograms	.454	grams	ounces	.035
short tons	metric tons	.907	kilograms	pounds	2.205
pound-feet	newton-meters	1.365	metric tons	short tons	1.102
pound-inches	mewton-meters	.11375			

Temperature (Exact)

^{o}F	Fahrenheit temperature	5/9 (after subtracting 32)	Celsius temperature	^{o}C

PIN: **025832-000**

This fine document...

Was brought to you by me:

Liberated Manuals -- free army and government manuals

Why do I do it? I am tired of sleazy CD-ROM sellers, who take publicly available information, slap “watermarks” and other junk on it, and sell it. Those masters of search engine manipulation make sure that their sites that sell free information, come up first in search engines. They did not create it... They did not even scan it... Why should they get your money? Why are not letting you give those free manuals to your friends?

I am setting this document FREE. This document was made by the US Government and is NOT protected by Copyright. Feel free to share, republish, sell and so on.

I am not asking you for donations, fees or handouts. If you can, please provide a link to liberatedmanuals.com, so that free manuals come up first in search engines:

<A HREF=http://www.liberatedmanuals.com/>Free Military and Government Manuals</A>

- Sincerely
  Igor Chudov
  http://igor.chudov.com/
- Chicago Machinery Movers