TECHNICALMANUAL

DIRECTSUPPORTANDGENERALSUPPORT

MAINTENANCEREPAIRPARTSAND

SPECIALTOOLSLISTS

(INCLUDINGDEPOTMAINTENANCEREPAIR

PARTSANDSPECIALTOOLS)

FOR

MULTIPLEXERTD-976/G

(NSN7025-01-048-9678)

AND
PULSEFORMRESTORERTD-982/G

(NSN7025-01-061-1254)

HEADQUARTERS,DEPARTMENTOFTHEARMY

14NOVEMBER1981

TECHNICALMANUAL
No.11-7025-202-34P

HEADQUARTERS
DEPARTMENTOFTHEARMY
WASHINGTON,DC,14November1981

DIRECTSUPPORTANDGENERALSUPPORT MAINTENANCEREPAIRPARTSAND SPECIALTOOLSLISTS (INCLUDINGDEPOTMAINTENANCEREPAIR PARTSANDSPECIALTOOLS) FOR MULTIPLEXERTD-976/G(NSN7025-01-048-9678) AND PULSEFORMRESTORERTD-982/G (NSN7025-01-061-1254)

Currentasof11March1981

REPORTINGERRORSANDRECOMMENDINGIMPROVEMENTS

Youcanhelpimprovethismanual.Ifyoufindanymistakesorifyouknow ofawaytoimprovetheprocedures,pleaseletusknow.Mailyourletter,DA Form2028(RecommendedChangestoPublicationsandBlankForms),orDA Form2028-2locatedinbackofthismanualdirecttoCommander,USArmy Communications-ElectronicsCommand,ATTN:DRSEL-ME-MQ,Fort Monmouth,NJ07703.

Ineithercase,areplywillbefurnisheddirecttoyou.

TableofContents

			Page	Illus Figure
SECTION	I.	Introduction	1	
	II.	RepairPartsListforMultiplexerTD-976/G	5	
GROUP	00	MultiplexerTD-976/G	5	1
	01	RemoteAccessUnit21A15	9	2
		0101CircuitCardAssembly,RemoteAccessUnit21A15A1	13	3
	02	CardFileAssembly21A13	21	4
		0201BackplaneAssembly	25	5
	03	ControlPanelAssembly21A14	33	6
		0301CircuitCardAssembly,ControlPanel21A14A1	37	7
	04	PowerSupplyAssembly21A12	47	8
		0401CircuitCardAssembly,PowerSupply21A12A1	51	9

*ThismanualsupersedesTM11-7025-202-34P,23January1980.

			Page	Illus Figure
GROUP	05	CircuitCardAssembly,DigitalDataOrderwireEncoder21A3	55	10
		0501ConnectorReceptacle	59	11
	06	CircuitCardAssembly,AlarmDetector21A1	61	12
		0601ConnectorReceptacle(SeeGroup0501forlistingofparts)		
	07	CircuitCardAssembly,GroupTrafficMonitor21A2	65	13
		0701ConnectorReceptacle(SeeGroup0501forlistingofparts)		
	08	CircuitCardAssembly,MasterOscillator/Combiner21A4	69	14
		0801ConnectorReceptacle(SeeGroup0501forlistingofparts)		
	09	CircuitCardAssembly,TimingandControl2A5	73	16
		0901ConnectorReceptacle(SeeGroup0501forlistingofparts)		
	10	CircuitCardAssembly,DualGroupProcessor21A6	75	16
		1001ConnectorReceptacle(SeeGroup0501forlistingofparts)		
	11	CircuitCardAssembly,FrameSync21A7	79	17
		1101ConnectorReceptacle(SeeGroup0501forlistingofparts)		
	12	CircuitCardAssembly,DigitalDataOrderwireDecoder21A8	81	18
		1201ConnectorReceptacle(SeeGroup0501forlistingofparts)		
	13	CircuitCardAssembly,SuperGroupDriver/Receiver21A9	85	19
		1301ConnectorReceptacle(SeeGroup0501forlistingofparts)		
	14	CircuitCardAssembly,AnalogVoiceOrderwire21A10	89	20
		1401ConnectorReceptacle(SeeGroup0501forlistingofparts)		
	15	CircuitCardAssembly,DigitalVoiceOrderwire21A1	93	21
		1501ConnectorReceptacle(SeeGroup0501forlistingofparts)		
	16	CoverAssembly,CardFile	97	22
	17	CaseAssembly	99	23
SECTION	III.	SpecialToolsListforMultiplexerTD-976/G		
GROUP	30	SpecialToolsforMultiplexerTD-976/G	103	24
		3001ExtenderCard,ElectronicTestMX-10260/G	105	24A
		300101CircuitCardAssembly,ExtenderCard	107	24B
		3002RemoteAccessUnitFeedthruBoxAssemblyMX-10223/G	111	24C
		3003RemoteAccessUnitBreakoutBoxAssemblyMX-10225/	115	24D
		300301ComponentBoardAssembly,RemoteAccessUnitBreakoutBox	119	24E
		3004PowerSupplyBreakoutBoxAssemblyMX-10222/G	125	24F
		3005HandsetBreakoutBoxAssemblyMX-10218/G	129	24G
		3006MultiplexerBreakoutBoxAssemblyMX-10259/G	133	24H
		300601ComponentBoardAssembly,MultiplexerBreakoutBox	137	24I
		3007CableAssemblySet,ElectricalCX-13167/G	139	24J
		300701CableAssembly70730080-009	141	24K
		300702CableAssembly70730080-019	143	24L
		3008CableAssemblySet,ElectricalCX-13166/G	145	24M
		300801CableAssembly70730085-009	147	24N
		300802CableAssembly70730085-019	149	24P
		3009MaintenanceKit,ElectricalConnectorRepairMK-2067/G	153	24Q
		3010MaintenanceKit,ElectricalContactRepairMK-2068/G	155	24R
SECTION	IV.	RepairPartsListforTD-982/G	159	
GROUP	00	PulseFormRestorerTD-982/	159	25
	01	CircuitCardAssembly	161	26
SECTION	V.	SpecialToolsListforPulseFormRestorerTD-982/G		
GROUP	30	SpecialToolsforPulseFormRestorerTD-982/G	165	27
		3001CableAssembly,SpecialPurpose,Electrical,BranchedCX-131141PTM-7	167	28
SECTION	VI.	NationalStockNumberandPartNumberIndex	168	

SECTIONI
INTRODUCTION

1.Scope

Thismanuallistssparesandrepairparts;specialtools;specialtest,measurement,anddiagnosticequipment(TMDE),andotherspecialsupportequipmentrequiredforperformanceofdirectsupportandgeneralsupportmaintenanceofTD-976/GandTD-982/G.Itauthorizestherequisitioningandissueofsparesandrepairpartsasindicatedbythesourceandmaintenancecodes.

2.General

ThisRepairPartsandSpecialToolsListisdividedintothefollowingsection:

a. *SectionII.RepairPartsListforMultiplexerTD-976/GandSectionIV*.RepairPartsListforPulseFormRestorerTD-982/G.Alistofsparesandrepairpartsauthorizedforuseintheperformanceofmaintenance.Thelistalsoincludespartswhichmustberemovedforreplacementoftheauthorizedparts.Partslistsarecomposedoffunctionalgroupsinnumericsequence,withthepartsineachgrouplistedinfigureanditemnumbersequence.

b. *SectionIII.SpecialToolsListforMultiplexerTD-976/GandSectionV*.SpecialToolsListforPulseFormRestorerTD-982/G.Alistofspecialtools,specialTMDE,andotherspecialsupportequipmentauthorizedfortheperformanceofmaintenance.

c. *SectionVI.NationalStockNumberandPartNumberIndex*.Alist,inNationalitemidentificationnumber(NIIN)sequence,ofallNationalstocknumbers(NSN)appearinginthelistings,followedbyalist,inalphamericsequence,ofallpartnumbersappearinginthelistings.Nationalstocknumbersandpartnumbersarecross-referencedtoeachillustrationfigureanditemnumberappearance.

3.ExplanationofColumns

a. *Illustration*.Thiscolumnisdividedasfollows:

(1) *Figurenumber*.Indicatesthefigurenumberoftheillustrationonwhichtheitemisshown.

(2) *ItemNumber*.Thenumberusedtoidentifyitemcalledoutintheillustration.

b. *Source,Maintenance,andRecoverability(SMR)Codes*.

(1) *Sourcecode*.Sourcecodesindicatethemannerofacquiringsupportitemsformaintenance,repair,oroverhaulofenditems.SourcecodesareenteredinthefirstandsecondpositionsoftheUniformSMRCodeformatasfollows:

Code		*Definition*
PA	-	Itemprocuredandstockedforanticipatedor knownusage.
PE	-	Supportequipmentprocuredandstockedfor initialissueoroutfittingtospecified maintenancerepairactivities.
MD	-	Itemtobemanufacturedorfabricatedatthe depotmaintenancelevel.
AH	-	Itemtobeassembledatgeneralsupport maintenancelevel.
XA	-	Itemisnotprocuredorstockedbecausethe requirementsfortheitemwillresultinthe replacementofthenexthigherassembly.
XD	-	Asupportitemthatisnotstocked.When required,itemwillbeprocuredthrough normalsupplychannels.

NOTE

Cannibalizationorsalvagemaybeusedasasourceofsupplyforanyitemssourcecodedaboveexceptthosecoded XAandaircraftsupportitemsasrestrictedbyAR700-42.

(2) *Maintenancecode*.MaintenancecodesareassignedtoindicatethelevelsofmaintenanceauthorizedtoUSEandREPAIRsupportitems.ThemaintenancecodesareenteredinthethirdandfourthpositionsoftheUniformSMRCodeformatasfollows:

(a) Themaintenancecodeenteredinthethirdpositionwillindicatethelowestmaintenancelevelauthorizedtoremove,replace,andusethesupportitem.Themaintenancecodeenteredinthethirdpositionwillindicateoneofthefollowinglevelsofmaintenance:

Code		*Application/Explanation*
O	-	Supportitemisremoved,replaced,usedatthe organizationallevel.
F	-	Supportitemisremoved,replaced,usedatthe directsupportlevel.
H	-	Supportitemisremoved,replaced,usedatthe generalsupportlevel.
D	-	Supportitemsthatareremoved,replaced,used atdepot,mobiledepot,specializedrepair activityonly.

(b) Themaintenancecodeenteredinthe

fourthpositionindicateswhethertheitemistoberepairedandidentifiesthelowestmaintenancelevelwiththecapabilityto performcompleterepair(i.e.,allauthorizedmaintenancefunctions).Thispositionwillcontainoneofthefollowingmainte nancecodes:

Code		*Application/Explanation*
F	-	Thelowestmaintenancelevelcapableofcompleterepairofthesupportitemisthedirect supportlevel.
H	-	Thelowestmaintenancelevelcapableofcompleterepairofthesupportitemisthe generalsupportlevel.
D	-	Thelowestmaintenancelevelcapableofcompleterepairofthesupportitemisthedepot level.
Z	-	Nonreparable.Norepairisauthorized.

(3) *Recoverabilitycode*.Recoverabilitycodesareassignedtosupportitemstoindicatethedispositionactiononunserv iceableitems.Therecoverabilitycodeisenteredinthefifthpositionoftheuniformsmrcodeformatasfollows:

Recoverability codes		*Definition*
Z	-	Nonreparableitem.Whenunserviceable,condemnandisposeatthelevelindicatedinposition3.
F	-	Reparableitem.Whenuneconomicallyreparable,condemnanddisposeatthedirectsupportlevel.
H	-	Reparableitem.Whenuneconomicallyreparable,condemnanddisposeatthegeneralsupportlevel.
D	-	Reparableitem.Whenbeyondlowerlevelrepaircapability,returntodepot.Condemnation anddisposalnotauthorizedbelowdepotlevel.
L	-	Reparableitem.Repair,condemnation,anddisposalnotauthorizedbelowdepot/specializedrepairactivityl evel.
A	-	Itemrequiresspecialhandlingorcondemnationproceduresbecauseofspecificreasons(i.e., preciousmetalcontent,highdollarvalue,criticalmaterialorhazardousmaterial).Refer toappropriatemanuals/directivesforspecificinstructions.

c. *NationalStockNumber*.IndicatestheNationalstocknumberassignedtotheitemandwillbeusedforrequisitioningp urposes.

d. *FederalSupplyCodeforManufacturer(FSCM).*TheFSCMisa5-digitnumericcodelistedinSB708-41/42whichisusedtoidentifythemanufacturer,distributor,orGovernmentagency,etc.

e. *PartNumber*.Indicatestheprimarynumberusedbythemanufacturer(individual,company,firm,corporation,orG overnmentactivity),whichcontrolsthedesignandcharacteristicsoftheitembymeansofitsengineeringdrawings,specifi cations,standards,andinspectionrequirementstoidentifyanitemorrangeofitems.

NOTE

Whenastocknumbereditemisrequisitioned,therepairpartreceivedmayhaveadifferent partnumberthanthepartbeingreplaced.

f. *Description*.IndicatestheFederalitemnameand,ifrequired,aminimumdescriptiontoidentifytheitem.IntheSpec ialToolsList,theinitialbasisofissue(BOI)appearsasthelastlineintheentryforeachspecialtool,specialTMDE,andothers pecialsupportequipment.Whendensityofequipmentssupportedexceedsdensityspreadindicatedinthebasisofissue,t hetotalauthorizationisincreasedaccordingly.

g. *UnitofMeasure(U/M).*Indicatesthestandardofthebasicquantityofthelisteditemasusedinperformingtheactual maintenancefunction.Thismeasureisexpressedbyatwo-characteralphabeticalabbreviation(e.g.,ea,in,pr,etc).Whentheunitofmeasuredifferfromtheunitofissue,thelowestu nitofissuethatwillsatisfytherequiredunitsofmeasurewillberequisitioned.

h. *QuantityIncorporatedinUnit*.Indicatesthequantityoftheitemusedinthebreakoutshownontheillustrationfigure,w hichispreparedforafunctionalgroup,subfunctionalgroup,oranassembly.A"V"appearinginthiscolumninlieuofaquantit yindicatesthatnospecificquantityisapplicable,(e.g.,shims,spacers,etc).

4.SpecialInformation

a. Usableoncodesareshowninthedescriptioncolumn.Uncodeditemsareapplicabletoallmodels.Identificationofth eusableoncodesusedinthispublicationare:

Code	*Usedon*
DH3	TD-976/G
DH2	TD-982/G

b. ThefollowingpublicationspertaintotheTD-976/GandTD-982/Gandtheircomponents:

TM11-7025-202-12,MultiplexerTD-976/Gand PulseFormRestorerTD-982/G

TM11-7025-202-20P,MultiplexerTD-976/Gand PulseFormRestorerTD-982/G

TM11-7025-202-34,MultiplexerTD-9761Gand PulseFormRestorerTD-982/G.

c. Nationalstocknumbers(NSN's)thatare

missingfromPsourcecodeditemshavebeenappliedforandwillbeaddedtothisTMbyfuturechange/revisionwhentheyareenteredintheArmyMasterDataFile(AMDF).UntiltheNSN'sareestablishedandpublished,submitexceptionrequisitionstoCommander,USArmyCommunications-ElectronicsCommand,ATTN:DR-SEL-MM,FortMonmouth,NJ07703forthepartrequiredtosupportyourequipment.

5.HowtoLocateRepairParts

a. WhenNationalstocknumberorpartnumberisunknown.

(1) First.Usingthetableofcontents,determinethefunctionalgroupwithinwhichtheitembelongs.Thisisnecessarysinceillustrationsarepreparedforfunctionalgroupsandlistingsanddividedintothesamegroups.

(2) *Second*.Findtheillustrationcoveringthefunctionalgrouptowhichtheitembelongs.

(3) *Third.*Identifytheitemontheillustrationandnotetheillustrationfigureanditemnumberoftheitem.

(4) *Fourth.*UsingtheRepairPartsListing,findthefigureanditemnumbernotedontheillustration.

b. WhenNationalstocknumberorpartnumberisknown.

(1) *First*.UsingtheIndexofNationalStockNumbersandPartNumbers,findthepertinentNationalstocknumberorpartnumber.ThisindexisinNIINsequencefollowedbyalistofpartnumbersinalphamericsequence,cross-referencedtotheillustrationfigurenumberanditemnumber.

(2) *Second.*Afterfindingthefigureanditemnumber,locatethefigureanditemnumberintherepairpartslist.

6.Abbreviations

Notapplicable.

(Nextprintedpageis4.1)

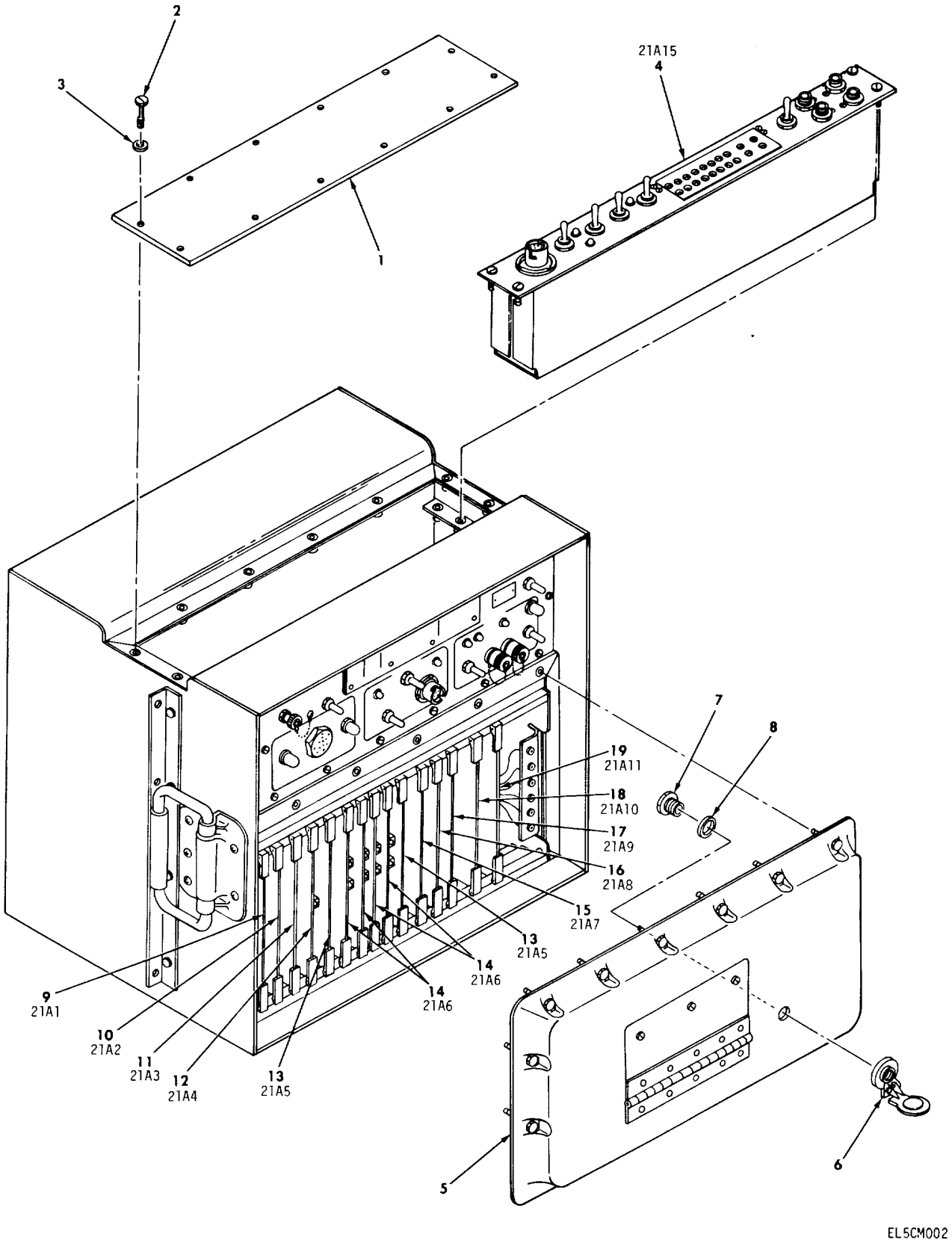

Figure1.MultiplexerTD-976/G(sheet1of4).

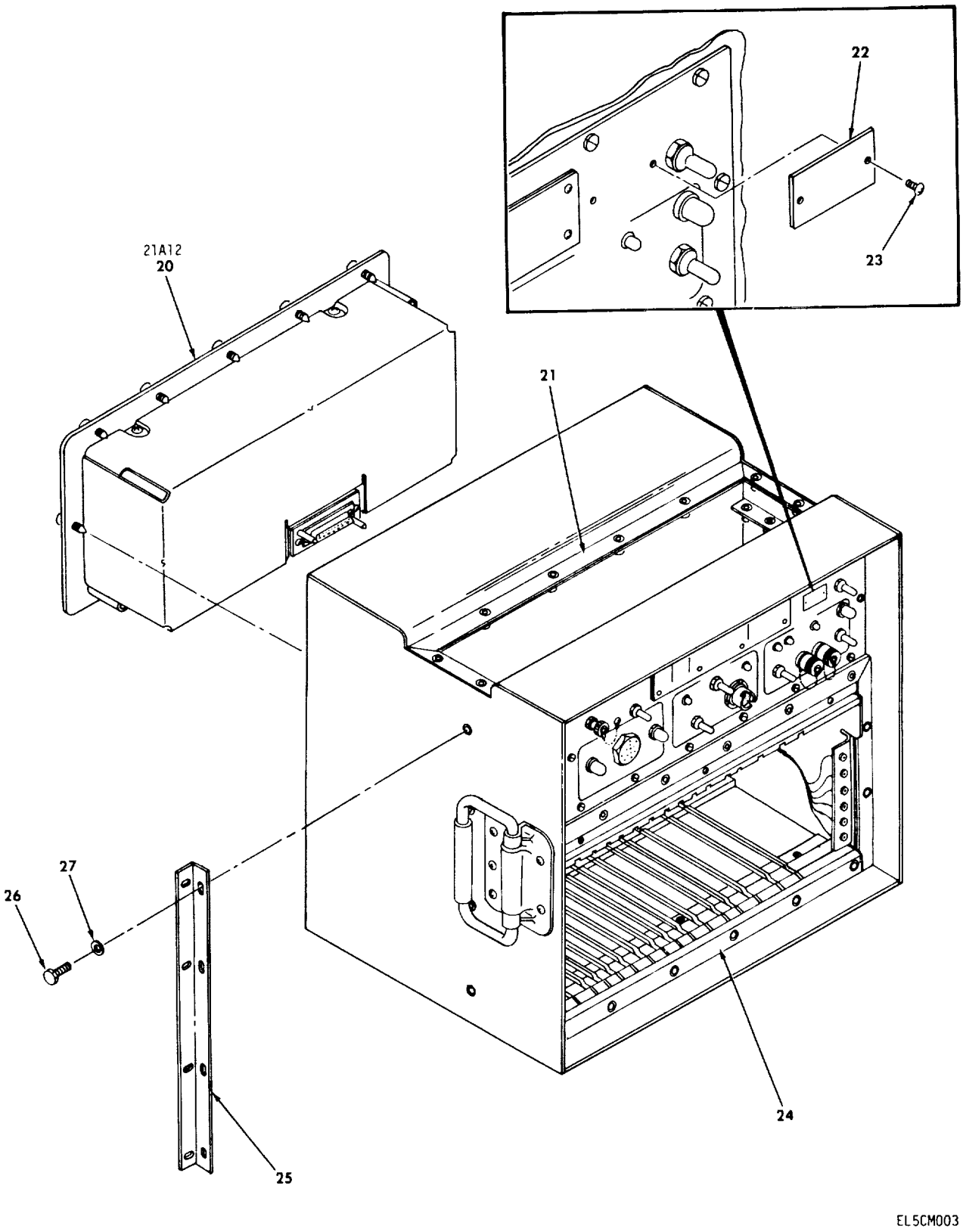

Figure1.MultiplexerTD-976/G(sheet2of4).

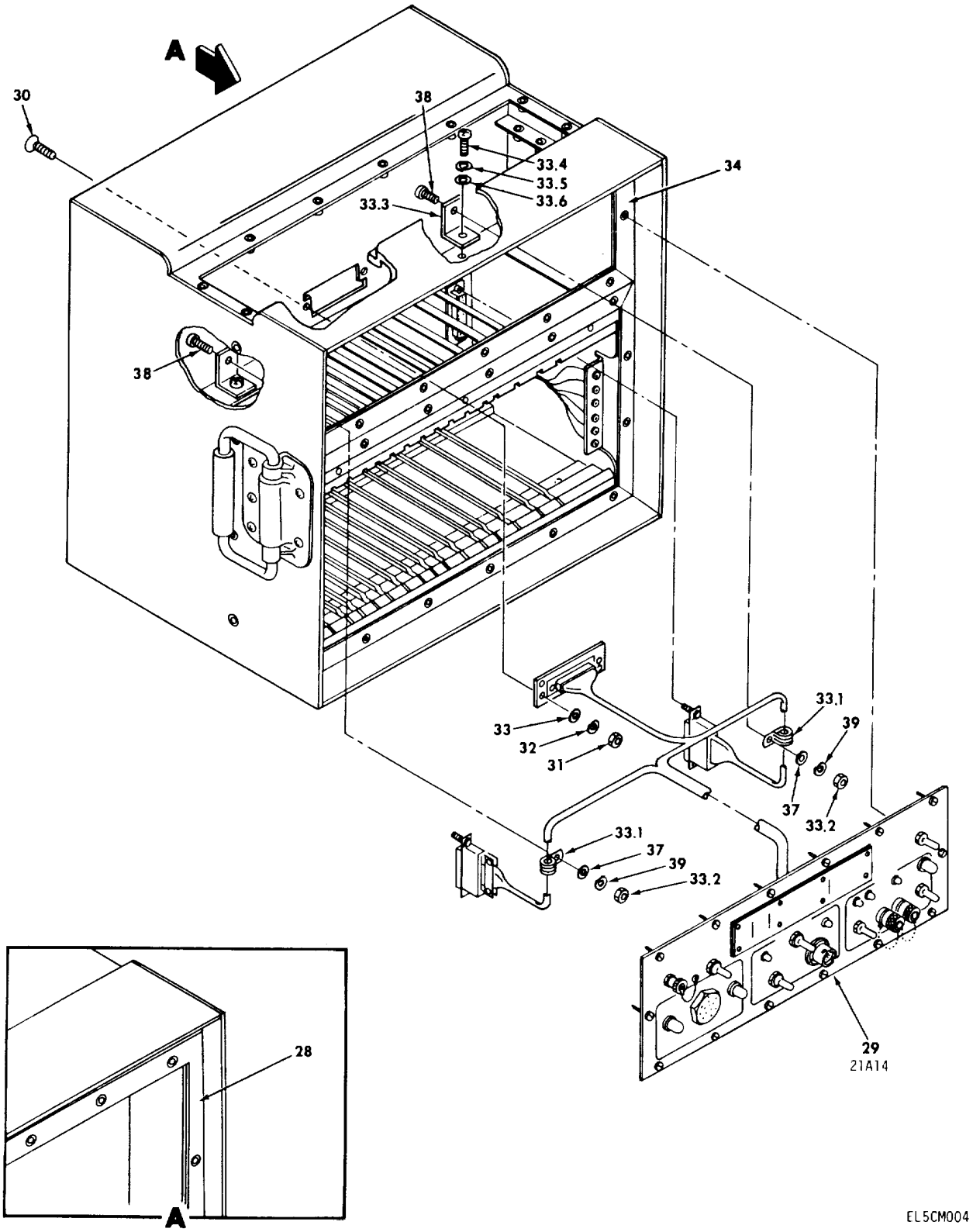

Figure1.MultiplexerTD-976/G(sheet3of4).

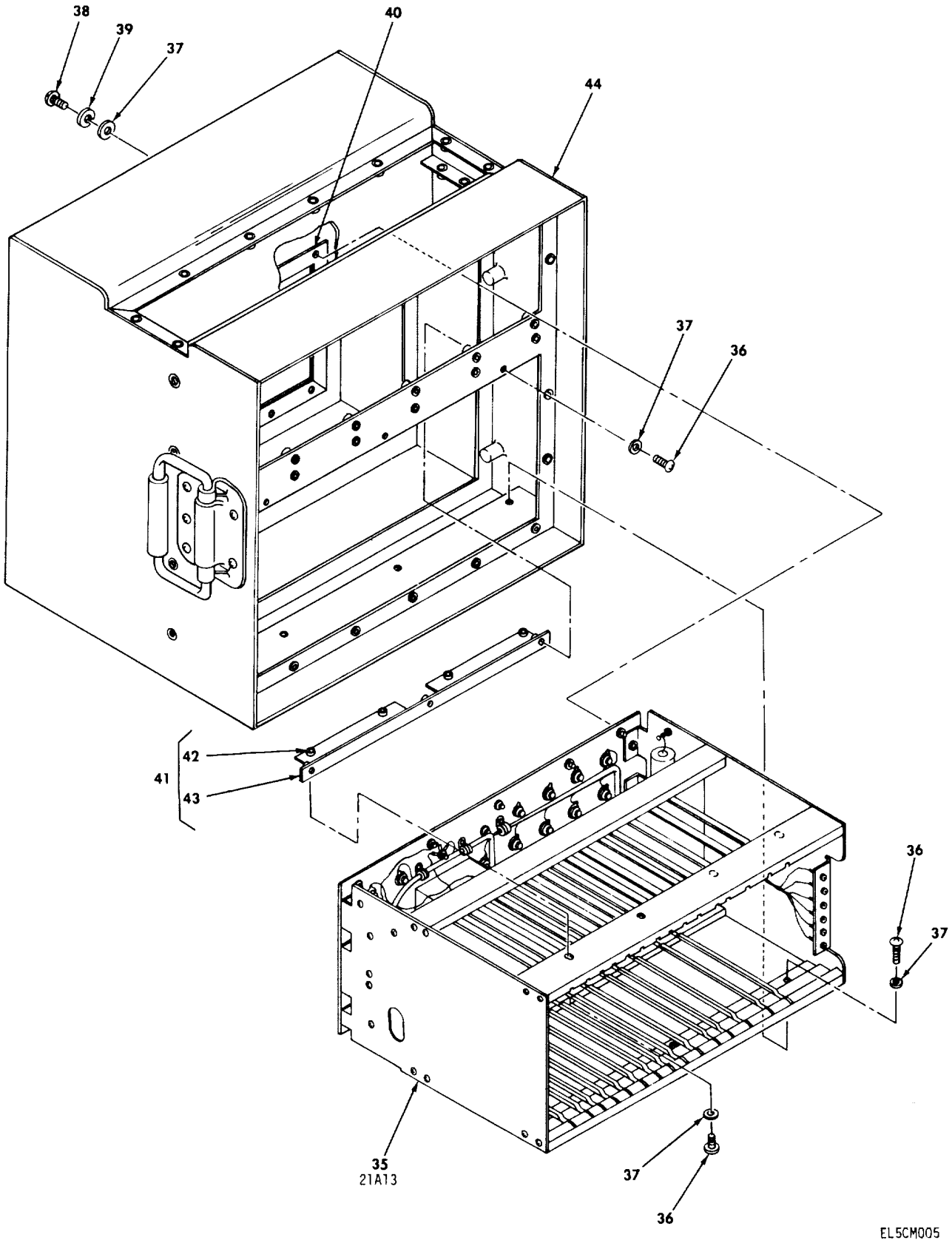

Figure1.MultiplexerTD-976/G(sheet4of4).

(1) ILLUSTRATION (a) FIG NO.	(b) ITEM NO.	(2) SMR CODE	(3) NATIONAL STOCK NUMBER	(4) FSCM	(5) PART NUMBER	(6) DESCRIPTION *USABLEONCODE*	(7) U/M	(8) QTY INC IN UNIT
						GROUP00TO-976/GMULTIPLEXER		
1	1	MDFZZ		80063	SM-D-941614	COVERREMOTEOW.....DH3	EA	1
1	2	NDFZZ		80063	SM-B-528627-4	SCREW,EXTERNALLYR.....DH3	EA	12
1	3	PAFZZ	5310-00-457-1488	88044	AN960XC8	WASHER,FLAT DH3	.EA	12
1	4	PAOFO	7025-01-085-7290	80063	SM-D-941650	REMOTEACCESSUNIT21A15.....DH3	EA	1
1	5	XAFFO		80063	SM-D-941612	COVERASSYCARDFILE DH3	EA	1
1	6	PAFZZ		80063	SM-A-942150	COVER,JACK DH3	EA	1
1	7	XDFZZ		80063	SM-A-942151	BUSHINGPANEL DH3	EA	1
1	8	XDFZZ		80205	NAS1523-68	PACKINGWITHRETAIN DH3	EA	1
1	9	PAODL	7025-01-085-5645	80063	SM-D-941905	CIRCUITCARDASSEMB,ALARMDETECTCR21A1.....DH3	EA	1
1	10	PAODL	7025-01-085-5646	80063	SM-D-941910	CIRCUITCARDASSENM,GROUPTRAFFICMONITOR21A2 .....DH3	EA	1
1	11	PAODL	7025-01-085-7350	80063	SM-D-941900	CIRCUITCARDASSEMB,DIGITALDATAORDERWIREENCDER21A3.....DH3	EA	1
1	12	PAODL	7025-01-085-5658	80063	SM-D-941915	CIRCUITCARDASSEMB,MASTEROSCILLATCR/COMBINER21A4 .....DH3	EA	1
1	13	PAODL	7025-01-085-5647	80063	SM-D-941920	CIRCUITCARDASSEMB,TIMINGANDCONTROL21A5.....DH3	EA	2
1	14	PAODL	7025-01-089-7864	80063	SM-D-941925	CIRCUITCARDASSEMB,DUALGROUPPRCCESSOR.....DH3	.EA	4
1	15	PAODL	7025-01-089-7863	80063	SM-D-941930	CIRCUITCARDASSEMB,FRAMESYNC21A7 .....DH3	EA	1
1	16	PAODL	7025-01-085-5648	80063	SM-D-941935	CIRCUITCARDASSEMB,DIGITALDATAORDERWIREDECDR21A8 .....DH3	EA	1
1	I7	PAODL	7025-01-085-5649	80063	SM-D-941940	CIRCUITCARDASSEMB.SUPERGROUPDRIVER/RECEIVER21A9 .....DH3	EA	1
1	18	PAODL	7025-01-085-5650	80063	SM-D-941945	CIRCUITCARDASSEMB,ANALOGVOICEORDERWIRE21A10 .....DH3	EA	1
1	19	PAODL	7025-01-085-5651	80063	SM-D-941950	CIRCUITCARDASSEMB,DIGITALVOICEORDERWIRE21A11.....DH3	EA	1
1	20	PAOHD	7025-01-086-4775	80063	SM-D-941800	POWERSUPPLYASSEMB21A2.....DH3	EA	1
1	21	MDFZZ		80063	SM-B-942102	SHIELDINGGSKTELEK DH3	EA	1
1	22	MDFZZ		80063	SM-D-941603	PLATEIDENT DH3	EA	1
1	23	PAFZZ	5305-00-762-7482	96906	MS35206-202	SCREW,MACHINE.....DH3	EA	2
1	24	RDFZZ		80063	SM-B-942104	SHIELDINGGSKTELEK DH3	EA	1
1	25	MNDZZ		80063	SM-D-941613	BRACKETANGLE DH3	EA	2
1	26	PAFZZ	5306-00-150-9105	88044	AN4-4A	BOLT,MACHINE.....DH3	EA	8
1	27	PAFZZ	5310-00-187-2354	88044	AN960PD416	WASHER,FLAT DH3	EA	8
1	28	MDFZZ		80063	SM-B-942103	SHIELDINGGSKTELEK DH3	EA	1
1	29	XAFFD		80063	SM-D-941700	CCNTROLPANELASSY21A14 .....DH3	EA	1
1	30	PAFZZ	5305-00-957-7815	96906	MS24693-54	SCREWMACHINE.....DH3	EA	2
1	31	PAFZZ	5310-00-810-7785	80205	NAS671-4	NUT,PLAIN.HEXAGON.....DH3	EA	2
1	32	PAFZZ	5310-00-933-8118	96906	MS35338-135	WASHER,LOCK DH3	EA	2
1	33	PAFZZ	5310-00-550-5009	96906	MS15795-704	WASHER.FLAT DH3	EA	2
1	33.1	XDFZZ	5340-00-543-4394	96906	MS21919DG6	CLAMP,LOOP.....DH3	EA	2
1	33.2	XDFZZ	5310-00-725-4712	80205	NAS671-8	NUT,PLAIN,HEXAGON.....DH3	EA	2
1	33.3	XDFZZ		80063	SM-C-941619	BRACKETANGLE DH3	EA	2
1	33.4	XDFZZ	5305-00-889-3000	96906	MS35206-230	SCREW,MACHINE.....DH3	EA	1
1	33.5	XDFZZ	5310-00-929-6395	96906	MS35338-136	WASHERLOCK. DH3	EA	1

(1) ILLUSTRATION (a) FIG NO.	(b) ITEM NO.	(2) SMR CODE	(3) NATIONAL STOCK NUMBER	(4) FSCM	(5) PART NUMBER	(6) DESCRIPTION *USABLEONCODE*	(7) U/M	(8) QTY INC IN UNIT
1	33.6	XDFZZ	5310-00-188-7721	88044	AN960-PD6	WASHER.FLAT DH3	EA	1
1	34	MDFZZ		80063	SM-B-942100	SHIELDINGGSKTELEK. DH3	EA	1
1	35	PAFFD	7025-01-085-7291	80063	SM-D-94I750	CARDFILEASSEMBLY21A13.....DH3	EA	1
1	36	PAFZZ	5305-00-984-6193	96906	MS35206-245	SCREIW,MACHINE. DH3	EA	10
1	37	PAFZZ	5310-00-184-8966	88044	AN960-PD8	WASHER,FLAT DH3	EA	26
1	38	PAFZZ	5305-00-984-6194	96906	MS35206-246	SCREWMACHINE. DH3	EA	16
1	39	PAFZZ	5310-00-933-8119	96906	MS35338-137	WASHER,LOCK DH3	EA	16
1	40	MDFZZ		80063	SM-B-942101	SHIELDINGGSKTELEK DH3	EA	1
1	41	MDFFD		80063	SM-D-941611	BRACKETASSYANGLE.....DH3	EA	1
1	42	XDFZZ		80063	SM-A-942111-2	NUTSELF-LOCK DH3	EA	7
1	43	XAFFD		80063	SM-D-941611-1	ANGLE. DH3	EA	1
1	44	XAFFD		80063	SY-D-941605	CASEASSEMBLY. DH3	EA	1

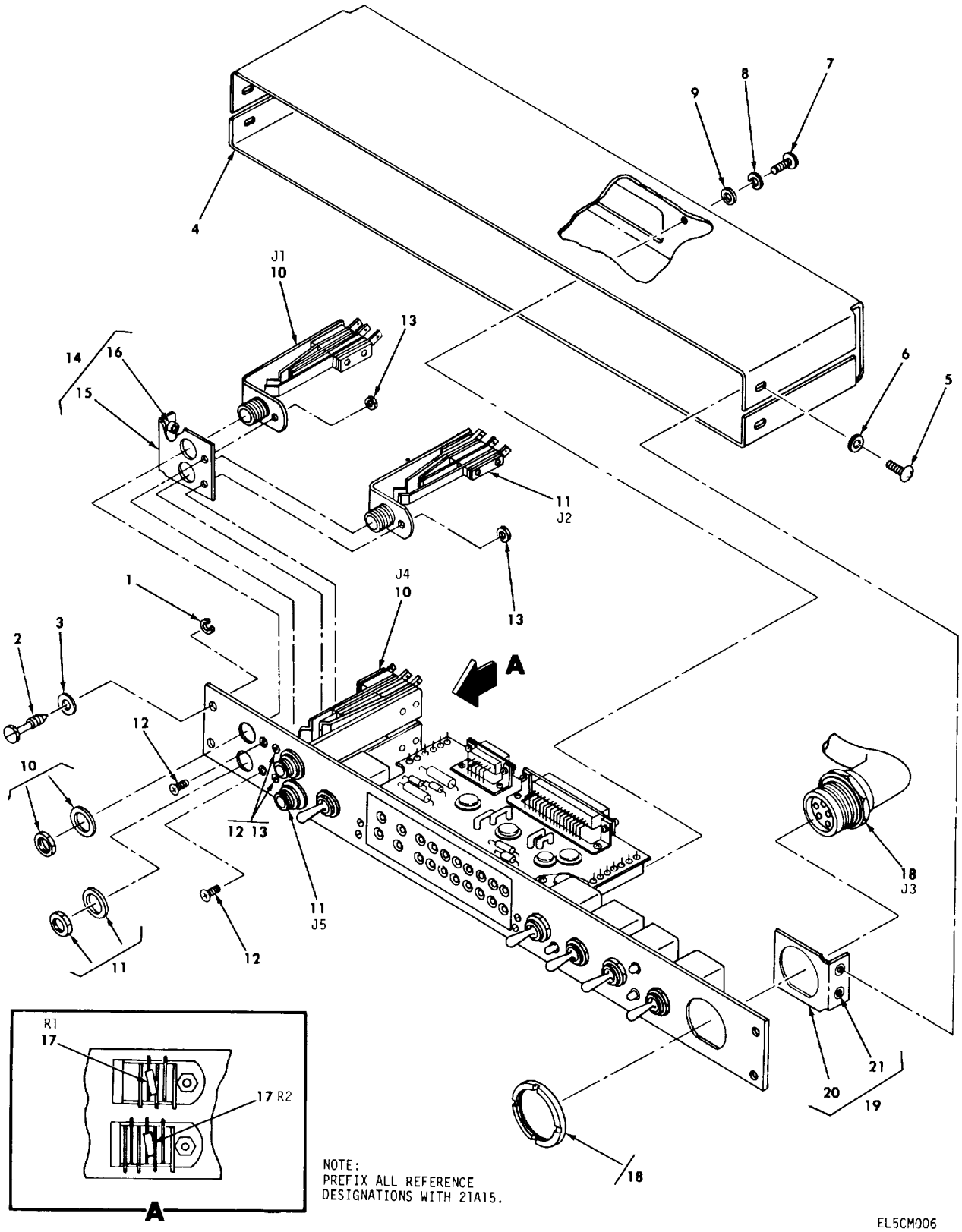

Figure 2. Remote access unit 21A15 (sheet1 of 2).

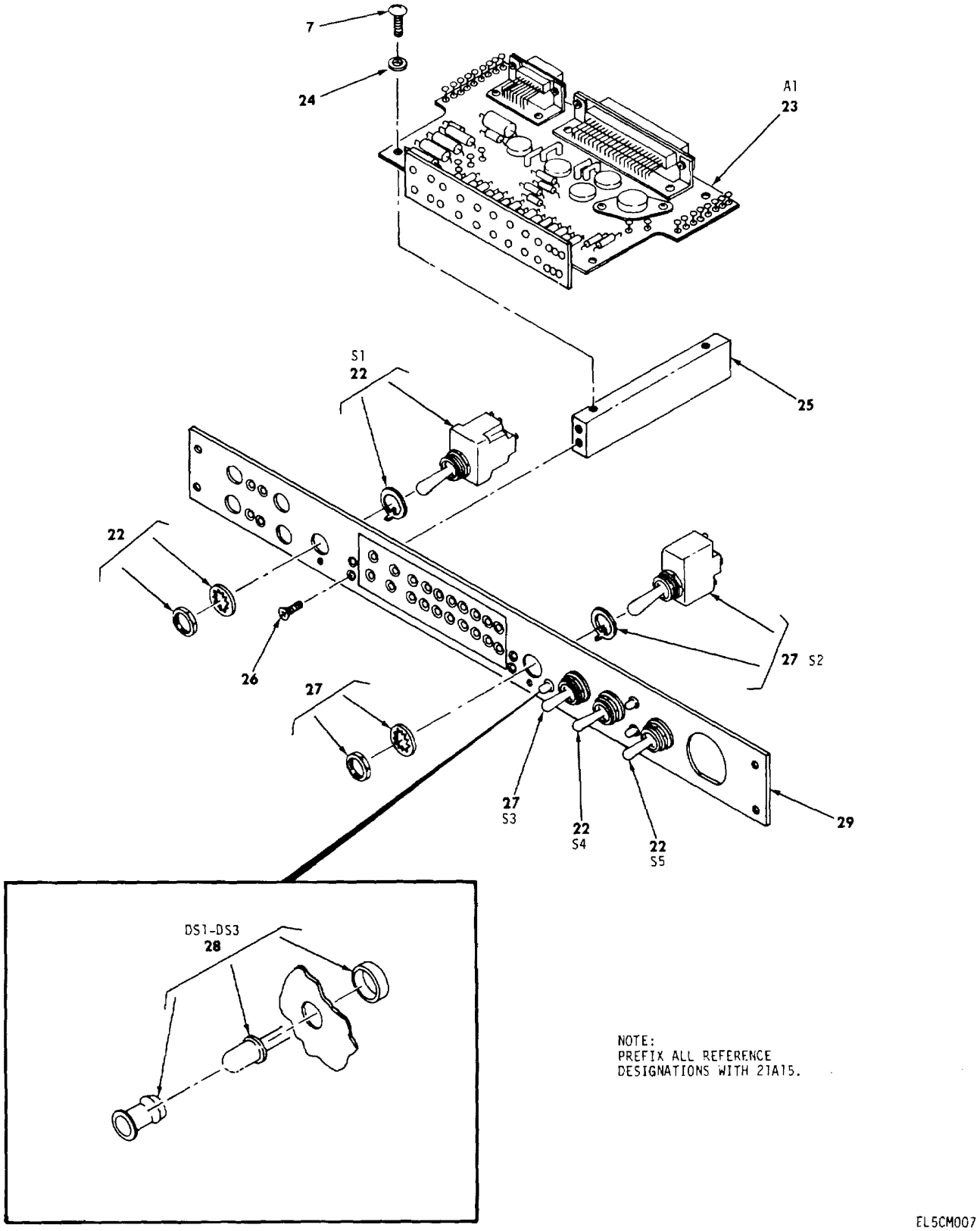

Figure 2. Remote access unit 21A15 (sheet 2 of 2).

(1) ILLUSTRATION (a) FIG NO.	(b) ITEM NO.	(2) SMR CODE	(3) NATIONAL STOCK NUMBER	(4) FSCM	(5) PART NUMBER	(6) DESCRIPTION USABLEONCODE	(7) U/M	(8) QTY INC IN UNIT
						GROUP01REMOTEACCESSUNIT21A15		
2	1	PAOZZ	5365-00-115-6848	72794	V166	RING,RETAINING DH3	EA	4
2	2	MDOZZ		80063	SM-C-941657	SCREWEXTBCDY DH3	EA	4
2	3	PAOZZ	5310-00-685-3744	88044	AN960C8	WASHERFLAT DH3	EA	4
2	4	MDFZZ		80063	SM-D-941652	COVER DH3	EA	1
2	5	PAFZZ	5305-00-984-4984	96906	MS35206-227	SCREWMACHINE DH3	EA	4
2	6	PAFZZ	5310-00-167-0832	88044	AN960-6L	WASHER,FLAT DH3	EA	4
2	7	PAFZZ	5305-00-889-3116	98906	MS35206-213	SCREW,MACHINE DH3	EA	6
2	8	PAFZZ	5310-00-184-8996	96906	MS35338-97	WASHERLOCK DH3	EA	2
2	9	PAFZZ	5310-00-950-1310	96906	MS27183-4	WASHERFLAT DH3	EA	2
2	10	PAFZZ	5935-00-433-5778	81349	M641/10-1	JACK.TELEPHONE DH3	EA	2
2	11	PAFZZ	5935-00-926-2946	81349	M641/9-3	JACK.TELEPHONE DH3	EA	2
2	12	PAFZZ	5305-00-957-7818	96906	MS24693-527	SCREW,MACHINE DH3	EA	4
2	13	PAFZZ	5310-00-631-1294	80205	NAS671-6	NUT,PLAIN.HEXAGON DH3	EA	4
2	14	MDFFD		80063	SM-C-941656	BRACKETASSEMBLY DH3	EA	1
2	15	XAFZZ		80063	SM-C-941656-1	BRACKET DH3	EA	1
2	16	XOFZZ		80063	SM-A-94211I-I	NUTSELFLOCKING DH3	EA	2
2	17	XDFZZ	5905-00-136-3891	81349	RCR07G621JS	RESISTOR,FIXED,COMP DH3	EA	2
2	18	PAFZZ	5935-00-549-2646	80058	U-79/U	CONNECTOR,RECEPTACLE DH3	EA	1
2	19	MDFFD		80063	SM-C-941655	BRACKETASSEMBLY DH3	EA	1
2	20	XAFZZ		80063	SM-C-941655-1	BRACKET DH3	EA	1
2	21	XDFZZ		80063	S-A-942111-1	NUTSELFLOCKING DH3	EA	2
2	22	PAFZZ		96906	MS27735-31	SWITCH.TOGGLE DH3	EA	3
2	23	PAFFD	7025-01-086-4869	80063	SM-D-941670	ELECTRONICCOMPONENT,REMOTEACCESSUNIT21A15A1 ..... DH3	EA	1
2	24	PAFZZ		88044	NA5620-4	WASHER,FLAT DH3	EA	4
2	25	MDFZZ		80063	SM-C-941654	POSTELEC DH3	EA	2
2	26	PAFZZ	5305-00-957-2383	96906	MS24693-53	SCREW,MACHINE DH3	EA	4
2	27	PAFZZ	5930-01-027-8176	96906	MS27134-31	SWITCH.TOGGLE DH3	EA	2
2	28	PAFZZ	5961-01-035-7155	80063	SM-A-942040	LIGHTEMITTINGDIOD DH3	EA	3
2	29	MDFZZ		80063	SM-D-941653	PANELFRONT DH3	EA	1

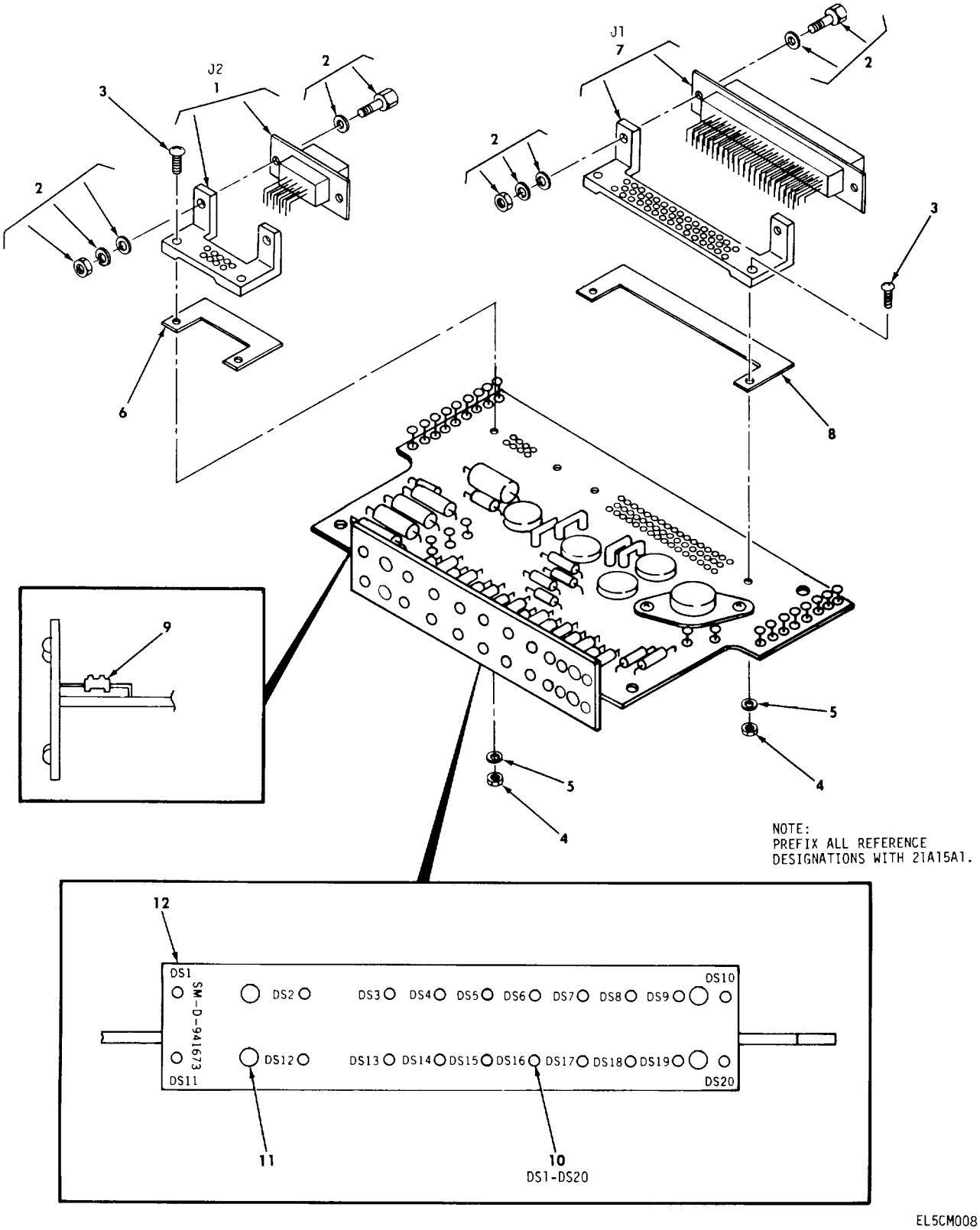

Figure 3. Circuit card assembly, remote access unit 21A15A1 (sheet 1 of 2).

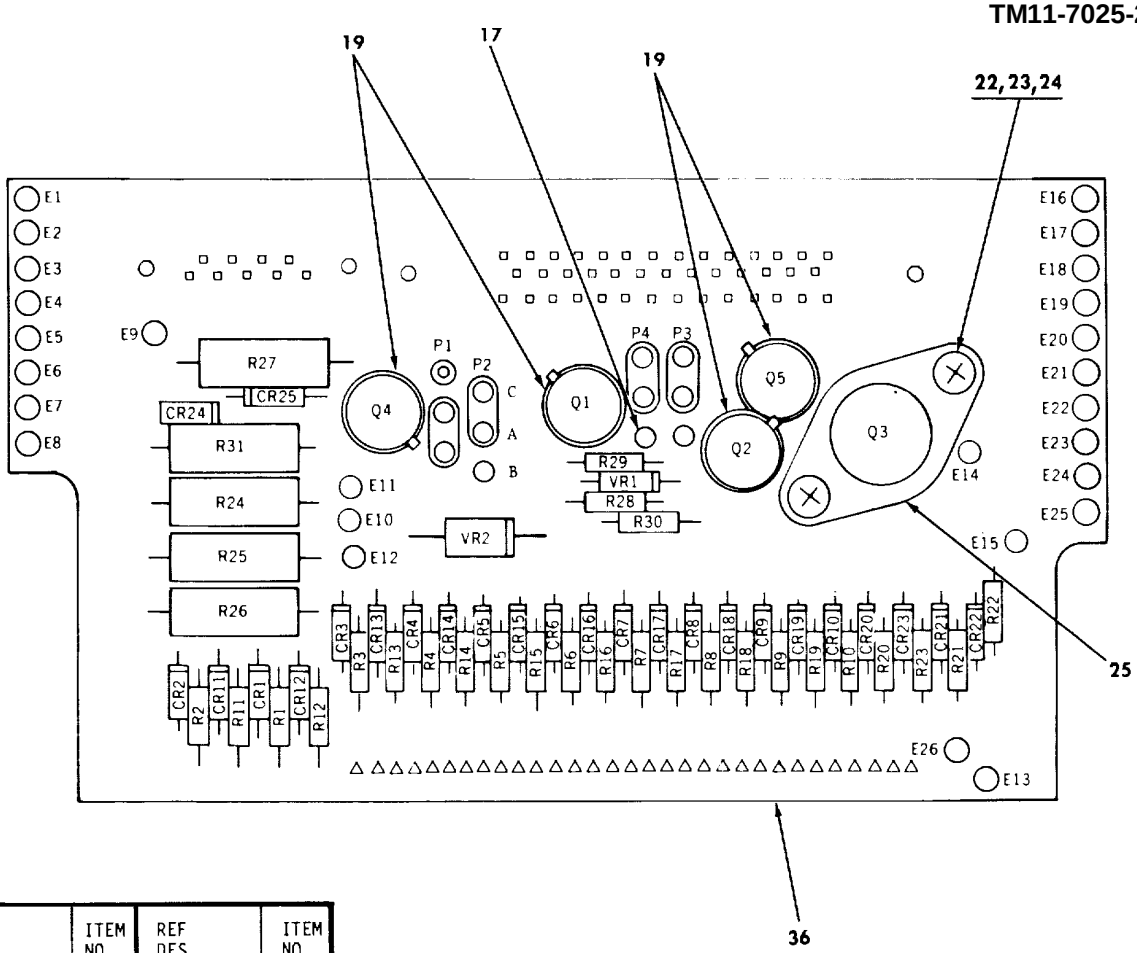

REF DES	ITEM NO.	REF DES	ITEM NO.
CR1 - CR24	13	R21 - R23	27
CR25	14	R24	28
E1 - E26	15	R25, R26	29
P1 - P4	16	R27	30
Q1	18	R28	31
Q2	20	R29	32
Q3	21	R30	27
Q4	18	R31	33
Q5	20	VR1	34
R1 - R20	26	VR2	35

NOTE:
PREFIX ALL REFERENCE DESIGNATIONS WITH 21A15A1.

EL5CM009

Figure 3. Circuit card assembly, remote access unit 21A15A1 (sheet 2 of 2).

(1) ILLUSTRATION (a) FIG NO.	(b) ITEM NO.	(2) SMR CODE	(3) NATIONAL STOCK NUMBER	(4) FSCM	(5) PART NUMBER	(6) DESCRIPTION *USABLEONCODE*	(7) U/M	(8) QTY INC IN UNIT
						GROUP0101CCAREMOTEACCESSUNIT21A15A1		
3	1	PAFZZ		81349	M24308/24-31	CONNECTOR,RECEPTACL.....DH3	EA	1
3	2	PAFZZ	5935-01-052-9436	81349	M24308/26-1	JACKSOCKET,ELECTRIC.....DH3	EA	4
3	3	PAFZZ	5305-00-889-2998	96906	MS35206-216	SCREW,MACHINE.....DH3	EA	4
3	4	PAFZZ	5310-00-811-6419	96906	MS21042-04	NUT.SELF-LCCKING,EX.....DH3	EA	4
3	5	PAFZZ		88044	NAS620-4	WASHER,FLAT.....DH3	EA	4
3	6	MDFZZ		80063	SM-C-941675	INSULATORPLATE.....DH3	EA	1
3	7	PAFZZ	5935-01-097-3675	81349	M24308/2-35	CONNECTOR,RECEPTACL.....DH3	EA	1
3	8	MDFZZ		80063	SM-C-941674	INSULATORPLATE.....DH3	EA	1
3	9	XDFZZ		80063	SM-A-942157	HEADERRIGHTANGLE.....DH3	EA	1
3	10	PAFZZ	5961-01-090-0102	80063	SM-A-942039	LIGHTEMITTINGDIOD.....DH3	EA	20
3	11	PAFZZ	5305-00-253-5609	96906	MS21318-13	SCREW,DRIVE.....DH3	EA	4
3	12	XAFZZ		80063	SM-D-941673	PRINTEDWIRINGBD.....DH3	EA	1
3	13	PAFZZ	5961-01-081-9573	81349	JAN1N4153-1	SEMICONDUCTCRDEVIC.....DH3	EA	24
3	14	PAFZZ	5961-01-048-0460	81349	JAN1N5314	SEMICONDUCTORDEVIC.....DH3	EA	1
3	15	XDFZ	5940-00-082-4861	81349	SE12XC04	TERMINAL.STUD.....DH3	EA	26
3	16	XDFZZ		80063	SM-B-942071	DUMMYCONNPLUG.....DH3	EA	4
3	17	XDFZZ		80063	SM-A-942070	CONTACTELECTRICAL.....DH3	EA	12
3	18	PAFZZ	5961-01-023-3309	81349	JAN4N24	COUPLER,OPTOELECTRO.....DH3	EA	2
3	19	XDFZZ		80063	SM-A-942098	INSULATORDISK.....DH3	EA	4
3	20	PAFZZ	5961-00-022-5670	81349	JAN2N3439	TRANSISTOR.....DH3	EA	2
3	21	PAFZZ	5961-00-468-2765	81349	JAN2N3584	TRANSISTOR.....DH3	EA	1
3	22	PAFZZ	5305-00-984-4988	96906	MS35206-228	SCREW,MACHINE.....DH3	EA	2
3	23	PAFZZ	5310-00-807-1465	96906	MS21042-06	NUT,SELF-LOCKING,EX.....DH3	EA	2
3	24	PAFZZ	5310-00-622-9531	80205	NAS620-6	WASHER,FLAT.....DH3	EA	2
3	25	XDFZZ		80063	SM-A-942145	INSULATORPLATE.....DH3	EA	1
3	26	PAFZZ	5905-00-141-0743	81349	RCR07G392JS	RESISTOR,FIXED.COMP.....DH3	EA	20
3	27	PAFZZ	5905-00-110-7620	81349	RCR07G102JS	RESISTOR,FIXED,COMP.....DH3	EA	4
3	28	XAFZZ	5905-00-141-1149	81349	RCR32G391JS	RESISTOR.FIXED.COMP.....DH3	EA	1
3	29	XDFZZ	5905-00-106-1247	81349	RCR32G221JS	RESISTOR,FIXED,COMP.....DH3	EA	2
3	30	XDFZZ	5905-00-494-4622	81349	RCR32G182JS	RESISTOR,FIXED.COMP.....DH3	EA	1
3	31	XDFZZ	5905-00-120-9152	81349	RCR07G274JS	RESISTOR,FIXED,COMP.....DH3	EA	1
3	37	XDFZZ	5905-00-141-0717	81349	RCR07G473JS	RESISTOR.FIXED,COMP.....DH3	EA	1
3	33	XDFZZ	5905-00-494-5137	81349	RCR32GI61JS	RESISTOR.FIXED.COMP.....DH3	EA	1
3	34	PAFZZ	5961-00-846-9157	81349	JAN1N759A	SEMICONDUCTORDEVIC.....DH3	EA	1
3	35	PAFZZ	5961-00-843-9086	81349	JAN1N3051B	SEMICONDUCTCRDEVIC.....DH3	EA	1
3	36	XAFZZ		80063	SM-D-941672	PRINTEDWIRINGBD.....DH3	EA	1

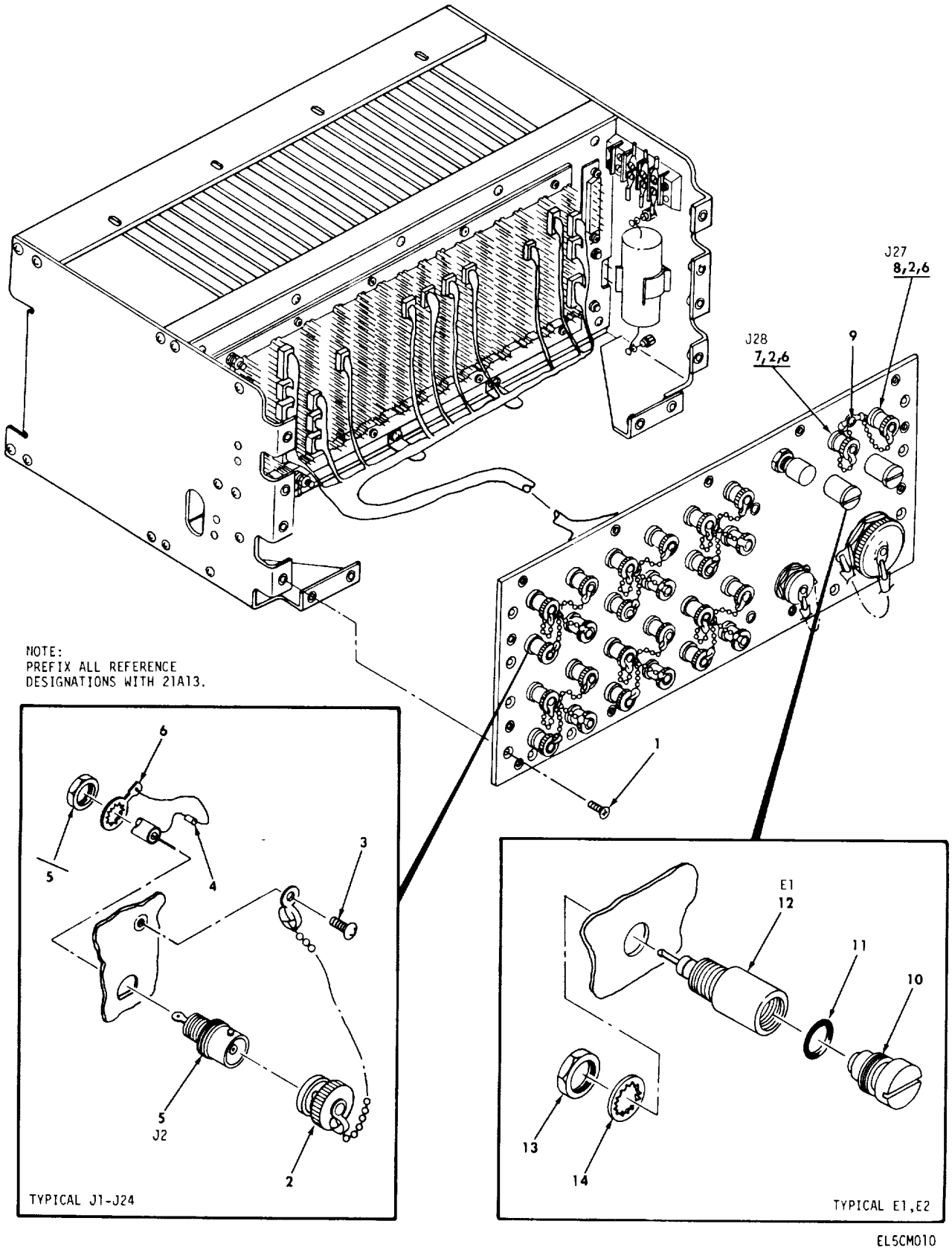

Figure 4. Card file assembly 21A13 (sheet 1of 7)

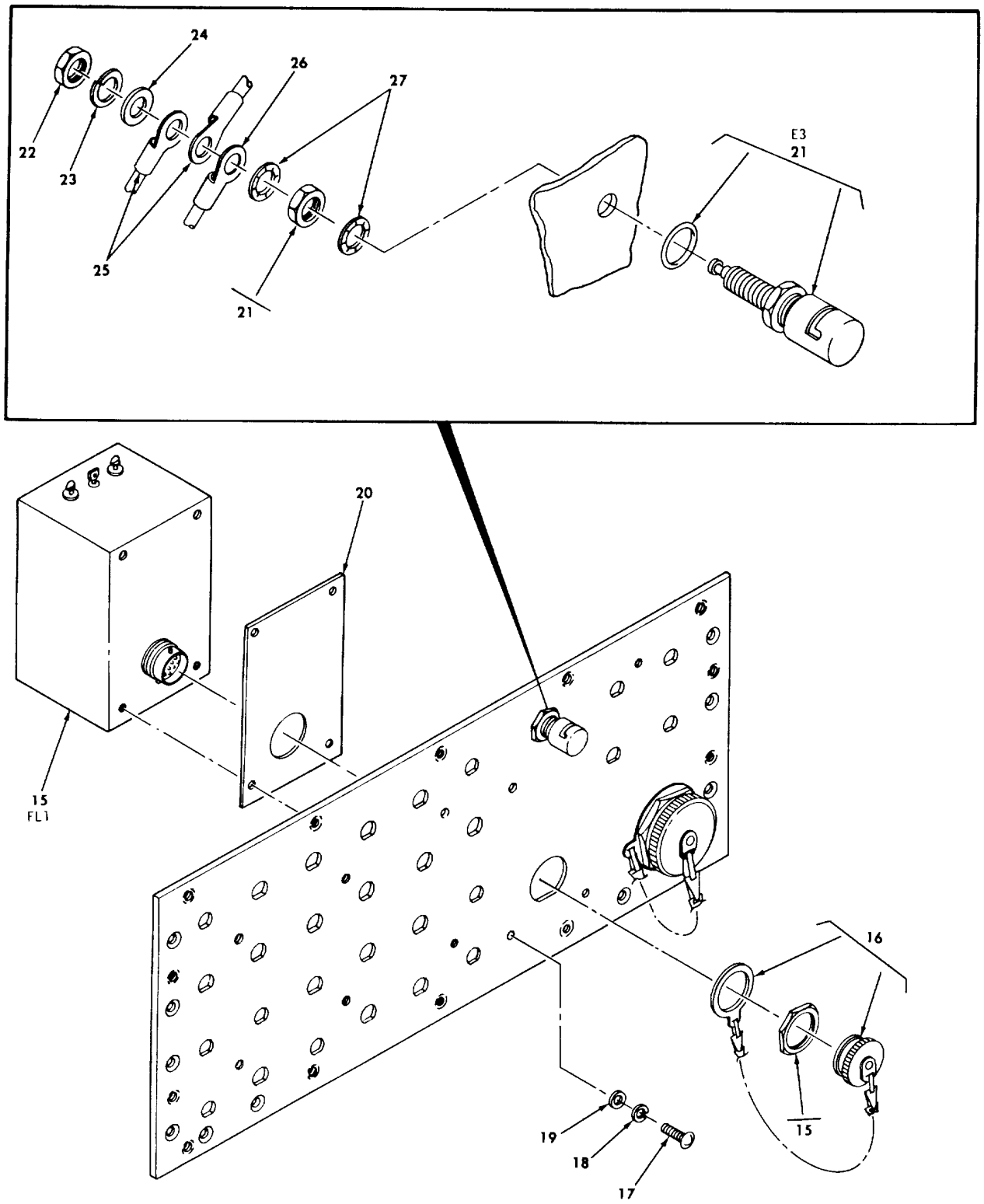

NOTE:
PREFIX ALL REFERENCE
DESIGNATIONS WITH 21A13.

EL5CM011

Figure 4. Card file assembly 21A13 (sheet 2 of 7).

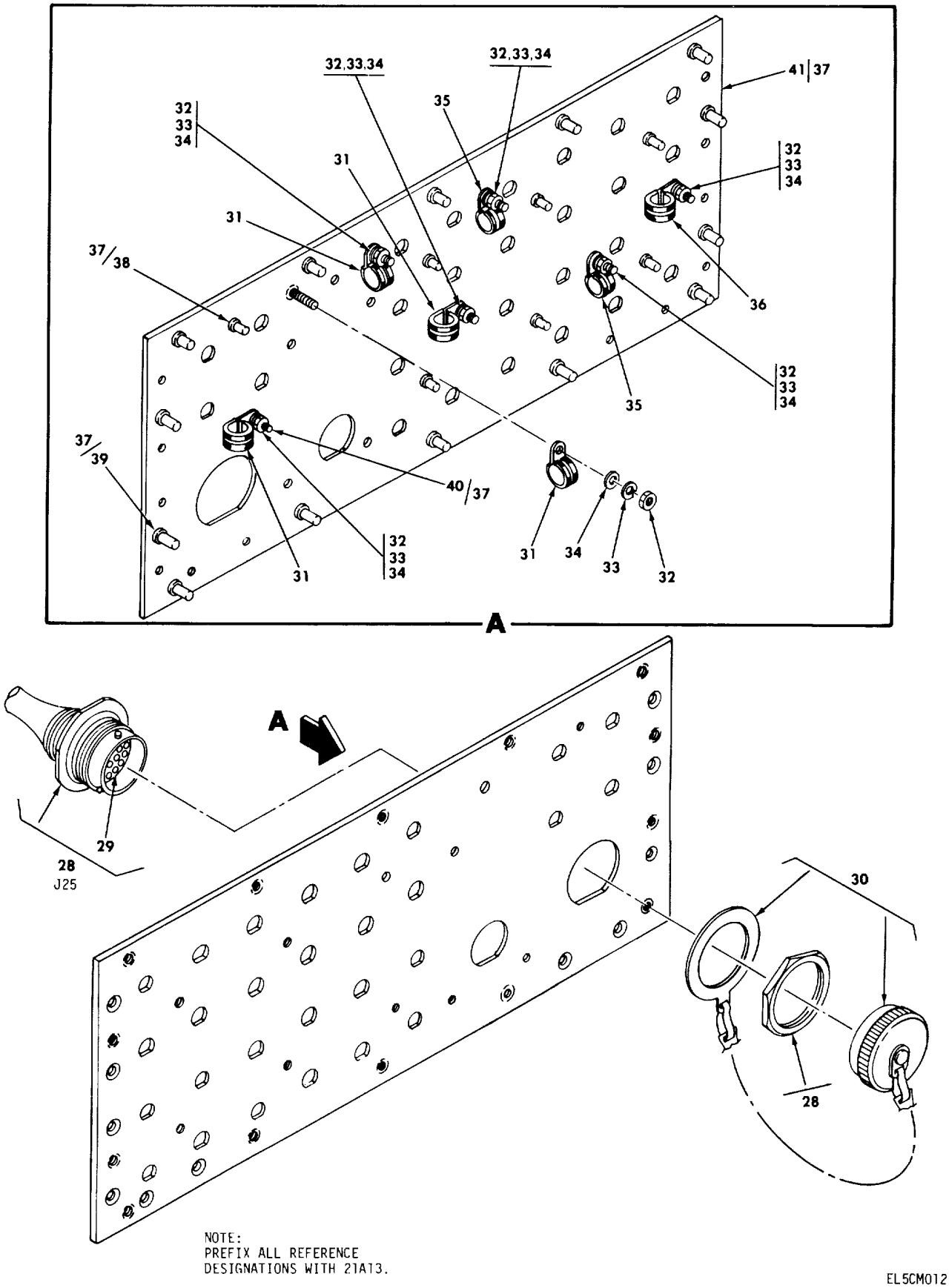

Figure 4. Card file assembly 21A13 (sheet 3 of 7).

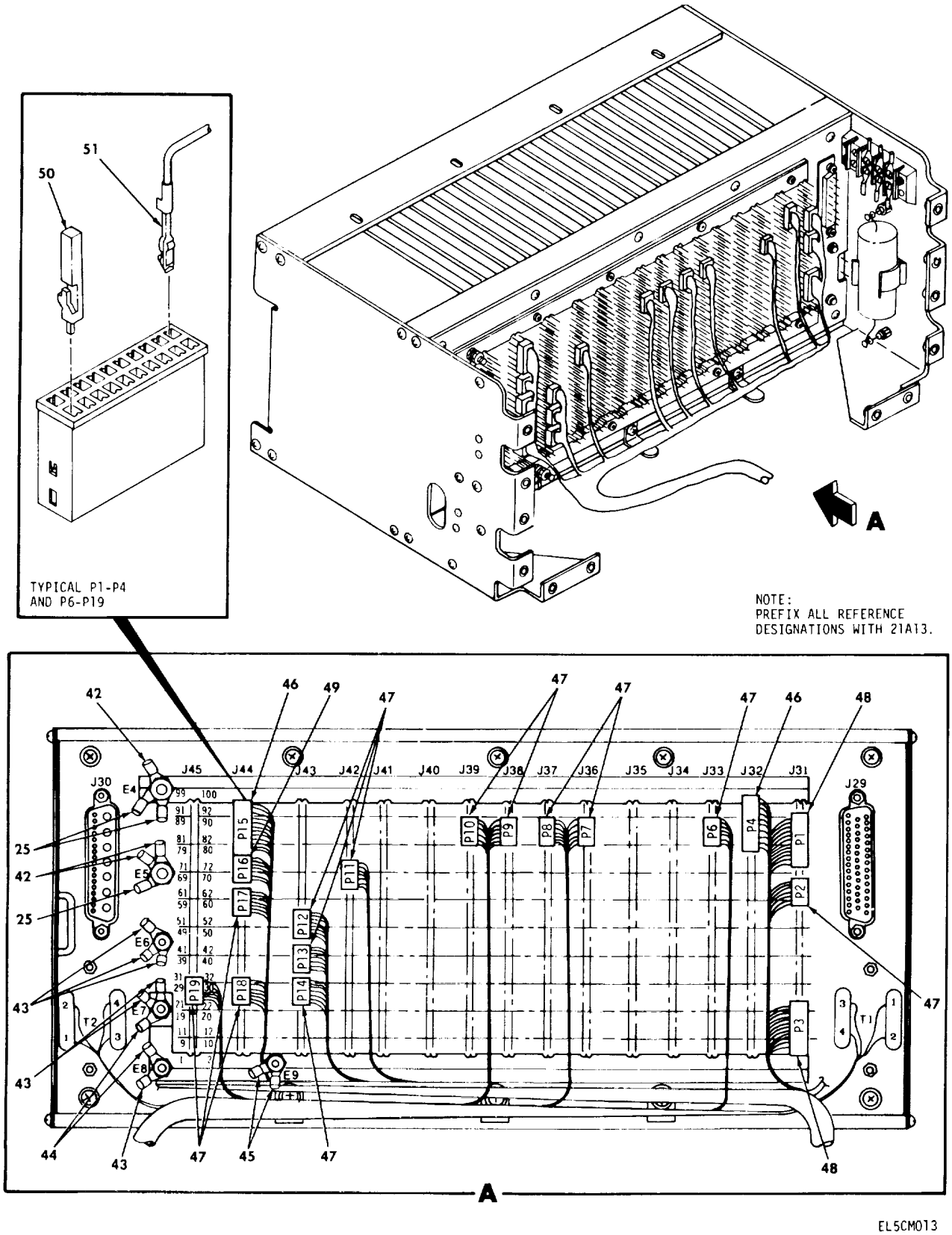

Figure 4. Card file assembly 21A13 (sheet 4 of 7).

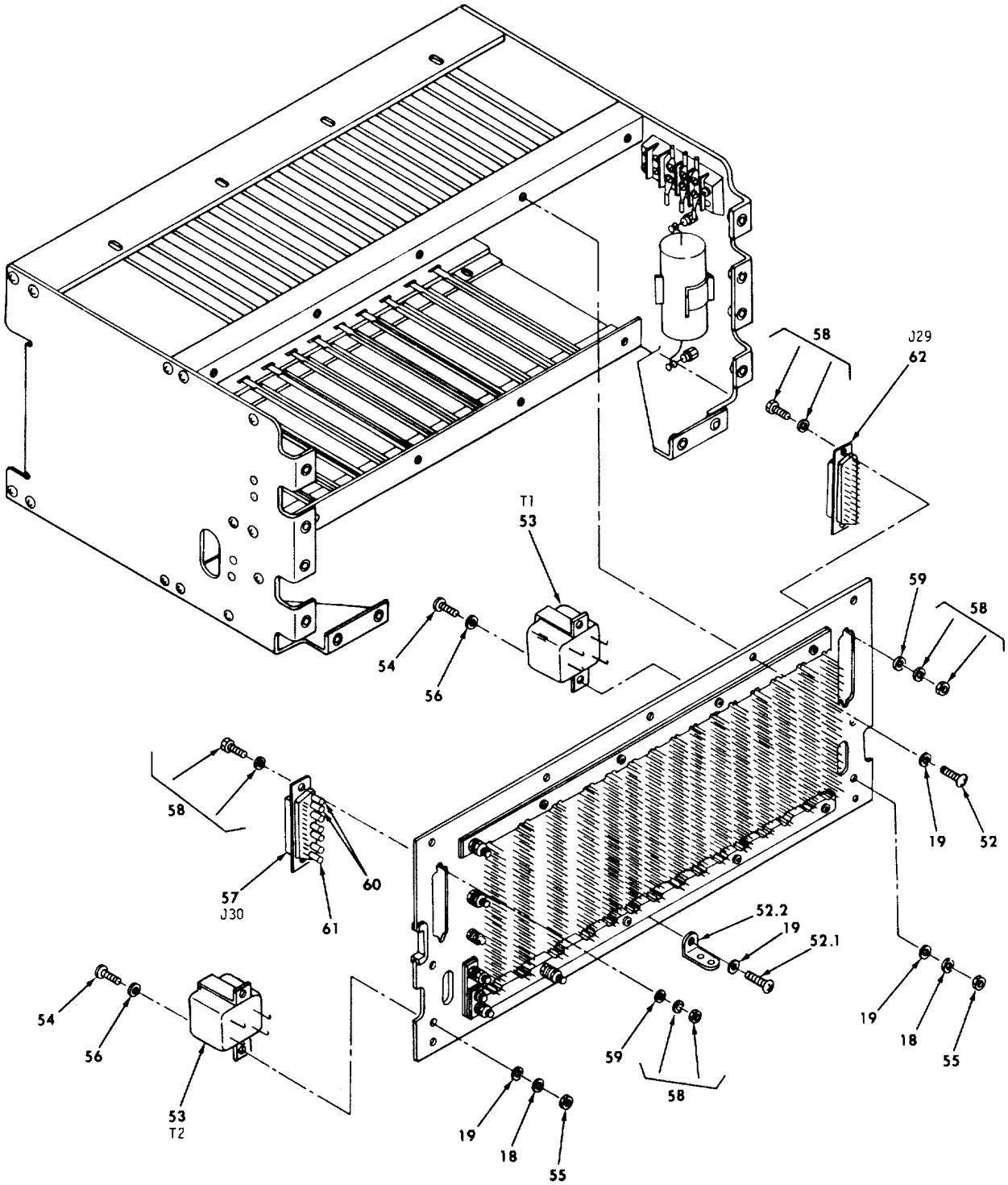

NOTE:
PREFIX ALL REFERENCE
DESIGNATIONS WITH 21A13.

EL5CM014

Figure 4. Card file assembly 21A13 (sheet 5 of 7).

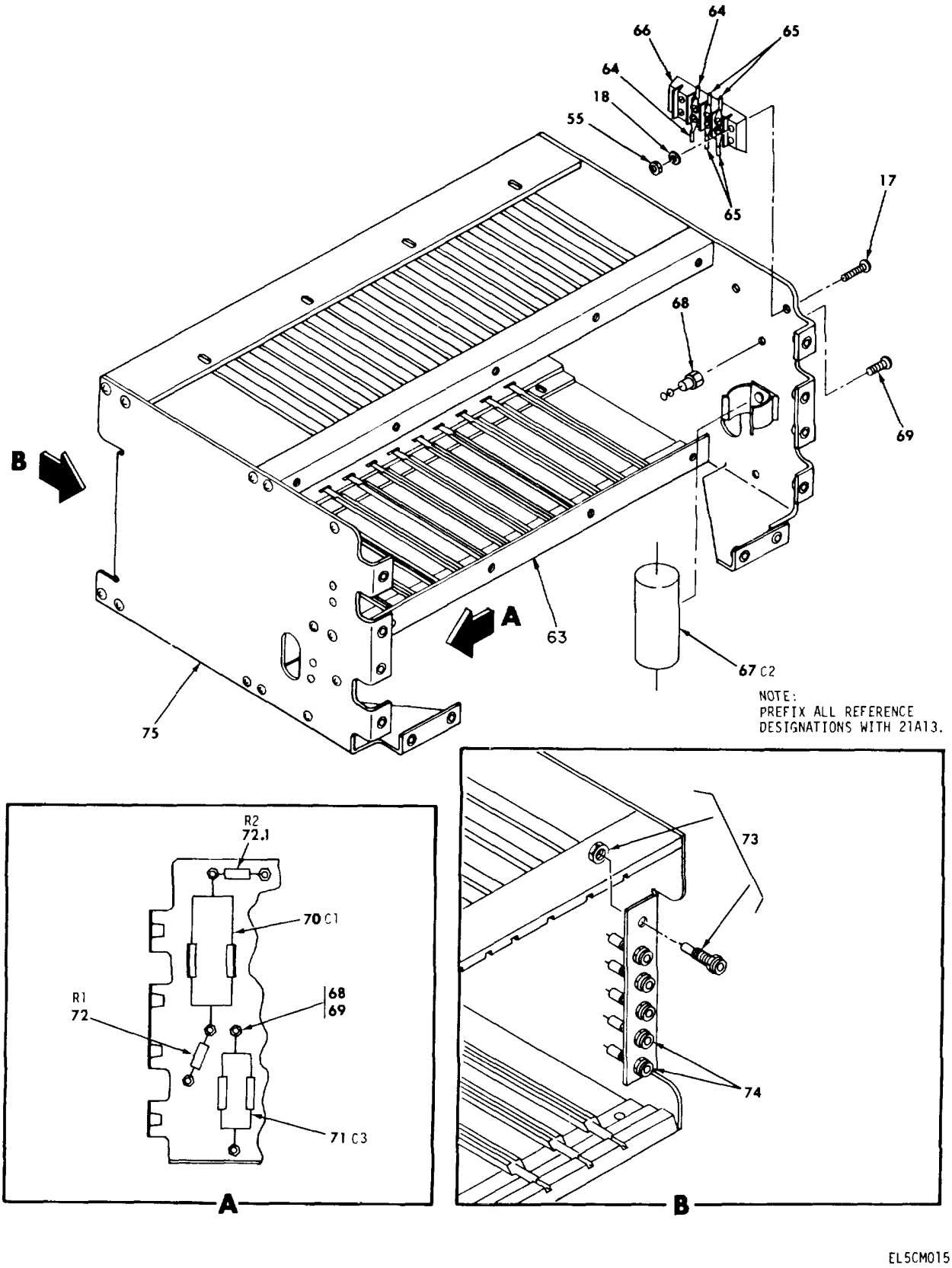

Figure 4. Card file assembly 21A13 (sheet 6 of 7).

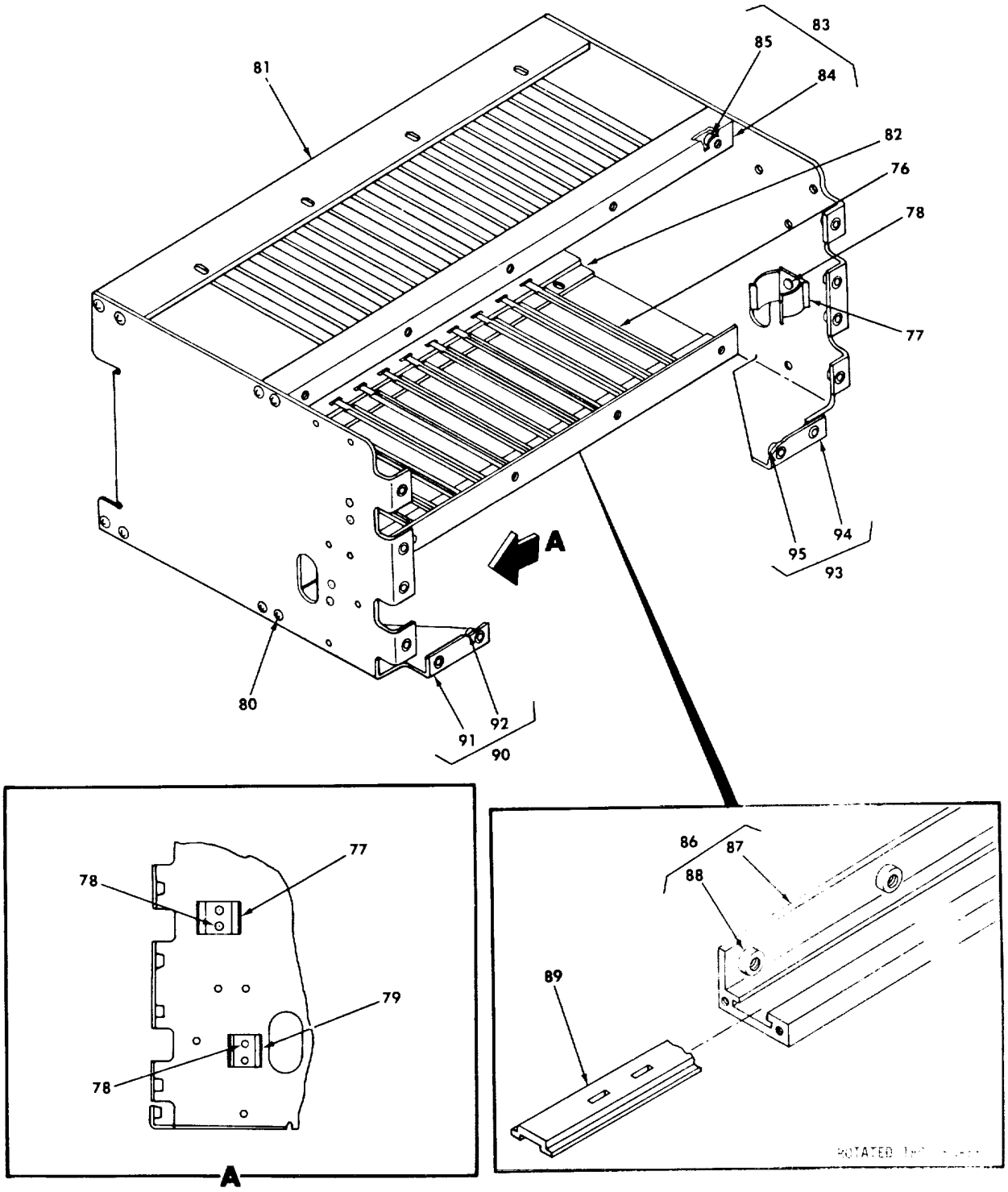

Figure 4. Card file assembly 21A13 (sheet 6 of 7).

(1) ILLUSTRATION (a) FIG NO.	(b) ITEM NO.	(2) SMR CODE	(3) NATIONAL STOCK NUMBER	(4) FSCM	(5) PART NUMBER	(6) DESCRIPTION USABLEONCODE	(7) U/M	(8) QTY INC IN UNIT
						GROUP02CARDFILEASSEMBLY21A13		
4	1	PAFZZ	5305-00-957-7818	96906	MS24693-S27	SCREW,MACHINE.....DH3	EA	12
4	2	PAOZZ	5935-00-885-2264	81349	M39012/25-0006	COVER,ELECTRICALCO.....DH3	EA	26
4	3	PAOZZ	5305-00-889-2999	96906	MS35206-217	SCREW.MACHINE.....DH3	EA	6
4	4	PAFZZ	5940-00-460-1733	80205	NAS1745-14	SPLICE,CONDUCTR.....DH3	EA	52
4	5	PAFZZ	5935-00-997-8026	81349	M39012/24-0002	CONNECTOR,RECEPTACL.....DH3	EA	24
4	6	XOFZZ	5940-00-405-2175	79963	814	TERMINAL.LUG.....DH3	EA	26
4	7	PAFZZ		77820	33270-2	CONNECTOR,RECEPTACL.....DH3	EA	1
4	8	PAFZZ	5935-00-949-5243	77820	97772-2	CONNECTOR,RECEPTACL.....DH3	EA	1
4	9	PAOZZ	5305-00-889-2997	96906	MS35206-215	SCREW.MACHINE.....DH3	EA	1
4	10	PAOZZ	5920-00-999-7324	80063	SM-B-530036	CAPARRESTOR.....DH3	EA	2
4	11	PAFZZ	5330-00-584-0265	96906	MS28775-02	PACKING,PREFORMED.....DH3	EA	2
4	12	PAFZZ	5920-00-930-1212	80063	SM-B-530020	HOLDER,ARRESTER.....DH3	EA	2
4	13	PAFZZ	5310-00-722-5300	96906	MS25082-6	WASHER.....DH3	EA	2
4	14	PAFZZ	5310-00-180-0277	96906	MS35333-76	WASHER,LOCK.....DH3	EA	2
4	15	XDFZZ		80063	SM-8-942091	FILTERRFI.....DH3	EA	1
4	16	PAFZZ	5935-00-913-1823	96906	MS3181-12N	COVER,ELECTRICALCO.....DH3	EA	1
4	17	PAFZZ	5305-00-889-3001	96906	MS35206-231	SCREW,MACHINE.....DH3	EA	6
4	18	PAFZZ	5310-00-929-6395	96906	MS35338-136	WASHER,LOCK.....DH3	EA	10
4	19	PAFZZ	5310-00-188-7721	88044	AN960-PD6	WASHE,FLAT.....DH3	EA	18
4	20	XOFZZ		80063	SM-A-942096	SHIELDINGGASKET.....DH3	EA	1
4	21	PAFZZ	5940-00-283-5386	80058	U-106/G	POST,BINDINGELECTR.....DH3	EA	1
4	22	PAFZZ	5310-00-167-1343	88044	AN315-3R	NUT,PLAIN,HEXAGON.....DH3	EA	1
4	23	PAFZZ	5310-00-933-8120	96906	MS35338-138	WASHER,LOCK.....DH3	EA	1
4	24	PAFZZ	5310-00-183-4406	88044	AN960-PD10	WASHER,FLAT.....DH3	EA	1
4	25	PAFZZ	5940-00-143-4771	96906	MS25036-103	TERMINAL,LUG.....DH3	EA	5
4	26	PAFZZ	5940-00-143-4780	96906	M525036-108	TERMINALLUG.....DH3	EA	1
4	27	PAFZZ	5310-00-543-5933	96906	MS35333-73	WASHER,LOCK.....DH3	EA	2
4	28	PAFFF	5935-00-725-4496	96906	MS3124E22-55S	CONNECTOR.RECEPTACL.....DH3	EA	1
4	29	PAFZZ	5999-00-078-6804	96906	MS3193A20-20A	CONTACT,ELECTRICAL.....DH3	EA	55
4	30	PAFZZ	5935-00-778-4919	96906	MS3181-22N	COVER.ELECTRICALCO.....DH3	EA	1
4	31	PAFZZ	5340-00-283-0649	96906	MS21919DG7	CLAMP.LOOP.....DH3	EA	4
4	32	PAFZZ	5310-00-725-4712	80205	NAS671-8	NUT,PLAIN,HEXAGON.....DH3	EA	7
4	33	PAFZZ	5310-00-933-8119	96906	MS3533-137	WASHER,LOCK.....DH3	EA	7
4	34	PAFZZ	5310-00-184-8966	88044	AN960-PD8	WASHER,FLAT.....DH3	EA	7
4	35	PAFZZ	5340-00-205-6301	96906	MS21919DG4	CLAMP,LOOP.....DH3	EA	2
4	36	PAFZZ	5340-00-205-6302	96906	MS21919DG5	CLAMP.LOOP.....DH3	EA	1
4	37	XAFFD		80063	SM-D-941760	CONNECTORPNLASSY.....DH3	EA	1
4	38	XDFZZ		80063	SM-A-942097-1	NUTPLAINCLINCHER.....DH3	EA	7
4	39	XDFZZ		80063	SM-A-942097-2	NUTPLAINCLINCH.....DH3	EA	14

(1) ILLUSTRATION (a) FIG NO.	(b) ITEM NO.	(2) SMR CODE	(3) NATIONAL STOCK NUMBER	(4) FSCM	(5) PART NUMBER	(6) DESCRIPTION USABLEONCODE	(7) U/M	(8) QTY INC IN UNIT
4	40	XDFZZ		80063	SM-A-942129-2	STUDSELF-LCCKING.....DH3	EA	7
4	41	MDFZZ		80063	SM-D-941760	PANEL.....DH3	EA	1
4	42	PAFZZ	5940-00-143-4794	96906	MS25036-112	TERMINAL,LUG.....DH3	EA	3
4	43	PAFZZ	5940-00-557-1629	96906	MS25036-149	TERMINAL,LUG.....DH3	EA	6
4	44	PAFZZ	5940-00-143-4775	96906	MS25036-156	TERNINAL,LUG.....DH3	EA	2
4	45	PAFZZ	5940-00-113-9828	96906	MS25036-148	TERMINAL,LUG.....DH3	EA	2
4	46	XDFZZ		80063	SM-A-942146	HOUSINGLKGCLIP.....DH3	EA	2
4	47	XDFZZ		80063	SM-A-942068	HOUSINGLKGCLIP.....DH3	EA	13
4	48	XDFZZ		80063	SM-A-942069	HOUSINGLKGCLIP.....DH3	EA	2
4	49	XDFZZ		80063	SM-A-942147	HOUSINGLKGCLIP.....DH3	EA	1
4	50	PAFZZ	5935-01-056-4606	80063	SM-A-942067	KEYINGPLUG.....DH3	EA	18
4	51	XDFZZ		80063	SM-A-942065	CONTACTELECTRICAL.....DH3	EA	113
4	52	PAFZZ	5305-00-984-4989	96906	MS35206-229	SCREW,MACHINE.....DH3	EA	7
4	52.1	XDFZZ	5305-00-889-3000	96906	MS35206-230	SCREW,MACHINE.....DH3	EA	3
4	52.2	XDFZZ		88044	AN743B2I3	BRACKET,ANGLE.....DH3	EA	3
4	53	XDFZZ		800631	SM-B-94263	TRANSFORMERAF.....DH3	EA	2
4	54	PAFZZ	5305-00-984-4988	96906	MS35206-228	SCREW,MACHINE.....DH3	EA	4
4	55	PAFZZ	5310-00-631-1294	80205	NAS671-6	NUT,PLAIN,HEXAGON.....DH3	EA	6
4	56	PAFZZ	5310-00-655-7548	80205	NAS620A6	WASHERFLAT.....DH3	EA	4
4	57	PAFZZ	5935-00-432-6519	80063	SM-B-942134	CONNECTOR,RECEPTACL.....DH3	EA	1
4	58	PAFZZ	5935-01-098-1685	81349	M24308/26-2	SHELL,ELECTRICALCD.....DH3	EA	4
4	59	PAFZZ	5310-00-550-5009	96906	MS15795-704	WASHER,FLAT.....DH3	EA	4
4	60	PAFZZ	5999-00-879-8474	80063	SM-B-942072-2	CONTACT,ELECTRICAL.....DH3	EA	2
4	61	PAFZZ	5999-00-102-6146	80063	SM-B-942072-1	CONTACT,ELECTRICAL.....DH3	EA	5
4	62	PAFZZ		80063	SM-B-942077	CONNECTOR,PLUG.ELEC.....DH3	EA	1
4	63	XDFFD		80063	SM-D-942094	BACKPLANEASSEMBLY.....DH3	EA	1
4	64	PAFZZ	5940-00-813-0698	96906	MS25036-101	TERMINAL,LUG.....DH3	EA	2
4	65	PAFZZ	5940-00-283-5280	96906	MS25036-106	TERMINAL,LUG.....DH3	EA	4
4	66	PAFZZ	5940-00-983-6045	81349	37T84	TERMINALBOARD.....DH3	EA	1
4	67	XDFZZ		81349	M8342101-5270	CAPACITORFIXED.....DH3	EA	1
4	68	XDFZZ		81349	SE10XD02	TERMINAL,STUD.....DH3	EA	8
4	69	PAFZZ	5305-00-984-4982	96906	MS35206-225	SCREW,MACHINE.....DH3	EA	8
4	70	XDFZZ		81349	M39022/02-214	CAPACITOR,FIXED,MET.....DH3	EA	1
4	71	XDFZZ	5910-01-040-7249	81349	RCR32G104JS	CAPACITORFIXED.....DH3	EA	1
4	72	XDFZZ	5905-00-106-1276	81349	RCR32G104JS	RESISTORFIXED.COMP.....DH3	EA	1
4	72.1	PAFZZ	5905-00-466-1487	81349	RWR89S10R0PR	RESISTOR.FIXED,WIRE.....DH3	EA	1
4	73	PAFZZ	5935-00-768-4232	81349	M39024/10-08	JACK,TIP.....DH3	EA	4
4	74	PAFZZ	5935-00-762-0312	81349	M39024/10-03	JACK,TIP.....DH3	EA	2
4	75	XAFFD		80063	SM-D-941759	CKTCOFILESUBASSY.....DH3	EA	1
4	76	XDFZZ		80063	SM-A-942121	GUIDECARD.....DH3	EA	30

(1) ILLUSTRATION (a) FIG NO.	(b) ITEM NO.	(2) SMR CODE	(3) NATIONAL STOCK NUMBER	(4) FSCM	(5) PART NUMBER	(6) DESCRIPTION *USABLEONCODE*	(7) U/M	(8) QTY INC IN UNIT
4	77	XDFZZ		80063	SM-A-942144-1	CLIPSPRINGTENSION DH3	EA	2
4	78	PAFZZ	5320-00-117-6826	96906	MS20470AD4-4	RIVET,SOLID DH3	EA	6
4	79	XDFZZ		80063	SM-A-942144-2	CLIPSPRINGTENSION DH3	EA	1
4	80	PAFZZ	5305-00-984-4988	96906	MS35206-228	SCREW,MACHINE DH3	EA	16
4	81	MDFZZ		800613	SM-D-941755	GUIDERAILCKTCARD DH3	EA	1
4	82	MDFZZ		80063	SM-D-941753	GUIDERAILCKTCARD DH3	EA	1
4	83	XAFFD		80063	SM-D-941758	GUIDERAILASSEMBLY DH3	EA	1
4	84	XDFZZ		80063	SM-D-941758-1	RAIL DH3	EA	1
4	85	XDFZZ		80063	SM-A-942111-1	NUTSELFLOCKING DH3	EA	5
4	86	XAFFD		80063	SM-D-941754	GUIDEPAILASSEMBLY DH3	EA	1
4	87	MDFZZ		80063	SM-D-941754-1	RAIL DH3	EA	1
4	88	XDFZZ		80063	SM-A-942111-1	NUTSELFLOCKING DH3	EA	5
4	89	MDFZZ		80063	SM-D-941752	GUIDERAILCKTCARD DH3	EA	4
4	90	XAFFD		80063	SMD--941757	SIDEPANELASSEMBLY DH3	EA	1
4	91	MDFZZ		80063	SM-D-941757-1	PANEL DH3	EA	1
4	92	XDFZZ		80063	SM-A-942111-1	NUTSELFLOCK DH3	EA	6
4	93	XAFFD		80063	SN-D-941756	SIDEPANELASSEMBLY DH3	EA	1
4	94	MDFZZ		80063	SM-D-941756-1	PANEL DH3	EA	1
4	95	XDFZZ		80063	SA-942111-1	NUTSELFLOCKING DH3	EA	6

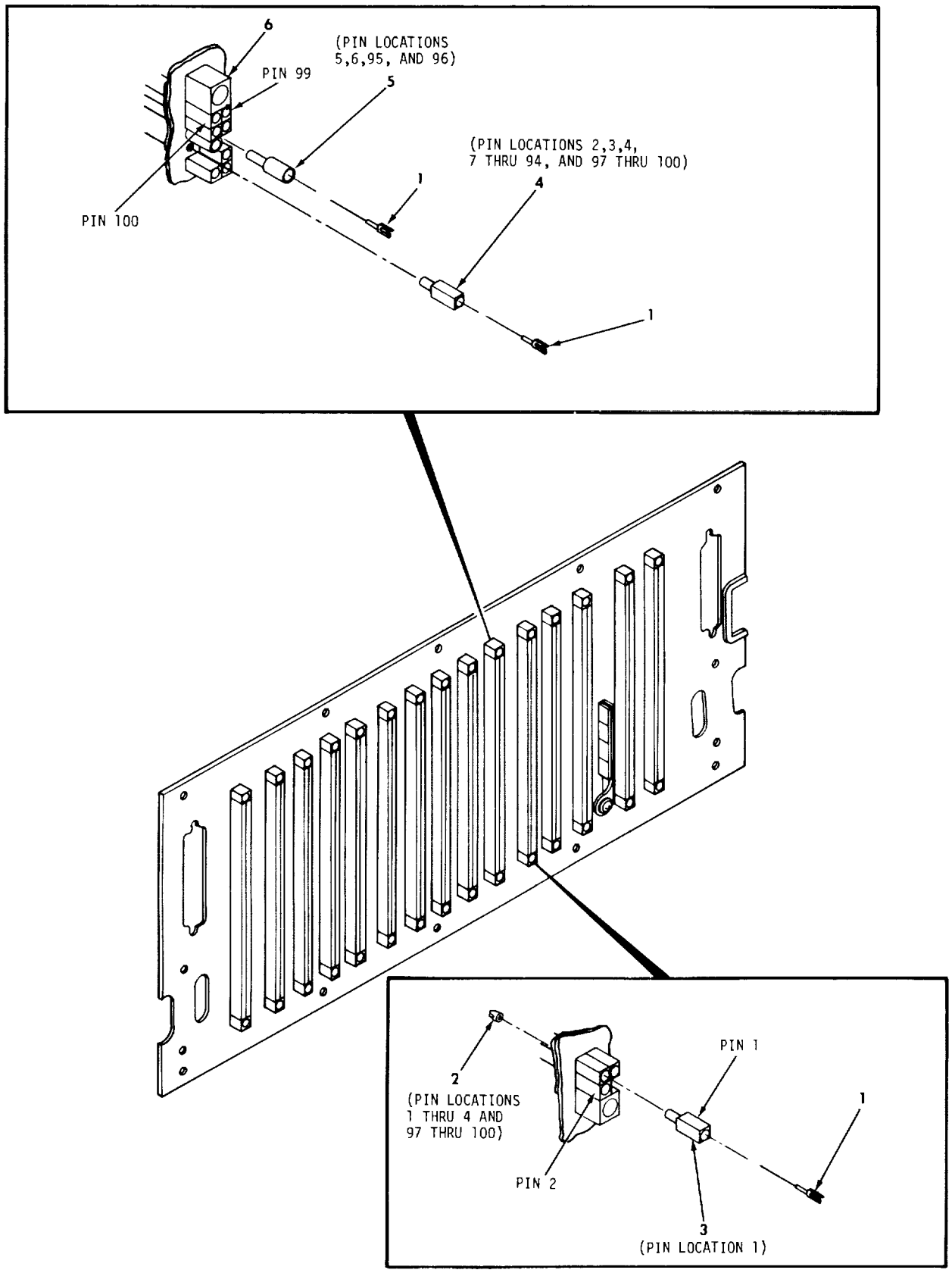

EL5CM017

Figure 5. Back plane assembly.

(1) ILLUSTRATION (a) FIG NO.	(b) ITEM NO.	(2) SMR CODE	(3) NATIONAL STOCK NUMBER	(4) FSCM	(5) PART NUMBER	(6) DESCRIPTION *USABLEONCODE*	(7) U/M	(8) QTY INC IN UNIT
						GROUP0201BACKPLANEASSEMBLY		
5	1	XDFZZ		31403	010-7514-503	CONTACTELEC.....DH3	EA	1500
5	2	XDFZZ		31403	516-0028-550	BUSHING.....DH3	EA	120
5	3	XDFZZ		31403	302-0002-003	INSULATOR.....DH3	EA	15
5	4	XDFZZ	5970-00-275-5242	31413	302-0002-002	INSULATOR,FEMALE.....DH3	EA	1425
5	5	XDFZZ		31403	516-0014-505	BUSHING.....DH3	EA	60
5	6	XDFZZ		31403	516-0019-000	BUSHING.....DH3	EA	30

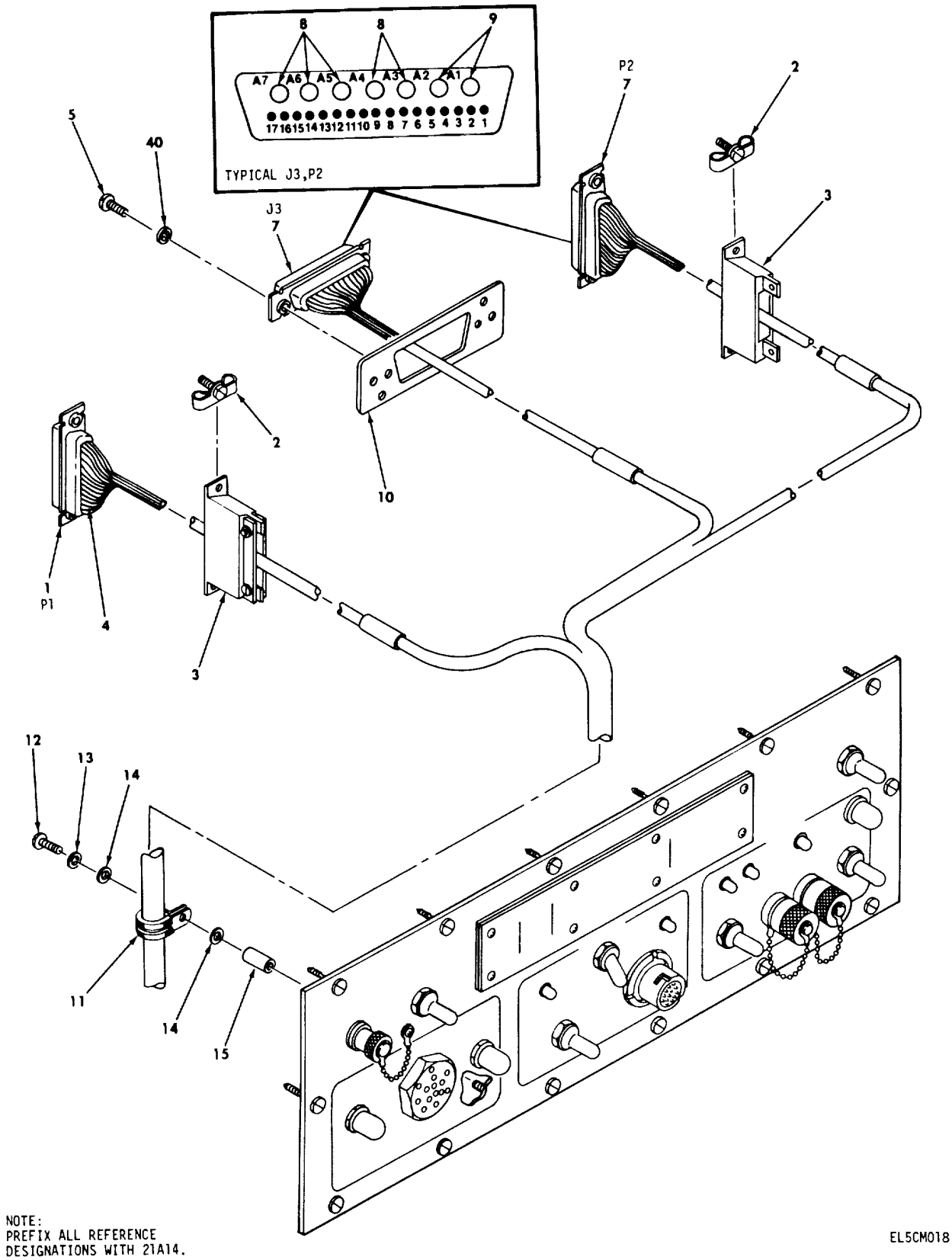

Figure 6. Control panel assembly 21A14 (sheet 1 of 7).

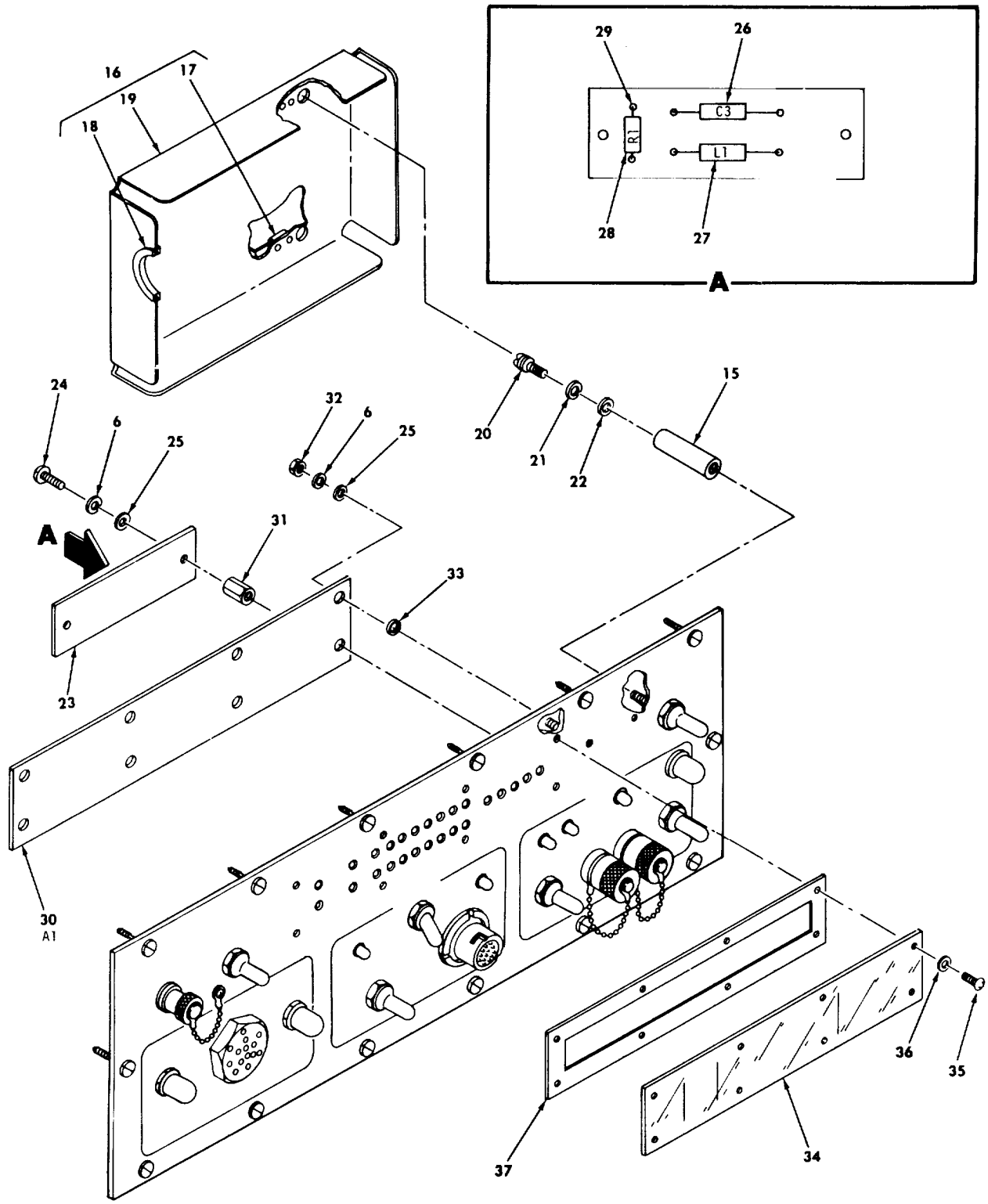

NOTE:
PREFIX ALL REFERENCE
DESIGNATIONS WITH 21A14.

EL5CM019

Figure 6. Control panel assembly 21A14 (sheet 2 of 7).

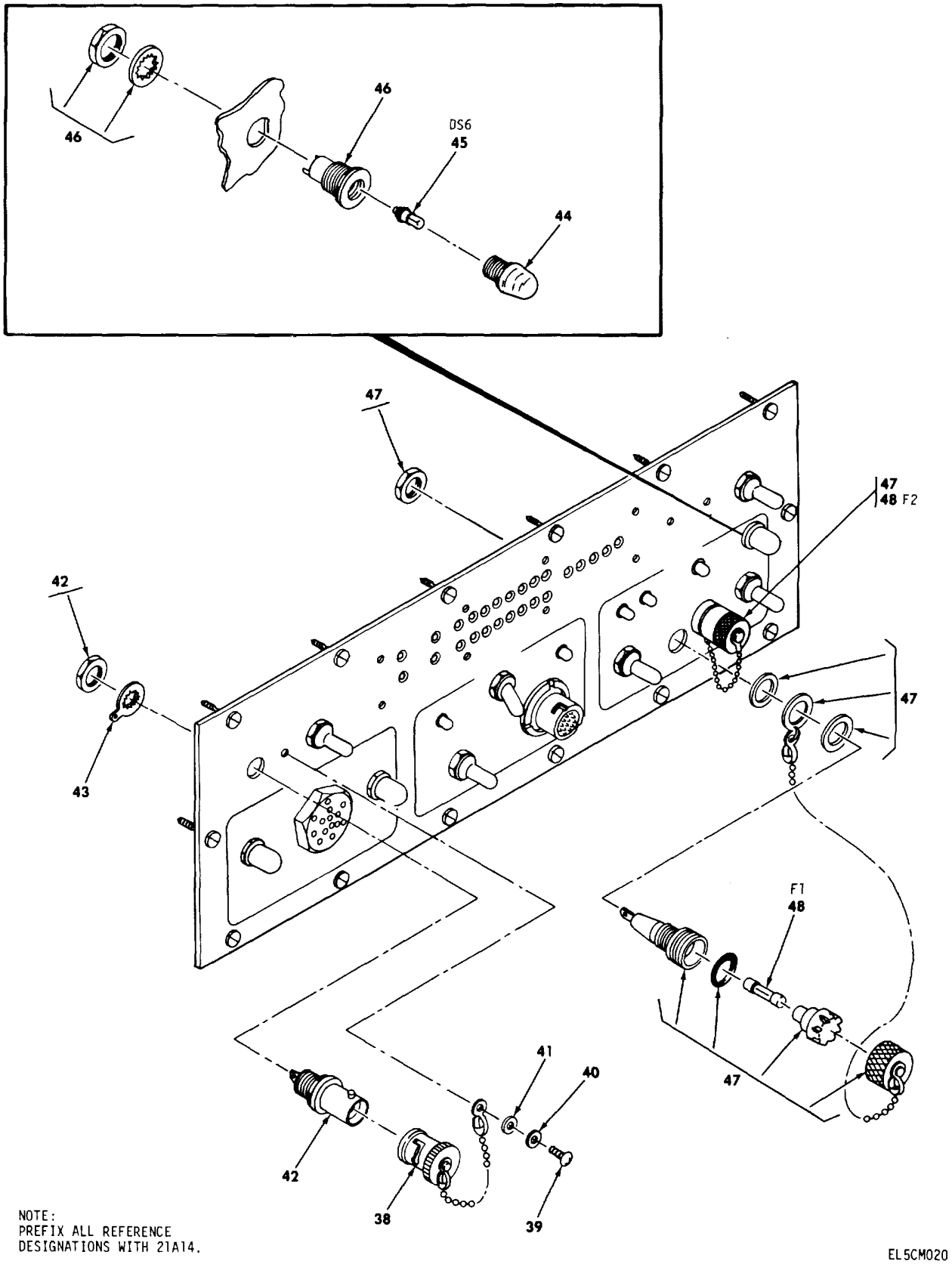

Figure 6. Control panel assembly 21A14 (sheet 3 of 7).

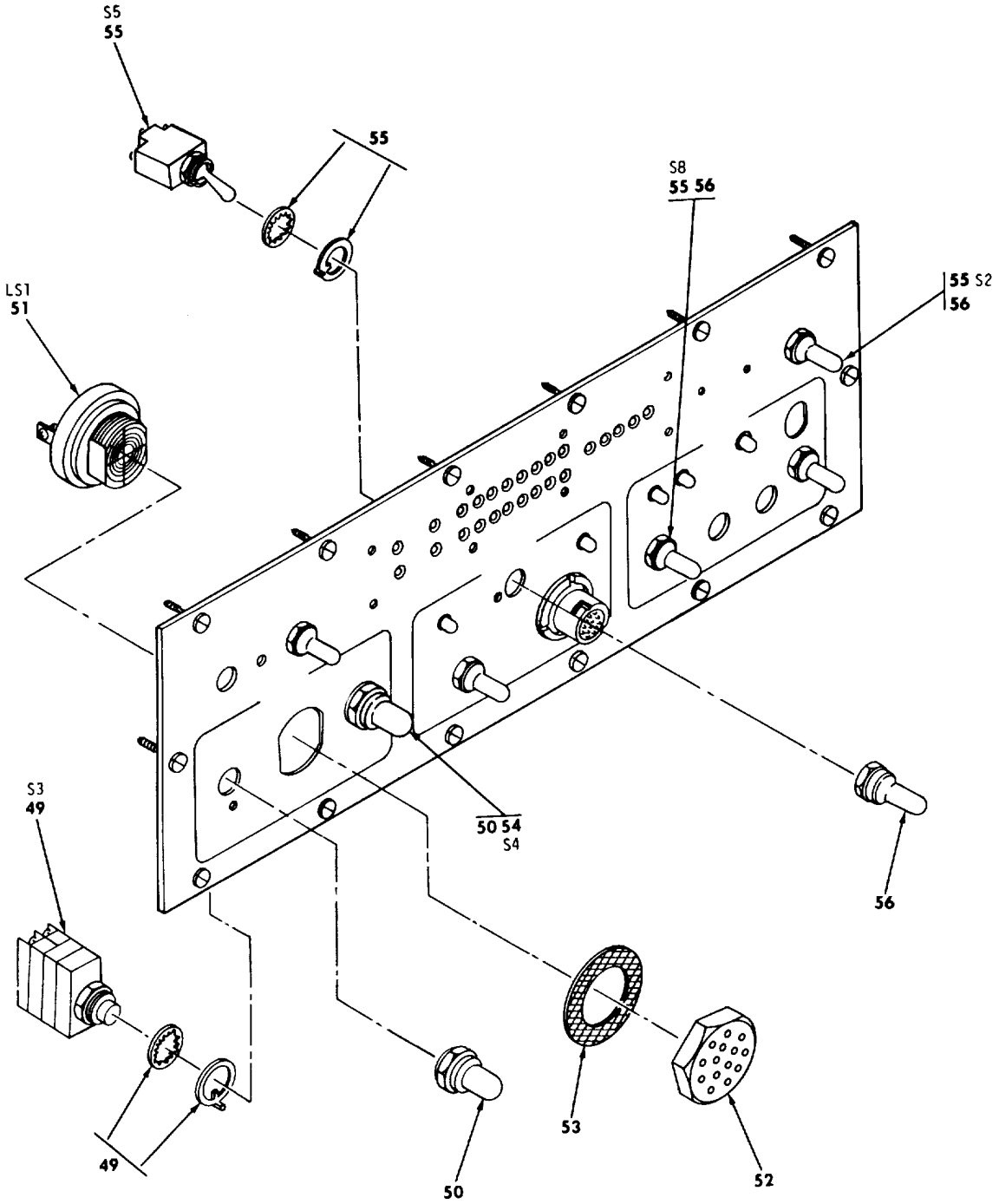

NOTE:
PREFIX ALL REFERENCE
DESIGNATIONS WITH 21A14.

EL5CM021

Figure 6. Control panel assembly 21A14 (sheet 4 of 7).

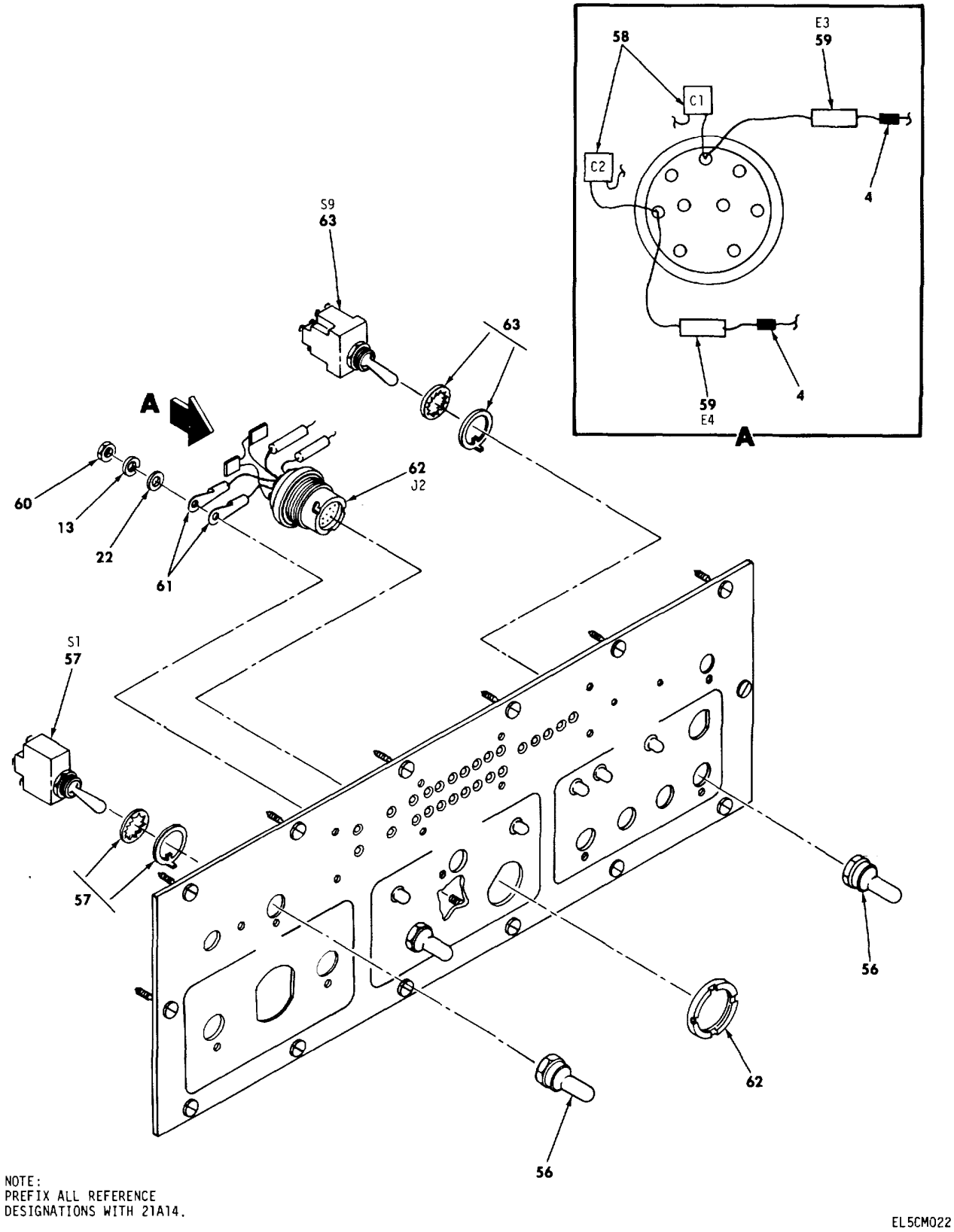

Figure 6. Control panel assembly 21A14 (sheet 5 of 7).

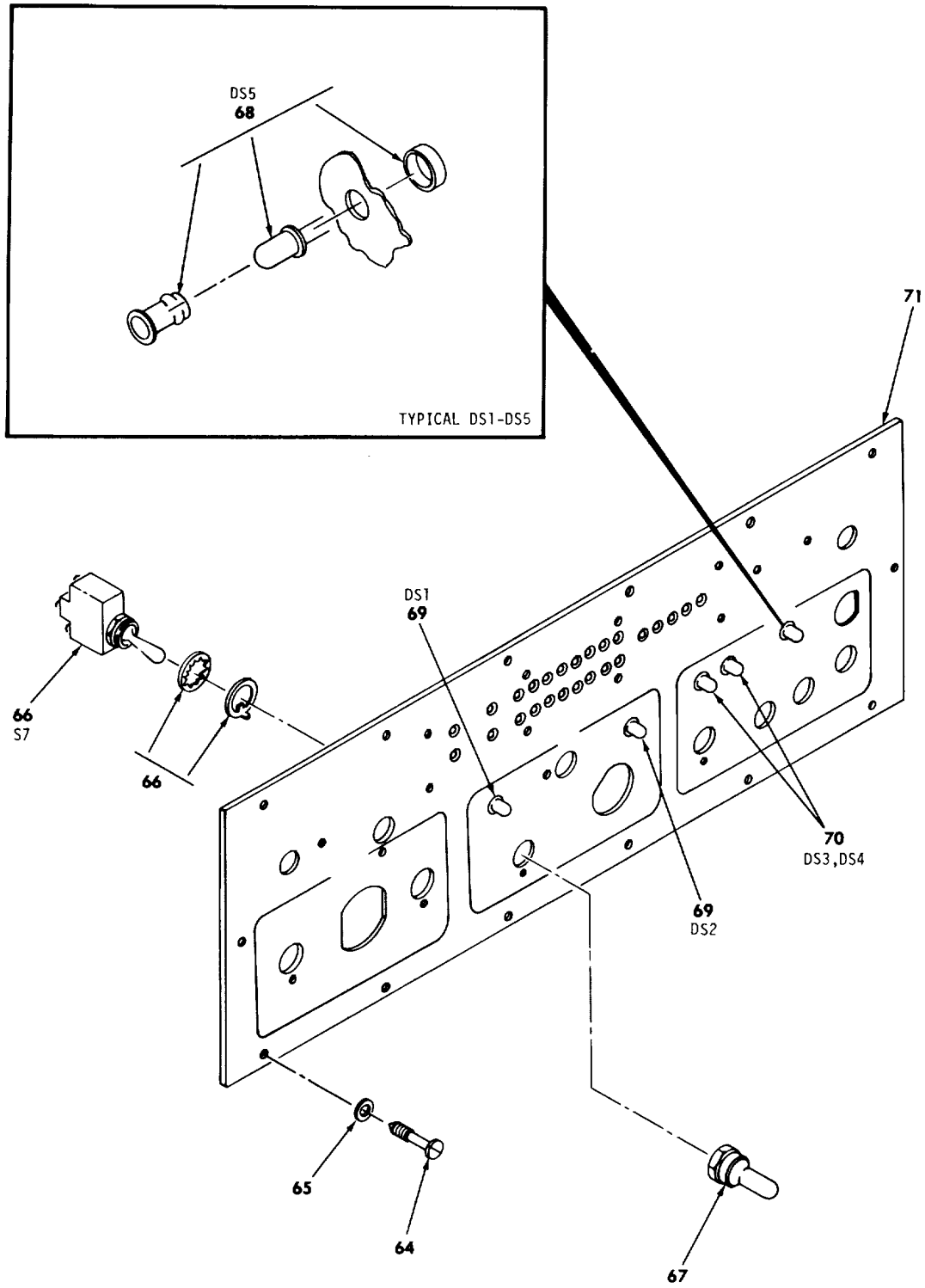

NOTE:
PREFIX ALL REFERENCE
DESIGNATIONS WITH 21A14.

EL5CM023

Figure 6. Control panel assembly 21A14 (sheet 6 of 7).

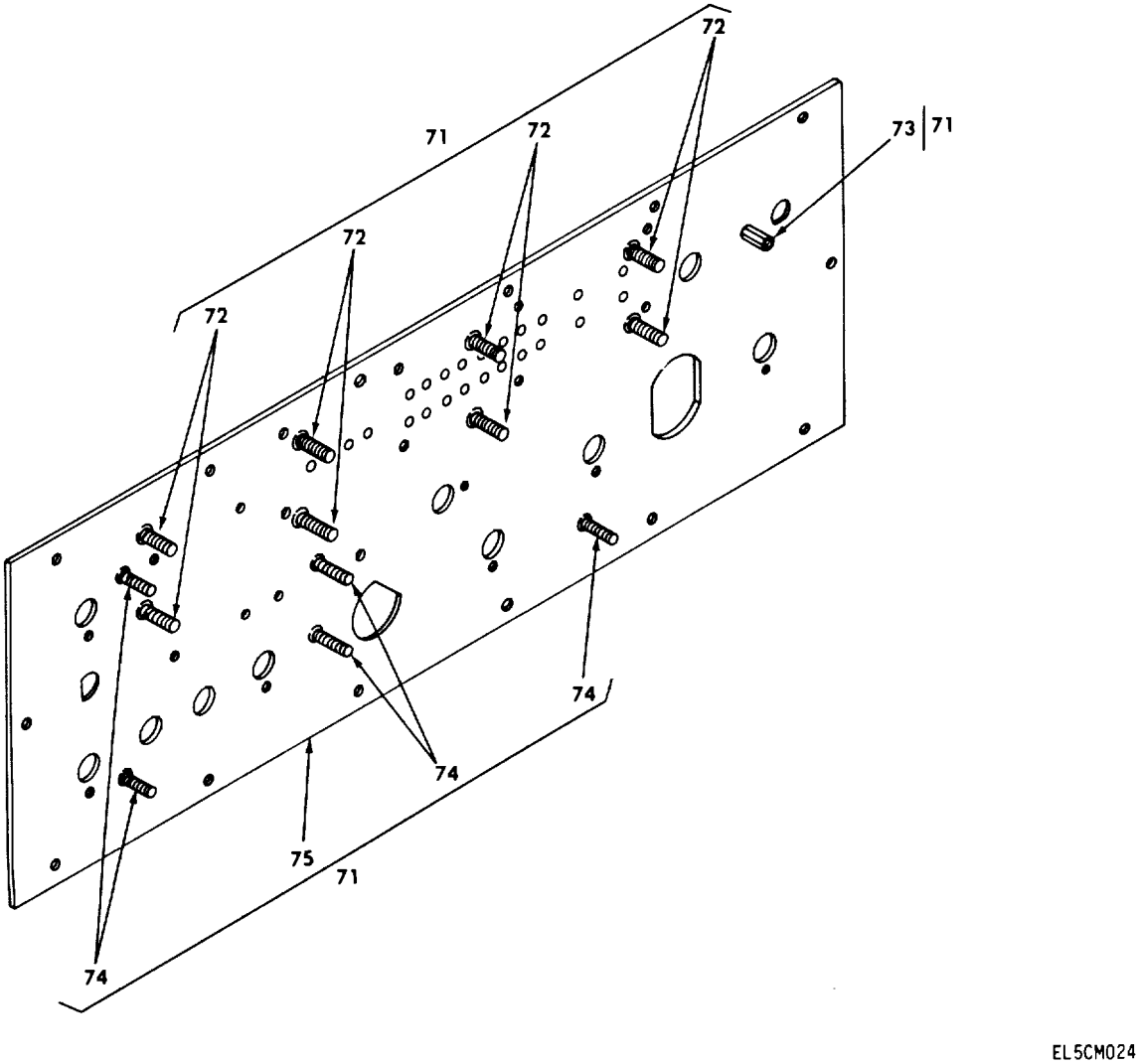

Figure 6. Control panel assembly 21A14 (sheet 7 of 7).

(1) ILLUSTRATION (a) FIG NO.	(b) ITEM NO.	(2) SMR CODE	(3) NATIONAL STOCK NUMBER	(4) FSCM	(5) PART NUMBER	(6) DESCRIPTION USABLEONCODE	(7) U/M	(8) QTY INC IN UNIT
						GROUP03CONTROLPANELASSEPBLY21A14		
6	1	PAFZZ	5935-00-489-1991	81349	M24308/2-5	CONCECTOR,RECEPTACL.....DH3	EA	1
6	2	XDFZZ		80063	SM-A-942137	SCREWLOCKMALE.....DH3	EA	4
6	3	XDFZZ	5935-01-028-6750	81349	M24308/20-S	SHIELD.ELECTRICALC.....DH3	EA	2
6	4	PAFZZ	5940-00-460-1733	80205	NAS1745-14	SPLICE,CONDUCTOR.....DH3	EA	6
6	5	PAFZZ	5305-00-889-3116	96906	MS35206-213	SCREW,MACHINE.....DH3	EA	2
6	6	PAFZZ	5310-00-579-0079	96906	MS35333--37	WASHER,LOCK.....DH3	EA	8
6	7	PAFZZ	5935-00-008-6786	80063	SM-B-942076	CONNECTOR,RECEPTACL.....DH3	EA	2
6	8	PAFZZ	5999-00-879-8472	80063	SM-B-942014-1	CONTACT.ELECTRICAL.....DH3	EA	10
6	9	PAFZZ	5999-01-056-5189	80063	SM-B-942074-2	CONTACT.ELECTRICAL.....DH3	EA	4
6	10	XDFZZ		80063	SM-A-942133	GUIDEPINPLATE.....DH3	EA	1
6	11	PAFZZ	5301-00-283-0649	96906	MS21919DG7	CLAMP.LOOP.....DH3	EA	1
6	12	PAFZZ	5301-00-984-6193	96906	MS35206-245	SCREW,MACHINE.....DH3	EA	1
6	13	PAFZZ	5310-00-559-0070	96906	MS35333-38	WASHER,LOCK.....DH3	EA	2
6	14	PAFZZ	5310-00-805-7632	80205	NAS620-8	WASHER,FLAT.....DH3	EA	2
6	15	XDFZZ		80063	SM-A-942167	STANDOFFROUND.....DH3	EA	4
6	16	MDFFD		80063	SM-C-941705	GUARDASSEMBLY.....DH3	EA	1
6	17	PAFZZ	5325-00-290-4925	96906	MS521332-3	FASTENER,SNAPSLIDE.....DH3	EA	3
6	18	XDFZZ	5325-00-960-2410	96906	MS21266-1N	GROMMET,NONMETALLIC.....DH3	SH	1
6	19	XAFZZ		80063	SM-C-941705-1	PANEL.....DH3	EA	1
6	20	PAFZZ	5325-00-171-1571	96906	MS21326-2	STUD.SNAPSLIDEFAST.....DH3	EA	3
6	21	PAFZZ	5310-00-576-0546	96906	MS35338-9	WASHER,LOCK.....DH3	EA	3
6	22	PAFZZ	5310-00-515-8058	88044	AN960-8	WASHER.FLAT.....DH3	EA	4
6	23	XDFZZ		80063	SM-C-941707	TERMINALBOARD.....DH3	EA	1
6	24	PAFZZ	5305-00-984-4988	96906	MS35206-228	SCREW,MACHINE.....DH3	EA	2
6	25	PAFZZ	5310-00-622-9531	80205	NAS620-6	WASHER,FLAT.....DH3	EA	8
6	26	XDFZZ	5910-00-935-3511	81349	M39003/01-2286	CAPACITOR,FIXED,ELE.....DH3	EA	1
6	27	PAFZZ	5950-00-005-5074	96906	MS14048-4	COIL.RADIOFREQUENC.....DH3	.EA	1
6	28	XDFZZ	5905-00-105-7768	81349	RCR07G561JS	RESISTOR.FIXED,COMP.....DH3	EA	1
6	29	PAFZZ	5940-00-725-9498	81349	SE12XC07	TERMINALSTUD.....DH3	EA	6
6	30	XDFFO	7025-01-094-8308	80063	SM-D-941720	CIRCUITCARDASSEMB.CONTROLPANEL21A14A1.....DH3	EA	1
6	31	XDFZZ		80205	MAS1786806-12	POSTELEC-MECH.....DH3	EA	2
6	32	PAFZZ	5310-00-631-1294	80205	NAS671-6	NUT,PLAINHEXAGON.....DH3	EA	6
6	33	XDFZZ	5365-00-684-5976	80205	NAS43DD1-7	SPACER,SLEEVE.....DH3	EA	8
6	34	MDFZZ		80063	SM-C-941703	WINDOW.....DH3	EA	1
6	35	PAFZZ	5305-00-993-0190	96906	MS35206-214	SCREW,MACHINE.....DH3	EA	8
6	36	PAFZZ	5310-00-950-1310	96904	MS2T83-4	WASHER.FLAT.....DH3	EA	8
6	37	MDFZZ		80063	SM-C-941704	GASKET.....DH3	EA	1
6	38	PAOZZ	5935-00-885-2264	81349	M39012/25-0006	COVER,ELECTRICALCO.....DH3	EA	1
6	39	PAOZZ	5305-00-889-2998	96906	MS35206-216	SCREW,MACHINE.....DH3	EA	1

(1) ILLUSTRATION (a) FIG NO.	(b) ITEM NO.	(2) SMR CODE	(3) NATIONAL STOCK NUMBER	(4) FSCM	(5) PART NUMBER	(6) DESCRIPTION *USABLEONCODE*	(7) U/M	(8) QTY INC IN UNIT
6	40	PADZZ	5310-00-193-7577	96906	MS35333-36	WASHER,LOCK DH3	EA	3
6	41	PADZZ		88044	NAS620-4	WASHER,FLAT DH3	EA	1
6	42	PAFZZ	5935-00-997-8026	81349	M39012/24-002	CDNNECTOR,RECEPTACL DH3	EA	1
6	43	XDFZZ	5940-00-405-2175	81349	814	TERMINAL,LUG DH3	EA	1
6	44	XDFZZ	6210-00-191-2709	81349	LC33YN2	LENS,LIGHT DH3	EA	1
6	45	PADZZ	6240-00-723-3378	80063	SM-A-942110	LAMP,GLOW DH3	EA	1
6	46	XDFZZ	6210-00-183-0576	81349	LH88/2	LIGHT,INDICATOR DH3	EA	1
6	47	XDFZZ	5920-00-887-6514	81349	FHN55W	FUSEHOLOER,EXTRACTO DH3	EA	2
6	48	PADZZ	5920-01-028-5727	81349	F028250V3A	FUSE,-CARTRIDGE DH3	EA	2
6	49	PAFZZ	5930-00-468-2767	81349	M8805/25-001	SWITCH,PUSH DH3	EA	1
6	50	PAFZZ	5930-00-800-5770	81349	M5423/07-01	BOOT,DUSTANDMOIST DH3	EA	2
6	51	XDFZZ		80063	SM-B-942083	ALARM-MONITCR DH3	EA	1
6	52	XDFZZ		80063	SM-C-941706	CAPALARM DH3	EA	1
6	53	MDFZZ		80063	SM-B-52086-6	SHIELDING-GASKET,EL DH3	EA	1
6	54	PAFZZ	5930-00-999-4401	81349	M8805/23-001	SWITCH.SENSITIVE DH3	EA	1
6	55	PAFZZ	5930-00-540-8311	96906	MS27735-23	SWITCH,TOGGLE DH3	EA	3
6	56	PAFZZ	5930-00-494-4657	80063	SM-A-942064	BOOT,DUSTANDMOIST DH3	EA	5
6	57	PAFZZ	5930-00-036-8716	96906	MS27734-22	SWITCH,TDGGLE DH3	EA	1
6	58	XDFZZ	5910-00-099-0538	81349	M39014/02-1342	CAPACITOR,FIXED,CER DH3	EA	2
6	59	XDFZZ		80063	SM-A-942085-1	FERRITEBEAD DH3	EA	2
6	60	PAFZZ	5310-00-660-2971	96906	MS25082-2	NUT,PLAIN,HEXAGDN DH3	EA	1
6	61	PAFZZ	5940-00-079-8324	96906	MS35430-5	TERMINAL,LUG DH3	EA	2
6	62	PAFZZ	5935-00-549-2646	80058	U-79/U	CONNECTOR,RECEPTACL DH3	EA	1
6	63	PAFZZ	5930-00-325-6153	96906	MS27735-22	SWITCH,TOGGLE DH3	EA	1
6	64	MDFZZ		80063	SM-B-528627-4	SCREW,EXTERNALLYR DH3	EA	14
6	65	PAFZZ	5310-00-457-1488	88044	AN960XC8	WASHER,FLAT DH3	EA	14
6	66	PAFZZ	5930-01-027-8176	96906	MS27734-31	SWITCH,TOGGLE DH3	EA	1
6	67	PAFZZ	5930-00-539-7013	81349	M5423/02-01	BOOT,DUSTANDMOIST DH3	EA	1
6	68	PAFZZ	6210-00-978-4533	81349	LHC82/1GT2	LIGHT,INDICATDR DH3	EA	1
6	69	PAFZZ	6210-00-064-2998	81349	LHC82/1WT2	LIGHT,INDICATOR DH3	EA	2
6	70	PAFZZ	6210-00-978-2546	81349	LHC82/1YT2	LIGHT,INDICATOR DH3	EA	2
6	71	MDFFD		80063	SM-D-941702	PANELASSYFRONT DH3	EA	1
6	72	XDFZZ		80063	SM-A-942129-1	STUDCLINCHING DH3	EA	8
6	73	XDFZZ		80063	SM-A-942142-2	NUTPLAINCLINCH DH3	EA	1
6	74	XDFZZ		80063	SM-A-942129-2	STUDSELF-LOCKING DH3	EA	5
6	75	XAFZZ		80063	SM-D-941702-1	PANEL DH3	EA	1

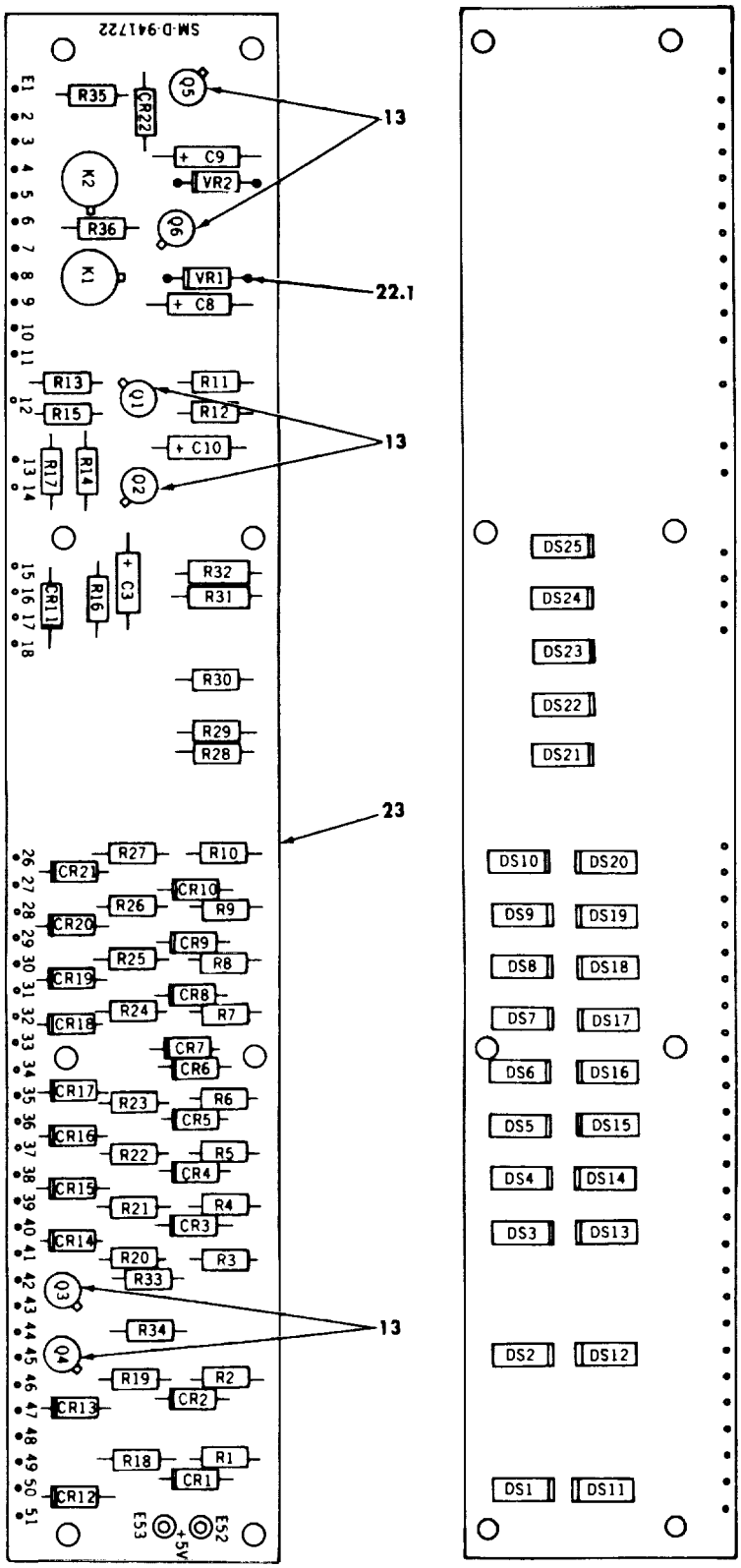

REF DES	ITEM NO.
C3	2
C8, C9	3
C10	4
CR1 - CR22	5
DS1 - DS25	6
E52, E53	7
K1, K2	8
Q1	9
Q2	10
Q3, Q4	11
Q5	12
Q6	11
R1 - R10	14
R11	15
R12	16
R13	17
R14	18
R15	19
R16	18
R17	20
R18 - R35	14
R36	21
VR1, VR2	22

NOTE:
PREFIX ALL REFERENCE DESIGNATIONS WITH 21A14A1.

Figure 7. Circuit card assembly, control panel 21A14A1.

(1) ILLUSTRATION (a) FIG NO.	(b) ITEM NO.	(2) SMR CODE	(3) NATIONAL STOCK NUMBER	(4) FSCM	(5) PART NUMBER	(6) DESCRIPTION USABLE ON CODE	(7) U/M	(8) QTY INC IN UNIT
						GROUP 0301 CCA CONTROL PANEL 21A14A1		
7	2	XDFZZ	5910-00-185-9045	81349	N39003/01-3000	CAPACITOR, FIXED,.ELE.....DH	EA	1
7	3	XDFZZ	5910-00-236-8740	81349	M39003/01-2974	CAPACITOR, FIXED,.ELE.....DH	EA	2
7	4	XODZZ	5910-00-078-7227	81349	M39003/01-2283	CAPACITOR, FIXED, ELE.....DH	EA	1
7	5	XDFZZ	5961-01-081-9573	81349	JANIN4153-1	SEMICONDUCTOR DEVIC.....DH	EA	22
7	6	XDFZZ	5961-01-090-0102	80063	SM-A-942039	LIGHT EMITTING DIOD.....DH	EA	25
7	7	XDFZZ	5940-00-082-4861	81349	SE12XC04	TERMINAL, STUD.....DH	EA	2
7	8	PAFZZ	5945-01-017-6015	81349	M39016/15-006M	RELAY, ELECTROMAGNET.....DH	EA	2
7	9	XDFZZ	5961-00-488-7385	81349	JAN2N4931	TRANSISTOR.....DH	EA	1
7	10	PAFZZ	5961-00-022-5670	81349	JAN2N3439	TRANSISTOR.....DH	EA	1
7	11	PAFZZ	5961-00-951-8757	81349	JAN2N2222A	TRANSISTOR.....DH	EA	3
7	12	XDFZZ	5961-00-925-3777	81349	JAN2N2907A	TRANSISTOR.....DH	EA	1
7	13	XDFZZ		80063	SM-A-942098	INSULATOR DISK.....DH	EA	6
7	14	PAFZZ	5905-00-110-7620	81349	RCR07G102JS	RESISTOR, FIXED, COMP.....DH	EA	28
7	15	XDFZZ	5905-00-482-0619	81349	RWRBIS82RSFR	RESISTOR, FIXED, WIRE.....DH	EA	1
7	16	XDFZZ	5905-00-111-0711	81349	RCROG472JS	RESISTOR, FIXED, COMP.....DH	EA	1
1	7	XDFZZ	5905-00-116-8555	81349	RCROTG153JS	RESISTOR, FIXED, CP.....DH	EA	1
7	18	XDFZZ	5905-00-106-3666	81349	RCRO7G103JS	RESISTOR, FIXED, COMP.....DH	EA	2
7	19	XDFZZ	5905-00-110-0388	81349	RCRO1G104JS	RESISTOR, FIXED, COMP.....DH	EA	1
7	20	XDFZZ	5905-00-485-4545	81349	RCRO7G334JS	RESISTOR.FIXED, COMP.....DH	EA	1
7	21	XDFZZ	5905-00-114-0710	81349	RCROTG31JS	RESISTOR, FIXED, COMP.....DH	EA	1
7	22	PAFZZ	5961-00-460-0983	81349	JAN1N4954	SEMICONDUCTOR DEVI.....DH	EA	2
7	22.1	PAFZZ		80063	SM-A-942164	CONNECTOR PLUG ELE.....DH	EA	4
7	23	XAFZZ		80063	SM-D-941722	PRINTED WIRING D.....DH	EA	1

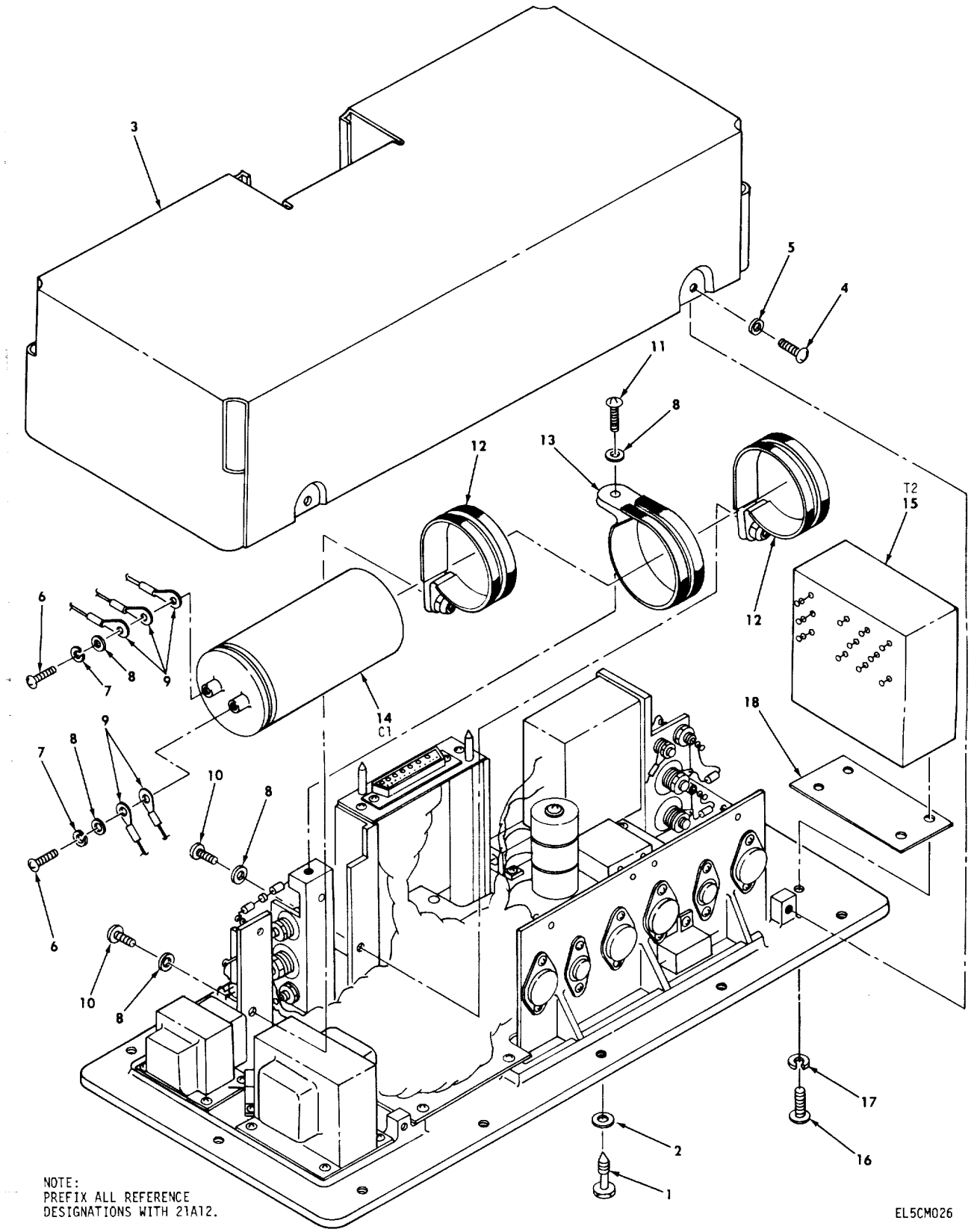

Figure 8. Power supply assembly 21A12 (sheet 1 of 9).

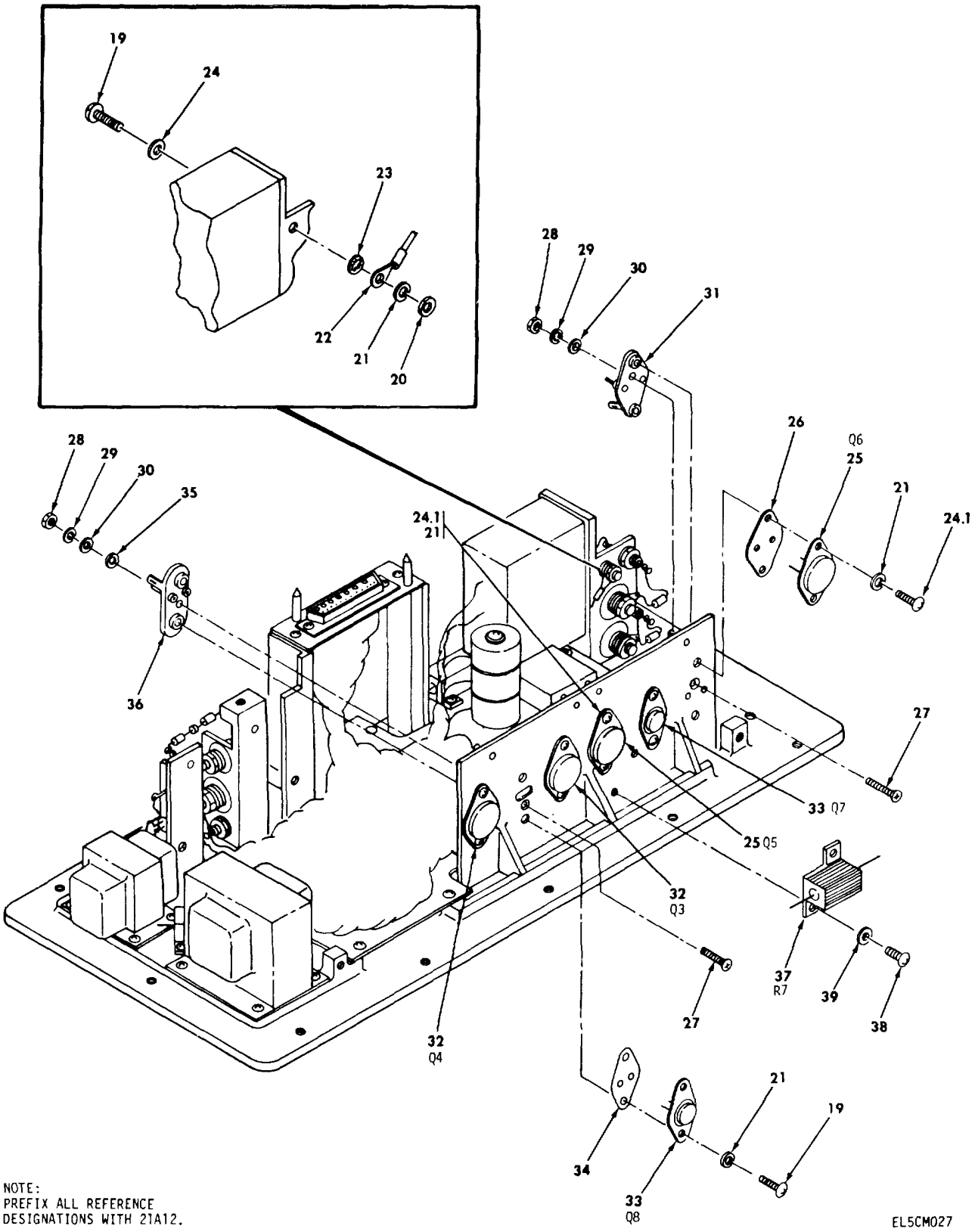

Figure 8. Power supply assembly 21A12 (sheet 2 of 9).

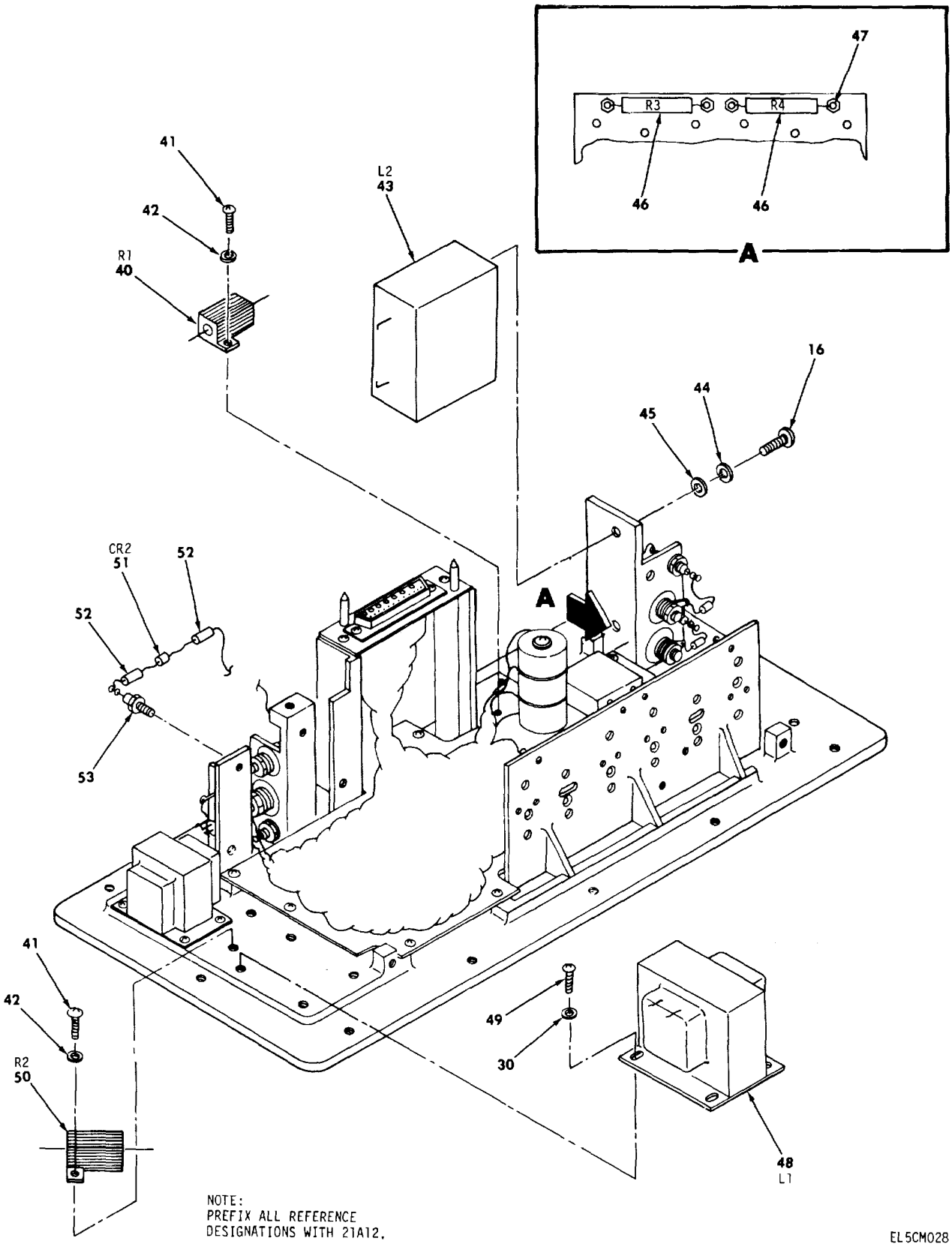

Figure 8. Power supply assembly 21A12 (sheet 3 of 9).

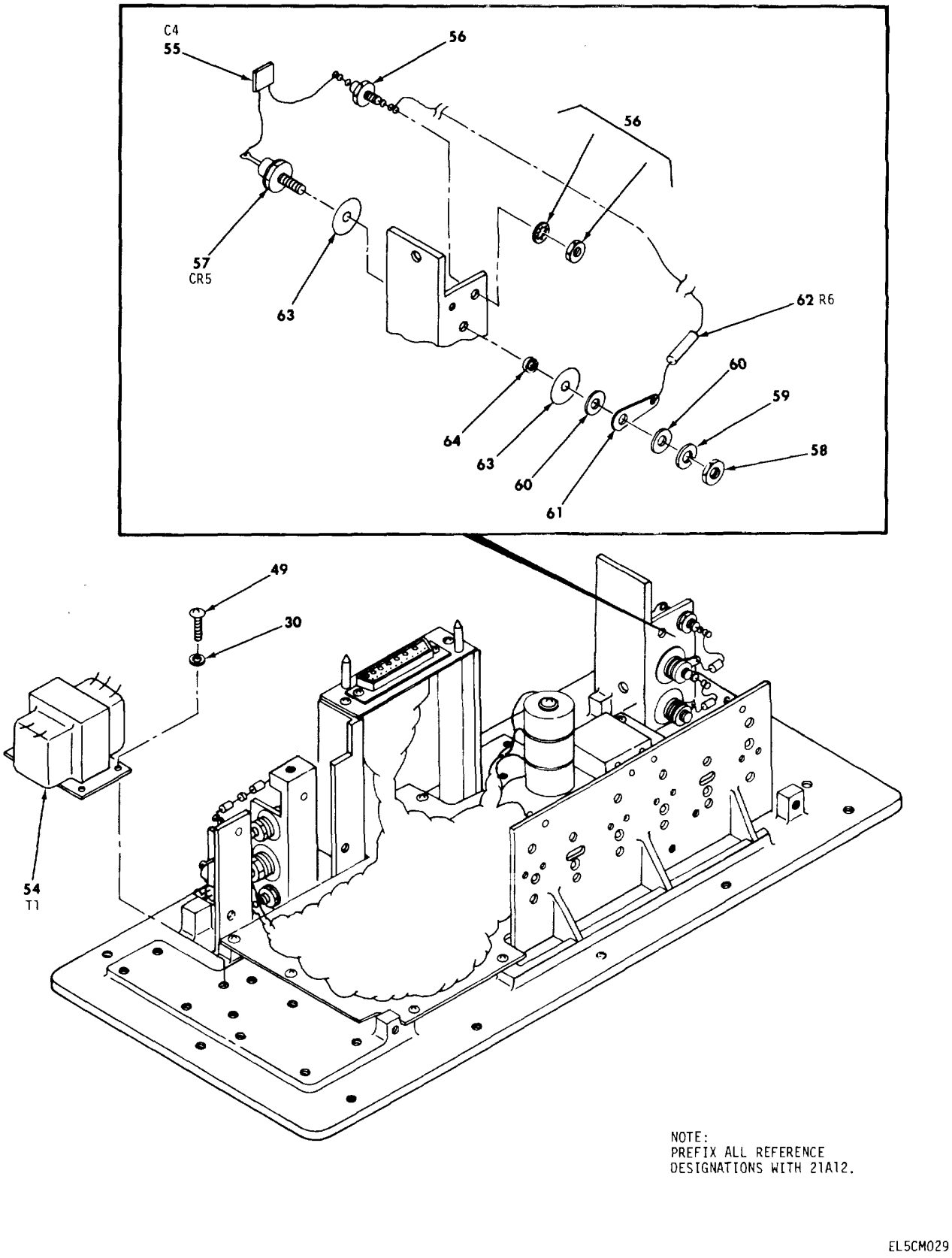

Figure 8. Power supply assembly 21A12 (sheet 4 of 9).

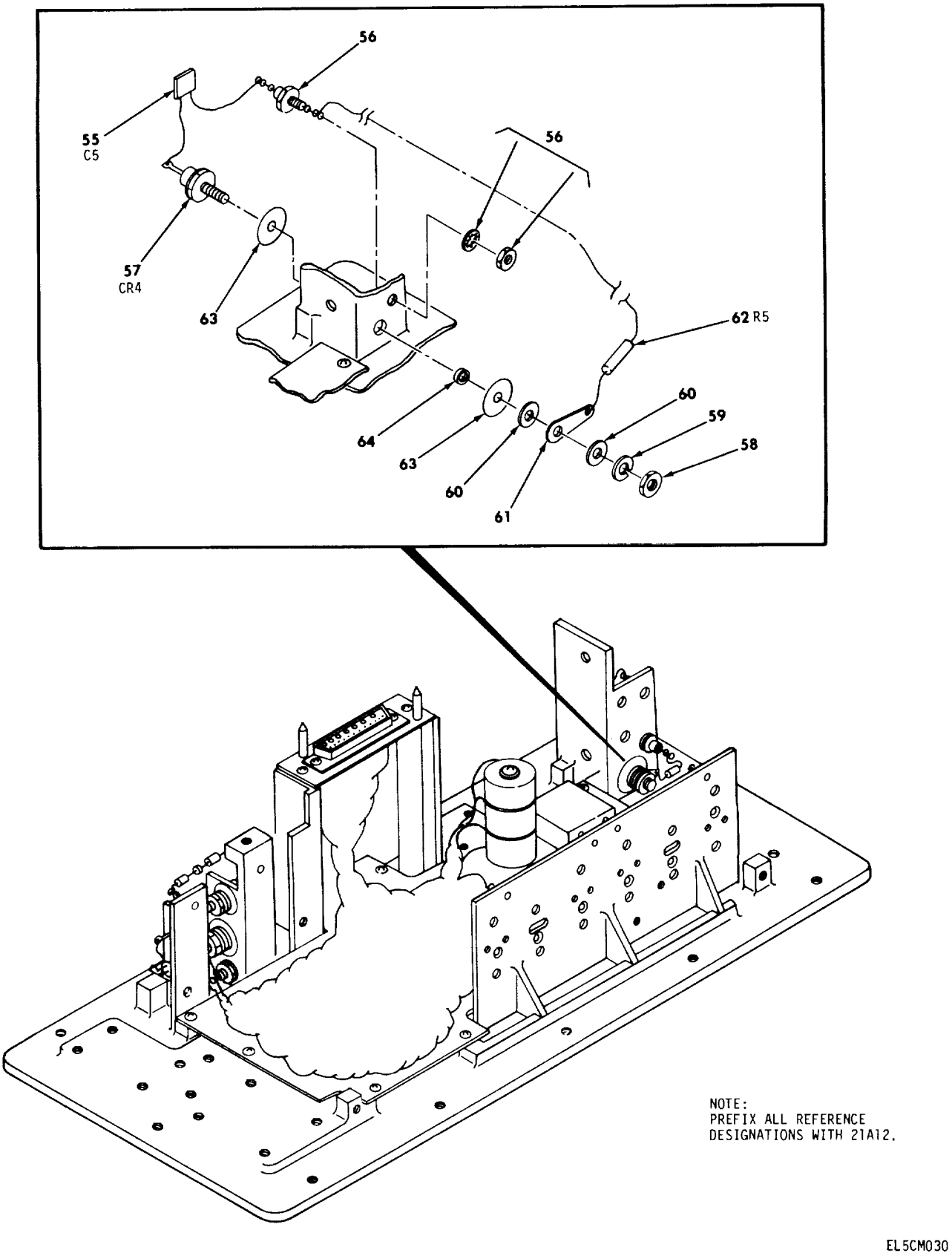

Figure 8. Power supply assembly 21A12 (sheet 5 of 9).

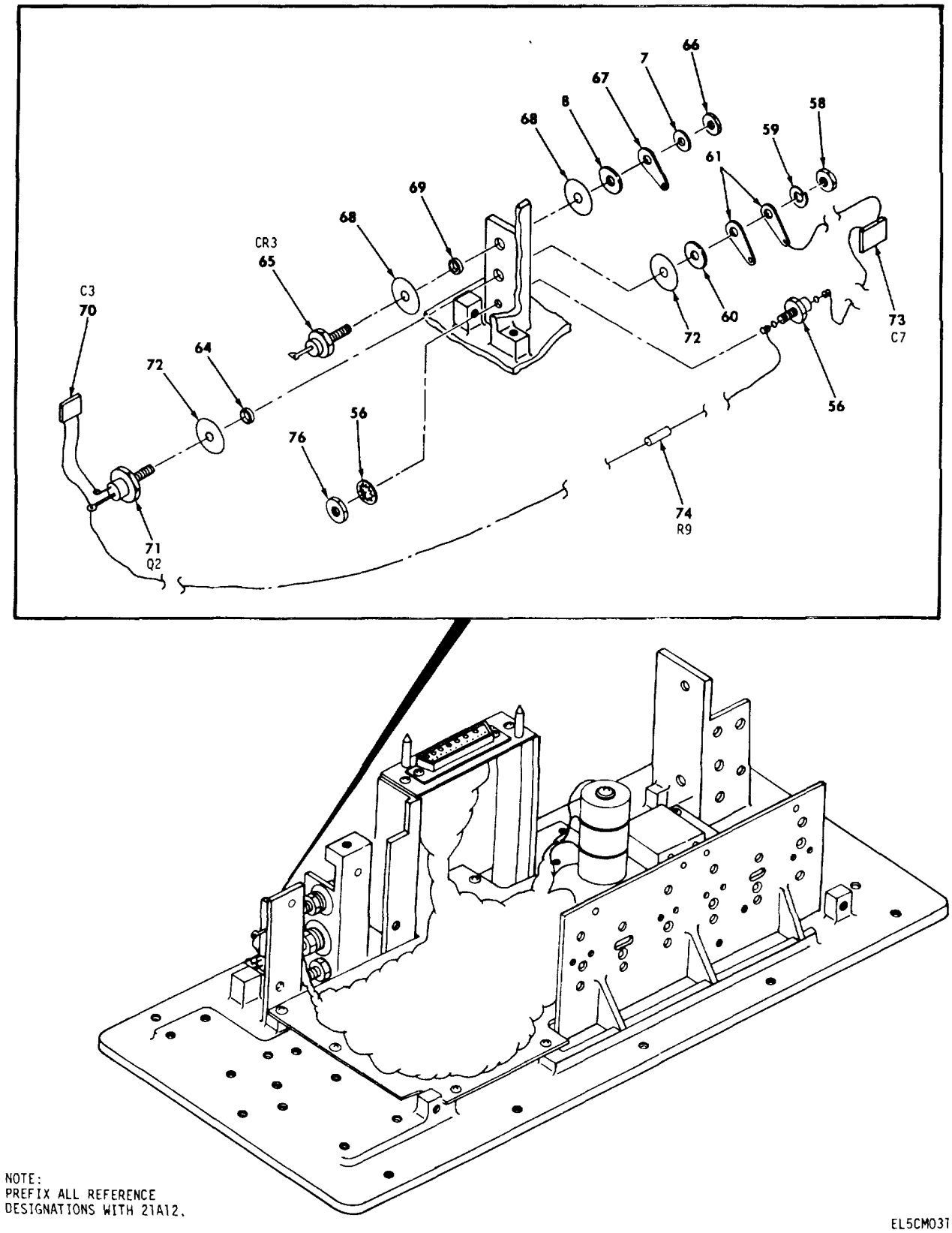

Figure 8. Power supply assembly 21A12 (sheet 6 of 9).

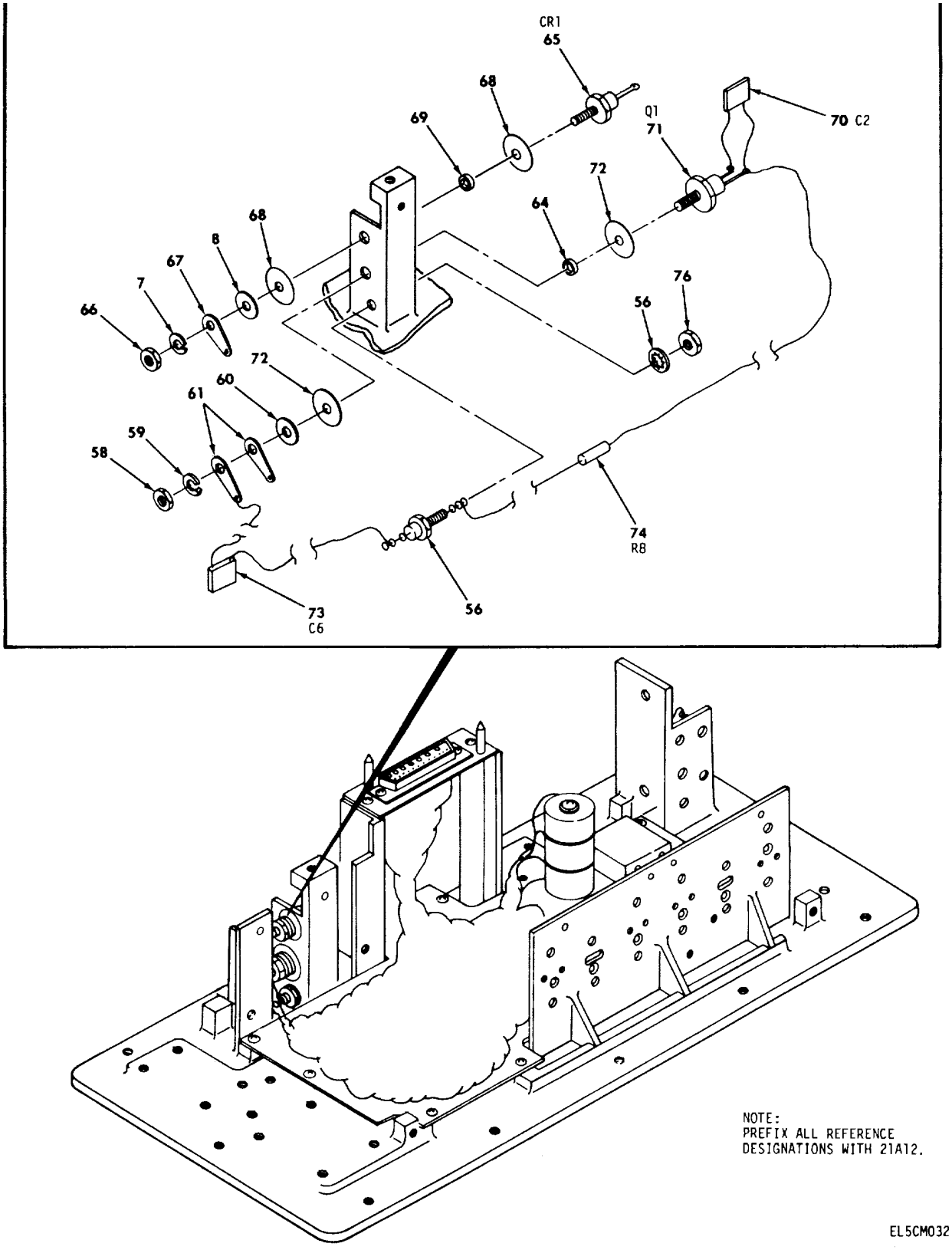

Figure 8. Power supply assembly 21A12 (sheet 7 of 9).

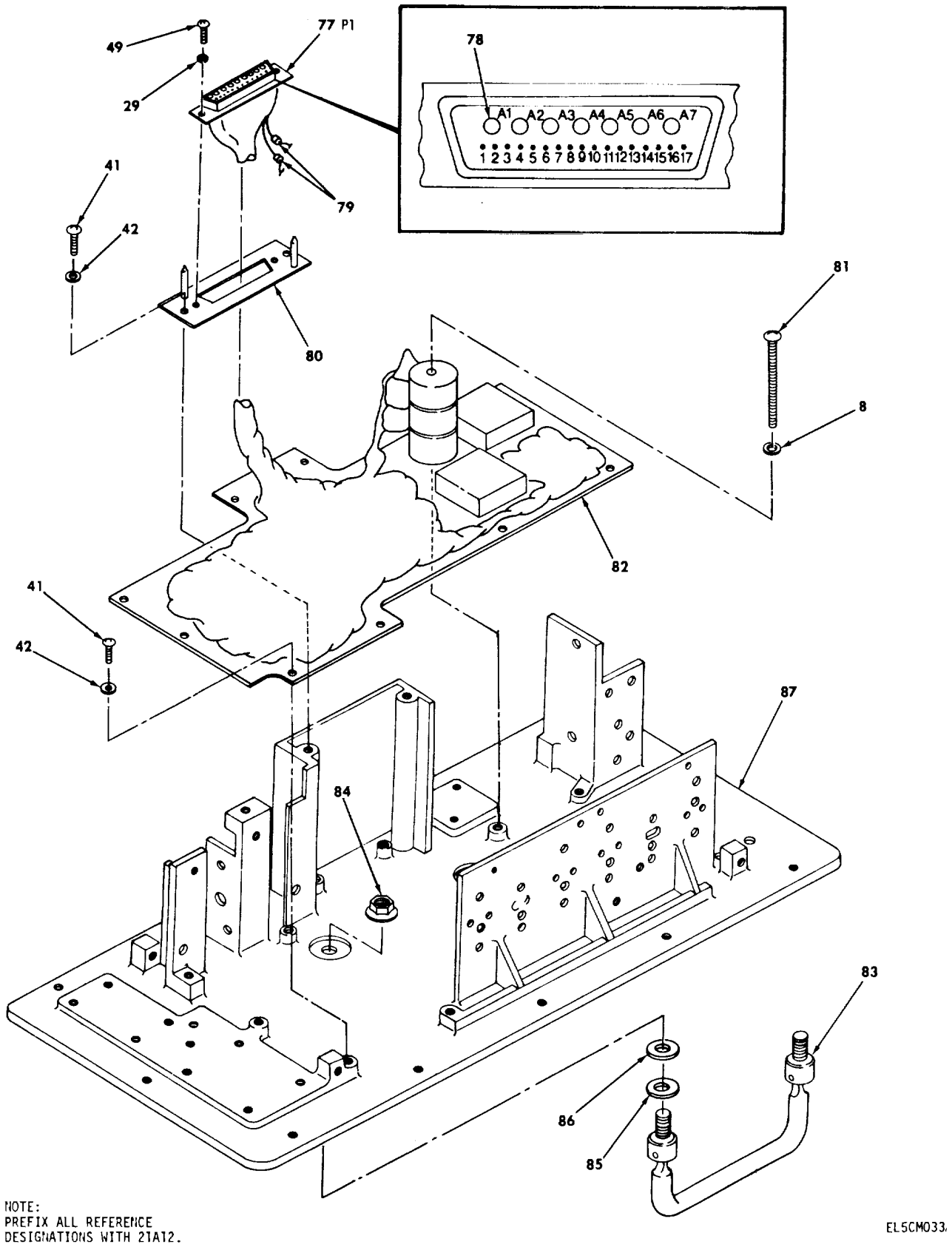

Figure 8. Power supply assembly 21A12 (sheet 8 of 9).

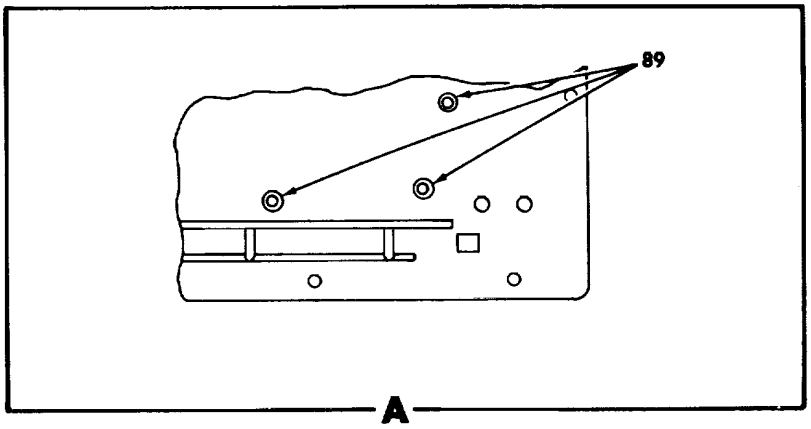

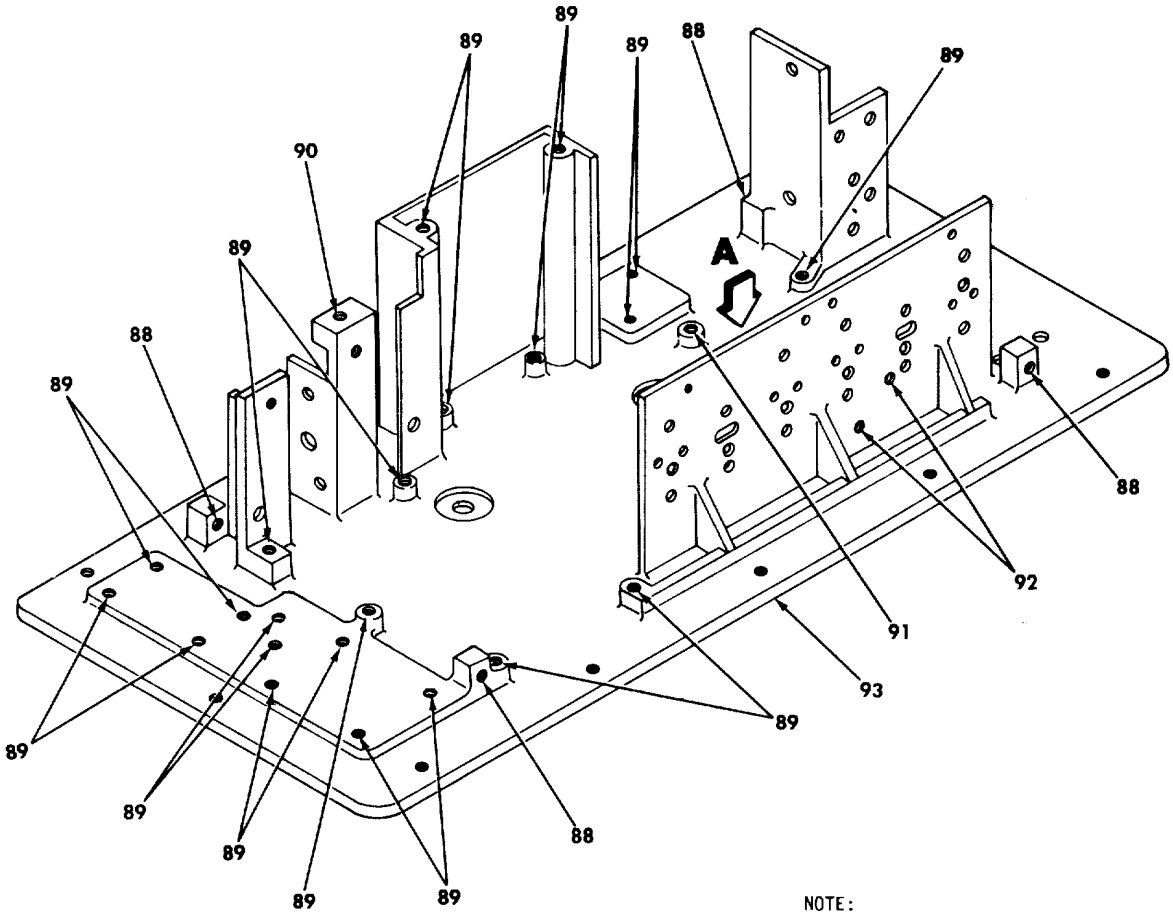

EL5CM034

Figure 8. Power supply assembly 21A12 (sheet 9 of 9).

(1) ILLUSTRATION (a) FIG NO.	(b) ITEM NO.	(2) SMR CODE	(3) NATIONAL STOCK NUMBER	(4) FSCM	(5) PART NUMBER	(6) DESCRIPTION USABLE ON CODE	(7) U/M	(8) QTY INC IN UNIT
						GROUP 04 POWER SUPPLY ASSEMBLY 21A12		
8	1	MDOZZ		80063	SM-B-528627-4	SCREW, EXTERNALLY R DH3	EA	12
8	2	PACZZ	5310-00-457-488	88044	AN960XCB	WASHER, FLAT DH3	EA	12
8	3	XDHZZ		80063	SM-D-941B11	COVER DH3	EA	1
8	4	PAHZZ	5305-00-984-6192	96906	MS3520-244	SCREW, MACHINE DH3	EA	4
8	5	PAHZZ	5310-00-167-0833	88044	AN960-8L	WASHER, FLAT DH3	EA	4
8	6	PAHZZ	5305-00-989-6265	96906	MS35207-262	SCREW, MACHINE. DH3	EA	2
8	7	PAHZZ	5310-00-261-8278	96906	NS35338-100	WASHER, LOCK DH3	EA	4
8	8	PAHZZ	5310-00-167-0834	88044	AN960-10L	WASHER, FLAT DH3	EA	8
8	9	PAHZZ	5994-00-143-4771	96906	MS25036-L03	TERMINAL, LUG.....DH3	EA	5
8	10	XDHZZ	5305-00-993-1848	96906	MS35207-265	SCREW, MACHINE DH3	EA	2
8	11	PAHZZ	5305-00-989-7434	c6906	MS35207-263	SCREW, MACHINE DH3	EA	1
8	12	XDHZZ		80063	SM-A-942066	CLAMP LOOP.....DH3	EA	2
8	13	PHHZZ	5340-00-223-1286	96906	MS2110532	CLAMP.LOOP DH3	EA	1
8	14	XDHZZ	5910-00-059-2439	81349	CE71C102K	CAPACITOR, FIXED.....DH3	EA	1
8	15	XDHZZ		80063,	SM-B-942060	TRANSFORMER, POWER.....DH3	EA	1
8	16	PAHZZ	5305-00-984-6193	96906	MS35206-245	SCREW, MACHINE DH3	EA	6
8	17	PAHZZ	5310-00-559-0070	96906	MS35333-38	WASHER, LOCK DH3	EA	4
8	18	PAHZZ		80063	SM-C-941813	GASKET.....DH3	EA	1
8	19	PAHZZ	5305-00-889-3000	96906	M535206-230	SCREW, MACHINE DH3	EA	9
8	20	PAHZZ	5310-00-631-1294	80205	NAS671-6	NUT, PLAIN, HEXAGON.....DH3	EA	1
8	21	PAHZZ	5310-00-184-8977	96906	MS3533898	WASHER, LOCK DH3	EA	1
8	22	PAHZZ	5940-00-204-8966	96906	MS25036-02	TERMINAL, LUG.....DH3	EA	1
8	23	PAHZZ	5110-00-579-0079	96906	S35333-37	WASHER, LOCK DH3	EA	1
8	24	PAHZZ	5310-00-167-0816	88044	AN960-6	WASHER, FLAT DH3	EA	4
8	24.1	XDHZZ	5305-00-889-3001	96906	MS35206-231	SCREW, MACHINE DH3	EA	2
8	25	XDHZZ		80063	SA-94216-1	TRANSISTOR.....DH3	EA	4
8	26	XDHZZ		80063	SM-A-942I43	INSULATOR PLATE.....DH3	EA	6
8	27	PAHZZ	5305-00-045-8338	96906	MS524693-S7	SCREW, MACHINE DH3	EA	6
8	29	PAHZZ	5310-00-810-7785	80205	NAS671--4	NUT, PLAIN, HEXAGON DH3	EA	8
8	q2	PADZZ	5310-00-184-8996	96906	M515338-97	WAISHER, LOCK DH3	EA	14
8	30	PAHZZ	5310-00-950-1310	96906	MS27183-4	WASHER.FLAT DH3	EA	4
8	31	XDHZZ		80063	S-8-94207 8	SOCKET PLUG-IN ELEK.....DH3	EA	2
8	32	XDHZZ		80014	S-8-099	TRANSISTOR.....DH3	EA	2
8	33	PAFZZ	5961-00-439-3749	81349	JAN2N37139	TRANSISTOR.....DH3	EA	2
8	34	XDHZZ		80063	SM-A-942145	INSULATOR PLATE DH3	EA	2
8	35	XDHZZ	5910-01-095-4617	81349	M38527/9-06S	INSULATOR, BUSHING DH3	EA	2
8	36	XDHZZ		80063	S-A-942115	SOCKET TRANSISTOR.....DH3	EA	2
8	37	XDHZZ	5905-01-014-9443	81349	RER65F6810R	RESISTOR, FIXED WIRE.....DH3	EA	1
8	38	PAHZZ	5305-00-889-3118	96906	M535206-203	SCREW, MACHINE DH3	EA	2

(1) ILLUSTRATION (a) FIG NO.	(b) ITEM NO.	(2) SMR CODE	(3) NATIONAL STOCK NUMBER	(4) FSCM	(5) PART NUMBER	(6) DESCRIPTION USABLE ON CODE	(7) U/M	(8) QTY INC IN UNIT
8	39	PAHZZ	5310-00-616-679T	80205	NAS620-2	WASHER, FLAT DH3	EA	2
8	40	XDHZZ		81349	RER70F4221N	RESISTOR FIXED DH3	EA	1
8	41	PAHZZ	5305-00-993-0190	96906	MS35206-214	SCREI, MACHINE DH3	EA	17
8	42	PAHZZ		88044	NAS6Z4	ASHER, FLAT DH3	EA	17
8	43	XDHZZ		80063	SM-A-942061	INDUCTOR POWER DH3	EA	1
8	44	PAHZZ	5310-00-576-0546	96906	S35338-99	WASHERLOCK DH3	EA	2
8	45	PAHZZ	5310-00-515-8058	88044	AN960-8	WASHER, FLAT DH3	EA	2
8	46	XDHZZ		81349	RR7SS2Z612FM	RESISTOR FXD WW DH3	EA	2
8	47	XDHZZ	5940-00-926-0040	81349	SE21XE03	TERMINAL, STUD DH3	EA	4
8	48	XDHZZ		80063	SB-8-942059	INDUCTOR POKER DH3	EA	1
8	49	PAHZZ	5305-00-889-3116	96906	MS35206-213	SCREW, MACHINE DH3	EA	10
8	50	XDHZZ		81349	RER7OF4641M	RESISTOR FIXED DH3	EA	1
8	51	XDHZZ	5961-00-898-2138	81349	JANIN4946	SEMICONDUCTOR DEVIC DH3	EA	1
8	52	XDHZZ		80063	S-A-942085-I	FERRITE BEAD DH3	EA	2
8	53	XDHZZ		81349	SE099E03	TERMINAL, STUD DH3	EA	2
8	54	XDHZZ		80063	SM-A-942057	TRANSFORMER POWER DH3	EA	1
8	55	XDHZZ	5910-00-513-5385	81349	M39014/02-1218	CAPACITOR FIXED CER DH3	EA	2
8	56	PAHZZ		81349	FT01XA101	TERMINAL, FEEDTHRU, I DH3	EA	4
8	57	XDHZZ		80063	SM-A-942082	SEMICONDUCTOR DVC DH3	EA	2
8	58	PAHZZ	5310-00-685-2631	96906	MS25082-4	NUT, PLAIN, HEXAGON DH3	EA	4
8	59	PAHZZ	5310-00-184-8970	96906	M535338-10L	WASHER, LOCK DH3	EA	4
8	60	PAHZZ	5310-00-167-0835	88044	AN960-46L	WASHER, FLAT DH3	EA	6
8	61	PAHZZ		96906	MS35431-9	TERMINAL, LUG DH3	EA	6
8	62	XDHZZ	5905-00-107-0656	81349	RCR07G100JS	RESISTOR, FIXED, COMP DH3	EA	2
8	63	XDHZZ		80063	SN-A-942114-3	INSULATOR, WASHER DH3	EA	4
8	64	XDHZZ		81349	M3852719-11T	INSULATOR, WASHER DH3	EA	4
8	65	XDHZZ	5961-00-724-5970	81349	JANIN1204A	SEMICONDUCTOR DEVIC DH3	EA	2
8	66	PAHZZ	5310-00-619-4376	80205	NAS671-10	NUT, PLAIN, HEXAGON DH3	EA	2
8	67	PAHZZ	5940-00-683-4339	96906	MS35431-7	TERMINAL, LUG DH3	EA	2
8	68	XDHZZ		80063	SM-A-942114-L	INSULATOR DH3	EA	4
8	69	XDHZZ	5970-00-449-4900	81349	M385291-10T	BUSHING DH3	EA	2
8	70	XDHZZ	5910-00.600-6889	81349'	M39014/02-1230	CAPACITOR, FIXED, CER DH3	EA	2
8	71	XDHZZ	5961-00-49-9005	81349	JAN2N690	SEMICONDUCTOR DEVIC DH3	EA	2
8	72	XDHZZ		80063	SM-A-942114-2	INSULATOR DH3	EA	4
8	73	XDHZZ	5910-01-030-9211	81349	CMR06F472GDDR	CAPACITOR, FIXED, MIC DH3	EA	2
8	74	XDHZZ	5905-00-104-8368	81349	RCR07G470JS	RESISTOR, FIXED, C CP DH3	EA	2
8	76	XDHZZ		80063	SM-A-942161	NUT PLAIN HEX DH3	EA	2
8	7T	PAHZZ	5935-00-432-6519	80063	51-8-942134	CONNECTOR, RECEPTACL DH3	EA	1
8	78	PAHZZ	5999-00-879-8474	80063	SM-B-942072-2	CONTACT, ELECTRICAL DH3	EA	7
8	79	XDHZZ		80063	SM-A-942085-2	FERRITE BEAD DH3	EA	2

(1) ILLUSTRATION (a) FIG NO.	(b) ITEM NO.	(2) SMR CODE	(3) NATIONAL STOCK NUMBER	(4) FSCM	(5) PART NUMBER	(6) DESCRIPTION	USABLE ON CODE	(7) U/M	(8) QTY INC IN UNIT
8	80	XDHZZ		80063	SM-A-942120	PLATE GUIDE PIN	DH3	EA	1
8	81	PAHZZ		80205	NAS1635-3-38	SCREW MACHINE	DH3	EA	1
8	82	PAHHD	17025-01-085-7349	80063	SM-D-941850	CIRCUIT CARD ASSEMB, POWER SUPPLY 21A12A1	DH3	EA	1
8	83	PAHZZ	53540-01-058-4858	80063	SM-A-942148	HANDLE, BOW	DH3	EA	1
8	84	XDHZZ	5310-00-810-1786	96906	MS2102-6	NUT.SELF-LOCKING.EX	DH3	EA	2
8	85	PAHZZ		88044	AN960XC616	WASHER, FLAT	DH3	EA	2
8	86	XDHZZ		80205	NAS1523-6B	PACKINC WITH RETAIN	DH3	EA	2
8	87	XAHHD		80063	SM-D-941810	HEAT SINK ASSY	DH3	EA	1
8	88	PAHZZ	5340-00-721-6936	96906	MS21209C0820	INSERT. SCREW THREAD	DH3	EA	4
8	89	PAHZZ	5340-00-631-7894	96906	MS21209C0415	INSERT. SCREW THREAD	DH3	EA	25
8	90	PAHZZ	5340-00-00-T7874	96906	MS21209F1I-5	INSERT. SCREW THREAD	DH3	EA	1
8	91	PAHZZ	5340-00-721-7653	96906	MS21209F1-20	INSERT. SCREW THREAD	DH3	EA	1
8	92	PAHZZ	5340-00-215-0248	96906	MS21209C0215	INSERT. SCREW THREAD	DH3	EA	2
8	93	XDHZZ		80063	SM-D-941810-I	HEAT SINK	DH3	EA	1

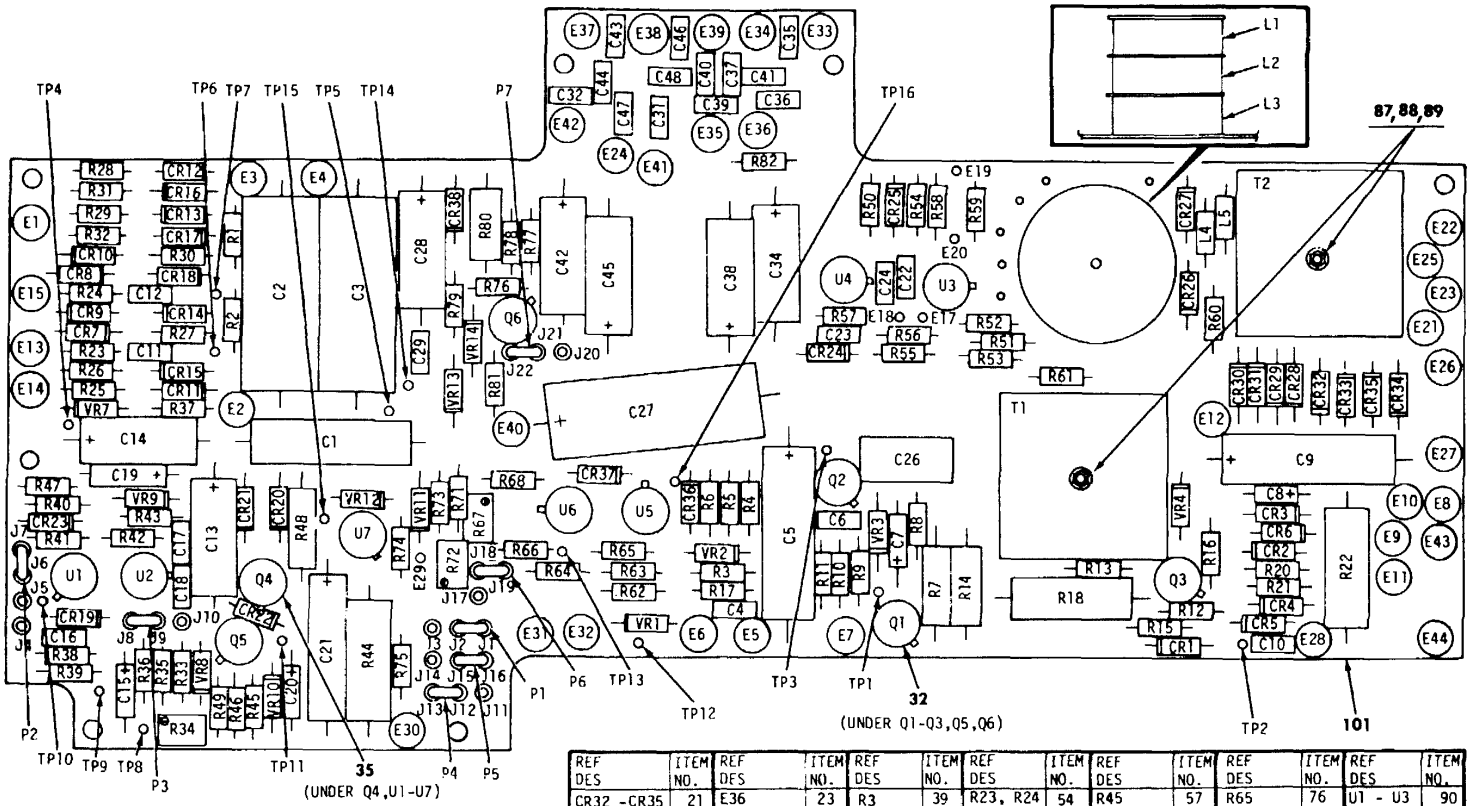

NOTE: PREFIX ALL REFERENCE DESIGNATIONS WITH 21A12A1.

REF DES	ITEM NO.	REF DES	ITEM NO.	REF DES	ITEM NO.	REF DES	ITEM NO.
C1	1	C16, C17	7	C34	16	C47, C48	7
C2, C3	2	C18	9	C35	6	CR1, CR2	18
C4	3	C19	10	C36, C37	7	CR3	19
C5	4	C20	11	C38	16	CR4	18
C6	3	C21	12	C39	6	CR5, CR6	20
C7, C8	5	C22 - C24	13	C40, C41	7	CR7 - CR18	19
C9	4	C26	14	C42	17	CR19	18
C10	6	C27	15	C43	6	CR20, CR21	19
C11, C12	7	C28	16	C44	7	CR22 - CR25	18
C13, C14	8	C29	3	C45	17	CR26, CR27	21
C15	5	C31, C32	6	C46	6	CR28 - CR31	22

REF DES	ITEM NO.	REF DES	ITEM NO.	REF DES	ITEM NO.	REF DES	ITEM NO.	REF DES	ITEM NO.	REF DES	ITEM NO.	REF DES	ITEM NO.	REF DES	ITEM NO.
CR32 -CR35	21	E36	23	R3	39	R23, R24	54	R45	57	R65	76	U1 - U3	90
CR36, CR37	18	E37	24	R4	40	R25, R26	55	R46	64	R66	77	U4	91
CR38	19	E38	23	R5	39	R27	56	R47	65	R67	78	U5 - U7	90
E1, E2	23	E39, E40	24	R6	41	R28, R29	57	R48	66	R68	79	VR1	92
E3, E4	24	E41, E42	23	R7	42	R30	56	R49	67	R71	80	VR2	93
E5 - E7	23	E43, E44	26	R8	43	R31, R32	57	R50	68	R72	81	VR3	94
E8	24	J1 - J22	27	R9	44	R33	46	R51	69	R73	46	VR4	95
E9	23	L1 - L3	28	R10	45	R34	58	R52, R53	56	R74	81.1	VR7	96
E10	24	L4, L5	29	R11	46	R35 .	59	R54	70	R75	44	VR8	95
E11	23	P1 - P7	30	R12	47	R36	60	R55	71	R76	82	VR9	93
E12	24	Q1	31	R13	48	R37, R38	56	R56	72	R77, R78	46	VR10	97
E13 - E15	23	Q2	33	R14	49	R39	61	R57	56	R79	83	VR11	98
E17 - E20	25	Q3	31	R15,R16	50	R40	56	R58	69	R80	84	VR12	99
E21 - E28	23	Q4	34	R17	39	R41	60	R59	73	R81	38	VR13	95
E29	25	Q5	36	R18	51	R42	62	R60, R61	74	R82	85	VR14	100
E30 - E32	23	Q6	37	R20,R21	52	R43	44	R62, R63	75	TP1-TP16	25		
E33 - E35	24	R1, R2	38	R22	53	R44	63	R64	56	T1, T2	86		

EL5CM035

Figure 9. Circuit card assembly, power supply 21A12A1.

(1) ILLUSTRATION (a) FIG NO.	(b) ITEM NO.	(2) SMR CODE	(3) NATIONAL STOCK NUMBER	(4) FSCM	(5) PART NUMBER	(6) DESCRIPTION USABLE ON CODE	(7) U/M	(8) QTY INC IN UNIT
						GROUP 0401 CCA POWER SUPPLY 21A12AI		
9	1	XDHZZ		81349	CQR09AIKEI23K3M	CAPACITOR, FIXED.....DH3	EA	1
9	2	XDHZZ	5910-00-142-6914	81349	M3902202-1285	CAPACITOR, FIXED MET.....DH3	EA	2
9	3	XDHZZ	5910-00-513-5385	81349	M39014/02-1218	CAPACITOR, FIXED CER DH3	EA	3
9	4	XDHZZ		81349	M39018/01-0748	CAPACITOR, FIXED.....DH3	EA	2
9	5	XDHZZ	5910-00-236-8740	81349	M39003/01-2974	CAPACITOR, FIXED.ELE DH3	EA	3
9	6	XOHZZ	5910-00-600-6889	81349	3901402-1230	CAPACITOR, FIXED, CER DH3	EA	7
9	7	PAHZZ	5910-01-042-3759	81349	M39014/02-1407	CAPACITOR, FIXED, CER DH3	EA	11
9	8	XDHZZ	5910-00-998-4105	81349	M39003/01-2312	CAPACITOR,.FIXED.ELE DH3	EA	2
9	9	XDHZZ	5910-00-047-6963	81349	M39014/02-1225	CAPACITOR, FIXED.CER DH3	EA	1
9	10	PAHZZ	5910-00-007-3974	81349	M39003/01-2991	CAPACITOR, FIXED, ELE DH3	EA	1
9	11	XDHZZ	5910-00-078-7227	81349	M3O03/01-2283	CAPACITOR, FIXED, ELE.....DH3	EA	1
9	12	XDHZZ	5910-00-166-6766	81349	M39018/01-0668	CAPACITOR, FIXED, ELE DH3	EA	1
9	13	XDHZZ	5910-00-113-9453	81349	M39014/02-141T	CAPACITOR, FIXED, CER.....DH3	EA	3
9	14	XDHZZ	5910-01-030-9211	81349	CMR06F472GODR	CAPACITOR, FIXED, CER.....DH3	EA	1
9	15	XDHZZ		81349	COR09AIKFS23K3M	CAPACITOR, FIXED DH3	EA	1
9	16	XDHZZ	5910-00-780-8853	81349	M39003/01-2265	CAPACITOR, FIXED, ELE DH3	EA	3
9	17	XDHZZ	5910-00-858-5184	81349	M39003/01-2301	CAPACITOR, FIXED, ELE.....DH3	EA	2
9	18	PAHZZ	5961-01-081-9573	81349	JANIN4153-1	SEMICONDUCTOR DEVIC DH3	EA	10
9	19	PAHZZ	5961-00-958-5391	81349	JANIN4247	SEMICONDUCTOR DEVIC.....DH3	EA	16
9	20	XDHZZ	5961-01-065-2333	81349	JANIN5806	SEMICONDUCTOR DEVIC.....DH3	EA	2
9	21	XDHZZ	5961-00-898-2138	81349	JANIN4946	SEMICONDUCTOR DEVIC DH3	EA	6
9	22	PAHZZ	5961-01-049-6934	81349	JANIN5420	SEMICONDUCTOR DEVIC DH3	EA	4
9	23	XDHZZ	5940-00-718-1721	81349	SE12XC08	TERMINAL, STUD DH3	EA	25
9	24	XDHZZ		81349	M55155/31-6	TERMINAL, STLD DH3	EA	11
9	25	XDHZZ	5940-00-926-0042	81349	M55155/30-9	TERNINAL, STUD.....DH3	EA	21
9	26	XDHZZ		80063	SM-A-942162	TERMINAL, TUFRET.....DH3	EA	2
9	27	XOHZZ		80063	SM-A-942149	CONNECTOR JACK DH3	EA	22
9	28	XDHZZ		80063	S0M-A-942058	INDUCTOR.....DH3	EA	3
9	29	XDHZZ	5950-00-043-0423	96906	MS14046-8	COIL, RADIO FREQUENC.....DH3	EA	2
9	30	XDHZZ		80063	SM-8942071	DUMMY CONN PLUG.....DH3	EA	7
9	31	XDHZZ	5961-00-998-9324	81349	JAN2N3635	TRANSISTOR DH3	EA	2
9	32	XOHZZ		80063	SM-A-942098	INSULATOR DISK DH3	EA	5
9	33	XDHZZ	5961-00-777-0925	81349	JAN2N2326A	SEMICONDUCTOR DEVIC DH3	EA	1
9	34	PAHZZ	5961-01-023-3309	81349	JAN4N24	COUPLER, OPTOELECTRO DH3	EA	1
9	35	XDHZZ	5999-01-062-7548	81349	M38527/4-030	MOUNTING.....DH3	EA	8
9	36	XDHZZ	5961-00-925-3771	81349	JAN2N2907A	TRANSISTOR DH3	EA	1
9	37	XDHZZ		81349	JAN2N2329	SEMICONDUCTOR DEVIC DH3	EA	1
9	38	XDHZZ	5905-00-113-4860	81349	RCRO7G270JS	RESISTOR.FIXED, COMP DH3	EA	3
9	39	XDHZZ	5905-00-104-8368	81349	RCROTG470OJS	RESISTOR, FIXEDCOMP DH3	EA	3

(1) ILLUSTRATION (a) FIG NO.	(b) ITEM NO.	(2) SMR CODE	(3) NATIONAL STOCK NUMBER	(4) FSCM	(5) PART NUMBER	(6) DESCRIPTION USABLE ON CODE	(7) U/M	(8) QTY INC IN UNIT
9	40	XDHZZ	5905-00-106-1356	81349	RCRO7G152JS	RESISTOR, FIXED, COMP.....DH3	EA	1
9	41	XDHZZ	5905-00-118-4559	81349	RCROEG333JS	RESISTOR, FIXED, COMP.....DH3	EA	1
9	42	XDHZZ		81349	RWR89SR215FM	RESISTOR, FIXED, WIRE.....DH3	EA	1
9	43	XDHZZ	5905-00-120-9154	81349	RCROTG471JS	RESISTOR, FIXED, COMP.....DH3	EA	1
9	44	XDHZZ	5905-00-114-0711	81349	RCROTG472JS	RESISTOR, FIXED, COMP.....DH3	EA	3
9	45	XDHZZ	5905-00-484-7880	81349	RNC5SH1271FS	RESISTOR, FIXED, FILM.....DH3	EA	1
9	46	PAHZZ	5905-00-110-7620	81349	RCROTGIO2JS	RESISTOR, FIXED, COMP.....DH3	EA	5
9	47	XDHZZ	5905-00-491-1921	81349	RWRBSIS3570FR	RESISTOR, FIXED, WIRE.....DH3	EA	1
9	48	XDHZZ	5905-00-141-0744	81349	RCR07G562JS	RESISTOR, FIXED, COMP.....DH3	EA	1
9	49	XDHZZ		81349	RWRB89S35TIFM	RESISTOR, FIXED WW DH3	EA	1
9	50	XDHZZ	5905-00-141-0595	81349	RCR2OG472JM	RESISTOR, FIXED, COMP.....DH3	EA	2
9	51	XDHZZ		81349	RWR7452151FM	RESISTOR, FIXED WW DH3	EA	1
9	52	XDHZZ	5905-00-113-4859	81349	RCR20G3R9JM	RESISTOR, FIXED, COMP.....DH3	EA	2
9	53	XDHZZ		81349	RWR74S4641FM	RESISTOR, FIXED WW DH3	EA	1
9	54	XDHZZ	5905-00-236-7578	81349	RNC55H3322FS	RESISTOR, FIXED, FILM DH3	EA	2
9	55	XDHZZ	5905-00-133-0440	81349	RCR07G560JS	RESISTOR, FIXED, COMP.....DH3	EA	2
9	56	PAHZZ	5905-00-223-2741	81349	RNC55HIOO2FS	RESISTOR, FIXED, FILM DH3	EA	9
9	57	XDHZZ	5905-00-126-6683	81349	RCR07G332JS	RESISTOR, FIXED, COMP.....DH3	EA	5
9	58	XDHZZ	5905-01-013-6993	81349	RJR24FW503P	RESISTOR,.VARIABLE.N.....DH3	EA	1
9	59	XDHZZ	5905-00-479-9945	81349	RNC55H14T2FS	RESISTOR, FIXED, FILM.....DH3	EA	1
9	60	PAHZZ	5905-00-419-2836	81349	RNCSSH1473FS	RESISTOR, FIXED, FILM.....DH3	EA	2
9	61	XDHZZ	5905-00-119-3504	81349	RCRO7G273JS	RESISTOR, FIXED, COMP.....DH3	EA	1
9	62	XDHZZ	5905-00-114-5339	81349	RCRD7G154JS	RESISTOR, FIXED, COMP.....DH3	EA	1
9	63	XDHZZ	5905-00-491-9072	81349	RWR74S5111FR	RESISTOR, FIXED, WIRE.....DH3	EA	1
9	64	XDHZZ	5905-00-111-4727	81349	RCROTG272JS	RESISTOR, FIXED, COMP.....DH3	EA	1
9	65	XDHZZ	5905-00-116-8556	81349	RCROTG223JS	RESISTOR, FIXED, COMP.....DH3	EA	1
9	66	XDHZZ	5905-00-205-9019	81349	RWR89S3160FR	RESISTOR, FIXED, WIRE.....DH3	EA	1
9	67	XDHZZ	5905-00-119-8812	81349	RCROTG121JS	RESISTOR, FIXED, COMP.....DH3	EA	1
9	68	XDHZZ	5905-00-786-1728	81349	RNC55H8211FS	RESISTOR, FIXED, FILM.....DH3	EA	1
9	69	XDHZ7	5905-00-256-8893	81349	RNC55H1962FS	RESISTOR, FIXED,.FILM.....DH3	EA	2
9	70	XDHZZ	5905-00-138-3376	81349	RNC55H1001FS	RESISTOR, FIXED, FILM.....DH3	EA	1
9	71	XDHZZ	5905-00-138-7327	81349	RNC55H1001FS	RESISTOR, FIXED, FILM.....DH3	EA	1
9	72	XDHZZ	5905-00-005-2902	81349	RNC55H3012FS	RESISTOR, FIXED, FILM.....DH3	EA	1
9	73	XDHZZ	5905-00-139-1925	81349	RNC55H649IFS	RESISTOR, FIXED, FILM.....DH3	EA	1
9	74	XDHZZ	5905-00-329-6968	81349	RWRBIS464R	RESISTOR, FIXED, WIRE.....DH3	EA	2
9	75	XDHZZ	5905-00-402-6917	81349	RNC55H5620PS	RESISTOR, FIXED, FILM.....DH3	EA	2
9	76	XDHZZ	5905-00-112-1392	81349	RNC55HI332FS	RESISTOR, FIXED, FILM.....DH3	EA	1
9	77	XDHZZ	5905-00-828-2416	81349	RNC55HI00FS	RESISTOR, FIXED, FILM.....DH3	EA	1
9	78	XDHZZ		81349	RJRF24FW202M	RESISTOR, VARIBLE, N DH3	EA	1
9	79	XDHZZ	5905-00-132-6046	81349	RCROTG68IJS	RESISTOR, FIXED, COMP DH3	EA	1

(1) ILLUSTRATION (a) FIG NO.	(b) ITEM NO.	(2) SMR CODE	(3) NATIONAL STOCK NUMBER	(4) FSCM	(5) PART NUMBER	(6) DESCRIPTION / USABLE ON CODE	(7) U/M	(8) QTY INC IN UNIT
9	80	XDHZZ	5905-00-482-0618	81349	RWR8S121OFR	RESISTOR, FIXED, WIRE DH3	EA	1
9	81	PAHZZ	5905-01-026-2140	81349	RJR24FWIOIP	RESISTOR, VARIBLE N DH3	EA	1
9	81.1	PAHZZ	5905-00-116-8555	81349	RCR07OG53JS	RESISTOR, FIXED, COMP DH3	EA	1
9	82	XDHZZ	5905-00-105-7764	81349	RCRO7G222JS	RESISTOR, FIXED, COMP DH3	EA	1
9	83	XDHZZ	5905-00-205-9792	81349	RWR15S42R2FR	RESISTOR, FIXED, WIRE DH3	EA	1
9	84	XDHZZ	5905-01-090-4072	81349	RBR55L56R20BM	RESISTOR, FIXED DH3	EA	1
9	85	XDHZZ	5905-00-135-3973	81349	RCROTG22IJS	RESISTOR, FIXED, COMP DH3	EA	1
9	86	XDHZZ		80063	SM-B-942056	TRANSFORMER POWER DH3	EA	2
9	87	PAHZZ	5305-00-984-4979	96906	MS35206-222	SCREW, MACHINE DH3	EA	2
9	88	PAHZZ	5310-00-811-6419	96906	MS21042-04	NUT, SELF-LOCKING, EX DH3	EA	2
9	89	PAHZZ	5310-00-950-1310	96906	NS27183-4	WASHER, FLAT DH3	EA	4
9	90	PAHZZ	5962-00-167-6330	81349	M38511010101BGC	MICROCIRCUIT, LINEAR DH3	EA	6
9	91	XDHZZ	5962-01-048-7767	81349	M38510/103048GC	MICROCIRCUIT, LINEAR DH3	EA	1
9	92	XDHZZ	5961-00-493-5482	81349	JANIN4971	SEMICONDUCTOR DEVIC DH3	EA	1
9	93	XDHZZ	5961-00-847-5246	81349	JANIN46	SEMICONDUCTOR DEVIC DH3	EA	2
9	94	XDHZZ	5961-00-752-6121	81349	JANIN753A	SEMICONDUCTOR DEVIC DH3	EA	1
9	95	XDHZZ	5961-00-081-6103	81349	JANIN823	SEMICONDUCTOR DEVIC DH3	EA	3
9	96	XDHZZ	5961-00-847-5244	81349	JANIN938	SEMICONDUCTOR DEVIC DH3	EA	1
9	97	XDHZZ	5961-00-894-0684	81349	JANIN758A	SEMICONDUCTOR DEVIC DH3	EA	1
9	98	XDHZZ	5961-00-893-6761	81349	JANIN9698	SEMICONDUCTOR DEVIC DH3	EA	1
9	99	XDHZZ	5961-00-160-5528	81349	JANIN457OA .	SEMICONDUCTOR DEVIC DH3	EA	1
9	100	XDHZZ	5961-00-892-3361	81349	JANIN750A	SEMICONDUCTOR DEVIC DH3	EA	1
9	101	XAHZZ		80063	SM-D-41852	PRINTED WIRING BD DH3	EA	1

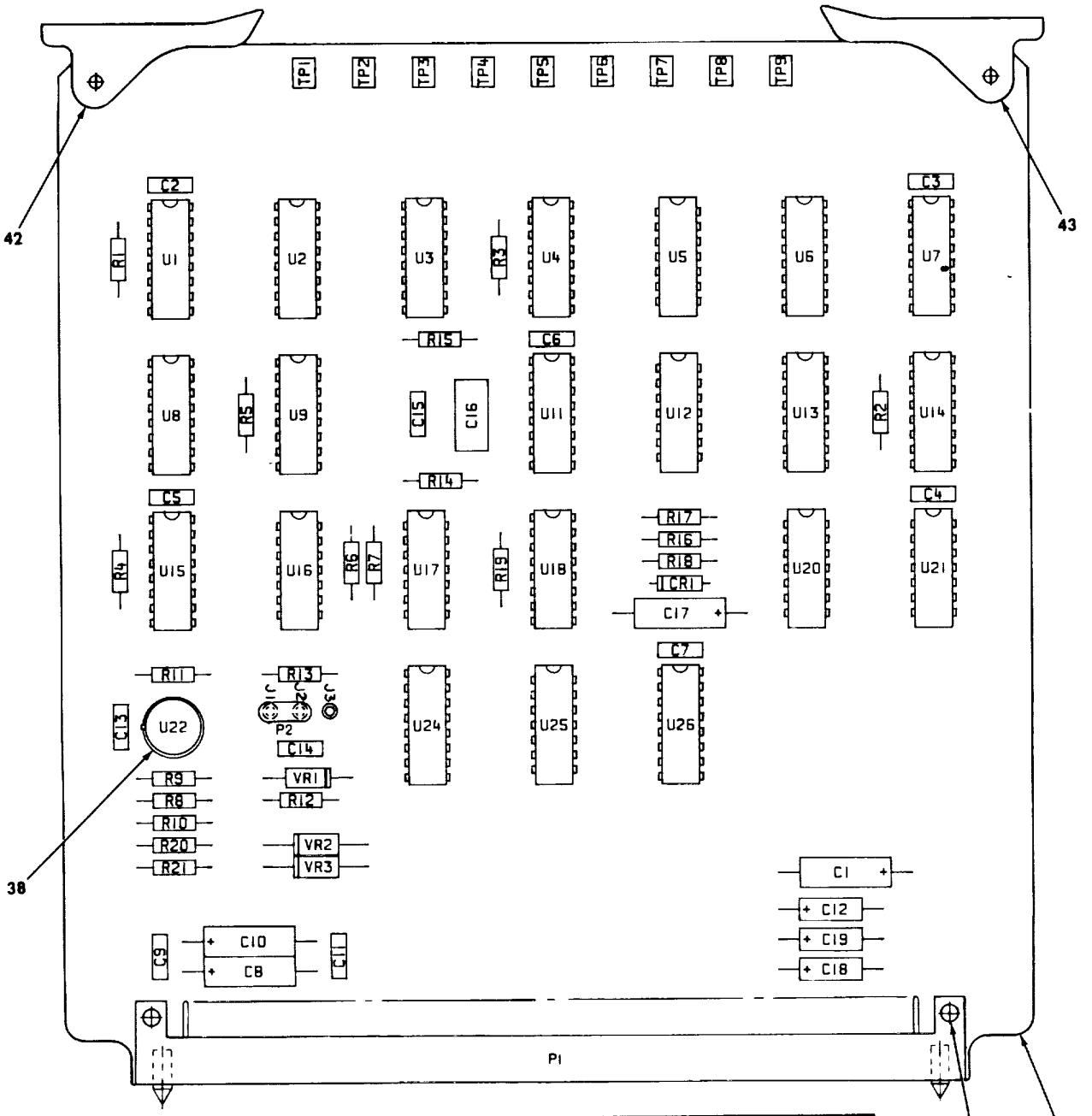

REF DES	ITEM NO.	REF DES	ITEM NO.	REF DES	ITEM NO.	REF DES	ITEM NO.	REF DES	ITEM NO.
C1	1	C18, C19	5	R12	20	U3, U4	25	U16	33
C2 - C7	2	CR1	9	R13	14	U5	27	U17	34
C8	3	J1 - J3	10	R14, R15	15	U6	25	U18	32
C9	4	P1	11	R16, R17	14	U7	28	U20	35
C10	3	P2	13	R18	21	U8	26	U21	36
C11	4	R1 - R6	14	R19, R20	14	U9	25	U22	37
C12	5	R7	15	R21	22	U11	29	U24	39
C13, C14	2	R8	16	TP1	23	U12	30	U25	30
C15	6	R9	17	TP2 - TP9	24	U13	31	U26	29
C16	7	R10	18	U1	25	U14	25	VR1	40
C17	8	R11	19	U2	26	U15	32	VR2, VR3	41

NOTE:
PREFIX ALL REFERENCE
DESIGNATIONS WITH 21A3.

EL5CM036

Figure 10. Circuit card assembly, digital data orderwire encoder 21A3.

(1) ILLUSTRATION (a) FIG NO.	(b) ITEM NO.	(2) SMR CODE	(3) NATIONAL STOCK NUMBER	(4) FSCM	(5) PART NUMBER	(6) DESCRIPTION USABLE ON CODE	(7) U/M	(8) QTY INC IN UNIT
						GROUP 05 CCA DIGITAL DATA ORDERWIRE ENCODER 21A3		
10	1	PADZZ	5910-00-007-3974	81349	M39003/01-2991	CAPACITOR, FIXED.ELE DH3	EA	1
10	2	XDDZZ	5910-00-513-530 5	81349	M39014/02-1218	CAPACITOR, FIXED.CER....DH3	EA	8
10	3	XDDZZ	5910-00-932-4455	81349	M39003/01-2289	CAPACITOR, FIXED.ELE DH3	EA	2
10	4	XDDZZ	5910-00-600-6889	81349	M3901A102-1230	CAPACITOR, FIXED, CER....DH3	EA	2
10	5	XDDZZ	5910-00-078-7227	81349	M39003/01-2283	CAPACITOR, FIXED.ELE DH3	EA	3
10	6	XDDZZ	59/0-00-113-5312	81349	M39014102-1322	CAPACITOR, FIXED.ELE DH3	EA	1
10	7	XDDZZ	5910-00-001-8818	81349	CMROSF331GOOM	CAPACITOR, FIXED, MIC....DH3	EA	1
10	8	XDDZZ	5910-00-47-8072	81349	tM39003/01-2244	CAPACITOR, FIXED.ELE DH3	EA	1
10	9	PADZZ	5961-01-081-9573	8131t	JANIN4153-1	SEMICONDUCTOR DEVIC....DH3	EA	1
10	10	XDDZZ		80063	SMA-942070	CONTACT ELECTRICAL....DH3	EA	3
10	11	XDDDD		80063	SM-D-942075	CONNECTOR RECP ELEC DH3	EA	1
10	12	XDDZZ		80205	NAS1788-3-6C	EYELET, METALLIC DH3	EA	2
10	13	XDDZZ		80063	SM-8-942071	DUMMY CONN PLUG DH3	EA	1
10	14	PADZZ	5905-00-110-7620	81349	RCRO7GIO2JS	RESISTOR, FIXED, COMP....DH3	EA	11
10	15	PADZZ	5905-00-106-3666	81349	RCR07GIO3JS	RESISTOR, FIXED, COMP....DH3	EA	3
10	16	XDDZZ	5905-00-114-5339	81349	RERG07154JS	RESISTOR, FIXED, COMP....DH3	EA	1
10	17	XDDZZ	5905-00-107-0656	81349	RCROTGIOOJS	RESISTOR, FIXED, COMP....DH3	EA	1
10	18	XDDZZ	5905-00-110-03R8	81349		RESISTOR, FIXED, COMP....DH3	EA	1
10	19	XDDZZ	5905-00-110-0733	81349	RCROt7GI3924JS	RESISTOR, FIXED, COMP....DH3	EA	1
10	20	XDDZZ	5905-00-120-9154	81349	RCR07tG47JS	RESISTOR, FIXED, COMP....DH3	EA	1
10	21	XDDZZ	5905-00-116-8555	81349	RCROTGI53JS	RESISTOR, FIXED, COMP DH3	EA	1
10	22	XDDZZ	5905-00-110-1622	81349	RCROTG682JS	RESISTOR, FIXED, COMP....DH3	EA	1
10	23	PADZZ	5935-01-026-0915	81349	M39024/18-06	JACK, TIP DH3	EA	1
10	24	PADZZ	5935-01-012-01773	81349	M39024/118-05	JACK, TIP....DH3	EA	8
10	25	PADZZ	5962-00-349-6236	80063	*-A-942027	MICROCIRCUIT.DIGITA....DH3	EA	6
10	26	PADZZ		80063	SMA-942013	MICROCIRCUIT.DIGITA....DH3	EA	2
10	27	PADZZ	5962-01-025-2592	80063	SA-942002	MICROCIRCUIT.DIGITA....DH3	EA	1
10	28	XDDZZ		80063	SM-A-942028	MICROCIRCUIT.DIGITA....DH3	EA	1
10	29	XDDZZ	5962-00-348-2717	81349	M38510101203EB	MICROCIRCUIT.DIGITA....DH3	EA	2
10	30	PADZZ	5962-01-024-5747	80063	SM-A-942003	MICROCIRCUIT.DIGITA....DH3	EA	2
10	31	XDDZZ		80063	SM-A-942005	MICROCIRCUIT.DIGITA....DH3	EA	1
10	32	PADZZ	5962-01-073-0693	81349	M38510/15901BEB	MICROCIRCUIT.DIGITA....DH3	EA	2
10	33	XDDZZ		80063	SM-A-942007	MICROCIRCUIT.DIGITA....DH3	EA	1
10	34	XDDZZ		80063	942023	MICROCIRCUIT.DIGITA....DH3	EA	1
10	35	XDDZZ		80063	SM-A-9420201	MICROCIRCUIT LINEAR....DH3	EA	1
10	34	XDDZZ		80063	10/I03EB	MICROCIRCUIT.DIGITA....DH3	EA	1
10	36	XDDZZ	5962-00-173-9716	81349	M38510/009038CB	MICROCIRCUIT.DIGITA....DH3	EA	1
10	37	XDDZZ	5962-00-261-7552	81349	M38510I0I3OIBGC	MICROCIRCUIT, LINEAR....DH3	EA	1
10	38	XDDZZ		80063	SM-A-942098	INSULATOR DISK DH3	EA	1

(1) ILLUSTRATION (a) FIG NO.	(b) ITEM NO.	(2) SMR CODE	(3) NATIONAL STOCK NUMBER	(4) FSCM	(5) PART NUMBER	(6) DESCRIPTION / *USABLE ON CODE*	(7) U/M	(8) QTY INC IN UNIT
10	39	PADZZ	5962-01-006-01861	80063	SM-942015	MICROCIRCUIT, DIGITA.....DH3	EA	1
10	40	XDDZZ	5961-00-152-6121	81349	JAN1N753A	SEMICONDUCTOR DEVIC.....DH3	EA	1
10	41	XDDZZ	5961-01-021-6003	81349	JAN1N4956	SEMICONDUCTOR DEVIC DH3	EA	2
10	42	XDDZZ		80063	SR-A-942112-1	EJECTOR CARD DH3	EA	1
10	43	XDDZZ		80063	SP-A-942&12-11	EJECTOR CARD DH3	EA	1
10	44	XAOZI		80063	SH-D-941902	PRINTED WIRING BD.....DH3	EA	1

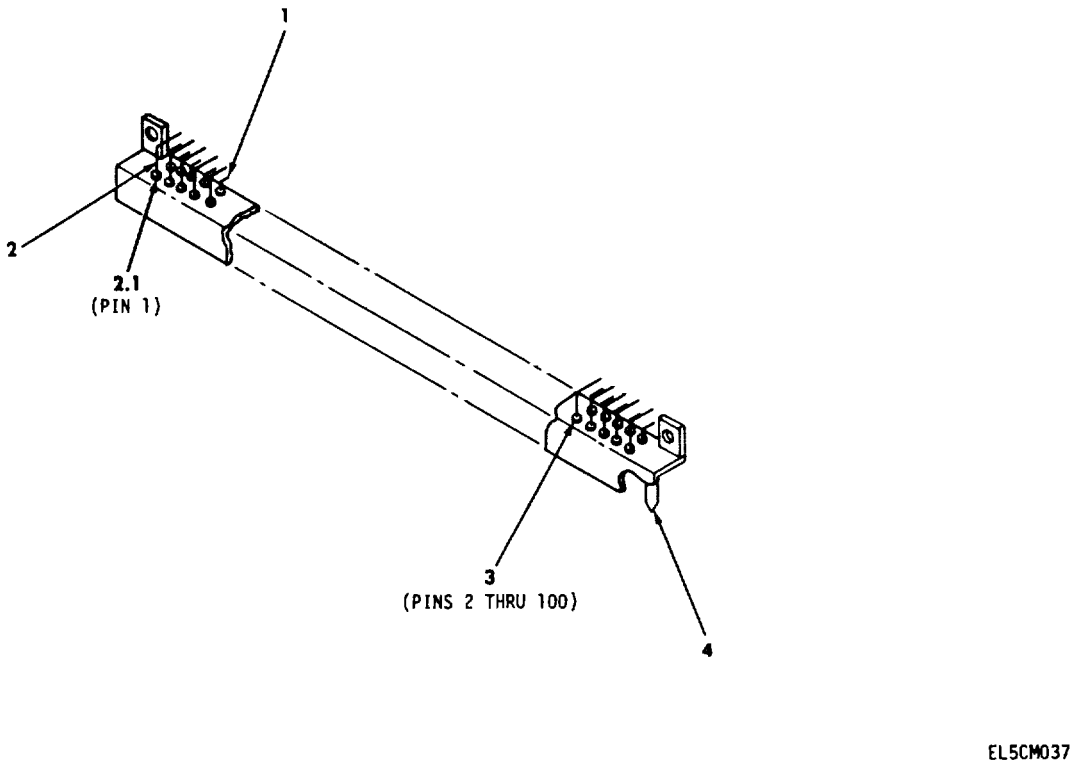

Figure 11. Connector receptacle.

(1) ILLUSTRATION (a) FIG NO.	(b) ITEM NO.	(2) SMR CODE	(3) NATIONAL STOCK NUMBER	(4) FSCM	(5) PART NUMBER	(6) DESCRIPTION USABLE ON CODE	(7) U/M	(8) QTY INC IN UNIT
						GROUP 0501 CONNECTOR RECEPTACLE		
11	1	XDODZZ		31413	010-7515-509	CONTACT, ELECTRICAL DH3	EA	50
11	2	XDDZZ		31413	010-7517-509	CONTACT, ELECTRICAL DH3	EA	50
11	2.1	XD0DIZ		31413	302-0002-005	INSULATOR, BUSHING DH3	EA	1
11	3	PADZZ	5970-00-275-5242	31413	302-0002-002	INSULATOR, FEMALE DH3	EA	99
11	4	ADZZ		31413	516-0019-505	GUIDE BUSHING DH3	EA	2

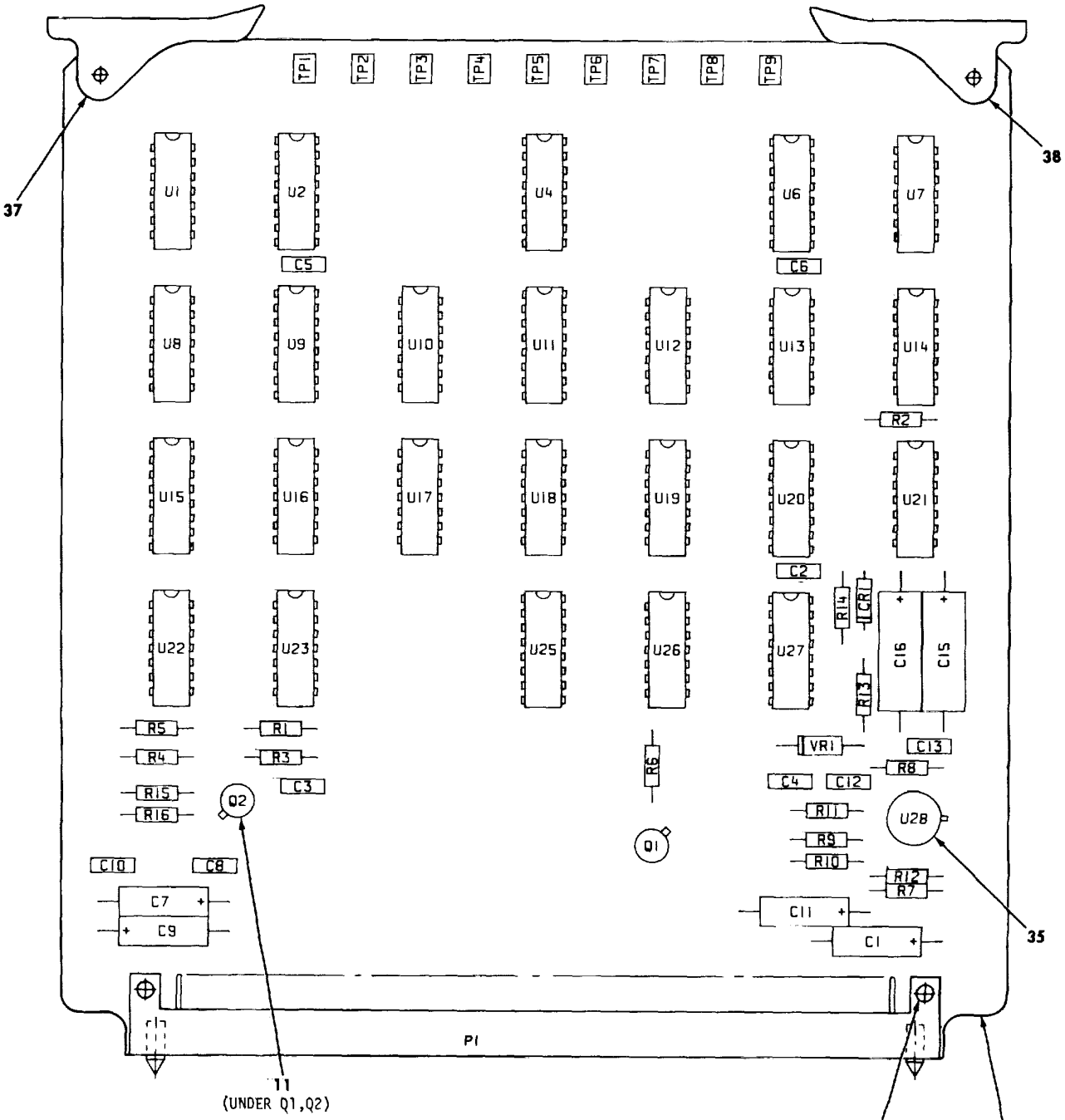

REF DES	ITEM NO.	REF DES	ITEM NO.	REF DES	ITEM NO.	REF DES	ITEM NO.	REF DES	ITEM NO.
C1	1	Q1, Q2	10	R15	20	U10	28	U23	29
C2 - C6	2	R1 - R4	12	R16	18	U11	25	U25	24
C7	3	R5	13	TP1	21	U12, U13	29	U26	26
C8	4	R6	14	TP2- TP9	22	U14	26	U27	33
C9	3	R7	15	U1	23	U15	30	U28	34
C10	4	R8	16	U2	24	U16	31	VR1	36
C11	5	R9	17	U4	25	U17	26		
C12, C13	4	R10	18	U6	24	U18	23		
C15, C16	6	R11	16	U7	26	U19	26		
CR1	7	R12, R13	12	U8	27	U20	32		
P1	8	R14	19	U9	25	U21, U22	26		

NOTE:
PREFIX ALL REFERENCE DESIGNATIONS WITH 21A1.

EL5CM038

Figure 12. Circuit card assembly, alarm detector 21A1.

(1) ILLUSTRATION (a) FIG NO.	(b) ITEM NO.	(2) SMR CODE	(3) NATIONAL STOCK NUMBER	(4) FSCM	(5) PART NUMBER	(6) DESCRIPTION USABLE ON CODE	(7) U/M	(8) QTY INC IN UNIT
						GROUP 06 CCA ALARM DETECTOR 21AI		
12	1	PADZZ	5910-00-007-3974	81349	M39003/0L-2991	CAPACITOR, FIXED, ELE DH3	EA	1
12	2	XDDZZ	5910-00-513-5385	81349	M39014/02-1218	CAPACITOR, FIXED, CER DH3	EA	5
12	3	XDDZZ	5910-00-932-4455	81349	M39003/01-2289	CAPACITOR, FIXED, ELE DH3	EA	2
12	4	XDDZZ	5910-00-600-6889	81349	M39014/02-1230	CAPACITOR, FIXED.CER.....DH3	EA	4
12	5	XDDZZ	5910-00-211-1261	81349	M39003/01-3085	CAPACITOR, FIXED, ELE DH3	EA	1
12	6	XDDZZ		81349	MS9003/01-2967	CAPACITOR, FIXED, ELE DH3	EA	2
12	7	PADZZ	5961-01-081-9573	81349	JAN1N4153-1	SEMICONDUCTOR DEVIC DH3	EA	1
12	8	XDOD		80063	SM-D-942075	CONNECTOR RECP ELEC DH3	EA	1
12	9	XDDZZ		80205	NAS1788-3-6C	EYELET, METALLIC DH3	EA	2
12	10	PADZZ	5961-00-951-8757T	81349	JAN2N2222A	TRANSISTOR DH3	EA	2
12	11	XDDZZ		80063	SM-D-942098	INSULATOR DISK.....DH3	EA	2
12	12	PADZZ	5905-00-110-7620	81349	RCRO7CG12JS	RESISTOR, FIXED, COMP.....DH3	EA	6
12	13	XDOZZ	5905-00-105-7764	81349	RCRO7G222JS	RESISTOR, FIXED, COMP.....DH3	EA	1
12	14	XDOZZ	5905-00-126-6683	81349	RCRO7G332JS	RESISTOR, FIXED, COMP.....DH3	EA	1
12	15	XDDZZ	5905-00-435-6374	81349	RCRO7G823JS	RESISTOR, FIXED, COMP.....DH3	EA	1
12	16 1	XDDZZ	5905-00-107-0656	81349	RCRO7G1OOJS	RESISTOR, FIXED, COMP.....DH3	EA	2
12	17	XDDZZ	5905-00-141-0744	81349	RCRO7G562JS	RESISTOR, FIXED, COMP.....DH3	EA	1
12	18	XDD1	5905-00-106-3666	81349	RCRO7G1O3JS	RESISTOR, FIXED, COMP.....DH3	EA	2
12	19	XOOZZ	5905-00-116-8555	81349	RCRO7G153JS	RESISTOR, FIXED, COMP.....DH3	EA	1
12	20	XDDZZ	5905-00-114-0711	81349	RCRO7GC72JS	RESISTOR, FIXED, COMP.....DH3	EA	1
12	21	PAOZZ	5935-01-026-0915	81349	M39024/18-06	JACK, TIP DH3	EA	1
12	22	PADZZ	5935-01-012-0773	81349	M39024/18-05	JACK, TIP.....DH3	EA	8
12	23	XDDZZ	5962-01-024-5747	80063	SM-A-942000	MICROCIRCUIT, DIGITA.....DH3	EA	2
12	24	XDDIZ		80063	SM-A-942006	MICROCIRCUIT, DIGITA.....DH3	EA	3
12	25	XODZZ		80063	SM-A-942030	MICROCIRCUIT, DIGITA.....DH3	EA	7
12	26	XDDZZ	5962-01-012-8537	81349	M38510/OO805BCB	MICROCIRCUIT, DIGITA.....DH3	EA	1
12	27	XDDZZ	5962-01-024-0142	80063	SM-A-942004	MICROCIRCUIT, DIGITA.....DH3	EA	1
12	28	XDZZ		80063	SM-A-942001	MICROCIRCUIT, DIGITA.....DH3	EA	3
t2	29	XDDZZ		80063	SM-A-942007	MICROCIRCUIT, DIGITA.....DH3	EA	1
12	30	XODZZ		80063	SM-A-942005	MICROCIRCUIT, DIGITA.....DH3	EA	1
12	31	XDDZZ		80063	SM-A-942003	MICROCIRCUIT, DIGITA.....DH3	EA	1
12	32	PADZZ	5962-01-006-0181	80063	SM-A-942015	MICROCIRCUIT, DIGITA.....DH3	EA	1
12	33	XDDZZ	5962-00-348-2717	81349	M38510/01203BE B	MICROCIRCUIT, DIGITA.....DH3	EA	1
12	34	XDDZZ	5962-00-274-0200	81349	M38510/1010281C	MICROCIRCUIT, LINEAR.....DH3	EA	1
12	35	XDOZZ		81349	M38527/2-080	MOUNTING PAD, ELECTR DH3	EA	1
12	36	XODZZ	591-00-847-5246	81349	JAN1N746A	SEMICONDUCTOR DEVIC.....DH3	EA	1
12	37	XODZZ		80063	SM-A-942112-1	EJECTOR CARD DH3	EA	1
12	38	XOOZZ		80063	SM-A-942112-13	EJECTOR CARD DH3	EA	1

(1) ILLUSTRATION (a) FIG NO.	(b) ITEM NO.	(2) SMR CODE	(3) NATIONAL STOCK NUMBER	(4) FSCM	(5) PART NUMBER	(6) DESCRIPTION USABLE ON CODE	(7) U/M	(8) QTY INC IN UNIT
12	39	XADZZ		80063	SM-D-941907	PRINTED WIRING BD DH3	EA	1

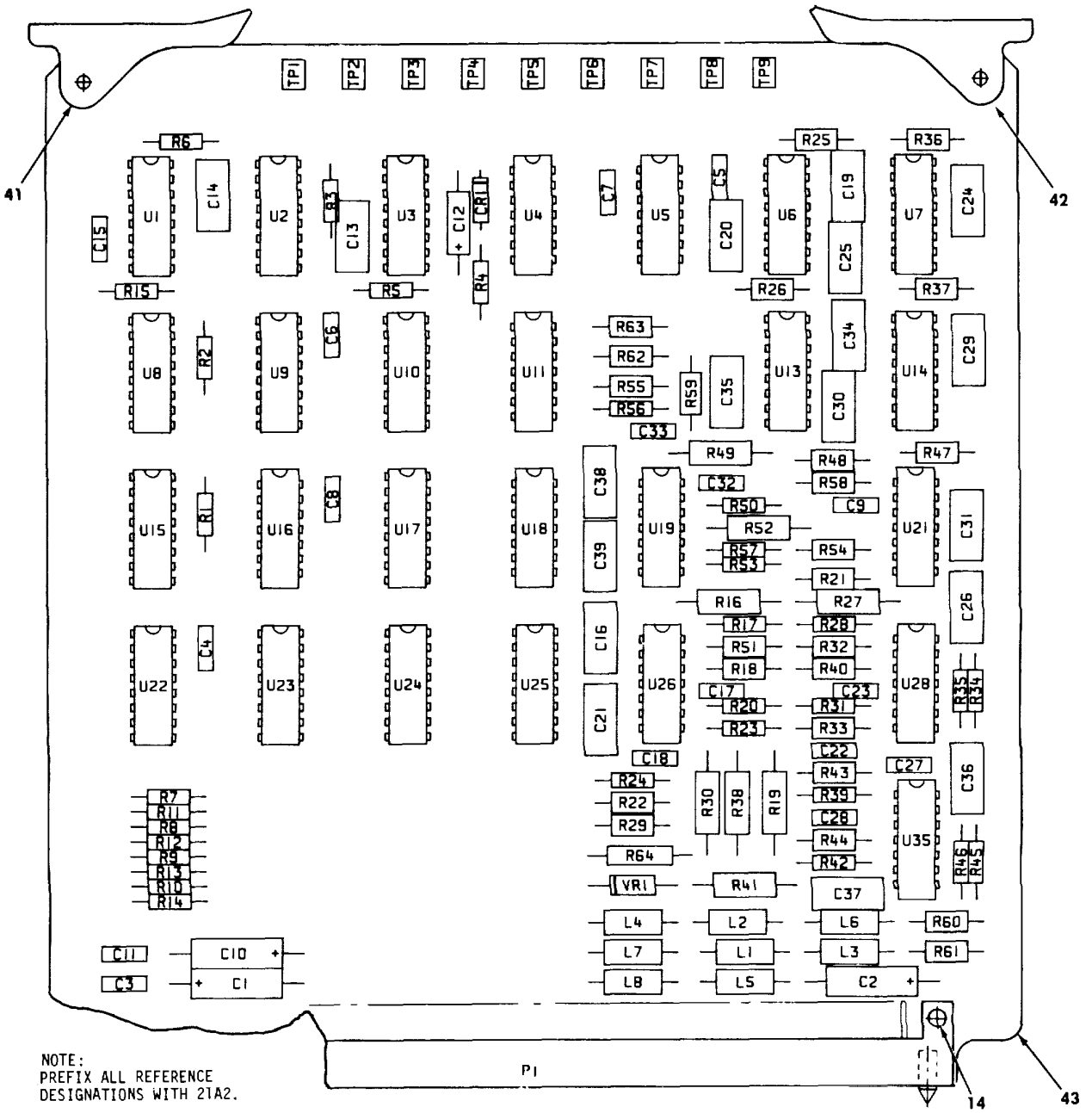

REF DES	ITEM NO.	REF DES	ITEM NO.	REF DES	ITEM NO.	REF DES	ITEM NO.	REF DES	ITEM NO.	REF DES	ITEM NO.
C1	1	C24, C25	10	R15	18	R34, R35	22	R54, R55	21	U10	33
C2	2	C26	9	R16	19	R36, R37	23	R56, R57	22	U11	34
C3	3	C27, C28	4	R17	15	R38	19	R58, R59	23	U13, U14	27
C4 - C9	4	C29, C30	10	R18	20	R39	15	R60 - R63	20	U15	35
C10	1	C31	9	R19	19	R40	20	R64	24	U16	36
C11	3	C32, C33	4	R20	15	R41	19	TP1	25	U17	37
C12	5	C34, C35	10	R21, R22	21	R42	15	TP2 - TP9	26	U18	36
C13	6	C36 - C39	9	R23, R24	22	R43, R44	21	U1	27	U19	38
C14	7	CR1	11	R25, R26	23	R45, R46	22	U2	28	U21	36
C15	8	L1 - L8	12	R27	19	R47, R48	23	U3	27	U22 - U25	39
C16	9	P1	13	R28	15	R49	19	U4	29	U26	38
C17, C18	4	R1 - R3	15	R29	20	R50	15	U5	30	U28	38
C19, C20	10	R4	16	R30	19	R51	20	U6, U7	27	U35	38
C21	9	R5, R6	17	R31	15	R52	19	U8	31	VR1	40
C22, C23	4	R7 - R14	15	R32, R33	21	R53	15	U9	32		

EL5CM039

Figure 13. Circuit card assembly, group traffic monitor 21A2.

(1) ILLUSTRATION (a) FIG NO.	(b) ITEM NO.	(2) SMR CODE	(3) NATIONAL STOCK NUMBER	(4) FSCM	(5) PART NUMBER	(6) DESCRIPTION USABLE ON CODE	(7) U/M	(8) QTY INC IN UNIT
						GROUP 07 CCA GROUP TRAFFIC MONITOR 21A2		
13	1	XDDZZ	5910-00-932-4455	81349	M39003/01-2289	CAPACITOR, FIXED, ELE.....DH3	EA	2
13	2	PADZZ	5910-00-007-3974	81349	R39003/01-2991	CAPACITOR, FIXED, ELE.....DH3	EA	1
13	3	X0DZZ	5910-00-600-6889	81349	M39014/02-1230	CAPACITOR, FIXED, CER.....DH3	EA	2
13	4	XDD2Z	5910-00-513-5385	81349	M39014/02-1218	CAPACITOR, FIXED, CER.....DH3	EA	14
13	5	XDDZZ	5910-00-078-7227	81349	M39003/01-2283	CAPACITOR, FIXED, ELE.....DH3	EA	1
13	6	XDDZZ	5910-01-043-5772	81349	CMROSF271GODR	CAPACITOR, FIXED, MIC.....DH3	EA	1
13	7	XDDZZ	5910-01-038-5395	81349	CMROSF391GODR	CAPACITOR, FIXED, MIC.....DH3	EA	1
13	8	XDDZZ	5910-00-113-5284	81349	M39014/02-1238	CAPACITOR, FIXED, CER.....DH3	EA	1
13	9	XDDZZ	5910-01-044-5615	81349	CMROSE680GODR	CAPACITOR, FIXED, MIC.....DH3	EA	8
13	10	PADZZ	5910-00-350-2912	81349	CMRO5C1O0DODM	CAPACITOR, FIXED, MIC.....DH3	EA	8
13	11	PADZZ	5961-01-081-9473	81349	JAN1N4153-1	SEMICONDUCTOR DEVIC.....DH3	EA	1
13	12	XDDZZ	5950-00-134-3940	96906	MS1813D-8	COIL, RADIO, FREQUENC.....DH3	EA	8
13	13	XDDDD		80063	SM-D-942075	CONNECTOR RECP ELEC.....DH3	EA	1
13	14	XDDZZ		80205	NASL788-3-6C	EYELET, METALLIC.....DH3	EA	2
13	15	PADZZ	5905-00-110-7620	81349	RCRO7G1O2JS	RESISTOR.FIXED, COMP.....DH3	EA	19
13	16	XDDZZ	5905-00-116-8555	81349	RCRO7G153JS	RESISTOR.FIXED, COMP.....DH3	EA	1
13	17	XDDZZ	5905-00-116-8556	81349	RC07G223JS	RESISTOR.FIXED, COMP.....DH3	EA	2
13	18	XDDZZ	5905-00-106-1278	81349	RCRO7G123JS	RESISTOR.FIXED, COMP.....DH3	EA	1
13	19	PADZZ	5905-01-064-6738	81349	RLR20C991ROGR	RESISTOR, FIXED, FILM.....DH3	EA	8
13	20	XDOZZ	5905-00-481-8454	81349	RNC55H2115FS	RESISTOR, FIXED, FILM.....DH3	EA	8
13	21	XDDZZ	5905-00-005-2903	81349	RNC55H4220FS	RESISTOR, FIXED, FILM.....DH3	EA	8
13	22	XDDZZ	5905-00-110-0388	81349	RCRO7G1O4JS	RESISTOR.FIXED, COMP.....DH3	EA	8
13	23	PADZZ	5905-10-138-7399	81349	RNC55H5111FS	RESISTOR, FIXED, FILM.....DH3	EA	8
13	24	XDDZZ	5905-00-329-6968	81349	RWR81S46R4FR	RESISTOR, FIXED, WIRE.....DH3	EA	1
13	25	PADZZ	5935-01-026-0915	81349	M39024/18-06	JACK, TIP.....DH3	EA	1
13	26	PADZZ	5935-01-012-0773	81349	M39024/I8-05	JACK, TIP.....DH3	EA	8
13	27	XDDZZ	5967-00-348-2717	81349	M38510/01203BEB	MICROCIRCUIT, DIGITA.....DH3	EA	6
13	28	PADZZ	5962-01-006-0181	80063	SM-A-942015	MICROCIRCUIT, DIGITA.....DH3	EA	1
13	29	XDDZZ	5962-01-024-5747	80063	SM-A-942000	MICROCIRCUIT, DIGITA.....DH3	EA	1
13	30	XDDZZ	5962-00-173-9776	81349	M38510/00903BCB	MICROCIRCUIT, DIGITA.....DH3	EA	1
13	31	PADZZ	5962-00-349-6236	80063	SM-A-942021	MICROCIRCUIT, DIGITA.....DH3	EA	1
13	32	XDDZZ	5962-01-073-0693	81349	M38510115901BEB	MICROCIRCUIT, DIGITA.....DH3	EA	1
13	33	XDDZZ		80063	SM-A-942006	MICROCIRCUIT, DIGITA.....DH3	EA	1
13	34	XDDZZ		80063	SM-A-942003	MICROCIRCUIT, DIGITA.....DH3	EA	1
13	35	PADZZ		80063	SM-A-942013	MICROCIRCUIT, DIGITA.....DH3	EA	1
13	36	XDDZZ		80063	SM-A-942007	MICROCIRCUIT, DIGITA.....DH3	EA	3
13	37	XDDZZ		80063	SM-A-942024	MICROCIRCUIT, DIGITA.....DH3	EA	1
13	38	XDDZZ		80063	SM-A-942022	MICROCIRCUIT, DIGITA.....DH3	EA	4
13	39	XDDZZ		80063	SM-A-942026	MICROCIRCUIT, DIGITA.....DH3	EA	4

(1) ILLUSTRATION (a) FIG NO.	(b) ITEM NO.	(2) SMR CODE	(3) NATIONAL STOCK NUMBER	(4) FSCM	(5) PART NUMBER	(6) DESCRIPTION / USABLE ON CODE	(7) U/M	(8) QTY INC IN UNIT
13	40	XDDZZ	5961-00-752-6121	81349	JANNT53A	SEMICONDUCTOR DEVIC.....DH3	EA	1
13	41	XDDZZ		80063	S+-A-942112-1	EJECTOR CAR.....DH3	EA	1
13	42	XDDZ2		80063	SSA-942112-12	EJECTOR CAR.....DH3	EA	1
13	43	XADZZ		80063	SM-D-941912	PRINTED WIRING.....DH3	EA	1

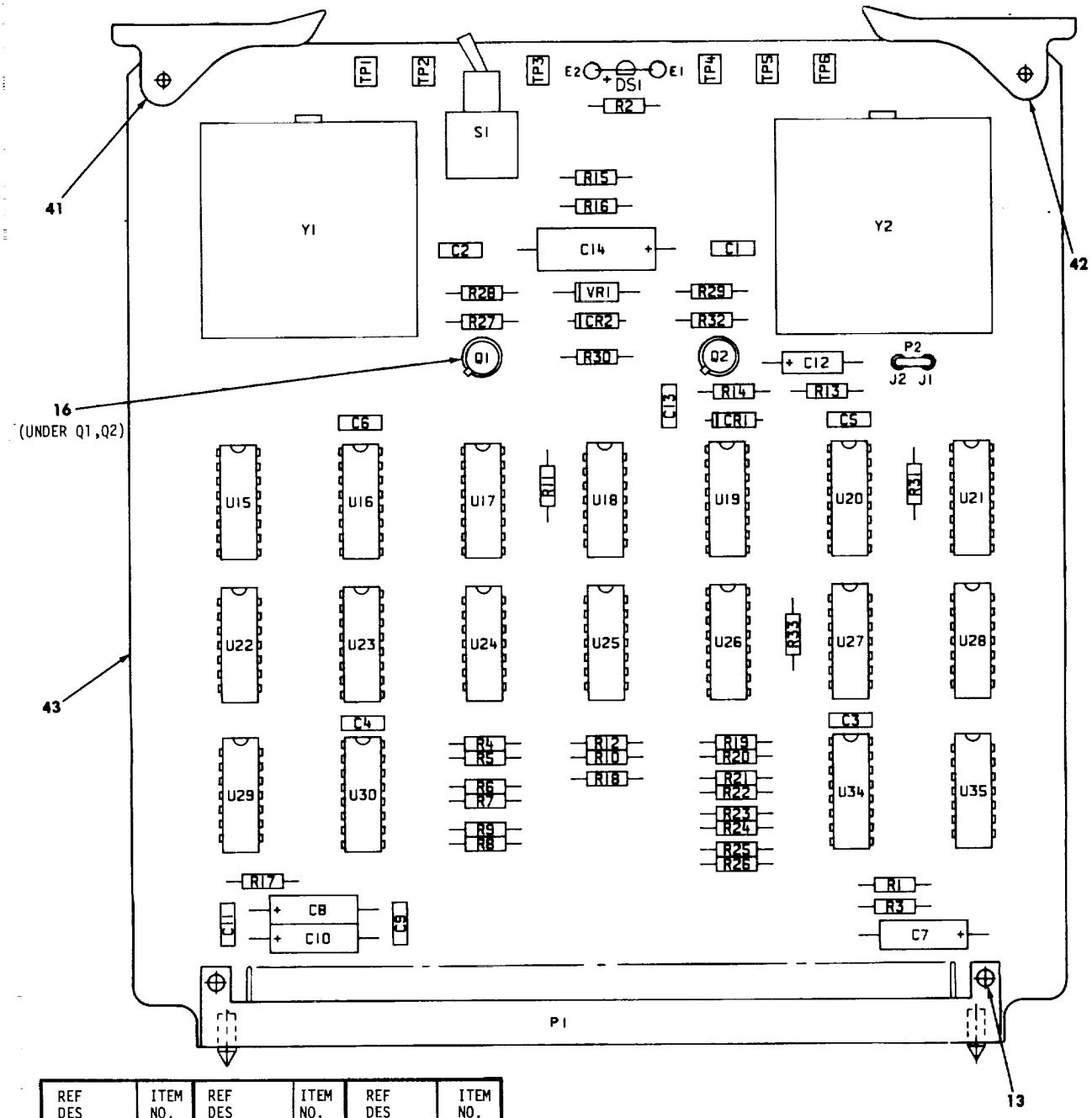

REF DES	ITEM NO.	REF DES	ITEM NO.	REF DES	ITEM NO.
C1 - C6	1	R4 - R12	18	U19	31
C7	2	R13	19	U20	29
C8	3	R14	20	U21	28
C9	4	R15, R16	17	U22	32
C10	3	R17 - R26	18	U23	33
C11	4	R27	21	U24	34
C12	5	R28	22	U25	30
C13	6	R29	23	U26	28
C14	7	R30	18	U27	34
CR1, CR2	8	R31, R32	17	U28	35
DS1	9	R33	24	U29	30
E1, E2	10	S1	25	U30	36
J1, J2	11	TP1	26	U34	37
P1	12	TP2 - TP6	27	U35	35
P2	14	U15	28	VR1	38
Q1, Q2	15	U16, U17	29	Y1	39
R1 - R3	17	U18	30	Y2	40

NOTE:
PREFIX ALL REFERENCE
DESIGNATIONS WITH 21A4.

EL5CM040

Figure 14. Circuit card assembly, master oscillator/combiner 21A4.

(1) ILLUSTRATION (a) FIG NO.	(b) ITEM NO.	(2) SMR CODE	(3) NATIONAL STOCK NUMBER	(4) FSCM	(5) PART NUMBER	(6) DESCRIPTION USABLE ON CODE	(7) U/M	(8) QTY INC IN UNIT
						GROUP 08 CCA NASTER OSCILLATCR/COMBINER 21A4		
14	1	XDDZZ	5910-00-513-5385	81349	M39014/02-1218	CAPACITOR.FIXED, CER DH3	EA	
14	2	PADZZ	5910-00-007-3974	81349	M39003/01-2991	CAPACITOR, FIXED, ELE DH3	EA	
14	3	XDDZZ	5910-00-932-4455	81349	M39003/01-2289	CAPACITOR, FIXED, ELE DH3	EA	
14	4	XODZZ	5910-00-600-6889	81349	M939014/02-1230	CAPACITOR.FIXED.CER DH3	EA	
14	5	XDDZZ	5910-00-420-7182	81349	M39003/01-2242	CAPACITOR, FIXED, ELE DH3	EA	
14	6	XDDZZ	5910-00-113-5494	81349	M39014/02-1340	CAPACITOR.FIXED.CER DH3	EA	
14	7	XDDZZ	5910-00-861-5108	81349	M39003/01-2295	CAPACITOR, FIXED, ELE DH3	EA	
14	8	PAOZZ	5961-01-081-9573	81349	JAN1N4153-1	SEMICONDUCTOR.....DH3	EA	
14	9	PADZZ	5961-01-090-0102	80063	SM-A-942039	LIGHT EMITTING DIOD.....DH3	EA	
14	10	XDDZZ		80063	SM-A-942156	TERMINAL DH3	EA	
14	11	XDDZZ		80063	SM-A-942070	CONTACT ELECTRICAL.....DH3	EA	
14	12	XDDDD		80063	SM-D-942075	CONNECTOR RECP ELEC DH3	EA	
14	13	XDDZZ		80205	NAS1788-3-6C	EYELET.METALLIC DH3	EA	
14	14	XDDZZ		80063	SM-B-942071	DUMMY CONN PLUG.....DH3	EA	
14	15	PADZZ	5961-00-951-8757	81349	JAN2N2222A	TRANSISTOR.....DH3	EA	
14	16	XDDZZ		80063	SM-A-942098	INSULATOR DISK DH3	EA	
14	17	PADZZ	5905-00-110-7620	81349	RCRO7G102JS	RESISTOR, FIXED, COMP.....DH3	EA	
14	18	XDDZZ	5905-00-106-3666	81349	RCRO07G1O3JS	RESISTOR, FIXED, COMP.....DH3	EA	
14	19	XDDZZ	5905-00-116-8555	81349	RCR07G153JS	RESISTOR, FIXED, COMP DH3	EA	
14	20	XDDZZ	5905-00-116-8556	81349	RCR07G223JS	RESISTOR, FIXED, COMP DH3	EA	
14	21	XDDZZ	5905-00-121-9932	81349	RCR07G6391JS	RESISTOR, FIXED, COMP.....DH3	EA	
14	22	XDDZZ	5905-00-111-4727	81349	RCR07G212JS	RESISTOR, FIXED, COMP DH3	EA	
14	23	XDDZZ	5905-00-105-7764	81349	RCRO1G222JS	RESISTOR, FIXED, COMP.....DH3	EA	
14	24	XDDZZ	5905-00-114-0711	81349	RCR07G472JS	RESISTOR, FIXED, COMP DH3	EA	
14	25	XDDZZ		80063	SMB-942090	SWITCH TOGGLE.....DH3	EA	
14	26	PADZZ	5935-01-026-0915	81349	M39024/18-06	JACK, TIP.....DH3	EA	
14	27	PADZZ	5935-01-012-0773	81349	M39D24/18-05	JACK, TIP.....DH3	EA	
14	28	PADZZ		80063	SM-A-942013	MICROCIRCUIT, DIGITA.....DH3	EA	
14	29	PADZZ	5962-01-006-0181	80063	SM-A-942015	MICROCIRCUIT, DIGITA.....DH3	EA	
14	30	XDDZZ	5962-01-024-5747	80063	SM-A-942000	MICROCIRCUIT, DIGITA.....DH3	EA	
14	31	XDDZZ	5962-00-348-2717	81349	M38510/01203BEB	MICROCIRCUIT, DIGITA.....DH3	EA	
14	32	XDDZZ		80063	SM-A-942001	MICROCIRCUIT, DIGITA.....DH3	EA	
14	33	XDDZZ		80063	SM-A-942006	MICROCIRCUIT, DIGITA.....DH3	EA	
14	34	XDDZZ		80063	SM-A-942007	MICROCIRCUIT, DIGITA.....DH3	EA	
14	35	PAOZZ	5962-01-021-0142	80063	SM-A-942004	MICROCIRCUIT, DIGITA.....DH3	EA	
14	36	XDDZZ		80063	SM-A-942026	MICROCIRCUIT, DIGITA.....DH3	EA	
14	37	XDDZZ	5962-00-348-3504	81349	M38510101402BEB	MICROCIRCUIT, DIGITA.....DH3	EA	
14	38	XDDZZ	5961-00-752-6121	81349	JANIN753A	SEMICONDUCTOR DEVIC.....DH3	EA	
14	39	PADZZ	5895-01-090-1923	80063	S5--942086-2	OSCILLATOR, RADIO FR.....DH3	EA	

(1) ILLUSTRATION (a) FIG NO.	(b) ITEM NO.	(2) SMR CODE	(3) NATIONAL STOCK NUMBER	(4) FSCM	(5) PART NUMBER	(6) DESCRIPTION	USABLE ON CODE	(7) U/M	(8) QTY INC IN UNIT
14	40	PADZZ	5895-01-090-1922	80063	SM-B-942086-1	OSCILLATOR, RADIO FR	DHE	EA	1
14	41	XDDZZ		80063	SM-A-942112-1	EJECTOR CARD	DHE	EA	1
14	42	XDOZZ		80063	SM-A-942112-10	EJECTOR CARD	DHE	EA	1
14	43	XADZZ		80063	SM-D-941917	PRINTED WIRING BD	DHE	EA	1

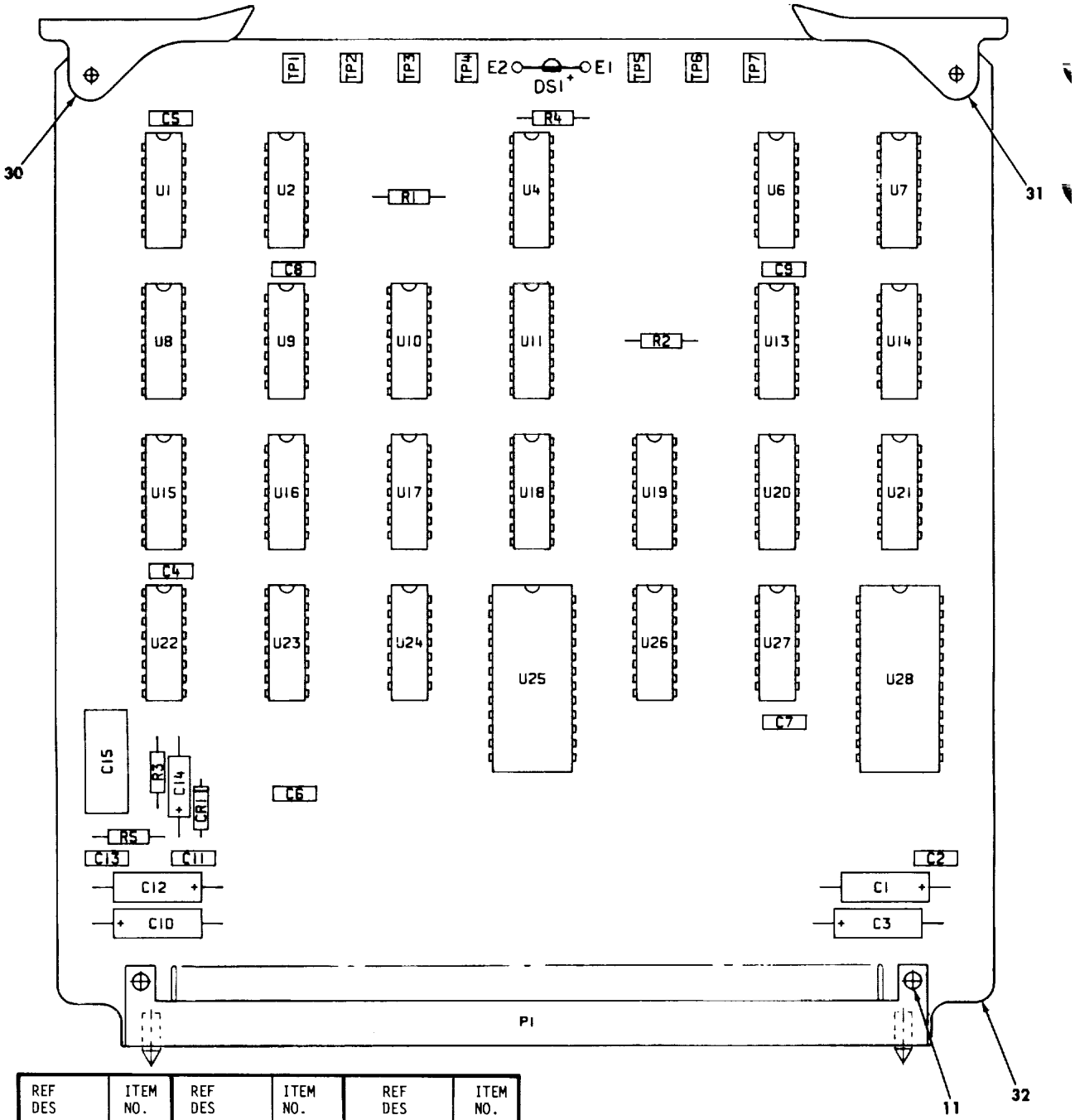

REF DES	ITEM NO.	REF DES	ITEM NO.	REF DES	ITEM NO.
C1	1	R3	13	U14	24
C2	2	R4	12	U15	18
C3	1	R5	13	U16	25
C4 - C9	3	TP1	14	U17	22
C10	4	TP2 - TP7	15	U18	26
C11	2	U1	16	U19	23
C12	4	U2	17	U20	27
C13	2	U4	18	U21	24
C14	5	U6	19	U22	28
C15	6	U7	20	U23	23
CR1	7	U8	21	U24	27
DS1	8	U9	22	U25	29
E1, E2	9	U10	18	U26	20
P1	10	U11	21	U27	27
R1, R2	12	U13	23	U28	29

NOTE:
PREFIX ALL REFERENCE DESIGNATIONS WITH 21A5.

EL5CM041

Figure 15. Circuit card assembly, timing and control 21A5.

(1) ILLUSTRATION (a) FIG NO.	(b) ITEM NO.	(2) SMR CODE	(3) NATIONAL STOCK NUMBER	(4) FSCM	(5) PART NUMBER	(6) DESCRIPTION USABLE ON CODE	(7) U/M	(8) QTY INC IN UNIT
						GROUP 09 CCA TIMING AND CONTROL 21A5		
15	1	PADZZ	5910-00-007-3974	81349	M39003/01-2991	CAPACITOR, FIXED, ELE DH3	EA	2
15	2	XDDZZ	5910-00-600-6889	81349	M39014/02-1230	CAPACITOR, FIXED, DEVICE.....DH3	EA	3
15	3	XDDZZ	5910-00-513-5385	81349	M39014/02-1218	CAPACITOR,.FIXED, CER.....DH3	EA	6
15	4	XDDZZ	5910-00-932-4455	81349	A39003/01-2289	CAPACITOR, FIXED, ELE DH3	EA	2
15	5	XDDZZ	5910-00-078-7227	81349	M39003101-2283	CAPACITOR, FIXED, ELE DH3	EA	1
15	6	XDDZZ	5910-01-029-8906	81349	CMRO6F1O2GODR	CAPACITOR, FIXED.MIC DH3	EA	1
15	7	PADZZ	5961-01-081-9573	81349	JAN1N4153-1	SEMICONDUCTOR DEVIC DH3	EA	1
15	8	PADZZ	5961-01-090-0102	80063	SM-A-942039	LIGHT, EMITTING DEVICE.....DH3	EA	1
15	9	XDDZZ		80063	SM-A-942156	TERMINAL DH3	EA	2
15	10	XDDDD		80063	SM-D-942075	CONNECTOR RECP ELEC DH3	EA	1
15	11	XDDZZ		80205	NASI788-3-6C	EYELET, METALLIC DH3	EA	2
15	12	PADZZ	5905-00-110-7620	81349	RCRO7G102JS	RESISTOR, FIXED, COMP.....DH3	EA	3
15	13	XDDZZ	5905-00-116-8555	81349	RCRO7G53JS	RESISTOR, FIXED, COMP.....DH3	EA	2
15	14	PADZZ	5935-01-026-0915	81349	M39024/18-06	JACK, TIP DH3	EA	1
15	15	PADZZ	5935-01-012-0773	81349	M39024/18-05	JACK, TIP.....DH3	EA	6
15	16	XDDZZ	5962-01-021-0142	80063	SM-A-942004	MICROCIRCUIT, DIGITA.....DH3	EA	1
15	17	XDDZZ		80063	SM-A-942016	MICROCIRCUIT, DGTL.....DH3	EA	1
15	18	PAD ZZ		80063	SM-A-942013	MICROCIRCUIT, DIGITA.....DH3	EA	3
15	19	XDDZZ		80063	SM-A-942008	MICROCIRCUIT, DGTL.....DH3	EA	1
15	20	XDDZZ	5962-01-051-1348	81349	M38510/L5206BEB	MICROCIRCUIT, DIGITA.....DH3	EA	2
15	21	PADZZ	5962-01-006-0181	80063	SM-A-942015	MICROCIRCUIT, DIGITA.....DH3	EA	2
15	22	XDDZZ	5962-01-024-5747	80063	SM-A-942000	MICROCIRCUIT, DIGITA.....DH3	EA	2
15	23	XDDZZ		80063	SM-A-942006	MICROCIRCUIT, DIGITA.....DH3	EA	3
15	24	PADZZ	5962-0O-025-2592	80063	SM-A-942002	MICROCIRCUIT, DGTL.....DH3	EA	2
15	25	XDDZZ		80063	SM-A-942001	MICROCIRCUIT, DIGITA.....DH3	EA	1
15	26	XDDZZ	5962-00348-3504	81349	M38510/01402BE8	MICROCIRCUIT, DIGITA.....DH3	EA	1
15	27	XDDZZ		80063	SM-A-942007	MICROCIRCUIT, DGTL.....DH3	EA	3
15	28	XDDZZ	5962-00-348-2717	81349	38510/012038E	MICROCIRCUIT, DIGITA.....DH3	EA	1
15	29	XDDZZ	5962-01-049-7686	81349	38510/15218B	MICROCIRCUIT, DIGITA.....DH3	EA	2
15	30	XDDZZ		80063	SM-A-942112-1	EJECTOR CARD DH3	EA	1
15	31	XDDZZ		80063	SM-A-942112-9	EJECTOR CARD DH3	EA	1
15	32	XADZZ		80063	SM-D-941922	PRINTED WIRING BD..... DH3	EA	1

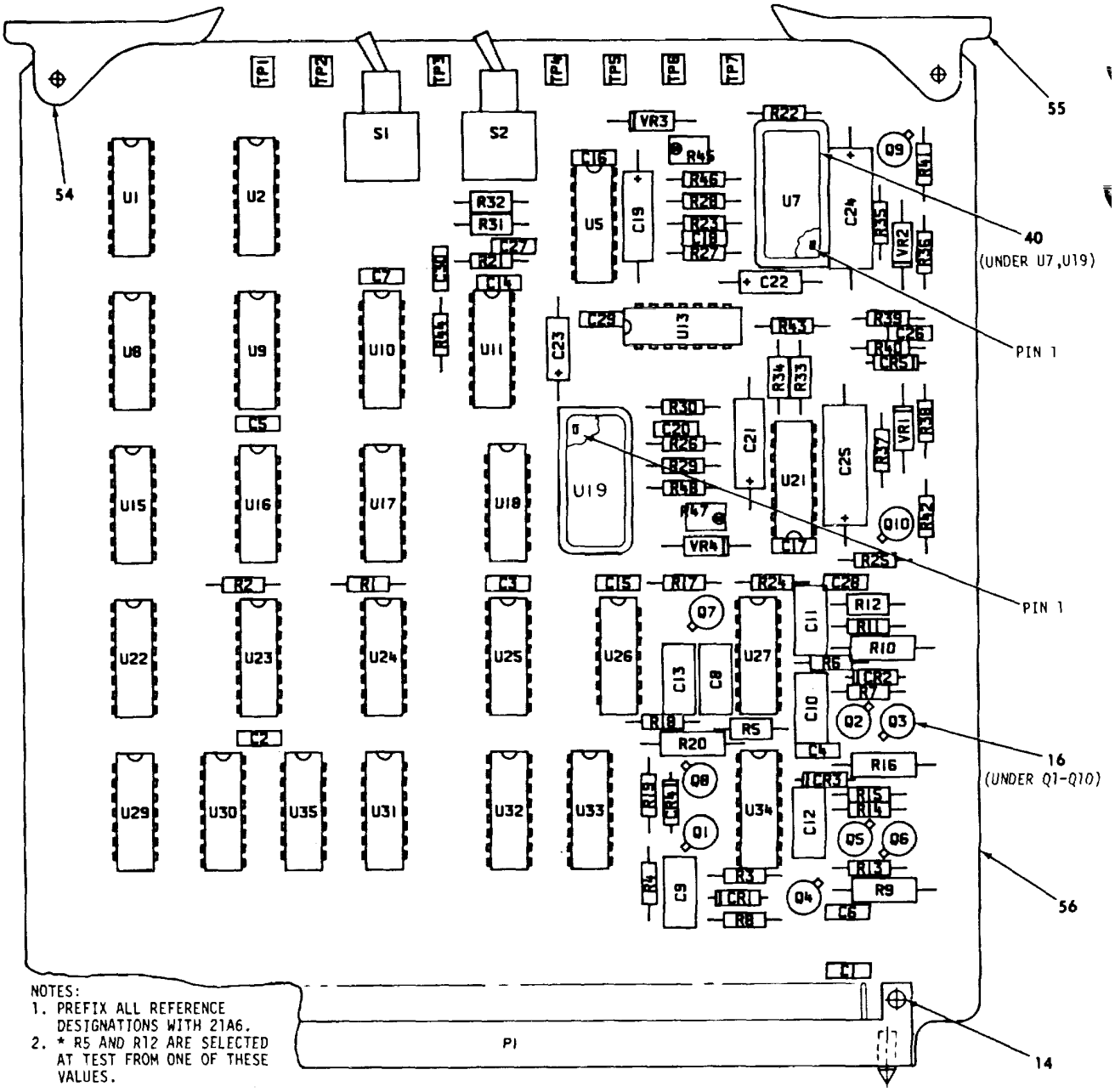

NOTES:
1. PREFIX ALL REFERENCE DESIGNATIONS WITH 21A6.
2. * R5 AND R12 ARE SELECTED AT TEST FROM ONE OF THESE VALUES.

REF DES	ITEM NO.	REF DES	ITEM NO.	REF DES	ITEM NO.	REF DES	ITEM NO.	REF DES	ITEM NO.	REF DES	ITEM NO.
C1 - C3	1	C26	9	R6	19	R22	24	S1, S2	33	U21	38
C4	1.1	C27, C28	10	R7	20	R23	25	TP1	34	U22	46
C5	1	C29, C30	11	R8	22	R24	19	TP2 - TP7	35	U23	48
C6	1.1	CR1 - CR5	12	R9, R10	23	R25	24	U1	36	U24	37
C7	1	P1	13	R11	22	R26	25	U2	37	U25	42
C8	2	Q1, Q2	15	R12	21	R27	26	U5	38	U26	43
C9, C10	3	Q3, Q4	17	*	21.1	R28, R29	27	U7	39	U27	49
C11	2	Q5	15	*	21.2	R30	26	U8	41	U29	50
C12, C13	3	Q6	17	R13	19	R31 - R34	28	U9	42	U30	41
C14, C15	1	Q7	15	R14	20	R35 - R38	29	U10	43	U31	43
C16, C17	4	Q8	17	R15	22	R39, R40	30	U11	44	U32	37
C18	5	Q9, Q10	18	R16	23	R41, R42	24	U13	45	U33	36
C19	6	R1 - R3	19	R17	19	R43, R44	31	U15	46	U34	51
C20	5	R4	20	R18	20	R45	32	U16	47	U35	47
C21	6	R5	21	R19	22	R46	25	U17	37	VR1, VR2	52
C22, C23	7	*	21.1	R20	23	R47	32	U18	47	VR3, VR4	53
C24, C25	8	*	21.2	R21	19	R48	25	U19	39		

EL5CM04

Figure 16. Circuit card assembly, dual group processor 21A6.

(1) ILLUSTRATION (a) FIG NO.	(b) ITEM NO.	(2) SMR CODE	(3) NATIONAL STOCK NUMBER	(4) FSCM	(5) PART NUMBER	(6) DESCRIPTION USABLE ON CODE	(7) U/M	(8) QTY INC IN UNIT
						GROUP 10 CCA DUAL GROUP PROCESSOR 21A6		
16	1	XDDZZ	5910-00-513-5385	81349	M39014/02-1218	CAPACITOR, FIXED, CER.....DH3	EA	7
16	1.1	PADZZ		81349	M39014/02-1405	CAPACITOR, FIXED, CER.....DH3	EA	2
16	2	PADZZ	5910-00-350-2912	81349	CMR05C100DODM	CAPACITOR, FIXED,.MIC.....DH3	EA	2
16	3	PADZZ	5910-0-043-6892	81349	CMR0A5F1O1GOR	CAPACITOR, FIXED, MIC.....DH3	EA	4
16	4	XDDZZ	5910-00-098-9277	81349	M39014/02-1354	CAPACITOR, FIXED, CER.....DH3	EA	2
16	5	PADZZ	5910-01-042-3759	81349	M39014/02-1407	CAPACITOR, FIXED, CER.....DH3	EA	2
16	6	ZDDZZ		80063	SM-A-942093	CAPACITOR, FIXED, CER.....DH3	EA	2
16	7	PADZZ	5910-00-068-4298	81349	M39003/01-2356	CAPACITOR, FIXED, ELE.....DH3	EA	2
16	8	XDDZZ	5910-00-R61-5108	81349	M39003/01-2295	CAPACITOR, FIXED, ELE.....DH3	EA	2
16	9	PADZZ	5910-00-113-9449	81349	M39014/102-1347	CAPACITOR, FIXED, CER.....DH3	EA	1
16	10	XDDZZ	5910-00-60G6889	8L349	M39014/02-1230	CAPACITOR, FIXED, CER.....DH3	EA	2
16	11	XDDZZ	910-00-010-8120	81349	M39014/02-1343	CAPACITOR, FIXED, CER.....DH3	EA	2
16	12	PADZZ	5961-01-081-9573	81349	JAN1N4153-l	SEMICONDUCTER DEVIC.....DH3	EA	5
16	13	XDDDD		80063	SM-0-942075	CONNECTOR RECP ELEC.....DH3	EA	1
16	14	XDDZZ		80205	NASL7SB-3-6C	EYELET.METALLIC.....DH3	EA	2
16	15	XDDZZ	5961-00-926-0237	81349	JAN1N236A	TRANSISTOR.....DH3	EA	4
16	16	XDDZZ		80063	SM-A-94209	INSULATOR.....DH3	EA	10
16	17	XDDZZ	5961-00-911-6015	81349	JAN2N3251A	RESISTOR.....DH3	EA	4
16	18	PADZZ	5961-00-951-8757	81349	JAN2N2222A	TRANSISTOR.....DH3	EA	2
16	19	PADZZ	5905-00-110-7620	81349	RCROTGIOZJS	RESISTOR, FIXED, COMP.....DH3	EA	8
16	20	XDDZZ	5905-00-119-3503	81349	RCR07G276JS	RESISTOR, FIXED, COMP.....DH3	EA	4
16	21	PADZZ		80063	SM-A-941929	RESISTOR ASSORTMENT.....DH3	EA	1
16	21.1	PADZZ	5905-00-138-7399	81349	RNC55H511AFS	RESISTOR, FIXED, FILM.....DH3	EA	V
16	21.2	PADZZ	5905-00-138-7399	81349	RNC55H511IFS	RESISTOR, FIXED, FILM.....DH3	EA	V
16	22	XDDZZ	5905-00-120-9154	81349	RCR07G47IJS	RESISTOR, FIXED, COMP.....DH3	EA	4
16	23	PADZZ	5905-01-064-6738	81349	RLRNOC5H ROIF	RESISTOR, FIXED, FILM.....DH3	EA	4
16	23	XDDZZ	5905-00-106-3668	81349	RCRO7G226JS	RESISTOR, FIXED, COMP.....DH3	EA	4
16	25	XDDZZ	5905-00-126-6073	81349	RCR07CG22JS	RESISTOR, FIXED, COMP.....DH3	EA	4
16	26	XDDZZ	5905-00-411-4772	81349	RCRT7G272JS	RESISTOR, FIXED, COMP.....DH3	EA	2
16	27	XDDZZ	5905-00-141-0744	81349	RC 07G562JS	RESISTOR, FIXED, COMP.....DH3	EA	2
16	28	PADZZ	5905-00-419-2836:	81349	RNC55Hl473FS	RESISTOR, FIXED, FILM.....DH3	EA	4
16	29	XDDZZ	5905-00-114-0711	81349	RCRO7G472JS	RESISTOR, FIXED, COMP.....DH3	EA	4
16	30	XDDZZ	5905-00-464-9805	81349	RCO7GI26	RESISTOR, FIXED, COMP.....DH3	EA	2
16	31	XDDZZ	5905-00-135-3973	81349	RCROTG52?JS	RESISTOR, FIXED, COMP.....DH3	EA	2
16	32	PADZZ	5905-01-047-5172	81349	RJR26FWI03P	RESISTOR, VARIABLE, N.....DH3	EA	2
16	33	XDDZZ		80063	SM-8-942090	SWITCH TOGGLE.....DH3	EA	2
16	34	PADZZ	5935-01-026-0915	81349	M39024/18 -06	JACK,TIP.....DH3	EA	1
16	35	PADZZ	5935-01-012-0773	81349	MR90241/1 05	JACK, TIP.....DH3	EA	6
16	36	PADZZ		80063	S-A-942013	MICROCIRCUIT, DIGITA.....DH3	EA	2

(1) ILLUSTRATION (a) FIG NO.	(b) ITEM NO.	(2) SMR CODE	(3) NATIONAL STOCK NUMBER	(4) FSCM	(5) PART NUMBER	(6) DESCRIPTION	USABLE ON CODE	(7) U/M	(8) QTY INC IN UNIT
16	37	XDDZZ	5962-01-012-9178	81349	M38510/01404BEB	MICROCIRCUIT, DIGITA	DH3	EA	4
16	38	XDDZZ		80063	SM-A-942021	MICROCIRCUIT, DGTL	DH3	EA	2
16	39	XD0ZZ		80063	SM-A-942041	MICROCIRCUIT LINEAR	DH3	EA	2
16	40	XDDZZ		80063	SM-A-942154	MOUNTING PAD	DH3	EA	2
16	41	XDDZZ		80063	SM-A-942028	MICROCIRCUIT, DIGITA	DH3	EA	2
16	42	XDDZZ		80063	SM-A-942031	MICROCIRCUIT, DIGITA	DH3	EA	2
16	43	XDOZZ		80063	SM-A-942042	MICROCIRCUIT, DIGITA	DH3	EA	3
16	44	XDDZZ	5962-01-015-8539	81349	M38510/00504BEB	MICROCIRCUIT, DIGITA	DH3	EA	1
16	45	XDDZZ		80063	SM-A-942152	MICROCIRCUIT, DIGITA	DH3	EA	1
16	46	PADZZ	5962-00-349-6236	80063	SM-A-942027	MICROCIRCUIT, DIGITA	DH3	EA	2
16	47	XDDZZ		80063	SM-A-942007	MICROCIRCUIT, DIGITA	DH3	EA	3
16	48	XDDZZ		80063	SM-A-942018	MICROCIRCUIT, DIGITA	DH3	EA	1
16	49	XDDZZ	5962-00-348-2717	81349	M38510/01203BEB	MICROCIRCUIT, DIGITA	DH3	EA	1
16	50	XDDZZ		80063	SM-A-942001	MICROCIRCUIT, DIGITA	DH3	EA	1
16	51	PADZZ	5962-01-006-0181	80063	SM-A-942015	MICROCIRCUIT, DIGITA	DH3	EA	1
16	52	XDZZ00	5961-00-894-0684	81349	JAN1N758A	SEMICONDUCTOR DEVIC	DH3	EA	2
16	53	PADZZ	5961-00-846-9157	81349	JAN1N759A	SEMICONDUCTOR DEVIC	DH3	EA	2
16	54	XDDZZ		80063	SM-A-942112-1	EJECTOR CARD	DH3	EA	1
16	55	XDDZZ		80063	SM-A-942112-8	EJECTOR CARD	DH3	EA	1
16	56	XADZZ		80063	SM-D-941927	PRINTED WIRING BOARD	DH3	EA	1

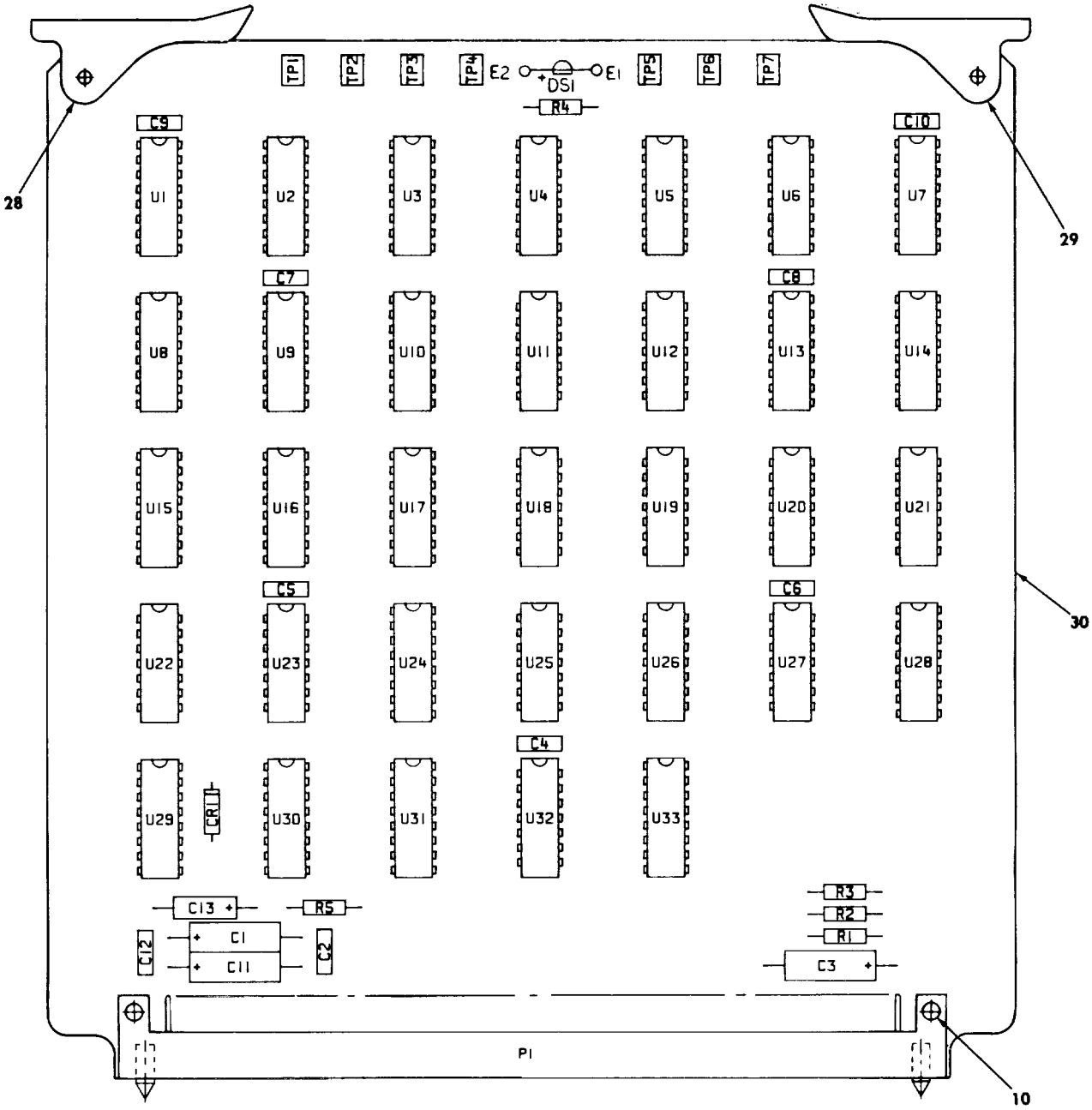

REF DES	ITEM NO.	REF DES	ITEM NO.	REF DES	ITEM NO.
C1	1	TP1	13	U22, U23	21
C2	2	TP2 - TP7	14	U24	22
C3	3	U1 - U3	15	U25	23
C4 - C10	4	U4	16	U26	24
C11	1	U5, U6	15	U27	21
C12	2	U7, U8	17	U28	22
C13	5	U9, U10	15	U29	25
CR1	6	U11, U12	18	U30	26
DS1	7	U13 - U16	15	U31	27
E1, E2	8	U17	16	U32	20
P1	9	U18, U19	18	U33	16
R1 - R4	11	U20	19		
R5	12	U21	20		

NOTE:
PREFIX ALL REFERENCE DESIGNATIONS WITH 21A7.

EL5CM043

Figure 17. Circuit card assembly, frame sync 21A7.

(1) ILLUSTRATION (a) FIG NO.	(b) ITEM NO.	(2) SMR CODE	(3) NATIONAL STOCK NUMBER	(4) FSCM	(5) PART NUMBER	(6) DESCRIPTION USABLE ON CODE	(7) U/M	(8) QTY INC IN UNIT
						GROUP 11 CCA FRAME SYNC 21A7		
17	1	XDDZZ	5910-00-932-4455	81349	M39003/01-2289	CAPACITOR, FIXED, ELE DH3	EA	2
17	2	XDDZZ	5910-00-600-6889	81349	M39014/02-1230	CAPACITOR, FIXED, CER DH3	EA	2
17	1	PADZZ	5910-00-007-3974	81349	M39003/01-2991	CAPACITOR, FIXED, ELE DH3	EA	1
17	4	XDDZZ	5910-00-513-5385	81349	M39014/02-218	CAPACITOR, FIXED, CER DH3	EA	7
17	5	XDDZZ	5910-00-420-7182	81349	M39003/01-2242	CAPACITOR, FIXED, ELE DH3	EA	1
17	6	PADZZ	5961-01-081-9573	81349	JAN1N4153-1	SEMICONDUCTOR DEVIC DH3	EA	1
17	7	PADZZ	5961-01-090-0102	80063	SM-A-942039	LIGHT EMITTING DIOD DH3	EA	1
17	8	XDDZZ		80063	SM-A-942156	TERMINAL DH3	EA	2
17	9	XDDDD		80063	SM-D-942075	CONNECTOR RECP ELC DH3	EA	1
17	10	XDOZZ		80205	NAS178I-3-6C	EYELET, METALLIC DH3	EA	2
17	11	PADZZ	5905-00-110-7620	81349	RCR07G102JS	RESISTOR, FIXED, COMP DH3	EA	4
17	12	XDDZZ	5905-00-116-8555	81349	RCR076153JS	RESISTOR, FIXED, COMP DH3	EA	1
17	13	PADZZ	5935-01-026-0915	81349	M39024118-06	JACK, TIP DH3	EA	1
17	14	PADZZ	5935-01-012-0773	81349	M39024/11-05	JACK, TIP DH3	EA	6
17	15	XDDZZ	5962-01-058-4418	81349	M38510/15902BE8	MICROCIRCUIT, DIGITA DH3	EA	11
17	16	PADZZ	5962-01-006-0181	80063	SM-A-942015	MICROCIRCUIT, DIGITA DH3	EA	3
17	17	XDDZZ	5962-01-073-0693	81349	385101/15901BEB	MICROCIRCUIT, DIGITA DH3	EA	2
17	18	XDDZZ		80063	SM-A-942003	MICROCIRCUIT DGTL DH3	EA	4
17	19	XDDZZ		80063	SM-A-942007	MICROCIRCUIT DGTL DH3	EA	1
17	20	XDDZZ		80063	SM-A-942008	MICROCIRCUIT DGTL DH3	EA	2
17	21	XDDZZ	5962-01-021-0142	80063	SM-A-942004	MICROCIRCUIT, DIGITA DH3	EA	3
17	22	XDDZZ		80063	SM-A-942025	MICROCIRCUIT DGTL DH3	EA	2
17	23	PADZZ	5962-01-025-2592	80063	SM-A-42002	MICROCIRCUIT, DIGITA DH3	EA	1
17	24	XDDZZ		80063	SM-A-942001	MICROCIRCUIT DGTL DH3	EA	1
17	25	XDDZZ	5962-00-348-2717	81349	M3851001203BEB	MICROCIRCUIT, DIGITA DH3	EA	1
17	26	XDDZZ		80063	SM-A-942163	MICROCIRCUIT DGTL DH3	EA	1
17	27	PADZZ		80063	SM-A-942013	MICROCIRCUIT, DIGITA DH3	EA	1
I7	28	XDDZZ		80063	SM-A-942112-1	EJECTOR CARD DH3	EA	1
17	29	XDDZZ		80063	SM-A-942112-7	EJECTOR CARD DH3	EA	1
17	30	XAOZZ		80063	SM-D-941932	PRINTED WIRING DH3	EA	1

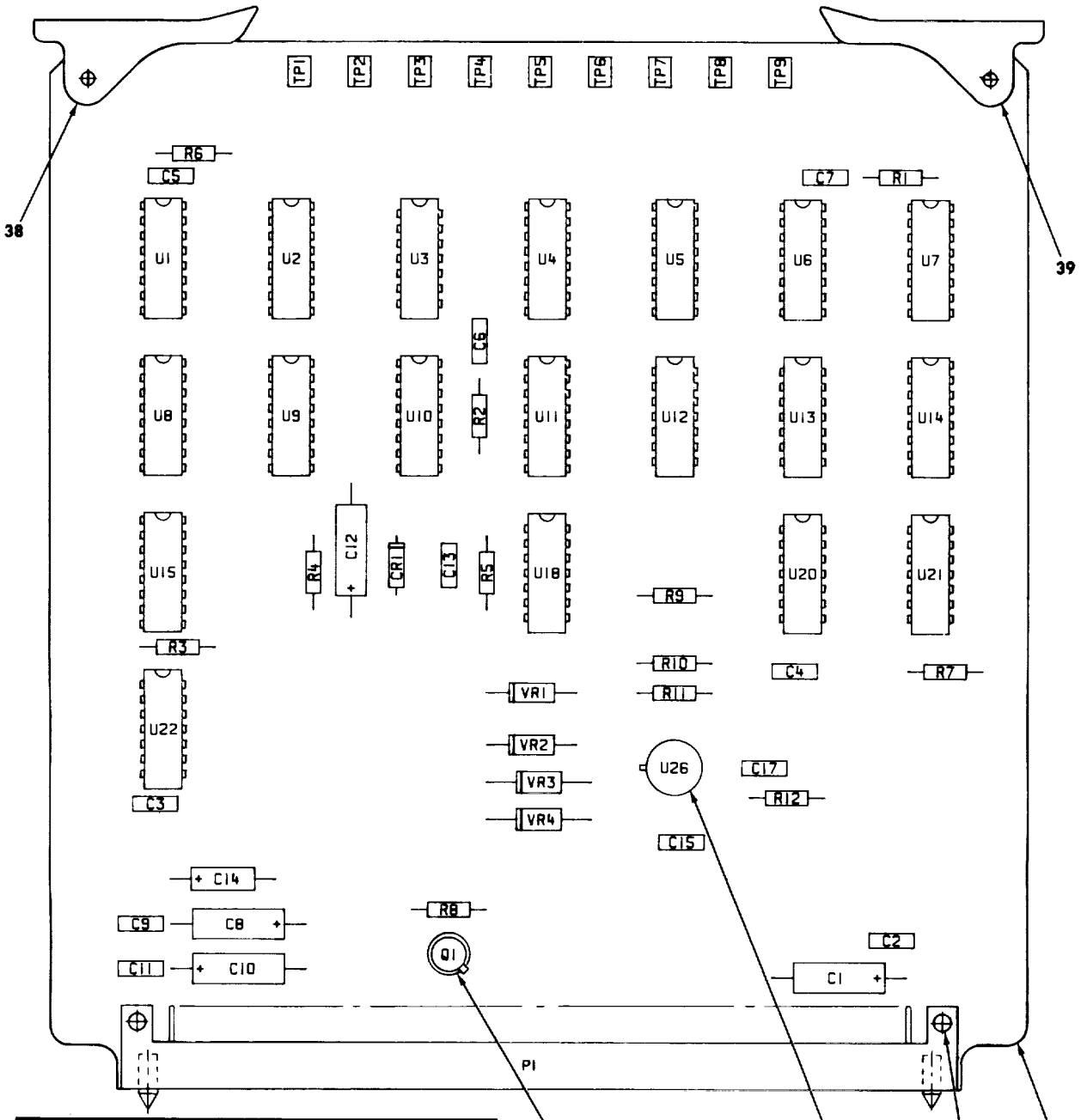

REF DES	ITEM NO.	REF DES	ITEM NO.	REF DES	ITEM NO.
C1	1	R4	14	U7, U8	22
C2 - C7	2	R5	15	U9	26
C8	3	R6, R7	13	U10	27
C9	4	R8	16	U11	28
C10	3	R9	17	U12	29
C11	4	R10	18	U13	30
C12	5	R11	19	U14	24
C13	6	R12	18	U15	22
C14	7	TP1	20	U18	31
C15	4	TP2 - TP9	21	U20	32
C17	4	U1, U2	22	U21	33
CR1	8	U3	23	U22	31
P1	9	U4	24	U26	34
Q1	11	U5	22	VR1, VR2	36
R1 - R3	13	U6	25	VR3, VR4	37

NOTE:
PREFIX ALL REFERENCE DESIGNATIONS WITH 21A8.

EL5CM044

Figure 18. Circuit card assembly, digital data orderwire encoder 21A8.

(1) ILLUSTRATION (a) FIG NO.	(b) ITEM NO.	(2) SMR CODE	(3) NATIONAL STOCK NUMBER	(4) FSCM	(5) PART NUMBER	(6) DESCRIPTION USABLE ON CODE	(7) U/M	(8) QTY INC IN UNIT
						GROUP 12 CCA DIGITAL DATA ORDERWIREE		
						DECODER 21A8		
18	1	PADZZ	5910-00-007-3974	81349	M39003/01-2991	CAPACITOR.FIXED.ELE DH3	EA	1
18	2	XDDZZ	5910-00-513-5385	81349	M39014/02-1218	CAPACITOR.FIXED.CER.....DH3	EA	6
18	3	XDDZZ	5910-00-932-4455	81349	M39003/01-2289	CAPACITOR.FIXED.ELE DH3	EA	2
18	4	XDDZZ	5910-00-600-6889	81349	M39014/02-1230	CAPACITOR,FIXED,CER DH3	EA	4
18	5	XDDZZ	5910-00-487-8072	81349	M39003/01-2244	CAPACITOR.FIXED.ELE DH3	EA	1
18	6	XDDZZ	5910-01-028-7835	81349	M39014/01-1237	CAPACITOR,FIXED,CER.....DH3	EA	1
18	7	XDDZZ	5910-00-078-7227	81349	M39003/01-2283	CAPACITOR.FIXED.ELE DH3	EA	1
18	8	PADZZ	5961-01-081-9573	81349	JAN1N4153-1	SEMICONUCTCR DEVIC DH3	EA	1
18	9	XDDDD		80063	SM-D-942075	CONNECTOR RECP ELEC DH3	EA	1
18	10	XDDZZ		80205	NAS1788-3-6C	EYELET, METALLIC DH3	EA	2
18	11	PADZZ	5961-00-951-8757	81349	JAN2N2222A	TRANSISTOR DH3	EA	1
18	12	XDDZZ		80063	SM-A-942098	INSULATOR DISK DH3	EA	1
18	13	PADZZ	5905-00-110-1620	81349	RCR07G102JS	RESISTOR,FIXED,COMP DH3	EA	5
18	14	XDDZZ	5905-00-116-8555	81349	RCR07G153JS	RESISTOR,FIXED,COMP.....DH3	EA	1
18	15	XDDZZ	5905-00-116-8556	81349	RCR07G223JS	RESISTOR,FIXED.COMP DH3	EA	1
18	16	XDDZZ		81349	RCR07G332JS	RESISTOR,FIXED COMP.....DH3	EA	1
18	17	XDDZZ	5905-00-121-9932	81349	RCR07G391JS	RESISTOR,FIXED.COMP DH3	EA	1
18	18	XDDZZ	5905-00-106-1356	81349	RCR07G152JS	RESISTOR,FIXED.COMP.....DH3	EA	2
18	19	XDDZ8	5905-00-106-3666	81349	RCR0TG103JS	RESISTOR,FIXED.COMP DH3	EA	1
18	20	PADZZ	5935-01-026-0915	81349	M39024/18-06	JACK.TIP.....DH3	EA	1
18	21	PAZZ	5935-01-012-0773	81349	M39024/18-05	JACKTIP.....DH3	EA	8
18	22	PADZZ	5962-00-349-6236	80063	SM-A-942027	MICROCIRCUIT,DIGITA.....DH3	EA	6
18	23	XDDZZ		80063	SM-A-942007	MICROCIRCUIT,DGTL DH3	EA	1
18	24	PADZZ	5962-01-006-0181	80063	SM-A-942015	MICROCIRCUIT,DIGITA.....DH3	EA	2
18	25	XDDZZ		80063	SM-A-942031	MICROCIRCUIT,DGTL DH3	EA	1
18	26	XDDZZ		80063	SM-A-942025	MICROCIRCUIT,DGTL DH3	EA	1
18	27	XDDZZ	5962-00-348-2717	81349	M38510/010203BEB	MICROCIRCUIT,DIGITA.....DH3	EA	1
18	28	XDDZZ		80063	SM-A-942006	MICROCIRCUIT,DGTL DH3	EA	1
18	29	XDDZZ	5962-00-173-9776	81349	M385101009038CB	MICROCIRCUIT,DIGITA.....DH3	EA	1
18	30	PADZZ	5962-01-05-2592	80063	SM-A-942002	MICROCIRCUIT,DIGITA.....DH3	EA	1
18	31	PADZZ		80063	SM-A-942001	MICROCIRCUIT,DGTL.....DH3	EA	2
18	32	XDDZZ	5962-01-024-5741	80063	SM-A-942000	MICROCIRCUIT,DIGIT.....DH3	EA	1
18	33	XDDZZ		80063	SM-A-942003	MICROCIRCUIT,DGTL.....DH3	EA	1
18	34	XDDZZ	5962-00-274-0200	81349	M38510/10102B1C	MICROCIRCUIT,LINEAR.....DH3	EA	1
18	35	XDDZZ		81349	M38527/2-08D	MOUNTING PAC,ELECTR.....DH3	EA	1
18	36	XDDZZ	5961-00-995-2310	81349	JAN1N752A	SEMICONDUCTOR DEVIC.....DH3	EA	2
18	37	XDDZZ	5961-01-021-6003	81349	JAN1N4956	SEMICONDUCTOR DEVIC DH3	EA	2
18	38	XDDZZ		80063	SM-A-942112-1	EJECTOR CARD DH3	EA	1

(1) ILLUSTRATION (a) FIG NO.	(b) ITEM NO.	(2) SMR CODE	(3) NATIONAL STOCK NUMBER	(4) FSCM	(5) PART NUMBER	(6) DESCRIPTION USABLE ON CODE	(7) U/M	(8) QTY INC IN UNIT
18	39	XDDZZ		80063	SM-A-942112-6	EJECTOR CAR.....DH3	EA	1
18	40	XADZZ		80063	SM-D-941937	PRINTED WIRING BD DH3	EA	1

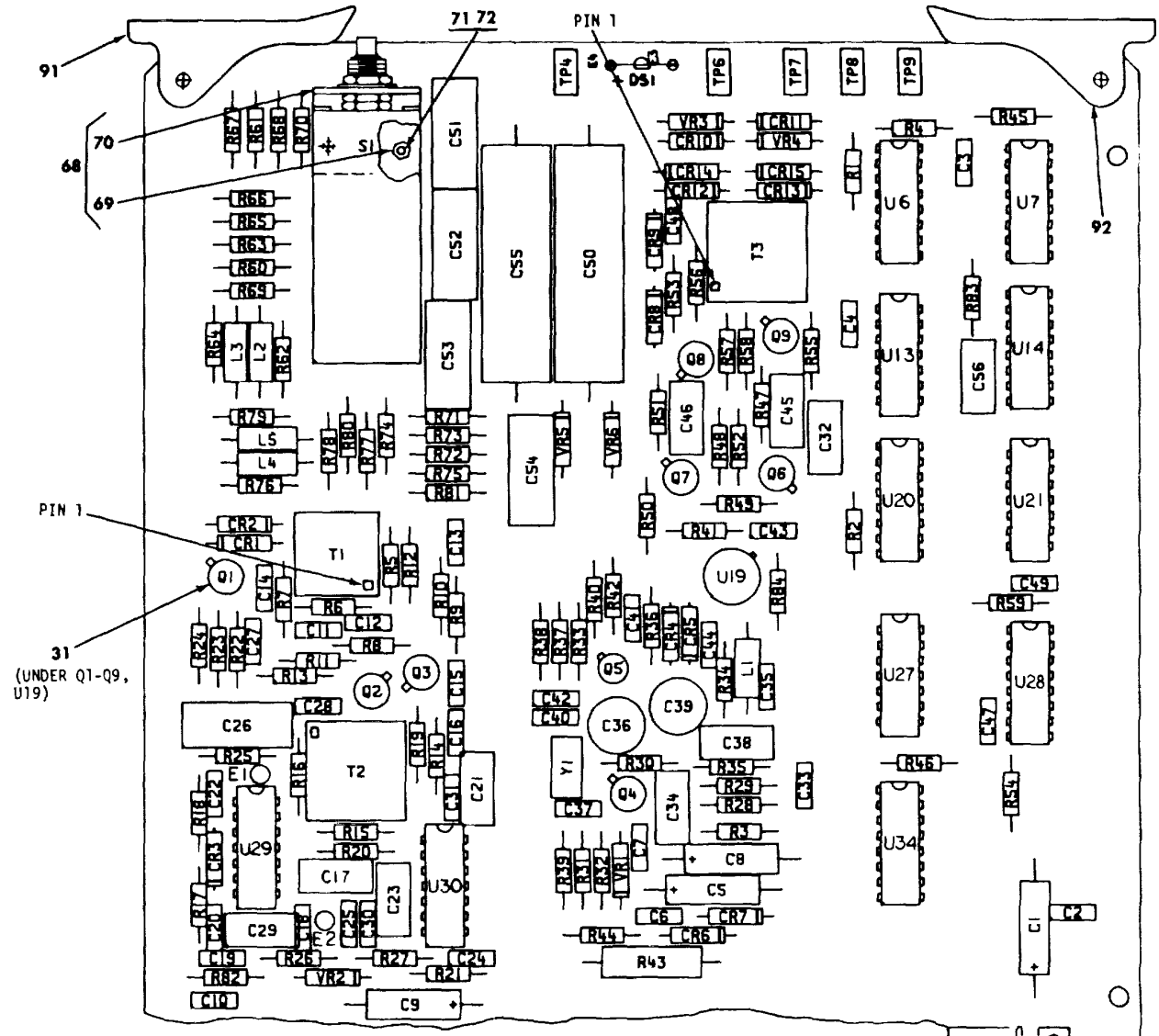

REF DES	ITEM NO.	REF DES	ITEM NO.	REF DES	ITEM NO.	REF DES	ITEM NO.	REF DES	ITEM NO.	REF DES	ITEM NO.
C1	1	C26	10	C51	18	R4	34	R27	45	R56	40
C2 - C4	2	C27, C28	5	C52, C53	19	R5	36	R28 - R31	48	R57, R58	52
C5	3	C29	8	C54	18	R6	37	R32	49	R59	58
C6	4	C30	9	C55	17	R7	38	R33	50	R60	59
C7	2	C31	5	C56	13	R8	36	R34	51	R61	60
C8	1	C32	11	CR1, CR2	20	R9	39	R35	37	R62	61
C9	3	C33	2	CR3 - CR5	21	R10	37	R36	52	R63	59
C10	4	C34	8	CR6, CR7	22	R11	40	R37	36	R64	48
C11	5	C35	4	CR8, CR9	21	R12	41	R38	34	R65, R66	59
C12	6	C36	12	CR10-CR15	20	R13	36	R39	37	R67	62
C13	5	C37	4	DS1	23	R14	42	R40	53	R68	38
C14	7	C38	13	E1 - E4	24	R15	34	R41	54	R69	63
C15, C16	5	C39	14	L1	25	R16	41	R42	55	R70, R71	38
C17	8	C40	4	L2	26	R17	43	R43	56	R72	63
C18	2	C41	2	L3, L4	27	R18	44	R44	56.1	R73	38
C19	4	C42	4	L5	26	R19, R20	41	R45, R46	34	R74	59
C20	2	C43, C44	2	P1	28	R21	45	R47, R48	51	R75	62
C21	8	C45, C46	15	Q1 - Q4	30	R22	39	R49, R50	35	R76	48
C22	4	C47	16	Q5	32	R23	46	R51, R52	57	R77, R78	59
C23	8	C48	4	Q6 - Q9	33	R24	47	R53	46	R79	61
C24	9	C49	16	R1, R2	34	R25	34	R54	58	R80	59
C25	5	C50	17	R3	35	R26	41	R55	46	R81	60

NOTE:
PREFIX ALL REFERENCE DESIGNATIONS WITH 21A9.

REF DES	ITEM NO.	REF DES	ITEM NO.
R82	64	U20	83
R83	65	U21	84
R84	66	U27	80
S1	67	U28	81
T1	73	U29, U30	85
T2	74	U34	86
T3	75	VR1	87
TP4	76	VR2	88
TP6	77	VR3 - VR6	89
TP7 - TP9	76	Y1	90
U6	78		
U7	79		
U13	80		
U14	81		
U19	82		

EL5CM045

Figure 19 Circuit card assembly, super group driver/receiver 21A9.

(1) ILLUSTRATION (a) FIG NO.	(b) ITEM NO.	(2) SMR CODE	(3) NATIONAL STOCK NUMBER	(4) FSCM	(5) PART NUMBER	(6) DESCRIPTION USABLE ON CODE	(7) U/M	(8) QTY INC IN UNIT
						GROUP 13 CCA SUPERGROUP DRIVER/RECEIVER 21A9		
19	1	PADZZ	5910-00-007-3974	81349	M39003/01-2991	CAPACITOR,FIXED,ELE DH3	EA	2
19	2	XDDZZ	5910-00-513-5385	81349	M39014/01-1218	CAPACITOR,FIXED,CER....DH3	EA	10
19	3	XDDZZ	5910-00-932-4455	81349	M39003/01-2289	CAPACITOR, FIXED,ELE DH3	EA	2
19	4	XDDZZ	5910-00-600-6889	81349	M39014/02-1230	CAPACITOR,FIXED,CER DH3	EA	9
19	5	PADZZ	5910-00-113-9449	81349	M39014/02-1347	CAPACITOR,FIXED,CER....DH3	EA	8
19	6	XDDZZ	5910-00-010-8720	81349	M39014/02-1343	CAPACITOR,FIXED,CER....DH3	EA	1
19	7	XDDZZ	5910-00-101-2382	81349	M39014/02-1329	CAPACITOR,FIXED,CER....DH3	EA	1
19	8	XDDZZ	5910-00-001-7583	81349	CMR05E560GODM	CAPACITOR.FIXED,MIC DH3	EA	5
19	9	XDDZZ	5910-00-113-9453	81349	M39014/02-1417	CAPACITOR.FIXEDE,CER....DH3	EA	2
19	10	XDDZZ	5510-01-049-7353	81349	CMR06F821GODR	CAPACITOR,FIXED,MIC....DH3	EA	1
19	11	XDDZZ		81349	CMR05E221GODR	CAPACITOR,FIXED,MIC DH3	EA	1
19	12	PADZZ	5910-00-498-5584	81349	CV31A080	CAPACITOR,VARIABLE....DH3	EA	1
19	13	XDDZZ	5910-01-043-8883	81349	CMR05E33OGODR	CAPACITOR,FIXED,MIC....DH3	EA	2
19	14	PADZZ	5910-00-403-8872	81349	CV31D350	CAPACITOR,FIXED,VARIABLE....DH3	EA	1
19	15	XDDZZ	5910-00-005-3468	81349	CMR05E220J0DR	CAPACITOR,FIXED.MIC....DH3	EA	2
19	16	XDDZZ	5910-01-047-6963	81349	M39014/02-1225	CAPACITOR,FIXED,CER....DH3	EA	2
19	17	XDDZZ		81349	CQR09A1KF333J3P	CAPACITOR,FIXED,PLA DH3	EA	2
19	18	XDDZZ		81349	CM06F2225GODR	CAPACITOR,FIXED,MIC....DH3	EA	2
19	19	XDDZZ	5910-01-052-8905	81349	CMR06F5616GODR	CAPACITOR,FIXED,MIC DH3	EA	2
19	20	XDDZZ	5961-00-924-6911	81349	JAN1N4245	SEMICONDUCTOR DEVIC....DH3	EA	8
19	21	PADZZ	5961-01-081-9573	81349	JAN1N4153-1	SEMICONDUCTOR DEVIC....DH3	EA	5
19	22	PADZZ	5961-00-958-5391	81349	JAN1N4247	SEMICONDUCTOR DEVIC....DH3	EA	2
19	23	PADZZ	5961-01-090-0102	80063	SM-A-942039	LIGHT EMITTING DIOD....DH3	EA	1
19	24	XDDZZ	5940-00-082-4861	81349	SE12XC04	TERMINAL,STUD DH3	EA	4
19	25	XDDZZ	5950-01-013-5115	96906	MS14046-6	COIL,RADIO FREQUENC....DH3	EA	1
19	26	XDDZZ	5900-00-726-0165	96906	MS14046-2	COIL,RADIO FREQUENC....DH3	EA	2
19	27	XDDZZ	5950-00-042-4694	96906	MS18130-10	COIL,RADIO FREQUENC....DH3	EA	2
19	28	XDDZZ		80063	SM-D-942075	CONNECTOR RECP ELEC DH3	EA	1
19	29	XDDZZ		80205	NAS1788-3-6C	EYELET,METALLIC DH3	EA	2
19	30	PADZZ	5961-00-951-8757	81349	JAN2N2222A	TRANSISTOR....DH3	EA	4
19	31	PADZZ		80063	SM-A-942098	INSULAOR DISK....DH3	EA	10
19	32	XDDZZ	5961-00-905-4815	81349	JAN2N918	TRANSISTOR DH3	EA	1
19	33	XDDZZ	5961-00-926-0237	81349	JAN2N2369A	TRANSISTOR....DH3	EA	4
19	34	PADZZ	5905-00-110-7620	81349	RCR07G102JS	RESISTOR,FIXED,COMP DH3	EA	8
19	35	XDDZZ	5905-00-135-3973	81349	RCR07G221JS	RESISTOR,FIXED,COMP....DH3	EA	3
19	36	XDDZZ	5905-00-119-8812	81349	RCR07G121JS	RESISTOR,FIXED,COMP....DH3	EA	4
19	37	XDDZZ	5905-00-141-1183	81349	RCR07G101JS	RESISTOR.FIXED,COMP....DH3	EA	4
19	38	XDDZZ	5905-00-121-9932	81349	RCR07G391JS	RESISTOR,FIXED,COMP....DH3	EA	5
19	39	XDDZZ	5905-00-113-4860	81349	RCR07G270JS	RESISTOR.FIXED.COMP....DH3	EA	2

(1) ILLUSTRATION (a) FIG NO.	(b) ITEM NO.	(2) SMR CODE	(3) NATIONAL STOCK NUMBER	(4) FSCM	(5) PART NUMBER	(6) DESCRIPTION USABLE ON CODE	(7) U/M	(8) QTY INC IN UNIT
19	40	XDDZZ	5905-00-131-1255	81349	RCR07G122JS	RESISTOR,FIXED,COMP DH3	EA	2
19	41	XDDZZ	5905-00-105-7768	81349	RCR07G561JS	RESISTOR,FIXED,COMP DH3	EA	5
19	42	XDDZZ	5905-00-119-3503	81349	RCR07C271JS	RESISTOR,FIXED,COMP DH3	EA	1
19	43	XDDZZ	5905-00-114-0710	81349	RCR07G331JS	RESISTOR.FIXED,COMP DH3	EA	1
19	44	XDDZZ	5905-00-106-1278	81349	RCR07G123JS	RESISTOR,FIXED,COMP DH3	EA	1
19	45	XDDZZ	5905-00-111-4727	81349	RCR07G272JS	RESISTOR,FIXED,COMP DH3	EA	2
19	46	XDDZZ	5905-00-481-8452	81349	RNC55H1960FS	RESISTOR,FIXED,FILM DH3	EA	3
19	47	XDDZZ	5905-00-119-8768	81349	RCR07G821JS	RESISTOR,FIXED,COMP DH3	EA	1
19	48	XDDZZ	5905-00-120-9154	81349	RCR07G471JS	RESISTOR,FIXED,COMP DH3	EA	6
19	49	XDDZZ	5905-00-106-1356	81349	RCR07G152JS	RESISTOR.FIXED,COMP DH3	EA	1
19	50	XDDZZ	5905-00-105-7764	81349	RCR07G222JS	RESISTOR.FIXED,COMP DH3	EA	1
19	51	XDDZZ	5905-00-126-6683	81349	RCR07G332JS	RESISTOR.FIXED,COMP DH3	EA	3
19	52	XDDZZ	5905-00-114-0711	81349	RCR07G472JS	RESISTOR,FIXED,COMP DH3	EA	3
19	53	XDDZZ	5905-00-110-0388	81349	RCR07G104JS	RESISTOR,FIXED,COMP DH3	EA	1
19	54	XDDZZ	5905-00-107-0656	81349	RCR07G100JS	RESISTOR,FIXED,COMP DH3	EA	1
19	55	XDDZZ	5905-00-106-3668	81349	RCR07G220JS	RESISTOR,FIXED,COMP DH3	EA	1
19	56	XDDZZ		81349	RNC65J3324DS	RESISTOR FIXED FILM DH3	EA	1
19	56.1	PADZZ	5905-00-105-7767	81349	RCR07G474JS	RESISTOR,FIXED,COMP DH3	EA	1
19	57	XDDZZ	5905-00-141-0744	81349	RCR07G562JS	RESISTOR,FIXED,COMP DH3	EA	2
19	58	XDDZZ	5905-00-116-8556	81349	RCR07G223JS	RESISTOR,FIXED,COMP DH3	EA	2
19	59	XDDZZ	5905-00-113-0440	81349	RCR07G560JS	RESISTOR.FIXED,COMP DH3	EA	8
19	60	XDDZZ	5905-00-113-4861	81349	RCR07G390JS	RESISTOR,FIXED,CORP DH3	EA	2
19	61	XDDZZ	5905-00-104-8363	81349	RCR07G820JS	RESISTOR,FIXED,COMP DH3	EA	2
19	62	XDDZZ	5905-00-121-9863	81349	RCR07G5R6JS	RESISTOR.FIXED,COMP DH3	EA	2
19	63	XDDZZ	5905-00-135-3971	81349	RCR07G150JS	RESISTOR,FIXED,COMP DH3	EA	2
19	64	XDDZZ		81349	RWR81S1330FR	RESISTOR,FIXED,COMP DH3	EA	1
19	65	PADZZ	5905-00-138-7399	81349	RNC55H5111FS	RESISTOR,FIXED,FILM DH3	EA	1
19	66	XDDZZ	5905-00-141-0743	81349	RCR07G392JS	RESISTOR,FIXED,COMP DH3	EA	1
19	67	PADZZ	5930-01-091-3973	80063	SM-B-942089	SWITCH,ROTARY DH3	EA	1
19	68	MDDDD		80063	SM-C-941944	BRACKET ASSY ELEC DH3	EA	1
19	69	PADZZ	5310-01-090-7190	81349	M45938/6-1C	NUT,SELF-LOCKING,CL DH3	EA	2
19	70	XADZZ		80063	SM-C-9419-1	BRACKET DH3	EA	1
19	71	PADZZ	5305-00-889-3118	96906	MS35206-203	SCREW,MACHINE DH3	EA	2
19	72	PADZZ	5310-00-616-6791	80205	NAS620-2	WASHER,FLAT DH3	EA	2
19	73	XDDZZ	5950-01-088-2713	80063	SM-A-942054	TRANSFORMER,PULSE DH3	EA	1
19	74	PADZZ		80063	SM-A-942053-2	TRANSFORMER,PULSE DH3	EA	1
19	75	XDDZZ	5950-01-081-3792	80063	SM-A-942050	TRANSFORMER,PULSE DH3	EA	1
19	76	PADZZ	5935-01-012-0773	81349	M39024/18-05	JACK,TIP DH3	EA	4
19	77	PADZZ	5935-01-026-0915	81349	M39024/18-06	JACK,TIP DH3	EA	1
19	78	XDDZZ		80063	SM-A-942163	MICROCIRCUIT DGTL DH3	EA	1

(1) ILLUSTRATION (a) FIG NO.	(b) ITEM NO.	(2) SMR CODE	(3) NATIONAL STOCK NUMBER	(4) FSCM	(5) PART NUMBER	(6) DESCRIPTION	USABLE ON CODE	(7) U/M	(8) QTY INC IN UNIT
19	79	XDDZZ	5962-00-430-2641	81349	M38510/01405BEB	MICROCIRCUIT,DIGITA	DH3	EA	1
19	80	XDDZZ		80063	SM-A-942001	MICROCIRCUIT,DGTL	DH3	EA	2
19	81	XDDZZ	5962-00-348-2711	81349	M38510/01203BEB	MICROCIRCUIT,DIGITA	DH3	EA	2
19	82	XDDZZ	5962-00-261-7552	81349	M38510/10301BGC	MICROCIRCUIT,LINEAR	DH3	EA	1
19	83	PADZZ	5962-01-006-0181	80063	SM-A-942015	MICROCIRCUITI,DIGITA	DH3	EA	1
19	84	XDDZZ		80063	SM-A-942007	MICROCIRCUIT DGTL	DH3	EA	1
19	85	XDDZZ		80063	SM-A-942022	MICROCIRCUIT.DGTL	DH3	EA	2
19	86	PADZZ		80063	SM-A-942013	MICROCIRCUIT DIGIT	DH3	EA	1
19	87	XDDZZ	5961-00-879-3091	81349	JAN1N755A	SEMICONDUCTCR DEVIC	DH3	EA	1
19	88	XDDZZ	5961-00-752-6121	81349	JAN1N753A	SEMICONOUCTCR DEVIC	DH3	EA	1
19	89	PADZZ	5961-00-460-0983	81349	JAN1N4954	SEMICODOUCTCR DEVIC	DH3	EA	4
19	90	XDDZZ	5955-01-088-2904	80063	SM-A-942087	CRYSTAL UNIT,QUARTZ	DH3	EA	1
19	91	XDDZZ		80063	SM-A-942112-2	EJECTOR CARD	DH3	EA	1
19	92	XDDZZ		80063	SM-A-942112-5	EJECTOR CARD	DH3	EA	1
19	93	XDDZZ		80063	SM-D-941942	PRINTED WIRING BD	DH3	EA	1

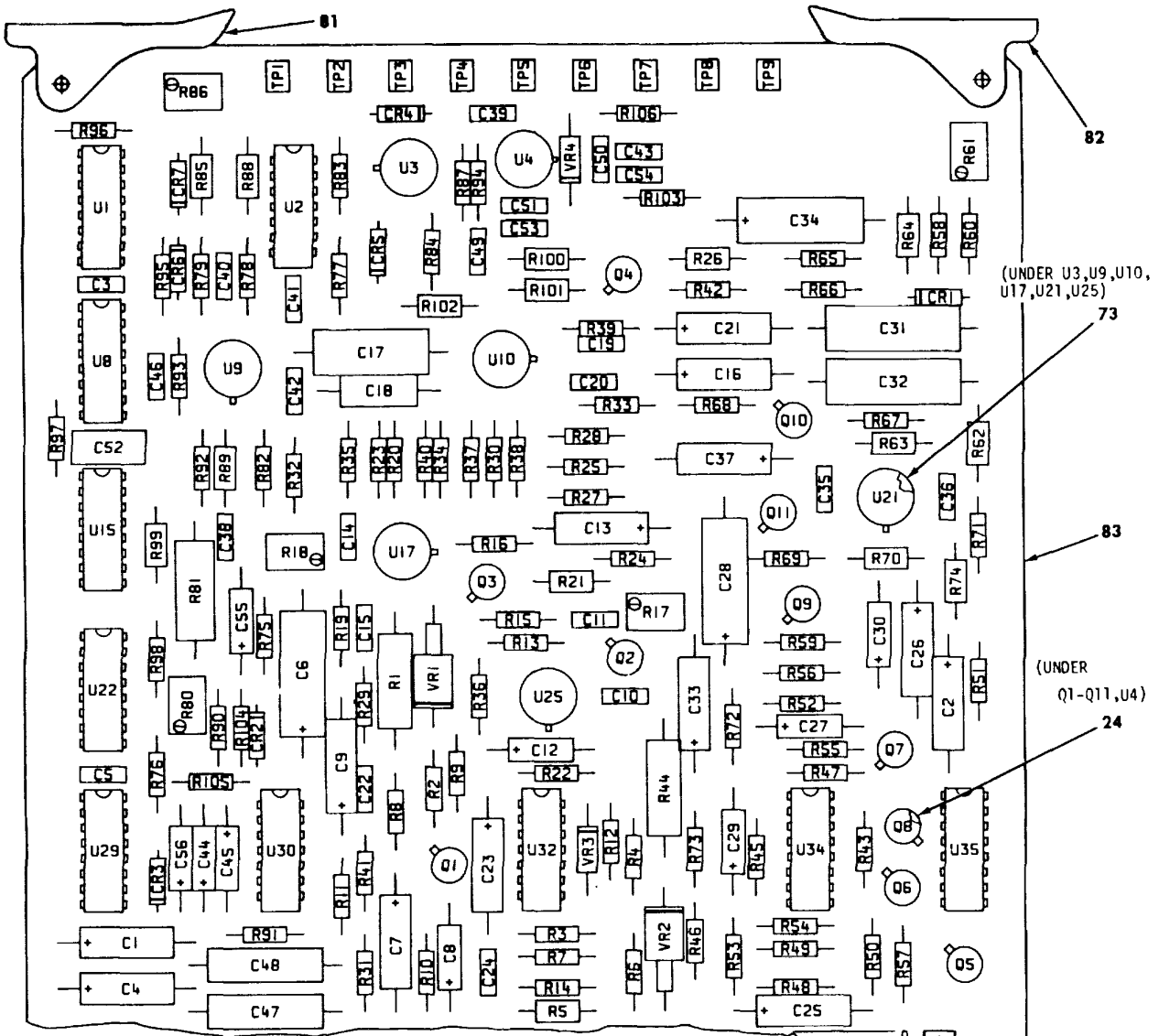

REF DES	ITEM NO.	REF DES	ITEM NO.	REF DES	ITEM NO.	REF DES	ITEM NO.	REF DES	ITEM NO.	REF DES	ITEM NO.
C1	1	C27	6	CR1- CR7	20	R23	39	R49	28	R75, R76	31
C2	2	C28	4	P1	21	R24, R25	27	R50	27	R77	53
C3	3	C29, C30	6	Q1 - Q11	23	R26	38	R51	31	R78	40
C4	1	C31, C32	11	R1	25	R27, R28	31	R52	27	R79	54
C5	3	C33	7	R2	26	R29	40	R53	31	R80	55
C6	4	C34	12	R3	27	R30	31	R54 - R56	28	R81	56
C7	5	C35, C36	3	R4	28	R31	41	R57	27	R82	57
C8	6	C37	7	R5	29	R32	42	R58	46	R83	57.1
C9	5	C38	13	R6	30	R33	36	R59	28	R84	27
C10, C11	3	C39, C40	3	R7 - R9	31	R34	31	R60	47	R85	58
C12	6	C41	14	R10	28	R35, R36	27	R61	48	R86	59
C13	7	C42	3	R11, R12	27	R37	28	R62	49	R87	60
C14, C15	3	C43	15	R13	32	R38	43	R63	50	R88	61
C16	5	C44, C45	16	R14	27	R39	27	R64	51	R89	62
C17	8	C46	13	R15	33	R40, R41	44	R65 - R67	28	R90 - R92	36
C18	9	C47, C48	17	R16	28	R42	45	R68	31	R93	32
C19, C20	3	C49	18	R17	34	R43	28	R69	28	R94	63
C21	7	C50, C51	3	R18	35	R44	25	R70	49	R95, R96	27
C22	3	C52	19	R19	36	R45	31	R71	43	R97	28
C23	7	C53	14	R20	37	R46	26	R72	27	R98	27
C24	10	C54	15	R21	38	R47	31	R73	31	R99	64
C25, C26	5	C55, C56	16	R22	28	R48	27	R74	52	R100, R101	49

REF DES	ITEM NO.
R102	65
R103	66
R104, R105	67
R106	45
TP1	68
TP2 - TP9	69
U1	70
U2	71
U3	72
U4	74
U8	75
U9, U10	72
U15	76
U17	72
U21	72
U22	75

NOTE:
PREFIX ALL REFERENCE DESIGNATIONS WITH 21A10.

REF DES	ITEM NO.
U25	72
U29	77
U30	71
U32	71
U34, U35	77
VR1, VR2	78
VR3	79
VR4	80

EL5CM046A

Figure 20. Circuit card assembly, analog voice orderwire 21A10.

(1) ILLUSTRATION (a) FIG NO.	(b) ITEM NO.	(2) SMR CODE	(3) NATIONAL STOCK NUMBER	(4) FSCM	(5) PART NUMBER	(6) DESCRIPTION USABLE ON CODE	(7) U/M	(8) QTY INC IN UNIT
						GROUP 14 CCA ANALOG VOICE ORDERWIRF 21A10		
20	1	XDDZZ	5910-00-932-4455	81349	M39003/01-2289	CAPACITOR.FIXED,ELE DH3	EA	2
20	2	PADZZ	5910-00-007-3974	81349	M39003/01-2991	CAPACITOR.FIXED,ELE DH3	EA	1
20	3	XDDZZ	5910-00-513-5385	81349	M39014/02-1218	CAPACITOR FIXED.CER DH3	EA	16
20	4	XDDZZ	5910-00-858-5178	81349	M39003/01-2261	CAPACITOR.FIXED,ELE DH3	EA	2
20	5	XDDZZ	5910-00-935-3511	81349	M39003/01-2286	CAPACITOR,FIXED,ELE DH3	EA	5
20	6	XDDZZ	5910-00-236-8740	81349	M39003/01-2974	CAPACITOR,FIXED,ELE DH3	EA	5
20	7	XDDZZ	5910-00-021-8075	81349	M39003/01-2257	CAPACITOR.FIXED,ELE DH3	EA	5
20	8	XDDZZ		81349	CFR02AMB473JM	CAPACITOR.FIXED,PLA DH3	EA	1
20	9	XDDZZ		81349	CFR02AMC472JM	CAPACITOR.FIXED,PLA DH3	EA	1
20	10	PADZZ	5910-00-113-9449	81349	M39014/02-1347	CAPACITOR,FIXED,CER DH3	EA	1
20	11			81349	M83421/01-3172M	CAPACITOR FXD PLSTC DH3	EA	2
20	12	XDDZZ	5910-00-010-8158	81349	M39003/01-2967	CAPACITOR.FIXED.ELE DH3	EA	1
20	13	XDDZZ	5910-00-113-9449	81349	M39014/02-1347	CAPACITOR.FIXED,CER DH3	EA	2
20	14	XDDZZ	5910-00-113-5286	81349	M39014/02-1236	CAPACITOR.FIXED,CER DH3	EA	2
20	15			81349	M39014/02-1403	CAPACITOR.FIXED,CER DH3	EA	2
20	16	PADZZ	5910-00-068-4298	81349	M39003/01-2356	CAPAC[TOR,FIXE D,ELE DH3	EA	4
20	17	XDDZZ	5910-00-284-8877	81349	CFR02AMB223JM	CAPACITOR,FIXEO,PLA DH3	EA	2
20	18	XDDZZ	5910-01-028-1835	81349	M39014/01-1237	CAPACITOR.FIXED,CER DH3	EA	1
20	19	XDDZZ	5910-00-005-3468	81349	CMR05E220J0DR	CAPACITOR.FIXED,MIC DH3	EA	1
20	20	PADZZ	5961-01-081-9573	81349	JAN1N4153-1	SEMICONDUCTCR DEVIC DH3	EA	7
20	21	XDDDD		80063	SM-D-942075	CONNECTOR REC ELEC DH3	EA	1
20	22	XDDZZ		80205	NAS1788-3-6C	EYELET,METALLIC DH3	EA	2
20	23	PADZZ	5961-00-951-8757	81349	JAN2N2222A	TRANSISTOR DH3	EA	11
20	24	XDDZZ		80063	SM-A-942098	INSULATOR DISK DH3	EA	12
20	25	XDDZZ		81349	RWR89S61R9FR	RESISTOR,FIXED,WIRE DH3	EA	2
20	26	XDDZZ	5905-00-408-8663	81349	RWR81S56R2FR	RESISTOR,FIXED,WIRE DH3	EA	2
20	27	PADZZ	5905-00-110-7620	81349	RCR07G102JS	RESISTOR,FIXED,COMP DH3	EA	18
20	28	XDDZZ	5905-00-105-7764	81349	RCR07G222JS	RESISTOR,FIXED,COMP DH3	EA	16
20	29	XDDZZ	5905-00-138-7529	81349	RNC55H3830FS	RESISTOR,FIXED,FILM DH3	EA	1
20	30	XDDZZ	5905-00-135-3975	81349	RCR07G680JS	RESISTOR,FIXED,COMP DH3	EA	1
20	31	XDDZZ	5905-00-114-0711	81349	RCR07G472JS	RESISTOR:FIXED,COMP DH3	EA	15
20	32	XDDZZ	5905-00-120-9154	81349	RCR07G471JS	RESISTOR FIXED,COMP DH3	EA	2
20	33	XDDZZ	5905-00-119-8811	81349	RCR07G151JS	RESISTOR,FIXED,COMP DH3	EA	1
20	34	PADZZ	5905-01-012-9761	81349	RJR24FW502P	RESSTOR,VAPIABLE DH3	EA	1
20	35	PADZZ		81349	RJR4FW103P	RESISTOR.VAAIABLE DH3	EA	1
20	36	XDDZZ	5905-00-106-3666	81349	RCR07G103JS	RESISTOR,FIXED,COMP DH3	EA	5
20	37	XDDZZ	5905-00-106-1356	81349	RCR07G152JS	RESISTOR,FIXED,COMP DH3	EA	1
20	38	XDDZZ	5905-00-004-6076	81349	RNC55H2490FS	RESISTOR,FIXED,FILM DH3	EA	2
20	39	XDDZZ	5905-00-115-8055	81349	RCR07G393JS	RESISTOR,FIXED,COMP DH3	EA	1

(1) ILLUSTRATION (a) FIG NO.	(b) ITEM NO.	(2) SMR CODE	(3) NATIONAL STOCK NUMBER	(4) FSCM	(5) PART NUMBER	(6) DESCRIPTION USABLE ON CODE	(7) U/M	(8) QTY INC IN UNIT
20	40	XDDZZ	5905-00-118-4559	81349	RCR0TG333JS	RESISTOR,FIXED,COMP.....DH3	EA	2
20	41	XDDZZ	5905-00-106-1278	81349	RCR07G123JS	RESISTOR,FIXED,COMP.....DH3	EA	1
20	42	XDDZZ	5905-00-131-1255	81349	RCR07G122JS	RESISTOR,FIXED,COMP.....DH3	EA	1
20	43	XDDZZ	5905-00-119-3504	81349	RCR07G273JS	RESISTOR,FIXED,COMP.....DH3	EA	2
20	44	XDDZZ	5905-00-135-3973	81349	RCR07G221JS	RESISTOR,FIXED,COMP.....DH3	EA	2
20	45	XDDZZ	5905-00-141-0743	81349	RCR07G392JS	RESISTOR,FIXED,COMP.....DH3	EA	2
20	46	XDDZZ	5905-00-126-6683	81349	RCR07G332JS	RESISTOR,FIXED,COMP.....DH3	EA	1
20	47	XDDZZ	5905-00-106-3668	81349	RCR07G220JS	RESISTOR.FIXED,COMP.....DH3	EA	1
20	48	PADZZ	5905-01-026-2140	81349	RJR24FW101P	RESISTOR,VARIABLE,N.....DH3	EA	1
20	49	PADZZ	5905-00-223-2741	81349	RNC55H1002FS	RESISTOR,FIXED,FILM.....DH3	EA	4
20	50	XDDZZ	5905-00-184-7788	81349	RNC55H3832FS	RESISTOR,FIXED,FILM.....DH3	EA	1
20	51	XDDZZ	5905-00-431-5152	81349	RNC55H2612FS	RESISTOR.FIXED.FILM.....DH3	EA	1
20	52	XDDZZ	5905-00-184-7790	81349	RNC55H4642FS	RESISTOR.FIXED,FILM.....DH3	EA	1
20	53	XDDZZ	5905-00-105-7765	81349	RCR07G224JS	RESISTOR,FIXED,COMP.....DH3	EA	1
20	54	XDDZZ	5905-00-116-8555	81349	RCR07G153JS	RESISTOR,FIXED,COMP.....DH3	EA	1
20	55	PADZZ	5905-00-594-2640	81349	RJR24FW105P	RESISTDR,VARIABLE,N.....DH3	EA	1
20	56	XDDZZ	5905-00-304-0325	81349	RNC65H3833FS	RESISTOR.FIXED.FILM.....DH3	EA	1
20	57	XDDZZ	5905-00-119-8768	81349	RCR07G821JS	RESISTOR,FIXED,COMP.....DH3	EA	1
20	57.1	PADZZ	5905-00-104-8357	81349	RCR07G684JS	RESISTOR.FIXED,COMP.....DH3	EA	1
20	58	XDDZZ	5905-00-401-7432	81349	RNC55H1003FS	RESISTOR,FIXED.FILM.....DH3	EA	1
20	59	PADZZ	5905-01-026-2141	81349	RJR24FW203P	RESISTOR,VARIABLE,N.....DH3	EA	1
20	60	XDDZZ	5905-00-114-0710	81349	RCR07G331JS	RESISTOR,FIXED,COMP.....DH3	EA	1
20	61	XDDZZ	5905-00-153-0135	81349	RNC55H1212FS	RESISTOR,FIXED,FILM.....DH3	EA	1
20	62	XDDZZ	5905-00-421-6187	81349	RNC55H6811FS	RESISTOR,FIXED,FILM.....DH3	EA	1
20	63	XDDZZ	5905-00-106-1357	81349	RCR07G563JS	RESISTOR,FIXED.COMP.....DH3	EA	1
20	64	XDDZZ	5905-00-138-7392	81349	RNC55H1151FS	RESISTOR,FIXED,FILM.....DH3	EA	1
20	65	PADZZ	5905-00-138-7399	81349	RNC55H5111FS	RESISTOR,FIXED,FILM.....DH3	EA	1
20	66	PADZZ	5905-00-126-6703	81349	RCR07G226JS	RESISTOR,FIXED,COMP.....DH3	EA	1
20	67	XDDZZ	5905-00-104-8368	81349	RCR07G470JS	RESISTOR.FIXED,COMP.....DH3	EA	2
20	68	PADZZ	5935-01-026-0915	81349	M39024/18-06	JACK,TIP.....DH3	EA	1
20	69	PADZZ	5935-01-012-0773	81349	M39024/18-05	JACK,TIP.....DH3	EA	8
20	70	PADZZ	5962-01-006-0181	80063	SM-A-942015	MICROCIRCUIT,DIGITA.....DH3	EA	1
20	71	XDDZZ	5962-01-024-5747	80063	SM-A-942000	MICROCIRCUIT,DIGIT.....DH3	EA	3
20	72	XDDZZ	5962-00-274-0200	81349	M38510/1012BIC	MICROCIRCUIT,LINEAR.....DH3	EA	6
20	73	XDDZZ		81349	M38527/2-08D	MOUNTING PAD,ELECTR.....DH3	EA	6
20	74	XDDZZ	5962-00-261-7552	81349	M38510/10301BGC	MICROCIRCUIT,LINEAR.....DH3	EA	1
20	75	XDDZZ		80063	SM-A-942025	MICROCIRCUIT DGTL.....DH3	EA	2
20	76	XDDZZ		80063	SM-A-942020	MICROCIRCUIT DGTL.....DH3	EA	1
20	77	XDDZZ		80063	SM-A-942006	MICROCIRCUIT DGTL.....DH3	EA	3
20	78	XDDZZ	5961-00-883-8906	81349	JAN1N3016B	SEMICONDUCTOR DEVIC.....DH3	EA	2

(1) ILLUSTRATION (a) FIG NO.	(b) ITEM NO.	(2) SMR CODE	(3) NATIONAL STOCK NUMBER	(4) FSCM	(5) PART NUMBER	(6) DESCRIPTION / *USABLE ON CODE*	(7) U/M	(8) QTY INC IN UNIT
20	79	XDDZZ	5961-00-847-5246	81349	JAN1N746A	SEMICONOUCTCR DEVIC.....DH3	EA	1
20	80	XDDZZ	5961-00-752-6121	81149	JAN1N753A	SEMICONDUCTOR DEVIC.....DH3	EA	1
20	81	XDDZZ		80063	SM-A-942112-1	EJECTOR CARD DH3	EA	1
20	82	XDDZZ		80063	SM-A-942112-4	EJECTOR CARD DH3	EA	1
20	83	XADZZ		80063	SM-D-941947	PRINTED WIRING BD DH3	EA	1

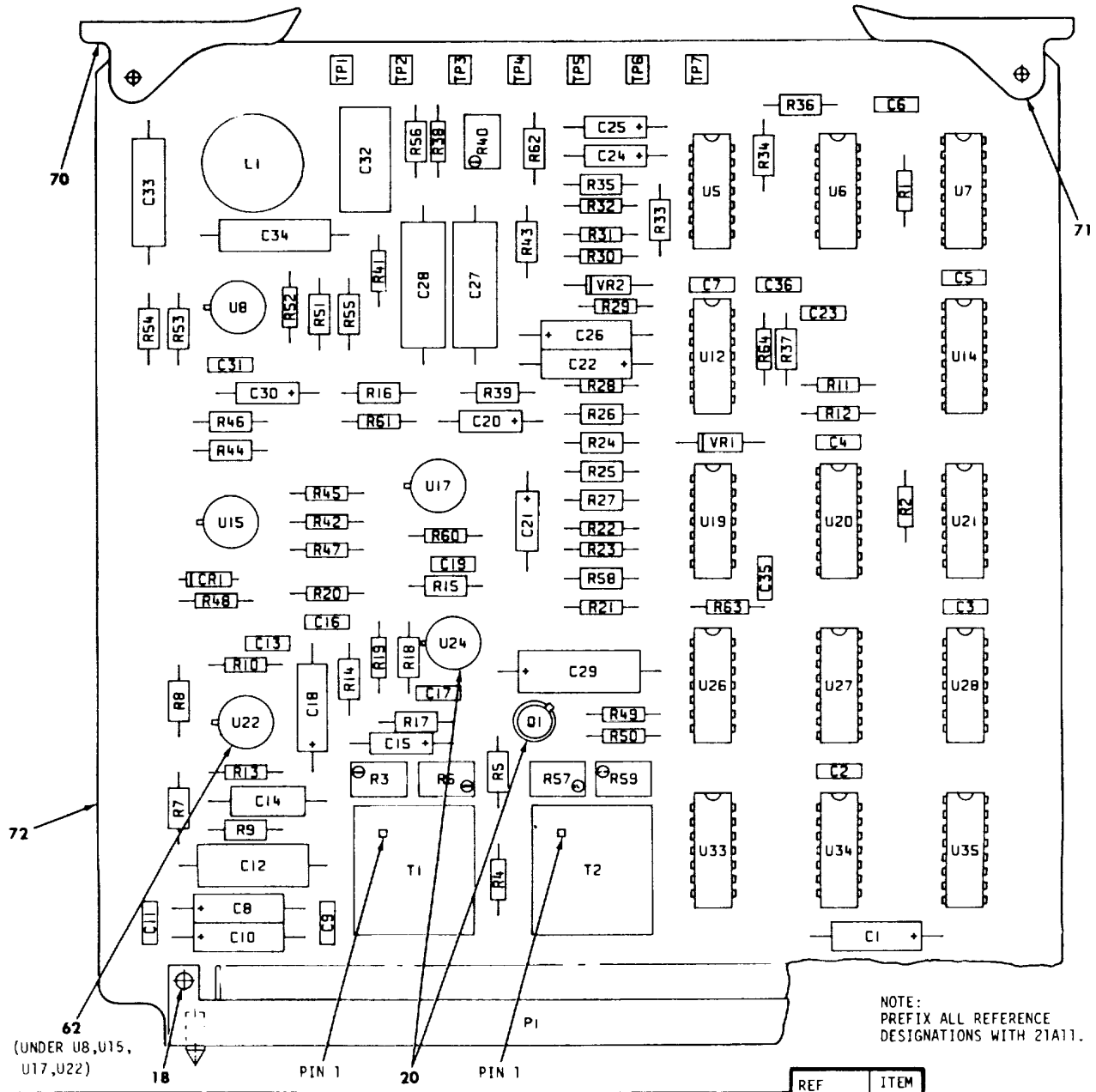

REF DES	ITEM NO.	REF DES	ITEM NO.	REF DES	ITEM NO.	REF DES	ITEM NO.	REF DES	ITEM NO.	REF DES	ITEM NO.	REF DES	ITEM NO.
C1	1	C22	1	R1, R2	21	R18	33	R39	33	R56	50	U12	63
C2 - C7	2	C23	2	R3	22	R19	35	R40	41	R57	22	U14	60
C8	3	C24, C25	9	R4	23	R20	21	R41	23	R58	53	U15	61
C9	4	C26	1	R5	24	R21	36	R42	42	R59	52	U17	61
C10	3	C27, C28	10	R6	22	R22, R23	37	R43	43	R60	39	U19	58
C11	4	C29	11	R7	25	R24, R25	33	R44	33	R61	30	U20	60
C12	5	C30	8	R8	26	R26, R27	38	R45	44	R62	53	U21	59
C13	6	C31	2	R9	27	R28, R29	39	R46	45	R63,R64	54	U22	61
C14	7	C32	12	R10	28	R30	37	R47 - R49	39	T1, T2	55	U24	64
C15	8	C33, C34	13	R11, R12	29	R31	36	R50	21	TP1	56	U26	63
C16	2	C35, C36	14	R13	30	R32	37	R51	46	TP2 - TP7	57	U27	60
C17	6	CR1	15	R14	31	R33, R34	33	R52	47	U5	58	U28	65
C18	1	L1	16	R15	32	R35, R36	38	R53	48	U6	59	U33	66
C19	2	P1	17	R16	33	R37	32	R54	46	U7	60	U34	67
C20, C21	9	Q1	19	R17	34	R38	40	R55	49	U8	61	U35	68
												VR1,VR2	69

Figure 21. Circuit card assembly, digital voice orderwire 21A11.

(1) ILLUSTRATION (a) FIG NO.	(b) ITEM NO.	(2) SMR CODE	(3) NATIONAL STOCK NUMBER	(4) FSCM	(5) PART NUMBER	(6) DESCRIPTION USABLE ON CODE	(7) U/M	(8) QTY INC IN UNIT
						GROUP 15 CCA DIGITAL VCICE CRDERWIRE 21A11		
21	1	PADZZ	5910-00-007-3974	81349	M39003/01-2991	CAPACITOR,FIXED,ELE DH3	EA	4
21	2	XDDZZ	5910-00-513-5385	81349	M39014/02-1218	CAPACITOR,FIXED,CER DH3	EA	10
21	3	XDDZZ	5910-00-932-4455	81349	M39003/01-2289	CAPACITOR,FIXED,ELE DH3	EA	2
21	4	XDDZZ	5910-00-600-6889	81349	M39014/02-1230	CAPACITOR FIXED,CER DH3	EA	2
21	5	XDDZZ		81349	CFR02AMB473JM	CAPACITOR,FIXED,PLA DH3	EA	1
21	6	XDDZZ	5910-01-028-7835	81349	M39014/01-1237	CAPACITOR,FIXED,CER DH3	EA	2
21	7	XDDZZ		81349	CFR02AMB103JM	CAPACITOR,FIXED,PLA DH3	EA	1
21	8	XDDZZ	5910-00-236-8740	81349	M39003/01-2974	CAPACITOR,FIXED,ELE DH3	EA	2
21	9	PADZZ	5910-00-068-4298	81349	M39003/01-2356	CAPACITOR.FIXED,ELE DH3	EA	4
21	10	XDDZZ		81349	M83421/01-3172M	CAPACITOR FIXED PLSTC DH3	EA	2
21	11	XDDZZ	5910-00-010-8158	81349	M39003/01-2967	CAPACITOR.FIXED ELE DH3	EA	1
21	12	XDDZZ	5910-01-057-6558	81349	CMR06F272GODR	CAPACITOR,FIXED,MIC DH3	EA	1
21	13	XDDZZ		81349	M83421/101-3142M	CAPACITOR FIXED,PLSTC DH3	EA	2
21	14	XDDZZ	5910-00-010-8720	81349	M39014/02-1343	CAPACITOR.FIXED,CER DH3	EA	2
21	15	PADZZ	5961-01-081-9573	81349	JAN1N4153-1	SEMICONDUCTCR DEVIC DH3	EA	1
21	16	XDDZZ		80063	SM-A-942055	INDUCTOR PWR DH3	EA	1
21	17	XDDZZ		80063	SM-D-942075	CONNECTOR RECP ELEC DH3	EA	1
21	18	XDDZZ		80205	NAS1788-3-6C	EVELET,METALLIC DH3	EA	2
21	19	PADZZ	5961-00-951-8757	81349	JAN2N2222A	TRANSISTOR DH3	EA	1
21	20	XDDZZ		80063	SM-A-942098	INSULATOR DISK DH3	EA	2
21	21	PADZZ	5905-00-110-7620	81349	RCR07G102JS	RESISTOR,FIXED,COMP DH3	EA	4
21	22	PADZZ	5905-01-014-4761	81349	RJR24F103P	RESISTOR,VARIABLE,N DH3	EA	3
21	23	XDDZZ	5905-00-141-0744	81349	RCR07G62JS	RESISTOR,FIXED,COMP DH3	EA	2
21	24	XDDZZ	5905-00-138-3361	81349	RNC55H6490FS	RESISTOR.FIXED,FILM DH3	EA	1
21	25	XDDZZ	5905-00-264-3832	81349	RNC55H9530FS	RESISTOR,FIXED,FILM DH3	EA	1
21	26	XDDZZ	5905-00-139-1926	81349	RNC55H7150FS	RESISTOR,FIXED,FILM DH3	EA	1
21	27	XDDZZ	5905-00-138-7530	81349	RNC55H4020FS	RESISTOR,FIXED.FILM DH3	EA	1
21	28	XDDZZ	5905-00-114-0711	81349	RCR07G472JS	RESISTOR,FIXED,COMP DH3	EA	1
21	29	XDDZZ	5905-00-114-5343	01349	RCR07G182JS	RESISTOR,FIXED,COMP DH3	EA	2
21	30	XDDZZ	5905-00-120-9154	81349	RCR07G471JS	RESISTOR.FIXED,COMP DH3	EA	2
21	31	XDDZZ	5905-00-256-5029	81349	RNC55H3162FS	RESISTOR,FIXED,FILM DH3	EA	1
21	32	XDDZZ	5905-00-184-7788	81349	RNC55H3832FS	RESISTOR,FIXED.FILM DH3	EA	2
21	33	PADZZ	5905-00-223-2741	81349	RNC55H1002FS	RESISTOR,FIXED,FILM DH3	EA	8
21	34	XDDZZ	5905-00-479-9945	81349	RNC55H1472FS	RESISTOR.FIXED,FILM DH3	EA	1
21	35	XDDZZ	5905-00-133-0440	81349	RCR07G560JS	RESISTOR,FIXED,COMP DH3	EA	1
21	36	XDDZZ	5905-00-119-8812	81349	RCR07G121JS	RESISTOR,FIXED,COMP DH3	EA	2
21	37	XDDZZ	5905-00-119-8768	81349	RCR07G821JS	RESISTOR,FIXED,COMP DH3	EA	4
21	38	XDDZZ	5905-00-432-0331	81349	RNC55H8661FS	RESISTOR.FIXED,FILM DH3	EA	4
21	39	XDDZZ	5905-00-105-7764	81349	RCR07G222JS	RESISTOR.FIXED,COMP DH3	EA	6

(1) ILLUSTRATION (a) FIG NO.	(b) ITEM NO.	(2) SMR CODE	(3) NATIONAL STOCK NUMBER	(4) FSCM	(5) PART NUMBER	(6) DESCRIPTION USABLE ON CODE	(7) U/M	(8) QTY INC IN UNIT
21	40	XDDZZ	5905-00-106-3668	81349	RCR07G220JS	RESISTOR,FIXED,COMP.....DH3	EA	1
21	41	PADZZ	5905-01-026-2140	81349	RJR24FW101P	RESISTOR,VARIABLE,N.....DH3	EA	1
21	42	XDDZZ	5905-00-115-8055	81349	RCR07G393JS	RESISTOR,FIXED,COMP.....DH3	EA	1
21	43	XDDZZ	5905-00-431-5152	81349	RNC55H2612FS	RESISTOR ,FIXED,FILM.....DH3	EA	1
21	44	XDDZZ	5905-00-119-3504	81349	RCR07G273JS	RESISTOR,FIXED,COMP.....DH3	EA	1
21	45	XDDZZ	5905-00-184-7790	81349	RNC55H4642FS	RESISTOR,FIXED,FILM.....DH3	EA	1
21	46	XDDZZ	5905-00-112-1392	81349	RNC55H1332FS	RESISTOR,FIXED,FILM.....DH3	EA	2
21	47	XDDZZ	5905-00-110-0388	81349	RCR07G104JS	RESISTOR,FIXED,COMP.....DH3	EA	1
21	48	XDDZZ	5905-00-462-5635	81349	RNC55H4022FS	RESISTOR.FIXED,FILM.....DH3	EA	1
21	49	XDDZZ	5905-00-480-4023	81349	RNC55H1211FS	RESISTOR,FIXED,FILM.....DH3	EA	1
21	50	XDDZZ	5905-00-139-1978	81349	RNC55H7500FS	RESISTOR,FIXED,FILM.....DH3	EA	1
21	52	PADZZ	5905-00-594-2643	81349	RJR24FW102P	RESISTOR.VARIALE,N.....DH3	EA	1
21	53	XDDZZ	5905-00-421-2938	81349	RNC55H4640FS	RESISTOR.FIXED,FILM.....DH3	EA	2
21	54	XDDZZ	5905-00-135-3973	81349	RCR07G221JS	RESISTOR.FIXED,COMP.....DH3	EA	2
21	55	XDDZZ		80063	SM-B-942128	TRANSFORMER AF.....DH3	EA	2
21	56	PADZZ	5935-01-026-0915	81349	M39024/18-06	JACK,TIP.....DH3	EA	1
21	57	PADZZ	5935-01-012-0773	81349	M39024/18-05	JACK,TIP.....DH3	EA	6
21	58	XDDZZ	5962-01-015-8537	81349	M38510/00805BCB	MICROCIRCUIT,DIGITA.....DH3	EA	2
21	59	XDDZZ		80063	SM-A-942001	MICROCIRCUIT DGTL.....DH3	EA	2
21	60	PADZZ	5962-01-006-0181	80063	SM-A-942015	MICROCIRCUIT,DIGITA.....DH3	EA	4
21	61	XDDZZ	5962-00-274-0200	81349	M38510/10102BIC	MICROCIRCUIT,LINEAR.....DH3	EA	4
21	62	XDDZZ		81349	M38527/2-08D	MOUNTING PAD,ELECTR.....DH3	EA	4
21	63	XDDZZ		80063	SM-A-942152	MICROCIRCUIT DGTL.....DH3	EA	2
21	64	XDDZZ	5962-01-048-7767	81349	M38510/10304BGC	MICROCIRCUIT,LINEAR.....DH3	EA	1
21	65	XDDZZ		80063	SM-A-942007	MICROCIRCUIT DGTL.....DH3	EA	1
21	66	XDDZZ		80063	SM-A-942008	MICROCIRCUIT DGTL.....DH3	EA	1
21	67	XDDZZ	5962-01-024-5747	80063	SM-A-942000	MICROCIRCUIT,DIGIT.....DH3	EA	1
21	68	XDDZZ		80063	SM-A-942006	MICROCIRCUIT DGTL.....DH3	EA	1
21	69	XDDZZ	5961-00-833-3043	81349	JAN1N757A	SEMICONDUCTOR DEVIC.....DH3	EA	2
21	70	XDDZZ		80063	SM-A-942112-1	EJECTOR CARD.....DH3	EA	1
21	71	XDDZZ		80063	SM-A-942112-3	EJECTOR CARD.....DH3	EA	1
21	72	XADZZ		80063	SM-D-9419	PRINTED WIRING BD.....DH3	EA	1

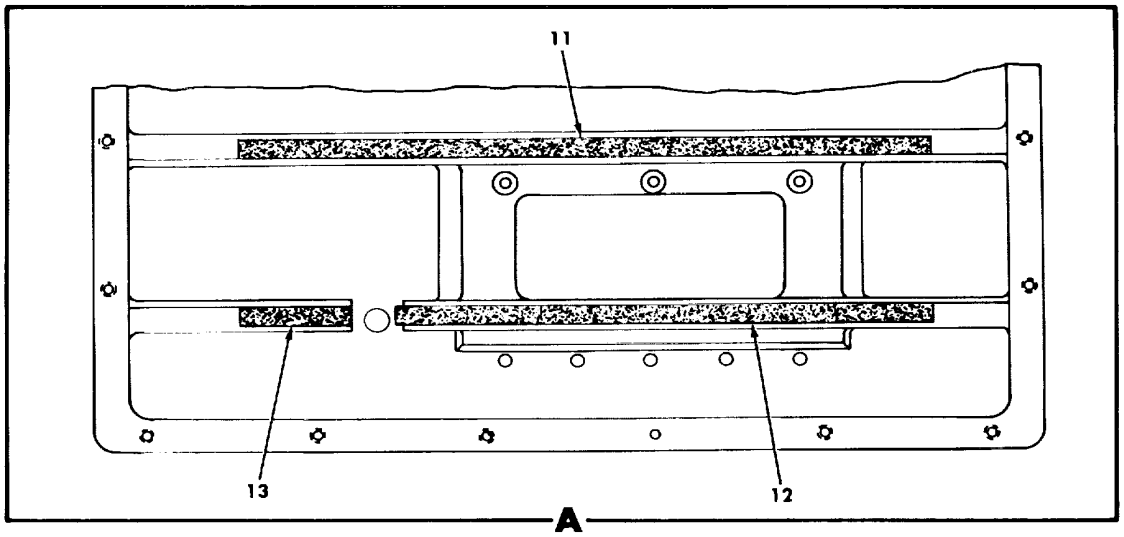

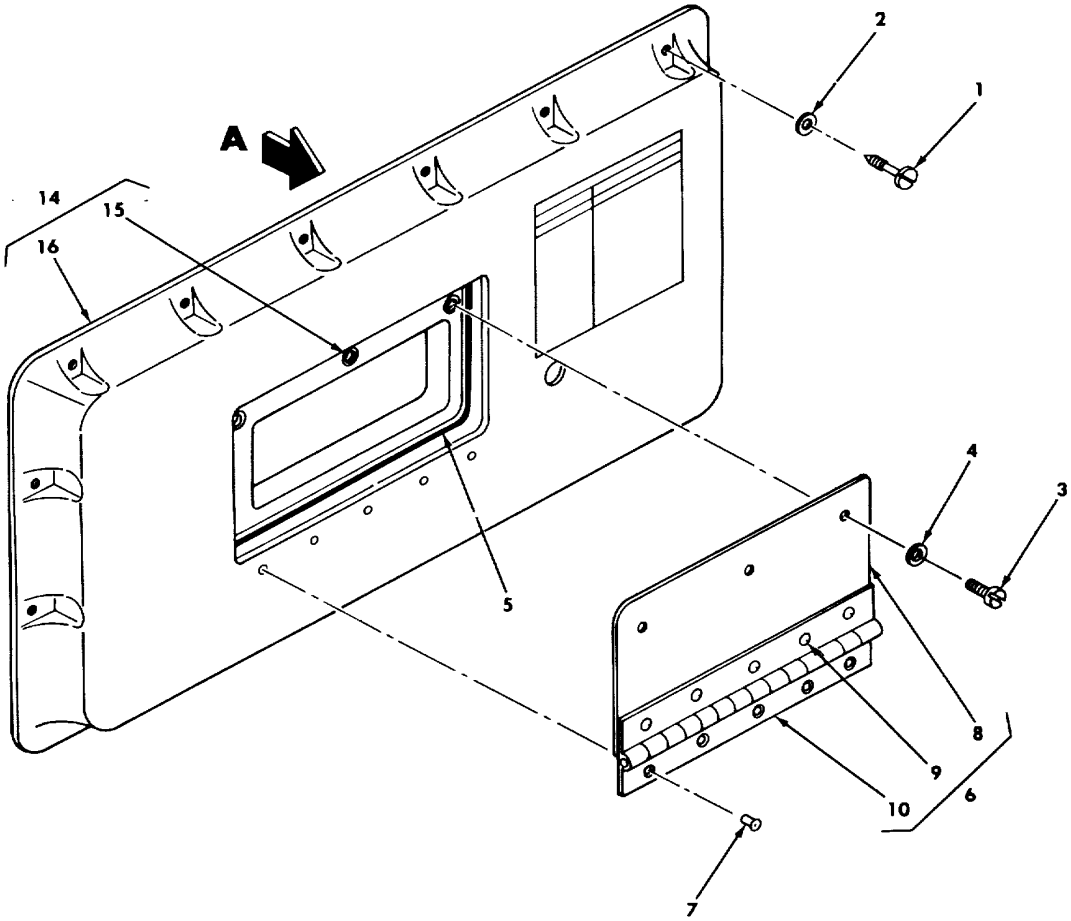

Figure 22. Cover assembly, card file.

(1) ILLUSTRATION (a) FIG NO.	(b) ITEM NO.	(2) SMR CODE	(3) NATIONAL STOCK NUMBER	(4) FSCM	(5) PART NUMBER	(6) DESCRIPTION USABLE ON CODE	(7) U/M	(8) QTY INC IN UNIT
						GROUP 16 COVER ASSEMBLY,CARD FILE		
22	1	MDFZZ		80063	SM-B-528627-4	SCREW,EXTERNALLY R DH3	EA	16
22	2	PAFZZ	5310-00-457-1488	88044	AN960XC8	WASHER,FLAT DH3	EA	16
22	3	XDFZZ		80063	SM-A-942155	SCREW PANEL CAPTIVE DH3	EA	3
22	4	PAFZZ		80205	NAS1598C08	PACKING,PREFORMED DH3	EA	3
22	5	XDFZZ		80063	SM-A-942105	SHIELDING GASKET....DH3	EA	18
22	6	MDFZZ		80063	SM-D-941617	DOOR ASSY DH3	EA	1
22	7	PAFZZ	5320-00-117-6950	96906	MS20426AD4-5	RIVET, SOLID....DH3	EA	5
22	8	XAFZZ		80063	SM-D-941617-1	DOOR....DH3	EA	1
22	9	PAFZZ	5320-00-117-6950	96906	MS20426AD4-5	RIVET,SOLID DH3	EA	5
22	10	XAFZZ		96906	MS20001P3-630	HINGE CONTINIOUS DH3	EA	1
22	11	MDFZZ		80063	SM-C-941618-1	PAD RETAINING....DH3	EA	1
22	12	MDFZZ		80063	SM-C-941618-2	PAD RETAINING DH3	EA	1
22	13	MDFZZ		80063	SM-C-941618-3	PAD RETAINING....DH3	EA	1
22	14	MDFZZ		80063	SM-D-941616	COVER ASSY....DH3	EA	1
22	15	XDFZZ		80063	SM-A-942095	NUT FLOATING....DH3	EA	1
22	16	XAFZZ		80063	SM-D-941616-1	COVER DH3	EA	1

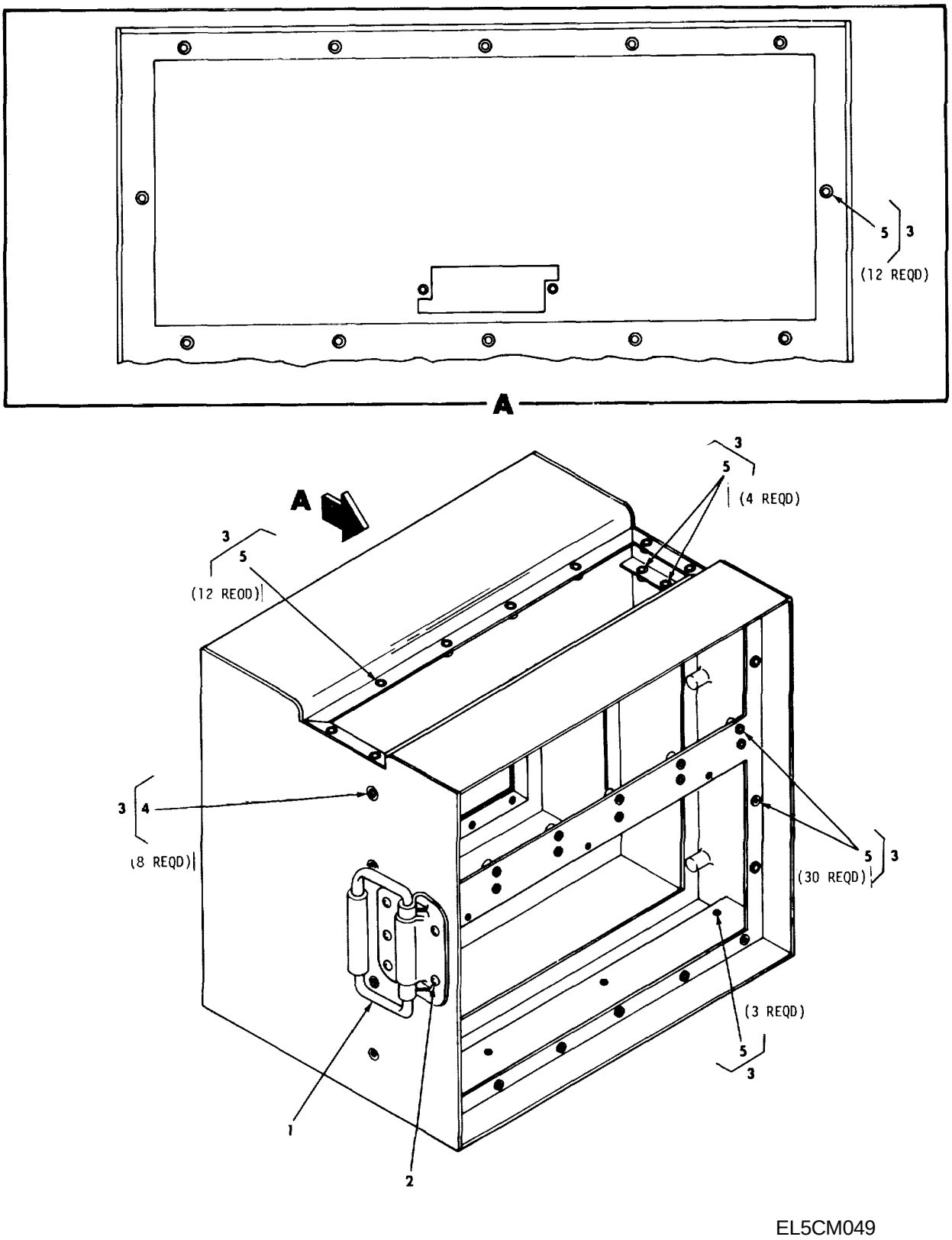

Figure 23. Case assembly.

(1) ILLUSTRATION (a) FIG NO.	(b) ITEM NO.	(2) SMR CODE	(3) NATIONAL STOCK NUMBER	(4) FSCM	(5) PART NUMBER	(6) DESCRIPTION *USABLE ON CODE*	(7) U/M	(8) QTY INC IN UNIT
						GROUP 17 CASE ASSEMBLY		
23	1	XDFZZ		80063	SM-A-942099	HANDLE BAIL DH3	EA	2
23	2	PAFZZ	5320-00-117-7227	96906	MS20426DD6-9	RIVET,SOLID DH3	EA	5
23	3	XAFFD		80063	SM-D-941610	CASE ASSEMBLY DH3	EA	1
23	4	PAFZZ	5340-00-829-2141	96906	MS21209F4-15	INSERT,SCREW THREAD DH3	EA	8
23	5	PAFZZ	5340-00-815-4929	96906	MS21209C0815	INSERT,SCREW THREAD DH3	EA	61

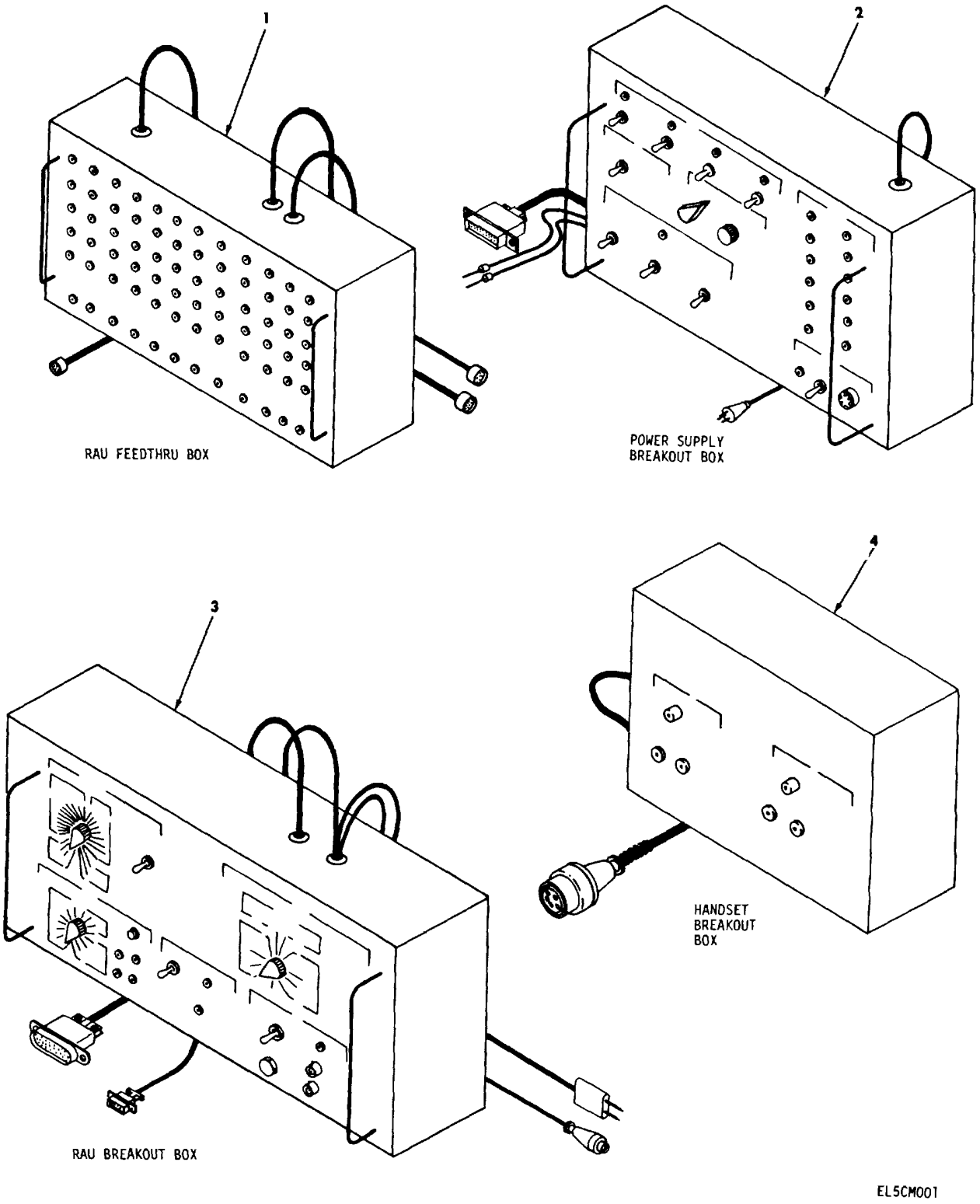

Figure 24. Special tools for Multiplexer TD-976/G (sheet 1 of 2).

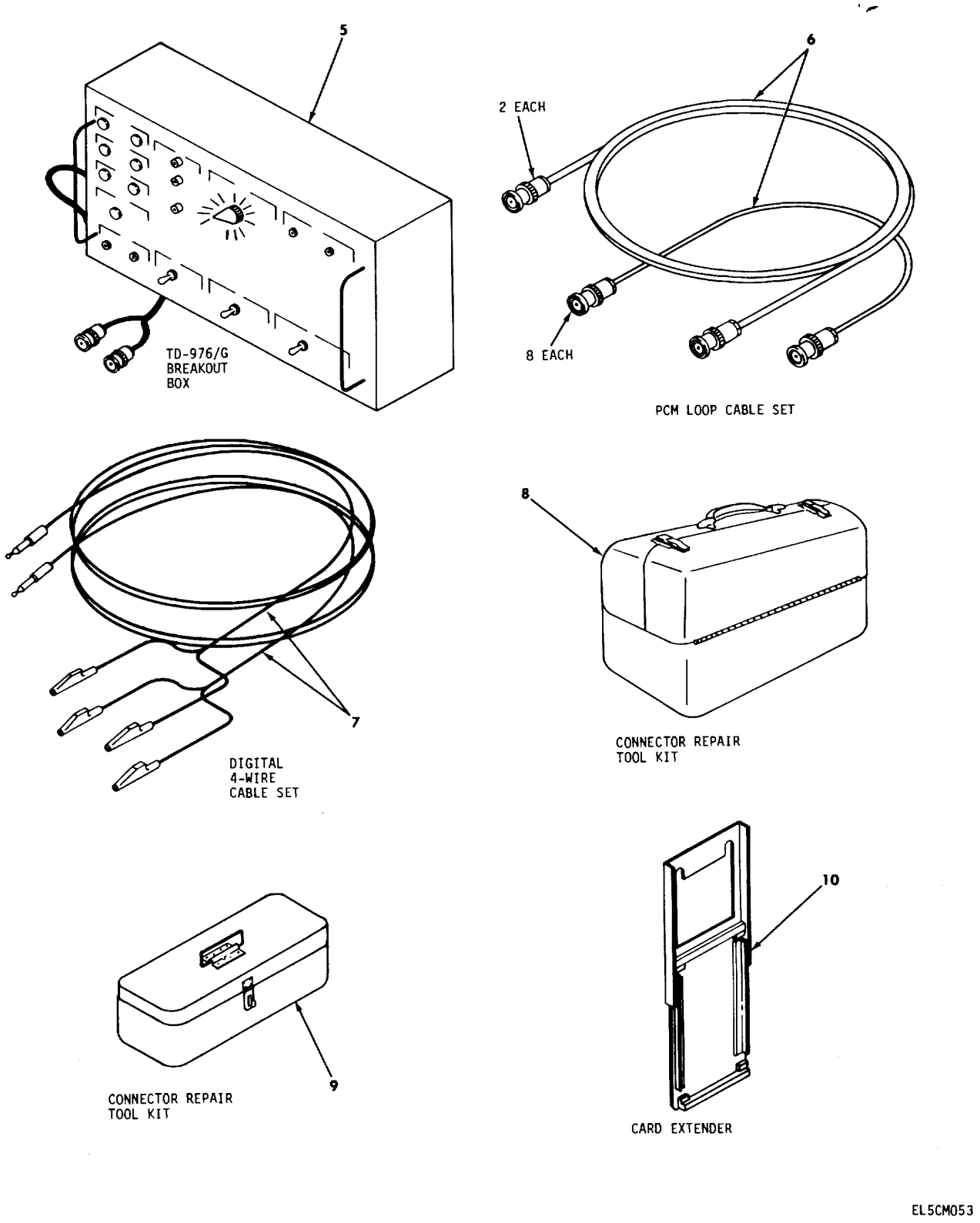

Figure 24. Special tools for Multiplexer TD-979/G (sheet 2 of 2)

(1) ILLUSTRATION (a) FIG NO.	(b) ITEM NO.	(2) SMR CODE	(3) NATIONAL STOCK NUMBER	(4) FSCM	(5) PART NUMBER	(6) DESCRIPTION *USABLE ON CODE*	(7) U/M	(8) QTY INC IN UNIT
						GROUP 30 SPECIAL TOOLS FCR HULTIPLEXER TD-976/G		
24	1	PEFHH		80058	MX-10223/G	FEEDTHRU BOX RAU.....DH3 BOI 1 AUTH FOR 1-100 EQUIP	EA	
24	2	PEFHH		80058	MX-10222/G	POWER SUPPLY BREAK.....DH3 BOI 1 AUTH FOR 1-100 EQUIP	EA	
24	3	PEFHH		80058	MX-10225/G	RAU BREAKOUT BOX.....DH3 BOI 1 AUTH FOR 1-100 EQUIP	EA	
24	4	PEFHH		80058	MX-10218/G	HANDSET BREAKOUT B.....DH3 BOI 1 AUTH FOR 1-100 EQUIP	EA	
24	5	PEFHH		80058	MX-10259/G	TD-976/G BREAKOUT.....DH3 BOI AUTH FOR 1-100 EQUIP	EA	
24	6	PEFHH		80058	CX-13167/G	PCM LOOP CABLE SET.....DH3 BOI 1 AUTH FOR 1-100 EQUIP	EA	
24	7	PEFHH		80058	CX-13166/G	DIGITAL CABLE SET.....DH3 BOI 1 AUTH FOR 1-100 EQUIP	EA	
24	8	PEOZZ		80058	MK-2067/G	TOOL KIT CONNECTOR.....DH3 BOI 1 AUTH FOR 1-100 EQUIP	EA	
24	9	PEOZZ		80058	MK-2068/G	TOOL KIT ELECTRICA.....DH3 BOI 1 AUTH FOR 1-100 EQUIP	EA	
24	10	PEFHH		80058	MX-10260/G	EXTENDER CARD.....DH3 BOI 1 AUTH FOR 1-100 EQUIP	EA	

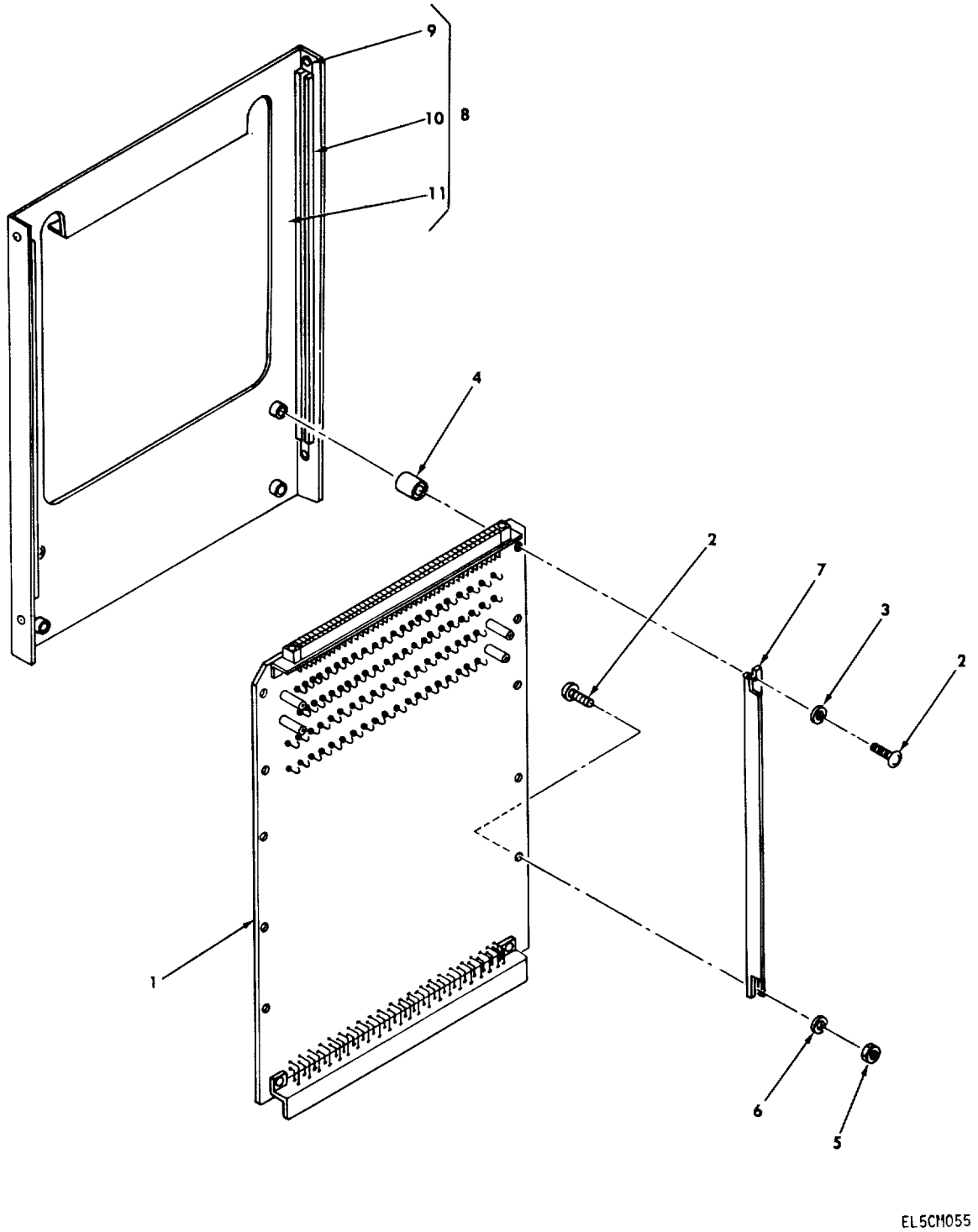

Figure 24A. Extender Card, Electronic Test MX-10260/G.

(1) ILLUSTRATION (a) FIG NO.	(b) ITEM NO.	(2) SMR CODE	(3) NATIONAL STOCK NUMBER	(4) FSCM	(5) PART NUMBER	(6) DESCRIPTION / *USABLE ON CODE*	(7) U/M	(8) QTY INC IN UNIT
						GROUP 3001 EXTENDER CARD		
						ELECTRONIC TEST MX-10260/G		
24A	1	PEFHH		80063	SM-D-941965	CIRCUIT CARD ASSEM,EXTENDER CARD DH3	EA	1
24A	2	PAHZZ	5305-00-054-5649	96906	MS51957-15	SCREW.MACHINE DH3	EA	10
24A	3	PAHZZ	5310-00-933-8118	96906	MS35338-135	WASHER,LOCK DH3	EA	4
24A	4	PAHZZ		80205	NAS43DD3-14	SPACER.SLEEVE DH3	EA	4
24A	5	PAHZZ	5310-00-982-5000	96906	MS21045C04	NUT,SELF-LOCKING,HE....DH3	EA	6
24A	6	PAHZZ	5310-00-057-0573	80205	NA5620C4	WASHER,FLAT DH3	EA	6
24A	7	XDHZZ		80063	SM-C-941963	STIFFENER....DH3	EA	2
24A	8	XDHZZ		80063	SM-D-941962	FRAME ASSY EXTENDER DH3	EA	1
24A	9	XDHZZ	5320-00-117-6516	96906	MS20470AD4-3	RIVET.SOLID....DH3	EA	4
24A	10	XDHZZ		26430	ST4001-8.500-062	GUIDE CARD....DH3	EA	2
24A	11	XAHZZ		80063	SM-D-941964	FRAME ASSY DH3	EA	1

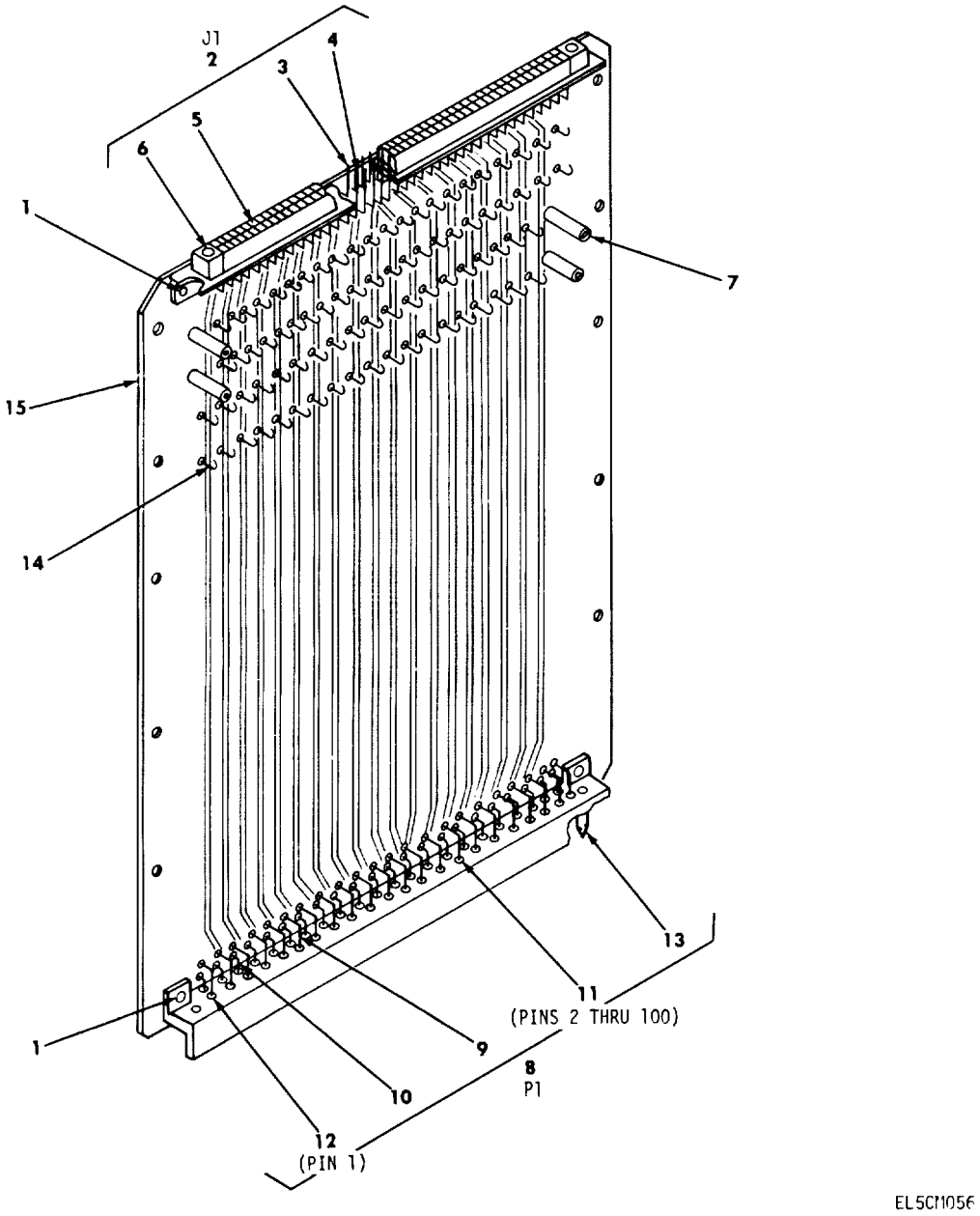

Figure 24B. Circuit card assembly, extender card

(1) ILLUSTRATION (a) FIG NO.	(b) ITEM NO.	(2) SMR CODE	(3) NATIONAL STOCK NUMBER	(4) FSCM	(5) PART NUMBER	(6) DESCRIPTION USABLE ON CODE	(7) U/M	(8) QTY INC IN UNIT
						GROUP 300101 CIRCUIT CARD ASSEMBLY, EXTENDER CARD		
24B	1	XDHZZ		80205	NAS1788-3-6C	EYELET,METALLIC DH3	EA	4
24B	2	AHHHH		31413	S1000-01965	CONNECTOR RCPT ELEC DH3	EA	1
24B	3	XDHZZ		31413	010-8700-509	CONTACT ELECTRICAL DH3	EA	50
24B	4	XDHZZ		31413	010-8703-509	CONTACT ELECTRICAL DH3	EA	50
248	5	XDHZZ	5970-00-275-5242	31413	302-0002-002	INSULATOR,FEMALE....DH3	EA	100
24B	6	XAHZZ		31413	516-0019-505	BUSHING GUIDE DH3	EA	2
24B	7	PAHZZ		71279	450-3279-01-03-10	CONNECTOR PLUG JA DH3	EA	4
24B	8	AHHHZ		31413	M1001-01630	CONNECTDR.RECEPTACL DH3	EA	1
24B	9	XDHZZ		31413	010-7517-509	CONTACT ELECTRICAL DH3	EA	50
24B	10	XDHZZ		31413	010-7515-509	CONTACT ELECTRICAL DH3	EA	50
24B	11	XDHZZ	5970-00-275-5242	31413	302-0012-002	INSULATOR,FEMALE....DH3	EA	99
24B	12	XDHZZ		31413	302-0002-003	INSULATOR....DH3	EA	1
24B	13	XAHZZ		31413	516-0019-505	BUSHING GUIDE....DH3	EA	2
24B	14	PAHZZ	5940-01-057-6689	22526	75401-001	TERMINAL,STUD....DH3	EA	88
24B	15	XAHZZ		80063	SM-D-941967	PRINTED WIRING BD ....DH	EA	1

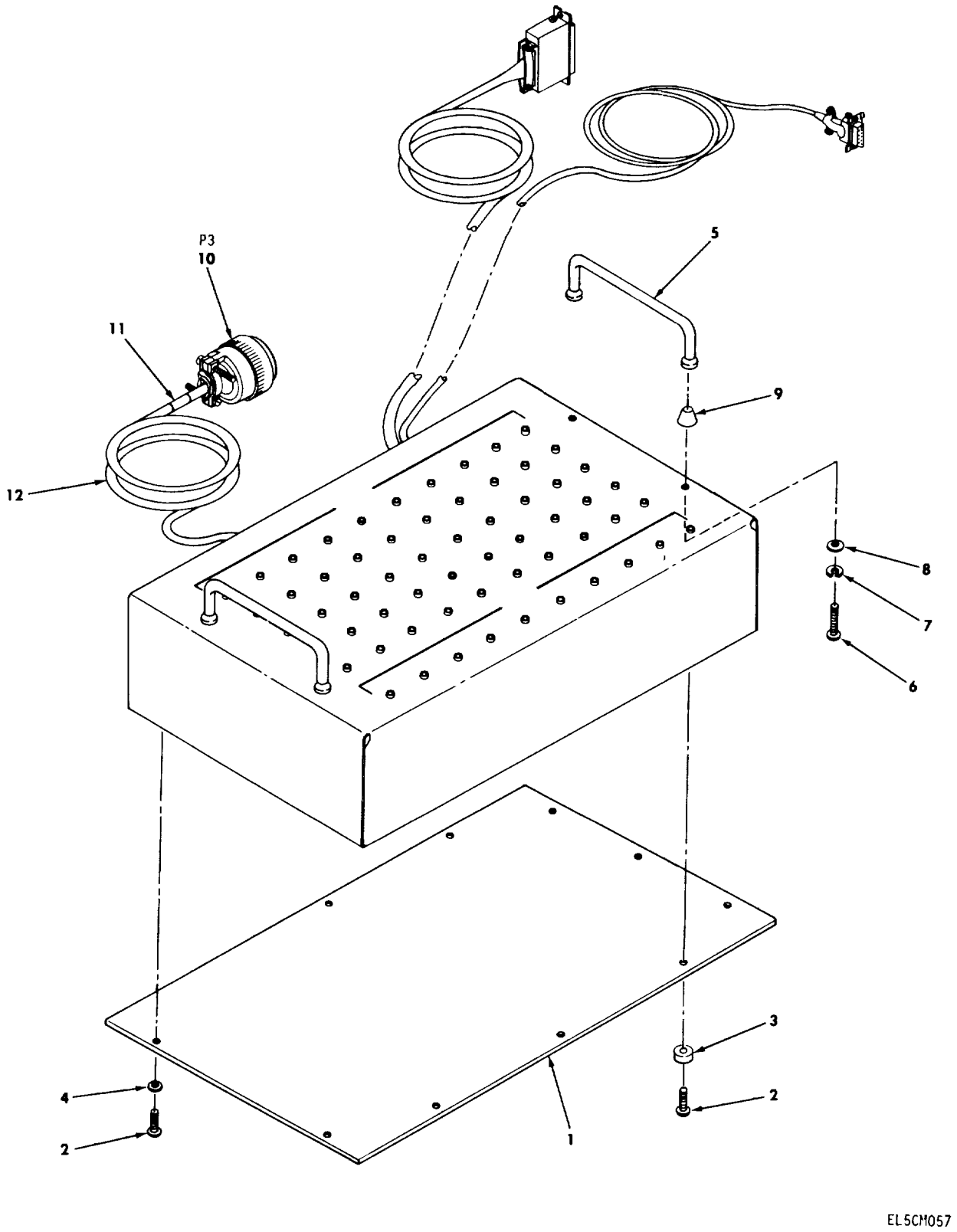

Figure 24C. Remote Access Unit Feedthru Box Assembly MX-10223/G (sheet 1 of 2)

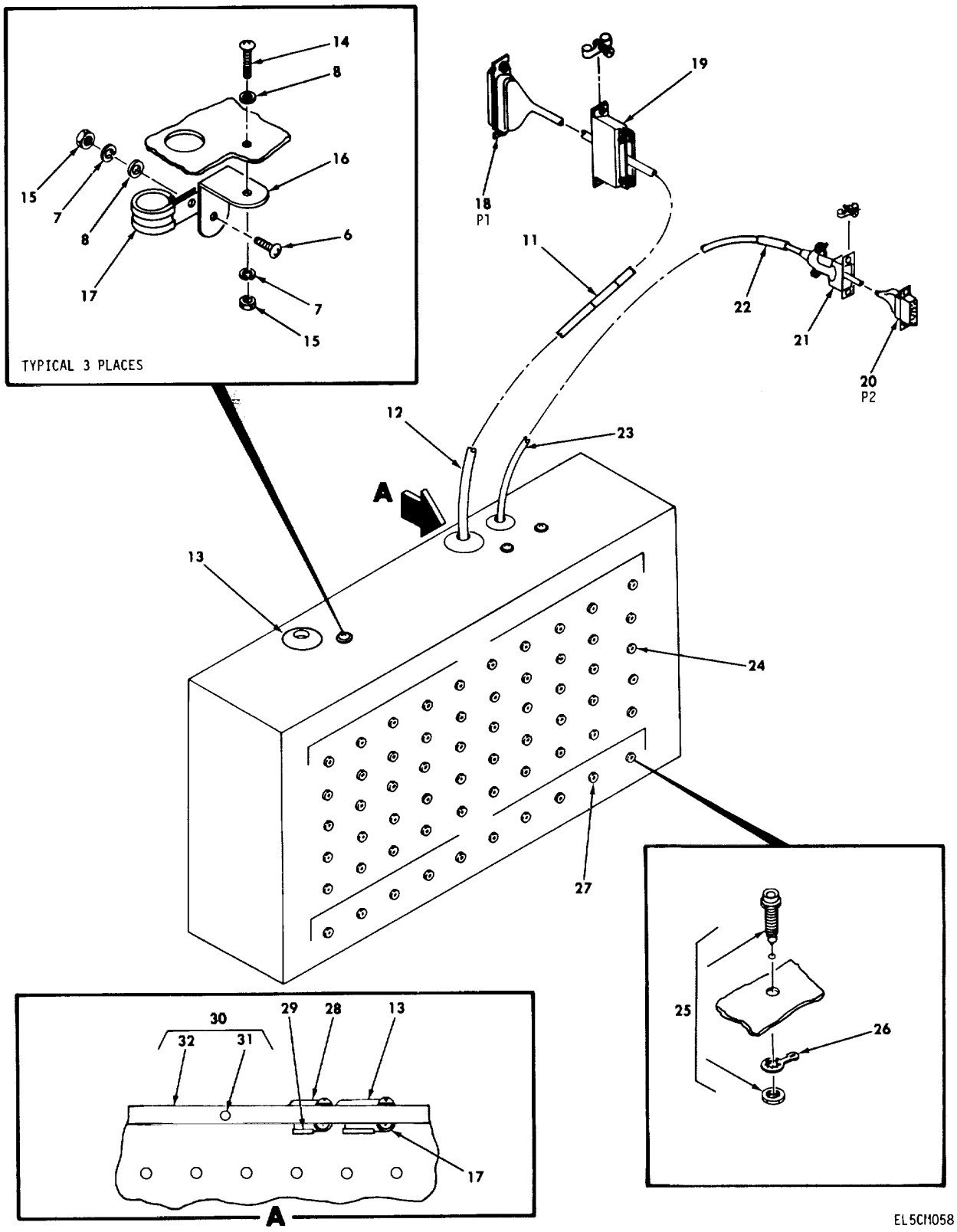

Figure 24C. Remote Access Unit Feedthru Box Assembly MX-10223/G (sheet 2 of 2)

(1) ILLUSTRATION (a) FIG NO.	(b) ITEM NO.	(2) SMR CODE	(3) NATIONAL STOCK NUMBER	(4) FSCM	(5) PART NUMBER	(6) DESCRIPTION / *USABLE ON CODE*	(7) U/M	(8) QTY INC IN UNIT
						GROUP 3002 REMOTE ACCESS UNIT		
						FEEDTHRU BOX ASSEMBLY MX-10223/G		
24C	1	XDHZZ		04939	70730002-001	COVER DH3	EA	1
24C	2	PAHZZ	5305-00-889-3000	96906	MS35206-230	SCREW,MACHINE DH3	EA	12
24C	3	XDHZZ	5340-00-209-9352	83330	2192	BUMPER,RUBBER DH3	EA	6
24C	4	PAHZZ	5310-00-167-0832	88044	AN960-6L	WASHER,FLAT DH3	EA	6
24C	5	PAHZ	5340-00-060-5386	96906	MS39087-3	HANDLE BOW DH3	EA	2
24C	6	PAHZZ	5305-00-989-7434	96906	MS35207-263	SCREW,MACHINE DH3	EA	7
24C	7	PAHZZ	5310-00-261-8278	96906	MS35338-100	WASHER,LOCK DH3	EA	10
24C	8	PAHZZ	5310-00-167-0834	88044	AN960-10L	WASHER,FLAT DH3	EA	10
24C	9	XDHZZ		71279	416-1988-01-02	FERRULE ELECTRICAL....DH3	EA	4
24C	10	XDHZZ	5935-00-724-7578	96906	MS3126F-22-55P	CONNECTOR,PLUG,ELEC DH3	EA	1
24C	11	XDHZZ	5970-00-812-1360	81349	M23053/5-109-9	INSULATION SLEEVING DH3	FT	V
24C	12	XDHZZ	6145-00-078-5751	70903	8750	CABLE,SPECIAL PURPO DH3	FT	V
24C	13	PAHZZ	5325-00-276-6091	96906	MS35489-19	GROMMET RUBBER DH3	EA	2
24C	14	XDHZZ	5305-00-990-6444	96906	MS35207-261	SCREW,MACHINE DH3	EA	3
24C	15	PAHZZ	5310-00-619-4376	80205	NAS671-10	NUT,PLAIN,HEXAGON DH3	EA	6
24C	16	XDHZZ		80205	AN743BZ12	BRACKET ANGLE. DH3	EA	3
24C	17	PAHZZ	5340-00-726-9317	96906	MS21919DG9	CLAMP,LOOP DH3	EA	2
24C	18	XDFZZ	5935-00-493-0465	71468	DDMM50S	CONNECTOR,RECEPTACL....DH3	EA	1
24C	19	XDHZZ	5935-00-833-3548	71468	DD24661	SHIELDOELECRICAL C DH3	EA	1
24C	20	XDHZZ	5935-00-951-8986	71468	DEMM9S	CONNECTOR,RECEPTACL DH3	EA	1
24C	21	XDHZZ	5935-00-498-1902	71468	DE44994	SHIELD,ELECTRICAL C DH3	EA	1
24C	22	XDHZZ	5970-00-082-3948	81349	M23053/5-108-9	INSULATION SLEEVING DH3	FT	V
24C	23	XDHZZ		16428	8747	CABLE SP ELECTRICAL DH3	FT	V
24C	24	PAHZZ	5935-00-728-4514	81349	M39024/10-01	JACK,TIP DH3	EA	58
24C	25	PAHZZ	5935-00-762-0312	81349	M39024/10-03	JACK,TIP....DH3	EA	1
24C	26	XDHZZ	5940-00-254-5216	96906	MS77069-3	TERNINAL,LUG DH3	EA	1
24C	27	PAHZZ	5935-00-702-4199	81349	M39024/10-02	JACK,TIP....DH3	EA	1
24C	28	PAHZZ	5325-00-291-9366	96906	MS3549-11	GRUMMET,NONMETALLIC....DH3	EA	1
24C	29	PAHZZ	5340-00-205-6302	96906	MS21919DG5	CLARP.LOOP DH3	EA	1
24C	30	PAHZZ		04939	70730001-009	CHASSIS ASSY DH3	EA	1
24C	31	XDHZZ		15653	MF7200-06	SWITCH,ELECTRICAL DH3	EA	12
24	32	XDHZZ		71218	AC-427	CHASSIS,ELECTRICAL DH3	EA	1

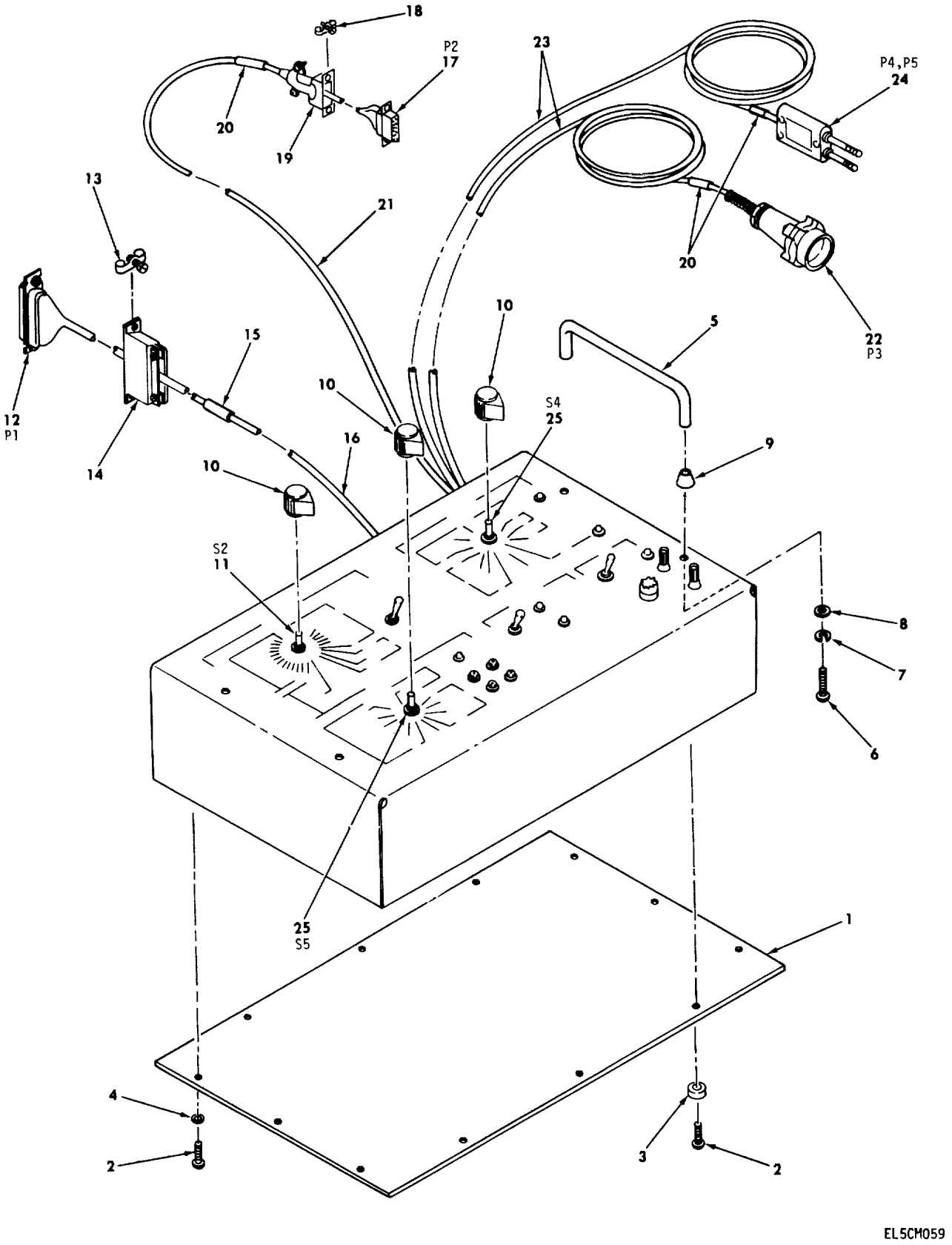

Figure 24D. Remote Access Unit Breakout Box Assembly MX-10225/G (sheet 1 of 3)

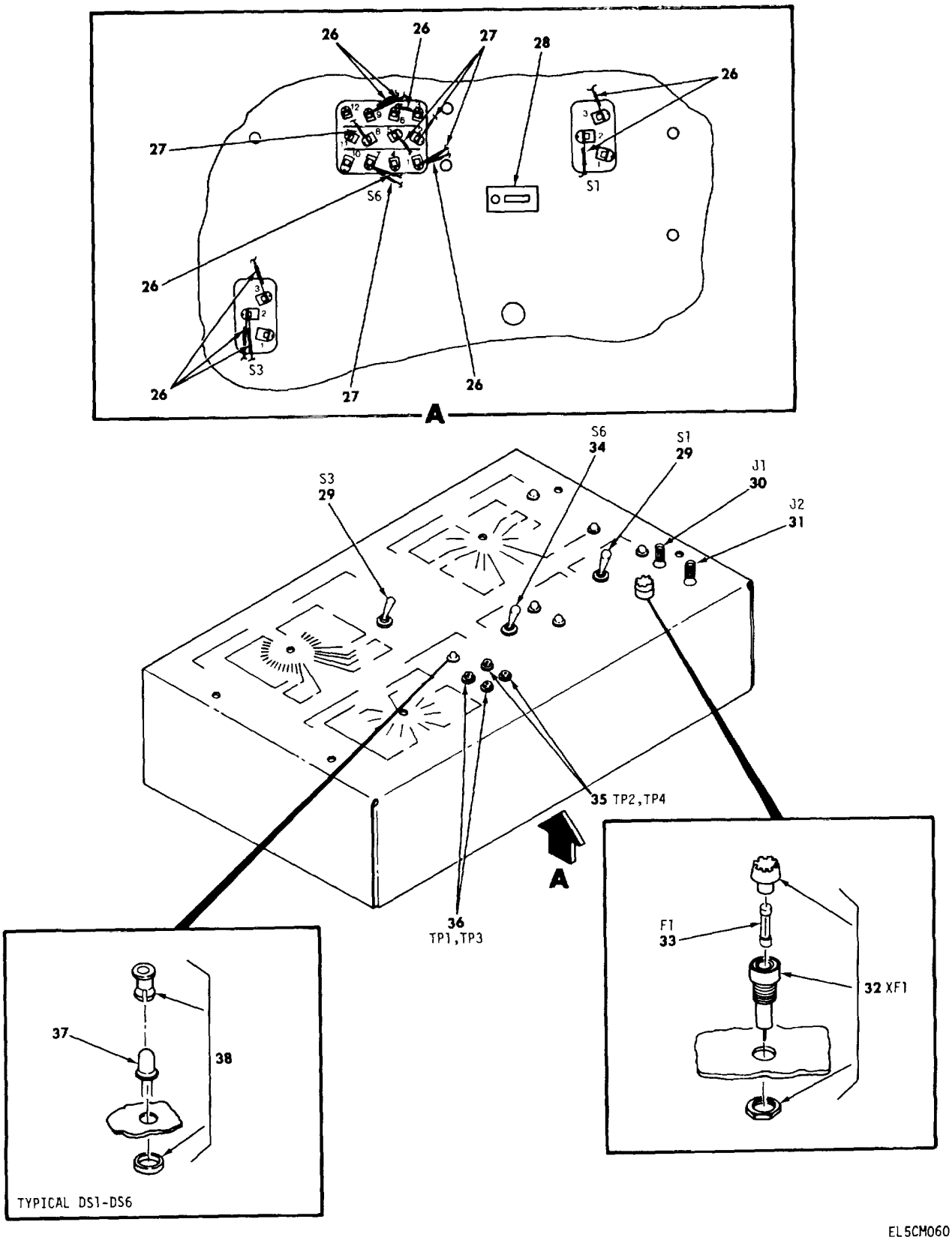

Figure 24D. Remote Access Unit Breakout Box Assembly MX-10225/G (sheet 2 of 3)

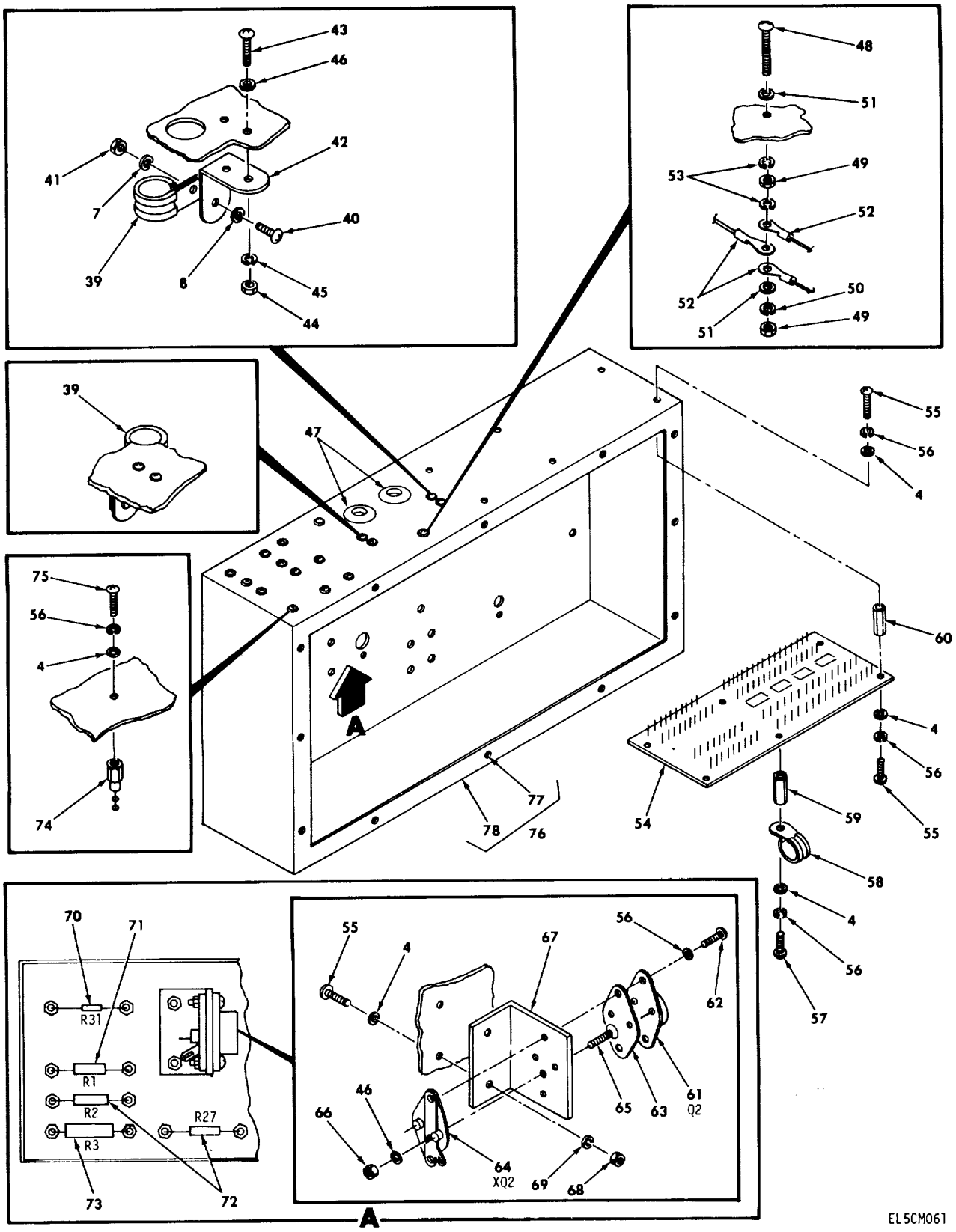

Figure 24D. Remote Access Unit Breakout Box Assembly MX-10225/G (sheet 3 of 3)

(1) ILLUSTRATION (a) FIG NO.	(b) ITEM NO.	(2) SMR CODE	(3) NATIONAL STOCK NUMBER	(4) FSCM	(5) PART NUMBER	(6) DESCRIPTION USABLE ON CODE	(7) U/M	(8) QTY INC IN UNIT
						GROUP 3003 REMOTE ACCESS UNIT		
						BREAKOUT B0X ASSEMBLY MX-10225/G		
24D	1	XDHZZ		04939	70730002-001	COVER DH3	EA	1
24D	2	PAHZZ	5305-00-889-3000	96906	MS35206-230	SCREW,MACHIHE DH3	EA	12
24D	3	XDHZZ	5340-00-209-9352	83330	2192	BUMPER,RUBBER DH3	EA	6
24D	4	PAHZZ	5310-00-167-0832	88044	AN960-6L	WASHER,FLAT DH3	EA	34
24D	5	PAHZZ	5340-00-060-5386	96906	MS39087-3	HANDLE BOW DH3	EA	2
24D	6	PAHZZ	5305-00-984-6210	96906	MS35206-263	SCREW,MACHINE DH3	EA	4
24D	7	PAHZZ	5310-00-261-8278	96906	M535338-100	WASHER.LOCK DH3	EA	6
24D	8	PAHZZ	5310-00-167-0834	88044	AN960-10L	WASHER,FLAT DH3	EA	6
24D	9	XDHZZ		71279	416-1988-01-02	FERRULE ELECTRICAL DH3	EA	4
24D	10	PAHZZ	5355-00-556-0145	96906	MS91528-1K2B	KNOB DH3	EA	3
24D	11	PAHZZ	5930-00-021-9665	25244	PA4001	SWITCH.ROTARY DH3	EA	1
24D	12	XDHZZ	5935-00-493-0465	71468	DDMM50S	CONNECTOR,RECEPTACL DH3	EA	1
24D	13	PAHZZ	5305-00-073-8885	71468	D20420-12	SCREW,CAP,SOCKET HE DH3	EA	2
24D	14	XDHZZ	5935-00-833-3548	71468	DD24661	SHIELD.ELECTRICAL C DH3	EA	1
24D	15	XDHZZ	5970-00-812-1360	81349	M23053/5-109-9	INSULATION SLEEVING DH3	EA	V
24D	16	XDHZZ	6145-00-078-5751	70903	8750	CABLE,SPECIAL PURPO DH3	EA	V
24D	17	XDHZZ	5935-00-951-8986	71468	DEMM9S	CONNECTOR,RECEPTACL DH3	EA	1
24D		PAHZZ	5935-00-956-2935	71468	D20419	SCREW LOCK,MALE DH3	EA	2
24D	9	XDHZZ	5935-00-498-1902	71468	DE44994	SHIELD,ELECTRICAL C DH3	EA	1
24D	20	XDHZZ	5970-00-740-2971	81349	M23053/5-107-9	INSULATION SLEEVING DH3	EA	V
24D	21	XDHZZ		16428	8747	CABLE SP ELECTRICAL DH3	EA	V
24D	22	PAHZZ	5935-00-283-2950	02660	164-28	CONNECTOR.PLUG,ELEC DH3	EA	1
24D	23	XDHZZ	6145-00-729-9091	70903	8404	CABLE,SPECIAL PURPO DH3	EA	V
24D	24	PAHZZ	5935-00-075-6813	82389	415	PLUG,TELEPHONE DH3	EA	1
24D	25	PAHZZ	5930-00-055-3271	71590	PA4003	SWITCH.ROTARY DH3	EA	2
24D	26	PAHZZ	5940-00-577-3807	96906	MS25036-145	TERMINAL,LUG DH3	EA	10
24D	27	PAHZZ	5940-00-204-8966	96906	MS25036-102	TERMINAL.LUG DH3	EA	5
24D	28	XDHZZ	5340-00-917-8296	59730	TC105A	MOUNT,RESILIENT DH3	EA	1
24D	29	PAHZZ	5930-00-772-9276	96906	MS25306-232	SWITCH.TOGGLE DH3	EA	2
24D	30	PAHZZ	5940-00-842-6483	81349	PB01FA01	POST,BINDING,ELECTR DH3	EA	1
24D	31	PAHZZ	5940-00-044-1583	81349	PB01FA02	POST,BINDING,ELECTR DH3	EA	1
24D	32	PAHZZ	5920-00-556-0144	81349	FHN20G	FUSEHOLDER,EXTRACTO DH3	EA	1
24D	33	PAHZZ	5920-00-228-7882	81349	F02B250V2A	FUSE,CARTRIDGE DH3	EA	1
24D	34	PAHZZ	5930-00-892-9393	96906	MS25308-232	SWITCH,TOGGLE DH3	EA	1
24D	35	PAHZZ	5935-00-762-0312	81349	M39024/10-03	JACK,TIP DH3	EA	2
24D	36	PAHZZ	5935-00-702-4199	81349	M39024/10-02	JACKTIP DH3	EA	2
24D	37	PAHZZ		50522	MV5023	LIGHT EMITTING DI DH3	EA	6
24D	38	XDHZZ		50522	MP22	GROMMET LED MOUNT DH3	EA	6

(1) ILLUSTRATION (a) FIG NO.	(b) ITEM NO.	(2) SMR CODE	(3) NATIONAL STOCK NUMBER	(4) FSCM	(5) PART NUMBER	(6) DESCRIPTION / USABLE ON CODE	(7) U/M	(8) QTY INC IN UNIT
24D	39	PAHZZ	5340-00-543-4394	96906	MS21919DG6	CLAMP,LOOP DH3	EA	2
24D	40	PAHZZ	5305-00-989-7434	96906	MS35207-263	SCREW,MACHINE DH3	EA	2
24D	41	PAHZZ	5310-00-619-4376	80205	NAS671-10	NUT.PLAIN,HEXAGON....DH3	EA	2
24D	42	XDHZZ		88044	AN743BZ13	BRACKET.ANGLE DH3	EA	3
24D	43	PAHZZ	5305-00-889-2997	96906	MS35206-215	SCREW,MACHINE DH3	EA	4
24D	44	PAHZZ	5310-00-810-7785	80205	NAS671-4	NUT,PLAIN,HEXAGON DH3	EA	4
24D	45	PAHZZ	5310-00-184-8996	96906	MS35338-97	WASHER,LOCK DH3	EA	4
24D	46	PAHZZ	5310-00-167-0831	88044	AN960-4L	WASHER,FLAT DH3	EA	5
24D	47	PAHZZ	5325-00-281-1557	96906	MS35489-17	GROMMET,NONMETALLIC....DH3	EA	2
24D	48	XDHZZ	5305-00-984-6197	96906	MS35206-249	SCREW,MACHINE DH3	EA	1
24D	49	PAHZZ	5310-00-725-4712	80205	NA5671-8	NUT,PLAIN,HEXAGON....DH3	EA	2
24D	50	PAHZZ	5310-00-576-0546	96906	MS35338-99	WASHER,LOCK DH3	EA	1
24D	51	PAHZZ	5310-00-167-0833	88044	AN960-8L	WASHER,FLAT DH3	EA	2
24D	52	PAHZZ	5940-00-557-1629	96906	MS5036-149	TERMINAL,LUG....DH3	EA	3
24D	53	PAHZZ	5310-00-559-0070	96906	MS35333-38	WASHER,LOCK DH3	EA	2
24D	54	PAHZZ		04939	70730022-009	COMPONENT BOARD AS,REMOTE ACCESS UNIT BREAKOUT BOX DH3	EA	1
24D	55	PAHZZ	5305-00-984-4988	96906	MS35206-228	SCREW,MACHINE DH3	EA	13
24D	56	PAHZZ	5310-00-579-0079	96906	MS35333-37	WASHER,LOCK DH3	EA	25
24D	57	XDHZZ	5305-00-984-6222	96906	MS35206-235	SCREW,MACHINE DH3	EA	1
24D	58	PAHZZ	5340-00-543-4394	96906	MS21919DG6	CLAMP.LOOP....DH3	EA	1
24D	59	XDHZZ	5365-00-302-8099	80205	NAS43DD1-32	SPACER,SLEEVE DH3	EA	1
24D	60	XDHZZ		80205	NAS1786B06-16	SPACER THREADED HEX DH3	EA	6
24D	61	PAHZZ	5961-00-235-3226	81349	JAN2N3716	TRANSISTOR....DH3	EA	1
24D	62	PAHZZ	5305-00-889-3001	96906	MS35206-231	SCREW,MACHINE DH3	EA	2
24D	63	XDHZZ		08530	2010097-22	INSULATOR....DH3	EA	1
24D	64	XDHZZ		06776	MD-3452G	SOCKET,PLUG-IN ELEC....DH3	EA	1
24D	65	PAHZZ	5305-00-045-8338	96906	MS24693-S7	SCREW,MACHINE DH3	EA	1
24D	66	PAHZZ	5310-00-811-6419	96906	MS21042-04	NUT,SELF-LOCKING,EX....DH3	EA	1
24D	67	XDHZZ		04939	70730026-001	BRACKET TRANSISTOR DH3	EA	1
24D	68	PAHZZ	5310-00-631-1294	80205	NAS671-6	NUT,PLAIN,HEXAGON DH3	EA	2
24D	69	PAHZZ	5310-00-184-8977	96906	MS35338-98	WASHER,LOCK DH3	EA	2
24D	70	XDHZZ	5905-00-121-9932	81349	RCR07G391JS	RESISTOR,FIXED,COMP DH3	EA	1
24D	71	PAHZZ	5905-00-904-3650	81349	RW79U8250F	RESISTOR,FIXED,WIRE DH3	EA	1
24D	72	PAHZZ	5905-00-901-7369	81349	RW79U1001F	RESISTOR,FIXED,WIRE DH3	EA	2
24D	73	PAHZZ	5905-00-491-2764	81349	RWR74S10ROFM	RESISTOR.FIXED,WIRE DH3	EA	1
24D	74	PAHZA	5940-00-082-4745	81349	SE109D02	TERMINAL,STUD....DH3	EA	12
24D	75	PAHZZ	5305-00-984-4983	96906	MS35206-226	SCREW.MACHINE DH3	EA	12
24D	76	XDHZZ		04939	70730021-009	CHASSIS ASSY....DH3	EA	1
24D	77	XDHZZ		15653	MF7200-06	SWITCH,ELECTRICAL....DH3	EA	12

(1) ILLUSTRATION (a) FIG NO.	(b) ITEM NO.	(2) SMR CODE	(3) NATIONAL STOCK NUMBER	(4) FSCM	(5) PART NUMBER	(6) DESCRIPTION USABLE ON CODE	(7) U/M	(8) QTY INC IN UNIT
2 40	78	XDHZZ		71218	AC-427	CHASSIS,ELECTRICAL DH3	EA	1

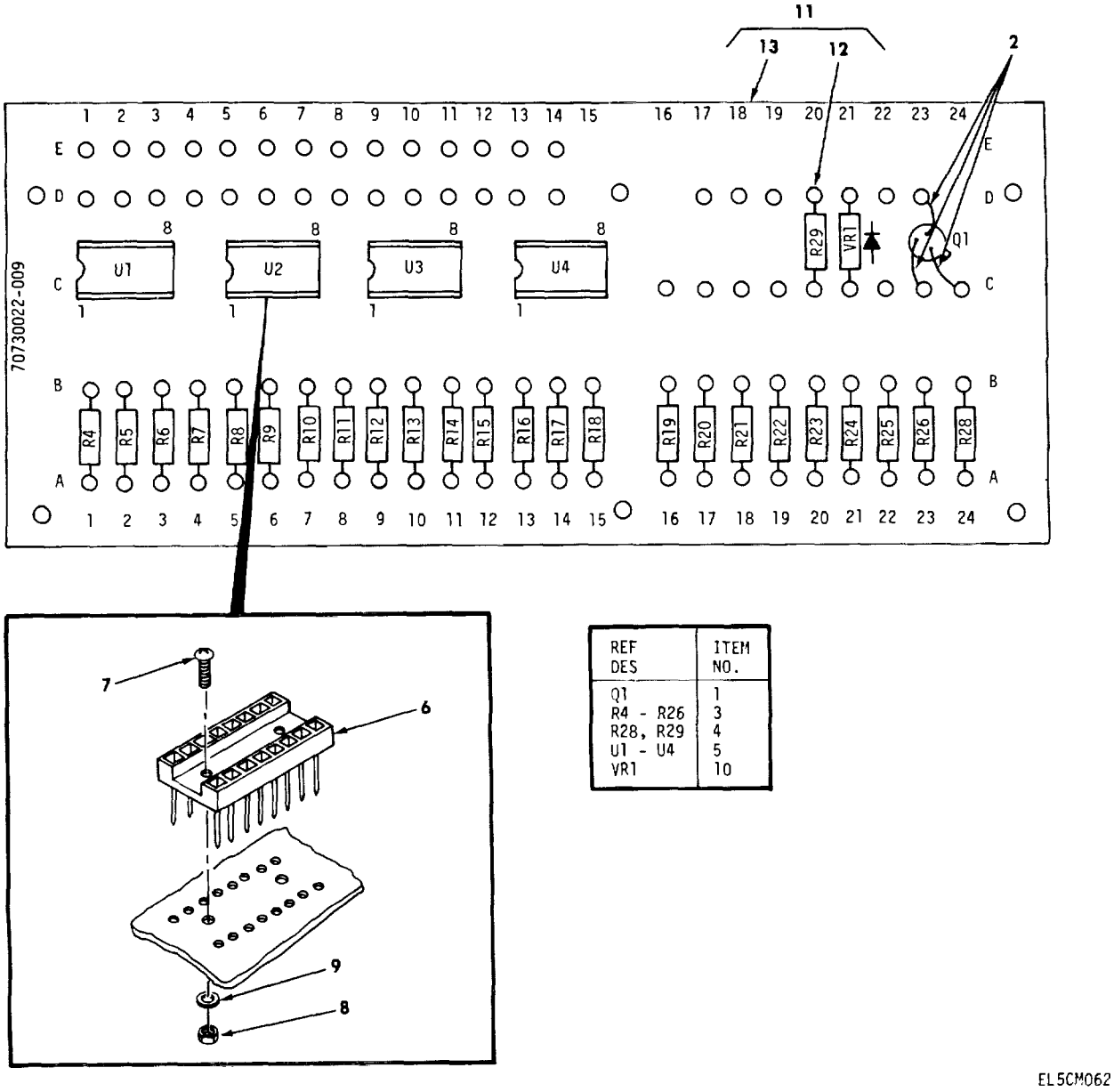

REF DES	ITEM NO.
Q1	1
R4 - R26	3
R28, R29	4
U1 - U4	5
VR1	10

Figure 24E. Component board assembly, remote access unit breakout box

(1) ILLUSTRATION (a) FIG NO.	(b) ITEM NO.	(2) SMR CODE	(3) NATIONAL STOCK NUMBER	(4) FSCM	(5) PART NUMBER	(6) DESCRIPTION *USABLE ON CODE*	(7) U/M	(8) QTY INC IN UNIT
						GROUP 300301 COMPONENT BOARD ASSEMBLY,		
						REMOTE ACCESS UNIT BREAKOUT BOX		
24E	1	PAHZZ	5961-00-951-8757	81349	JAN2N2222A	TRANSISTOR	EA	1
24E	2	XDHZZ		81349	MIL-1-22076-24	INSULATION TUBING	FT	V
24E	3	PAHZZ	5905-00-138-7399	81349	RNC55H5111FS	RESISTOR,FIXED,FILM	EA	23
24E	4	PAHZZ	5905-00-135-3973	81349	RC07G221JS	RESISTOR.FIXED,COMP	EA	2
24E	5	PAHZZ	5962-00-244-4228	34148	9016 DC	MICROCIRCUIT,DIGITA	EA	4
24F	6	XDHZZ		19112	102-14-AA-B	SOCKET,PLUG-IN ELEC	EA	4
24E	7	PAHZZ	5305-00-989-0682	96906	MS35206-205	SCREW,MACHINE	EA	8
24E	8	PAHZZ	5310-00-058-1823	96906	MS21042-02	NUT,SELF-LOCKING,.EX	EA	8
24E	9	PAHZZ	5310-00-616-6791	80205	NAS620-2	WASHER,FLAT	EA	8
24E	10	PAHZZ	5961-00-752-6121	81349	JAN1N753A	SEMICONDUCTCR DEVIC	EA	1
24E	11	XAHZZ		04939	70730024-009	COMPONENT B ASSY	EA	1
24E	12	XDHZZ	5940-00-764-9174	71279	155-3848-01-03	TERMINAL,STUD	EA	92
24E	13	XAHZZ		81349	MILP18177 TY GEE	BOARD GLASS.	FT	V

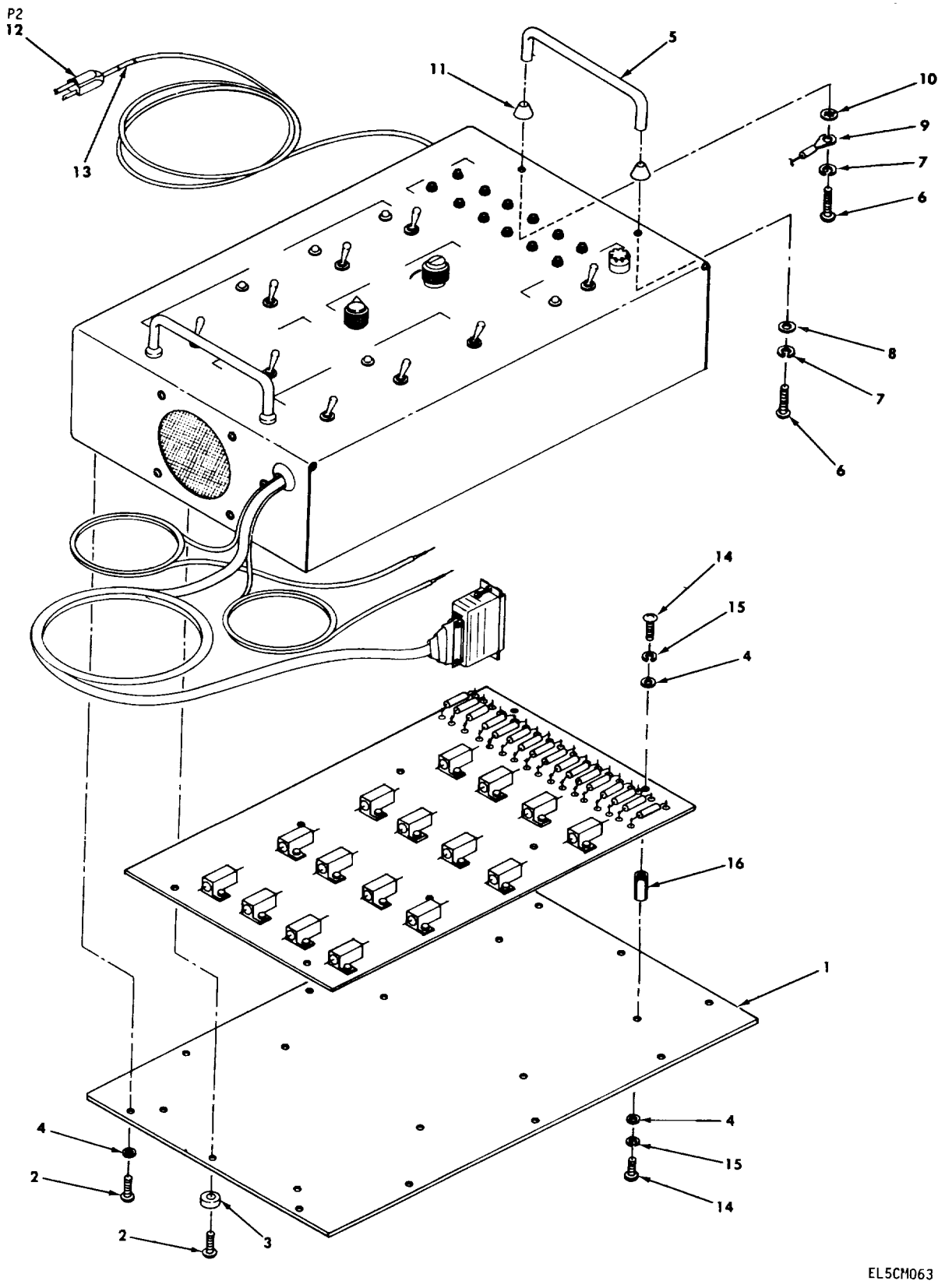

Figure 24F. Power Supply Breakout Box Assembly MX-10222/G (sheet 1 of 4).

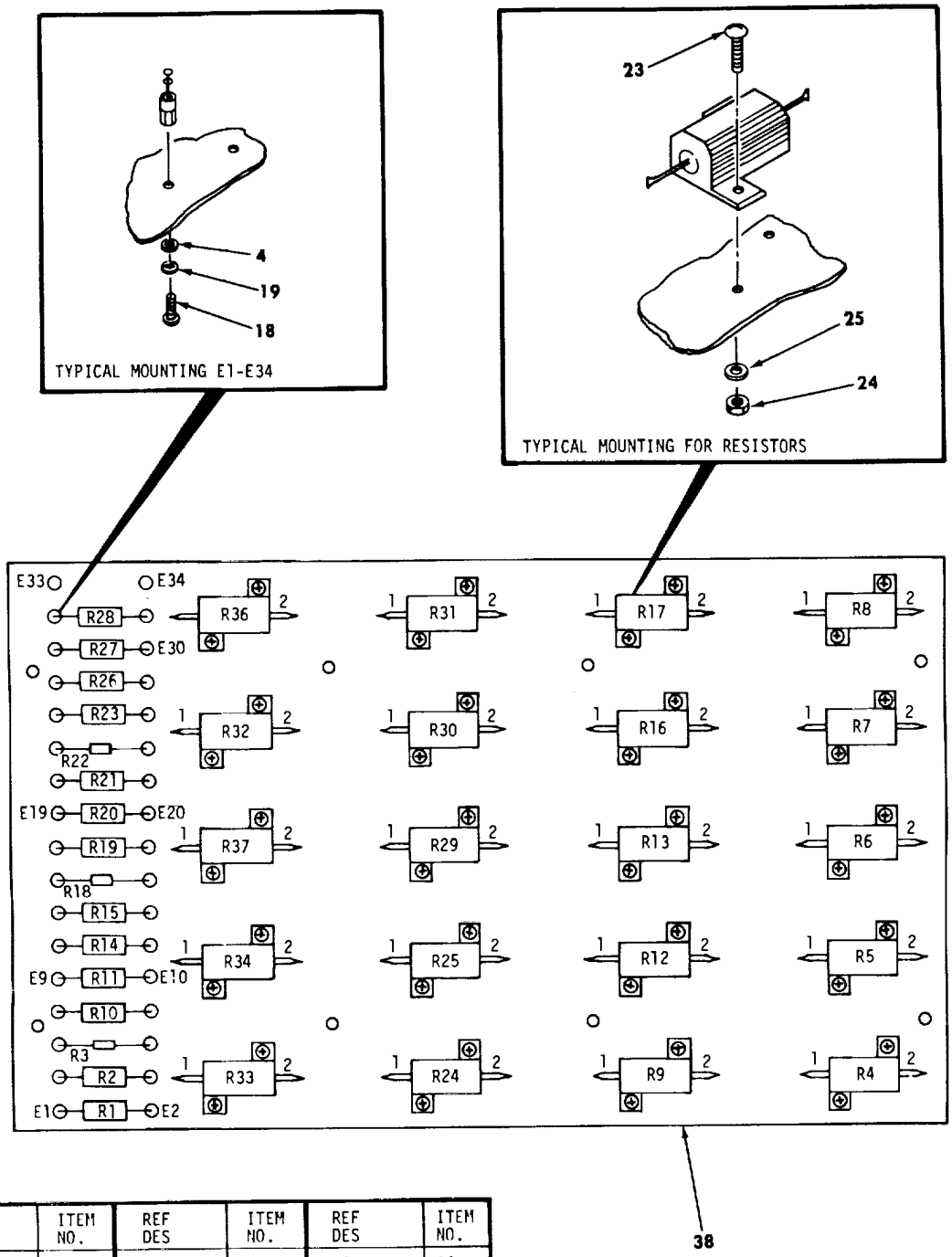

REF DES	ITEM NO.	REF DES	ITEM NO.	REF DES	ITEM NO.
E1 - E34	17	R13	31	R23	34
R1, R2	20	R14	28	R24, R25	35
R3	21	R15	29	R26	34
R4	22	R16	31	R27	36
R5, R6	26	R17	30	R28	34
R7 - R9	27	R18	21	R29 - R32	35
R10	28	R19	32	R33, R34	37
R11	29	R20, R21	33	R36, R37	35
R12	30	R22	21		

EL5CM064

Figure 24F. Power Supply Breakout Box Assembly MX-10222/G (sheet 2 of 4).

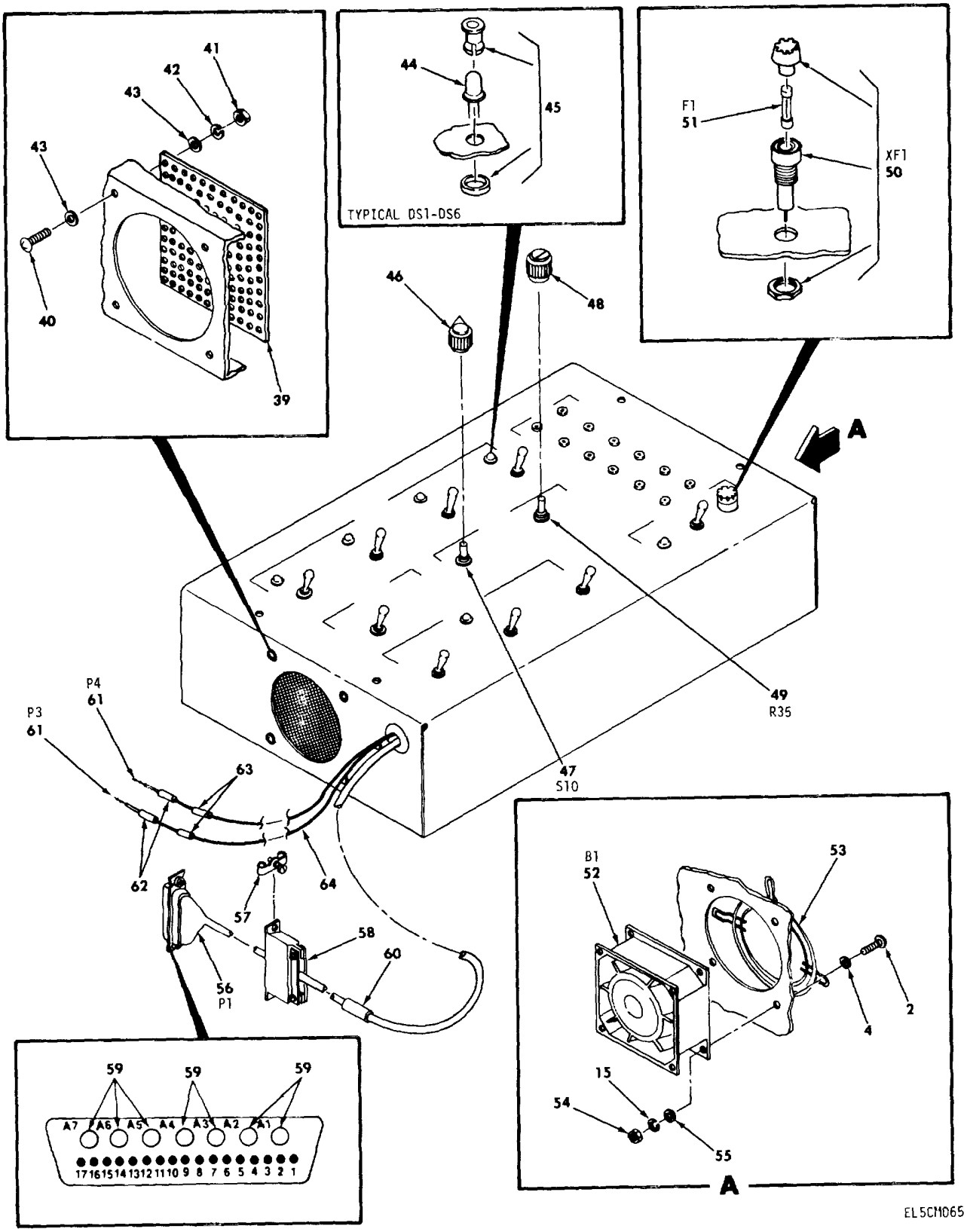

Figure 24F. Power Supply Breakout Box Assembly MX-10222/G (sheet 3 of 4).

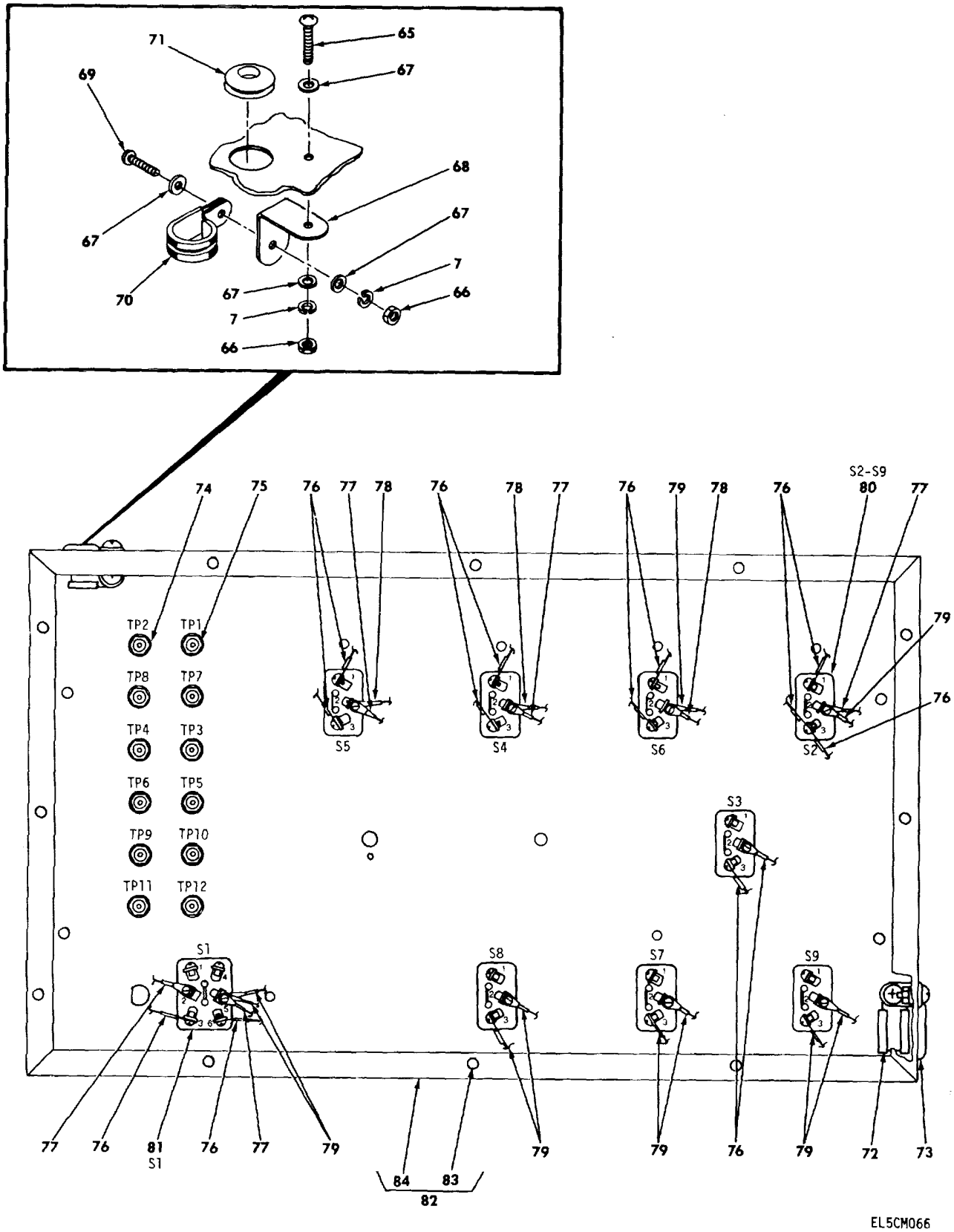

Figure 24F. Power Supply Breakout Box Assembly MX-10222/G (sheet 4 of 4).

(1) ILLUSTRATION (a) FIG NO.	(b) ITEM NO.	(2) SMR CODE	(3) NATIONAL STOCK NUMBER	(4) FSCM	(5) PART NUMBER	(6) DESCRIPTION ..... USABLE ON CODE	(7) U/M	(8) QTY INC IN UNIT
						GROUP 3004 POWER SUPPLY BREAKOUT		
						BOX ASSEMBLY MX-10222/G		
24F	1	XDHZZ		04939	7030042-001	COVER DH3	EA	1
24F	2	PAHZZ	5305-00-889-3000	96906	MS35206-230	SCREW,MACHINE DH3	EA	16
24F	3	XDHZZ	5340-00-209-9352	83330	2192	BUMPER, RUBBER DH3	EA	6
24F	4	PAHZZ	5310-00-167-0832	044	AN960-6L	WASHER, FLAT DH3	EA	60
24F	5	PAHZZ	5340-00-060-5386	96906	MS39087-3	HANDLE BOW DH3	EA	2
24F	6	PAHZZ	5305-00-984-6210	96906	M535206-263	SCREW.MACHINE DH3	EA	4
24F	7	PAHZZ	5310-00-261-8278	96906	MS35338-100	WASHER, LOCK DH3	EA	7
24F	8	PAHZZ	5310-00-167-0834	88044	AN960-10L	WASHER, FLAT DH3	EA	3
24F	9	PAHZZ	5940-00-143-4771	96906	MS25036-103	TERMINAL, LUG DH3	EA	1
24F	10	PAHZZ	5310-00-576-5752	96906	MS35333-39	WASHER, LOCK DH3	EA	1
24F	11	XDHZZ		71279	416-1988-01-02	FERRULE ELECTRICAL.....DH3	EA	4
24F	12	PAHZZ	4931-01-073-7428	16428	17419	CABLE ASSEMELY, SPEC DH3	EA	1
24F	13	XDHZZ	5970-00-082-3948	81349	M23053/5-108-9	INSULATION SLEEVING DH3	EA	V
24F	14	PAHZZ	5305-00-984-4988	96906	MS35206-228	SCREW, MACHINE DH3	EA	16
24F	15	PAHZZ	5310-00-184-8977	96906	MS35338-98	WASHER, LOCK DH3	EA	20
24F	16	XDHZZ		80205	NAS1768B06-16	SPACER THREAD HEX DH3	EA	8
24F	17	PAHZA	5940-00-082-4745	81349	SE109D02	TERMINAL STUD DH3	EA	34
24F	18	PAHZZ	5305-00-984-4983	96906	MS35206-226	SCREW, MACHINE DH3	EA	34
24F	19	PAHZZ	5310-00-579-0079	96906	MS35333-37	WASHER LOCK DH3	EA	34
24F	20	PAHZZ	5905-00-105-7537	81349	RW79U6191F	RESISTOR, FIXED, WIRE DH3	EA	2
24F	21	PAHZZ	5905-00-135-3973	81349	RCR07G221JS	RESISTOR, FIXED, COMP.....DH3	EA	3
24F	22	PAHZZ		81349	RER70F4R64P	RESISTOR, FIXED WW DH3	EA	1
24F	23	PAHZZ	5305-00-889-2999	96906	MS35206-217	SCREW,.MACHINE DH3	EA	40
24F	24	PAHZZ	5310-00-811-6419	96906	MS21042-04	NUT, SELF-LCCKING, EX.....DH3	EA	40
24F	25	PAHZZ	5310-00-167-0815	88044	AN960-4	WASHER, FLAT DH3	EA	40
24F	26	PAHZZ	5905-00-308-6916	81349	RER70FR750P	RESISTOR FIXED WW DH3	EA	2
24F	27	PAHZZ	5905-00-628-6782	81349	RER70FR511P	RESISTOR FIXED WW DH3	EA	3
24F	28	PAHZZ	5905-00-904-3741	81349	RW79U5620F	RESISTOR, FIXED, WIRE DH3	EA	2
24F	29	PAHZZ	5905-00-936-3743	81349	RW79U1210F	RESISTOR, FIXED, WIRE.....DH3	EA	2
24F	30	PAHZZ	5905-00-466-2897	81349	RER70F10R0P	RESISTOR, FIXED, WIRE.....DH3	EA	2
24F	31	PAHZZ		81349	RER70F2R15P	RESISTOR, FIXED, WW DH3	EA	2
24F	32	PAHZZ	5905-00-788-0297	81349	RW79U46R4F	RESISTOR, FIXE D, WIRE DH3	EA	1
24F	33	PAHZZ	5905-00-985-6317	81349	RW79U10R0F	RESISTOR ,FIXED WIRE DH3	EA	2
24F	34	PAHZZ	5905-00-891-2478	81349	RW79U3160F	RESISTOR, FIXED,WIRE., ...DH3	EA	3
24F	35	PAHZZ	5905-00-003-8253	81349	RER70F1001P	RESISTOR, FIXED, WIRE DH3	EA	8
24F	36	PAHZZ	5905-00-024-0598	81349	RNC65J1000BS	RESISTOR, FIXED.....DH3	EA	1
24F	37	PAHZZ	5905-00-284-6289	81349	RER70F3161P	RESISTOR, .FIXED, WIRE.....DH3	EA	2
24F	38	XDHZZ		04939	70730044-0Q1	PLATE RESISTOR DH3	EA	1

(1) ILLUSTRATION (a) FIG NO.	(b) ITEM NO.	(2) SMR CODE	(3) NATIONAL STOCK NUMBER	(4) FSCM	(5) PART NUMBER	(6) DESCRIPTION ..... USABLE ON CODE	(7) U/M	(8) QTY INC IN UNIT
24F	39	XDHZZ		04939	70730046-001	SCREEN DH3	EA	1
24F	40	PAHZZ	5305-00-889-2997	96906	MS35206-215	SCREW,MACHINE DH3	EA	4
24F	41	PAHZZ	5310-00-810-7785	80205	NAS671-4	NUT, PLAIN.HEXAGON DH3	EA	4
24F	42	PAHZZ	5310-00-184-8996	96906	MS35338-97	WASHER LOCK DH3	EA	4
24F	43	PAHZZ	5310-00-167-0831	88044	AN960-4L	WASHER, FLAT DH3	EA	8
24F	44	PAHZZ		50522	MV5023	LIGHT EMITTING DI.....DH3	EA	6
24F	45	XDHZZ		50522	MP22	GROMMET LED MOUNT.....DH3	EA	6
24F	46	PAHZZ	5355-00-552-1810	96906	MS9152B-1K1B	KNOB.....DH3	EA	1
24F	47	PAHZZ		81349	M3786/13-0229	SWITCH ROTARY.....DH3	EA	1
24F	48	PAHZZ	5355-00-556-0151	96906	MS91528-1D2B	KNOB.....DH3	EA	1
24F	49	PAHZZ	5905-00-407-5029	80294	3400S-1-202	RESISTOR, VARIABLE, W.....DH3	EA	1
24F	50	PAHZZ	5920-00-556-0144	81349	FHN20G	FUSEHOLDER, EXTRACTO.....DH3	EA	1
24F	51	PAHZZ	5920-00-284-6787	81349	F02A250V5A	FUSE, CARTRIDGE.....DH3	EA	1
24F	52	PAHZZ	4140-00-485-6139	92702	PBS2107FL	FAN, VENTILATING.....DH3	EA	1
24F	53	XDHZZ		28875	055007	GUARD, FAN DH3	EA	1
24F	54	PAHZZ	5310-00-631-1294	80205	NAS671-6	NUT, PLAIN, HEXAGON.....DH3	EA	4
24F	55	PAHZZ	5310-00-616-6822	80205	NAS620-6L	WASHER, FLAT DH3	EA	4
24F	56	PAHZZ	5935-00-008-6786	71468	DDMM-24W7S	CONNECTED, .RECEPTACL DH3	EA	1
24F	57	PAHZZ	5305-00-073-8885	71468	D20420-12	SCREW, CAP, SCCKET HE.....DH3	EA	2
24F	58	XDHZZ	5915-00-833-3548	71468	DD24661	SHIELD, ELECTRICAL C.....DH3	EA	1
24F	59	PAHZZ	5999-00-879-8472	71468	DM53744-6	CONTACT, ELECTRICAL.....DH3	EA	7
24F	60	XDHZZ	5970-00-812-1360	81349	M23053/5-109-9	INSULATION SLEEVING.....DH3	FT	V
24F	61	PAHZZ		49367	SB-4020-36LY	CONTACT ELECTRIC.....DH3	EA	2
24F	62	XDHZZ	5970-00-814-2878	81349	M23053/5-106-9	INSULATION SLEEVING.....DH3	FT	V
24F	63	XDHZZ	5970-00-088-2975	81349	M23053/5-104-9	INSULATION SLEEVING.....DH3	FT	V
24F	64	XDHZZ		81349	MILW1316918AWG9	WIRE ELECTRICAL.....DH3	FT	V
24F	65	PAHZZ	5305-00-984-6191	96906	M35206-243	SCREW, MACHINE DH3	EA	2
24F	66	PAHZZ	5310-00-725-4712	80205	NAS671-8	NUT, PLAIN, HEXAGON.....DH3	EA	4
24F	67	PAHZZ	5310-00-167-0833	88044	AN960-8L	WASHER, FLAT DH3	EA	8
24F	68	XDHZZ		80205	AN743BZ12	BRACKET ANGLE DH3	EA	2
24F	69	PAHZZ	5305-00-984-6193	96906	MS35206-245	SCREW MACHINE DH3	EA	2
24F	70	PAHZZ	5340-00-543-4394	96906	MS21919DG6	CLAMP, LOOP.....DH3	EA	1
24F	71	PAHZZ	5325-00-291-9366	96906	MS35489-11	GROMMET, NONMETALLIC.....DH3	EA	1
24F	72	PAHZZ	5340-00-598-0597	96906	MS21919DG8	CLAMP, LOOP.....DH3	EA	1
24F	73	PAHZZ	5325-00-276-6100	96906	MS35489-14	GROMMET RUBBER.....DH3	EA	1
24F	74	PAHZZ	5935-00-762-0312	81349	M39024/10-03	JACK, TIP.....DH3	EA	6
24F	75	PAHZZ	5935-00-702-4199	81349	M39024/10-02	JACK, TIP.....DH3	EA	6
24F	76	XDHZZ	5940-00-113-8179	96906	MS25036-107	TERMINAL, LUG.....DH3	EA	13
24F	77	XDHZZ	5940-00-204-8990	96906	MS25036-111	TERMINAL, LUG.....DH3	EA	5
24F	78	PAHZZ	5940-00-577-3807	96906	MS25036-145	TERMINAL, LUG.....DH3	EA	3

(1) ILLUSTRATION (a) FIG NO.	(b) ITEM NO.	(2) SMR CODE	(3) NATIONAL STOCK NUMBER	(4) FSCM	(5) PART NUMBER	(6) DESCRIPTION	USABLE ON CODE	(7) U/M	(8) QTY INC IN UNIT
24F	79	PAHZZ	5940-00-204-8966	96906	M525036-102	TERMINAL, LUG	DH3	EA	9
24F	80	PAHZZ	5930-00-772-9276	96906	NS25306-232	SWITCH,TOGGLE	DH3	EA	8
24F	81	PAHZZ	5930-00-984-9971	96906	MS25307-232	SWITCH,TOGGLE	DH3	EA	1
24F	82	XDHZZ		04939	70730041-009	CHASSIS, ASSY	DH3	EA	1
24F	83	XDHZZ		15653	HF7200-06	SWITCH,ELECTRICAL	DH3	EA	12
24F	84	XAHZZ		71218	AC-427	CHASSIS,ELECTICAL	DH3	EA	1

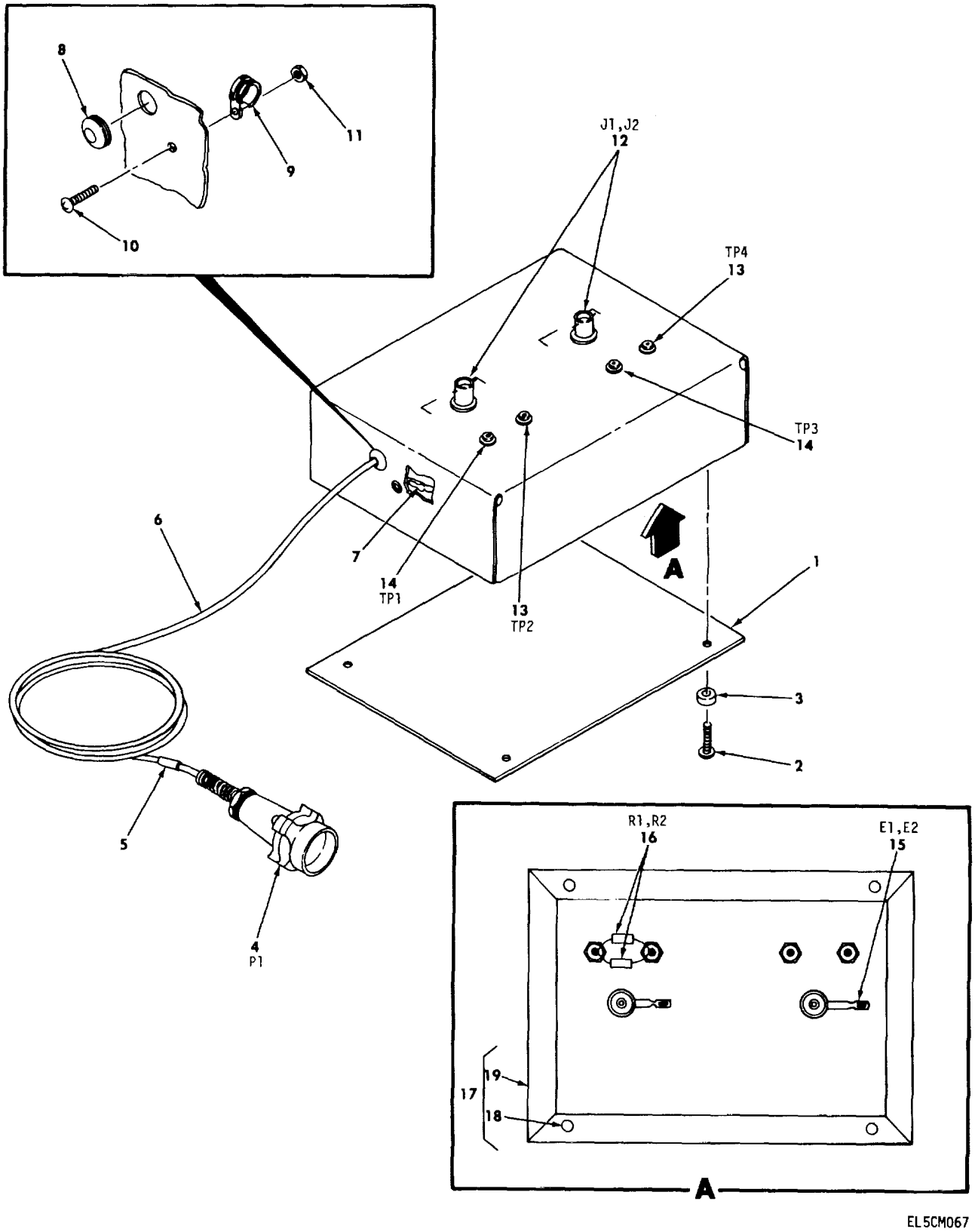

Figure 24G. Handset Breakout Box Assembly MX-10218/G

(1) ILLUSTRATION (a) FIG NO.	(b) ITEM NO.	(2) SMR CODE	(3) NATIONAL STOCK NUMBER	(4) FSCM	(5) PART NUMBER	(6) DESCRIPTION / USABLE ON CODE	(7) U/M	(8) QTY INC IN UNIT
						GROUP 3005 HANDSET BREAKCUT BOX ASSEMBLY HX-10218/G		
24G	1	XDHZZ		04939	70730062-001	COVER DH3	EA	1
24G	2	PAHZZ	5305-00-984-4988	96906	MS35206-228	SCREW, MACHINE DH3	EA	4
24G	3	XDHZZ	5340-00-209-9352	83330	2192	BUMPER, RUBBER DH3	EA	4
24G	4	PAHZZ	5935-00-283-2950	02660	164-28	CONNECTOR, PLUG, ELEC DH3	EA	1
24G	5	XDHZZ	5970-00-740-2971	81349	M23053/5-107-9	INSULATION SLEEVING DH3	FT	V
24G	6	XDHZZ	6145-00-729-9091	70903	8404	CABLE, SPECIAL PURPO DH3	FT	V
24G	7	XDHZZ	5940-00-682-0768	06090	D-121-00	SPLICE, CONOUCTOR DH3	EA	1
24G	8	PAHZZ	5325-00-263-6632	96906	MS35489-6	GROMMET, NONMETALLIC DH3	EA	1
24G	9	PAHZZ	5340-00-205-6301	96906	MS21919DG4	CLAMP, LOOP DH3	EA	1
24G	10	PAHZZ	5305-00-984-6191	96906	MS35206-243	SCREW,.MACHINE DH3	EA	1
24G	11	PAHZZ	5310-00-807-1466	96906	MS21042-08	NUT, SELF-LOCKING, EX DH3	EA	1
24G	12	PAHZZ	5935-00-721-0003	81349	M39012/21-0003	CONNECTOR, RECEPTACL DH3	EA	2
24G	13	PAHZZ	5935-00-762-0312	81349	M39024/10-03	JACK, TIP DH3	EA	2
24G	14	PAHZZ	5935-00-702-4199	81349	M39024/10-02	JACK, TIP DH3	EA	2
24G	15	PAHZZ	5940-00-405-2175	80063	814	TERMINAL, LUG DH3	EA	2
24G	16	PAHZZ	5905-00-448-9355	01121	RNC55H3010FS	RESISTOR, FIXED, FILM DH3	EA	2
24G	17	XDHZZ		04939	70730061-009	CHASSIS ASSY DH3	EA	1
24G	18	XDHZZ		15653	MF7200-06	SWITCH, ELECTRICAL DH3	EA	4
24G	19	XAHZZ		71218	AC402	CHASSIS, ELECTRICAL DH3	EA	1

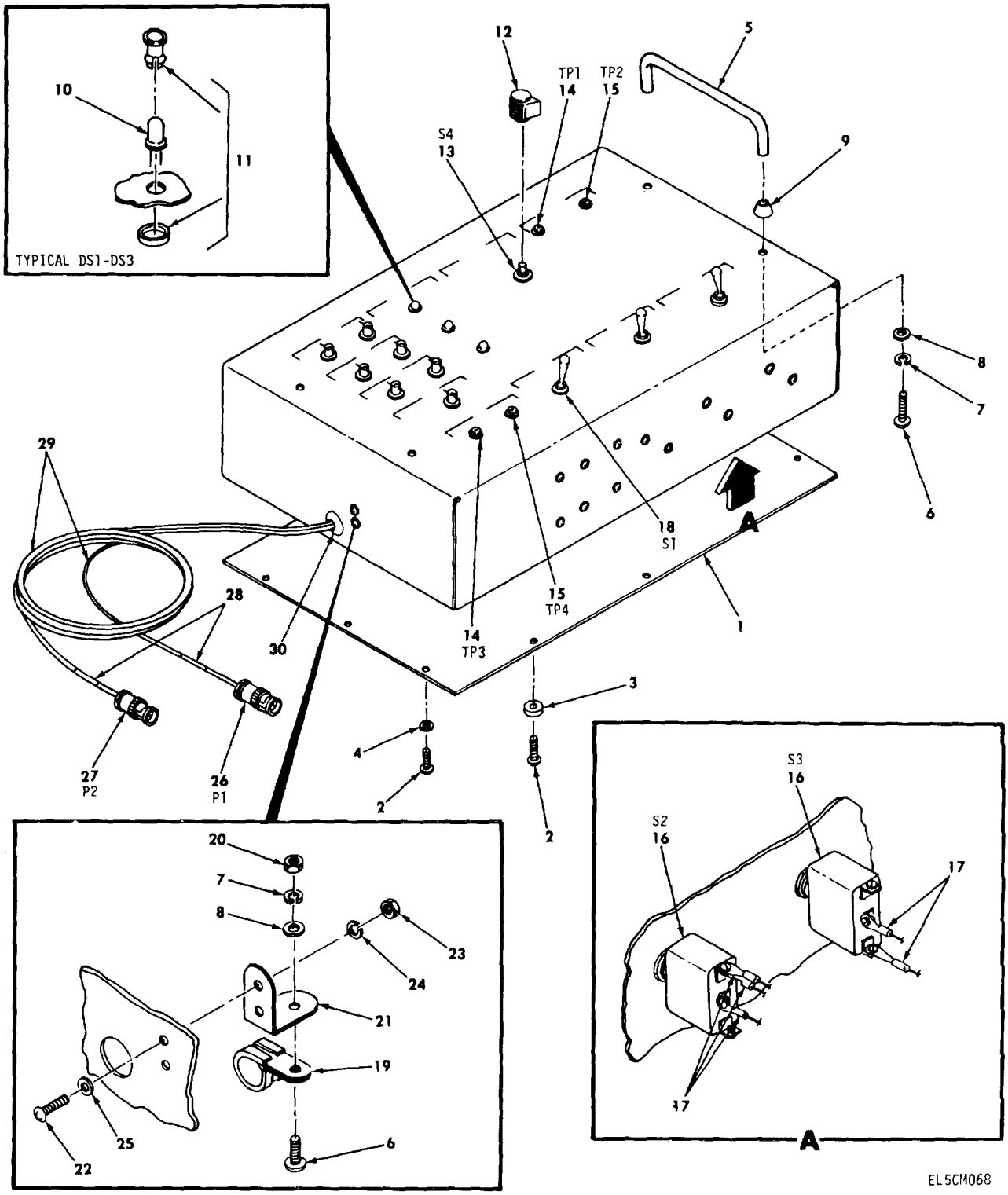

Figure. 24H. Multiplexer Breakout Box Assembly MX-10259/G (sheet 1 of 2)

(1) ILLUSTRATION (a) FIG NO.	(b) ITEM NO.	(2) SMR CODE	(3) NATIONAL STOCK NUMBER	(4) FSCM	(5) PART NUMBER	(6) DESCRIPTION USABLE ON CODE	(7) U/M	(8) QTY INC IN UNIT
						GROUP 3006 MULTIIPLEXER BREAKCUT BCX		
						ASSEMBLY MX-10259/G		
24H	1	XDHZZ		04939	70730002-001	COVER DH3	EA	1
24H	2	PAHZZ	5305-00-889-3000	96906	MS35206-230	SCREW, MACHINE DH3	EA	12
24H	3	XDHZZ	5340-00-209-9352	83330	2192	BUMPER RUBBER DH3	EA	6
24H	4	PAHZZ	5310-00-167-0816	88044	AN960-6	WASHER,FLAT DH3	EA	14
24H	5	PAHZZ	5340-00-060-5386	96906	MS39087-3	HANDLE BOW DH3	EA	2
24H	6	PAHZZ	5305-00-984-6210	96906	MS35206-263	SCREW, MACHINE DH3	EA	5
24H	7	PAHZZ	5310-00-261-8278	96906	MS35338-100	WASHER, .LOCK DH3	EA	5
24H	8	PAHZZ	5310-00-167-0818	88044	AN960-10	WASHER, .FLAT DH3	EA	5
24H	9	XDHZZ		71279	416-1988-01-02	FERRULE ELECTRICAL....DH3	EA	4
24H	10	PAHZZ		50522	MV5023	LIGHT EMITTING DI....DH3	EA	3
24H	11	XDHZZ		50522	MP22	GROMMET LED MOUNT DH3	EA	3
24H	12	PAHZZ		96906	MA91528-1K2B	KNOB DH3	EA	1
24H	13	PAHZZ	5930-00-889-2697	11590	PA-4000	SWITCH, ROTARY DH3	EA	1
24H	14	PAHZZ	5935-00-702-4199	81349	M39024/10-02	JACK, TIP DH3	EA	2
24H	15	PAHZZ	5935-00-762-0312	81349	M39024/10-03	JACK,.TIP DH3	EA	2
24H	16	PAHZZ	6930-01-043-2399	91929	11TS15-3	SWITCH, SPECIAL DH3	EA	2
24H	17	PAHZZ	5940-00-577-3807	96906	MS25036-145	TERMINAL, LUG....DH3	EA	5
24H	18	PAHZZ	5930-00-008-0540	91929	12TS115-10	SWITCH TOGGLE....DH3	EA	1
24H	19	PAHZZ	5340-00-543-4394	96906	MS21919DG6	CLAMP, LOOP DH3	EA	1
24H	20	PAHZZ	5310-00-619-4376	80205	NAS671-10	NUT, PLAIN, HEXAGON DH3	EA	1
24H	21	XDHZZ		88044	AN743BZ13	BRACKET, ANGLE DH3	EA	1
24H	22	PAHZZ	5305-0-889-3116	96906	MS35206-213	SCREW MACHINE DH3	EA	2
24H	23	PAHZZ	5310-00-810-7785	80205	NAS671-4	NUT, PLAIN, HEXAGON DH3	EA	8
24H	24	PAHZZ	5310-00-184-8996	96906	MS35338-97	WASHER, LOCK DH3	EA	20
24H	25	PAHZZ	5310-00-167-0815	88044	AN960-4	WASHER, FLAT DH3	EA	20
24H	26	PAHZZ		77180	N3621-4	CONNECTOR PLUG DH3	EA	1
24H	27	PAHZZ		77820	F4698-5	CONNECTOR PLUG ELE DH3	EA	1
24H	28	XDHZZ	5970-00-740-2971	8134	M23053/5-107-9	INSULATON SLEEVING DH3	FT	V
24H	29	PAHZZ		80205	RG-58/U	CABLE COAXIAL DH3	FT	V
24H	30	PAHZZ	5325-00-291-9366	96906	MS35489-11	GROMMET, NONMETALLIC....DH3	EA	1
24H	31	PAHZZ	5935-00-721-0003	81349	N39012/21-0003	CONNECTOR, RECEPTACL DH3	EA	6
24H	32	PAHZZ	5940-00-405-2175	80063	814	TERMINAL, LUG DH3	EA	4
24H	33	PAHZZ		77820	33270-2	CONNECTOR, RECEPTACL DH3	EA	1
24H	34	PAHZZ	5905-00-403-4456	81349	RNC55H90R9FS	RESISTOR, FIXED, FILM DH3	EA	2
24H	35	PAHZZ	5905-00-403-4450	81349	RNC55H56R2FS	RESISTOR.FIXED,FILM DH3	EA	1
24H	36	PEHHH		04939	70730072-009	COMPONENT BOARD AS TO-976/G BREAKOUT BOX DH3	EA	1
24H	37	PAHZZ	5305-00-889-2997	96906	MS35206-215	SCREW, MACHINE DH3	EA	18
24H	38	XDHZZ		06540	8218-SS-0440	POST, ELECTRICAL -MEC....DH3	EA	6

(1) ILLUSTRATION (a) FIG NO.	(b) ITEM NO.	(2) SMR CODE	(3) NATIONAL STOCK NUMBER	(4) FSCM	(5) PART NUMBER	(6) DESCRIPTION / *USABLE ON CODE*	(7) U/M	(8) QTY INC IN UNIT
24H	39	XDHZZ	5940-00-682-0768	06090	D-121-00	SPLICE, CONDUCTOR.....DH3	EA	2
24H	40	PAHZZ		81349	CE13C680Q	CAPACITOR, FIXED, ELE.....DH3	EA	2
24H	41	PAHZZ	5905-00-904-3742	81349	RWT79U6810F	RESISTOR FIXED, WIRE.....DH3	EA	1
24H	42	PAHZZ	5905-00-891-2478	81349	RW79U3160F	RESISTOR. FIXED WIRE.....DH3	EA	1
24H	43	PAHZZ	5940-00-082-4745	81349	SE1090D02	TERMINAL,STUD.....DH3	EA	8
24H	44	PAHZZ	5305-00-984-4983	96906	MS35206-226	SCREW, MACHINE.....DH3	EA	8
24H	45	PAHZZ	5310-00-184-8977	96906	MS35338-98	WASHER, LOCK.....DH3	EA	8
24H	46	PAHZZ	5905-00-003-8253	81349	REP70F1001P	RESISTOR, FIXED, WIRE.....DH3	EA	1
24H	47	PAHZZ		81349	RER70F2151P	RESISTOR FIXED.....DH3	EA	2
24H	48	PAHZZ	5310-00-680-6336	80205	NAS620-4	WASHER,FLAT.....DH3	EA	6
24H	49	XDHZZ	5340-00-917-8296	59730	TC105A	MOUNT, RESILIENT.....DH3	EA	2
24H	50	XDHZZ		04939	70730071-009	CHASSIS ASSY.....DH3	EA	1
24H	51	XDHZZ		15653	MF7200-06	SWITCH, ELECTRICAL.....DH3	EA	12
24H	52	XAHZZ		11218	AC-427	CHASSIS, ELECTRICAL.....DH3	EA	1

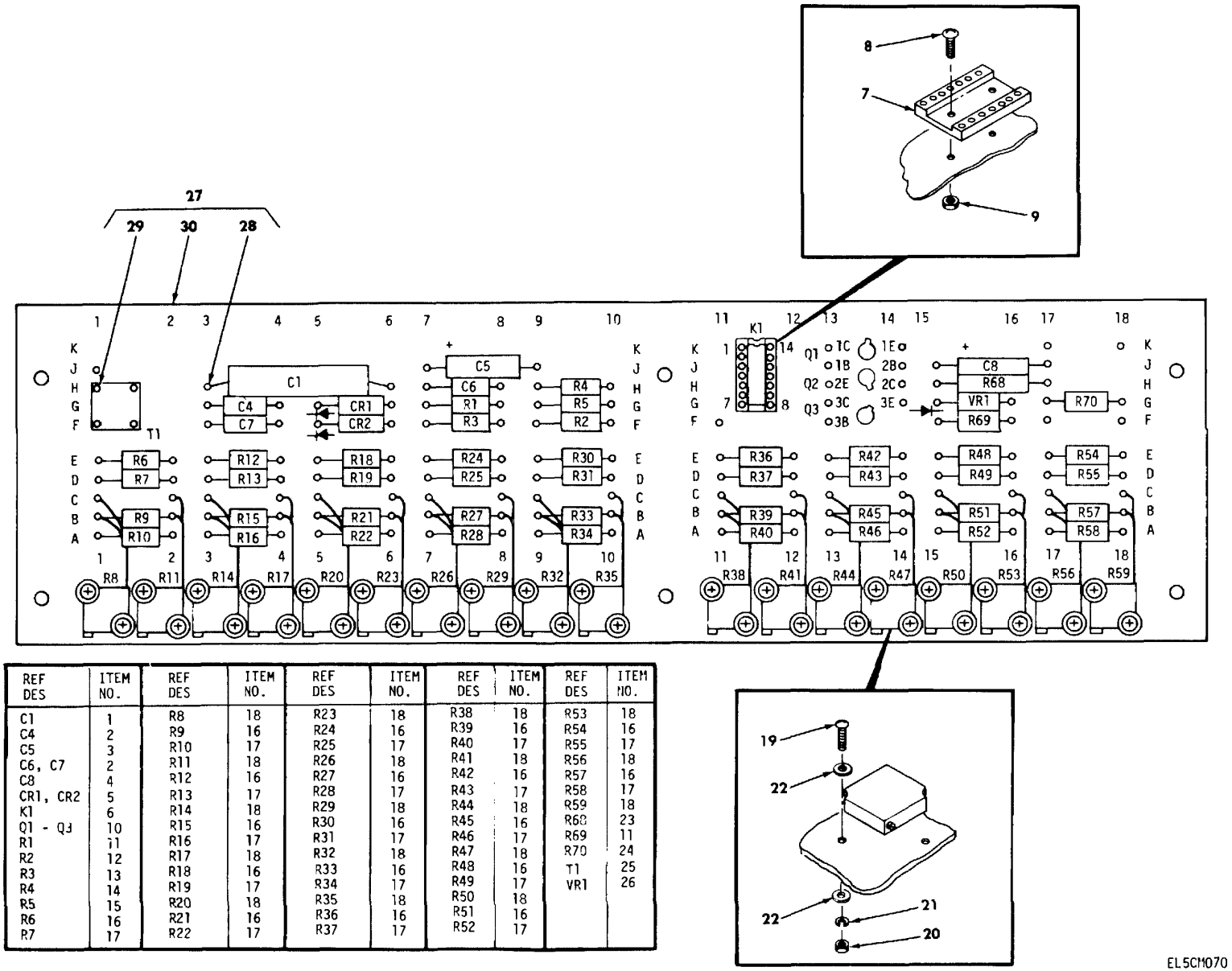

REF DES	ITEM NO.	REF DES	ITEM NO.	REF DES	ITEM NO.	REF DES	ITEM NO.	REF DES	ITEM NO.
C1	1	R8	18	R23	18	R38	18	R53	18
C4	2	R9	16	R24	16	R39	16	R54	16
C5	3	R10	17	R25	17	R40	17	R55	17
C6, C7	2	R11	18	R26	18	R41	18	R56	18
C8	4	R12	16	R27	16	R42	16	R57	16
CR1, CR2	5	R13	17	R28	17	R43	17	R58	17
K1	6	R14	18	R29	18	R44	18	R59	18
Q1 - Q3	10	R15	16	R30	16	R45	16	R60	23
R1	11	R16	17	R31	17	R46	17	R69	11
R2	12	R17	18	R32	18	R47	18	R70	24
R3	13	R18	16	R33	16	R48	16	T1	25
R4	14	R19	17	R34	17	R49	17	VR1	26
R5	15	R20	18	R35	18	R50	18		
R6	16	R21	16	R36	16	R51	16		
R7	17	R22	17	R37	17	R52	17		

Figure 24I. Component board assembly, multiplexer breakout box.

(1) ILLUSTRATION (a) FIG NO.	(b) ITEM NO.	(2) SMR CODE	(3) NATIONAL STOCK NUMBER	(4) FSCM	(5) PART NUMBER	(6) DESCRIPTION USABLE ON CODE	(7) U/M	(8) QTY INC IN UNIT
						GROUP 300601 COMPONENT BOARD ASSEMBL.,		
						MULTIPLEXER BREAKOUT BOX		
24I	1	PAHZZ		81349	CPV09A1KE333KM	CAPACITOR, FIXED, PLA DH3	EA	1
24I	2	PAHZZ		81349	M39014/02-0391	CAPACITOR FIXED CE....DH3	EA	3
24I	3	PAHZZ	5910-00-997-4079	81349	M39003/01-2271	CAPACITOR, FIXED, ELE....DH3	EA	1
24I	4	PAHZZ	5910-00-829-3304	81349	M39003/01-2254	CAPACITOR, FIXED ELE....DH3	EA	1
24I	5	PAHZZ	5961-00-410-3985	81349	JAN1N4153	SEMICONDUCTOR DEVIC....DH3	EA	2
24I	6	PAHZZ	5945-00-457-8880	94696	W017DIP-5	RELAY, REED DH3	EA	1
24I	7	XDHZZ		19112	102-14-AAC	SOCKET PLUG-IN....DH3	EA	1
24I	8	PAHZZ	5305-00-889-3118	96906	MS35206203	SCREW, MACHINE DH3	EA	2
24I	9	PAHZZ	5310-00-058-1823	96906	MS21042-02	NUT, SELF-LOCKING, EX....DH3	EA	2
24I	10	PAHZZ	5961-00-951-8757	81349	JAN2N2222A	TRANSISTOR....DH3	EA	3
24I	11	PAHZZ	5905-00-119-8811	81349	RCR07G151JS	RESISTOR, FIXED, COMP....DH3	EA	2
24I	12	PAHZZ	5905-00-106-1356	81349	RCR07G152JS	RESISTOR, FIXED, COMP....DH3	EA	1
24I	13	PAHZZ	5905-00-126-6683	81349	RCR07G332JS	RESISTOR, FIXED, COMP....DH3	EA	1
24I	14	PAHZZ	5905-00-110-7620	81349	RCR07G102JS	RESISTOR, FIXED, COMP....DH3	EA	1
24I	15	PAHZZ	5905-00-141-1183	81349	RCR07G101JS	RESISTOR, FIXED, COMP....DH3	EA	1
24I	16	PAHZZ	5905-00-476-8189	81349	RN55H64R9FS	RESISTOR,FIXED, FILM....DH3	EA	18
24I	17	PAHZZ	5905-00-484-7892	81349	RNC55H2050FS	RESISTOR, FIXED, FILM....DH3	EA	18
24I	18	PAHZZ	5905-00-192-4474	80294	3252L-1-501	RESISTOR, VARIABLE, N....DH3	EA	18
24I	19	PAHZZ	5305-00-954-3938	96906	MS35206-207	SCREW, MACHINE DH3	EA	36
24I	20	PAHZZ	5310-00-817-9056	80205	NAS671-2	NUT, PLAIN, HEXAGON....DH3	EA	36
24I	21	PAHZZ	5310-00-184-8990	96906	MS35338-96	WASHER. ; LOCK DH3	EA	36
24I	22	PAHZZ	5310-00-167-0657	88044	AN960-3	WASHER, FLAT DH3	EA	72
24I	23	PAHZZ	5905-00-024-0598	81349	RNC65J1000BS	RESISTOR, FIXED, FILM....DH3	EA	1
24I	24	PAHZZ	5905-00-114-0711	81349	RCRO7G472JS	RESISTOR, FIXED, COMP....DH3	EA	1
24I	25	PAHZZ	5950-01-081-3793	00961	PE61571	TRANSFORMER, PULSE....DH3	EA	1
24I	26	PAHZZ	5961-00-892-3361	81349	JAN1N750A	SEMICONDUCTOR DEVIC....DH3	EA	1
24I	27	XDHZZ		04939	70730074-009	COMPONENT BD ASSY....DH3	EA	1
241	28	XDHZZ	5940-00-764-9174	71279	155-3848-01-03	TERMINAL STUD....DH3	EA	139
24I	29	XDHZZ		80205	NAS178-2-4C	EYELET METALLIC....DH3	EA	4
24I	30	XAHZZ		81349	MILP18177 TY GEE	BOARD GLASS DH3	FT	V

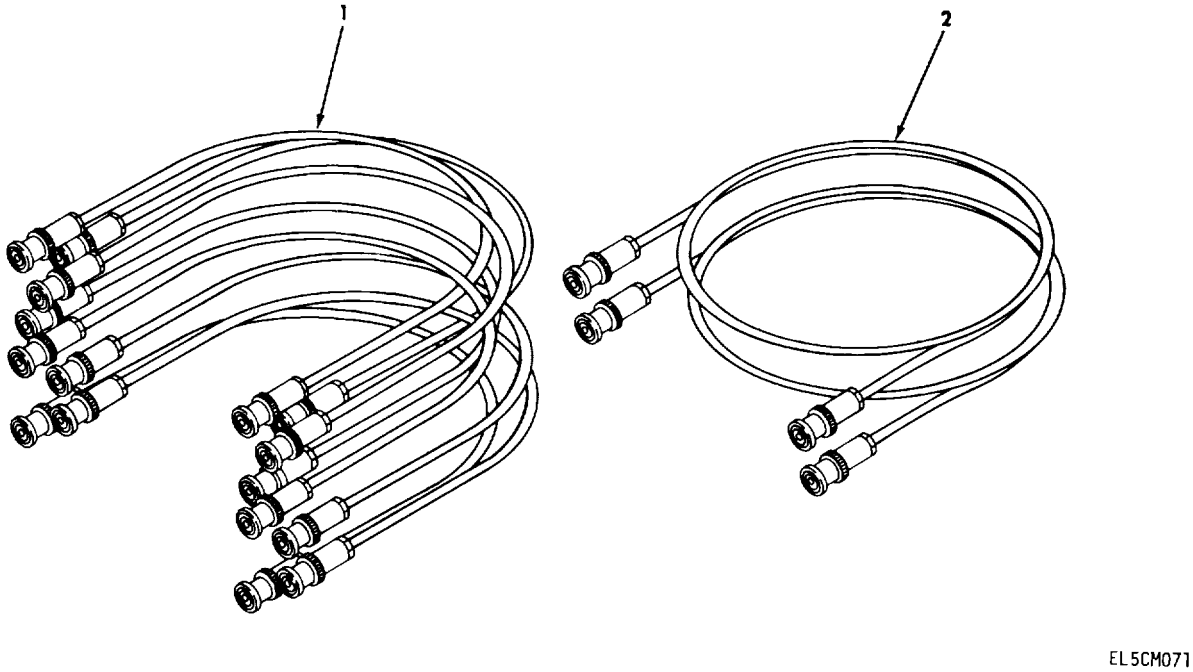

Figure 24J. Cable Assembly Set, Electrical CX13167/G.

(1) ILLUSTRATION (a) FIG NO.	(b) ITEM NO.	(2) SMR CODE	(3) NATIONAL STOCK NUMBER	(4) FSCM	(5) PART NUMBER	(6) DESCRIPTION USABLE ON CODE	(7) U/M	(8) QTY INC IN UNIT
						GROUP 3007 CABLE ASSEMBLY SET,		
						ELECTRICAL CX-13167/G		
24J	I	AHHHH		04939	7073008-009	CABLE ASSY.....DH3	EA	8
24J	2	AHHHH		04939	70730080-019	CABLE ASSY.....DH3	EA	2

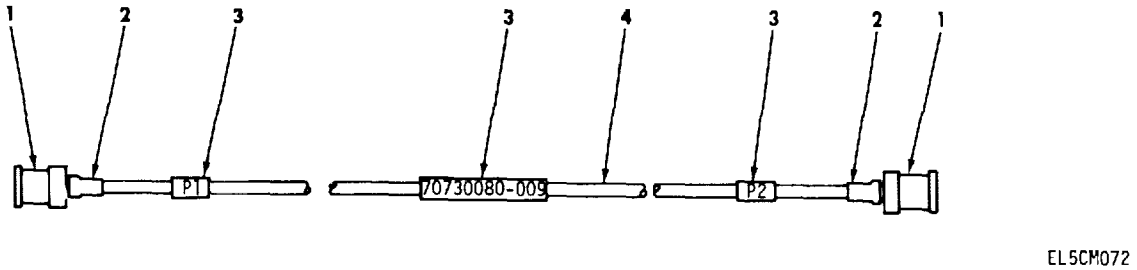

Figure 24K. Cable assembly 70730080-009

(1) ILLUSTRATION (a) FIG NO.	(b) ITEM NO.	(2) SMR CODE	(3) NATIONAL STOCK NUMBER	(4) FSCM	(5) PART NUMBER	(6) DESCRIPTION *USABLE ON CODE*	(7) U/M	(8) QTY INC IN UNIT
						GROUP 300701 CABLE ASSEMBLY 70730080-009		
24K	1	PAHZZ	5935-00-762-3857	02660	68175	CONNECTOR, PLUG, ELEC DH3	EA	2
24K	2	XDHZZ	5970-00-082-3948	81349	M23053/5-108-9	INSULATION SLEEVING DH3	FT	V
24K	3	XDHZZ	5970-00-740-2971	81349	M23053/5-107-9	INSULATION SLEEVING DH3	FT	V
24K	4	PAHZZ		80058	RG-62A/U	CABLE COAXIAL DH3	FT	V

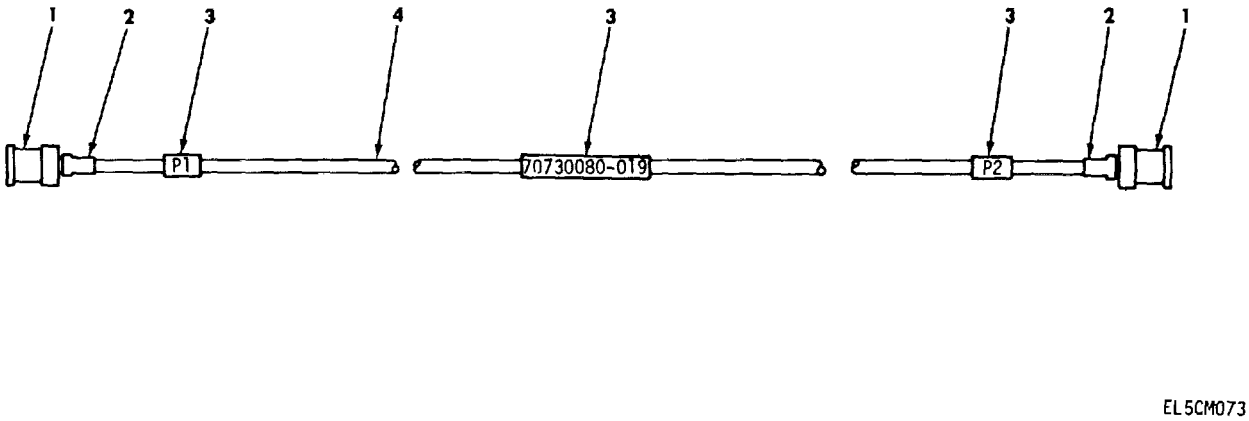

Figure 24L. Cable assembly 70730080-019.

(1) ILLUSTRATION (a) FIG NO.	(b) ITEM NO.	(2) SMR CODE	(3) NATIONAL STOCK NUMBER	(4) FSCM	(5) PART NUMBER	(6) DESCRIPTION USABLE ON CODE	(7) U/M	(8) QTY INC IN UNIT
						GROUP 300702 CABLE ASSEMBLV 70730080-019		
24L	1	PAHZZ	5935-00-762-3857	02660	68175	CONNECTOR.PLUG,ELEC DH3	EA	2
24L	2	XDHZZ	5970-00-082-3948	81349	M23053/5-108-9	INSULATION SLEEVING. DH3	FT	V
24L	3	XDHZZ	5970-00-740-2971	81349	M23053/5-107-9	INSULATION SLEEVING. DH3	FT	V
24L	4	PAHZZ		80058	RG-62A/U	CABLE COAXIAL DH3	FT	V

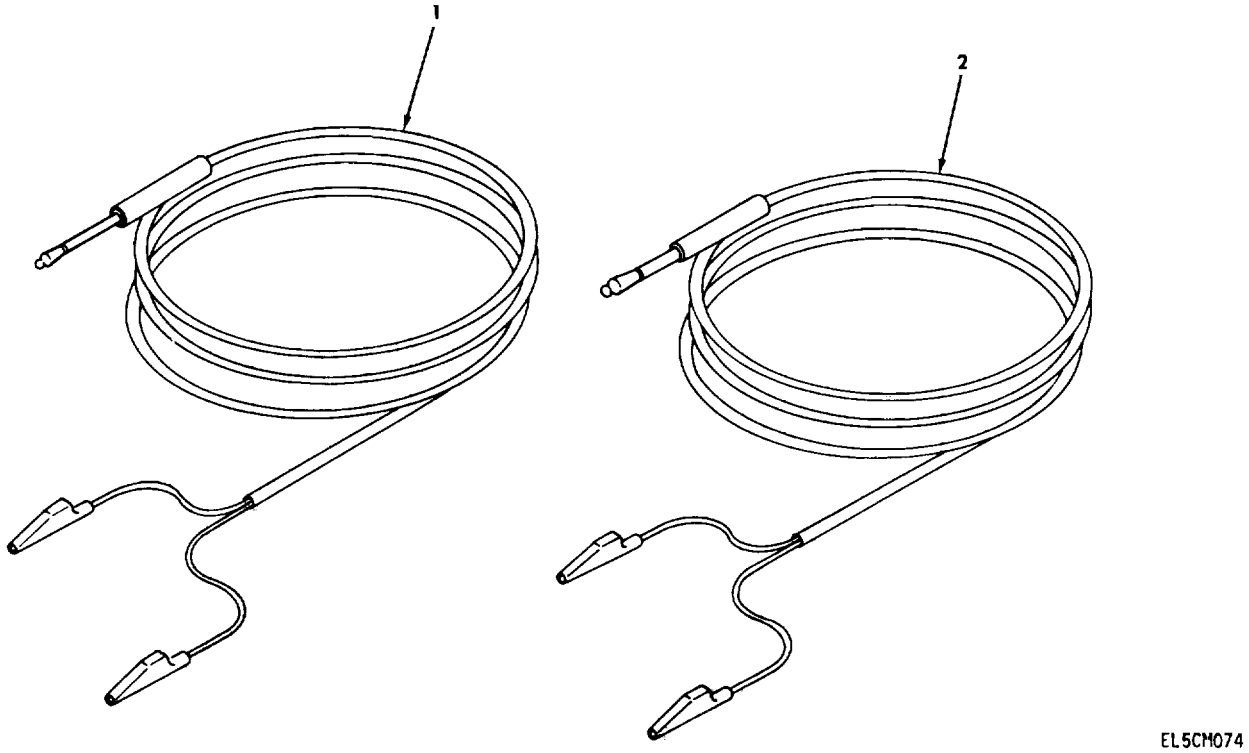

Figure 24M. Cable Assembly Set, Electrical CX-13166/G.

(1) ILLUSTRATION (a) FIG NO.	(b) ITEM NO.	(2) SMR CODE	(3) NATIONAL STOCK NUMBER	(4) FSCM	(5) PART NUMBER	(6) DESCRIPTION USABLE ON CODE	(7) U/M	(8) QTY INC IN UNIT
						GROUP 3008 CABLE ASSEMBLV SET, ELECTRICAL CX-13166/G		
24M	1	AHHHH		04939	70730065-009	CABLE ASSY DIGITAL.....DH3	EA	1
24M	2	AHHHH		04939	70730085-019	CABLE ASSY DIGITAL.....DH3	EA	1

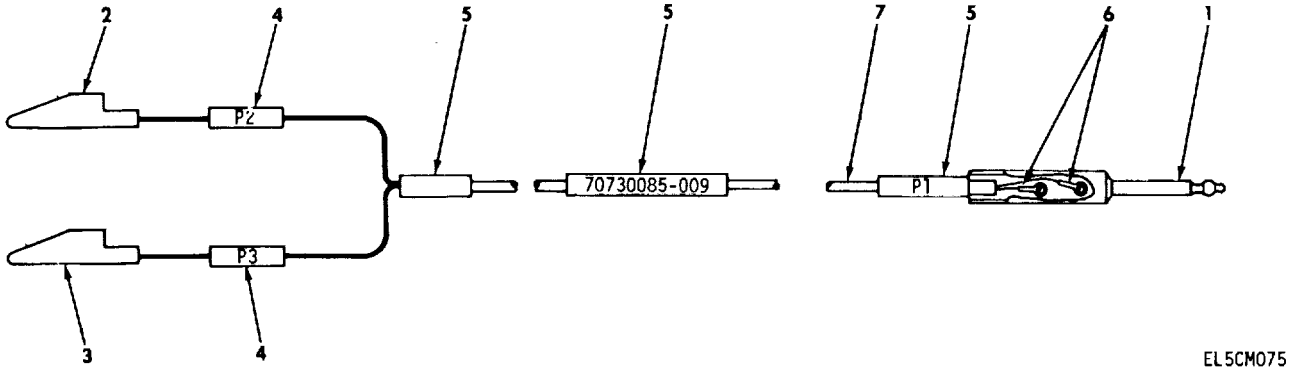

Figure 24N. Cable assembly 70730085-009

(1) ILLUSTRATION (a) FIG NO.	(b) ITEM NO.	(2) SMR CODE	(3) NATIONAL STOCK NUMBER	(4) FSCM	(5) PART NUMBER	(6) DESCRIPTION / *USABLE ON CODE*	(7) U/M	(8) QTY INC IN UNIT
						GROUP 300801 CABLE ASSEBLY 170130085-009		
24N	1	PAHZZ	5935-00-192-4753	81349	PJ-051B	PLUG, TELEPHONE.....DH3	EA	1
24N	2	XDHZZ		76545	63-2	BLK CLIP ELECTRICAL.....DH3	EA	1
24N	3	XDHZZ		76545	63-2	RED CLIP ELECTRICAL.....DH3	EA	1
24N	4	XDHZZ	5970-00-819-9569	81349	M23053/5-103-9	INSULATION SLEEVING.....DH3	FT	V
24N	5	XDHZZ	5970-00-082-3942	81349	M23053/5-105-9	INSULATION SLEEVING.....DH3	FT	V
24N	6	XDHZZ	5940-00-688-6005	96906	MS25036-143	TERMINAL, PLUG DH3	EA	2
24N	7	PAHZZ	6145-00-635-5011	70903	B444	CABLE, SPECIAL PURPO DH3	FT	V

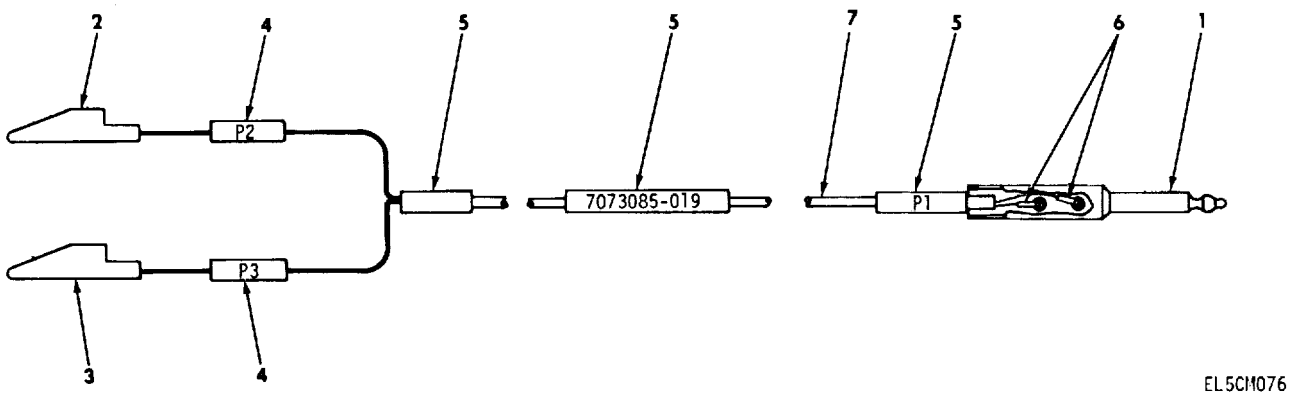

Figure 24P. Cable assembly 70730085-019

(1) ILLUSTRATION (a) FIG NO.	(b) ITEM NO.	(2) SMR CODE	(3) NATIONAL STOCK NUMBER	(4) FSCM	(5) PART NUMBER	(6) DESCRIPTION / *USABLE ON CODE*	(7) U/M	(8) QTY INC IN UNIT
						GROUP 300802 CABLE ASSEMBLY 70730085-019		
24P	1	PAHZZ	5935-00-192-4753	81349	PJ-068	PLUG, TELEPHONE.....DH3	EA	1
24P	2	XDHZZ		76545	63-2	BLK CLIP ELECTRICAL.....DH3	EA	1
24P	3	XDHZZ		76545	63-2	RED CLIP ELECTRICAL.....DH3	EA	1
24P	4	XDHZZ	5970-00-819-9569	81349	M23053/5-103-9	INSULATION SLEEVING.....DH3	FT	V
24P	5	XDHZZ	5970-00-082-3942	81349	M23053/5-L-9	INSULATION SLEEVING.....DH3	FT	V
24P	6	XDHZZ	5940-00-688-6005	96906	MS25036-143	TERMINAL, LUG.....DH3	EA	2
24P	7	PAHZZ	6145-00-635-5011	70903	8444	CABLE, SPECIAL PURPO DH3	FT	V

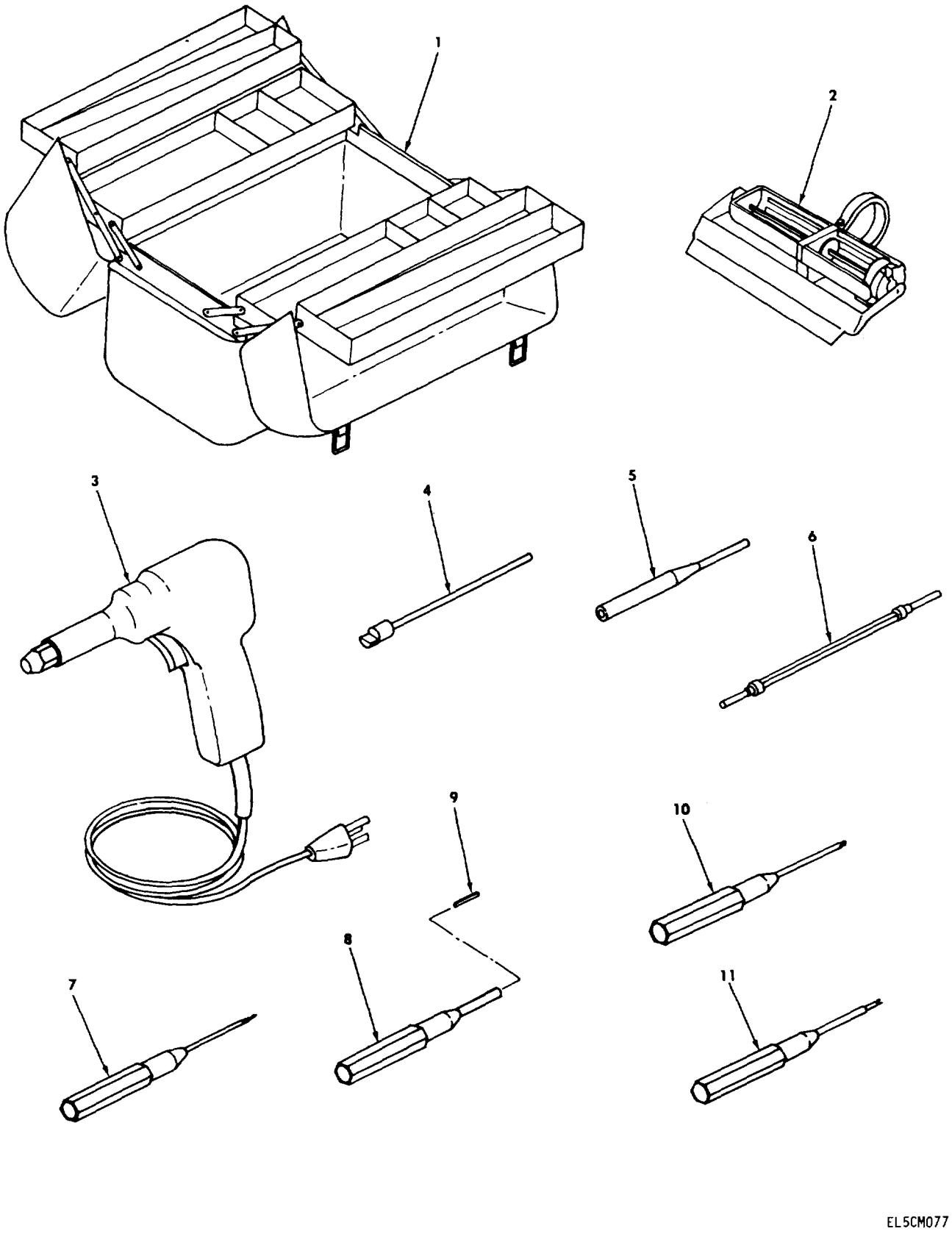

Figure 24Q. Maintenance Kit, Electrical Connector Repair MK-2067/G (sheet 1 of 2).

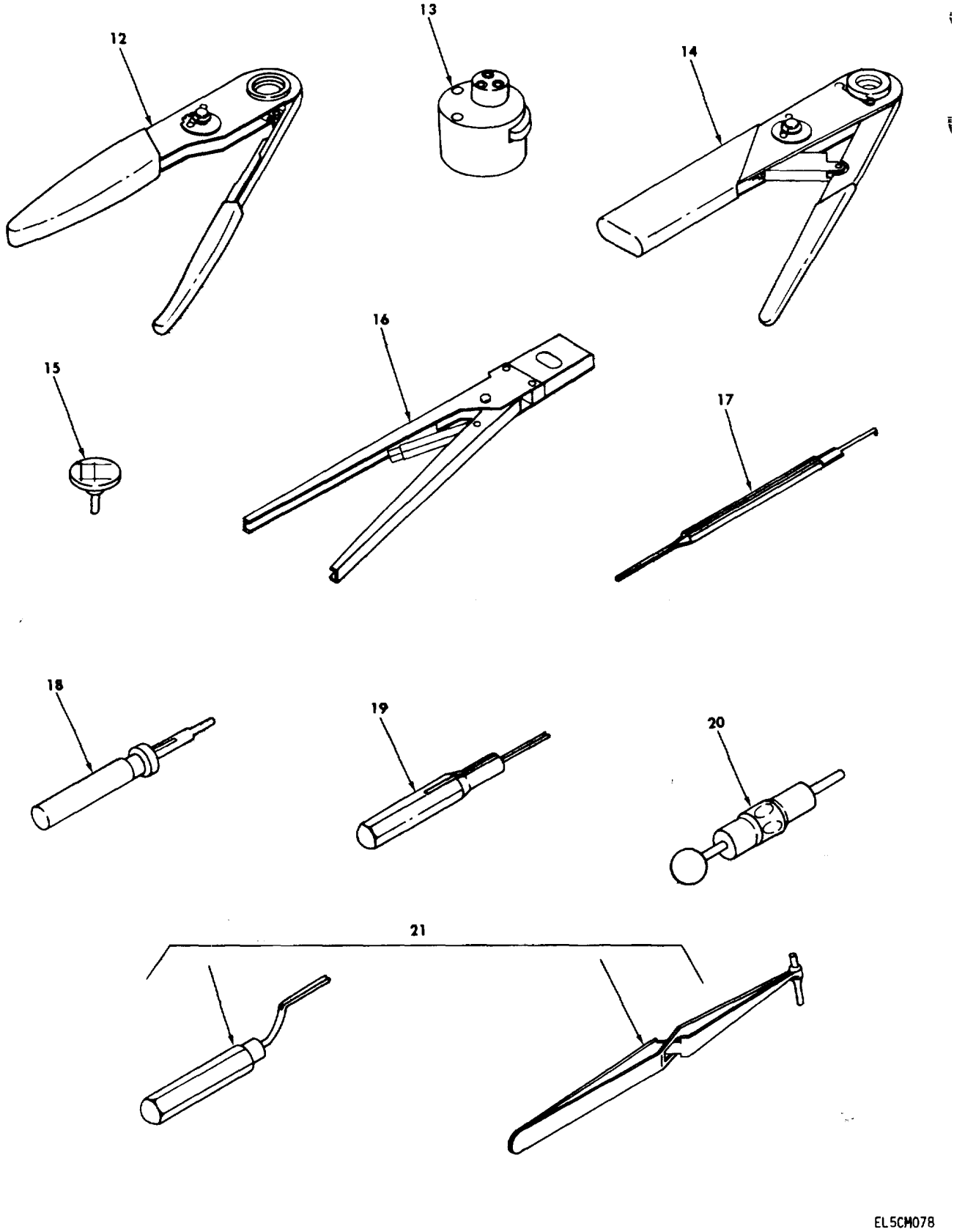

Figure 24Q. Maintenance Kit, Electrical Connector Repair MK-2067/G (sheet 2 of 2)

(1) ILLUSTRATION (a) FIG NO.	(b) ITEM NO.	(2) SMR CODE	(3) NATIONAL STOCK NUMBER	(4) FSCM	(5) PART NUMBER	(6) DESCRIPTION *USABLE ON CODE*	(7) U/M	(8) QTY INC IN UNIT
						GROUP 3009 MAINTENANCE KIT, ELECTRICAL CONNECTOR REPAIR MK-2067/G		
24Q	1	PEOZZ		04939	10730091-001	BOX TOOL PORTABLE DH3	EA	1
24Q	2	PEOZZ	5120-01-018-2901	32945	515654	TOOL, CUTTING AND ST....DH3	EA	1
24Q	3	PEOZZ	5130-01-018-2900	32945	27368AA8	TOOL, WIRE WRAPPING. DH3	EA	1
24Q	4	PEOZZ	5120-01-018-2902	32945	508748	BIT, WIRE WRAP DH3	EA	1
24Q	5	PFOZZ	5130-00-459-4485	24047	507100	SLEEVE ADAPTER DH3	EA	1
24Q	6	PEOZZ	5120-01-018-2903	32945	511203	TOOL UNWRAPPING....DH3	EA	1
24Q	7	PEOZZ	5120-01-108-5115	31413	6-0-0001-000	EXTRACTION TOOL DH3	EA	1
24Q	8	PEOZZ	5120-00-320-4056	23350	600-004-000	INSERTION TOOL....DH3	EA	1
24Q	9	PEOZZ	5120-01-108-5116	31413	600-0005-000	INSERTION BLADE DH3	EA	1
24Q	10	PEOZZ	5120-01-108-5117	31413	600-0007-000	INSERTION TOOL....DH3	EA	1
24Q	11	PEOZZ	5970-01-108-5118	31413	600-0107-01 07-0	BUSHING INSERTION DH3	EA	1
24Q	12	PEOZZ		81349	M2252011-01	CRIMP TOOL DH3	EA	1
24Q	13	PEOZZ	5120-00-016-6382	81349	M22520/1-02	TURRET HEAD ASSEMBL....DH3	EA	1
24Q	14	PEOZZ	5120-00-165-3910	81349	M22520/2-01	CRIMPING TOOL, TERMI DH3	EA	1
24Q	15	PEOZZ	5120-00-017-3921	81349	M22520/2-08	CONTACT POSITIONER....DH3	EA	1
24Q	16	PEOZZ	5120-00-124-5429	00779	90289-l	CRIMPING TOOL, TERMI DH3	EA	1
24Q	17	PFOZZ	5120-00-126-3205	00779	91084-1	REMOVAL TOOL, CONNEC....DH3	EA	1
24Q	18	PEOZZ	5120-00-079-4601	96906	MS24256R20	EXTRACTION TOOL DH3	EA	1
24Q	19	PEOZZ	5120-00-079-4598	96906	MS24256A20	INSERTION TOOL....DH3	EA	1
24Q	20	PEOZZ	5120-00-963-7661	71468	CET-C68	REMOVAL TOOL.CONNEC DH3	EA	1
24Q	21	PEOZZ	5120-00-230-3770	96906	MS18278-1	INSTALLING AND REMO DH3	EA	1

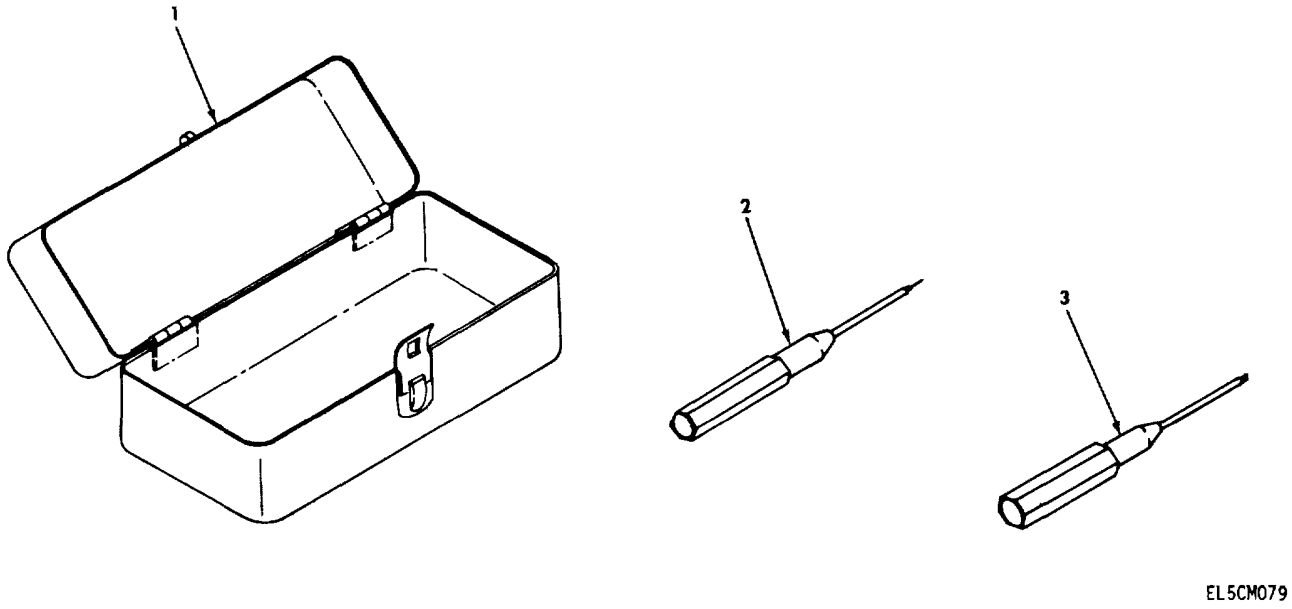

Figure 24R. Maintenance Kit, Electrical Contact Repair MK-2068/G.

(1) ILLUSTRATION (a) FIG NO.	(b) ITEM NO.	(2) SMR CODE	(3) NATIONAL STOCK NUMBER	(4) FSCM	(5) PART NUMBER	(6) DESCRIPTION *USABLE ON CODE*	(7) U/M	(8) QTY INC IN UNIT
						GROUP 3010 MAINTENANCE KIT, ELECTRICAL CONTACT REPAIR MK-2068/G		
24R	1	XDOZZ		04939	70730096-001	BOX UTILITY DH3	EA	1
24R	2	PEOZZ	5120-01-108-5115	31413	600-0001-000	EXTRACTION TOOL DH3	EA	1
24R	3	PEOZZ	5120-01-108-5117	31413	600-0007-000	INSERTION TOOL.....DH3	EA	1

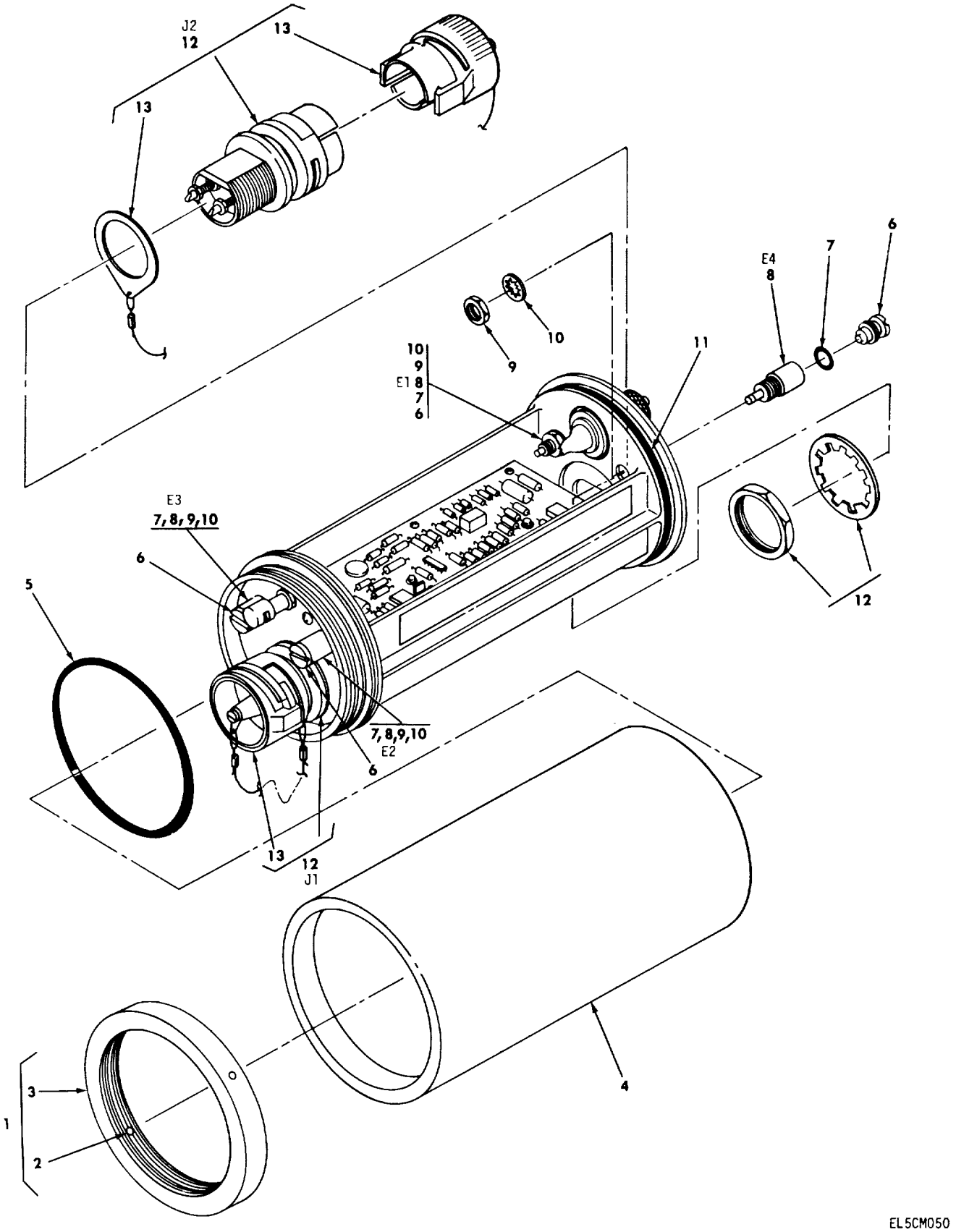

Figure 25. Pulse Form Restorer TD-982/G (sheet 1 of 2).

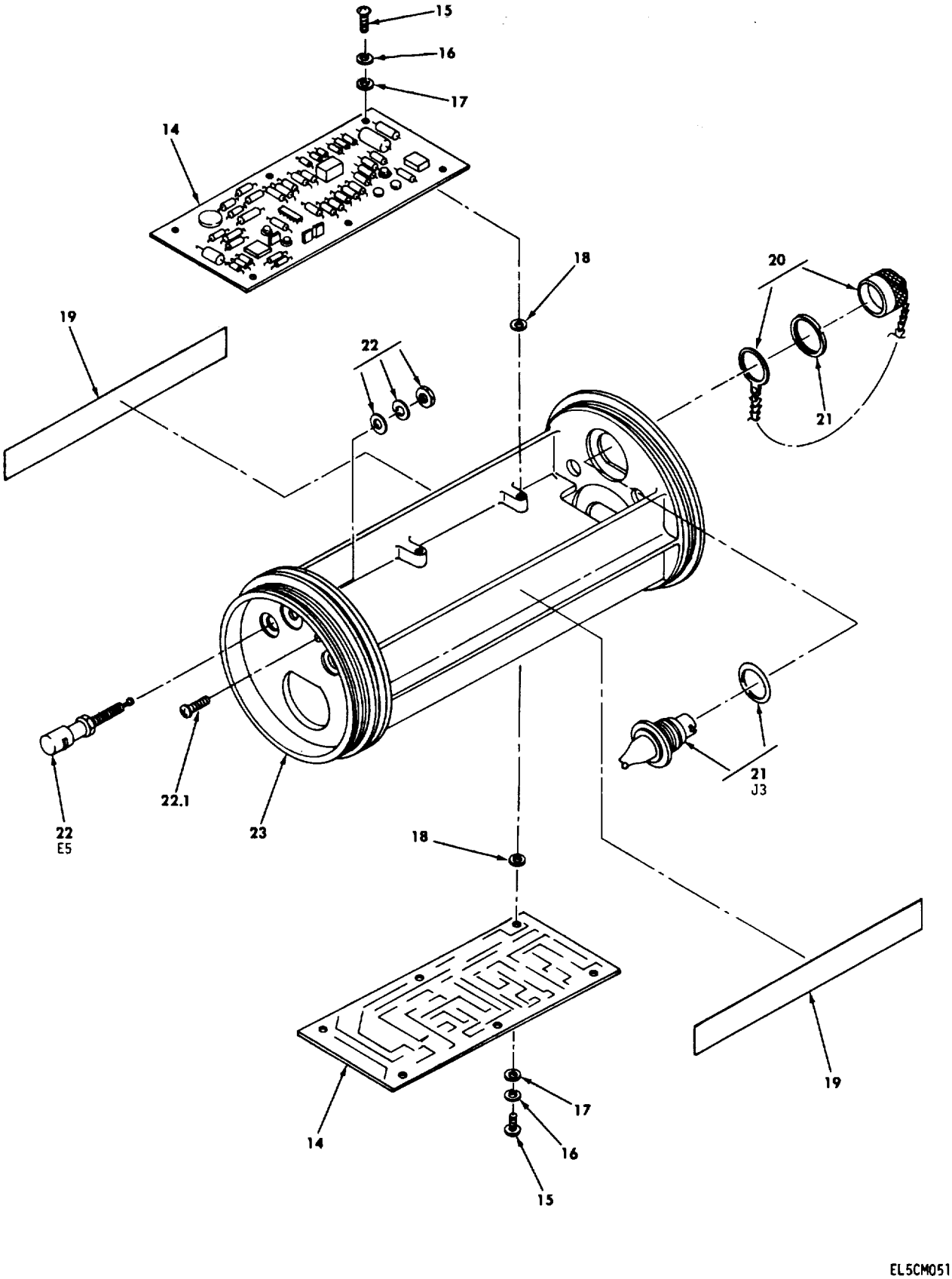

Figure 25. Pulse Form Restorer TD-982/G (sheet 2 of 2).

(1) ILLUSTRATION (a) FIG NO.	(b) ITEM NO.	(2) SMR CODE	(3) NATIONAL STOCK NUMBER	(4) FSCM	(5) PART NUMBER	(6) DESCRIPTION / USABLE ON CODE	(7) U/M	(8) QTY INC IN UNIT
						GROUP 00 PULSE FORM RESTORER TO-982/G		
25	1	MDDZZ		80063	SM-C-941527	NUT ASSEMBLY.....DH2	EA	1
25	2	XDDZZ		80063	SM-C-941527-2	INSERT.....DH2	EA	2
25	3	XDDZZ		80063	SM-C-941527-1	RING.....DH2	EA	1
25	4	XBDZZ		80063	SM-D-941530	CASE.....DH2	EA	1
25	5	XDDZZ	5330-00-579-6861	96906	MS28775-236	PACKING, PREFORMED.....DH2	EA	1
25	6	PAOZZ	5920-00-999-7324	80063	SM-B-530036	CAP ARRESTOR.....DH2	EA	4
25	7	PAOZZ	5330-00-584-0265	96906	MS28775-012	PACKING, PREFORMED.....DH2	EA	4
25	8	XDDZZ	5920-00-930-1212	80063	SM-B-530020	HOLDER, ARRESTER.....DH2	EA	4
25	9	XDDZZ	5310-00-159-6215	80063	SM-B-527575	NUT, PLAIN, HEXAGON.....DH2	EA	4
25	10	XDDZZ	5310-00-595-7237	96906	MS35333-42	WASHER, LOCK.....DH2	EA	4
25	11	XDDZZ	5330-00-579-7545	96906	MS28775-238	PACKING, PREFORMED.....DH2	EA	1
25	12	PADDD	5935-00-938-0406	80058	UG-1837/U	CONNECTOR, RECEPTACL.....DH2	EA	2
25	13	PAOZZ	5999-00-136-9040	80063	SC-C-388423	CAP.ELECTRICAL.....DH2	EA	2
25	14	PADDL	5820-01-081-6882	80063	SM-D-941540	CIRCUIT CARD ASSY.....DH2	EA	2
25	15	XDDZZ	5305-00-993-0190	96906	MS35206-214	SCREW, MACHINE.....DH2	EA	6
25	16	XDDZZ	5310-00-184-8996	96906	MS535338-97	WASHER, LOCK.....DH2	EA	6
25	17	XDDZZ		88044	NAS620-4	WASHER FLAT.....DH2	EA	6
25	18	XDDZZ		80205	NAS549-L4	WASHER,FLAT.....DH2	EA	6
25	19	MDDZZ		80063	SM-C-941529	PLATE IDENT.....DH2	EA	2
25	20	XDDZZ		80063	SM-B-942107	COVER ELEC CONN.....DH2	EA	1
25	21	PADZZ	5935-00-823-0667	80058	U-183/U	CONNECTOR, RECEPTACL.....DH2	EA	1
25	22	PADZZ	5940-00-926-8162	80058	U-106/U	POST, BINDING, ELECTR.....DH2	EA	1
25	22.1	XDDZZ		96906	MS3212-31L	SCREW SEAL.....DH2	EA	1
25	23	XADZZ		80063	SM-D-941528	CHASSIS.....DH2	EA	1

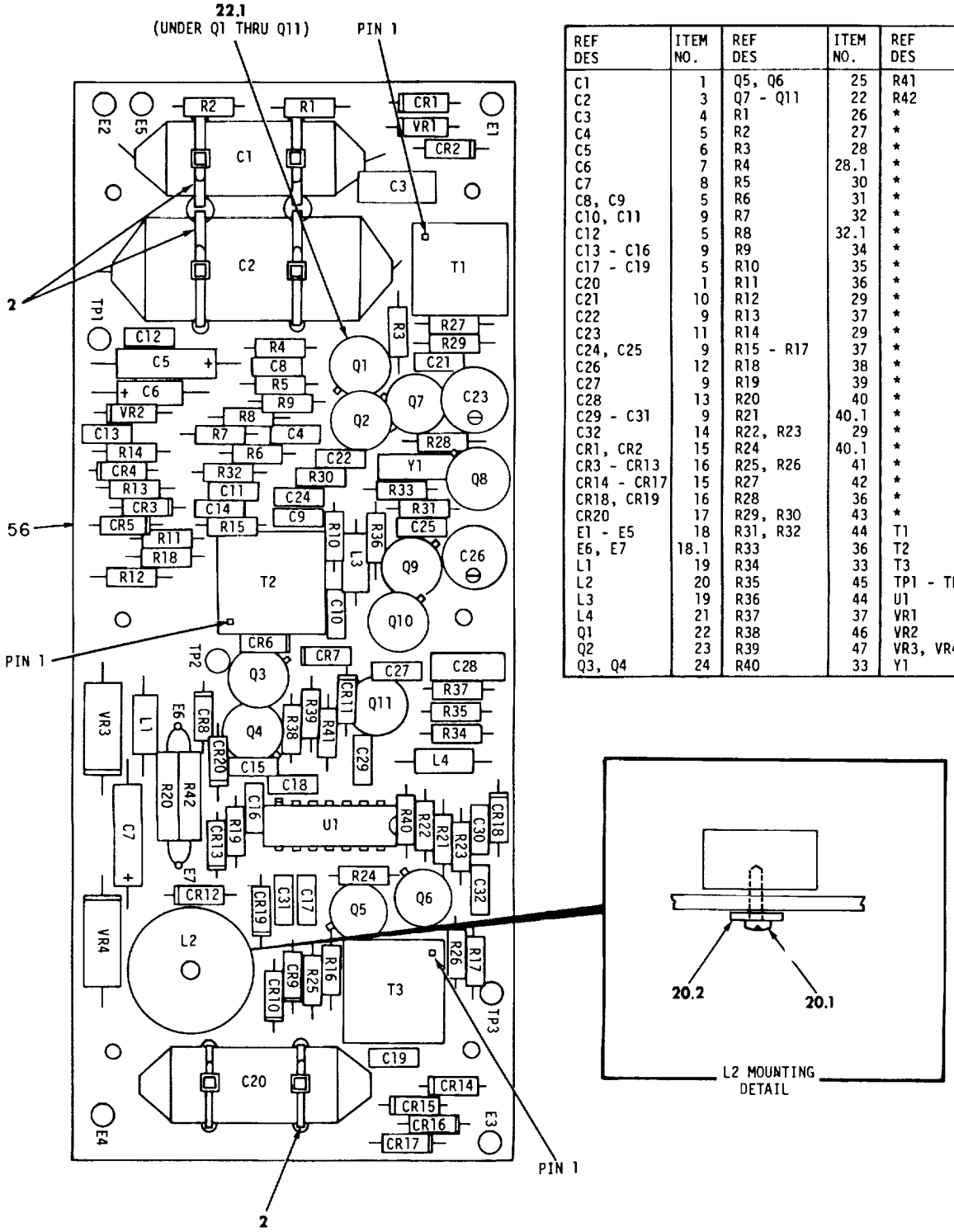

REF DES	ITEM NO.	REF DES	ITEM NO.	REF DES	ITEM NO.
C1	1	Q5, Q6	25	R41	47.1
C2	3	Q7 - Q11	22	R42	57
C3	4	R1	26	*	58
C4	5	R2	27	*	59
C5	6	R3	28	*	60
C6	7	R4	28.1	*	61
C7	8	R5	30	*	62
C8, C9	5	R6	31	*	63
C10, C11	9	R7	32	*	64
C12	5	R8	32.1	*	65
C13 - C16	9	R9	34	*	66
C17 - C19	5	R10	35	*	67
C20	1	R11	36	*	68
C21	10	R12	29	*	69
C22	9	R13	37	*	70
C23	11	R14	29	*	71
C24, C25	9	R15 - R17	37	*	72
C26	12	R18	38	*	73
C27	9	R19	39	*	74
C28	13	R20	40	*	75
C29 - C31	9	R21	40.1	*	76
C32	14	R22, R23	29	*	77
CR1, CR2	15	R24	40.1	*	78
CR3 - CR13	16	R25, R26	41	*	79
CR14 - CR17	15	R27	42	*	80
CR18, CR19	16	R28	36	*	81
CR20	17	R29, R30	43	*	82
E1 - E5	18	R31, R32	44	T1	48
E6, E7	18.1	R33	36	T2	49
L1	19	R34	33	T3	50
L2	20	R35	45	TP1 - TP3	18
L3	19	R36	44	U1	51
L4	21	R37	37	VR1	52
Q1	22	R38	46	VR2	53
Q2	23	R39	47	VR3, VR4	54
Q3, Q4	24	R40	33	Y1	55

NOTES:
1. PREFIX ALL REFERENCE DESIGNATIONS WITH A1 OR A2.
2. * R42 IS SELECTED AT TEST FROM ONE OF THESE VALUES.

EL5CM052

Figure 26. Circuit card assembly

(1) ILLUSTRATION (a) FIG NO.	(b) ITEM NO.	(2) SMR CODE	(3) NATIONAL STOCK NUMBER	(4) FSCM	(5) PART NUMBER	(6) DESCRIPTION USABLE ON CODE	(7) U/M	(8) QTY INC IN UNIT
						GROUP 01 CIRCUIT CARD ASSEMBRLY		
26	1	PADZZ	5910-01-017-4944	81349	CQRO9A1KE333K3M	CAPACITOR, FIXED. PL.....DH2	EA	2
26	2	XDDZZ	5975-00-111-3208	96906	MS3367-5-9	STRAP, TIE DOWN, ELECT.....DH2	EA	6
26	3	PADZZ	5910-00-454-3538	81349	CQR09A1KE104J3P	CAPACITOR.FIXED PLA DH2	EA	1
26	4	PADZZ	5910-00-001-8818	81349	CMR05F331GODM	CAPACITOR,FIXED .MIC.....DH2	EA	1
26	5	XDDZZ	5910-00-600-6889	81349	M39014/02-1230	CAPACITOR. FIXED.CE.....DH2	EA	7
26	6	XDDZZ	5910-00-932-4455	81349	M39003/01-2289	CAPACITOR, FIXED, ELE.....DH2	EA	1
26	7	XDDZZ	5910-00-078-7227	81349	M39003/01-2283	CAPACITOR, FIXED, ELE DH2	EA	1
26	8	PADZZ	5910-00-935-3511	81349	M39003/01-2286	CAPACITOR, FIXED, ELE DH2	EA	I
26	9	XDDZZ	5910-00-513-5385	81349	M39014/02-1218	CAPACITOR, FIXED, CER DH2	EA	13
26	10	XDDZZ		81349	M39014102-1220	CAPACITOR FIXED, CER.....DH2	EA	1
26	11	PADZZ	5910-00-498-5584	81349	CV31A806	CAPACITOR, VARIABLE DH2	EA	1
26	12	PADZZ	5910-00-403-8872	81349	CV31D350	CAPACITOR, VARIABLE DH2	EA	1
26	13	PADZZ	5910-00-481-2717	81349	CMR0SE220JODM	CAPACFTOR, FIXED.MIC.....DH2	EA	1
26	14	XDDZZ	5910-01-027-2704	81349	M39014/01-1222	CAPACITOR FIXED.CER DH2	EA	1
26	5I	PADZZ	5961-00-924-6981	61349	JAN1N4245	SEMICONDUCTCR DEVIC DH2	EA	6
26	6	PADZZ	5961-01-081-9573	81349	JAN1N4153-1	SEMICONDUCTCR DEVIC.....DH2	EA	13
26	17	PADZZ	5961-01-031-6896	81349	JANIN5305	SEMICONOUCTER DEVIC DH2	EA	1
26	18	XDDZZ	5940-00-082-4861	81349	SE12XC04	TERMINAL STUD DH2	EA	8
6	18.1	XDDZZ		80063	SM-A-942166	TERMINAL TURRET.....DH2	EA	2
26	19	PADZZ	5950-00-994-6600	96906	MS90538-20	COIL, RADIO FREQUENCY.....DH2	EA	2
26	20	PADZZ	5950-01-087-9411	80063	SM-A-942051	INDUCTOR.....DH2	EA	1
26	20.1	XDDZZ		80205	NAS1635-06LE7	SCREW, SELF-LOCKING DH2	EA	1
26	20.2	XDDZZ	5970-00-760-5011	80205	NAS549GL6	INSULATOR, WASHER.....DH2	EA	1
26	21	PADZZ	5950-01-013-5115	96906	MS14046-6	COIL.RADIO FREQUENC.....DH2	EA	1
26	22	PADZZ	5961-00-951-8757	81349	JAN2N2222A	TRANSISTOR.....DH2	EA	6
26	22.1	XDDZZ		80063	SM-A-942098	INSUILATOR DISK DH2	EA	11
26	23	PADZZ	5961-00-911-6015	81349	JAN2N3251A	TRANSISTOR.....DH2	EA	1
26	24	PADZZ		80063	SM-A-942159	TRANSISTOR.....DH2	EA	2
26	25	PADZZ	5961-00-905-4815	81349	JAN2N918	TRANSISTOR DH2	EA	2
26	26	PADZZ	5905-00-116-8554	81349	RCR07G105JS	RESISTOR, FIXED, COMP DH2	EA	1
26	27	PADZZ	5905-00-141-0743	81349	RCR07G392JS	RESISTOR, FIXED,COMP.....DH2	EA	1
26	28	PADZZ	5905-00-133-0440	81349	RCR07G560JS	RESISTOR.FIXED, COMP DH2	EA	1
26	28.1	PADZZ	5905-00-138-3376	81349	RNC55H1001FS	RESISTOR, FIXED, FILM DH2	EA	1
26	29	PADZZ	5905-00-110-7620	81349	RCR07G102JS	RESISTOR, FIXED, COMP DH2	EA	4
26	30	XDDZZ	5905-00-403-4454	81349	RNC55H82R5FS	RESISTOR, FIXED, FILM.....DH2	EA	1
26	31	PADZZ	5905-00-402-6917	81349	RNC55H5620FS	RESISTOR.FIXED, FILM DH2	EA	1
26	32	PADZZ	5905-04-680-4023	81349	RNC55H1211FS	RESISTOR, FIXED, FILM.....DH2	EA	1
26	32.1	PADZZ	5905-00-484-7892	81349	RNC55H2050FS	RESISTOR,FIXED, FILM DH2	EA	1
26	33	PADZZ	5905-00-135-3973	81349	RCR07G221JS	RESISTOR, FIXED, COMP.....DH2	EA	2

(1) ILLUSTRATION (a) FIG NO.	(b) ITEM NO.	(2) SMR CODE	(3) NATIONAL STOCK NUMBER	(4) FSCM	(5) PART NUMBER	(6) DESCRIPTION USABLE ON CODE	(7) U/M	(8) QTY INC IN UNIT
26	34	XDDZZ	5905-01-022-3044	81349	RNC55H46R4FS	RESISTOR, FIXED, FILM	EA	1
26	35	XDDZZ	5905-00-421-2938	81349	RNC55H4640FS	RESISTOR, FIXED, FILM	EA	1
26	36	PADZZ	5905-00-114-0711	81349	RCR07G472JS	RESISTOR, FIXED, COMP	EA	3
26	37	PADZZ	5905-00-126-6683	81349	RCR07G332JS	RESISTOR, FIXED, COMP	EA	5
26	38	PADZZ	5905-00-141-0742	81349	RCR07G181JS	RESISTOR, FIXED, COMP	EA	1
26	39	PADZZ	5905-00-106-3666	81349	RCRO7G103JS	RESISTOR, FIXED, COMP	EA	1
26	40	PADZZ	5905-00-139-9878	81349	RWR80S61R9FR	RESISTOR, FIXED, WIRE	EA	1
26	40.1	PADZZ	5905-00-135-3975	81349	RCR07G680JS	RESISTOR, FIXED, COMP	EA	2
26	41	PADZZ	5905-00-151-4657	81349	RNC55H2150FS	RESISTOR, FIXED, FILM	EA	2
26	42	XDDZZ	5905-00-141-1183	81349	RCR07G101JS	RESISTOR, FIXED, COMP	EA	1
26	43	PADZZ	5905-00-120-9154	81349	RCR07G471JS	RESISTOR, FIXED, COMP	EA	2
26	44	PADZZ	5905-00-105-7764	81349	RCR07G222JS	RESISTOR	EA	3
26	45	PADZZ	5905-00-106-1356	81349	RCR07G152JS	RESISTOR, FIXED, COMP	EA	1
26	46	PADZZ	5905-00-119-8811	81349	RCRO7G151JS	RESISTOR, FIXED, COMP	EA	1
26	47	PADZZ	5905-00-114-5343	81349	RCR07G182JS	RESISTOR, FIXED, COMP	EA	1
26	47.1	PADZZ	5905-00-116-8555	81349	RCR07G153JS	RESISTOR, FIXED, COMP	EA	1
26	48	PADZZ	5950-01-088-2713	80063	SM-A-942054	TRANSFORMER PULSE	EA	1
26	49	XDDZZ		80063	SM-A-942053-2	TRANSFORMER PULSE	EA	1
26	50	PADZZ	5950-01-081-3792	80063	SM-A-942050	TRANSFORMER PULSE	EA	1
26	51	PADZZ	5962-01-030-6352	81349	M38510/30005BCB	MICROCIRCUIT, DIGITA	EA	1
26	52	PADZZ		80063	SM-A-942165	DIODE ZENER	EA	1
26	53	PADZZ	5962-00-752-6121	81349	JAN1N753A	SEMICONDUCTOR DEVIC	EA	1
26	54	PADZZ	5961-00-837-9288	81349	JANIN3029B	SEMICONDUCTOR DEVIC	EA	2
26	55	PADZZ	5955-01-088-2904	80063	SM--A-942087	CRYSTAL UNIT QUARTZ	EA	1
26	56	XADZZ		80063	SM-A-941542	PRINTED WIRING BR	EA	1
26	57	PADZZ		80063	SM-A-941544	RESISTOR ASSORTMEN	EA	1
26	58	PADZZ	5905-00-492-5420	81349	RNC55H3320FS	RESISTOR, FIXED, FILM	EA	V
26	59	PADZZ	5905-00-112-5007	81349	RNC55H3480FS	RESISTOR, FIXED, FILM	EA	V
26	60	PADZZ	5905-00-254-1051	81349	RNC55H3650FS	RESISTOR, FIXED, FILM	EA	V
26	61	PADZZ	5905-00-138-7529	81349	RNC55H3930FS	RESISTOR, FIXED, FILM	EA	V
26	62	PADZZ	5905-00-138-7530	81349	RNC55H4020FS	RESISTOR, FIXED, .FILM	EA	V
26	63	PADZZ	5905-00-005-2903	81349	RNC55H4220FS	RESISTOR, FIXED, FILM	EA	V
26	64	PADZZ	5905-00-139-2146	81349	RNC55H4420FS	RESISTOR, FIXED, FILM	EA	V
26	65	PADZZ	5905-00-421-2938-	81349	RNC55H4640FS	RESISTOR, FIXED, FILM	EA	V
26	66	PADZZ	5905-00-138-7531	81349	RNC55H4870FS	RESISTOR, FIXED, FILM	EA	V
26	67	PADZZ	5905-00-431-5159	81349	RNC55H5110FS	RESISTOR, FIXED, FILM	EA	V
26	68	PADZZ	5905-00-169-3419	81349	RNC55H5360FS	RESISTOR, FIXED, FILM	EA	V
26	69	PADZZ	5905-00-402-6917	81349	RNC55H5620FS	RESISTOR, FIXED, FILM	EA	V
26	70	PADZZ	5905-00-167-0620	81349	RNC55H5900FS	RESISTOR, FIXED, FILM	EA	V
26	71	PADZZ	5905-00-194-8390	81349	RNC55H6190FS	RESISTOR, FIXED, FILM	EA	V

(1) ILLUSTRATION (a) FIG NO.	(b) ITEM NO.	(2) SMR CODE	(3) NATIONAL STOCK NUMBER	(4) FSCM	(5) PART NUMBER	(6) DESCRIPTION USABLE ON CODE	(7) U/M	(8) QTY INC IN UNIT
26	72	PADZZ	5905-00-138-3361	81349	RNC55H6490FS	RESISTOR, FIXED, FILM DH2	EA	V
26	73	PADZZ	5900-00-356-4199	81349	RNC55H6810FS	RESISTOR, FIXED, FILM....DH2	EA	V
26	74	PADZZ	5905-00-139-1926	81349	RNC55H7150FS	RESISTOR, FIXED, FILM....DH2	EA	V
26	75	PADZZ	5905-00-139-1928	81349	RNC55H7500FS	RESISTOR, FIXED, FILM....DH2	EA	V
26	76	PADZZ	5905-00-421-6188	81349	RNC55H7870FS	RESISTOR, FIXED, FILM....DH2	EA	V
26	77	PADZZ	5905-00-401-6188	81349	RNC55H8250FS	RESISTOR, FIXED, FILM DH2	EA	V
26	78	PADZZ	5905-00-758-5019	81349	RNC55H8660FS	RESISTOR, FIXED, FILM DH2	EA	V
26	79	PADZZ	5905-00-264-3832	81349	RNC55H9530FS	RESISTOR, FIXED, FILM....DH2	EA	V
26	80	PADZZ	5905-00-139-1920	81349	RNC55H1051FS	RESISTOR, FIXED, FILM....DH2	EA	V
26	81	PADZZ	5905-00-138-7392	81349	RNC55H1151FS	RESISTOR, FIXED, FILM DH2	EA	V
26	82	PADZZ	5905-00-484-7880	81349	RNC55H1271FS	RESISTOR, FIXED, FILM....DH2	EA	V

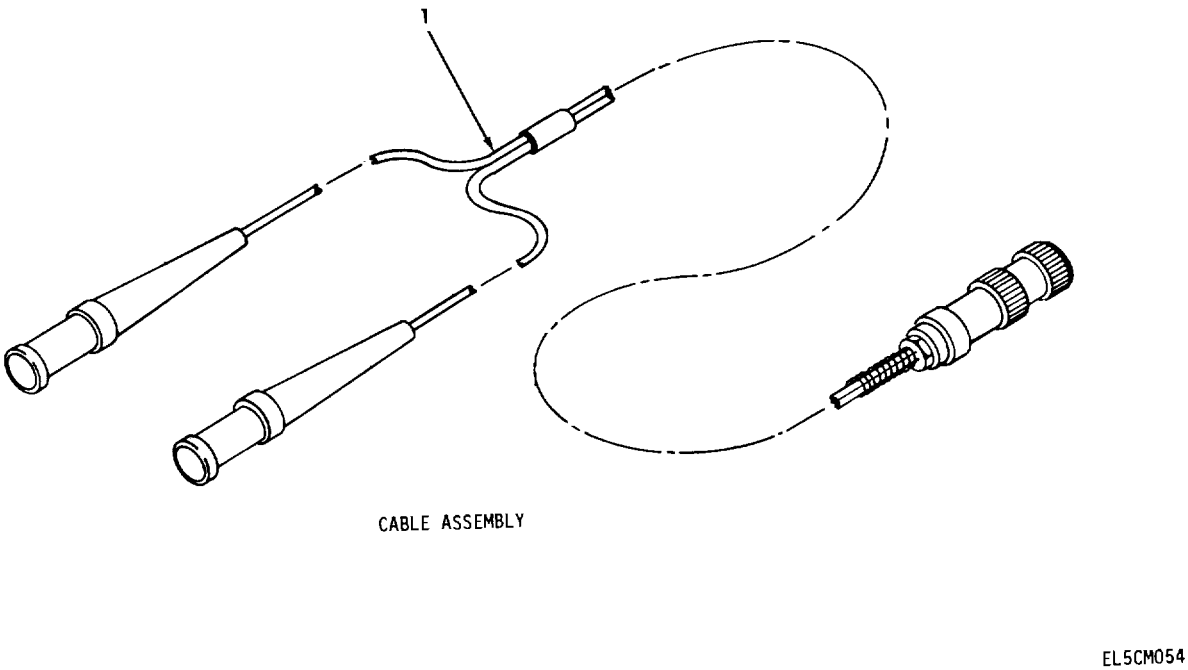

Figure 27. Special Tools for Pulse Form Restorer TD-982/G.

(1) ILLUSTRATION (a) FIG NO.	(b) ITEM NO.	(2) SMR CODE	(3) NATIONAL STOCK NUMBER	(4) FSCM	(5) PART NUMBER	(6) DESCRIPTION USABLE ON CODE	(7) U/M	(8) QTY INC IN UNIT
						GROUP 30 SPECIAL TOOLS FOR PULSE RESTORER TD-982/G		
27	1	PEODD	5995-01-085-1707	80063	SM-D-941995	CABLE ASSEMBLY, SPEC ..... B0I 1 AUTH FOR 1-100 EQUIP	DH3	EA

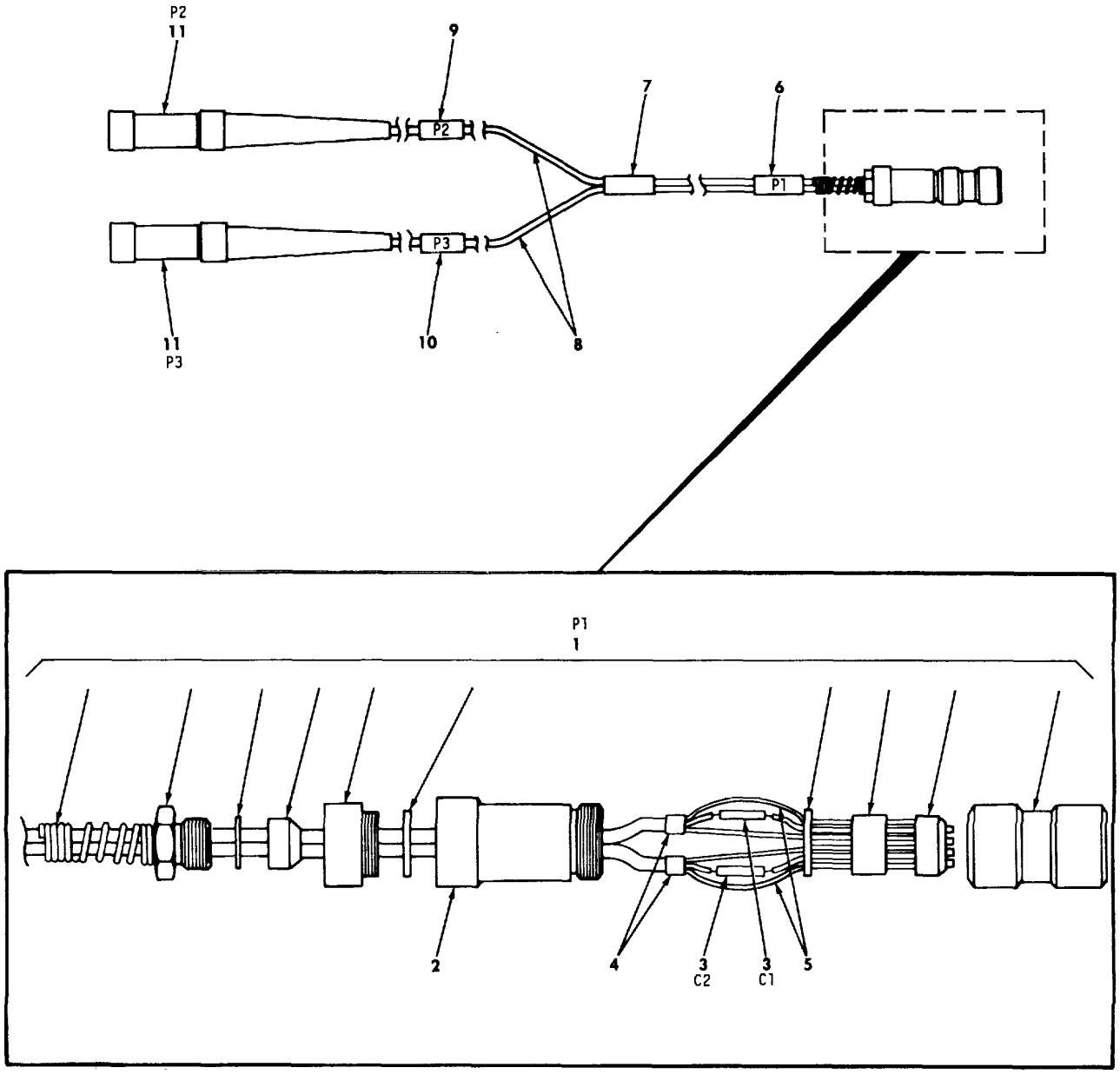

EL5CM080

Figure 28. Cable Assembly, Special Purpose, Electrical, Branched CX-13114/PTM-7.

(1) ILLUSTRATION (a) FIG NO.	(b) ITEM NO.	(2) SMR CODE	(3) NATIONAL STOCK NUMBER	(4) FSCM	(5) PART NUMBER	(6) DESCRIPTION USABLE ON CODE	(7) U/M	(8) QTY INC IN UNIT
						GROUP 3001 CABLE ASSEM BLY.SPECIAL PURPCSE) ELECTRICAL, BRANCHED CX-13114/PTM-7		
28	1	PAHZZ	5935-00-992-2035	80058	U-229/U	CONNECTOR.PLUG,ELEC DH2	EA	1
28	2	PAHZZ		80063	SM-C-941996	ADAPTER CABLE ASSY DH2	EA	1
28	3	PAHZZ		81349	CFR02AMB333JM	CAPACITOR FXD DH2	EA	2
28	4	XDHZZ	5970-00-767-0524	81349	M23053/5-206-C	INSULATION SLEEVING DH2	FT	V
28	5	XDHZZ		81349	M81822/3-A22-9	WIRE ELECTRICAL DH2	FT	V
28	6	XAHZZ		81349	SM-D-941761-37	INSULATOR,SLEEVING DH2	EA	V
28	7	XAHZZ		81349	SM-D-941761-36	INSULATOR,SLEEVING DH2	EA	V
28	8	XDHZZ	6145-00-443-5488	80063	SM-A-434065	CABLE,RADIO FREQUEN DH2	FT	V
28	9	XAHZZ		81349	SM-D-941761-38	INSULATOR,SLEEVING DH2	EA	V
28	10	XAHZZ		81349	SM-D-941761-39	INSULATOR,SLEEVING DH2	EA	V
28	11	PAHZZ	5935-00-089-8867	80063	SM-C-551576	CONNECTOR.PLUG,ELEC DH2	EA	2

NATIONAL STOCK NUMBER AND PART NUMBER INDEX

NOTE: LATEST NATIONAL STOCK NUMBER AND PART NUMBER ASSIGNMENTS ARE INCLUDED AT END OF INDEX.

STOCK NUMBER	FIG.	ITEM
5910-00-001-7583	19	8
5910-00-001-8818	10	7
5910-00-001-8818	26	4
5905-00-003-8253	24F	35
5905-00-003-8253	24H	46
5905-00-004-6076	20	38
5905-00-005-2902	9	72
5905-00-005-2903	13	21
5905-00-005-2903	26	63
5910-00-005-3468	19	15
5910-00-005-3468	20	19
5910-00-007-3974	9	
5910-00-007-3974	10	1
5910-00-007-3974	12	1
5910-00-007-3974	13	2
5910-00-007-3974	14	2
5910-00-007-3974	15	1
5910-00-007-3974	17	3
5910-00-007-3974	18	1
5910-00-007-3974	19	1
5910-00-001-3974	20	2
5910-00-007-3974	21	1
5930-00-008-0540	24H	18
5935-00-008-6786	6	7
5935-00-008-6786	24F	56
5910-00-010-8158	20	12
5910-00-010-8158	21	11
5910-00-010-8720	16	11
5910-00-010-8720	19	6
5910-00-010-8720	21	14
5120-00-016-6382	24Q	13
5120-00-017-3921	24Q	15
5910-00-021-8075	20	7
5930-00-021-9665	24D	11
5961-00-022-5670	3	20
5961-00-022-5670	7	10
5905-00-024-0598	24F	36
5905-00-024-0598	24I	23
5930-00-036-8716	6	57
5950-00-042-4694	19	27
5950-00-043-0423	9	29
5940-00-044-1583	24D	31
5305-00-045-8338	8	27
5305-00-045-8338	24D	65
5305-00-054-5649	24A	2
5930-00-055-3271	24D	25
5310-00-057-0573	24A	6
5310-00-058-1823	24E	8
5310-00-058-1823	24I	9
5910-00-059-2439	8	14
5340-00-060-5386	24C	5
5340-00-060-5386	24D	5
5340-00-060-5386	24F	5
5340-00-060-5386	24H	5
6210-00-064-2998	6	69
5910-00-068-4298	16	7
5910-00-068-4298	20	16
5910-00-068-4298	21	9
5305-00-073-8885	24D	13
5305-00-073-8885	24F	57
5935-00-075-6813	24D	24
6145-00-078-5751	24C	12
6145-00-078-5751	24D	16
5999-00-078-6804	4	29
5910-00-078-7227	7	4
5910-00-078-7227	9	11
5910-00-078-7227	10	5
5910-00-078-7227	13	5
5910-00-078-7227	15	5
5910-00-078-7227	18	7
5910-00-078-7227	26	7
5120-00-079-4598	24Q	19
5120-00-079-4601	24Q	18
5940-00-079-8324	6	61
5961-00-081-6103	9	95
5970-00-082-3942	24N	5
5970-00-082-3942	24P	5
5970-00-082-3948	24C	22
5970-00-082-3948	24F	13
5970-00-082-3948	24K	2
5970-00-082-3948	24L	2
5940-00-082-4745	24D	74
5940-00-082-4745	24F	17
5940-00-082-4745	24H	43
5940-00-082-4861	3	15
5940-00-082-4861	7	7
5940-00-082-4861	19	24
5940-00-082-4861	26	18
5970-00-088-2975	24F	63
5935-00-089-8867	28	11
5910-00-098-9277	16	4
5910-00-099-0538	6	58
5910-00-101-2382	19	7
5999-00-102-6146	4	61
5905-00-104-8357	20	57.1
5905-00-104-8363	19	61
5905-00-104-8368	8	74
5905-00-104-8368	9	39
5905-00-104-8368	20	67
5905-00-105-7537	24F	20
5905-00-105-7764	9	82
5905-00-105-7764	12	13
5905-00-105-7764	14	23
5905-00-105-7764	19	50
5905-00-105-7764	20	28
5905-00-105-7764	21	39
5905-00-105-7764	26	44
5905-00-105-7765	20	53
5905-00-105-7767	19	56.1
5905-00-105-7768	6	28
5905-00-105-7768	19	41
5905-00-106-1247	3	29
5905-00-106-1276	4	72
5905-00-106-1278	13	18
5905-00-106-1278	19	44
5905-00-106-1278	20	41
5905-00-106-1356	9	40
5905-00-106-1356	18	18
5905-00-106-1356	19	49
5905-00-106-1356	20	37
5905-00-106-1356	241	12
5905-00-106-1356	26	45
5905-00-106-1357	20	63
5905-00-106-3666	7	18
5905-00-106-3666	10	15
5905-00-106-3666	12	18
5905-00-106-3666	14	18
5905-00-106-3666	18	19
5905-00-106-3666	20	36
5905-00-106-3666	26	39
5905-00-106-3668	16	24
5905-00-106-3668	19	55
5905-00-106-3668	20	47
5905-00-106-3668	21	40
5905-00-107-0656	8	62
5905-00-107-0656	10	17
5905-00-107-0656	12	16
5905-00-107-0656	19	54
5905-00-110-0388	7	19
5905-00-110-0388	10	18
5905-00-110-0388	13	22
5905-00-110-0388	19	53
5905-00-110-0388	21	47
5905-00-110-7620	3	27
5905-00-110-7620	7	14
5905-00-110-7620	9	46
5905-00-110-7620	10	14
5905-00-110-7620	12	12
5905-00-110-7620	13	15
5905-00-110-7620	14	17
5905-00-110-7620	15	12
5905-00-110-7620	16	19
5905-00-110-7620	17	11
5905-00-110-7620	18	13
5905-00-110-7620	19	34
5905-00-110-1620	20	27
5905-00-110-7620	21	21
5905-00-110-7620	241	14
5905-00-110-7620	26	29
5905-00-110-7622	10	22

NATIONAL STOCK NUMBER AND PART NUMBER INDEX

STOCK NUMBER	FIG.	ITEM
5975-00-111-3208	26	2
5905-00-111-4727	9	64
5905-00-111-4727	14	22
5905-00-111-4727	16	26
5905-00-111-4727	19	45
5905-00-112-1392	9	76
5905-00-112-1392	21	46
5905-00-112-5007	26	59
5905-00-113-4859	9	52
5905-00-113-4860	9	38
5905-00-113-4860	19	39
5905-00-113-4861	19	60
5910-00-113-5284	13	8
5910-00-113-5286	20	14
5910-00-113-5312	10	6
5910-00-113-5494	14	6
5940-00-113-8179	24F	76
5910-00-113-9449	16	9
5910-00-113-9449	19	5
5910-00-113-9449	20	10
5910-00-113-9449	20	13
5910-00-113-9453	9	13
5910-00-113-9453	19	9
5940-00-113-9828	4	45
5905-00-114-0710	7	21
5905-00-114-0710	19	43
5905-00-114-0710	20	60
5905-00-114-0711	7	16
5905-00-114-0711	9	44
5905-00-114-0711	12	20
5905-00-114-0711	14	24
5905-00-114-0711	16	29
5905-00-114-0711	19	52
5905-00-114-0711	20	31
5905-00-114-0711	21	28
5905-00-114-0711	24I	24
5905-00-114-0711	26	36
5905-00-114-5339	9	62
5905-00-114-5339	10	16
5905-00-114-5343	21	29
5905-00-114-5343	26	47
5365-00-115-6848	2	1
5905-00-115-8055	20	39
5905-00-115-8055	21	42
5905-00-116-8554	26	26
5905-00-116-8555	7	17
5905-00-116-8555	9	81.1
5905-00-116-8555	10	21
5905-00-116-8555	12	19
5905-00-116-8555	13	16
5905-00-116-8555	14	19
5905-00-116-8555	15	13
5905-00-116-8555	17	12
5905-00-116-3555	18	14
5905-00-116-8555	20	54
5905-00-116-8555	26	47.1
5905-00-116-8556	9	65
5905-00-116-8556	13	17
5905-00-116-8556	14	20
5905-00-116-8556	18	15
5905-00-116-8556	19	58
5320-00-117-6516	24A	9
5320-00-117-6826	4	78
5320-00-117-6950	22	7
5320-00-117-6950	22	9
5320-00-117-7227	23	2
5905-00-118-4559	9	41
5905-00-118-4559	20	40
5905-00-119-3503	16	20
5905-00-119-3503	19	42
5905-00-119-3504	9	61
5905-00-119-3504	20	43
5905-00-119-3504	21	44
5905-00-119-8768	19	47
5905-00-119-8768	20	57
5905-00-119-8768	21	37
5905-00-119-8811	20	33
5905-00-119-8811	24I	11
5905-00-119-8811	26	46
5905-00-119-8812	9	67
5905-00-119-8812	15	36
5905-00-119-8812	21	36
5905-00-120-9152	3	31
5905-00-120-9154	9	43
5905-00-120-9154	10	20
5905-00-120-9154	16	22
5905-00-120-9154	19	48
5905-00-120-9154	20	32
5905-00-120-9154	21	30
5905-00-120-9154	26	43
5905-00-121-9863	19	62
5905-00-121-9932	14	21
5905-00-121-9932	18	17
5905-00-121-9932	1S	38
5905-00-121-9932	24D	70
5120-00-124-5429	24Q	16
5120-00-126-3205	24Q	17
5905-00-126-6683	9	57
5905-00-126-6683	12	14
5905-00-126-6683	18	16
5905-00-126-6683	19	51
5905-00-126-6683	20	46
5905-00-126-6683	24I	13
5905-00-126-6683	26	37
5905-00-126-6103	16	25
5905-00-126-6703	20	66
5905-00-131-1255	19	40
5905-00-131-1255	20	42
5905-00-133-0440	9	55
5905-00-133-0440	19	59
5905-00-133-0440	21	35
5905-00-133-0440	26	28
5905-00-135-3971	19	63
5905-00-135-3973	9	85
5905-00-135-3973	16	31
5905-00-135-3973	19	35
5905-00-135-3973	20	44
5905-00-135-3973	21	54
5905-00-135-3973	24E	4
5905-00-135-3973	24F	21
5905-00-135-3973	26	33
5905-00-135-3975	20	30
5905-00-135-3975	26	40.1
5905-00-135-6046	9	79
5905-00-136-3891	2	17
5999-00-136-9040	25	13
5905-00-138-3361	21	24
5905-00-138-3361	26	72
5905-00-138-3376	9	10
5905-00-138-3376	26	28.1
5905-00-138-7392	20	64
5905-00-138-7392	26	81
5905-00-138-7399	13	23
5905-00-138-7399	16	21.1
5905-00-138-7399	16	21.2
5905-00-138-7399	19	65
5905-00-138-7399	20	65
5905-00-138-7399	24E	3
5905-00-138-7529	20	29
5905-00-138-7529	26	61
5905-00-138-7530	21	27
5905-00-138-7530	26	62
5905-00-138-7531	26	66
5905-00-139-1920	26	80
5905-00-139-1925	9	73
5905-00-139-1926	21	26
5905-00-139-1926	26	74
5905-00-139-1928	21	50
5905-00-139-1928	26	75
5905-00-139-2146	26	64
5905-00-139-9878	26	40
5905-00-141-0595	9	50
5905-00-141-0711	3	32
5905-00-141-0742	26	38
5905-00-141-0743	3	26
5905-00-141-0743	10	19
5905-00-141-0743	19	66
5905-00-141-0743	20	45
5905-00-141-0743	26	27
5905-00-141-0744	9	48

NATIONAL STOCK NUMBER AND PART NUMBER INDEX

STOCK NUMBER	FIG.	ITEM
5905-00-141-0744	12	17
5905-00-141-0744	16	27
5905-00-141-0744	19	57
5905-00-141-0744	21	23
5905-00-141-1149	3	28
5905-00-141-1183	19	37
5905-00-141-1183	24I	15
5905-00-141-1183	26	42
5910-00-142-6974	9	2
5940-00-143-4771	4	25
5940-00-143-4771	8	9
5940-00-143-4771	24F	9
5940-00-143-4775	4	44
5940-00-143-4780	4	26
5940-00-143-4794	4	42
5306-00-150-9105	1	26
5905-00-151-4657	26	41
5905-00-153-0135	20	61
5310-00-159-6215	25	9
5961-00-160-5528	9	99
5120-00-165-3910	24D	14
5910-00-166-6766	9	12
5905-00-167-0620	26	70
5310-00-167-0657	24I	22
5310-00-167-0815	24F	25
5310-00-167-0815	24H	25
5310-00-167-0816	8	24
5310-00-167-0816	24H	4
5310-00-167-0818	24H	8
5310-00-167-0831	24D	46
5310-00-167-0831	24F	43
5310-00-167-0832	2	6
5310-00-167-0832	24C	4
5310-00-167-0832	24D	4
5310-00-167-0832	24F	4
5310-00-167-0833	8	5
5310-00-167-0833	24D	51
5310-00-167-0833	24F	67
5310-00-167-0834	8	8
5310-00-167-0834	24C	8
5310-00-167-0834	24D	8
5310-00-167-0834	24F	8
5310-00-167-0835	8	60
5310-00-167-1343	4	22
5962-00-167-6330	9	90
5905-00-169-3419	26	68
5325-00-171-5719	6	20
5962-00-173-9776	10	36
5962-00-173-9776	13	30
5962-00-173-9776	18	29
5310-00-180-0277	4	14
6210-00-183-0576	6	46
5310-00-183-4406	4	24
5905-00-184-7788	20	50
5905-00-184-7788	21	32
5905-00-184-7790	20	52
5905-00-184-7790	21	45
5310-00-184-8966	1	37
5310-00-184-8966	4	34
5310-00-184-8970	8	59
5310-00-184-8977	8	21
5310-00-184-8977	24D	69
5310-00-184-8977	24F	15
5310-00-184-8977	24H	45
5310-00-184-8990	24I	21
5310-00-184-8996	2	8
5310-00-184-8996	8	29
5310-00-184-8996	24D	45
5310-00-184-8996	24F	42
5310-00-184-8996	24H	24
5310-00-184-8996	25	16
5910-00-185-9045	7	2
5310-00-187-2354	1	27
5310-00-188-7721	1	33.6
5310-00-188-7721	4	19
6210-00-191-2709	6	44
5905-00-192-4474	24I	18
5935-00-192-4753	24N	1
5935-00-192-4753	24P	1
5310-00-193-7577	6	40
5905-00-194-8390	26	71
5940-00-204-8966	8	22
5940-00-204-8966	24D	27
5940-00-204-8966	24F	79
5940-00-204-8990	24F	17
5340-00-205-6301	4	35
5340-00-205-6301	24G	9
5340-00-205-6302	4	36
5340-00-205-6302	24C	29
5905-00-205-9019	9	66
5905-00-205-9792	9	83
5340-00-209-9352	24C	3
5340-00-209-9352	24D	3
5340-00-209-9352	24F	3
5340-00-209-9352	24G	3
5340-00-209-9352	24H	3
5910-00-211-1261	12	5
5340-00-215-0248	8	92
5340-00-223-1286	8	13
5905-00-223-2741	9	56
5905-00-223-2741	20	49
5905-00-223-2741	21	33
5120-00-228-7882	24D	33
5120-00-230-3770	24Q	21
5961-00-235-3226	24D	61
5905-00-236-7578	9	54
5910-00-236-8740	7	3
5910-00-236-8740	9	5
5910-00-236-8740	20	6
5910-00-236-8740	21	8
5962-00-244-4228	24E	5
5305-00-253-5609	3	11
5905-00-254-1051	26	60
5940-00-254-5216	24C	26
5905-00-256-5029	21	31
5905-00-256-8893	9	69
5962-00-261-7552	10	37
5962-00-261-7552	19	82
5962-00-261-7552	20	74
5310-00-261-8278	8	7
5310-00-261-8278	24C	7
5310-00-261-8278	24D	7
5310-00-261-8278	24F	7
5310-00-261-8278	24H	7
5325-00-263-6632	24G	8
5905-00-264-3832	21	25
5905-00-264-3832	26	79
5962-00-274-0200	12	34
5962-00-274-0200	18	34
5962-00-274-0200	20	72
5962-00-274-0200	21	61
5S70-00-275-5242	5	4
5970-00-275-5242	11	3
5970-00-275-5242	24B	5
5s70-00-275-5242	24B	11
5325-00-276-6091	24C	13
5325-00-276-6100	24F	73
5325-00-281-1557	24D	47
5340-00-283-0649	4	31
5340-00-283-0649	6	11
5935-00-283-2950	24D	22
5935-00-283-2950	24G	4
5940-00-283-5280	4	65
5940-00-283-5386	4	21
5905-00-284-6289	24F	37
5920-00-284-6787	24F	51
5910-00-284-8877	20	17
5325-00-290-4925	6	17
5325-00-291-9366	24C	28
5325-00-291-9366	24F	71
5325-00-291-9366	24H	30
5365-00-302-8099	24D	59
5905-00-304-0325	20	56
5905-00-308-6916	24F	26
5120-00-320-4056	24Q	8
5930-00-325-6153	6	63
5905-00-329-6968	9	74
5935-00-329-6968	13	24
5962-00-348-2717	10	29
5962-00-348-2717	12	33

NATIONAL STOCK NUMBER AND PART NUMBER INDEX

STOCK NUMBER	FIG.	ITEM
5962-00-348-2717	13	27
5962-00-348-2717	14	31
5962-00-348-2717	15	28
5962-00-348-2117	16	49
5962-00-348-2717	17	25
5962-00-348-2717	18	27
5962-00-348-2717	19	81
5962-00-348-3504	14	37
5962-00-348-3504	15	26
5962-00-349-6236	10	25
5962-00-349-6236	13	31
5962-00-349-6236	16	46
5962-00-349-6236	18	22
5910-00-350-2912	13	27
5910-00-350-2912	16	2
5905-00-356-4199	26	73
5905-00-401-7432	9	71
5905-00-401-7432	20	58
5905-00-401-8688	26	77
5905-00-402-6917	9	75
5905-00-402-6917	26	31
5905-00-402-6917	26	69
5905-00-403-4450	24H	35
5905-00-403-4454	26	30
5905-00-403-4456	24H	34
5910-00-403-8872	19	14
5910-00-403-8872	26	12
5940-00-405-2175	4	6
5940-00-405-2175	6	43
5940-00-405-2175	24G	15
5940-00-405-2175	24H	32
5905-00-407-5029	24F	49
5905-00-408-8663	20	26
5961-00-410-3985	24I	5
5905-00-419-2836	9	60
5905-00-419-2836	16	28
5910-00-420-7182	14	5
5910-00-420-7182	17	5
5905-00-421-2938	21	53
5905-00-421-2938	26	35
5905-00-421-7938	26	65
5905-00-421-6187	20	62
5905-00-421-6188	26	76
5962-00-430-2641	19	79
5905-00-431-5152	20	51
5905-00-431-5152	21	43
5905-00-431-5159	26	67
5905-00-432-0331	21	38
5935-00-432-6519	4	57
5935-00-432-6519	8	77
5935-00-433-5778	2	10
5905-00-435-6374	12	15
5961-00-439-3749	8	33
6145-00-443-5488	28	8
5905-00-448-9355	24G	16
5970-00-449-4900	8	69
5910-00-454-3538	26	03
5310-00-457-1488	1	3
5310-00-457-1488	6	65
5310-00-457-1488	8	2
5310-00-457-1488	22	2
5945-00-457-8880	24I	6
5130-00-459-4485	24Q	5
5961-00-460-0983	7	22
5961-00-460-0983	19	89
5940-00-460-1733	4	4
5940-00-460-1733	6	4
5905-00-462-5635	21	48
5905-00-464-9805	16	30
5905-00-466-1487	4	72.1
5905-00-466-2897	24F	30
5961-00-468-2765	3	21
5930-00-468-2767	6	49
5905-00-476-8189	24I	16
5905-00-479-9945	9	59
5905-00-479-9945	21	34
5905-00-480-4023	21	49
5905-00-480-4023	26	32
5910-00-481-2717	26	13
5905-00-481-8452	19	46
5905-00-481-8454	13	20
5905-00-482-0618	9	80
5905-00-482-0619	7	15
5905-00-484-7880	9	45
5905-00-484-7880	26	82
5905-00-484-7892	24I	17
5905-00-484-7892	26	32.1
5905-00-485-4545	7	20
4140-00-485-6139	24F	52
5910-00-487-8072	10	8
5910-00-487-8072	18	5
5961-00-488-7385	7	9
5935-00-489-1997	6	1
5905-00-491-1921	9	47
5905-00-491-2764	24D	73
5905-00-491-9072	9	63
5905-00-492-5420	26	58
5935-00-493-0465	24C	18
5935-00-493-0465	24D	12
5961-00-493-5482	9	92
5905-00-494-4622	3	30
5930-00-494-4657	6	56
5905-00-494-5137	3	33
5961-00-494-9005	8	71
5935-00-498-1902	24C	21
5935-00-498-1902	24D	19
5910-00-498-5584	19	12
5910-00-498-5584	26	11
5910-00-513-5385	8	55
5910-00-513-5385	9	3
5910-00-513-5385	10	2
5910-00-513-5385	12	2
5910-00-513-5385	13	4
5910-00-513-5385	14	1
5910-00-513-5385	15	3
5910-00-513-5385	16	1
5910-00-513-5385	17	4
5910-00-513-5385	18	2
5910-00-513-5385	19	2
5910-00-513-5385	20	3
5910-00-513-5385	21	2
5910-00-513-5385	26	9
5310-00-515-8058	6	22
5310-00-515-8058	8	45
5930-00-539-7013	6	67
5930-00-540-8311	6	55
5340-00-543-4394	1	33.1
5340-00-543-4394	24C	39
5340-00-543-4394	24D	58
5340-00-543-4394	24F	70
5340-00-543-4394	24H	19
5310-00-543-5933	4	27
5935-00-549-2646	2	18
5935-00-549-2646	6	62
5310-00-550-5009	1	33
5310-00-550-5009	4	59
5355-00-552-1810	24F	46
5920-00-556-0144	24D	32
5920-00-556-0144	24F	50
5355-00-556-0145	24D	10
5355-00-556-0151	24F	48
5940-00-557-1629	4	43
5940-00-557-1629	240	52
5310-00-559-0070	6	13
5310-00-559-0070	8	17
5310-00-559-0070	24D	53
5310-00-576-0546	6	21
5310-00-576-0546	8	44
5310-00-576-0546	24D	50
5310-00-576-5752	24F	10
5940-00-577-3807	24D	26
5940-00-577-3807	24F	78
5940-00-577-3807	24H	17
5310-00-579-0079	6	6
5310-00-579-0079	8	23
5310-00-579-0079	24D	56
5310-00-579-0079	24F	19
5330-00-579-6861	25	5
5330-00-579-7545	25	11
5330-00-584-0265	4	11

NATIONAL STOCK NUMBER AND PART NUMBER INDEX

STOCK NUMBER	FIG.	ITEM
5330-00-584-0265	25	7
5905-00-594-2640	20	55
5905-00-594-2643	21	52
5310-00-595-7237	25	10
5340-00-598-0597	24F	72
5910-00-600-6889	8	70
5910-00-600-6889	9	6
5910-00-600-6889	10	4
5910-00-600-6889	12	4
5910-00-600-6889	13	3
5910-00-600-6889	14	4
5910-00-600-6889	15	2
5910-00-600-6889	16	10
5910-00-600-6889	17	2
5910-00-600-6889	18	4
5910-00-600-6889	19	4
5910-00-600-6889	21	4
5910-00-600-6889	26	5
5310-00-616-6791	8	39
5310-00-616-6791	19	72
5310-00-616-6791	24E	9
5310-00-616-6822	24F	55
5310-00-619-4376	8	66
5310-00-619-4376	24C	15
5310-00-619-4376	24D	41
5310-00-619-4376	24H	20
5310-00-622-9531	3	24
5310-00-622-9531	6	25
5905-00-628-6782	24F	27
5310-00-631-1294	2	13
5310-00-631-1294	4	55
5310-00-631-1294	6	32
5310-00-631-1294	8	20
5310-00-631-1294	24D	68
5310-00-631-1294	24F	54
5340-00-631-7894	8	89
6145-00-635-5011	24N	7
6145-00-635-5011	24P	7
5310-00-655-7548	4	56
5310-00-660-2971	6	60
5310-00-680-6336	24H	48
5940-00-682-0768	24G	7
5940-00-682-0768	24H	39
5940-00-683-4339	8	67
5365-00-684-5976	6	33
5310-00-685-2631	8	58
5310-00-685-3744	2	3
5940-00-688-6005	24N	6
5940-00-688-6005	24P	6
5935-00-702-4199	24C	27
5935-00-702-4199	24D	36
5935-00-702-4199	24F	75
5935-00-702-4199	24G	14
5935-00-702-4199	24H	14
5940-00-718-1721	9	23
5935-00-72t-0003	24G	12
5935-00-721-0003	24H	31
5340-00-721-6936	8	88
5340-00-721-7653	8	91
5310-00-722-5300	4	13
6240-00-723-3378	6	45
5961-00-724-5970	8	65
5935-00-724-7578	24C	10
5935-00-725-4496	4	28
5310-00-725-4712	1	33.2
5310-00-725-4712	4	32
5310-00-725-4712	240	49
5310-00-725-4712	24F	66
5940-00-725-9498	6	29
5950-00-726-0165	19	26
5340-00-726-9317	24C	17
5935-00-728-4514	24C	24
6145-00-729-9091	24D	23
6145-00-729-9091	24G	6
5950-00-734-3940	13	12
5970-00-740-2971	240	20
5970-00-740-2971	24G	5
5970-00-740-2971	24H	28
5970-00-740-2971	24K	3
5970-00-740-2971	24L	3
5961-00-752-6121	9	94
5961-00-752-6121	10	40
5961-00-752-6121	13	40
5961-00-752-6121	14	38
5961-00-752-6121	19	88
5961-00-752-6121	20	80
5961-00-752-6121	24E	10
5961-00-752-6121	26	53
5905-00-758-5019	2E	78
5S70-00-760-5017	26	20.2
5935-00-762-0312	4	74
5935-00-762-0312	24C	25
5935-00-762-0312	24D	35
5935-00-762-0312	24F	74
5935-00-762-0312	24G	13
5935-00-762-0312	24H	15
5935-00-762-3857	24K	1
5935-00-762-3857	24L	1
5305-00-762-7482	1	23
5940-00-764-9174	24E	12
5940-00-764-9174	24I	28
5970-00-767-0524	28	4
5935-00-768-4232	4	73
5930-00-772-9276	24D	29
5930-00-772-9276	24F	80
5s61-00-777-0925	9	33
5935-00-778-4919	4	30
5510-00-780-a853	9	16
5905-00-786-1728	9	68
5905-00-788-0297	24F	32
5930-00-800-5770	6	50
5340-00-800-7874	8	90
5310-00-805-7632	t	14
5310-00-807-1465	3	23
5310-00-807-1466	24G	11
5310-00-810-1786	8	84
5310-00-810-7785	1	31
5310-00-810-7785	8	28
5310-00-810-7785	24D	44
5310-00-810-7785	24F	41
5310-00-810-7785	24H	23
5310-00-811-6419	3	4
5310-00-811-6419	9	88
5310-00-811-6419	24D	t6
5310-00-811-6419	24F	24
5970-00-812-1360	24C	11
5970-00-812-1360	24D	15
5970-00-812-1360	24F	60
5940-00-813-0698	4	64
5970-00-814-2878	24F	62
5340-00-815-4929	23	5
5310-00-817-9056	24I	20
5970-00-819-9569	24N	4
5970-00-819-9569	24P	4
5935-00-823-0667	25	21
5905-00-828-2416	9	77
5340-00-829-2141	23	4
5910-00-829-3304	24I	4
5961-00-833-3043	21	69
5935-00-833-3548	24C	19
5935-00-833-3548	24D	14
5935-00-833-3548	24F	58
5961-00-837-9288	26	54
5940-00-842-6483	24D	30
5961-00-843-9086	3	35
5961-00-846-9157	3	34
5961-00-846-9157	16	53
5961-00-847-5244	9	96
5961-00-847-5246	9	93
5961-00-847-5246	12	36
5961-00-847-5246	20	79
5910-00-858-5178	20	4
5910-00-858-5184	9	17
5910-00-861-5108	14	7
5910-00-861-5108	16	8
5961-00-879-3091	19	87
5999-00-879-8472	6	8
5999-00-879-8472	24F	59
5999-00-879-8474	4	60
5999-00-879-8474	e	78

NATIONAL STOCK NUMBER AND PART NUMBER INDEX

STOCK NUMBER	FIG.	ITEM
5961-00-883-8906	20	78
5935-00-885-2264	4	2
5935-00-885-2264	6	38
5920-00-887-6514	6	47
5930-00-889-2697	24H	13
5305-00-889-2997	4	9
5305-00-889-2997	24D	43
5305-00-889-2997	24F	40
5305-00-889-2997	24H	37
5305-00-889-2998	3	3
5305-00-889-2998	6	39
5305-00-889-2999	4	3
5305-00-889-2999	24F	23
5305-00-889-3000	1	33.4
5305-00-889-3000	4	52.1
5305-00-889-3000	8	19
5305-00-889-3000	24C	2
5305-00-889-3000	24D	2
5305-00-889-3000	24F	2
5305-00-889-3000	24H	2
5305-00-889-3001	4	17
5305-00-889-3001	8	24.1
5305-00-889-3001	24D	62
5305-00-889-3116	2	7
5305-00-889-3116	6	5
5305-00-889-3116	8	49
5305-00-889-3116	24H	22
5305-00-889-3118	8	38
5305-00-889-3118	19	71
5305-00-889-3118	24I	8
5905-00-891-2478	24F	34
5905-00-891-2478	24H	42
5961-00-892-3361	24I	26
5930-00-892-9393	24D	34
5961-00-893-6761	9	98
5961-00-894-0684	9	97
5961-00-894-0684	16	52
5961-00-898-2138	8	51
5961-00-898-2138	9	21
5905-00-901-7369	240	72
5905-00-904-3650	24D	71
5905-00-904-3741	24F	28
5905-00-904-3742	24H	41
5961-00-905-4815	19	32
5961-00-905-4815	26	25
5961-00-911-6015	16	17
5961-00-911-6015	26	23
5935-00-913-1823	4	16
5340-00-917-8296	24D	28
5340-00-917-8296	24H	49
5961-00-924-6981	19	20
5961-00-924-6981	26	15
5961-00-925-3777	7	12
5961-00-925-3777	9	36
5940-00-926-0040	8	47
5940-00-926-0042	9	25
5961-00-926-0237	16	15
5961-00-926-0237	19	33
5935-00-926-2946	2	11
5940-00-926-8162	25	22
5310-00-929-6395	1	33.5
5310-00-929-6395	4	18
5920-00-930-1212	4	12
5920-00-930-1212	25	8
5910-00-932-4455	10	3
5910-00-932-4455	12	3
5910-00-932-4455	13	1
5910-00-932-4455	14	3
5910-00-932-4455	15	4
5910-00-932-4455	17	1
5910-00-932-4455	18	3
5910-00-932-4455	19	3
5910-00-932-4455	20	1
5910-00-932-4455	21	3
5910-00-932-4455	26	6
5310-00-933-8118	1	32
5310-00-933-8118	24A	3
5310-00-933-8119	1	39
5310-00-933-8119	4	33
5310-00-933-8120	4	23
5910-00-935-3511	6	26
5910-00-935-3511	20	5
5910-00-935-3511	26	8
5905-00-936-3743	24F	29
5935-00-938-0406	25	12
5935-00-949-5243	4	8
5310-00-950-1310	2	9
5310-00-950-1310	6	36
5310-00-950-1310	8	30
5310-00-950-1310	9	89
5961-00-951-8757	1	11
5961-00-951-8757	12	10
5961-00-951-8757	14	15
5961-00-951-8757	16	18
5961-00-951-8757	18	11
5961-00-951-8757	19	30
5961-00-951-8757	20	23
5961-00-951-8757	21	19
5961-00-951-8757	24E	I
5961-00-951-8757	24I	10
5961-00-951-8757	26	22
5935-00-951-8986	24C	20
5935-00-951-8986	24D	17
5305-00-954-3938	24I	19
5935-00-956-2935	24D	18
5305-00-957-2383	2	26
5305-00-957-7815	1	30
5305-00-957-7818	2	12
5305-00-957-7818	4	I
5961-00-958-5391	9	19
5961-00-958-5391	19	22
5325-00-960-2410	6	18
5120-00-963-7661	24C	20
6210-00-978-2546	6	70
6210-00-978-4533	6	68
5310-00-982-5000	24A	5
5940-00-983-6045	4	66
5305-00-984-4979	9	87
5305-00-984-4982	4	69
5305-00-984-4983	24D	75
5305-00-984-4983	24F	18
5305-00-984-4983	24H	44
5305-00-984-4984	2	5
5305-00-984-4988	3	22
5305-00-984-4988	4	54
5305-00-984-4988	4	80
5305-00-984-4988	6	24
5305-00-984-4988	24D	55
5305-00-984-4988	24F	14
5305-00-984-4988	24G	2
5305-00-984-4989	4	52
5305-00-984-6191	24F	65
5305-00-984-6191	24G	10
5305-00-984-6192	8	4
5305-00-984-6193	1	36
5305-00-984-6193	6	12
5305-00-984-6193	8	16
5305-00-984-6193	24F	69
5305-00-984-6194	1	38
5305-00-984-6197	24D	48
5305-00-984-6210	24D	6
5305-00-984-6210	24F	6
5305-00-984-6210	24H	6
5305-00-984-6222	24D	57
5930-00-984-9971	24F	81
5905-00-985-6317	24F	33
5305-00-989-0682	24E	7
5305-00-989-6265	8	6
5305-00-989-7434	8	11
5305-00-989-7434	24C	6
5305-00-989-7434	24D	40
5305-00-990-6444	24C	14
5935-00-992-2035	28	1
5305-00-993-0190	6	35
5305-00-993-0190	8	41
5305-00-993-0190	25	15
5305-00-993-1848	8	10
5950-00-994-6600	26	19
5961-00-995-2310	18	36
5910-00-997-4079	24I	3

NATIONAL STOCK NUMBER AND PART NUMBER INDEX

STOCK NUMBER	FIG.	ITEM
5935-00-997-8026	4	5
5935-00-997-8026	6	42
5910-00-998-4105	9	8
5961-00-998-9324	9	31
5930-00-999-4401	6	54
5920-00-999-7324	4	10
5920-00-999-7324	25	6
5950-01-005-5074	6	27
5962-01-006-0181	10	39
5962-01-006-0181	12	32
5962-01-006-0181	13	28
5962-01-006-0181	14	29
5962-01-006-0181	15	21
5962-01-006-0181	16	51
5962-01-006-0181	17	16
5962-01-006-0181	18	24
5962-01-006-0181	19	83
5962-01-006-0181	20	70
5962-01-006-0181	21	60
5935-01-012-0773	10	24
5935-01-012-0773	12	22
5935-01-012-0773	13	26
5935-01-012-0773	14	27
5935-01-012-0773	15	15
5935-01-012-0773	16	35
5935-01-012-0773	17	14
5935-01-012-0773	18	21
5935-01-012-0773	19	76
5935-01-012-0773	20	69
5935-01-012-0773	21	57
5962-01-012-9178	16	37
5905-01-012-9761	20	34
5950-01-013-5115	19	25
5950-01-013-5115	26	21
5905-01-013-6993	9	58
5905-01-014-4761	21	22
5962-01-015-8537	12	26
5962-01-015-8537	21	58
5962-01-015-8539	16	44
5910-01-017-4944	26	1
5945-01-017-6015	7	8
5130-01-018-2900	24Q	3
5120-01-018-2901	24Q	2
5120-01-018-2902	24Q	4
5120-01-018-2903	24Q	6
5905-01-019-9443	8	37
5962-01-021-0142	12	27
5962-01-021-0142	14	35
5962-01-021-0142	15	16
5962-01-021-0142	17	21
5961-01-021-6003	10	41
5961-01-021-6003	18	37
5905-01-022-3044	26	34
5961-01-023-3309	3	18
5961-01-023-3309	9	34
5962-01-024-5747	10	30
5962-01-024-5747	12	23
5962-01-024-5747	13	29
5962-01-024-5747	14	30
5962-01-024-5747	15	22
5962-01-024-5747	18	32
5962-01-024-5747	20	71
5962-01-024-5747	21	67
5962-01-025-2592	10	27
5962-01-025-2592	15	24
5962-01-025-2592	17	23
5962-01-025-2592	18	30
5935-01-026-0915	10	23
5935-01-026-0915	12	21
5935-01-026-0915	13	25
5935-01-026-0915	14	26
5935-01-026-0915	15	14
5935-01-026-0915	16	34
5935-01-026-0915	17	13
5935-01-026-0915	18	20
5935-01-026-0915	19	77
5935-01-026-0915	20	68
5935-01-026-0915	21	56
5905-01-026-2140	9	81
5905-01-026-2140	20	48
5905-01-026-2140	21	41
5905-01-026-2141	20	59
5910-01-027-2704	26	14
5930-01-027-8176	2	27
5930-01-027-8176	6	66
5920-01-028-5727	6	48
5935-01-028-6750	6	3
5910-01-028-7835	18	6
5910-01-028-7835	20	18
5910-01-028-7835	21	6
5910-01-029-8906	15	6
5962-01-030-6352	26	51
5910-01-030-9211	8	13
5910-01-030-9211	9	14
5961-01-031-6896	26	17
5961-01-035-7155	2	28
5910-01-038-5395	13	7
5910-01-040-7249	4	71
5910-01-042-3759	9	7
5910-01-042-3759	16	5
6930-01-043-2399	24H	16
5910-01-043-5772	13	6
5910-01-043-6892	16	3
5910-01-043-8883	19	13
5910-01-044-5615	13	9
5905-01-047-5172	16	32
5910-01-047-6963	9	9
5910-01-047-6963	19	16
5961-01-048-0460	3	14
5962-01-048-7767	s	91
5962-01-048-7767	21	64
5910-01-049-3153	19	10
5961-01-049-6934	9	22
5962-01-049-7686	15	29
5962-01-051-1348	15	20
5910-01-052-8905	19	19
5935-01-052-9436	3	2
5935-01-056-4606	4	50
5999-01-056-5189	6	9
5910-01-057-6558	21	12
5940-01-057-6689	24B	14
5962-01-058-4418	17	15
5340-01-058-4858	8	83
5999-01-062-7548	S	35
5905-01-064-6738	13	19
5905-01-064-6738	16	23
5961-01-065-2333	9	20
5962-01-073-0693	10	32
5962-01-073-0693	13	32
5962-01-073-0693	17	17
4931-01-073-7428	24F	12
5950-01-081-3792	19	75
5950-01-081-3792	26	50
5950-01-081-3793	24I	25
5820-01-081-6882	25	14
5961-01-081-9573	3	13
5961-01-081-9573	7	5
5961-01-081-9573	9	18
5961-01-081-9573	10	9
5961-01-081-9573	12	7
5961-01-081-9573	13	11
5961-01-081-9573	14	8
5961-01-081-9573	15	7
5961-01-081-9573	16	12
5961-01-081-9513	17	6
5961-01-081-9573	18	8
5961-01-081-9573	19	21
5961-01-081-9573	20	20
5961-01-081-9573	21	15
5961-01-081-9573	26	16
5995-01-085-1707	27	1
7025-01-085-5645	1	9
7025-01-085-5646	1	10
7025-01-085-5647	1	13
7025-01-085-5648	1	16
7025-01-085-5649	1	17
7025-01-085-5650	1	18
7025-01-085-5651	1	19
7025-01-085-5658	1	12
7025-01-085-7290	1	4

NATIONAL STOCK NUMBER AND PART NUMBER INDEX

STOCK NUMBER	FIG.	ITEM
7025-01-085-7291	1	35
7025-01-085-7349	8	82
7025-01-085-7350	1	11
7025-01-086-4775	1	20
7025-01-086-4869	2	23
5950-01-087-9411	26	20
5950-01-088-2713	19	73
5950-01-088-2713	26	48
5955-01-088-2904	19	90
5955-01-088-2904	26	55
7025-01-088-7863	1	15
7025-01-089-7864	1	14
5961-01-090-0102	3	10
5961-01-090-0102	7	6
5961-01-090-0102	14	9
5961-01-090-0102	15	8
5961-01-090-0102	17	7
5961-01-090-0102	19	23
5895-01-090-1922	14	40
5895-01-090-1923	14	39
5905-01-090-4072	9	84
5310-01-090-7190	19	69
5930-01-091-3973	19	67
7025-01-094-8308	6	30
5970-01-095-4617	8	35
5935-01-097-3675	3	7
5935-01-098-1685	4	58
5120-01-108-5115	24Q	7
5120-01-108-5115	24PR	2
5120-01-108-5116	24Q	9
5120-01-108-5117	24Q	10
5120-01-108-5117	24R	3
5970-01-108-5118	24Q	11

FSCM	PART NUMBER	FIG. NO.	ITEM NO.
71218	AC-427	24C	32
71218	AC-427	24D	78
71218	AC-427	24F	84
71218	AC-427	24H	52
71218	AC402	24G	19
88044	AN315-3R	4	22
88044	AN4-4A	1	26
80205	ANT43BZ12	24C	16
80205	AN743BZ12	24F	68
88044	AN743BZ13	4	52.2
88044	AN7431BZ13	24D	42
88044	AN7438Z13	24H	21
88044	AN960-PD10	4	24
88044	AN960-PD6	1	33.6
88044	AN960-PD6	4	19
88044	AN960-P08	1	37
88044	AN960-PD8	4	34
88044	AN960-10	24H	8
88044	AN960-10L	B	8
88044	6N960-10L	24C	8
88044	AN960-10L	24D	8
88044	AN960-10L	24F	8
88044	AN960-3	24I	22
88044	AN960-4	24F	25
88044	AN960-4	24H	25
88044	AN960-4L	24D	46
88044	AN960-4L	24F	43
88044	AN960-416L	8	60
88044	AN960-6	8	24
88044	AN960-6	24H	4
88044	AN960-6L	2	6
88044	AN960-6L	24C	4
88044	AN960-61	240	4
88044	AN960-6L	24F	4
88044	AN960-8	6	22
88044	AN960-8	8	45
88044	AN960-8L	8	5
88044	AN960-8L	24D	51
88044	AN960-8L	24F	67
88044	AN960C8	2	3
88044	AN960P0416	1	27
88044	AN960XC616	8	85
88044	AN960XC8	1	3
88044	AN960XC8	6	65
88044	AN960XC8	8	2
88044	AN960XC8	22	2
71468	CET-C6B	24Q	20
81349	CF13C6800	24H	40
81349	CE71C102K	8	14
81349	CFR02AMB103JM	21	7
81349	CFP02AMBZ23JM	20	17
81349	CFR02AMR333JM	28	3
81349	CFR02AMB473JM	20	8
81349	CFR02AMB473JM	21	5
81349	CFR02AMC472JM	20	9
81349	CMR05C100DODM	13	10
81349	CMR05C100DODM	16	2
81349	CMR05E220JODM	26	13
81349	CMR05E220JODR	19	15
81349	CMR05E220JODR	20	19
81349	CMR05E221GODR	19	11
81349	CMR05E330GODR	19	13
81349	CMR05E560GODM	19	8
81349	CMR05E680GODR	13	9
81349	CMR05F101GODR	16	3
81349	CMR05F271GODR	13	0
81349	CMR05F331GODM	10	7
81349	CMRO5F331GODM	26	4
81349	CMR05F391GODR	13	7
81349	CMR06F102GODR	15	6
81349	CMR06F272GODR	21	12
81349	CMR06F472GODR	8	73
81349	CMR06F472GODR	9	14
81349	CMR06F561GODR	19	19
81349	CMR06F821GODR	19	10
81349	CM06F222GODR	19	18
81349	CPV09A1KE333KM	24I	1
81349	CQR09A1KE104J3P	26	C3
81349	CQR09A1KE123K3M	9	1
81349	CQR09A1KE333K3M	26	1
81349	CQR09A1KF333J3P	19	11
81349	CQR09A1KFH23K3M	9	15
81349	CQR09A1KG104K3M	4	71
81349	CV31A080	19	12
81349	CV31A080	26	11
81349	CV310350	19	14
81349	CV31D350	26	12
8005E	CX-13166/G	24	7
80058	CX-13167/G	24	6
06090	D-121-00	24G	7
06090	D-121-00	24H	39
71468	DDMM-24W7S	24F	56
71468	DDMM50S	24C	18
71468	DDMM50S	24D	12
71468	DD24661	24C	19
71468	DD24661	24D	14
71468	DD24661	24F	58
71468	DEMM9S	24C	20
71468	DEMM9S	24D	17
71468	DE44994	24C	21
71468	DE44994	24C	19
71468	DM53744-6	24F	59
71468	D20419	24D	18
71468	D20420-12	24D	13
71468	D20420-12	24F	57
81349	FHN20G	24D	32
81349	FHN20G	24F	50
81349	FHN55W	6	47
81349	FT01XA01	8	56
81349	F02A250VSA	24F	51
81349	F028250V2A	24D	33
81349	F02B250V3A	6	48
77820	F4698-5	24H	27
81349	JAN1N1204A	8	65
81349	JAN1N3016B8	20	78
81349	JAN1N3029B	26	54

FSCM	PART NUMBER	FIG. NO.	ITEM NO.
81349	JAN1N3051B	3	35
81349	JAN1N4153	241	5
81349	JAN1N4153-1	3	13
81349	JAN1N4153-1	7	5
81349	JAN1N4153-1	9	18
81349	JAN1N4153-1	10	9
81349	JAN1N4153-1	12	7
81349	JAN1N4153-1	13	11
81349	JAN1N4153-1	14	8
81349	JAN1N4153-1	15	7
81349	JAN1N4153-1	16	12
81349	JAN1N4153-1	17	6
81349	JAN1N4153-1	18	8
81349	JAN1N4153-1	19	21
81349	JAN1N4153-1	20	20
81349	JAN1N4153-1	21	15
81349	JAN1N4153-1	26	16
81349	JAN1N4245	19	20
81349	JAN1N4245	26	15
81349	JAN1N4247	9	19
81349	JAN1N4247	19	22
81349	JAN1N4570A	9	99
81349	JAN1N4946	8	51
81349	JAN1N4946	9	21
81349	JAN1N4954	7	22
81349	JAN1N4954	19	89
81349	JAN1N4956	10	41
81349	JAN1N4956	18	37
81349	JAN1N4971	9	92
81349	JAN1N5305	26	17
81349	JAN1N5314	3	14
81349	JAN1N5420	9	22
81349	JAN1N5806	9	20
81349	JAN1N746A	9	93
81349	JAN1N746A	12	36
81349	JAN1N146A	20	79
81349	JAN1N750A	241	26
81349	JAN1N752A	18	36
81349	JAN1N753A	9	94
81349	JAN1N753A	10	40
81349	JAN1N753A	13	40
81349	JAN1N753A	14	38
81349	JAN1N753A	19	88
81349	JAN1N753A	20	80
81349	JAN1N753A	24E	10
81349	JAN1N753A	26	53
81349	JAN1N755A	19	87
81349	JAN1N75TA	21	69
81349	JAN1N758A	9	97
81349	JAN1N758A	16	52
81349	JAN1N759A	3	34
81349	JAN1N759A	16	53
81349	JAN1N823	9	95
81349	JAN1N969B	9	98
81349	JAN1N973B	9	96
81349	JAN2N2222A	7	11
81349	JAN2N2222A	12	10
81349	JAN2N2222A	14	15
81349	JAN2N2222A	16	18
81349	JAN2N2222A	18	11
81349	JAN2N2222A	19	30
81349	JAN2N2222A	20	23
81349	JAN2N2222A	21	19
81349	JAN2N2222A	24E	1
81349	JAN2N2222A	24I	10
81349	JAN2N2222A	26	22
81349	JAN2N2326A	9	33
81349	JAN2N2329	9	37
81349	JAN2N2369A	16	15
81349	JAN2N2369A	19	33
81349	JAN2N2907A	7	12
81349	JAN2N2907A	9	36
81349	JAN2N3251A	16	17
81349	JAN2N3251A	26	23
81349	JAN2N3439	3	20
81349	JAN2N3439	7	10
81349	JANZN3584	3	21
81349	JANZN3635	9	31
81349	JAN2N3716	240	61
81349	JAN2N3739	8	33
81349	JAN2N4931	7	9
81349	JAN2N690	8	71
81349	JAN2N918	19	32
81349	JAN2N918	26	25
81349	JAN4N24	3	18
81349	JAN4N24	9	34
81349	LC33YN2	6	44
81349	LHC82/1GT2	6	68
81349	LHC82/1WT2	6	69
81349	LHC82/1YT2	6	70
81349	LH88/2	6	46
96906	MA91528-1K2B	24H	12
06776	MD-3452G	24D	64
15653	MF7200-06	24C	31
15653	MF7200-06	24D	77
15653	MF7200-06	24F	83
15653	MF7200-06	24G	18
15653	MF7200-06	24H	51
81349	MIL-I-22076-24	24E	2
81349	MILP18177 TY GEE	24E	13
81349	MILP18177 TY GEE	24I	30
81349	MILW1316918AWG9	24F	64
80058	MK-2067/G	24	8
80058	FK-2068/G	24	9
50522	MP22	24D	38
50522	MP22	24F	45
50522	MP22	24H	11
96906	MS14046-2	19	26
96906	MS14046-6	19	25
96906	MS14046-6	26	21
96906	MS14046-8	9	29
96906	MS14048-4	6	27
96906	MS15795-704	1	33
96906	MS15795-704	4	59
96906	MS18130-10	19	27
96906	MS18130-8	13	12
96906	MS18278-1	24Q	21
96906	MS20001P3-630	22	10
96906	MS20426AD4-5	22	7
96906	MS20426AD4-5	22	9
96906	MS20426006-9	23	2
96906	MS20470A04-3	24A	9
96906	MS20470AD4-4	4	78
96906	MS21042-02	24E	8
96906	MS21042-02	24I	9
96906	MS21042-04	3	4
96906	MS21042-04	9	88
96906	MS21042-04	24D	66
96906	MS21042-04	24F	24
96906	MS21042-06	3	23
96906	MS21042-08	24G	11
96906	MS21042-6	8	84
96906	MS21045C04	24A	5
96906	MS21105W32	8	13
96906	MS21209C0215	8	92
96906	MS21209C0415	8	89
96906	MS21209C0815	23	5
96906	MS21209C0820	8	88
96906	MS21209F1-15	8	90
96906	MS21209F1-20	8	91
96906	MS21209F4-15	23	4
96906	MS21266-IN	6	18
96906	MS21318-13	3	11
96906	MS21326-2	6	20
96906	MS21332-3	6	17
96906	MS21919DG4	4	35
96906	MS21919DG4	246	9
96906	MS21919DG5	4	3b
96906	MS21919DG5	24C	29
96906	MS21919DG6	1	33.1
96906	MS21919DG6	24D	39
96906	MS21919DG6	24D	58
96906	MS21919DG6	24F	70
96906	MS21919DG6	24H	19
96906	MS21919DG7	4	31
96906	MS21919DG7	6	11
96906	MS21919DG8	24F	72
96906	MS21919DG9	24C	17
96906	MS24256A20	24C	19
96906	MS24256R20	24C	18

FSCM	PART NUMBER	FIG. NO.	ITEM NO.
96906	MS24693-S27	2	12
96906	MS24693-S27	4	1
96906	MS24693-S3	2	26
96906	MS24693-S4	1	30
96906	MS24693-S7	8	21
96906	MS24693-S7	24D	65
96906	MS25036-101	4	64
96906	MS25036-102	8	22
96906	MS25036-102	24D	27
96906	MS25036-102	24F	79
96906	MS25036-103	4	25
96906	MS25036-103	8	9
96906	MS25036-103	24F	9
96906	MS25036-106	4	65
96906	MS25036-107	24F	76
96906	MS25036-108	4	26
96906	MS25036-111	24F	77
96906	MS25036-112	4	42
96906	MS25036-143	24N	6
96906	MS25036-143	24P	6
96906	MS25036-145	24D	26
96906	MS25036-145	24F	78
96906	MS25036-145	24H	17
96906	MS25036-148	4	45
96906	MS25036-149	4	43
96906	MS25036-149	24D	52
96906	MS25036-156	4	46
96906	MS25082-2	6	60
96906	MS25082-4	8	58
96906	MS25082-6	4	13
96906	MS25306-232	24D	29
96906	MS25306-232	24F	80
96906	MS25307-232	24F	81
96906	MS25308-232	24D	34
96906	MS27183-4	2	9
96906	MS27183-4	6	36
96906	MS27183-4	8	30
96906	MS27183-4	9	89
96906	MS27734-22	6	57
96906	MS27734-31	2	27
96906	MS27734-31	6	66
96906	MS27735-22	6	63
96906	MS27735-23	6	55
96906	MS27735-31	2	22
96906	MS28775-012	4	11
96906	MS28775-012	25	7
96906	MS2R775-236	25	5
96906	MS28775-238	25	11
96906	MS3124E22-55S	4	28
96906	MS3126F-22-55P	24C	10
96906	MS3181-12N	4	16
96906	MS3181-22N	4	30
96906	MS3193A20-20A	4	29
96906	MS3212-31L	25	22.1
96906	MS3367-5-9	26	2
96906	MS35206-202	1	23
96906	MS35206-203	8	38
96906	MS35206-203	19	71
96906	MS35206203	24I	8
96906	MS35206-205	24E	7
96906	MS35206-207	24I	19
96906	MS35206-213	2	7
96906	MS35206-213	6	5
96906	MS35206-213	8	49
96906	MS35206-213	24H	22
96906	MS35206-214	6	35
96906	MS35206-214	8	41
96906	MS35206-214	25	15
96906	MS35206-215	4	9
96906	MS35206-215	24D	43
96906	MS35206-215	24F	40
96906	MS35206-215	24H	37
96906	MS35206-216	3	3
96906	MS35206-216	6	39
96906	MS35206-217	4	3
96906	MS35206-217	24F	23
96906	MS35206-222	9	87
96906	MS35206-225	4	69
96906	MS35206-226	24D	75
96906	MS35206-226	24F	18
96906	MS35206-226	24H	44
96906	MS35206-227	2	5
96906	MS35206-228	3	22
96906	MS35206-228	4	54
96906	MS35206-228	4	80
96906	MS35206-228	6	24
96906	MS35206-228	24D	55
96906	MS35206-228	24F	L4
96906	MS35206-228	24G	2
96906	MS35206-229	4	52
96906	MS35206-230	1	33.4
96906	MS35206-230	4	52.1
96906	MS35206-230	8	19
96906	MS35206-230	24C	2
96906	MS35206-230	24D	2
96906	MS35206-230	24F	2
96906	MS35206-230	24H	2
96906	MS35206-231	4	17
96906	MS35206-231	8	24.1
96906	MS35206-231	24C	62
96906	MS35206-235	24D	57
96906	MS35206-243	24F	65
96906	MS35206-243	24G	10
96906	MS35206-244	8	4
96906	MS35206-245	1	36
96906	MS35206-245	6	12
96906	MS35206-245	8	16
96906	MS35206-245	24F	69
96906	MS35206-246	1	38
96906	MS35206-249	24D	48
96906	MS35206-263	24D	6
96906	MS35206-263	24F	6
96906	MS35206-263	24H	6
96906	MS35207-261	24C	1I
96906	MS35207-262	8	6
96906	MS35207-263	8	11
96906	MS35207-263	24C	6
96906	MS35207-263	24D	40
96906	MS35207-265	8	10
96906	MS35333-36	6	40
96906	MS35333-37	6	6
96906	MS35333-37	8	23
96906	MS35333-37	24D	56
96906	MS35333-37	24F	19
96906	MS35333-38	6	13
96906	MS35333-38	8	17
96906	MS35333-38	24D	53
96906	MS535333-39	24F	10
96906	MS35333-42	25	10
96906	MS35333-73	4	27
96906	MS35333-76	4	14
96906	MS35338-100	8	7
96906	MS35338-100	24C	7
96906	MS35338-100	24D	7
96906	MS35338-100	24F	?
96906	MS35338-100	24H	7
96906	MS35338-101	8	59
96906	MS35338-135	1	32
96906	MS35338-135	24A	3
96906	MS35338-136	1	33.5
96906	MS35338-136	4	18
96906	HS35338-137	1	39
96906	MS35338-137	4	33
96906	MS35338-138	4	23
96906	MS35338-96	24I	21
96906	MS35338-97	2	8
96906	MS35338-97	8	29
96906	MS35338-97	24D	45
96906	MS35338-97	24F	42
96906	MS35338-97	24H	24
96906	MS35338-97	25	16
96906	MS35338-98	8	21
96906	MS35338-98	24D	69
96906	MS35338-98	24F	15
96906	MS35338-98	24H	45
96906	MS35338-99	6	21
96906	MS35338-99	8	44
96906	MS35338-99	24D	50
96906	MS35430-5	6	61
96906	MS35431-7	8	67

FSCM	PART NUMBER	FIG. NO.	ITEM NO.	FSCM	PART NUMBER	FIG. NO.	ITEM NO.
96906	MS35431-9	8	61	81349	M38510/10102BIC	12	34
96906	MS35489-11	24C	28	81349	M38510/10102BIC	18	34
96906	MS35489-11	24F	71	81349	M38510/10102BIC	20	72
96906	MS35489-11	24H	30	81349	M38510/10102BIC	21	61
96906	MS35489-14	24F	73	81349	M38510/10301BGC	10	37
96906	MS35489-17	24D	47	81349	M38510/10301BGC	19	82
96906	MS35489-19	24C	13	81349	M38510/10301BGC	20	74
96906	MS35489-6	24G	8	81349	M38510/10304BGC	9	91
96906	MS39087-3	24C	5	81349	M38510/10304BGC	21	64
96906	MS39087-3	24D	5	81349	M38510/15201BJB	15	29
96906	MS39087-3	24F	5	81349	M38510/15206BEB	15	20
96906	MS39087-3	24H	5	81349	M38510/15901BEB	10	32
96906	MS51957-15	24A	2	81349	M38510/15901BEB	13	32
96906	MS77069-3	24C	26	81349	M38510/15901BEB	17	17
81349	MS9003/01-2967	12	6	81349	M38510/15902BEB	17	15
96906	MS90538-20	26	19	81349	M38510/30005BCB	26	51
96906	MS91528-1D2B	24F	48	81349	M38527/2-08D	12	35
96906	MS91528-1K1B	24F	46	81349	M38527/2-08D	18	5
96906	MS91528-1K2B	24D	10	81349	M38527/2-08D	20	73
50522	MV5023	24D	37	81349	M38527/2-08D	21	62
50522	MV5023	24F	44	81349	M38527/4-03D	9	35
50522	NV5023	24H	10	81349	M38527/9-06S	8	35
80058	MX-10218/G	24	4	81349	M38527/9-10T	8	69
80058	MX-10222/G	24	2	81349	M38527/9-11T	8	64
80058	MX-10223/G	24	1	81349	M39003/01-2242	14	5
80058	MX-10225/G	24	3	81349	M39003/01-2242	11	5
80058	MX-10259/G	24	5	81349	M39003/01-2244	10	8
80058	MX-10260/G	24	10	81349	M39003/01-2244	18	5
31413	M1001-01630	24B	8	81349	M39003/01-2254	24I	4
81349	M22520/1-01	24Q	12	81349	M39003/01-2257	20	7
81349	M22520/1-02	24Q	13	81349	M39003/01-2261	20	4
81349	M22520/2-01	24Q	14	81349	M39003/01-2265	9	16
81349	M22520/2-08	24Q	15	81349	M39003/01-2271	24I	3
81349	M23053/5-103-9	24N	4	81349	M39003/01-2283	7	4
81349	M23053/5-103-9	24P	4	81349	M39003/01-2283	9	11
81349	M23053/5-104-9	24F	63	81349	M39003/01-2283	10	5
81349	M23053/5-105-9	24N	5	81349	M39003/01-2283	13	5
81349	M23053/5-105-9	24P	5	81349	M39003/01-2283	15	5
81349	M23053/5-106-9	24F	62	81349	M39003/01-2283	18	7
81349	M23053/5-107-9	24D	20	81349	M39003/01-2283	26	7
81349	M23053/5-107-9	24G	5	81349	M39003/01-2286	6	26
81349	M23053/5-107-9	24H	28	81349	M39003/01-2286	20	5
81349	M23053/5-107-9	24K	3	81349	M39003/01-2286	26	8
81349	M23053/5-107-9	24L	3	81349	M39003/01-2289	10	3
81349	M23053/5-108-9	24C	22	81349	M39003/01-2289	12	3
81349	M23053/5-108-9	24F	13	81349	M39003/01-2289	13	1
81349	M23053/5-108-9	24K	2	81349	M39003/01-2289	14	3
81349	M23053/5-108-9	24L	2	81349	M39003/01-2289	15	4
81349	M23053/5-109-9	24C	11	81349	M39003/01-2289	17	1
81349	M23053/5-109-9	24D	15	81349	M39003/01-2289	18	3
81349	M23053/5-109-9	24F	60	81349	M39003/01-2289	19	3
81349	M23053/5-206-C	28	4	81349	M39003/01-2289	20	1
81349	M24308/2-5	6	1	81349	M39003/01-2289	21	3
81349	M24308/20-5	6	3	81349	M39003/01-2289	26	6
81349	M24308/24-31	3	1	81349	M39003/01-2295	14	7
81349	M24308/24-35	3	7	81349	M39003/01-2295	16	8
81349	M24308/26-1	3	2	81349	M39003/01-2301	9	17
81349	M24308/26-2	4	58	81349	M39003/01-2312	9	8
77820	M3621-4	24H	26	81349	M39003/01-2356	16	7
81349	M3786113-0229	24F	47	81349	M39003/01-2356	20	16
81349	M38510/00805BCB	12	26	81349	M39003/01-2356	21	9
81349	M38510/00805BCB	21	58	81349	M39003/01-2967	20	12
81349	M38510/00903BCB	10	36	81349	M39003/01-2967	21	11
81349	M38510100903BCB	13	30	81349	M39003/01-2974	7	3
81349	M38510/00903BCB	18	29	81349	M39003/01-2974	9	5
81349	M38510/101203BEB	10	29	81349	M39003/01-2974	20	6
81349	M38510/01203BEB	12	33	81349	M39003/01-2974	21	8
81349	M38510/01203BEB	13	27	81349	M39003/01-2591	9	10
81349	M38510/01203BEB	14	31	81349	M39003/01-2991	10	1
81349	M38510/01203BEB	15	28	81349	M39003/01-2991	12	1
81349	M38510/01203BEB	16	49	81349	M39003/01-2991	13	2
81349	M38510/01203BEB	17	25	81349	M39003/01-2991	14	2
81349	M38510/01203BEB	18	27	81349	M39003/01-2991	15	1
81349	M38510/01203BEB	19	81	81349	M39003/01-2991	17	3
81349	M38510/01402 BEB	14	37	81349	M39003/01-2991	18	1
81349	M38510/01402BEB	15	26	81349	M39003/01-2991	19	1
81349	M38510/01404BEB	16	37	81349	M39003/01-2991	20	2
81349	M38510/01405BEB	19	79	81349	M39003/01-2991	21	1
R1349	M38510/05504BEB	16	44	81349	M39003/01-3000	7	2
81349	M38510/10101BGC	9	90	81349	M39003/01-3085	12	5

FSCM	PART NUMBER	FIG. NO.	ITEM NO.	FSCM	PART NUMBER	FIG. NO.	ITEM NO.
81349	M39012/21-0003	24G	12	81349	M39024/18-05	12	22
81349	M39012/21-0003	24H	31	81349	M39024/18-05	13	26
81349	M39012/24-0002	4	5	81349	M39024/18-05	14	27
81349	M39012/24-0002	6	42	81349	M39024/18-05	15	15
81349	M39012/25-0006	4	2	81349	M39024/18-05	16	35
81349	M39012/25-0006	6	38	81349	M39024/18-05	17	14
81349	M39014/01-1222	26	14	81349	M39024/18-05	18	21
81349	M39014/01-1237	18	6	81349	M39024/18-05	19	76
81349	M39014/01-1231	20	18	81349	M39024/18-05	20	69
81349	M39014/01-1237	21	6	81349	M39024/18-05	21	57
81349	M39014/02-0391	24I	2	81349	M39024/18-06	10	23
81349	M39014/02-1218	8	55	81349	M39024/18-06	12	21
81349	M39014/02-1218	9	3	81349	M39024/18-06	13	25
81349	M39014/02-1218	10	2	81349	M39024/18-06	14	26
81349	M39014/02-1218	12	2	81349	M39024/18-06	15	14
81349	M39014/02-1218	13	4	81349	M39024/18-06	16	34
81349	M39014/02-1218	14	1	81349	M39024/18-06	17	13
81349	M39014/02-1218	15	3	81349	M39024/18-06	18	20
81349	M39014/02-1218	16	1	81349	M39024/18-06	19	77
81349	M39014/02-1218	17	4	81349	M39024/18-06	20	68
81349	M39014/02-1218	18	2	81349	M39024/18-06	21	56
81349	M39014/02-1218	19	2	81349	M45938/6-1C	19	69
81349	M39014/02-1218	20	3	81349	M5423/02-01	6	67
81349	M39014/02-1218	21	2	81349	M5423/07-01	6	50
81349	M39014/02-1218	26	9	81349	M55155/30-9	9	25
81349	M39014/02-1220	26	10	81349	M55155/31-6	9	24
81349	M39014/02-1225	9	9	81349	M641/10-1	2	10
81349	M39014/02-1225	19	16	81349	M641/9-3	2	11
81349	M39014/02-1230	8	70	81349	M81822/3-A22-9	28	5
81349	M39014/02-1230	9	6	81349	M83421/01-3142H	21	13
81349	M39014/02-1230	10	4	81349	M83421/01-3172M	20	11
81349	M39014/02-1230	12	4	81349	M83421/01-3172M	21	10
81349	M39014/02-1230	13	3	81349	M83421/01-5270M	4	67
81349	M39014/02-1230	14	4	81349	M8805/23-001	6	54
81349	M39014/02-1230	15	2	81349	M8805/25-001	6	49
81349	M39014/02-1230	16	10	80205	NAS1523-6B	1	8
81349	M39014/02-1230	17	2	80205	NAS1523-6B	8	86
81349	M39014/02-1230	18	4	80205	NAS1598C08	22	4
81349	M39014/02-1230	19	4	80205	NAS1635-06LE7	26	20.1
81349	M39014/02-1230	21	4	80205	NAS1635-3-38	8	81
81349	M39014/02-1230	26	5	80205	NAS1745-14	4	4
81349	M39014/02-1236	20	14	80205	NAS1745-14	6	4
81349	M39014/02-1238	13	8	80205	NAS1786B06-12	6	31
81349	M39014/02-1322	10	6	80205	NAS1786B06-16	24D	60
81349	M39014/02-1329	19	7	80205	NAS1786B06-16	24F	16
81349	M39014/02-1340	14	6	80205	NAS1788-2-4C	24I	29
81349	M39014/02-1342	6	58	80205	NAS1788-3-6C	10	12
81349	M39014/02-1343	16	11	80205	NA51788-3-6C	12	9
81349	M39014/02-1343	19	6	80205	NAS1788-3-6C	13	14
81349	M39014/02-1343	21	14	80205	NAS1788-3-6C	14	13
81349	M39014/02-1347	16	9	80205	NAS1788-3-6C	15	11
81349	M39014/02-1347	19	5	80205	NAS1788-3-6C	16	14
81349	M39014/02-1347	20	10	80205	NAS1788-3-6C	17	10
81349	M39014/02-1347	20	13	80205	NAS1788-3-6C	18	10
81349	M39014/02-1354	16	4	80205	NAS1788-3-6C	19	29
81349	M39014/02-1403	20	15	80205	NAS1788-3-6C	20	22
81349	M39014/02-1405	16	1.1	80205	NAS1788-3-6C	21	18
81349	M39014/02-1407	9	7	80205	NAS1788-3-6C	24B	1
81349	M39014/02-1407	16	5	80205	NAS43DD1-32	24D	59
81349	M39014/02-1417	9	13	80205	NAS43DD1-7	6	33
81349	M39014/02-1417	19	9	80205	NAS43DD3-14	24A	4
81349	M39016/15-006M	7	8	80205	NAS549-L4	25	18
81349	M39018/01-0668	9	12	80205	NAS549GL6	26	20.2
81349	M39018/01-0748	9	4	80205	NAS620-2	8	39
81349	M39022/02-1214	4	70	80205	NAS620-2	19	72
81349	M39022/02-1285	9	2	80205	NAS620-2	24E	9
81349	M39024/10-01	24C	24	80205	NAS620-4	24H	48
81349	M39024/10-02	24C	27	88044	NAS620-4	2	24
81349	M39024/10-02	24D	36	88044	NAS620-4	3	5
81349	M39024/10-02	24F	75	88044	NAS620-4	6	41
81349	M39024/10-02	24G	14	88044	NAS620-4	8	42
81349	M39024/10-02	24H	14	88044	NAS620-4	25	17
81349	M39024/10-03	4	74	80205	NAS620-6	3	24
81349	M39024/10-03	24C	25	80205	NAS620-6	6	25
81349	M39024/10-03	24D	35	80205	NAS620-6L	24F	55
81349	M39024/10-03	24F	74	80205	NAS620-8	6	14
81349	M39024/10-03	24G	13	80205	NAS620A6	4	56
81349	M39024/10-03	24H	15	80205	NAS620C4	24A	6
81349	M39024/10-08	4	73	80205	NAS671-10	8	66
81349	M39024/18-05	10	24	80205	NAS671-10	24C	15

FSCM	PART NUMBER	FIG. NO.	ITEM NO.	FSCM	PART NUMBER	FIG. NO.	ITEM NO.
80205	NAS671-10	24D	41	81349	RCR07G152JS	20	37
80205	NAS671-10	24H	20	81349	RCR07G152JS	24I	12
80205	NAS671-2	241	20	81349	RCR07G152JS	26	45
80205	NAS671-4	1	31	81349	RCR07G153JS	7	17
80205	NAS671-4	8	28	81349	RCR07G153JS	9	81.1
80205	NAS671-4	24D	44	81349	RCR07G153JS	10	21
80205	NAS671-4	24F	41	81349	RCR07G153JS	12	19
80205	NAS671-4	24H	23	81349	RCR07G153JS	13	16
80205	NAS671-6	2	13	81349	RCR07G153JS	14	19
80205	NAS671-6	4	55	81349	RCR07G153JS	15	13
80205	NAS671-6	6	32	81349	RCR07G153JS	17	12
80205	NAS671-6	8	20	81349	RCR07G153JS	18	14
80205	NAS671-6	24D	68	81349	RCR07G153JS	20	54
80205	NAS671-6	24F	54	81349	RCR07G153JS	26	47.1
80205	NAS671-8	1	33.2	81349	RCR07G154JS	9	62
80205	NAS671-8	4	32	81349	RCR07G154JS	10	16
80205	NAS671-8	24D	49	81349	RCR07G181JS	26	38
80205	NAS671-8	24F	66	81349	RCR07G182JS	21	29
71590	PA-4000	24H	13	81349	RCR07G182JS	26	47
25244	PA4001	24D	11	81349	RCR07G220JS	16	24
71590	PA4003	24D	25	81349	RCR07G220JS	19	55
92702	PBS2107FL	24F	52	81349	RCR07G220JS	20	47
81349	PB01FA01	24D	30	81349	RCR07G220JS	21	40
81349	PB01FA02	24D	31	81349	RCR07G221JS	9	85
01961	PE61571	24I	25	81349	RCR07G221JS	16	31
81349	PJ-0518	24N	1	81349	RCR07G221JS	19	35
81349	PJ-068	24P	1	81349	RCR07G221JS	20	44
81349	RBR55L56R20BM	9	84	81349	RCR07G221JS	21	54
81349	PCR07G100JS	B	62	81349	RCR07G221JS	24E	4
81349	RCR07G100JS	10	17	81349	RCR07G221JS	24F	21
81349	RCR07G100JS	12	16	81345	RCR07G221JS	26	33
81349	RCR07G100JS	19	54	81349	RCR07G222JS	S	E2
81349	RCR07G101JS	19	37	8134S	RCR07G222JS	12	13
81349	RCR07G101JS	24I	15	81349	RCR07G222JS	14	23
81349	RCR07G101JS	26	42	81349	RCR07G222JS	19	50
81349	RCR07G102JS	3	27	81349	RCR07G222JS	20	28
81349	RCR07G102JS	7	14	81349	RCR07G222JS	21	39
81349	RCR07G102JS	9	46	81349	RCR07G222JS	26	44
81349	RCR07G102JS	10	14	81349	RCR07G223JS	9	65
81349	RCR07G102JS	12	12	81349	RCR07G223JS	13	17
81349	RCR07G102JS	13	15	81349	RCR07G223JS	14	20
81349	RCR07G102JS	14	17	81349	RCR07G223JS	18	15
81349	RCR07G102JS	15	12	81349	RCR07G223JS	19	58
81349	RCR07G102JS	16	19	81349	RCR07G224JS	20	53
81349	RCR07G102JS	17	11	81349	RCR07G226JS	16	25
81349	RCR07G102JS	18	13	81349	RCR07G226JS	20	66
81349	RCR07G102JS	19	34	8134S	RCR07G270JS	9	38
81349	RCR07G102JS	20	27	81349	RCR07G270JS	19	39
81349	RCR07G102JS	21	21	81349	RCR07G271JS	16	20
81349	RCR07G102JS	24I	14	81349	RCR07G271JS	19	42
81349	RCR07G102JS	26	29	81349	RCR07G272JS	9	64
81349	RCR07G103JS	7	18	81349	RCR07G272JS	14	22
81349	RCR07G103JS	10	15	81349	RCR07G272JS	16	26
81349	RCR07G103JS	12	18	81349	RCR07G272JS	19	45
81349	RCR07G103JS	14	18	81349	RCR07G273JS	9	61
81349	RCR07G103JS	18	19	81349	RCR07G273JS	20	43
81349	RCR07G103JS	20	36	81349	RCR07G273JS	21	44
81349	RCR07G103JS	26	39	81349	RCR07G274JS	3	31
81349	RCR07G104JS	7	19	81349	RCR07G331JS	7	21
81349	RCR07G104JS	10	18	81349	RCR07G331JS	19	43
81349	RCR07G104JS	13	22	81349	RCR07G331JS	20	60
81349	RCR07G104JS	19	53	81349	RCR07G332JS	9	57
81349	RCR07G104JS	21	47	8134S	RCR07G332JS	12	14
81349	RCR07G105JS	26	26	81349	RCR07G332JS	18	16
81349	RCR07G121JS	9	67	81349	RCR07G332JS	19	51
81349	RCR07G121JS	19	36	81349	RCR07G332JS	20	46
81349	RCR07G121JS	21	36	81349	RCR07G332JS	24I	13
81349	RCR07G122JS	19	40	81349	RCR07G332JS	26	37
81349	RCR07G122JS	20	42	81349	RCR07G333JS	9	41
81349	RCR07G123JS	13	18	81349	RCR07G333JS	20	40
81349	RCR07G123JS	19	44	81349	RCR07G334JS	7	20
81349	RCR07G123JS	20	41	81349	RCR07G390JS	19	60
81349	RCR07G126JS	16	30	81349	RCR07G391JS	14	21
81349	RCR07G150JS	19	63	81349	RCR07G391JS	18	17
81349	RCR07G151JS	20	33	81349	RCR07G391JS	19	38
81349	RCR07G151JS	24I	11	81349	RCR07G391JS	24D	70
81349	RCR07G151JS	26	46	81349	RCR07G392JS	3	26
81349	RCR07G152JS	9	40	81349	RCR07G392JS	10	19
81349	RCR07G152JS	18	18	81349	RCR07G392JS	19	66
81349	RCR07G152JS	19	49	81349	RCR07G392JS	20	45

FSCM	PART NUMBER	FIG. NO.	ITEM NO.	FSCM	PART NUMBER	FIG. NO.	ITEM NO.
81349	RCR07G392JS	26	27	81349	RJR24FW503P	9	58
81349	RCR07G393JS	20	39	81349	RJR26FW103P	16	32
81349	RCR07G393JS	21	42	81349	RJR4FW103P	20	35
81349	RCR07G470JS	8	74	81349	RLR20C91R0GR	13	19
81349	RCR07G470JS	9	39	81349	RLR20C91R0GR	16	23
81349	RCR07G470JS	20	67	81349	RNC55H1000FS	9	77
81349	RCR07G471JS	9	43	81349	RNC55H1001FS	9	70
81349	RCR07G471JS	10	20	81349	RNC55H1001FS	26	28.1
81349	RCR07G471JS	16	22	81349	RNC55H1002FS	9	56
81349	RCR07G471JS	19	48	81349	RNC55H1002FS	20	49
81349	RCR07G471JS	20	32	81349	RNC55H1002FS	21	33
81349	RCR07G471JS	21	30	81349	RNC5SH1003FS	9	71
81349	RCR70G471JS	26	43	81349	RNC55H1003FS	20	58
81349	RCR07G472JS	1	16	81349	RNC55H1051FS	26	80
81349	RCR07G472JS	9	44	81349	RNC55H1151FS	20	64
P1349	RCR07G472JS	12	20	81349	RNC55H1211FS	26	81
81349	RCR07G472JS	14	24	81349	RNC55H1211FS	21	49
81349	RCR07G472JS	16	29	81349	RNC55H1211FS	26	32
81349	RCR07G472JS	19	52	81349	RNC55H1212FS	20	61
81349	RCR07G472JS	20	31	81349	RNC55H1271FS	9	45
81349	RCR07G472JS	21	28	81349	RNC55H1271FS	26	82
81349	RCR07G472JS	24I	24	81349	RNC55H1332FS	9	76
81349	RCR07G472JS	26	36	81349	RNC55H1332FS	21	46
81349	RCR07G473JS	3	32	81349	RNC55H1472FS	9	59
81349	RCR07G474JS	19	56.1	81349	RNC55H1472FS	21	36
81349	RCR07G5R6JS	19	62	81349	RNC55H1473FS	9	60
81349	RCR07G560JS	9	55	81349	RNC55H1473FS	16	28
81349	RCR07G560JS	19	59	81349	RNC55H1960FS	19	46
81349	RCR07G560JS	21	35	81349	RNC55H1962FS	9	69
91349	RCR07G560JS	26	28	81349	RNC55H2050FS	24I	17
81349	RCR07G561JS	6	28	81349	RNC55H2050FS	26	32.1
81349	RCP07GS61JS	19	41	81349	RNC55H2150FS	26	41
81349	RCR07G562JS	9	48	81349	RNC55H2151FS	13	20
81349	RCR07GS62JS	12	17	81349	RNC55H2490FS	20	38
81349	RCR07G562JS	16	27	81349	RNC55H2612FS	20	51
81349	PCR07G562JS	19	57	81349	RNC55H2612FS	21	43
81349	RCR07G562JS	21	23	01121	RNC55H3010FS	24G	16
81349	RCR07G563JS	20	63	81349	RNC55H3012FS	9	72
81349	RCR07G621JS	2	17	81349	RNC55H3162FS	21	31
81349	RCR07G680JS	20	30	81349	RNC55H3320FS	26	58
81349	RCR07G680JS	26	40.1	81349	RNC55H3322FS	9	54
81349	RCR07G681JS	9	79	81349	RNC55H3480FS	26	59
81349	RCR07G682JS	10	22	81349	RNC55H3650FS	26	60
81349	RCR07G684JS	20	57.1	81349	RNC55H3830FS	20	29
81349	RCR07G820JS	19	61	81349	RNC55H3830FS	26	61
81349	PCR07G821JS	19	47	81349	RNC55H3832FS	20	50
81349	RCR07G821JS	20	57	81349	RNC55H3832FS	21	32
81349	RCR07GB21JS	21	37	81349	RNC55H4020FS	21	27
81349	RCR07G823JS	12	15	81349	RNC55H4020FS	26	62
81349	RCP20G3R9JM	9	52	81349	RNC55H4022FS	21	48
81349	RCR20G472JM	9	50	81349	RNC55H4220FS	13	21
81349	RCP32G104JS	4	72	81349	RNC55H4220FS	26	63
81349	RCR32G161JS	3	33	81349	RNC55H4420FS	26	64
81349	RCR32G182JS	3	30	81349	RNC55H46R4FS	26	34
81349	RCR370221JS	3	29	81349	RNC55H4640FS	21	53
81349	RCR32G391JS	3	28	81349	RNC55H4640FS	26	35
81349	RER65F6810R	8	37	81349	RNC55H4640FS	26	65
81349	RER70FR511P	24F	27	81349	RNC55H4642FS	20	52
81349	RER70FR750P	24F	26	81349	RNC55H4642FS	21	45
81349	RER70F10R0P	24F	30	81349	RNC55H4870FS	26	66
81349	RER70F1001P	24F	35	81349	RNC55H5110FS	26	61
81349	RER70F1001P	24H	46	81349	RNC55H5111FS	13	23
81349	RER70F2R15P	24F	31	81349	RNC55H5111FS	16	21.1
81349	RER70F2151P	24H	47	81349	RNC55H5111FS	16	21.2
81349	RERT0F3161P	24F	37	81349	RNC55H5111FS	19	65
81349	RER70F4R64P	24F	22	81349	RNC55H5111ES	20	65
81349	RER70F4221M	8	40	81349	RNC55H5111FS	24E	3
81349	REP70F4641H	8	50	81349	RNC55H5360FS	26	68
80058	RG-58/U	24H	29	81349	RNC55H56R2FS	24H	35
80058	PG-62A/U	24K	4	81349	RNC55H5620FS	9	75
80058	RG-62A/U	24L	4	81349	RNC55H5620FS	26	31
81349	RJR24FW101P	9	81	81349	RNC55H5620FS	26	69
81349	RJR24FW101P	20	68	81349	RNC55H5900FS	26	70
81349	RJR24FW101P	21	41	81349	RNC55H6190FS	26	71
81349	RJR24FW102P	21	52	81349	RNC55H64R9FS	24I	16
81349	RJR24FW103P	21	22	81349	RNC55H6490FS	21	24
81349	RJR24FW105P	20	55	81349	RNC55H6490FS	26	72
81349	PJP24FW202M	9	78	81349	RNC55H6491FS	9	73
81349	RJR24FW203P	20	59	81349	RNC55H6810FS	26	73
81349	RJR24FW502P	20	34	81349	RNC55H6811FS	20	62

FSCM	PART NUMBER	FIG. NO.	ITEM NO.	FSCM	PART NUMBER	FIG. NO.	ITEM NO.
81349	RNC55H7150FS	21	26	80063	SM-A-942002	10	27
81349	RNC55H7150FS	26	74	80063	SM-A-942002	15	24
81349	RNC55H7500FS	21	50	80063	SM-A-942002	17	23
81349	RNC55H7500FS	26	75	80063	SM-A-942002	18	30
81349	RNC55H7870FS	26	76	80063	SN-A-942003	12	31
81349	RNC55H82R5FS	26	30	80063	SM-A-942003	13	34
81349	RNC55H8250FS	26	77	80063	SM-A-942003	17	18
81349	RNC55H8251FS	9	68	80063	SM-A-942003	18	33
81349	RNC55H8660FS	26	78	80063	SM-A-942004	12	27
81349	RNC55H8661FS	21	38	80063	SM-A-942004	14	35
81349	RNC55H90R9FS	24H	34	80063	SM-A-942004	15	16
81349	RNC55H9530FS	21	25	80063	SM-A-942004	17	21
81349	PNC55H9530FS	26	79	80063	SM-A-942005	10	31
81349	RNC65H3833FS	20	56	80063	SM-A-942005	12	30
81349	RNC65J1000BS	24F	36	80063	SM-A-942006	12	24
81349	RNC65J1000BS	241	23	80063	SM-A-942006	13	33
81349	RNC65J3324DS	19	56	80063	SM-A-942006	14	33
81349	RWR74S10R0FM	24D	73	80063	SM-A-942006	15	23
81349	RWR74S2151FM	9	51	80063	SM-A-942006	18	28
81349	RWR74S4641FM	9	53	80063	SM-A-942006	20	77
81349	RWR74S5111FR	9	63	80063	SM-A-942006	21	68
81349	RWR78S2612FM	8	46	80063	SM-A-942007	10	33
81349	RWR80S61R9FR	26	40	80063	SM-A-942007	12	29
81349	RWR81S1210FR	9	80	80063	SM-A-942007	13	36
81349	RWR81S1330FR	19	64	80063	SM-A-942007	14	34
81349	RWR81S3570FR	9	47	80063	SM-A-942007	15	27
81349	RWR81S42R2FR	9	83	80063	SM-A-942007	16	47
81349	RWR81S46R4FR	9	74	80063	SM-A-942007	17	19
81349	RWR81S46P4FR	13	24	80063	SM-A-942007	18	23
81349	RWR81S56R2FR	20	26	80063	SM-A-942007	1S	84
81349	RWR81S82R5FR	7	15	80063	SM-A-942007	21	65
81349	RWR89SR215FM	9	42	80063	SM-A-942008	15	19
81349	RWR89S10R0PR	4	72.1	80063	SM-A-942008	17	20
81349	RWR89S3160FR	9	66	80063	SM-A-942008	21	66
81349	RWR89S3571FM	9	49	80063	SM-A-942013	10	26
81349	RWR89561R9FR	20	25	80063	SM-A-942013	13	35
81349	RW79U10R0F	24F	33	80063	SM-A-942013	14	2f
81349	RW79U1001F	24D	72	80063	SM-A-942013	15	18
81349	RW79U1210F	24F	29	80063	SM-A-942013	16	36
81349	RW79U3160F	24F	34	80063	SM-A-942013	17	27
81349	RW79U3160F	24H	42	80063	SM-A-942013	19	86
81349	RW79U46R4F	24F	32	80063	SM-A-942015	10	39
81349	RW79U5620F	24F	28	80063	S4-A-942015	12	32
81349	RW79U6191F	24F	20	80063	SM-A-942015	13	28
81349	RW79U6810F	24H	4L	80063	SM-A-942015	14	29
81349	RW79U8250F	24D	71	80063	SM-A-942015	15	21
49367	SB-4020-36LY	24F	61	80063	SM-A-942015	16	51
80063	SC-C-388423	25	13	80063	SM-A-942015	17	16
81349	SE099E03	8	53	80063	SM-A-942015	18	24
81349	SE10XD02	4	68	80063	SM-A-942015	19	83
81349	SE109D02	240	74	80063	SM-A-942015	20	10
81349	SE109D02	24F	17	80063	SM-A-942015	21	60
81349	SE109D02	24H	43	80063	SM-A-942016	15	17
81349	SE12XCO4	3	15	80063	SM-A-942018	16	48
81349	SE12XC04	7	7	80063	SM-A-942020	20	76
81349	SE12XC04	19	24	80063	SM-A-942021	16	38
91349	SE12XC04	26	18	80063	SM-A-942022	13	38
81349	SE12XC07	6	29	80063	SM-A-942022	19	85
81349	SE12XC08	9	23	80063	SM-A-942023	10	34
81349	SE21XE03	8	47	80063	SM-A-942024	13	37
80063	SM-A-434065	28	8	80063	SM-A-942025	17	22
80063	SM-A-941544	26	57	80063	SM-A-942025	18	26
80063	SM-A-941929	16	21	80063	SM-A-942025	20	75
80063	SM-A-942000	10	30	80063	SM-A-942026	13	39
80063	SM-A-942000	12	23	80063	SM-A-942026	14	36
80063	SM-A-942000	13	29	80063	SM-A-942027	10	25
80063	SM-A-942000	14	30	80063	SM-A-942027	13	31
80063	SM-A-942000	15	22	80063	SM-A-942027	16	46
80063	SM-A-942000	18	32	80063	SM-A-942027	18	22
80063	SM-A-942000	20	71	80063	SM-A-942028	10	28
80063	SM-A-942000	21	67	80063	SM-A-942028	16	41
80063	SM-A-942001	10	35	80063	SM-A-942030	12	25
80063	SM-A-942001	12	28	80063	SM-A-942031	16	42
80063	SM-A-942001	14	32	80063	SM-A-942031	18	25
80063	SM-A-942001	15	25	80063	SM-A-942039	3	10
80063	SM-A-942001	16	50	80063	SM-A-942039	7	6
80063	SM-A-942001	17	24	80063	SM-A-942039	14	9
80063	SM-A-942001	18	31	80063	SM-A-942039	15	8
80063	SM-A-942001	19	80	80063	SM-A-942039	17	7
80063	SM-A-942001	21	59	80063	SM-A-942039	19	23

FSCM	PART NUMBER	FIG. NO.	ITEM NO.	FSCM	PART NUMBER	FIG. NO.	ITEM NO.
80063	SM-A-942040	2	28	80063	SM-A-942114-2	8	72
80063	SM-A-942041	16	39	80063	SM-A-942114-3	8	63
80063	SM-A-942042	16	43	80063	SM-A-942115	8	36
80063	SM-A-942049	8	32	80063	SM-A-942120	8	80
80063	SM-A-942050	19	75	80063	SM-A-942121	4	76
80063	SM-A-942050	26	50	80063	SM-A-942129-1	6	72
80063	SM-A-942051	26	20	80063	SM-A-942129-2	4	40
80063	SM-A-942053-2	19	74	80063	SM-A-942129-2	6	74
80063	SM-A-942053-2	26	49	80063	SM-A-942133	6	10
80063	SM-A-942054	19	73	80063	SM-A-942137	6	2
80063	SM-A-942054	26	48	80063	SM-A-942142-2	6	73
80063	SM-A-942055	21	16	80063	SM-A-942143	8	26
80063	SM-A-942057	8	54	80063	SM-A-942144-1	4	77
80063	SM-A-942058	9	28	80063	SM-A-942144-2	4	79
80063	SM-A-942061	8	43	80063	SM-A-942145	3	25
80063	SM-A-942064	6	56	80063	SM-A-942145	8	34
80063	SM-A-942065	4	51	80063	SM-A-942146	4	46
80063	SM-A-942066	8	12	80063	SM-A-942147	4	49
80063	SM-A-942067	4	50	80063	SM-A-942148	8	83
80063	SM-A-942068	4	47	80063	SM-A-942149	9	27
80063	SM-A-942069	4	48	80063	SM-A-942150	1	6
80063	SM-A-942070	3	17	80063	SM-A-942151	1	7
80063	SM-A-942070	10	10	80063	SM-A-942152	16	45
80063	SM-A-942070	14	11	80063	SM-A-942152	21	63
80063	SM-A-q42082	8	57	80063	SM-A-942154	16	40
80063	SM-A-942085-1	6	59	80063	SM-A-942155	22	3
80063	SM-A-942085-1	8	52	80063	SM-A-942156	14	10
80063	SM-A-942085-2	8	79	80063	SM-A-942156	15	9
80063	SM-A-942087	19	90	80063	SM-A-942156	17	8
80063	SM-A-942087	26	55	80063	SM-A-942157	3	9
80063	SM-A-942093	16	6	80063	SM-A-942159	26	24
80063	SM-A-942095	22	15	80063	SM-A-942160-1	8	25
80063	SM-A-942096	4	20	80063	SM-A-942161	8	76
80063	SM-A-942097-1	4	38	80063	SM-A-942162	9	26
80063	SN-A-942097-2	4	39	80063	SM-A-942163	17	26
80063	SM-A-942098	3	19	80063	SM-A-942163	19	7b
80063	SM-A-942098	7	13	80063	SM-A-942164	7	22.1
80063	SM-A-942098	9	32	80063	SM-A-942165	26	52
80063	SM-A-942098	10	38	80063	SM-A-942166	26	18.1
80063	SM-A-942098	12	11	80063	SM-A-942167	6	15
80063	SM-A-942098	14	16	80063	SM-B-524086-6	6	53
80063	SM-A-942098	16	16	80063	SM-B-527575	25	9
80063	SM-A-942098	18	12	80063	SM-B-528627-4	1	2
80063	SM-A-942098	19	31	80063	SM-B-528627-4	6	64
80063	SM-A-S42098	20	24	80063	SM-B-528627-4	8	1
80063	SM-A-942098	21	20	80063	SM-B-528627-4	22	1
80063	SM-A-942098	26	22.1	80063	SM-B-530020	4	12
80063	SM-A-942099	23	1	80063	SM-B-530020	25	8
80063	SM-A-942105	22	5	80063	SM-B-530036	4	10
80063	SM-A-942110	6	45	80063	SM-B-530036	25	6
80063	SM-A-942111-1	2	16	80063	SM-B-942056	9	86
80063	SM-A-942111-1	2	21	80063	SM-B-942059	8	48
80063	SM-A-942111-1	4	85	80063	SM-B-942060	8	15
80063	SM-A-942111-1	4	88	80063	SM-B-942063	4	53
80063	SM-A-942111-1	4	92	80063	SM-B-942071	3	16
80063	SM-A-942111-1	4	95	80063	SM-B-942071	9	30
80063	SM-A-942111-2	1	42	80063	SM-B-942071	10	13
80063	SM-A-942112-1	10	42	80063	SM-B-942071	14	14
80063	SM-A-942112-1	12	37	80063	SM-B-942072-1	4	61
80063	SM-A-942112-1	13	41	80063	SM-B-942072-2	4	60
80063	SM-A-942112-1	14	41	80063	SM-B-942072-2	8	78
80063	SM-A-942112-1	15	30	80063	SM-B-942074-1	6	8
80063	SM-A-942112-1	16	54	80063	SM-B-942074-2	6	9
80063	SM-A-942112-1	17	28	80063	SM-B-942076	6	7
80063	SM-A-942112-1	18	38	80063	SM-B-942077	4	62
80063	SM-A-942112-1	20	81	80063	SM-B-942078	8	31
80063	SM-A-942112-1	21	70	80063	SM-B-942083	6	51
80063	SM-A-942112-10	14	42	80063	SM-B-942086-1	14	40
80063	SM-A-942112-11	10	43	80063	SM-B-942086-2	14	39
80063	SM-A-942112-12	13	42	80063	SM-B-942089	19	67
80063	SM-A-942112-13	12	38	80063	SM-B-942090	14	25
80063	SM-A-942112-2	19	91	80063	SM-B-942090	16	33
80063	SM-A-942112-3	21	71	80063	SM-B-942091	4	15
80063	SM-A-942112-4	20	82	80063	SM-B-942100	1	34
80063	SM-A-942112-5	19	92	80063	SM-B-942101	1	40
80063	SM-A-942112-6	18	39	80063	SM-B-942102	1	21
80063	SM-A-942112-7	17	29	80063	SM-B-942103	1	28
80063	SM-A-942112-8	16	55	80063	SM-B-942104	1	24
80063	SM-A-942112-9	15	31	80063	SM-B-942107	25	20
80063	SM-A-942114-1	8	68	80063	SM-B-942128	21	55

FSCM	PART NUMBER	FIG. NO.	ITEM NO.
80063	SM-B-942134	4	57
80063	SM-B-942134	8	77
80063	SM-C-551576	28	11
80063	SM-C-941527	25	1
80063	5M-C-941527-1	25	3
80063	SM-C-941527-2	25	2
80063	SM-C-941529	25	19
80063	SM-C-941603	1	22
80063	SM-C-941618-1	22	11
80063	SM-C-941618-2	22	12
80063	SM-C-941618-3	22	13
80063	SM-C-941619	1	33.3
80063	SM-C-941654	2	25
80063	SM-C-941655	2	19
80063	SM-C-941655-1	2	20
80063	SM-C-941656	2	14
80063	SM-C-941656-1	2	15
80063	SM-C-941657	2	2
80063	SM-C-941674	3	8
80063	5M-C-941675	3	6
80063	SM-C-941703	6	34
80063	SM-C-941704	6	37
80063	SM-C-941705	6	16
80063	SM-C-941705-1	6	19
80063	SM-C-941706	6	52
80063	SM-C-941707	6	23
80063	SM-C-941813	8	18
80063	SM-C-941944	19	68
80063	SM-C-941944-1	19	70
80063	SM-C-941963	24A	7
80063	SM-C-941996	28	2
80063	SM-D-941528	25	23
80063	SM-D-941530	25	4
80063	SM-D-941540	25	14
80063	SM-D-941542	26	56
80063	SM-D-941605	1	44
80063	SM-D-941610	23	3
80063	SM-D-941611	1	41
80063	SM-D-941611-1	1	43
80063	SM-D-941612	1	5
80063	SM-D-941613	1	25
80063	SM-D-941614	1	1
80063	SM-D-941616	22	14
80063	SM-D-941616-1	22	16
80063	SM-D-941617	22	6
80063	SM-D-941617-1	22	8
80063	SM-D-941650	1	4
80063	SM-D-941652	2	4
80063	SM-D-941653	Z	29
80063	SM-D-941670	2	23
80063	SM-D-941672	3	36
80063	SM-D-941673	3	12
80063	SM-D-941700	1	29
80063	SM-D-941702	6	71
80063	SM-D-941702-1	6	75
80063	SM-D-941720	6	30
80063	SM-D-941722	7	23
80063	SM-D-941750	1	35
80063	SM-D-941752	4	89
80063	SM-D-941753	4	82
80063	SM-D-941754	4	86
80063	SM-D-941754-1	4	87
80063	SM-D-941755	4	81
80063	SM-D-941756	4	93
80063	SM-D-941756-1	4	94
80063	SM-D-941757	4	90
80063	SM-D-941757-1	4	91
80063	SM-D-941758	4	83
80063	SM-D-941758-1	4	84
80063	SM-D-941759	4	75
80063	SM-D-941760	4	37
80063	SM-D-941760-1	4	41
81349	SM-D-941761-36	28	7
81349	SM-D-941761-37	28	6
81349	SM-D-941761-38	28	9
81349	SM-D-941761-39	28	10
80063	SM-D-941800	1	20
80063	SM-D-941810	8	87
80063	SM-D-941810-1	8	93
80063	SM-D-941811	8	3
80063	SM-D-941850	B	82
80063	SM-D-941852	9	101
80063	SM-D-941900	1	11
80063	SM-D-941902	10	44
80063	SM-D-941905	1	9
80063	SM-D-941907	12	39
80063	SM-D-941910	1	10
80063	SM-D-941912	13	43
80063	SM-D-941915	1	12
80063	SM-D-941917	14	43
80063	SM-D-941920	1	13
80063	SM-D-941922	15	32
80063	SM-D-941925	1	14
80063	SM-D-941927	16	56
80063	SM-D-941930	1	15
80063	SM-D-941932	17	30
80063	SM-D-941935	1	16
80063	SM-D-941937	18	40
80063	SM-D-941940	1	17
80063	SM-D-941942	19	93
80063	SM-D-941945	1	18
80063	SM-D-941947	20	83
80063	SM-D-941950	1	19
80063	SM-D-941952	21	72
80063	SM-D-941962	24A	8
80063	SM-D-941964	24A	11
80063	SM-D-941965	24A	1
80063	SM-D-941967	248	15
80063	SM-D-941995	27	1
80063	SM-D-942075	10	11
80063	SM-D-942075	12	8
80063	SM-D-942075	13	13
80063	SM-D-942075	14	12
80063	SM-D-942075	15	10
80063	SM-D-942075	lb	13
80063	SM-D-942075	17	9
80063	SM-D-942075	18	9
80063	SM-D-942075	19	28
80063	SM-D-942075	20	21
80063	SM-D-942075	21	17
80063	SM-D-942094	4	63
26430	ST4001-8.500-062	24A	10
31413	S1000-01965	248	2
59730	TC105A	240	28
59730	TC105A	24H	49
80058	U-106/G	4	21
80058	U-106/U	25	22
80058	U-183/U	25	21
80058	U-229/U	28	1
80058	U-79/U	2	18
80058	U-79/U	6	62
80058	UG-1837/U	25	12
94696	W107DIP-5	241	6
72794	Y166	2	1
31403	010-7514-503	5	1
31413	010-7515-509	11	1
31413	010-7515-509	248	10
31413	010-7517-509	11	2
31413	010-7517-509	248	9
31413	010-8700-509	248	3
31413	010-8703-509	248	4
28875	055007	24F	53
19112	102-14-AA-B	24E	6
19112	102-14-AAC	241	7
91929	11TS15-3	24H	16
91929	12TS115-10	24H	18
71279	155-3848-01-03	24E	12
71279	155-3848-01-03	241	28
02660	164-28	240	22
02660	164-28	24G	4
16428	17419	24F	12
08530	2010097-22	24C	63
83330	2192	24C	3
83330	2192	240	3
83330	2192	24F	3
83330	2192	24G	3
83330	2192	24h	3
32945	27368AA8	24C	3
31413	302-0002-002	5	4
31413	302-0002-002	11	3

FSCM	PART NUMBER	FIG. NO.	ITEM NO.	FSCM	PART NUMBER	FIG. NO.	ITEM NO.
31413	302-0002-002	24B	5	04939	70730002-001	24C	1
31413	302-0002-002	24B	11	04939	70730002-001	24D	1
31403	302-0002-003	5	3	04939	70730002-001	24H	1
31413	302-0002-003	24B	12	04939	70730021-009	24D	76
31413	302-0002-005	11	2.1	04939	70730022-009	24D	54
80294	3252L-1-501	24I	18	04939	70730024-009	24E	11
77820	33270-2	4	7	04939	70730026-001	24D	67
77820	33270-2	24H	33	04939	70730041-009	24F	82
80294	34005-1-202	24F	49	04939	70730042-001	24F	1
81349	37TB4	4	66	04939	70730044-001	24F	38
82389	415	24D	24	04939	70730046-001	24F	39
71279	416-1988-01-02	24C	9	04939	70730061-009	24G	17
71279	416-1988-01-02	24D	9	04939	70730062-001	24G	1
71279	416-1988-01-02	24F	11	04939	70730071-009	24H	50
71279	416-1988-01-02	24H	9	04939	70730072-009	24H	36
71279	450-3279-01-03-10	24B	7	04939	70730074-009	24I	27
24047	507100	24Q	5	0493s	70730080-009	24J	I
32945	508748	24Q	4	04939	70730080-019	24J	2
32945	511203	24Q	6	04939	70730085-009	24M	1
32945	515654	24Q	2	04939	70730085-019	24M	2
31403	516-0014-505	5	5	04939	70730091-001	24C	1
31403	516-0019-000	5	6	04939	70730096-001	24R	1
31413	516-0019-505	11	4	22526	75401-001	24B	14
31413	516-0019-505	24B	6	79963	814	4	6
31413	516-0019-505	24B	13	79963	814	6	43
31403	516-0028-550	5	2	80063	814	24G	15
31413	600-0001-000	24Q	7	80063	814	24H	32
31413	600-0001-000	24R	2	06540	8218-SS-0440	24H	38
23350	600-0004-000	24Q	8	70903	8404	24D	23
31413	600-0005-000	24Q	9	70903	8404	24G	6
31413	600-0007-000	24Q	10	70903	8444	24N	7
31413	600-0007-000	24R	3	70903	8444	24P	7
31413	600-0107-000	24Q	11	16428	8747	24C	23
76545	63-2 BLK	24N	2	16428	8747	24D	21
76545	63-2 RLK	24P	2	70903	8750	24C	12
76545	63-2 RED	24N	3	70903	8750	24D	16
76545	63-2 RED	24P	3	34148	9016 DC	24E	5
02660	68175	24K	1	00779	90289-1	24Q	16
02660	68175	24L	1	00779	91084-1	24Q	17
04939	70730001-009	24C	30	77820	97772-2	4	8

LATEST NATIONAL STOCK NUMBER ASSIGNMENT

STOCK NUMBER	FIGURE NO.	ITEM NO.
5961-00-892-3361	9	100

LATEST PART NUMBER ASSIGNMENT

FSCM	PART NUMBER	FIGURE NO.	ITEM NO.
81349	JAN1N750A	9	100

By Order of the Secretary of the Army:

E. C. MEYER
General, United States Army
Chief of Staff

Official:

ROBERT M. JOYCE
Brigadier General, United States Army
The Adjutant General

Distribution:

To be distributed in accordance with Special List.

☆ U.S. GOVERNMENT PRINTING OFFICE: ,1989-242-451/05223

TEAR ALONG PERFORATED LINE

RECOMMENDED CHANGES TO EQUIPMENT TECHNICAL PUBLICATIONS

THEN...JOT DOWN THE DOPE ABOUT IT ON THIS FORM. CAREFULLY TEAR IT OUT, FOLD IT AND DROP IT IN THE MAIL.

SOMETHING WRONG WITH PUBLICATION

FROM: (PRINT YOUR UNIT'S COMPLETE ADDRESS)

DATE SENT

PUBLICATION NUMBER	PUBLICATION DATE	PUBLICATION TITLE

BE EXACT PIN-POINT WHERE IT IS

PAGE NO.	PARA-GRAPH	FIGURE NO.	TABLE NO.

IN THIS SPACE, TELL WHAT IS WRONG AND WHAT SHOULD BE DONE ABOUT IT.

PRINTED NAME, GRADE OR TITLE AND TELEPHONE NUMBER	SIGN HERE

DA FORM 1 JUL 79 2028-2

PREVIOUS EDITIONS ARE OBSOLETE.

P.S.--IF YOUR OUTFIT WANTS TO KNOW ABOUT YOUR RECOMMENDATION MAKE A CARBON COPY OF THIS AND GIVE IT TO YOUR HEADQUARTERS.

This fine document...

Was brought to you by me:

Liberated Manuals -- free army and government manuals

Why do I do it? I am tired of sleazy CD-ROM sellers, who take publicly available information, slap “watermarks” and other junk on it, and sell it. Those masters of search engine manipulation make sure that their sites that sell free information, come up first in search engines. They did not create it... They did not even scan it... Why should they get your money? Why are not letting you give those free manuals to your friends?

I am setting this document FREE. This document was made by the US Government and is NOT protected by Copyright. Feel free to share, republish, sell and so on.

I am not asking you for donations, fees or handouts. If you can, please provide a link to liberatedmanuals.com, so that free manuals come up first in search engines:

<A HREF=http://www.liberatedmanuals.com/>Free Military and Government Manuals</A>

- Sincerely
  Igor Chudov
  http://igor.chudov.com/
- Chicago Machinery Movers