TECHNICAL MANUAL

OPERATOR'S AND ORGANIZATIONAL MAINTENANCE MANUAL FOR PROJECTOR,

STILL PICTURE PH-637 E/PFP

(NSN) 6730-01-014-5072)

HEADQUARTERS, DEPARTMENT OF THE ARMY

22 JULY 1976

WARNING
HIGH VOLTAGE

is used in the operation of this equipment.

Projection lamp reaches high temperature during operation. Do not handle lamp until it cools.

CHANGE NO. 4 }

HEADQUARTERS
DEPARTMENT OF THE ARMY
WASHINGTON, DC, 23 *December 1981*

Operator's and Organizational Maintenance Manual
PROJECTOR, STILL PICTURE PH-637E/PFP
(NSN 6730-01-014-5072)

TM 11-6730-242-12, 22 July 1976, is changed as follows:
1. New or changed material is indicated by a vertical bar in the margin of the page.
2. Remove old pages and insert new pages as indicated below:

Remove Pages	*Insert Pages*
i and ii	i and ii
1-1 and 1-2	1-1 and 1-2
2-1 and 2-2	2-1,2-2 and 2-2.1/(2-2.2 blank)
A-1	A-1/(A-2 blank)

3. File this change sheet in front of the publication for reference purposes.

By Order of the Secretary of the Army:

Official:

E.C. MEYER
General, United States Army
Chief of Staff

ROBERT M. JOYCE
Brigadier General, United States Army
The Adjutant General

CHANGE
NO.3 }

HEADQUARTERS
DEPARTMENT OF THE ARMY
WASHINGTON, DC, 14 January *1980*

Operator's and Organizational Maintenance Manual
PROJECTOR, STILL PICTURE PH-637E/PFP
(NSN 6730-01-014-5072)

TM 11-6730-242-12, 22 July 1976, is changed as follows:
1. A vertical bar appears opposite changed material.
2. Remove and insert pages as indicated in page list below:

Remove	*Insert*
1-1 and 1-2	1-1 and 1-2
2-1 and 2-2	2-1 and 2-2
4-1 and 4-2	4-1 and 4-2

3. File this change sheet in front of the publication for reference purposes.

By Order of the Secretary of the Army:

E.C. MEYER
General, United States Army
Chief of Staff

Official:

J. C. PENNINGTON
Major General, United States Army
The Adjutant General

DISTRIBUTION:
Active Army:
HISA (Ft Monmouth) (21)
USAINSCOM (2)
COE (1)
TSG (1)
USAARENBD (1)
DARCOM (2)
TRADOC (2)
OS Maj Comd (4)
TECOM (2)
USACC (4)
MDW (1)
Armies (2)
Corps (2)
Svc Colleges (1)
USASIGS (5)
USAADS (2)
USAFAS (2)
USAARMS (2)
USAIS (2)
USAIS (2)
USAES (2)
USAICS (3)
MAAG (1)
USARMIS (1)
USAERDAA (1)
USAERDAW (1)
Ft Carson (5)
Ft Gillem (10)
Ft Gordon (10)
Ft Richardson (CERCOM Ofc) (2)
Army Dep (1) except
LBAD (14)
SAAD (30)
SHAD (3)
TOAD (14)
USA Dep (1)
Sig Sec USA Dep (1)
Units Org Under Fol TOE:
29-207 (2)
29-610 (2)
NG: State AG (None: Units - None
USAR: None
For explanation of abbreviations used, see AR 310-50.

CHANGE
NO.2 }

HEADQUARTERS
DEPARTMENT OF THE ARMY
WASHINGTON, DC, *13 September 1978*

Operator's and Organizational Maintenance Manual
PROJECTOR, STILL PICTURE PH-637E/PFP
(NSN 673001,014-5072)
Current as of l5 June 1978

TM 11-6730-242-12, 22 July 1976, is changed as follows:
1. A vertical bar appears opposite changed material.
2. Remove and insert pages as indicated in the page list below:

Remove	*Insert*
1-1 and 1-2	1-1 and 1-2
2-1 and 2-2	2-1 and 2-2
2-3 (from Change 1)	2-2.1
2-3 and 2-4	2-3 and 2-4

3. File this change sheet in front of the manual for reference purposes.

By Order of the Secretary of the Army:

BERNARD W. ROGERS
General, United States Army
Chief of Staff

Official:

J. C. PENNINGTON
Brigadier General, United States Army
The Adjutant General

Distribution:
Active Army:
HISA (Ft Monmouth) (26)
USAINSCOM (2)
COE (1)
TSG (1)
USAARENBD (1)
DARCOM (1)
TRADOC (2)
OS Maj Comd (4)
TECOM (2)
USACC (4)
MDW (1)
Armies (2)
Corps (2)
Svc Colleges (1)
USASIGS (5)
USAADS (2)
USAFAS (2)
USAARMS (2)
USAIS (2)
USAES (2)
USAICS (3)
MAAG (1)
USARMIS (1)
USAERDAA (1)
USAERDAW (1)
Ft Carson (5)
Ft Gillem (10)
Ft Gordon (10)
Ft Huachuca (10)
Ft Richardson (CERCOM Ofc) (2)
Army Dep (1) except
LBAD (14)
SAAD (30)
SHAD (3)
TOAD (14)
USA Dep (1)
Sig Sec USA Dep (1)
Units Org Under Fol TOE:
29207
29610
(2 copies each)

ARNG: None
USAR: None
For explanation of abbreviations used, See AR 310-50.

CHANGE NO. 1

HEADQUARTERS
DEPARTMENT OF THE ARMY
WASHINGTON, DC, 28 March 1978

Operator's and Organizational Maintenance Manual
PROJECTOR, STILL PICTURE PH-637E/PFP
(NSN 6730-01-014-5072)

TM 11-6730-242-12, 22 July 1976, is changed as follows:
1. A vertical bar appears opposite changed material.
2. Remove and insert pages as indicated in the page list below:

Remove	*Insert*
i and ii	i and ii
1-1 through 1-3/(1-4 blank)	1-1 through 1-3
2-1 and 2-2	2-1, 2-2, and 2-3
3-1 and 3-2	3-1 and 3-2
4-1 and 4-2	4-1 and 4-2

3. File this change sheet in the front of the manual for reference purposes.

By Order of the Secretary of the Army:

BERNARD W. ROGERS
General, United States Army
Chief of Staff

Official:
J. C. PENNINGTON
Brigadier General United States Army
The Adjutant General

Distribution:

HISA (Ft Monmouth) (33)
USAINSCOM (2)
COE (1)
TSG (1)
USAARENBD (1)
DARCOM (1)
TRADOC (2)
OS Maj Comd (4)
TECOM (2)
USACC (4)
MDW (1)
Armies (2)
Corps
Svc Colleges (1)
USASIGS (5)
USAADS (2
USAFAS (2)
USAARMS (2)
USAIS (2)
USAES (2)
UASICS (3)
MAAG (1)
USARMIS (1)
USAERDAA (1)
USAERDAW (1)
Army Dep (1) except
Fort Carson (5)
Fort Gillem (10)
Fort Gordon (10)
Fort Huachuca (10)
Ft Richardson (CERCOM Ofc) (2)
LBAD (14)
SAAD (30)
TOAD (14)
SHAD (3)
USA Dep (1)
Sig Sec USA Dep (1)
Units org under fol TOE: (2)
29-207
29-610

NG: None
USAR: None
For explanation of abbreviations used, see AR 310-50.

TECHNICAL MANUAL
NO. 11-6730-242-12

HEADQUARTERS
DEPARTMENT OF THE ARMY
WASHINGTON, DC, 22 *July 1976*

OPERATOR'S AND ORGANIZATIONAL MAINTENANCE MANUAL
PROJECTOR, STILL PICTURE PH-637E/PFP
(NSN 6730-01-014-5072)

REPORTING ERRORS AND RECOMMENDING IMPROVEMENTS

You can help improve this manual. If you find any mistakes or if you know of a way to improve the procedures, please let us know. Mail your letter, DA Form 2028 (Recommended Changes to Publications and Blank Forms), or DA Form 2028-2 located in the back of this manual direct to Commander, US Army Communications-Electronics Command, ATTN: DRSEL-ME-MQ, Fort Monmouth, NJ 07703.

In either case, a reply will be furnished direct to you.

CHAPTER 1
INTRODUCTION

Section I. GENERAL

1-1. Scope

a. This manual describes Projector, Still Picture PH-637E//PFP (projector) (fig. 1-1) and covers its installation, Operation, and operator and organizational maintenance. It includes operation under usual and unusual conditions, and cleaning and inspection instructions for operator and organizational maintenance.

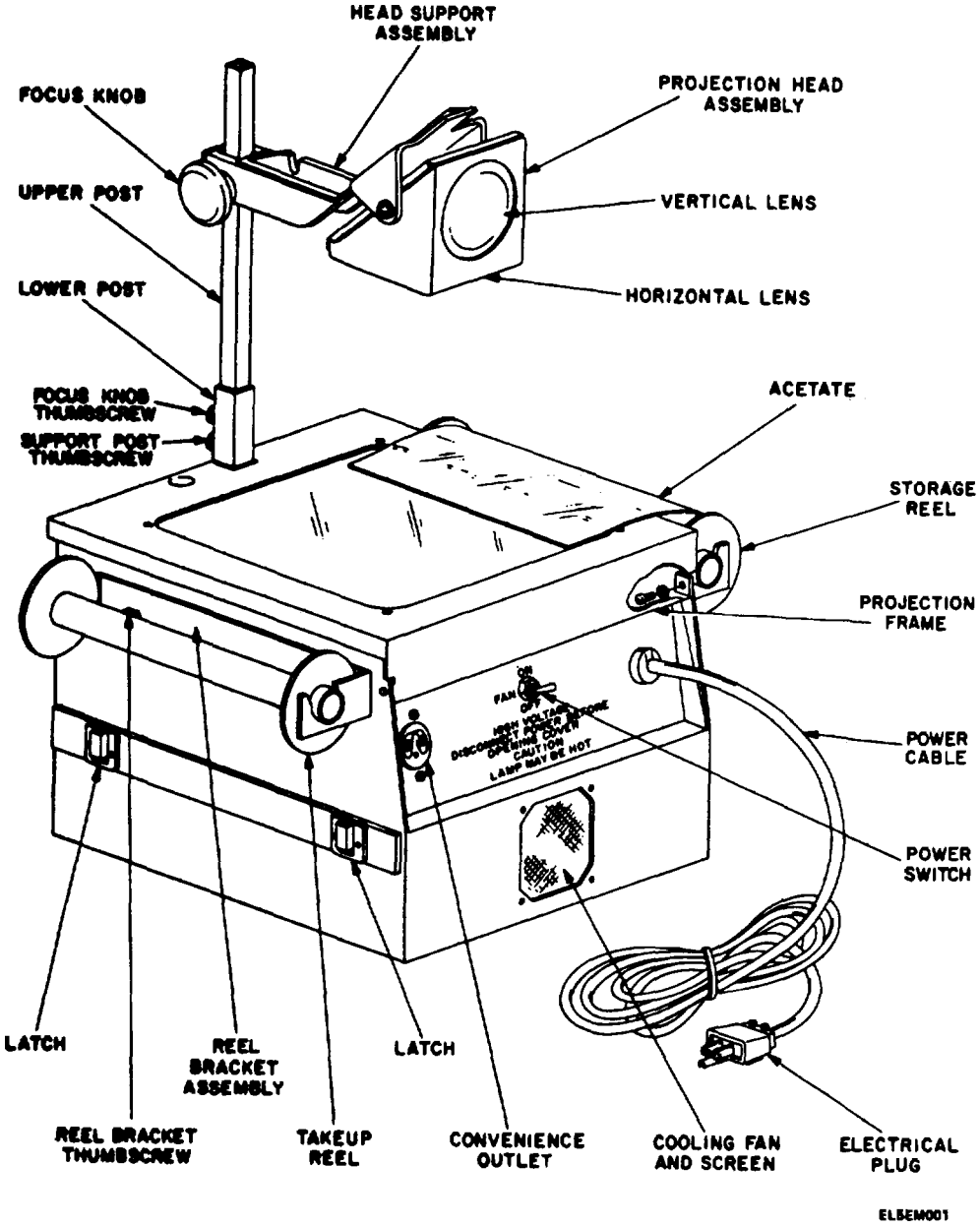

Figure 1-1. Projector, Still Picture PH-637E/PFP. 1-1

b. The maintenance allocation chart (MAC) appears in appendix C.

NOTE

Appendix C is current as of March 1976.

1-2. Index of Technical Publications

Refer to the latest issue of DA Pam 310-4 to determine whether there are new editions, changes, or additional publications pertaining to the equipment.

1-3. Maintenance Forms, Records, and Reports

a. Reports of Maintenance and Unsatisfactory Equipment. Department of the Army forms and procedures used for equipment maintenance will be those prescribed by TM 38-750, The Army Maintenance System.

b. Report of Packaging and Handling Deficiencies. Fill out and forward SF 364 (Report of Discrepancy (ROD)) as prescribed in AR 735-11-2/DLAR 4140.55/NAVMATINST 4355.73/AFR 400-54/MCO 4430.3E.

c. Discrepancy in Shipment Report (DISREP) (SF'361). Fill out and forward Discrepancy in Shipment Report (DISREP) (SF 361) as prescribed in AR55-38/NAVSUPINST 4610.33B/AFR 75-18/MCO4610.19C/DLAR 4500.15.

1-3.1. Reporting Equipment Improvement Recommendations (EIR)

If your equipment needs improvement, let us know. Send us an EIR. You, the user, are the only one who can tell us what you don't like about your equipment. Let us know why you don't like the design. Tell us why a procedure is hard to perform. Put it on an SF 368 (Quality Deficiency Report). Mail it to Commander, US Army Communications-Electronics Command, ATTN: DRSEL-ME-MQ, Fort Monmouth, NJ 07703. We'll send you a reply.

1-4. Administrative Storage

For procedures, forms and records, and inspections required during administrative storage of this equipment, refer to TM 740-90-1.

1-5. Destruction of Army Electronics Materiel

Destruction of Army electronics materiel to prevent enemy use shall be in accordance with TM 750-244-2

Section II. DESCRIPTION AND DATA

1-6. Purpose and Use

a. Purpose. The projector is a self-contained, portable, overhead projector that magnifies and projects the opaque portions of illustrations and text placed on transparent materials. The resulting projection appears as an enlarged image on a projection screen or other suitable projection surface.

b. Use. The projector is used as an aid in training, briefing, and entertaining troops. It projects relatively small text and illustrated material for simultaneous viewing by all members of a class or lecture audience. Projection materials can be prepared before, or as part of, a lecture demonstration. Overlay techniques, in which one or more transparencies are placed over another transparency and progressively removed, can be used with the projector to illustrate stages of an operation. Also, opaque masks can be placed over portions of the transparency being projected to provide partial or progressive presentation of material.

1-7. **Description of Equipment**

The PH-637E/PFP (fig. I-1) is an overhead projector consisting of the following assemblies: projection head assembly, head support assembly, cover assembly, two reel bracket assemblies, film storage reel, takeup reel, and housing.

a. The projection head assembly contains two lenses, and an internal front surface mirror within a metal housing. It is supported by the head support assembly and is free to pivot on two support screws. The head support is attached by means of the upper support post to the housing assembly. The head support can be moved up and down the support post to focus the projected image by rotating the focus knob, causing a rubber focus puck to bear against the upper support post.

b. The housing assembly supports the Fresnel lens and stage glass, upon which the transparency to be projected rests. The projection lamp is located within the housing. Cooling air is supplied by a cooling fan also located within the housing, adjacent to the vent screen.

c. Operating power for the projection lamp and cooling fan is controlled by a three-position toggle switch. A convenience outlet is provided for auxiliary equipment. An interlock switch is provided to cut off the power when the stage is lifted. Two reel bracket assemblies, stored in the cover assembly, support the storage and takeup reels that hold the acetate film.

d. The cover assembly provides for protection during storage and transit. It is secured to the housing with four manually operated latches. If you need a detailed description of any component of the projector, see TM 11-6730-242-24P, to be published.

1-8. Tabulated Data

Transparency tape accommodated	Overhead transparencies in prepared mounts up to 10 by 10 in. (25.4 by 25.4 cm). Acetate rolls 100 ft by 10W4 in. (30.4 m by 27.3 cm).
Temperature range:	
Operational	+40'F (4.4"C) to +1150F (46.1°C)
Storage	-80F (62.20C) to + 160,F (71.1°C)
Lens data	Two lenses, combined focal length of 14 in. (35.6 cm)
Lamp data	Quartz, bromide-halogen cycle, single-ended
Ventilation	Forced air
Image elevation angel	Over 30 degrees
Projection range	6 to 25 ft (1.8 m to 7.6 m)
Power input	105 to 120 volts, 60 Hz
Power consumption	635 watts
Projected image:	
At 6 ft (1.8 m)	42 by 42 in. (106.6 by 106.6 cm)
At 25 ft (7.6 m)	175 by 175 in. (444.5 by 444.5 cm)
Dimensions (HWD)	19.125 by 13.438 by 14.688 in. (48.6 by 34.1 by 37.3 cm)
Weight with cover	33 lb (15 kg)

1-9. Items Comprising an Operable Equipment

Projector, Still Picture PH-637E/PFP (NSN 6730-01-014-5072) comprises an operable equipment and includes the cover, reel bracket assemblies, acetate storage reel, and takeup reel.

1-10. Expendable Consumable Items

The items listed in table 1-1 are required for operation and are authorized to be requested by SB 700-50.

Table 1-1. Expendable Consumables

NSN	*Item*	*Qty*
	Acetate	1 roll, 100 feet long

CHAPTER 2
INSTALLATION AND OPERATION

2-1. Unpacking
(fig. 2-1)

a. Packaging and Packing Data. The projector is packed and shipped in a fiberboard box approximately 21 3/4 inches by 20 1/2 inches by 26 1/2 inches.

Legend:

I.	Technical manual	11.	Projector housing
2.	Cover assembly	12.	Foam container bottom
3.	Cushioning material	13.	Cushioning material
4.	Fiberboard box	14.	Acetate roll
5.	Fiberboard pad	15.	Takeup reel and bracket
6.	Waterproof wrap	16.	Bracket
7.	Fiberboard box	17	Cable assembly
8.	Waterproof bag	18.	Projection lamp
9.	Foam container top	19.	Projection head and head support assembly
10.	Fiberboard box		

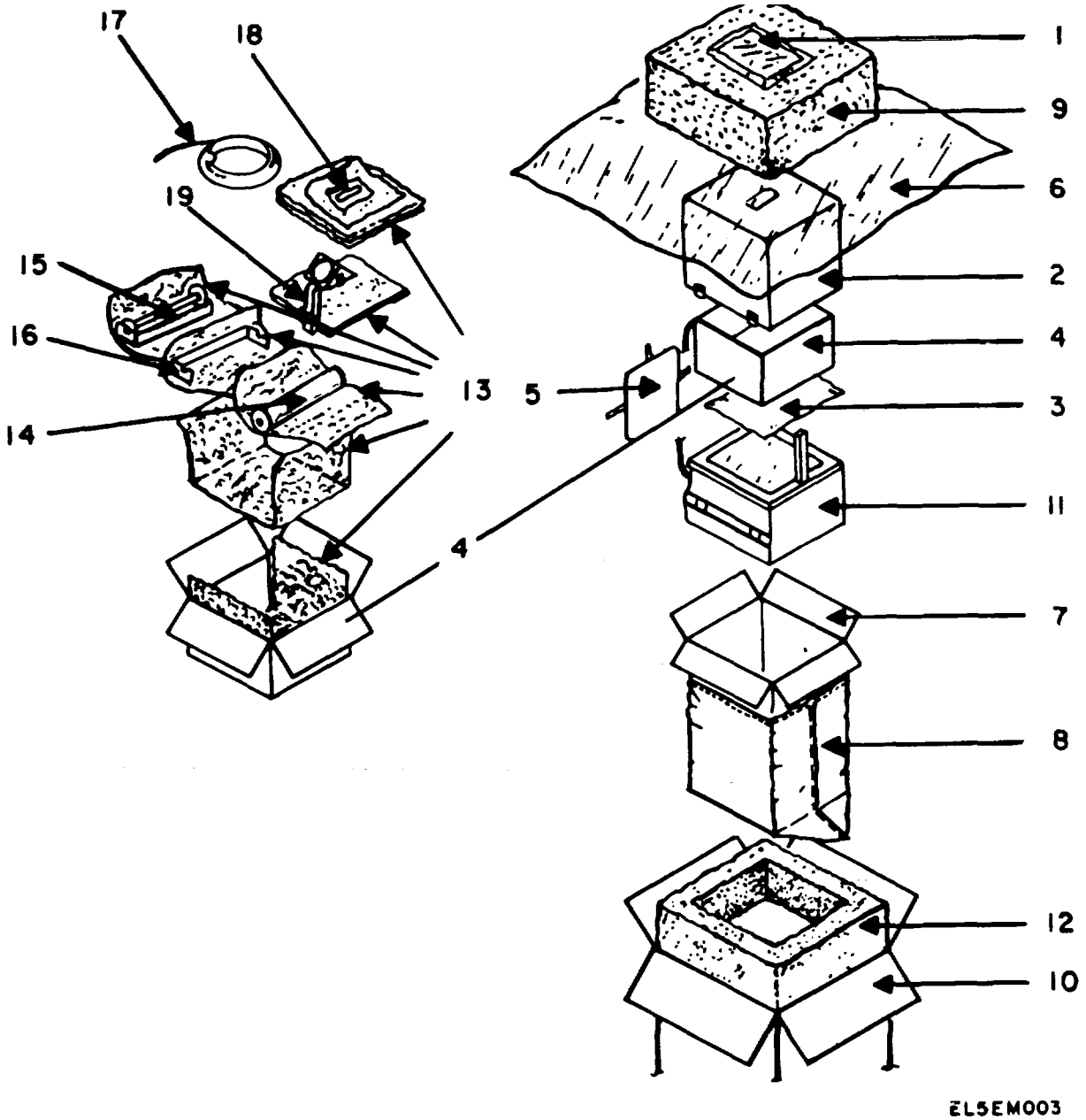

Figure 2-1. Projector, packing diagram.

b. Unpacking. Unpack the projector as follows:

(1) Remove tape sealing fiberboard box (10) and open the box.

(2) Remove the technical manual from the top of the foam container.

(3) Lift out foam container top (9).

(4) Open waterproof bag (8) and lift out fiberboard box (7).

(5) Open the fiberboard box and lift out the projector.

(6) Remove waterproof wrap (6).

(7) Release the four latches securing the cover assembly (2) in place and remove the cover assembly.

(8) Remove fiberboard pad (5).

(9) Remove the tape sealing fiberboard box (4) and open the box.

(10) Unwind cable assembly (17) and slide it out through the slot in the box.

(11) Carefully remove the remaining items from the box. Do not remove the cushioning material or wrapping.

(12) Remove fiberboard box (4) and cushioning material (3) from projector housing (I).

(13) Remove the cushioning material from projection lamp (18). Do not remove the paper wrapper.

(14) Insert the projection lamp into the projector as described in paragraph 4-6. Handle the glass portion of the projection lamp with the paper wrapper. Discard the paper wrapper after the projection lamp is in place.

(15) Remove the cushioning material from the projection head and head support assembly (19).

(16) Remove the focus knob thumbscrew and support post thumbscrew (fig. I-I).

(17) Insert the projection head and head support assembly into the lower post. If the projector is to be used immediately, refer to paragraph 2-3. If the projector is to be stored, refer to paragraph 2-3.1.

(18) Remove the cushioning material from takeup reel and bracket (15), bracket (16), and acetate roll (14).

(19) If the acetate roll is to be used, refer to paragraph 2-4. If the acetate roll is to be stored in the cover assembly, refer to paragraph 2-3.1.

2-2. Checking Unpacked Equipment

a. Inspect the equipment for damage incurred during shipment. If the equipment has been damaged, report the damage on SF 364.

b. Check the equipment against the packing list to see if the shipment is complete. Report all discrepancies in accordance with the instructions of TM 38-750. The equipment should be placed in service even though a minor assembly or part that does not affect proper functioning is missing.

c. Check to see whether the equipment has been modified. (Equipment which has been modified will have the MWO number on the front panel, near the nomenclature plate.) Check also to see whether all currently applicable MWO's have been applied. (Current MWO's applicable to the equipment are listed in DA PAM 310-4.)

2-3. Installation

Installation of the projector consists of setting it up for operation.

a. Place the projector on a surface that is at least 24 inches (60.9 cm) wide by 30 inches (76.2 cm) deep.

b. Release four latches securing cover assembly to projector housing and remove cover.

c. Remove support post thumbscrew and raise upper support post until projection head is approximately 14 inches (35.6 cm) above the stage glass. Install thumbscrew when upper and lower support post thumbscrew holes are aligned.

WARNING

Be careful when handling the projection lamp. If a lamp is still hot from operation, touching the glass envelope can cause painful burns.

d. Lift the projection frame.

CAUTION

Do not remove the adjusting screws in step *e.*

e. Loosen, but do not remove the four adjusting screws holding the lamp housing to the projector housing (see figure 2-2). Loosen the screws only enough so that the lamp housing "floats" freely on the four springs.

f. The power cable is 15 feet (4.95 m) long; locate the projector close enough to a I 10-volt, 60-Hz power outlet to permit the power cable to reach without applying any tension to the projector or causing a safety hazard.

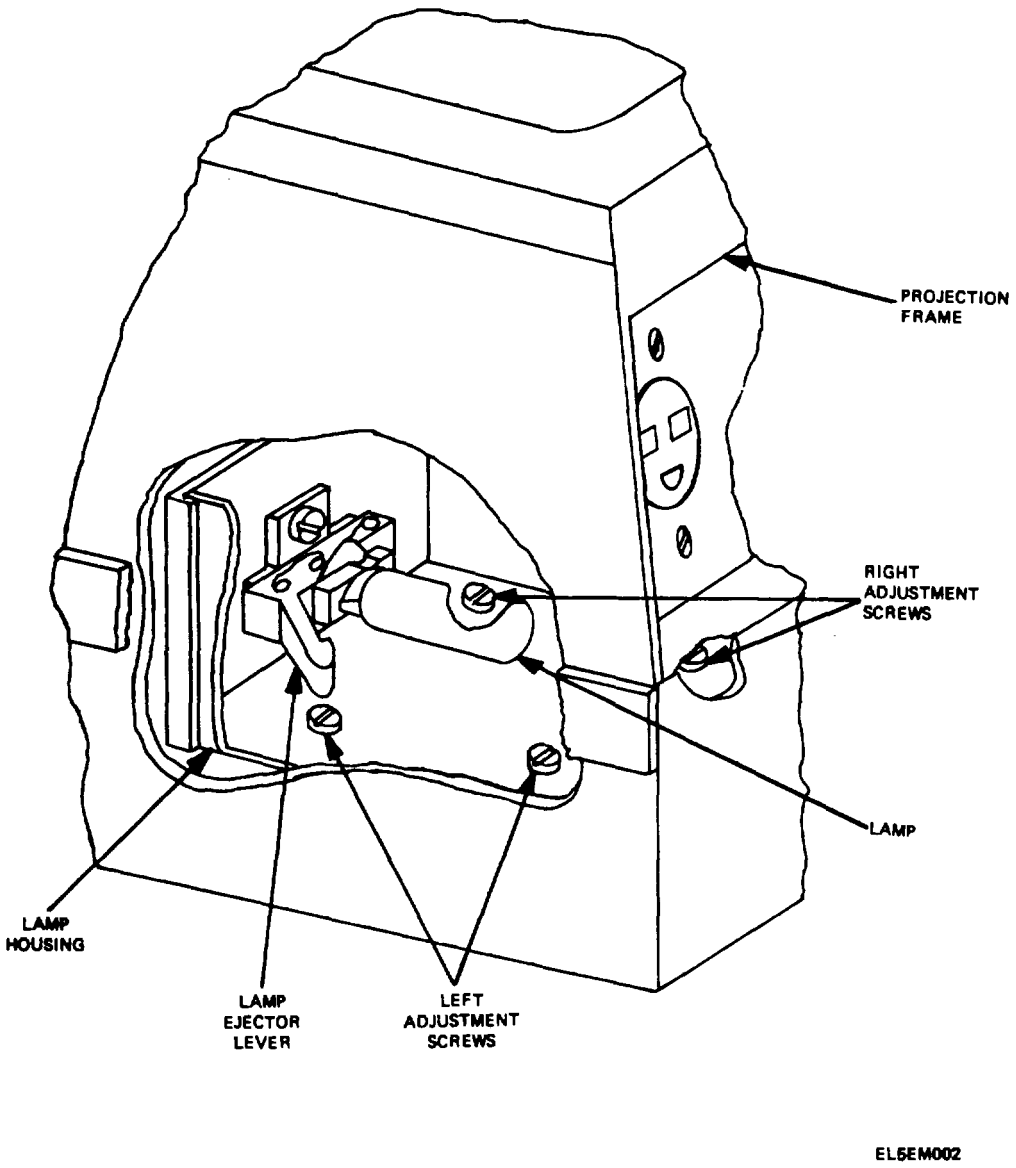

Figure 2-2. Location of adjusting screws and lamp ejector lever.

2-5. Mounting Storage and Takeup Reels

a. Determine the desired direction of the projected image movement to establish which reel will be the storage reel (supply) and which will be the takeup reel. (Projected image may go from left to right or from right to left.)

b. Place the storage reel in the cutouts of the selected reel bracket assembly.

c. Guide the leading edge of the acetate from the storage reel over the top of the stage glass to the empty takeup reel.

d. Attach the leading edge of the acetate to the takeup reel with plastic or paper masking tape.

e. Rotate takeup reel and check for proper movement of acetate over stage glass.

Section II. OPERATION UNDER USUAL CONDITIONS

2-6. Planning a Mission

The applications of the projector are determined by the nature of the information being described to a class or lecture audience. When planning the use of the projector, consider the following:

a. The *projection* of a transparency can provide a far more effective and economical means of presenting many types of information than is possible when individual copies of the material containing the information are distributed to each member of a class or audience.

b. Time and effort otherwise spent at a chalkboard can be saved by preparing information for viewing with the projector.

c. Preparation of information for viewing with the projector is less fatiguing to an audience than the development of large quantities of information on a chalkboard.

d. Information can be presented during class or lecture by writing on the acetate roll without moving from the location of the projector.

e. Illustrative material developed during one class or lecture can be rolled up and stored for future reuse.

f. Masks can be used with the transparencies to emphasize certain information and obscure other information on a selective basis.

g. Overlays can be used with transparencies to show stages of an operation.

h. Strips of colored cellophane, or other transparent material, can be placed at selected points on a transparency to provide emphasis, or make a distinction, between two or more simultaneously projected items of information.

i. The shape of opaque objects placed on the stage glass can be projected in two dimensions.

2-7. Operator Controls

(fig. 1-1)

Control or element	*Function*
Power switch	Controls application and removal of projector power.
Focus knob	Raises and lowers projection head assembly to focus projected image.
Projection head	Varies elevation angle of projected image to insure that focusing does not move image off projection surface.
Stage glass	Supports transparencies containing images to lie projection surface.
Storage and takeup reels	Move acetate roll across the stage glass from side to side on projection surface.
Convenience outlet	Provides power source for auxiliary and test equipment.
Support post thumbscrew	Provides for locking upper support post in either operating (raised) or storage (lowered) position.
Focus knob thumbscrew	Provides for locking the upper post to he lower post to prevent movement of the projection head assembly.

NOTE

The power cable plug is a three-prong polarized electrical connector. If the power source outlet is a two-pronged electrical connector, you must obtain a suitable adapter for use with the projector.

2-8. Operation

a. Connect the line cord plug to the power source convenience outlet.

b. Place the power switch in the FAN position. The fan comes on; then place the power switch in the ON position. The lamp comes on.

c. Position the projector to center the projected light beam on the projection surface on the horizontal axis.

d. Turn the focus knob to clearly focus the concentric ring pattern of the Fresnel lens on the projection surface.

e. Pivot the lens head assembly to center the focused light beam on the vertical axis of the projection surface.

f. If necessary, readjust the setting of the focus knob to produce a sharper image.

g. Place the material to be projected on the stage glass of the top plate assembly.

h. Examine the projected image of the transparency on the projection surface. If necessary, readjust the focus knob.

i. If the information to be projected is to be developed during the class or lecture, write on the transparency with a felt tip transparency pen, or an overhead projector pencil, or both.

j. If the acetate reel assemblies are being used, move the acetate by turning the takeup reel.

k. If auxiliary or test equipment is to be used with the projector, plug the line cord for that equipment into the projector convenience outlet.

I. When operation is to be ceased, turn projector off as follows:

(1) Set power switch to FAN.

(2) Wait approximately 30 seconds, or until exhaust air Is cool. -

(3) Set power switch to OFF.

Section III. OPERATION UNDER UNUSUAL CONDITIONS

2-9. Operation In Arctic Region*

a. Warming Projector. If the projector has not been unpacked, but has been stored at a low temperature, transfer It to a heated area and allow It to remain there for a minimum of 6 hours before unpacking it. If the projector has been unpacked and stored at a low temperature, wrap it with a water-repellent material, transfer it to a heated area, and allow it to remain covered for a minimum of 6 hours before checking *(b* below) and setting it up for operation.

CAUTION

Do not operate the projector until all moisture has been removed from it.

b. Checking Projector Before Us., Check projector as follows:

(1) Remove moisture from the exterior surfaces of the projector, except for the lenses, with a clean cloth.,

(2) Clean the lenses on the projection head assembly with lens tissue.

2-10. Operation In Desert and Tropical Regions

a. Desert Regions. Before operating the projector, remove dust and sand from the exterior surfaces of the projector roll attachments. Remove dust and sand from the lenses of the projector with a hand blower; then wipe them with a lens tissue moistened with lens cleaner. Cover the projector components while they are not in use.

CAUTION

Keep oil off the lenses, stage glass, and electrical contacts.

b. Tropical Regions. Check the projector daily; remove corrosion, fungus, mites, and mold. Wipe all exposed metal parts with a cloth moistened with Lubricating Oil, General Purpose (FED VV-L.800) (NSN 9150-00-273.2389). Store the projector in a well-ventilated area and air the carrying case daily.

2-11. Operation In Maritime, High altitude, Low Temperature or Rainy Regions

To prevent corrosion from salt-laden air of salt water spray and rusting from moisture when the projector is stored, wipe all exposed metal parts, with a cloth moistened with oil (FED VV.L.800). To remove condensation, allow the projector to warm up **to** room temperature (para 2-9) and the wipe with a clean, dry cloth before using It. When storing the projector cover It with water-repellent material and add desiccant, if available, to absorb moisture.

CHAPTER 3

OPERATOR MAINTENANCE

3-1. Tools and Materials Required

The following tools and materials are required for operator maintenance:

Lint-free cloth (NSN 8305-00-170-5062).
Hand blower (air syringe).
Camel's-hair brush.
Lens cleaner (NSN 6760-00-408-5175).
Trichloroethane.

NOTE

The above tools and materials are part of Tool Kit, Photographic Repair TK-77/GF.

3-2. Operator Preventive Maintenance Checks and Services

a To insure that the projector is always ready for operation, it must be inspected systematically so that defects may be discovered and corrected before they result in serious damage or failure. The necessary daily and *weekly preventive* maintenance checks and services to be performed are listed in table 3-1. The item numbers indicate the sequence of and minimum inspection required. Defects discovered during operation of the unit will be noted for future correction to be made as soon as operation has ceased. Stop operation immediately if a deficiency is noted that would damage the equipment. Record all deficiencies together with the corrective action taken in accordance with TM 38-750.

b. Preventive maintenance checks and services of the projector are required on a daily basis while the projector is in use. If the projector is maintained in a standby (ready for immediate operation) condition, the daily checks and *services* should be *performed* once each week. Table 3-1 specifies the checks and services that must be performed daily and under the following special conditions:

(1) When the equipment is initially placed in service.

(2) When the equipment or any *of its com*ponents are removed from service for any reason.

Table 3-1. Operator Preventive Maintenance Checks and Services

D—Daily Time required: 0.9				W—Weekly Time Required: 2.7	
Interval and Sequence No.		Item to be inspected procedure	Work Time	Reference	
D	W		(M/H)	Para	Fig.
1	1	COMPLETENESS OF EQUIPMENT Check to see if all items required for operation are available.	0.25		
	2	CLEANLINESS Check to see that all exterior surfaces of the equipment are clean from foreign matter.	0.1		
2	3	STORAGE AND TAKEUP REELS Check to see that storage and takeup reels operate freely. Check to see that captive thumbscrews are not damaged and that they permit attachment to housing.	0.1		
	4	OPTICAL SYSTEM Check exterior surfaces of stage glass and projection head lenses for visible signs of damage such as cracks or chips. CAUTION Severe damage to projection lamp will occur if operated without cooling air. If cooling fan does not operate while projection lamp is on, immediately set power switch to OFF.	0.1		
3	5	OPERATION Check power cable and plug for damage. Set power switch to FAN. Check to see that switch operates smoothly and that cooling fan is operating. Set power switch to *ON.* Check to see that switch operates smoothly and that cooling fan and projection lamp are operating. Lift projection- frame. Projection lamp should extinguish, fan should stop. Operate **focus** knob while observing projected image. Concentric rings should appear in focus. No extraneous spots should be visible. Check to see that projection head pivots freely.	0.25		

c. Perform the maintenance functions indicated in the weekly preventive maintenance checks and services given in table 3-1 once each week. A week is defined as approximately 7 calendar days of 8-hour-per-day operation. If the equipment is operated for more than 8 hours a day, the weekly maintenance interval should be made to compensate for any unusual operating conditions. Equipment maintained in a standby condition must have weekly maintenance performed on it. Equipment in limited storage (requires service before operation) does not require weekly maintenance.

3-3. Cleaning

Cleaning the projector is essential to proper operation. Dirt on the lenses or stage glass can appear as a magnified image on the projection surface. Images of this type not only are a nuisance, but can obscure or alter the information that should be projected.

a. Lenses. Clean the exterior surfaces of the front and bottom lenses in the lens head assembly with the lens tissue. If dirt particles appear in the rim of the lens frames, remove them with a camel's-hair brush.

CAUTION

Do not allow cleaning liquid to leak into the projector housing. Use only the minimum amount of liquid to moisten the cloth.

b. Stage Glass. Clean the top of the stage glass with a lint-free cloth that has been moistened in a soap and water solution and then wipe dry.

3-4. Operator Troubleshooting

The troubleshooting information given in table 3-2 is based primarily on trouble symptoms that may be observed while making the operational checks in the operator's preventive maintenance checks and services (table 3-1). Symptoms of troubles that occur during normal operation of a defective projector are also included. In the *Corrective action* column, paragraph references are to procedures that are too lengthy or involved to include in the table. Any malfunction that is beyond the scope of the operator to correct shall be referred to organizational maintenance.

Table 3-2. Operator Troubleshooting

Malfunction	Probable cause	Corrective action
1. Spots appear on screen that are not on transparency	a. Damaged stage glass	a. Refer to higher category of maintenance.
	b. Dirty stage glass.	*b.* Clean stage glass (pars 3-3).
	c. Damaged or dirty Fresnel lens	*c.* Refer to higher category of maintenance
2. Cloudy images	a. Dirty projection head lens	a. Clean lenses (para 3-3)
	b. Dirt inside projection head	*b.* Refer to higher category of maintenance
3. Focus knob does not operate smoothly,	Defective head support assembly.	Refer to higher category of maintenance.-
4. Switch does not operate smoothly.	Defective switch.	Refer to higher category of maintenance
5. Cooling fan, lamp, or both do not operate	*a.* Power cable plug not securely plugged into wall outlet	a. Seat plug securely in wall outlet.
	b. Defective power switch	*b.* Refer to higher category of maintenance
	c. Defective interlock switch	*c.* Refer to higher category of maintenance
	d. Defective cooling fan	*d.* Refer to higher category of maintenance
	e. Defective lamp	*e.* Refer to higher category of maintenance
	f. Defective wiring	*f.* Refer to higher category of maintenance
6. Projection head does not pivot.	a. Defective projection head assembly.	*a.* Refer to higher category of maintenance.
7. Distorted image.	a. Damaged Fresnel lens	a. Refer to higher category of maintenance
	b. Defective head support assembly.	*b.* Refer to higher category of maintenance.
8. Storage and takeup reels do not operate freely	*a* Defective storage or takeup reel.	*a.* Refer to higher category of maintenance
	b. Defective reel bracket assemblies.	*b.* Refer to higher category of maintenance.

CHAPTER 4

ORGANIZATIONAL MAINTENANCE

4-1. Tools, Materials, and Test Equipment Required
Tool Kit, Photographic Repair TK-77/GF is required for organizational maintenance. TM 11-6730-242-24P lists repair parts and special tools required for organizational maintenance of the projector.

4-2. Repainting and Refinishing Instructions
If inspection of the projector indicates that a painted surface is chipped, cracked, or peeling, repaint or refinish in accordance with the instructions in TB 43-0118. Use paints or finishes listed in SB 11-573.

4-3. Organizational Preventive Maintenance Checks and Services

a. To be sure that the projector is always ready for operation, it must be inspected systematically so that defects may be discovered and corrected before they result in serious damage or failure. The necessary monthly and quarterly preventive maintenance checks and services to be performed are listed in table 4-1. The item numbers indicate the sequence of and minimum inspection required. Defects discovered during operation of the unit will be noted for future correction to be made as soon as operation has ceased. Stop operation immediately if a deficiency is noted during operation which would damage the equipment. Record all deficiencies together with the corrective action taken in accordance with TM 38-750.

b. Perform the maintenance functions indicated in the monthly preventive maintenance checks and services in table 4-1 once each month at the same time that the daily and weekly preventive maintenance checks and services (table 3-1) are performed. A month is defined as approximately 30 calendar days of 8-hour-per-day operation. If the equipment is operated 16 hours a day, the monthly preventive maintenance checks and services should be performed at 15-day intervals. Adjustment of the maintenance interval must be made to compensate for any unusual operating conditions. Equipment maintained in a standby condition must have monthly preventive maintenance checks and services performed on it. Equipment in limited storage does not require monthly preventive maintenance.

c. Quarterly preventive maintenance checks and services on the projector are required. Periodic daily and weekly (table 3-1), and monthly (table 4-1) preventive maintenance checks and services constitute a part of the quarterly preventive maintenance checks and services and must be performed concurrently. All deficiencies or shortcomings will be recorded in accordance with the requirements of TM 38-750. Perform all checks and services listed in the quarterly preventive maintenance checks and services (table 4-1) in the sequence listed.

4-4. Organizational Troubleshooting
Organizational troubleshooting is based on trouble symptom observed while making the operational checks listed in the daily, weekly (table 3-1), monthly, and quarterly (table 4-11 preventive maintenance checks and services tables. The trouble symptoms observed and their probable causes are listed in the operator troubleshooting table (table 3-2). The checks and corrective actions listed in the table that apply to organizational maintenance are those in items No. 5d, 1c, 8a, and 8b. Refer all other checks and corrective action to a higher category of maintenance. To replace a storage or takeup reel or reel bracket assembly (items 8a and 8b), perform the procedure given in paragraph 4-5. To replace a projection lamp (item 5d), perform the procedure given in paragraph 4-6. To clean the lower surface of the Fresnel lens (item 1c) perform procedure given in paragraph 4-7. Refer to a higher category of maintenance for cleaning upper surface.

Table 4-1. Organizational Preventive Maintenance Checks and Services

M—Monthly Time required:				Q—Quarterly Time Required:	
Interval and Sequence No.		Item to be inspected procedure	Work Time (M/H)	Reference	
M	Q			Para	Fig.
1	1	POWER CABLE Inspect power cable for worn, cracked, or frayed areas. Check to see that plug is securely attached.	0.1		
2	2	POWER PLUG AND CONVENIENCE OUTLET Check for worn, cracked, or broken or bent pins or sockets.	0.1		
3	3	WIRING Inspect wiring to see that it is in good condition, and all connections are secured by their associated binding screws or electrical caps.	0.2		
4	4	PRESERVATION Inspect all painted surfaces for cracks, chipped paint, rust, corrosion, mildew, or fungi.	0.1		
	5	PUBLICATIONS Refer to the latest issue of DA Pam 310-4 to determine whether there are new editions, changes, or additional publications pertaining to the equipment.	0.25		
	6	MODIFICATIONS Refer to DA Pam 310-7 to determine whether there are modification work orders (MWO's) pertaining to the equipment	0.25,		
	7	PROJECTION HEAD ASSEMBLY Check to see that projected image is centered on projection surface when image source on transparency is centered on stage glass.	0.2		

4-5. Reel Bracket Assembly Removal

a. Loosen two thumbscrews securing reel bracket assemblies to housing.

b. Place replacement reel bracket assembly in position and secure in place using two thumbscrews.

4-6. Projection Lamp Replacement

WARNING

Disconnect power cable before proceeding with replacement procedure.

a. Lift the projection frame.

WARNING

Be careful when handling the projection lamp. If a lamp is still hot from operation, touching the glass envelope can cause painful burns.

b. Operate the lamp eject lever on the projection lampholder (figure 2-2) to eject the projection lamp.

c. When the projection lamp has cooled, remove it from the case assembly, or use gloves to handle it immediately if it is still hot. Note relative positions of large and small pins.

d. Insert the replacement lamp in the lamp socket. Note that pins are keyed to prevent improper installation.

e. Move the **lamp** gently from side to side if necessary to insure a firm seating for the lamp.

f. Lower the projection frame onto the housing.

4-7. Cleaning Fresnel Lens Lower Surface

Organizational cleaning is similar to operator cleaning except that the lower surface of the Fresnel lens can be cleaned. Clean the lower surface of the Fresnel lens as follows:

WARNING

Disconnect power cable plug before proceeding with cleaning procedure.

a. Lift the projection frame.

b. Clean the lower surface of the Fresnel lens in accordance with the instructions given in paragraph 3-3.

c. Lower the projection frame onto the housing.

APPENDIX A

REFERENCES

DA Pam 310-4	Index of Technical Publications.
SB 11-573	Painting and Preservation of Supplies Available for Field Use for Electronics Command Equipment.
SB 38-100	Preservation, Packaging, Packing and Marking Materials, Supplies, and Equipment Used by the Army.
TB 43-0118	Field Instructions for Painting and Preserving Electronics Command Equipment Including Camouflage Pattern Painting of Electrical Equipment Shelters.
TM 11-6730-242-24P	Organizational, Direct Support, and General Support Maintenance Repair Parts and Special Tools Lists for Projector, Still Picture PH-637E/PFP (NSN 6730-01-014-5072).
TM 11-6730-242-30	Direct Support Maintenance Manual for Projector, Still Picture PH-637E/PFP (NSN 6730-01-014-5072).
TM 38-750	The Army Maintenance Management System (TAMMS)
TM 740-90-1	Administrative Storage of Equipment
TM 750-244-2	Procedures for Destruction of Electronics Materiel to Prevent Enemy Use (Electronics Command).

APPENDIX C

MAINTENANCE ALLOCATION

Section I. INTRODUCTION

C-1. General

This appendix provides a summary of the maintenance operations for Projector, Still Picture PH-637E/PFP. It authorizes categories of maintenance for specific maintenance functions on repairable items and components and the tools and equipment required to perform each function. This appendix may be used as an aid in planning maintenance operations.

C-2. Maintenance Function

Maintenance functions will be limited to and defined as follows:

a. Inspect. To determine the serviceability of an item by comparing its physical, mechanical, and/or electrical characteristics with established standards through examination.

b. Test. To verify serviceability and to detect incipient failure by measuring the mechanical or electrical characteristics of an item and comparing those characteristics with prescribed standards.

c. Service. Operations required periodically to keep an item in proper operating condition; i.e., to clean, preserve, drain, paint, or to replenish fuel/lubricants/hydraulic fluids or compressed air supplies.

d. Adjust. Maintain within prescribed limits by bringing into proper or exact position, or by setting the operating characteristics to the specified parameters.

e. Align. To adjust specified variable elements of an item to about optimum or desired performance.

f. Calibrate. To determine and cause corrections to be made or to be adjusted on instruments or test measuring and diagnostic equipment used in precision measurement. Consists of the comparison of two instruments, one of which is a certified standard of known accuracy, to detect and adjust any discrepancy in the accuracy of the instrument being compared.

g. Install. The act of emplacing, seating, or fixing into position an item, part, module (component or assembly) in a manner to allow the proper functioning of the equipment/system.

h. Replace. The act of substituting a serviceable like-type part, subassembly, module {component or assembly) for an unserviceable counterpart.

i. Repair. The application of maintenance services (inspect, test, service, adjust, align, calibrate, replace) or other maintenance actions (welding, grinding, riveting, straightening, facing, remachining, or resurfacing) to restore serviceability to an item by correcting specific damage, fault, malfunction, or failure in a part, subassembly, module/component/assembly, end item or system. This function does not include trial and error replacement of running spare items such as fuses, lamps, or electron tubes.

j. Overhaul. That periodic maintenance effort (service/action) necessary to restore an item to a completely serviceable/operational condition as prescribed by maintenance standards (e.g., DWR) in appropriate technical publications. Overhaul is normally the highest degree of maintenance performed by the Army. Overhaul does not normally return an item to like-new condition.

k. Rebuild. Consists of those services/actions necessary for the restoration of unserviceable equipment to a like-new condition in accordance with original manufacturing standards. Rebuild is the highest degree of material maintenance applied to Army equipment. The rebuild operation includes the act of returning to zero those age measurements (hours, miles, etc.) considered in classifying Army equipment/components.

C-3. Column Entries

a. Column 1, Group Number. Column 1 lists group numbers, the purpose of which is to identify components, assemblies, subassemblies and modules with the next higher assembly.

b. Column 2, Component/Assembly. Column 2 contains the noun names of components, assemblies, subassemblies, and modules for which maintenance is authorized.

c. Column 3, Maintenance Functions. Column 3 lists the functions to be performed on the item listed in column 2.

d. Column 4, Maintenance Category. Column 4 specifies, by the listing of a "worktime" figure in the

appropriate subcolumn(s), the lowest level of maintenance authorized to perform the function listed in column 3. This figure represents the active time required to perform that maintenance function at the indicated category of maintenance. If the number or complexity of the tasks within the listed maintenance function vary at different maintenance categories, appropriate "worktime" figures will be shown for each category. The number of man-hours specified by the "worktime" figure represents the average time required to restore an item (assembly, subassembly, component, module, end item or system) to a serviceable condition under typical field operating conditions. This time includes preparation time, troubleshooting time and quality assurance/quality control time in addition to the time required to perform the specific tasks identified for the maintenance functions authorized in the maintenance allocation chart. Subcolumns of column 4 are as follows:

C- Operator/Crew
O - Organizational
F-Direct Support
H--General Support
D-Depot

e. Columns 5, Tools and Equipment. Column 5 specifies by codes, those common tool sets (not individual tools) and special tools, test, and support equipment required to perform the designated function.

C4. Tool and Test Equipment Requirements

a Tool or Test Equipment Requirements (Table 1). The numbers in this column coincides with the numbers used in the tools and equipment column of the MAC. The numbers indicate the applicable tool or test equipment for the maintenance functions.

b. Maintenance Category. The codes in this column indicate the maintenance category allocated the tool or test equipment.

c. Nomenclature. This column lists the noun name and nomenclature of the tools and test equipment required to perform the maintenance functions.

d. National/NATO Stock Number. This column lists the National/NATO stock number of the specific tool or test equipment.

e. Tool Number. This column lists the manufacturer’s part number of the tool followed by the Federal Supply Code for Manufacturer’s (5 digit) in parentheses.

Section II. MAINTENANCE ALLOCATION CHART FOR

PROJECTOR, STILL PICTURE PH-637E/PFP

(1)	(2)	(3)	(4)					(5)	(6)
GROUP NUMBER	COMPONENT ASSEMBLY	MAINTENANCE FUNCTION	MAINTENANCE CATEGORY C	O	F	H	D	TOOLS AND EQUIPMENT	REMARKS
00	PROJECTOR, STILL PICTURE PH-637E/PFP	Inspect	0.1					1	
		Service		0.2	0.1			1	
		Adjust			0.2			1	
		Test			0.2			1,2	
		Replace		0.2					
		Repair			1			1,2	
		Overhaul					5	1,2	

TABLE I. TOOL AND TEST EQUIPMENT REQUIREMENTS FOR

PROJECTOR, STILL PICTURE PH-637E/PFP

(1) TOOL OR TEST EQUIPMENT REF CODE	(2) MAINTENANCE CATEGORY	(3) NOMENCLATURE	(4) NATIONAL/NATO STOCK NUMBER	(5) TOOL NUMBER
1	O,F,H,D	TOOL KIT, PHOTOGRAPHIC REPAIR TI-77/GR	5180-00-752-9068	
2	F, H, D	MULTIMETER AN/URM-105	6625-00-999-6282	

By Order of the Secretary of the Army:

FRED C. WEYAND
General, United States Army
Chief of Staff

Official:
PAUL T. SMITH
Major General, United States Army
The Adjutant General

DISTRIBUTION:
Active Army:
USASA (2)
COE (1)
TSG (1)
USAARENBD (1)
DARCOM (1)
TRADOC (2)
OS Maj Comd (4)
LOGCOMDS (3)
MICOM (2)
TECOM (2)
USACC (4)
MDW (1)
Armies (2)
Corps (2)
HISA (Ft Monmouth) (33)
Svc Colleges (1)
USASESS (5)
USAADS (2)
USAFAS (2)
NG: None
USAR: None
For explanation of abbreviations used see AR310-50

USAARMS (2)
USAIS (2)
USAES (2)
USAICS (3)
MAAG (1)
USARMIS (1)
Instl **12)** except)
Fort Gillem (10)
Fort Huachuca (10)
Fort Carson (5)
Ft Richardson (ECOM) (2)
LBAD (14)
SAAD (30)
TOAD (14)
SHAD (3)
SigFLDMS (1)
USAERDAA (1)
USAERDAW (1)
Fort Gordon (10)

*U.S. GOVERNMENT PRINTING OFFICE: 1994 0 300-421 (01117)

TEAR ALONG PERFORATED LINE

RECOMMENDED CHANGES TO EQUIPMENT TECHNICAL PUBLICATIONS

THEN. . JOT DOWN THE DOPE ABOUT IT ON THIS FORM, CAREFULLY TEAR IT OUT, FOLD IT AND DROP IT IN THE MAIL!

SOMETHING WRONG WITH THIS PUBLICATION?

FROM: (PRINT YOUR UNIT'S COMPLETE ADDRESS)

DATE SENT

PUBLICATION NUMBER	PUBLICATION DATE	PUBLICATION TITLE

BE EXACT. . .PIN-POINT WHERE IT IS

PAGE NO.	PARA-GRAPH	FIGURE NO	TABLE NO.

IN THIS SPACE TELL WHAT IS WRONG AND WHAT SHOULD BE DONE ABOUT IT:

PRINTED NAME, GRADE OR TITLE, AND TELEPHONE NUMBER

SIGN HERE:

DA FORM 1 JUL 79 2028-2

PREVIOUS EDITIONS ARE OBSOLETE.

P.S.—IF YOUR OUTFIT WANTS TO KNOW ABOUT YOUR RECOMMENDATION MAKE A CARBON COPY OF THIS AND GIVE IT TO YOUR HEADQUARTERS.

PIN: 020061-004

This fine document...

Was brought to you by me:

Liberated Manuals -- free army and government manuals

Why do I do it? I am tired of sleazy CD-ROM sellers, who take publicly available information, slap “watermarks” and other junk on it, and sell it. Those masters of search engine manipulation make sure that their sites that sell free information, come up first in search engines. They did not create it... They did not even scan it... Why should they get your money? Why are not letting you give those free manuals to your friends?

I am setting this document FREE. This document was made by the US Government and is NOT protected by Copyright. Feel free to share, republish, sell and so on.

I am not asking you for donations, fees or handouts. If you can, please provide a link to liberatedmanuals.com, so that free manuals come up first in search engines:

<A HREF=http://www.liberatedmanuals.com/>Free Military and Government Manuals</A>

- Sincerely
  Igor Chudov
  http://igor.chudov.com/
- Chicago Machinery Movers