TECHNICAL MANUAL

ORGANIZATIONAL, DIRECT SUPPORT, AND GENERAL SUPPORT MAINTENANCE REPAIR PARTS AND SPECIAL TOOLS LISTS (INCLUDING DEPOT MAINTENANCE REPAIR PARTS AND SPECIAL TOOLS)

FOR

SWEEP GENERATOR SG-677A/U

(NSN 6625-01-074-4337)

HEADQUARTERS, DEPARTMENT OF THE ARMY
17 FEBRUARY 1981

TECHNICAL MANUAL
No. 11-6625-2955-24P

HEADQUARTERS
DEPARTMENT OF THE ARMY
WASHINGTON, DC, *17 February 1981*

ORGANIZATIONAL, DIRECT SUPPORT, AND GENERAL SUPPORT MAINTENANCE REPAIR PARTS AND SPECIAL TOOLS LISTS (INCLUDING DEPOT MAINTENANCE REPAIR PARTS AND SPECIAL TOOLS) FOR SWEEP GENERATOR SG-677A/U (NSN 6625-01-074-4337)

Current as of 13 June 1980

REPORTING ERRORS AND RECOMMENDING IMPROVEMENTS

You can help improve this manual. If you find any mistakes or if you know of a way to improve the procedures, please let us know. Mail your letter DA Form 2028 (Recommended Changes to Publications and Blank Forms), or DA Form 2028-2 located in back of this manual direct to Commander, US Army Communications and Electronics Materiel Readiness Command ATTN: DRSEL-ME-MQ, Fort Monmouth, NJ 07703.

In either case, a reply will be furnished direct to you.

Table of Contents

			Page	Illus Figure
SECTION	I.	Introduction	1	
	II.	Repair Parts List	5	
Group	00	Sweep Generator SG-677A/U		
		Top Assembly	5	2-1
		Cabinet Assembly	9	2-2
		Chassis Assembly	17	2-3
		Sweep Time Switch Assembly	21	2-4
		Marker Size Switch Assembly	25	2-5
		Harness Assembly	29	2-6
	01	Module M1H (No parts authorized)		
	02	Module M2H (No parts authorized)		
	03	Module M5H (no parts authorized)		
	04	Module M6H-1 (No parts authorized)		
	05	Module M6H-10 (No parts authorized)		
	06	Module M6H-50 (No parts authorized)		
	07	Module M9H	35	2-7
	08	Module M10H	45	2-8
	09	Module M19H	55	2-9
	10	Power Supply PS6A	61	2-10
SECTION	III.	Special Tools List (Not applicable)		
	IV.	National Stock Number and Part Number Index	63	

*** This manual supersedes so much of TM 11-6625-2955-14&P, dated 22 January 1980, as pertains to repair parts and special tools lists.**

SECTION I

INTRODUCTION

1-1. Scope

This manual lists spares and repair parts; special tools; special test, measurement, and diagnostic equipment (TMDE), and other special support equipment required for performance of organizational, direct support, and general support maintenance of the SG-677A/U. It authorizes the requisitioning and issue of spares and repair parts as indicated by the source and maintenance codes.

1-2. General

This Repair Parts and Special Tools List is divided into the following sections:

a. Section II. Repair Parts List. A list of spares and repair parts authorized for use in the performance of maintenance. The list also includes parts which must be removed for replacement of the authorized parts. Parts lists are composed of functional groups in numeric sequence, with the parts in each group listed in figure and item number sequence.

b. Section III. Special Tools List. Not applicable.

c. Section IV. National Stock Number and Part Number Index. A list, in National item identification number (NIIN) sequence, of all National stock numbers (NSN) appearing in the listings, followed by a list, in alphameric sequence, of all part numbers appearing in the listings. National stock numbers and part numbers are cross-referenced to each illustration figure and item number appearance.

1-3. Explanation of Columns

a. Illustration. This column is divided as follows:

(1) *Figure number.* Indicates the figure number of the illustration on which the item is shown.

(2) *Item number.* The number used to identify item called out in the illustration.

b. Source, Maintenance, and Recoverability (SMR) Codes.

(1) Source code. Source codes indicate the manner of acquiring support items for maintenance, repair, or overhaul of end items. Source codes are entered in the first and second positions of the Uniform SMR Code format as follows:

Code *Definition*

PA—Item procured and stocked for anticipated or known usage.

Code *Definition*

XA-Item is not procured or stocked because the requirements for the item will result in the replacement of the next higher assembly.

XD-A support item that is not stocked. When required, item will be procured through normal supply channels.

NOTE

Cannibalization or salvage may be used as a source of supply for any items source coded above except those coded XA and aircraft support items as restricted by AR 700-42.

(2) Maintenance code. Maintenance codes are assigned to indicate the levels of maintenance authorized to USE and REPAIR support items. The maintenance codes are entered in the third and fourth positions of the Uniform SMR Code format as follows:

(a) The maintenance code entered in the third position will indicate the lowest maintenance level authorized to remove, replace, and use the support item. The maintenance code entered in the third position will indicate one of the following levels of maintenance:

Code *Application/Explanation*

O—Support item is removed, replaced, used at the organizational level.

H—Support item is removed, replaced, used at the general support level.

D—Support items that are removed, replaced, used at depot, mobile depot, specialized repair activity only.

(b) The maintenance code entered in the fourth position indicates whether the item is to be repaired and identifies the lowest maintenance level with the capability to perform complete repair (i.e., all authorized maintenance functions). This position will contain one of the following maintenance codes:

Code *Application/Explanation*

D—The lowest maintenance level capable of complete repair of the support item is the depot level.

Z—Nonreparable. No repair is authorized.

(3) *Recoverability code.* Recoverability codes are assigned to support items to indicate the

disposition action on unserviceable items. The recoverability code is entered in the fifth position of the Uniform SMR Code format as follows:

Recoverability codes	*Definition*
Z	Nonreparable item. When unserviceable, condemn and dispose at the level indicated in position 3.
D	Reparable item. When beyond lower level repair capability, return to depot. Condemnation and disposal not authorized below depot level.
L	Reparable item. Repair, condemnation, and disposal not authorized below depot/specialized repair activity level.

c. National Stock Number. Indicates the National stock number assigned to the item and will be used for requisitioning purposes.

d. Part Number. Indicates the primary number used by the manufacturer (individual, company, firm, corporation, or Government activity), which controls the design and characteristics of the item by means of its engineering drawings, specifications, standards, and inspection requirements to identify an item or range of items.

NOTE

When a stock numbered item is requisitioned, the repair part received may have a different part number than the part being replaced.

e. Federal Supply Code for Manufacturer (FSCM). The FSCM is a 5-digit numeric code listed in SB 708-41/42 which is used to identify the manufacturer, distributor, or Government agency, etc.

f. Description. Indicates the Federal item name and, if required, a minimum description to identify the item.

g. Unit of Measure (U/M). Indicates the standard of the basic quantity of the listed item as used in performing the actual maintenance function. This measure is expressed by a two-character alphabetical abbreviation (e.g., ea, in, pr, etc). When the unit of measure differs from the unit of issue, the lowest unit of issue that will satisfy the required units of measure will be requisitioned.

h. Quantity Incorporated in Unit. Indicates the quantity of the item used in the breakout shown on the illustration figure, which is prepared for a functional group, subfunctional group, or an assembly.

1-4. Special Information

a. The following publications pertain to the SG-677A/U and its components:

TM ll-6625-2955-14/P, Sweep Generator SG-677A/U.

b. National stock numbers (NSN's) that are missing from P source coded items have been applied for and will be added to this TM by future change/revision when they are entered in the Army Master Data File (AMDF). Until the NSN's are established and published, submit exception requisitions to Commander, US Army Communications and Electronics Materiel Readiness Command, ATTN: DRSEL-MM, Fort Monmouth, NJ 07703 for the part required to support your equipment.

1-5. How to Locate Repair Parts

a. When National stock number or part number is unknown.

(1) *First.* Using the table of contents, determine the functional group within which the item belongs. This is necessary since illustrations are prepared for functional groups and listings are divided into the same groups.

(2) *Second.* Find the illustration covering the functional group to which the item belongs.

(3) *Third.* Identify the item on the illustration and note the illustration figure and item number of the item.

(4) *Fourth.* Using the Repair Parts Listing, find the figure and item number noted on the illustration.

b. When National stock number or part number is known.

(1) *First.* Using the Index of National Stock Numbers and Part Numbers, find the pertinent National stock number or part number. This index is in NIIN sequence followed by a list of part numbers in alphameric sequence, cross-referenced to the illustration figure number and item number.

(2) *Second.* After finding the figure and item number, locate the figure and item number in the repair parts list.

1-6. Abbreviations

Not applicable.

(Next printed page is 4)

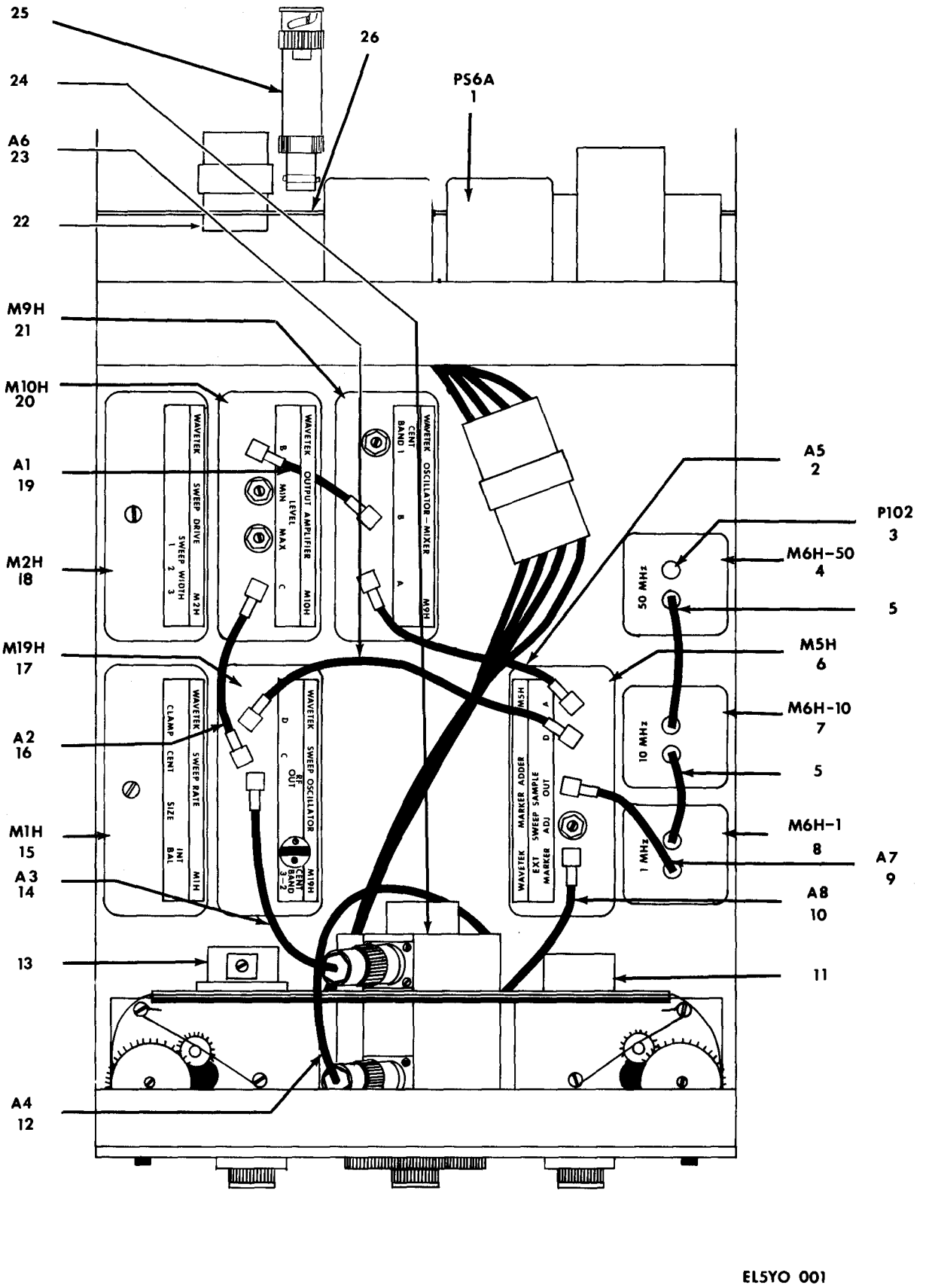

Figure 2-1. Sweep Generator SG-677A/U, Top Assembly.

(1) ILLUSTRATION (A) FIG NO.	(B) ITEM NO.	(2) SMR CODE	(3) NATIONAL STOCK NUMBER	(4) PART NUMBER	(5) FSCM	(6) DESCRIPTION USABLE ON CODE	(7) U/M	(8) QTY INC IN UNIT
						GROUP 00 SWEEP GENERATOR SG-677A/U		
2-1	1	PADDL	6130-01-094-5596	PS6A	34280	POWER SUPPLY	EA	1
2-1	2	PAHZZ	5995-01-088-2421	1217-00-0036	34280	CABLE ASSEMBLY	EA	1
2-1	3	XADZZ		1118-00-0007	34280	SMC TERMINAL	EA	1
2-1	4	PAHZZ	6625-01-085-1709	M6H50	34280	MODULE	EA	1
2-1	5	PAHZZ	6150-01-095-3844	1217-01-0030	34280	CABLE ASSEMBLY	EA	1
2-1	6	PAHZZ	4931-01-003-3857	M5H	34280	MODULE	EA	1
2-1	7	PAHZZ	6625-01-085-1708	M6H10	34280	MODULE	EA	1
2-1	8	PAHZZ	4931-01-003-2870	M6H1	34280	MODULE	EA	1
2-1	9	PAHZZ	5995-01-088-2423	1217-02-0026	34280	CABLE ASSEMBLY	EA	1
2-1	10	PAHZZ	5995-01-088-2425	1217-80-0010	34280	CABLE ASSEMBLY	EA	1
2-1	11	XDHZZ		1112-00-0005	34280	MKR SZ SWITCH ASSY	EA	1
2-1	12	PAHZZ	5995-01-088-2426	1217-80-0037	34280	CABLE ASSEMBLY	EA	1
2-1	13	XDHZZ		1112-00-0008	34280	SWEEP TIME SWITCH ASSY	EA	1
2-1	14	PAHZZ	5995-01-088-2424	1217-80-0008	34280	CABLE ASSEMBLY	EA	1
2-1	15	PAHZZ	4931-01-003-2868	M1H	34280	MODULE	EA	1
2-1	16	PAHZZ	5995-01-088-2420	1217-00-0032	34280	CABLE ASSEMBLY	EA	1
2-1	17	PAHDL	4931-01-003-2873	M19H	34280	MODULE	EA	1
2-1	18	PAHZZ	4931-01-003-2869	M2H	34280	MODULE	EA	1
2-1	19	PAHZZ	5995-01-088-2419	1217-00-0022	34280	CABLE ASSEMBLY	EA	1
2-1	20	PAHDL	4931-01-003-2872	M10H	34280	MODULE	EA	1
2-1	21	PAHDL	4931-01-003-2871	M9H	34280	MODULE	EA	1
2-1	22	XADZZ		1118-00-0001	34280	REMOTE JUMPER PLUG	EA	1
2-1	23	PAHZZ	5995-01-088-2422	1217-00-0050	34280	CABLE ASSEMBLY	EA	1
2-1	24	HZZ	6625-01-088-6705	1113-30-0024	34280	ATTENUATOR,VARIABLE	EA	1
2-1	25	PAHZZ	6625-01-088-6720	1113-15-0005	34280	DETECTOR,RADIO FREQ	EA	1
2-1	26	XDHZZ		1111-00-0042	34280	CABINET ASSY	EA	1

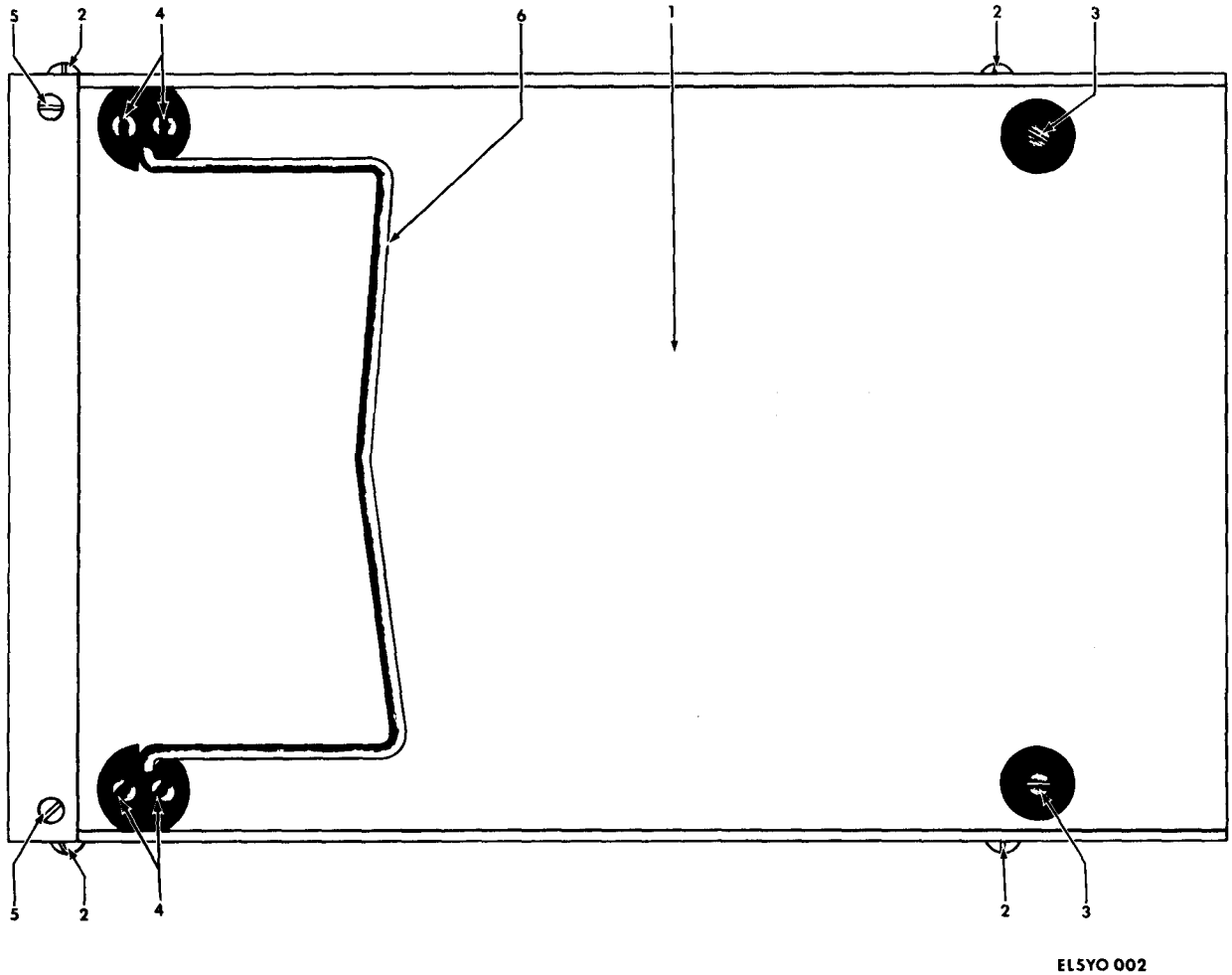

Figure 2-2. Sweep Generator SG-677A/U, Cabinet Assembly, (Sheet 1 of 2).

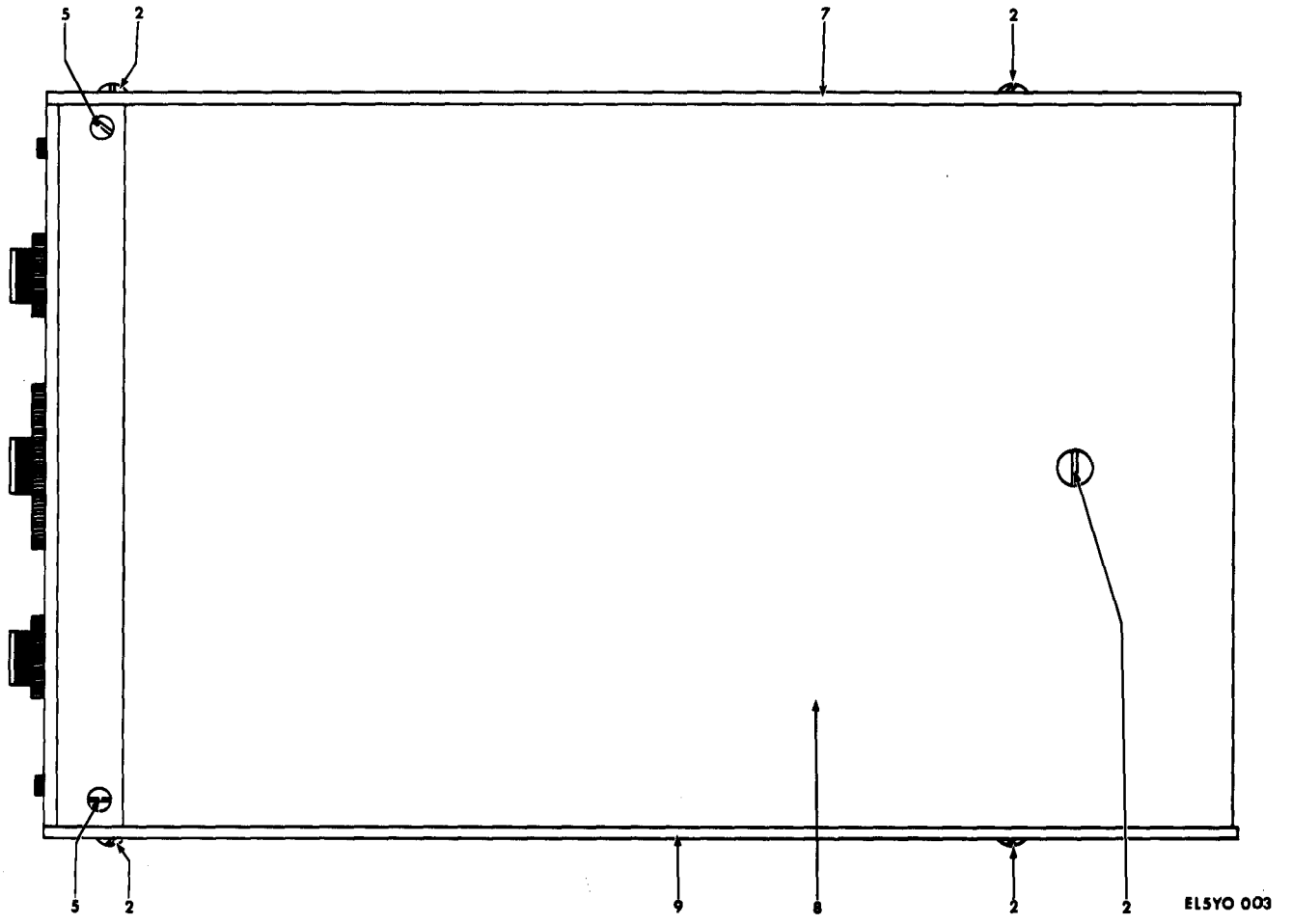

Figure 2-2. Sweep Generator SG-677A/U, Cabinet Assembly, (Sheet 2 of 2).

(1) ILLUSTRATION (A) FIG NO.	(B) ITEM NO.	(2) SMR CODE	(3) NATIONAL STOCK NUMBER	(4) PART NUMBER	(5) FSCM	(6) DESCRIPTION	USABLE ON CODE	(7) U/M	(8) QTY INC IN UNIT
2-2	1	XDHZZ		1410-00-4450	34280	COVER,BOTTOM		EA	1
2-2	2	XDHZZ		11403NP	73734	SCREW,MACHINE		EA	9
2-2	3	XDHZZ		4034NP	73734	SCREW,MACHINE		EA	2
2-2	4	PAHZZ	5310-01-063-5069	C7494-632-4	78553	NUT,SHEET SPRING		EA	4
2-2	5	XDHZZ		2332NP	73734	SCREW,MACHINE		EA	4
2-2	6	PAHZZ	5340-01-088-5854	40008-2	21604	BRACKET,DOUBLE		EA	1
2-2	7	XDHZZ		1410-60-1190	34280	PANEL,SIDE		EA	1
2-2	8	XDHZZ		1410-00-4270	34280	COVER,TOP		EA	1
2-2	9	XDHZZ		1410-00-4260	34280	PANEL,SIDE		EA	2

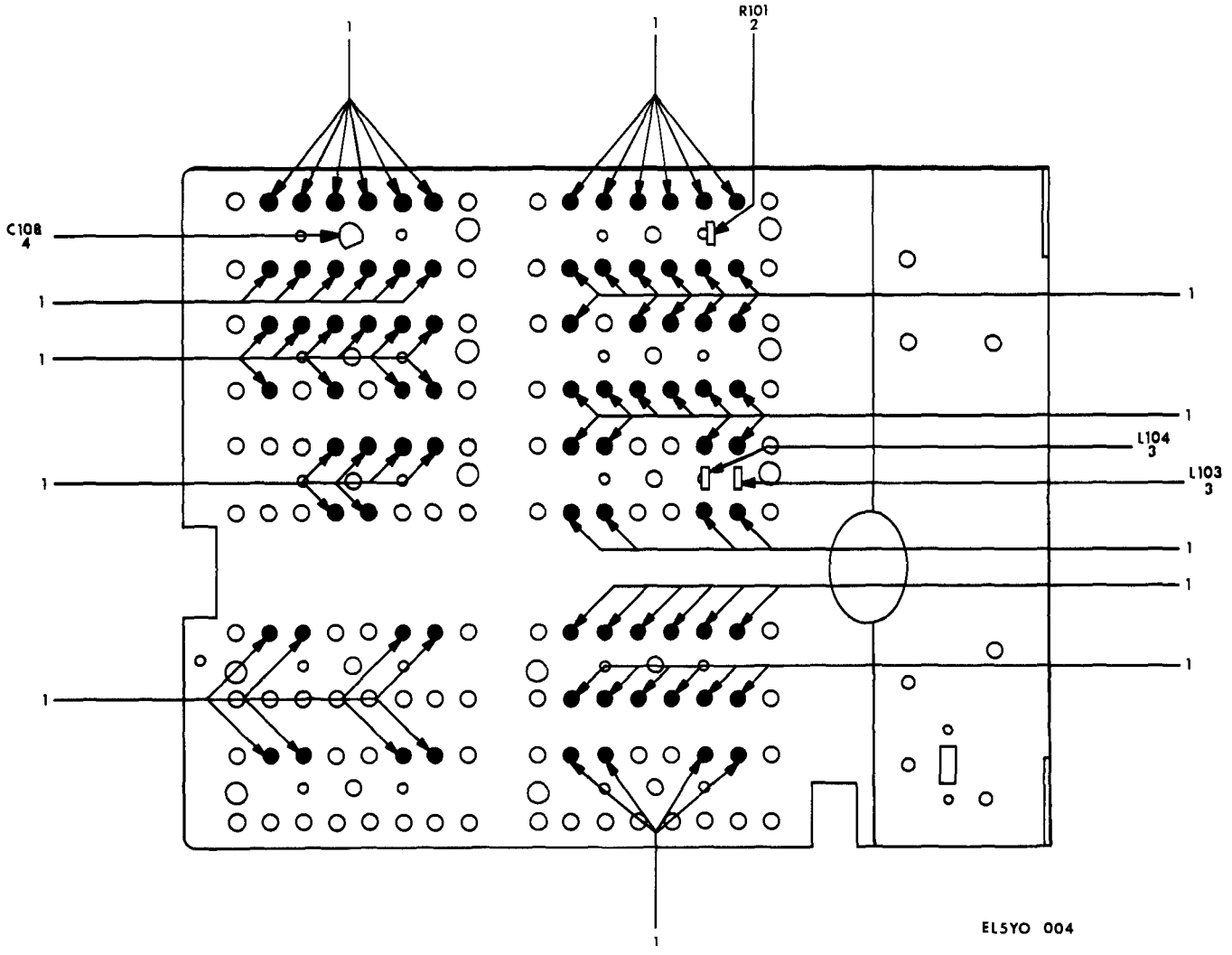

Figure 2-3. Sweep Generator SG-677A/U, Chassis Assembly, (Sheet 1 of 6).

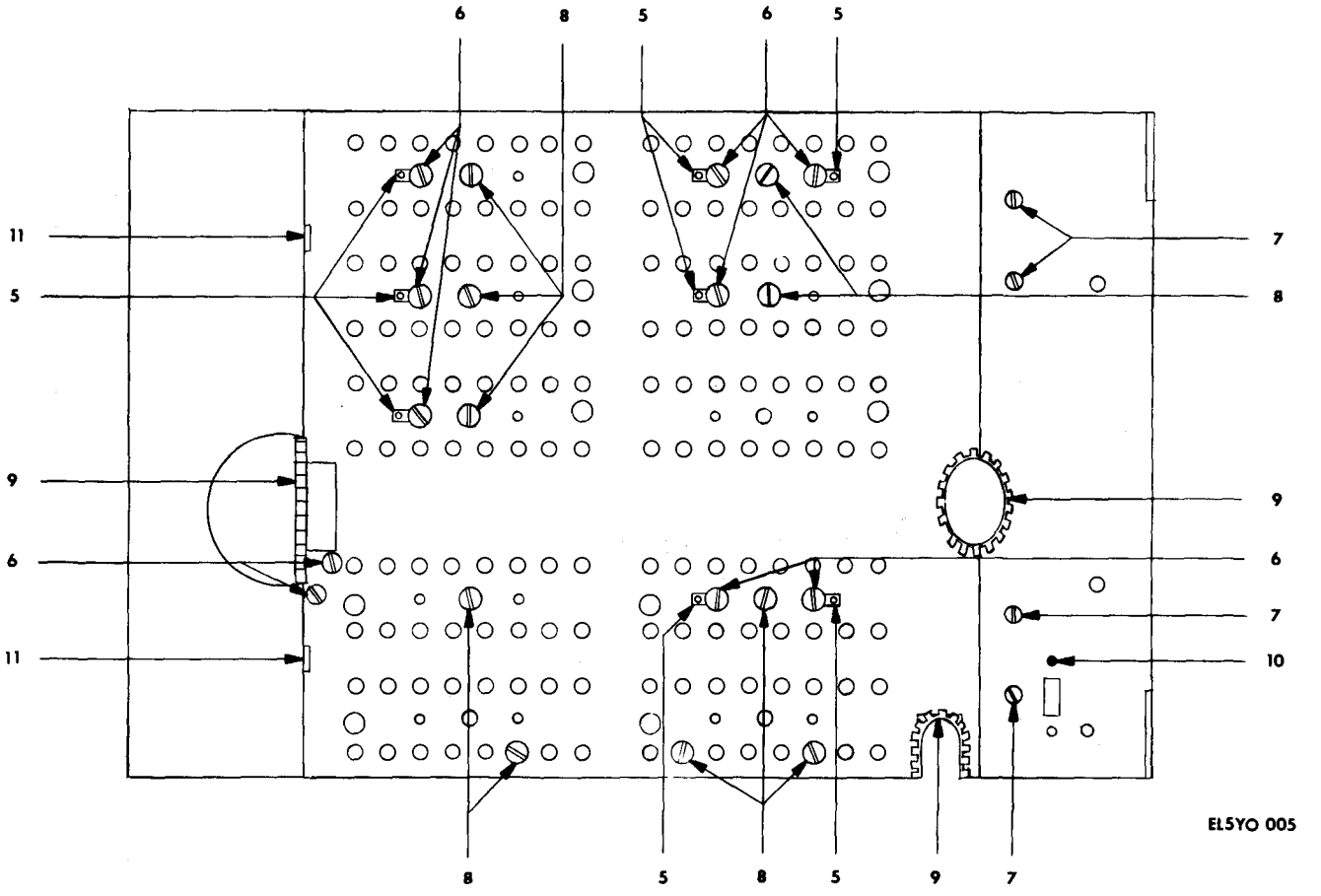

Figure 2-3 Sweep Generator SG-677A/U. Chassis Assembly, (Sheet 2 of 6).

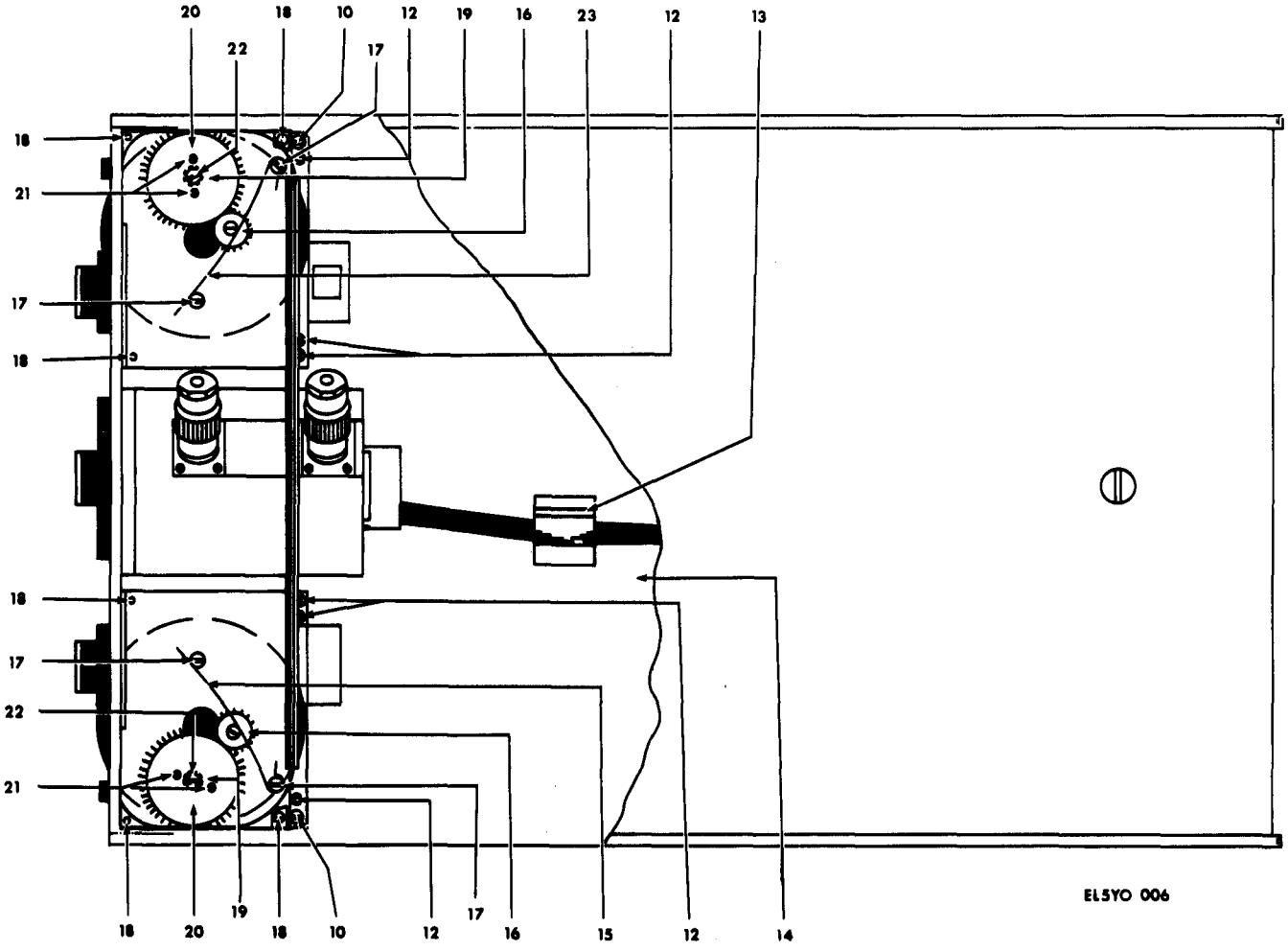

Figure 2-2. Sweep Generator SG-677A/U, Chassis Assembly, (Sheet 3 of 6).

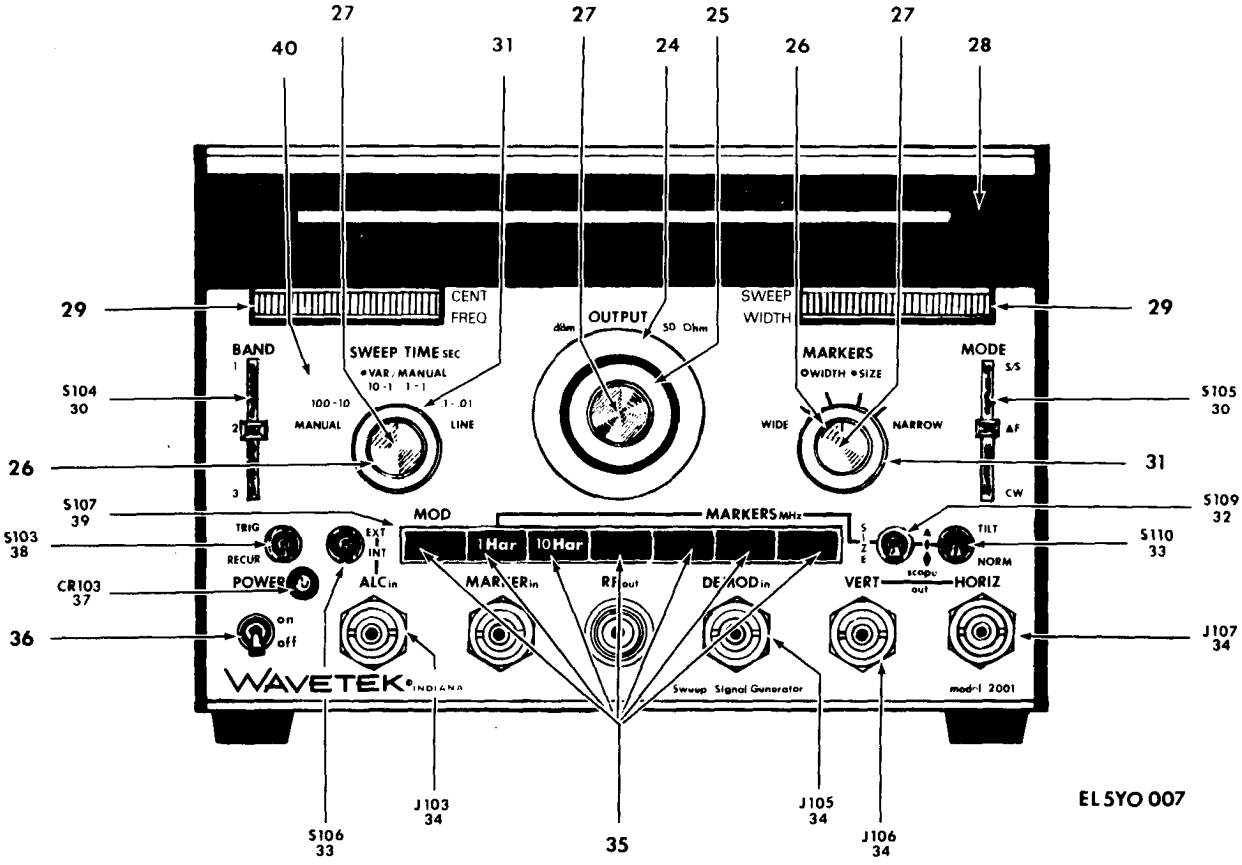

Figure 2-3. Sweep Generator SG-677A/U, Chassis Assembly, (Sheet 4 of 6).

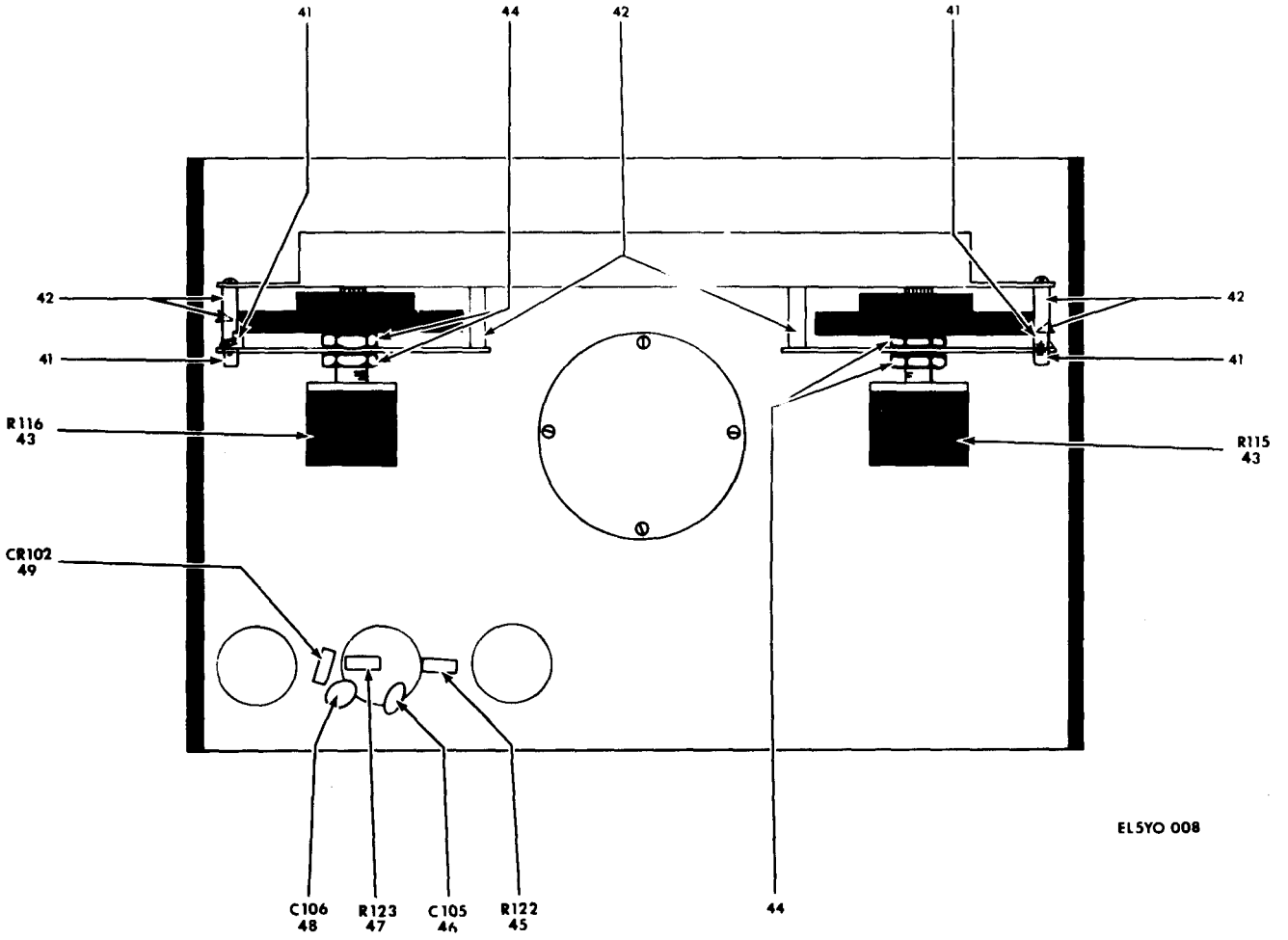

Figure 2-3 Sweep Generator SG-677A/U, Chassis Assembly, (Sheet 5 of 6).

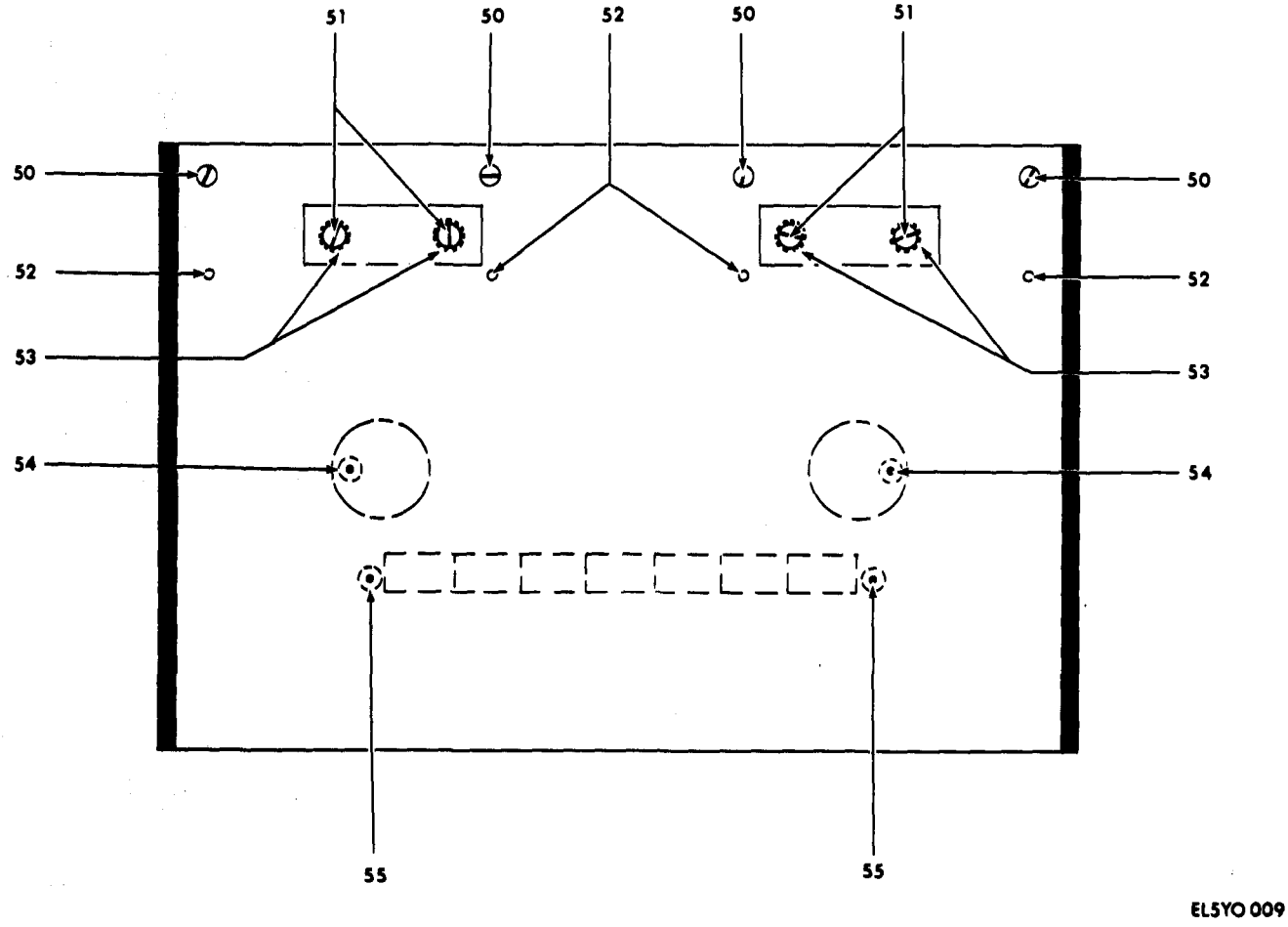

Figure 2-3. Sweep Generator SG-677A/U, Chassis Assembly (Sheet 6 of 6).

(1) ILLUSTRATION (A) FIG NO.	(B) ITEM NO.	(2) SMR CODE	(3) NATIONAL STOCK NUMBER	(4) PART NUMBER	(5) FSCM	(6) DESCRIPTION	USABLE ON CODE	(7) U/M	(8) QTY INC IN UNIT
2-3	1	PAHZZ	5935-01-088-8254	016-2604-00-0-20 9	98291	CONNECTOR,RECEPTACL		EA	83
2-3	2	PADZZ	5905-00-141-0592	RCR20G122JS	81349	RESISTOR,FIXED,COMP		EA	1
2-3	3	PAHZZ	5950-01-088-6940	08N100K	06560	COIL,RADIO FREQUENC		EA	2
2-3	4	PAHZZ		60U361M	91984	CAPACITOR,FIXED,CER		EA	1
2-3	5	XDHZZ		38-111	73734	LUG,GROUND		EA	8
2-3	6	XDHZZ		6-32X3/16BHNP	73734	SCREW MACHINE		EA	17
2-3	7	XDHZZ		4032NP	73734	SCREW,MACHINE		EA	4
2-3	8	XDHZZ		4033NP	73734	SCREW MACHINE		EA	13
2-3	9	XDHZZ		WG101-1 9/16LG	95987	GROMMET		EA	3
2-3	10	XDHZZ		4020NP	73734	SCREW,MACHINE		EA	3
2-3	11	XDHZZ		4052NP	73734	SCREW,MACHINE		EA	4
2-3	12	XDHZZ		011-6808-000-59- 9	98291	TERMINAL,FEEDTHRU		EA	6
2-3	13	XDHZZ		128105	73734	CABLE CLAMP,FLAT		EA	1
2-3	14	XDHZZ		1410-60-1410	34280	PANEL FRONT		EA	1
2-3	15	XDHZZ		1410-00-1260	34280	SPRING,TENSION RH		EA	1
2-3	16	XDHZZ		2810-12-0004	34280	GEAR,SPUR		EA	2
2-3	17	XDHZZ		4024NP	73734	SCREW		EA	4
2-3	18	XDHZZ		2017NP	73734	SCREW,MACHINE		EA	6
2-3	19	XDHZZ		9403NP	73734	SPACER,ROUND		EA	2
2-3	20	XDHZZ		1219-00-0142	34280	GEAR-SPROCKET ASSY		EA	2
2-3	21	XDHZZ		7401CAD	73734	DRIVESCREW		EA	4
2-3	22	XDHZZ		2015NP	73734	SCREW,MACHINE		EA	4
2-3	23	XDHZZ		1410-00-1270	34280	SPRING,TENSION LH		EA	1
2-3	24	PAOZZ	5355-01-088-7971	1410-00-1510	34280	KNOB		EA	1
2-3	25	PAOZZ	5355-01-088-8967	1410-00-1500	34280	KNOB		EA	1
2-3	26	PAOZZ	5355-01-088-7972	1410-00-1660	34280	KNOB		EA	2
2-3	27	PAOZZ	5340-01-088-6736	1410-00-2580	34280	BUTTON,PLUG		EA	3
2-3	28	XDHZZ		1410-00-1210	34280	DIAL PLATE		EA	1
2-3	29	XDHZZ		1410-00-4470	34280	KNOB ASSY		EA	2
2-3	30	PAHZZ		184A1	76854	SWITCH,LEVER		EA	2
2-3	31	PAOZZ		1410-00-5930	34280	KNOB		EA	2
2-3	32	PAHZZ		7103PN-BLK	09353	SWITCH,TOGGLE		EA	1
2-3	33	PAHZZ	5930-00-255-9462	7101PN	09353	SWITCH,TOGGLE		EA	2
2-3	34	PAHZZ	5935-01-088-8253	KC79-146	91836	CONNECTOR,RECEPTACL		EA	4
2-3	35	PAHZZ		J52304-B	71590	PUSH BUTTON		EA	7
2-3	36	PAHZZ	5930-01-089-0712	9201P3HZQ	09353	SWITCH,TOGGLE		EA	1
2-3	37	PAHZZ	5961-01-035-7154	5082-4955	28480	LIGHT EMITTING DIOD		EA	1
2-3	38	PAHZZ		7107PN-BLK	09353	SWITCH,TOGGLE		EA	1
2-3	39	PAHZZ	5930-01-091-9027	2KCB070000-304BL	71590	SWITCH,PUSH		EA	1

(1) ILLUSTRATION (A) FIG NO.	(B) ITEM NO.	(2) SMR CODE	(3) NATIONAL STOCK NUMBER	(4) PART NUMBER	(5) FSCM	(6) DESCRIPTION	USABLE ON CODE	(7) U/M	(8) QTY INC IN UNIT
2-3	40	XDHZZ		1410-00-5050	34280	PANEL,FRONT		EA	1
2-3	41	PAHZZ	5940-00-665-5740	1901	73734	TERMINAL,LUG		EA	5
2-3	42	XDHZZ		9404NP	73734	SPACER,ROUND		EA	6
2-3	43	PAHZZ		534-10K	28375	RESISTOR,VARIABLE N		EA	2
2-3	44	PAHZZ	5310-00-282-4653	S203-1004P1	99687	NUT,PLAIN,HEXAGON		EA	6
2-3	45	PAHZZ	5905-00-141-0717	RCR07G473JS	81349	RESISTOR,FIXED,COMP		EA	1
2-3	46	PAHZZ		60U121M	91984	CAPACITOR,FIXED,CER		EA	1
2-3	47	PAHZZ	5905-00-116-8554	RCR07G105JS	81349	RESISTOR,FIXED,COMP		EA	1
2-3	48	PAHZZ	5910-01-088-6848	60C0G200J	91984	CAPACITOR,FIXED,CER		EA	1
2-3	49	PAHZZ	5961-00-170-4430	1N34A	80131	SEMICONDUCTOR DEVIC		EA	1
2-3	50	XDHZZ		4001NP	73734	SCREW,MACHINE		EA	4
2-3	51	XDHZZ		4021NP3/16	73734	SCREW,MACHINE		EA	4
2-3	52	XDHZZ		7400	73734	DRIVESCREW		EA	8
2-3	53	XDHZZ		1315ZINC	73734	LOCKWASHER		EA	4
2-3	54	XDHZZ		2130NP	73734	SCREW,MACHINE		EA	2
2-3	55	XDHZZ		7511CP	73734	SCREW,MACHINE		EA	2

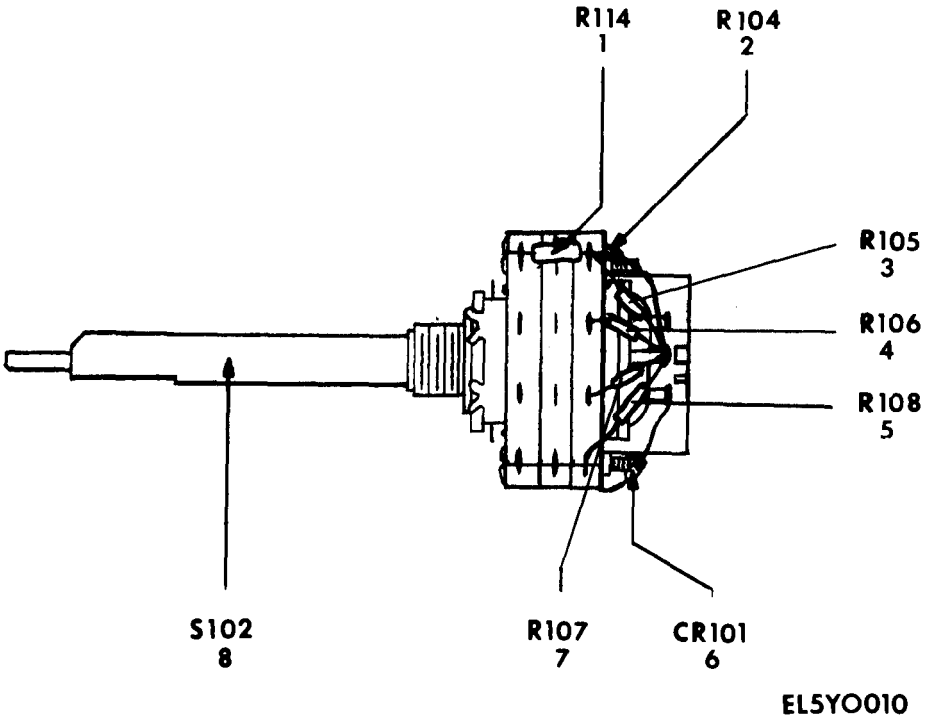

Figure 2-4. Sweep Generator SG-677A/U, Sweep Time Switch Assembly (Sheet 1 of 2).

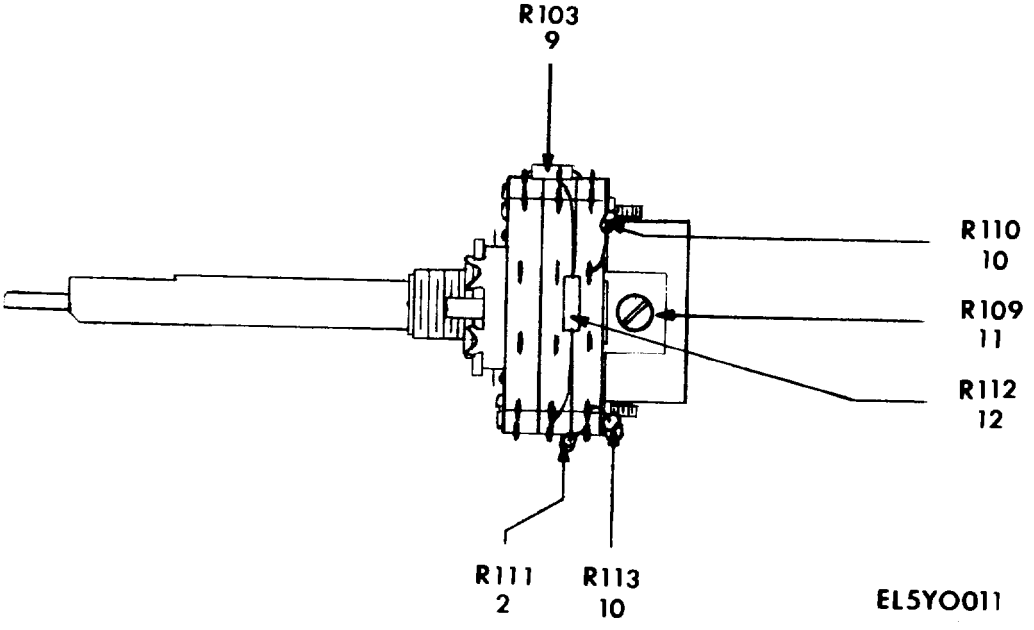

Figure 2-4. Sweep Generator SG-677A/U, Sweep Time Switch Assembly (Sheet 2 of 2).

(1) ILLUSTRATION (A) FIG NO.	(B) ITEM NO.	(2) SMR CODE	(3) NATIONAL STOCK NUMBER	(4) PART NUMBER	(5) FSCM	(6) DESCRIPTION	USABLE ON CODE	(7) U/M	(8) QTY INC IN UNIT
2-4	1	PAHZZ	5905-00-121-9938	RCR07G753JS	81349	RESISTOR,FIXED,COMP		EA	1
2-4	2	PAHZZ	5905-00-118-4559	RCR07G333JS	81349	RESISTOR,FIXED,COMP		EA	2
2-4	3	PAHZZ		RCR07G476JS	81349	RESISTOR,FIXED,COMP		EA	1
2-4	4	PAHZZ	5905-00-126-6694	RCR07G475JS	81349	RESISTOR,FIXED,COMP		EA	1
2-4	5	PAHZZ		MF55K-47.5K	06560	RESISTOR,FIXED,FILM		EA	1
2-4	6	PAHZZ	5961-00-723-3602	1N4004	04713	SEMICONDUCTOR DEVIC		EA	1
2-4	7	PAHZZ	5905-00-105-7767	RCR07G474JS	81349	RESISTOR,FIXED,COMP		EA	1
2-4	8	PAHZZ	6625-01-088-6686	5104-00-0005	34280	SWITCH SUBASSEMBLY		EA	1
2-4	9	PAHZZ	5905-00-120-9154	RCR07G471JS	81349	RESISTOR,FIXED,COMP		EA	1
2-4	10	PAHZZ	5905-00-115-8055	RCR07G393JS	81349	RESISTOR,FIXED,COMP		EA	2
2-4	11	PAHZZ	5905-00-517-9589	360S503B	11236	RESISTOR,VARIABLE,N		EA	1
2-4	12	PAHZZ	5905-00-141-0717	RCR07G473JS	81349	RESISTOR,FIXED,COMP		EA	1

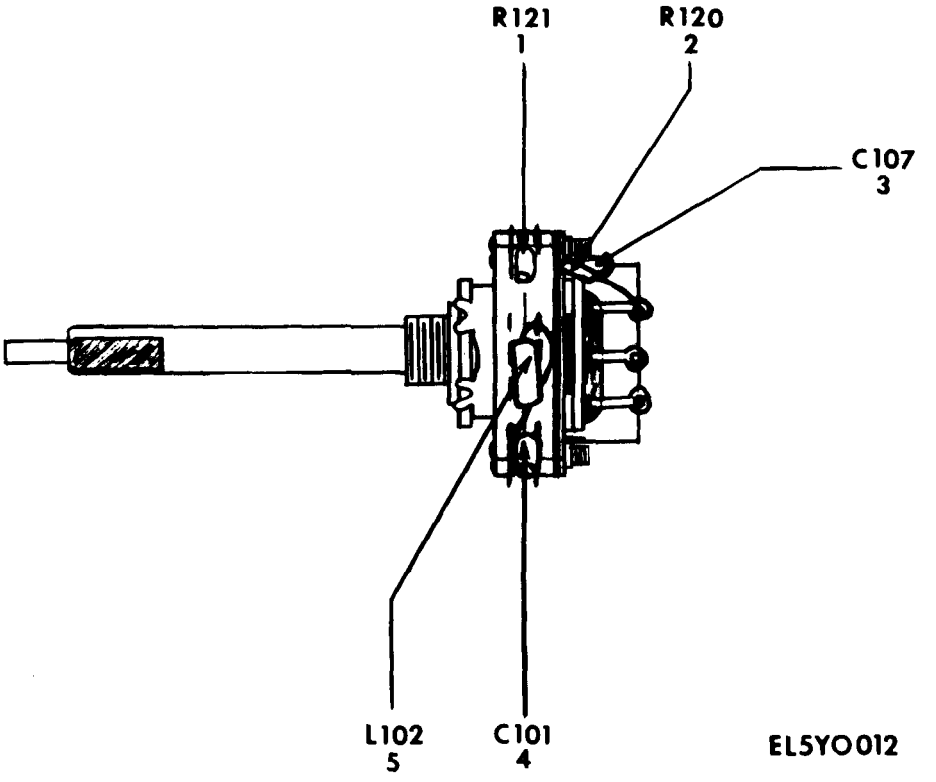

Figure 2-5. Sweep Generator SG-677A/U, Marker Size Switch Assembly (Sheet 1 of 2).

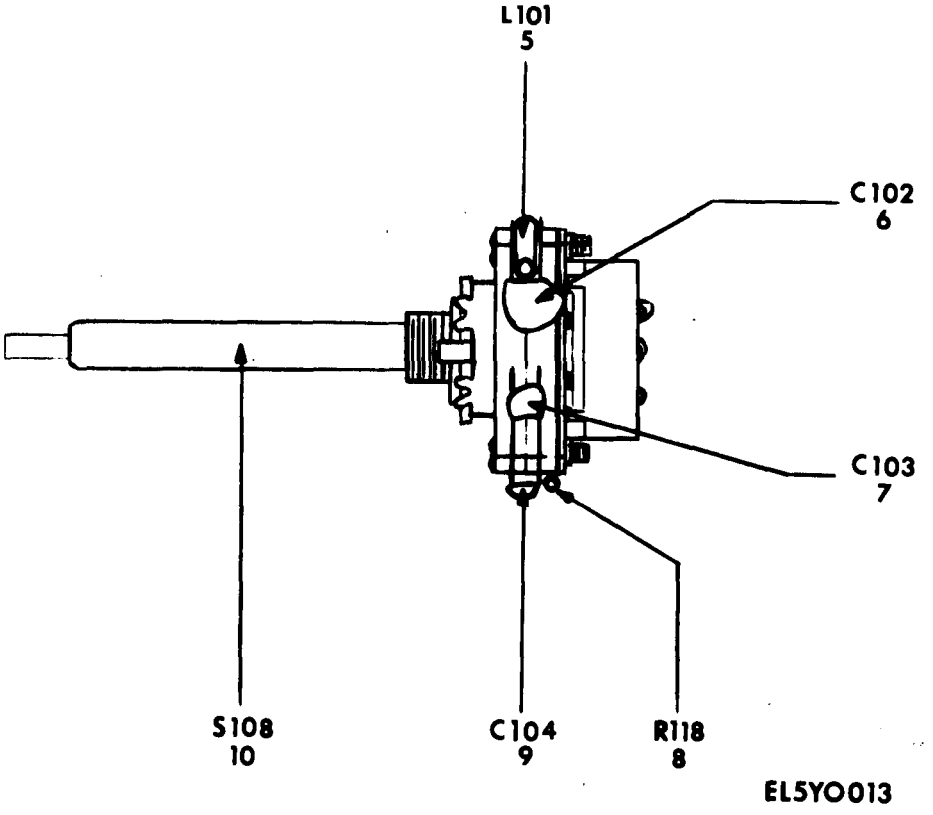

Figure 2-5. Sweep Generator SG-677A/U, Marker Size Switch Assembly (Sheet 2 of 2).

(1) ILLUSTRATION (A) FIG NO.	(B) ITEM NO.	(2) SMR CODE	(3) NATIONAL STOCK NUMBER	(4) PART NUMBER	(5) FSCM	(6) DESCRIPTION	USABLE ON CODE	(7) U/M	(8) QTY INC IN UNIT
2-5	1	PAHZZ	5905-00-111-4727	RCR07G272JS	81349	RESISTOR,FIXED,COMP		EA	1
2-5	2	PAHZZ	5905-00-118-4559	RCR07G333JS	81349	RESISTOR,FIXED,COMP		EA	1
2-5	3	PAHZZ	5910-00-222-8207	10TCC-Q10	56289	CAPACITOR,FIXED,CER		EA	1
2-5	4	PAHZZ	5910-00-864-8387	5GAD20	56289	CAPACITOR,FIXED,CER		EA	1
2-5	5	PAHZZ	5950-01-017-0770	MS75089-35	96906	COIL,RADIO FREQUENC		EA	2
2-5	6	PAHZZ	5910-00-603-5906	TG-S20	56289	CAPACITOR,FIXED,CER		EA	1
2-5	7	PAHZZ		68U2J680J	91984	CAPACITOR,FIXED,CER		EA	1
2-5	8	PAHZZ	5905-00-105-7764	RCR07G222JS	81349	RESISTOR		EA	1
2-5	9	PAHZZ		60U151M	91984	CAPACITOR,FIXED,CER		EA	1
2-5	10	PAHZZ		5104-00-0004	34280	SWITCH,ROTARY		EA	1

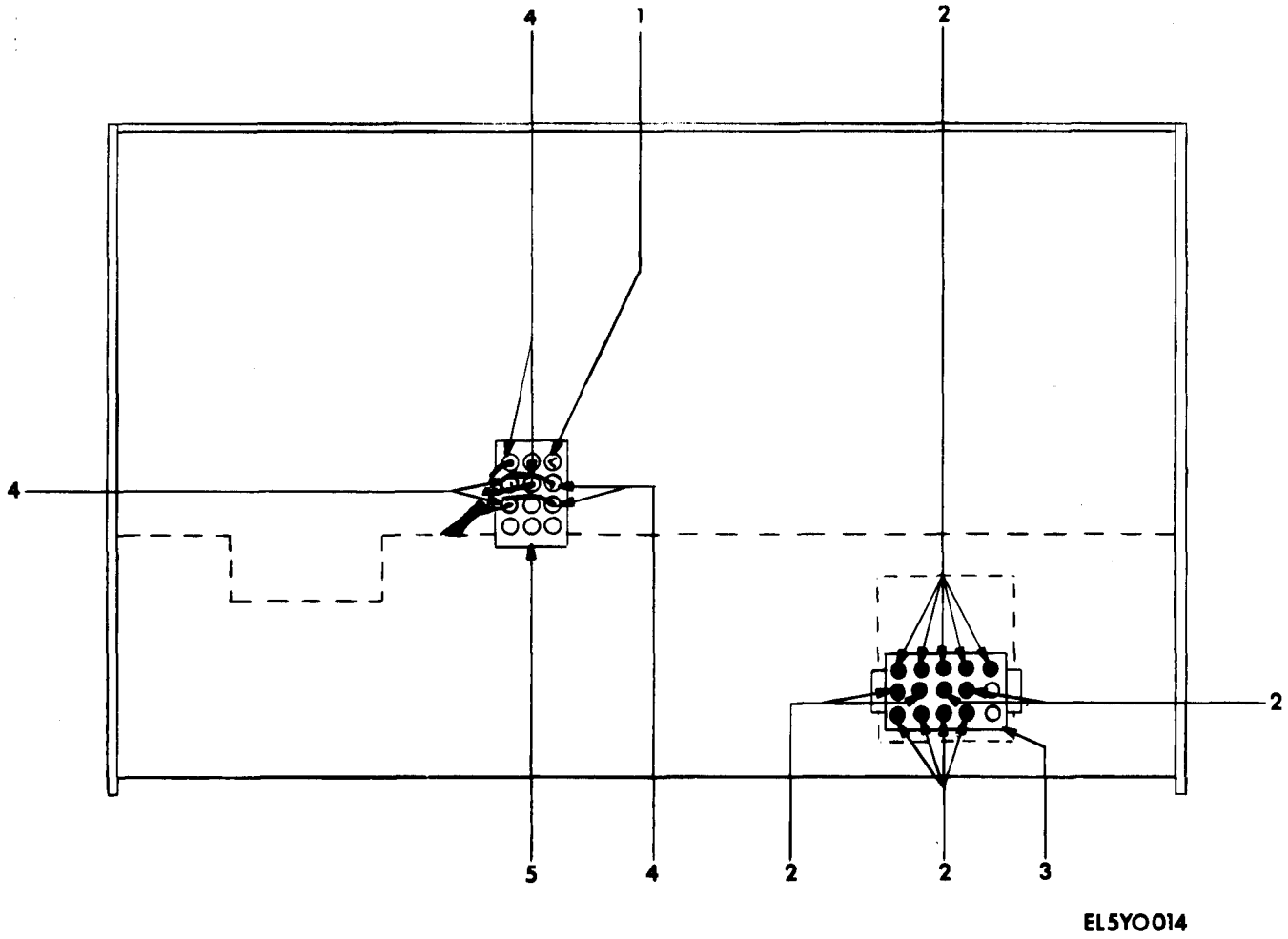

Figure 2-6. Sweep Generator SG-677A/U, Harness Assembly (Sheet 1 of 2).

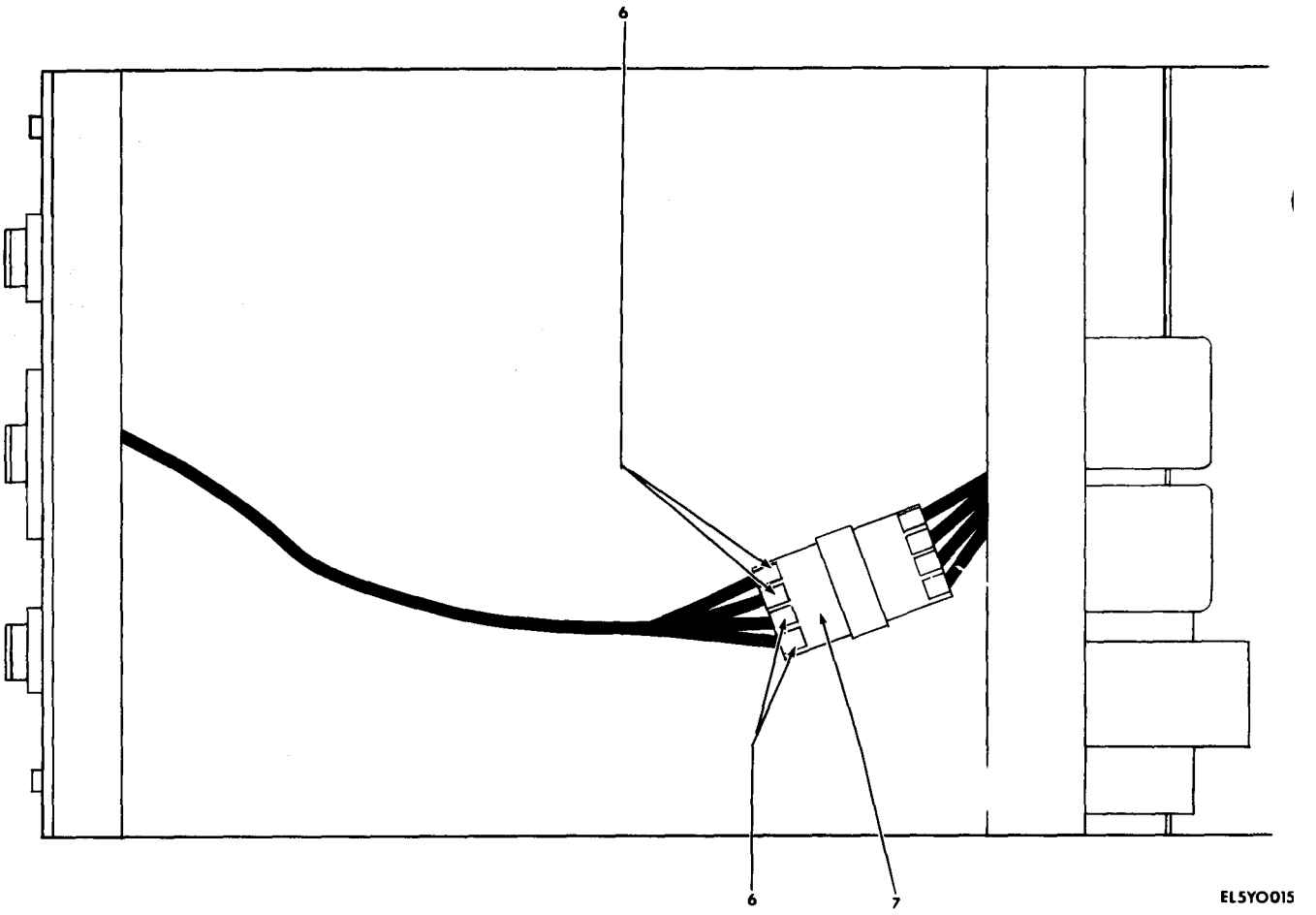

Figure 2-6. Sweep Generator SG-677A/U, Harness Assembly (Sheet 2 of 2).

(1) ILLUSTRATION (A) FIG NO.	(B) ITEM NO.	(2) SMR CODE	(3) NATIONAL STOCK NUMBER	(4) PART NUMBER	(5) FSCM	(6) DESCRIPTION	USABLE ON CODE	(7) U/M	(8) QTY INC IN UNIT
2-6	1	PADZZ	5999-01-029-9987	02-09-2143	27264	CONTACT,ELECTRICAL		EA	1
2-6	2	PADZZ	5999-00-386-8688	1855	27264	CONTACT,ELECTRICAL		EA	13
2-6	3	PADZZ	5935-00-372-0549	03-06-1151	27264	CONNECTOR,RECEPTACL		EA	1
2-6	4	PADZZ	5999-00-387-5510	02-09-1143	27264	CONTACT,ELECTRICAL		EA	6
2-6	5	PADZZ	5935-01-026-0409	03-09-1121	27264	CONNECTOR,RECEPTACL		EA	1
2-6	6	PADZZ	5999-00-417-3811	02-09-2118	27264	CONTACT,ELECTRICAL		EA	1
2-6	7	PADZZ		19-09-2042	27264	CONNECTOR,RECEPTACL		EA	4

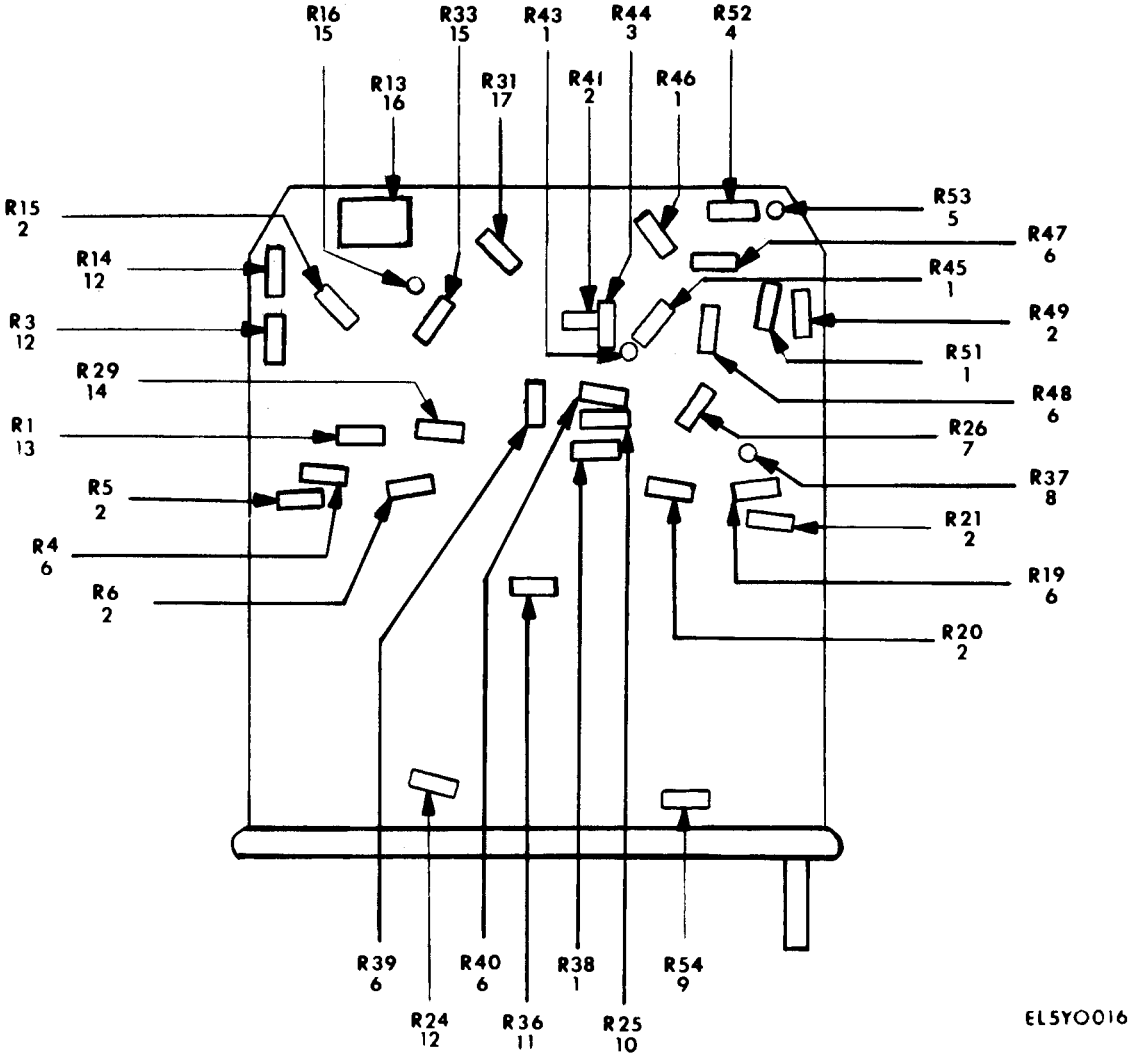

Figure 2-7. Module M9H (Sheet 1 of 5).

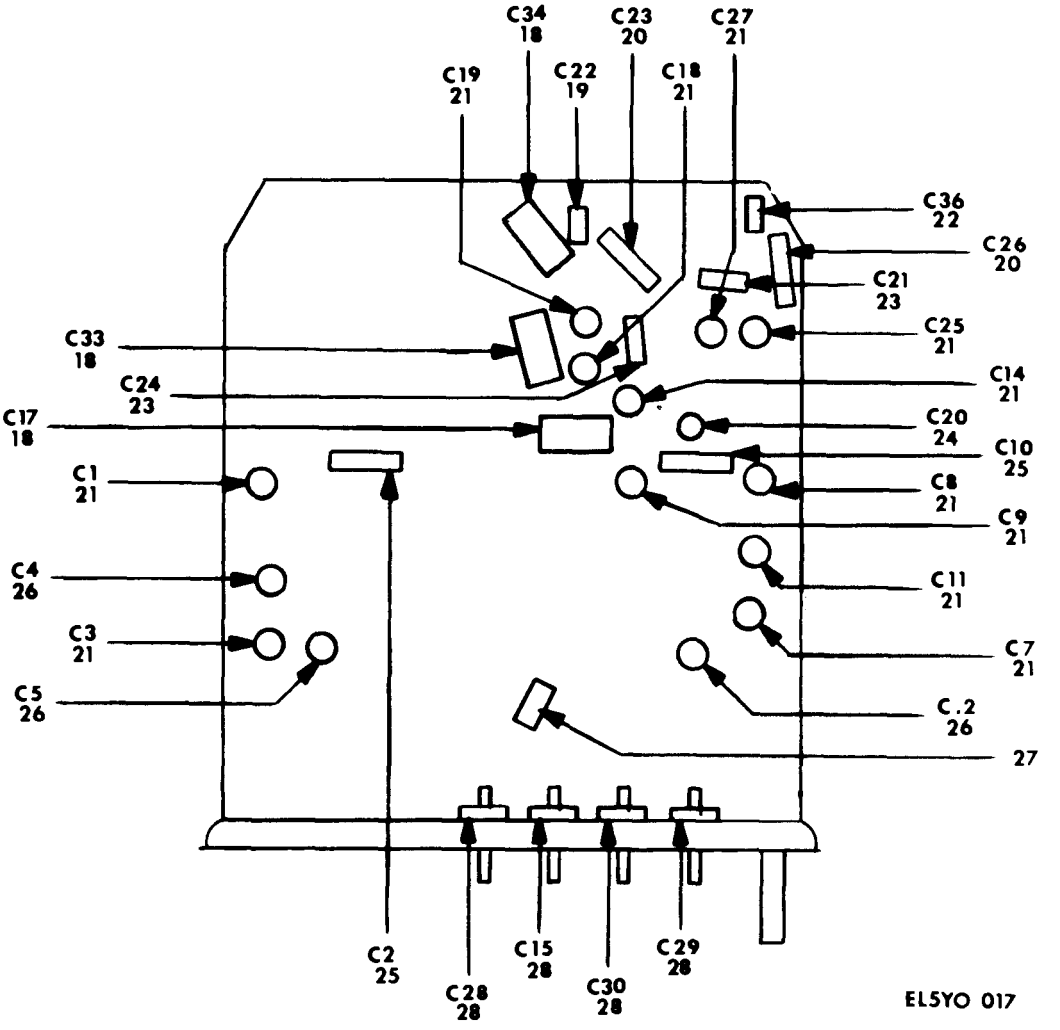

Figure 2-7. Module M9H (Sheet 2 of 5).

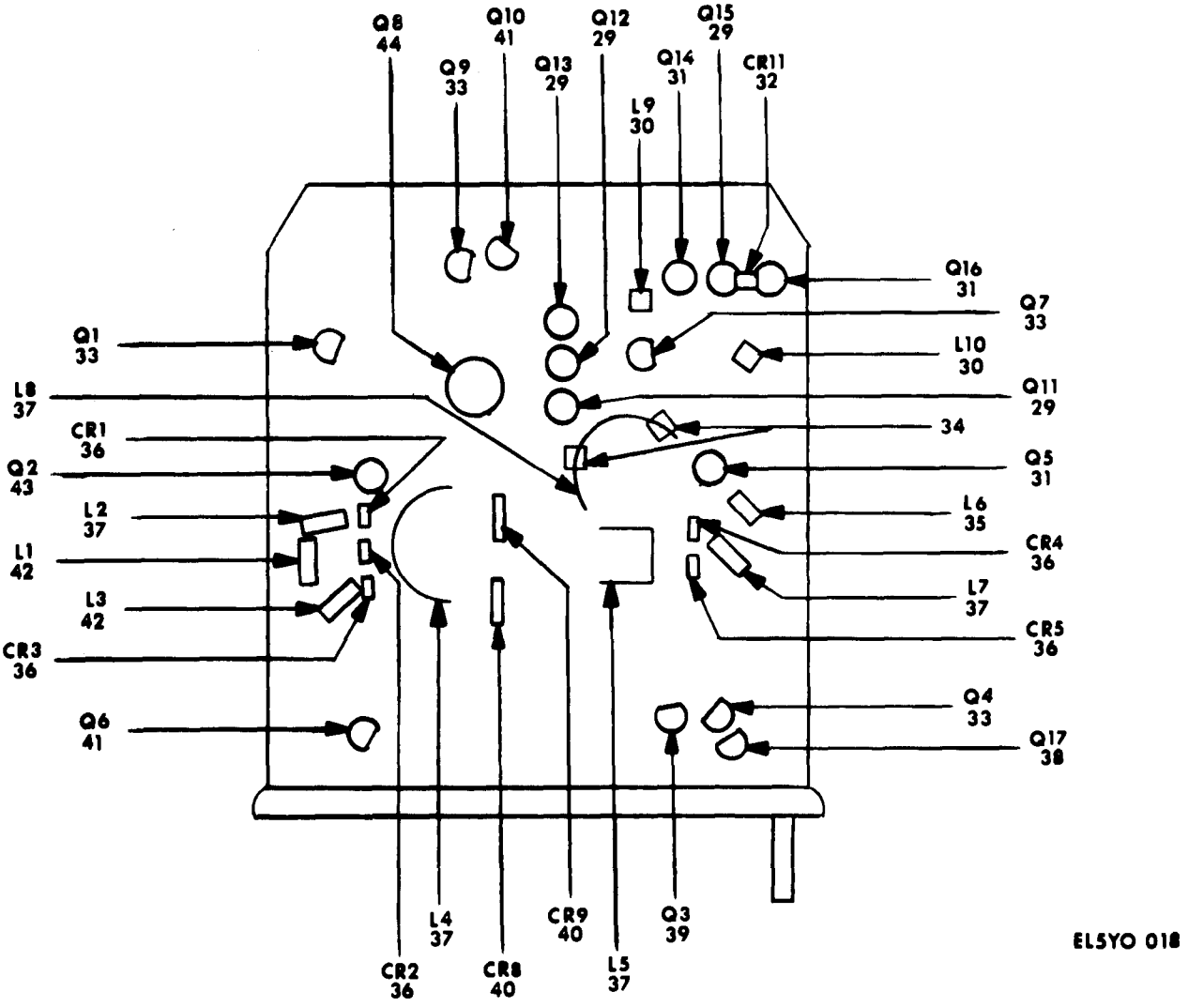

Figure 2-7. Module M9H (Sheet 3 of 5).

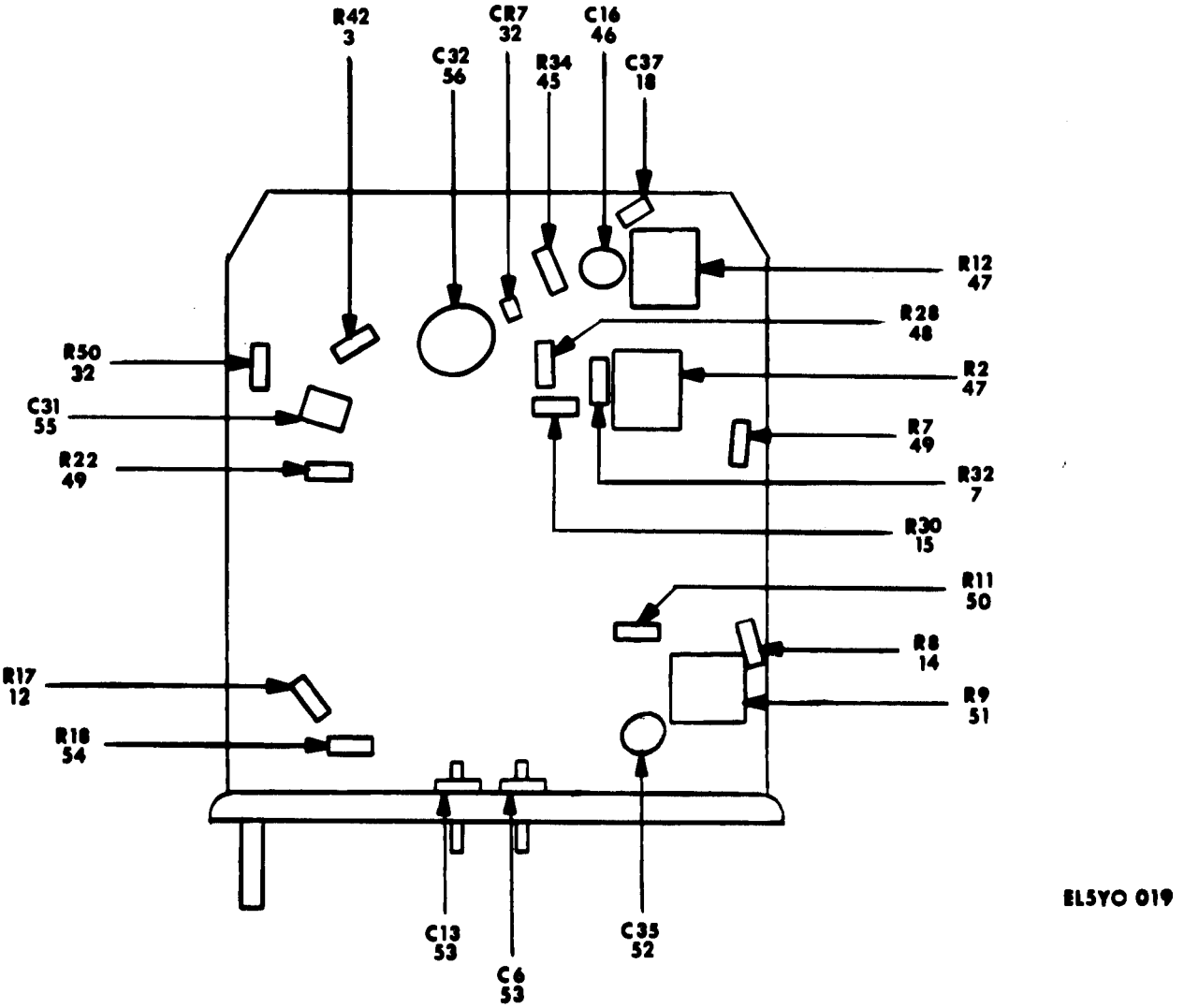

Figure 2-7. Module M9H (Sheet 4 of 5).

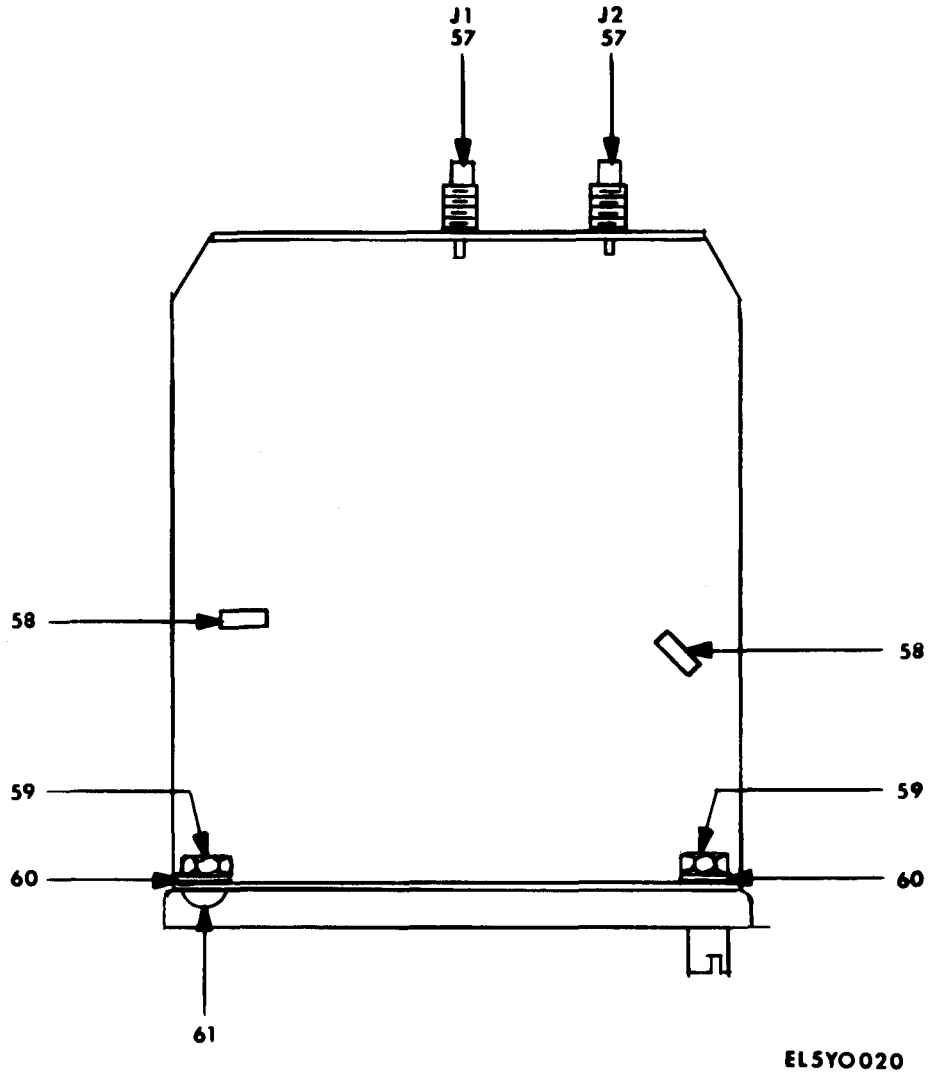

Figure 2-7. Module M9H (Sheet 5 of 5).

(1) ILLUSTRATION (A) FIG NO.	(B) ITEM NO.	(2) SMR CODE	(3) NATIONAL STOCK NUMBER	(4) PART NUMBER	(5) FSCM	(6) DESCRIPTION USABLE ON CODE	(7) U/M	(8) QTY INC IN UNIT
						GROUP 07 MODULE M9H		
2-7	1	PADZZ	5905-00-141-1183	RCR07G101JS	81349	RESISTOR,FIXED,COMP	EA	5
2-7	2	PADZZ	5905-00-114-0711	RCR07G472JS	81349	RESISTOR,FIXED,COMP	EA	7
2-7	3	PADZZ	5905-00-104-8368	RCR07G470JS	81349	RESISTOR,FIXED,COMP	EA	3
2-7	4	PADZZ	5905-00-106-3668	RCR07G220JS	81349	RESISTOR,FIXED,COMP	EA	1
2-7	5	PADZZ	5905-00-119-8811	RCR07G151JS	81349	RESISTOR,FIXED,COMP	EA	1
2-7	6	PADZZ	5905-00-120-9154	RCR07G471JS	81349	RESISTOR,FIXED,COMP	EA	6
2-7	7	PADZZ	5905-00-119-3504	RCR07G273JS	81349	RESISTOR,FIXED,COMP	EA	2
2-7	8	PADZZ	5905-00-121-9932	RCR07G391JS	81349	RESISTOR,FIXED,COMP	EA	1
2-7	9	PADZZ	5905-00-121-9919	RCR07G106JS	81349	RESISTOR,FIXED,COMP	EA	1
2-7	10	PADZZ	5905-00-106-1356	RCR07G152JS	81349	RESISTOR,FIXED,COMP	EA	1
2-7	11	PADZZ	5905-00-246-9393	RCR07G4R7JS	81349	RESISTOR,FIXED,COMP	EA	1
2-7	12	PADZZ	5905-00-106-3666	RCR07G103JS	81349	RESISTOR,FIXED,COMP	EA	4
2-7	13	PADZZ	5905-00-116-8556	RCR07G223JS	81349	RESISTOR,FIXED,COMP	EA	1
2-7	14	PADZZ	5905-00-141-0744	RCR07G562JS	81349	RESISTOR,FIXED,COMP	EA	2
2-7	15	PADZZ	5905-00-118-4559	RCR07G333JS	81349	RESISTOR,FIXED,COMP	EA	3
2-7	16	PADZZ		WA2G032S-203MA	01121	RESISTOR,VARIABLE,N	EA	1
2-7	17	PADZZ	5905-00-110-0388	RCR07G104JS	81349	RESISTOR,FIXED,COMP	EA	1
2-7	18	PADZZ		935	84411	CAPACITOR,FIXED,ELE	EA	3
2-7	19	PADZZ	5910-00-613-4414	QC-2.4PF	95121	CAPACITOR,FIXED,CER	EA	1
2-7	20	PADZZ		68U103M	91984	CAPACITOR,FIXED,CER	EA	2
2-7	21	PADZZ		4420-500PF	96095	CAPACITOR,FIXED,CER	EA	11
2-7	22	PADZZ	5910-00-577-9337	QC-3.9PF	95121	CAPACITOR,FIXED,CER	EA	1
2-7	23	XAHZZ		1519-99-9999	34280	CAPACITOR	EA	2
2-7	24	PADZZ		QC-.75PF	95121	CAPACITOR,FIXED,CER	EA	1
2-7	25	PADZZ	5910-00-953-4420	CN1500-100PF	91418	CAPACITOR,FIXED,CER	EA	2
2-7	26	PADZZ		4420-100PF	96095	CAPACITOR,FIXED,CER	EA	3
2-7	27	PADZZ	5910-00-934-2636	MC-.47PF	95121	CAPACITOR,FIXED,CER	EA	1
2-7	28	PADZZ	5910-00-956-8401	FA5C-4712	01121	CAPACITOR,FIXED,CER	EA	4
2-7	29	PADZZ	5961-00-402-7679	2N5053	73445	TRANSISTOR	EA	4
2-7	30	PADZZ	5950-01-088-6721	T1255-1	29525	COIL,RADIO FREQUENC	EA	2
2-7	31	PADZZ	5961-00-401-0507	2N5179	02735	TRANSISTOR	EA	3
2-7	32	PADZZ		HW6.88	14552	SEMICONDUCTOR DEVIC	EA	3
2-7	33	PADZZ	5961-00-163-7227	MPS3702	04713	TRANSISTOR	EA	4
2-7	34	PADZZ	5950-00-813-0567	K5-001-00/3B	02114	FORM,COIL	EA	2
2-7	35	PADZZ	5950-01-088-6941	08N1R0K	06560	COIL,RADIO FREQUENC	EA	1
2-7	36	PADZZ		BB141A	15238	SEMICONDUCTOR DEVIC	EA	5
2-7	37	XDHZZ		1819-99-9999	80058	MISC CHOKE/COIL	FI	1
2-7	38	PADZZ	5961-00-483-0400	2N5458	04713	TRANSISTOR	EA	1
2-7	39	PADZZ	5961-00-434-9313	2N5088	04713	TRANSISTOR	EA	1
2-7	40	PADZZ		1N82A	14936	SEMICONDUCTOR DEVIC	EA	2

(1) ILLUSTRATION (A) FIG NO.	(B) ITEM NO.	(2) SMR CODE	(3) NATIONAL STOCK NUMBER	(4) PART NUMBER	(5) FSCM	(6) DESCRIPTION	USABLE ON CODE	(7) U/M	(8) QTY INC IN UNIT
2-7	41	PADZZ	5961-00-763-7890	2N3854A	03508	TRANSISTOR		EA	2
2-7	42	PADZZ	5950-01-088-6942	08NR22K	06560	COIL,RADIO FREQUENC		EA	2
2-7	43	PADZZ	5961-00-139-2398	A430	25403	TRANSISTOR		EA	1
2-7	44	PADZZ	5961-00-401-9106	TD401	56289	SEMICONDUCTOR DEVIC		EA	1
2-7	45	PADZZ	5905-00-106-1278	RCR07G123JS	81349	RESISTOR,FIXED,COMP		EA	1
2-7	46	PADZZ		60U121M	91984	CAPACITOR,FIXED,CER		EA	1
2-7	47	PADZZ	5905-00-205-9554	360S103B	11236	RESISTOR,VARIABLE,N		EA	2
2-7	48	PADZZ	5905-00-115-8055	RCR07G393JS	81349	RESISTOR,FIXED,COMP		EA	1
2-7	49	PADZZ	5905-00-107-0656	RCR07G100JS	81349	RESISTOR,FIXED,COMP		EA	2
2-7	50	PADZZ	5905-00-141-0717	RCR07G473JS	81349	RESISTOR,FIXED,COMP		EA	1
2-7	51	PADZZ	5905-01-089-8723	360S203B	11236	RESISTOR,VARIABLE,N		EA	1
2-7	52	PADZZ	5910-00-822-5682	5GAD10	56289	CAPACITOR,FIXED,CER		EA	1
2-7	53	PADZZ		FA5C-6892	01121	CAPACITOR,FIXED,CER		EA	2
2-7	54	PADZZ	5905-00-105-7764	RCR07G222JS	81349	RESISTOR		EA	1
2-7	55	PADZZ		162D106X0025DD2	56289	CAPACITOR,FIXED,ELE		EA	1
2-7	56	PADZZ	5910-00-577-3281	TG-S50	56289	CAPACITOR,FIXED,CER		EA	1
2-7	57	PADZZ	5935-01-088-8255	37JR116-1	24931	CONNECTOR,RECEPTACL		EA	2
2-7	58	PADZZ	5905-00-114-0711	RCR07G472JS	81349	RESISTOR,FIXED,COMP		EA	2
2-7	59	XDDZZ		8005NP	73734	NUT,HEX		EA	2
2-7	60	XDDZZ		1304ZP	73734	LOCKWASHER		EA	2
2-7	61	XDDZZ		4033NP	73734	SCREW,MACHINE		EA	1

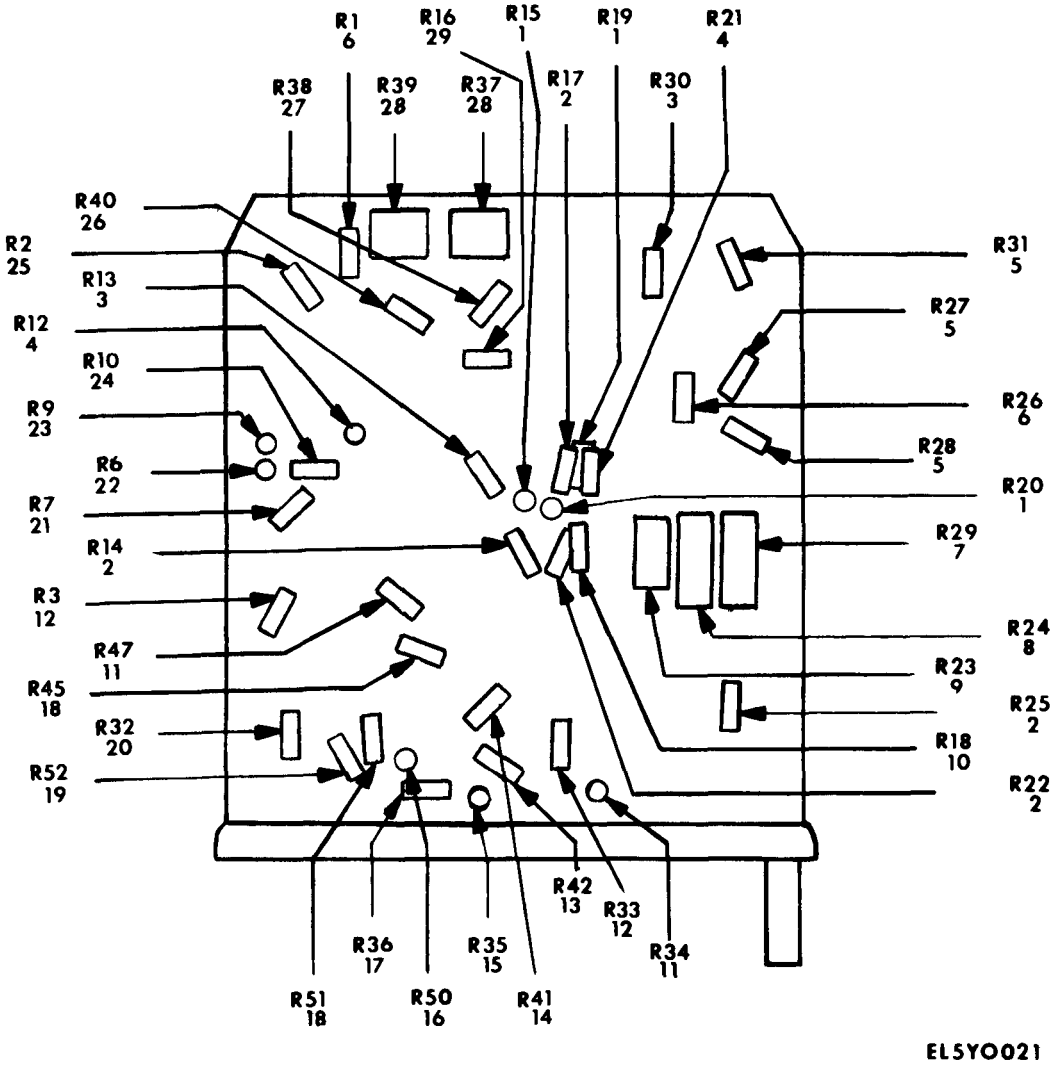

Figure 2-8. Module M10H (Sheet 1 of 7).

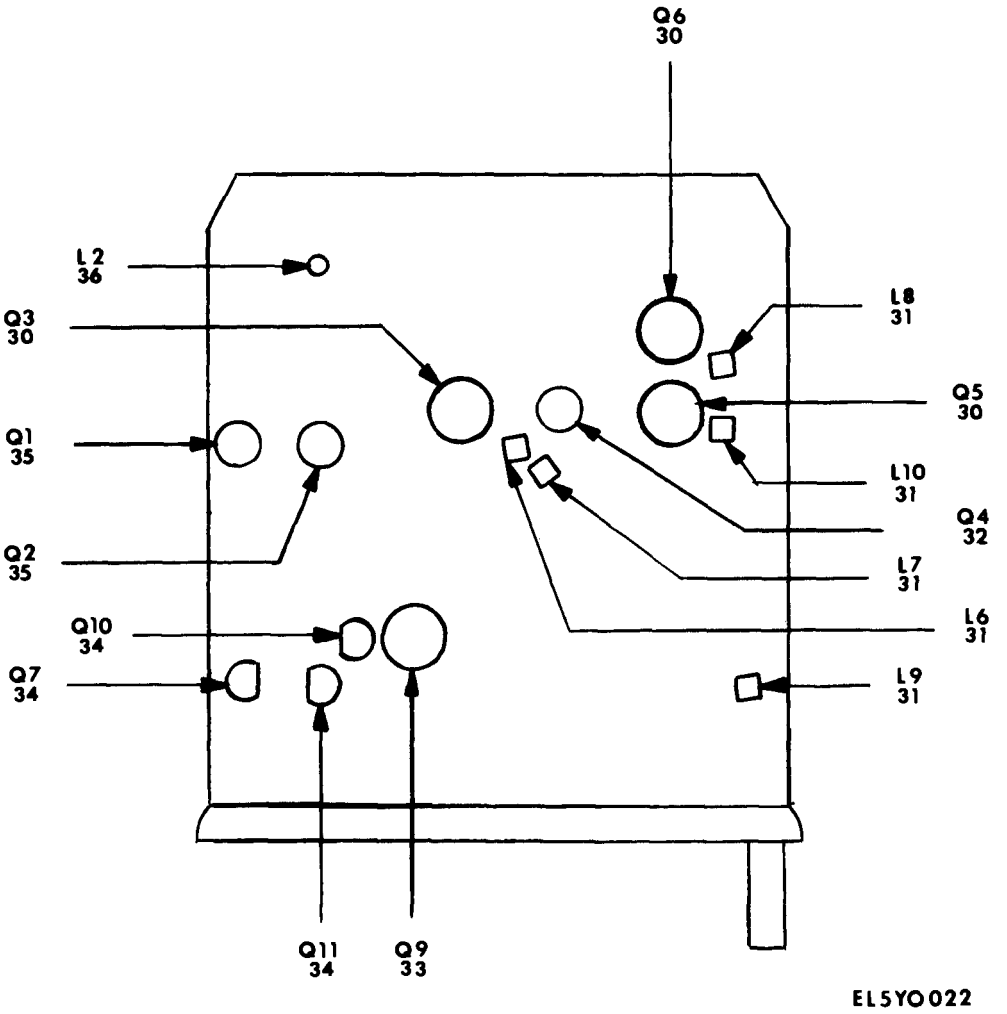

Figure 2-8. Module M10H (Sheet 2 of 7).

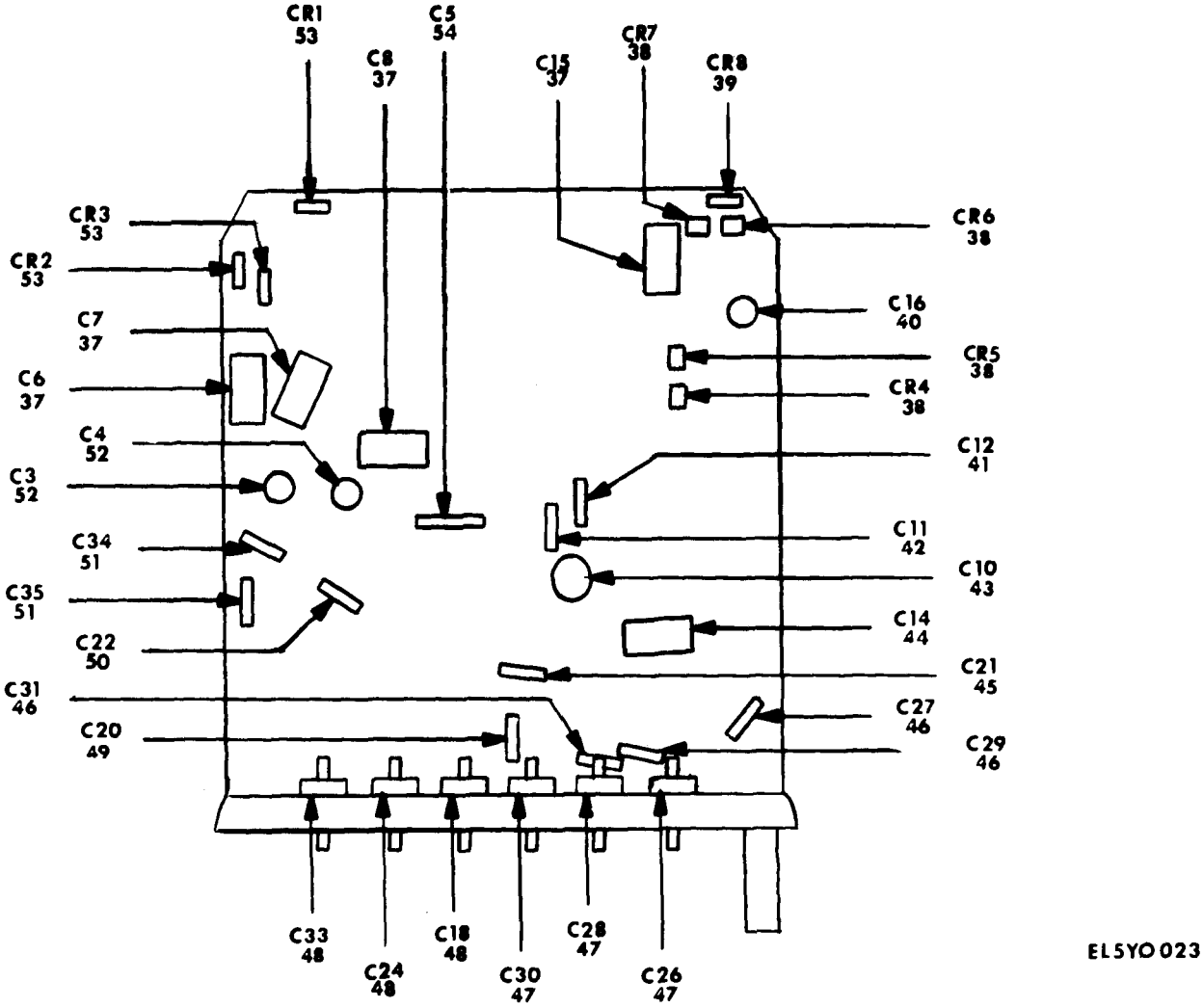

Figure 2-8. Module M10H (Sheet 3 of 7).

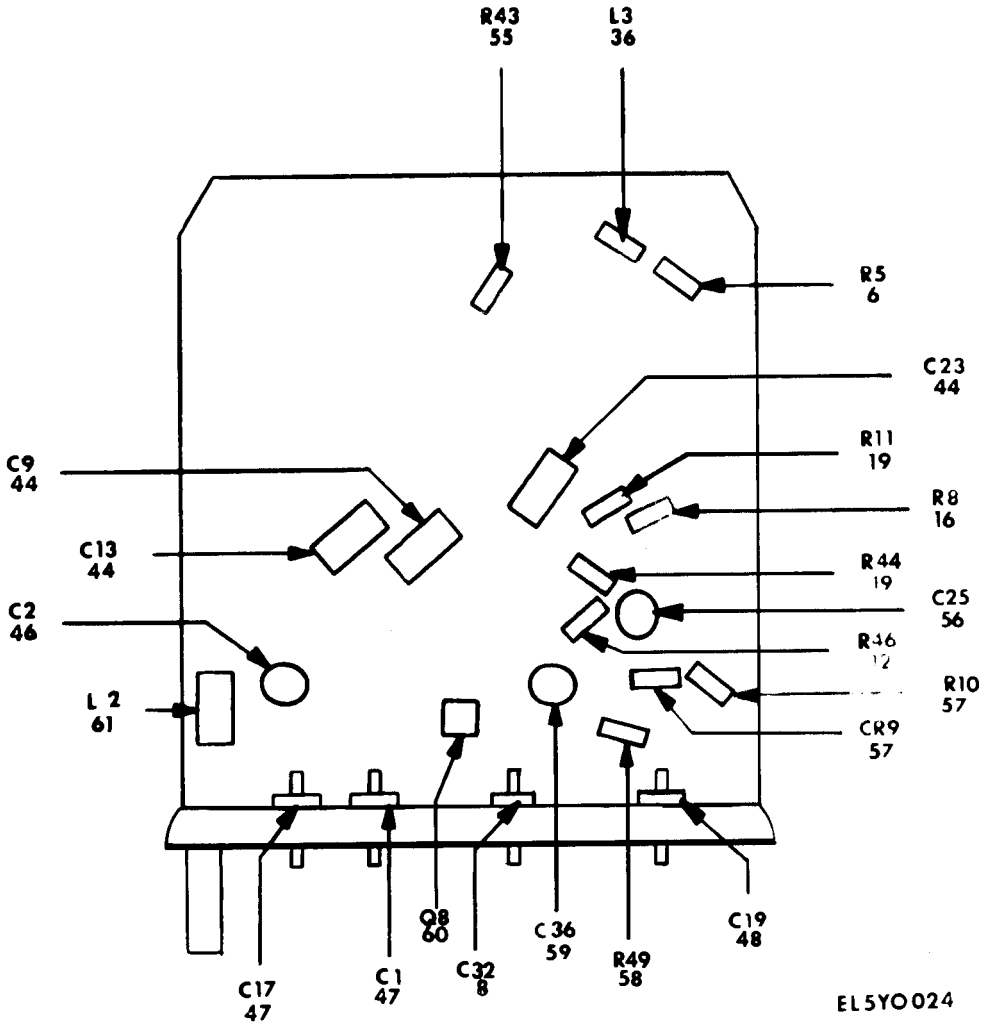

Figure 2-8. Module M10H (Sheet 4 of 7).

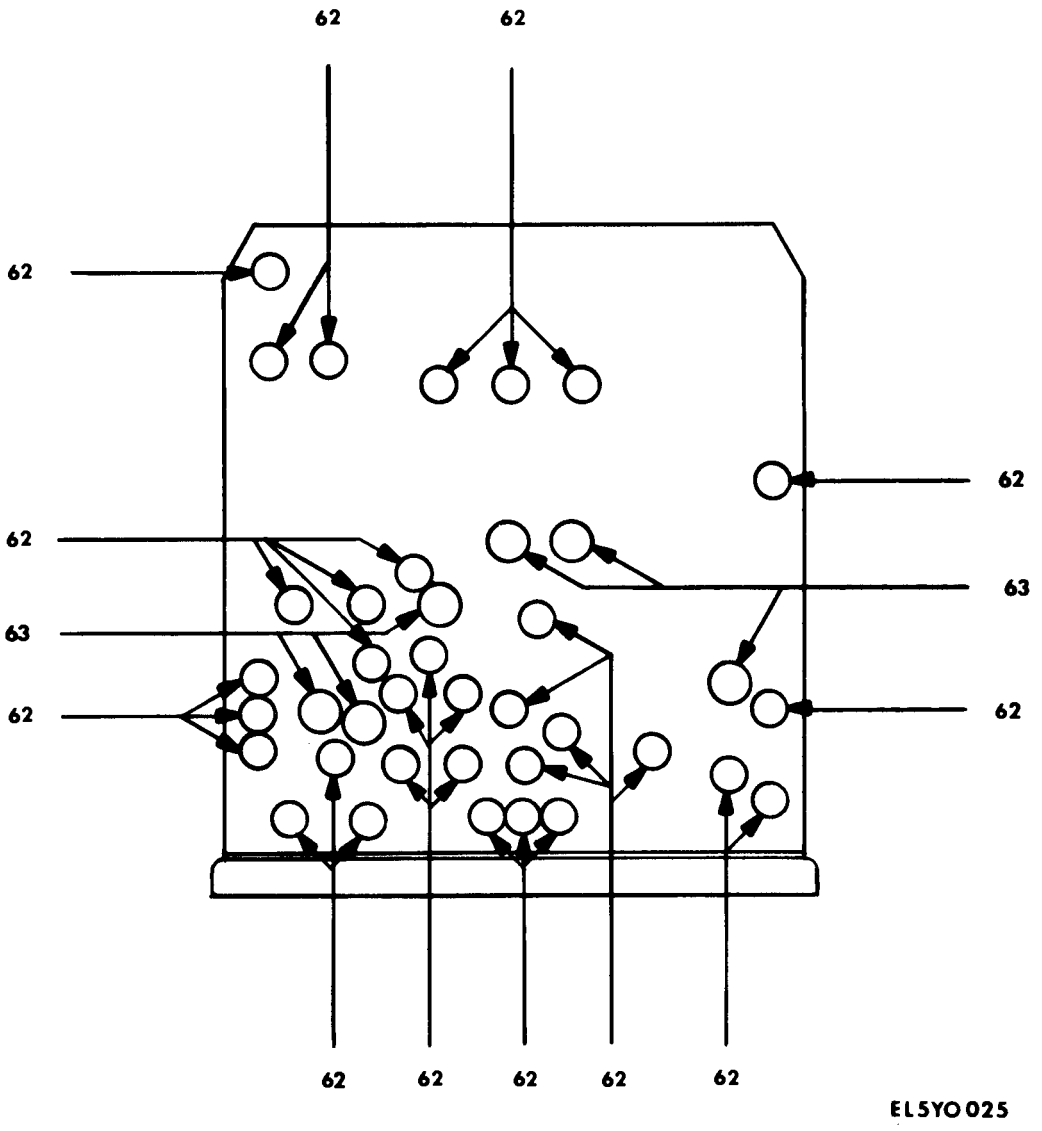

Figure 2-8. Module M10H (Sheet 5 of 7).

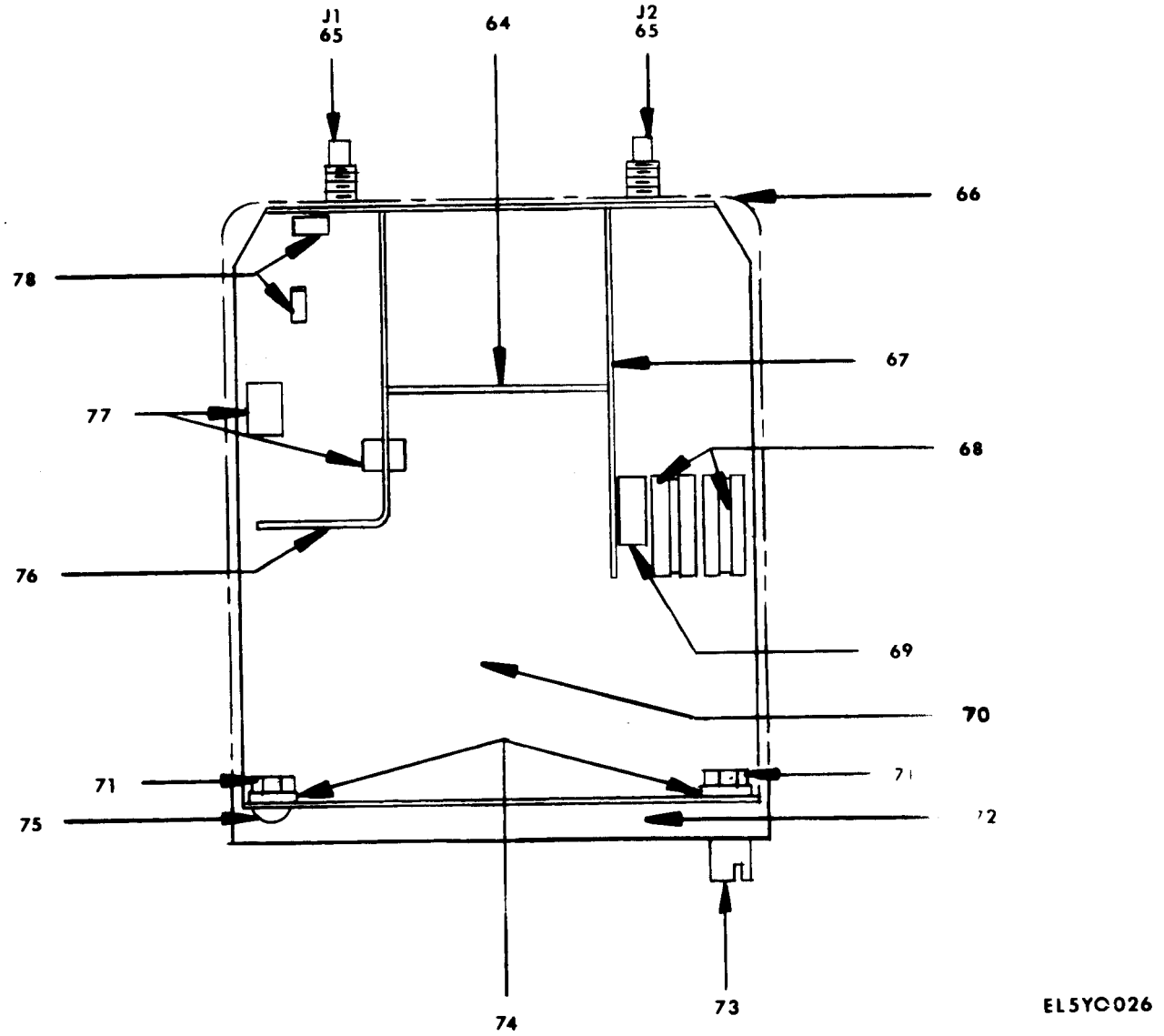

Figure 2-8. Module M10H (Sheet 6 of 7).

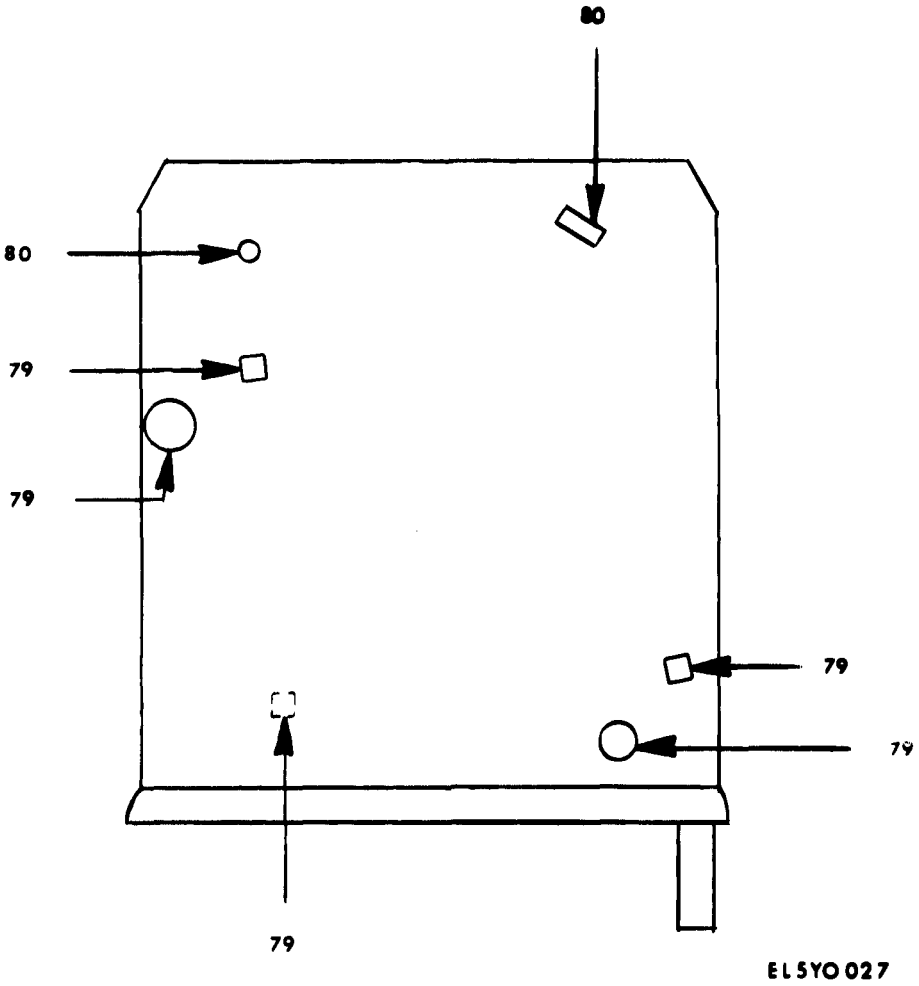

Figure 2-8. Module M10H (Sheet 7 of 7).

(1) ILLUSTRATION (A) FIG NO.	(B) ITEM NO.	(2) SMR CODE	(3) NATIONAL STOCK NUMBER	(4) PART NUMBER	(5) FSCM	(6) DESCRIPTION	USABLE ON CODE	(7) U/M	(8) QTY INC IN UNIT
						GROUP 08 MODULE M10H			
2-8	1	PADZZ	5905-00-104-8363	RCR07G820JS	81349	RESISTOR,FIXED,COMP		EA	3
2-8	2	PADZZ	5905-00-107-0656	RCR07G100JS	81349	RESISTOR,FIXED,COMP		EA	4
2-8	3	PADZZ	5905-00-120-9154	RCR07G471JS	81349	RESISTOR,FIXED,COMP		EA	2
2-8	4	PADZZ	5905-00-113-4860	RCR07G270JS	81349	RESISTOR,FIXED,COMP		EA	2
2-8	5	PADZZ	5905-00-118-4559	RCR07G333JS	81349	RESISTOR,FIXED,COMP		EA	3
2-8	6	PADZZ	5905-00-104-8368	RCR07G470JS	81349	RESISTOR,FIXED,COMP		EA	3
2-8	7	PADZZ	5905-00-104-8347	RCR32G101JS	81349	RESISTOR,FIXED,COMP		EA	1
2-8	8	PADZZ	5905-00-110-0991	RCR32G151JS	81349	RESISTOR,FIXED,COMP		EA	1
2-8	9	PADZZ	5905-00-116-8562	RCR20G361JS	81349	RESISTOR,FIXED,COMP		EA	1
2-8	10	PADZZ	5905-00-106-3668	RCR07G220JS	81349	RESISTOR,FIXED,COMP		EA	1
2-8	11	PADZZ	5905-00-106-3668	RCR07103JS	81349	RESISTOR,FIXED,COMP		EA	2
2-8	12	PADZZ	5905-00-110-7620	RCR07G102JS	81349	RESISTOR,FIXED,COMP		EA	3
2-8	13	PADZZ	5905-00-104-8357	RCR07G684JS	81349	RESISTOR,FIXED,COMP		EA	1
2-8	14	PADZZ	5905-00-131-1255	RCR07G122JS	81349	RESISTOR,FIXED,COMP		EA	1
2-8	15	PADZZ	5905-00-116-8554	RCR07G105JS	81349	RESISTOR,FIXED,COMP		EA	1
2-8	16	PADZZ	5905-00-141-1183	RCR07G101JS	81349	RESISTOR,FIXED,COMP		EA	2
2-8	17	PADZZ	5905-00-252-1671	RCR07G225JS	81349	RESISTOR,FIXED,COMP		EA	1
2-8	18	PADZZ	5905-00-114-0711	RCR07G472JS	81349	RESISTOR,FIXED,COMP		EA	2
2-8	19	PADZZ	5905-00-135-3973	RCR07G221JS	81349	RESISTOR,FIXED,COMP		EA	3
2-8	20	PADZZ	5905-00-110-0388	RCR07G104JS	81349	RESISTOR,FIXED,COMP		EA	1
2-8	21	PADZZ	5905-00-119-8768	RCR07G821JS	81349	RESISTOR,FIXED,COMP		EA	1
2-8	22	PADZZ	5905-00-119-8811	RCR07G151JS	81349	RESISTOR,FIXED,COMP		EA	1
2-8	23	PADZZ	5905-00-133-0440	RCR07G560JS	81349	RESISTOR,FIXED,COMP		EA	1
2-8	24	PADZZ	5905-00-105-7768	RCR07G561JS	81349	RESISTOR,FIXED,COMP		EA	1
2-8	25	PADZZ	5905-00-114-0710	RCR07G331JS	81349	RESISTOR,FIXED,COMP		EA	1
2-8	26	PADZZ	5905-00-105-7767	RCR07G474JS	81349	RESISTOR,FIXED,COMP		EA	1
2-8	27	PADZZ	5905-00-116-8555	RCR07G153JS	81349	RESISTOR,FIXED,COMP		EA	1
2-8	28	PADZZ		WA2G032S-203MA	01121	RESISTOR,VARIABLE,N		EA	2
2-8	29	PADZZ	5905-00-106-1356	RCR07G152JS	81349	RESISTOR,FIXED,COMP		EA	1
2-8	30	PADZZ	5961-00-372-1820	SD1006	57962	TRANSISTOR		EA	3
2-8	31	PADZZ	5950-01-088-6721	T1255-1	29525	COIL,RADIO FREQUENC		EA	4
2-8	32	PADZZ	5961-00-139-2398	A430	25403	TRANSISTOR		EA	1
2-8	33	PADZZ	5961-00-110-7657	TD101	56289	SEMICONDUCTOR DEVIC		EA	1
2-8	34	PADZZ	5961-00-163-7227	MPS3702	04713	TRANSISTOR		EA	3
2-8	35	PADZZ	5961-00-402-7679	2N5053	73445	TRANSISTOR		EA	2
2-8	36	XDHZZ		1819-99-9999	80058	MISC CHOKE/COIL		FT	1
2-8	37	PADZZ		935	84411	CAPACITOR,FIXED,ELE		EA	4
2-8	38	PADZZ		BB205	25403	SEMICONDUCTOR DEVIC		EA	4
2-8	39	PADZZ	5961-00-252-1309	5082-2800	28480	SEMICONDUCTOR DEVIC		EA	1

(1) ILLUSTRATION (A) FIG NO.	(B) ITEM NO.	(2) SMR CODE	(3) NATIONAL STOCK NUMBER	(4) PART NUMBER	(5) FSCM	(6) DESCRIPTION	USABLE ON CODE	(7) U/M	(8) QTY INC IN UNIT
2-8	40	PADZZ		4420-100PF	96095	CAPACITOR,FIXED,CER		EA	1
2-8	41	PADZZ	5910-00-222-8207	10TCC-Q10	56289	CAPACITOR,FIXED,CER		EA	1
2-8	42	PADZZ		10TCC-V470	56289	CAPACITOR,FIXED,CER		EA	1
2-8	43	PADZZ	5910-00-070-7010	10TCC-Q15	56289	CAPACITOR,FIXED,CER		EA	1
2-8	44	PADZZ		162D106X0025DD2	56289	CAPACITOR,FIXED,ELE		EA	4
2-8	45	PADZZ		60U361M	91984	CAPACITOR,FIXED,CER		EA	1
2-8	46	PADZZ		68U103M	91984	CAPACITOR,FIXED,CER		EA	4
2-8	47	PADZZ	5910-00-956-8401	FA5C-4712	01121	CAPACITOR,FIXED,CER		EA	5
2-8	48	PADZZ		FA5C-6892	01121	CAPACITOR,FIXED,CER		EA	5
2-8	49	PADZZ	5910-00-822-5682	5GAD10	56289	CAPACITOR,FIXED,CER		EA	1
2-8	50	PADZZ	5910-00-810-0454	TG-D50	56289	CAPACITOR,FIXED,CER		EA	1
2-8	51	PADZZ	5910-00-950-6684	5GA-T20	56289	CAPACITOR,FIXED,CER		EA	2
2-8	52	PADZZ		4420-500PF	96095	CAPACITOR,FIXED,CER		EA	2
2-8	53	PADZZ	5961-00-137-7208	5082-3080	28480	SEMICONDUCTOR DEVIC		EA	3
2-8	54	PADZZ	5910-00-577-3283	TG-S25	56289	CAPACITOR,FIXED,CER		EA	1
2-8	55	PADZZ	5905-00-111-4727	RCR07G272JS	81349	RESISTOR,FIXED,COMP		EA	1
2-8	56	PADZZ		60U121M	91984	CAPACITOR,FIXED,CER		EA	1
2-8	57	PADZZ	5961-00-723-3602	1N4004	04713	SEMICONDUCTOR DEVIC		EA	2
2-8	58	PADZZ	5905-00-141-0717	RCR07G473JS	81349	RESISTOR,FIXED,COMP		EA	1
2-8	59	PADZZ	5910-01-088-6849	60U2J470J	91984	CAPACITOR,FIXED,CER		EA	1
2-8	60	PADZZ		4999-00-0001	34280	TRANSISTOR		EA	1
2-8	61	PADZZ	5950-01-017-0770	MS75089-35	96906	COIL,RADIO FREQUENC		EA	1
2-8	62	XDDZZ		011-6808-000-59-9	98291	TERMINAL,FEEDTHRU		EA	32
2-8	63	XDDZZ		011-6809-00-0-59 9	98291	TERMINAL,FEED THRU		EA	7
2-8	64	XDDZZ		1410-00-1400	34280	SHIELD		EA	1
2-8	65	PADZZ	5935-01-088-8255	37JR116-1	24931	CONNECTOR,RECEPTACL		EA	2
2-8	66	XDDZZ		1410-00-0550	34280	CAN,MODULE		EA	1
2-8	67	XDDZZ		1410-00-1390	34280	SHIELD		EA	1
2-8	68	XDDZZ		1410-00-1410	34280	TUBE		EA	2
2-8	69	XDDZZ		1410-00-1420	34280	TUBE		EA	1
2-8	70	XDDZZ		1410-00-3360	34280	CHASSIS,MODULE		EA	1
2-8	71	XDDZZ		8005NP	73734	NUT,HEX		EA	2
2-8	72	XDDZZ		1410-00-0510	34280	BASE,MODULE		EA	1
2-8	73	XDDZZ		1410-00-2680	34280	STUD,INDEX		EA	1
2-8	74	XDDZZ		1304ZP	73734	LOCKWASHER		EA	2
2-8	75	XDDZZ		4033NP	73734	SCREW,MACHINE		EA	1
2-8	76	XDDZZ		1410-00-1380	34280	SHIELD		EA	1
2-8	77	XDDZZ		1410-00-1370	34280	TUBE		EA	2
2-8	78	XDDZZ		1410-00-1360	34280	TUBE		EA	2

(1) ILLUSTRATION (A) FIG NO.	(B) ITEM NO.	(2) SMR CODE	(3) NATIONAL STOCK NUMBER	(4) PART NUMBER	(5) FSCM	(6) DESCRIPTION	USABLE ON CODE	(7) U/M	(8) QTY INC IN UNIT
2-8	79	PADZZ	5950-01-088-6722	T1255-2	29525	COIL,RADIO FREQUENC		EA	5
2-8	80	PADZZ	5905-00-141-1183	RCR07G101JS	81349	RESISTOR,FIXED,COMP		EA	2

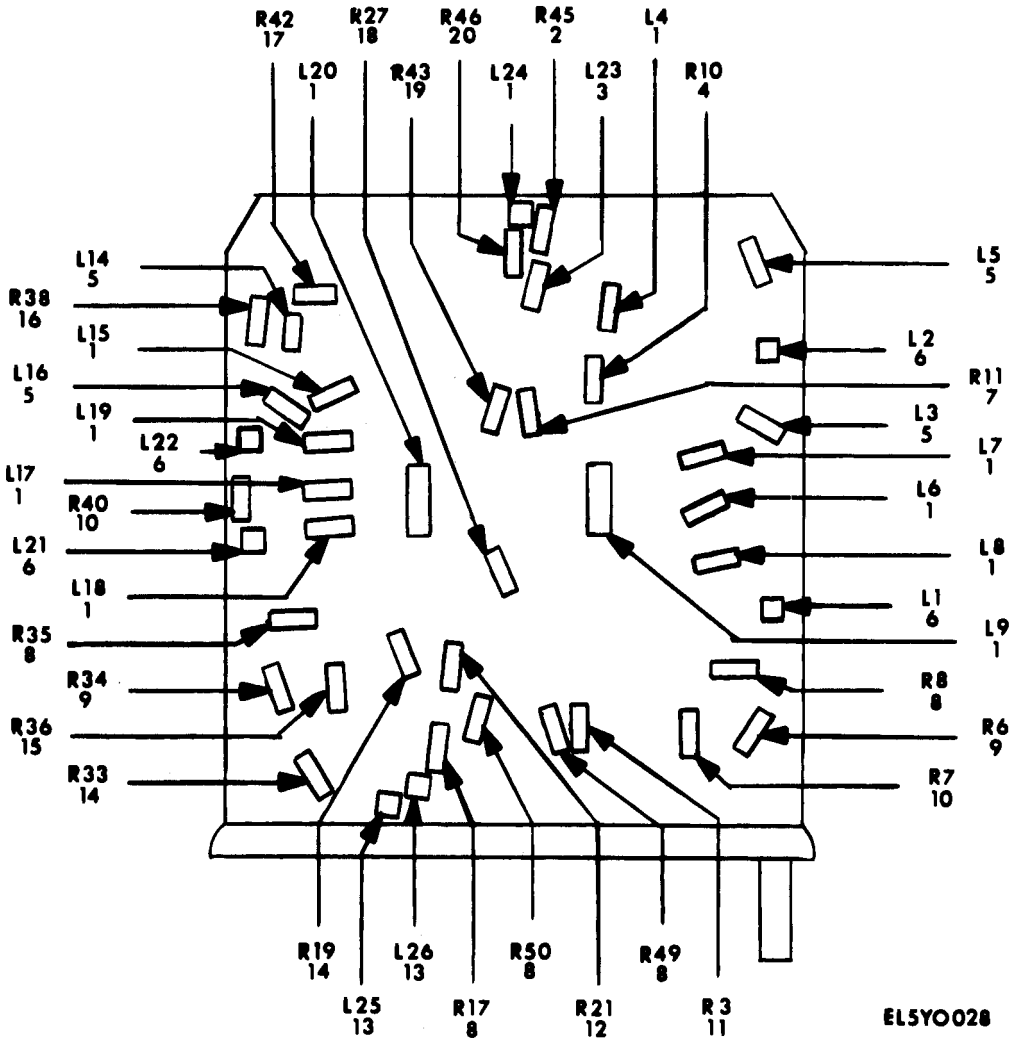

Figure 2-9. Module M19H (Sheet 1 of 7).

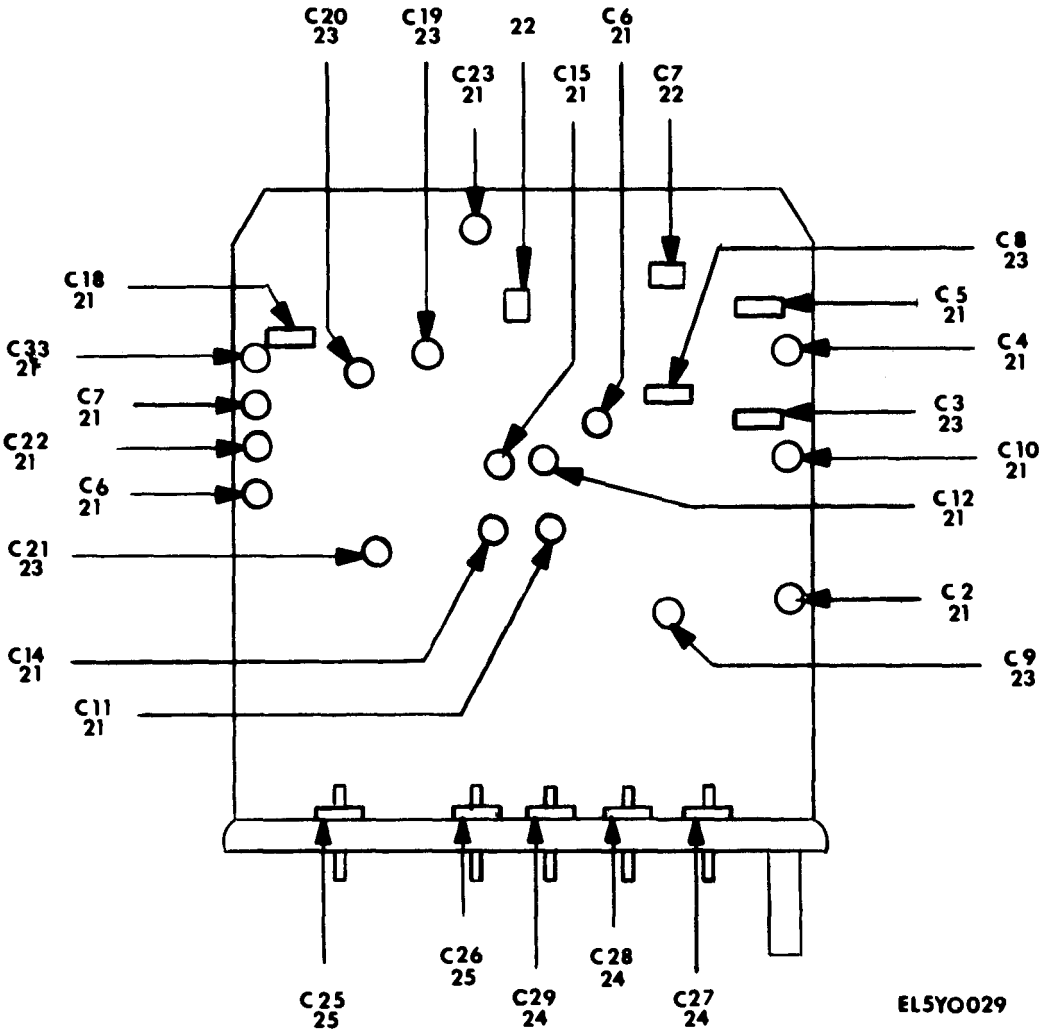

Figure 2-9. Module M19H (Sheet 2 of 7).

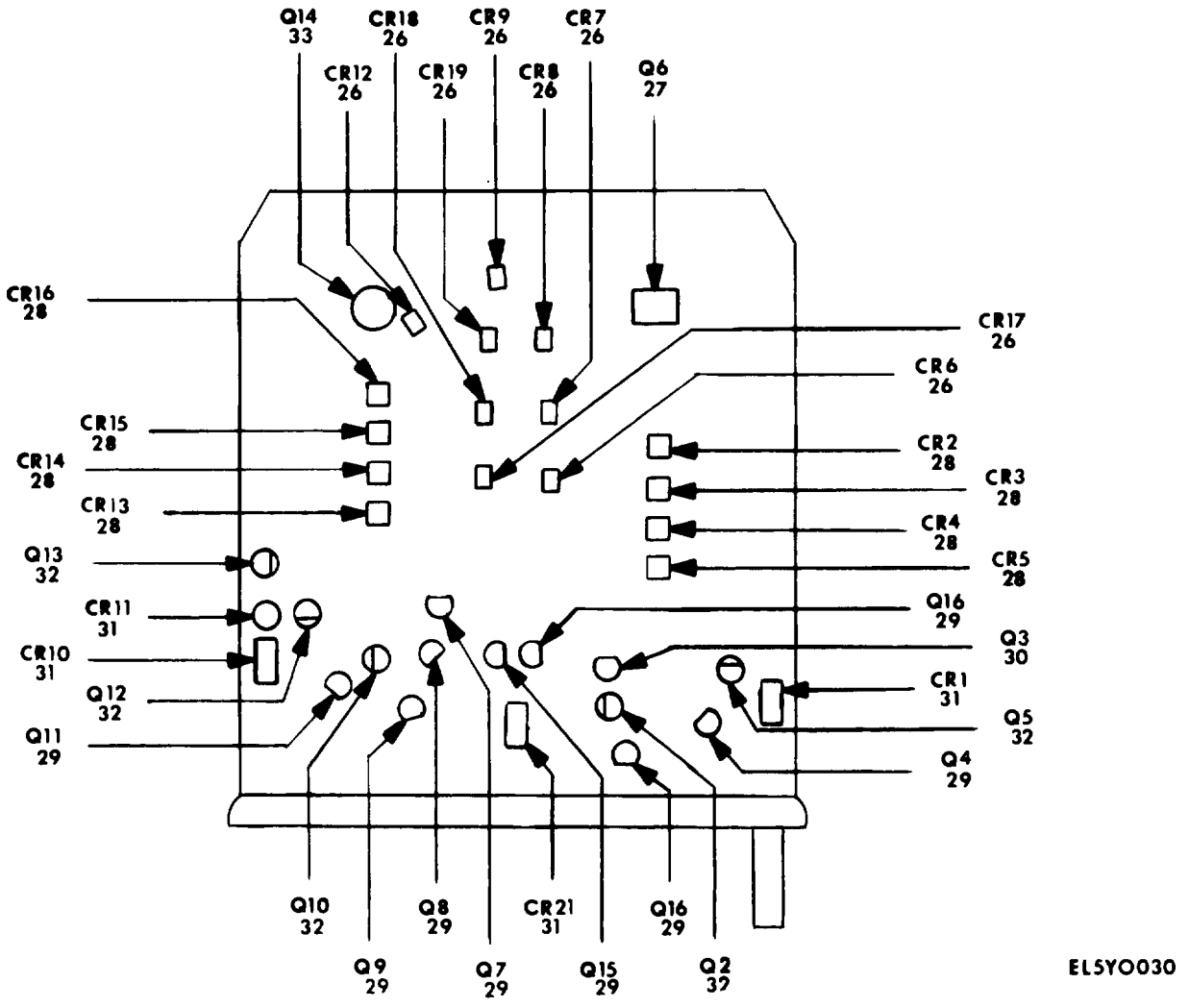

Figure 2-9. Module M19H (Sheet 3 of 7).

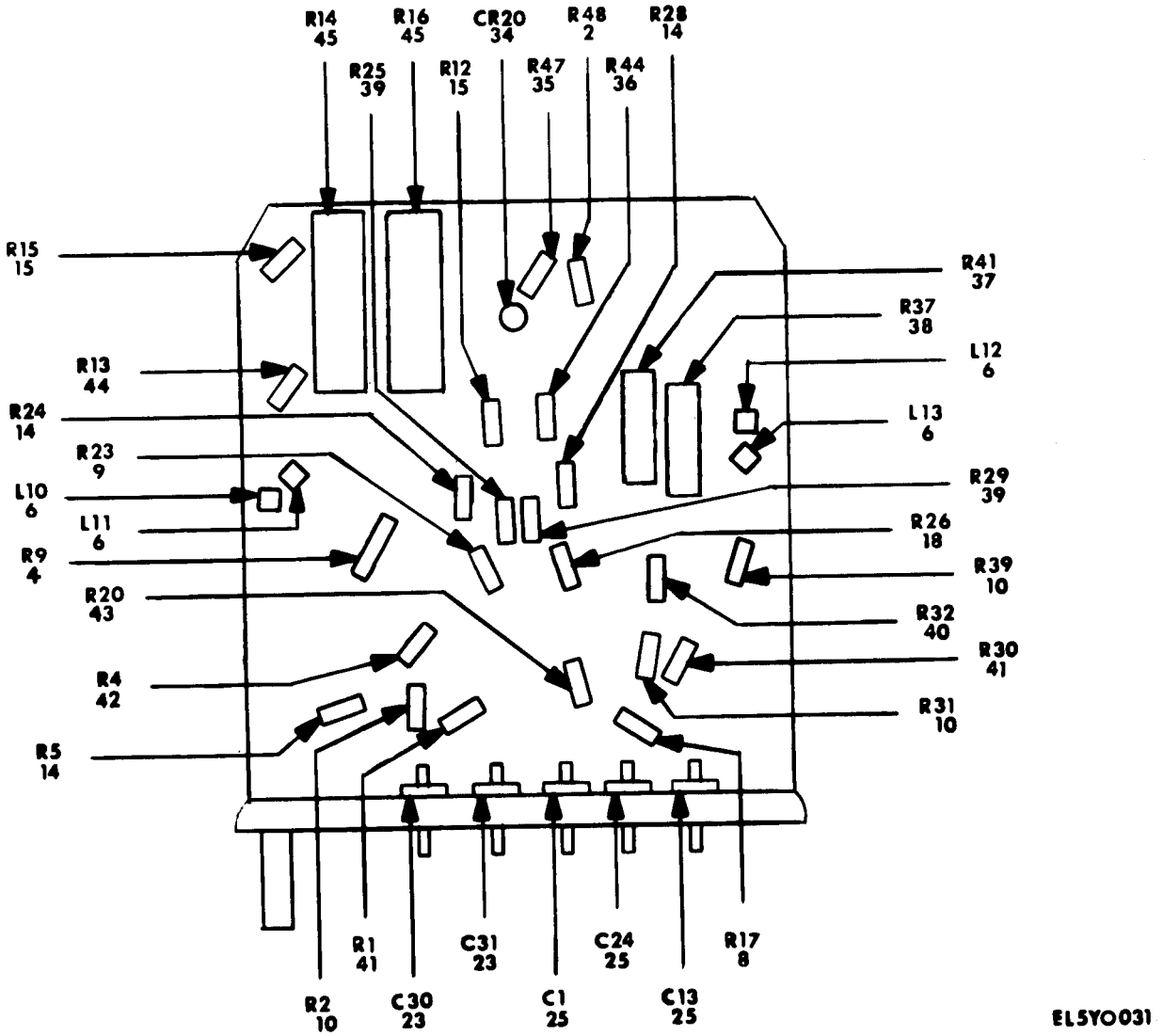

Figure 2-9. Module M19H (Sheet 4 of 7).

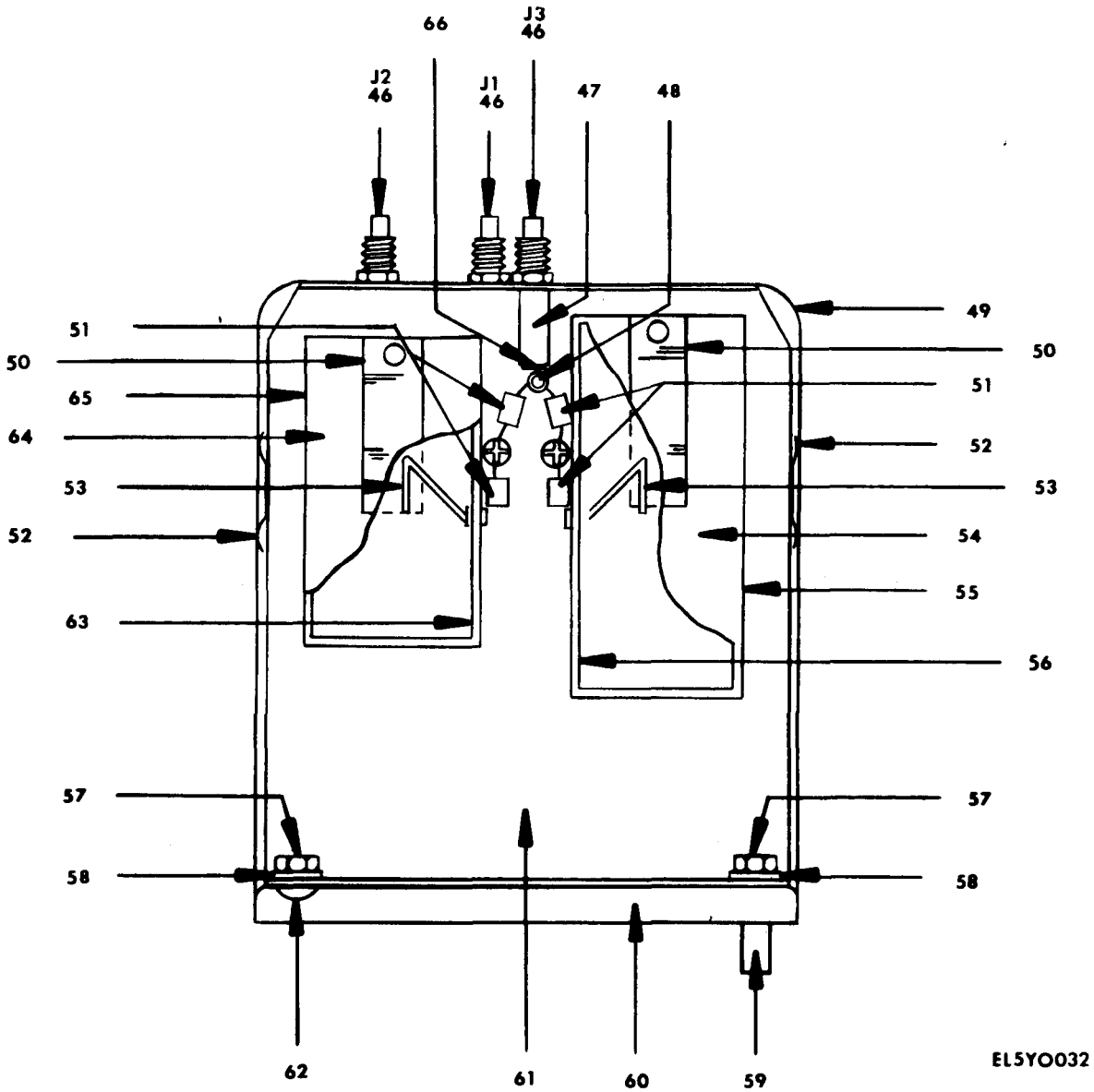

Figure 2-9. Module M19H (Sheet 5 of 7).

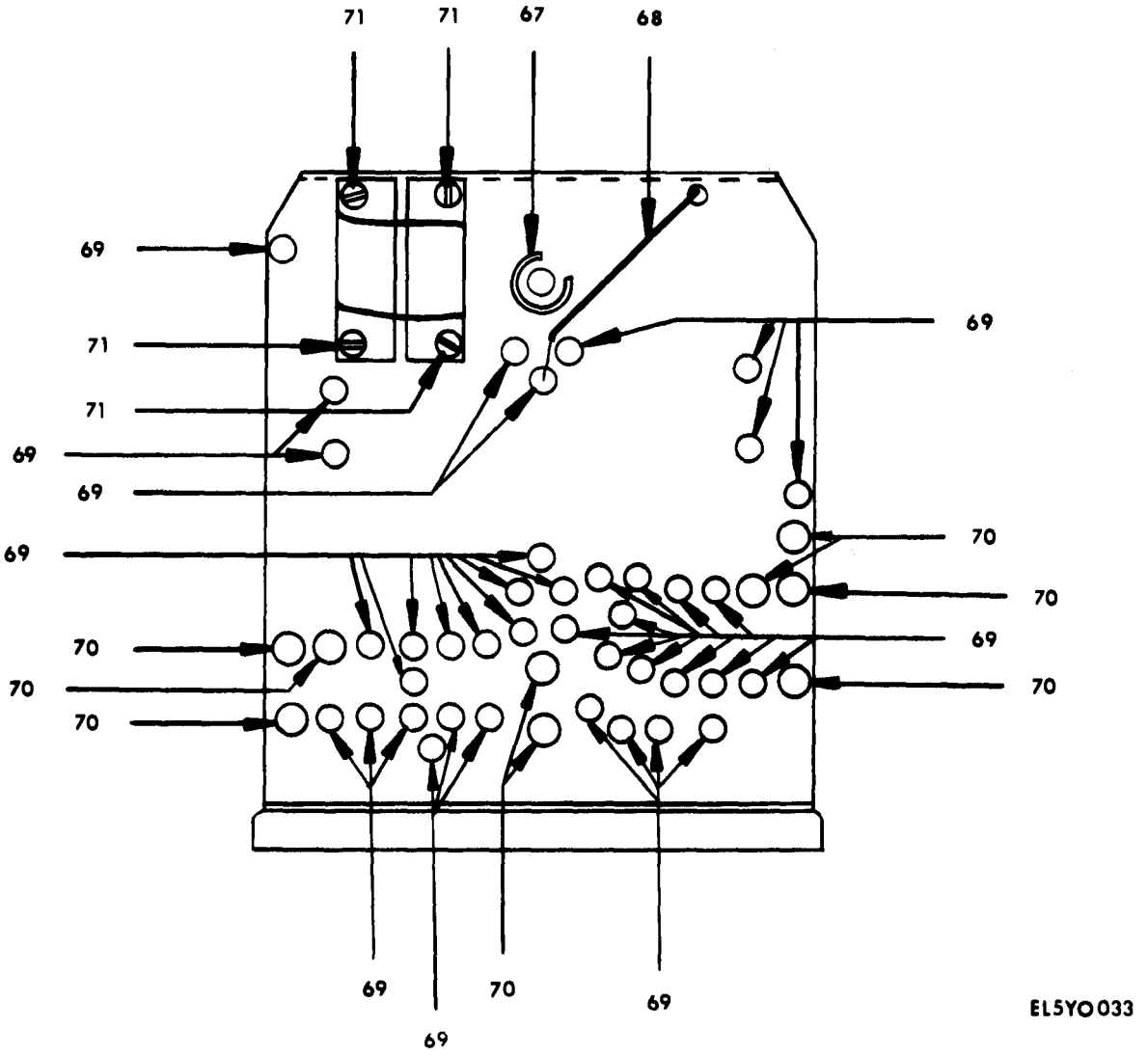

Figure 2-9. Module M19H (Sheet 6 of 7).

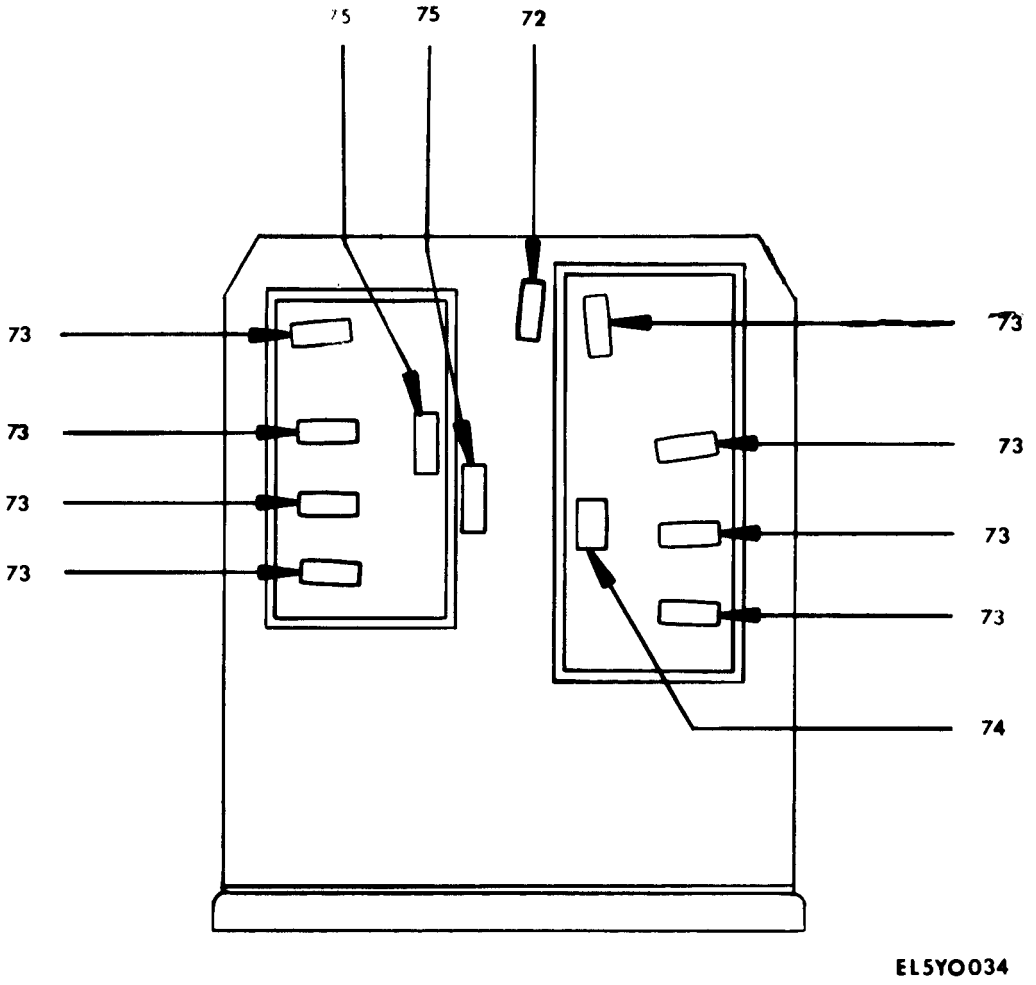

Figure 2-9. Module M19H (Sheet 7 of 7).

(1) ILLUSTRATION (A) FIG NO.	(B) ITEM NO.	(2) SMR CODE	(3) NATIONAL STOCK NUMBER	(4) PART NUMBER	(5) FSCM	(6) DESCRIPTION	USABLE ON CODE	(7) U/M	(8) QTY INC IN UNIT
						GROUP 09 MODULE M19H			
2-9	1	XDHZZ		1819-99-9999	80058	MISC CHOKE/COIL		FT	1
2-9	2	PADZZ	5905-00-141-1183	RCR07G101JS	81349	RESISTOR,FIXED,COMP		EA	2
2-9	3	PADZZ	5950-01-088-6722	T1255-2	29525	COIL,RADIO FREQUENC		EA	1
2-9	4	PADZZ	5905-00-135-3973	RCR07G221JS	81349	RESISTOR,FIXED,COMP		EA	2
2-9	5	PADZZ	5950-01-088-6942	08NR22K	06560	COIL,RADIO FREQUENC		EA	4
2-9	6	PADZZ	5950-01-088-6721	T1255-1	29525	COIL,RADIO FREQUENC		EA	8
2-9	7	PADZZ	5905-00-121-9932	RCR07G391JS	81349	RESISTOR,FIXED,COMP		EA	1
2-9	8	PADZZ	5905-00-110-0388	RCR07G104JS	81349	RESISTOR,FIXED,COMP		EA	6
2-9	9	PADZZ	5905-00-119-3505	RCR07G683JS	81349	RESISTOR,FIXED,COMP		EA	3
2-9	10	PADZZ	5905-00-114-0711	RCR07G472JS	81349	RESISTOR,FIXED,COMP		EA	5
2-9	11	PADZZ	5905-00-121-9919	RCR07G106JS	81349	RESISTOR,FIXED,COMP		EA	1
2-9	12	PADZZ	5905-00-115-2262	RCR07G913JS	81349	RESISTOR,FIXED,COMP		EA	1
2-9	13	PADZZ	5950-01-088-6723	1210-30-0005	34280	COIL,RADIO FREQUENC		EA	2
2-9	14	PADZZ	5905-00-116-8556	RCR07G223JS	81349	RESISTOR,FIXED,COMP		EA	5
2-9	15	PADZZ	5905-00-105-7764	RCR07G222JS	81349	RESISTOR		EA	3
2-9	16	PADZZ	5905-00-111-4743	RCR20G820JS	81349	RESISTOR,FIXED,COMP		EA	1
2-9	17	PADZZ	5905-00-104-8368	RCR07G470JS	81349	RESISTOR,FIXED,COMP		EA	1
2-9	18	PADZZ	5905-00-105-7765	RCR07G224JS	81349	RESISTOR,FIXED,COMP		EA	2
2-9	19	PADZZ	5905-00-114-0710	RCR07G331JS	81349	RESISTOR,FIXED,COMP		EA	1
2-9	20	PADZZ		SPS-N-347-49.9	75042	RESISTOR,FIXED,WIRE		EA	1
2-9	21	PADZZ		4420-500PF	96095	CAPACITOR,FIXED,CER		EA	15
2-9	22	PADZZ		QC-.75PF	95121	CAPACITOR,FIXED,CER		EA	2
2-9	23	PADZZ		4420-100PF	96095	CAPACITOR,FIXED,CER		EA	6
2-9	24	PADZZ	5910-00-956-8401	FA5C-4712	01121	CAPACITOR,FIXED,CER		EA	5
2-9	25	PADZZ		FA5C-6892	01121	CAPACITOR,FIXED,CER		EA	5
2-9	26	PADZZ		MA47980	96341	SEMICONDUCTOR DEVIC		EA	8
2-9	27	PADZZ	5961-00-252-1331	2N5109	02735	TRANSISTOR		EA	1
2-9	28	PADZZ		BB205	25403	SEMICONDUCTOR DEVIC		EA	8
2-9	29	PADZZ	5961-00-163-7227	MPS3702	04713	TRANSISTOR		EA	8
2-9	30	PADZZ	5961-00-444-6656	2N5461	04713	TRANSISTOR		EA	1
2-9	31	PADZZ	5961-00-723-3602	JAN1N3612	81349	SEMICONDUCTOR DEVIC		EA	4
2-9	32	PADZZ	5961-00-763-7890	2N3854A	03508	TRANSISTOR		EA	5
2-9	33	PADZZ	5961-01-005-1454	2N5947	04713	TRANSISTOR		EA	1
2-9	34	PADZZ	5961-00-912-4907	JAN1N82AG	81349	SEMICONDUCTOR DEVIC		EA	1
2-9	35	PADZZ	5905-00-133-0440	RCR07G560JS	81349	RESISTOR,FIXED,COMP		EA	1
2-9	36	PADZZ	5905-00-110-7620	RCR07G102JS	81349	RESISTOR,FIXED,COMP		EA	1
2-9	37	PADZZ	5905-00-247-8732	RCR32G471JS	81349	RESISTOR,FIXED,COMP		EA	1
2-9	38	PADZZ	5905-00-494-5137	RCR32G161JS	81349	RESISTOR,FIXED,COMP		EA	1
2-9	39	PADZZ	5905-00-141-0717	RCR07G473JS	81349	RESISTOR,FIXED,COMP		EA	2

(1) ILLUSTRATION (A) FIG NO.	(B) ITEM NO.	(2) SMR CODE	(3) NATIONAL STOCK NUMBER	(4) PART NUMBER	(5) FSCM	(6) DESCRIPTION	USABLE ON CODE	(7) U/M	(8) QTY INC IN UNIT
2-9	40	PADZZ	5905-00-110-7622	RCR07G682JS	81349	RESISTOR,FIXED,COMP		EA	1
2-9	41	PADZZ	5905-00-141-1132	RCR07G752JS	81349	RESISTOR,FIXED,COMP		EA	2
2-9	42	PADZZ	5905-01-089-6602	4799-99-9999	34280	RESISTOR,FIXED,COMP		EA	2
2-9	43	PADZZ	5905-00-115-8055	RCR07G393JS	81349	RESISTOR,FIXED,COMP		EA	1
2-9	44	PADZZ	5905-00-141-0743	RCR07G392JS	81349	RESISTOR,FIXED,COMP		EA	1
2-9	45	PADZZ	5905-00-993-7406	3067P-10K	80294	RESISTOR,VARIABLE,N		EA	2
2-9	46	PADZZ	5935-01-088-8255	37JR116-1	24931	CONNECTOR,RECEPTACL		EA	3
2-9	47	XDDZZ		1410-00-1430	34280	TUBE		EA	1
2-9	48	PADZZ	5935-00-351-6063	LSG1DG2-1	91506	CONNECTOR,RECEPTACL		EA	1
2-9	49	XDDZZ		1410-00-0550	34280	CAN,MODULE		EA	1
2-9	50	XDDZZ		1410-00-1229	34280	STRAP,GROUND		EA	2
2-9	51	XDDZZ		1410-00-1410	34280	TUBE		EA	4
2-9	52	XDDZZ		1410-00-1549	34280	STRAP,GROUND		EA	2
2-9	53	XDDZZ		1410-00-1520	34280	STRAP,OSC		EA	2
2-9	54	XDDZZ		1410-00-1180	34280	COVER,OSC		EA	1
2-9	55	XDDZZ		1410-00-1320	34280	SHIELD		EA	1
2-9	56	XDDZZ		1410-00-1330	34280	SHIELD		EA	1
2-9	57	XDDZZ		8005NP	73734	NUT,HEX		EA	1
2-9	58	XDDZZ		1304ZP	73734	LOCKWASHER		EA	2
2-9	59	XDDZZ		1410-00-2680	34280	INDEX STUD		EA	1
2-9	60	XDDZZ		1410-00-0510	34280	BASE,MODULE		EA	1
2-9	61	XDDZZ		1410-00-3360	34280	CHASSIS,MODULE		EA	1
2-9	62	XDDZZ		4033NP	73734	SCREW,MACHINE		EA	1
2-9	63	XDDZZ		1410-00-1310	34280	SHIELD		EA	1
2-9	64	XDDZZ		1410-00-1349	34280	COVER,SMALL		EA	1
2-9	65	XDDZZ		1410-00-1300	34280	SHIELD		EA	1
2-9	66	XDDZZ		1410-00-3380	34280	TUBE		EA	1
2-9	67	XDDZZ		1410-00-1530	34280	SHIELD		EA	1
2-9	68	PADZZ	6145-00-221-6528	MA50056	82413	CABLE,RADIO FREQUEN		FT	2
2-9	69	XDDZZ		011-6808-000-59-9	98291	TERMINAL,FEEDTHRU		EA	40
2-9	70	XDDZZ		011-6809-00-0-59 9	98291	TERMINAL,FEEDTHRU		EA	9
2-9	71	XDDZZ		4004NP	73734	SCREW,MACHINE		EA	4
2-9	72	PADZZ	5905-00-252-1671	RCR07G225JS	81349	RESISTOR,FIXED,COMP		EA	1
2-9	73	PADZZ	5905-00-114-0711	RCR07G472JS	81349	RESISTOR,FIXED,COMP		EA	8
2-9	74	PADZZ		QC-2.0PF	95121	CAPACITOR,FIXED,CER		EA	1
2-9	75	PADZZ	5910-00-934-2636	MC-.47PF	95121	CAPACITOR,FIXED,CER		EA	2

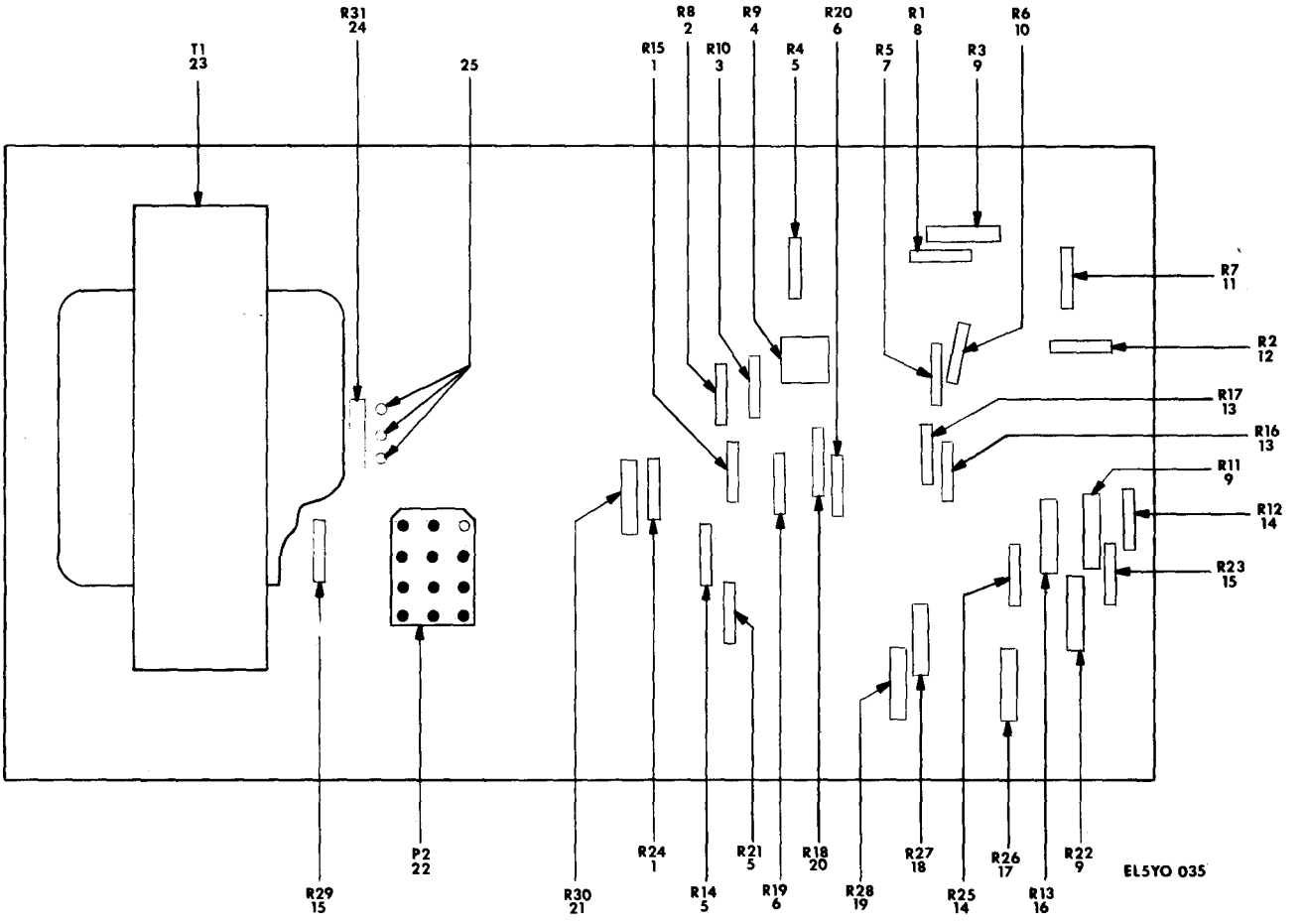

Figure 2-10. Power Supply PS6A (Sheet 1 of 4).

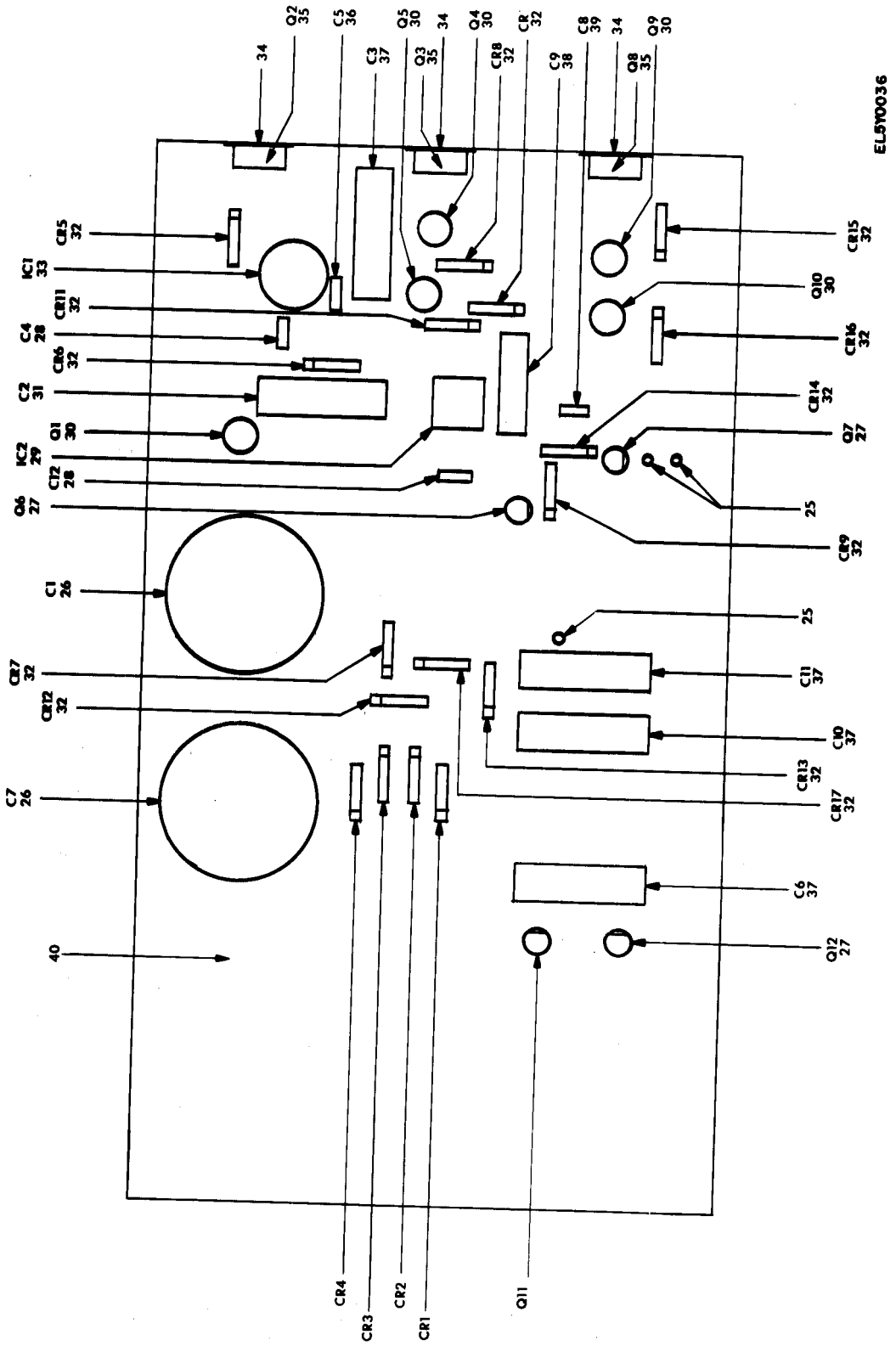

Figure 2-10. Power Supply PS6A (Sheet 2 of 4).

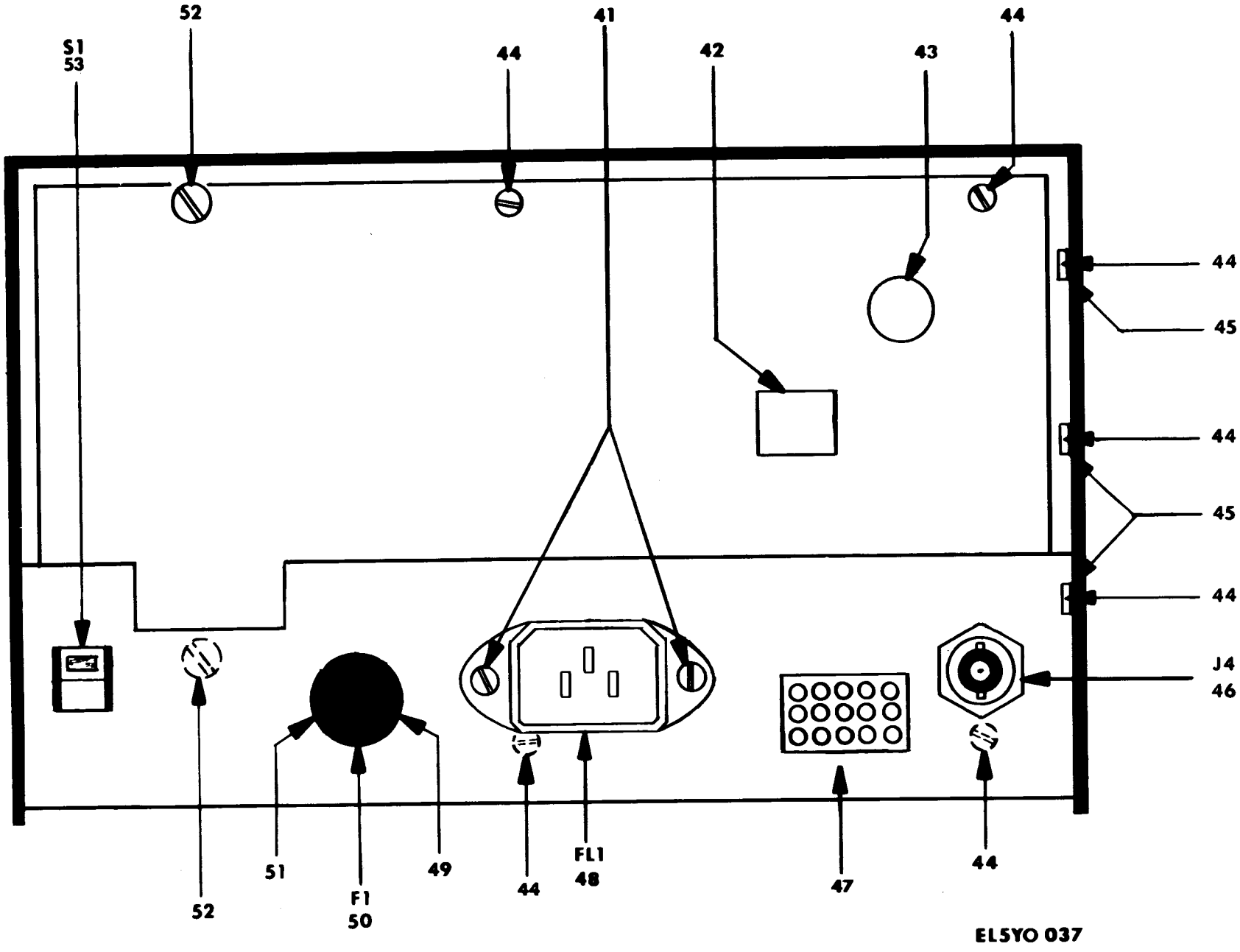

Figure 2-10. Power Supply PS6A (Sheet 3 of 4).

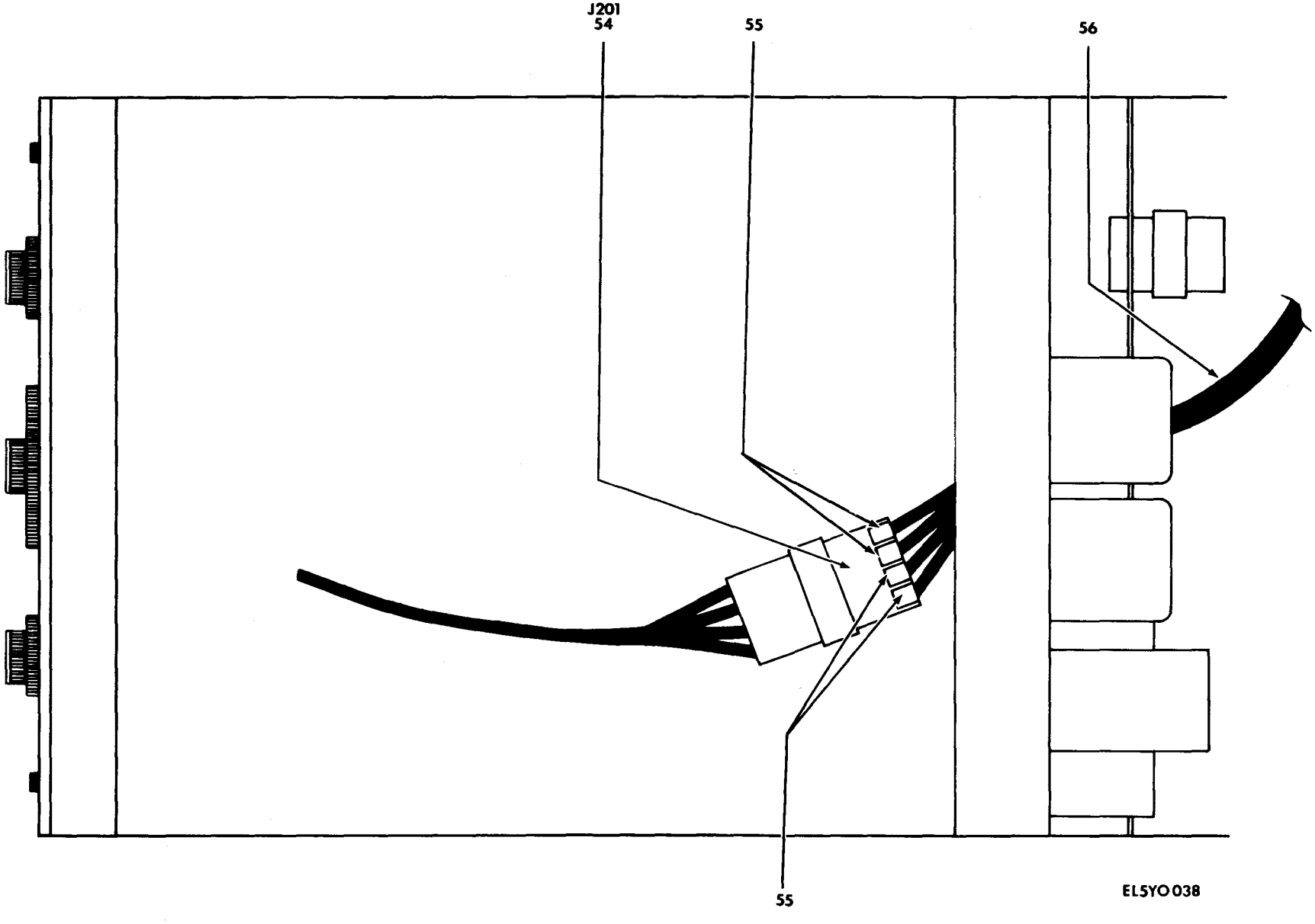

Figure 2-10. Power Supply PS6A (Sheet 4 of 4).

(1) ILLUSTRATION (A) FIG NO.	(B) ITEM NO.	(2) SMR CODE	(3) NATIONAL STOCK NUMBER	(4) PART NUMBER	(5) FSCM	(6) DESCRIPTION	USABLE ON CODE	(7) U/M	(8) QTY INC IN UNIT
						GROUP 10 POWER SUPPLY PS6A			
2-10	1	PADZZ		MF55K-15K	06560	RESISTOR,FIXED,FILM		EA	2
2-10	2	PADZZ	5905-00-141-0743	RCR07G392JS	81349	RESISTOR,FIXED,COMP		EA	1
2-10	3	PADZZ	5905-00-111-4727	RCR07G272JS	81349	RESISTOR,FIXED,COMP		EA	1
2-10	4	PADZZ	5905-00-407-1826	360T102B	11236	RESISTOR,VARIABLE,N		EA	1
2-10	5	PADZZ		MF55K-1K	06560	RESISTOR,FIXED,FILM		EA	3
2-10	6	PADZZ	5905-01-089-6640	4789-00-0004	34280	RESISTOR,SET,MATCHE		EA	1
2-10	7	PADZZ		MF55K-12.1K	06560	RESISTOR,FIXED,FILM		EA	1
2-10	8	PADZZ	5905-00-119-3503	RCR07G271JS	81349	RESISTOR,FIXED,COMP		EA	1
2-10	9	PADZZ		K20-5	12126	RESISTOR,FIXED,COMP		EA	3
2-10	10	PADZZ	5905-00-106-1356	RCR07G152JS	81349	RESISTOR,FIXED,COMP		EA	1
2-10	11	PADZZ	5905-00-135-3973	RCR07G221JS	81349	RESISTOR,FIXED,COMP		EA	1
2-10	12	PADZZ	5905-00-114-5343	RCR07G182JS	81349	RESISTOR,FIXED,COMP		EA	1
2-10	13	PADZZ	5905-00-110-7620	RCR07G102JS	81349	RESISTOR,FIXED,COMP		EA	2
2-10	14	PADZZ	5905-00-120-9154	RCR07G471JS	81349	RESISTOR,FIXED,COMP		EA	2
2-10	15	PADZZ	5905-00-106-3666	RCR07G103JS	81349	RESISTOR,FIXED,COMP		EA	2
2-10	16	PADZZ	5905-00-141-1130	RCR20G272JS	81349	RESISTOR,FIXED,COMP		EA	1
2-10	17	PADZZ	5905-00-141-1168	RCR20G222JS	81349	RESISTOR,FIXED,COMP		EA	1
2-10	18	PADZZ		MF55K-825	06560	RESISTOR,FIXED,FILM		EA	1
2-10	19	PADZZ		MF55K-6.81K	06560	RESISTOR,FIXED,FILM		EA	1
2-10	20	PADZZ	5905-00-114-0711	RCR07G472JS	81349	RESISTOR,FIXED,COMP		EA	1
2-10	21	PADZZ	5905-00-111-4858	RCR20G471JS	81349	RESISTOR,FIXED,COMP		EA	1
2-10	22	PADZZ	5935-00-432-0860	A-1840-12-2	27264	SOCKET,PLUG-IN ELEC		EA	1
2-10	23	PADZZ	5950-01-088-6767	5610-00-0006	34280	TRANSFORMER,POWER		EA	1
2-10	24	PADZZ	5905-00-104-8350	RCR20G221JS	81349	RESISTOR,FIXED,COMP		EA	1
2-10	25	XDDZZ		1559-2	27264	TERMINAL		EA	6
2-10	26	PADZZ	5910-01-088-8181	1510-20-7122	34280	CAPACITOR		EA	2
2-10	27	PADZZ	5961-00-763-7890	2N3854A	03508	TRANSISTOR		EA	4
2-10	28	PADZZ	5910-01-088-7957	60U101M	91984	CAPACITOR,FIXED,CER		EA	2
2-10	29	PADZZ	5962-01-057-7884	N5741CV	18324	MICROCIRCUIT,LINEAR		EA	1
2-10	30	PADZZ	5961-00-103-3981	2N3644	07263	TRANSISTOR		EA	5
2-10	31	PADZZ	5910-00-879-0123	TE1307	56289	CAPACITOR,FIXED,ELE		EA	1
2-10	32	PADZZ	5961-00-723-3602	1N4004	04713	SEMICONDUCTOR DEVIC		EA	17
2-10	33	PADZZ	5962-00-403-4534	LM723CH	27014	MICROCIRCUIT,LINEAR		EA	1
2-10	34	XDDZZ		2810-11-0001	34280	INSULATOR		EA	3
2-10	35	PADZZ	5961-00-039-8814	2N5294	02735	TRANSISTOR		EA	3
2-10	36	PADZZ	5910-00-810-0454	TG-D50	56289	CAPACITOR,FIXED,CER		EA	1
2-10	37	PADZZ	5910-00-879-6897	TE1211	56289	CAPACITOR,FIXED,ELE		EA	4
2-10	38	PADZZ		162D106X0025DD2	56289	CAPACITOR,FIXED,ELE		EA	1

(1) ILLUSTRATION (A) FIG NO.	(B) ITEM NO.	(2) SMR CODE	(3) NATIONAL STOCK NUMBER	(4) PART NUMBER	(5) FSCM	(6) DESCRIPTION	USABLE ON CODE	(7) U/M	(8) QTY INC IN UNIT
2-10	39	PADZZ		60U121M	91984	CAPACITOR,FIXED,CER		EA	1
2-10	40	XDDDD		1218-00-0012	34280	POWER SUPPLY BOARD		EA	1
2-10	41	XDHZZ		4034NP	73734	SCREW,MACHINE		EA	2
2-10	42	PADZZ		DILB-8P-108	09922	SOCKET,PLUG-IN ELEC		EA	1
2-10	43	PADZZ		HT7717-21-DAP	13103	MOUNTING PAD,ELECTR		EA	1
2-10	44	XDDZZ		4020NP	73734	SCREW,MACHINE		EA	9
2-10	45	XDDZZ		DF137A	49671	WASHER		EA	3
2-10	46	PADZZ	5935-01-088-8253	KC79-146	91836	CONNECTOR,RECEPTACL		EA	1
2-10	47	XDDZZ		1410-80-0350	34280	CHASSIS,POWER SPLY		EA	1
2-10	48	PADZZ		APF300	14655	FILTER,LINE		EA	1
2-10	49	XDHZZ		2410-05-0009	34280	FUSE CARRIER		EA	1
2-10	50	PADZZ	5920-00-199-9498	F02B250V1-2A	81349	FUSE,CARTRIDGE		EA	1
2-10	51	XDHZZ		2410-05-0010	34280	FUSE HOLDER BODY		EA	1
2-10	52	XDDZZ		4030NP	73734	SCREW,MACHINE		EA	1
2-10	53	PADZZ		EPSI-SLI	82389	SWITCH,PUSH		EA	1
2-10	54	PADZZ		19-02-1042	27264	RECEPTACLE		EA	1
2-10	55	PADZZ	5999-00-543-0977	02-09-1118	27264	CONTACT,ELECTRICAL		EA	3
2-10	56	PADZZ		17250C	70903	CORD,POWER		EA	1

NATIONAL STOCK NUMBER AND PART NUMBER INDEX

NOTE: LATEST NATIONAL STOCK NUMBER AND PART NUMBER ARE INCLUDED AT END OF INDEX

STOCK NUMBER	FIGURE NO.	ITEM NO.	STOCK NUMBER	FIGURE NO.	ITEM NO.
5961-00-039-8814	2-10	35	5905-00-121-9932	2-9	7
5910-00-070-7010	2-8	43	5905-00-121-9938	2-4	1
5961-00-103-3981	2-10	30	5905-00-126-6694	2-4	4
5905-00-104-8347	2-8	7	5905-00-131-1255	2-8	14
5905-00-104-8350	2-10	24	5905-00-133-0440	2-8	23
5905-00-104-8357	2-8	13	5905-00-133-0440	2-9	35
5905-00-104-8363	2-8	1	5905-00-135-3973	2-10	11
5905-00-104-8368	2-7	3	5905-00-135-3973	2-8	19
5905-00-104-8368	2-8	6	5905-00-135-3973	2-9	4
5905-00-104-8368	2-9	17	5961-00-137-7208	2-8	53
5905-00-105-7764	2-5	8	5961-00-139-2398	2-7	43
5905-00-105-7764	2-7	54	5961-00-139-2398	2-8	32
5905-00-105-7764	2-9	15	5905-00-141-0592	2-3	2
5905-00-105-7765	2-9	18	5905-00-141-0717	2-3	45
5905-00-105-7767	2-4	7	5905-00-141-0717	2-4	12
5905-00-105-7767	2-8	26	5905-00-141-0717	2-7	50
5905-00-105-7768	2-8	24	5905-00-141-0717	2-8	58
5905-00-106-1278	2-7	45	5905-00-141-0717	2-9	39
5905-00-106-1356	2-10	10	5905-00-141-0743	2-10	2
5905-00-106-1356	2-7	10	5905-00-141-0743	2-9	44
5905-00-106-1356	2-8	29	5905-00-141-0744	2-7	14
5905-00-106-3666	2-10	15	5905-00-141-1130	2-10	16
5905-00-106-3666	2-7	12	5905-00-141-1132	2-9	41
			5905-00-141-1168	2-10	17
5905-00-106-3668	2-7	4	5905-00-141-1183	2-7	1
5905-00-106-3668	2-8	10	5905-00-141-1183	2-8	16
5905-00-106-3668	2-8	11	5905-00-141-1183	2-8	80
5905-00-107-0656	2-8	2	5961-00-163-7227	2-7	33
5905-00-110-0388	2-7	17	5961-00-163-7227	2-8	34
5905-00-110-0388	2-8	20	5961-00-163-7227	2-9	29
5905-00-110-0388	2-9	8	5961-00-170-4430	2-3	49
5905-00-110-0991	2-8	8	5920-00-199-9498	2-10	50
5905-00-110-7620	2-10	13	5905-00-205-9554	2-7	47
5905-00-110-7620	2-8	12	6145-00-221-6528	2-9	68
5905-00-110-7620	2-9	36	5910-00-222-8207	2-5	3
5905-00-110-7622	2-9	40	5910-00-222-8207	2-8	41
5961-00-110-7657	2-8	33	5905-00-246-9393	2-7	11
5905-00-111-4727	2-10	3	5905-00-247-8732	2-9	37
5905-00-111-4727	2-5	1	5961-00-252-1309	2-8	39
5905-00-111-4727	2-8	55	5961-00-252-1331	2-9	27
5905-00-111-4743	2-9	16	5905-00-252-1671	2-8	17
5905-00-111-4858	2-10	21	5905-00-252-1671	2-9	72
5905-00-113-4860	2-8	4	5930-00-255-9462	2-3	33
5905-00-114-0710	2-8	25	5310-00-282-4653	2-3	44
5905-00-114-0710	2-9	19	5935-00-351-6063	2-9	48
5905-00-114-0711	2-10	20	5935-00-372-0549	2-6	3
5905-00-114-0711	2-7	2	5961-00-372-1820	2-8	30
5905-00-114-0711	2-7	58	5999-00-386-8688	2-6	2
5905-00-114-0711	2-8	18	5999-00-387-5510	2-6	4
5905-00-114-0711	2-9	10	5961-00-401-0507	2-7	31
5905-00-114-0711	2-9	73	5961-00-401-9106	2-7	44
5905-00-114-5343	2-10	12	5961-00-402-7679	2-7	29
5905-00-115-2262	2-9	12	5961-00-402-7679	2-8	35
5905-00-115-8055	2-4	10	5962-00-403-4534	2-10	33
5905-00-115-8055	2-7	48	5905-00-407-1826	2-10	4
5905-00-115-8055	2-9	43	5999-00-417-3811	2-6	6
5905-00-116-8554	2-3	47	5935-00-432-0860	2-10	22
5905-00-116-8554	2-8	15	5961-00-434-9313	2-7	39
5905-00-116-8555	2-8	27	5961-00-444-6656	2-9	30
5905-00-116-8556	2-7	13	5961-00-483-0400	2-7	38
5905-00-116-8556	2-9	14	5905-00-494-5137	2-9	38
5905-00-116-8562	2-8	9	5905-00-517-9589	2-4	11
5905-00-118-4559	2-4	2	5999-00-543-0977	2-10	55
5905-00-118-4559	2-5	2	5910-00-577-3281	2-7	56
5905-00-118-4559	2-7	15	5910-00-577-3283	2-8	54
5905-00-118-4559	2-8	5	5910-00-577-9337	2-7	22
5905-00-119-3503	2-10	8		2-5	6
5905-00-119-3504	2-7	7	5910-00-613-4414	2-7	19
5905-00-119-3505	2-9	9	5940-00-665-5740	2-3	41
5905-00-119-8768	2-8	21	5961-00-723-3602	2-10	32
5905-00-119-8811	2-7	5	5961-00-723-3602	2-4	6
5905-00-119-8811	2-8	22	5961-00-723-3602	2-8	57
5905-00-120-9154	2-10	14	5961-00-723-3602	2-9	31
5905-00-120-9154	2-4	9	5961-00-763-7890	2-10	27
5905-00-120-9154	2-7	6	5961-00-763-7890	2-7	41
5905-00-120-9154	2-8	3	5961-00-763-7890	2-9	32
5905-00-121-9919	2-7	9	5910-00-810-0454	2-10	36
5905-00-121-9919	2-9	11	5910-00-810-0454	2-8	50
5905-00-121-9932	2-7	8	5950-00-813-0567	2-7	34

NATIONAL STOCK NUMBER AND PART NUMBER INDEX

STOCK NUMBER	FIGURE NO.	ITEM NO.	STOCK NUMBER	FIGURE NO.	ITEM NO.
5910-00-822-5682	2-7	52	5995-01-088-2	2-1	12
5910-00-822-5682	2-8	49	5340-01-088-8	2-2	6
5910-00-864-8387	2-5	4	6625-01-088-	2-4	8
5910-00-879-0123	2-10	31	6625-01-088-	2-1	24
5910-00-879-6897	2-10	37	6625-01-088-	2-1	25
5961-00-912-4907	2-9	34	5950-01-088-	2-7	30
5910-00-934-2636	2-7	27	5950-01-088-	2-8	31
5910-00-934-2636	2-9	75	5950-01-088-	2-9	6
5910-00-950-6684	2-8	51	5950-01-088-	2-8	79
5910-00-953-4420	2-7	25	5950-01-088-	2-9	3
5910-00-956-8401	2-7	28	5950-01-088-	2-9	13
5910-00-956-8401	2-8	47	5340-01-088-	2-3	27
5910-00-956-8401	2-9	24	5950-01-088-	2-10	23
5905-00-993-7406	2-9	45	5910-01-088-	2-3	48
4931-01-003-2868	2-1	15	5910-01-088-	2-8	59
4931-01-003-2869	2-1	18	5950-01-088-	2-3	3
4931-01-003-2870	2-1	8	5950-01-088-	2-7	35
4931-01-003-2871	2-1	21	5950-01-088-	2-7	42
4931-01-003-2872	2-1	20	5950-01-088-	2-9	5
4931-01-003-2873	2-1	17	5910-01-088-7	2-10	28
4931-01-003-3857	2-1	6	5355-01-088-7	2-3	24
5961-01-005-1454	2-9	33	5355-01-088-	2-3	26
5950-01-017-0770	2-5	5	5910-01-088-8	2-10	26
5950-01-017-0770	2-8	61	5935-01-088-8	2-10	46
5935-01-026-0409	2-6	5	5935-01-088-8	2-3	34
5999-01-029-9987	2-6	1	5935-01-088-8	2-3	1
5961-01-035-7154	2-3	37	5935-01-088-8	2-7	57
5962-01-057-7884	2-10	29	5935-01-088-8	2-8	65
5310-01-063-5069	2-2	4	5935-01-088-8	2-9	46
6625-01-085-1708	2-1	7	5355-01-088-8	2-3	25
6625-01-085-1709	2-1	4	5930-01-089-0	2-3	36
5995-01-088-2419	2-1	19	5905-01-089-	2-9	42
5995-01-088-2420	2-1	16	5905-01-089-	2-10	6
5995-01-088-2421	2-1	2	5905-01-089-8	2-7	51
5995-01-088-2422	2-1	23	5930-01-091-9	2-3	39
5995-01-088-2423	2-1	9	6130-01-094-9	2-1	1
5995-01-088-2424	2-1	14	6150-01-095-3	2-1	5
5995-01-088-2425	2-1	10			

PART NUMBER	FSCM	FIG. NO.	ITEM NO.	PART NUMBER	FSCM	FIG. NO.	ITEM NO.
A-1840-12-2	27264	2-10	22	MF55K-47.5K	06560	2-4	5
APF300	14655	2-10	48	MF55K-6.81K	06560	2-10	19
A430	25403	2-7	43	MF55K-825	06560	2-10	18
A430	25403	2-8	32	MPS3702	04713	2-7	33
BB141A	15238	2-7	36	MPS3702	04713	2-8	34
BB205	25403	2-8	38	MPS3702	04713	2-9	29
BB205	25403	2-9	28	MS75089-35	96906	2-5	5
CN1500-100PF	91418	2-7	25	MS75089-35	96906	2-8	61
C7494-632-4	78553	2-2	4	M1H	34280	2-1	15
DF137A	49671	2-10	45	M10H	34280	2-1	20
DILB-8P-108	09922	2-10	42	M19H	34280	2-1	17
EPSI-SLI	82389	2-10	53	M2H	34280	2-1	18
FA5C-4712	01121	2-7	28	M5H	34280	2-1	6
FA5C-4712	01121	2-8	47	M6H1	34280	2-1	8
FA5C-4712	01121	2-9	24	M6H10	34280	2-1	7
FA5C-6892	01121	2-7	53	M6H50	34280	2-1	4
FA5C-6892	01121	2-8	48	M9H	34280	2-1	21
FA5C-6892	01121	2-9	25	N5741CV	18324	2-10	29
F02B250V1-2A	81349	2-10	50	PS6A	34280	2-1	1
HT7717-21-DAP	13103	2-10	43	QC-.75PF	95121	2-7	24
HW6.88	14552	2-7	32	QC-.75PF	95121	2-9	22
JAN1N3612	81349	2-9	31	QC-2.0PF	95121	2-9	74
JAN1N82AG	81349	2-9	34	QC-2.4PF	95121	2-7	19
J52304-B	71590	2-3	35	QC-3.9PF	95121	2-7	22
KC79-146	91836	2-10	46	RCR07G100JS	81349	2-7	49
KC79-146	91836	2-3	34	RCR07G100JS	81349	2-8	2
K20-5	12126	2-10	9	RCR07G101JS	81349	2-7	1
K5-001-00/3B	02114	2-7	34	RCR07G101JS	81349	2-8	16
LM723CH	27014	2-10	33	RCR07G101JS	81349	2-8	80
LSG1DG2-1	91506	2-9	48	RCR07G101JS	81349	2-9	2
MA47980	96341	2-9	26	RCR07G102JS	81349	2-10	13
MA50056	82413	2-9	68	RCR07G102JS	81349	2-8	12
MC-.47PF	95121	2-7	27	RCR07G102JS	81349	2-9	36
MC-.47PF	95121	2-9	75	RCR07G103JS	81349	2-10	15
MF55K-1K	06560	2-10	5	RCR07G103JS	81349	2-7	12
MF55K-12.1K	06560	2-10	7				
MF55K-15K	06560	2-10	1	RCR07G104JS	81349	2-7	17

NATIONAL STOCK NUMBER AND PART NUMBER INDEX

PART NUMBER	FSCM	FIG. NO.	ITEM NO.	PART NUMBER	FSCM	FIG. NO.	ITEM NO.
RCR07G104JS	81349	2-8	20	RCR07G821JS	81349	2-8	21
RCR07G104JS	81349	2-9	8	RCR07G913JS	81349	2-9	12
RCR07G105JS	81349	2-3	47	RCR07103JS	81349	2-8	11
RCR07G105JS	81349	2-8	15	RCR20G122JS	81349	2-3	2
RCR07G106JS	81349	2-7	9	RCR20G221JS	81349	2-10	24
RCR07G106JS	81349	2-9	11	RCR20G222JS	81349	2-10	17
RCR07G122JS	81349	2-8	14	RCR20G272JS	81349	2-10	16
RCR07G123JS	81349	2-7	45	RCR20G361JS	81349	2-8	9
RCR07G151JS	81349	2-7	5	RCR20G471JS	81349	2-10	21
RCR07G151JS	81349	2-8	22	RCR20G820JS	81349	2-9	16
RCR07G152JS	81349	2-10	10	RCR32G101JS	81349	2-8	7
RCR07G152JS	81349	2-7	10	RCR32G151JS	81349	2-8	8
RCR07G152JS	81349	2-8	29	RCR32G161JS	81349	2-9	38
RCR07G153JS	81349	2-8	27	RCR32G471JS	81349	2-9	37
RCR07G182JS	81349	2-10	12	SD1006	57962	2-8	30
RCR07G220JS	81349	2-7	4	SPS-N-347-49.9	75042	2-9	20
RCR07G220JS	81349	2-8	10	S203-1004P1	99687	2-3	44
RCR07G221JS	81349	2-10	11	TD101	56289	2-8	33
RCR07G221JS	81349	2-8	19	TD401	56289	2-7	44
RCR07G221JS	81349	2-9	4	TE1211	56289	2-10	37
RCR07G222JS	81349	2-5	8	TE1307	56289	2-10	31
RCR07G222JS	81349	2-7	54	TG-D50	56289	2-10	36
RCR07G222JS	81349	2-9	15	TG-D50	56289	2-8	50
RCR07G223JS	81349	2-7	13	TG-S20	56289	2-5	6
RCR07G223JS	81349	2-9	14	TG-S25	56289	2-8	54
RCR07G224JS	81349	2-9	18	TG-S50	56289	2-7	56
RCR07G225JS	81349	2-8	17	T1255-1	29525	2-7	30
RCR07G225JS	81349	2-9	72	T1255-1	29525	2-8	31
RCR07G270JS	81349	2-8	4	T1255-1	29525	2-9	6
RCR07G271JS	81349	2-10	8	T1255-2	29525	2-8	79
RCR07G272JS	81349	2-10	3	T1255-2	29525	2-9	3
RCR07G272JS	81349	2-5	1	WA2G032S-203MA	01121	2-7	16
RCR07G272JS	81349	2-8	55	WA2G032S-203MA	01121	2-8	28
RCR07G273JS	81349	2-7	7	WG101-1 9/16LG	95987	2-3	9
RCR07G331JS	81349	2-8	25	011-6808-000-59-9	98291	2-3	12
RCR07G331JS	81349	2-9	19	011-6808-000-59-9	98291	2-8	62
RCR07G333JS	81349	2-4	2	011-6808-000-59-9	98291	2-9	69
RCR07G333JS	81349	2-5	2	011-6809-00-0-599	98291	2-8	63
RCR07G333JS	81349	2-7	15	011-6809-00-0-599	98291	2-9	70
RCR07G333JS	81349	2-8	5	016-2604-00-0-209	98291	2-3	1
RCR07G391JS	81349	2-7	8	02-09-1118	27264	2-10	55
RCR07G391JS	81349	2-9	7	02-09-1143	27264	2-6	4
RCR07G392JS	81349	2-10	2	02-09-2118	27264	2-6	6
RCR07G392JS	81349	2-9	44	02-09-2143	27264	2-6	1
RCR07G393JS	81349	2-4	10	03-06-1151	27264	2-6	3
RCR07G393JS	81349	2-7	48	03-09-1121	27264	2-6	5
RCR07G393JS	81349	2-9	43	08NR22K	06560	2-7	42
RCR07G4R7JS	81349	2-7	11	08NR22K	06560	2-9	5
RCR07G470JS	81349	2-7	3	08N1R0K	06560	2-7	35
RCR07G470JS	81349	2-8	6	08N100K	06560	2-3	3
RCR07G470JS	81349	2-9	17	1N34A	80131	2-3	49
RCR07G471JS	81349	2-10	14	1N4004	04713	2-10	32
RCR07G471JS	81349	2-4	9	1N4004	04713	2-4	6
RCR07G471JS	81349	2-7	6	1N4004	04713	2-8	57
RCR07G471JS	81349	2-8	3	1N82A	14936	2-7	40
RCR07G472JS	81349	2-10	20	10TCC-Q10	56289	2-5	3
RCR07G472JS	81349	2-7	2	10TCC-Q10	56289	2-8	41
RCR07G472JS	81349	2-7	58	10TCC-Q15	56289	2-8	43
RCR07G472JS	81349	2-8	18	10TCC-V470	56289	2-8	42
RCR07G472JS	81349	2-9	10	1111-00-0042	34280	2-1	26
RCR07G472JS	81349	2-9	73	1112-00-0005	34280	2-1	11
RCR07G473JS	81349	2-3	45	1112-00-0008	34280	2-1	13
RCR07G473JS	81349	2-4	12	1113-15-0005	34280	2-1	25
RCR07G473JS	81349	2-7	50	1113-30-0024	34280	2-1	24
RCR07G473JS	81349	2-8	58	1118-00-0001	34280	2-1	22
RCR07G473JS	81349	2-9	39	1118-00-0007	34280	2-1	3
RCR07G474JS	81349	2-4	7	11403NP	73734	2-2	2
RCR07G474JS	81349	2-8	26	1210-30-0005	34280	2-9	13
RCR07G475JS	81349	2-4	4	1217-00-0022	34280	2-1	19
RCR07G476JS	81349	2-4	3	1217-00-0032	34280	2-1	16
RCR07G560JS	81349	2-8	23	1217-00-0036	34280	2-1	2
RCR07G560JS	81349	2-9	35	1217-00-0050	34280	2-1	23
RCR07G561JS	81349	2-8	24	1217-01-0030	34280	2-1	5
RCR07G562JS	81349	2-7	14	1217-02-0026	34280	2-1	9
RCR07G682JS	81349	2-9	40	1217-80-0008	34280	2-1	14
RCR07G683JS	81349	2-9	9	1217-80-0010	34280	2-1	10
RCR07G684JS	81349	2-8	13	1217-80-0037	34280	2-1	12
RCR07G752JS	81349	2-9	41	1218-00-0012	34280	2-10	40
RCR07G753JS	81349	2-4	1	1219-00-0142	34280	2-3	20
RCR07G820JS	81349	2-8	1	128105	73734	2-3	13

NATIONAL STOCK NUMBER AND PART NUMBER INDEX

PART NUMBER	FSCM	FIG. NO.	ITEM NO.
1304ZP	73734	2-7	60
1304ZP	73734	2-8	74
1304ZP	73734	2-9	58
1315ZINC	73734	2-3	53
1410-00-0510	34280	2-8	72
1410-00-0510	34280	2-9	60
1410-00-0550	34280	2-8	66
1410-00-0550	34280	2-9	49
1410-00-1180	34280	2-9	54
1410-00-1210	34280	2-3	28
1410-00-1229	34280	2-9	50
1410-00-1260	34280	2-3	15
1410-00-1270	34280	2-3	23
1410-00-1300	34280	2-9	65
1410-00-1310	34280	2-9	63
1410-00-1320	34280	2-9	55
1410-00-1330	34280	2-9	56
1410-00-1349	34280	2-9	64
1410-00-1360	34280	2-8	78
1410-00-1370	34280	2-8	77
1410-00-1380	34280	2-8	76
1410-00-1390	34280	2-8	67
1410-00-1400	34280	2-8	64
1410-00-1410	34280	2-8	68
1410-00-1410	34280	2-9	51
1410-00-1420	34280	2-8	69
1410-00-1430	34280	2-9	47
1410-00-1500	34280	2-3	25
1410-00-1510	34280	2-3	24
1410-00-1520	34280	2-9	53
1410-00-1530	34280	2-9	67
1410-00-1549	34280	2-9	52
1410-00-1660	34280	2-3	26
1410-00-2580	34280	2-3	27
1410-00-2680	34280	2-8	73
1410-00-2680	34280	2-9	59
1410-00-3360	34280	2-8	70
1410-00-3360	34280	2-9	61
1410-00-3380	34280	2-9	66
1410-00-4260	34280	2-2	9
1410-00-4270	34280	2-2	8
1410-00-4450	34280	2-2	1
1410-00-4470	34280	2-3	29
1410-00-5050	34280	2-3	40
1410-00-5930	34280	2-3	31
1410-60-1190	34280	2-2	7
1410-60-1410	34280	2-3	14
1410-80-0350	34280	2-10	47
1510-20-7122	34280	2-10	26
1519-99-9999	34280	2-7	23
1559-2	27264	2-10	25
162D106X0025DD2	56289	2-10	38
162D106X0025DD2	56289	2-7	55
162D106X0025DD2	56289	2-8	44
17250C	70903	2-10	56
184A1	76854	2-3	30
1855	27264	2-6	2
19-02-1042	27264	2-10	54
19-09-2042	27264	2-6	7
1901	73734	2-3	41
1901	73734	2-3	41
2N3644	07263	2-10	30
2N3854A	03508	2-10	27
2N3854A	03508	2-7	41
2N3854A	03508	2-9	32
2N5053	73445	2-7	29
2N5053	73445	2-8	35
2N5088	04713	2-7	39
2N5109	02735	2-9	27
2N5179	02735	2-7	31
2N5294	02735	2-10	35
2N5458	04713	2-7	38
2N5461	04713	2-9	30
2N5947	04713	2-9	33
2015NP	73734	2-3	22
2017NP	73734	2-3	18
2130NP	73734	2-3	54
2332NP	73734	2-2	5
2410-05-0009	34280	2-10	49
2410-05-0010	34280	2-10	51
2810-11-0001	34280	2-10	34
2810-12-0004	34280	2-3	16
3067P-10K	80294	2-9	45
360S103B	11236	2-7	47
360S203B	11236	2-7	51
360S503B	11236	2-4	11
360T102B	11236	2-10	4
37JR116-1	24931	2-7	57
37JR116-1	24931	2-8	65
37JR116-1	24931	2-9	46
38-111	73734	2-3	5
40008-2	21604	2-2	6
4001NP	73734	2-3	50
4004NP	73734	2-9	71
4020NP	73734	2-10	44
4020NP	73734	2-3	10
4021NP3/16	73734	2-3	51
4024NP	73734	2-3	17
4030NP	73734	2-10	52
4032NP	73734	2-3	7
4033NP	73734	2-3	8
4033NP	73734	2-7	61
4033NP	73734	2-8	75
4033NP	73734	2-9	62
4034NP	73734	2-10	41
4034NP	73734	2-2	3
4052NP	73734	2-3	11
4420-100PF	96095	2-7	26
4420-100PF	96095	2-8	40
4420-100PF	96095	2-9	23
4420-500PF	96095	2-7	21
4420-500PF	96095	2-8	52
4420-500PF	96095	2-9	21
4789-00-0004	34280	2-10	6
4799-99-9999	34280	2-9	42
4999-00-0001	34280	2-8	60
5GA-T20	56289	2-8	51
5GAD10	56289	2-7	52
5GAD10	56289	2-8	49
5GAD20	56289	2-5	4
5082-2800	28480	2-8	39
5082-3080	28480	2-8	53
5082-4955	28480	2-3	37
5104-00-0004	34280	2-5	10
5104-00-0005	34280	2-4	8
534-10K	28375	2-3	43
5610-00-0006	34280	2-10	23
6-32X3/16BHNP	73734	2-3	6
60C0G200J	91984	2-3	48
60U101M	91984	2-10	28
60U121M	91984	2-10	39
60U121M	91984	2-3	46
60U121M	91984	2-7	46
60U121M	91984	2-8	56
60U151M	91984	2-5	9
60U2J470J	91984	2-8	59
60U361M	91984	2-3	4
60U361M	91984	2-8	45
60U361M	91984	2-8	45
68U103M	91984	2-8	46
68U2J680J	91984	2-5	7
7101PN	09353	2-3	33
7103PN-BLK	09353	2-3	32
7107PN-BLK	09353	2-3	38
7400	73734	2-3	52
7401CAD	73734	2-3	21
7511CP	73734	2-3	55
8005NP	73734	2-7	59
8005NP	73734	2-8	71
8005NP	73734	2-9	57
9201P3HZQ	09353	2-3	36
935	84411	2-7	18
935	84411	2-8	37
9403NP	73734	2-3	19
9404NP	73734	2-3	42

NATIONAL STOCK NUMBER AND PART NUMBER INDEX

LATEST PART NUMBER ASSIGNMENTS

PART NUMBER	FSCM	FIG. NO.	ITEM NO.
1819-99-9999	80058	2-7	37
1819-99-9999	80058	2-8	26
1819-99-9999	80058	2-9	1

RECOMMENDED CHANGES TO EQUIPMENT TECHNICAL PUBLICATIONS

THEN JOT DOWN THE DOPE ABOUT IT ON THIS FORM, CAREFULLY TEAR IT OUT, FOLD IT AND DROP IT IN THE MAIL!

SOMETHING WRONG WITH THIS PUBLICATION?

FROM (PRINT YOUR UNIT'S COMPLETE ADDRESS)
Commander
Stateside Army Depot
ATTN: AMSTA-US
Stateside, N.J. 07703

DATE SENT
10 July 1975

PUBLICATION NUMBER	PUBLICATION DATE	PUBLICATION TITLE
TM 11-5840-340-20P	23 Jan 78	Radar Set AN/PRC-76

BE EXACT PIN-POINT WHERE IT IS

PAGE NO	PARA-GRAPH	FIGURE NO	TABLE NO	IN THIS SPACE TELL WHAT IS WRONG AND WHAT SHOULD BE DONE ABOUT IT:
33				For item 2, change the NSN to read: 5835-00-134-9186. Reason: Accuracy.
44		19		Identify the cover on the junction box (item no. 5). Reason: It is a separate item and is not called out on figure 19.
45				Add the cover of the junction box as an item in the listing for figure 19. Reason: Same as above

SAMPLE

PRINTED NAME, GRADE OR TITLE, AND TELEPHONE NUMBER
SSG I. M. DeSpirit of 999-1776

SIGN HERE

DA FORM 1 JUL 79 2028-2

PREVIOUS EDITIONS ARE OBSOLETE

P.S.--IF YOUR OUTFIT WANTS TO KNOW ABOUT YOUR RECOMMENDATION MAKE A CARBON COPY OF THIS AND GIVE IT TO YOUR HEADQUARTERS

TEAR ALONG PERFORATED LINE

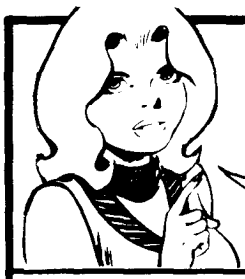

THEN... JOT DOWN THE DOPE ABOUT IT ON THIS FORM, CAREFULLY TEAR IT OUT, FOLD IT AND DROP IT IN THE MAIL!

SOMETHING WRONG WITH THIS PUBLICATION?

FROM (PRINT YOUR UNIT'S COMPLETE ADDRESS)

DATE SENT

PUBLICATION NUMBER	PUBLICATION DATE	PUBLICATION TITLE
TM 11-6625-2955-24P	17 Feb 81	Sweep Generator SG-677A/U

BE EXACT PIN-POINT WHERE IT IS

PAGE NO	PARA-GRAPH	FIGURE NO	TABLE NO

IN THIS SPACE TELL WHAT IS WRONG AND WHAT SHOULD BE DONE ABOUT IT:

PRINTED NAME, GRADE OR TITLE, AND TELEPHONE NUMBER

SIGN HERE

DA FORM 1 JUL 79 2028-2

PREVIOUS EDITIONS ARE OBSOLETE

P.S. IF YOUR OUTFIT WANTS TO KNOW ABOUT YOUR RECOMMENDATION MAKE A CARBON COPY OF THIS AND GIVE IT TO YOUR HEADQUARTERS.

TEAR ALONG PERFORATED LINE

FILL IN YOUR UNIT'S ADDRESS

FOLD BACK

DEPARTMENT OF THE ARMY

POSTAGE AND FEES PAID
DEPARTMENT OF THE ARMY
DOD 314

U.S. MAIL

OFFICIAL BUSINESS
PENALTY FOR PRIVATE USE $300

TEAR ALONG PERFORATED LINE

Commander
US Army Communications and
Electronics Materiel Readiness Command
ATTN: DRSEL-ME-MQ
Fort Monmouth, New Jersey 07703

THEN JOT DOWN THE DOPE ABOUT IT ON THIS FORM, CAREFULLY TEAR IT OUT, FOLD IT AND DROP IT IN THE MAIL!

SOMETHING WRONG WITH THIS PUBLICATION?

FROM (PRINT YOUR UNIT'S COMPLETE ADDRESS)

DATE SENT

PUBLICATION NUMBER	PUBLICATION DATE	PUBLICATION TITLE
TM 11-6625-2955-24P	17 Feb 81	Sweep Generator SG-677A/U

BE EXACT PIN-POINT WHERE IT IS

PAGE NO	PARA-GRAPH	FIGURE NO	TABLE NO

IN THIS SPACE TELL WHAT IS WRONG AND WHAT SHOULD BE DONE ABOUT IT:

PRINTED NAME, GRADE OR TITLE, AND TELEPHONE NUMBER

SIGN HERE

DA FORM 1 JUL 79 2028-2

PREVIOUS EDITIONS ARE OBSOLETE

P.S.—IF YOUR OUTFIT WANTS TO KNOW ABOUT YOUR RECOMMENDATION MAKE A CARBON COPY OF THIS AND GIVE IT TO YOUR HEADQUARTERS.

FOLD ALONG PERFORATED LINE

FILL IN YOUR UNIT'S ADDRESS

FOLD BACK

DEPARTMENT OF THE ARMY

POSTAGE AND FEES PAID
DEPARTMENT OF THE ARMY
DOD 314

U.S. MAIL

OFFICIAL BUSINESS
PENALTY FOR PRIVATE USE $300

TEAR ALONG PERFORATED LINE

Commander
US Army Communications and
Electronics Materiel Readiness Command
ATTN: DRSEL-ME-MQ
Fort Monmouth, New Jersey 07703

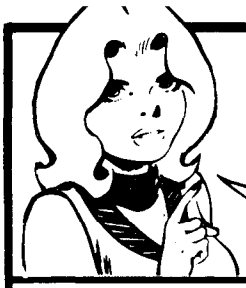

THEN... JOT DOWN THE DOPE ABOUT IT ON THIS FORM, CAREFULLY TEAR IT OUT, FOLD IT AND DROP IT IN THE MAIL!

SOMETHING WRONG WITH THIS PUBLICATION?

FROM (PRINT YOUR UNIT'S COMPLETE ADDRESS)

DATE SENT

PUBLICATION NUMBER	PUBLICATION DATE	PUBLICATION TITLE
TM 11-6625-2955-24P	17 Feb 81	Sweep Generator SG-677A/U

BE EXACT PIN-POINT WHERE IT IS

PAGE NO	PARA-GRAPH	FIGURE NO	TABLE NO

IN THIS SPACE TELL WHAT IS WRONG AND WHAT SHOULD BE DONE ABOUT IT:

PRINTED NAME, GRADE OR TITLE, AND TELEPHONE NUMBER

SIGN HERE

DA FORM 1 JUL 79 2028-2

PREVIOUS EDITIONS ARE OBSOLETE

P.S. IF YOUR OUTFIT WANTS TO KNOW ABOUT YOUR RECOMMENDATION MAKE A CARBON COPY OF THIS AND GIVE IT TO YOUR HEADQUARTERS

TEAR ALONG PERFORATED LINE

FILL IN YOUR UNIT'S ADDRESS

FOLD BACK

DEPARTMENT OF THE ARMY

POSTAGE AND FEES PAID
DEPARTMENT OF THE ARMY
DOD 314

U.S. MAIL

OFFICIAL BUSINESS
PENALTY FOR PRIVATE USE $300

TEAR ALONG PERFORATED LINE

Commander
US Army Communications and
Electronics Materiel Readiness Command
ATTN: DRSEL-ME-MQ
Fort Monmouth, New Jersey 07703

By Order of the Secretary of the Army:

E. C. MEYER
General, United States Army
Chief of Staff

Official:
J. C. PENNINGTON
Major General, United States Army
The Adjutant General

Distribution:

Active Army:

HISA Ft Monmouth (21)
USAINSCOM (2)
COE (1)
TSG (1)
USAARENBD (1)
DARCOM (1)
TRADOC (2)
OS Maj Cmd (4)
TECOM (2)
USACC (4)
MDW (1)
Armies (2)
Corps (2)
Svc Colleges (1)
USASIGS (5)
USAADS (2)
USAFAS (2)
USAARMS (2)
USAIS (2)
USAES (2)
USAICS (3)
MAAG (1)
USARMIS (1)
USAERDAA (1)
USAERDAW (1)
Ft Gordon (10)
Ft Carson (5)
Army Dep (1) except
SAAD (30)
TOAD (14)
SHAD (2)
Ft Gillem (10)
USA Dep (1)
Sig Sec USA Dep (1)
Ft Richardson (CERCOM Ofc) (2)
Units org under fol TOE
29-207 (2)
29-610 (2)

NG: None

USAR: None

For explanation of abbreviations used, see AR 310-50.

U.S. GOVERNMENT PRINTING OFFICE: 1981–703-029/1035

DEPARTMENT OF THE ARMY
US ARMY AG PUBLICATIONS CENTER
1655 WOODSON ROAD
ST. LOUIS, MISSOURI 63114

OFFICIAL BUSINESS
PENALTY FOR PRIVATE USE $300

POSTAGE AND FEES PAID
DEPARTMENT OF THE ARMY
DOD 314

U.S.MAIL

This fine document...

Was brought to you by me:

Liberated Manuals -- free army and government manuals

Why do I do it? I am tired of sleazy CD-ROM sellers, who take publicly available information, slap “watermarks” and other junk on it, and sell it. Those masters of search engine manipulation make sure that their sites that sell free information, come up first in search engines. They did not create it... They did not even scan it... Why should they get your money? Why are not letting you give those free manuals to your friends?

I am setting this document FREE. This document was made by the US Government and is NOT protected by Copyright. Feel free to share, republish, sell and so on.

I am not asking you for donations, fees or handouts. If you can, please provide a link to liberatedmanuals.com, so that free manuals come up first in search engines:

<A HREF=http://www.liberatedmanuals.com/>Free Military and Government Manuals</A>

- Sincerely
  Igor Chudov
  http://igor.chudov.com/
- Chicago Machinery Movers