TM 11-6625-2835-14&P

TECHNICAL MANUAL

OPERATOR'S, ORGANIZATIONAL, DIRECT SUPPORT,
AND GENERAL SUPPORT MAINTENANCE MANUAL
INCLUDING REPAIR PARTS AND SPECIAL TOOLS LISTS
FOR

PULSE GENERATOR SG - 1105/U
(HEWLETT-PACKARD MODEL 8013B)
(NSN 6625-01-010-3524)

HEADQUARTERS, DEPARTMENT OF THE ARMY

27 JUNE 1979

This manual contains copyright material reproduced by permission of the Hewlett-Packard Company.

TECHNICAL MANUAL
NO. 11–6625–2835–14&P

HEADQUARTERS
DEPARTMENT OF THE ARMY
WASHINGTON, DC, 27 *June 1979*

OPERATOR'S, ORGANIZATIONAL, DIRECT SUPPORT, AND GENERAL SUPPORT MAINTENANCE MANUAL INCLUDING REPAIR PARTS AND SPECIAL TOOLS LISTS FOR

PULSE GENERATOR SG-1105/U (HEWLETT- PACKARD MODEL 8013B) (NSN 6625-01-010-3524)

REPORTING OF ERRORS

You can improve this manual by recommending improvements using DA Form 2028-2 located in the back of the manual. Simply tear out the self-addressed form, fill it out as shown on the sample, fold it where shown, and drop it in the mail.

If there are no blank DA Forms 2028-2 in the back of your manual, use the standard DA Form 2028 (Recommended Changes to Publications and Blank Forms) and forward to the Commander, US Army Communications and Electronics Materiel Readiness Command, ATTN: DRSEL-ME-MQ, Fort Monmouth, NJ 07703.

In either case a reply will be furnished direct to you.

This manual is an authentication of the manufacturer's commercial literature which, through usage, has been found to cover the data required to operate and maintain this equipment. Since the manual was not prepared in accordance with military specifications, the format has not been structured to consider levels of maintenance.

CONTENTS

Section 0 Introduction **Page**

Section 1 General Information

1–1 Introduction 1-1

Section 2 Installation

2–1 Initial Inspection 2-1
2–5 Claims for Damage 2-1
2–7 Repacking 2-1
2–9 Preparation for Use 2-2
2–10 Power Cord 2-2
2–13 Power Source Requirements 2-2
2–17 Temperature Requirements 2-2
2–19 Rack Mounting 2–2

Section 3 Operating Instructions

3–1 General 3–1
3–3 Output Formats 3–1
3–6 Internal 50 Ohm Load 3–1
3–8 Control Layout 3-1
3–11 Norm Operating Mode 3-2
3–13 Internal Trigger 3–2
3–18 External Trigger 3-4
3–23 Manual Trigger 3–5
3–28 Square Wave Mode 3–7
3–34 Gating Mode 3–9
3–38 RZ Mode 3–10
3–44 Double Pulse Mode 3–11
3–49 External Width Mode 3-13
3–54 Additional Facilities in RZ and Ext Width Modes 3-14

Section 4 Theory of Operation

4–1 Introduction 4-1
4–9 Repetition Rate Generator 4–2
4–12 Internal Rate Generator 4–2
4–14 External Trigger Operationg 4–2
4–16 Manual Operation 4-2
4–18 Gating 4–2
4–20 Selector Circuits 4-2
4–26 Delay Generator 4-4
4–31 Width Generator 4-5
4–37 Output Amplifiers 4-5
4-43 Offsets and Attenuators 4-7
4–48 Power Supplies 4-7

CONTENTS

Section 5	Maintenance	Page
5–1	General	5–1
5–4	Removal of covers	5–1
5–6	Removal of Assemblies	5–1
5–8	Timing board – Assembly 5	5–1
5–10	Output board – Assembly 6.	5–1
5–15	Motherboard – Assembly 7	5–1
5–23	Performance Tests	5–1
5–25	internal Checks and Adjustments	5–2
5–27	Service Product Safety Check	5–2
Section 6	Diagrams and Replaceable Parts	
6–1	Introduction	6–1
6–3	Ordering Information	6–1
6–4	General	6–1

TABLES

Table	Title	
1-1	Specifications	1 –2
5-1	Test Equipment and Accessories	5–3
5-2	Performance Test: Pulse Period.	5–4
5-3	Performance Test: Pulse Delay.	5–4
5-4	Performance Test: Pulse Width (greater than 1 µs)	5–5
5-5	Performance Test: Minimum Pulse Width	5–5
5-6	Performance Test: Pulse Period Jitter	5–6
5-7	Performance Test: Pulse Delay Jitter	5–6
5-8	Performance Test: Pulse Width Jitter	5–7
5-9	Performance Test: Square Wave	5–7
5-10	Performance Test: Duty Cycle.	5–8
5-11	Performance Test: Manual Operation	5–8
5-12	Performance Test: External Width Operation	5–9
5-13	Performance Test: RZ Operation	5–9
5-14	Performance Test: Gate Operation	5–10
5-15	Performance Test: External Trigger Operation	5–10
5-16	Performance Test: High Frequency Trigger Operation	5–11
5-17	Performance Test: Trigger Output	5–11
5-18	Performance Test: Preshoot, Overshoot and Ringing	5–12
5-19	Performance Test: Amplitude.	5–12
5-20	Performance Test: DC Offset.	5–13
5-21	Internal Checks and Adjustments – Power Supply	5–13
5-22	Internal Checks and Adjustments – Repetition Rate	5–14
5-23	Internal Checks and Adjustments - Delay and Width Timing	5–14
5-24	Internal Checks and Adjustments - Pulse Perturbation	5-15
5-25	Internal Checks and Adjustments - Double Pulse	5–16
5–26	Service Product Safety Check	5–18
6–1	Reference Designators	6-1
6-2	Diagram Notes	6–2
6–3	Manufacturers Codes	6-3
6–4	Frame Replaceable Parts List	6-5
6-5	Board A5 Replaceable Parts List	6-7
6-6	Board A6 Replaceable Parts List.	6–13
6-7	Board A7 Replaceable Parts List	6-17
6-8	Part Number-National Stock Number Cross Reference Index	6-32

ILLUSTRATIONS

Figure	Title	Page
2–1	8013 Band Supplied Accessories	2–0
2–2	Power Cords	2–1
2–3	Selector settings for the nominal power line voltages	2–2
3–1	80136 Front and rear panels – Control identification diagram	3–0
3–2	Normal/Complement Outputs	3–1
3–3	Positioning of Controls	3–2
3–4	Initial Control Settings and Test Equipment	3–3
3–5	Normal Internal Trigger Mode – Block Diagram	3–3
3–6	Output Pulses in Normal Internal Trigger Mode	3–4
3–7	Normal External Trigger Mode – Block Diagram	3–5
3–8	Output Pulses in Normal External Trigger Mode	3–6
3–9	Normal Manual Trigger Mode – Block Diagram	3–6
3–10	Output Pulses in Normal Manual Trigger Mode	3–7
3–11	Normal Square Wave Mode – Block Diagram	3–8
3–12	Output Pulses in Square Wave Mode	3–8
3–13	Normal Gate Mode – Block Diagram	3–9
3–14	Output Pulses in Gate Mode	3–10
3–15	R Z Mode – Block Diagram	3–10
3–16	Output Pulses in RZ Mode	3–11
3–17	Double Pulse Mode – Block Diagram	3–12
3–18	Output Pulses in Double Pulse Mode	3–12
3–19	External Width Mode – Block Diagram	3–13
3–20	Output Pulses in External Width Mode	3–14
3–21	Independent Clock Generator in RZ/EXT WIDTH Modes – Block Diagram	3–14
4–1	80136 Pulse Generator – Block Diagram	4–0
4–2	Repetition Rate Generator – Block Diagram	4–1
4–3a	Normal Mode (including external trigger and rate mode)	4–2
4–3b	RZ Mode	4–3
4–3c	Ext Width Mode	4–3
4–3d	Square Wave Mode	4–4
4–4	Delay Generator – Block Diagram	4–4
4–5	Width Generator – Block Diagram	4–5
4–6	Output Amplifiers – Block Diagram	4–6
4–7	Offsets and Attenuators – Block Diagram	4–6
6–1	Assembly Diagram	6–4
6–2	Component Layout - Board A5	6–6
6–3	Component Layout - Board A6	6–8
6–4	Component Layout - Board A7 - Front View	6–10
6–5	Component Layout - Board A7 – Rear View	6–11

Diagrams		Page
1	Repetition Rate Generator 8012B/8013B	6–13
2	Mode Selector, Trigger Amplifier, Ext. Input and Square Wave Circuits 8012B/8013B	6–15
3	Delay Generator 8012B/8013B	6–17
4	Width Generator 8012B/8013B	6–19
5	Output Amplifiers 8013B	6–21
6	Offset and Attenuator 8013B	6–23
7	Power Supplies 8013B	6–25

APPENDIXES

Appendix	Title	Page
A	References	A-l
B	Components of End Item List	B-1
C	Additional Authorization List (Nonapplicable)	
D	Maintenance Allocation	D-1
E	Expendable Supplies and Materials List (Not Applicable)	
F	Repair Parts and Special Tools List	F-1

SECTION 0

INTRODUCTION

0-1. Scope

This manual describes Pulse Generator SG–1105/U and provides instructions for operation and maintenance. Throughout this manual, the SG-1105/U is referred to as Hewlett–Packard Model 8013B.

0-2. Indexes of Publications

a. DA Pam 910-4. Refer to the latest issue of DA Pam 310-4 to determine whether there are new editions, changes, or additional publications pertaining to the equipment.

b. DA Pam 310–7. Refer to DA Pam 310–7 to determine whether there are modification work orders (MWO's) pertaining to the equipment.

0-3. Forms and Records

a. Reports of Maintenance and Unsatisfactory Equipment. Maintenance forms, records, and reports which are to be used by maintenance personnel at all maintenance levels are listed in and prescribed by TM 38-750.

b. Report of Packaging and Handling Deficiencies. Fill out and forward DD Form 6 (Packaging Improvement Report) as prescribed in AR 700-58/NAVSUPINST 4030.29/AFR 71–13/MCO P4030.29A and DSAR 4145.8.

c. Discrepancy in Shipment Report (DISREP) (SF 361). Fill out and forward Discrepancy in Shipment Report (DISREP) (SF 361) as prescribed in AR 55–38/NAVSUPINST 4610.33B/AFR 75–18/MCO P4610.19C and DLAR 4500.15.

0-4. Reporting Equipment Improvement Recommendations (EIR)

EIR's will be prepared using Standard Form 368, Quality Deficiency Report. Instructions for preparing EIR's are provided in TM 38-750, The Army Maintenance Management System, EIR's should be mailed direct to Commander, US Army Communications and Electronics Materiel Readiness Command, ATTN: DRSEL–ME–MQ, Fort Monmouth, NJ 07703. A reply will be furnished direct to you.

0-5. Administrative Storage

To prepare the equipment for administrative storage, ascertain its operability and reliability. In addition, use the proper packing materials.

0-6. Destruction of Army Electronics Materiel

Destruction of Army electronics materiel to prevent enemy use shall be in accordance with TM 750-244–2.

SECTION 1

GENERAL INFORMATION

1-1 INTRODUCTION

1–2 The 8013B is an extremely versatile, easy to operate pulse generator with a wide range of applications. It has a variable repetition rate of 0–50 MHz and transition times of < 3.5ns which make it ideal for testing digital logic: HTL, RTL, DTL and most ECL can be tested. The simultaneous positive and negative outputs are useful for testing circuits with both positive and negative power supplies. Format changes from normal to complement can be made at the throw of a switch. without having to re-adjust any pulse parameters. This enables changes from positive to negative logic conventions to be made and 100% duty cycles to be obtained very easily.

1-3 The 8013B has a selectable source impedance which makes impedance matching to the circuit under test very simple. It also has a square wave facility that is independent of width and delay settings and a double pulse facility that is useful for testing device recovery times and making noise immunity measurements.

1-4 The front panel of the 8013B has been carefully designed to provide a logical layout of the controls; horizontal controls for pulse timing parameters, vertical controls for pulse amplitude parameters. Also, compatible pulse settings are guaranteed as long as the pulse delay and pulse width controls are either set to the left of the pulse period control or; if set vertically below the period control, that the delay and width verniers are set counterclockwise of the period vernier. This simple, straightforward design enables pulses to be set up extremely quickly and easily.

1-5 The 8013B will operate in three different modes as follows:

Normal mode: in this mode the internal rate generator determines the repetition rate of the output pulses. The generator can be triggered internally, externally or manually or can be gated. A trigger pulse is generated for each output pulse and the pulse output can be delayed with respect to the trigger output.

RZ mode: in this mode external pulses are applied to the input connector on the 8013B rear panel and these pulses trigger the delay generator directly, completely by-passing the internal rate generator. Thus the internal rate generator can be used separately in this mode to provide trigger pulses that are independent of the RZ output.

External width mode: in this mode external pulses applied to the input socket on the rear panel determine the width and repetition rate of the output pulses. In fact the output is a pulse-shaped version of the external input. The pulse available at the trigger output, being derived from the internal rate generator, is independent of the R Z output . .

Table 1–1. Specifications

PULSE CHARACTERISTICS

Transition times: 3.5ns fixed with INT LOAD switched IN. < 5ns fixed with INT LOAD switched OUT.

Overshoot and ringing: < ± 5% of pulse amplitude unless INT LOAD is switched OUT and amplitude reduced to 0.4V – 4V when it may increase to ± 10%.

Preshoot: < ± 5% of pulse amplitude.

Pulse width: < 10ns to 1s in four ranges. Vernier provides continuous adjustment within ranges.

Width jitter: < 0.1% + 50ps on any width setting.

Maximum duty cycle: > 75% from 1 Hz to 10 MHz, decreasing to > 40% at 50 MHz. Up to 100% in COMPL mode.

Maximum output: with INT LOAD switched IN, output is 5V across 50 ohms, 10V across open circuit. With INT LOAD switched OUT, output is 10V across 50 ohms. Output circuit cannot be damaged by short circuits.

Attenuator: 4-step attenuator reduces output to 0.2V with INT LOAD switched IN, or to 0.4V with INT LOAD switched OUT. Vernier provides continuous adjustment within ranges.

Polarity: dual channel, positive and negative outputs simultaneously.

Output format: normal or complement selectable.

Source impedance: 50 ohms ±3% shunted by typically 20pF with INT LOAD switched IN. >50 ohms shunted by typically 20pF with INT LOAD switched OUT.

DC offset: with INT LOAD switched IN, offset is ±2.5v across 50 ohms and is independent of amplitude settings. With INT LOAD switched OUT, offset is automatically switched off.

Pulse delay: < 35ns to 1s (with respect to trigger output) in four ranges. Vernier provides continuous adjustment within ranges. Min. delay 17ns typical.

Delay jitter: < 0.1% + 50ps on any delay setting.

REPETITION RATE AND TRIGGER

Repetition rate: 1 Hz to 50 MHz in four ranges, continuous adjustment within ranges.

Period jitter: <O. 1% + 50ps on any rate setting.

Square wave: 0.5 Hz to 25 MHz in four ranges. Duty cycle 50% ± 5% up to 1 MHz. At 25 MHz tolerance increases to ± 15%.

Double pulse: up to 25 MHz simulating 50 MHz.

Trigger output: > +1 V across 50 ohms, 16ns ± 10ns wide. Suitable for triggering another 8012B/13B.

EXTERNALLY CONTROLLED OPERATION

External Triggering

Repetition rate: 0 to 50 MHz. For square wave output, frequency is divided by 2.

Trigger input: sinewaves >1.7 p-p (about zero) or pulses > 0.8V either polarity with a width of> 7ns.

Maximum input amplitude: ± 7V.

Delay: 25ns ± 8ns between leading edge of trigger input and trigger output signals.

Input impedance: 50 ohms ± 10%, dc coupled.

Manual: front panel pushbutton for single pulse.

Gating

Synchronous gating: gating signal turns generator on. First trigger output pulse is coincident with leading edge of gate pulse. Last output pulse is always generated with normal width even if the gate pulse ends during the generation of the pulse.

Gate input: dc-coupled; voltage at open connector approx. +1.8V. Shorting current<12rnA. Input impedance approx. 160Ω.

Table 1-1. Specifications (cont'd)

Gate input signal: voltage > +1.5V or resistor >1KΩto ground enables rep. rate generator. Voltage < +0.8V or resistor< 160Ωdisables rep. rate generator. Gate input TTL compatible. Maximum input: ± 5V.

External Width and RZ modes

External width: output pulse width determined by the width of the drive input signal. Amplitude selectable. Trigger pulses, produced by the internal rate generator, are independent of the output pulses.

RZ mode: external input signal switched directly to delay generator. Output pulse period determined by period of RZ input signal. Delay, width, amplitude and output formats are selectable. Trigger pulses, produced by internal rate generator, are independent of the output pulses.

Input signal: input impedance 50 ohms, dc coupled. Signal amplitude > +1 V, maximum input ± 5V. Width > 7ns.

GENERAL

Operating temperature range: 0°C to 55°C.

Power: 100/120/220/240V +5%, –10%, 48 to 400 Hz, 100 VA max.

Weight: net 4 kg (8.8 lbs); shipping 6.5 kg (14.6 lbs).

Dimensions: 200mm wide, 142mm high, 330mm deep (7.9" X 5.6" X 13").

Accessories: 15179A Adapter frame; rackmount for two units.

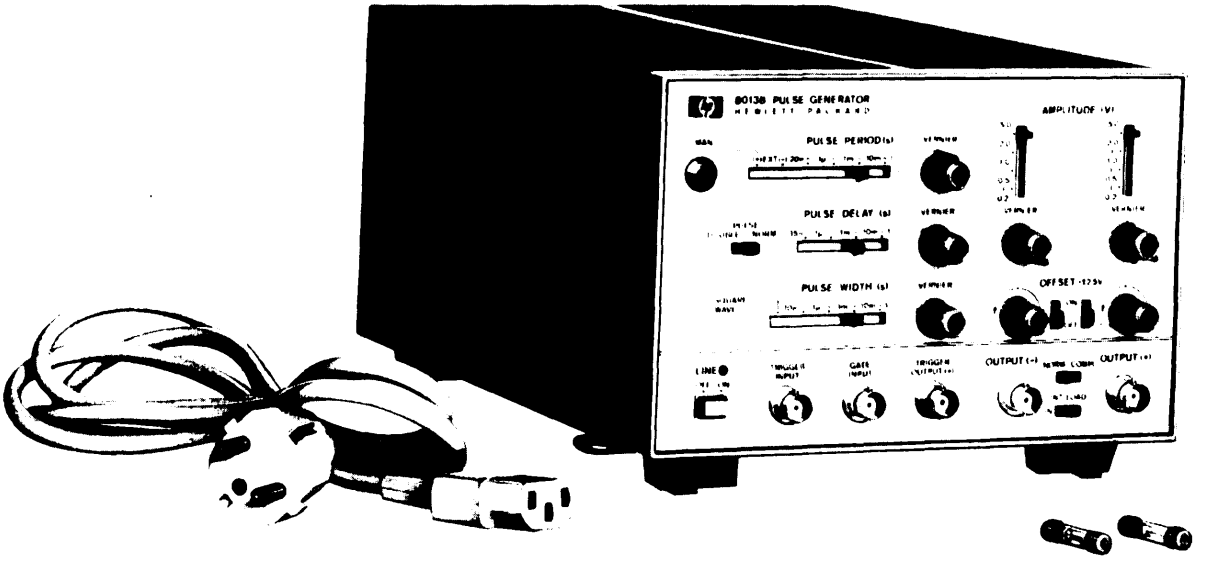

Figure 2-1. 8013B and Supplied Accessories

SECTION 2

INSTALLATION

2-1 INITIAL INSPECTION

2-2 Inspect the instrument and accessories for physical damage and if damage is evident refer to paragraphs 2–5 to 2–8 for the recommended claim procedure and repacking information.

2-3 The 8013B is delivered complete with the following items.

ITEM	HP Stock Number
Spare 0.5A fuse for 220/240V operation	2110–0202
Spare 1A fuse for 100/120V operation	2110–0007
Power cord	see below
Manual	08013–90003

2-4 The power cord delivered with the 80138 will be one of the following:

2-5 CLAIMS FOR DAMAGE

2-6 If physical damage is evident or if the instrument does not meet specifications when received, notify the carrier and the nearest Hewlett-Packard Sales/Service Office. The Sales/Service Off ice will arrange for repair or replacement of the unit without waiting for settlement of the claim against the carrier.

2–7 REPACKING

2–8 If the instrument is to be shipped to a Hewlett-Packard Sales/Service Office, attach a tag showing owner, address, model and serial number and the repair required. The original shipping carton and packing maternal can be re-used but the Hewlett-Packard Sales/Service Office will also provide information and recommendations on materials to be used if the original packing is not available or re-usable.

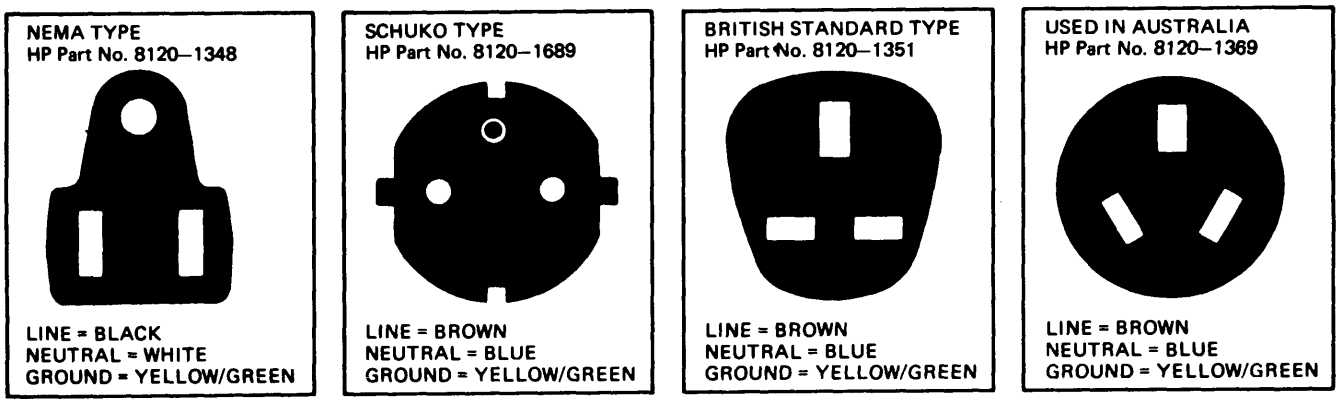

Figure 2–2. Power Cords

2–9 PREPARATION FOR USE

2–10 Power Cord

2–11 The 3-wire power cable supplied with the 8013B when connected to the appropriate power outlet, grounds the instrument cabinet and panels. To preserve this safety feature when operating the instrument from an outlet without a ground connection use an appropriate adapter and connect the ground lead (green/yellow) to an external ground.

2–12 If the plug on the cable does not fit your power outlet then cut the cable at the plug end and connect a suitable plug. The plug should meet local safety requirements and include the following features:

a. Minimum current rating of 2A
b. Ground connection
c. Cable clamp

The colour coding used in the cable will depend on the cable supplied (see figure 2–2).

2–13 POWER SOURCE REQUIREMENTS

2–14 The model 8013B will operate from nominal ac line supplies of 100V, 120V, 220V or 240V (–10%, +5%) at 48 Hz to 400 Hz. Two switches on the rear panel allow one of the four voltages to be selected.

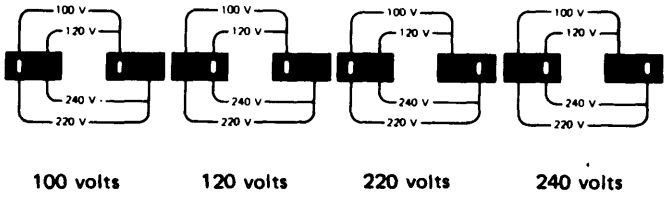

Figure 2–3. Selector settings for the nominal power line voltages

The power dissipation is 100VA max.

CAUTION

Before applying power to the instrument, check on the rear panel that the 8013B is set in accordance with local supply conditions (see para 2–14). If not, use a screwdriver to change the voltage selector positions.

2–15 The 8013B contains two fuses in the power supply and the correct fuse is automatically selected when the supply voltage is selected (see para. 2–14). To replace either of these fuses, remove the 8013B left-hand side cover and change the fuse (situated on the inside of the rear panel).

2–16 Connect the power cable to the rear connector.

2–17 TEMPERATURE REQUIREMENTS

2–18 The 8013B will operate within specifications when the ambient temperature is between 0°C (32°F) and 55°C (131°F). It can be stored at temperatures between –40°C (–40°F) and 75°C (167°C).

2–19 RACK MOUNTING

2-20 The 8013B can be mounted in a rack using the 15179A Adapter Frame. This frame has space for mounting either one or two 8013B pulse generators alongside each other in a rack.

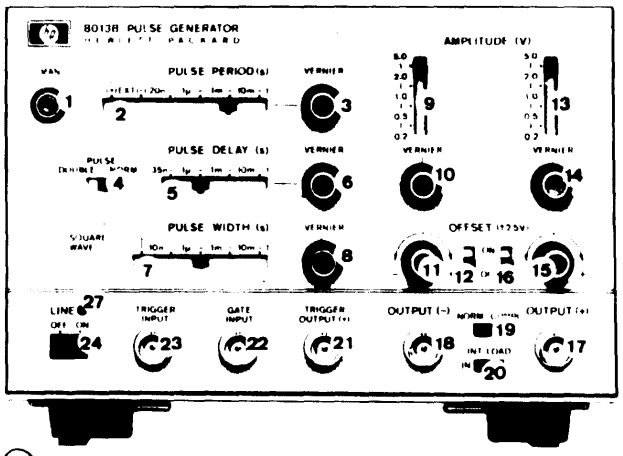

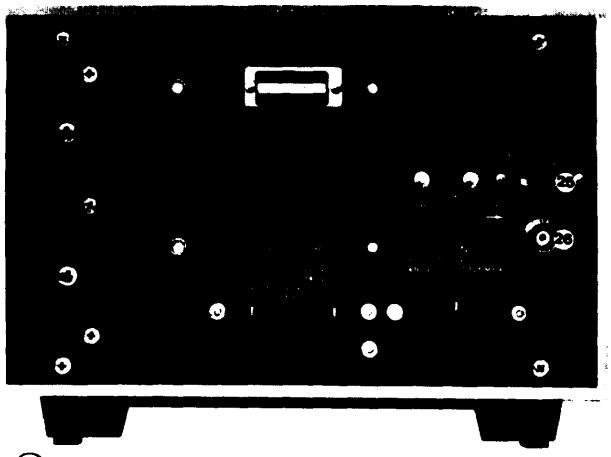

(1) MAN pushbutton: push to generate single pulses when the RATE switch is set to EXT(+) or EXT(−).

(2) RATE switch: for selecting the range of pulse rate.

(3) Rate VERNIER: for continuous adjustment of the repetition rate within the range selected on the RATE switch. Clockwise rotation increases the pulse period (i.e. reduced the rate). In the RZ and EXT WIDTH modes the RATE controls define the frequency of trigger output pulses only.

(4) PULSE DOUBLE/NORMAL switch: in the DOUBLE PULSE position the 8013B delivers two pulses for every trigger pulse – one pulse in phase with the trigger output and one delayed by the amount set on the PULSE DELAY controls. DOUBLE PULSE is not available in the EXT WIDTH mode and is automatically inhibited if selected. In the NORMAL position, for each trigger pulse, the 8013B delivers, from each output, one pulse which is delayed on the trigger pulse by the amount set on the PULSE DELAY controls.

(5) PULSE DELAY switch: for selecting the range of pulse delay with respect to trigger in all modes except SQUARE and EXT WIDTH.

(6) Pulse delay VERNIER: for continuous adjustment of pulse delay within the range selected on the PULSE DELAY switch. Clockwise rotation increases the delay.

(7) PULSE WIDTH switch: for selecting the range of the pulse width required in all modes except SQUARE and EXT WIDTH.

(8) Pulse width VERNIER: for continuous adjustment of pulse width within the range set on the PULSE WIDTH switch.

(9) AMPLITUDE (V) switch: for selecting range of negative (−) output pulse voltage.

(10) AMPLTIUDE VERNIER: for continuous adjustment of negative (−) output voltage within the range selected on the AMPLITUDE switch. Clockwise roation increases the output amplitude.

(11) OFFSET (V) vernier: for adjustment of baseline of pulse OUTPUT (−) over the range of +2.5V to −2.5V.

(12) OFFSET (V) switch: for enabling/disabling the offset VERNIER (−). In the OFF position, the baseline of the pulse OUTPUT (−) is zero volts.

(13) AMPLITUDE (V) switch: for selecting range of positive (+) output pulse voltage.

(14) AMPLITUDE VERNIER: for continuous adjustment of positive (+) output voltage within the range selected on the AMPLITUDE switch. Clockwise rotation increases the output amplitude.

(15) OFFSET (V) vernier: for adjustment of baseline of pulse OUTPUT (+) over the range of +2.5V to −2.5V.

(16) OFFSET (V) switch: for enabling/disabling the offset VERNIER (+). In the OFF position, the baseline of the pulse OUTPUT (+) is zero volts.

(17) OUTPUT (+) connector: BNC connector.

(18) OUTPUT (−) connector: BNC connector.

(19) NORM/COMPL switch: NORM/COMPL reverses the duty cycle of the output; what was the normal output becomes the complement and vice versa.

(20) INT LOAD switch: switches the internal 50 ohm load either IN or OUT. With load OUT, max. amplitude is doubled to 10V.

(21) TRIGGER OUTPUT connector: BNC connector supplies positive trigger output. Trigger output is not related to the input in EXT WIDTH and RZ modes.

(22) GATE INPUT connector: BNC connector to which gate pulses are applied. The pulse output and trigger output are synchronous to the gate signal.

(23) TRIGGER INPUT connector: BNC connector to which trigger pulses are applied when the RATE switch is set to EXT(−) or EXT(+).

(24) LINE ON-OFF switch: press-for-on-press-for-off switch.

(25) EXT WIDTH, NORM, RZ switch: NORM position enables synchronous pulse and trigger output. With rate switch set to EXT+ and this switch set to RZ (delay trigger) or EXT WIDTH (width trigger) the trigger output is asynchronous to signals applied to the INPUT connector.

(26) INPUT connector: BNC connector to which RZ or EXT WIDTH trigger pulses are applied. Input disabled when rate switch is set to an internal range.

(27) LINE lamp: glows when LINE ON/OFF switch is ON.

Figure 3–1. 8013B Front and rear panels – Control identification diagram

SECTION 3

OPERATING INSTRUCTIONS

3-1 GENERAL

3–2 This section gives some general notes on the operation of the 8013B together with operating instructions for each of the operating modes:

NORM operating mode
RZ operating mode
EXT WIDTH operating mode

Full setting up instructions are given for normal internal trigger mode followed by any changes required in the control settings for the following modes. For ease of operation the instructions will refer to Figure 3–1 which shows the controls identified by a reference number in a circle. The same reference numbers are used in the text when each control is mentioned. The control settings shown in Figure 3–1 are the same as the initial settings given for normal internal trigger mode.

3–3 OUTPUT FORMATS

3–4 The 8013B has two pulse outputs: one with positive (17) and one with negative (18) output polarity. The normal/complement output formats can be changed using the NORM/COMPL switch (19) Thus logic convention can be changed without having to re-adjust any of the pulse parameters.

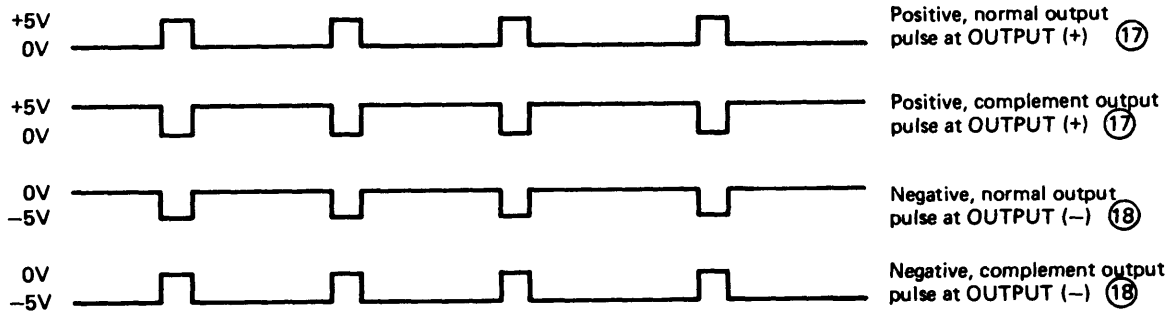

Figure 3-2. Normal/Complement Outputs

3–5 Normal/Complement pulse switching can be used to provide duty cycles of up to 100%.

3-6 INTERNAL 50 OHM LOAD

3–7 The internal 50 ohm load of the 8013B can be switched in or out using the INT LOAD switch (20) . This makes impedance matching to the circuit under test much easier and also provides a maximum pulse amplitude of ± 10V with the load switched out.

Note, however, that the DC offset is automatically switched off when the I NT LOAD is switched out.

3-8 CONTROL LAYOUT

3–9 The front panel of the 8013B has been carefully designed to provide a logical layout of the controls; horizontal controls for pulse timing parameters, vertical controls for pulse amplitude parameters. Thus a particular pulse can be set up extremely easily and quickly. Also, the pulse period, delay and width controls are designed in such a way that incompatible pulse settings will be noticed immediately (see Figure 3-3).

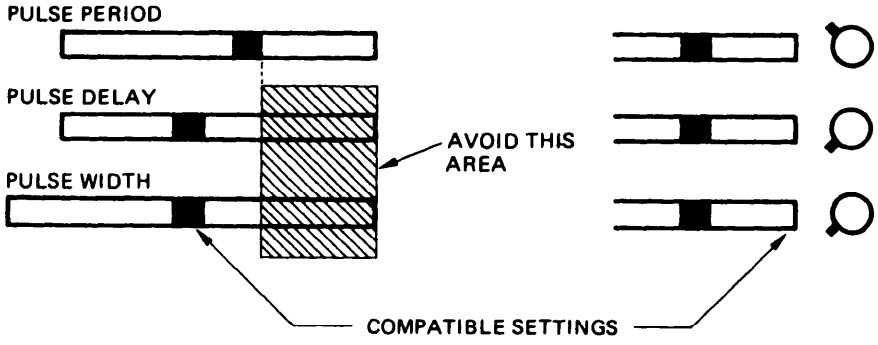

Figure 3–3. Positioning of Controls

3–10 Compatible pulse settings are guaranteed as long as the pulse delay and pulse width controls are either set to the left of the pulse period control or; if set vertically below the period control, that the delay and width verniers are set counterclockwise of the period vernier.

3-11 NORM OPERATING MODE

3–12 There are six ways of operating in the normal mode:

Internal trigger – the repetition rate is determined by the internal rate generator which is internally triggered.

External trigger - the rate generator is disabled and an external signal is used as the trigger source.

Manual trigger – one pulse is produced each time the MAN button is pressed.

Square wave – in each of the above modes a square wave output can be selected (pulse width = pulse period / 2) instead of the variable pulse width output.

Gating – Each of the outputs obtained above (except square wave) can be gated using an external input.

Double pulse – this mode can be selected with any of the above outputs (except square wave). Two pulses are produced for each trigger pulse.

All output pulses are preceded by a trigger pulse at the TRIGGER output connector (21). In square wave mode the delay between the trigger output and the pulse outputs is fixed at 25 ± 8ns, but in other modes the delay can be varied using the PULSE DELAY (5) and VERNIER (6) controls.

3-13 Internal Trigger

3–14 In this mode the 8013B requires no external signal to produce an output signal. Rate, delay, width, amplitudes etc. are all adjustable from the front panel controls, The initial control settings (also shown in Figure 3–1) are given to assist someone unfamiliar with the operation of the 8013B. The positive and negative pulse outputs (17) and (18) and the TRIGGER OUTPUT (21) should be connected to an oscilloscope using a 50 ohm system (as shown in Figure 3–4). The oscilloscope (an HP 180C mainframe with 1801A and 1821A plug-ins) should be set with the sweep time at 20μs/div and the sensitivity at 2V/div.

PULSE PERIOD (2)	.1m–10m
VERNIER (3)	CCW
PULSE DOUBLE/NORM (4)	NORM
PULSE DELAY (5)	1μ–.1m
VERNIER (6)	CCW
PULSE WIDTH (7)	1μ–.1m
VERNIER (8)	Center
AMPLITUDE (9)	2.0–5.0
VERNIER (10)	CW
OFFSET VERNIER (11)	Center
OFFSET SWITCH (12)	ON
AMPLITUDE (13)	2.0–5.0
VERNIER (14)	CW
OFFSET VERNIER (15)	Center
OFFSET SWITCH (16)	ON
NORM/COMPL (19)	NORM
INT LOAD (20)	IN
Mode selector (25)	NORM
LINE (24)	ON

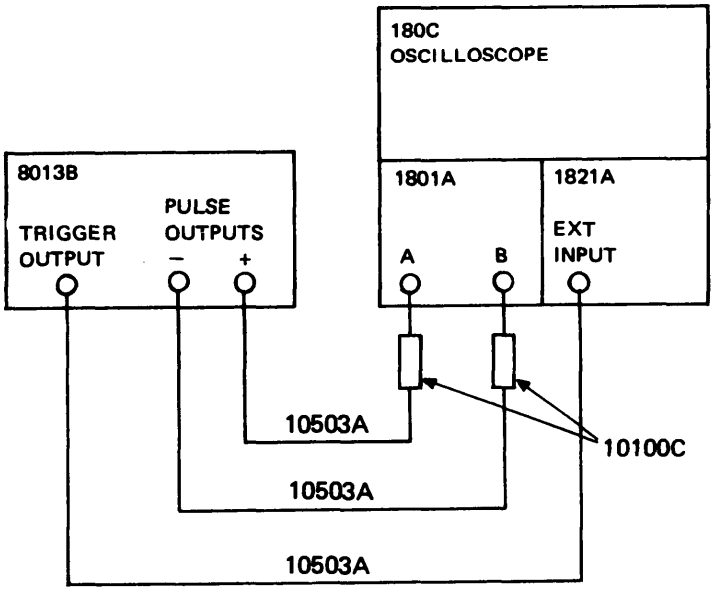

Figure 3-4. Initial control settings and test equipment

3–15 The circuits and controls involved in normal internal trigger mode are shown in Figure 3-5.

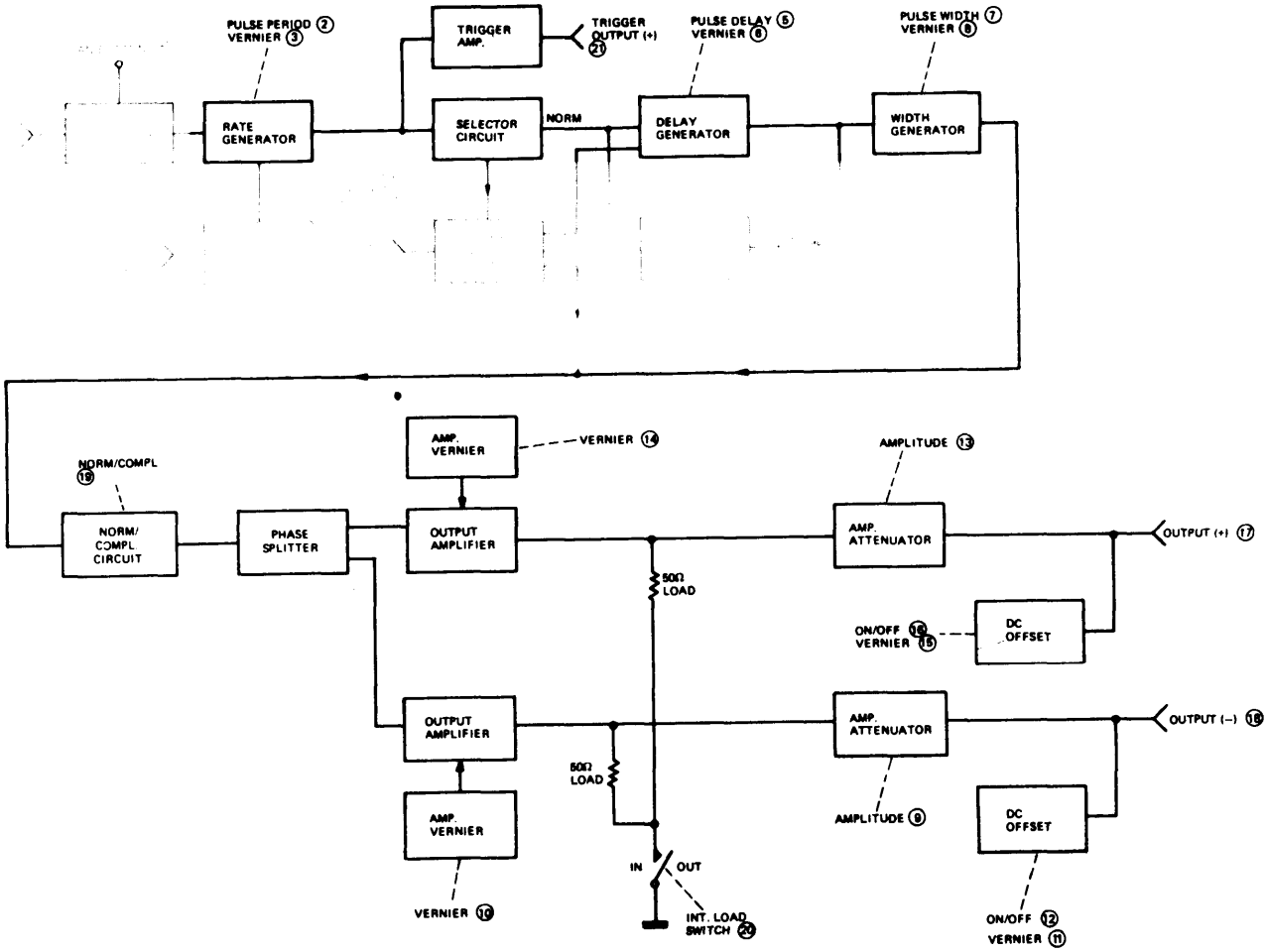

Figure 3–5. Normal internal trigger mode - block diagram

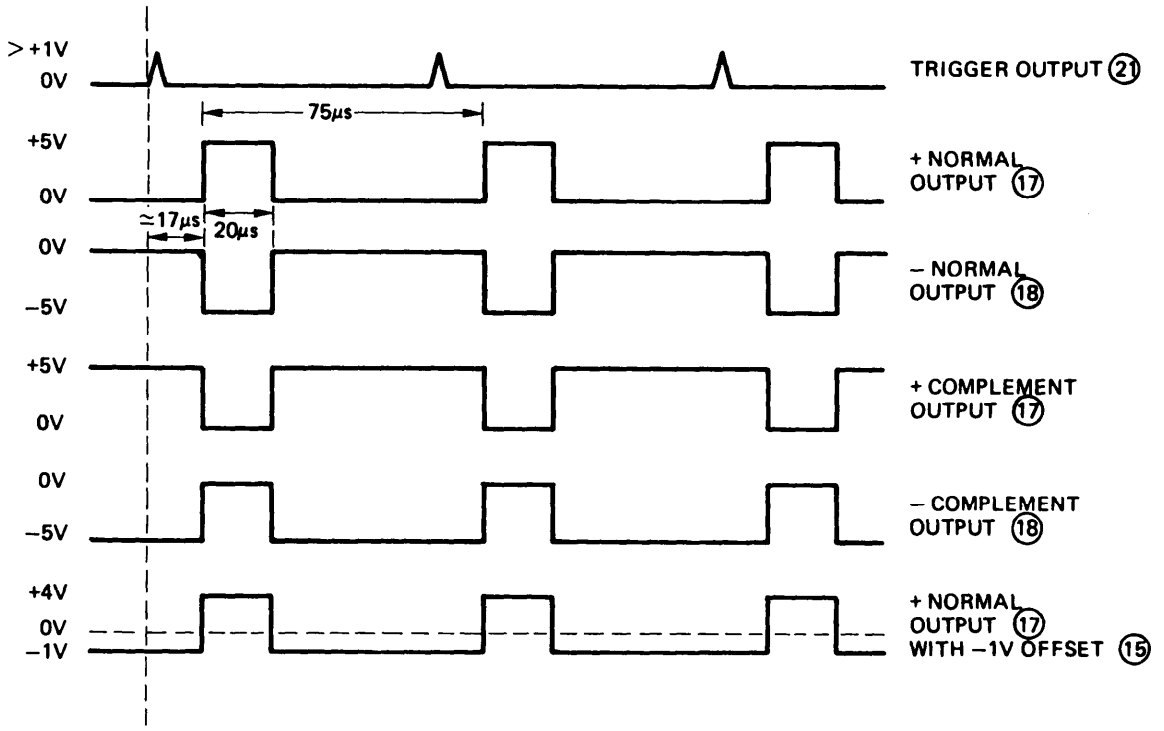

Figure 3-6. Output pulses in normal internal trigger mode

3–16 The output pulses should appear at the pulse OUTPUT (+) (17) and pulse OUTPUT (–) (18) as shown in Figure 3–6 according to the setting of the NORM/COMPL switch (19) and the OFFSET verniers (11) and (15) .

3–17 If the INT LOAD switch (20) is set to OUT, the internal 50 ohm loads on each of the output amplifiers are switched out and the amplitude of the output pulses doubles (this can only be done if the 8013B has an external 50 ohm load). All other pulse parameters remain the same.

3-18 External Trigger

3-19 In this mode the repetition rate generator is disabled and each trigger puke is produced by an external signal which is applied at the TRIGGER INPUT connector (23) . The input signal can be a sinewave of > 1.7V p-p (about zero) or pulses > 0.8V amplitude (positive or negative) and at least 7ns wid The amplitude must not exceed ± 7V.

a. Set the PULSE PERIOD control (2) to EXT (+) to trigger on the positive going slope of the input or to EXT(–) to trigger on the negative going slope.

b. The pulse delay, width , amplitude, etc. are determined by the front panel controls and can be left at the same settings as for normal internal trigger mode.

3–20 The circuits and controls involved in normal external trigger mode are shown in Figure 3–7.

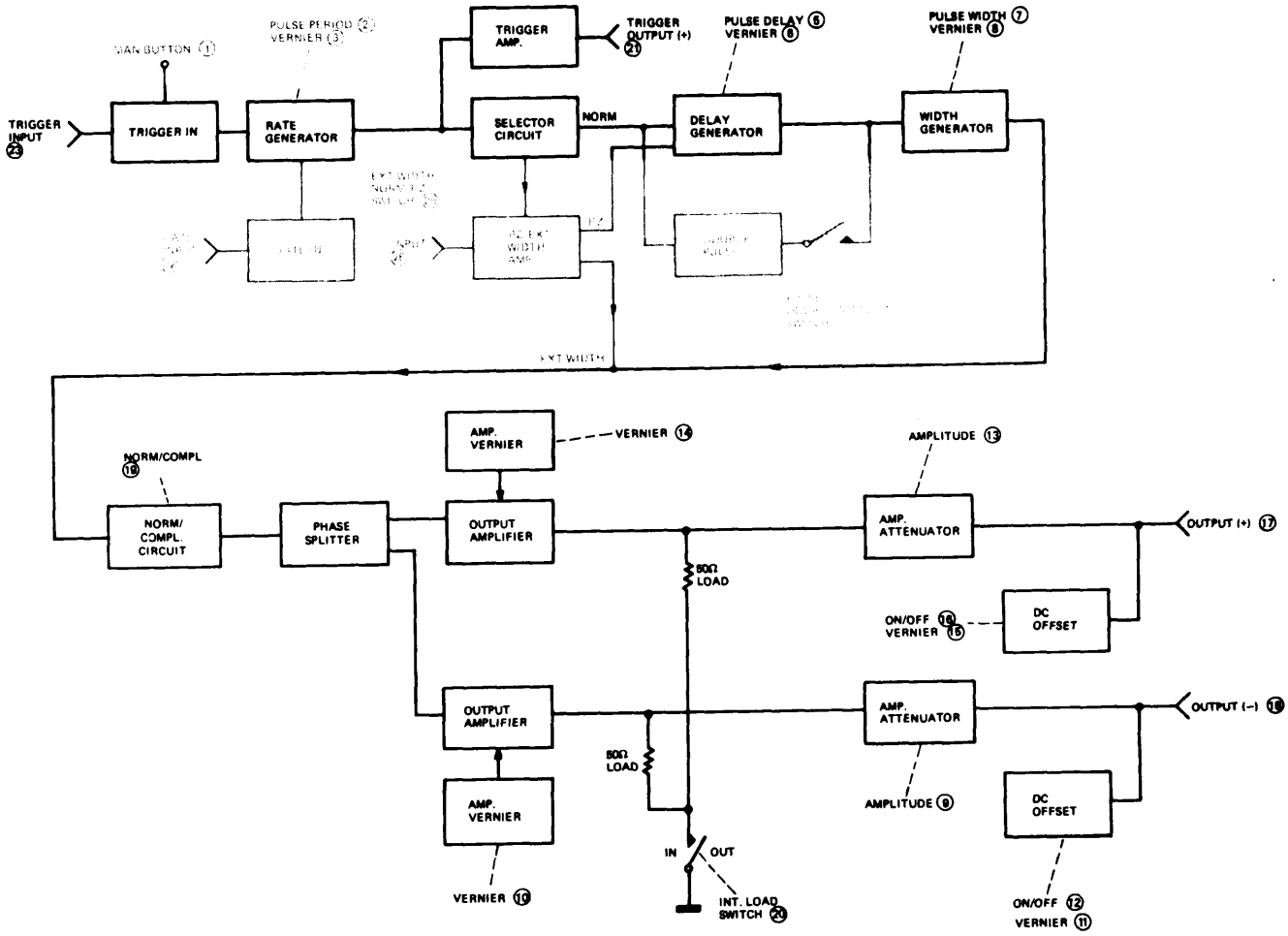

Figure 3-7. Normal external trigger mode - Block diagram

3–21 The output pulses should appear at the TRIGGER OUTPUT (21) and OUTPUT (+) (17) connectors as shown in Figure 3–8, according to the applied trigger and the setting of the PULSE PERIOD control (2) (either EXT+ or EXT–).

3-22 The output pulse parameters and formats can be varied using the controls shown in Figure 3–7.

3-23 Manual Trigger

3–24 In this mode the repetition rate generator is again disabled and each trigger pulse is produced by pressing the MAN button (1) once.

a. Set the PULSE PERIOD control (2) to either EXT(+) or EXT(–).

b. The pulse delay, width, amplitude etc. are determined by the front panel controls and can be left at the same settings as for normal internal trigger mode.

c. Press the MAN button (1) once for each output pulse.

3-25 The circuits and controls involved in normal manual trigger operation are shown in Figure 3-9.

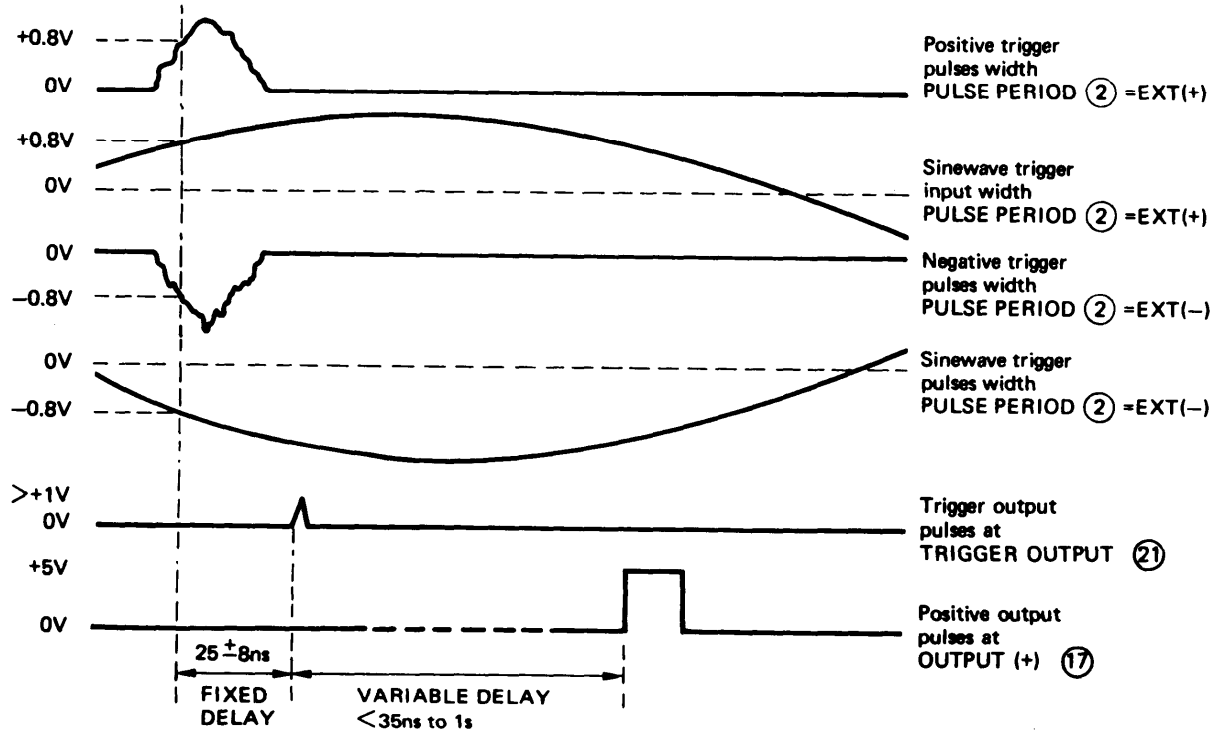

Figure 3-8. Output pulses in normal external trigger mode

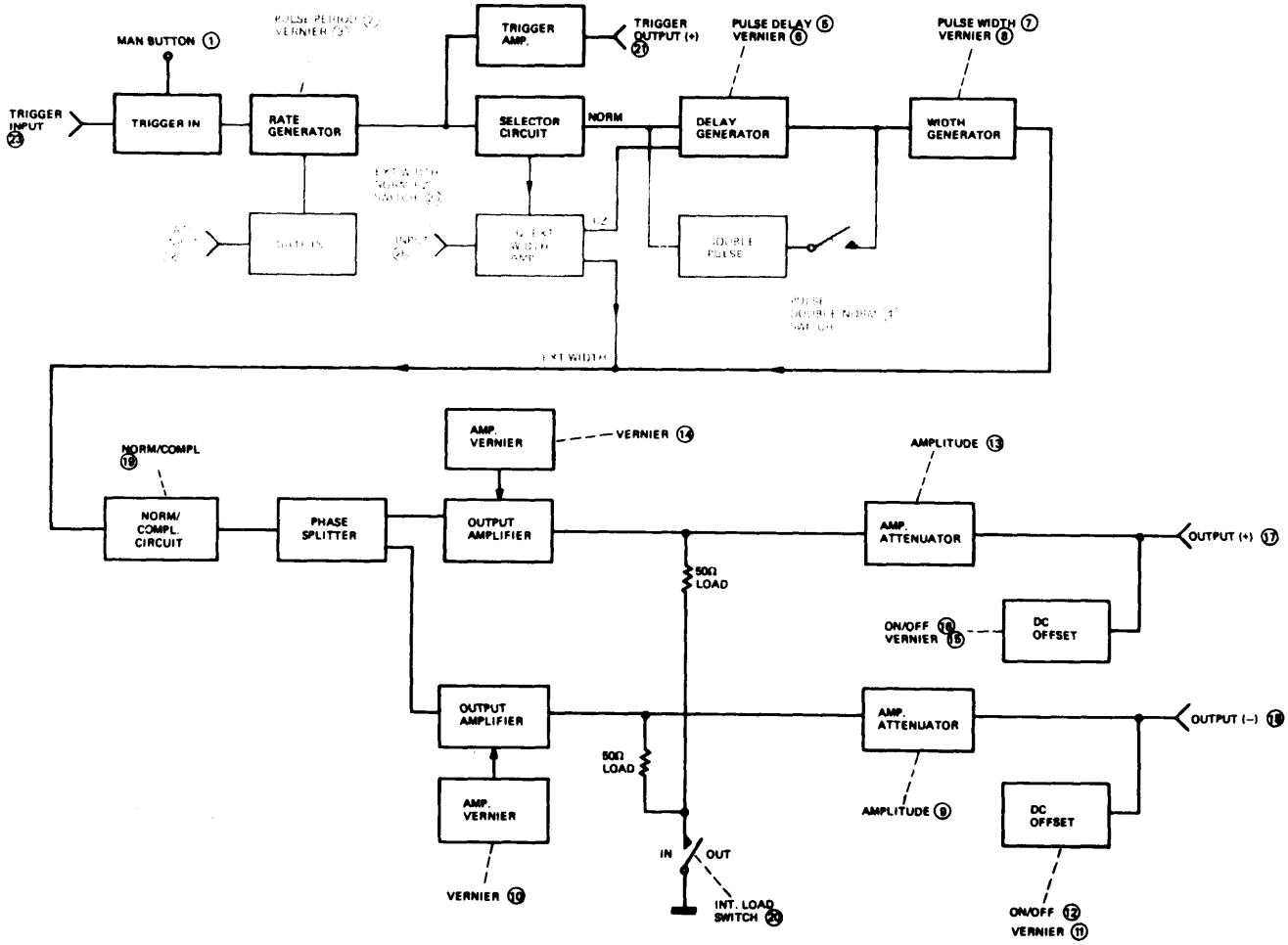

Figure 3-9. Normal manual trigger mode - block diagramm

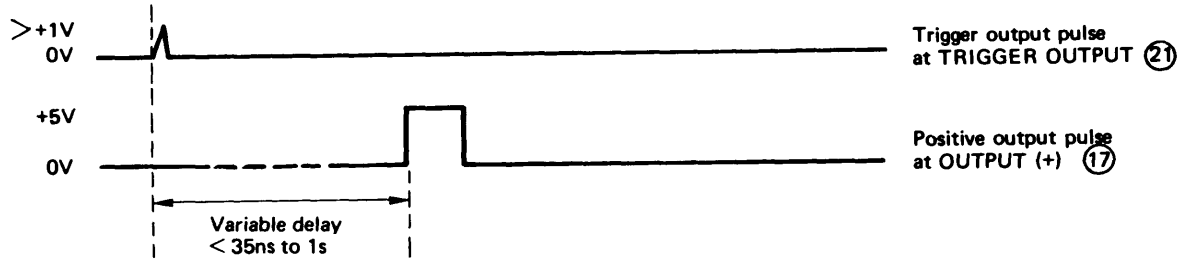

Figure 3-10. Output pulses in normal manual trigger mode

3–26 The output pulses should appear at the TRIGGER OUTPUT (21) and OUTPUT (+) (17) connectors as shown in Figure 3–10.

3–27 The output pulse parameters and formats can be varied using the controls shown in Figure 3–9.

3-28 Square Wave Mode

3–29 In this mode the pulse width is exactly half the pulse period (50% duty cycle). Pulse period, delay amplitude etc. can still be varied using the front panel controls. A square wave output can be selected in any of the preceding operating modes; the following points must, however, be remembered.

a. Output pulse has 50% duty cycle.

b. Output pulse rate is half that of the rate generator (or input trigger pulse).

c. The delay between input trigger pulse and square wave output is fixed.

d. The output pulse is symmetrical above and below the off set level.

e. Square wave output cannot be gated.

3-30 The square wave output can be produced as follows:

a. Set the PULSE PERIOD control (2) to an internal range (as in normal internal trigger mode) or to EXT and apply external trigger pulses at the TRIGGER INPUT connector (23) in order to determine the repetition rate of the output pulses.

b. Set the PULSE WIDTH control (7) to SQUARE WAVE.

c. Set the amplitude etc. of the output pulses as for normal internal trigger mode.

3–31 The circuits and controls involved in square wave mode are shown in Figure 3-11.

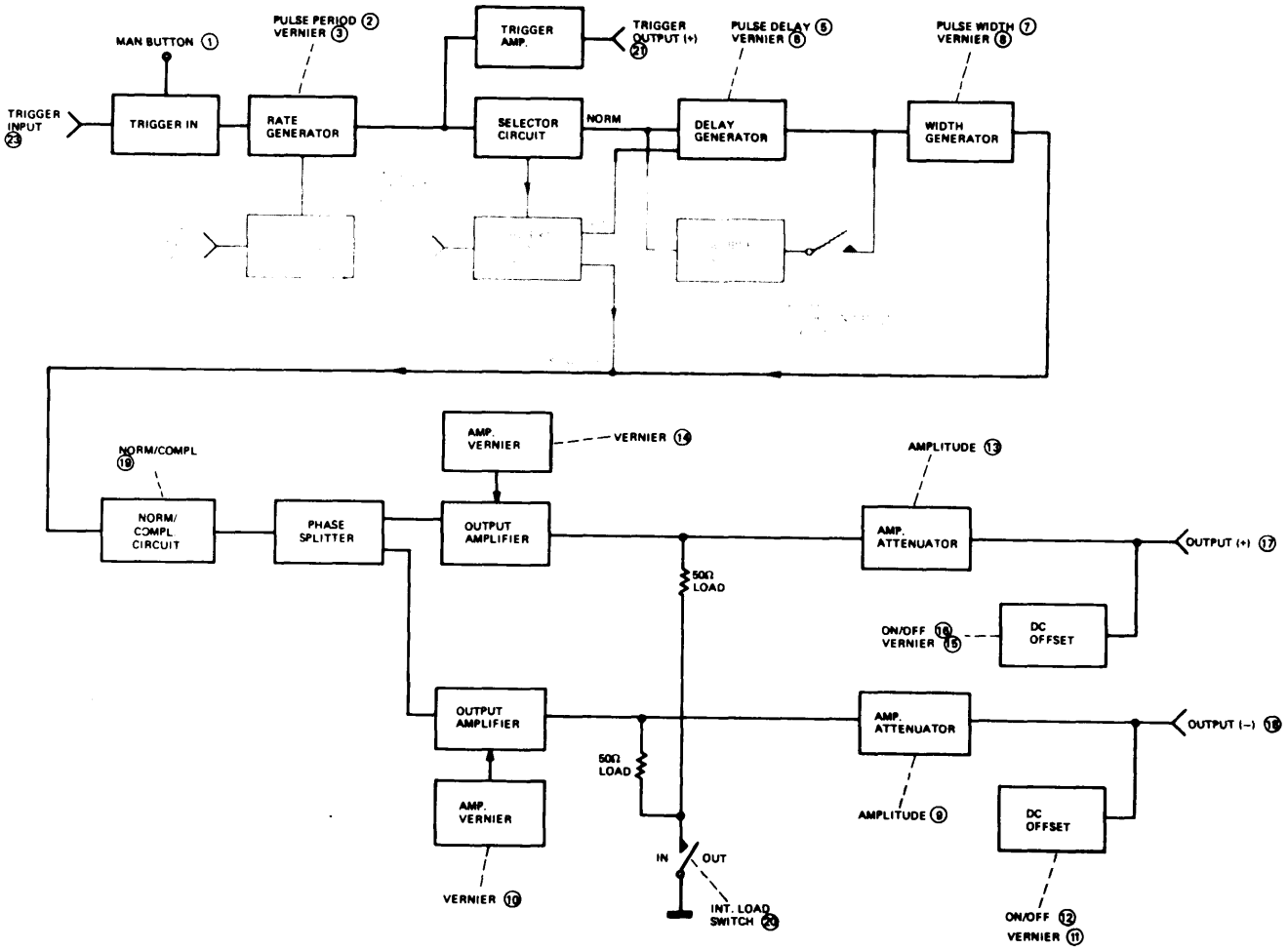

Figure 3–11. Normal square wave mode – block diagram

3–32 The output pulses should appear at the OUTPUT (+) connector (17) as shown in figure 3–12.

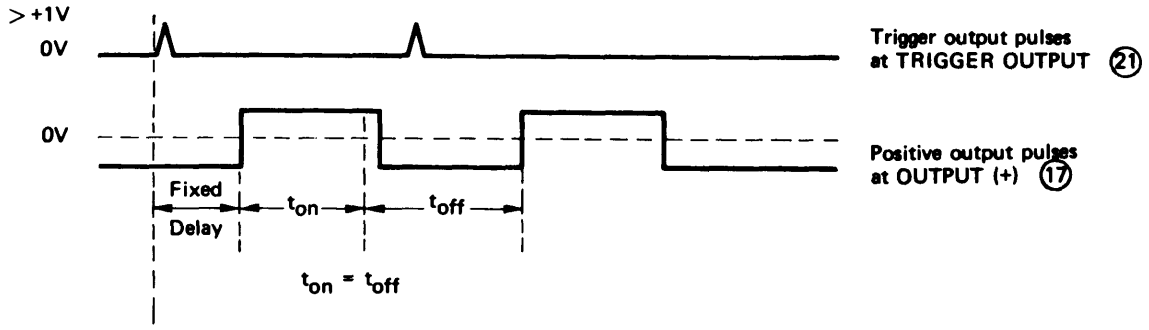

Figure 3–12. Output pulses in square wave mode

3–33 The output pulse can be switched to negative or normal or complement and the offset and amplitude can be varied.

3-34 Gating Mode

3–35 The output pulses obtained in any of the preceding operating modes can be gated by applying an appropriate pulse to the GATE INPUT (22). If square wave mode is gated, the level of the pulse baseline after the gate has closed depends on the number of pulses during the gate 'on' time (see figure 3–15). The gate input must meet the following requirements:

to enable the rate generator – input voltage > +1.5V or resistor > 1K Ω from gate input to ground.

to disable the rate generator – input voltage <+0.8V or resistor <160 Ω from gate input to ground.

The gate input is TTL compatible and the input voltage must not exceed ±5V.

3–36 The circuits and controls involved in gate mode are shown in Figure 3–13.

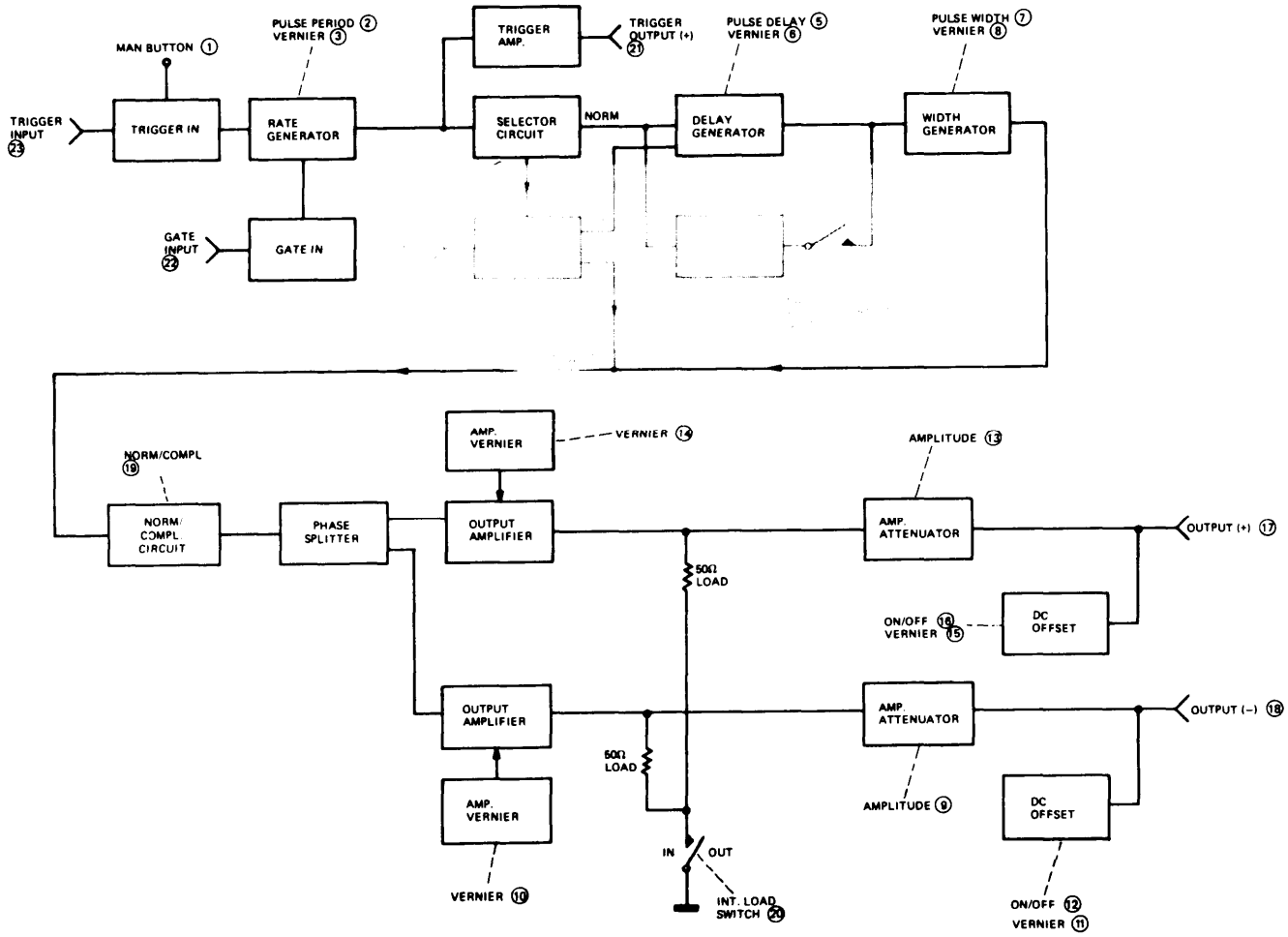

Figure 3–13. Normal gate mode – block diagram

3–37 The output pulses should appear at the TRIGGER OUTPUT (21) and OUTPUT (+) (17) connectors as shown in Figure 3–14.

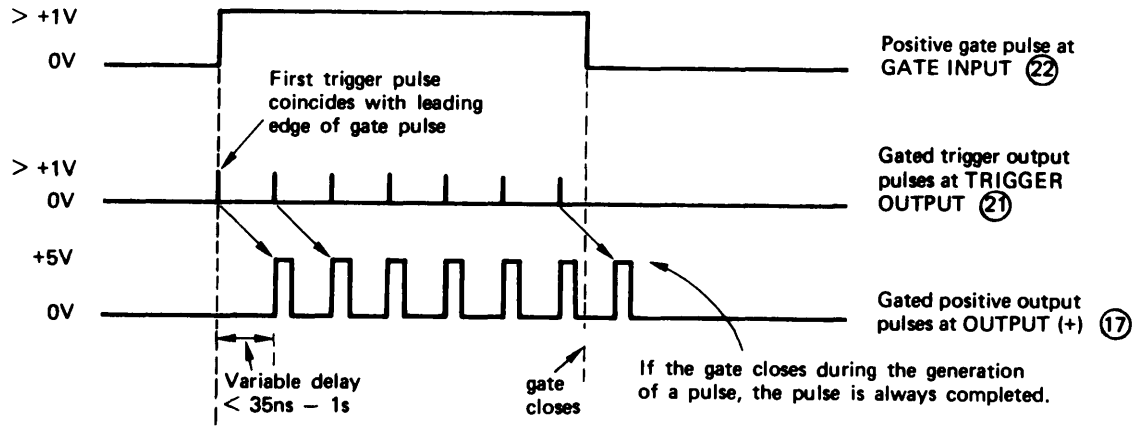

Figure 3–14. Output pulses in gate mode

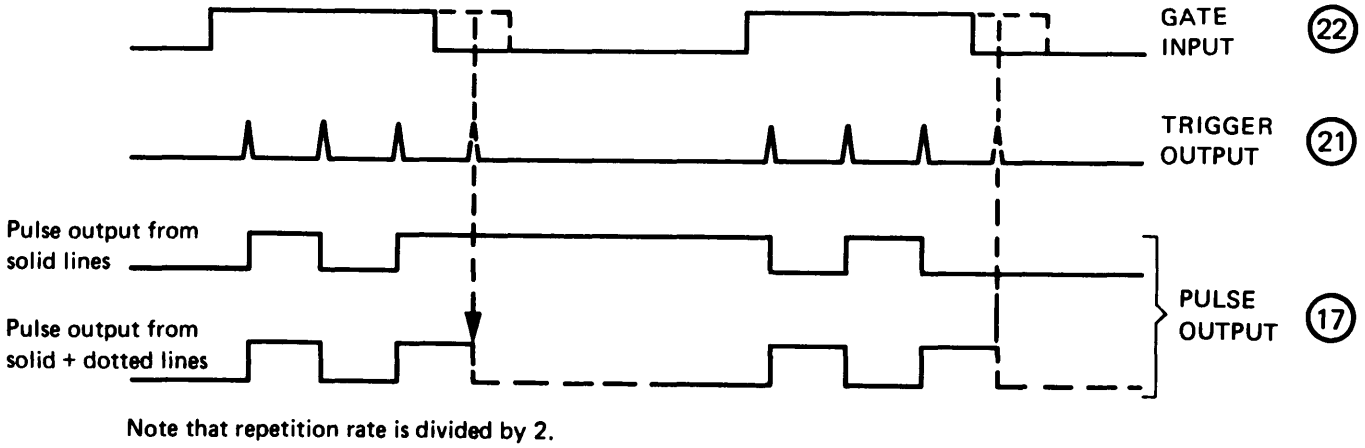

Figure 3–15. Gated output in square wave mode

3-38 RZ MODE

3-39 In RZ mode external pulses, applied to the INPUT connector (26) on the 8013B rear panel, trigger the delay generator directly (see figure 3-16) and the shape of the output pulses is determined by the output amplifiers. The output pulses cannot be gated and are independent of the pulses at the TRIGGER OUTPUT connector (21).

3–40 The circuits and controls involved in RZ mode are shown in figure 3–16.

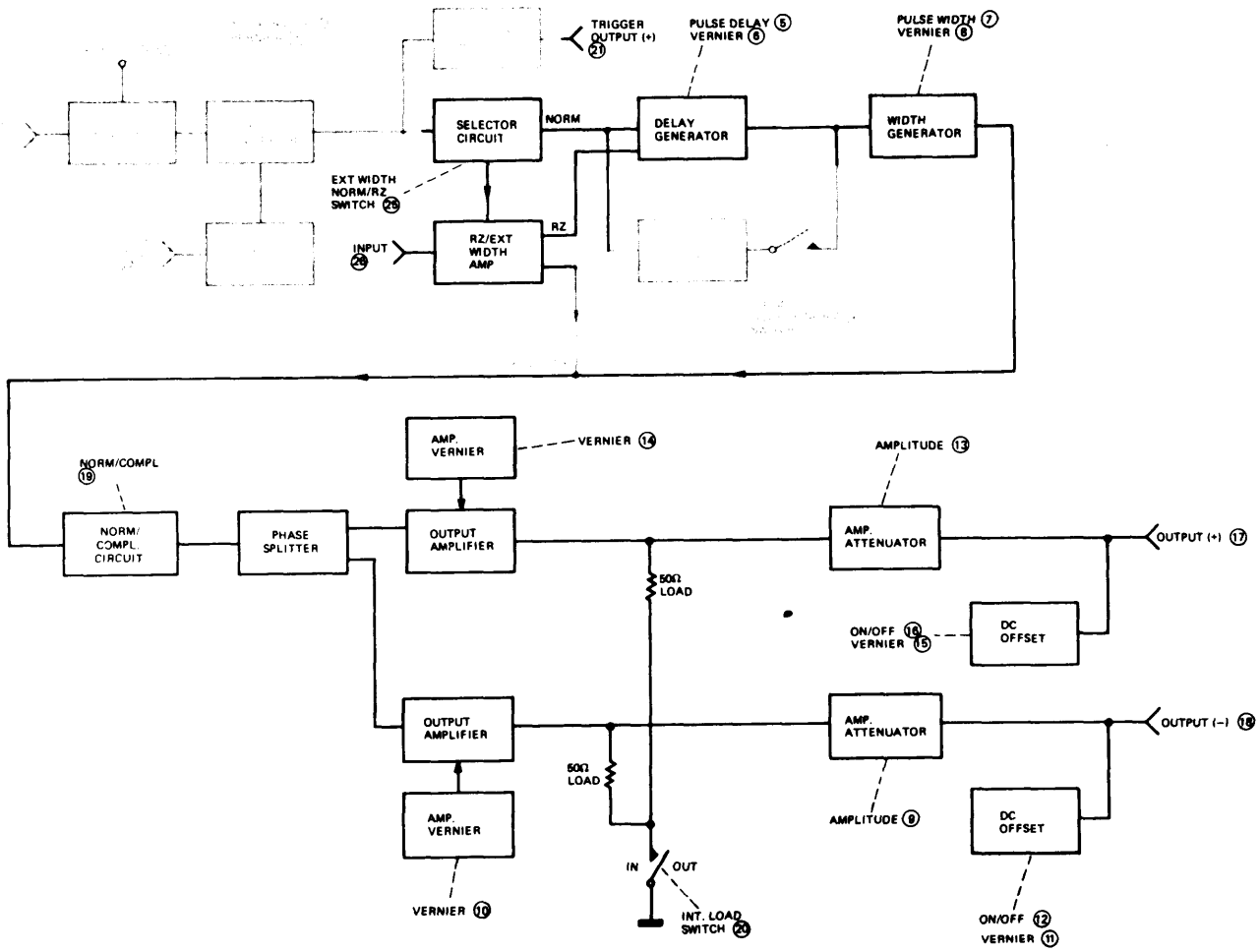

Figure 3–16. RZ mode – block diagram

3-41 The RZ input signal must be > +1V to a maximum of ±5V in amplitude and must be at least 7ns wide.

3–42 The procedure for obtaining an output in RZ mode is as follows:

a. Connect the external signal to the INPUT connector (26) on the rear panel of the 8013B.

b. Set the Mode Selector switch (25) to RZ.

c. Set the pulse delay, width, amplitude, offset and output format as required.

3–43 The output pulses should appear at the OUTPUT (+) connector (17) as shown in Figure 3–17.

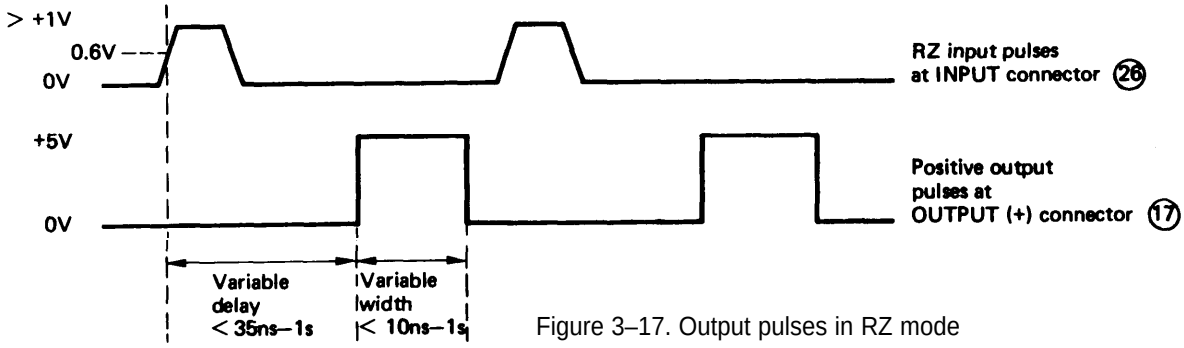

Figure 3–17. Output pulses in RZ mode

3–44 DOUBLE PULSE Mode

3–45 In this mode, the 8013B delivers two output pulses for each trigger pulse. One pulse is in phase with the TRIGGER OUTPUT (21) ; the other pulse is delayed by the time set on the PULSE DELAY controls (5) and (6).

3-46 Double pulse output can be selected in any of the preceding operating modes except square wave. Double pulse output is produced as follows:

a. Set the PULSE DOUBLE/NORM switch (4) to DOUBLE.

b. The remaining pulse parameters and output format can be set as required.

3–47 The circuits and controls involved in double pulse mode are shown in Figure 3–18.

3–48 The trigger and output pulses should appear at the TRIGGER OUTPUT (21) and OUTPUT (+) (17) connectors as shown in Figure 3–19.

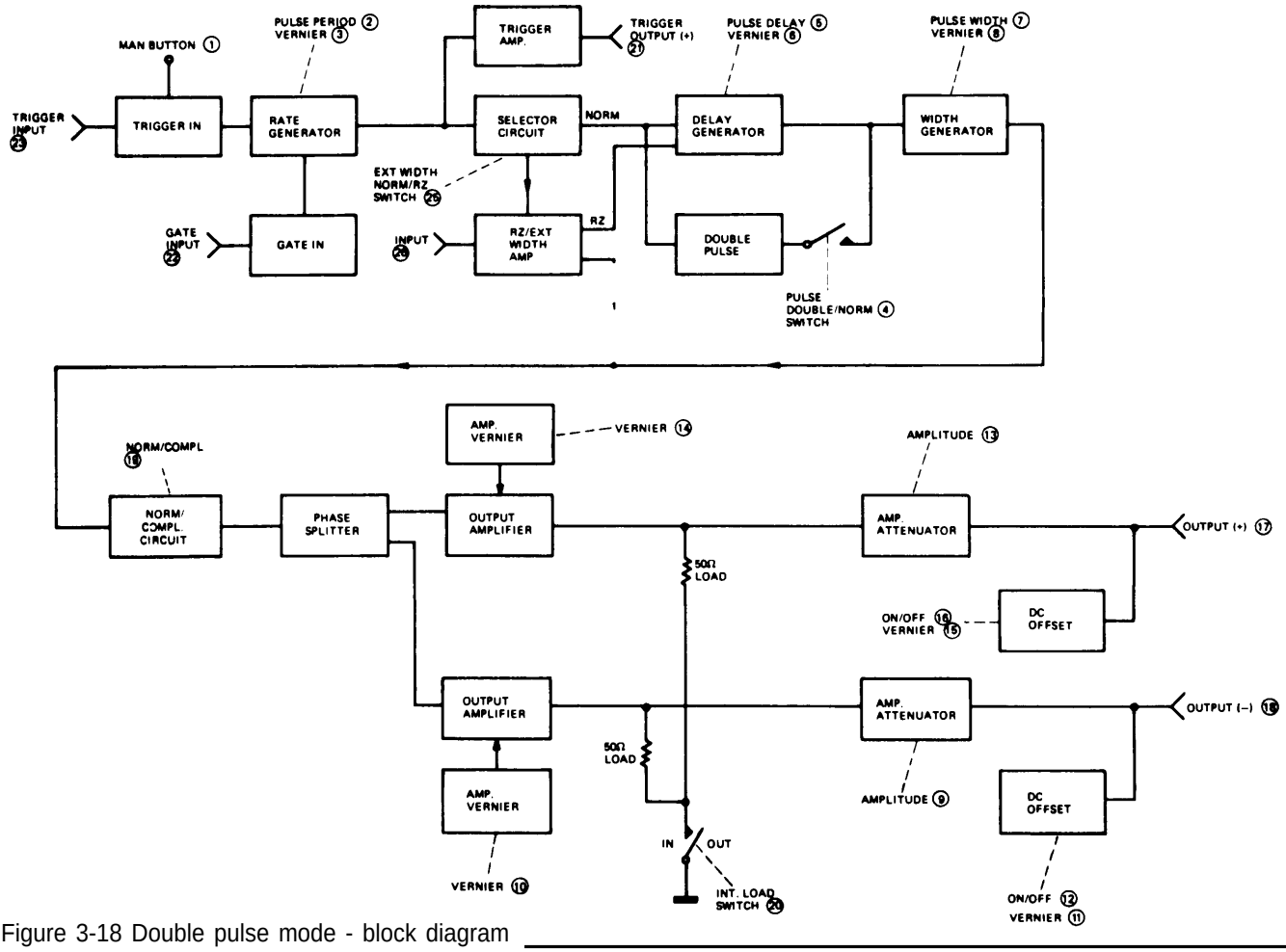

Figure 3-18 Double pulse mode - block diagram

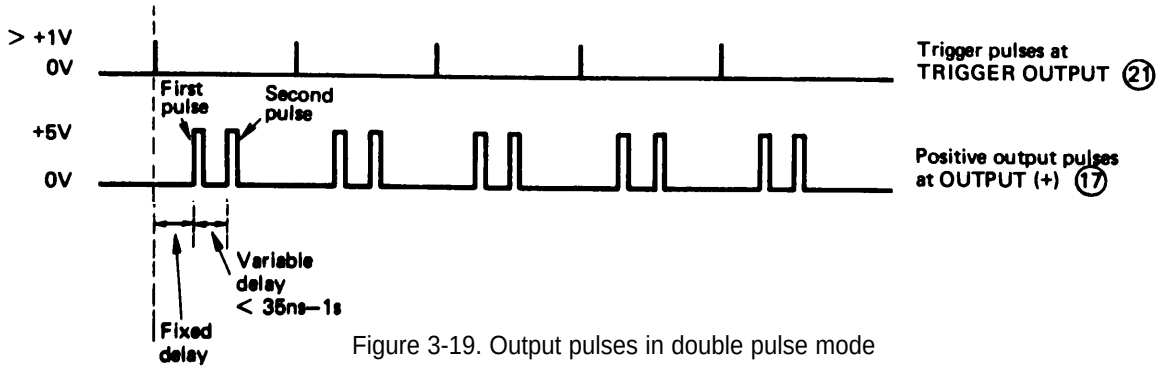

Figure 3-19. Output pulses in double pulse mode

3-49 EXTERNAL WIDTH MODE

3–50 In this mode, external pulses, applied to the INPUT connector (26) on the rear panel, are routed directly to the output amplifiers which are caused to change state at the threshold level of the input signal. Thus the pulse output is a shaped version of the input. **It is also independent of the TRIGGER OUTPUT (21).** The external width input signal must be >+1V to a maximum of ± 5V in amplitude and must be at least 7ns wide.

3-51 The circuits and controls involved in external width mode are shown in Figure 3-20.

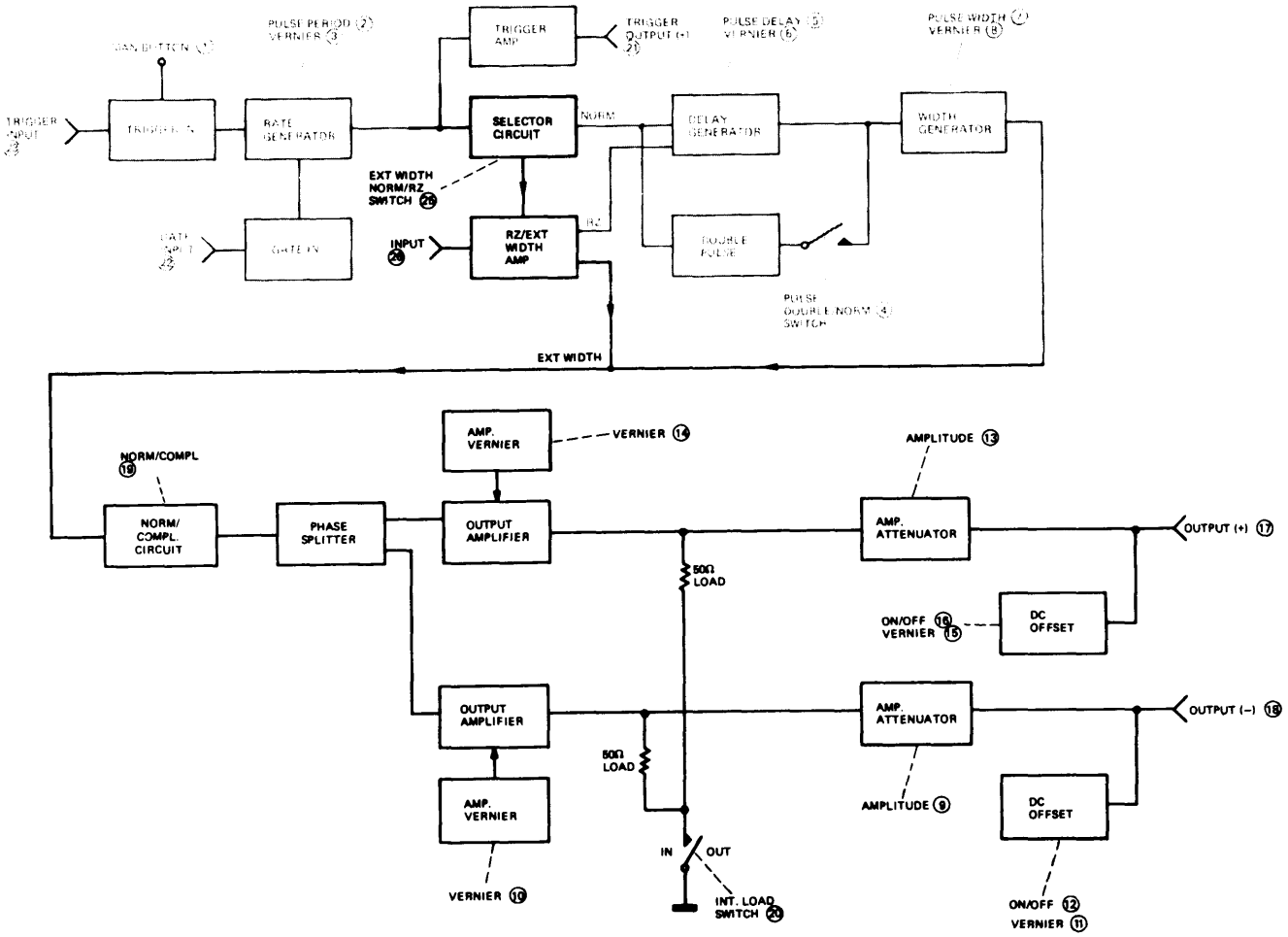

Figure 3–20. External Width mode - block diagram

3-52 The procedure for obtaining an output in external width mode is as follows:

a. Connect the external signal to the INPUT connector (26) on the rear panel of the 8013B.

b. Set the Mode Selector switch (25) to EXT WIDTH.

c. Set the pulse amplitude and output' format as required.

3-53 **The output pulses should appear at the OUTPUT (+) connector (17) as** shown in Figure 3-21.

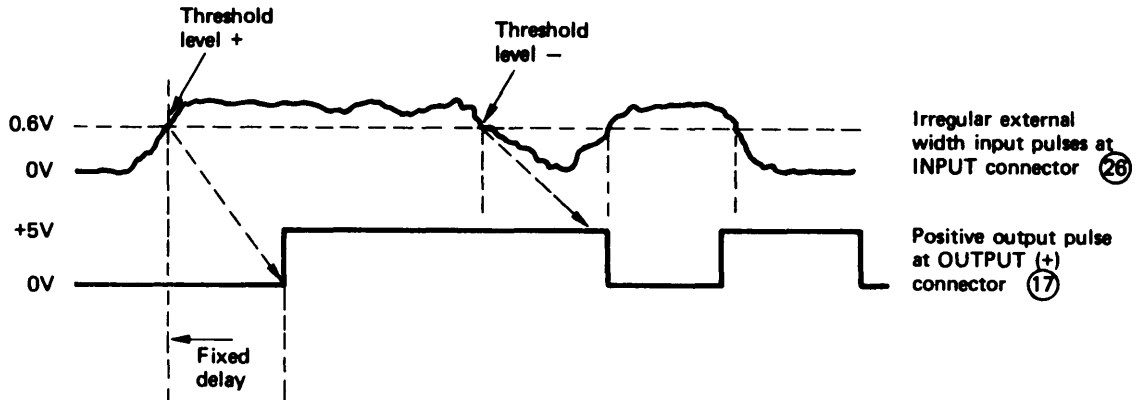

Figure 3-21. Output pulses in external width mode

3-54 ADDITIONAL FACILITIES IN RZ AND EXT WIDTH MODES

3–55 When operating in RZ or EXT WIDTH modes, the internal rate generator is available as an independent clock generator which provides an output at the TRIGGER OUTPUT connector 21. This output can be triggered internally, externally or manually and can also be gated as in the normal operating mode. If this facility is not required, it can be switched off by setting the PULSE PERIOD control 2 to EXT and disconnecting the TRIGGER INPUT 23. The circuits and controls involved in this facility are shown in Figure 3-22.

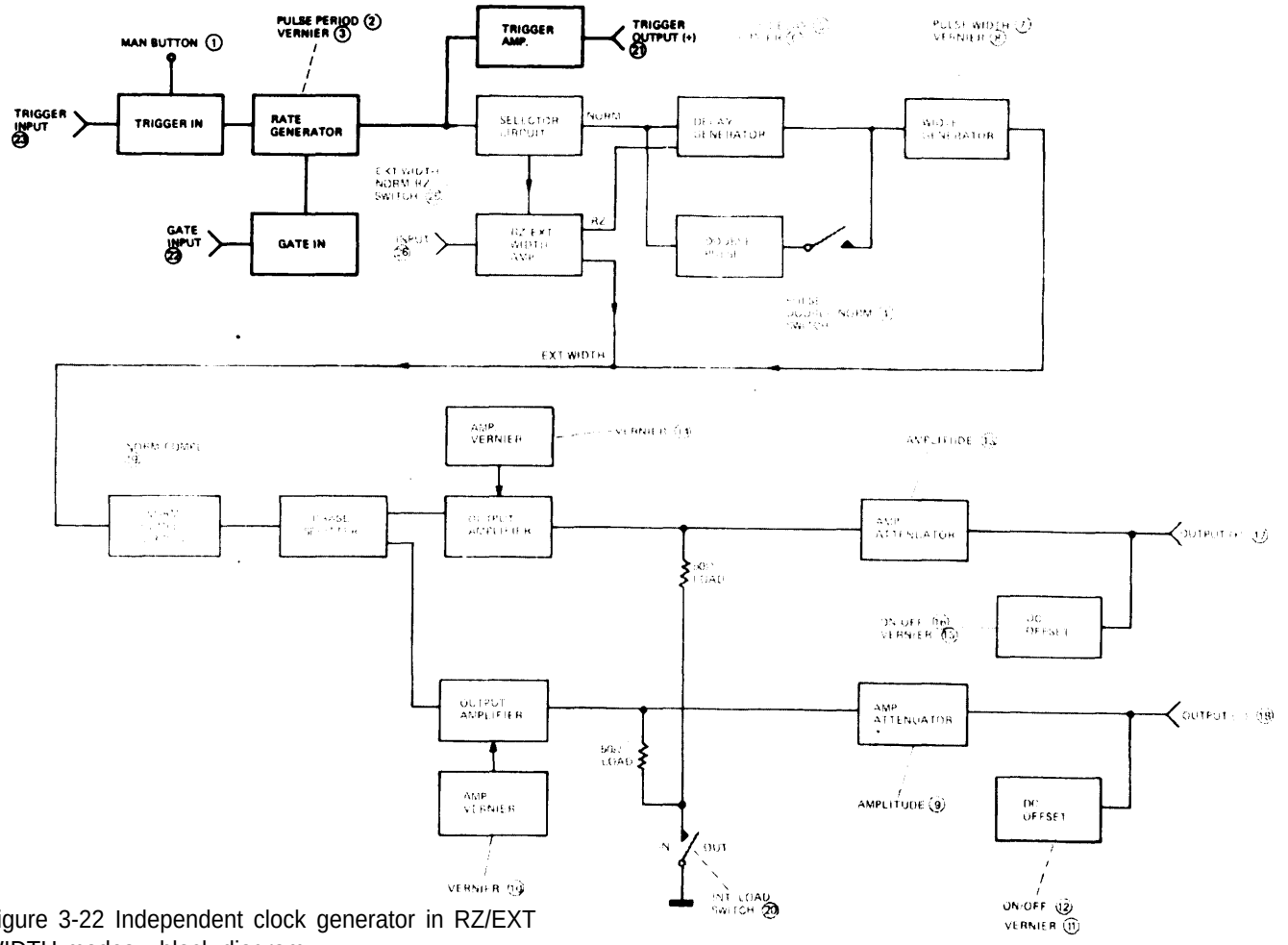

Figure 3-22 Independent clock generator in RZ/EXT WIDTH modes - block diagram

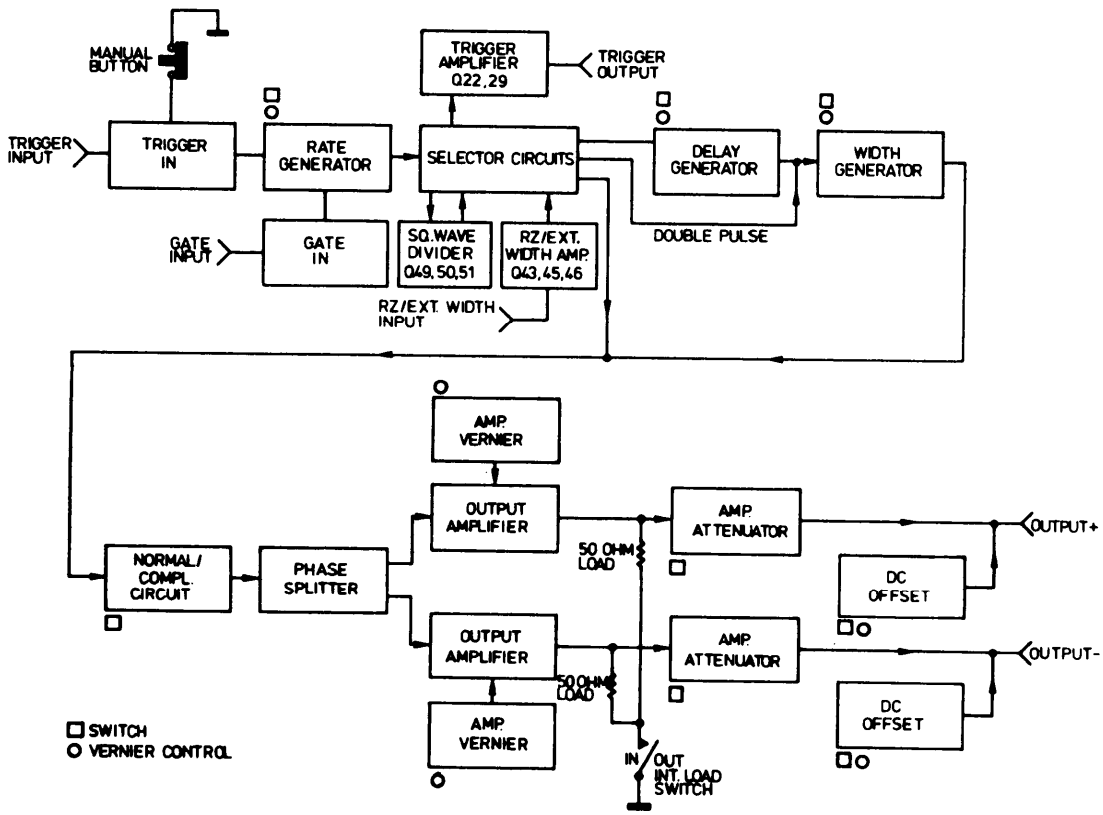

Figure 4-1.8013B Pulse Generator – Block Diagram

4-1 INTRODUCTION

4-2 A basic block diagram of the 8013B is shown in Figure 4-1 and this diagram should be referred to when reading the following description. The pulse repetition rate is generated either internally by the rate generator, manually using a push-button, or externally by an applied signal. The pulses produced can be gated synchronously by applying an external gating signal to the gate input. The output of the rate generator is fed to the selector circuits and to the trigger amplifier to produce a trigger output.

4-3 The 8013B can be used in one of three modes of operation; Normal mode, RZ mode and External Width mode. In Normal mode the pulses are generated as described above; In RZ mode external signals, applied directly to the delay generator, determine the repetition rate of the output pulses; I n External Width mode external signals, applied to the Normal/Complement circuit, determine the width and repetition rate of the output pulses. The mode switching is accomplished by the selector circuits.

4–4 The output of the selector circuits, in Normal and RZ modes is applied to the delay generator which delays the pulses by the amount set on the delay controls.

4–5 In double pulse mode two pulses are produced for each trigger pulse; the normal delayed pulse plus an extra pulse that by-passes the delay generator and is thus not delayed.

4–6 The pulse spikes from the delay generator are applied to the width generator where pulses of defined width are created.

4–7 The output of the width generator or, in External Width mode, the external input signal is applied to a pulse shaper where two complementary signals are generated. These two signals are then applied to the normal/complement circuit.

4–8 The signals are then applied to two variable gain output amplifiers and attenuators. Finally the variable DC offset is added.

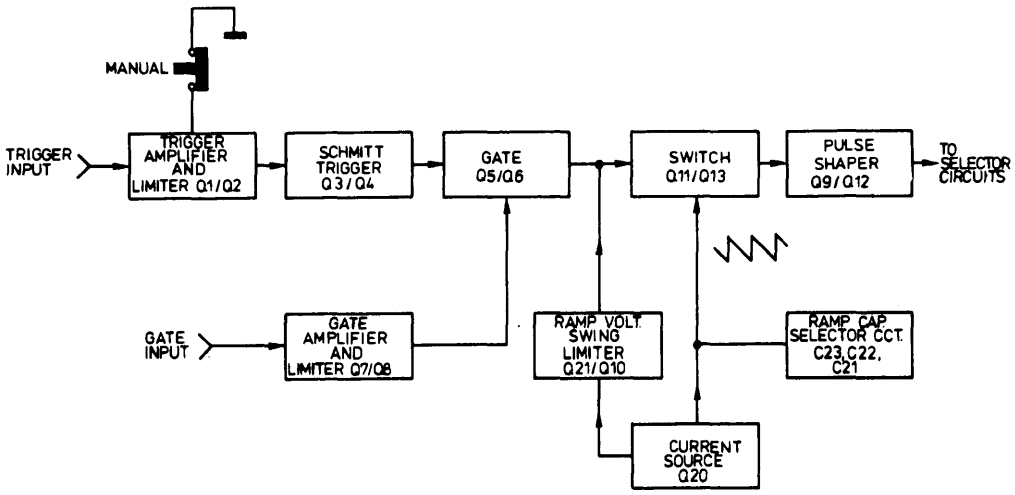

Figure 4-2. Repetition rate generator - block diagram

4–9 REPETITION RATE GENERATOR

4–10 A block diagram of the repetition rate generator is given in figure 4–2 and a full schematic in diagram I. These diagrams should be referred to when reading the following description.

4–11 The pulse repetition rate is determined;

a. by the internal rate generator
b. externally using an applied signal
c. manually suing a pushbutton.

4–12 Internal Rate Generator

4–13 When the internal rate generator is used, one of four period ranges is selected using the period range switch. In the three slower ranges, ramp capacitors (C23, C22, C21) are selected to provide the required repetition rate, transistors Q17, Q18 and Q19 switch these capacitors in or out. In the fastest range, no ramp capacitor is switched in; the time is determined by preset capacitor C24. In operation the selected capacitor discharges through constant current sink Q20 controlled by the pulse period vernier R1 and the value of the capacitor.

As the voltage at Q20 collector approaches zero, CR17 becomes forward biassed causing Q11 and Q13 to conduct and rapidly recharge the capacitor. The pulse period vernier controls Q21 and Q10 which act as a voltage swing limiter and determine the upper voltage limit to which the ramp capacitor can recharge. When the capacitor has recharged to this limit, Q13 and Q11 cut off thus allowing the discharge cycle to resume. The output from Q11 is applied, via the differentiator network Q28/L3/R35, to the delay generator and the trigger output amplifier.

4–14 External Trigger Operation

4–15 In external trigger mode the rate generator is used as a pulse shaper. Trigger pulses are applied to the differential amplifier Q1/Q2 which in turn switches the Schmitt trigger formed by Q3/Q4. The negative output spikes from the collector of Q4 turn Q5 on and Q13 base rises so that Q13 and Q11 turn on to produce an output pulse.

4-16 Manual Operation

4–17 When the Manual pushbutton is pressed, a negative spike is produced at the collector of Q4 which enables the current switch Q11/Q13. One pulse is produced from Q11 each time the Manual pushbutton is pressed.

4-18 GATING

4–19 Gate signals are applied to the gate amplifier Q8/Q7. Q8, normally 'off' is turned on by the 0V level (off time) of the gate input pulse. Thus Q6 is turned on, the current through Q6 lowers the base voltage of Q13 and so disables the rate generator. When the level of the gate input pulse reaches +1.8V (on time) Q8 turns on and enables the pulse source. Thus output pulses will be produced from the rate generator only during the gate input pulse 'on' time.

4-20 SELECTOR CIRCUITS

4–21 A block diagram of the selector circuits is given in figure 4–3 and is repeated for each mode of operation showing the signal paths used. Figure 4–1, 4–3 and the schematic diagram 2 should be referred to when reading the following description.

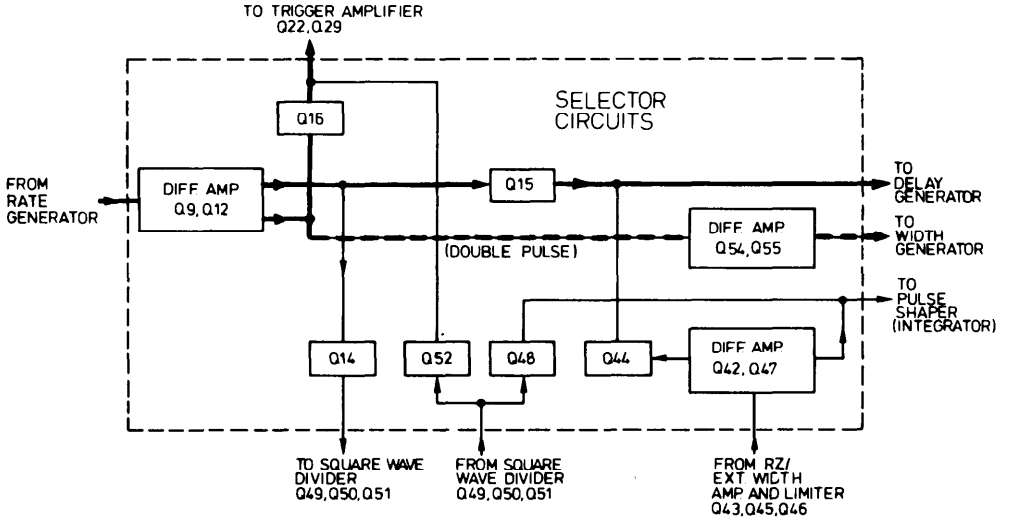

Figure 4–3a. Normal mode (including external trigger and rate mode),

4-22 In Normal mode, the rate generator output is applied to the delay generator via Q15 and to the trigger amplifier via 616. If double pulse mode is selected, the pulse is also applied to the width generator via differential amplifier Q54/Q55 (see schematic 3).

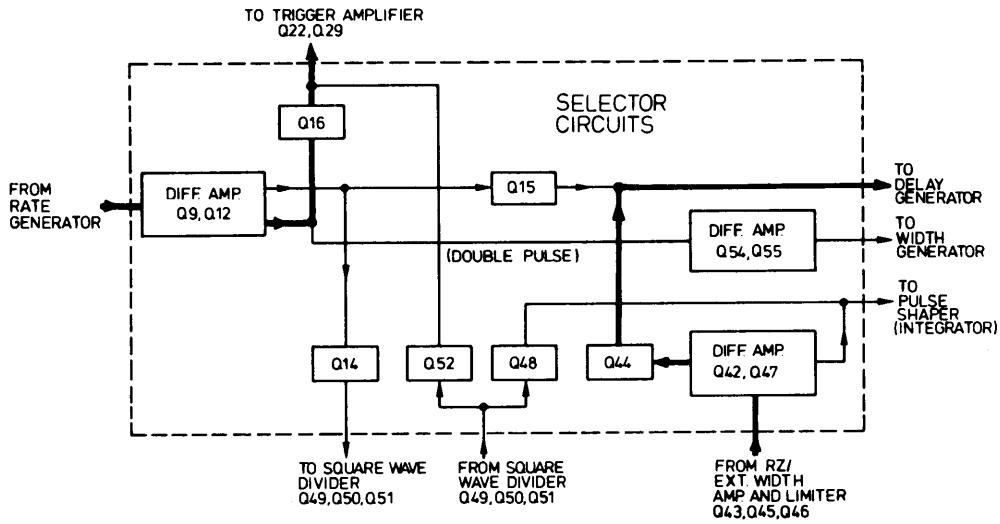

Figure 4–3b. RZ mode

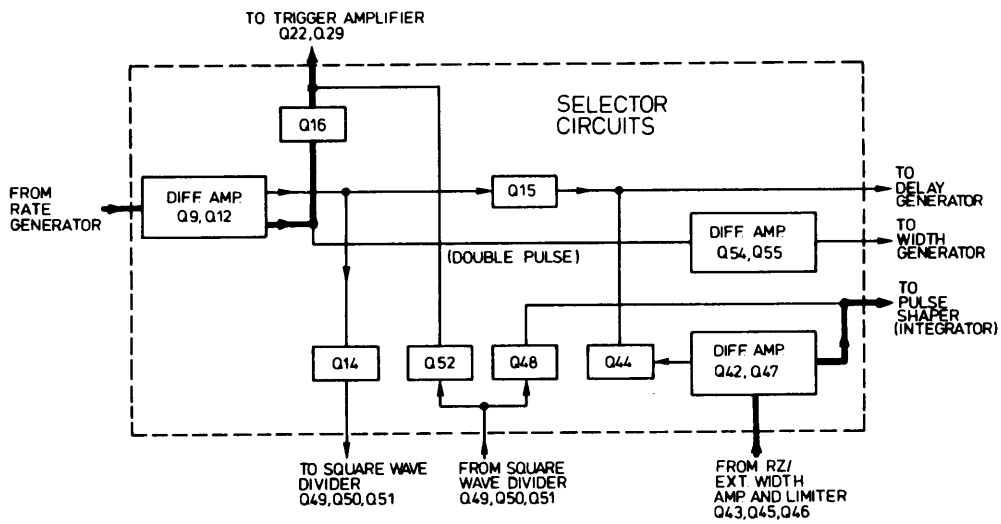

Figure 4-3c. Ext. Width mode

4-23 In RZ mode the rate generator output is only used to generate trigger pulses, via Q16. The RZ input is applied, via Q43, Q46, Q45 to the differential amplifier Q42/Q47 and gate Q44, to the delay generator.

4–24 In Ext Width mode the rate generator output is only used to generate trigger pulses, via Q16. The Ext Width input is applied, via Q43, Q46, Q45 to the differential amplifier Q42/Q47 to pulse shaper 3 and the integrator.

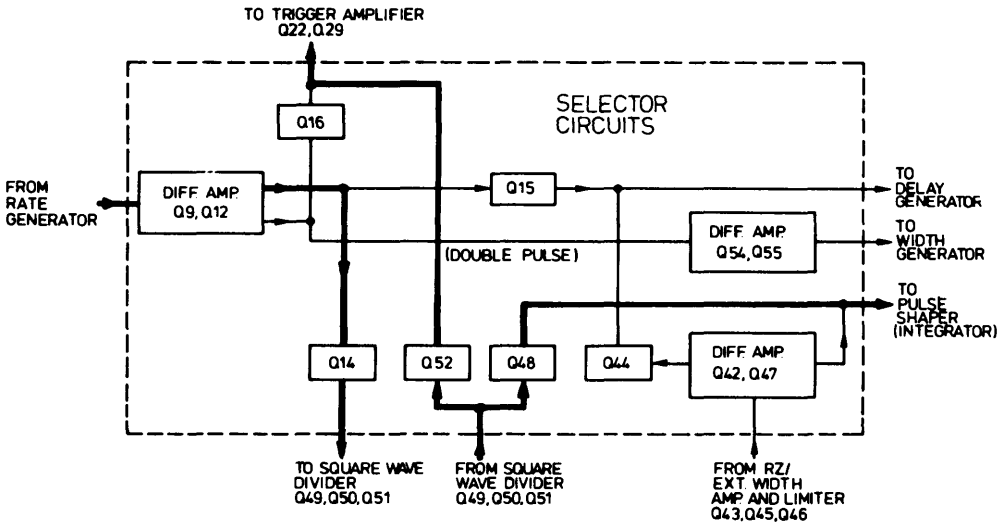

Figure 4–3d. Square wave mode

4-25 In Square wave mode the output of the rate generator is applied, via Q14, to the square wave divider. The output of the divider is applied to the trigger amplifier, via Q52, and pulse shaper 3 and the integrator, via Q48.

4-26 DELAY GENERATOR

4–27 A block diagram of the delay generator is given in figure 4-4 and a full schematic in diagram 3. These diagrams should be referred to when reading the following description.

4-28 The purpose of the delay generator is to delay the pulse source, whether from the internal rate generator, external trigger or from the RZ input, within the range of 35ns to 1s, with respect to the trigger output.

4-29 The current source (Q23), the monostable (Q30/Q31) and the recharge circuit (Q26) are controlled by the width switch so that the delay circuit is inhibited in square wave and external width modes.

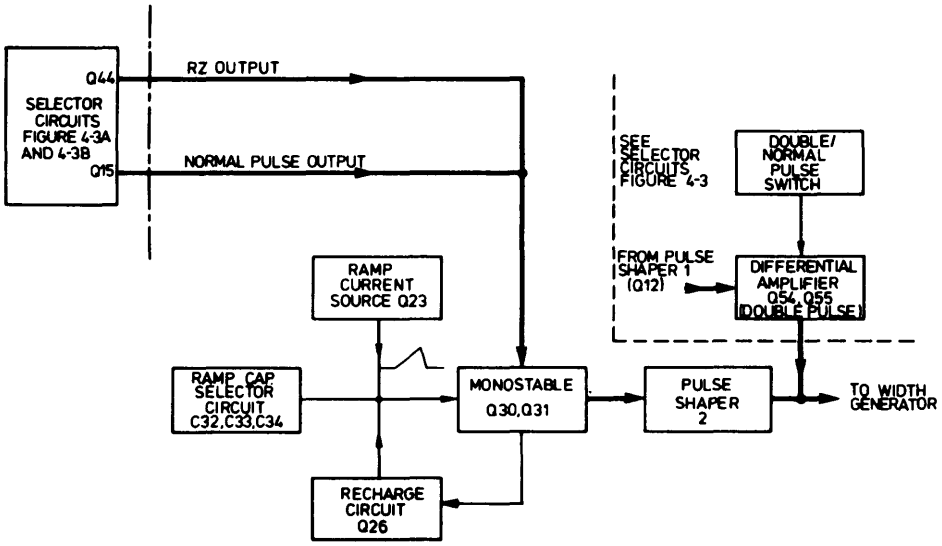

Figure 4-4. Delay generator - block diagram

4-30 Under no-signal conditions, Q31 is off, Q30 is on and Q26 is acting as a sink for the ramp current. Thus the ramp current souce (Q23) cannot charge the ramp capacitors. A positive pulse input signal turns Q31 on and Q30 off, Q26 follows Q30 collector and thus is non-conducting The selected ramp capacitor is charged by the current source Q23 until a level is reached when Q30 turns on again, which turns Q31 off. Q26 now conducts again and rapidly discharges the selected ramp capacitor. The output from the monostable is a negative spike, coincident with the pulse input, followed by a positive spike which occurs some time later and is used to drive pulse shaper 2. The time between the pairs of spikes is the time taken for the ramp waveform to reach the threshold level of the monostable (Q30/Q31), i.e. the delay time.

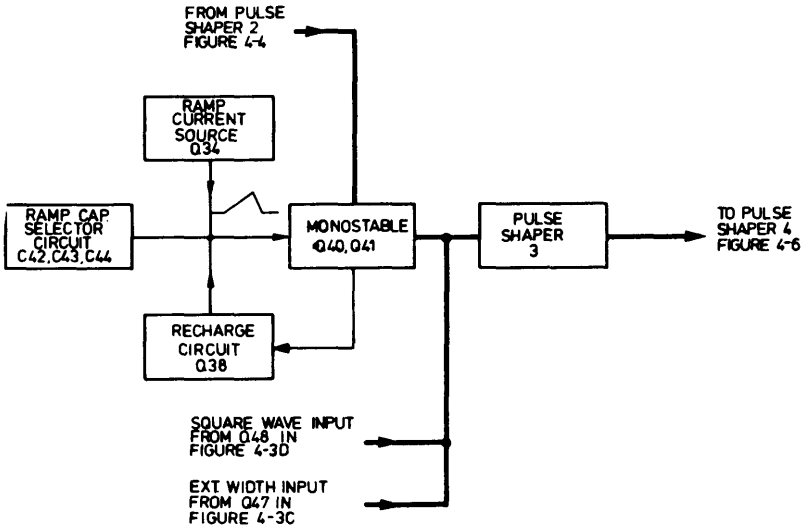

Figure 4–5. Width generator - block diagram

4-31 WIDTH GENERATOR

4-32 A block diagram of the width generator is given in figure 4-5 and a full schematic in diagram 4. These diagrams should be referred to when reading the following description.

4-33 The function of the width generator is to. create a pulse of defined width for each positive pulse spike received from the delay generator. The current source (Q34) and the rnonostable (Q40/Q41) are controlled by the width switch so that the width circuit is inhibited in square wave and external width modes.

4-34 The width generator circuit is identical to the delay generator circuit except for the differentiator on the output (L11); see para. 4-30. The output pulse is applied to pulse shaper 3.

4-35 If square wave or external width modes are being used, the output signals from the selector circuits in figures 4-3c and 4-3d are applied directly to pulse shaper 3 and both the delay and width generators are disabled.

4-36 The two complementary outputs from pulse shaper 3 are then applied to the Normal/Complement circuit,

4-37 OUTPUT AMPLIFIERS

4-36 A block diagram of the output amplifiers is given in figure 4-6 and a full schematic in diagram 5. These diagrams should be referred to when reading the following description.

4-39 The Normal/Complement circuit consists of transistors Q29 to Q32 which are controlled in pairs

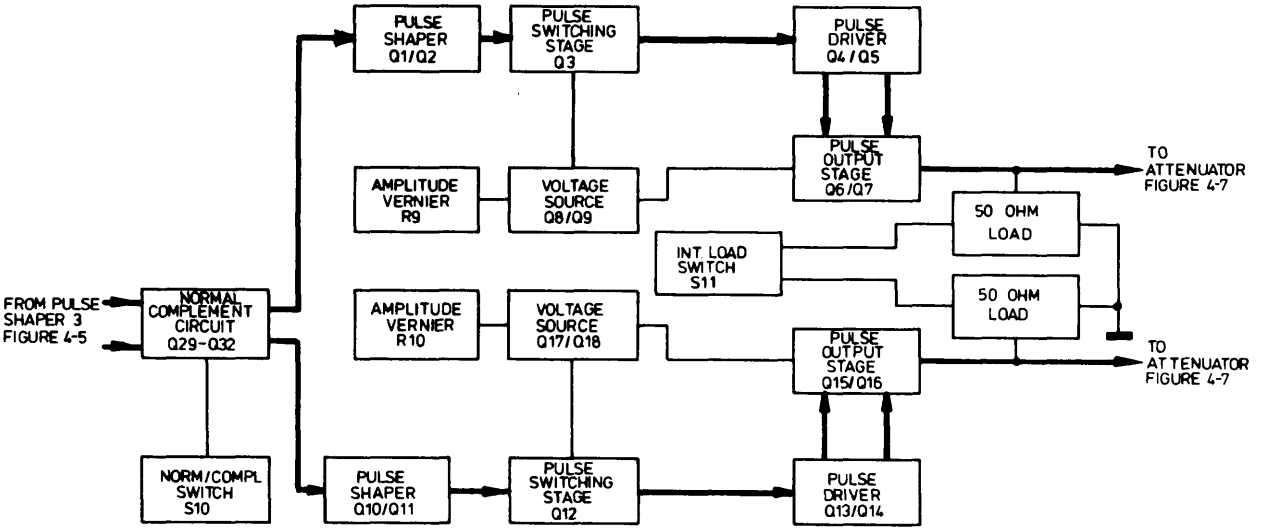

Figure 4–6.0utput amplifiers- block diagram

(Q29/Q30 and Q31/Q32) by the NORM/COMPL switch (S10). Either one pair or the other is enabled to transpose the two pulse inputs.

4–40 The two complementary differentiated outputs are applied to pulse shaper Q1/Q2 for the positive channel and pulse shaper Q10/Q11 for the negative channel. The output of Q2 drives the positive output amplifier (Q4 to Q7) via a switching transistor Q3; the output of Q11 drives the negative output amplifier (Q13 to Q16) via a switching transistor Q12.

4-41 Amplitude verniers R9 and R10 determine the potential across the respective voltage sources (Q8/Q9 for the positive channel and Q17/Q18 for the negative channel). This determines the pulse amplitude swing for each channel.

4–42 When the internal load switch S11 is set to the 'in' position, relays K1 and K2 are energized and connect the 50 ohm loads to their repsective outputs.

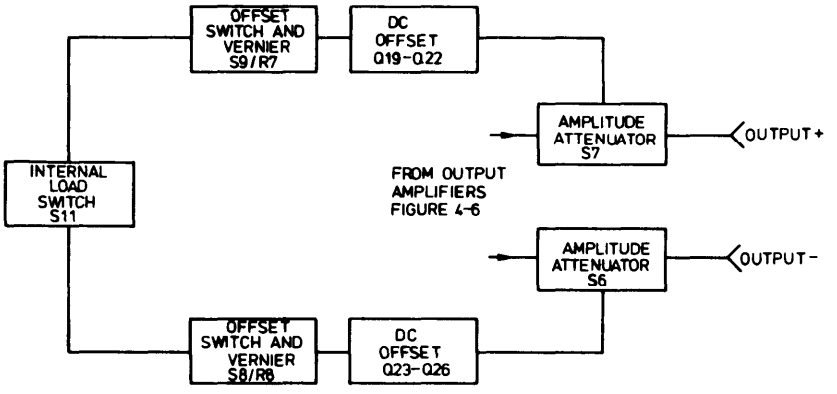

Figure 4-7. Offsets and attenuators - block diagram

4-43 OFFSETS AND ATTENUATORS

4-44 A block diagram of the offsets and attenuators is given in figure 4–7 and a full schematic in diagram 6. These diagrams should be referred to when reading the following description.

4-45 The pulses from the output amplifiers are applied to the two attenuator networks which can reduce the amplitude of each channel from 10V to 0.4V with the 50 ohm load switched out or from 5V to 0.2V with the 50 ohm load switched in.

4–46 The dc offset circuits comprise Q19 to Q22 for the positive channel and Q23 to Q26 for the negative channel. Both circuits operate in the same way and thus only the positive channel is described. Note that the offset is not available when the internal load is switched out.

4–47 When the offset switch (S9) is set to 'off', the vernier (R7) is shorted out. Thus Q19/Q20 and Q21/Q22 are switched off and deliver no current. When the offset switch is set to 'on', clockwise rotation of the vernier increases the output from Q20 and decreases the output from Q22. The output of the amplifier will then be positive. Counterclockwise rotation of the vernier causes the reverse to happen and the amplifier output to become negative.

4-48 POWER SUPPLIES

4–49 The +17V and -17V power supplies are identical series regulated types using IC regulators (U1 and U2) and series pass transistors (Q27 and Q28). Resistors R 100 and R 104 act as current sensing resistors to enable the regulators to limit the current output.

SECTION 5

MAINTENANCE

5-1 GENERAL

5-2 This section contains information on the removal of covers and assemblies, performance verification and recalibration (internal checks and adjustments) procedures.

5-3 Before attempting removal of covers, assemblies or components, disconnect the instrument from the ac line supply. It is advisable also to leave the instrument for a few minutes after disconnecting from the line, to enable capacitors to discharge.

5-4 REMOVAL OF COVERS

5–5 To gain access to all test points and assemblies remove the four screws from each of the two covers and slide the covers off.

5-6 REMOVAL OF ASSEMBLIES

5–7 Reference should be made to the Assembly Location diagram (6-1) before attempting to remove assemblies. Table 6-2 gives the colour code used to identify the internal wiring, e.g. wire 93 is white with an orange stripe.

5–8 Timing board - assembly 5

5-9 Disconnect coaxial cable W2 and wires 93 and 94 from board A5. Remove the three long securing screws and spacers and ease the board out of its connector on board A7.

5-10 Output board - assembly 6

5–11 Disconnect wires 93 and 94 and unsolder coaxial cables W3 and W4 from board A6.

5-12 Remove the four screws securing the rear panel to the frame. Withdraw the rear panel and board A6 through the rear of the frame as far as the power supply leads will permit.

5–13 Remove the three screws securing board A6 to the rear panel. Unsolder the two wires number 923 and the wto wires number 937 from board A6. Carefully withdrawn board A6 from the frame.

5–14 When board A6 is being refitted, thermal compound (HP part no. 6040-0265) must be applied to the output amplifier heat sink where it bolts on to the rear panel. This is necessary to improve thermal conductivity between the two surfaces.

5-15 Mother board - assembly 7

5–1 6 Remove boards A5 and A6 as detailed in paragraphs 5–8 to 5-13.

5-17 Unsolder coaxial cables W5 and W6 connecting the output jacks to board A7 at the board A7 end.

5-18 Unsolder the power supply wires (W7) from the line on/off switch (S12).

5-19 Disconnect the five wires 91, 92, 93, 90 and O from the top rear of board A7. Disconnect wire 7 from the rear centre of board A7.

5-20 Disconnect the three wires 3, 4 and 5 from the bottom rear of board A7.

5-21 Disconnect the wires from all vernier controls, i.e. R1, R2, R3, R7, R8, R9 and R10 at the board A7 end.

5–22 Remove the six screws securing board A7 to the f rent panel and carefully remove the board from the frame.

5-23 PERFORMANCE TESTS

5-24 The performance tests in tables 5-2 to 5–20 give the procedures for verifying that the instrument is

working to the specifications. Rigid observance of the sequence in which the tests appear is unnecessary.

5–25 INTERNAL CHECKS AND ADJUSTMENTS

5–26 The internal checks and adjustments in tables 5-21 to 5-25 give the procedures for adjusting a serviceable instrument to bring it within specification. The checks should be performed in the order in which they appear.

5–27 SERVICE PRODUCT SAFETY CHECK

5–28 This check (table 5–26) should be performed following the internal checks and adjustments to verify the instrument safety.

Table 5-1. Test Equipment and Accessories

INSTRUMENT	BRIEF SPECIFICATION	RECOMMENDED MODEL
Counter	Frequency range 0 – 50 MHz with Prescaler plug-in	HP 5245L HP 5252A
Oscilloscope	Dual-channel 50 MHz bandwidth 20mV/div sensitivity, sweep speeds 100ns/div to 1s/div. with sweep delay	HP 180C with plug-ins 1801A, 1821A
Digital Voltmeter	100V range. Accuracy ± (0.03% reading +0.01% range).	HP 3470 system comprising 34740A display and 34702A Multimeter.
Sampling Oscilloscope	Dual-channel, 1 GHz bandwidth 2mV/div. sensitivity, sweep speeds 100ps/div to 50µs/div.	HP 180C with plug-in 1810A
Test Oscillator	Frequency range 10 Hz to 10 MHz	HP 651B
Test Oscillator	Frequency range 10 MHz to 500 MHz	HP 3200B
Pulse Generator	Rep. rate at least 1 MHz variable width (1µs to 100ms), amplitude 0V to ± 5V.	HP 8011A

ACCESSORIES	
50 ohm cable assembly, 23cm long with male BNC connectors	HP 10502A
50 ohm cable assembly, 122cm long with male BNC connectors (4 required)	HP 10503A
Test leads for DVM – dual banana plug to probe and clip	HP 11003A
Connector, BNC male to type N female (2 required) Connector, type N male to BNC male (2 required)	HP 1250-0077 HP 1250-0780
Tee Connector, BNC	HP 1250-0781
50 ohm Feed-through termination	HP 10100C
Pulse Adder	HP 15104A
20dB Attenuator, 50 ohm (2 required)	HP 8491A

Table 5-2. Performance Test: Pulse Period

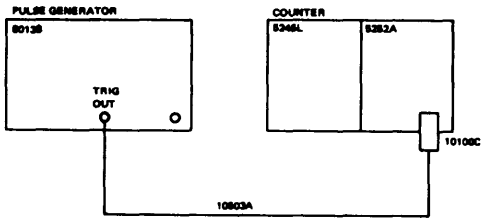

INITIAL CONTROL SETTINGS

PULSE PERIOD 2	20n–1μ
VERNIER 3	CCW
PULSE DOUBLE/NORM 4	NORM
PULSE DE LAY 5	35n–1μ
VERNIER 6	CCW
PULSE WIDTH 7	10n–1μ
VERNIER 8	CCW
AMPLITUDE 9	5.0-2.0
VERNIER 10	CW
OFFSET vernier 11	–
OFFSET switch 12	OFF
AMPLITUDE 13	5.0-2.0
VERNIER 14	CW
OFFSET vernier 15	–
OFFSET switch 16	OFF
NORM/COMPL 19	NORM
INT LOAD 20	IN
EXT WIDTH/NORM/RZ 25	NORM

5245L:

FUNCTION	FREQUENCY
SENSITIVITY	1V
TIME BASE	adjust as necessary

STEP	INSTRUCTIONS				RESULTS	
1	Check repetition rate for each set of control settings given in table:					
PULSE PERIOD 2	VERNIER 3	PULSE WIDTH 7	VERNIER 8			
20n–1μ	CCW	10n–1μ	CCW		< 20ns	> 50 MHz
20n–1μ	CW	1μ–.1m	CCW		> 1μs	< 1 MHz
1μ–.1m	CCW	1μ–.1m	CCW		< 1μs	> 1 MHz
1μ–.1m	CW	.1m–10m	CCW		> .1ms	< 10 KHz
.1m–10m	CCW	.1m–10m	CCW		< .1ms	> 10 KHz
.1m–10m	CW	10m–1	CCW		> 10ms	< 100 Hz
10m–1	CCW	10m–1	CCW		< 10ms	> 100 Hz
10m–1	CW	10m–1	Center		> 1s	< 1 Hz

For the lest setting, set the 5245L FUNCTION switch to PERIOD AVERAGE 1 and measure the pulse period

Table 5-3. Performance Test: Pulse Delay

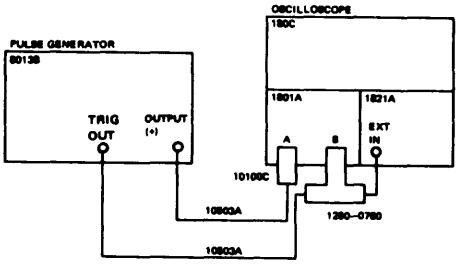

INITIAL CONTROL SETTINGS

PULSE PERIOD 2	1μ–.1m
VERNIER 3	CW
PULSE DOUBLE/NORM 4	NORM
PULSE DELAY 6	35n–1μ
VERNIER 6	CW
PULSE WIDTH 7	10n–1μ
VERNIER 8	Center
AMPLITUDE 9	5.0-2.0
VERNIER 10	CW
OFFSET vernier 11	–
OFFSET switch 12	OFF
AMPLITUDE 13	5.0-2.0
VERNIER 14	CW
OFFSET vernier 15	–
OFFSET switch 16	OFF
NORM/COMPL 19	NORM
INT LOAD 20	IN
EXT WIDTH /NORM /RZ 25	NORM

STEP	INSTRUCTIONS				
1	Check the pulse delay for both VERNIER 6 extremities of each range setting of the PULSE DELAY switch 5 as follows:				
PULSE DELAY 5	VERNIER 6	PULSE PERIOD 2	PULSE WIDTH 7		
35n–1μ	CW	1μ–.1m	10n–1μ		> 1μs
1μ–.1m	CW	.1m–10m	1μ–.1m		> 100μs
1μ–.1m	CCW	1μ–.1m	1μ–.1m		< 1μs
.1m–10m	CW	.1m–10m	.1m–10m		> 10ms
.1m–10m	CCW	.1m–10m	.1μ–10m		< 100μs
10m–1	CW	EXT+ (press MAN 1)	10m–1		> 1s
10m–1	CCW	10m–1	.1m–10m		< 10mS

Table 5–4. Performance Test: Pulse Width (greater than 1µs)

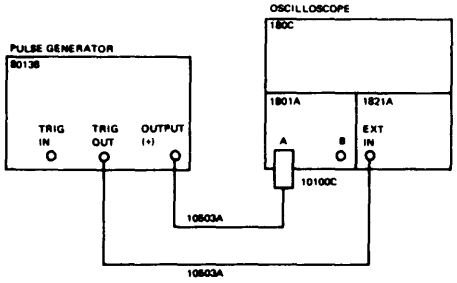

INITITAL CONTROL SETTINGS

PULSE PERIOD 2	1µ–.1m
VERNIER 3	CW
PULSE DOUBLE/NORM 4	NORM
PULSE DE LAY 5	35n–1µ
VERNIER 6	CCW
PULSE WIDTH 7	10n–1µ
VERNIER 8	CW
AMPLITUDE 9	5.0-2.0
VERNIER 10	CW
OFFSET vernier 11	–
OFFSET switch 12	OFF
AMPLITUDE 13	5.0-2.0
VERNIER 14	CW
OFFSET vernier 15	–
OFFSET switch 16	OFF
NORM/COMPL 19	NORM
INT LOAD 20	IN
EXT WIDTH/NORM/RZ 25	NORM

STEP	INSTRUCTIONS	RESULTS
1	Check the pulse width for both VERNIER 8 extremities of each range setting of the PULSE WIDTH switch 7 as follows:	

PULSE WIDTH 7	VERNIER 8	PULSE PERIOD 2	
10n–1µ	CW	1µ–.1m	> 1µs
1µ–.1m	CW	.1m–10m	> .1ms
1µ–.1m	CCW	1µ–.1m	< 1µs
.1m–10m	CW	10m–1	> 10ms
.1m–10m	CCW	.1m–10m	< .1ms
10m–1	CW	EXT+(press MAN 1)	> 1s
10m–1	CCW	10m–1	> 10ms

Table 5-5. Performance Test: Minimum Pulse Width

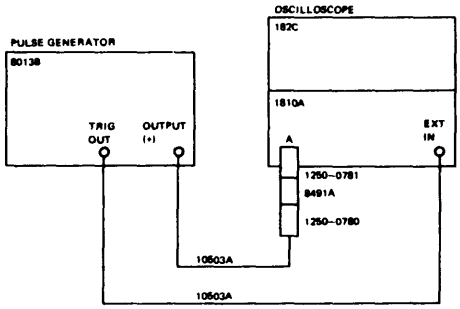

INITITAL CONTROL SETTINGS

PULSE PERIOD 2	20ns–1µ
VERNIER 3	Center
PULSE DOUBLE/NORM 4	NORM
PULSE DE LAY 5	35n–1µ
VERNIER 6	CCW
PULSE WIDTH 7	10n–1µ
VERNIER 8	CCW
AMPLITUDE 9	5.0-2.0
VERNIER 10	CW
OFFSET vernier 11	–
OFFSET switch 12	OFF
AMPLITUDE 13	5.0-2.0
VERNIER 14	CW
OFFSET vernier 15	–
OFFSET switch 16	OFF
NORM/COMPL 19	NORM
INT LOAD 20	IN
EXT WIDTH/NORM/RZ 25	NOBM

STEP	INSTRUCTIONS	RESULTS
1	Measure the pulse width.	<10ns

Table 5-6. Performance Test: Pulse Period Jitter

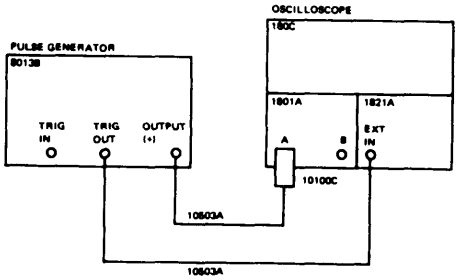

INITITAL CONTROL SETTINGS

PULSE PERIOD 2	1μ–.1m
VERNIER 3	see step 2
PULSE DOUBLE/NORM 4	NORM
PULSE DE LAY 5	35n–1μ
VERNIER 6	CCW
PULSE WIDTH 7	1μ–.1m
VERNIER 8	CCW
AMPLITUDE 9	5.0-2.0
VERNIER 10	CW
OFFSET vernier 11	–
OFFSET switch 12	OFF
AMPLITUDE 13	5.0-2.0
VERNIER 14	CW
OFFSET vernier 15	–
OFFSET switch 16	OFF
NORM/COMPL 19	NORM
INT LOAD 20	IN
EXT WIDTH/NORM/RZ 25	NORM

STEP	INSTRUCTIONS	RESULTS
1	Set the 1821A controls as follows:	
	Main Sweep — 0.1ms/div	
	Delayed Sweep — 0.1μs/div	
	Sweep Mode — Norm.	
	Delay Trigger — Auto	
	CM Delay — 2.0	
2	Adjust pulse period VERNIER 3 to obtain 0.1ms pulse period on display.	
3	Switch Mode switch on 1821A to MIXED.	
4	Adjust 1821A Delay (Div) vernier until intensified spot coincides with leading edge of second pulse on display.	
5	Measure pulse period jitter:	<.1%

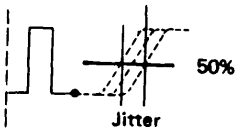

Table 5–7, Performance Test: Pulse Delay Jitter

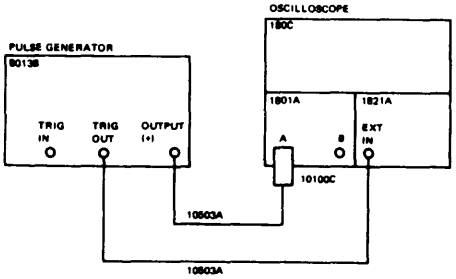

INITIAL CONTROL SETTINGS

PULSE PERIOD 2	.1m–10m
VERNIER 3	CW
PULSE DOUBLE/NORM 4	NORM
PLSE DELAY 5	1μ–.1m
VERNIER 6	CW
PULSE WIDTH 7	1μ–.1m
VERNIER 8	CCW
AMPLITUDE 9	5.0-2.0
VERNIER 10	CW
OFSET vernier 11	–
OFFSET switch 12	OFF
AMPLITUDE 13	5.0-2.0
VENIER 14	CW
OFFSET vernier 15	–
OFFSET switch 16	OFF
NORM/COMPL 19	NORM
INT LOAD 20	IN
EXT WIDTH/NORM/RZ 25	NORM

STEP	INSTRUCTIONS
1	Set the 1821A controls as follows:
	Main Sweep — 0.1mS/div
	Delayed Sweep — 0.1μS/div
	Sweep Mode — Norm.
	Delayed Trigger — Auto.
	CM Delay — 10.0
2	Adjust pulse period VERNIER 3 to obtain 0.4mS pulse period on display.
3	Adjust pulse delay VERNIER 6 to obtain 0.1mS pulse delay,
4	Switch Mode switch on 1821A to MIXED.
5	Adjust 1821A Delay (Div) vernier until intensified spot coincides with leading edge of first pulse.
6	Display should be:
7	Measure pulse delay jitter: <.1%

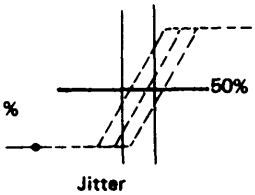

Table 5–8. Performance Test: Pulse Width Jitter

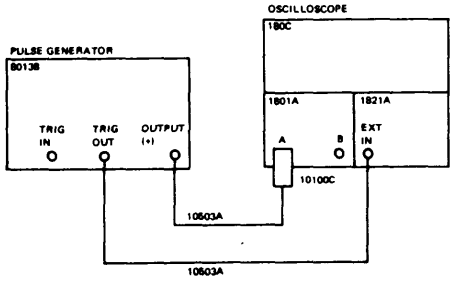

INITITAL CONTROL SETTINGS

PULSE PERIOD 2	.1m–10m
VERNIER 3	CW
PULSDE DOUBLE/NORM 4	NORM
PULSE DELAY 5	35n–1μ
VERNIER 6	CCW
PULSE WIDTH 7	1μ–.1m
VERNIER 8	CW
AMPLITUDE 9	5.0-2.0
VERNIER 10	CW
OFFSET vernier 11	–
OFFSET switch 12	OFF
AMPLITUDE 13	5.0-2.0
VERNIER 14	CW
OFFSET vernier 15	–
OFFSET switch 16	OFF
NORM/COMPL 19	NORM
INT LOAD 20	IN
EXT WIDTH/NORM/RZ 25	NORM

STEP INSTRUCTIONS

1 Set 1821A controls es follows:

Main Sweep	0.1mS/div
Delayed Sweep	0.1uS/div
Sweep Mode	Norm.
Delayed Trigger	Auto.
CM Delay	10

2 Adjust pulse period VERNIER 3 to obtain 0.4ms pulse period on display.

3 Adjust pulse width VERNIER 8 to obtain 0.1ms pulse width.

4 Switch Mode on 1821A to MIXED.

5 Adjust 1821A Delay (Div) vernier until intensified spot coincides with trailing edge of first pulse.

6 Display should be:

7 Measure pulse width jitter:

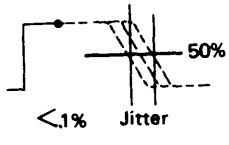

Table 5–9. Performance Test: Square Wave

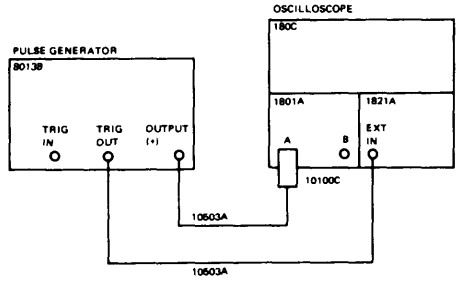

INITITAL CONTROL SETTINGS

PULSE PERIOD 2	20n–1μ
VERNIER 3	CCW
PULSE DOUBLE/NORM 4	NORM
PULSE DELAY 5	35n–1μ
VERNIER 6	CW
PULSE WIDTH 7	SQUARE WAVE
VERNIER 8	CW
AMPLITUDE 9	5.0-2.0
VERNIER 10	CW
OFFSET vernier 11	–
OFFSET switch 12	OFF
AMPLITUDE 13	5.0-2.0
VERNIER 14	CW
OFFSET vernier 15	–
OFFSET switch 16	OFF
NORM/COMPL 19	NORM
INT LOAD 20	IN
EXT WIDTH/NORM/RZ 25	NORM

STEP INSTRUCTIONS RESULTS

1 For each setting of the PULSE PERIOD switch 2, given in the table below, turn the VERNIER 3 slowly from fully CCW to fully CW and check that the PULSE DELAY 5 and VERNIER 6 controls have no effect on the position of the displayed pulse.

PULSE PERIOD 2	VERNIER 3	Symmetry
20n – 1μ	CCW to CW	50% ± 15%
1μ – .1m	CCW to CW	50% ± 5%
.1m – 10m	CCW to CW	50% ± 5%
10m – 1	CCW to CW	50% ± 5%

2 For all settings of the pulse period control check that the pulse width equals pulse OFF time within the above limits.

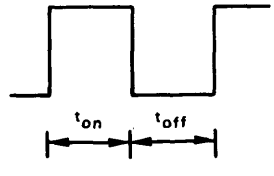

Table 5–10. Performance Test: Duty Cycle

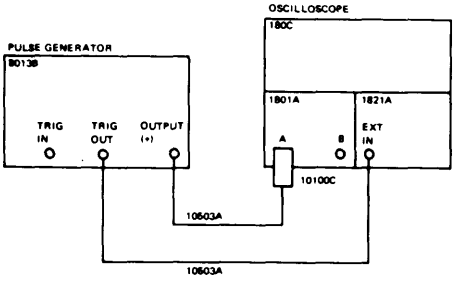

INITITAL CONTROL SETTINGS

PULSE PERIOD 2	1μ–.1m
VERNIER 3	CW
PULSE DOUBLE/NORM 4	NORM
PULSE DELAY 5	35n–1μ
VERNIER 6	CCW
PULSE WIDTH 7	1μ–.1m
VERNIER 8	CCW
AMPLITUDE 9	5.0-2.0
VERNIER 10	CW
OFFSET vernier 11	–
OFFSET switch 12	OFF
AMPLITUDE 13	5.0-2.0
VERNIER 14	CW
OFFSET vernier 15	–
OFFSET switch 16	OFF
NORM/COMPL 19	NORM
INT LOAD 20	IN
EXT WIDTH/NORM/RZ 25	NORM

STEP	INSTRUCTIONS	RESULTS
1	For each set of control settings given in table below, display the output pulse so that it occupies half of the display (see diagram below).	

Starting with the pulse period VERNIER 3 fully CW turn VERNIER 3 slowly CCW until the trailing edge of the pulse begins to move or the pulse divides. When this happens measure the pulse period (Tp) and use in the formula:

$$\text{Duty Cycle}_{\text{Max}} = \frac{\text{Pulse Width (Tw)}}{\text{Pulse Period (Tp)}} \times 100\%$$

PULSE PERIOD 2	PULSE WIDTH 7	VERNIER 8	
1μ–.1m	1μ–.1m	Adjust for 1μs	> 75%
.1m–10m	.1m–10m	Adjust for 0.1ms	> 75%
10m–1	10m–1	Adjust for 10ms	> 75%

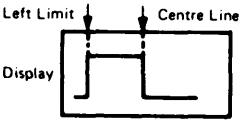

Table 5–11. Performance Test: Manual Operation

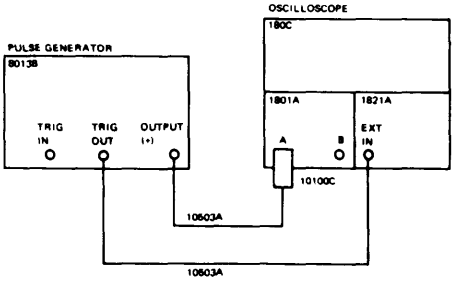

INITIAL CONTROL SETTINGS

PULSE PERIOD 2	EXT(+)
VERNIER 3	–
PULSE DOUBLE/NORM 4	NORM
PULSE DE LAY 5	35n–1μ
VERNIER 6	CCW
PULSE WIDTH 7	1μ–.1m
VERNIER 8	CW
AMPLITUDE 9	5.0-2.0
VERNIER 10	CW
OFFSET vernier 11	–
OFFSET switch 12	OFF
AMPLITUDE 13	5.0-2.0
VERNIER 14	CW
OFFSET vernier 15	–
OFFSET switch 16	OFF
NORM/COMPL 19	NORM
INT LOAD 20	IN
EXT WIDTH/NORM/RZ 25	NORM

STEP	INSTRUCTIONS
1	Press MAN button 1

Only one output pules must occur when the button is pressed, no pulse must occur when the button is released.

Table 5-12. Performance Test: External Width Operation

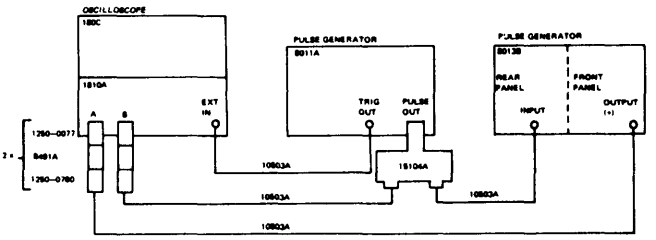

INITIAL CONTROL SETTINGS

PULSE PERIOD 2	–
VERNIER 3	–
PULSE DOUBLE/NORM 4	–
PULSE DE LAY 5	–
VERNIER 6	–
PULSE WIDTH 7	–
VERNIER 8	–
AMPLITUDE 9	5.0-2.0
VERNIER 10	CW
OFFSET vernier 11	–
OFFSET switch 12	OFF
AMPLITUDE 13	5.0-2.0
VERNIER 14	CW
OFFSET vernier 15	–
OFFSET switch 16	OFF
NORM/COMPL 19	NORM
INT LOAD 20	IN
EXT WIDTH/NORM/RZ 25	EXT WIDTH

STEP INSTRUCTIONS

1 Apply external signals to INPUT 26

2 Note that the leading and trailing edges of the output pulses are delayed on the input pulses by a fixed delay of approx. 30ns. This is the propagation delay of the 8013B internal circuitry.

RESULT

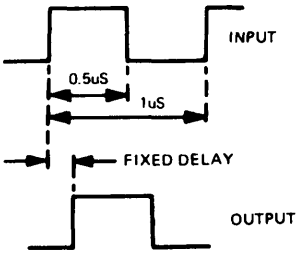

Table 5-13. Performance Test: RZ Operation

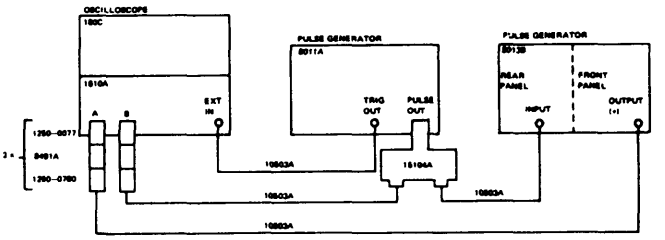

INITIAL CONTROL SETTINGS

PULSE PERIOD 2	EXT(+)
VERNIER 3	–
PULSE DOUBLE/NORM 4	NORM
PULSE DELAY 5	35n–1μ
VERNIER 6	CCW
PULSE WIDTH 7	10n–1μ
VERNIER 8	Center
AMPLITUDE 9	5.0-2.0
VERNIER 10	CCW
OFFSET vernier 11	–
OFFSET switch 12	OFF
AMPLITUDE 13	5.0-2.0
VERNIER 14	CCW
OFFSET vernier 15	–
OFFSET switch 16	OFF
NORM/COMPL 19	NORM
INT LOAD 20	IN
EXT WIDTH/NORM/RZ 25	RZ

STEP INSTRUCTIONS RESULTS

1 Apply RZ pulses to INPUT 26

2 **Output should be:**

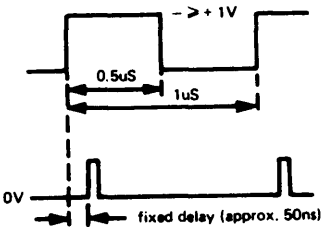

3 Check that pulse delay VERNIER 6 and pulse width VERNIER 8 vary the pulse delay and pulse width.

Table 5-14. Performance Test: Gate Operation

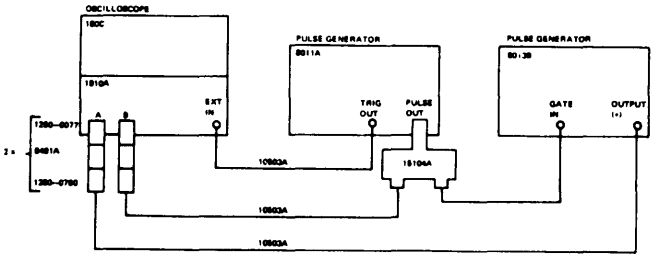

INITIAL CONTROL SETTINGS

PULSE PERIOD 1	20n–1u
VERNIER 2	Center
PULSE DE LAY 6	35n–1u
VERNIER 7	CCW
PULSE WIDTH 10	10n–1u
VERNIER 11	50% duty cycle
AMPLITUDE 3	5.0-2.0
VERNIER 8	CCW
AMPLITUDE 4	5.0-2.0
VERNIER 9	CCW
OFFSET 13	OFF
OFFSET 14	OFF
Mode selector 22	NORM

STEP INSTRUCTIONS

1 Apply gate pulse to GATE INPUT 22

2 Check that output pulses et OUTPUT 17 only occur during ON time of gate pulse: Turn pulse period VERNIER 3 slowly CW and check gate operation for all pulse periods.

3 Check that leading edge of first trigger output pulse (TRIGGER OUTPUT 21) occurs a short time (owing to fixed delay) after the leading edge of the gate pulse.

4 Check that last pulse width is correct even when gate pulse trailing edge occurs just before or during the last pulse (owing to the effect of the fixed delay of approx. 40ns).

RESULTS

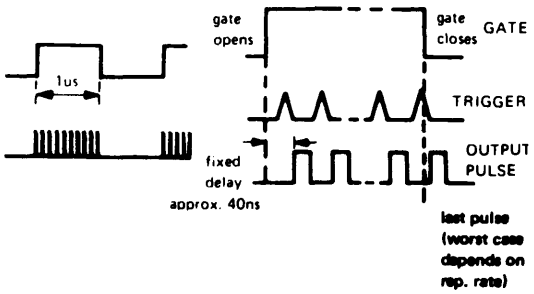

Table 5–15. Performance Test: External Trigger Operation

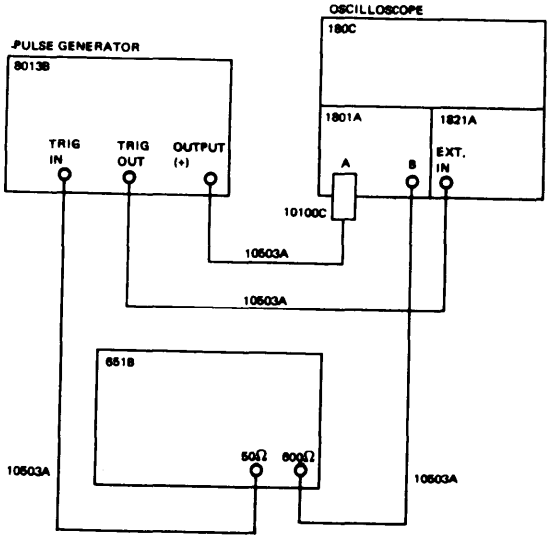

INITIAL CONTROL SETTINGS

PULSE PERIOD 2	EXT(+)
VERNIER 3	–
PULSE DOUBLE/NORM 4	NORM
PULSE DE LAY 5	35n–1μ
VERNIER 6	CCW
PULSE WIDTH 7	.1m–10m
VERNIER 8	Center
AMPLITUDE 9	5.0-2.0
VERNIER 10	CW
OFFSET vernier 11	–
OFFSET switch 12	OFF
AMPLITUDE 13	5.0-2.0
VERNIER 14	CW
OFFSET vernier 15	–
OFFSET switch 16	OFF
NORM/COMPL 19	NORM
INT LOAD 20	IN
EXT WIDTH/NORM/RZ 25	NORM

STEP	INSTRUCTIONS
1	Set the 651B controls as follows: Range X100 Vernier 2.5 Attenuator +10dB (1.0V) Amplitude 0.61V RMS
2	Center the waveforms on the oscilloscope display end check that the leading edge of the output pulse occurs during positive slope of the sinewave.
3	Set PULSE PERIOD 2 to EXT (–). The leading edge of the output pulse should occur during the negative slope of the sinewave.

Table 5-16. Performance Test: High Frequency Trigger Operation

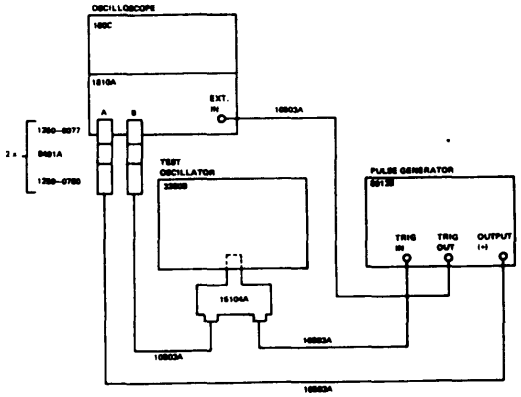

INITIAL CONTROL SETTINGS

PULSE PERIOD 2	EXT(+)
VERNIER 3	–
PULSE DOUBLE/NORM 4	NORM
PULSE DELAY 5	35n–1μ
VERNIER 6	CCW
PULSE WIDTH 7	10n–1μ
VERNIER 8	CCW
AMPLITUDE 9	5.0-2.0
VERNIER 10	CW
OFFSET vernier 11	–
OFFSET switch 12	OFF
AMPLITUDE 13	5.0-2.0
VERNIER 14	CW
OFFSET vernier 15	–
OFFSET switch 16	OFF
NORM/COMPL 19	NORM
INT LOAD 20	IN
EXT WIDTH/NORM/RZ 25	NORM

STEP INSTRUCTIONS

1 Apply a sinewave with a repetition rate of 50 MHz end amplitude of 1.7V p-p. Check that repetition rate of output is equal to repetition rate of input i.e. 50 MHz.

2 Set PULSE PERIOD 2 to EXT -.

3 Repeat step 1.

Note that there is a delay of 25ns ± 8ns between the trigger input end output.

Table 5-17. Performance Test: Trigger Output

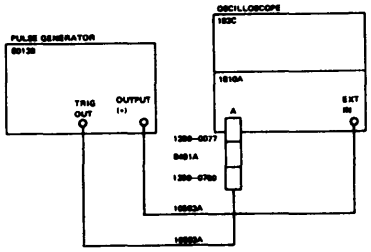

INITIAL CONTROL SETTINGS

PULSE PERIOD 2	20n–1μ
VERNIER 3	CCW
PULSE DOUBLE/NORM 4	NORM
PULSE DELAY 5	35n–1μ
VERNIER 6	CCW
PULSE WIDTH 7	10n–1μ
VERNIER 8	CCW
AMPLITUDE 9	2.0-1.0
VERNIER 10	CW
OFFSET vernier 11	–
OFFSET switch 12	OFF
AMPLITUDE 13	2.0-1.0
VERNIER 14	CW
OFFSET vernier 15	–
OFFSET switch 16	OFF
NORM/COMPL 19	NORM
INT LOAD 20	IN
EXT WIDTH/NORM/RZ 25	NORM

STEP	INSTRUCTIONS	RESULTS
1	Measure amplitude of trigger output pulse (TRIGGER OUTPUT)	>1.0V
2	Measure width of trigger output pulse at 50% of amplitude:	16ns ± 10ns
3	Turn VERNIER 3 slowly from CCW to CW, the amplitude and width limits given must be true for the whole range.	
4	Switch PULSE PERIOD 2 to range 1μ-.1m and repeat steps 1 to 3.	
5	Switch PULSE WIDTH 7 to SQUARE WAVE and repeat steps 1 to 3.	

Table 5–18. Performance Test: Preshoot, Overshoot and Ringing

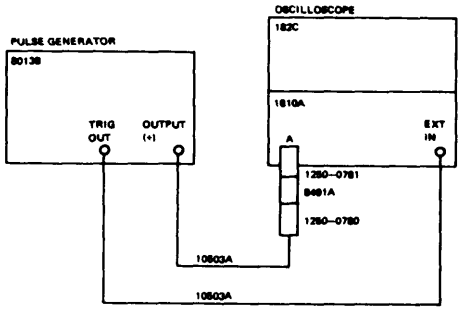

INITIAL CONTROL SETTINGS

PULSE PERIOD 2	20n–1μ
VERNIER 3	CCW
PULSE DOUBLE/NORM 4	NORM
PULSE DE LAY 5	35n–1μ
VERNIER 6	CCW
PULSE WIDTH 7	SQUARE WAVE
VERNIER 8	–
AMPLITUDE 9	5.0-2.0
VERNIER 10	CW
OFFSET vernier 11	–
OFFSET switch 12	OFF
AMPLITUDE 13	5.0-2.0
VERNIER 14	CW
OFFSET vernier 15	–
OFFSET switch 16	OFF
NORM/COMPL 19	NORM
INT LOAD 20	IN
EXT WIDTH/NORM/RZ 25	NORM

STEP INSTRUCTIONS

1 With reference to the diagram below, measure preshoot, overshoot and ringing in turn to ensure that these are <5% of the pulse amplitude.

2 Disconnect the oscilloscope input from the 8013B and reconnect to the negative output connector 18 . Repeat step 1.

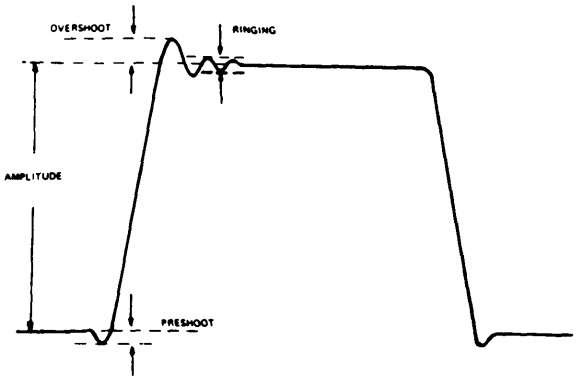

Table 5-19. Performance Test: Amplitude

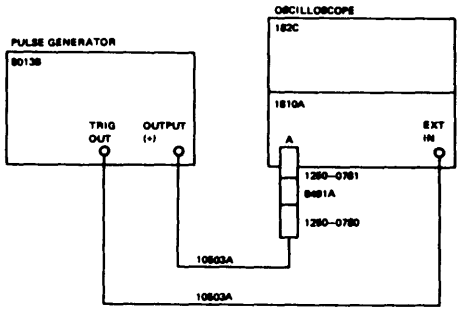

INITIAL CONTROL SETTINGS

PULSE PERIOD 2	20n–1μ
VERNIER 3	CW
PULSE DOUBLE/NORM 4	NORM
PULSE DELAY 5	35n–1μ
VERNIER 6	CCW
PULSE WIDTH 7	10n–1μ
VERNIER 8	Center
AMPLITUDE 9	5.0-2.0
VERNIER 10	CW
OFFSET vernier 11	–
OFFSET switch 12	OFF
AMPLITUDE 13	5.0-2.0
VERNIER 14	CW
OFFSET vernier 15	–
OFFSET switch 16	OFF
NORM/COMPL 19	NORM
INT LOAD 20	IN
EXT WIDTH/NORM/RZ 25	NORM

STEP INSTRUCTIONS RESULTS

1 Check the amplitude for both VERNIER 10 and 14 extremities of each setting of the AMPLITUDE switch 9 and 13 as follows:

AMPLITUDE 9 13	VERNIER 10 14	INT LOAD IN	INT LOAD OUT
5.0-2.0	CW	≥5.0	≥10V
5.0-2.0	CCW	≤2.0	≤4V
2.0-1.0	CW	≥2.0	≥4V
2.0-1.0	CCW	≤1.0	≤2V
1.0-.05	CW	≥1.0	≥2V
1.0-0.5	CCW	≤0.5	≤1V
0.5-0.2	CW	≥0.5	≥1V
0.5-0.2	CCW	≤0.2	≤0.4V

Table 5–20. Performance Test: DC Offset

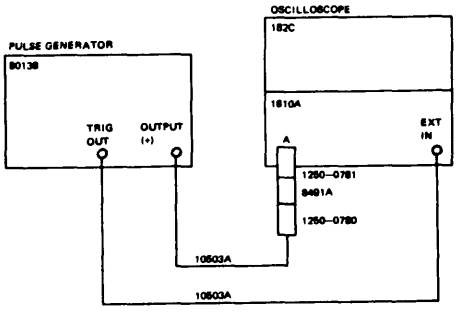

INITITAL CONTROL SETTINGS

PULSE PERIOD **2**	20n-1µ
VERNIER **3**	CW
PULSE DOUBLE/NORM **4**	NORM
PULSE DELAY **5**	35n-1µ
VERNIER **6**	CCW
PULSE WIDTH **7**	10n-1µ
VERNIER **8**	Center
AMPLITUDE **9**	5.0-2.0
VERNIER **10**	CW
OFFSET vernier **11**	
OFFSET switch **12**	OFF
AMPLITUDE **13**	5.0-2.0
VERNIER **14**	CW
OFFSET vernier **15**	
OFFSET switch **16**	OFF
NORM/COMPL **19**	NORM
INT LOAD **20**	IN
EXT WIDTH/NORM/RZ **25**	NORM

STEP	INSTRUCTIONS	RESULTS
1	Disconnect 8013B from oscilloscope.	
2	Center the oscilloscope display trace.	
3	Reconnect 8013B to oscilloscope.	
4	Set OFFSET **16** to ON.	
5	Turn VERNIER **15** fully CCW.	
6	Measure negative offset:	≥2.5 v
7	Turn VERNIER **15** fully CW.	
8	Measure positive offset:	≥2.5 v
9	Turn OFFSET **16** to OFF.	
10	Output pulse baseline should be at center of oscilloscope display.	
11	Connect the oscilloscope input to the 8013B negative output connector **18.**	
12	Repeat steps 1 to 8 for OFFSET **12** and VERNIER **11** but with the following limits:	
	VERNIER **11** fully CCW	≥-2. 5V
	VERNIER **11** fully CW	≥+2.5V

Table 5-21. Internal Checks and Adjustments - Power Supply

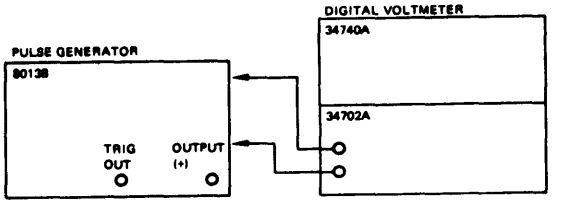

INITITAL CONTROL SETTINGS 8013B:

PULSE PERIOD **2**	EXT+
VERNIER **3**	CW
PULSE DOUBLE/NORMAL 4	NORM
PULSE DELAY **5**	1µ-0.1m
VERNIER **6**	CCW
PULSE WIDTH **7**	1µ-0.1m
VERNIER **8**	CCW
AMPLITUDE **9**	5.0-2,0
VERNIER **10**	CW
OFFSET switch **12**	OFF
AMPLITUDE **13**	5.0-2.0
VERNIER **14**	CW
OFFSET **16**	OFF
NORM/COMPL **19**	NORM
INT LOAD **20**	IN
EXT WIDTH/NORM/RZ **25**	NORM

3444A:

FUNCTION switch	VOLTS
RANGE switch	100V

STEP	INSTRUCTION
1	Connect the DVM between the +17VTP on board A6 and GND. Adjust A6R102 for Ø17V ± 100mV.
2	Connect the DVM between the – 17V Tp on board A6 and GND. Adjust A6R106 for –17V ± l00mV.

BOARD A6

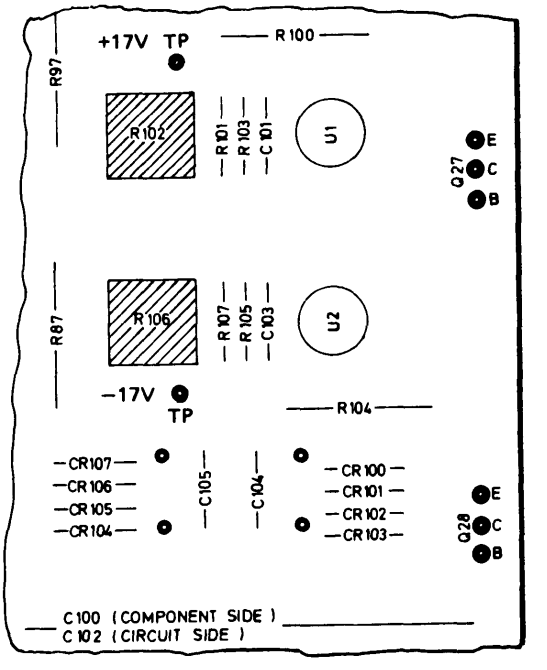

Table 5--22. internal Checks and Adjustments-
Repetition Rate

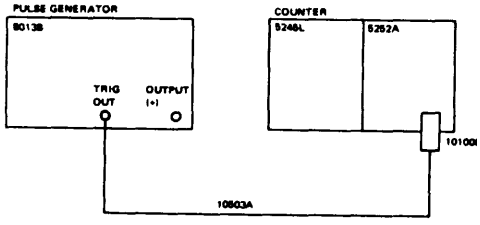

INITIAL CONTROL SETTINGS 80138:

PULSE PERIOD 2	20n-1µ
VERNIER 3	CCW
PULSE DOUBLE/NORMAL 4	NORM
PULSE DELAY **5**	35n-1µ
VERNIER **6**	CCW
PULSE WIDTH **7**	10n-1µ
VERNIER **8**	CCW
AMPLITUDE **9**	5.0-2,0
VERNIER **10**	CW
OFFSET switch **12**	OFF
AMPLITUDE **13**	5.0-2.0
VERNIER **14**	CW
OFFSET **16**	OFF
NORM/COMPL **19**	NORM
INT LOAD **20**	IN
EXT WIDTH/NORM/RZ **25**	NORM
5252A :	
MAX COUNT RATE	100MC
5245L:	
SENSITIVITY	0.1V
SIGNAL INPUT	AC
TIME BASE	O.1m
FUNCTION	FREQUENCY

STEP INSTRUCTION

1 Adjust capacitor A5C24 for a nominal frequency of 51.5 MHz. Limits >51 MHz <52 MHz.

BOARD A5

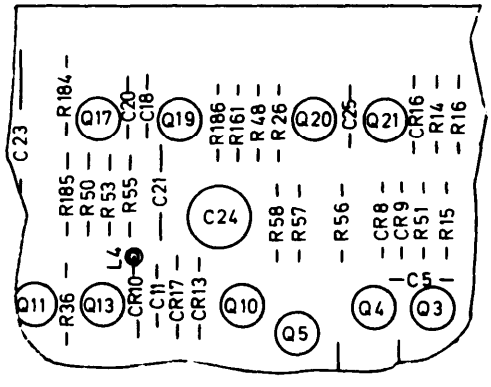

Table 5-23. internal Checks and Adjustments-Delay and Width Timing

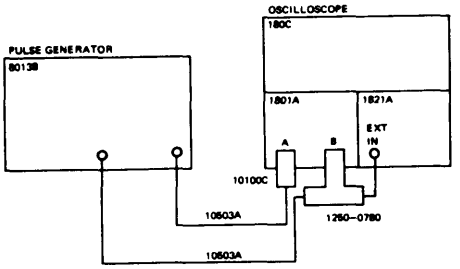

INITITAL CONTROL SETTINGS 8013B:

PuLSE PERIOD **2**	1µ-0.1m
VERNIER **3**	CW
PULSE DOUBLE/NORMAL **4**	NORM
PULSE DELAY **5**	35n-1µ
VERNIER **6**	CW
PULSE WIDTH **7**	10n-1µ
VERNIER **8**	CW
AMPLITUDE **9**	5.0-2.0
VERNIER **10**	CW
OFFSET switch **12**	OFF
AMPLITUDE **13**	5.0-2.0
VERNIER **14**	CW
OFFSET **16**	OFF
NORM/COMPL **19**	NORM
INT LOAD **20**	IN
EXT WIDTH/NORM/RZ **25**	NORM

1. PULSE DELAY

STEP INSTRUCTION

1 Set up the oscilloscope as follows:

1801A:

DISPLAY	ALT, channel B
VOLTS/DIV	2V
POLARITY	+ UP, DC INPUT

1821A:

TIME/DIV	0.2µs

2 Set the leading edge of the trigger output pulse on the first vertical line on the screen. Measure the time to the leading edge of the output pulse. Adjust A5C35 for a nominal 1.2µs. Limits >1.µs < 1.35µs.

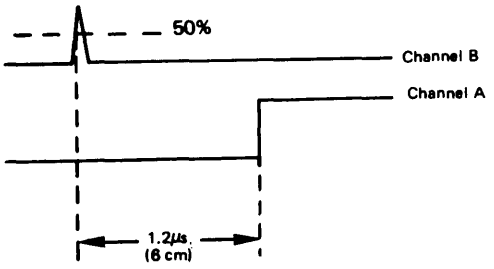

2. PULSE WIDTH

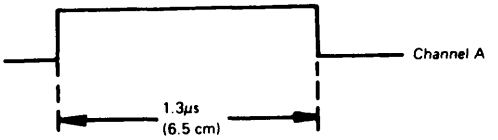

STEP INSTRUCTION

1 Set the oscilloscope DISPLAY switch to CHANNEL A only.

2 Set the pulse leading edge on the first line of the screen. Adjust A5C45 for a nominal 1.3µs. Limits> 1.1/µs< 1.5µs. (minimum width with vernier 8 in CCW position is < 10ns using a sampling oscilloscope).

BOARD A5

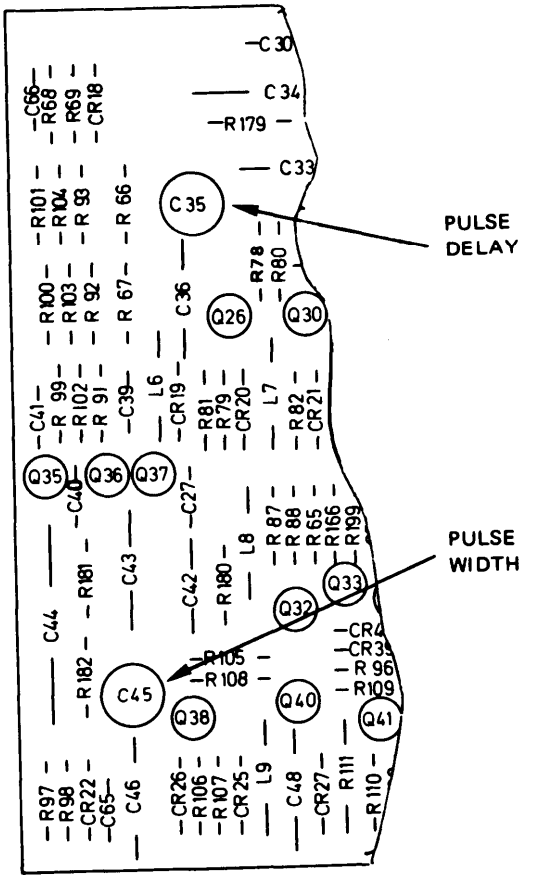

Table 5–24. internal Checks and Adjustments–Pulse Perturbation

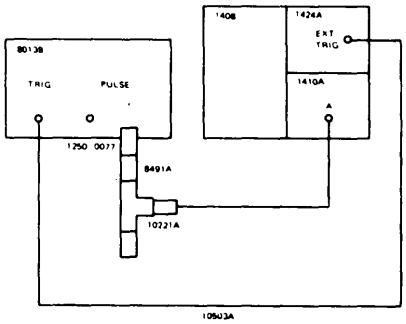

INITITAL CONTROL SETTINGS 80136:

PULSE PERIOD **2**	20n-1µ
VERNIER **3**	see step 2
PULSE DOUBLE/NORMAL **4**	NORM
PULSE DE LAY **5**	35n–1µ
VERNIER **6**	CCW
PULSE WIDTH **7**	10n–1µ
VERNIER **8**	CCW
AMPLITUDE **9**	5.0-2.0
VERNIER **10**	CW
OFFSET switch **12**	OFF
AMPLITUDE **13**	5,0-2.0
VERNIER **14**	CW
OFFSET **16**	OFF
NORM/COMPL **19**	NORM
INT LOAD **20**	IN
EXT WIDTH/NORM/RZ **25**	NORM

STEP	INSTRUCTION
1	Adjust the amplitude vernier 14 for the + channel to obtain a 8 cm deflection.
2	Adjust the period vernier 3 to display two periods on the screen.
3	Measure the pulse transition times; they should be < 3.5ns.
4	Measure the preshoot, overshoot and ringing; they should both be <5% of pulse amplitude.
5	Adjust A6C25 and A6R25 for the best compromise between overshoot and rise time
6	Disconnect the scope from the positive pulse output and connect it to the negative pulse output.
7	Repeat steps 1 to 5 for the negative channel and adjust the pulse shape using A6C65 and A6R65.

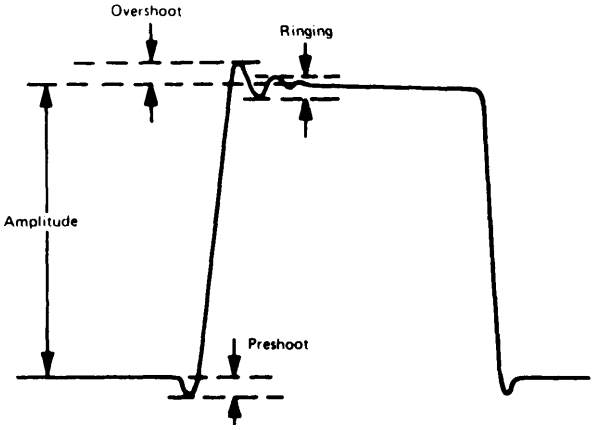

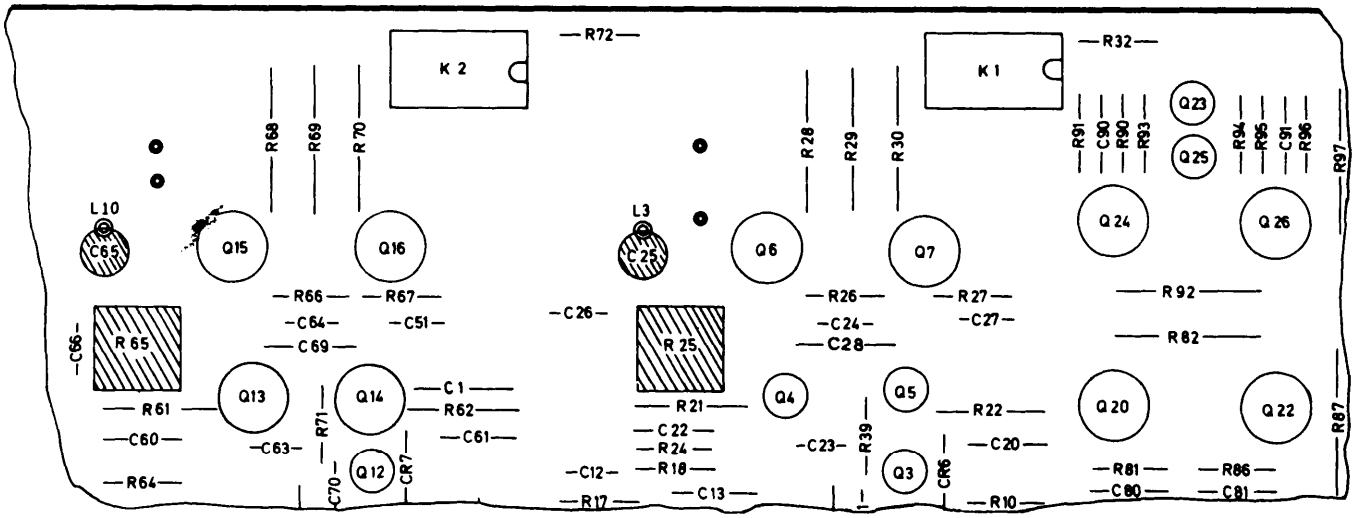

Table 5-25. internal Checks and Adjustments – Double Pulse

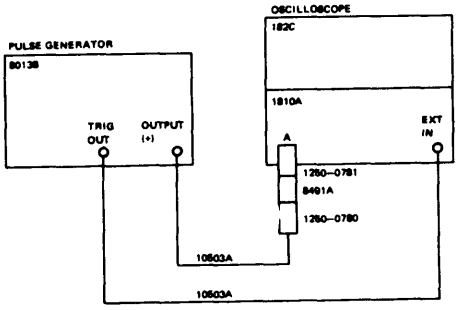

INITIAL CONTROL SETTINGS

PULSE PERIOD **2**	20n-1µ
VERNIER **3**	center
PULSE DOUBLE/NORM **4**	NORM
PULSE DELAY **5**	35n–1µ
VERNIER **6**	CCW
PULSE WIDTH **7**	10n–1µ
VERNIER **8**	CCW
AMPLITUDE **9**	5.0-2.0
VERNIER **10**	CW
OFFSET vernier **11**	–
OFFSET switch **12**	OFF
AMPLITUDE **13**	5.0-2.0
VERNIER **14**	CW
OFFSET vernier **15**	
OFFSET switch **16**	OFF
NORM/COMPL **19**	NORM
INT LOAD **20**	IN
EXT WIDTH/NORM/RZ **25**	NORM

STEP INSTRUCTION

1 Position the output pulse on the oscilloscope screen.

2 Adjust A5C35 for 9.5ns pulse width at 50% of pulse amplitude.

3 Set the 8013B pulse double/norm switch to double.

4 Adjust A5R188 to produce a first (undelayed) pulse of ≥20ns between the pulse leading edges.

5 Adjust A5R188 to produce a first (undelayed) pulse of the same width as the delayed pulse (9.5ns – see step 2)

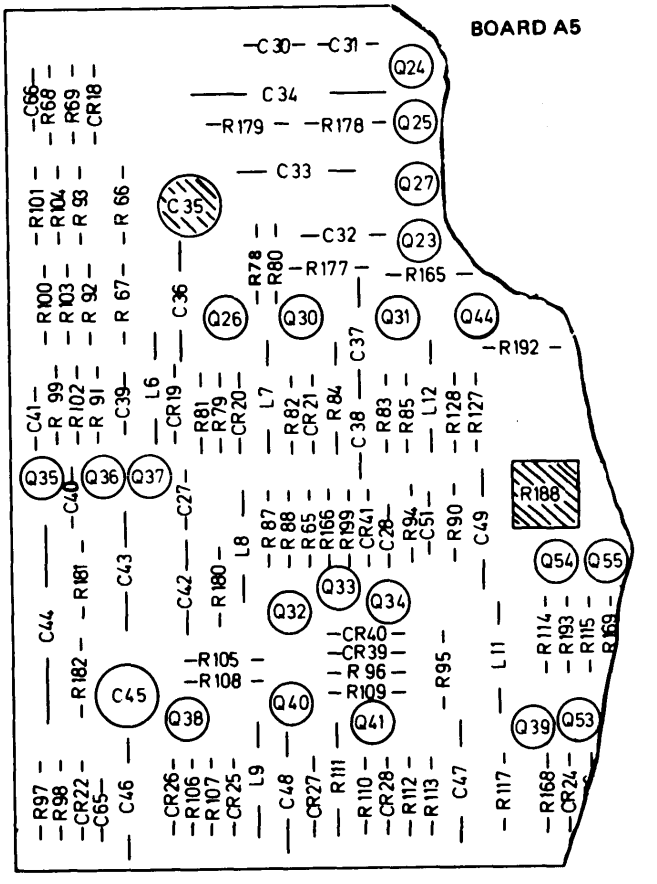

Table 5-26. Service Product Safety Check

STEP	INSTRUCTION
1	Visually inspect interior of 80136 for any signal of abnormal internally generated heat, such as discolored printed circuit boards or components, damaged insulation, or evidence of arcing, Determine and remedy cause of any such condition if the product is in warranty, Disconnect power cord from line.
2	Check resistance from 80136 cabinet to ground pin on power plug with suitable ohmmeter. The reading must be less than one ohm. Flex the power cord while making this measurement to detect any intermittent discontinuity. Check internal ground connections on boards and frame. Also check resistance of any front or rear panel ground terminals marked ⏚.
3	Check resistance from 80136 cabinet to line and neutral (tied together) with the power switch on and the power source disconnected. The minimum acceptable resistance is two megohms. Replace any component which results in a failure or refer to production Memo or service Note issued by product division for alternate action.
4	Check the line fuses to verify that the correct values are installed.
5	Check that the line voltage selector is sat to the customers requirements.
6	Check that all coaxial cables and wires inside the 80136 are properly connected. Check that all boards are properly connected and that there is good thermal contact between the poor supply transistors and the rear panel heat sink.
7	Inform the responsible product division of any repeated failures in the above tests or any other safety features.

SECTION 6

DIAGRAMS AND REPLACEABLE PARTS

6-1 INTRODUCTION

6–2 This section contains the circuits, component location diagrams and the lists of replaceable parts. Waveforms shown with the circuits are included for guidance only and failure to observe identical results should not be automatically taken as indication of a fault.

6-3 ORDERING INFORMATION

6-4 General

6–5 The replaceable parts tables give parts in alphanumerical order of their reference designators and indicate the description and HP stock number of each part, together with any applicable notes.

6-6 To order a replacement part, address order or enquiry either to your authorized Hewlett-Packard sales representative or to:

CUSTOMER SERVICE
Hewlett-Packard Company,
333 Logue Avenue,
Mountain View, California 94040

or, in Western Europe, to:

Hewlett-Packard (Schweiz) SA
Rue du Bois-du-Lan 7
1217 Meyrin 2
Geneva

6–7 Specify the following information for each part:

a) Model and complete serial number of instrument.

b) Hewlett-Packard stock number.

c) Circuit reference stock number.

d) Description.

To order a part not listed, give a complete description of the part and include its function and location.

6-6 Refer to Table 6-8 for part number to NSN cross-reference.

Table 6–1. Reference Designators

A	= assembly	U	= micro-circuit
B	= motor	P	= plug
BT	= battery	Q	= transistor
C	= capacitor	R	= resistor
CP	= coupler	RT	= thermistor
CR	= diode	S	= switch
DL	= delay line	T	= transformer
DS	= lamp	TB	= terminal board
F	= fuse	V	= vacuum, tube, neon bulb, photocell, etc.
FL	= filter	VR	= voltage regulator
HR	= heater	W	= cable
J	= jack	X	= socket
K	= relay	Y	= crystal
L	= inductor	TP	= test point
M	= meter		

Table 6-2 Diagram Notes

Unless otherwise stated:

capacitance in microfarads
inductance in microhenries
resistance in ohms

Wiring colour code:

0 black
1 brown
2 red
3 orange
4 yellow
5 green
6 blue
7 violet
8 grey
9 white

Encloses front panel nomenclature

U1 — Microcirciut

Screwdriver Adjustment

Primary Signal Path

931
931 — Indicates wire colour using resistor colour code.

Coaxial cable

Chassis/Ground

P/O — Part Of

F.S. — Factory Selected

Zener Diode

2 X5 — Printed circuit board edge connector and socket (X5) with pin number (2).

Single pin or soldered connection.

Coaxial Connector
Bolt down cable bush

Coaxial Connector
bulkhead mounted.

K1 — Relay

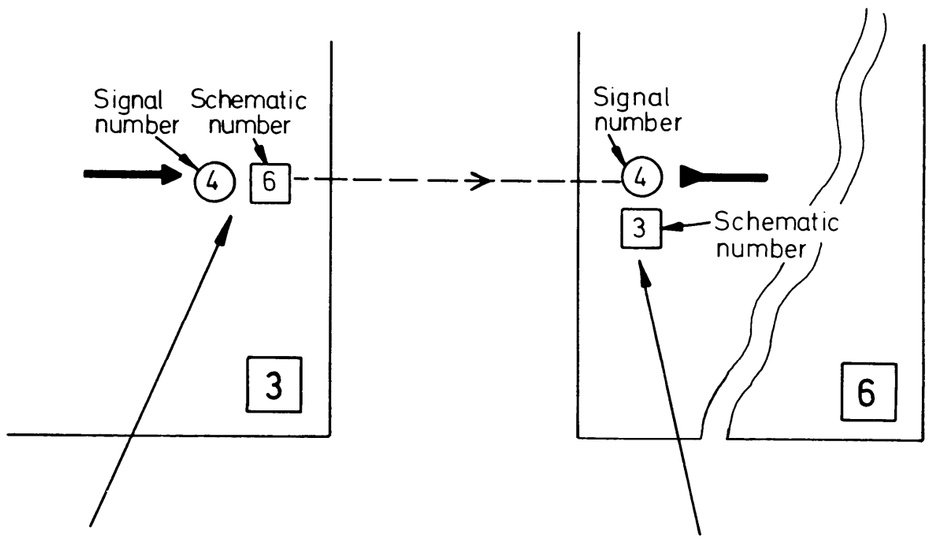

These references on a signal leaving a schematic diagram: indicate the signal destination: The circle contains the signal number and the square contains the number of the schematic to which that signal goes.

These references on a signal entering a schematic diagram indicate the siqnal origin, The circle contains the 'signal number and the square contains the number of the schematic on which that signal originates

Table 6–3, Manufacturer Codes

MFR. NR.	MANUFACTURER NAME	ADDRESS	ZIP CODE
FR083	SOVCOR ELECTRONIQUE	LE VESINET FRANCE	
00865	STETTNER-TRUSH INC	CAZENOVIA NY	13035
01295	TEXAS INSTR INC SEMICOND CMPNT DIV	DALLAS TX	75231
02114	FERROXCUBE CORP	SAUGERTIES NY	12477
04713	MOTOROLA SEMICONDUCTOR PRODUCTS	PHOENIX AZ	85008
07263	FAIRCHILD SEMICONDUCTOR DIV	MOUNTAIN VIEW CA	94040
12697	CLAROSTAT MFG CO INC	DOVER NH	03820
13103	THERMALLOY CO	DALLAS TX	75247
16299	CORNING GL WK ELEC CMPNT DIV	RALEIGH NC	27604
16550	EX-CELL-O CORP REMEX DIV	SANTA ANA CA	92705
17537	LAMPS INC	TORRENCE CA	90502
19701	MEPCO/ELECTRA CORP	MINERAL WELLS TX	76067
24226	GOWANDA ELECTRONICS CORP	GOWANDA NY	14070
24546	CORNING GLASS WORKS (BRADFORD)	BRADFORD PA	16701
28480	HEWLETT-PACKARD CO CORPORATE HQ	PALO ALTO CA	94304
56289	SPRAGUE ELECTRIC CO	NORTH ADAMS MA	01247
71400	BUSSMAN MFG DIV OF MCGRAW-EDISON CO	ST LOUIS MO	63017
71785	TRW ELEK COMPONENTS CINCH DIV	ELK GROVE VILLAGE IL	60007
72136	ELECTRO MOTIVE MFG CO INC	WILLIMANTIC CT	06226
72228	BECKMAN INSTRUMENTS INC HELIPOT DIV	FULLERTON CA	92634
75042	TRW INC PHILADELPHIA DIV	PHILADELPHIA PA	19108
75915	LITTELFUSE INC	DES PLAINES IL	60016
79727	C-W INDUSTRIES	WARMINSTER PA	18974
82389	SWITCHCRAFT INC	CHICAGO IL	60630
80640	AMPHENOL SALES DIV OF BUNKER-RAMO	HAZELWOOD MO	63042

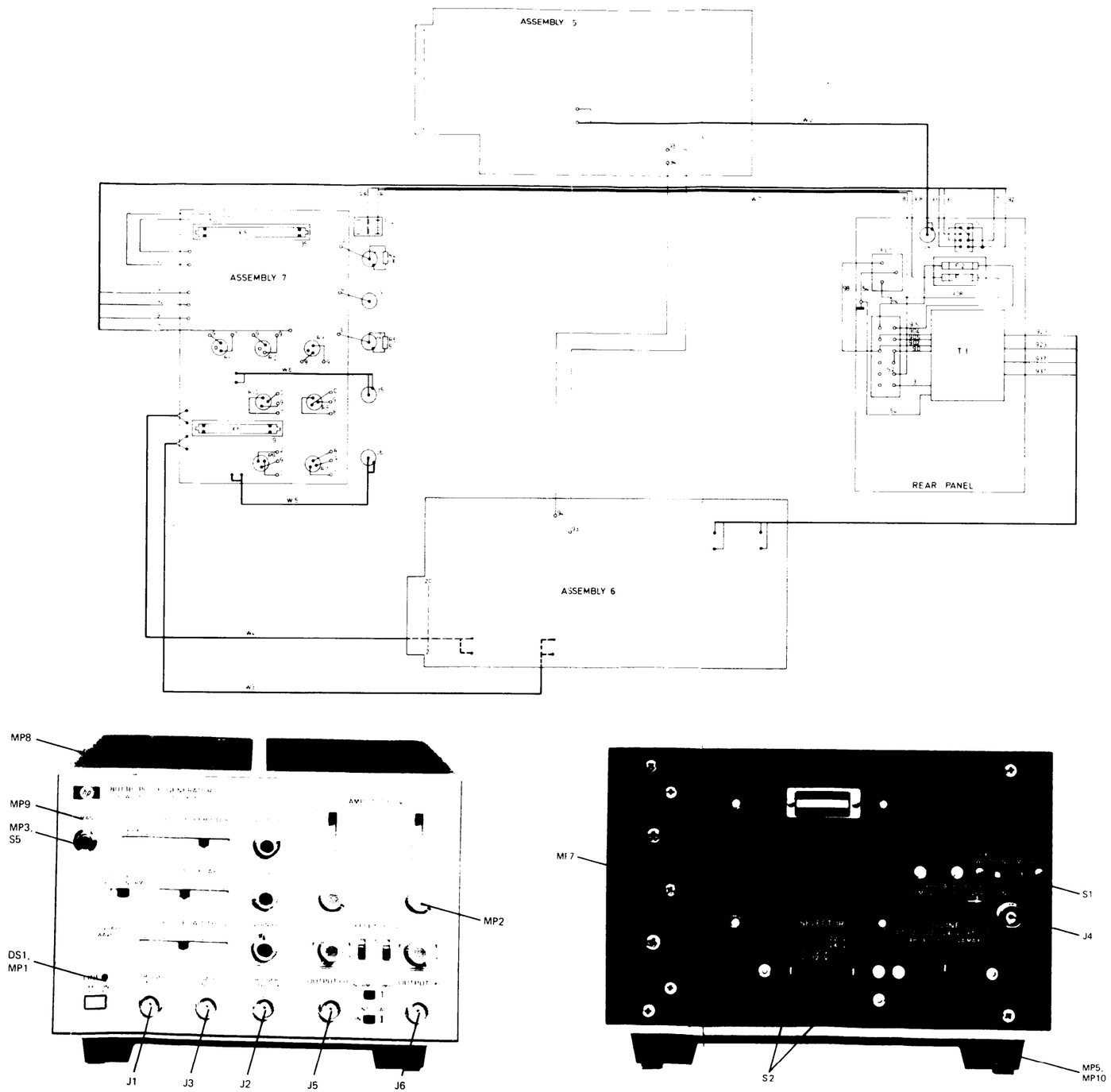

Figure 6—1. Assembly Diagram

TABLE 6-4. FRAME REPLACEABLE PARTS LIST

REFERENCE DESIGNATION	HP PART NUMBER	QTY	DESCRIPTION	MFR CODE	MFR PART NUMBER
A5	08012-66508		BOARD ASSEMBLY, TIMING	28480	08012-66508
A6	08013-66504		BOARD ASSEMBLY, AMPLIFIER OUTPUT	28480	08013-66504
A7	08013-66505		BOARD ASSEMBLY, MOTHER	28480	08013-66505
DS1	2140-0253	1	LAMP-INC AND T-1 BULB 28V	17537	64(ANSI 6839)
F1	2110-0007	1	FUSE 1A 250V SLO-BLO 1.25X.25 UL	71400	MDL-1
F1	0510-0748	1	FUSSEHOLDER-BLOCK 2-FU .25X1.25 FUSE	71400	3823-2
F2	2110-0202	1	FUSE .5A 250V SLO-BLO 1.25X.25 UL IEC	75915	313.500S
FL1	9100-3121	1	FILTER-ELEC 2A	28480	9100-3121
J1	1250-0118	6	CONNECTOR-RF BNC FEM SGL HOLE FR	9D949	31-2221-1022
J2	1250-0118		CONNECTOR-RF BNC FEM SGL HOLE FR	9D949	31-2221-1022
J3	1250-0118		CONNECTOR-RF BNC FEM SGL HOLE FR	9D949	31-2221-1022
J4	1250-0118		CONNECTOR-RF BNC FEM SGL HOLE FR	9D949	31-2221-1022
J5	1250-0118		CONNECTOR-RF BNC FEM SGL HOLE FR	9D949	31-2221-1022
J6	1250-0118		CONNECTOR-RF BNC FEM SGL HOLE FR	9D949	31-2221-1022
MP1	1450-0404	1	LIGHT-IND LENS CAP CLR TL LENS	28480	1450-0404
MP2	0370-1005	7	KNOB-BASE-PTR .375 IN JGK SGI-DECAL	28480	0370-1005
MP3	5040-1124	1	KNOB, PUSHBUTTON, POWER	28480	5040-1124
MP5	5040-0445	2	FOOT ASSEMBLY	28480	5040-0445
MP7	08012-00204	1	PANEL,REAR	28480	08012-00204
MP8	08012-04101	2	COVER ASSEMBLY	28480	08012-04101
MP9	08013-00203	1	PANEL, FRONT	28480	08013-00203
MP10	1460-1300	1	STAND, TILT	28480	1460-1300
R1	2100-3081	3	RESISTOR-VAR CONTROL CC 50K 10% 10CW	12697	SERIES 63M
R2	2100-3081		RESISTOR-VAR CONTROL CC 50K 10% 10CW	12697	SERIES 63M
R3	2100-3081		RESISTOR-VAR CONTROL CC 50K 10% 10CW	12697	SERIES 63M
R4	0758-0024	1	RESISTOR 100 5% .25W F TC=0+-100	24546	C5-1/4-TO-101-J
R5	0758-0126	1	RESISTOR 51 5% .25W F TC=0+-100	24546	C5-1/4-TO-51R0-J
R7	2100-2066	2	RESISTOR-VAR CONTROL CC 2K 20% LIN	12697	382
R8	2100-2066		RESISTOR-VAR CONTROL CC 2K 20% LIN	12697	382
R9	2100-2488	2	RESISTOR-VAR CONTROL CC 10K 20% LIN	12697	382
R10	2100-2488		RESISTOR-VAR CONTROL CC 10K 20% LIN	12697	382
S1	3101-0903	1	SWITCH-SL DP3T-NS MINTR .5A 125VAC/DC	79727	G128S-0003A
S2	3101-1609	1	SWITCH-SL 2-DPDT-NS STD 1.5A 250VAC SLDR	82389	11E-1036
S5	3101-0124	1	SWITCH-PB SPST NC MOM	82389	962
T1	08012-61101	1	TRANSFORMER, POWER	28480	08012-61101
W2	08012-61621	1	CABLE ASSEMBLY, SHIL INPUT	28480	08012-61621
W3	08013-61620	4	CABLE ASSEMBLY, SET SHIL	28480	08013-61620
W4	08013-61620		CABLE ASSEMBLY, SET SHIL	28480	08013-61620
W5	08013-61620		CABLE ASSEMBLY, SET SHIL	28480	08013-61620
W6	08013-61620		CABLE ASSEMBLY, SET SHIL	28480	08013-61620
W7	08012-61620	1	CABLE ASSEMBLY, SHIL POWER	28480	08012-61620

SEE TABLE 6-3 FOR MANUFACTURER CODES

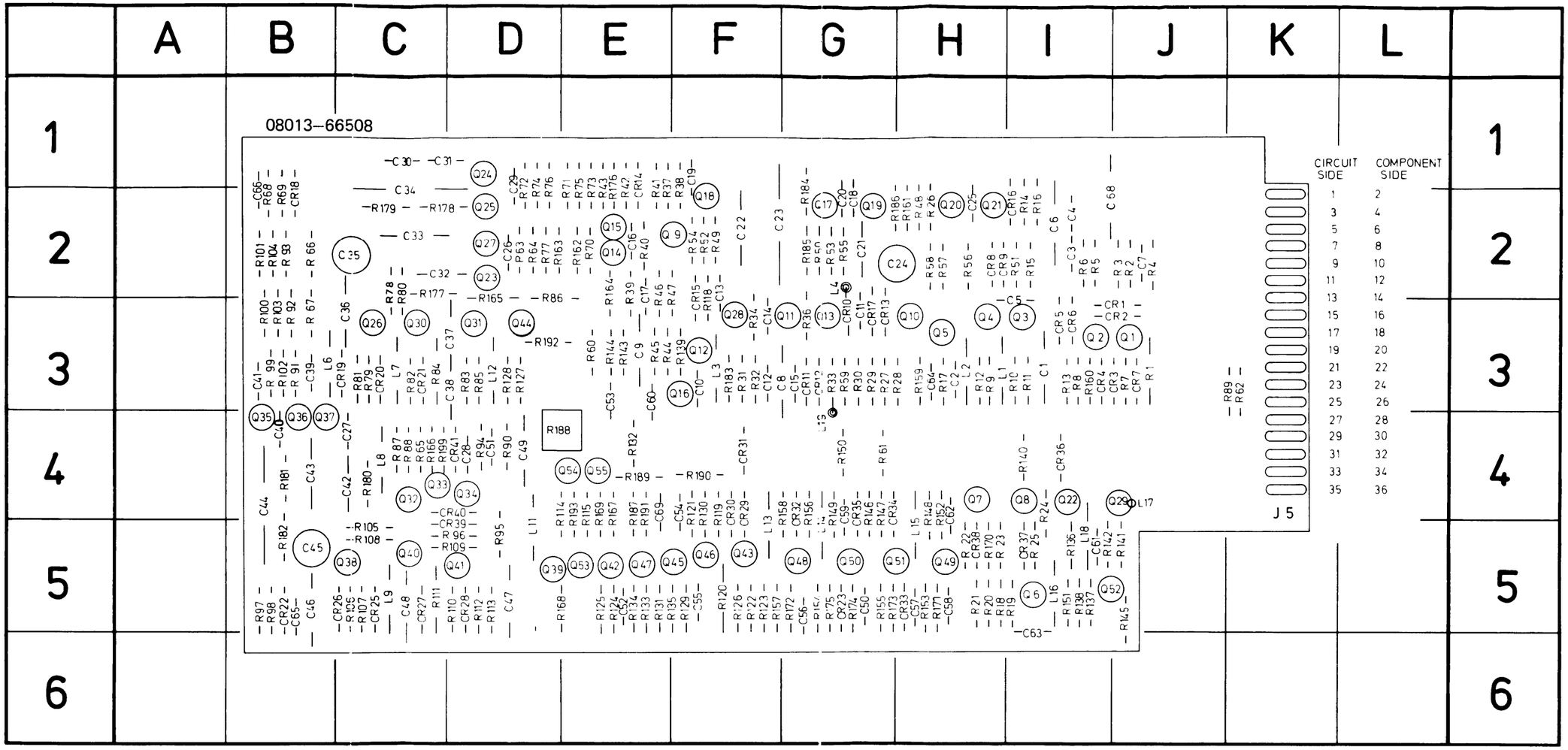

REF DESIG	GRID LOC
C1	I-3
C2	H-3
C3	I-2
C4	I-2
C5	I-3
C6	I-2
C7	J-2
C8	F-3
C9	E-3
C10	F-3
C11	G-3
C12	F-3
C13	F-2
C14	F-3
C15	G-3
C16	E-2
C17	E-2
C18	G-2
C19	F-1
C20	G-2
C21	G-2
C22	F-2
C23	F-2
C24	H-2
C25	H-2
C26	D-2
C27	C-4
C28	D-4
C29	D-1
C30	C-1
C31	C-1
C32	C-2
C33	C-2
C34	C-2
C35	C-2
C36	C-3
C37	D-3
C38	D-3
C39	B-3
C40	B-4
C41	B-3
C42	B-4
C43	B-4
C44	B-4
C45	B-5
C46	B-5
C47	D-5
C48	C-5
C49	D-4
C50	G-5
C51	D-4
C52	E-5
C53	E-3
C54	F-4
C55	F-5
C56	G-5
C57	H-5
C58	H-5
C59	G-4
C60	E-3
C61	I-5
C62	H-4
C63	I-5
C64	H-3
C65	B-5
C66	B-2
C68	I-2
C69	E-5
CR1	J-3
CR2	J-3
CR3	J-3
CR4	I-3
CR5	I-3
CR6	I-3
CR7	J-3
CR8	H-2
CR9	H-2
CR10	G-3
CR11	G-3
CR12	G-3
CR13	G-3
CR14	E-1
CR15	F-2
CR16	I-2
CR17	G-3
CR18	B-2
CR19	C-3
CR20	C-3
CR21	C-3
CR22	B-5
CR23	G-5
CR25	C-5
CR26	C-5
CR27	C-5
CR28	D-5
CR29	F-4
CR30	F-4
CR31	F-4
CR32	G-4
CR33	H-5
CR34	G-4
CR35	G-4
CR36	I-4
CR37	I-5
CR38	H-5
CR39	D-5
CR40	D-4
CR41	D-4
L1	H-3
L2	H-3
L3	F-3
L4	G-2
L6	B-3
L7	C-3
L8	C-4
L9	C-5
L11	D-5
L12	D-3
L13	F-4
L14	G-4
L15	[illegible]
L16	I-5
L17	J-4
L18	I-5
L19	G-4
Q1	J-3
Q2	I-3
Q3	I-3
Q4	H-3
Q5	H-3
Q6	I-5
Q7	H-4
Q8	I-4
Q9	F-2
Q10	H-3
Q11	G-3
Q12	F-3
Q13	G-3
Q14	E-2
Q15	E-2
Q16	F-3
Q17	G-2
Q18	F-2
Q19	G-2
Q20	H-2
Q21	H-2
Q22	I-4
Q23	D-2
Q24	D-1
Q25	D-2
Q26	C-3
Q27	D-2
Q28	F-3
Q29	J-4
Q30	C-3
Q31	D-3
Q32	C-4
Q33	C-4
Q34	D-4
Q35	B-4
Q36	B-4
Q37	B-4
Q38	C-5
Q39	D-5
Q40	C-5
Q41	E-5
Q42	D-3
Q43	F-5
Q44	F-5
Q45	F-5
Q46	F-5
Q47	E-5
Q48	G-5
Q49	H-5
Q50	G-5
Q51	H-5
Q52	J-5
Q53	E-5
Q54	E-4
Q55	E-4
R1	J-3
R2	J-2
R3	J-2
R4	J-2
R5	I-2
R6	I-2
R7	J-3
R8	I-3
R9	H-3
R10	I-3
R11	I-3
R12	H-3
R13	I-3
R14	I-2
R15	I-2
R16	I-2
R17	H-3
R18	H-5
R19	I-5
R20	H-5
R21	H-5
R22	H-5
R23	H-5
R24	I-4
R25	I-5
R26	H-2
R27	G-3
R28	G-3
R29	G-3
R30	G-3
R31	F-3
R32	F-3
R33	G-3
R34	F-3
R36	G-3
R37	E-1
R38	F-1
R39	E-2
R40	E-2
R41	E-1
R42	E-1
R43	E-1
R44	E-3
R45	E-3
R46	E-2
R47	E-2
R48	H-2
R49	F-2
R50	G-2
R51	I-2
R52	F-2
R53	G-2
R54	F-2
R55	G-2
R56	H-2
R57	H-2
R58	H-2
R59	G-3
R60	E-3
R61	G-4
R62	K-3
R63	D-2
R64	D-2
R65	C-4
R66	B-2
R67	B-3
R68	B-2
R69	B-2
R70	E-2
R71	E-1
R72	D-1
R73	E-1
R74	D-1
R75	E-1
R76	D-1
R77	D-2
R78	C-2
R79	C-3
R80	C-2
R81	C-3
R82	C-3
R83	D-3
R84	C-3
R85	D-3
R86	D-3
R87	C-4
R88	C-4
R89	K-3
R90	D-4
R91	B-3
R92	B-3
R93	B-2
R94	D-4
R95	D-5
R96	D-5
R97	B-5
R98	B-5
R99	B-3
R100	B-3
R101	B-2
R102	B-3
R103	B-3
R104	B-2
R105	C-5
R106	C-5
R107	C-5
R108	C-5
R109	D-5
R110	D-5
R111	C-5
R112	D-5
R113	D-5
R114	E-4
R115	E-4
R118	F-2
R119	F-4
R120	F-5
R121	F-4
R122	F-5
R123	F-5
R124	E-5
R125	E-5
R126	F-5
R127	D-3
R128	D-3
R129	F-5
R130	F-4
R131	E-5
R132	E-4
R133	E-5
R134	E-5
R135	F-5
R136	I-5
R137	I-5
R138	I-5
R139	F-3
R140	I-4
R141	J-5
R142	I-5
R143	E-3
R144	E-3
R145	J-5
R146	G-4
R147	G-4
R148	H-4
R149	G-4
R150	G-4
R151	I-5
R152	H-4
R153	H-5
R154	G-5
R155	G-5
R156	G-4
R157	F-5
R158	G-4
R159	H-3
R160	I-3
R161	H-2
R162	E-2
R163	D-2
R164	E-2
R165	D-3
R166	C-4
R167	E-4
R168	E-5
R169	E-4
R170	H-5
R171	H-5
R172	G-5
R173	G-5
R174	G-5
R175	G-5
R176	E-1
R177	C-2
R178	C-2
R179	C-2
R180	C-4
R181	B-4
R182	B-5
R183	F-3
R184	G-2
R185	G-2
R186	H-2
R187	E-4
R188	E-4
R189	E-4
R190	F-4
R191	E-4
R192	D-3
R193	E-4
R199	C-4

Figure 6–2. Component Layout – Board A5

TABLE 6-5. BOARD A5 REPLACEABLE PARTS LIST

REFERENCE DESIGNATION	HP PART NUMBER	QTY	DESCRIPTION	MFR CODE	MFR PART NUMBER
A5	08012-66508	1	BOARD ASSEBMLY, TIMING	28480	08012-66508
A5C1	0150-0121	20	CAPACITOR-FXD .1UF +80-20% 50WVDC CER	28480	0150-0121
A5C2	0160-2055	47	CAPACITOR-FXD .01UF +80-20% 100WVDC CER	28480	0160-2055
A5C3	0160-2055		CAPACITOR-FXD .01UF +80-20% 100WVDC CER	28480	0160-2055
A5C4	0160-2055		CAPACITOR-FXD .01UF +80-20% 100WVDC CER	28480	0160-2055
A5C5	0160-2199	1	CAPACITOR-FXD 30PF +-5% 300WVDC MICA	28480	0160-2199
A5C6	0180-0374	6	CAPACITOR-FXD; 100F+-10% 20VDC TA-SOLID	56289	150D106X9020B2
A5C7	0160-2307	1	CAPACITOR-FXD 47PF +-5% 300WVDC MICA	28480	0160-2307
A5C8	0150-0121		CAPACITOR-FXD .1UF +80-20% 50WVDC CER	28480	0150-0121
A5C9	0150-0121		CAPACITOR-FXD .1UF +80-20% 50WVDC CER	28480	0150-0121
A5C10	0160-2055		CAPACITOR-FXD .01UF +80-20% 100WVDC CER	28480	0160-2055
A5C11	0160-2055		CAPACITOR-FXD .01UF +80-20% 100WVDC CER	28480	0160-2055
A5C12	0160-2055		CAPACITOR-FXD .01UF +80-20% 100WVDC CER	28480	0160-2055
A5C13	0160-2055		CAPACITOR-FXD .01UF +80-20% 100WVDC CER	28480	0160-2055
A5C14	0160-2198	4	CAPACITOR-FXD 20PF +-5% 300WVDC MICA	28480	0160-2198
A5C15	0160-2197	1	CAPACITOR-FXD 10PF +-5% 300WVDC MICA	28480	0160-2197
A5C16	0160-2055		CAPACITOR-FXD .01UF +80-20% 100WVDC CER	28480	0160-2055
A5C17	0160-2055		CAPACITOR-FXD .01UF +80-20% 100WVDC CER	28480	0160-2055
A5C18	0160-2055		CAPACITOR-FXD .01UF +80-20% 100WVDC CER	28480	0160-2055
A5C19	0160-2055		CAPACITOR-FXD .01UF +80-20% 100WVDC CER	28480	0160-2055
A5C20	0160-2055		CAPACITOR-FXD .01UF +80-20% 100WVDC CER	28480	0160-2055
A5C21	0160-3714	1	CAPACITOR-FXD 5600PF +-10% 250WVDC MET	28480	0160-3714
A5C22	0160-3725	3	CAPACITOR-FXD .68UF +-10% 40WVDC MET	28480	0160-3725
A5C23	0180-0375	3	CAPACITOR-FXD; 68UF+-10% 20VDC TA-SOLID	56289	150D686X9020B2
A5C24	0121-0046	3	CAPACITOR-V TRMR-CER 9/35PF 200V PC-MTG	0086S	304322 9/35PF N650
A5C25	0160-2055		CAPACITOR-FXD .01UF +80-20% 100WVDC CER	28480	0160-2055
A5C26	0160-2055		CAPACITOR-FXD .01UF +80-20% 100WVDC CER	28480	0160-2055
A5C27	0160-2055		CAPACITOR-FXD .01UF +80-20% 100WVDC CER	28480	0160-2055
A5C28	0160-2055		CAPACITOR-FXD .01UF +80-20% 100WVDC CER	28480	0160-2055
A5C29	0160-2055		CAPACITOR-FXD .01UF +80-20% 100WVDC CER	28480	0160-2055
A5C30	0160-2055		CAPACITOR-FXD .01UF +80-20% 100WVDC CER	28480	0160-2055
A5C31	0160-2055		CAPACITOR-FXD .01UF +80-20% 100WVDC CER	28480	0160-2055
A5C32	0160-3220	2	CAPACITOR-FXD 6800PF +-5% 250WVDC MET	FR009	CKB-68
A5C33	0160-3725		CAPACITOR-FXD .68UF +-10% 40WVDC MET	28480	0160-3725
A5C34	0180-0375		CAPACITOR-FXD; 68UF+-10% 20VDC TA-SOLID	56289	150D686X9020B2
A5C35	0121-0046		CAPACITOR-V TRMR-CER 9/35PF 200V PC-MTG	0086S	304322 9/35PF N650
A5C36	0150-0121		CAPACITOR-FXD .1UF +80-20% 50WVDC CER	28480	0150-0121
A5C37	0150-0121		CAPACITOR-FXD .1UF +80-20% 50WVDC CER	28480	0150-0121
A5C38	0150-0121		CAPACITOR-FXD .1UF +80-20% 50WVDC CER	28480	0150-0121
A5C39	0160-2055		CAPACITOR-FXD .01UF +80-20% 100WVDC CER	28480	0160-2055
A5C40	0160-2055		CAPACITOR-FXD .01UF +80-20% 100WVDC CER	28480	0160-2055
A5C41	0160-2055		CAPACITOR-FXD .01UF +80-20% 100WVDC CER	28480	0160-2055
A5C42	0160-3220		CAPACITOR-FXD 6800PF +-5% 250WVDC MET	FR009	CK8-68
A5C43	0160-3725		CAPACITOR-FXD .68UF +-10% 40WVDC MET	28480	0160-3725
A5C44	0180-0375		CAPACITOR-FXD; 68UF+-10% 20VDC TA-SOLID	56289	1500686X9020B2
A5C45	0121-0046		CAPACITOR-V TRMR-CER 9/35PF 200V PC-MTG	0086S	304322 9/35PF N650
A5C46	0150-0121		CAPACITOR-FXD .1UF +80-20% 50WVDC CER	28480	0150-0121
A5C47	0150-0121		CAPACITOR-FXD .1UF +80-20% 50WVDC CER	28480	0150-0121
A5C48	0150-0121		CAPACITOR-FXD .1UF +80-20% 50WVDC CER	28480	0150-0121
A5C49	0150-0121		CAPACITOR-FXD .1UF +80-20% 50WVDC CER	28480	0150-0121
A5C50	0140-0191	1	CAPACITOR-FXD 56PF +-5% 300WVDC MICA	72136	DM15E560J0300WV1CR
A5C51	0160-2055		CAPACITOR-FXD .01UF +80-20% 100WBDC CER	28480	0160-2055
A5C52	0160-2055		CAPACITOR-FXD .01UF +80-20% 100WVDC CER	28480	0160-2055
A5C53	0160-2055		CAPACITOR-FXD .01UF +80-20% 100WVDC CER	28480	0160-2055
A5C54	0160-2055		CAPACITOR-FXD .01UF +80-20% 100WVDC CER	28480	0160-2055
A5C55	0160-2198		CAPACITOR-FXD 20PF +-5% 300WVDC MICA	28480	0160-2198
A5C56	0160-2055		CAPACIATOR-FXD .01UF +80-20% 100WVDC CER	28480	0160-2055
A5C57	0160-2055		CAPACITOR-FXD .01UF +80-20% 100WVDC CER	28480	0160-2055
A5C58	0160-2055		CAPACITOR-FXD .01UF +80-20% 100WVDC CER	28480	0160-2055
A5C59	0160-2055		CAPACITOR-FXD .01UF +80-20% 100WVDC CER	28480	0160-2055
A5C60	0160-2055		CAPACITOR-FXD .01UF +80-20% 100WVDC CER	28480	0160-2055
A5C61	0160-2055		CAPACITOR-FXD .01UF +80-20% 100WVDC CER	28480	0160-2055
A5C62	0160-2055		CAPACITOR-FXD .01UF +80-20% 100WVDC CER	28480	0160-2055
A5C63	0160-2055		CAPACITOR-FXD .01UF +80-20% 100WVDC CER	28480	0160-2055
A5C64	0160-2198		CAPACITOR-FXD 20PF +-5% 300WVDC MICA	28480	0160-2198
A5C65	0160-2055		CAPACIATOR-FXD .01UF +80-20% 100WVDC CER	28480	0160-2055
A5C66	0160-2055		CAPACITOR-FXD .01UF +80-20% 100WVDC CER	28480	0160-2055
A5C68	0180-0374		CAPACITOR-FXD; 10UF+-10% 20VDC TA-SOLID	56289	150D106X902082
A5C69	0160-2055		CAPACITOR-FXD .01UF +80-20% 100WVDC CER	28480	0160-2055
A5CR1	1901-0040	34	DIODE-SWITCHING 30V 50NA 2NS DO-35	28480	1901-0040
A5CR2	1901-0040		DIODE-SWITCHING 30V 50NA 2NS DO-35	28480	1901-0040
A5CR3	1901-0040		DIODE-SWITCHING 30V 50NA 2NS DO-35	28480	1901-0040
A5CR4	1901-0040		DIODE-SWITCHING 30V 50NA 2NS DO-35	28480	1901-0040
A5CR5	1901-0040		DIODE-SWITCHING 30V 50NA 2NS DO-35	28480	1901-0040

SEE TABLE 6-3 FOR MANUFACTURER CODES

TABLE 6-5(CONT'D). BOARD A5 REPLACEABLE PARTS LIST

REFERENCE DESIGNATION	HP PART NUMBER	QTY	DESCRIPTION	MFR CODE	MFR PART NUMBER
A5CR6	1901-0040		DIODE-SWITCHING 30V 50NA 2NS DO-35	28480	1901-0040
A5CR7	1902-0037	1	DIODE-ZNR 9.09V 10% DO-7 PD=.4W	04713	10939-169
A5CR8	1901-0040		DIODE-SWITCHING 30V 50NA 2NS DO-35	28480	1901-0040
A5CR9	1901-0040		DIODE-SWITCHING 30V 50NA 2NS DO-35	28480	1901-0040
A5CR10	1901-0179	9	DIODE-SWITCHING 15V 50NA 75OPS DO-7	28480	1901-0179
A5CR11	1901-0040		DIODE-SWITCHING 30V 50NA 2NS DO-35	28480	1901-0040
A5CR12	1901-0040		DIODE-SWITCHING 30V 50NA 2NS DO-35	28480	1901-0040
A5CR13	1901-0040		DIODE-SWITCHING 30V 50NA 2NS DO-35	28480	1901-0040
A5CR14	1901-0040		DIODE-SWITCHING 30V 50NA 2NS DO-35	28480	1901-0040
A5CR15	1901-0533	8	DIODE-SCHOTTKY	28480	1901-0533
A5CR16	1901-0040		DIODE-SWITCHING 30V 50NA 2NS DO-35	28480	1901-0040
A5CR17	1910-0022	2	DIODE-GE 5V 60NA 3.5NS DO-7	28480	1910-0022
A5CR18	1901-0040		DIODE-SWITCHING 30V 50NA 2NS DO-35	28480	1901-0040
A5CR19	1902-0049	4	&	04713	SZ 10939-122
A5CR20	1901-0040		DIODE-SWITCHING 30V 50NA 2NS DO-35	28480	1901-0040
A5CR21	1902-0126	2	DIODE-ZNR 2.61V 5% DO-7 PD=.4W TC=-.073%	04713	SZ 10939-14
A5CR22	1901-0040		DIODE-SWITCHING 30V 50NA 2NS DO-35	28480	1901-0040
A5CR23	1902-0025	3	DIODE-ZNR 10V 5% DO-7 PD=.4W TX=+.06%	04713	SZ 10939-182
A5CR25	1901-0040		DIODE-SWITCHING 30V 50NA 2NS DO-35	28480	1901-0040
A5CR26	1902-0049		DIODE-ZNR 6.19V 5% DO-7 PD=.4W TC=+.022%	04713	SZ 10939-122
A5CR27	1902-0126		DIODE-ZNR 2.61V 5% DO-7 PD=.4W TC=-.073%	04713	SZ 10939-14
A5CR28	1910-0034	1	DIODE-GE 30V 80NA 8NS DO-7	28480	1910-0034
A5CR29	1901-0040		DIODE-SWITCHING 30V 50NA 2NS DO-35	28480	1901-0040
A5CR30	1901-0040		DIODE-SWITCHING 30V 50NA 2NS DO-35	28480	1901-0040
A5CR31	1901-0040		DIODE-SWITCHING 30V 50NA 2NS DO-35	28480	1901-0040
A5CR32	1901-0040		DIODE-SWITCHING 30V 50NA 2NS DO-35	28480	1901-0040
A5CR33	1901-0040		DIODE-SWITCHING 30V 50NA 2NS DO-35	28480	1901-0040
A5CR34	1902-0032	2	DIODE-ZNR 5.49V 5% DO-7 PD=.4W TC=+.009%	04713	SZ 10939-107
A5CR35	1902-0032		DIODE-ZNR 5.49V 5% DO-7 PD=.4W TC=+.009%	04713	SZ 10939-107
A5CR36	1902-0025		DIODE-ZNR 10V 5% DO-7 PD=.4W TC=+.06%	04713	SZ 10939-182
A5CR37	1901-0040		DIODE-SWITCHING 30V 50NA 2NS DO-35	28480	1901-0040
A5CR38	1901-0040		DIODE-SWITCHING 30V 50NA 2NS DO-35	28480	1901-0040
A5CR39	1901-0533		DIODE-SCHOTTKY	28480	1901-0533
A5CR40	1901-0533		DIODE-SCHOTTKY	28480	1901-0533
A5CR41	1901-0533		DIODE-SCHOTTKY	28480	1901-0533
A5L1	9100-1611	3	COIL-FXD MOLDED RF CHOKE .22UH 20%	24226	15/220
A5L2	9100-1614	2	COIL-FXD MOLDED RF CHOKE .82UH 10%	24226	15/820
A5L3	9100-1611		COIL-FXD MOLDED RF CHOKE .22UH 20%	24226	15/220
A5L4	9170-0029	6	CORE-SHIELDING BEAD	02114	56-590-65A2/4A
A5L6	9140-0179	2	COIL-FXD MOLDED RF CHOKE 22UH 10%	24226	15/222
A5L7	9100-1613	3	COIL-FXD MOLDED RF CHOKE .47UH 20%	24226	15/470
A5L8	9140-0094	1	COIL-FXD MOLDED RF CHOKE .68UH 10%	24226	15/680
A5L9	9140-0179		COIL-FXD MOLDED RF CHOKE 22UH 10%	24226	15/222
A5L11	9100-1611		COIL-FXD MOLDED RF CHOKE .22UH 20%	24226	15/220
A5L12	9140-0096	2	COIL-FXD MOLDED RF CHOKE 1UH 10%	24226	15/101
A5L13	9140-0096		COIL-FXD MOLDED RF CHOKE 1UH 10%	24226	15/101
A5L14	9100-1613		COIL-FXD MOLDED RF CHOKE .47UH 20%	24226	15/470
A5L15	9100-1613		COIL-FXD MOLDED RF CHOKE .47UH 20%	24226	15/470
A5L16	9140-0112	1	COIL-FXD MOLDED RF CHOKE 4.7UH 10%	24226	15/471
A5L17	9170-0029		CORE-SHIELDING BEAD	02114	56-590-65A2/4A
A5L18	9100-1614		COIL-FXD MOLDED RF CHOKE .82UH 10%	24226	15/820
A5L19	9170-0029		CORE-SHIELDING BEAD	02114	56-590-65A2/4A
A5MP28	1205-0037	10	HEAT-DISSIPATOR SGL TO-36 PKG	28480	1205-0037
A5MP29	1205-0037		HEAT-DISSIPATOR SGL TO-36 PKG	28480	1205-0037
A5Q1	1854-0296	2	TRANSISTOR NPN SI TO-92 PD=310MW	28480	1854-0296
A5Q2	1854-0296		TRANSISTOR NPN SI TO-92 PD=310MW	28480	1854-0296
A5Q3	1854-0092	4	TRANSISTOR NPN SI PD=200MW FT-600MHZ	28480	1854-0092
A5Q4	1854-0092		TRANSISTOR NPN SI PD=200MW FT=600MHZ	28480	1854-0092
A5Q5	1853-0096	1	TRANSISTOR PNP SI TO-18 PD=360MW	28480	1853-0096
A5Q6	1854-0019	4	TRANSISTOR NPN SI TO-18 PD=360MW	28480	1854-0019
A5Q7	1853-0034	3	TRANSISTOR PNP SI TO-18 PD=360MW	28480	1853-0034
A5Q8	1853-0034		TRANSISTOR PNP SI TO-18 PD=360MW	28480	1853-0034
A5Q9	1853-0357	15	TRANSISTOR PNP SI TO-18 PD=360MW	28480	1853-0357
A5Q10	1853-0036	20	TRANSISTOR PNP SI PD=310MW FT=250MHZ	28480	1853-0036
A5Q11	1853-0357		TRANSISTOR PNP SI TO-18 PD=360MW	28480	1853-0357
A5Q12	1853-0357		TRANSISTOR PNP SI TO-18 PD=360MW	28480	1853-0357
A5Q13	1854-0345	8	TRANSISTOR NPN 2N5179 SI TO-72 PD=20MW	04713	2N5179
A5Q14	1853-0357		TRANSISTOR PNP SI TO-18 PD=360MW	28480	1853-0357
A5Q15	1853-0357		TRANSISTOR PNP SI TO-18 PD=360MW	28480	1853-0357
A5Q16	1854-0009	4	TRANSISTOR NPN 2N709 SI TO-18 PD=300MW	28480	1854-0009
A5Q17	1854-0215	13	TRANSISTOR NPN SI PD=350MW FT=300MHZ	04713	SPS 3611
A5Q18	1854-0215		TRANSISTOR NPN SI PD=350MW FT=300MHZ	04713	SPS 3611
A5Q19	1854-0215		TRANSISTOR NPN SI PD=350MW FT=300MHZ	04713	SPS 3611
A5Q20	1854-0019		TRANSISTOR NPN SI TO-18 PD=360MW	28480	1854-0019

SEE TABLE 6-3 FOR MANUFACTURER CODES

TABLE 6-5 (CONT'D). BOARD A5 REPLACEABLE PARTS LIST

REFERENCE DESIGNATION	HP PART NUMBER	QTY	DESCRIPTION	MFR CODE	MFR PART NUMBER
A5Q21	1853-0036		TRANSISTOR PNP SI PD=310MW FT=250MHZ	28480	1853-0036
A5Q22	1854-0019		TRANSISTOR NPN SI TO-18 PD=360MW	28480	1854-0019
A5Q23	1853-0036		TRANSISTOR PNP SI PD=310MW FT=250MHZ	28480	1853-0036
A5Q24	1853-0036		TRANSISTOR PNP SI PD=310MW FT=250MHZ	28480	1853-0036
A5Q25	1853-0036		TRANSISTOR PNP SI PD=310MW FT=250MHZ	28480	1853-0036
A5Q26	1853-0357		TRANSISTOR PNP SI TO-18 PD=360MW	28480	1853-0357
A5Q27	1853-0036		TRANSISTOR PNP SI PD=310MW FT=250MHZ	28480	1853-0036
A5Q28	1854-0019		TRANSISTOR NPN SI TO-18 PD=360MW	28480	1854-0019
A5Q29	1853-0034		TRANSITOR PNP SI TO-18 PD=360MW	28480	1853-0034
A5Q30	1854-0345		TRANSISTOR NPN 2N5179 SI TO-72 PD=200MW	04713	2N5179
A5Q31	1854-0345		TRANSISTOR NPN 2N5179 SI TO-72 PD=200MW	04713	2N5179
A5Q32	1853-0018	1	TRANSISTOR PNP SI TO-72 PD=200MW FT=1GHZ	28480	1853-0018
A5Q33	1853-0357		TRANSISTOR PNP SI TO-18 PD=360MW	28480	1853-0357
A5Q34	1853-0036		TRANSISTOR PNP SI PD=310MW FT=250MHZ	28480	1853-0036
A5Q35	1853-0036		TRANSISTOR PNP SI PD=310MW FT=250MHZ	28480	1853-0036
A5Q36	1853-0036		TRANSISTOR PNP SI PD=310MW FT=250MHZ	28480	1853-0036
A5Q37	1853-0036		TRANSISTOR PNP SI PD=310MW FT=250MHZ	28480	1853-0036
A5Q38	1853-0357		TRANSISTOR PNP SI TO-18 PD=360MW	28480	1853-0357
A5Q39	1853-0357		TRANSISTOR PNP SI TO=18 PD=360W	28480	1853-0357
A5Q40	1854-0345		TRANSISTOR NPN 2N5179 SI TO-72 PD=200MW	04713	2N5179
A5Q41	1854-0345		TRANSISTOR NPN 2N5179 SI TO-72 PD=200MW	04713	2N5179
A5Q42	1854-0009		TRANSISTOR NPN 2N709 SI TO-18 PD=300MW	28480	1854-0009
A5Q43	1853-0357		TRANSISTOR PNP SI TO-18 PD=360MW	28480	1853-0357
A5Q44	1853-0015	1	TRANSISTOR PNP SI PD=200MW FT=500MHZ	28480	1853-0015
A5Q45	1854-0345		TRANSISTOR NPN 2N5179 SI TO-72 PD=200MW	04713	2N5179
A5Q46	1854-0345		TRANSISTOR NPN 2N5179 SI TO-72 PD=200MW	04713	2N5179
A5Q47	1854-0009		TRANSISTOR NPN 2N709 SI TO-18 PD-300MW	28480	1854-0009
A5Q48	1854-0215		TRANSISTOR NPN SI PD=350MW FT-300MHZ	04713	SPS 3611
A5Q49	1854-0215		TRANSISTOR NPN SI PD=350MW FT=300MHZ	04713	SPS 3611
A5Q50	1854-0092		TRANSISTOR NPN SI PD=200MW FT=600MHZ	28480	1854-0092
A5Q51	1854-0092		TRANSISTOR NPN SI PD=200MW FT=600MHZ	28480	1854-0092
A5Q52	1854-0009		TRANSISTOR NPN 2N709 SI TO-18 PD=300MW	28480	1854-0009
A5Q53	1853-0357		TRANSISTOR PNP SI TO-18 PD=360MW	28480	1853-0357
A5Q54	1853-0218	2	TRANSISTOR PNP SI TO-18 PD=360MW	28480	1853-0218
A5Q55	1853-0218		TRANSISTOR PNP SI TO-18 PD=360MW	28480	1853-0218
A5R1	0758-0024	3	RESISTOR 100 5% .25W F T0=0+-100	24546	C5-1/4-TO-101-J
A5R2	0698-0083	4	RESISTOR 1.96K 1% .125W F T0=0+-100	16299	C4-1/8-TO-1961-F
A5R3	0698-0083		RESISTOR 1.96K 1% .125W F TO=0+-100	16299	C4-1/8-TO-1961-F
A5R4	0757-0276	1	RESISTOR 61.9 1% .125W F TO=0+-100	24546	C4-1/8-TO-6192-F
A5R5	0698-3443	2	RESISTOR 287 1% .125W F TO=0+-100	16299	C4-1/8-TO-287R-F
A5R6	0698-3443		RESISTOR 287 1% .125W F TO=0+-100	16299	C4-1/8-TO-287R-F
A5R7	0757-0448	3	RESISTOR 18.2K 1% .125W F TO=0+-100	24546	C4-1/8-TO-1822-F
A5R8	0757-1094	3	RESISTOR 1.47K 1% .125W F TO=0+-100	24546	C4-1/8-TO-1471-F
A5R9	0757-0401	14	RESISTOR 100 1% .125W F TO=0+-100	24546	C4-1/8-TO-101-F
A5R10	0757-0400	3	RESISTOR 90.9 1% .125W F TO=0+-100	24546	C4-1/8-T0-90R9-F
A5R11	0757-0421	3	RESISTOR 825 1%.125W F TC=0+-100	24546	C4-1/8-T0-825R-F
A5R12	0757-0282	2	RESISTOR 221 1% .125W F TC=0+-100	24546	C4-1/8-T0-221R-F
A5R13	0757-0420	4	RESISTOR 750 1% .125W F TC=0+-100	24546	C4-1/8-TO-751-F
A5R14	0757-0426	3	RESISTOR 1.3K 1% .125W F TC=0+-100	24546	C4-1/8-T0-1301-F
A5R15	0698-4426	1	RESISTOR 1.58K 1% .125W F TC=0+-100	16299	C4-1/8-T0-1581-F
A5R16	0757-0407	7	RESISTOR 200 1% .125W F TC=0+-100	24546	C4-1/8-T0-201-F
A5R17	0757-0395	3	RESISTOR 56.2 1% .125W F TC=0+-100	24546	C4-1/8-T0-56R2-F
A5R18	0757-0442	11	RESISTOR 10K 1% .125W F TC=0+-100	24546	C4-1/8-T0-1002-F
A5R19	0757-0399	3	RESISTOR 82.5 1% .125W F TC=0+-100	24546	C4-1/8-T0-82R5-F
A5R20	0757-0409	4	RESISTOR 274 1% .125W F TC=0+-100	24546	C4-1/8-T0-274R-F
A5R21	0757-0424	5	RESISTOR 1.1K 1% .125W F TC=0+-100	24546	C4-1/8-T0-1101-F
A5R22	0757-0448		RESISTOR 18.2K 1% .125W F TC=0+-100	24546	C4-1/8-T0-1822-F
A5R23	0757-0283	1	RESISTOR 2K 1% .125 F TC=0+-100	24546	C4-1/8-T0-2001-F
A5R24	0757-0428	2	RESISTOR 1.62K 1% .125W F TC=0+-100	24546	C4-1/8-T0-1621-F
A5R25	0757-0406	2	RESISTOR 182 1% .125W F TC=0+-100	24546	C4-1/8-T0-182R-F
A5R26	0757-0443	4	RESISTOR 11K 1% .125W F TC=0+-100	24546	C4-1/8-T0-1102-F
A5R27	0757-0442		RESISTOR 10K 1% .125W F TC=0+-100	24546	C4-1/8-T0-1002-F
A5R28	0757-0442		RESISTOR 10K 1% .125W F TC+0=-100	24546	C4-1/8-T0-1002-F
A5R29	0757-0274	11	RESISTOR 1.21K 1% .125W F TC=0+-100	24546	C4-1/8-T0-1213-F
A5R30	0757-0273	4	RESISTOR 3.01K 1% .125W F TC=0+-100	24546	C4-1/8-T0-3011-F
A5R31	0757-0428		RESISTOR 1.62K 1% .125W F TC=0+-100	24546	C4-1/8-T0-1621-F
A5R32	0698-0085	1	RESISTOR 2.61K 1% .125W F TC=0+-100	16299	C4-1/8-T0-2611-F
A5R33	0757-0404	4	RESISTOR 130 1% .125W F TC=0+-100	24546	C4-1/8-T0-131-F
A5R34	0757-0401		RESISTOR 100 1% .125W F TC=0+-100	24546	C4-1/8-T0-101-F
A5R36	0757-0404		RESISTOR 130 1% .125W F TC=0+-100	24546	C4-1/8-T0-131-F
A5F37	0698-3151	1	RESISTOR 2.87K 1% .125W F TC=0+-100	16299	C4-1/8-T0-2871-F
A5R38	0698-0084	7	RESISTOR 2.15K 1% .125W F TC=0+-100	16299	C4-1/8-T0-2151-F
A5R39	0757-0438	12	RESISTOR 5.1K 1% .125W F TC=0+-100	24546	C4-1/8-T0-5111-F
A5R40	0757-0420		RESISTOR 750 1% .125W F TC=0+-100	24546	C4-1/8-T0-751-F
A5R41	0757-0421		RESISTOR 825 1% .125W F TC=0+-100	24546	C4-1/8-T0-825R-F

TABLE 6-5 (CONT'D). BOARD A5 REPLACEABLE PARTS LIST

REFERENCE DESIGNATION	HP PART NUMBER	QTY	DESCRIPTION	MFR CODE	MFR PART NUMBER
A5R42	0757-0401		RESISTOR 100 1% .125W F TC=0+-100	24546	C4-1/8-T0-101-F
A5P43	0757-0401		RESISTOR 100 1% .125W F TC=0+-100	24546	C4-1/8-T0-101-F
A5R44	0757-0403	2	RESISTOR 121 1% .125W F TC=0+-100	24546	C4-1/8-T0-121R-F
A5R45	0757-0407		RESISTOR 200 1% .125W F TC=0+-100	24546	C4-1/8-T0-201-F
A5R46	0698-0084		RESISTOR 2.15K 1% .125W F TC=0+-100	16299	C4-1/8-T0-2151-F
A5R47	0757-0274		RESISTOR 1.21K 1% .125W F TC=0+-100	24546	C4-1/8-T0-1213-F
A5R48	0757-0438		RESISTOR 5.11K 1% .125W F TC=0+-100	24546	C4-1/8-T0-5111-F
A5R49	0757-0438		RESISTOR 5.11K 1% .125W F TC=0+-100	24546	C4-1/8-T0-5111-F
A5R50	0757-0438		RESISTOR 5.11K 1% .125W F TC=0+-100	24546	C4-1/8-T0-5111-F
A5R51	0757-0439	1	RESISTOR 6.81K 1% .125W F TC=0+-100	24546	C4-1/8-T0-6811-F
A5R52	0757-0443		RESISTOR 11K 1% .125W F TC=0+-100	24546	C4-1/8-T0-1102-F
A5R53	0757-0443		RESISTOR 11K 1% .125W F TC=0+-100	24546	C4-1/8-T0-1102-F
A5R54	0757-0274		RESISTOR 1.21K 1% .125W F TC=0+-100	24546	C4-1/8-T0-1213-F
A5R55	0757-0274		RESISTOR 1.21K 1% .125W F TC=0+-100	24546	C4-1/8-T0-1213-F
A5R56	0757-0417	3	RESISTOR 562 1% .125W F TC=0+-100	24546	C4-1/8-T0-562R-F
A5R57	0757-0438		RESISTOR 5.11K 1% .125W F TC=0+-100	24546	C4-1/8-T0-5111-F
A5R58	0757-0433	2	RESISTOR 3.32K 1% .125W F TC=0+-100	24546	C4-1/8-T0-3321-F
A5R59	0757-0427	3	RESISTOR 1.5K 1% .125W F TC=0+-100	24546	C4-1/8-T0-1501-F
A5R60	0757-0273		RESISTOR 3.01K 1% .125W F TC=0+-100	24546	C4-1/8-T0-3011-F
A5R61	0757-0273		RESISTOR 3.01K 1% .125W F TC=0+-100	24546	C4-1/8-T0-3011-F
A5R62	0757-0391	1	RESISTOR 39.2 1% .125W F TC=0+-100	24546	C4-1/8-T0-39R2-F
A5R63	0698-3439	1	RESISTOR 178 1% .125W F TC=0+-100	16299	C4-1/8-T0-178R-F
A5R64	0698-0084		RESISTOR 2.15K 1% .125W F TC=0+-100	16299	C4-1/8-T0-2151-F
A5R65	0757-0429	3	RESISTOR 1.82K 1% .125W F TC=0+-100	24546	C4-1/8-T0-1821-F
A5R66	0757-0447	1	RESISTOR 16.2K 1% .125W F TC=0+-100	24546	C4-1/8-T0-1622-F
A5R67	0757-0421		RESISTOR 825 1% .125W F TC=0+-100	24546	C4-1/8-T0-825R-F
A5R68	0757-0278	3	RESISTOR 1.78K 1% .125W F TC=0+-100	24546	C4-1/8-T0-1781-F
A5R69	0698-0084		RESISTOR 2.15K 1% .125W F TC=0+-100	16299	C4-1/8-T0-2151-F
A5R70	0698-3492	10	RESISTOR 2.67K 1% .125W F TC=0+-100	16299	C4-1/8-T0-2671-F
A5R71	0698-3492		RESISTOR 2.67K 1% .125W F TC=0+-100	16299	C4-1/8-T0-2671-F
A5R72	0698-3492		RESISTOR 2.67K 1% .125W F TC=0+-100	16299	C4-1/8-T0-2671-F
A5R73	0698-3158	6	RESISTOR 23.7K 1% .125W F TC=0+-100	16299	C4-1/8-T0-2372-F
A5R74	0698-3158		RESISTOR 23.75 1% .125W F TC=0+-100	16299	C4-1/8-T0-2372-F
A5R75	0757-0438		RESISTOR 5.11K 1% .125W F TC=0+-100	24546	C4-1/8-T0-5111-F
A5R76	0757-0438		RESISTOR 5.11K 1% .125W F TC=0+-100	24546	C4-1/8-T0-5111-F
A5R77	0757-0290	4	RESISTOR 6.19K 1% .125W F TC=0+-100	19701	MF4C1/8-T0-6191-F
A5R78	0757-0390	4	RESISTOR 36.5 1% .125W F TC=0+-100	24546	C4-1/8-T0-36R5-F
A5R79	0757-0393	4	RESISTOR 47.5 1% .125W F TC=0+-100	24546	C4-1/8-T0-47R5-F
A5R80	0757-0390		RESISTOR 36.5 1% .125W F TC=0+-100	24546	C4-1/8-T0-36R5-F
A5R81	0757-0427		RESISTOR 1.5K 1% .125W F TC=0+-100	24546	C4-1/8-T0-1501-F
A5R82	0757-0409		RESISTOR 274 1% .125W F TC=0+-100	24546	C4-1/8-T0-274R-F
A5R83	0757-0404		RESISTOR 130 1% .125W F TC=0+-100	24546	C4-1/8-T0-131-F
A5R84	0758-0002	2	RESISTOR 560 5% .25W F TC=0+-100	24546	C5-1/4-T0-561-J
A5R85	0757-0429		RESISTOR 1.82K 1% .125W F TC=0+-100	24546	C4-1/8-T0-1821-F
A5R86	0757-0284	3	RESISTOR 150 1% .125W F TC=0+-100	24546	C4-1/8-T0-151-F
A5R87	0757-0284		RESISTOR 150 1% .125W F TC=0+-100	24546	C4-1/8-T0-151-F
A5R88	0757-0282		RESISTOR 221 1% .125W F TC=0+-100	24546	C4-1/8-T0-221R-F
A5R89	0757-0389	3	RESISTOR 33.2 1% .125W F TC=0+-100	24546	C4-1/8-T0-33R2-F
A5R90	0698-3438	1	RESISTOR 147 1% .125W F TC=0+-100	16299	C4-1/8-T0-147R-F
A5R91	0698-3158		RESISTOR 23.7K 1% .125W F TC=0+-100	16299	C4-1/8-T0-2372-F
A5R92	0698-3158		RESISTOR 23.7K 1% .125W F TC=0+-100	16299	C4-1/8-T0-2372-F
A5R93	0698-3158		RESISTOR 23.7K 1% .125W F TC=0+-100	16299	C4-1/8-T0-2372-F
A5R94	0698-4424	1	RESISTOR 1.4K 1% .125W F TC=0+-100	16299	C4-1/8-T0-1401-F
A5R95	0757-0290		RESISTOR 6.19K 1% .125W F TC=0+-100	19701	MF4C1/8-T0-6191-F
A5R96	0757-0401		RESISTOR 100 1% .125W F TC=0+-100	24546	C4-1/8-T0-101-F
A5R97	0757-0278		RESISTOR 1.78K 1% .125W F TC=0+-100	24546	C4-1/8-T0-1781-F
A5R98	0698-0084		RESISTOR 2.15K 1% .125W F TC=0+-100	16299	C4-1/8-T0-2151-F
A5R99	0757-0438		RESISTOR 5.11K 1% .125W F TC=0+-100	24546	C4-1/8-T0-5111-F
A5R100	0757-0438		RESISTOR 5.11K 1% .125W F TC=0+-100	24546	C4-1/8-T0-5111-F
A5R101	0757-0438		RESISTOR 5.11K 1% .125W F TC=-100	24546	C4-1/8-T0-5111-F
A5R102	0698-3492		RESISTOR 2.67K 1% .125W F TC=0+-100	16299	C4-1/8-T0-2671-F
A5R103	0698-3492		RESISTOR 2.67K 1% .125W F TC=0+-100	16299	C4-1/8-T0-2671-F
A5R104	0698-3492		RESISTOR 2.67K 1% .125W F TC=0+-100	16299	C4-1/8-T0-2671-F
A5R105	0757-0390		RESISTOR 36.5 1% .125W F TC=0+-100	24546	C4-1/8-T0-36R5-F
A5R106	0757-0393		RESISTOR 47.5 1% .125W F TC=0+-100	24546	C4-1/8-T0-47R5-F
A5R107	0757-0427		RESISTOR 1.5K 1% .125W F TC=0+-100	24546	C4-1/8-T0-1501-F
A5R108	0757-0390		RESISTOR 36.5 1% .125W F TC=0+-100	24546	C4-1/8-T0-36R5-F
A5R109	0757-0409		RESISTOR 274 1% .125W F TC=0+-100	24546	C4-1/8-T0-274R-F
A5R110	0757-0404		RESISTOR 130 1% .125W F TC=0+-100	24546	C4-1/8-T0-131-F
A5R111	0758-0002		RESISTOR 560 5% .25W F TC=0+-100	24546	C5-1/4-T0-561-J
A5R112	0757-0442		RESISTOR 10K 1% .125W F TC=0+-100	24546	C4-1/8-T0-1002-F
A5R113	0757-0429		RESISTOR 1.82K 1% .125W F TC=0+-100	24546	C4-1/8-T0-1821-F
A5R114	0757-0401		RESISTOR 100 1% .125W F TC=0+-100	24546	C4-1/8-T0-101-F
A5R115	0757-0394	1	RESISTOR 51.1 1% .125W F TC=0+-100	24546	C4-1/8-T0-51R1-F

REFERENCE DESIGNATION	HP PART NUMBER	QTY	DESCRIPTION	MFR CODE	MFR PART NUMBER
A5R118	0757-0346	9	RESISTOR 10 1% .125W F TC=0+-100	24546	C4-1/8-T0-10R0-F
A5R119	0698-3492		RESISTOR 2.67K 1% .125W F TC=0+-100	16299	C4-1/8-T0-2671-F
A5R120	0758-0126	2	RESISTOR 51 5% .25W F TC=0+-100	24546	C5-1/4-T0-51R0-J
A5R121	0757-0407		RESISTOR 200 1% .125W F TC=0+-100	24546	C4-1/8-T0-201-F
A5R122	0757-0419	2	RESISTOR 681 1% .125W F TC=0+-100	24546	C4-1/8-T0-681R-F
A5R123	0757-0419		RESISTOR 681 1% .125W F TC=0+-100	24546	C4-1/8-T0-681R-F
A5R124	0757-0280	10	RESISTOR 1K 1% .125W F TC=0+-100	24546	C4-1/8-T0-1001-F
A5R125	0757-0437	4	RESISTOR 4.75K 1% .125W F TC-0+-100	24546	C4-1/8-T0-4751-F
A5R126	0757-0405	3	RESISTOR 162 1% .125W F TC=0+-100	24546	C4-1/8-T0-162R-F
A5R127	0757-0399		RESISTOR 82.5 1% .125W F TC=0+-100	24546	C4-1/8-T0-82R5-F
A5R128	0757-0411	4	RESISTOR 332 1% .125W F TC=0+-100	24546	C4-1/8-T0-332R-F
A5R129	0757-0424		RESISTOR 1.1K 1% .125W F TC=0+-100	24546	C4-1/8-T0-1101-F
A5R130	0757-0420		RESISTOR 750 1% .125W F TC=0+-100	24546	C4-1/8-T0-751-F
A5R131	0757-0278		RESISTOR 1.78K 1% .125W F TC=0+-100	24546	C4-1/8-T0-1781-F
A5R132	0757-0438		RESISTOR 5.11K 1% .125W F TC=0+-100	24546	C4-1/8-T0-5111-F
A5R133	0757-0426		RESISTOR 1.3K 1% .125W F TC-0+-100	24546	C4-1/8-T0-1301-F
A5R134	0757-0407		RESISTOR 200 1% .125W F TC=0+-100	24546	C4-1/8-T0-201-F
A5R135	0757-0436	1	RESISTOR 4.32K 1% .125W F TC=0+-100	24546	C4-1/8-T0-4321-F
A5R136	0757-0409		RESISTOR 274 1% .125W F TC=0+-100	24546	C4-1/8-T0-274R-F
A5R137	0757-0430	1	RESISTOR 2.21K 1% .125W F TC=0+-100	24546	C4-1/8-T0-2211-F
A5R138	0757-0274		RESISTOR 1.21K 1% .125W F TC=0+-100	24546	C4-1/8-T0-1213-F
A5R139	0757-0405		RESISTOR 162 1% .125W F TC=0+-100	24546	C4-1/8-T0-162R-F
A5R140	0757-0401		RESISTOR 100 1% .125W F TC=0+-100	24546	C4-1/8-T0-101-F
A5R141	0757-0410	1	RESISTOR 301 1% .125W F TC=0+-100	24546	C4-1/8-T0-301R-F
A5R142	0757-0388	9	RESISTOR 30.1 1% .125W F TC=0+-100	24546	C4-1/8-T0-30R1-F
A5R143	0757-0437		RESISTOR 4.75K 1% .125W F TC=0+-100	24546	C4-1/8-T0-4751-F
A5R144	0757-0280		RESISTOR 1K 1% .125W F TC=0+-100	24546	C4-1/8-T0-1001-F
A5R145	0757-0406		RESISTOR 182 1% .125W F TC=0+-100	24546	C4-1/8-T0-182R-F
A5R146	0757-1094		RESISTOR 1.47K 1% .125W F TC=0+-100	24546	C4-1/8-T0-1471-F
A5R147	0757-1094		RESISTOR 1.47K 1% .125W F TC=0+-100	24546	C4-1/8-T0-1471-F
A5R148	0757-0401		RESISTOR 100 1% .125W F TC=0+-100	24546	C4-1/8-T0-101-F
A5R149	0757-0401		RESISTOR 100 1% .125W F TC=0+-100	24546	C4-1/8-T0-101-F
A5R150	0757-0346		RESISTOR 10 1% .125W F TC=0+-100	24546	C4-1/8-T0-10R0-F
A5R151	0757-0414	1	RESISTOR 432 1% .125W F TC=0+-100	24546	C4-1/8-T0-432R-F
A5R152	0757-0398	3	RESISTOR 75 1% .125W F TC=0=-100	24546	C4-1/8-T0-75R0-F
A5R153	0757-0424		RESISTOR 1.1K 1% .125W F TC=0+-100	24546	C4-1/8-T0-1101-F
A5R154	0757-0424		RESISTOR 1.1K 1% .125W F TC=0+-100	24546	C4-1/8-T0-1101-F
A5R155	0757-0280		RESISTOR 1K 1% .125W F TC=0+-100	24546	C4-1/8-T0-1001-F
A5R156	0757-0398		RESISTOR 75 1% .125W F TC=0+-100	24546	C4-1/8-T0-75R0-F
A5R157	0757-0280		RESISTOR 1K 1% .125W F TC=0+-100	24546	C4-1/8-T0-1001-F
A5R158	0757-0433		RESISTOR 3.32K 1% .125W F TC=0+-100	24546	C4-1/8-T0-3321-F
A5R159	0757-0384	5	RESISTOR 20 1% .125W F TC=0+-100	19701	MF4C1/8-T0-20R0-F
A5R160	0757-0401		RESISTOR 100 1% .125W F TC=0+-100	24546	C4-1/8-T0-101-F
A5R161	0757-0274		RESISTOR 1.21K 1% .125W F TC=0+-100	24546	C4-1/8-T0-1213-F
A5R162	0698-3158		RESISTOR 23.7K 1% .125W F TC=0+-100	16299	C4-1/8-T0-2372-F
A5R163	0757-0438		RESISTOR 5.11K 1% .125W F TC=0+-100	24546	C4-1/8-T0-5111-F
A5R164	0757-0346		RESISTOR 10 1% .125W F TC=0+-100	24546	C4-1/8-T0-10R0-F
A5R165	0757-0346		RESISTOR 10 1% .125W F TC=0+-100	24546	C4-1/8-T0-10R0-F
A5R166	0757-0401		RESISTOR 100 1% .125W F TC=0+-100	24546	C4-1/8-T0-101-F
A5R167	0757-0407		RESISTOR 200 1% .125W F TC=0+-100	24546	C4-1/8-T0-201-F
A5R168	0757-0279	1	RESISTOR 3.16K 1% .125W F TC=0+-100	24546	C4-1/8-T0-3161-F
A5R169	0757-0422	2	RESISTOR 909 1% .125W F TC=0+-100	24546	C4-1/8-T0-909R-F
A5R170	0757-0346		RESISTOR 10 1% .125W F TC=0+-100	24546	C4-1/8-T0-10R0-F
A5R171	0757-0346		RESISTOR 10 1% .125W F TC=0+-100	24546	C4-1/8-T0-10R0-F
A5R172	0757-0346		RESISTOR 10 1% .125W F TC=0+-100	24546	C4-1/8-T0-10R0-F
A5R173	0757-0395		RESISTOR 56.2 1% .125W F TC=0+-100	24546	C4-1/8-T0-56R2-F
A5R174	0757-0407		RESISTOR 200 1% .125W F TC=0+-100	24546	C4-1/8-T0-201-F
A5R175	0757-0290		RESISTOR 6.19K 1% .125W F TC=0+-100	19701	MF4C1/8-T0-6191-F
A5R176	0757-0408	4	RESISTOR 243 1% .125W F TC=0+-100	24546	C4-1/8-T0-243R-F
A5R177	0683-1055	9	REISISTOR 1M 5% .25W FC TC=-800/+900	1121	CB1055
A5R178	0683-1055		RESISTOR 1M 5% .25W FC TC=-800/+900	1121	CB1055
A5R179	0683-1055		RESISTOR 1M 5% .25W FC TC=-800/+900	1121	CB1055
A5R180	0683-1055		RESISTOR 1M 5% .25W FC TC=-800/+900	1121	CB1055
A5R181	0683-1055		RESISTOR 1M 5% .25W FC TC=-800/+900	1121	CB1055
A5R182	0683-1055		RESISTOR 1M 5% .25W FC TC=-800/+900	1121	CB1055
A5R183	0757-0388		RESISTOR 30.1 1% .125W F TC=-0+-100	24546	C4-1/8-T0-30R1-F
A5R184	0683-1055		RESISTOR 1M 5% .25W FC TC=-800/+900	1121	CB1055
A5R185	0683-1055		RESISTOR 1M 5% .25W FC TC=-800/+900	1121	CB1055
A5R186	0683-1055		RESISTOR 1M 5% .25W FC TC=-800/+900	1121	CB1055
A5R187	0757-0422		RESISTOR 909 1% .125W F TC=0+-100	24546	C4-1/8-T0-909R-F
A5R188	2100-0554	5	RESISTOR-VAR TRMR 500 OHM 10% C TOP ADJ	73138	72PR500
AR5189	0757-0388		RESISTOR 30.1 1% .125W F TC=0+-100	24546	C4-1/8-TO-30R1-F
A5R190	0757-0408		RESISTOR 243 1% .125W F TC=0+-100	24546	C4-1/8-T0-243R-F
A5R191	0757-0408		RESISTOR 243 1% .125W F TC=0+-100	24546	C4-1/8-T0-243R-F
A5R192	0757-0401		RESISTOR 100 1% .125W F TC=0+-100	24546	C4-1/8-T0-101-F
A5R192	0757-0401		RESISTOR 100 1% .125W F TC=0+-100	24546	C4-1/8-T0-101-F
A5R193	0698-4422	1	RESISTOR 1.27K 1% .125W F TC=0+-100	16299	C4-1/8-T0-1271-F
A5R199	0757-0412	1	RESISTOR 365 1% .125W F TC=0+-100	24546	C4-1/8-T0-365R-F

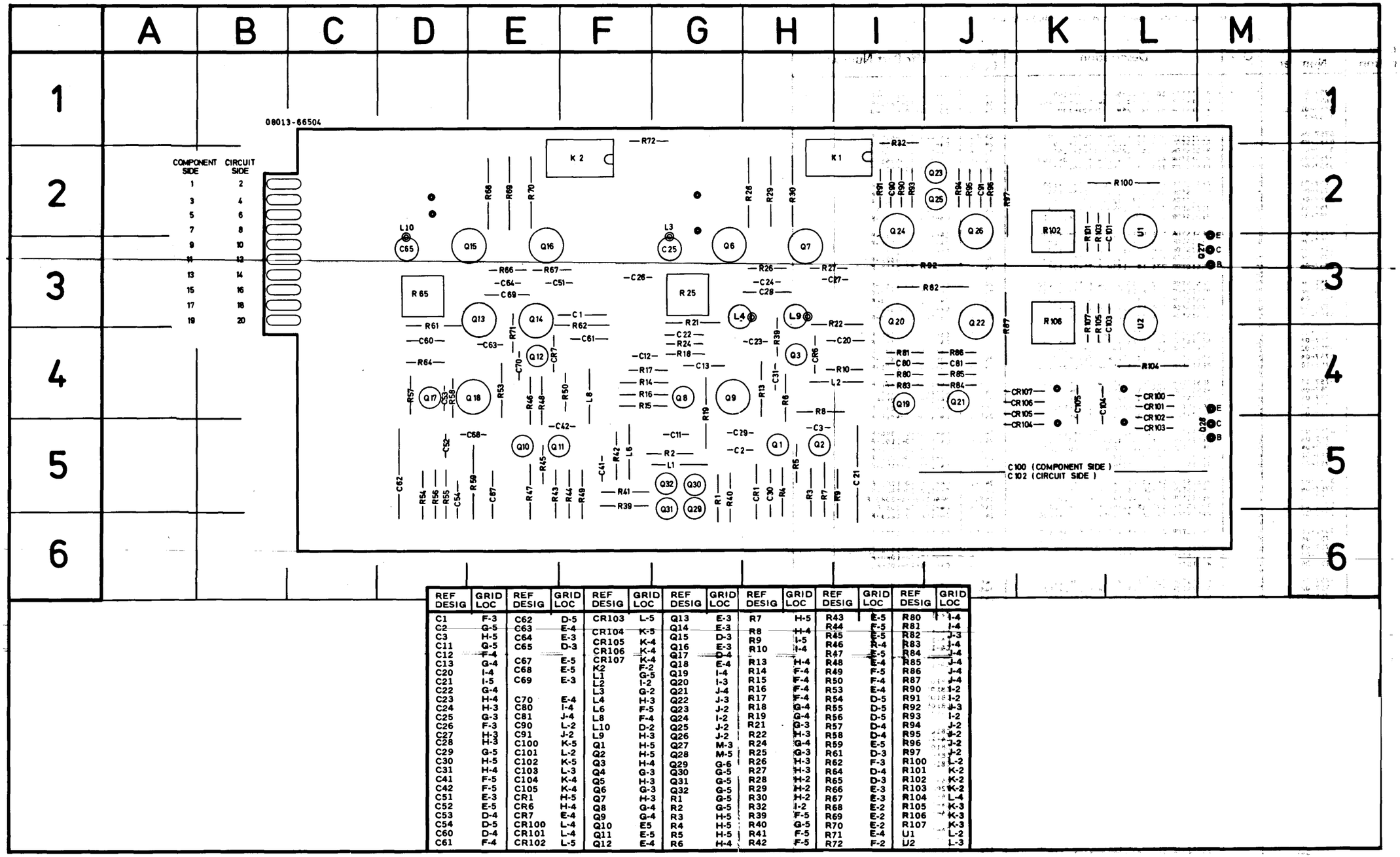

REF DESIG	GRID LOC	REF DESIG	GRID LOC	REF DESIG	GRID LOC	REF DESIG	GRID LOC	REF DESIG	GRID LOC	REF DESIG	GRID LOC	REF DESIG	GRID LOC
C1	F-3	C62	D-5	CR103	L-5	Q13	E-3	R7	H-5	R43	E-5	R80	I-4
C2	G-5	C63	E-4	CR104	K-5	Q14	E-3	R8	H-4	R44	F-5	R81	I-4
C3	H-5	C64	E-3	CR105	K-4	Q15	D-3	R9	I-5	R45	E-5	R82	J-3
C11	G-5	C65	D-3	CR106	K-4	Q16	E-3	R10	I-4	R46	E-4	R83	J-4
C12	F-4			CR107	K-4	Q17	D-4			R47	E-5	R84	J-4
C13	G-4	C67	E-5	K2	F-2	Q18	E-4	R13	H-4	R48	E-4	R85	J-4
C20	I-4	C68	E-5	L1	G-5	Q19	I-4	R14	F-4	R49	F-5	R86	J-4
C21	I-5	C69	E-3	L2	I-2	Q20	I-3	R15	F-4	R50	F-4	R87	J-4
C22	G-4			L3	G-2	Q21	J-4	R16	F-4	R53	E-4	R90	I-2
C23	H-4	C70	E-4	L4	H-3	Q22	J-3	R17	F-4	R54	D-5	R91	I-2
C24	H-3	C80	I-4	L6	F-5	Q23	J-2	R18	G-4	R55	D-5	R92	J-3
C25	G-3	C81	J-4	L8	F-4	Q24	I-2	R19	G-4	R56	D-5	R93	I-2
C26	F-3	C90	L-2	L10	D-2	Q25	J-2	R21	G-3	R57	D-4	R94	J-2
C27	H-3	C91	J-2	L9	H-3	Q26	J-2	R22	H-3	R58	D-4	R95	J-2
C28	H-3	C100	K-5	Q1	H-5	Q27	M-3	R24	G-4	R59	E-5	R96	J-2
C29	G-5	C101	L-2	Q2	H-5	Q28	M-5	R25	G-3	R61	D-3	R97	J-2
C30	H-5	C102	K-5	Q3	H-4	Q29	G-6	R26	H-3	R62	F-3	R100	L-2
C31	H-4	C103	L-3	Q4	G-3	Q30	G-5	R27	H-3	R64	D-4	R101	K-2
C41	F-5	C104	K-4	Q5	H-3	Q31	G-5	R28	H-2	R65	D-3	R102	K-2
C42	F-5	C105	K-4	Q6	G-3	Q32	G-5	R29	H-2	R66	E-3	R103	K-2
C51	E-3	CR1	H-5	Q7	H-3	R1	G-5	R30	H-2	R67	E-3	R104	L-4
C52	E-5	CR6	H-4	Q8	G-4	R2	G-5	R32	I-2	R68	E-2	R105	K-3
C53	D-4	CR7	E-4	Q9	G-4	R3	H-5	R39	F-5	R69	E-2	R106	K-3
C54	D-5	CR100	L-4	Q10	E5	R4	H-5	R40	G-5	R70	E-2	R107	K-3
C60	D-4	CR101	L-4	Q11	E-5	R5	H-5	R41	F-5	R71	E-4	U1	L-2
C61	F-4	CR102	L-5	Q12	E-4	R6	H-4	R42	F-5	R72	F-2	U2	L-3

Figure **6-3.** Component Layout – Board **A6**

TABLE 6-6 BOARD A6 REPLACEABLE PARTS LIST

REFERENCE DESIGNATION	HP PART NUMBER	QTY	DESCRIPTION	MFR CODE	MFR PART NUMBER
A6	08013-66504	1	BOARD ASSEMBLY, AMPLIFIER OUTPUT	28480	08013-66504
A6C1	0160-2307	1	CAPACITOR-FXD 47PF +-5% 300WVDC MICA	28480	0160-2307
A6C1	0160-0356	2	CAPACITOR-FXD 18PF +-5% 300WVDC MICA	28480	0160-0356
A6C1	0160-2306	3	CAPACITOR-FXD 27PF +-5% 300WVDC MICA	28480	0160-2306
A6C2	0150-0050	2	CAPACITOR-FXD 1000PF +80-20% 1000WVDC	28480	0150-0050
A6C3	0160-2306		CAPACITOR-FXD 27PF +-5% 300WVDC MICA	28480	0160-2306
A6C11	0160-2055	12	CAPACITOR-FXD .01UF +80-20% 100WVDC CER	28480	0160-2055
A6C12	0160-2055		CAPACITOR-FXD .01UF +80-20% 100WVDC CER	28480	0160-2055
A6C13	0160-0174	10	CAPACITOR-FXD .47UF +80-20% 25WVDC CER	28480	0160-0174
A6C20	0160-0174		CAPACITOR-FXD .47UF +80-20% 25WVDC CER	28480	0160-0174
A6C21	0180-0098	2	CAPACITOR-FXD; 100UF+-20% 20VDC TA	56289	150D107X0020S2
A6C22	0160-0174		CAPACITOR-FXD .47UF +80-20% 25WVDC CER	28480	0160-0174
A6C23	0160-2055		CAPACITOR-FXD .01UF +80-20% 100WVDC CER	28480	0160-2055
A6C24	0160-2055		CAPACITOR-FXD .01UF +80-20% 100WVDC CER	28480	0160-2055
A6C25	0121-0046	2	CAPACITOR-V TRMR-CER 9/35PF 200V PC-MTG	0086S	304322 9/35PF N650
A6C26	0140-0190	2	CAPACITOR-FXD 39PF +-5% 300WVDC MICA	72136	DM15E390J0300WV1CR
A6C26	0160-0356		CAPACITOR-FXD 18PF +-5% 300WVDC MICA	28480	0160-0356
A6C26	0140-0202	2	CAPACITOR-FXD 15PF +-5% 500WVDC MICA	72136	DM15C150J0500WV1CR
A6C26	0160-2150	2	CAPACITOR-FXD 33PF +-5% 300WVDC MICA	28480	0160-2150
A6C26	0140-0201	2	CAPACITOR-FXD 12PF +-5% 500WVDC MICA	72136	DM15C120J0500WV1CR
A6C27	0160-2055		CAPACITOR-FXD .01UF +80-20% 100WVDC CER	28480	0160-2055
A6C28	0180-0291	4	CAPACITOR-FXD; 1UF+-10% 35VDC TA-SOLID	56289	150D105X9035A2
A6C29	0160-2055		CAPACITOR-FXD .01UF +80-20% 100WVDC CER	28480	0160-2055
A6C30	0180-0291		CAPACITOR-FXD; 1UF+-10% 35VDC TA-SOLID	56289	A50D105X9035A2
A6C31	0160-2259	2	CAPACITOR-FXD 12PF +-5% 500WVDC CER	28480	0160-2259
A6C41	0150-0050		CAPACITOR-FXD 1000PF +80-20% 1000WVDC	28480	0150-0050
A6C42	0160-2306		CAPACITOR-FXD 27PF +-5% 300WVDC MICA	28480	0160-2306
A6C51	0160-2055		CAPACITOR-FXD .01UF +80-20% 100WVDC CER	28480	0160-2055
A6C52	0160-2055		CAPACITOR-FXD .01UF +80-20% 100WVDC CER	28480	0160-2055
A6C53	0160-2055		CAPACITOR-FXD .01UF +80-20% 100WVDC CER	28480	0160-2055
A6C54	0160-0174		CAPACITOR-FXD .47UF +80-20% 25WVDC CER	28480	0160-0174
A6C60	0160-0174		CAPACITOR-FXD .47UF +80-20% 25WVDC CER	28480	0160-0174
A6C61	0160-0174		CAPACITOR-FXD .47UF +80-20% 25WVDC CER	28480	0160-0174
A6C62	0180-0098		CAPACITOR-FXD; 100UF+-20% 20VDC TA	56289	150D107X0020S2
A6C63	0160-2055		CAPACITOR-FXD .01UF +80-20% 100WVDC CER	28480	0160-2055
A6C64	0160-2055		CAPACITOR-FXD .01UF +80-20% 100WVDC CER	28480	0160-2055
A6C65	0121-0046		CAPACITOR-V TRMR-CER 9/35PF 200V PC-MTG	0086S	304322 9/35PF N650
A6C67	0180-0291		CAPACITOR-FXD; 1UF+-10% 35VDC TA-SOLID	56289	150D105X9035A2
A6C68	0160-2055		CAPACITOR-FXD .01UF +80-20% 100WVDC CER	28480	0160-2055
A6C69	0180-0291		CAPACITOR-FXD; 1UF+-10% 35VDC TA-SOLID	56289	150D105X9035A2
A6C70	0160-2259		CAPACITOR-FXD 12PF +-5% 500WVDC CER	28480	0160-2259
A6C80	0160-0174		CAPACITOR-FXD .47UF +80-20% 25WVDC CER	28480	0160-0174
A6C81	0160-0174		CAPACITOR-FXD .47UF +80-20% 25WVDC CER	28480	0160-0174
A6C90	0160-0174		CAPACITOR-FXD .47UF +80-20% 25WVDC CER	28480	0160-0174
A6C91	0160-0174		CAPACITOR-FXD .47UF +80-20% 25WVDC CER	28480	0160-0174
A6C100	0180-1784	2	CAPACITOR-FXD 1000UF +75-10% 40VDC AL	56289	39D108G040GP4
A6C102	0180-1784		CAPACITOR-FXD 1000UF +75-10% 40VDC AL	56289	39D108G040GP4
A6C103	0160-2940		CAPACITOR-FXD 470PF+-5% 300WVDC MICA	28480	0160-2940
A6C104	0160-4213	2	CAPACITOR-FXD .1UF +-20% 50WVDC POLYE	28480	0160-4213
A6C105	0160-4213		CAPACITOR-FXD .1UF +-20% 50WVDC POLYE	28480	0160-4213
A6CR1	1902-0025	1	DIODE-ZNR 10V 5% D0-7 PD=.4W TC=+.06%	4713	SZ 10939-182
A6CR6	1901-0533	6	DIODE-SCHOTTKY	28480	1901-0533
A6CR7	1901-0533		DIODE-SCHOTTKY	28480	1901-0533
A6CR100	1901-0159	8	DIODE-PWR RECT 400V 750NA DO-41	4713	SR1358-4
A6CR101	1901-0159		DIODE-PWR RECT 400V 750NA DO-41	4713	SR1358-4
A6CR102	1901-0159		DIODE-PWR RECT 400V 750NA DO-41	4713	SR1358-4
A6CR103	1901-0159		DIODE-PWR RECT 400V 750NA DO-41	4713	SR1358-4
A6CR104	1901-0159		DIODE-PWR RECT 400V 750NA DO-41	4713	SR1358-4
A6CR105	1901-0159		DIODE-PWR RECT 400V 750NA DO-41	4713	SR1358-4
A6CR106	1901-0159		DIODE-PWR RECT 400V 750NA DO-41	4713	SR1358-4
A6CR107	1901-0159		DIODE-PWR RECT 400V 750NA DO-41	4713	SR1358-4
A6K1	0490-1079	2	RELAY-REED 1A .5A 100V CONT 5V-COIL	28480	0490-1079
A6K2	0490-1079		RELAY-REED 1A .5A 100V CONT 5V-COIL	28480	0490-1079
A6L1	9100-1613	2	COIL-FXD MOLDED RF CHOKE .47UH 20%	24226	15/470
A6L2	9100-1611	2	COIL-FXD MOLDED RF CHOKE .22UH 20%	24226	15/220
A6L3	9170-0029	8	CORE-SHIELDING BEAD	2114	56-590-65A2/4A
A6L4	9170-0029	3	CORE-SHIELDING BEAD	2114	56-590-65A2/4A
A6L6	9100-1613		COIL-FXD MOLDED RF CHOKE .47UH 20%	24226	15/470
A6L8	9100-1611		COIL-FXD MOLDED RF CHOKE .22UH 20%	24226	15/220
A6L9	9170-0029		CORE-SHIELDING BEAD	2114	56-590-65A2/4A

REFERENCE DESIGNATION	HP PART NUMBER	QTY	DESCRIPTION	MFR CODE	MFR PART NUMBER
A6L10	9170-0029		CORE-SHIELDING BEAD	2114	56-590-65A2/4A
A6MP4	1205-0037	2	HEAT-DISSIPATOR SGL TO-36 PKG, 04	28480	1205-0037
A6MP5	1205-0037		HEAT-DISSIPATOR SGL TO-36 PKG, 05	28480	1205-0037
A6MP6	1205-0033	8	HEAT-DISSIPATOR SGL TO-5/TO-39 PKG, 06	28480	1205-0033
A6MP7	1205-0033		HEAT-DISSIPATOR SGL T0-5/T0-39 PKG, Q7	28480	1205-0033
A6MP9	1205-0011	2	HEAT-DISSIPATOR SGL T0-5/T0-39 PKG, 09	28480	1205-0011
A6MP15	1205-0033		HEAT-DISSIPATOR SGL TO-5/TO-39 PKG, Q15	28480	1205-0033
A6MP16	1205-0033		HEAT-DISSIPATOR SGL TO-5/TO-39 PKG, Q16	28480	1205-0033
A6MP18	1205-0011		HEAT-DISSIPATOR SGL T0-5/T0-39 PKG, Q18	28480	1205-0011
A6MP20	1205-0033		HEAT-DISSIPATOR SGL TO-5/TO-39 PKG, Q20	28480	1205-0033
A6MP22	1205-0033		HEAT DISSIPATOR SGL TO-5/TO-39 PKG, Q22	28480	1205-0033
A6MP24	1205-0033		HEAT-DISSIPATOR SGL TO-5/TO-39 PKG, Q24	28480	1205-0033
A6MP26	1205-0033		HEAT-DISSIPATOR SGL TO-5/TO-39 PKG, 026	28480	1205-0033
A6MP27	0340-0720	1	INSULATOR-XSTR TO-18 .1-THK	28480	0340-0720
A6MP28	1200-0185	1	INSULATOR-XSTR TO-5 .075-THK	13103	7717-86N RED
A6Q1	1854-0345	2	TRANSISTOR NPN 2N5179 SI TO-72 PD=200MW	4713	2N5179
A6Q2	1854-0345		TRANSISTOR NPN 2N5179 SI TO-72 PD=200MW	4713	2N5179
A6Q3	1853-0218	1	TRANSISTOR PNP SI TO-18 PD=360MW	28480	1853-0218
A6Q4	1853-0357	2	TRANSISTOR PNP SI TO-18 PD=360MW	28480	1853-0357
A6Q5	1853-0357		TRANSISTOR PNP SI T0-18 PD=360MW	28480	1853-0357
A6Q6	1853-0315	2	TRANSISTOR PNP SI TO-39 PD=1W FT=1GHZ	28480	1853-0315
A6Q7	1853-0315		TRANSISTOR PNP SI TO-39 PD=1W FT=1GHZ	28480	1853-0315
A6Q8	1853-0036	3	TRANSISTOR PNP SI PD=310MW FT=250MHZ	28480	1853-0036
A6Q9	1854-0003	1	TRANSISTOR NPN SI TO-39 PD=800MW	28480	1854-0003
A6Q10	1853-0015	2	TRANSISTOR PNP SI PD=200MW FT=500MHZ	28480	1853-0015
A6Q11	1853-0015		TRANSISTOR PNP SI PD=200MW FT=500MHZ	28480	1853-0015
A6Q12	1854-0009	1	TRANSISTOR NPN 2N709 SI TO-18 PD=300MW	28480	1854-0009
A6Q13	1854-0332	4	TRANSISTOR NPN SI TO-39 PF=1W FT=800MHZ	28480	1854-0332
A6Q14	1854-0332		TRANSISTOR NPN SI TO-39 PD=1W FT=800MHZ	28480	1854-0332
A6Q15	1854-0332		TRANSISTOR NPN SI TO-39 PD-1W FT=800MHZ	28480	1854-0332
A6Q16	1854-0332		TRANSISTOR NPN SI TO-39 PD=1W FT=800MHZ	28480	1854-0332
A6Q17	1854-0215	3	TRANSISTOR NPN SI PD=350MW FT=300MHZ	4713	SPS 3611
A6Q18	1853-0012	1	TRANSISTOR PNP 2N2904A SI TO-5 PD=600MW	1295	2N2904A
A6Q19	1854-0215		TRANSISTOR NPN SI PD=350MW FT=300MHZ	4713	SPS 3611
A6Q20	1853-0027	2	TRANSISTOR PNP SI TO-39 PD=1W FT=100MHZ	28480	1853-0027
A6Q21	1853-0036		TRANSISTOR PNP SI PD=310MW FT=250MHZ	28480	1853-0036
A6Q22	1854-0039	2	TRANSISTOR NPN 2N3053 SI TO-5 PD=1W	4713	2N3053
A6Q23	1854-0215		TRANSISTOR NPN SI PD=350MW FT=300MHZ	4713	SPS 3611
A6Q24	1853-0027		TRANSISTOR PNP SI TO-39 PD=1W FT=100MHZ	28480	1853-0027
A6Q25	1853-0036		TRANSISTOR PNP SI PD=310MW FT=250MHZ	28480	1853-0036
A6Q26	1854-0039		TRANSISTOR NPN 2N3053 SI TO-5 PD=1W	4713	2N3053
A6Q27	1854-0433	2	TRANSISTOR NPN SI PD=90W FT-2MHZ	28480	1854-0433
A6Q28	1854-0433		TRANSISTOR NPN SI PD=90W FT=2MHZ	28480	1854-0433
A6Q29	1854-0630	4	TRANSISTOR NPN SI TO-52 PD=360MW	4713	SS2077
A6Q30	1854-0630		TRANSISTOR NPN SI TO-52 PD=360MW	4713	SS2077
A6Q31	1854-0630		TRANSISTOR NPN SI TO-52 PD=36OMW	4713	SS2077
A6Q32	1854-0630		TRANSISTOR NPN SI TO-52 PD=360MW	4713	SS2077
A6R1	0757-0401	2	RESISTOR 100 1% .125W F TC=0+-100	24546	C4-1/8-T0-101-F
A6R2	0698-4418	2	RESISTOR 205 1% .125W F TC=0+-100	16299	C4-1/8-T0-205R-F
A6R3	0757-0280	2	RESISTOR 1K 1% .125W F T0=0+-100	24546	C4-1/8-T0-1001-F
A6R4	0757-0317	4	RESISTOR 1.33K 1% .125W F TC=0+-100	24546	C4-1/8-T0-1331-F
A6R5	0757-0395	2	RESISTOR 56.2 1% .125W F TC=0+-100	24546	C4-1/8-T0-56R2-F
A6R6	0698-3438	2	RESISTOR 147 1% .125W F TC=0+-100	16299	C4-1/8-T0-147R-F
A6R7	0758-0029	2	RESISTOR 470 5% .25W F TC=0+-100	24546	C5-1/4-T0-471-J
A6R8	0757-0419	2	RESISTOR 681 1% .125W F TC=0+-100	24546	C4-1/8-T0-681R-F
A6R9	0757-0317		RESISTOR 1.33K 1% .125W F TC=0+-100	24546	C4-1/8-T0-1331-F
A6R10	0757-0276	2	RESISTOR 61.9 1% .125W F TC=0+-100	24546	C4-1/8-T0-6192-F
A6R13	0757-0178	1	RESISTOR 100 1% .25W F TC=0+-100	24546	C5-1/4-T0-101-F
A6R14	0757-0288	2	RESISTOR 9.09K 1% .125W F TC=0+-100	19701	MF4C1/8-T0-9091-F
A6R15	0757-0442	2	RESISTOR 10K 1% .125W F TC=0+-100	24546	C4-1/8-T0-1002-F
A6R16	0757-0433	1	RESISTOR 3.32K 1% .125W F TC=0+-100	24546	C4-1/8-T0-3321-F
A6R17	0757-0405	2	RESISTOR 162 1% .125W F TC=0+-100	24546	C4-1/8-T0-162R-F
A6R18	0757-0418	2	RESISTOR 619 1% .125W F TC=0+-100	24546	C4-1/8-T0-619R-F
A6R19	0760-0024	2	RESISTOR 100 5% 1W MO TC=0+-200	FR003	C32
A6R21	0757-0500	4	RESISTOR 30.1 1% .25W F TC=0+-100	24546	C5-1/4-T0-30R1-F
A6R22	0757-0500		RESISTOR 30.1 1% .25W F TC=0+-100	24546	C5-1/4-T0-30R1-F
A6R24	0698-3442	1	RESISTOR 237 1% .125W F TC=0+-100	16299	C4-1/8-T0-237R-F
A6R25	2100-0568	2	RESISTOR-VAR TRMR 100 OHM 10% C TOP ADJ	73138	72PR100
A6R26	0757-0393	4	RESISTOR 47.5 1% .125W F TC=0+-100	24546	C4-1/8-T0-47R5-F
A6R27	0757-0393		RESISTOR 47.5 1% .125W F TC=0+-100	24546	C4-1/8-T0-47R5-F
A6R28	0757-0801	6	RESISTOR 150 1% .5W F TC=0+-100	19701	MF7C-1/2-T0-151-F
A6R29	0757-0801		RESISTOR 150 1% .5W F TC=0+-100	19701	MF7C-1/2-T0-151-F
A6R30	0757-0801		RESISTOR 150 1% .5W F TC=0+-100	19701	MR7C-1/2-T0-151-F
A6R32	0757-0274	2	RESISTOR 1.21K 1% .125W F TC=0+-100	24546	C4-1/8-T0-1213-F
A6R39	0698-0082	2	RESISTOR 464 1% .125W F TC=0+-100	16299	C4-1/8-T0-4640-F
A6R39	0757-0406	2	RESISITOR 182 1% .125W F TC=0+-100	24546	C4-1/8-TO-182R-F
A6R40	0757-0401		RESISTOR 100 1% .125W F TC=0+-100	24546	C4-1/8-T0-101-F

TABLE 6-6 (CONT'D) BOARD A6 REPLACEABLE PARTS LIST

REFERENCE DESIGNATION	HP PART NUMBER	QTY	DESCRIPTION	MFR CODE	MFR PART NUMBER
A6R41	0698-0082		RESISTOR 464 1% .125W F TC=0+-100	16299	C4-1/8-T0-4640-F
A6R42	0698-4418		RESISTOR 205 1% .125W F TC=0+-100	16299	C4-1/8-T0-205R-F
A6R43	0757-0280		RESITOR 1K 1% .125W F TC=0+-100	24546	C4-1/8-T0-1001-F
A6R44	0757-0317		RESISTOR 1.33K 1% .125W F TC=0+-100	24546	C4-1/8-T0-1331-F
A6R45	0757-0395		RESISTOR 56.2 1% .125W F TC=0+-100	24546	C4-1/8-T0-56R2-F
A6R46	0698-3438		RESISTOR 147 1% .125W F TC=0+-100	16299	C4-1/8-T0-147R-F
A6R47	0758-0029		RESISTOR 470 5% .25W F TC=0+-100	24546	C5-1/4-T0-471-J
A6R48	0757-0419		RESISTOR 681 1% .125W F TC=0+-100	24546	C4-1/8-T0-681R-F
A6R49	0757-0317		RESISTOR 1.33K 1% .125W F TC=0+-100	24546	C4-1/8-T0-1331-F
A6R50	0757-0276		RESISTOR 61.9 1% .125W F TC=0+-100	24546	C4-1/8-T0-6192-F
A6R53	0758-0013	1	RESISTOR 120 5% .25W F TC=0+-100	24546	C5-1/4-T0-121-J
A6R54	0757-0288		RESISTOR 9.09 1% .125W F TC=0+-100	19701	MF4C1/8-T0-9091-F
A6R55	0757-0442		RESISTOR 10K 1% .125W F TC=0+-100	24546	C4-1/8-T0-1002-F
A6R56	0757-0279	1	RESISTOR 3.16K 1% .125W F TC=0+-100	24546	C4-1/8-T0-3161-F
A6R57	0757-0405		RESISTOR 162 1% .125W F TC=0+-100	24546	C4-1/8-T0-162R-F
A6R58	0757-0418		RESISTOR 619 1% .125W F TC=0+-100	24546	C4-1/8-T0-619R-F
A6R59	0760-0024		RESISTOR 100 5% 1W MO TC=0+-200	FR003	C32
A6R61	0757-0500		RESISTOR 30.1 1% .25W F TC=0+-100	24546	C5-1/4-T0-30R1-F
A6R62	0757-0500		RESISTOR 30.1 1% .25W F TC=0+-100	24546	C5-1/4-T0-30R1-F
A6R64	0698-3443	1	RESISTOR 287 1% .123W F TC=0+-100	16299	C4-1/8-T0-287R-F
A6R65	2100-0568		RESISTOR-VAR TRMR 100 OHM 10% C TOP ADJ	73138	72PR100
A6R66	0757-0393		RESISTOR 47.5 1% .125W F TC=0+-100	24546	C4-1/8-T0-47R5-F
A6R67	0757-0393		RESISTOR 47.5 1% .125W F TC=0+-100	24546	C4-1/8-T0-47R5-F
A6R68	0757-0801		RESISTOR 150 1% .5W F TC=0+-100	19701	MF7C-1/2-T0-151-F
A6R69	0757-0801		RESISTOR 150 1% .5W F TC=0+-100	19701	MF7C-1/2-T0-151-F
A6R70	0757-0801		RESISTOR 150 1% .5W F TC=0+-100	19701	MF7C-1/2-T0-151-F
A6R71	0757-0406		RESISTOR 182 1% .125W F TC=0+-100	24546	C4-1/8-T0-182R-F
A6R72	0757-0274		RESISTOR 1.21K 1% .125W F TC=0+-100	24546	C4-1/8-T0-1213-F
A6R80	0698-3496	4	RESISTOR 3.57K 1% .125W F TC=0+-100	16299	C4-1/8-T0-357R-F
A6R81	0698-4455	2	RESISTOR 536 1% .125W F TC=0+-100	24546	C4-1/8-T0-536R-F
A6R82	0757-0997	2	RESISTOR 39.2 1% .5W F TC=0+-100	19701	MF7C1/2-T0-39R2-F
A6R83	0757-0415	4	RESISTOR 475 1% .125W F TC=0+-100	24546	C4-1/8-T0-475R-F
A6R84	0698-4421	2	RESISTOR 249 1% .125W F TC=0+-100	16299	C4-1/8-T0-249R-F
A6R85	0698-3496		RESISTOR 3.57K 1% .125W F TC=0+-100	16299	C4-1/8-T0-357R-F
A6R86	0757-0415		RESISTOR 475 1% .125W F TC=0+-100	24546	C4-1/8-T0-475R-F
A6R87	0760-0026	6	RESISTOR 75 2% 1W M0 TC=0+-200	FR003	C32
A6R90	0698-3496		RESISTOR 3.57K 1% .125W F TC=0+-100	16299	C4-1/8-T0-357R-F
A6R91	0757-0415		RESISTOR 475 1% .125W F TC=0+-100	24546	C4-1/8-T0-475R-F
A6R92	0760-0026		RESITOR 75 2% 1W MO TC=0+-200	FR003	C32
A6R93	0698-4421		RESISTOR 249 1% .125W F TC=0+-100	16299	C4-1/8-T0-249R-F
A6R94	0757-0415		RESISTOR 475 1% .125W F TC=0+-100	24546	C4-1/8-T0-475R-F
A6R95	0698-3496		RESISTOR 3.57K 1% .125W F TC=0+-100	16299	C4-1/8-T0-357R-F
A6R96	0698-4455		RESISTOR 536 1% .125W F TC=0+-100	24546	C4-1/8-T0-536R-F
A6R97	0757-0997		RESISTOR 39.2 1% .5W F TC=0+-100	19701	MF7C1/2-T0-39R2-F
A6R100	0811-0929	2	RESISTOR .51 5% 2W PW TC=0+-100	75042	BWH2-R51-J
A6R101	0757-0435	2	RESISTOR 3.92K 1% .125W F TC=0+-100	24546	C4-1/8-T0-3921-F
A6R102	2100-3211	2	RESISTOR-VAR TRMR 1KOHM 10% C TOP ADJ	73138	72PR1K
A6R103	0698-3492	2	RESISTOR 2.67K 1% .125W F TC=0+-100	16299	C4-1/8-T0-2671-F
A6R104	0811-0929		RESISTOR .51 5% 2W PW TC=0+-800	75042	BWH2-R51-J
A6R105	0757-0435		RESISTOR 3.92K 1% .125W F TC=0+-100	24546	C4-1/8-T0-3921-F
A6R106	2100-3211		RESISTOR-VAR TRMR 1KOHM 10% C TOP ADJ	73138	72PR1K
A6R107	0698-3492		RESISTOR 2.67K 1% .125W F TC=0+-100	16299	C4-1/8-T0-2671-F
A6U1	1820-0196	2	IC LIN REGULATOR	7263	723HC
A6U2	1820-0196		IC LIN REGULATOR	7263	723HC

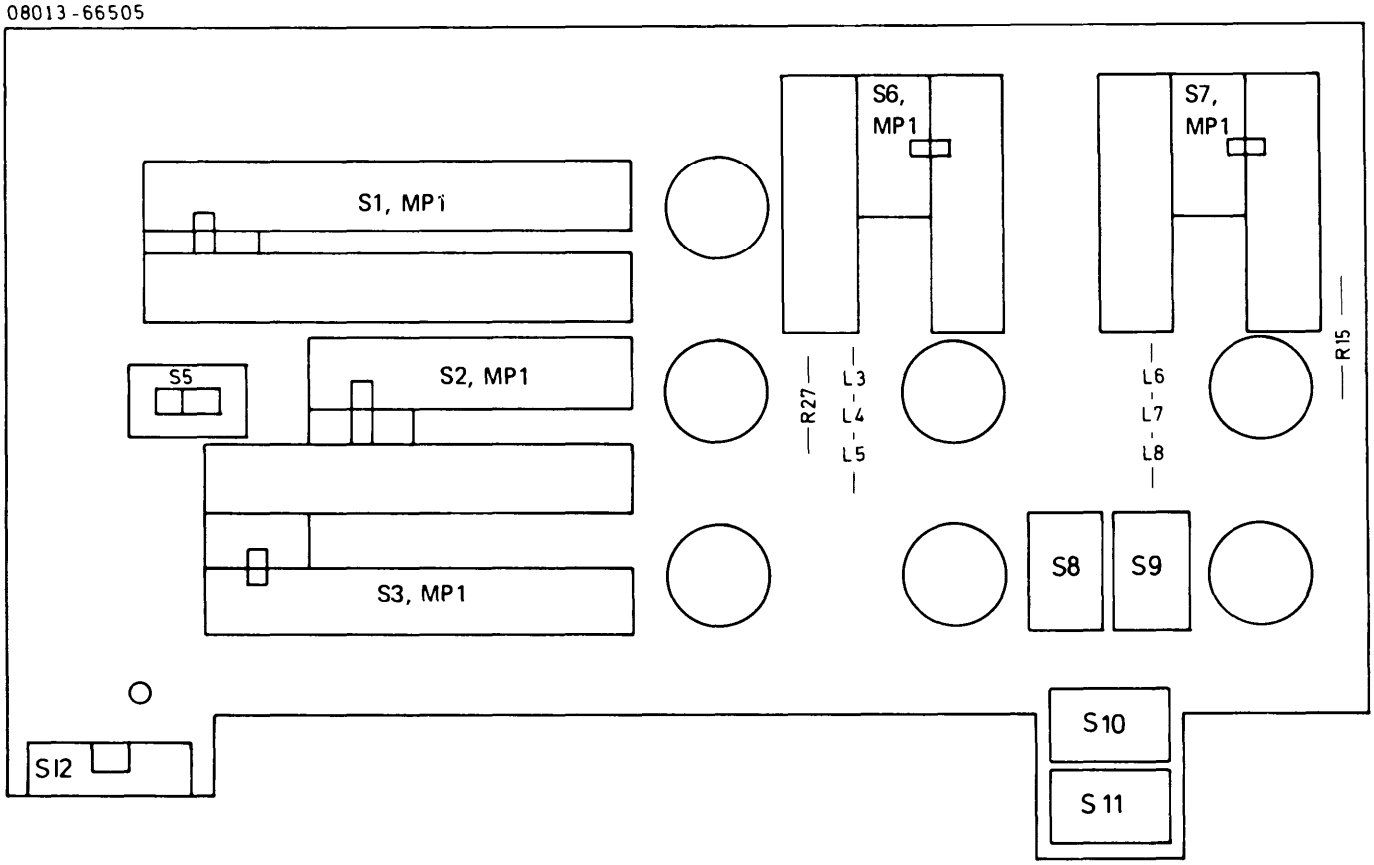

Figure 6–4. Component Layout–Board A7 – Front View

Table 6-7. Board A7 Replaceable Parts List

Reference Designation	HP Part Number	Qty	Description	Mfr Code	Mfr Part Number
A7	08013-66505	1	BOARD ASSEMBLY, MOTHER	28480	08013-66505
A7CR1	1901-0533		DIODE-SCHOTTKY	28480	1901-0533
A7CR2	1901-0533		DIODE-SCHOTTKY	28480	1901-0533
A7CR3	1901-0533		DIODE-SCHOTTKY	28480	1901-0533
A7CR4	1901-0533		DIODE-SCHOTTKY	28480	1901-0533
A7J5	1251-2026	1	CONNECTOR-PC EDGE 18-CONT/ROW 2-ROWS	71785	252-18-30-300
A7L1	9140-0118	2	COIL-FXD MOLDED RF CHOKE 500UH 5%	24226	19/503
A7L2	9140-0118		COIL-FXD MOLDED RF CHOKE 500UH 5%	24226	19/503
A7L3	9170-0029		CORE-SHIELDING BEAD	02114	56-590-65A2/4A
A7L4	9170-0029		CORE-SHIELDING BEAD	02114	56-590-65A2/4A
A7L5	9170-0029		CORE-SHIELDING BEAD	02114	56-590-65A2/4A
A7L6	9170-0029		CORE-SHIELDING BEAD	02114	56-590-65A2/4A
A7L7	9170-0029		CORE-SHIELDING BEAD	02114	56-590-65A2/4A
A7L8	9170-0029		CORE-SHIELDING BEAD	02114	56-590-65A2/4A
A7 MP1	5020-3440	5	SPRING DETENT FOR S1, S2, S3, S6, S7	28480	5020-3440
A7R7	0760-0027	4	RESISTOR 150 2% 1W MO TC=0+-200	FR003	C32
A7R8	0760-0027		RESISTOR 150 2% 1W MO TC=0+-200	FR003	C32
A7R9	0760-0027		RESISTOR 150 2% 1W MO TC=0+-200	FR003	C32
A7R10	0760-0027		RESISTOR 150 2% 1W MO TC=0+-200	FR003	C32
A7R11	0757-0172	2	RESISTOR 37.4 1% .5W F TC=0+-100	19701	MF7C1/2-T0-37R4-F
A7R12	0757-0172		RESISTOR 37.4 1% .5W F TC=0+-100	19701	MF7C1/2-T0-37R4-F
A7R13	0760-0026		RESISTOR 75 2% 1W MO TC=0+-200	FR003	C32
A7R14	0760-0026		RESISTOR 75 2% 1W MO TC=0+-200	FR003	C32
A7R15	0760-0026		RESISTOR 75 2% 1W MO TC=0+-200	FR003	C32
A7R16	0760-0026		RESISTOR 75 2% 1W MO TC=0+-200	FR003	C32
A7R17	0757-0799	2	RESISTOR 121 1% .5W F TC=0+-100	19701	MF7C-1/2-T0-121R-F
A7R18	0757-0799		RESISTOR 121 1% .5W F TC=0+-100	19701	MF7C-1/2-T0-121R-F
A7R19	0698-3616	2	RESISTOR 62 5% 2W MO TC=0+-200	16299	FP42-2-T00-62R0-J
A7R20	0698-3616		RESISTOR 62 5% 2W MO TC=0+-200	16299	FP42-2-T00-62R0-J
A7R21	0761-0003	2	RESISTOR 62 5% 1W MO TC=0+-200	24546	FP32-1-62R0-J
A7R22	0761-0003		RESISTOR 62 5% 1W MO TC=0+-200	24546	FP32-1-62R0-J
A7R23	0757-0071	2	RESISTOR 247.5 1% .25W F TC=0+-100	19701	MF52C1/4-T0-247R5-F
A7R24	0757-0071		RESISTOR 247.5 1% .25W F TC=0+-100	19701	MF52C1/4-T0-247R5-F
A7R27	0757-0407	2	RESISTOR 200 1% .125W F TC=0+-100	24546	C4-1/8-T0-201-F
A7R28	0757-0407		RESISTOR 200 1% .125W F TC=0+-100	24546	C4-1/8-T0-201-F
A7R29	0757-0200	2	RESISTOR 5.62K 1% .125W F TC=0+-100	24546	C4-1/8-T0-5621-F
A7R30	0757-0200		RESISTOR 5.62K 1% .125W F TC=0+-100	24546	C4-1/8-T0-5621-F
A7R31	0757-0437	2	RESISTOR 4.75K 1% .125W F TC=0+-100	24546	C4-1/8-T0-4751-F
A7R32	0757-0437		RESISTOR 4.75K 1% .125W F TC=0+-100	24546	C4-1/8-T0-4751-F
A7R33	0758-0028	1	RESISTOR 270 5% .25W F TC=0+-100	24546	C5-1/4-T0-271-J
A7S1	5040-1109	2	SLIDE ASSEMBLY, P.C. SWITCH	28480	5040-1109
A7S2	5040-1109		SLIDE ASSEMBLY, P.C. SWITCH	28480	5040-1109
A7S3	5040-1110	1	SLIDE ASSEMBLY, P.C. SWITCH	28480	5040-1110
A7S5	3101-1311	5	SWITCH-SL DPDT-NS STD .5A 125VAC/DC	28480	3101-1311
A7S6	5040-1112	2	SLIDE ASSEMBLY, P.C. SWITCH	28480	5040-1112
A7S7	5040-1112		SLIDE ASSEMBLY, P.C. SWITCH	28480	5040-1112
A7S8	3101-1311		SWITCH-SL DPDT-NS STD .5A 125VAC/DC	28480	3101-1311
A7S9	3101-1311		SWITCH-SL DPDT-NS STD .5A 125VAC/DC	28480	3101-1311
A7S10	3101-1311		SWITCH-SL DPDT-NS STD .5A 125VAC/DC	28480	3101-1311
A7S11	3101-1311		SWITCH-SL DPDT-NS STD .5A 125VAC/DC	28480	3101-1311
A7X6	1251-2034	1	CONNECTOR-PC EDGE 10-CONT/ROW 2-ROWS	71785	252-10-30-300

See table 6-3 for Manufacturer Codes

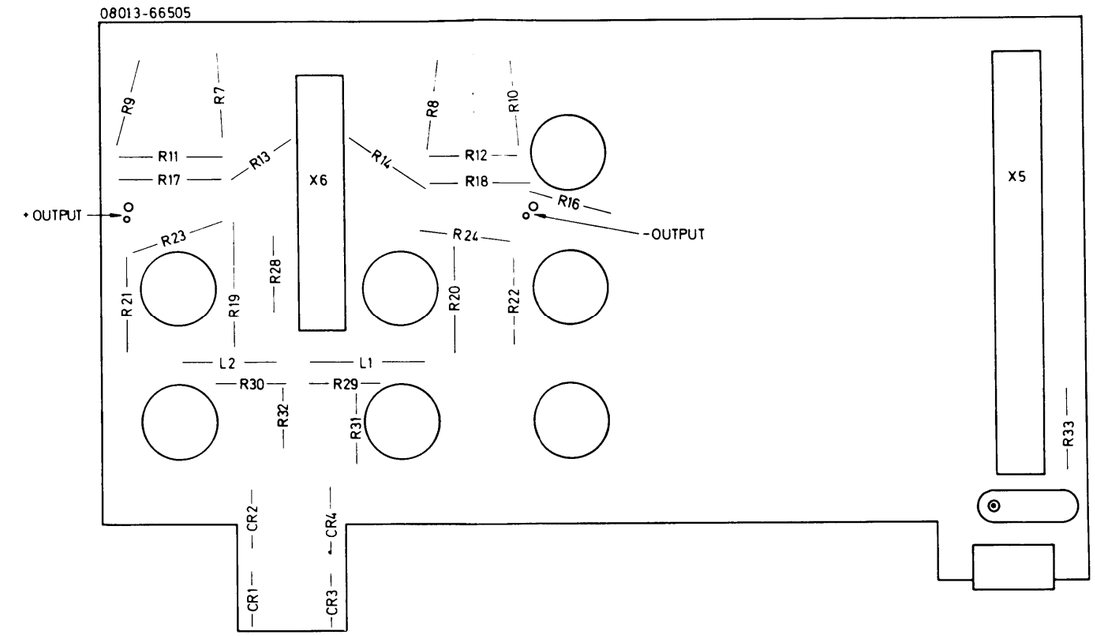

Figure 6–5. Component Layout–Board A7– Rearview

NOTES

1. All d.c. voltages were measured with the following pulse settings unless otherwise stated.

PULSE PERIOD **2**	EXT(+)
VERNIER **3**	CCW
PULSE DOUBLE/NORMAL **4**	NORM
PULSE DELAY **5**	35n–1μ
VERNIER **6**	CCW
PULSE WIDTH **7**	10n–1μ
VERNIER **8**	CCW
AMPLITUDE **9**	5.0-2.0
VERNIER **10**	CW
OFFSET vernier **11**	–
OFFSET switch **12**	OFF
AMPLITUDE **13**	5.0-2.0
VERNIER **14**	CW
OFFSET vernier **15**	–
OFFSET switch **16**	OFF
NORM/COMPL switch **19**	NORM
INT LOAD **20**	IN
EXT WIDTH/NORM/RZ switch **25**	NORM

No external input signal

2. A model 3440A digital voltmeter with a 3444A plug-in was used for the d.c. measurements.

3. A model 180C oscilloscope with 1801A and 1821A plug-ins was used for the waveform measurements.

4. A model 8015A pulse generator was used to provide the external input signals.

Pulse settings as for d.c. measurements (see note 1) except for:

EXTERNAL GATE INPUT (21)	330KHz
PULSE PERIOD (2)	20n–1μ
VERNIER (3)	Center

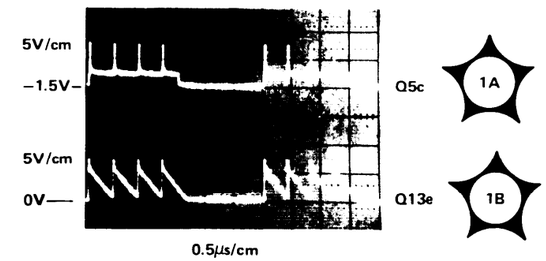

PULSE PERIOD (2)	20n–1μ
VERNIER (3)	CCW
VERNIER (3)	CW

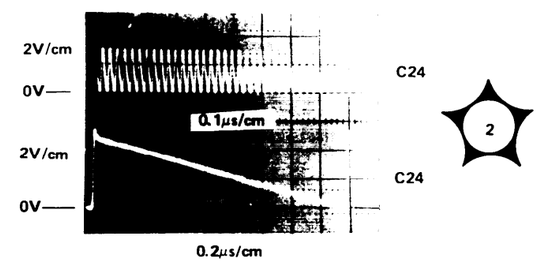

PULSE PERIOD (2) EXT (+)

EXTERNAL TRIGGER INPUT (23)

sine wave ≙ 500 KHz

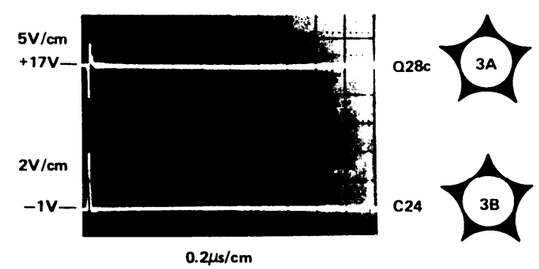

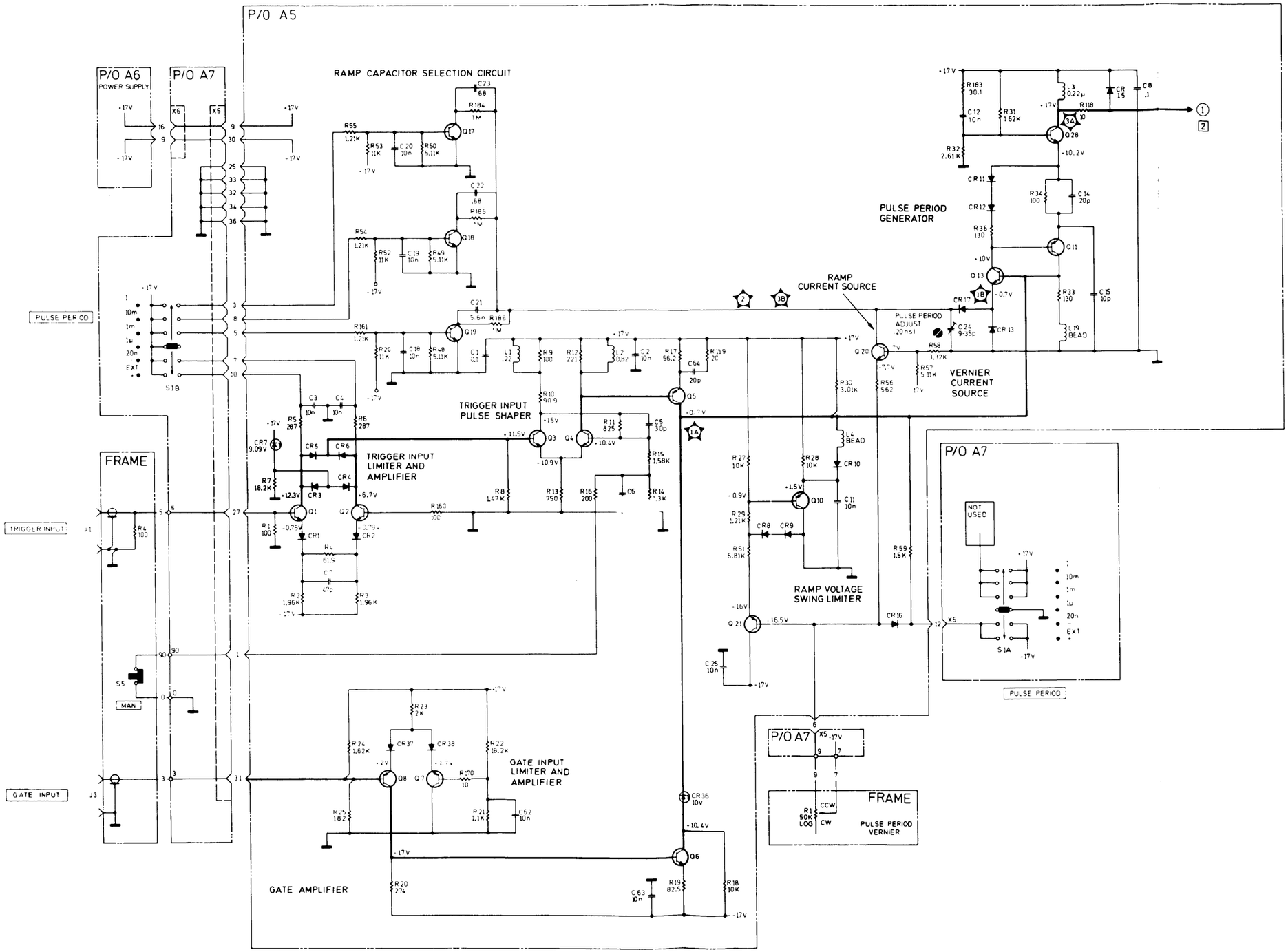
P/O A5
P/O A6
POWER SUPPLY
P/O A7
RAMP CAPACITOR SELECTION CIRCUIT
PULSE PERIOD GENERATOR
RAMP CURRENT SOURCE
PULSE PERIOD ADJUST (20 ns)
VERNIER CURRENT SOURCE
TRIGGER INPUT PULSE SHAPER
TRIGGER INPUT LIMITER AND AMPLIFIER
GATE INPUT LIMITER AND AMPLIFIER
GATE AMPLIFIER
RAMP VOLTAGE SWING LIMITER
FRAME
PULSE PERIOD
TRIGGER INPUT
GATE INPUT
MAN
NOT USED
PULSE PERIOD VERNIER
CCW
CW

NOTES

1. All d.c. voltages were measured with the following pulse settings unless otherwise stated.

PULSE PERIOD 2	EXT(+)
VERNIER 3	CCW
PULSE DOUBLE/NORMAL 4	NORM
PULSE DELAY 5	35n–1μ
VERNIER 6	CCW
PULSE WIDTH 7	10n–1μ
(but set to SQUARE WAVE for voltages marked SW).	
VERNIER 8	CCW
AMPLITUDE 9	5.0-2.0
VERNIER 10	CW
OFFSET vernier 11	—
OFFSET switch 12	OFF
AMPLITUDE 13	5.0-2.0
VERNIER 14	CW
OFFSET vernier 15	—
OFFSET switch 16	OFF
NORM/COMPL switch 19	NORM
INT LOAD 20	IN
EXT WIDTH/NORM/RZ switch 25	NORM
(but set to RZ and EXT WIDTH for voltages marked RZ and EXT WIDTH respectively).	

No external input signal required

2. A model 3440A digital voltmeter with a 3444A plug-in was used for the d.c. measurements.

3. A model 180C oscilloscope with 1801A and 1821 A plug-ins was used for the waveform measurements.

4. A model 8015A pulse generator was used to provide the external input signals.

Pulse settings as for d. c. measurements (see note 1) except for:

PULSE PERIOD 2 — 20n-1μ
VERNIER 3 — CW

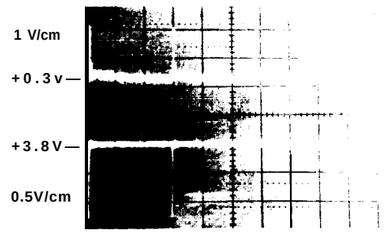

Q9c 4A

Q12c 4B

Pulse settings as for d. c. measurements (see note 1) except for:

PULSE PERIOD 2 — 20n– 1
VERNIER 3 — CW
PULSE WIDTH 7 — SQUARE WAVE

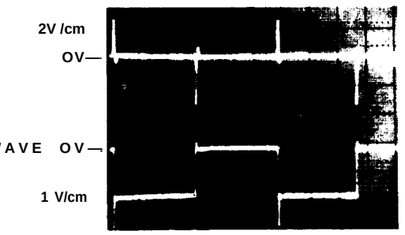

Q49c 7A

Q48c 7B

PULSE PERIOD 2 — 20n–1μ
VERNIER 3 — CW
PULSE WIDTH 7 — SQUARE WAVE

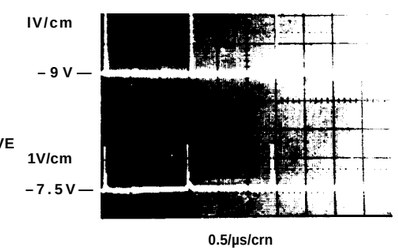

Q15c 5A

Q14c 5B

PULSE PERIOD ② — 20n–1μ
VERNIER 3 — CW

PULSE PERIOD ② — 20n–1μ
VERNIER ③ — CW
PULSE WIDTH 7 — sQUARE WAVE

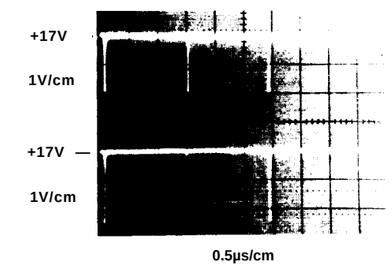

Q22c 8

PULSE PERIOD @ — 20n–1μ
VERNIER 3 — CW
PULSE WIDTH 7 — SQUARE WAVE

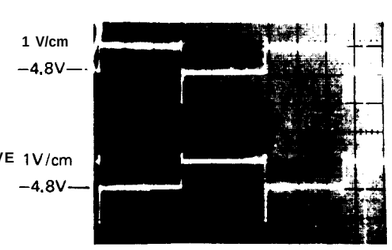

Q51b 6A

Q50b 6B

External Input to EXT. WIDTH/NORM/RZ connector 26 on on rear panel ≙ 330 KHz

EXT WIDTH/NORM/RZ switch 25

↓ NORM
↓ RZ
↓ EXT WIDTH

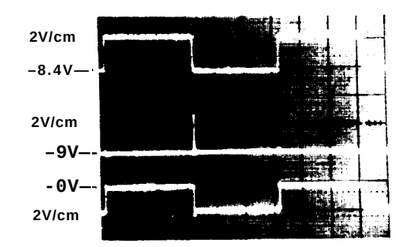

Q43c 9A

Q44c 9B

Q47c 9C

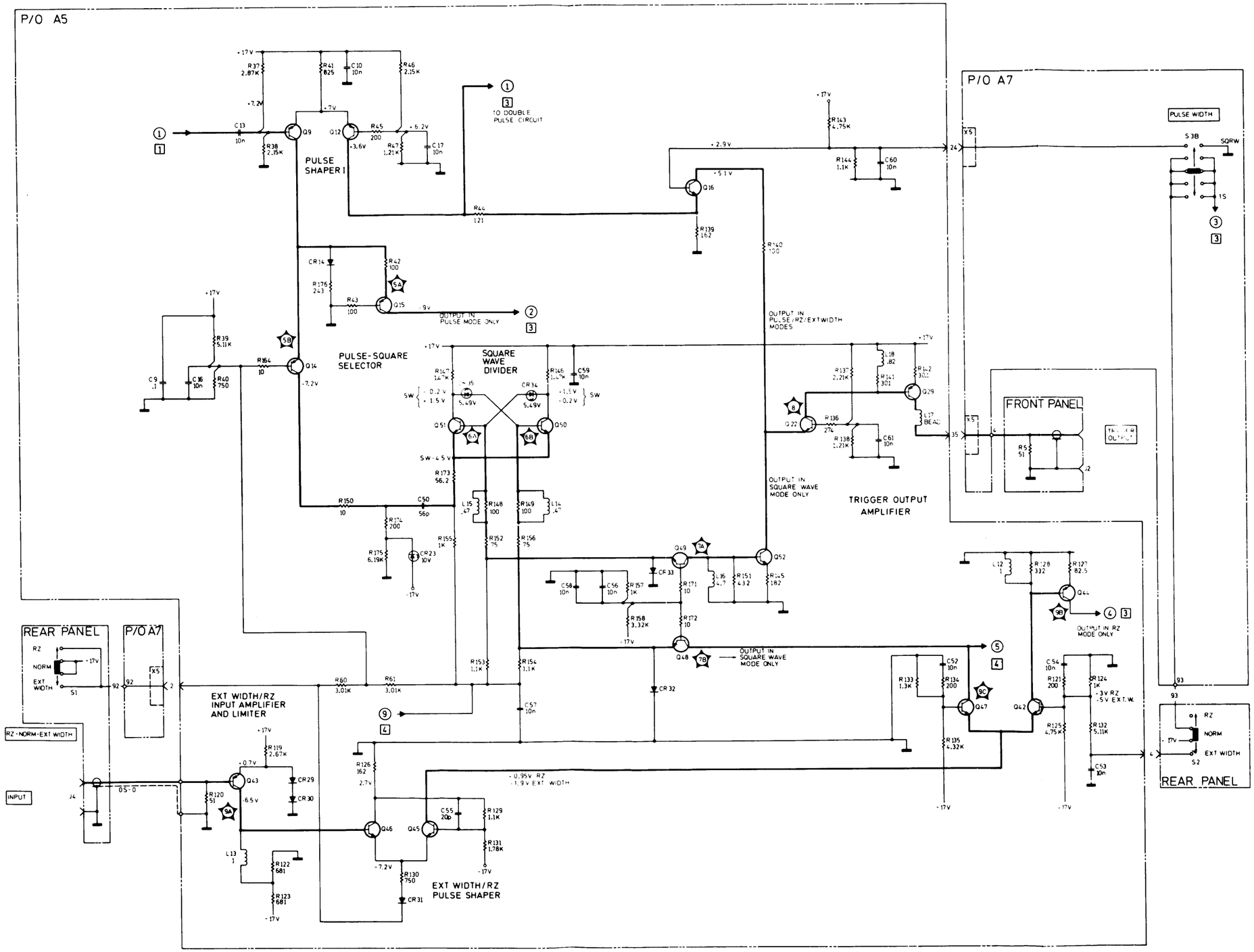

2

MODE SELECTOR, TRIGGER AMPLIFIER, EXT. INPUT AND SQUARE WAVE CIRCUITS 8013B

NOTES

1. All d.c. voltages were measured with the following pulse settings unless otherwise stated.

PULSE PERIOD 2	EXT(+)
VERNIER 3	CCW
PULSE DOUBLE/NORMAL 4	NORM
PULSE DELAY 5	35n–1μ
VERNIER 6	CCW
PULSE WIDTH 7	10n–1μ
VERNIER 8	CCW
AMPLITUDE 9	5.0-2.0
VERNIER 10	CW
OFFSET vernier 11	–
OFFSET switch 12	OFF
AMPLITUDE 13	5.0-2.O
VERNIER 14	CW
OFFSET vernier 15	–
OFFSET switch 16	OFF
NORM/COMPL switch 19	NORM
INT LOAD 20	IN
EXT WIDTH/NORM/RZ switch 25	NORM

No external input signal

2. A model 3440A digital voltmeter with a 3444A plug-in was used for the d.c. measurements.

3. A modal 180C oscilloscope with 1801A and 1821A plug-ins was used for the waveform measurements.

4. A model 8015A pulse generator was used to provide the external input signals.

Pulse settings as for d, c. measurements (sea note 1) except for:

PULSE PERIOD 2	20n–1μ
VERNIER 3	CW
PULSE DELAY 5	35n–1μ
VERNIER 6	Center

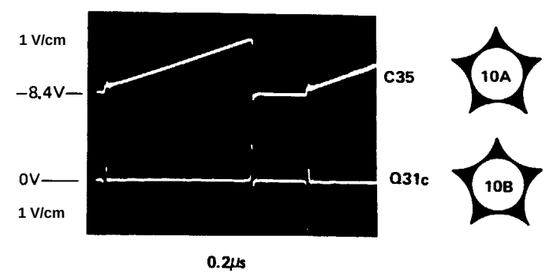

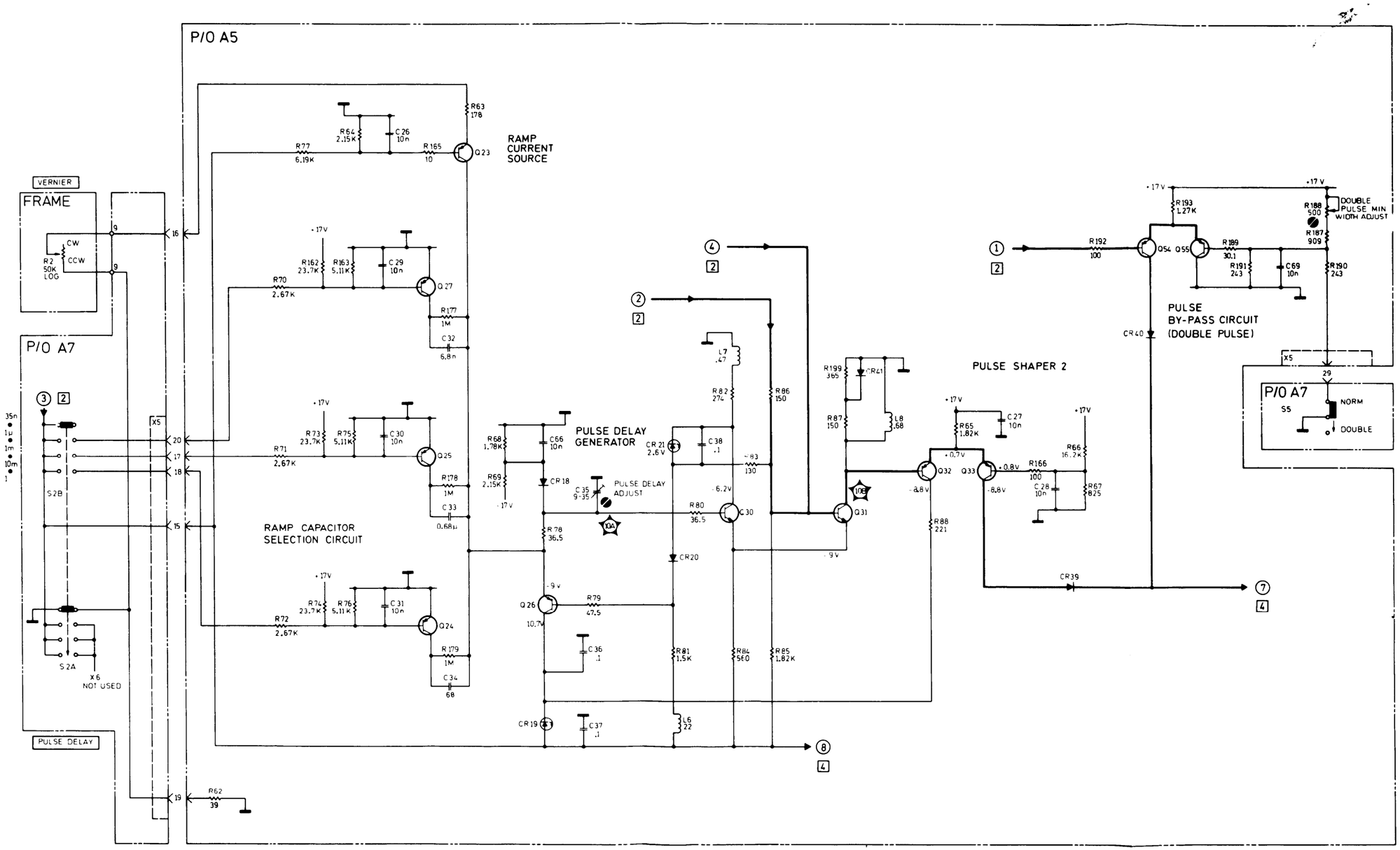
P/O A5
RAMP CURRENT SOURCE
VERNIER
FRAME
CW
CCW
R2 50K LOG
P/O A7
S2B
S2A
X6 NOT USED
PULSE DELAY
RAMP CAPACITOR SELECTION CIRCUIT
PULSE DELAY GENERATOR
PULSE DELAY ADJUST
PULSE SHAPER 2
PULSE BY-PASS CIRCUIT (DOUBLE PULSE)
DOUBLE PULSE MIN WIDTH ADJUST
NORM
DOUBLE
S5

NOTES

1. All d.c. voltages were measured with the following pulse settings unless otherwise stated.

PULSE PERIOD 2	EXT(+)
VERNIER 3	CCW
PULSE DOUBLE/NORMAL 4	NORM
PULSE DELAY 5	35n–1μ
VERNIER 6	CCW
PULSE WIDTH 7	10n–1μ
VERNIER 8	CCW
AMPLITUDE 9	5.0-2.0
VERNIER 10	CW
OFFSET vernier 11	–
OFFSET switch 12	OFF
AMPLITUDE 13	5.0-2.0
VERNIER 14	CW
OFFSET vernier 15	–
OFFSET switch 16	OFF
NORM/COMPL switch 19	NORM
INT LOAD 20	IN
EXT WIDTH/NORM/RZ switch 25	NORM

No external input signal

2. A model 3440A digital voltmeter with a 3444A plug-in was used for the d.c measurements.

3. A model 180C oscilloscope with 1801A and 1821A plug-ins was used for the waveform measurements.

Pulse settings as for d.c. measurements (see note 1) except for:

PULSE PERIOD (2)	20n–1μ
VERNIER (3)	CW
PULSE WIDTH (7)	10n–1μ
VERNIER (8)	Center

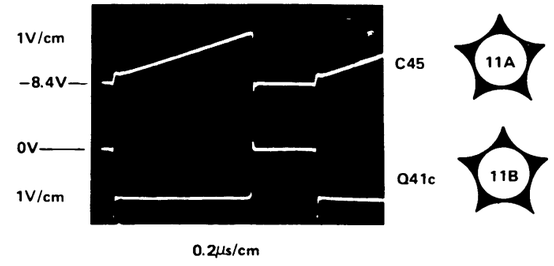

PULSE PERIOD (2)	20n–1μ
VERNIER (3)	CW
PULSE WIDTH (7)	10n–1μ
VERNIER (8)	Center

PULSE PERIOD (2)	20n–1μ
VERNIER (3)	CW
PULSE WIDTH (7)	SQUARE WAVE

External input to EXT WIDTH/NORM/RZ connector (26) on rear panel ≙ 330 KHz

EXT WIDTH ↑ RZ ↑ EXT WIDTH/NORM/RZ switch (25)

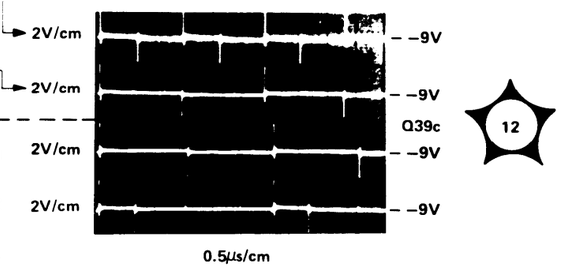

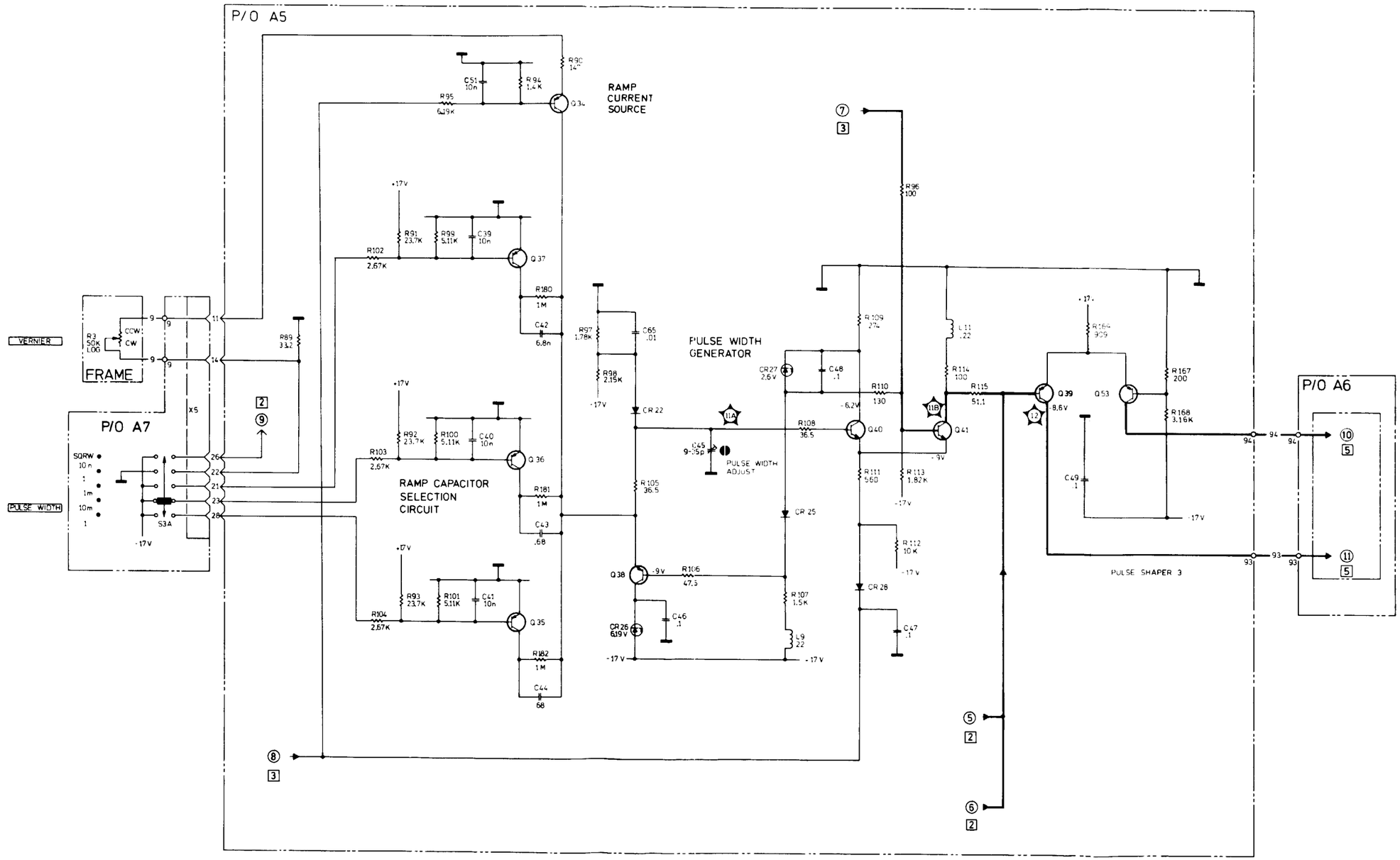

4

WIDTH GENERATOR 8013B

NOTES

1. All d.c. voltages were measured with the following pulse settings unless otherwise stated.
Press and release the MAN button (1) to change from one d.c. voltage level to the other.

PULSE PERIOD **2**	EXT(+)
VERNIER **3**	CCW
PULSE DOUBLE/NORMAL **4**	NORM
PULSE DELAY **5**	35n–1μ
VERNIER **6**	CCW
PULSE WIDTH **7**	SQUARE WAVE
VERNIER **8**	CCW
AMPLITUDE **9**	5.0-2.0
VERNIER **10**	CW
OFFSET vernier **11**	–
OFFSET switch **12**	OFF
AMPLITUDE **13**	5.0-2.0
VERNIER **14**	CW
OFFSET vernier **15**	–
OFFSET switch **16**	OFF
NORM/COMPL switch **19**	NORM
INT LOAD **20**	IN
EXT WIDTH/NORM/RZ switch **25**	NORM

No external input signal

2. A model 3440A digital voltmeter with a 3444A plug-in was used for the d.c. measurements.

3. A model 180C oscilloscope with 1801A and 1821A plug-ins was used for the waveform measurements.

4. A model 8015A pulse generator was used to provide the external input signals.

Pulse settings as for d.c. measurements (see note 1) except for:

PULSE PERIOD **2**	20n–1μ
VERNIER **3**	CW
PULSE WIDTH **7**	10n–1μ
VERNIER **8**	Center

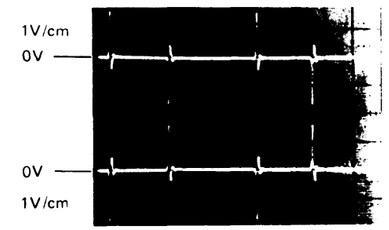

Q30c 13A

Q29c 13B

PULSE PERIOD **2**	20n–1μ
VERNIER **3**	CW
PULSE WIDTH **7**	10n–1μ
VERNIER **8**	Center

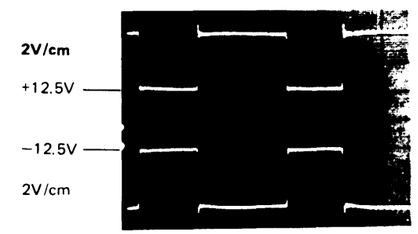

Q3c 14A

Q12c 14B

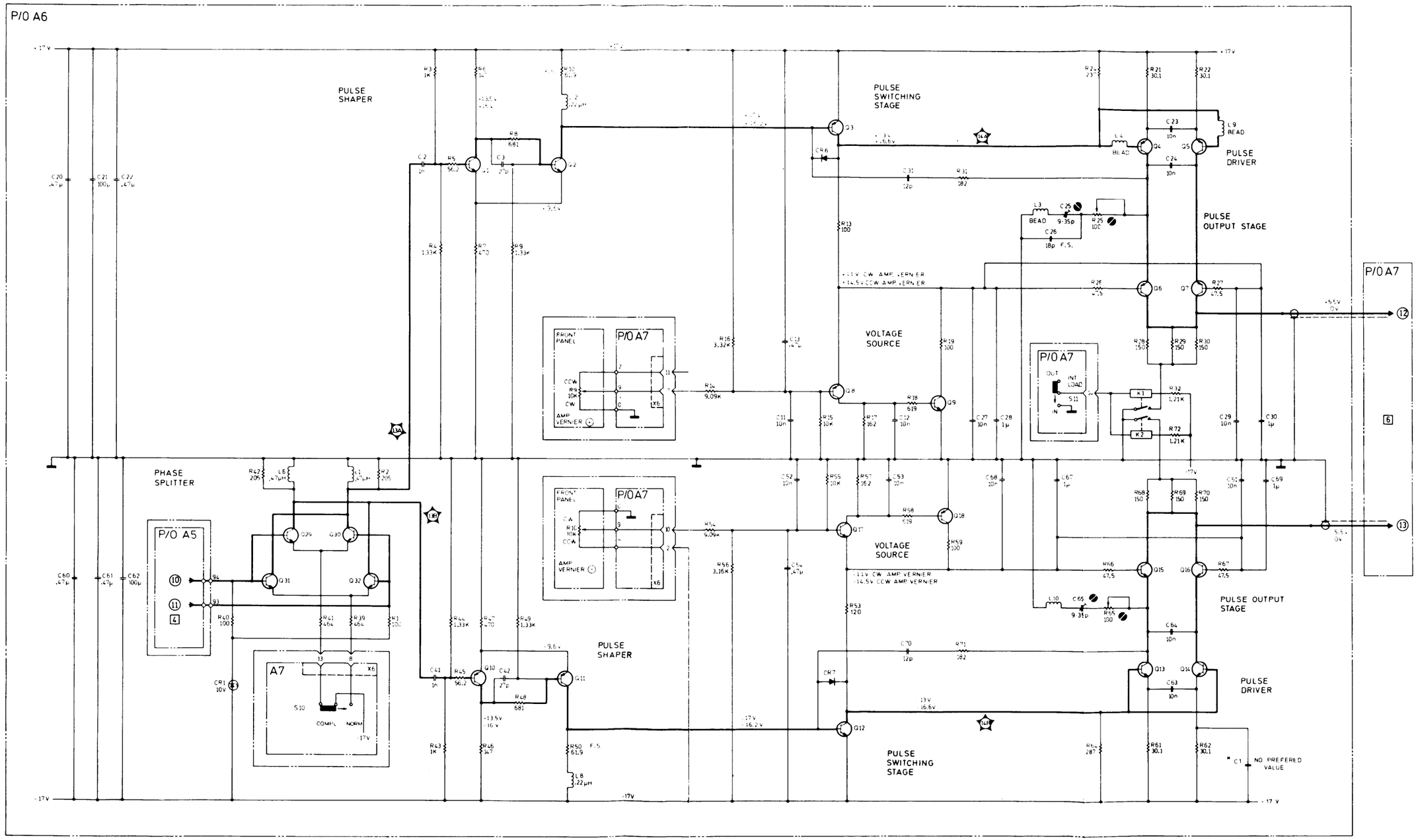
P/O A6
PULSE SHAPER
PULSE SWITCHING STAGE
PULSE DRIVER
PULSE OUTPUT STAGE
VOLTAGE SOURCE
PHASE SPLITTER
P/O A5
P/O A7
FRONT PANEL
AMP VERNIER
A7
COMPL
NORM
NO PREFERED VALUE
P/O A7

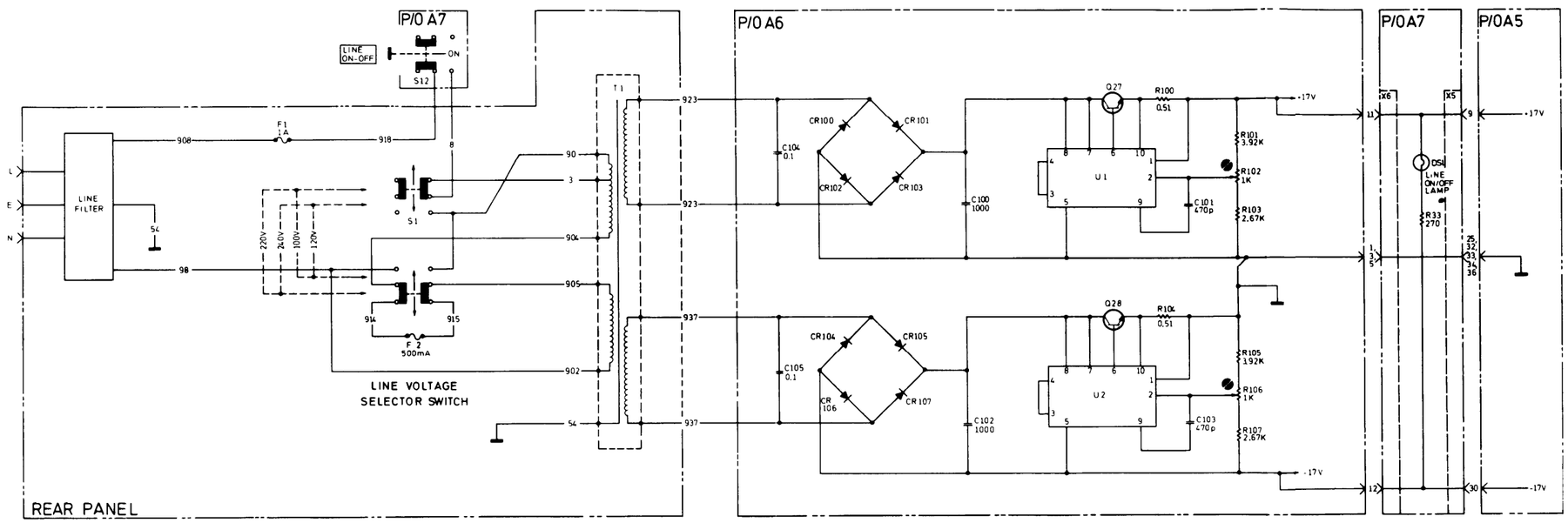

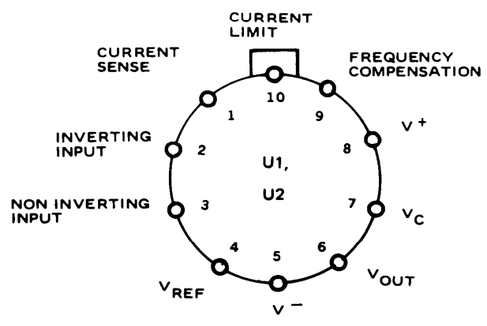

NOTE: Pin 5 connected to case.

U1, U2 } μA 723HC

U1, U2 } μA 723 HC

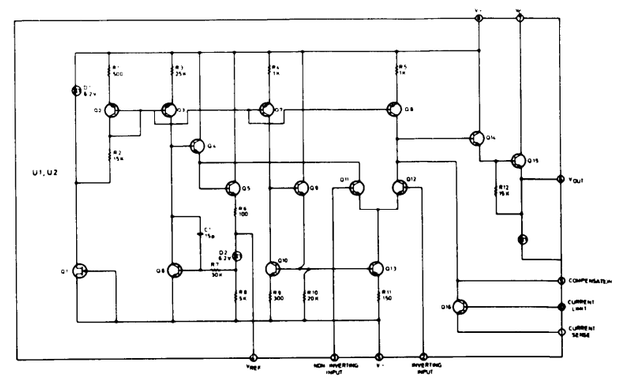

VOLTAGE REGULATOR IC's – BOARD A6

TABLE 6-8

PART NUMBER - NATIONAL STOCK NUMBER
CROSS REFERENCE INDEX

PART NUMBER	FSCM	NATIONAL STOCK NUMBER	PART NUMBER	FSCM	NATIONAL STOCK NUMBER
CB1055	1121	5905-00-116-8554	0698-3443	28480	5905-00-194-0341
SR1358-4	4713	5961-00-496-7363	0698-3496	28480	5905-00-407-0106
SS2077	4713	5961-00-472-5039	0757-0071	28480	5905-00-917-0569
0121-0046	28480	5910-00-983-2624	0757-0178	28480	5905-00-763-5243
0140-0190	28480	5910-00-852-3004	0757-0200	28480	5905-00-891-4224
0140-0201	28480	5910-00-068-3923	0757-0273	28480	5905-00-193-4294
0140-0202	28480	5910-00-852-2655	0757-0274	28480	5905-00-858-9105
0150-0050	28480	5910-00-784-0927	0757-0278	28480	5905-00-110-0851
0150-0121	28480	5910-00-950-6822	0757-0279	28480	5905-00-221-8310
0160-0174	28480	5910-00-234-9817	0757-0280	28480	5905-00-853-8190
0160-0356	28480	5910-00-776-3815	0757-0283	28480	5905-00-998-1909
0160-2055	28480	5910-00-211-1611	0757-0284	28480	5905-00-917-0576
0160-2197	28480	5910-00-472-5027	0757-0288	28480	5905-00-193-4318
0160-2198	28480	5910-00-430-5647	0757-0290	28480	5905-00-858-8826
0160-2199	28480	5910-00-244-7164	0757-0317	28480	5905-00-244-7189
0160-2259	28480	5910-00-917-9679	0757-0346	28480	5905-00-998-1906
0160-2306	28480	5910-00-883-6281	0757-0384	28480	5905-00-166-3562
0160-2307	28480	5910-00-406-9675	0757-0388	28480	5905-00-929-2528
0180-0098	28480	5910-00-430-5947	0757-0389	28480	5905-00-100-4623
0180-0291	28480	5910-00-931-7055	0757-0390	28480	5905-00-858-6845
0180-0374	28480	5910-00-931-7050	0757-0391	28480	5905-00-920-5229
0180-1784	28480	5910-00-491-8237	0757-0393	28480	5905-00-998-1903
0510-0748	28480	5920-00-221-5673	0757-0394	28480	5905-00-412-4036
0698-0082	28480	5905-00-974-6075	0757-0395	28480	5905-00-891-4210
0698-0083	28480	5905-00-407-0052	0757-0398	28480	5905-00-788-0291
0698-0084	28480	5905-00-974-6073	0757-0399	28480	5905-00-929-7774
0698-0085	28480	5905-00-998-1814	0757-0400	28480	5905-00-998-1902
0698-3151	28480	5905-00-246-8634	0757-0401	28480	5905-00-981-7529
0698-3158	28480	5905-00-858-8927	0757-0403	28480	5905-00-412-4023
0698-3438	28480	5905-00-974-6080	0757-0404	28480	5905-00-917-9187
0698-3439	28480	5905-00-407-0059	0757-0405	28480	5905-00-493-0738
0698-3442	28480	5905-00-489-6773	0757-0406	28480	5905-00-890-5601

TABLE 6-8

PART NUMBER - NATIONAL STOCK NUMBER

CROSS REFERENCE INDEX

PART NUMBER	FSCM	NATIONAL STOCK NUMBER	PART NUMBER	FSCM	NATIONAL STOCK NUMBER
0757-0407	28480	5905-00-998-1796	0757-0997	28480	5905-00-203-0599
0757-0408	28480	5905-00-781-2980	0757-1094	28480	5905-00-917-0580
0757-0409	28480	5905-00-728-9970	0758-0002	28480	5905-00-878-0779
0757-0410	28480	5905-00-078-1549	0758-0013	28480	5905-00-978-5045
0757-0411	28480	5905-00-056-0451	0758-0024	28480	5905-00-978-5048
0757-0412	28480	5905-00-858-6843	0758-0028	28480	5905-00-989-2840
0757-0414	28480	5905-00-764-2021	0758-0029	28480	5905-00-978-5051
0757-0415	28480	5905-00-857-0123	0811-0929	28480	5905-00-083-6028
0757-0417	28480	5905-00-858-9417	1205-0011	28480	5999-00-789-3794
0757-0418	28480	5905-00-412-4037	1205-0033	28480	5999-00-871-9538
0757-0419	28480	5905-00-891-4213	1205-0037	28480	6625-00-403-6593
0757-0420	28480	5905-00-493-5404	1250-0118	28480	5935-00-897-9351
0757-0421	28480	5905-00-891-4219	1251-2026	28480	5935-00-446-8768
0757-0422	28480	5905-00-728-9980	1251-2034	28480	5935-00-267-2973
0757-0424	28480	5905-00-493-0736	150D105X9035A2	56289	5910-00-104-0144
0757-0426	28480	5905-00-412-4093	150D106X9020B2	56289	5910-00-812-2752
0757-0427	28480	5905-00-917-0578	150D107X0020S2	56289	5910-00-820-0209
0757-0428	28480	5905-00-998-1794	1820-0196	28480	5962-00-451-3131
0757-0429	28480	5905-00-728-9981	1853-0015	28480	5961-00-927-0845
0757-0430	28480	5905-00-858-9207	1853-0018	28480	5961-00-989-2747
0757-0433	28480	5905-00-858-8905	1853-0027	28480	5961-00-193-4463
0757-0435	28480	5905-00-858-9148	1853-0034	28480	5961-00-987-4700
0757-0436	28480	5905-00-858-6792	1853-0036	28480	5961-00-931-0372
0757-0437	28480	5905-00-904-4404	1853-0218	28480	5961-00-985-9070
0757-0438	28480	5905-00-929-2529	1854-0003	28480	5961-00-990-5369
0757-0439	28480	5905-00-990-0303	1854-0092	28480	5961-00-943-7572
0757-0442	28480	5905-00-998-1792	1854-0215	28480	5961-00-892-8706
0757-0443	28480	5905-00-891-4252	1854-0296	28480	5961-00-110-5144
0757-0447	28480	5905-00-981-7530	1854-0332	28480	5961-00-455-0155
0757-0448	28480	5905-00-911-5782	1854-0345	28480	5961-00-401-0507
0757-0500	28480	5905-00-865-6181	1901-0040	28480	5961-00-965-5917
0757-0801	28480	5905-00-830-6669	1901-0159	28480	5961-00-496-7363

TABLE 6-8
PART NUMBER - NATIONAL STOCK NUMBER
CROSS REFERENCE INDEX

PART NUMBER	FSCM	NATIONAL STOCK NUMBER	PART NUMBER	FSCM	NATIONAL STOCK NUMBER
1901-0179	28480	5961-00-853-7934			
1901-0533	28480	5961-00-139-1956			
1902-0025	28480	5961-00-914-3087			
1902-0032	28480	5961-00-914-3089			
1902-0049	28480	5961-00-911-9277			
1902-0126	28480	5961-00-780-8330			
1910-0022	28480	5961-00-690-9341			
1910-0034	28480	5961-00-185-5419			
2N3053	4713	5961-00-985-9073			
2N5179	4713	5961-00-401-0507			
2100-2066	28480	5905-00-236-7416			
2100-2488	28480	5905-00-407-0068			
2110-0007	28480	5920-00-794-3215			
2140-0253	28480	6240-00-078-9094			
252-10-30-300	71785	5935-00-267-2973			
252-18-30-300	17185	5935-00-446-8768			
3101-0124	28480	5930-00-726-8993			
3101-0903	28480	5930-00-586-5295			
3101-1609	28480	5930-00-372-1972			
3823-2	71400	5920-00-837-6646			
39D108G040GP4	56289	5910-00-586-5247			
723HC	7263	5962-00-403-4534			
9100-1611	28480	5950-00-438-4375			
9100-1613	28480	5950-00-431-0189			
9100-1614	28480	5950-00-431-3192			
9140-0096	28480	5950-00-138-1381			
9140-0112	28480	5950-00-455-7744			
9140-0118	28480	5950-00-932-2727			
9140-0179	28480	5950-00-225-2177			
9170-0029	28480	5950-00-406-6419			
962	82389	5930-00-726-8993			

SECTION 7

BACKDATING

7–1 INTRODUCTION

7–2 This section contains backdating information which adapts this manual to instruments with serial numbers lower than 1412G00331.

7–3 CHANGE SEQUENCE

7–4 Changes are listed on the serial number order that they occurred in the manufacture of the instrument. In adapting this manual to an instrument with a particular serial number, apply the changes in reverse order. That is, begin with the latest change and progress to the earliest change that applies to the serial number in question. Table 7–1 lists the serial numbers to which each change applies.

Table 7–1 Manual Backdating Changes

Instrument Serial Number	Make Backdating Changes
1412G001 to 00170	3, 2 and 1
1412G00171 to 00270	3 and 2
1412G00271 to 00330	3

CHANGE 1 {for serial numbers 1412G00101 to 1412G00170)

Table 6–4. Change the following components to:

A5	L3	9100 – 1613 COIL CHOKE .47µH
A5	L11	9100 – 1612 COIL CHOKE .33µH
A5	R44	0757 – 0401 R–F 100 1%.125W
A6	R102	0698 – 3492 R–F 2.67K 1%
A5	R139	0757 – 0407 R–F 200 1%.125W
A6	R168	0757 – 0437 R–F 4.75K 1%

Delete A5CR15, A5CR41 and A5R199 (also delete these components from board A5 component layout)

Add

A5 R35 0757 – 0400 R–F 90.9 1% .125W.

On board A5 component layout add R35 in place of CR15. Change schematic 1, top right-hand corner, as shown below.

FROM

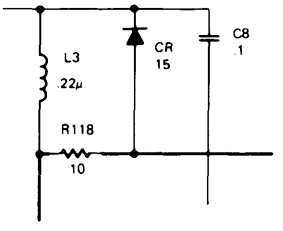

TO

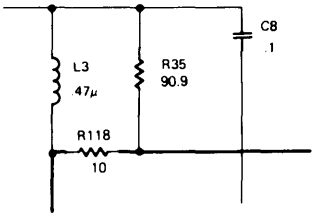

Schematic 2. Change R44 to 100 and R139 to 200, Change schematic 3 as shown below,

FROM

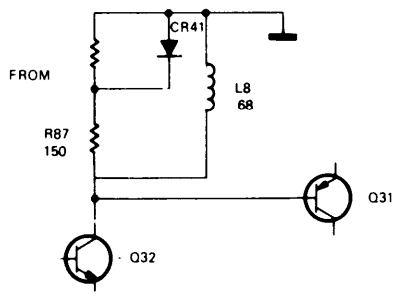

TO

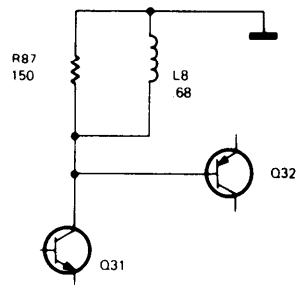

Schematic 4. Change L11 to 0.33µH, R102 to 2.67K and R168 to 4.75K.

Table 6–5. Change the following components to:

A6	C1	0160 – 2307 C–F 47PF 300V
A6	Q12	1854 – 0630 XSTR SI NPN
A6	R53	0757 – 0178 R–F 100 1%.125W
A6	R64	0698 – 3442 R–F 237 1%.125W

Add

A6 C66 0160–0356 C–F 18PF 300V

On the component layout for board A6 add C66 to the left of potentiometer R65.

Schematic 5. Change the value of Cl to 47PF. Change the value of R53 to 100 and the value of R64 to 237. Add C66, value 18PF, wired in parallel with L10 and C65.

CHANGE 2 (for serial numbers 1412G00101 to 1412G00270) Board A5 component layout. Add C67 as shown below.

BOARD A5

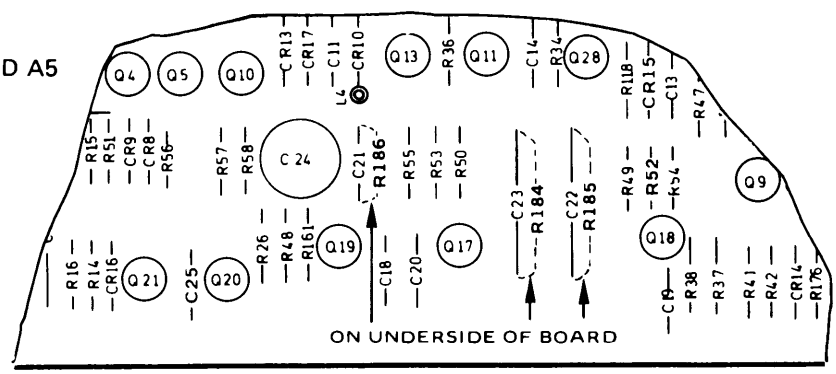

Table 6–4. Add the following component

A5 C67 0150 – 0093 C–F .01µF 100V

thematic 1. Add C67 as shown below.

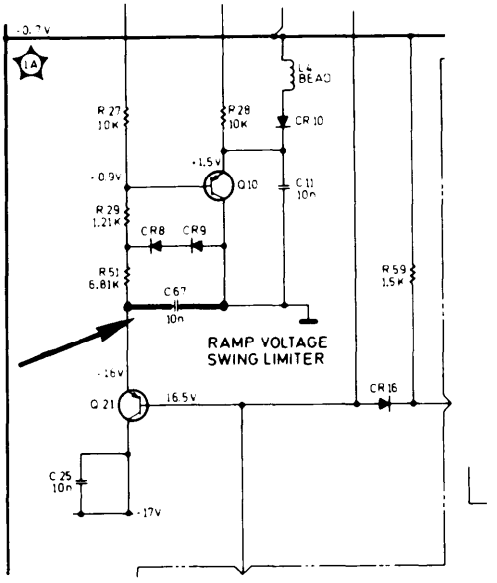

CHANGE 3 **(for serial numbers 1412G00101 to 1412G00330) Change the complete component layout for board A5 as shown on the following page.**

APPENDIX A

REFERENCES

DA Pam 310-4	Index of Technical Publications: Technical Manuals, Technical Bulletins, Supply Manuals (Types 7,8, and 9), Supply Bulletins, and Lubrication Orders.
DA Pam 310-7	US Army Equipment Index of Modification Work Orders.
TM 38-750	The Army Maintenance Management System (TAMMS).
TM 750-244-2	Procedures for Destruction of Electronics Materiel to Prevent Enemy Use. (Electronics Command).

APPENDIX B

COMPONENTS OF END ITEM LIST

Section I. INTRODUCTION

B-1. Scope

This appendix lists integral components of and basic issue items for the SG– 1105/U to help you inventory items required for safe and efficient operation.

B-2. General

This Components of End Item List is divided into the following sections:

a. Section II. Integral Components of the End Item. These items, when assembled, comprise the SG–1105/U and must accompany it whenever it is transferred or turned in. The illustrations will help you identify these items.

b. Section III. Basic *Issue Items.* These are the minimum essential items required to place the SG–1105/U in operation, to operate it, and to perform emergency repairs. Although shipped separately packed they must accompany the during operation and whenever it is transferred between accountable officers. The illustrations will assist you with hard-to-identify items. This manual is your authority to requisition replacement BII, based on TOE/MTOE authorization of the end item.

B-3. Explanation of Columns

a. Illustration. This column is divided as follows:

(1) Figure number. Indicates the figure number of the illustration on which the item is shown.

(2) Item number. Not applicable.

b. National Stock Number. Indicates the National stock number assigned to the item and which will be used for requisitioning.

c. *Description.* Indicates the Federal item name and, if required, a minimum description to identify the item. The part number indicates the primary number used by the manufacturer, which controls the design and characteristics of the item by means of its engineering drawings, specifications, standards, and inspection requirements to identify an item or range of items. Following the part number, the Federal Supply Code for Manufacturers (FSCM) is shown in parentheses.

d. Location. Not applicable.

e. Usable on Code. Not applicable.

f. Quantity Required (Qty Reqd). This column lists the quantity of each item required for a complete major item.

g. Quantity This column is left blank for use during an inventory. Under the Rcvd column, list the quantity you actually receive on your major item. The Date columns are for your use when you inventory the major item.

(1) ILLUSTRATION (A) FIG NO.	(B) ITEM NO.	(2) NATIONAL STOCK NUMBER	(3) DESCRIPTION PART NUMBER	(FSCM)	(4) LOCATION	(5) USABLE ON CODE	(6) QTY REQD	(7) QUANTITY RCVD	DATE
2-1		6625-01-010-3524	PULSE GENERATOR SG-1105/U] HP-8013B	(28480)			1		
2-1			POWER CORD HP-8120-1348				1		
			SECTION III BASIC ISSUE ITEMS						
2-1			FUSE 1/2A HP-2110-0202				1		
2-1			FUSE 1A HP-2110-0007				1		
			TECHNICAL MANUAL TM 11-6625-2835-14&P				1		

APPENDIX D

MAINTENANCE ALLOCATION

Section 1. INTRODUCTION

D-1. General

This appendix provides a summary of the maintenance operations for SG-1105/U. It authorizes categories of maintenance for specific maintenance functions on repairable items and components and the tools and equipment required to perform each function. This appendix may be used as an aid in planning maintenance operations.

D-2. Maintenance Function.

Maintenance functions will be limited to and defined as follows:

a. Inspect. To determine the serviceability of an item by comparing its physical, mechanical, and/or electrical characteristics with established standards through examination.

b. Test. To verify serviceability and to detect incipient failure by measuring the mechanical or electrical characteristics of an item and comparing those characteristics with prescribed standards.

c. Service. Operations required periodically to keep an item in proper operating condition, i.e., to clean (decontaminate), to preserve, to drain, to paint, or to replenish fuel, lubricants, hydraulic fluids, or compressed air supplies.

d. Adjust. To maintain, within prescribed limits, by bringing into proper or exact position, or by setting the operating characteristics to the specified parameters.

e. *Align.* To adjust specified variable elements of an item to bring about optimum or desired performance.

f. *Calibrate.* To determine and cause corrections to be made or to be adjusted on instruments or test measuring and diagnostic equipments used in precision measurement. Consists of comparisons of two instruments, one of which is a certified standard of known accuracy, to detect and adjust any discrepancy in the accuracy of the instrument being compared.

g. *InstaU. The* act of emplacing, seating, or fixing into position an item, part, module (component or assembly) in a manner to allow the proper functioning of the equipment or system.

h. Replace. The act of substituting a serviceable like type part, subassembly, or module (component or assembly) for an unserviceable counterpart.

i. Repair. The application of maintenance services (inspect, test, service, adjust, align, calibrate, replace) or other maintenance actions (welding, grinding, riveting, straightening, facing, remachining, or resurfacing) to restore serviceability to an item by correcting specific damage, fault, malfunction, or failure in a part, subassembly, module (component or assembly), end item, or system.

j. *Overhaul.* That maintenance effort (service/action) necessary to restore an item to a completely serviceable/operational condition as prescribed by maintenance standards (i.e., DMWR) in appropriate technical publications. Overhaul is normally the highest degree of maintenance performed by the Army. Overhaul does not normally return an item to like new condition.

k. Rebuild. Consists of those services/actions necessary for the restoration of unserviceable equipment to a like new condition in accordance with original manufacturing standards. Rebuild is the highest degree of materiel maintenance applied to Army equipment. The rebuild operation includes the act of returning to zero those age measurements (hours, miles, etc.) considered in classifying Army equipments/components.

D-3. Column Entries

a. Column 1, Group Number. Column 1 lists group numbers, the purpose of which is to identify components, assemblies, subassemblies, and modules with the next higher assembly.

b. Column 2, *Component/Assembly.* Column *2* contains the noun names of components, assemblies, subassemblies, and modules for which maintenance is authorized.

c. Column 3, Maintenance Functions. Column 3 lists the functions to be performed on the item listed in column *2.* When items are listed without maintenance functions, it is solely for purpose of having the group numbers in the MAC and RPSTL coincide.

d. Column i. Maintenance Category. Column *4* specifies, by the listing of a "worktime" figure in the appropriate subcolumn(s), the lowest level of maintenance authorized to perform the function listed in column 3. This figure represents the active time required to perform that maintenance function at the indicated category of maintenance. If the number or complexity of the tasks within the listed maintenance function vary at different maintenance categories, appropriate "worktime" figures will be shown for each category. The number of task-hours specified by the "worktime" figure represents the average time required to restore an item (assembly, subassembly, component, module, end item or system) to a serviceable condition under typical field operating conditions. This time includes preparation time, troubleshooting time, and quality assurance/ quality control time in addition to the time required to perform the specific tasks identified for the maintenance functions authorized in the maintenance allocation chart. Subcolumns of column 4 are as follows:

C – Operator/Crew
O – Organizational
F - Direct Support
H - General Support
D - Depot

e. Column 5, Took and Equipment. Column 5 specifies by code, those common tool sets (not individual tools) and special tools, test, and support equipment required to perform the designated function.

f. Column 6, *Remarks.* Column 6 contains an alphabetic code which leads to the remark in section IV, Remarks, which is pertinent to the item opposite the particular code.

D-4. Tool and Test Equipment Requirements (sect. Ill)

a. Tool or Test Equipment Reference Code. The numbers in this column coincide with the numbers used in the tools and equipment column of the MAC. The numbers indicate the applicable tool or test equipment for the maintenance functions.

b. Maintenance Category. The codes in this column indicate the maintenance category allocated the tool or test equipment.

c. Nomenclature. This column lists the noun name and nomenclature of the tools and test equipment required to perform the maintenance functions.

d. National/NATO Stock Number. This column lists the National/NATO stock number of the specific tool or test equipment.

e. Tool Number. This column lists the manufacturer's part number of the tool followed by the Federal Supply Code for manufacturers (5-digit) in parentheses.

D-5. Remarks (Sect. IV) Not applicable.

(Next printed page is D-3)

*U.S. GOVERNMENT PRINTING OFFICE: 1979 603 028 1115

SECTION II MAINTENANCE ALLCATION CHART
FOR
PULSE GENERATOR SG-1105/U

(1) GROUP NUMBER	(2) COMPONENT/ASSEMBLY	(3) MAINTENANCE FUNCTION	(4) MAINTENANCE CATEGORY					(5) TOOLS AND EQPT.	(6) REMARKS
			C	O	F	H	D		
00	PULSE GENERATOR SG-1105/U (HEWLETT-PACKARD MODEL 8013B)	Inspect		0.3				7	
		Test		0.3				1 thru 4	
		Test				0.6		1 thru 4	
		Adjust				0.5		6	
		Repair				0.4		1 thru 6	
		Overhaul					4.0		

SECTION III TOOL AND TEST EQUIPMENT REQUIREMENTS
FOR
PULSE GENERATOR SG-1105/U

TOOL OR TEST EQUIPMENT REF CODE	MAINTENANCE CATEGORY	NOMENCLATURE	NATIONAL\NATO STOCK NUMBER	TOOL NUMBER
1	H,D	COUNTER, ELECTRONIC, DIGITAL READOUT AN/USM-207A	6625-00-044-3228	
2	H,D	OSCILLOSCOPE AN/USM-281C	6625-00-106-9622	
3	H,D	VOLTMETER AN/GMS-64	6625-00-022-7894	
4	H,D	PULSE GENERATOR SG-1105/U	6625-01-010-3524	
5	D	OSCILLOSCOPE (H-P 180C/1810A)		
6	H,D	TOOL KIT, ELECTRONIC EQUIPMENT TK-100/G	5180-00-605-0079	
7	0	TOOLS AND TEST EQUIPMENT AVAILABLE TO THE TECHNICIAN BECAUSE OF THE ASSIGNED MISSION.		

APPENDIX F

REPAIR PARTS AND SPECIAL TOOLS LIST

Refer to Section 6, Diagrams and Replaceable Parts, for all maintenance parts.

RECOMMENDED CHANGES TO EQUIPMENT TECHNICAL MANUALS

SOMETHING WRONG WITH THIS MANUAL?

THEN. . .JOT DOWN THE DOPE ABOUT IT ON THIS FORM, TEAR IT OUT, FOLD IT AND DROP IT IN THE MAIL!

FROM: (YOUR UNIT'S COMPLETE ADDRESS)
Commander
Stateside Army Depot
ATTN: AMSTA-US
Stateside, N.J. 07703

DATE 4 April 1978

PUBLICATION NUMBER	DATE	TITLE
TM 11-5840-340-14&P	23 Jan 74	Radar Set AN/PLC-76

BE EXACT. . .PIN-POINT WHERE IT IS — IN THIS SPACE TELL WHAT IS WRONG AND WHAT SHOULD BE DONE ABOUT IT:

PAGE NO.	PARAGRAPH	FIGURE NO.	TABLE NO.	
2-25	2-28			Recommend that the installation antenna alignment procedure be changed throughout to specify a 2° IFF antenna lag rather than 1°. REASON: Experience has shown that with only a 1° lag, the antenna servo system is too sensitive to wind gusting in excess of 35 knots, and has a tendency to rapidly accelerate and decelerate as it hunts, causing strain to the drive train. Hunting is minimized by adjusting the lag to 2° without degradation of operation.
3-10	3-3		3-1	Item 5, Function column. Change "2 db" to "3db." REASON: The adjustment procedure for the TRANS POWER FAULT indicator calls for a 3 db (500 watts) adjustment to light the TRANS POWER FAULT indicator.
5-6	5-8			Add new step f.1 to read, "Replace cover plate removed in step e.1, above." REASON: To replace the cover plate.
E-5				For item 2, change the NSN to read: 5835-00-134-9186. REASON: Accuracy.
E-8		E-3		Identify the cover on the junction box (item no. 5). REASON: It is a separate item and is not called out on figure 19.
E-9				Add the cover of the junction box as an item in the listing for figure 19. REASON: Same as above.

TYPED NAME, GRADE OR TITLE, AND TELEPHONE NUMBER: SSG I. M. DeSpiritof 999-1776

SIGN HERE: SSG I. M. DeSpiritof

DA FORM 1 AUG 74 2028-2

P.S.--IF YOUR OUTFIT WANTS TO KNOW ABOUT YOUR MANUAL "FINDS" MAKE A CARBON COPY OF THIS AND GIVE IT TO YOUR HEADQUARTERS.

TEAR ALONG DOTTED LINE

RECOMMENDED CHANGES TO EQUIPMENT TECHNICAL MANUALS

SOMETHING WRONG WITH THIS MANUAL?

THEN. . .JOT DOWN THE DOPE ABOUT IT ON THIS FORM, TEAR IT OUT, FOLD IT AND DROP IT IN THE MAIL!

FROM: (YOUR UNIT'S COMPLETE ADDRESS)

DATE

PUBLICATION NUMBER	DATE	TITLE
TM 11-6625-2835-14&P	27 June 79	Pulse Generator SG-1105/U

BE EXACT. . .PIN-POINT WHERE IT IS

PAGE NO.	PARA-GRAPH	FIGURE NO.	TABLE NO.

IN THIS SPACE TELL WHAT IS WRONG AND WHAT SHOULD BE DONE ABOUT IT:

TYPED NAME, GRADE OR TITLE, AND TELEPHONE NUMBER

SIGN HERE:

TEAR ALONG DOTTED LINE

DA FORM 1 AUG 74 2028-2

P.S.--IF YOUR OUTFIT WANTS TO KNOW ABOUT YOUR MANUAL "FIND," MAKE A CARBON COPY OF THIS AND GIVE IT TO YOUR HEADQUARTERS.

FILL IN YOUR UNIT'S ADDRESS

FOLD BACK

DEPARTMENT OF THE ARMY

OFFICIAL BUSINESS

PENALTY FOR PRIVATE USE, $300

POSTAGE AND FEES PAID
DEPARTMENT OF THE ARMY
DOD-314

Commander
US Army Communications and
Electronics Materiel Readiness Command
ATTN: DRSEL-ME-MQ
Fort Monmouth, New Jersey 07703

TEAR ALONG DOTTED LINE

FOLD BACK

REVERSE OF DA FORM 2028-2

RECOMMENDED CHANGES TO EQUIPMENT TECHNICAL MANUALS

SOMETHING WRONG WITH THIS MANUAL?

THEN. . .JOT DOWN THE DOPE ABOUT IT ON THIS FORM, TEAR IT OUT, FOLD IT AND DROP IT IN THE MAIL!

FROM: (YOUR UNIT'S COMPLETE ADDRESS)

DATE

PUBLICATION NUMBER	DATE	TITLE
TM 11-6625-2835-14&P	27 June 79	Pulse Generator SG-1105/U

BE EXACT. . .PIN-POINT WHERE IT IS

PAGE NO.	PARA-GRAPH	FIGURE NO.	TABLE NO.

IN THIS SPACE TELL WHAT IS WRONG AND WHAT SHOULD BE DONE ABOUT IT:

TYPED NAME, GRADE OR TITLE, AND TELEPHONE NUMBER

SIGN HERE:

TEAR ALONG DOTTED LINE

DA FORM 1 AUG 74 2028-2

P.S.--IF YOUR OUTFIT WANTS TO KNOW ABOUT YOUR MANUAL "FIND," MAKE A CARBON COPY OF THIS AND GIVE IT TO YOUR HEADQUARTERS.

FILL IN YOUR UNIT'S ADDRESS

FOLD BACK

DEPARTMENT OF THE ARMY

OFFICIAL BUSINESS

PENALTY FOR PRIVATE USE, $300

POSTAGE AND FEES PAID
DEPARTMENT OF THE ARMY
DOD-314

Commander
US Army Communications and
Electronics Materiel Readiness Command
ATTN: DRSEL-ME-MQ
Fort Monmouth, New Jersey 07703

TEAR ALONG DOTTED LINE

FOLD BACK

REVERSE OF DA FORM 2028-2

RECOMMENDED CHANGES TO EQUIPMENT TECHNICAL MANUALS

SOMETHING WRONG WITH THIS MANUAL?

THEN. . .JOT DOWN THE DOPE ABOUT IT ON THIS FORM, TEAR IT OUT, FOLD IT AND DROP IT IN THE MAIL!

FROM: (YOUR UNIT'S COMPLETE ADDRESS)

DATE

PUBLICATION NUMBER	DATE	TITLE
TM 11-6625-2835-14&P	27 June 79	Pulse Generator SG-1105/U

BE EXACT. . .PIN-POINT WHERE IT IS

PAGE NO.	PARA-GRAPH	FIGURE NO.	TABLE NO.

IN THIS SPACE TELL WHAT IS WRONG AND WHAT SHOULD BE DONE ABOUT IT:

TYPED NAME, GRADE OR TITLE, AND TELEPHONE NUMBER

SIGN HERE:

TEAR ALONG DOTTED LINE

DA FORM 1 AUG 74 2028-2

P.S.--IF YOUR OUTFIT WANTS TO KNOW ABOUT YOUR MANUAL "FIND," MAKE A CARBON COPY OF THIS AND GIVE IT TO YOUR HEADQUARTERS.

FILL IN YOUR UNIT'S ADDRESS

FOLD BACK

DEPARTMENT OF THE ARMY

OFFICIAL BUSINESS

PENALTY FOR PRIVATE USE, $300

POSTAGE AND FEES PAID
DEPARTMENT OF THE ARMY
DOD-314

Commander
US Army Communications and
Electronics Materiel Readiness Command
ATTN: DRSEL-ME-MQ
Fort Monmouth, New Jersey 07703

TEAR ALONG DOTTED LINE

FOLD BACK

REVERSE OF DA FORM 2028-2

RECOMMENDED CHANGES TO EQUIPMENT TECHNICAL MANUALS

SOMETHING WRONG WITH THIS MANUAL?

THEN. . .JOT DOWN THE DOPE ABOUT IT ON THIS FORM, TEAR IT OUT, FOLD IT AND DROP IT IN THE MAIL!

FROM: (YOUR UNIT'S COMPLETE ADDRESS)

DATE

PUBLICATION NUMBER	DATE	TITLE
TM 11-6625-2835-14&P	27 June 79	Pulse Generator SG-1105/U

BE EXACT. . .PIN-POINT WHERE IT IS

PAGE NO.	PARA-GRAPH	FIGURE NO.	TABLE NO.

IN THIS SPACE TELL WHAT IS WRONG AND WHAT SHOULD BE DONE ABOUT IT:

TYPED NAME, GRADE OR TITLE, AND TELEPHONE NUMBER

SIGN HERE:

TEAR ALONG DOTTED LINE

DA FORM 1 AUG 74 2028-2

P.S.--IF YOUR OUTFIT WANTS TO KNOW ABOUT YOUR MANUAL "FIND," MAKE A CARBON COPY OF THIS AND GIVE IT TO YOUR HEADQUARTERS.

FILL IN YOUR UNIT'S ADDRESS

FOLD BACK

DEPARTMENT OF THE ARMY

OFFICIAL BUSINESS

PENALTY FOR PRIVATE USE, $300

POSTAGE AND FEES PAID
DEPARTMENT OF THE ARMY
DOD-314

Commander
US Army Communications and
Electronics Materiel Readiness Command
ATTN: DRSEL-ME-MQ
Fort Monmouth, New Jersey 07703

TEAR ALONG DOTTED LINE

FOLD BACK

REVERSE OF DA FORM 2028-2

By Order of the Secretary of the Army:

BERNARD W. ROGERS
General, United States Army
Chief of Staff

Official:

J. C. PENNINGTON
Major General, United States Army
The Adjutant General

DISTRIBUTION:

Active Army

TSG (1)
USAARENBD (1)
USAINSCOM (2)
TRADOC (2)
DARCOM (1)
TECOM (2)
OS Maj Comd (2)
USACC (2)
HISA (Ft Monmouth) (26)
Armies (1)
USASIGS (10)
Svc Colleges (1)
Ft Huachuca (5)
Ft Richardson (CERCOM Oft) (1)
Ft Carson (5)
Ft Gillem (10)
WSMR (1)
USAERDAA (1)
USAERDAW (1)
Army Dep (1) except
LBAD (10)
SAAD (30)
TOAD (14)
SHAD (3)
USA Dep (1)
Sig Sec USA Dep (1)
Units org under fol TOE:
29–134 (1)
29–136 (1)
29–207 (2)
29–610 (2)

IVG: None
USAR: None
For explanation of abbreviations used, see AR 310–50.

PIN: 041412-000

This fine document...

Was brought to you by me:

Liberated Manuals -- free army and government manuals

Why do I do it? I am tired of sleazy CD-ROM sellers, who take publicly available information, slap “watermarks” and other junk on it, and sell it. Those masters of search engine manipulation make sure that their sites that sell free information, come up first in search engines. They did not create it... They did not even scan it... Why should they get your money? Why are not letting you give those free manuals to your friends?

I am setting this document FREE. This document was made by the US Government and is NOT protected by Copyright. Feel free to share, republish, sell and so on.

I am not asking you for donations, fees or handouts. If you can, please provide a link to liberatedmanuals.com, so that free manuals come up first in search engines:

<A HREF=http://www.liberatedmanuals.com/>Free Military and Government Manuals</A>

- Sincerely
  Igor Chudov
  http://igor.chudov.com/
- Chicago Machinery Movers