TM 11-6130-392-12

TECHNICAL MANUAL

OPERATOR'S AND ORGANIZATIONAL MAINTENANCE MANUAL

FOR

CHARGER, BATTERY PP-7286/U
(NSN 6130-01-041-3490)

This copy is a reprint which includes current pages from Change 1.

HEADQUARTERS, DEPARTMENT OF THE ARMY

30 OCTOBER 1979

WARNINGS

HIGH VOLTAGE is used in the operation of this equipment. DEATH ON CONTACT may result if personnel fail to observe safety precautions. The power cable, interlock switch, POWER switch, EMI filters, filter capacitor, and the power transformer with their associated wiring are components in the battery charger which may have high voltage on exposed terminals. Before working inside the equipment, set the POWER switch to OFF and remove the power cable from the power source. Ground high voltage points before touching them.

Dangerous fumes or gases may be generated during battery charging operations. Be sure the working area has adequate ventilation. Do not allow smoking or open flame near charging batteries; vented gas may explode. Do not attempt to charge a damaged or leaking battery.

Adequate ventilation should be provided while using TRICHLOROTRIFLUOROE-THANE. Prolonged breathing of vapor should be avoided. The solvent should not be used near heat or open flame; the products of decomposition are toxic and irritating. Since TRICHLOROTRIFLUOROETHANE dissolves natural oils, prolonged contact with skin should be avoided, When necessary, use gloves which the solvent cannot penetrate. If the solvent is taken internally, consult a physician immediately.

If the battery charger is to be prepared for shipment or placed in inactive storage for more than 30 days, remove the memory battery (B1).

5 SAFETY STEPS TO FOLLOW IF SOMEONE IS THE VICTIM OF ELECTRICAL SHOCK

1. DO NOT TRY TO PULL OR GRAB THE INDIVIDUAL
2. IF POSSIBLE, TURN OFF THE ELECTRICAL POWER
3. IF YOU CANNOT TURN OFF THE ELECTRICAL POWER, PULL, PUSH, OR LIFT THE PERSON TO SAFETY USING A WOODEN POLE OR A ROPE OR SOME OTHER INSULATING MATERIAL
4. SEND FOR HELP AS SOON AS POSSIBLE
5. AFTER THE INJURED PERSON IS FREE OF CONTACT WITH THE SOURCE OF ELECTRICAL SHOCK, MOVE THE PERSON A SHORT DISTANCE AWAY AND IMMEDIATELY START ARTIFICIAL RESUSCITATION

Change

No. 1

HEADQUARTERS
DEPARTMENT OF THE ARMY
Washington, DC 11 January 1983

OPERATOR'S AND ORGANIZATIONAL MAINTENANCE MANUAL
CHARGER, BATTERY PP-7286/U
(NSN 6130-01-041-3490)

TM 11-6130-392-12, 30 October 1979, is changed as follows:

1. New or changed material is indicated by a vertical bar in the margin of the page.

2. Added or revised illustrations are indicated by a vertical bar in the margin of the page.

3. Remove and insert pages as indicated below:

Remove	Insert
None	A
1-1 and 1-2	1-1 and 1-2
None	1-2.1 (1-2.2 blank)
1-3 and 1-4	1-3 and 1-4
2-1 through 2-4	2-1 through 2-4
2-7 and 2-8	2-7 and 2-8
3-3,3-4 and 3-5	3-3, 3-4 and 3-5
A-1	A-1

4. File this change sheet in front of the publication for reference purposes.

By Order of the Secretary of the Army:

E. C. MEYER
General United States Army
Chief of Staff

Official:
ROBERT *M.* JOYCE
Major *General United States Army*
Thee Adjutant General

DISTRIBUTION

To be distributed in accordance with Special Mailing List.

TECHNICAL MANUAL
No. 11-6130-392-12

HEADQUARTER
DEPARTMENT OF THE ARMY
WASHINGTON, DC 30 *October 1979*

OPERATOR'S AND ORGANIZATIONAL MAINTENANCE MANUAL FOR CHARGER, BATTERY PP-7286/U (NSN 6130-01-041-3490)

REPORTING ERRORS AND RECOMMENDING IMPROVEMENTS

You can help improve this manual. If you find any mistakes or if you know of a way to improve the procedures, please let us know. Mail you letter, DA Form 2028 (Recommended Changes to Publications and Blank Forms), or DA Form 2028-2 located in back of this manual direct to Commander, U.S. Army Communications and Electronics Materiel Readiness Command, ATTN: DRSEL-ME-MQ, Fort Monmouth, NJ 07703. A reply will be furnished to you.

LIST OF ILLUSTRATIONS

LIST OF TABLES

CHAPTER 1
INTRODUCTION

Section I. GENERAL

1-1. Scope

This manual contains insturctions for operation and organizational maintenance of the Battery Charger PP-7286/U, (fig. l-l). Included are instructions for installing, operating, amd maintaining the battery charger. Tools, materials, and test equipment required for operation and maintenance are also listed.

Also included in this manual are instructions for installing, operating, and maintaining the Battery Charging Tray Assembly MX-10154( )/U (figure 1-1.1).

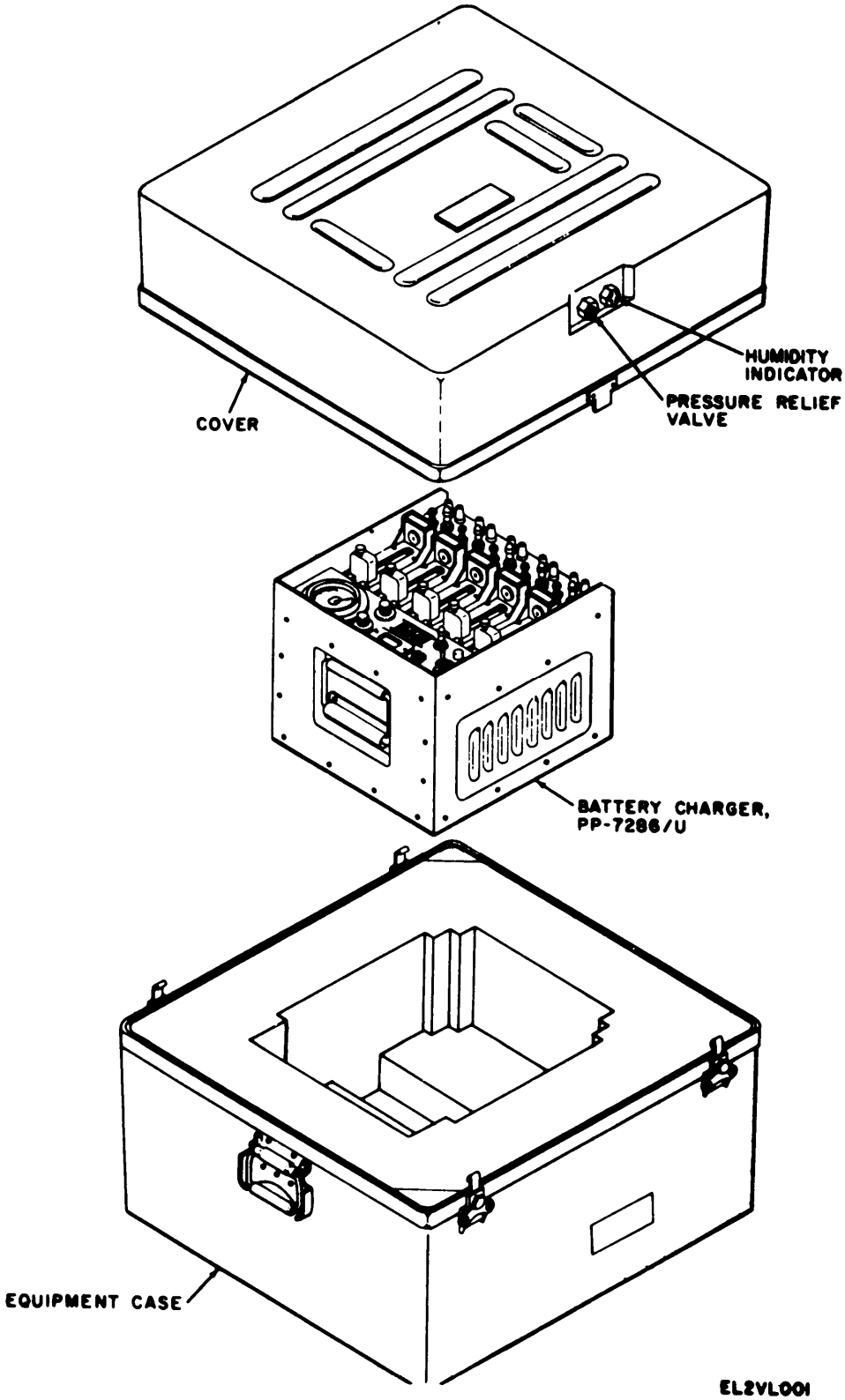

Figure 1-1. Battery Charger, PP-7286/U and Equipment Case

1-2. CONSOLIDATED INDEX OF ARMY PUBLICATIONS AND BLANK FORMS

Refer to the latest issue of DA Pam 310-1 to determine whether there are new editions, changes, or additional publications pertaining to the equipment.

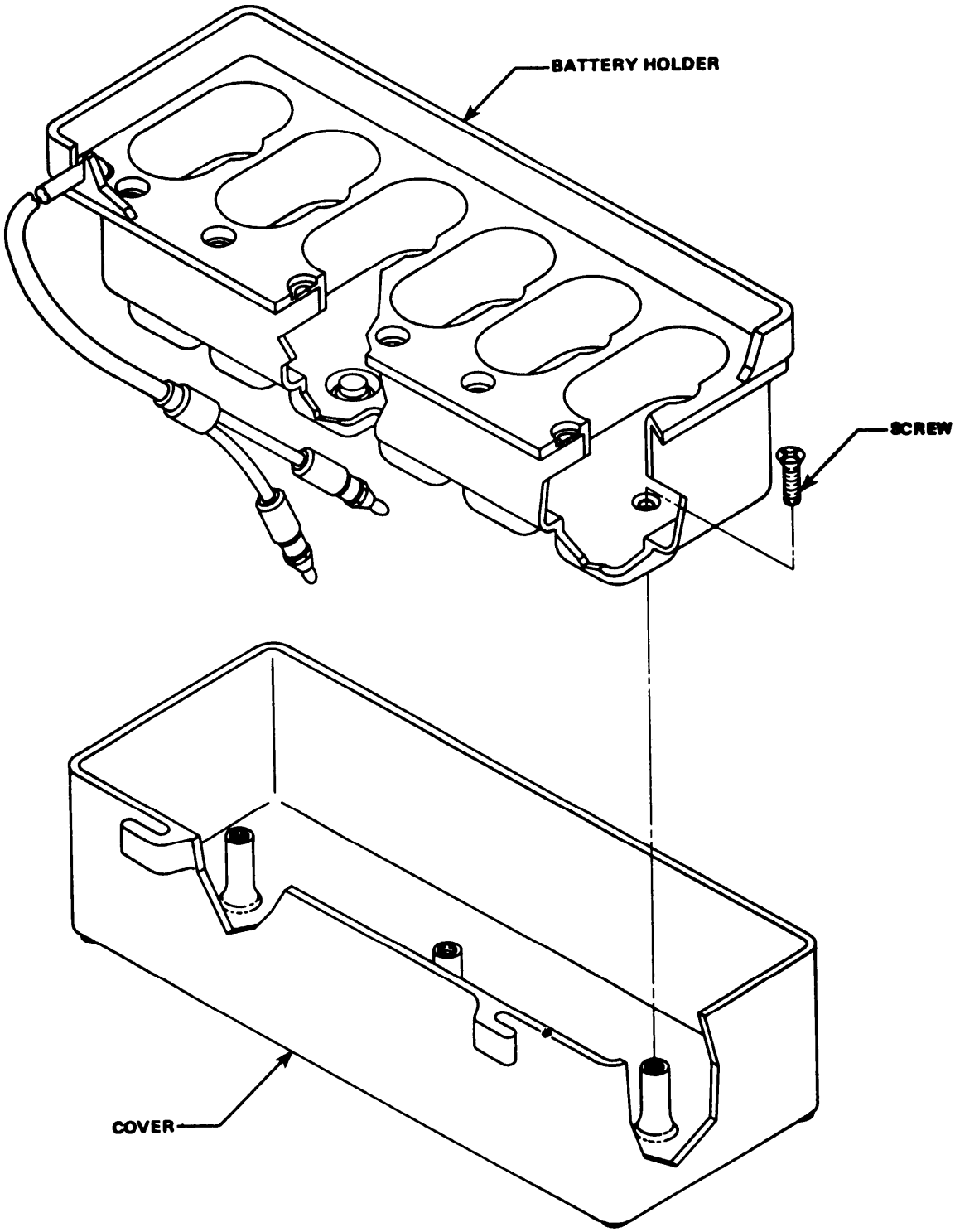

Figure 1-1.1. Battery Charging Tray Assembly MX-10154( )/U

1-3. Maintenance Forms, Records and Reports

a. Reports of Maintenance and Unsatisfactory Equipment. Department of the Army forms and procedures used for equipment maintenance will be those prescribed by TM 38-750. The Army Maintenance Management System (TAMMS).

b. Report of Packaging and Handling Deficiencies. Fill out and forward SF 364 (Report of Discrepancy (ROD)) as prescribed in AR 735-1l-2/DLAR 4140.55 NAVMATINST 4355.73/AFR 400-54/MCO 4430.3E.

c. Discrepancy in Shipment Report (DISREP) (SF 361). Fill out and forward Discrepancy in Shipment Report (DISREP) (SF 361) as prescribed in AR 55-38/ NAVSUPINST 4610.33B/AFR 75-18/MCO P4610.19C/DLAR 4500.15.

1-4. Destruction of Army Materiel

Destruction of Army Materiel to prevent enemy use shall be as prescribed in TM 750-244-2.

1-5. Administrative Storage

Procedures, forms and records, and inspections required during administrative storage of equipment will be those prescribed by TM 740-90-1.

1-6. Reporting Equipment Improvement Recommendations (EIR)

If your Battery Charger PP-7286/U needs improvement, let us know. Send us an EIR. You, the user, are the only one who can tell us what you don't like about your equipment. Let us know why you don't like the design. Tell us why a procedure is hard to perform. Put it on an SF 368 (Quality Deficiency Report). Mail it to Commander, US Army Communications -Electronics Command and Fort Monmouth, ATTN: DRSEL-ME-MP. Fort Monmouth, NJ 07703. We'll send you a reply.

Section II. DESCRIPTION AND DATA

1-7. Purpose and Use

The PP-7286/U is a portable self-contained battery charger designed to charge sealed ,nickel-cadmium (Ni-Cd) batteries such as: the BB-516/U used in the Laser Infrared Obscuration Set AN/GVS-5 hereinafter referred to as LR; the BB-557( )/U (Digital Message Device AN/PSG-2); the BB-699( )/PAQ-l (Target Designator Laser); and the BB-704( )/U (GLLD). It will charge any 6,12,24 or 28 volt sealed Ni-Cd battery capable of either fitting in the five battery holders on the front panel (pressure contacts adjustable from 0.25 to 4.0 inches) or being attached to cables connected to the five sets of plug-in-connectors (jacks) located beneath the battery holders. The MX-10154( )/U is used in conjunction with the PP-7286/U. The tray can accommodate up to six sealed nickel-cadmium (Ni-Cd) batteries BB-503/TAS.

1-8. Description

The batter charger (figure 1-2) consists of an ac to dc converter and five 15 to 700 mA constant current charging channels. The battery charger operates from either 115 vac or 230 vac, 47 to 400 Hz single phase power source. Each channel is provided with an adjustable pressure contact battery holder for accepting sealed nickel-cadmium batteries, such as the BB-516/U battery, used in the LR. Each channel is also provided with remote battery jacks for use with external cables or clip leads. A CHANNEL SELECT switch, VOLTAGE TEST SELECT switch, VOLTAGE TEST/CHG mA switch and a panel meter are provided for setting individual channel charge current and for monitoring individual battery voltage. The individual channel currents are adjustable by means of FINE ADJ screws and a CURRENT SET locking toggle switch. The battery charging tray is made of Lexan plastic material and furnishes a means of charging one through six BB-503/TAS batteries from a constant current source supplied by the charger. The tray is provided with five single pole, single throw, normally closed, five ampere rating pushbutton switches and six sockets. A cable assembly, terminated at one end in a "Y" configuration, has a red banana plug at the positive terminal and a black banana plug at the negative terminal. Two cleats, integral to the cover, serve to secure the cable when it is not in use.

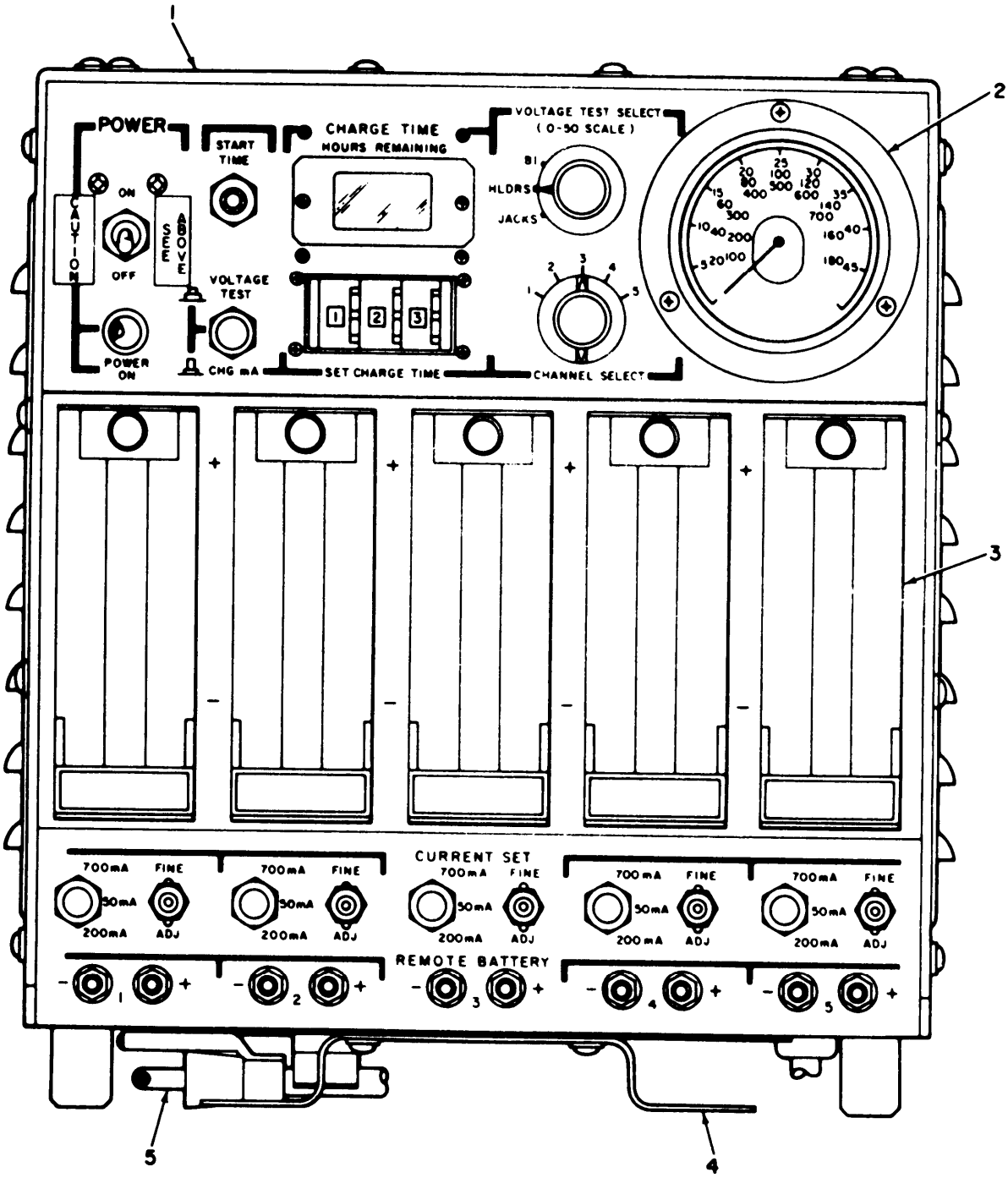

LEGEND FOR FIGURE 1-2:

1. CARRYING HANDLE
2. PANEL METER
3. BATTERY HOLDER (5)
4. POWER CORD STORAGE BRACKET
5. POWER CORD

EL2VL002

Figure 1-2. Battery Charger, PP-7286/U

1-9. Tabulated Data

The characteristics of the battery charger are listed in table 1-1.

Table 1-1. Tabulated Data

Power Input Voltage	l5 or 230 vac ± 10%

Table 1-1. Tabulated Data (Cont.)

Frequency	50 Hz ± 5%, or 60 Hz ± 5%, or 400 Hz ± 5%
Current	5 amperes maximum
Power Output	
Voltage	41 vdc (Maximum)
Current	15 to 700 Milliamps ± 5%, - 10%
Timing Control	One, adjustable for up 19.9 hours, with automatic cutoff

1-10. Items Comprising and Operable Equipment

The items comprising an operable battery charger are listed in table 1-2.

Table 1-2. Items Comprising an Operable Battery Charger

NSN	Qty	Description	Fig. No.	Dimensions (in.) Height	Width	Depth	Weight
6130-01-041-3490	1	Charger, Battery PP-7286/U	1-1	13	11 5/8	9 ½	35 lbs
6130-00-850-3177 or 6135-01-063-1978	1	Battery, BA-90/U or BA-3090/U		13/4	1	5/8	1.6 Oz

1-11. Additional Equipment Required

If the battery charger is to be used to charge batteries which will not fit into the battery holder assembly, a set of cables or clip leads will be needed to make connections between REMOTE BATTERY jacks (5 sets) on the battery charger and the battery to be charged. These items are not furnished with the battery charger.

Section I. SERVICE UPON RECEIPT AND INSTALLATION

2-1. Site Requirement

The battery charger is normally supplied to operate from a 115 or 230 vac, 50-60 Hz or 400 Hz power source capable of supplying 5 amperes of current. Sufficient bench space is required to accommodate both the battery charger and the battery charging tray assembly plus room for maintenance functions.

2-2. Checking Unpacked Equipment

a. Refer to figure 1-1. Press the pressure relief valve on equipment case cover. Release four latches, remove equipment case cover and remove the battery charger.

b. Inspect the battery charger for damage incurred during shipment. If the battery chapter has been damaged, report any damage as described in paragraph l-3b.

c. Check equipment against component listing on the equipment case and packing slip to verify that shipment is complete. Report any discrepancies as described in paragraph 1-3c.

d. Check to see whether the battery_ has been modified. Equipment which has been modified will have the MWO number on the cover, near the nomenclature plate. Check to see whether all currently applicable MWOs have been applied. Current MOWs applicable to the battery charger are listed in DA PAM 310-1.

e. Battery charging tray assemblies are packed ten to the carton. A fully packed carton weighs approximately 30 pounds. Carefully fit open the carton and remove the ten trays.

f. Inspect each tray assembly for any damthat may have occurred during shipment. If my tray has been damaged, report extent of damage as described in paragraph l-3b.

g. Check equipment against component listing on the carton and packing slip to verify that shipment is complete. Report any discrepancies as described in paragraph 1-3c.

23. Installation

a. Open battery access door, on back of the battery charger, and install a 9 volt battery (memory Bl) (BA-90/U or BA-3090/U), as described in paragraph 3-6a., (3).

CAUTION

Prior to connecting the battery charger power cable to power source inspect the INPUT VOLTAGE switch on rear panel. This switch must be set to 115 V position before operating the battery charger from a 115 vac supply or 230 V position from a 230 vac supply.

b. Set POWER ON OFF switch (3, figure 2-1) to OFF.

c. Connect power cable to appropriate vac power source.

Section II. CONTROLS AND INDICATORS

2-4. Damage From Improper Setting

Haphazard operation or improper setting of controls can damage the battery charger and the batteries it charges. The following instructions and explanations should be read and understood thoroughly before operating the battery charger.

2-5. Operator Controls and Indicator

Table 2-1 lists the controls and indicators and their functions. Figure 2-1 shows their locations. The battery charging tray assembly has no controls or indicators.

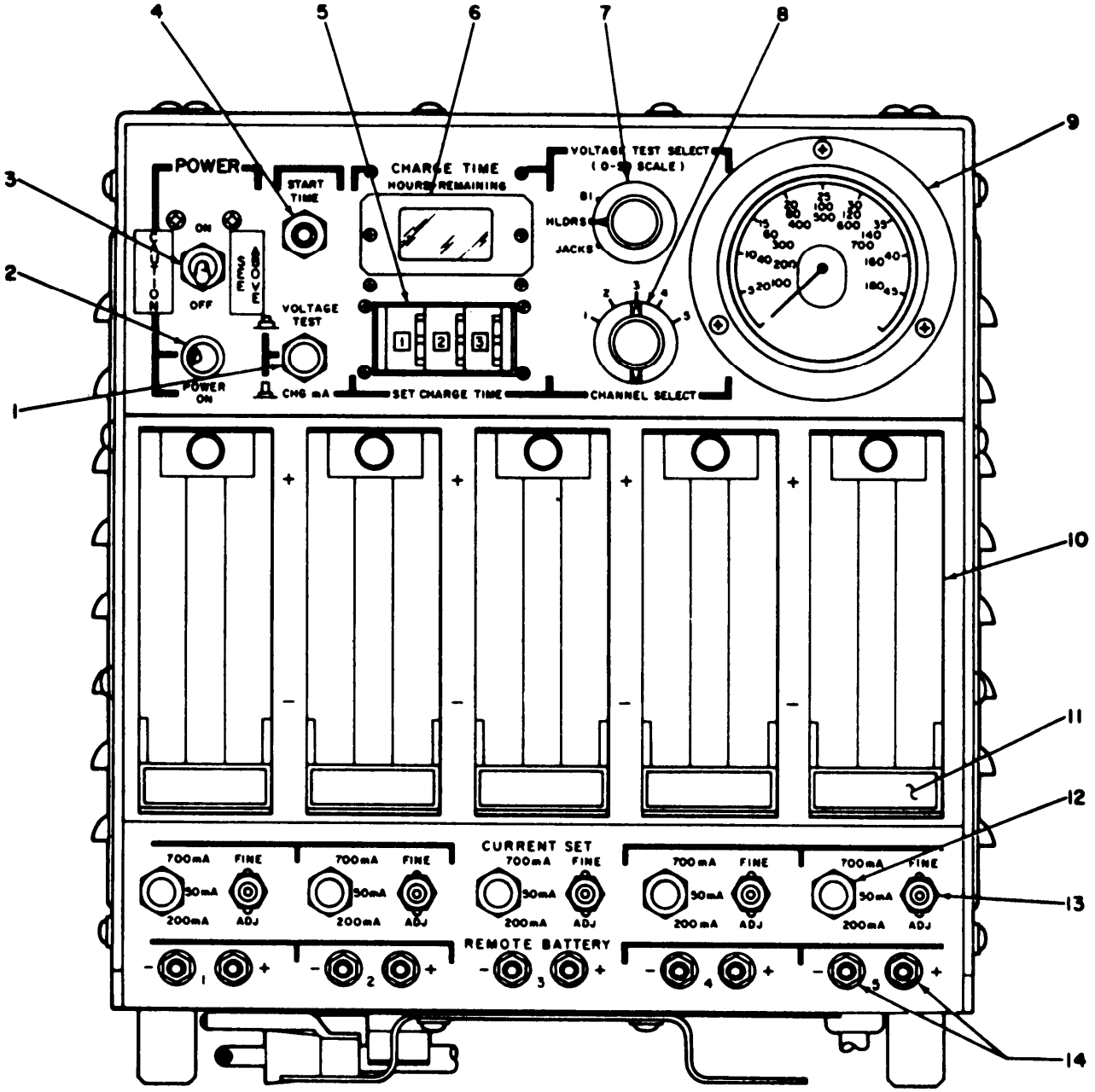

LEGEND FOR FIGURE 2-1:

1. VOLTAGE TEST-CHG mA pushbutton switch
2. POWER ON indicator lamp
3. POWER ON-OFF toggle switch
4. START TIME pushbutton switch
5. SET CHARGE TIME thumbwheel controls
6. CHARGE TIME-HOURS REMAINING indicator
7. VOLTAGE TEST SELECT switch
8. CHANNEL SELECT switch
9. Panel meter
10. Battery Holder (5)
11. Battery Holder Label (5)
12. CURRENT SET toggle switch (5)
13. CURRENT SET - FINE ADJ control (5)
14. REMOTE BATTERY jacks (5 sets)

EL2VL003

Figure 2-1. Battery Charge Controls and Indicators (Sheet 1 of 2)

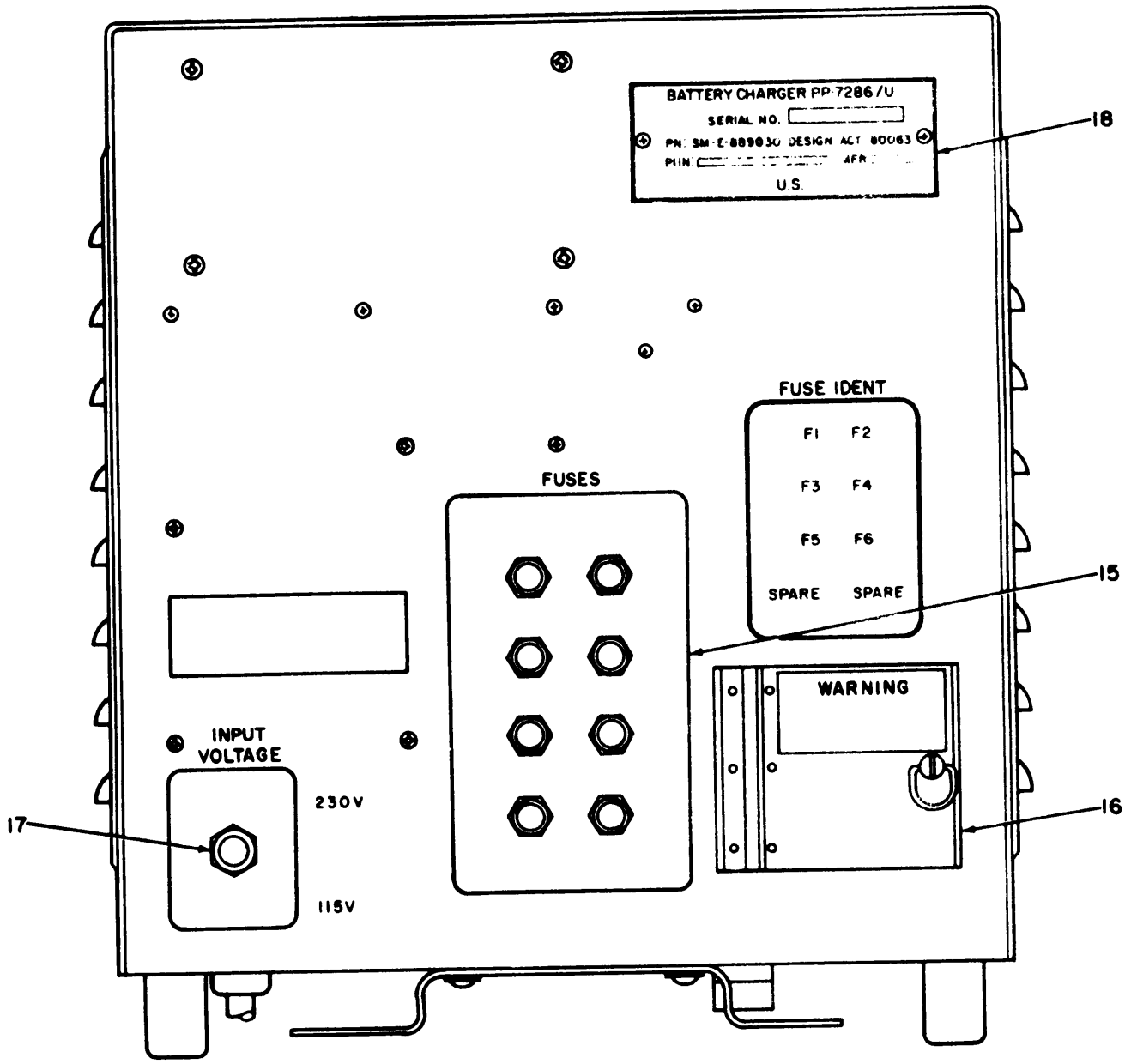

LEGEND FOR FIGURE 2-1: (CONTINUED)

15. FUSES
16. Access door (memory battery B1)
17. INPUT VOLTAGE toggle switch
18. IDENTIFICATION PLATE

EL2VL004

Figure 2-1. Battery Charge Controls and Indicators (Sheet 2 of 2)

Table 2-1. Battery Charger Controls and Indicators

Item (Fig. 2-1)	Control/Indicator	Function
1	VOLTAGE TEST-CHG mA (pushbutton switch)	When released (normal position), measures current as determined by CHANNEL SELECT switch and when START TIME switch IS pressed m start charging cycle. When pressed, displays voltage on panel meter for memory battery (Bl), or batteries in holders or jacks. Set VOLTAGE TEST SELECT switch to B1. HLDRS, or JACKS as appropriate voltage test
2	POWER ON (indicator lamp)	Lights when POWER ON-OFF switch IS set to ON and power IS applied
3	POWER ON-OFF (switch/circuit breaker)	Controls ac input power. Trips to OFF if input current exceeds 10 amperes.
4	START TIME (pushbutton switch)	Starts battery charger and timing operation.
5	SET CHARGE TIME (thumbwheel controlled numbers)	Sets time in hours and tenths of hours that battery charger will operate. Maximum setting is 19.9 hours.
6	CHARGE TIME HOURS REMAINING (digital readout indicator)	Indicates remaining charging time m hours and tenths of an hour.
7	VOLTAGE TEST SELECT (3 position rotary switch)	Position B1 allows test of internal 9 volt battery. Position HLDRS allows voltage monitoring at battery holders Position JACKS allows voltage monitoring at REMOTE BATTERY jacks.
8	CHANNEL SELECT (5 position rotary switch)	Positions 1 thru 5 allow current or voltage montioning of battery channel selected.
9	Panel Meter	Indicates charging current or voltage of battery being charged as selected by CHANNEL SELECT switch.
10	Battery Holders	Holds batteries during charging.
11	Battery Holder Labels (erasable)	Use to indicate any desired charging data with a pencil.
12	CURRENT SET-700 mA -50 mA -200 mA (3 position toggle switch, one for each channel)	Sets maximum charging current for each channel.
13	CURRENT SET-FINE ADJ (screwdriver adjusted control, one for each channel)	Provides fine adjustment of charging current.
14	REMOTE BATTERY (positive and negative jacks, one set for each channel)	Provides connection point for charging remote batteries.
15	FUSES (rear panel)	Holders for eight 1 amp fuses as follows: F1 through F5-Protect channels 1 through 5. F6--Protects battery charger power supply. SPARE-Two spare fuses.
16	Memory Battery (IN) Access Door	Provides access to memory battery.
17	INPUT VOLTAGE—115V-230V (2 position toggle switch)	Normally set to 115V position Permits battery charger to operate from 230 vac power source with power cable modification or adapter.

Section III. OPERATING UNDER USUAL CONDITIONS

2-6. Preliminary Control Settings

WARNING

Dangerous fumes or gases may be generated during battery charging operations. Be sure the working area has adequate ventilation. Do not allow smoking or open flame near batteries; vented gases may explode. Do not attempt to charge a damaged or leaking battery.

a. Position CURRENT SET switches (12, fig. 2-1) to 50 mA (center) position.

b. Using a 5/16 inch wrench, loosen locking nut on CURRENT SET-FINE ADJ controls (13).

c. Using a small bladed screwdriver, turn all CURRENT SET-FINE ADJ controls fully counterclockwise. Tighten locking nuts.

d. Position VOLTAGE TEST SELECT switch (7) to B1.

e. Set POWER ON-OFF switch (3) to ON. POWER ON indicator lamp should light.

f. Press and hold VOLTAGE TEST pushbutton (1) and observe panel meter.

(1) If meter needle points to 700 or above, release switch and go to paragraph 2-7.

(2) If meter needle points below 700, release switch, set POWER ON-OFF switch to OFF and go to paragraph 2-10 *a.*

NOTE

A panel meter reading below 700 indicates a faulty memory battery (B1) which should be replaced.

g. Set POWER ON-OFF switch to OFF POWER ON indicator lamp should go out.

2-7. Operating Procedures for Battery Charger PP-7286/U.

CAUTION

Do not charge more than one battery (one in the battery holder and one in the REMOTE BATTERY jacks) on the same channel at the same time.

NOTE

Charging channel 1 is used as an operating example in the following steps. The same instruc--

tions apply when using channels 2 through 5.

a. Inspect battery to be charged for evidence of leakage and damaged or dirty terminals. If leaky or damaged dispose of batteries through property disposal office (PDO).

b. Note charging information on battery to be charged. Record information on battery holder label (11, fig. 2-1). Refer to table 2-2 for charging information on some selected NiCD batteries.

Example: Typical charging information on a BB-516/U battery would read "30 mA FOR 6 HOURS" for ambient temperature of 40° F (5° C) to 100° F (38° C). This means this battery should be charged at a rate of 30 mA for 6 hours.

Tabk 2-2. Recommended Charging Data for Selected Batteries

Battery	Charging Information for Ambient Temperatures of 14°F (– 10°C) to 39°F (4°C)	Charging information for Ambient Temperature of 40°F (5°C) to 100°F (38°C)
BB-505( )/U	120 mA for 12 hours	240 mA for 6 hours
BB-507( )/U	400 mA for 12 hours	700 mA for 7 hours
BB-516/U	15 mA for 12 hours	30 mA for 6 hours
BB-557( )/U	50 mA for 12 hours	100 mA for 6 hours
BB-590( )/U	180 mA for 12 hours	360 mA for 6 hours
BB-655( )/U	350 mA for 24 hours	700 mA for 14 hours
BB-699/PAQ-l	180 mA for 12 hours	360 mA for 6 hours
BB-704/U	200 mA for 24 hours	400 mA for 12 hours
MC-1605B	600 mA for 6 hours	600 mA for 6 hours

c. Set CURRENT SET switch of channel 1 to lowest setting that includes the required charging current on battery to be charged.

Example: 0 to 50 mA charging information on battery. Set CURRENT SET switch to 50 mA.
51 to 200 mA charging information on battery. Set CURRENT SET switch to 200 mA.
201 to 700 mA charging information on battery. Set CURRENT SET switch to 700 mA.

d. Position CHANNEL SELECT switch to 1.

NOTE

Battery can be charged in either battery holder or connected to REMOTE BATTERY jacks. If battery is to be charged in battery holder, go to paragraph e. If connected to REMOTE BATTERY jacks, go to paragraph *f.*

e. Battery Holder Charging

(1) Loosen thumbscrew (1, fig. 2-2) on + (positive) sliding contact (2) for channel 1 and slide positive contact up, as high as it will go. Tighten thumbscrew.

(2) Place battery (3) in battery holder with positive (+) terminal on battery pointing up.

(3) Loosen thumbscrew on sliding contact and slide contact down onto battery. Press firmly on contact and tighten thumbscrew.

(4) Loosen thumbscrews on any sliding contacts not in use and slide contacts all the way down. Tighten thumbscrews.

CAUTION

Do not press down on contacts when tightening thumbscrews.

(5) Proceed to paragraph *g.*

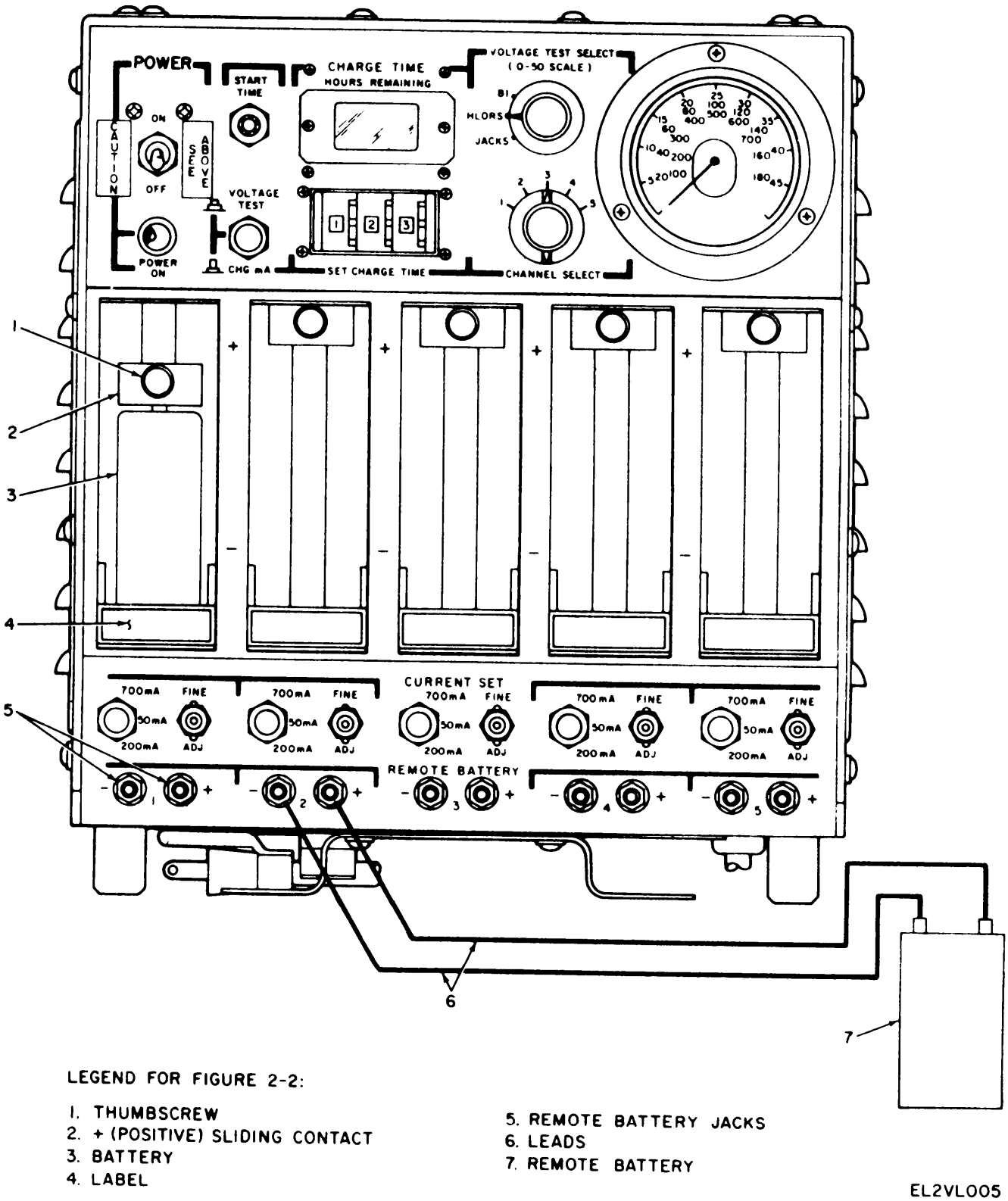

LEGEND FOR FIGURE 2-2:

1. THUMBSCREW
2. + (POSITIVE) SLIDING CONTACT
3. BATTERY
4. LABEL
5. REMOTE BATTERY JACKS
6. LEADS
7. REMOTE BATTERY

EL2VL005

Figure 2-2. Battery Charger Setup

f. REMOTE BATTER Y Charging.

(1) Loosen thumbscrews (1, fig. 2-2) on all + (positive) sliding contacts (2) not in use and slide contacts down. Tighten thumbscrews.

CAUTION

Do not press down on contacts when tightening

thumbscrews.

(2) Unscrew REMOTE BATTERY + (Red) and – (Black) jacks (5) for channel 1.

NOTE

The battery charger does not have a set of leads or cables (6) for remote battery charging. A set of leads or cables will be needed for remote battery charging.

(3) Connect one lead from positive (+) terminal on battery being charged to red jack on battery charger. Tighten jack.

(4) Connect the other lead from negative (–) terminal on battery to black jack on battery charger. Tighten jack.

(5) Tighten all REMOTE BATTERY jacks not in use.

g. Set thumbwheels on SET CHARGE TIME control (figure 2-1) to charging time required,

Example: Normally, the batteries in channel l through 5will all be same type requiring same charging time. If all batteries, such as BB-516/U, require a charge of 6 hours; set thumbwheels to read 6.0.

If more than one type of battery, each requiring a different charging time, is to be charged at the same time use the shortest time requirement (6 hours).

h. Set POWER ON-OFF switch to ON. POWER ON indicator lamp lights.

i. Set CHANNEL SELECT switch to position 1 and press START TIME switch.

j. Using a 5/16 inch wrench, loosen locking nut on channel 1 CURRENT SET-FINE ADJ control.

k. Using a small bladed screwdriver, slowly turn CURRENT SET-FINE ADJ control until needle on panel meter points to current charging rate required for battery being charged.

Example: If battery to be charged is a BB-516/U (refer to table 2-2) and the ambient temperature is 40° F (5°C) to 100° F (38°C); the needle should be set to 30 mA which is read on 0-50 panel meter scale.

NOTE

When adjusting FINE ADJ controls for other channels, set CHANNEL SELECT switch to each battery channel being adjusted.

l. Tighten locking nut, after each channel is adjusted.

m. Allow battery charger to go through charging time and stop charging automatically when CHARGE TIME-HOURS REMAINING display reads O and then extinguishes.

NOTE

If different type batteries, requiring different charge times, were connected and required additional charging proceed to step n. If no more charging is required, proceed to paragraph 2-8.

n. Set POWER ON-OFF switch to OFF. Remove fully charged battery. Figure 2-3 shows the retention rate of a fully charged battery at various degrees in Fahrenheit.

o. Set CHARGE TIME control for added charge time always using shortest time.

p. Set POWER ON OFF switch to ON. Press START TIME pushbutton.

q. Repeat steps m., n., and o. as required, to complete charging of remaining batteries.

2-7.1. Operating Procedures for Battery Charging Tray Assembly MX-10154( )/U

a. The battery holder contains six battery holding compartments. A pushbutton switch is positioned at the bottom of each of five compartments designated SW1 through SW5. The sixth compartment does not contain a pushbutton switch and has no designation.

b. When only one battery is to be charged it must be placed in the sixth undesignated compartment and the battery terminal pressed firmly into the socket designated J6.

c. Up to six batteries may be charged at the same time. If less than six batteries, but more than one are to be charged, one of the batteries must be inserted in the sixth (undersignated) compartment. The remaining batteries to be charged can be placed randomly in any of the other five designated compartment. Refer to paragraph 2-7f through q for the proper remote battery charging procedures.

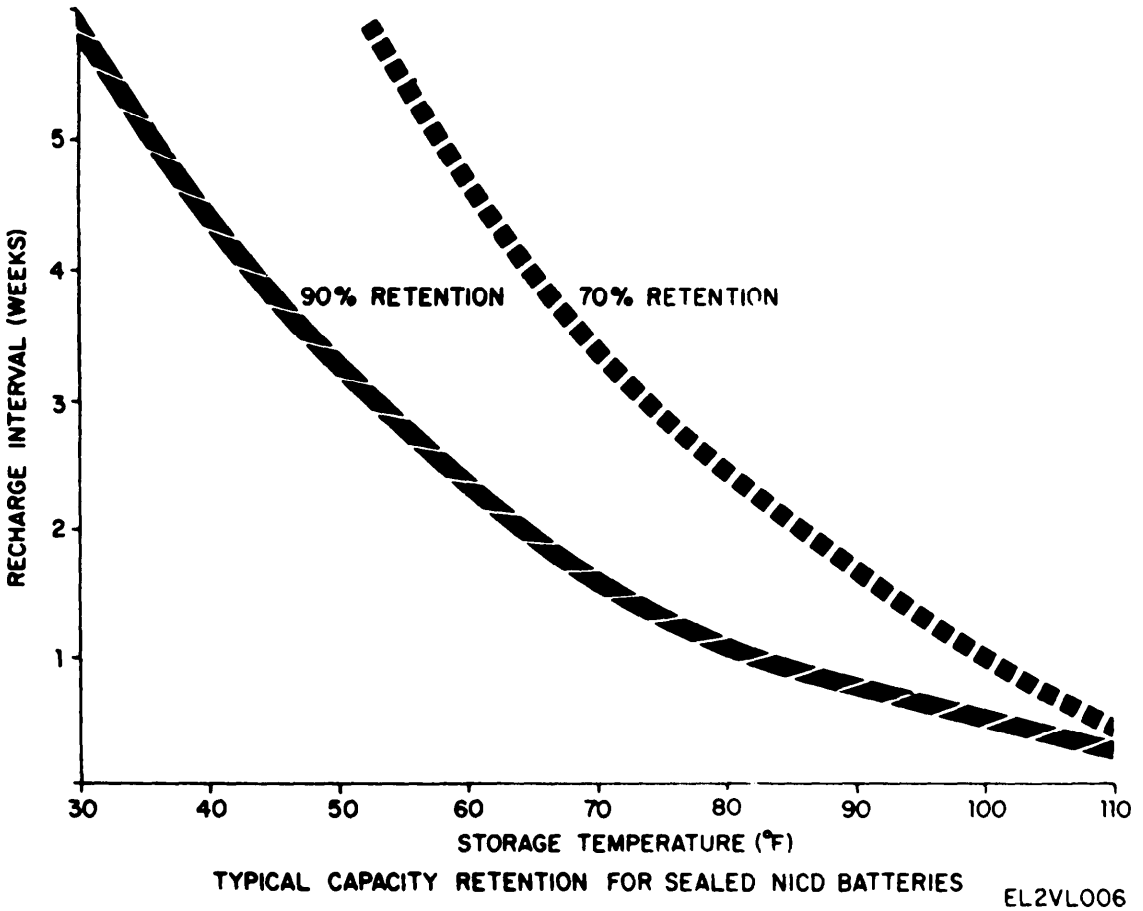

Figure 2-3. Typical Capacity Retention for Sealed NiCD Batteries

2-8. Shutdown Procedure

a. Set POWER ON-OFF switch (3) to OFF. POWER ON indicator lamp should go out.

b. Disconnect power cord from power source. Wrap cord around bracket on bottom of battery charger.

c. Loosen thumbscrews on each positive sliding contact and remove batteries.

d. Slide each sliding contact down and tighten thumbscrews.

e. Disconnect remote battery leads from REMOTE BATTERY jacks and from remote batteries.

CAUTION

If battery charger is to be prepared for shipment or placed in inactive storage for more than 30 days, remove memory battery (B1) as described in paragraph 3-5a and place in transit case for protection,

j. Position CURRENT SET switches to 50 mA position.

g. Using a 5/16 inch wrench, loosen locking nut on CURRENT SET-FINE ADJ controls.

h. Using a small bladed screwdriver, turn FINE ADJ controls fully counterclockwise. Tighten locking nuts.

i. Remote notations on battery holder label, if required.

Section IV. OPERATING UNDER UNUSUAL CONDITIONS

2-9. Weather Conditions

If Battery Charger PP-7286/U, has to be used under unusual weather conditions, the following is recommended:

a. Sand or Rain Storms. Protect battery charger by covering with any suitable field material, such as a box, raincoat, or tarpaulin. Prevent direct exposure to blowing sand or water. Keep battery holder and battery contacts clean.

b. Cold or Heat Extremes. Consider battery temperature before making a charge. For best results, bring battery temperature to within the usual range. A sealed battery out in extreme cold can be warmed in a heated room or near an engine exhaust. An extremely hot battery can be placed in the shade to cool.

2-10. Unusual Conditions

The battery charger will operate under the following con-

ditions:

a. No Memory *Battery (B1.), or Memory Battery Failed Test In Paragraph* 2-6. The battery charger will not automatically hold remaining charging time, if input power is lost or power cable is unplugged in error, during the charging cycle. The battery charger would have to be reset, to restart the charging cycle. Tag battery charger to indicate memory battery has failed or no memory battery installed. Use a clock to monitor charging time when using battery charger without a memory battery.

b. POWER ON Indicator Does Not Light, or No *Replacement Lamp to Install.* Follow each step in Operating Procedure, paragraph 2-7. Press START TIME switch, if panel meter (M1) shows a voltage or current reading the battery charger may be used Protect all personnel by tagging equipment on the front with an easy-to-see warning, and operate only after receiving proper authorization.

CHAPTER 3
OPERATOR/CREW AND ORGANIZATIONAL MAINTENANCE INSTRUCTIONS

Section I. TOOLS, EQUIPMENT, AND LUBRICATION

3-1. Tools and Equipment

There are no special tools or equipment required by the operator. Tools and test equipment, used by organizational maintenance personnel for the Battery Charger PP-7286/U, are listed in Appendix B, table B-1.

3-2. Lubrication

There are no lubrication requirements for the battery charger.

Section II. PREVENTIVE MAINTENANCE CHECKS AND SERVICES

3-3. General

a. Operator/Crew preventive maintenance is the systematic care, servicing, and inspection of equipment to prevent the occurrence of trouble, to reduce downtime, and to maintain the equipment in serviceable condition. To be sure that your battery charger is always ready for your mission, you must do scheduled PREVENTIVE MAINTENANCE CHECKS AND SERVICES (PMCS) .

(1) BEFORE OPERATION, perform your B PMCS to be sure that your equipment is ready to go.

(2) DURING OPERATION, perform your D PMCS. This should help you spot small troubles before they become big problems.

(3) AFTER OPERATION, perform your A PMCS. This should help you keep your equipment in top shape.

(4) WEEKLY AND MONTHLY PMCS are important checks you make to keep serious problems from suddenly happening. Perform WEEKLY as well as BEFORE OPERATION PMCS if:

(a) You are the assigned operator and have not operated the item since the last WEEKLY.

(b) You are operating the item for the first time.

(5) When an item of equipment is reinstalled after removal for any reason, perform the necessary B PMCS, paragraph 3-4, to be sure the item meets the operational criteria.

(6) Use the ITEM NO. column in the PMCS table to get the number to be used in the TM ITEM NO. column on DA Form 2404 (Equipment Inspection and Maintenance Worksheet) when you fill out the form.

b. Organizational preventive maintenance procedures are designed to help maintain equipment in serviceable condition. They include what items should be checked and how to check them. These checks and services described in paragraph 3-8, outline inspections that are to be made at specific (W) weekly, (M) monthly, (Q) quarterly, (S) semiannually and (A) annual intervals.

c. Routine checks like CLEANING, DUSTING, WASHING, CHECKING FOR FRAYED CABLES, STOWING ITEMS NOT IN USE, COVERING UNUSED RECEPTACLES AND CHECKING FOR LOOSE NUTS AND BOLTS are not listed as PMCS checks. They are things that you should do anytime you see they must be done. If you find a routine check like one of those listed, in your PMCS, it was listed because other operators reported problems with this item.

WHEN YOU ARE DOING ANY PMCS OR ROUTINE CHECKS, KEEP IN MIND THE WARNINGS AND CAUTIONS.

WARNINGS

Compressed air is dangerous and can cause serious bodily harm if protective means or methods are not observed to prevent a chip or particle (of whatever size) from being blown into the eyes *or* unbroken skin of the operator or other personnel. Compressd air shall not be used for cleaning purposes except where reduced to less than 30 psi and then only with effective chip guarding and personnel protective equipment. Do not use compressed air to dry parts when trichlorotrifluoroethane has been used.

Adequate ventilation should be provided while using TRICHLOROTRIFLUOROETHANE. Prolonged breathing of vapor should be avoided. The solvent should not be used near heat or open flame; the products of decomposition are toxic and irritating. Since TRICHLOROTRIFLUOROETHANE dissolves natural oils, prolonged contact with skin should be avoided. When necessary, use gloves which the solvent cannot penetrate. If the solvent is taken internally, consult a physician immediately.

NOTE

The PROCEDURES column in your PMCS charts instructs you how to perform the required checks and services. Carefully follow these instructions and if tools are needed or the chart instructions tell you, get organizational maintenance to do the necessary work. If your equipment must be in operation all the time, check those items that can be checked and serviced without disturbing operation. Make the complete checks and services when the equipment can be shut down.

d. Deficiencies that cannot be corrected must be reported to higher category maintenance personnel. Records and reports of preventive maintenance must be made in accordance with procedures given in TM 38-750.

Section III. OPERATOR/CREW PREVENTIVE MAINTENANCE CHECKS AND SERVICES

3-4. Preventive Maintenance Checks and Services

a. The operator/crew preventive maintenance checks and services are listed in table 3-1.

b. Perform weekly as well as before operation PMCS if:

(1) You are the assigned operator and have not operated the item since the last weekly.

(2) You are operating the item for the first time.

Table 3-1. Operator/Crew Preventive Maintenance Checks and Services

NOTE

The checks in the interval column are to be performed in the order listed.

B- Before Operation **A** —After Operation **M** —Monthly
***D-** During Operation **W** —Weekly

Item No.	Interval B	D	A	W	M	Item To Be Inspected/ Procedure
1	*					BATTERY CHARGER EQUIPMENT CASE
						a. Check for dirt and moisture on case.
						b Check for damage to equipment use, humidity indicator, pressure relief valve, latches, and handles. If there ıs damage notify next higher level of maintenance.
2		*				BATTERY CHARGER
						a. Check that unit is complete.
						b. Check for dirt and moisture on unit.
						c. Check + and – contacts on battery holders for damage or dirt
						d. Using a soft clean cloth, Wipe dirt and moisture from battery charger.
						e. Clean battery charger as described m paragraph 3-6.
						f. Check for damage to controls, battery holders, panel meter, and jacks.
						g. Check power cord for cuts or damaged connector.
						h. inspect battery charger for rust and corrosion. If these conditions exist, refer to a higher level maintenance for repair.
						i. Check INPUT VOLTAGE switch on back of charger for damage and that switch is in either 115V or 230V position depending upon power source being used.
						j. Check that SPARE fuse holders on back of charger contain I amp fuses,
						k. Check that POWER ON indicator lights when POWER ON-OFF switch is set to ON with power cord connected to power source Replace lamp, if burned out, as described in paragraph 3-5, *b.*
						l. Set VOLTAGE TEST SELECT switch to Bl and press VOLTAGE TEST pushbutton. Panel meter should indicate 700 mA.
						m. Set power ON-OFF switch to ON, turn thumbwheels of SET CHARGE TIME control to 10.0, then press START TIME switch Display should light to show number 10.0. Set power to OFF.
						n. Repeat *m,* but set SET CHARGE TIME control to 09.0; check that display is same.
						Repeat *m.,* but set SET CHARGE TIME control to 00.9; check that display is same.

NOTES:

* Make this check right after all batteries being charged are in battery holders and/or connected to REMOTE BATTERY jacks and POWER ON-OFF switch is set to ON.

Section IV. OPERATOR/CREW MAINTENANCE

3-5. Troubleshooting

The troubleshooting chart, table 3-2 is for failure indications as noticed during normal operation and preventive maintenance checks of the battery charger. Any malfunction that is beyond the scope of the operator to correct shall be referred to Organizational maintenance.

Table 3-2. Troubleshooting Chart

Malfunction	Probable Cause	Connective Action
1. POWER ON indicator light does not light when POWER ON-OFF switch is set to ON or goes out during operation of battery charger.	*a.* Power cord not plugged into power source.	*a.* Plug power into power source.
	b. No power source	*b. Check* input power source and change fuses.
	c. Indicator lamp is burned out.	*c.* Replace lamp.
2. VOLTAGE TEST SELECT control in B1 position with VOLTAGE TEST-CHG	Weak or missing memory battery (B1).	Replace battery.

Table 3-2. Troubleshooting Chart-Continued

Malfunction	Probable Cause	Corrective Action
mA pushbutton pressed and held, panel meter does not indicate 700 or more.		
3. CHARGE TIME-HOURS REMAINING indicator does not light.	*a. SET* CHARGE TIME thumbwheels not set and START TIME pushbutton not pressed.	*a. Set* thumbwheels and press pushbutton.
	b. Fuse F6 blown.	*b.* Replace fuse.
4. CHARGE TIME-HOURS REMAINING display does not read same as SET CHARGE TIME thumbwheels, when START TIME is pressed	Internal fault.	Send battery charger to next higher maintenance level.
5. Panel meter needle does not move when START TIME is pressed, CURRENT SET switch in correct position, battery connected for charging, and CHANNEL SELECT control in these positions:		
1	*a.* Fuse F1 blown.	*a.* Replace fuse.
2	*b.* Fuse F2 blown.	*b.* Replace fuse.
3	*c.* Fuse F3 blown.	*c* Replace fuse
4	*d* Fuse F4 blown.	*d.* Replace fuse.
5	*e.* Fuse F5 blown.	*e.*, Replace fuse.
6. POWER ON-OFF switch trips to OFF.	Internal short circuit or 220 volt input with 115/220V switch set to 115 V.	Reset to ON. If switch trips to off, disconnect battery charger from power source. Cheek position of 115/220V switch. Forward charger to next higher level of maintenance.

3-6. Removal and Installation

a. Memory Battery (Bl).

(1) Turn door latch on access door, on rear of battery charger, and open door.

(2) Remove battery from compartment; then disconnect battery from battery connector.

NOTE

Take notice of how battery terminals are connected to terminals on connector for reinstallation.

(3) Connect replacement battery to battery connector and place in battery compartment.

CAUTION

Before closing door, be sure battery leads are inside compartment and will not be in the way when door is being closed. Damage to battery leads may result.

(4) Close and latch access door.

b. POWER ON-OFF Indicator Lamp.

(1) Remove lens cap from lamp socket.
(2) Remove lamp from lens cap.
(3) Insert replacement lamp in lens cap.
(4) Install lens cap in lamp socket.

c. Fuses.

(1) Unscrew fuse cap from fuse holder.
(2) Pull out fuse from holder.
(3) Press in a new fuse holder.
(4) Install fuse cap on holder.

3-7. Cleaning

Inspect exterior of battery charger and exterior and interior of battery charging tray assembly. The surfaces should be clean and free of dust, dirt, grease, and fungus.

a. Remove dust and loose dirt with a soft, clean cloth.

WARNING

Adequate ventilation should be provided while using TRICHLOROTRIFLUOROETHANE. Prolonged breathing of vapor should be avoided. The solvent should not be used near heat or open flame; the products of decomposition are toxic and irritating. Since TRICHLOROTRIFLUOROETHANE dissolves natural oils, prolonged contact with skin should be avoided. When necessary, use gloves which the solvent cannot penetrate. If the solvent is taken internally, consult a physician immediately.

CAUTION

Do not press hard on panel meter face when cleaning. Damage to panel meter may result.

b. Remove grease, fungus, and ground-in dirt from front panel and case of battery charger and interior and exterior of battery charging tray assembly with a cloth dampened (not wet) with trichlorotrifluoroethane.

c. Remove dust or dirt from plugs and jacks of battery charger and from pushbutton switches and sockets of battery charging tray assembly with a soft brush.

Section V. ORGANIZATIONAL PREVENTIVE MAINTENANCE CHECKS AND SERVICES

3-8. General

a. Refer to Section II for introduction to preventive maintenance checks and services

b. The organizational preventive maintenance checks and services are listed in table 3-3.

Table 3-3. Organizational Preventive Maintenance Checks and Services

NOTE

The checks in the interval column are to be performed in the order listed.

W—Weekly Q-Quarterly A—Annually
M—Monthly S-Semiannually

Item No.	Interval W	M	Q	s	A	Item To Be Inspected/ Procedure
1		•				**BATTERY CHARGER EQUIPMENT** CASE *a.* Inspect case for corrosion and for worn or peeling finish. Touchup in accordance with paragraph 3-11. *b.* Check for damage to case, latches, handles, humidity indicator and relief valve. If there is damage, notify next higher level of maintenance
2			•			**BATTERY CHARGER** *a.* Inspect case and control panel for corrosion and worn or peeling finish. Touchup in accordance with paragraph 3-11. *b.* Check toggle switches for damage and verify that they are securely fastened to panel. *c.* Rotate CHANNEL SELECT switch through its 5 positions; then rotate VOLTAGE TEST SELECT through its 3 positions. Check for mechanical operation of each switch. *d.* Rotate SET CHARGE TIME thumbwheels through their positions and check for mechanical operation. *e.* Inspect CHARGE TIME-HOURS REMAINING indicator for broken glass. *f.* Inspect panel meter for broken glass. *g.* Using a small flat bladed screwdriver, rotate CURRENT SET-FINE ADJ controls through their range of travel. Check for smooth operation and verify that they are securely fastened to panel. *h.* Inspect REMOTE BATTERY terminals for damage and verify that they are securely fastened to panel. *i.* Inspect battery holder assemblies for dirt or corrosion. Clean as necessary. *j.* Inspect fuse holders for damage and verify that they are securely fastened to rear panel and have fuses installed. *k.* Inspect battery access door for latching and damage. *l.* Inspect the power cable assembly for cuts or damaged connector, **NOTE** If any item is damaged, notify next higher level of maintenance.
3	•					MEMORY BATTERY (B1) TEST *a.* Test memory battery (B1) in accordance with paragraph 2-6. If test indicates a faulty battery, replace battery in accordance with paragraph 3-6.

Section VI. ORGANIZATIONAL MAINTENANCE

3-9. Troubleshooting

To troubleshoot battery charger, perform operating procedures in paragraphs 2-6 and 2-7. If a malfunction occurs, refer to table 3-2.

3-10. Maintenance Instructions

Perform corrective action indicated in table 3-2. Any malfunction requiring maintenance and not authorized at organizational level, will be referred to next higher level of maintenance.

3-11. Touchup Painting

Touchup of small damaged paint areas to prevent rust and corrosion is authorized for the battery charger and equip ment case. AU paints and finishes are listed in SB 11-573, Painting and Preserving Supplies Available for Field Use

for Electronics Command Equipment. Refer to TB 43-0118, Field Instructions for Painting and preserving Electronic Equipment Including Camouflage pattern Painting of Electrical Equipment Shelters, and AR 746-5, color and marking of Army Materiel.

CAUTION

Do not paint over panel lettering, stenciling, labels warning notices, or glass windows.

a. Equipment Case.

(1) Lightly sand touchup area with fine sandpaper, and wipe with clean cloth.

(2) Apply two thin paint coats, color chip 34087 olive drab green, Fed. Std. 595.

b. Battery Charger Case.

(1) Lightly sand touchup area with fine sandpaper, and wipe with clean cloth.

(2) Apply primer per MIL-P-23377 and paint per finish No. P518M of MIL-F-14072.

APPENDIX A
REFERENCES

The following list of references is applicable to battery charger PP-7286/U.

DA Pam 310-1	Consolidated Index of Army Publications and Blank Forms.
SB 11-573	Painting and Reservation Supplies Available for Field Use for Electronic Command Equipment.
TB 43-0118	Field Instructions for Painting and Preserving Electronics Command Equipment Including Camouflage Pattern Painting of Electrical Equipment Shelters.
TM 38-750	The Army Maintenance Management System (TAMMS).
TM 38-750-1	The Army Maintenance Management System (TAMMS), Field Command Procedures.
TM 740-90-1	Administrative Storage of Equipment.
TM 750-244-2	Procedures for Destruction of Electronix Materiel to Prevent Enemy Use (Electronics Command).

APPENDIX B
MAINTENANCE ALLOCATION CHART

Section I. INTRODUCTION

B-1. General

This appendix provides a summary of the maintenance operations for Battery Charger PP-7286/U. It authorizes categories of maintenance for specific maintenance functions on repairable items and components and the tools and equipment required to perform each function. This appendix may be used as an aid in planning maintenance operations.

B-2. Maintenance Functions

Maintenance functions shall be limited to and defined as follows in connection with the Maintenance Allocation Chart:

a. Inspect. To determine the serviceability of an item by comparing its physical, mechanical, and/or electrical characteristics with established standards through examination.

b. Test. To verify serviceability and to detect incipient failure by measuring the mechanical or electrical characteristics of an item and comparing those characteristics with prescribed standards.

c. Service. Operations required periodically to keep an item in proper operating condition, i.e., to clean, preserve, drain, paint, or to replenish fuel/lubricants/-hydraulic fluids or compressed air supplies.

d. Adjust. Maintains within prescribed limits by bringing into proper or exact position, or by setting the operating characteristics to the specified parameters.

e. Align. To adjust specified variable elements of an item to about optimum or desired performance.

f. Calibrate. To determine and cause corrections to be made or to be adjusted on instruments or test measuring and diagnostic equipment used in precision measurement. Consists of the comparison of two instruments, one of which is a certified standard of known accuracy, to detect and adjust any discrepancy in the accuracy of the instrument being compared.

g. Install. The act of emplacing, seating, or fixing into position an item, part, module (component or assembly) in a reamer to allow the proper functioning of the equipment system.

h. Replace. The act of substituting a serviceable like-type part, subassembly, model (component or assembly) for an unserviceable counterpart.

i. Repair. The application of maintenance services (inspect, test, service, adjust, align, calibrate, replace) or other maintenance actions (welding, grinding, riveting, straightening, facing, machining, or resurfacing) to restore serviceability to an item by correcting specific damage, fault, malfunction, or failure in a part, subassembly, module/component/assembly, end item or system.

j. Ouerhaul. That periodic maintenance effort (service/action) necessary to restore an item to a completely serviceable/operational condition as prescribed by maintenance standards (e.g., DMWR) in appropriate technical publications. Overhaul does not normally return an item to like-new condition.

k. Rebuild. Consists of those services/actions necessary for the restoration of unserviceable equipment to a like-new condition in accordance with original manufacturing standards. Rebuild is the highest degree of material maintenance applied to Army equipment. The rebuild operation includes the act of returning to zero those age measurements (hours, miles, etc.) considered in classifying Army equipment/components.

B-3. Column Entries (Sect. II)

a. Column 1, Group Number. Column 1 lists group numbers, the purpose of which is to identify components, assemblies, subassemblies and modules with the next higher assembly.

b. Column 2, Component/Assembly. Column 2 contains the noun names of components, assemblies, subassemblies, and modules for which maintenance is authorized.

c. *Column 3, Maintenance Functions.* Column 3 lists the functions to be performed on the item listed in column 2.

d. Column 4, Maintenance Category. Column 4 specifies, by the listing of a " worktime" figure in the appropriate subcolumn (s), the lowest level of maintenance authorized to perform the function listed in column 3. This figure represents the active time required to perform that maintenance function at the indicated category of maintenance. If the number or complexity of the tasks within the listed maintenance function vary at different maintenance categories, appropriate "worktime" figures will be shown for each category. The number of task-hours specified by the "worktime" figure represents the average time required to restore an item (assembly, subassembly, component, module, end item or system) to a serviceable condition under typical field operating conditions. This time includes preparation time, troubleshooting time and quality assurance/quality control time in addition to the time required to perform the specific tasks identified for the maintenance functions authorized in the maintenance allocation chart. Subcolumns of column 4 are as follows:

C-Operator/Crew
O-Oganizational
F—Direct Support
H-General Support
D-Depot

e. *Column 5, Tools and Equipment.* Column 5 specifies

by code, those common tool sets (not individual tools) and special tools, test, and support equipment required to perform the designated function,

f. Column 6, *Remarks*. Column 6 contains an alphabetic code which leads to the remark in section IV, Remarks, which is pertinent to the item opposite the particular code.

B-4. Tools and Test Equipment Requirements (Sect. III)

a. Tool or Test Equipment Reference Code. The numhers in this column coincide with the numbers used in the tools and equipment column of the MAC. The numbers indicate the applicable tool or test equipment for the maintenance functions.

b. Maintenance Category. The codes in this column indicate the maintenance category allocated the tool or test equipment,

c. Nomenclature. This column lists the noun name and nomenclature of the tools and test equipment required to perform the maintenance functions.

d. National/NATO Stock Number. This column lists the National/NATO stock number of the specific tool or test equipment

e. Tool Number. This column lists the manufacturer's part number of the tool followed by the Federal Supply Code for manufacturers (5-digit) in parentheses.

B-5. Remarks (Sect. IV)

a. Reference Code. This code refers to the appropriate item in section III, column 6.

b. Remarks. This column provides the required explanatory information necessary to clarify items appearing in section IV.

(Next printed page is B-3)

SECTION II MAINTENANCE ALLOCATION CNART
FOR
CHARGER, BATTERY PP- 7286/U

(1) GROUP NUMBER	(2) COMPONENT/ASSEMBLY	(3) MAINTENANCE FUNCTION	(4) MAINTENANCE CATEGORY					(5) TOOLS AND EQPT.	(6) REMARKS
			C	O	F	H	D		
00	CHARGER, BATTERY PP-7286/U	Inspect	0.1						
		Test	0.1						
		Replace	0.1						A
		Test		0.1					
		Replace		0.2				1	B
		Service		0.1				1	
		Test				1.0		3 thru 9	
		Repair				0.5		2, 11, 12	
		Adjust				0.5		2, 8	C
01	ASSEMBLY, BATTERY CHARGER	Overhaul					30	2 thru 12	
101	CHARGING MODULES, P.W.A. A-6 thru A-10	Test			0.5			3, 5	D
		Replace			0.2			2	
		Test					1.0	3, 5, 8, 10	
		Repair					1.0	2	
102	POWER SUPPLY P.W.A., A-11	Test			0.5			3, 5	D
		Replace			0.2			2	
		Test					1.0	3 thru 5, 8, 10	
		Repair					1.0	2	
103	TIMING CIRCUIT, P.W.A., A-12	Test			0.5			3, 4, 6, 7	D
		Replace			0.2			2	
		Test					1.5	3, 4, 6 thru 8, 10	
		Repair					1.0	2	
104	DISPLAY CIRCUIT, P.W.A., A-13	Test			0.2				D
		Replace			0.2			2	
		Test				0.5		3	
		Repair				1.0		2	

SECTION III TOOL AND TEST EQUIPMENT REQUIREMENTS
FOR
CHARGER, BATTERY PP-7286/U

TOOL OR TEST EQUIPMENT REF CODE	MAINTENANCE CATEGORY	NOMENCLATURE	NATIONAL NATO STOCK NUMBER	TOOL NUMBER
1	O	Tool Kit, Electronic Equipment TK-101/G	5180-00-064-5178	
2	F,H,D	Tool Kit, Electronic Eqduipment TK-105/G	5180-00-610-8177	
3	F,H,D	Multimeter, AN/USM-223/U (Rs TS-353 B/U)	6625-00-999-7465	
4	F,H,D	Oscilloscope, AN/USM-281	6625-00-106-9622	
5	F,H,D	Extender Test Board (23-pins) SMD 889125	6130-01-066-4496	
6	F,H,D	Extender Test Board (41 pins) SMD 889122	6130-01-066-4495	
7	F,H,D	Stop Watch	6645-00-903-1696	
8	H,D	Voltmeter, Digital AN/GSM-64	6625-00-022-7894	
9	H, D	Bridge, Resistance ZM-4B/U	6625-00-500-0937	
10	D	Charger, Battery PP-7286/U	6130-01-041-3490	
11	H,D	Heat Gull	4940-00-785-1162	
12	H,D	Key, Socket Head Screw (3/16" x 13 1/2")	5120-00-821-3459	

SECTION IV. REMARKS FOR CHARGER, BATTERY PP-7286/U

REFERENCE CODE	REMARKS
A	FUSES
B	LAMPS AND INTERNAL 9-VOLT MEMORY BATTERY (B1)
C	METER M1 (IF REPLACED)
D	TO FAULT ISOLATE TO REPLACEABLE PC BOARD ASSEMBLY

* U.S. GOVERNMENT PRINTING OFFICE : 1994 0 - 388-421 (1280)

By Order of the Secretary of the Army:

E. C. MEYER
General, United States Army
Chief of Staff

Official:
J. C. PENNINGTON
Major General, United States Army
The Adjutant General

DISTRIBUTION:
Active Army:
HISA (Ft Monmouth) (21)
USAINSCOM (2)
COE (1)
TSG (1)
USAARENBD (1)
DARCOM (1)
TRADOC (2)
OS Maj Cmd (4)
TECOM (2)
USACC (4)
MDW (1)
Armies (2)
Corps (2)
Svc Colleges (1)
USASIGS (5)
USAADS (2)
USAFAS (2)
USAARMS (2)
USAIS (2)
USAES (2)
USAICS (3)
MAAG (1)
USARMIS (1)
USAERDAA (1)
USAERDAW (1)
Ft Gordon (10)
Ft Carson (5)
Army Dep (1) except
LBAD (14)
SAAD (30)
TOAD (14)
SHAD (3)
Ft Gillem (10)
USA Dep (1)
Sig Sec USA Dep (1)
Ft Richardson (CERCGM Ofc) (2)
Units org under fol TOE:
29-207 (2)
29-610 (2)

NG: None
USAR: None
For explanation of abbreviations used, see AR 310-50.

RECOMMENDED CHANGES TO EQUIPMENT TECHNICAL MANUALS

SOMETHING WRONG WITH THIS MANUAL?

THEN. . .JOT DOWN THE DOPE ABOUT IT ON THIS FORM, TEAR IT OUT, FOLD IT AND DROP IT IN THE MAIL!

FROM: (YOUR UNIT'S COMPLETE ADDRESS)
Commander
Stateside Army Depot
ATTN: AMSTA-US
Stateside, N.J. 07703

DATE 10 July 1975

PUBLICATION NUMBER	DATE	TITLE
TM 11-5840-340-12	23 Jan 74	Radar Set AN/[illegible]-76

BE EXACT. . .PIN-POINT WHERE IT IS

PAGE NO.	PARAGRAPH	FIGURE NO.	TABLE NO.	IN THIS SPACE TELL WHAT IS WRONG AND WHAT SHOULD BE DONE ABOUT IT:
2-25	2-28			Recommend that the installation antenna alignment procedure be changed throughout to specify a 2° IFF antenna lag rather than 1°. REASON: Experience has shown that with only a 1° lag, the antenna servo system is too sensitive to wind gusting in excess of [illegible] knots, and has a tendency to rapidly accelerate and decelerate as it hunts, causing strain to the drive train. Hunting is minimized by adjusting the lag to 2° without degradation of operation.
3-10	3-3		3-1	Item 5, Function column. Change "2 db" to "3db." REASON: The adjustment procedure for the TRANS POWER FAULT indicator calls for a 3 db (500 watts) adjustment to light the TRANS POWER FAULT indicator.
5-6	5-8			Add new step f.1 to read, "Replace cover plate removed in step e.1, above." REASON: To replace the cover plate.
		F03		Zone C 3. On J1-2, change "+24 VDC to "+5 VDC." REASON: This is the output line of the 5 VDC power supply. + 24 VDC is the input voltage.

TYPED NAME, GRADE OR TITLE, AND TELEPHONE NUMBER
SSG I. M. DeSpiritof 999-1776

SIGN HERE: SSG I. M. DeSpiritof

DA FORM 1 AUG 74 2028-2

P.S.--IF YOUR OUTFIT WANTS TO KNOW ABOUT YOUR MANUAL "FIND," MAKE A CARBON COPY OF THIS AND GIVE IT TO YOUR HEADQUARTERS.

TEAR ALONG DOTTED LINE

RECOMMENDED CHANGES TO EQUIPMENT TECHNICAL MANUALS

SOMETHING WRONG WITH THIS MANUAL?

THEN. . .JOT DOWN THE DOPE ABOUT IT ON THIS FORM, TEAR IT OUT, FOLD IT AND DROP IT IN THE MAIL!

FROM: (YOUR UNIT'S COMPLETE ADDRESS)

DATE

PUBLICATION NUMBER	DATE	TITLE
TM 11-6130-392-12	30 Oct 79	Charger, Battery PP-7286/U

BE EXACT. . .PIN-POINT WHERE IT IS

PAGE NO.	PARA-GRAPH	FIGURE NO.	TABLE NO.

IN THIS SPACE TELL WHAT IS WRONG AND WHAT SHOULD BE DONE ABOUT IT:

TYPED NAME, GRADE OR TITLE, AND TELEPHONE NUMBER

SIGN HERE:

TEAR ALONG DOTTED LINE

DA FORM 1 AUG 74 2028-2

P.S.--IF YOUR OUTFIT WANTS TO KNOW ABOUT YOUR MANUAL "FIND," MAKE A CARBON COPY OF THIS AND GIVE IT TO YOUR HEADQUARTERS.

FILL IN YOUR UNIT'S ADDRESS

FOLD BACK

DEPARTMENT OF THE ARMY

OFFICIAL BUSINESS

Commander
US Army Communications and
Electronics Materiel Readiness Command
ATTN: DRSEL-ME-MQ
Fort Monmouth, New Jersey 07703

TEAR ALONG DOTTED LINE

FOLD BACK

REVERSE OF DA FORM 2028-2

This fine document...

Was brought to you by me:

Liberated Manuals -- free army and government manuals

Why do I do it? I am tired of sleazy CD-ROM sellers, who take publicly available information, slap “watermarks” and other junk on it, and sell it. Those masters of search engine manipulation make sure that their sites that sell free information, come up first in search engines. They did not create it... They did not even scan it... Why should they get your money? Why are not letting you give those free manuals to your friends?

I am setting this document FREE. This document was made by the US Government and is NOT protected by Copyright. Feel free to share, republish, sell and so on.

I am not asking you for donations, fees or handouts. If you can, please provide a link to liberatedmanuals.com, so that free manuals come up first in search engines:

<A HREF=http://www.liberatedmanuals.com/>Free Military and Government Manuals</A>

- Sincerely
  Igor Chudov
  http://igor.chudov.com/
- Chicago Machinery Movers