TECHNICAL MANUAL

OPERATOR'S ORGANIZATIONAL, DS, GS, AND DEPOT MAINTENANCE MANUAL INCLUDING REPAIR PARTS AND SPECIAL TOOLS LISTS

POWER SUPPLY PP-6224/U

HEADQUARTERS, DEPARTMENT OF THE ARMY

SEPTEMBER 1971

WARNING

High voltages and currents exist in this equipment.

DO NOT TAKE CHANCES!

Power Supply PP-6224/U should be used *only* with a 3-wire grounded ac power source. To avoid possible electrical shock, a 2-wire adapter must *not* be used.

CAUTION

ACID CONTAMINATES NICKEL-CADMIUM BATTERIES

Every effort must be made to keep nickel-cadmium batteries as far away as possible from lead-acid batteries because lead-acid batteries contain sulphuric acid. Do not use the same tools and materials, such as screwdrivers, wrenches, syringes, hydrometers, and gloves for both types of batteries. Any trace of acid or acid fumes will permanently damage nickel-cadmium batteries on contact.

CHANGE

No. 4

HEADQUARTERS
DEPARTMENT OF THE ARMY
Washington, DC, 1 June 1983

OPERATOR'S, ORGANIZATIONAL, DIRECT SUPPORT, GENERAL SUPPORT AND DEPOT MAINTENANCE MANUAL INCLUDING REPAIR PARTS AND SPECIAL TOOLS LISTS

POWER SUPPLY PP-6224/U AND POWER SUPPLY PP-6224A / U (NSN 6130-00-133-5879)

TM 11-6130-266-15, 23 September 1971, is changed as follows:

1. Remove and insert pages as indicated in the page list below:

Remove pages	*Insert pages*
5-7 and 5-8	5-7 and 5-8

2. File this change sheet in front of the manual for reference purposes.

By Order of the Secretary of the Army:

EDWARD C. MEYER
General, United States Army
Chief of Staff

Official:

ROBERT M. JOYCE
Major General, United States Army
The Adjutant General

DISTRIBUTION:

To be distributed in accordance with DA Form 12-51, Operator's Maintenance requirements for RT-246/VRC.

CHANGE
No. 3

HEADQUARTERS
DEPARTMENT OF THE ARMY
WASHINGTON, DC, *21 June 1978*

Operator's, Organizational, Direct Support, General Support, and Depot Maintenance Manual Including Repair Parts and Special Tools Lists for PP-6224/U

POWER SUPPLY PP-6224/U AND
POWER SUPPLY PP-6224A/U
(NSN 6130-00-133-5879)

TM 11-6130-266-15, 23 September 1971, is changed as follows:
1. Title of manual is changed as shown above.
2. Remove and insert pages as indicated in the page list below:

Remove pages	*Insert pages*
i and ii	i and ii
1-1 and 1-2	1-1 and 1-2
3-1 through 3-3	3-1 through 3-3
4-3	4-3
5-1 through 5-8	5-1 through 5-8.2
5-9 and 5-10	5-9 and 5-10
6-1 and 6-2	6-1 and 6-2
Appendix B	Appendix B
None	Figure 8-4

3. File this change sheet in front of the manual for reference purposes.

By Order of the Secretary of the Army:

BERNARD W. ROGERS
General, United States Army
Chief of Staff

Official:

J.C. PENNINGTON
Brigadier General, United States Army
The Adjutant General

Distribution:
To be distributed in accordance with DA Form 12-51, Operator TM literature requirements for RT-246/VRC and RT-524/VRC.

CHANGE
No. 2

HEADQUARTERS
DEPARTMENT OF THE ARMY
WASHINGTON, DC, *22 April 1975*

Operator's, Organizational, Direct Support,
General Support, and Depot Maintenance Manual
Including Repair Parts and Special Tools Lists
POWER SUPPLY PP-6224/U

TM 11-6130-266-15, 23 September 1971, is changed as follows:

1. Remove and insert information as indicated below:

Remove	*Insert*
Warning notice on inside front cover (Deleted)	Warning notice (Added)

2. File this change sheet in front of the manual for reference purposes.

By Order of the Secretary of the Army:

FRED C. WEYAND
General, United States Army
Chief of Staff

Official:

VERNE L. BOWERS
Major General, United States Army
The Adjutant General

Distribution:
To be distributed in accordance with DA Form 12-51, Operator maintenance Requirements for RT-246/VRC and RT-524/VRC.

WARNING

DANGEROUS CHEMICALS ARE USED IN NICKEL-CADMIUM BATTERIES

The electrolyte used in nickel-cadmium batteries contains potassium hydroxide (KOH), which is a caustic chemical agent. Serious and deep burns of body tissue will result if the electrolyte comes in contact with the eyes or any part of the body. Use rubber gloves, rubber apron, and protective goggles when handling the electrolyte. If accidental contact with the electrolyte is made, use ONLY clean water and immediately (seconds count) flush contaminated areas. Continue flushing with large quantities of clean water for at least 15 minutes. Seek medical attention without delay.

EXPLOSIVE GASES ARE GENERATED BY NICKEL-CADMIUM BATTERIES

Hydrogen and oxygen gases are generated in explosive proportions while the nickel-cadmium battery is being charged. Charge the nickel-cadmium battery in a well-ventilated area to reduce concentrations of explosive gases. Turn off the battery charger before connecting or disconnecting the nickel-cadmium battery to prevent arcing. Do not use matches or an open flame in the charging area. Arcs, flames, or sparks in the charging area will ignite the gases and cause an explosion. The battery box cover must be removed and the battery case vent plug (if used) must be open when charging.

DO NOT MIX SULPHURIC ACID AND KOH

The electrolyte used in nickel-cadmium batteries reacts violently to the sulphuric acid used in the more common lead-acid types of batteries. DO NOT add sulphuric acid electrolyte to the battery; the mixing of the acid and KOH electrolytes twill cause a violent reaction which could result in the splattering of the mixture into the eyes and onto the skin.

☆ U.S. GOVERNMENT PRINTING OFFICE: 1975-665141/949

CHANGE
No. 1

HEADQUARTERS
DEPARTMENT OF THE ARMY
WASHINGTON, D.C., *15 February 1973*

Operator's, Organizational, Direct Support, General

Support, and Depot Maintenance Manual Including

Repair Parts and Special Tools Lists

POWER SUPPLY PP-6224/U

TM 11-6130-266-15, 23 September 1971, is changed as follows:

1. Remove and insert pages as indicated in the page list below.

Remove pages-	*Insert pages-*
1-1 and 1-2	1-1 and 1-2
4-1 through 4-3	4-1 through 4-3
5-3 through 5-6	5-3 through 5-6
C-5 through C-8	C-5 through C-8
C-25 and C-26	C-25 and C-26
C-31 through C-34	C-31 through C-34
	C-56.1
Figures 8-2 and 8-3	Figures 8-2 and 8-3

2. File this change sheet in front of the publication for reference purposes.

By Order of the Secretary of the Army:

CREIGHTON W. ABRAMS
General, United States Army
Chief of Staff

Official:

VERNE L. BOWERS
Major General, United States Army
The Adjutant General

Distribution:

To be distributed in accordance with DA Form 12-51. Operator's Maintenance requirements for RT-246 VRC and RT-524. VRC Equipment.

TECHNICAL MANUAL
No. 11-6130-266-15

HEADQUARTERS
DEPARTMENT OF THE ARMY
WASHINGTON, D.C., *23 September 1971*

Operator's, Organizational, DS, GS, and Depot Maintenance Manual

Including Repair Parts and Special Tools List for PP-6224/U

POWER SUPPLY PP-6224/U AND

POWER SUPPLY PP-6224A/U

(NSN 6130-00-133-5879)

REPORTING OF ERRORS

You can help improve this manual by calling attention to errors and recommending improvements and stating your reasons for the recommendations. Your letter or DA Dorm 2028 (Recommended Changes to Publications and Blank Forms) should be mailed direct to Commander, US Army Communications and Electronics Materiel Readiness Command, ATTN: DRSEL-MA-Q, Fort Monmouth, NJ 07703. A reply will be furnished direct to you.

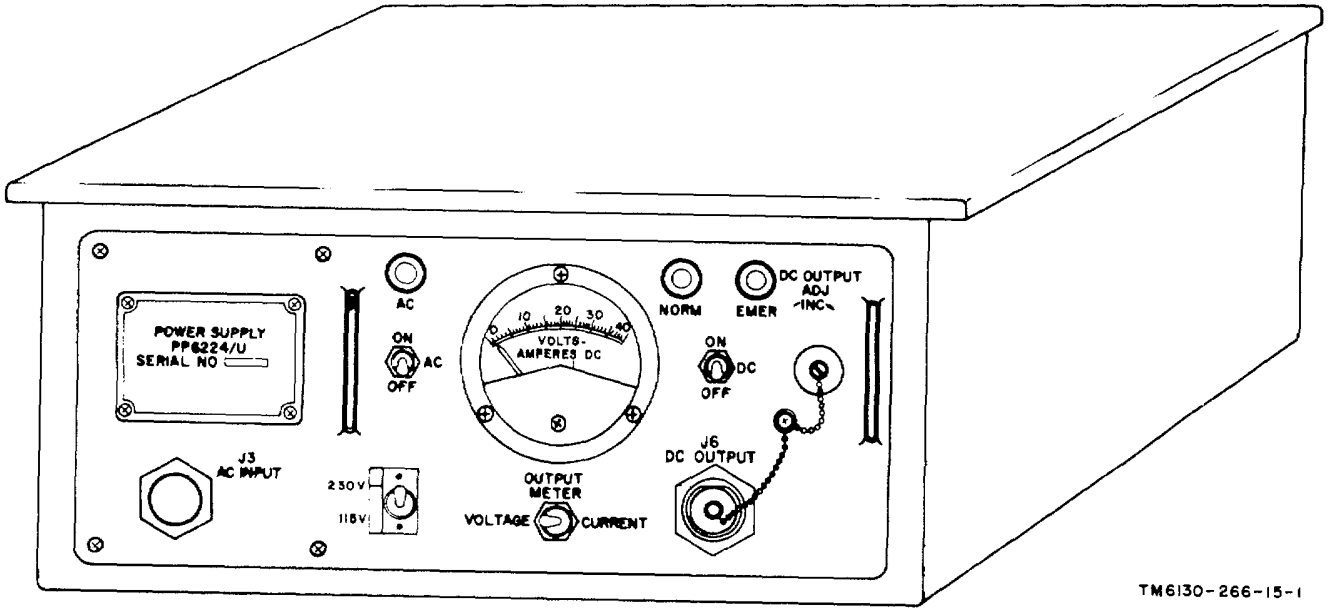

Figure 1-1. Power Supply PP-6224/U.

CHAPTER 1

INTRODUCTION

Section I. GENERAL

1-1. Scope

a. This manual describes Power Supply PP-6224/U and PP-6224A/U (fig. 1-1) and covers its installation, operation. function, and maintenance. It includes operation under usual and unusual conditions, cleaning and inspection of the equipment, and replacement of parts available to each category of maintenance

b. Unless otherwise indicated, all information provided for Power Supply PP-6224/U is also applicable to Power Supply PP-6224A/U.

c. Throughout this manual, Power Supply PP-6224/U; Cable Assembly, Power, Electrical CX-11979/U; and Cable Assembly, Power, Electrical CX-12342/VRC will be referred to as *power supply, ac power cord, and dc power cord, respectively.*

d. Appendix A contains a list of publications applicable to this equipment. Appendix B contains the maintenance allocation and repair operations to be performed at the appropriate maintenance categories. Appendix C contains repair parts and tool lists (RPSTL) for the PP-6224/U only. The RPSTL for the PP-6224A/U is contained in TM 11-6130-266-24P-2.

NOTE

Appendix C is current as of 31 May 1972.

1-2. Indexes of Publications

a. DA Pam 310-4. Refer to DA Pain 310-4 to determine whether there are new editions, changes, or additional publications pertaining to the equipment.

b. DA Pam 310-7. Refer to DA Pam 310-7 to determine whether there are modification work orders (MWO's) pertaining to the equipment.

1-3. Forms and Records

a. Reports of Maintenance and Unsatisfactory Equipment. Use equipment forms and records in accordance with instructions TM 38-750.

b. Report of Packaging and Handling Deficiencies. Fill out and forward DD Form 6 (Report of Packaging and Handling Deficiencies) as prescribed in AR 700-58 (Army) NAVSUP PUB 378 (Navy)/AFR 71-4 (Air Force) and MCO P4030.29 (Marine Corps).

c. Discrepancy in Shipment Report (DISREP) (SF 361). Fill out and forward Discrepancy in Shipment Report (DISREP) (SF 361) as prescribed in AR 55-38 (Army) NAVSUP PUB 459 (Navy)/AFM 75-34 (Air Force) and MCO P4610.19 (Marine Corps).

d. Reporting Equipment Improvement Recommendations (EIR). EIR's will be prepared using DA Form 2407 (Maintenance Request). Instructions for preparing EIR's are provided in TM 38-750, The Army Maintenance Management System. EIR's should be mailed direct to Commander, US Army Communications and Electronics Materiel Readiness Command, ATTN: DRSEL-MA-Q, Fort Monmouth, New Jersey 07703.

e. Administrative Storage. For procedures, forms and records, and inspection requirement; during administrative storage of equipment. refer to Chapter 8.

Section II. DESCRIPTION AND DATA

1-4. Purpose and Use

a. Power Supply PP-6224/U converts 115 or 230 volt, single phase, 50, 60, or 400 hertz (Hz) to 24 to 32 volts de (local load) or 24 to 29 volts dc (remote load) at 25 amperes maximum. This power is used as a general-purpose, de power source and includes battery charging. Typically, the power supply can be used to power one or two Receiver-Transmitters RT-246 VRC-12 or one or two Receiver-Transmitters RT-524, VRC-12 with their auxiliary equipment.

b. During local operation, the power supply is connected directly to the load through the dc power cord. If the load must be connected to the power supply at a remote point, a four-conductor cable makes it possible to obtain regulated dc power of 24 to 29 volts at the remote load terminals. The remote load may be placed up to a distance of 25 feet from the power supply.

c. If a failure or undervoltage condition should occur in the ac power source, the power supply is capable of transferring the load to an external battery. The only limitations affecting battery-supplied power are the absence of voltage regulation and the lack of complete circuit protection. Circuit protection available in this case is limited to the dc circuit breaker located on the front panel.

1-5. Technical Characteristics

a. Electrical Characteristics

(1) Ac input voltage — 115/230 volts ±10%
(2) Ac input frequency — 50, 60, or 400 Hz ±5%
(3) Dc output voltage
  (a) Local load — 24.0 to 32.0 volts at 1% regulation
  (b) Remote load — 24.0 to 29.0 volts at 1% regulation
(4) Dc output current — 25 amperes maximum
(5) Ripple (Rms voltage) — Less than 0.5%
(6) Ambient temperature operating — -40°F to +150°F (-40°C to +66'C)°

b. Weight and Dimensions

(1) Weight:
  (a) Unpacked.....94 pounds
  (b) Packed.....120 pounds
(2) PP-6224/U Dimensions:
  (a) Depth.....16 inches
  (b) Width.....16 inches
  (c) Height .....7 inches

1-6. Components

Item No.	*Quantity*	*National stock No.*	*Component*	*Height (in.)*	*width (in.)*	*Depth (in.)*	*Length (ft.)*	*Weight (lb.)*
1	1	6130-00-133-5879	Power Supply PP-6224/U	7	16	16		94
or 1A	1	6130-00-133-5879	Power Supply PP-6224A/U	7	16	16		94
2	1	6150-00-135-4555	Cable Assembly, Power Electrical CX-11979/U				15	
3	1	5995-00-466-0217	Cable Assembly, Power Electrical CX-12342/VRC				3	

1-7. Description

The power supply is housed in a watertight case. Circuit beakers to protect the power supply during overloads are mounted on the front panel. A combination voltmeter-ammeter enables the operator to monitor either output voltage or output current, All controls and receptacles, except the J7 DC OUT, J8 BAT, IN, and J9 DC OUT receptacles, are mounted on the front panel. Receptacles 37 DC OUT, J8 BAT, IN, and J9 DC OUT are mounted on the rear panel. Ac and dc power cords furnished with the power supply are illustrated in figure 1-2.

1-8. Auxiliary Cable Assemblies

Cable assemblies required but not supplied with the power supply are as follows:

a. Twenty five feet in length, 4-conductor cable assembly required to connect the power supply to a set of remote load terminals.

b. Cable assembly required to connect the power supply to the external battery.

1-9. Differences in Models

Differences between Power Supplies PP-6224/U and PP-6224A/U are the result of certain EMI improvements which have been incorporated into the PP-6224A/U. Unless otherwise indicated, all information provided for PP-6224/U is also applicable to PP-6224A/U.

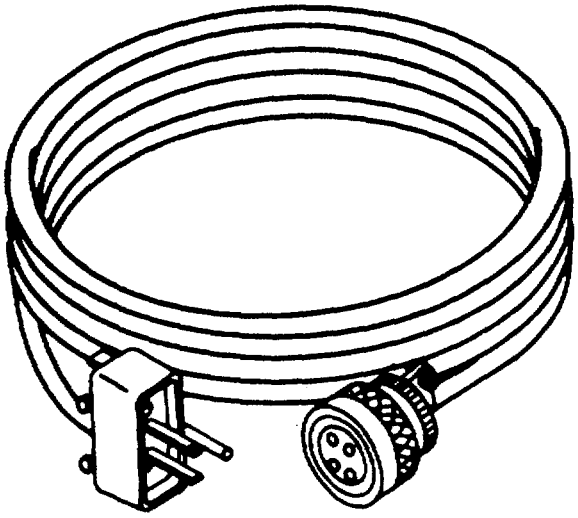

A. CABLE ASSEMBLY, POWER, ELECTRICAL
CX-11979/U (AC POWER CORD).

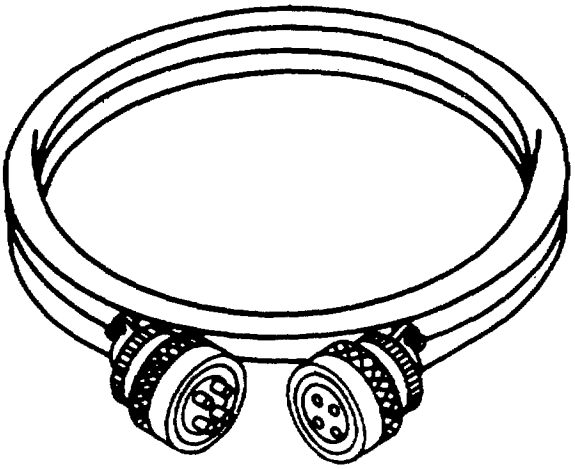

B. CABLE ASSEMBLY, POWER, ELECTRICAL
CX-12342/VRC (DC POWER CORD).

TM 6130-266-15-2

Figure 1-2. Power Supply PP-622 /U, power cords.

CHAPTER 2

INSTALLATION AND OPERATING INSTRUCTIONS

Section I. INSTALLATION

2-1. Packaging Data

When packaged for shipment, the power supply is packed as follows:

a. The power supply is fastened to a plywood sheet by bolts and nuts at each corner.

b. The ac and dc. power cords are placed in a sealed plastic bag and packed behind the power supply.

c. The power supply, technical manual, and cords are placed in the fiberboard box and enclosed by a sleeve.

d. A top pad is placed over the equipment, then the two sealed bags are placed on the pad.

e. The box is now closed and taped at all four corners.

2-2. Unpacking and Checking

a. Unpacking. To unpack the power supply (fig. 2-1), proceed as follows:

(1) Cut the tape sealing the top of the fiberboard box and fold back the flaps.

(2) Remove the manual bag.

(3) Remove the top pad.

(4) Lift out the ac and de power cords.

(5) Cut the tape at the four corners of the box and fold back each side of the box until the four fastening bolts are accessible.

(6) Remove the sleeve from the power supply.

(7) Remove the nuts and bolts that secure the power supply to the plywood.

(8) Lift the power supply off the plywood and place it in an area for easy checking.

b. Checking.

(1) Inspect the equipment for damage incurred during shipment. If the equipment has been damaged, report the damage on DD Form 6 (para 1-3).

(2) Check to see that the equipment is complete as listed on the packing slip. If a packing slip is not available, check the equipment against the chart in paragraph 1-6. Report all discrepancies in accordance with TM 38-750. Shortage of a minor assembly or part that does not affect proper functioning of the equipment should not prevent use of the equipment.

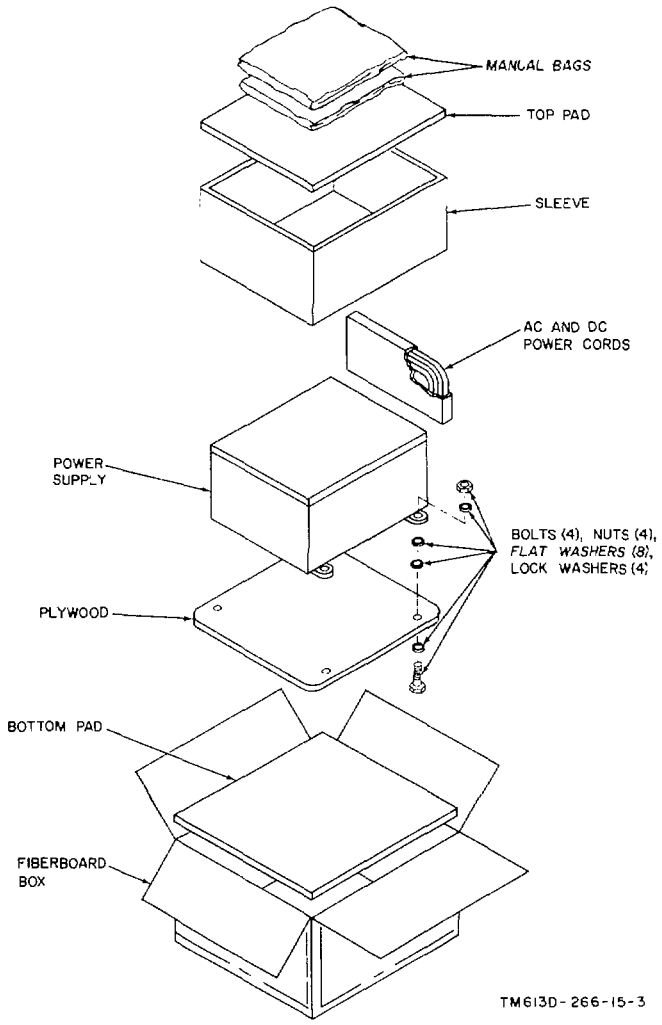

Figure 2-1. Power Supply PP-6224/ U, typical packaging.

(3) If the equipment has been used or reconditioned, see whether it has been changed by a modification work order (MWO). If the equipment has been modified, the MWO number will appear on the front panel near the nomenclature plate. Check to see that any operational changes resulting from the modification have been entered in the equipment manual.

NOTE

Current MWO's applicable to the equipment are listed in DA Pam 310-7.

Section II. OPERATING INSTRUCTIONS

2-3. Controls, Indicators, and Connectors

The following chart lists controls, indicators, and connectors located on the front (fig. 2-2) and rear (fig. 2-3) panels of the power supply. Except for the DC OUT and BAT IN connectors, all items are located on the front panel.

Control, connector, or indicator	*Function*
AC circuit breaker	Protects the ac input circuit against overcurrent and also serves as the ac on-off switch.
AC indicator lamp (amber)	Lights to indicate that the AC circuit breaker is ON and that the line voltage is applied to the power supply.
230V-115V selector switch (2-position toggle switch)	*Sw. position* — *Function* 230V — Connects input circuit for 230-volt input power operation. 115V — Connects input circuit for 115-volt input power operation.
AC INPUT receptacle (J3)	Connects the power supply to an external 115- or 230-volt ac power source through the ac power cord.
NORM indicator lamp (green)	During local and remote operation, the lamp indicates that a dc output voltage is being produced.
EMER indicator lamp (red)	Indicates an undervoltage condition or loss of power in the ac power source, providing the power supply is connected to an external battery. For an input of 115 volts ac, a drop below 80 volts ac causes an undervoltage condition; for an input of 230 volts ac, a drop below 160 volts ac causes an undervoltage condition. Normal operation resumes where the ac input voltage reaches 100 volts ac or 200 volts ac, respectively.
DC OUTPUT receptacle (J6, front)	Connects the power supply to a remote load through a suitable 4-conductor cable. Maximum dc output voltage obtainable at the end of the 25-foot connecting cable is 29.0 volts.
DC OUT receptacle (J7, rear)	Connects the power supply to a local load through the de power cord. Also connects the power supply to an external battery, enabling the power supply to function as a battery charger. The DC OUT receptacle (J7) is connected in parallel with the DC OUT receptacle J9.
BAT IN receptacle (J8, rear)	Connects the power supply to a standby battery. When ac input power fails or an undervoltage condition develops, the load is automatically transferred to this battery.
DC OUT receptacle (J9, rear)	Connects the power supply to a local load through the de power cord. Also connects the power supply to an external battery, enabling the power supply to function as a battery charger. The DC OUT receptacle (J9) is connected in parallel with DC OUT receptacle J7.
DC circuit breaker	*a.* Protects the power supply against overloads in case of failure of the overcurrent limiter. The DC circuit breaker is set to trip when the output current reaches 28.0 amperes. Also protects the power supply against reverse polarity when functioning as a battery charger. *b.* Serves as the dc on-off switch by connecting the dc power to the load. *c.* Connects the power supply to an external battery. *d.* Protects the power supply against overcurrent when the load is transferred to the external battery during emergency operation.
VOLTAGE-CURRENT selector switch (2-position toggle switch (spring-loaded in VOLTAGE position)	*Sw. position* — *Function* VOLTAGE — Connects OUTPUT METER to measure dc voltage. CURRENT — Connects OUTPUT METER to measure de current.
OUTPUT METER	Indicates power supply output voltage or current, depending on the setting of the VOLTAGE-CURRENT selector switch. Also indicates battery voltage when the load has been transferred to the external battery.
DC OUTPUT ADJ potentiometer	Adjusts the power supply output voltage from a minimum of 24.0 volts to a maximum of 29.0 volts in remote operation, and to 32.0 volts in local operation.

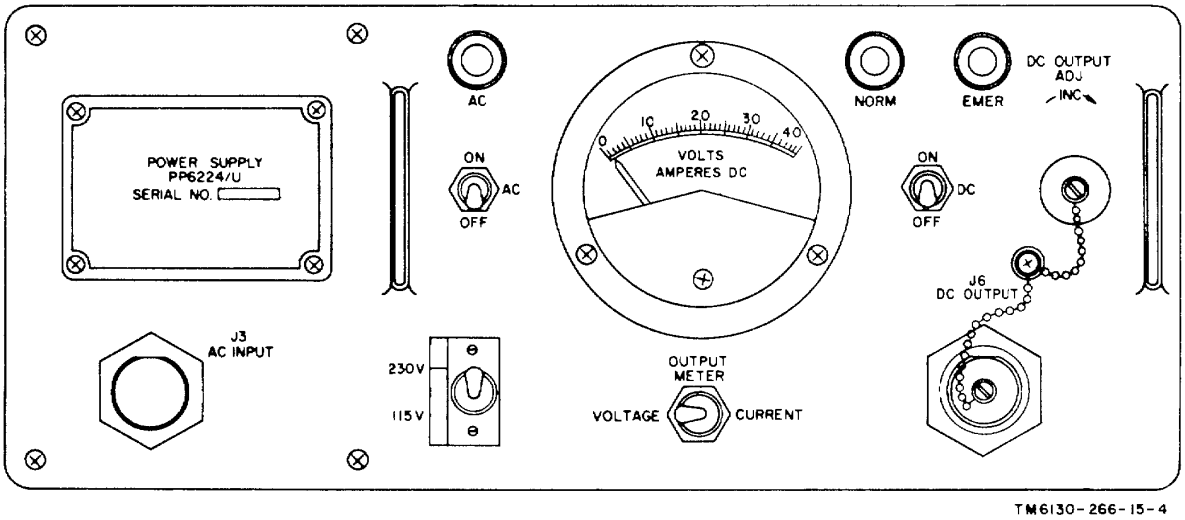

Figure 2-2. Power Supply PP-6224/U, controls and indicators.

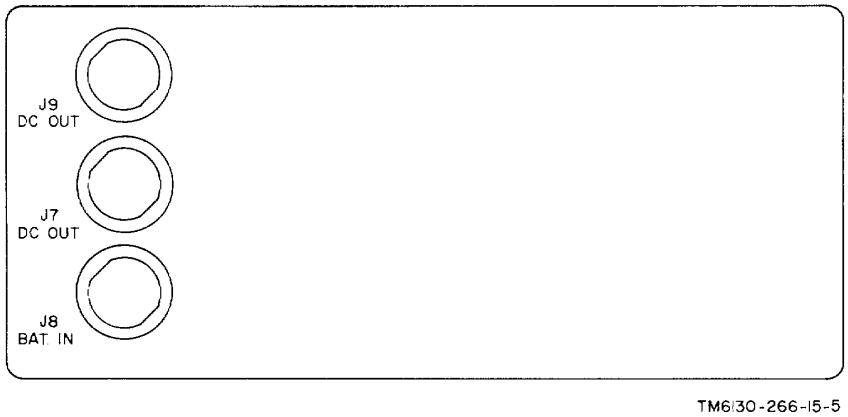

Figure 2-3. Power Supply PP-6224/U, rear view.

2-4. Damage from Improper Settings
(fig. 2-2)

Observe the following precautions when setting the controls:

a. Be sure that the power supply is not connected to a source of power.

b. Set the AC circuit breaker to OFF.

c. Check to see that the 230V-115V selector switch is in the proper position for the source of voltage available. If the switch is set for 115-volt operation and the power supply is connected to a 220-volt source, the AC circuit breaker will trip. If the switch is set for 230-volt operation and the power Supply is connected to a 115-volt source, the AC circuit breaker will not trip, but the power supply will not operate.

2-5. Preliminary Operation

To prepare the power supply for operation, proceed as follows:

a. Check, to see that the AC circuit breaker is set to OFF.

b. Check to see that the DC circuit breaker is set to OFF.

c. Check to see that the ace power cord is properly connected to the AC INPUT receptacle J3

and then connect the ac power cord to a 3-wire grounded ac power source. (To avoid possible electrical shock, 2-wire adapters must not be used).

NOTE

Loads may be connected simultaneously to DC OUTPUT receptacle J6 and DC OUT receptacles J7 and J9 providing the total output current drain is less than 25 amperes.

d. Determine whether local or remote operation is required. Each type of operation is described below:

(1) *Local.* Use the dc power cord to connect the load directly to DC OUT receptacle J7 or J9 on the real panel (pin A (-), pin B (+)).

(2) *Remote.* Use a 4-conductor cable (not supplied) to connect the remote load terminals to DC OUTPUT receptacle J6 on the front panel. Connect the load leads (power) to pins D (+) and B (-). Connect the sensing leads to pins C (-) and A (+) (fig. 2-4).

NOTE

At the load, be sure that the positive sensing lead is connected to the positive terminal and the negative sensing lead is connected to the negative terminal.

e. Check to see that the standby battery is connected to BAT IN receptacle J8 on the rear panel.

f. If a battery is to be charged, disconnect and remove the standby battery connected to

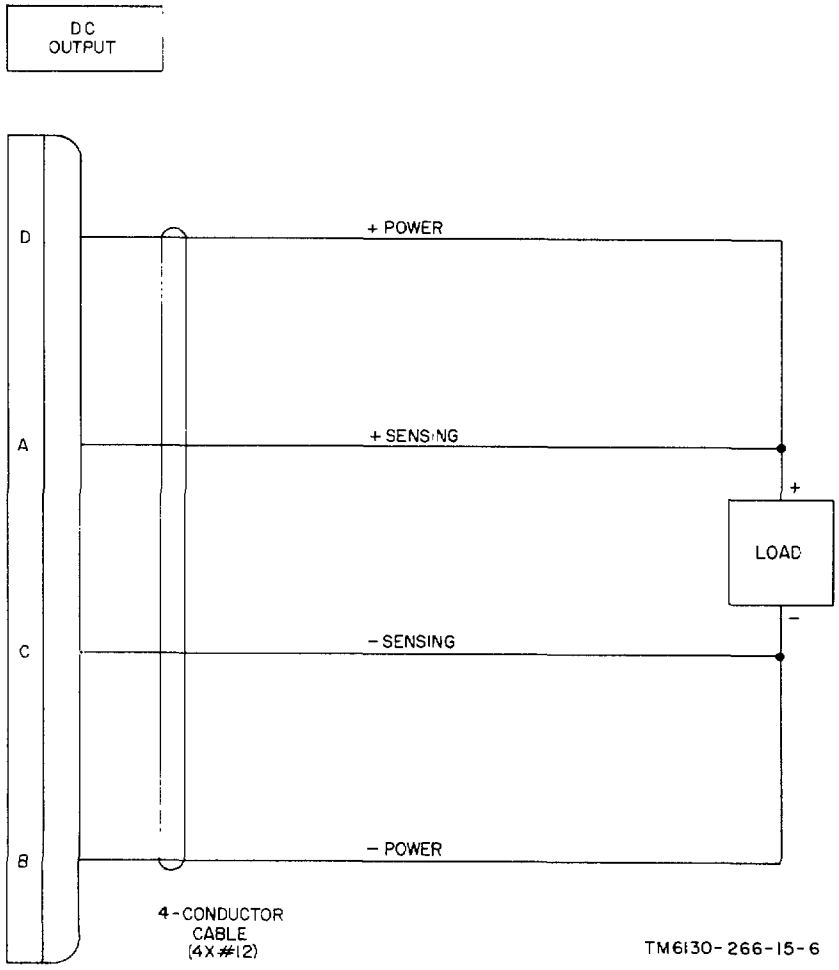

Figure 2-4. Power Supply PP-6224/U, remote cabling.

J8 and refer to paragraph 2-6c for charging instructions.

g. Check to see that the 230V-115V selector switch is in a position that corresponds to the rating of the ac power source.

2-6. Operation

The power supply is used as a general purpose power supply or to charge a battery. The power supply is operated in a similar manner for both functions. After performing the procedures given in paragraph 2-5, operate the power supply as follows:

a. Set the AC circuit breaker to ON. The AC lamp lights.

b. Remove the cap from the DC OUTPUT ADJ potentiometer.

c. For battery charging, proceed as follows:

(1) Determine the constant charging voltage value for the battery to be charged.

(2) Set the DC circuit breaker to ON. The NORM lamp lights.

(3) Remove the protective cap over the DC OUTPUT ADJ potentiometer. Unlock and rotate the DC OUTPUT ADJ potentiometer for the required constant charging voltage value as indicated on the OUTPUT METER. Lock the DC OUTPUT ADJ potentiometer.

(4) Set the DC circuit breaker to OFF.

(5) Connect the battery to be charged to either DC OUT receptacle J7 or J9.

(6) Set the DC circuit breaker to ON. (It is normal for the indicated charging voltage to drop because of the current limiting circuit. After the battery has received a portion of recharge, the indicated voltage will be the voltage value obtained in (3) above.

(7) When the battery is fully charged, set the DC circuit breaker to OFF.

d. For power supply operation, proceed as follows :

(1) Set the AC circuit breaker to ON.

(2) With the equipment to be powered set to OFF, set the DC circuit breaker to ON.

NOTE

The desired dc output voltage value of the power supply when powering Radio Set AN/VRC-12, AN/VRC-44, AN/ VRC-45, AN /VRC-47, or AN/VRC - 9 is 25.5 volts. For best performance of equipment, be sure to adjust the output voltage of the power supply to 25.5 volts when powering Radio Set AN/VRC-12, AN/VRC-44, AN/VRC-45, AN/VRC-47, or AN/VRC-49.

(3) Remove the protective cap over the DC OUTPUT ADJ potentiometer. Unlock and rotate the DC OUTPUT ADJ potentiometer for the desired voltage value as indicated on the OUTPUT METER. Lock the DC OUTPUT ADJ potentiometer.

(4) Set the equipment to be powered to ON. Monitor the current by holding the VOLTAGE-CURRENT SWITCH in the CURRENT position and observing the OUTPUT METER reading.

(5) Release the VOLTAGE-CURRENT switch.

2-7. Emergency Operation

An emergency condition is indicated by the on-off combinations of the three front panel indicator lamps and the OUTPUT METER indication. The following chart lists various combinations which indicate a different type of emergency condition. Except where it is so stated, normal operation continues because the load is immediately transferred to the external battery. The load is transferred back to the power supply when the emergency condition no longer exists.

Emergency condition	*EMER indicator lamp*	*AC indicator lamp*	*NORM indicator lamp*	*OUTPUT METER*
Low ac input voltage	Lights	Goes out (or dims)	Goes out	Indicates external battery voltage.
Surges in ac input voltage ***Note.*** **This condition trips the AC circuit breaker. It must be reset manually before the load is transferred back to the power supply.**	Lights	Goes out	Gees out	Indicates external battery voltage.

Emergency condition	*EMER indicator lamp*	*AC indicator lamp*	*NORM indicator lamp*	*OUTPUT METER*
Complete failure of ac input voltage	Lights	Goes out	Goes out	Indicates external battery voltage.
Overload (short)	Goes out	Lights	Lights if circuit breaker doesn't trip. Goes out if circuit breaker trips.	Complete loss of operating voltage.
Note. **There is no provision for transferring the load to the external battery.**				
Overheating	Goes out	Lights	Goes out	Initial loss of operating voltage until temperature falls.

NOTE

Different types of failures will produce various symptoms. Refer to chapter 3 for additional information.

2-8. Shutoff

To shut off the power supply, proceed as follows:

a. Set the DC circuit breaker to OFF. The NORM indicator lamp will go out.

b. Set the AC circuit breaker to OFF. The AC indicator lamp will go out.

CHAPTER 3

OPERATOR AND ORGANIZATIONAL MAINTENANCE

3-1. Scope of Maintenance

The maintenance duties assigned to the operator and organizational repairman of the equipment are listed below, together with references to the paragraphs covering the specific maintenance functions. The tools and test equipment required are listed in appendix B.

a. Operator's daily preventive maintenance checks and services (para 3-4).

b. Operator's weekly preventive maintenance checks and services (para 3-5).

c. Organizational monthly preventive maintenance checks and services (para 3-6).

d. Organizational quarterly preventive maintenance checks and services (para 3-7).

e. Cleaning (para 3-8).

f. Touchup painting (para 3-9).

g. Troubleshooting (para 3-10).

h. Replacement of indicator lamps (para 3-11).

3-2. Preventive Maintenance

Preventive maintenance is the systematic care, servicing, and inspection of equipment to prevent the occurrence of trouble, to reduce downtime, and to assure that the equipment is serviceable.

a. Systematic Care. The procedures given in paragraphs 3-4 through 3-8 cover routine systematic care and cleaning essential to proper upkeep and operation of the equipment.

b. Preventive Maintenance Checks and Services. The preventive maintenance checks and services charts (para 3-4 through 3-7) outline functions to be performed at specific intervals. These checks and services are to maintain Army electronic equipment in a combat-serviceable condition; that is, in good general (physical) condition and in good operating condition. To assist operators in maintaining combat serviceability, the chart indicates what to check, how to check, and what the normal conditions are. The *references* column lists the paragraphs, figures, or manuals that contain detailed repair or replacement procedures. If the defect cannot be remedied by the corrective actions listed, higher category of maintenance or repair is required. Records and reports of these checks and services must be made in accordance with the requirements set forth in TM 38-750.

3-3. Preventive Maintenance Checks and Services Periods

Preventive maintenance checks and services of the equipment are required daily, weekly, monthly, and quarterly.

a. Paragraph 3-4 specifies the checks and services that must be accomplished daily (or at least once each week if the equipment is maintained in standby condition).

b. Paragraphs 3-5, 3-6, and 3-7 specify additional checks and services that must be performed on a weekly, monthly, and quarterly basis, respectively.

3-4. Operator's Daily Preventive Maintenance Checks and Services Chart

Sequence No.	*Item to be inspected*	*Procedure*	*Reference*
1	Completeness	Check to see that the equipment is complete	Para 1-6.
2	Exterior surfaces	Clean the exterior surfaces, including the panel meter glasses. Check meter glass and indicator lenses for cracks.	Para 3-8.
3	Connectors	Check the tightness of all connectors.	
4	Controls and indicators	While making the operating checks (sequence No. 5 below), check to see that the mechanical action of	

Sequence No.	Item to be inspected	Procedure	Reference
		each switch is smooth and free of external or internal binding and that there is no excessive looseness. Also, check the meter for sticking or bent pointer.	
5	Operation	During operation, be alert for any abnormal indications.	Para 2-5 through 2-8.

3-5. Operator's Weekly Preventive Maintenance Checks and Services Chart

Sequence No.	Item to be inspected	Procedure	Reference
1	Cables	Inspect cables for chaffed, cracked, or frayed insulation.	
2	Metal surfaces	Inspect exposed metal surfaces for rust and corrosion.	

3-6. Organizational Monthly Preventive Maintenance Checks and Services Chart

Sequence No.	Item to be inspected	Procedure	Reference
1	Transformer terminals	Inspect the terminals on the power transformer(s). All nuts must be tight. There should be no evidence of dirt or corrosion.	
2	Resistors	Inspect resistors for cracks, blistering, or other defects.	
3	Gaskets and insulators	Inspect gaskets, insulators, bushings, and sleeves for cracks, chipping, and excessive wear.	
4	Terminal block	Inspect the terminal block for loose terminals, cracks, and other defects.	
5	Interior	Clean the interior of the chassis and cabinet	Para 3-8.
6	Metal surfaces	Inspect the equipment to determine that it is free of bare spots, rust, and corrosion.	Para 3-9.

3-7. Organizational Quarterly Preventive Maintenance Checks and Services Chart

Sequence No.	Item to be inspected	Procedure	Reference
1	Publications	Check to see that all publications are complete, serviceable, and current.	DA Pam 310-4.
2	Modifications	Check DA Pam 310-4 to determine whether new applicable MWO's have been published. ALL URGENT MWO's must be applied immediately. All NORMAL MWO's must be scheduled.	TM 38-750 and DA Pam 310-4.

3-8. Cleaning

WARNING

The fumes of TRICHLOROETHANE are toxic. Provide thorough ventilation whenever it is used; avoid prolonged or repeated breathing of vapor. Do not use near an open flame or hot surface; trichloroethane is nonflammable but heat converts the fumes to a highly toxic phosgene gas the inhalation of which could result in serious injury or death. Prolonged or repeated skin contact with trichloroethane can cause skin inflammation. When necessary, use gloves, sleeves and aprons which the solvent cannot penetrate.

Inspect the exterior of the equipment. The exterior surfaces should be free of dirt, grease, and fungus.

a. Remove dust and other loose dirt with a clean soft cloth.

b. Remove grease, fungus, and ground-in dirt from the case; use a cloth dampened (not wet) with trichloroethane O-T-620, Type I.

c. Remove dirt from plugs and jacks with a brush.

CAUTION

Do not press on the meter face (glass) when cleaning; the meter may become damaged.

d. Clean the front panel, meter, and switches; use a soft clean cloth. If necessary, dampen the cloth with water; mild soap may be used for more effective cleaning.

3-9. Touchup Painting Instructions

Remove rust and corrosion from metal surfaces by lightly sanding them with fine sandpaper. Brush two thin coats of paint on the hare metal to protect it from further corrosion. Refer to the applicable cleaning and refinishing practices specified in TB 746-10.

3-10. Organizational Troubleshooting

a. General. The troubleshooting chart (b. below) will help locate trouble in the power supply. Only those corrective measures are given which the unit repairman can accomplish. If the corrective measure does not restore normal equipment performance, higher category of maintenance is required.

b. Troubleshooting Chart.

Sequence No.	*Symptom*	*Probable trouble*	*Corrective measure*
1	When operating on 115 or 230 volts ac, the AC or NORM lamp fails to light, but there is a voltage indication on the OUTPUT METER.	Defective AC or NORM indicator lamp	Replace defective lamp.

3-11. Replacement of Indicator Lamps
(fig. 2-2)

a. Unscrew the indicator lens.

b. Remove the defective lamp and replace it with a new one; make certain it is of the correct type. Replace the "O" ring seal (after lubricating with clear silicone grease) and indicator lens.

CHAPTER 4

FUNCTIONING

4-1. Block Diagram

(fig. 8-2)

a. The power supply provides a regulated 24 to 32-volt dc output required to operate an electronic equipment or to charge an external battery. The power supply will maintain a constant output voltage within 1 percent. The operating power for the power supply is 115 or 230 volts at a frequency of 50, 60, or 400 Hertz.

b. The ac input voltage is applied, through AC input circuit breaker CB1, to main transformer T1. The outputs at the secondary windings of transformer T1 are fed to both the power regulator switch (in preregulator assembly A4) and to the auxiliary power supply (in auxiliary supply and control assembly A1). Also, AC indicator lamp DS1 is lighted.

c. The preregulator provides high efficiency isolation between the series pass element and any input line variations. The preregulator circuit consists of two silicon controlled rectifiers A4Q1 and A4Q2, pulse-width controlled by phase angle control A4A1L1 (part of magnetic amplifier A4A1). Gating signals for phase angle control A4A1L1 are provided by gate generator A4A2, A4A1T1. The control windings are referenced to the series pass element drop of the post regulator by the comparator. Any change in the series pass element drop results in a proportional error current in the control windings and automatically corrects the series pass element drop to the preset level. The transient suppressor provides means for dissipating excess energy in filter capacitors A8C2 through A8C5 when a drive signal is received from the comparator.

d. The auxiliary power supply provides the regulated +16 and -16 volts dc necessary to meet the low-level power requirements of the preregulator and the post regulator. In addition, a full wave bridge rectifier circuit in auxiliary supply and control assembly Al provides an unregulated nominal +32 volts dc for operation of the transfer control circuit. This circuit senses input line conditions.

e. The output of the preregulator switch is integrated by a filter composed of inductor L1 and capacitors A8C2 through A8C5 to provide a low-level ripple dc voltage which enables high efficiency operation of the pass element. The filtered output is applied to the series pass element.

f. The post regulator comprises a conventional pass element control gate for controlling the output voltage. This gate is controlled by voltage regulating amplifier A2Q3 (balanced differential amplifier). Changes in output voltage result in a proportional error voltage change to the amplifier. The resulting error voltage will correct the output to its preset level. The output of the series pass element is fed to energy storage capacitor A8C6 where high frequency transients are reduced and the regulator stability is improved.

g. The post regulator also contains output current sensor resistor A6R1 and current regulating amplifier A2A1 which limit the load current to a safe predetermined level. The load step compensator differentiates the output of A2A1 so that in the event of a step load, it provides a large turn-on pulse for phase angle control A4AL1. This large pulse eliminates the drooping response characteristic inherent in a magnetic amplifier.

h. The output circuit includes power transfer relay A6K1 which connects the output termination to an external battery in the event of a drop in line voltage. Sensing transfer relay A1K2 disconnects remote sensing, while relay A1K1 is used for the standby condition. The DC circuit breaker CB2 connects the dc output voltage to the load and also serves as a protective device. The DC OUTPUT ADJ potentiometer R3 is used to adjust the output voltage of the power supply. Indicator lamps DS2 (NORM) and DS3 (EMER) are also provided to indicate the operational status of the unit. OUTPUT METER M1 indicates both voltage and current of the post regulator, as determined by the setting of VOLTAGE-CURRENT selector switch S2, or only the voltage of an external battery supply.

The voltage of a battery to be charged is indicated prior to the application of ac power. The post regulator is designed so that if the ac power is turned on after connecting the output to a reverse polarity source (exceeding 8 volts), the transfer control will lock out, and no output current will flow. Filter network FL2 is used to eliminate radio-frequency interference.

4-2. Circuit Description

(fig. 8-3)

a. Input Power. The power supply receives 115 or 230-volts ac power from the line via AC INPUT receptacle J3 and AC circuit breaker CB1. The ac is then routed through 230V-115V selector switch S1 to transformer T1. Secondary winding 9-10 energizes AC indicator lamp DS1. From secondary winding 9-11, 42V ac is fed to auxiliary supply and control assembly Al where it is converted to 16 and 32 volts do. The 32V de output of Al energizes relay A1K1 which, in turn applies : 32V de to the coil of transfer relay A6K1 via closed contacts 7-10 of A1K1. Energizing A6K1 connects the output of the power supply, via contacts 2-4 of A6K1, to DC OUTPUT receptacle J6 and DC OUT receptacle J7. Simultaneously, NORM indicator lamp DS2, which is connected across the coil of AGK1, goes on indicating the power supply is producing a normal do output voltage.

b. Transfer Control. A Schmitt trigger, comprising input level detectors A1Q5 and A1Q7, senses line voltage through auxiliary power supply rectifier diodes A1CR1 through A1CR4. Switching occurs when the ac input power fails completely or when the input voltage falls to 90 volts rms nominal (or 180 volts rms nominal for a 230-volt input).

Relay driver A1Q9 is cut off causing relay A1K1 to drop and deenergize relay A6K1. Deenergized contacts 4-1 of A6K1 then switch the load to the external battery connected at BATTERY in receptacle J8, and EMER indicator lamp DS3 is energized. This action insures that there is no interruption of de power being furnished to the load.

Both the AC and NORM indicator lamps go out as soon as battery power is connected to the load.

EMER indicator lamp DS3 remains on until normal ac input power is restored, at which time the load is automatically returned to the power supply.

c. Preregulator and Control. The preregulator circuit isolates the series pass element from input line variations. To maintain high efficiency, the voltage drop across the series pass element is maintained at 2.5 volts (nominal) under all loaded output voltage or current conditions. The net de voltage in filter capacitors A8C2 through A8C5 is controlled by varying the firing angle of SCR's A4Q1 and A4Q2. This is accomplished by interposing self-saturating magnetic amplifier A4A1L1 between gate generator A4A2, A4A1T1, and the SCR gates. Net dc control winding current determines the phase angle. A short circuit stabilizing winding provides magnetic amplifier gain relatively independent of core characteristics (temperature). This shunting reduces the frequency dependence over the range of 47 to 450 Hz to an insignificant level. The series pass element voltage drop is compared to a 2.0-volt dc reference, closing the loop. Free-wheeling diode A3CR4 and choke L1 prevent input current spiking, high-peak voltages, and excessive capacitor ripple current, while diode A3CR6 provides overvoltage protection when the voltage exceeds 36 volts.

d. Series Pass Element. The series pass element, comprising pass driver A3Q1 and series pass stages A3Q2 and A3Q3, maintains a constant voltage or current output by receiving inputs from the voltage and current sensing circuits. The dc voltage from the preregulator passes through a conventional triple Darlington series regulator element, consisting of pass driver A3Q1, series pass A3Q2, and pass driver A2Q1, before reaching the output. The series pass element is programmed by the voltage and current controls. Since the series pass element acts as a variable resistor, changes in the ac input voltage are reflected across the element, enabling it to maintain a constant output voltage.

e. Temperature Control. Temperature sensing switch A3S1 controls the ac line voltage applied to transformer A4A1T1 winding 1-2. This in turn, supplies the ac power required to operate squaring gate assembly A4A2. If the operating temperature of the power supply exceeds a maximum safe value, the sensing switch opens and disconnects power to A4A2. This action shuts down the power supply.

Although AC indicator lamp DS1 remains on, the NORM indicator lamp DS2 goes out, indicating there is no dc output. The sensing switch closes automatically when the operating temperature falls to a safe value.

f. Comparator. The transient suppressor comparator stage is A5Q3. The comparator has the following functions: it compares the voltage drop across the series pass element to a reference within the comparator to maintain the 2.5-volt drop across the series pass element; it furnishes a compensation signal to magnetic amplifier A4A1L1 so that the 2.5 voltage drop across the series pass element may be increased to 4 volts, when a no-load condition is indicated

by a negative signal from current regulating amplifier A2A1: and it provides the turn-on drive for the transient suppressor if the series pass element drop exceeds approximately 6 volts.

g. Voltage and Current Control. The output voltage is compared by voltage regulating amplifier A2Q3 (differential amplifier) through a sensing divider to a 9.0-volt, stable, temperature-compensated zener reference, diode A2CR1. Any error voltage is amplified, inverted by A2Q2, and applied to the pass element base, closing the loop. The output voltage is adjusted by varying the sensing divider ratio between preset limits, using DC OUTPUT ADJ potentiometer R3. The output current is sensed by low-voltage series shunt resistor A6R1. A voltage analog of the output current is developed by current regulating amplifier A2A1. The reference across CURRENT LIMIT ADJ potentiometer A2R15 is chosen so that 26.5-ampere output current opens gate diode A2CR4, providing constant current operation for any lower value of system load impedance.

h. Sensing Circuits. Both the voltage and current sensing circuits are controlled by sensing transfer relay A1K2. If the load has been transferred to an external battery because of ac input failure, relay A1K2 trips and cuts off voltage sensing signals. This action deactivates the entire sensing circuit. Sensing is automatically resumed when normal ac input power is restored. During the period normal ac power is applied to the power supply, 32 volts de furnished by the transfer control is used to energize A1K1. This, in turn, connects dc power to power transfer relay A6K1. Once A6K1 is made, it applies the output of the power supply to DC OUTPUT receptacle J6 and DC OUT receptacle J7 and J59. The output of the power supply is filtered for radiofrequency by A2L1-A2L6, A2C8-A2C13, C10-C13, and FL2.

(1) *Voltage sensing*. The voltage sensing circuit consists of DC OUTPUT ADJ potentiometer R3, voltage regulating amplifier A2Q3, current mode gate A2Q4, and pass driver A2Q1. (A2Q4 and A2Q1 are also part of the current sensing circuit.) The voltage sensing signal is routed to A2Q3 via relay A1K2 and DC OUTPUT ADJ potentiometer R3. The potentiometer, in conjunction with a voltage divider network, develops the difference or error signal between the actual (sensed) output voltage and the desired output voltage. (The desired output voltage is determined by the setting of R3). The error signal is then amplified before being fed to pass driver A2Q1 via current mode gate A2Q4. From A2Q1, the error signal is applied to the series pass element, allowing it to compensate for the change in output voltage.

(2) *Current sensing*. The current sensing circuit consists of output current sensor A6R1, current regulating amplifier A2A1, current mode gate A2Q4, and pass driver A2Q1. (A2Q4 and A2Q1 are also part of the voltage sensing circuit.) The current sensing signal is applied to A2A1 via relay A1K2 and resistor A6R1. The difference or error signal developed across A6R1 is applied to A2A1. The amplified error signal is then fed to A2Q1 via A2Q4. The output of A2Q1 is applied to the series pass element, enabling it to provide accurate load current regulation.

i. Differences Between Models. In addition to the circuit descriptions provided previously in paragraphs a. through h., Power Supply PP-6224 A/U also includes the following circuit changes for EMl reduction: (Refer to schematic diagram, fig. 8-4.).

(1) Input power. Input and output power switching is similar to that described in para. a except that relay A6K1 utilizes dual-contacts for reduced contact bounce, greater reliability and current-carrying capability. The output of the power supply is connected via paired contacts B1-B2 and C1-C2 to DC OUT receptacles J6-D and J7-B. Further, additional output filtering and transient suppression for J6 is provided by FL2 (C1 through C6) and output line shielding.

(2) Transfer Control. Switching operations for connecting the external battery to the load in the event of a power reduction or failure are as described in para. b except that switching is accomplished via normally-closed A6K1 contacts A2-A3, B2-B3.

CHAPTER 5

DIRECT SUPPORT AND GENERAL SUPPORT MAINTENANCE

WARNING

When servicing the power supply, be extremely careful of the ac power line voltage terminals (115 or 230 volts). Serious injury or death may result from contact with these terminals.

5-1. Scope of Direct Support and General Support Maintenance

Troubleshooting at the direct support and general support levels include all the techniques outlined for organizational maintenance and any special or additional techniques required to isolate a defective part. Paragraphs 5-2 through 5-8 provide troubleshooting procedures to be used to localize and isolate faults.

5-2. Organization of Troubleshooting Procedures

a. General. The first step in servicing a defective power supply is to localize the fault. Localization means tracing the fault to a defective stage or circuit responsible for the abnormal condition. The second step is isolation. Isolation means locating the defective part or parts. Some defective parts, such as burned resistors and arcing transformers, can often be located by sight, smell, or sound. Most defective parts, however, must be isolated by checking voltages and resistances.

b. Localization. The tests listed below will aid in isolating the trouble. The first step in tracking trouble is to localize the defective state by one of the following methods:

(1) *Visual inspection*. The purpose of visual inspection is to localize faults without testing or measuring circuit voltages or resistances. Through this inspection, the repairman frequently can discover troubles or determine the circuit in which the trouble exists. This inspection is valuable in avoiding additional damage which might occur through improper servicing methods, and in preventing future failures.

CAUTION

This equipment is transistorized; make voltage measurements only as specified in the voltage and resistance chart (para 5-8).

(2) *Voltage and resistance measurements*. When measuring voltages, use tape or sleeving to insulate the entire test prod, except for the extreme tip. A momentary short circuit can damage a transistor. (For example, if the bias resistor of a transistor is shorted out, excessive current between the emitter and the base would damage the transistor.) Use the voltage and resistance chart to find the normal readings, and compare them with the readings taken.

(3) *Trouble shooting chart*. The indications listed in the chart of paragraph 5-5d will aid in localizing the trouble to a component part or to an assembly.

(4) *Intermittent troubles*. In all these tests, the possibility of intermittent troubles should not be overlooked. If present, this type of trouble may be made to reappear by tapping or jarring the equipment. Check the internal wiring and connections for looseness.

5-3. Test Equipment Required

The following chart lists the test equipment required and the associated technical manuals for troubleshooting the power supply.

NOTE

Use tools and test equipment listed below until the tools and test equipment listed in Appendix B become available.

Test equipment	*Technical manual*
Multimeter TS-352R/U	TM 11-6625-366-15
Test Set, Transistor TS-1836.'U	TM 11-6625-539-15
Tool Kit, Electronic Equipment TK-100/G	None
Resistor, Variable, Wire Wound 0- to 7.5-ohm, 1000-watt, (FSN 5905-195-,1496)	None
Oscilloscope AN/USM-281A	TM 11 0625-1703-15
Transformer. Variable TF-171A	None

CAUTION

Read the instructions in paragraph 5-9 before attempting to remove or replace parts.

5-4. Checking for Shorts

a. When to Check. Check the power supply when the AC or DC circuit breaker trips without the load connected, or when there is no dc output.

b. Conditions for Tests.

(1) Disconnect the power supply from the power source.

(2) Disconnect the load connected to DC OUT receptacle J7 or J9, or DC OUTPUT receptacle J6. Disconnect the standby battery.

c. Resistance Measurements. Make the resistance measurements indicated in paragraph 5-7.

CAUTION

Do not make any resistance measurements on the power supply other than those specified. Tile multimeter battery can destroy the transistors by excessive current flowing through them if the multimeter is not connected according to directions.

5-5. Localizing Troubles

a. General. In the troubleshooting chart that follows, the procedures are outlined for localizing troubles to a part or an assembly. The parts locations are shown in figures 5-1 through 5-9. Depending on the nature of the operational symptoms, one or more of the localizing procedures will l) e necessary. When trouble has been localized to a particular assembly, use voltage and resistance measurements to isolate the trouble to a particular part.

b. Use of Chart. The troubleshooting chart (d below) supplements the troubleshooting chart in paragraph 3-10. If previous operational checks have resulted in reference to a particular item of the chart in d below, refer directly to the referenced item. If no operational symptoms are known, begin with item 1 of the troubleshooting chart and proceed until a symptom of the trouble is found.

CAUTION

If the operational symptoms are not known, or if they indicate the possibility of internal short circuits, make the short-circuit checks described in paragraph 5-4 before applying power.

c. Conditions for Tests. All checks outlined in the troubleshooting chart are to be conducted with the power supply connected to the ac power source and with the dummy load across DC OUT receptacle J7.

d. Troubleshooting Chart.

NOTE

Perform the steps in the organizational troubleshooting chart in paragraph 310 before using this chart, unless the trouble has already been localized.

CAUTION

In-circuit measurements made at the test points or terminals on A1, A2 or A5 must be performed with the aid of the Extender Test Board, SM-D-943415 (fig. 5-9). To avoid equipment damage, be sure to shut off power supply when extender board is being inserted or removed.

Item No.	*Trouble symptom*	*Probable cause*	*Corrective action*
1	AC indicator lamp DS1 fails to light when AC circuit breaker CB1 is set to ON. (230V-115V selector switch S1 set to proper position.)	a. No ac power is reaching AC INPUT receptacle J3.	a. Check continuity of the ac power cord and repair or replace if necessary.
		b. AC circuit breaker CB1 defective.	b. Check CB1 and replace if necessary.
		c. 230V-115V selector switch S1 defective.	c. Check S1 and replace if necessary.
		d. Transformer T1 defective.	d. Check T1 and replace if necessary.
2	NORM indicator lamp DS2 fails to light. (AC indicator lamp DS1 is lighted.)	a. Resistor A6A1R4 defective.	a. Check and replace A6A1R4 if necessary.
		b. Auxiliary supply and control assembly A1 defective.	b. Check for +32V de between pin 11 and pin 17 of A1. Replace A1 if necessary.

Item No.	*Trouble symptom*	*Probable cause*	*Corrective action*
3	With AC and NORM indicator lamps DS1 and DS2 lit, OUTPUT METER M1 fails to indicate output voltage. (VOLTAGE CURRENT switch S2 in VOLTAGE position and DC circuit breaker CB2 is ON.) Multimeter indicates normal output voltage.	No dc power reaching OUTPUT METER Ml.	a. Check resistor A6A1R2 and replace if necessary. b. Check S2 and replace if necessary. c. Check M1 and replace if necessary.
4	Same as Item No. 3, except multimeter also output voltage.	a. DC circuit breaker CB2 defective. ails to indicate b. Auxiliary supply and control assembly A1 defective. c. Relay A6K1 defective.	a. Check CB2 and replace if necessary. b. Check for +28 to +32V dc between pin 15 and pin 17 of A1. Replace A1 if necessary. c. Check A6K1 and replace if necessary.
5	OUTPUT METER M1 indicates voltage but rotating DC OUTPUT ADJ potentiometer R3 fails to change indication .	a. Potentiometer R3 defective. b. Auxiliary supply and control assembly A1 defective. c. Resistor A6A1R3 defective. d. Post regulator control assembly A2 defective.	a. Check R3 and replace if necessary. b. Check A1 and replace if necessary. e. Check A6A1R3 and replace if necessary. d. Check A2 and replace if necessary.

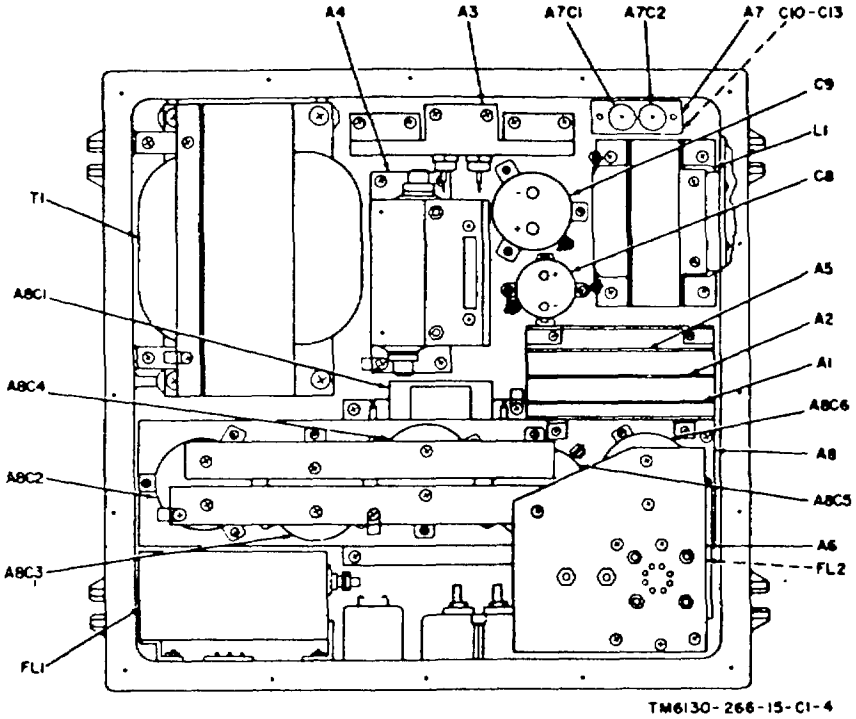

Figure 5-1. Power Supply PP-6224/U, top view, parts location.

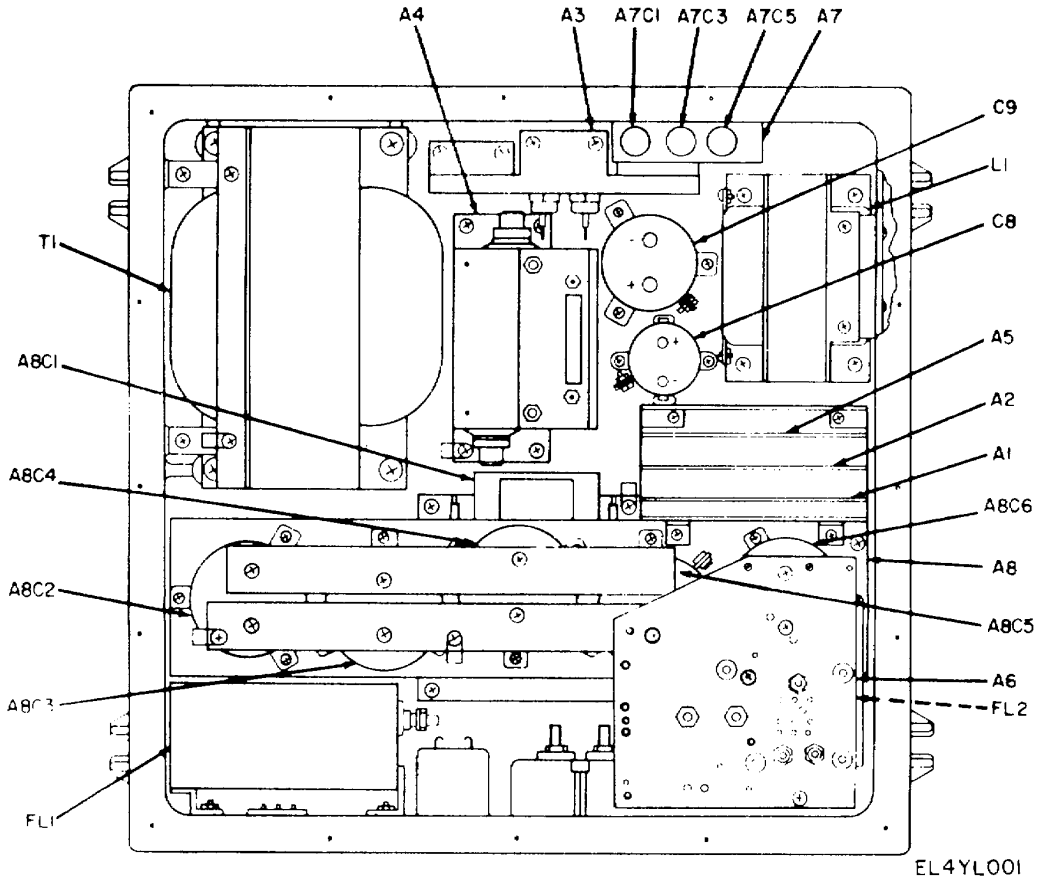

Figure 5-1.1. Power supply PP-6224A/U, top view, parts location.

5-6. Isolating Trouble Within Assemblies

a. When trouble has been localized to an assembly during the operational checks listed in the troubleshooting chart (para 5-5d), isolate the trouble to a component level by voltage measurements at the transistor terminals and other significant points.

b. Use the schematic (fig. 8-3 or 8-4) to trace the circuits and isolate the faulty components. Figure 8-1 (located in back of manual) is the resistor and capacitor color code diagram.

c. The transistor terminal voltage readings were made with Multimeter TS-352B/U. A measurement that differs widely from that in the voltage and resistance chart can localize the trouble when used with the schematic diagram.

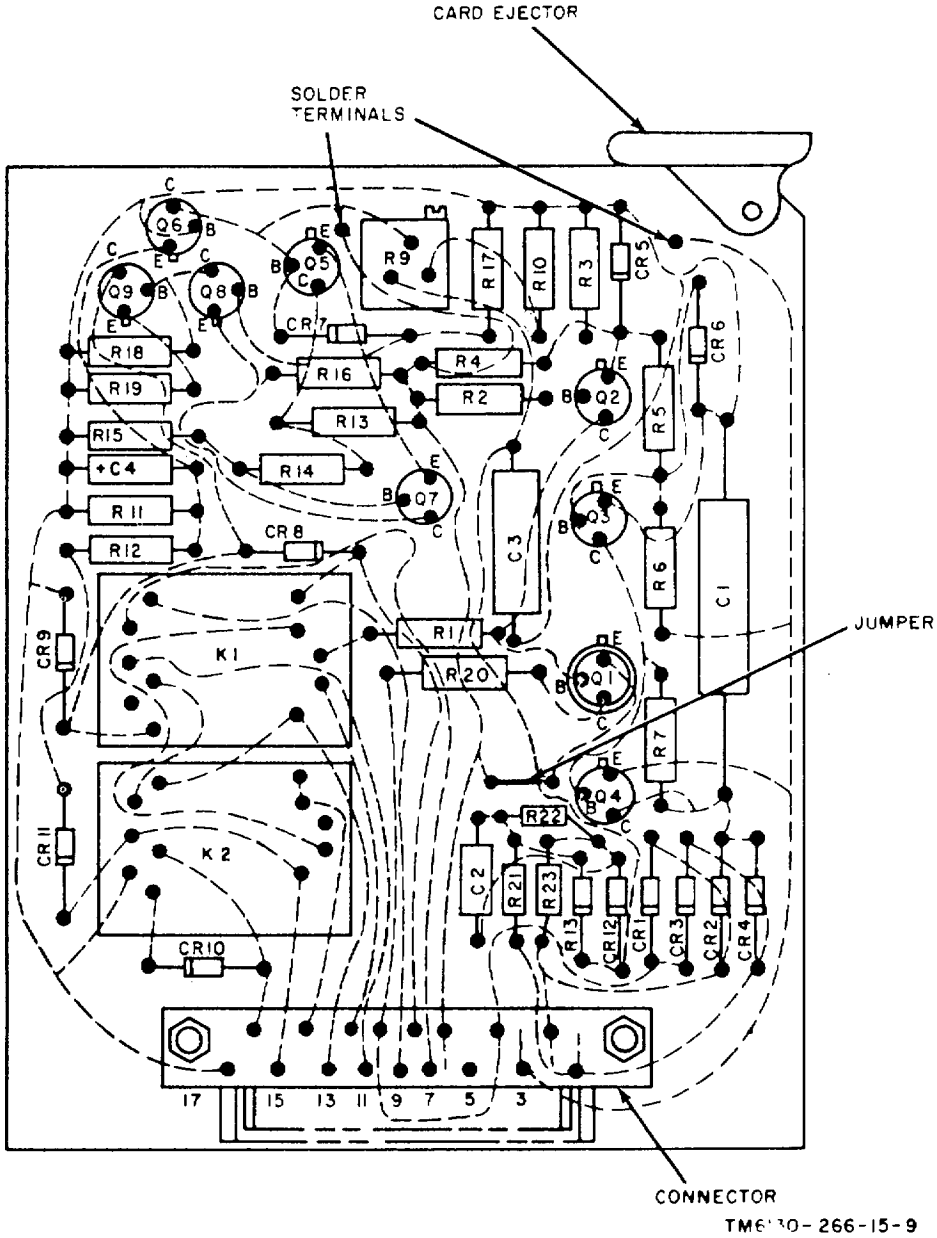

Figure 5-2. Board Assembly A1, parts location.

5-7. Resistance of Transformers, Inductors, and Relays

CAUTION
Make resistance measurements with input power off.

a. The resistance values are provided as an aid to troubleshooting. When using the data, observe the following instructions:

(1) Before making resistance measurements, determine whether faulty operation is due to one of these parts. To do this, follows the troubleshooting procedures (para 5-5d) and make the voltage checks given in the voltage and resistance chart.

(2) Do not use the resistance measurements as the sole basis for discarding any of these parts as defective. Because of broad winding tolerances during manufacture, resistances of identical coils may vary from the chart values, which are typical average values.

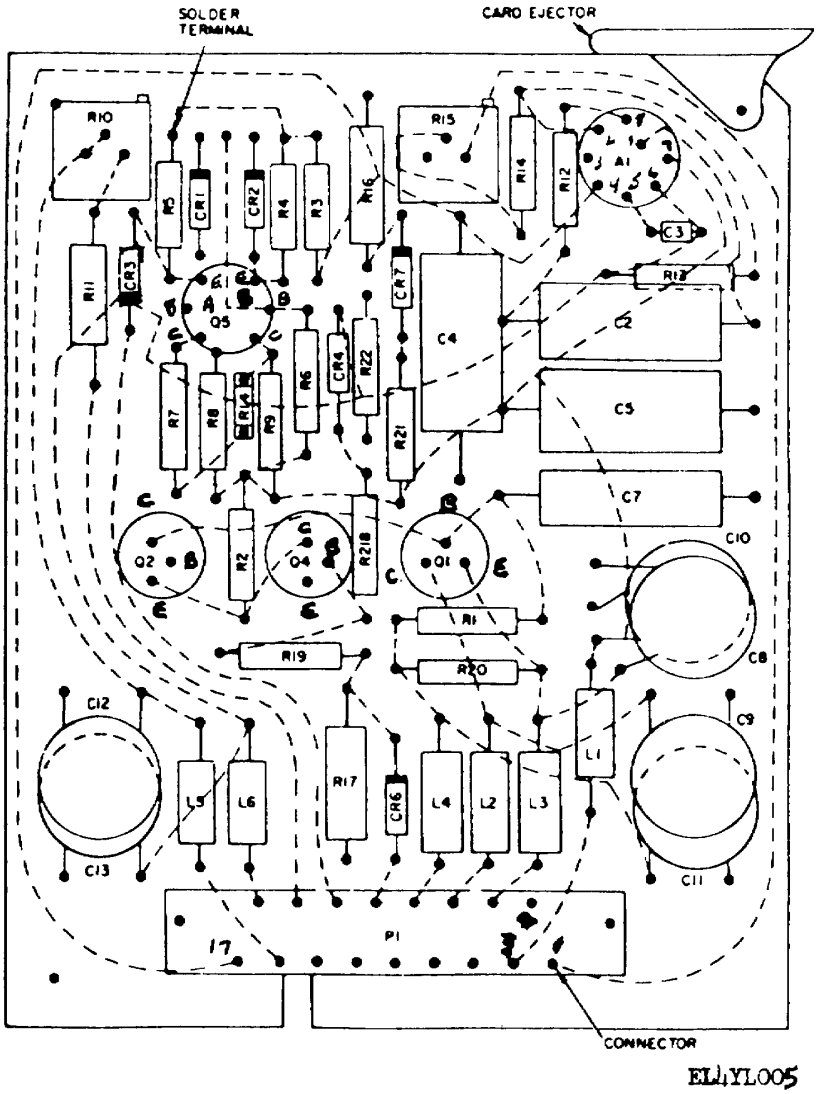

Figure 5-3. Post regular control assembly 12, parts location.

(3) The normal resistance of replacement parts may differ slightly from the values given in the

b. The resistances of the coils are listed below:

Part	*Measured between terminals*	*DC resistance (ohms)*
L1	1-2	Less than 1.
	3-9	9
T1	9-11	Less than 10.
	12-14	Less than 1.
A1K1	1-16	650
A1K2	1-16	650
A2L1	1-2	Less than 1.
A2L2	1-2	Less than 1.
A2L3	1-2	Less than 1.
A2L4	1-2	Less than 1.
A2L5	1-2	Less than 1.
A2L6	1-2	Less than 1.
A4A1L1	10-11	400
	12-13	150
	12-13	150
	14-15	2
	16-17	10
	18-19	10
A4A1T1	1-2	56
	3-5	5.8
	6-7	1.26
	8-9	1.26
A6K1	3-6	428(PP-6224/U)
	X1-X2	*260(PP-6224A/U)

* Measure with DS2 NORM indicator lamp pulled out

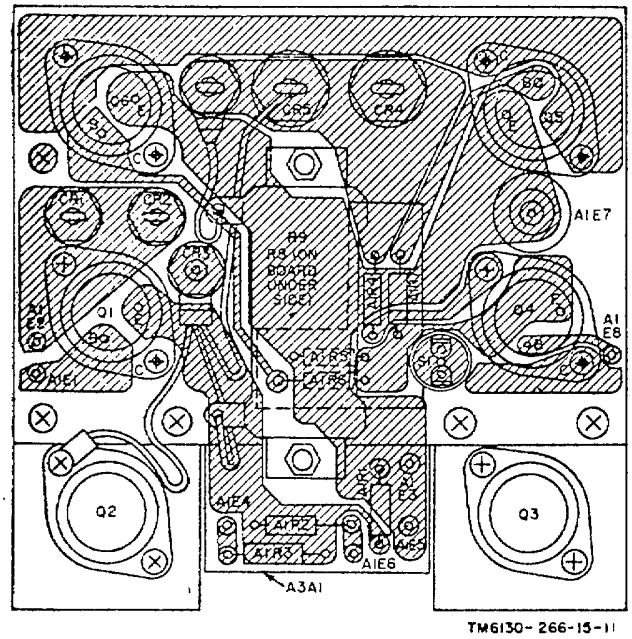

Figure 5-4. Transistor assembly A3, parts location.

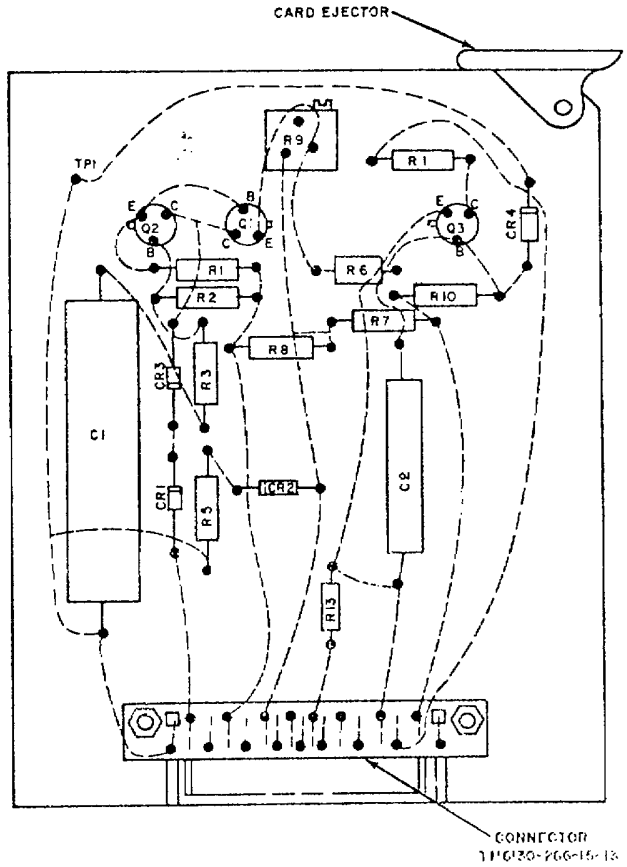

Figure 5-6. Preregulator assembly A5, parts location.

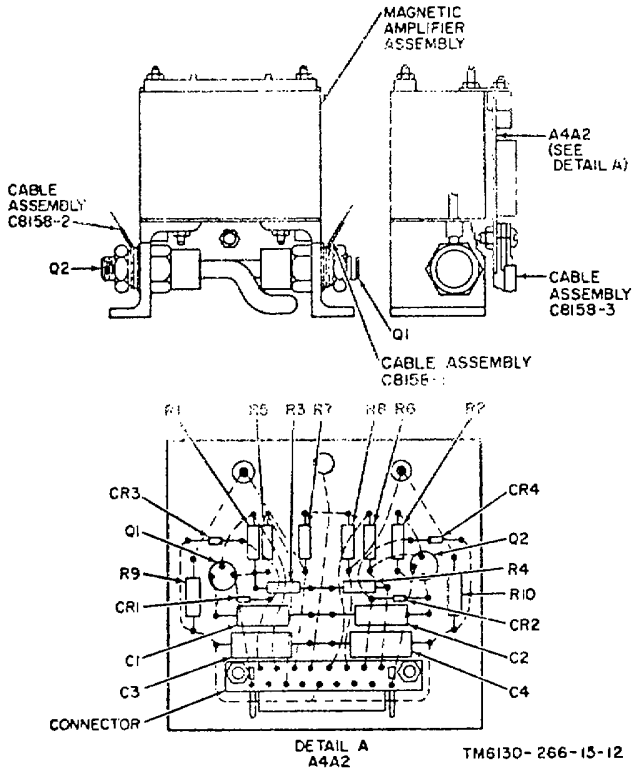

Figure 5-5. Preregular assembly A4, parts location.

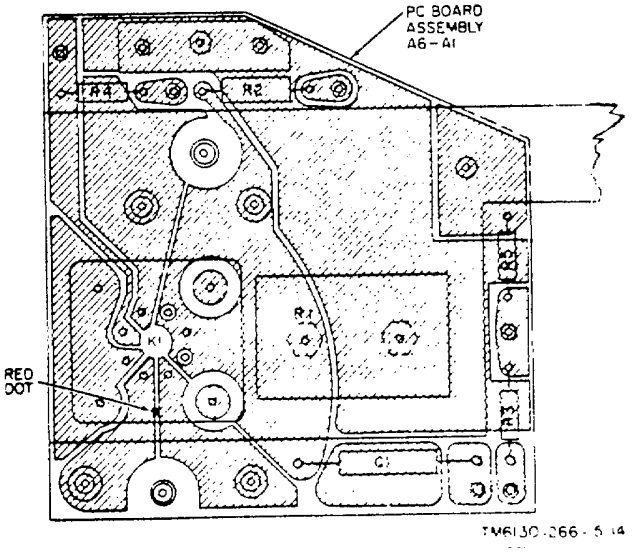

Figure 5-7. Terminal Board Assembly A6, (PP-6224/U) parts location.

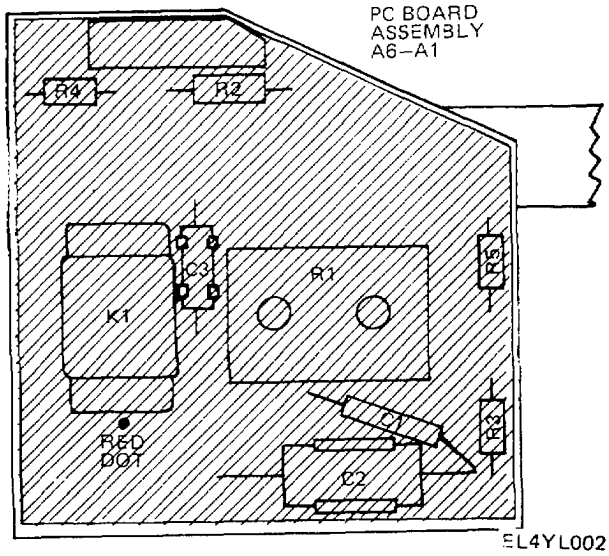

Figure 5-7.1. Terminal Board Assembly A6 (PP-6224A/U) parts location.

5-8. Voltage and Resistance Chart

The voltage and resistance measurements given in the chart which follows were made under the following conditions:

a. All voltage measurements were made from the designated terminal to the designated reference point with the power supply set up as follows:

CAUTION
To avoid damage to the equipment, be sure to shut off power supply when extender board is being inserted or removed.

(1) Extender Test Board SM-D-943415 installed for A1, A2, or A5 dynamic tests.

(2) Power supply connected to a 115-volt ac, 60-Hz source.

(3) No load connected.

(4) Power supply set for 28 volts dc, as indicated on the OUTPUT METER.

(5) 230V-115V selector switch in the 115V position.

(6) AC circuit breaker in the ON position.

(7) DC circuit breaker in the ON position.

b. The resistance measurements were made with input power turned off, the assemblies removed from the main assembly.

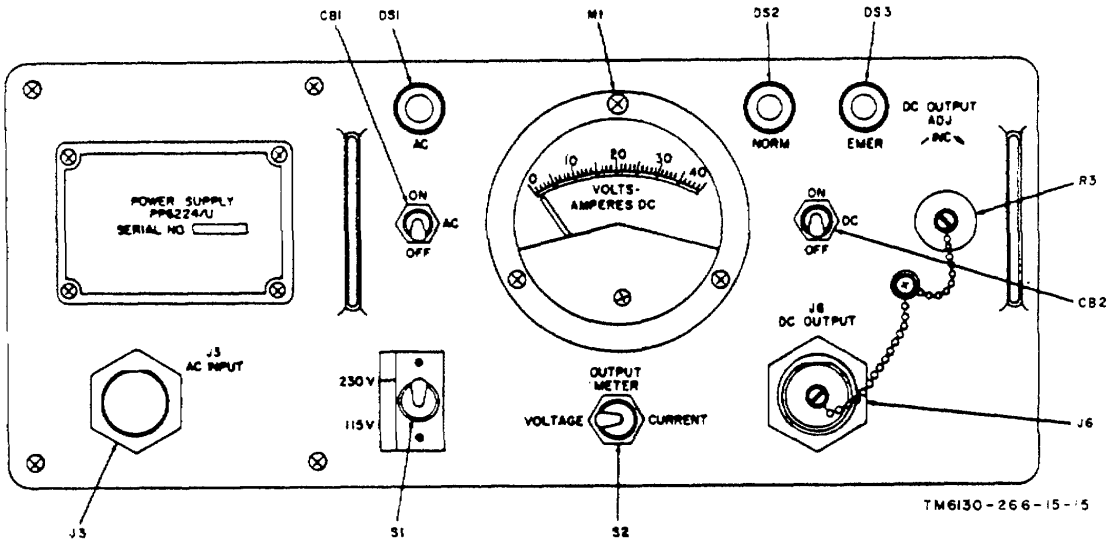

Figure 5-8. Power supply PP-622,/U front panel, parts location.

☆ U.S. GOVERNMENT PRINTING OFFICE: 1983-605-040/197

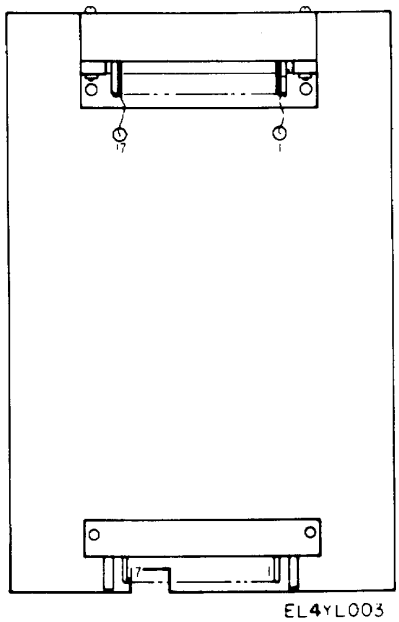

Figure 5-9. Extender Test Board. SM-D-9 13115.

c. Where two resistance readings between terminals are given, the top reading is the resistance measured with the positive multimeter lead connected to the base. The bottom reading is the resistance measured with the negative multimeter lead connected to the base. Be sure to check the actual polarity of the multimeter leads before making measurements.

d. Resistances measured at points shunted by large capacitors must be read after the multimeter ceases to drift.

Ref des	V_E	V_B	V_C	Voltage ref pt	R_{RE}	R_{BC}
A1Q1	+16.0	+16.5	+28.0	Pin 17	5K 900	4.K 750
A1Q2	+9.0	+9.6	+16.5	Pin 17	4.7K 900	5.6K 800
A1Q3	0.0	-0.4	-16.5	Pin 17	1.K 850	1.1K 30K
A1Q4	-16.0	-16.5	-34.0	Pin 17	1.1K	1.1K
A1Q5	+11.0	+11.5	+11.2	Pin 17	850 850	5.5K 750
A1Q6	0.0	0.0	+11.5	Pin 17	2.8K 850	2.2K 750
A1Q7	+11.0	+10.0	+12.0	Pin 17	14K 900	7.5K 800

Ref des	V_E	V_B	V_C	Voltage ref pt	R_{RE}	R_{BC}
A1Q8	+12.0	+11.2	+3.0	Pin 17	1K 2K	950 10K
A1Q9	+2.2	+3.0	+2.6	Pin 17	4K 880	∞ 800
A2Q1	+1.0	+1.70	+10.0	Pin 8	30K 900	∞ 825
A2Q2	-0.1	-0.7	-19.0	Pin 3	1K 4K	1.1K ∞
A2Q3A [a]	+8.8	+9.1	+13.0	Pin 2	800 1.1K	9K 1K
A2Q3B [a]	+8.5	+9.1	+15.0	Pin 2	800 1.1K	7K 950
A2Q4	0.0	0.0	+16.0	Pin 2	1.1K 800	10K 800
A2A1 [b]	V2	V3	V4	Pin 2		
	0.0	0.0	-16.0	Pin 2	--	--
	V5	V6	V1	Pin 2	--	--
	-15.0	-5.2	+16.0	Pin 2	--	--
A3Q5 [e]	0.0	0.0	32.5	A8C2 (-)	100 100	200 200 (d)
A3Q6 [e]	0.0	0.0	32.5	A8C2 (-)	100 100	200 200 (d)
A5Q1	0.0	0.0	+15.5	Pin 14	950 800	∞ 800
A5Q2	0.0	0.0	+15.5	Pin 14	3.8K 900	∞ 800
A5Q3	0.0	-0.05	+32.5	Pin 8	400 400	∞ 800

SCR's only •	Gate	Cath	Anode	Voltage ref pt	R_{GK}	R_{AK}
A4Q1	-0.25	0.0	-32.5	A4A2P1-10	100-1K 100-1K	∞ ∞
A4Q2	-0.25	0.0	-32.5	A4A2P1-10	100-1K 100-1K	∞ ∞

a A2Q3A and, A2Q3B are in 1 case
b Resistance data not valid
c R_{BE} and R_{BC} measurements made with A3 in circuit
d Voltage is average of square wave
e SCR voltages are waveform averages

5-9. General Parts Replacement Techniques

All the parts of the power supply can be replaced without special procedures. The following precautions apply specifically to this equipment.

a. Do not disturb the setting of any potentiometer.

b. The power supply is transistorized. Use a pencil-type soldering iron with a 25-watt maxi mum capacity. If the iron must be used with ac use an isolating transformer between the iron the line. Use a higher wattage soldering iron for heavier duty soldering.

CAUTION

Do not use a soldering gun; damaging voltage can be induced into components.

c. Use the cross tip screwdriver (FSN 5120-529-3101) to loosen or tighten Phillips head screws. Use hand screw starter (FSN 5120-832221) to remove loosened Phillips head screws or to hold and start Phillips head screws. Use the magnetic retrieving tool (FSN 5120-545-4268) Remove lockwashers under Phillips head screws at are not removed with the screws.

5-10. Use of Heat Sink

Solder transistor leads quickly; whenever wiring permits, use a heat sink (such as long-nosed pliers) between the soldered joint and the transistor. Use approximately the same length and dress of transistor leads as used originally.

5-11. Disassembly and Reassembly

The steps necessary to disassemble and reassemble the power supply are obvious, and no special instructions are required. However, certain procedures and precautions must be observed prior to, and during, reassembly.

a. Make sure that all mating machine surfaces are absolutely clean.

b. Use thermal compound (Astrodyne 829) on transformer T1, inductor L1, assemblies A3 and A4, and between all semiconductor and mounting surfaces.

c. Lubricate all rubber seals with clear silicone grease. See that the rubber seals have not cracked, flattened, or deteriorated.

d. Make sure that no hardware, such as nuts, bolts, and washers, have fallen inside the power supply.

e. Apply the correct amount of torque to the attaching hardware, as indicated below, when installing the following parts:

Part	*Torque*
A3CR1	12 in.-lb
A3CR2	12 in.-lb
A3CR3	12 in.-lb
A3CR4	25 in.-lb
A3CR5	25 in.-lb
A3CR6	12 in.-lb
A4Q1	10 ft-lb
A4Q2	10 ft-lb

5-12. Equipment Adjustments

The following adjustments must be performed after replacing a defective part or as a result of troubleshooting. The cover of the power supply must be removed to gain access to these adjustments.

a. High Voltage Limit Adj Potentiometer A2-R10. To adjust A2R10, proceed as follows:

(1) Set the 230V-115V selector switch to 115V.

(2) Connect 115-volt ac, 60 Hz power to AC INPUT receptacle J3 using the ac power cord.

(3) Set the AC circuit breaker to ON. The AC indicator lamp lights.

(4) Set the DC circuit breaker to ON.

(5) Rotate DC OUTPUT ADJ potentiometer R3 fully clockwise.

(6) With no load connected, adjust A2R10 until the OUTPUT METER indicates between 32 and 34 volts.

b. Current Limit Adj Potentiometer A2R15. To adjust A2R15, proceed as follows:

(1) Perform the procedures given in (1) through (4) above.

(2) Connect DC OUT receptacle J7 to load.

(3) While holding the VOLTAGE-CURRENT switch in the CURRENT position, adjust A2R15 until the OUTPUT METER indicates 27 amperes.

c. Transfer Point Adj Potentiometer A1R9. To adjust A1R9, proceed as follows:

(1) Set the 230V-115V selector switch to 115V.

(2) Connect a variable 115-volt ac, 60 Hz power source to AC INPUT receptacle J3 using the ac power cord and Transformer, variable TF-171A.

(3) Set the AC circuit breaker to ON. The AC and NORM indicator lamps light.

(4) Set the DC circuit breaker to ON.

(5) With no load connected, simultaneously adjust the ac input line voltage and A1R9 until transfer occurs with an input of between 80 and 100 volts ac. This is indicated when the NORM indicator lamp goes out and the EMER indicator lamp lights at 80 volts ac. At 100 volts ac, the EMER indicator lamp goes out and the NORM indicator lamp lights.

d. Preregulator Voltage Adj Potentiometer A5-R9.

To adjust A5R9, proceed as follows:

(1) Set the 230V-115V selector switch to 115V.

(2) Connect 103.5 volts ac, 60 Hz power to AC INPUT receptacle J3 using the ac power cord and Transformer, Variable TF-171A.

(3) Set the AC circuit breaker to ON. The AC and NORM indicator lamps light.

(4) Set the DC circuit breaker to ON.

(5) Set the PP-6224/U for 25 amperes output current at 32 volts output voltage.

(6) Connect the negative lead of TS-352B/U to the negative terminal (-) of A8C5.

(7) Connect the positive lead of TS-352B/U to the negative terminal (-) of A8C6.

(8) Adjust A5R9 until TS-352B/U indicates 2.0 volts.

e. DC OUTPUT ADJ Potentiometer R3. To adjust R3, proceed as follows:

(1) Perform the procedures given in (1) through (4) above.

(2) With no load connected, rotate DC OUTPUT ADJ potentiometer R3 until the OUTPUT METER indicates 25.5 volts. Lock R3 at this setting.

CHAPTER 6

GENERAL SUPPORT TESTING PROCEDURES

6-1. General

a. Test procedures are prepared for use by Electronics Field Maintenance Shops and Electronic Service Organizations responsible for general support maintenance of electronic equipment to determine the acceptability of repaired equipment. These procedures set forth specific requirements that repaired equipment must meet before it is returned to the using organization. A summary of the performance standards is given in paragraph 6-8.

b. Comply with the instructions preceding each chart before proceeding to the chart. Perform each step in sequence. Do not vary the sequence. For each step, perform all the actions required in the *Control settings* column; then perform each specific test procedure and verify it against its performance standard.

6-2. Test Equipment, Tools, and Materials

NOTE

Use tools and test equipment listed below until the tools and test equipment listed in Appendix A become available.

All test equipment, tools, materials, and other equipment required to perform the test procedures given in this chapter are listed in *a*, *b* and *c* below.

a. Test Equipment.

(1) Digital, Voltmeter AN/GSM-64.

(2) Voltmeter, Meter ME-30A/V.

(3) Multimeter, Weston Instruments Model 281.

(4) Multimeter TS-352B/U.

b. Tools. The only tools necessary for these checks are those contained in Tool Kit, Electronic Equipment TK-100/G.

c. Other Equipment.

(1) Transformer Variable TF-171A.

(2) Simulator, Battery Variable Load Bank (FMC63743, Type K48149).

(3) Connector, Electrical, 2 required (FSN 5935-921-3398).

6-3. Physical Tests and Inspection

a. Test Equipment and Materials. None required.

b. Test Connections and Conditions.

(1) No connections necessary.

(2) Remove panels and covers as necessary for visual and actual access to all components.

Step No.	Test equipment	Control Settings Equipment under test	Test procedure	Performance standard
1	None	Controls may be in any position.	*a.* Inspect case and chassis for damage or missing parts, and for condition of paint. ***Note*. Touchup painting is recommended in place of refinishing when-ever practicable; do not paint or polish screwheads, binding posts, receptacles, and other plated parts with abrasives.**	*a.* No damage evident or parts missing. External surfaces to be painted must not show bare metal. Panel lettering must be legible.
			b. Inspect all controls and mechanical assemblies for loose or missing screws, bolts, and nuts	*b.* Screws, bolts, and nuts must be tight; none missing.
			c. Inspect all connectors, sockets, and receptacles for looseness, damage,' or missing parts.	*c.* No loose parts or damage.
2	None	Controls may be in any position.	*a.* Rotate all panel controls throughout their limits of travel.	*a.* Controls must rotate freely, without binding or excessive looseness.
			b. Operate all switches.	*b.* Switches must operate properly.

6-4. Output Range Test

a. Test Equipment and Materials. No test equipment or materials are required for this test, other than a 115-volt, 60 Hz power source.

b. Test Connections and Conditions. To perform this test, the following connections and conditions must be accomplished:

(1) 11 5-volt, 60 Hz power source connected to AC INPUT receptacle J3 with the ac. power cord.

(2) No load connected.

c. Procedure.

Step No.	Test equipment	Control Settings Equipment under test	Test procedure	Performance standard
1	None	*a.* 230V-115V switch to 115V. *b.* AC circuit breaker to ON. *c.* DC circuit breaker to ON.	Adjust DC OUTPUT ADJ potentiometer fully clockwise.	OUTPUT METER indicates more than 32 volts dc.
2	None		Adjust DC OUTPUT ADJ potentiometer fully counterclockwise.	OUTPUT METER indicates less than 24 volts dc.

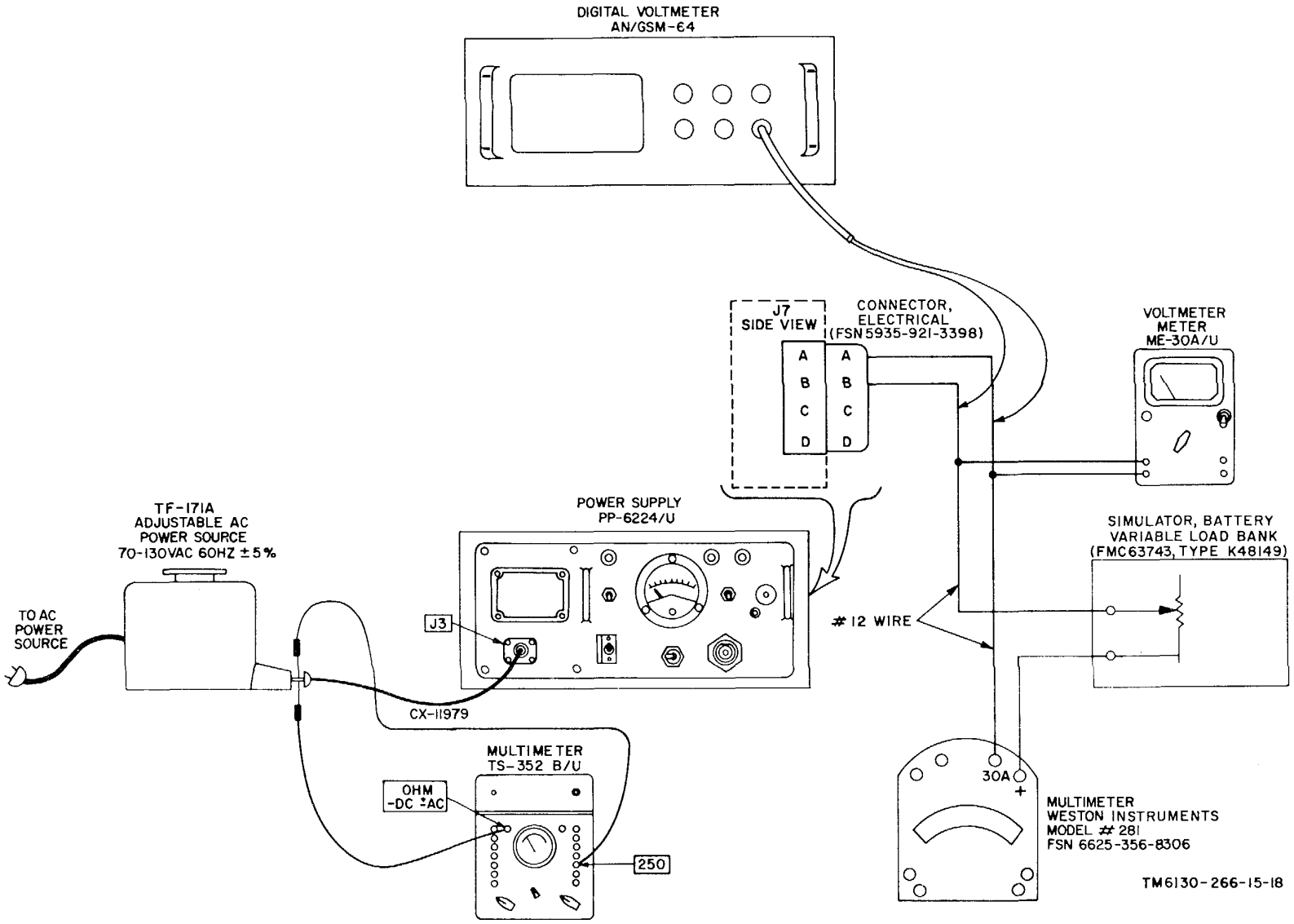

Figure 6-1. Test setup for regulation and ripple test.

6-5. Regulation and Ripple Test

a. Test Equipment and Materials.

(1) Digital, Voltmeter AN/GSM-64.
(2) Transformer, Variable TF-171A.
(3) Voltmeter, Meter ME-30A/U.
(4) Multimeter TS-352B/U.
(5) Multimeter, Weston Instruments Model 281 (test ammeter).
(6) Simulator, Battery Variable Load Bank (FMC63743, type K48149).
(7) Connector, Electrical (FSN 5935-921-3398).

b. Test Connections and Conditions. To perform this test, connect the equipment as shown in figure 6-1.

c. Procedure.

Step No.	*Control Settings*		*Test procedure*	*Performance standard*
	Test equipment	*Equipment under test*		
1	a. TF-171A set for 115 volt ac, 60 Hz. b. AN/GSM-64 set to indicate 28 volts de. c. ME-30A/U set to indicate 140 millivolts d. Load bank not connected.	a. 230V-115V switch to 115V. b. AC circuit breaker to ON. c. DC circuit breaker to ON.	With no load connected, adjust DC OUTPUT ADJ potentiometer for 28 volts de indication on OUTPUT METER	*a.* AN/GSM-64 indicates 28 volts dc. *b.* ME-30A/U indicates 140 millivolts maximum.
2	Same as step No. 1, except TF-171A set for 103.5 volts ac, 60 Hz.	Same as step No. 1.		*a.* AN/GSM-64 indicates 28 volts dc ±1%. *b.* ME-30A/U indicates 140 millivolts maximum.
3	Same as step No. 1, except TF-171A set for 126 volts ac, 60 Hz.	Same as step No. 1.		*a.* AN/GSM-64 indicates 28V dc ± 1%. *b.* ME-30A/U indicates 140 millivolts maximum.
4	Same as step No. 1, except load bank is connected.	Same as step No. 1.	Adjust load bank for 25 amperes indication on OUTPUT METER.	*a.* AN/GSM-64 indicates 28 volts dc ±1. *b.* ME-30A/U indicates 140 millivolts maximum. *c.* Test ammeter indicates 25 amperes ±3%.
5	Same as step No. 4 except TF-171A is set for 103.5 volts ac, 60 Hz.	Same as step No. 4.	Same as step No. 4.	*a.* AN/GSM-64 indicates 28 volts de ±1%. *b.* ME-30A/U indicates 140 millivolts maximum. *c.* Test ammeter indicates 25 amperes ±3%.
6	Same as step No. 5, except TF-171A is set for 126 volts ac 60 Hz.	Same as step No. 5.	Same as step No. 5.	*a.* AN/GSM-64 indicates 28 volts dc ±1%. *b.* ME-30A/U indicates 140 millivolts maximum. *c.* Test ammeter indicates 25 amperes ±3%.

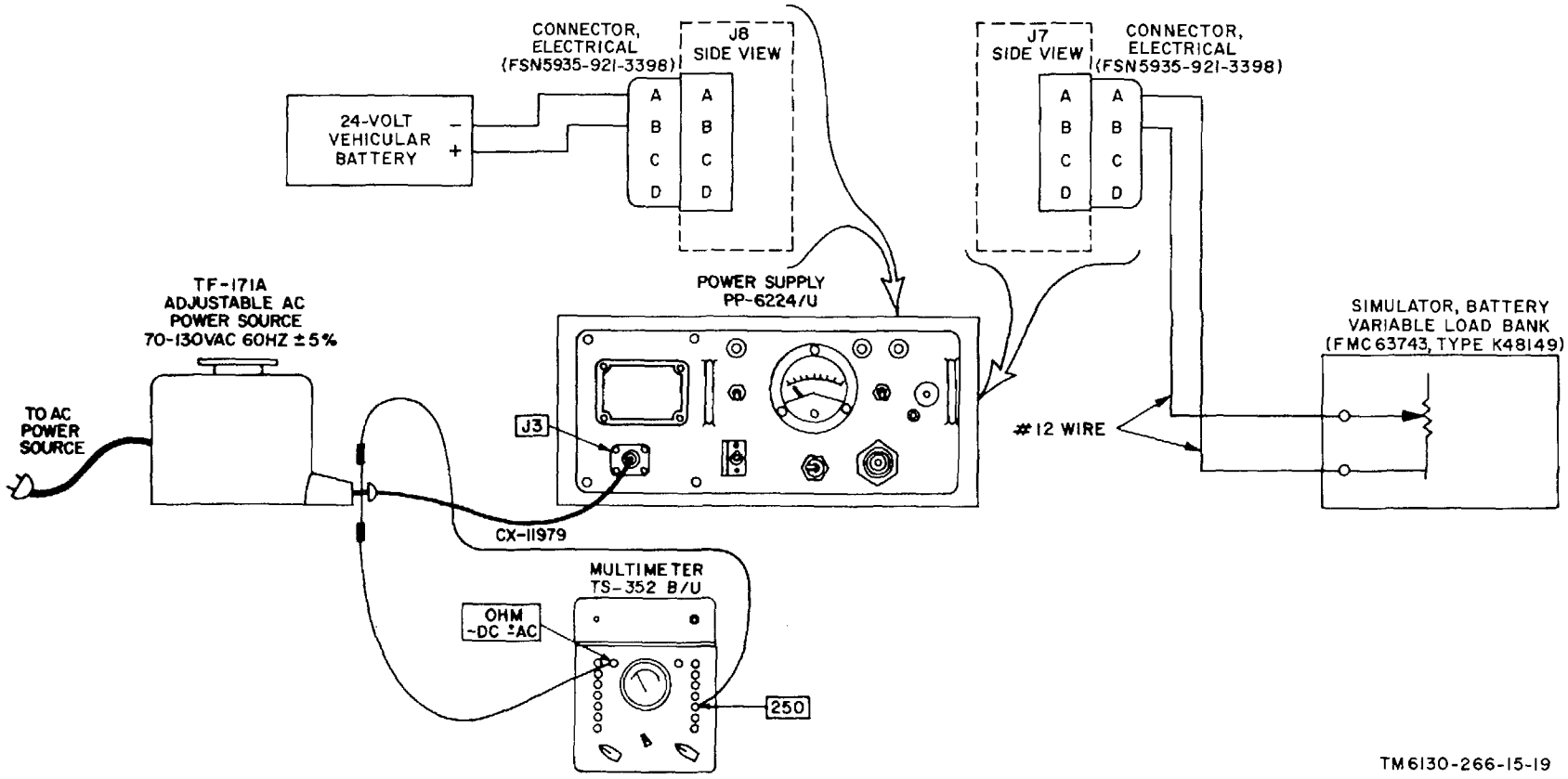

Figure 6-2. Test setup for power transfer test.

6-6. Power Transfer Test

a. Test Equipment and Materials.

(1) Transformer, Variable TF-171A.
(2) Multimeter TS-358B/U.
(3) Simulator, Battery, Variable Load Bank (FMC63743, type K48149).
(4) 24-volt vehicular battery.
(5) Connector, Electrical (FSN 5935-921-3398, 2 required).

b. Test Connections and Conditions. To perform this test, connect the equipment as shown in figure 6-2. (Do not connect the load bank for steps (1) through (3)).

c. Procedure.

Step No.	*Control Settings*		*Test procedure*	*Performance standard*
	Test equipment	*Equipment under test*		
1	a. TF-171A set at minimum output position (fully counter-clockwise). b. Load bank not connected. c. Connect 24-volt vehicular battery.	a. 230V-115V switch to 115V. b. AC circuit breaker to ON. c. DC circuit breaker to ON.		a. NORM indicator is not lighted. *b*. EMER indicator lamp is lighted.
2	Increase TF-171A voltage to 100 volts ac.	Same as step No. 1.		*a*. NORM indicator lamp lights. *b*. EMER indicator lamp goes out.
3	Decrease TF-171A voltage to 80 volts ac.	Same as step No. 1.		*a*. NORM indicator lamp goes out. *b*. EMER indicator lamp lights.
4	Same as step No. 1, except load bank is connected and adjusted for 25 amperes.	Same as step No. 1.	Same as step No. 1.	
5	Same as step No. 2, except load bank is connected and adjusted for 25 amperes.	Same as step No. 1.	Same as step No. 2.	
6	Same as step No. 3, except load bank is connected and adjusted for 25 amperes.	Same as step No. 1.	Same as step No. 3.	

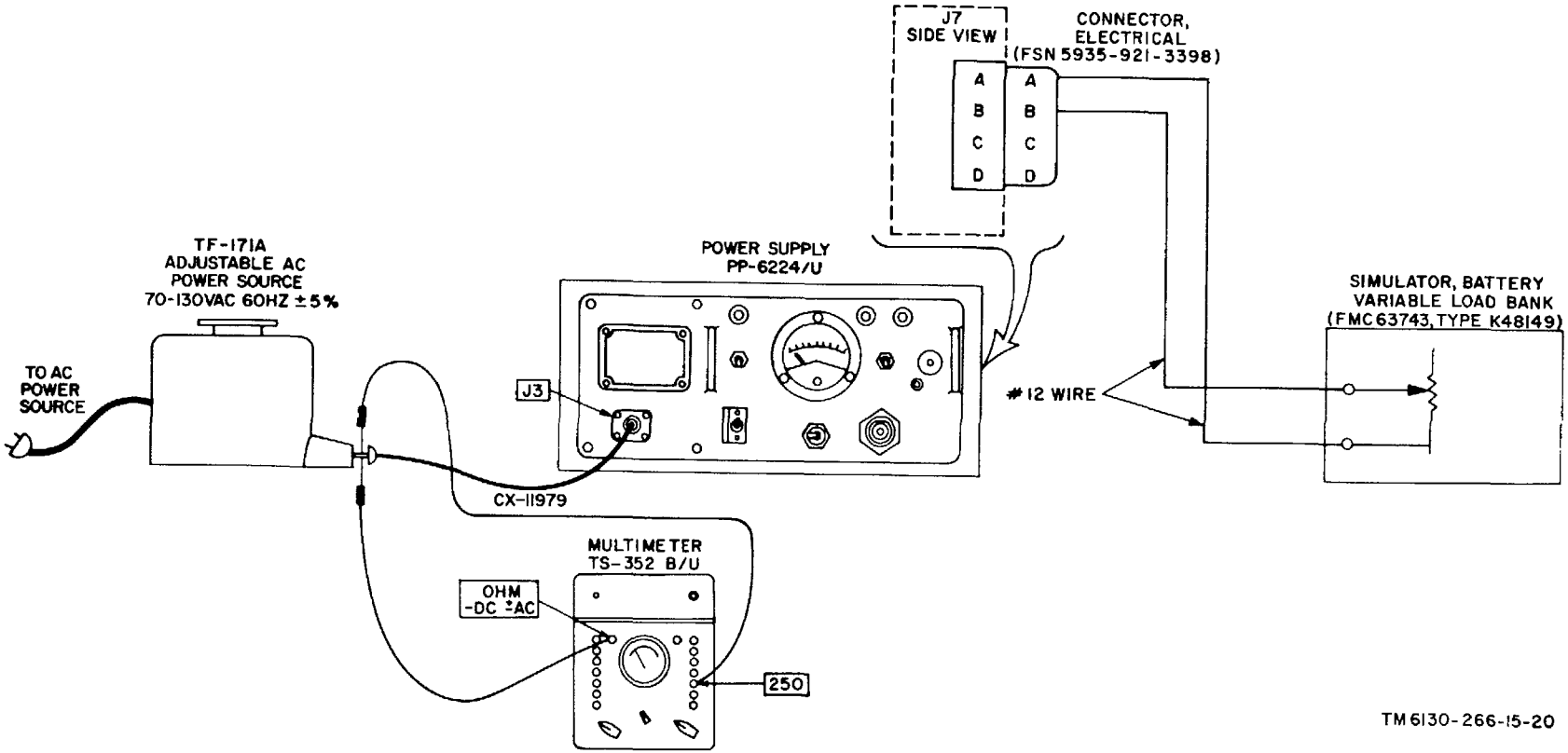

Figure 6-3. Test setup for overload protection test.

6-7. Overload Protection Test

a. Test Equipment and Materials.

(1) Transformer, Variable TF-171A.
(2) Multimeter TS-352B/U.
(3) Simulator Battery Variable Load Bank (FMC63743, Type K48149).
(4) Connector, Electrical (FSN 5935-921-3398).

b. *Test Connections and Conditions*. To perform this test, connect the equipment as shown in figure 6-3.

c. *Procedure.*

Step No.	*Control Settings*		*Test procedure*	*Performance standard*
	Test equipment	*Equipment under test*		
1	*a.* TF-171A set for 115 volts ac, 60 Hz. ON.	*a.* 230V-115V switch to 115V. *b.* AC circuit breaker to 0.5 ohm. *e.* DC circuit breaker to ON.	With DC output ADJ control set for 28.5 volts, gradually reduce the resistance of the load bank until the load bank resistance is less than	Dc ammeter indicates less than 27 amperes.

6-8. Test Data Summary

The test data are summarized as follows:

a. The 25.5-volt output must remain constant within 1 percent when the AC power source voltage is varied from 103.5 to 126.5 volts AC and the load varies from 0 to 25 amperes.

b. The output current must not exceed 27 amperes regardless of the load.

CHAPTER 7

DEPOT OVERHAUL STANDARDS

7-1. Applicability of Depot Overhaul Standards

The tests outlined in this chapter are designed to measure the performance capability of a repaired equipment. Equipment that is to be returned to stock should meet the standards given in these tests.

7-2. Applicable References

a. Repair Standards. Applicable procedures of depots which perform these tests, and the general standards for repaired electronic equipment given in TB Sig 355-1, TB Sig 355-2, and TB Sig 355-3 form a part of the requirements for testing this equipment.

b. Modification Work Orders. Perform all applicable modification work orders applicable to this equipment before making the tests specified. DA Pam 310-7 lists all available MWO'S.

7-3. Test Equipment Required

The test equipment and materials required in determining compliance with the requirements of this specific standard are given in paragraph 6.

7-4. Tests

The depot overhaul standards test procedures are the same as those given for general support (para 6-3 through 6-7). Equipment that meets the performance standards stated in these tests will furnish satisfactory operation equivalent to that of new equipment.

CHAPTER 8

SHIPMENT, LIMITED STORAGE, AND DEMOLITION TO PREVENT ENEMY USE

8-1. Packaging for Shipment

The exact procedure for packaging the equipment for shipment and storage depends on materials available and conditions under which the equipment is to be shipped or stored. If the original packaging materials are available, package the equipment as shown in figure 2-1. If the original packaging materials are not available, use sturdy cartons and barrier material to protect the equipment.

8-2. Authority for Demolition

Demolition of the equipment will be accomplished only upon order of the commander. The destruction procedures given in paragraph 8-3 will be used to prevent further use of the equipment.

8-3. Methods of Demolition

Use any of the methods of destruction given below. The time available for destruction is the major factor in determining the method of destruction.

a. Smash. Smash the cabinet, meters, and controls. Use sledges, axes, hammers, crowbars, and other heavy tool available. Remove the top panel, and smash the internal components.

b. Cut. Cut the wiring of the PP-6224/U. Use axes, handaxes, or machetes.

WARNING

Be extremely careful with explosives and incendiary devices. Use these items only when the need is urgent.

c. Burn. Burn the technical manuals first. Burn as much of the equipment as is flammable; use gasoline, oil, flamethrowers, and similar materials. Pour gasoline on the cut cables and internal wiring and ignite them. Use a flamethrower to burn the spare parts, or pour gasoline on spares and ignite them. Use incendiary grenades to complete the destruction of the unit.

d. Dispose. Bury or scatter destroyed parts, or throw them into nearby waterways.

Figure 8-1. Color code marking for resistors and capacitors.
(Located in back of manual.)

Figure 8-2. Power Supply PP-6624/U, block diagram
(Located in back of manual.)

Figure 8-3. Power Supply PP-6624/U, schematic diagram.
(Located in back of manual.)

APPENDIX A

REFERENCES

DA Pam 310-4	Index of Technical Manuals, Technical Bulletins, Supply Manuals (Types 7, 8, and 9), Supply Bulletins, and Lubrication Orders.
DA Pam 310-7	U.S. Army Index of Modification Work Orders.
SB 38-100	Preservation, Packaging, Packing and Marking Materials, Supplies, and Equipment Used by the Army.
TB 746-10	Field Instructions for Painting and Preserving Electronics Command Equipment.
TM 9-213	Painting Instructions for Field Use.
TM 11-6625-203-12	Operator and Organizational Maintenance Manual: Multimeter AN/URM-105, including Multimeter ME-77/U.
TM 11-6625-320-12	Operator and Organizational Maintenance Manual: Voltmeter, Meter ME-30A/U and Voltmeters, Electronic ME-30B/U and ME-30C/U, and ME-30E/U.
TM 11-6625-366-1.5	Organizational, DS, GS, and Depot Maintenance Manual: Multimeter TS-352B/U.
TM 11-6625-539-15	Operator, Organizational, Field and Depot Maintenance Manual: Transistor Test Set TS-1836/U.
TM 11-6625-1703-15	Operator, Organizational, DS, GS, and Depot Maintenance Manual, including Repair Parts and Special Tools Lists: Oscilloscope AN/USM-281A.
TM 38-750	The Army Maintenance Management Systems (TAMMS).
TM 740-90-1	Administrative Storage of Equipment.

APPENDIX B
MAINTENANCE ALLOCATION

Section I. INTRODUCTION

B-1. General

This appendix provides a summary of the maintenance operations for POWER SUPPLY PP-6224/U AND PP-6224A/U. It authorizes categories of maintenance for specific maintenance functions on repairable items and components and the tools and equipment required to perform each function. This appendix may be used as an. aid in planning maintenance operations.

B-2. Maintenance Function

Maintenance functions will be limited to and defined as follows:

a. Inspect. To determine the serviceability of an item by comparing its physical, mechanical, and/or electrical characteristics with established standards through examination.

b. Test. To verify serviceability and to detect incipient failure by measuring the mechanical or electrical characteristics of an item and comparing those characteristics with prescribed standards.

c. Service. Operations required periodically to keep an item in proper operating condition, i.e., to clean (decontaminate), to preserve, to drain, to paint, or to replenish fuel, lubricants, hydraulic fluids, or compressed air supplies.

d. Adjust. To maintain, within prescribed limits, by bringing into proper or exact position, or by setting the operating characteristics to the specified parameters.

e. Align. To adjust specified variable elements of an item to bring about optimum or desired performance.

f. Calibrate. To determine and cause corrections to be made or to be adjusted on instruments or test measuring and diagnostic equipments used in precision measurement. Consists of comparisons of two instruments, one of which is a certified standard of known accuracy, to detect and adjust any discrepancy in the accuracy of the instrument being compared.

g. Install. The act of emplacing, seating, or fixing into position an item, part, module (component or assembly) in a manner to allow theproper functioning of the equipment or system.

h. Replace. The act of substituting a serviceable like type part, subassembly, or module (component or assembly) for an unserviceable counterpart.

i. Repair. The application of maintenance services (inspect, test, service, adjust, align, calibrate, replace) or other maintenance actions (yielding, grinding, riveting, straightening, facing, remachining, or resurfacing) to restore serviceability to an item by correcting specific damage, fault, malfunction, or failure in a part, subassembly, module (component or assembly), end item, or system.

j. Overhaul. That maintenance effort (service/action) necessary to restore an item to a completely serviceable/operational condition as prescribed by maintenance standards (i.e., DMWR) in appropriate technical publications. Overhaul is normally the highest degree of maintenance performed by the Army. Overhaul does not normally return an item to like new condition.

k. Rebuild. Consists of those services/actions necessary for the restoration of unserviceable equipment to a like new condition in accordance with original manufacturing standards. Rebuild is the highest degree of materiel maintenance applied to Army equipment. The rebuild operation includes the act of returning to zero those age measurements (hours, miles, etc.) considered in classifying Army equipments/components.

B-3. Column Entries

a. Column 1, Group Number. Column 1 lists group numbers, the purpose of which is to identify components, assemblies, subassemblies, and modules with the next higher assembly.

b. Column 2, ,Component/Assembly. Column 2 contains the noun names of components, assemblies, subassemblies, and modules for which maintenance is authorized.

c. Column 3, Maintenance Functions. Column 3 lists the functions to be performed on the item listed in column 2. When items are listed without maintenance functions, it is solely for purpose of having the group numbers in the MAC and RPSTL coincide.

d. Column 4, Maintenance Category. Column 4 specifies, by the listing of a "worktime" figure in the appropriate subcolumn(s), the lowest level of maintenance authorized to perform the function listed in column 3. This figure represents the active time required to perform that maintenance function at the indicated category of maintenance. If the number or complexity of the tasks within the listed maintenance function vary at different maintenance categories, appropriate "worktime" figures will be shown for each category. The number of task-hours specified by the "worktime" figure represents the average time required to restore an item (assembly, subassembly, component, module, end item or system) to a serviceable condition under typical field operating conditions. This time includes preparation time, troubleshooting time, and quality assurance/quality control time in addition to the time required to perform the specific tasks identified for the maintenance functions authorized in the maintenance allocation chart. Subcolumns of column 4 are as follows:

C-Operator/Crew
O-Organizational
F-Direct Support
H-General Support
D-Depot

e. Column 5, Tools and Equipment. Column 5 specifies by code, those common tool sets (not individual tools) and special tools, test, and support equipment required to perform the designated function.

f. Column 6, Remarks. Column 6 contains an alphabetic code which leads to the remark in section IV, Remarks, which is pertinent to the item opposite the particular code.

B-4. Tool and Test Equipment Requirements (sec III)

a. Tool or Test Equipment Reference Code. The numbers in this column coincide with the numbers used in the tools and equipment column of the MAC. The numbers indicate the applicable tool or test equipment for the maintenance functions.

b. Maintenance Category. The codes in this column indicate the maintenance category allocated the tool or test equipment.

c. Nomenclature. This column lists the noun name and nomenclature of the tools and test equipment required to perform the maintenance functions.

d. National/NATO Stock Number. This column lists the National/NATO stock number of the specific tool or test equipment.

e. Tool Number. This column lists the manufacturer's part number of the tool followed by the Federal Supply Code for manufacturers (5 digit) in parentheses.

B-5. Remarks (sec IV)

a. Reference Code. This code refers to the appropriate item in section II, column 6.

b. Remarks. This column provides the required explanatory information necessary to clarify items appearing in section II.

(Next printed page is B-3.)

SECTION II. MAINTENANCE ALLOCATION CHART FOR POWER SUPPLY PP-6224/U & PP-6224A/U

(1) GROUP NUMBER	(2) COMPONENT/ASSEMBLY	(3) MAINTENANCE FUNCTION	(4) MAINTENANCE CATEGORY					(5) TOOLS AND EQPT	(6) REMARKS
			C	O	F	H	D		
00	POWER SUPPLY PP-6624/U AND PP-6224A/U	Inspect	0.1						A
		Service	0.2						A
		Inspect		0.5				1	B
		Test		0.2				2	C
		Service		0.5				1	B
		Adjust		0.1				1	D
		Replace		0.2				1	E
		Test			0.5			5	F
		Adjust			0.1			3	G
		Replace			0.6			3, 4	H
		Repair			1.0			3, 4	I
		Test				1.0		5 thru 17	
		Repair				1.0		3, 4	
		Overhaul					40.0	3 thru 18	
01	BOARD ASSY, AUXILIARY SUPPLY (A1) SM-D-667850	Replace			0.2			3	
		Test				1.0		5 thru 8, 15,16	
		Repair				1.0		3	
02	POST REGULATOR CONTROL ASSY, (A2) SM-D-667858	Replace			0.2			3	
		Test				1.0		5 thru 8 15, 16	
		Repair				1.0		3	
03	HEAT SINK ASSY (A3) SM-D-667867	Replace			0.2			3	
		Test				1.0		5 thru 8 15	
		Repair				1.0		3	
04	MAGNETIC AMPLIFIER ASSY (A4) SM-D-667881	Replace			0.2			3	
		Test				1.0		5 thru 8, 15	
		Repair				1.0		3	
05	BOARD ASSY, PRE-REGULATOR CONTROL (A5) SM-D-667863	Replace			0.2			3	
		Test				1.0		5 thru 18, 15,16	
		Repair				1.0		3	
06	TERMINAL BOARD ASSY (A6) SM-D-667894	Replace			0.2			3	
		Test				1.0		5 thru 8, 15	
		Repair				1.0		3	

SECTION III. TOOL AND TEST EQUIPMENT REQUIREMENTS FOR POWER SUPPLY PP-6624/U & PP-6624A/U

TOOL OR TEST EQUIPMENT REF CODE	MAINTENANCE CATEGORY	NOMENCLATURE	NATIONAL/NATO STOCK NUMBER	TOOL NUMBER
1	O	TOOL KIT, ELECTRONIC EQUIPMENT TK-101/G	5180-00-064-5178	
2	O	MULTIMETER, AN/URM-105	6625-00-581-2036	
3	F, H, D	TOOL KIT, ELECTRONIC EQUIPMENT TK-105/G	5180-00-610-8177	
4	F, H, D	RETRIEVING TOOL, MAGNETIC	5120-00-545-4268	
5	F, H, D	MULTIMETER, AN/USM-223/U (RS TS-352B/U)	6625-00-999-7465	
6	H, D	OSCILLOSCOPE, AN/USM-281	6625-00-228-2201	
7	H, D	TEST SET, SEMICONDUCTOR TS-1836( )/U	6625-00-159-2263	
8	H, D	VOLTMETER, DIGITAL AN/GSM-64	6625-00-022-7894	
9	H, D	MULTIMETER, ME-452/U (RS WESTON INSTR 281)	6625-00-519-2493	
10	H, D	VOLTMETER, ELECTRONIC AN/USM-265 (RS ME-30/U)	6625-00-054-3487	
11	H, D	CONNECTOR, ELECTRICAL (MW10M(M)A17)	5935-00-921-3398	
12	H, D	DUMMY LOAD, ELECTRICAL DA-638/U	6625-00-422-2111	
13	H, D	RESISTOR, VARIABLE, 0-7 1/2 OHM, 1000W	5905-00-195-4496	
14	H, D	TRANSFORMER, VARIABLE POWER TF-510/U	6120-00-054-7794	
15	H, D	POWER SUPPLY, PP-6224( )/U	6130-00-133-5879	
16	H, D	EXTENDER TEST BOARD (SM-D943415)	*	
17	H, D	BATTERY, STORAGE BB-297( )/U (4HN)	6140-00-059-3528	
18	H, D	KEY SOCKET HEAD SCREW	5120-00-508-5544	
		*The National Stock Number that is Missing from this list has been requested and will be added by a change to the list upon receipt.		

DRESEL-MA Form 1 Oct 77 6013 (Edition of 1 Oct 74 may be used until exhausted) HISA-FM 2132-77

SECTION IV. REMARKS

REFERENCE CODE	REMARKS
A	EXTERIOR
B	INTERIOR
C	OPERATIONAL; INPUT & OUTPUT VOLTAGE
D	OUTPUT VOLTAGE LEVEL
E	CABLES, LAMPS & LENS
F	TO FAULT ISOLATE TO REPLACEABLE ASSEMBLY
G	INTERNAL POTENTIONMETERS
H	ASSEMBLIES A1 THRU A6
I	ALL EXCEPT ASSEMBLIES A1 THRU A6, CHOKE L1, FILTER FL1, & POWER TRANS\FORMER T1
	☆U.S. GOVERNMENT PRINTING OFFICE 1978-703-128/242

APPENDIX C

ORGANIZATIONAL, DIRECT SUPPORT, GENERAL SUPPORT, AND DEPOT MAINTENANCE REPAIR PARTS AND SPECIAL TOOLS LIST

Section I. INTRODUCTION

C-1. Scope

This appendix lists repair parts required for the performance of organizational, direct support, general support, and depot maintenance of the PP-6224/U.

NOTE

No special tools, test, and support equipment are required.

C-2. General

This Repair Parts List is divided into the following sections:

a. Prescribed Load Allowance (PLA) -Section II. A composite listing of repair parts having quantitative allowances for initial stockage at the organizational level.

b. Repair Parts for Organizational Maintenance - Section III. A list of repair parts authorized for the performance of maintenance at the organizational level.

c. Repair Parts for Direct Support, General Support, and Depot Maintenance-Section IV. A list of repair parts authorized for the performance of maintenance at the direct support, general support, and depot level.

d. Index-Federal Stock Number or Reference Number Cross-Reference to Figure and Item Number or Reference Designation-Section V. A list of Federal stock numbers in ascending numerical sequence (section V.1) followed by a list of reference numbers appearing in ascending alphanumeric sequence (section V.2) cross-referenced to the illustration figure number and reference designation.

e. Index-Reference Designation Cross-Reference to Page Number-Section VI. A list of reference designations cross-referenced to page numbers.

C-3. Explanation of Columns

The following provides an explanation of columns in the tabular lists:

a. Source, Maintenance, and Recoverability Codes (SMR).

(1) Source code indicates the selection status and source for the listed item. Source codes are:

Code	*Explanation*
P	–Repair parts which are stocked in or supplied from the GSA/DSA, or Army supply system and authorized for use at indicated maintenance categories.
P2	–Repair parts which are procured and stocked for insurance purposes because the combat or military essentiality of the end item dictates that a minimum quantity be available .in the supply system.
P9	–Assigned to items which are NSA design controlled: unique repair parts, special tools, test, measuring and diagnostic equipment, which are stocked and supplied by the Army COMSEC logistic system, and which are not subject to the provisions of AR 380-41.
P10	–Assigned to items which are NSA design controlled: special tools, test, measuring and diagnostic equipment for COMSEC support, which are accountable under the provisions of AR 380-41, and which are stocked and supplied by the Army COMSEC logistic system.
M	–Repair parts which are not procured or stocked, but are to be manufactured in indicated maintenance levels.
A	–Assemblies which are not procured or stocked as such, but are made up of two or more units. Such component units carry individual stock numbers and descriptions, are procured and stocked separately and can be assembled to form the required assembly at indicated maintenance categories.

Code	*Explanation*
X	–Parts and assemblies which are no-t procured or stocked and the mortality of which normally is below that of the applicable end item or component. The failure of such part or assembly should result in retirement of the end item from the supply system.
X1	–Repair parts which are not procured or stocked. The requirement for such items will be filled by use of the next higher assembly or component.
X2	–Repair parts which are not stocked, The indicated maintenance category requiring such repair parts will attempt to obtain same through cannibalization. Where such repair parts are not obtainable through cannibalization. Where such repair parts are not obtainable through cannibalization, requirements will be requisitioned, with accompanying justification, through normal supply channels.
G	–Major assemblies that are procured with PEMA funds for initial issue only as exchange assemblies at DSU and GSU level. These assemblies will not he stocked above DS and GS level or returned to depot supply level.

(2) Maintenance code indicates the lowest category of maintenance authorized to install the listed item, The maintenance level codes are:

Code	*Explanation*
C	Operator/Crew
O	Organizational Maintenance
F	Direct Support Maintenance
H	General Support Maintenance
D	Depot Maintenance

(3) Recoverability code indicates whether unserviceable items should be returned for recovery or salvage. Items not coded are expendable. Recoverability codes are:

Code	*Explanation*
R	–Repair parts and assemblies that are economically repairable at DSU and GSU activities and normally are furnished by supply on an exchange basis.
S	–Repair parts and assemblies that are economically repairable at DSU and GSU activities and which normally are furnished by supply on an exchange basis. When items are determined by GSU to b e uneconomically reparable, they will be evacuated to a depot for evaluation and analysis before activities.
T	–High dollar value recoverable repair parts which are subject to special handling and are issued on an exchange basis. Such repair parts normally are repaired or overhauled at depot maintenance activities.
U	–Repair parts specifically selected for salvage by reclamation units because of precious metal content, critical materials, or high dollar value reusable casing or castings.

b. Federal Stock Number. Indicates the Federal stock number assigned to the item and will be used for requisitioning purposes..

c. Description. Indicates the Federal item name and any additional description of the item required. The index number has been included as “same as” items. A part number or other reference number is followed by the applicable five digit Federal supply code for manufacturers in parentheses.

d. Unit of Measure(U/M). A two character alphabetic abbreviation indicating the amount or quantity of the item upon which the allowances are based, e.g. ft, ea, pr, etc.

e. Quantity Incorporated in Unit. Indicates quantity of the item used in the PP-6624/U. Subsequent appearances of the same item in the same assembly are indicated by the letters “REF.”

f. 15-day Organizational Maintenance Allowances.

(1) The allowance columns are divided into four subcolumns. Indicated in each subcolumn, opposite the first appearance of each item, is the total quantity of items authorized for the number of equipments supported. Subsequent appearances of the same item will have the letters “REF” in the allowance columns. Items authorized for use as required, but not for initial stocakage, are identified with and asterisk in the allowance column.

(2) The quantitive allowances for organizational level of maintenance represents one initial prescribed load for a 15-day period for the number of equipments supported. Units and organizations authorized additional prescribed loads authorized by the quantity of repair parts reflected in the appropriate density column to obtain the total quantity of repair parts authorized.

(3) Organizational units providing maintenance for more than 100 of these equipments shall determine the total quantity of parts required by coverting the equipment quantity to a decimal factor by placing a decimal point before the next to last digit of the number to indicate hundredths, and multiplying the decimal factor by the parts and quantity authorized in the 51-100 allowance column. Example, authorized allowance for 51-100 equipments is 12: for 140 equipments multiply 12 by 1.40 or 16.80 rounded off to 17 parts required.

(4) Subsequent changes to allowances will be limited as follows: No change in the range of items is authorized. If additional items are considered necessary, recommendation should be

forwarded to Commanding General, U.S. Army Electronics Command, ATTN: AMSEL-ME-NMP-EM, Fort Monmouth, N.J., 07703 for exception or revision to the allowance list. Revisions to the range of items authorized will be made by the USAECOM National Maintenance Point based upon engineering experience, demand data, or TAERS information.

g. 30-Day DS/GS Maintenance Allowances.

NOTE

Allowances in GS Column are for GS maintenance only.

(1) The allowance columns are divided into three subcolumns. Indicated in each subcolumn, opposite the first appearance of each item, is the total quantity of items authorized for the number of equipments supported. Subsequent appearances of the same item will have the letters "REF" in the applicable allowance columns. Items authorized for use as required, but not for initial stockage, are identified with an asterisk in the allowance column.

(2) The quantitative allowances for DS/GS levels of maintenance will represent initial stockage for a 30-day period for the number of equipments supported.

(3) Determination of the total quantity of parts required for maintenance of more than 100 of these equipments can be accomplished by converting the equipment quantity to a decimal factor by placing a decimal point before the next to last digit of the number to indicate hundredths, and multiplying the decimal factor by the parts quantity authorized in the 51-100 allowance column. Example, authorized allowance for 51-100 equipments is 40; for 150 equipments multiply 40 by 1.50 or 60 parts required.

h. 1-Year Allowances Per 100 Equipments/Contingency Planning Purposes. Indicates opposite the first appearance of each item the total quantity required for distribution and contingency planning purposes. The range of items indicates total quantities of all authorized items required to provide for adequate support of 100 equipments for one year.

i. Depot Maintenance Allowance Per 100 Equipments. Indicates opposite the first appearance of each item the total quantity authorized for depot maintenance of 100 equipments. Subsequent appearances of the same item will have the letters "REF" in the allowance column. Items authorized for use as required but not for initial stockage are identified with an asterisk in the allowance column.

j. Illustrations.

(1) Figure number. Indicates the figure number of the illustration in which the item is shown.

(2) Item number or reference designation. Indicates the reference designation used to identify the item in the illustration.

C-4. Special information

Repair parts mortality is computed from failure rates derived from experience factors with ,the individual parts in a variety of equipments. Variations in the specific application and periods of use of electronics equipment, the fragility of electronic piece parts, plus intangible material and quality factors intrinsic to the manufacture of electronic parts, do not permit mortality to be based on hours of end item use. However, long periods of continuous use under adverse conditions are likely to increase repair parts mortality.

C-5. Location of Repair Parts

a. This appendix contains two cross reference indexes (see V. and see VI) to be used to locate a repair part when either the Federal stock number, reference number (manufacturer's part number), or reference designation is known. The first column in each index is prepared in numerical or alphanumeric sequence in ascending order. Where a Federal stock number is listed, refer to section V.1. Where a Federal stock number is not listed, refer to section V.2.

b. When the Federal stock number or reference number is known, follow the procedures given in (1.) and (2) below.

(1) Refer to section V.1 (index of Federal stock numbers) or section V.2 (index of reference numbers) and note the applicable figure and reference designation.

(2) When the reference designation is determined, refer to the reference designation index (sec VI). The reference designations are listed in alphanumeric ascending order and are cross referenced to the page number on which they appear in the repair parts lists (sec III and see IV). Refer to the page number noted in the index and locate the reference designation in the repair parts list (col. 7b, Repair Parts for Organizational Maintenance or co]. 10b, Repair Parts for Direct Support, General Support and Depot Main-

tenance). If the Description column indicates that it is a "SAME AS" item, locate the first appearance of the item by the index number referenced.

c. When the reference designation is known, follow the procedures given in b(2) above.

d. When neither the Federal stock number, reference number, nor reference designation is known, identify the part in the illustration and follow directions given in c above or scrutinize column 3 of the repair parts lists (sec III and sec IV).

C-6. Federal Supply Code for Manufacturers

Code	*Manufacturer's name*
06540	Amatom Electronic Hardware Div of Nite Corp
07601	Ceramaseal Inc
08289	Blinn Delbert Co Inc The
15605	Culterhammer Inc
18038	Digital Electronics Inc
70318	Allmetal Screw Products Co Inc
71279	Cambridge Thermionic Corp
75247	Kelley D N and Son Inc
77820	Bendix Corp Electrical Components Div
79963	Zierick Mfg Co
80063	Army Electronics Command
81349	Mil. Spec. Promulgated by Std. Div Dir. of Logistics Serv DSA
81350	Joint Army Navy Spec. Prom by Std Div Dir of Logistics Serv DSA
88044	Aeronautical Standards Group Dept of Navy and Air Force
96906	Mil. STd. Promulgated by Std. Div Dir. of Logistics Serv DSA
99392	S T M Corp

SECTION II. PRESCRIBED LOAD ALLOWANCE

(1) FEDERAL STOCK NUMBER	(2) DESCRIPTION USABLE ON CODE	(3) 15-DAY ORG. MAINT. ALLOWANCE			
		(a) 1-5	(b) 6-20	(c) 21-50	(d) 51-100
5995-466-0217	POWER CORD, DC CX-12342/U				1
6240-155-7836	LAMP, INCANDESCENT: MS25237-327 (96906)		1	1	2
6150-135-4555	POWER CORD, AC CX-11979/U				1

SECTION III. REPAIR PARTS FOR ORGANIZATIONAL MAINTENANCE

(1) SMR Code	(2) Federal Stock No.	(3) DESCRIPTION REFERENCE NUMBER & MFR CODE / USABLE ON CODE	(4) UNIT OF MEAS	(5) QTY INC IN UNIT	(6) 15-DAY ORGANIZATIONAL MAINTENANCE ALW				(7) ILLUSTRATIONS	
					(a) 1-5	(b) 6-20	(c) 21-150	(d) 51-100	(a) FIG. NO.	(b) ITEM NO. OR REFERENCE DESIGNATION
	6130-133-5879	A001 POWER SUPPLY ASSY PP-6624/U This item is nonexpendable)	1-1							
P-O	6240-155-7836	A370 LAMP, INCANDESCENT: MS25237-327 (96906)	EA	3	*	1	1	2	5-8	DS1
P-O	6240-155-7836	A371 LAMP, INCANDESCENT: SAME AS A370	EA	REF	REF	REF	REF	REF	5-8	DS2
P-O	6240-155-7836	A372LAMP, INCANDESCENT: SAME AS A370	EA	REF	REF	REF	REF	REF	5-8	DS3
P-O	6210-151-5246	A376 LENS: LC36GD2 (81349)	EA	1	*	*	*	*		MP14
P-O		A377 LENS: LC36YD2 (81349)	EA	1	*	*	*	*		MP15
P-O		A378 LENS: LC36RD2 (81349)	EA	1	*	*	*	*		MP16
P-O	6150-135-4555	A402 POWER CORD, AC CX-11979/U	EA	1	*	*	*	1		W1
P-O	5995-466-0217	A403 POWER CORD, DC CX-12342/U	EA	1	*	*	*	1		W2

SECTION IV. REPAIR PARTS FOR DIRECT SUPPORT, GENERAL SUPPORT, AND DEPOT MAINTENANCE

(1) SMR CODE	(2) FEDERAL STOCK NUMBER	(3) DESCRIPTION REFERENCE NUMBER & MFR/ CODE	USABLE ON CODE		(4) UNIT OF MEAS	(5) QTY INC IN UNIT	(6) 30-DAY DS MAINT ALLOWANCE (a) 1-20	(b) 21-50	(c) 51-100	(7) 30-DAY GS MAINT ALLOWANCE (a) 1-20	(b) 21-50	(c) 51-100	(8) 1-YR ALW PER EQUIP CNTGCY	(9) DEPOT MAINT ALW PER 100 EQUIP	(10) ILLUSTRATIONS (a) FIG. NO.	(b) ITEM NO. OR REFERENCE DESIGNATION
	6130-133-5879	A1		POWER SUPPLY ASSY PP-6224/u (THIS ITEM IS NONEXPENDABLE)												1-1
H-D		A2		BRACKET, ANGLE: C8263 (18038)	EA	1										MP1
X2-D		A3		SCREW, MACHINE: MS3212-53 (96906)	EA	3										H3
X2-D		A4		BOLT, MACHINE: MS35303-7 (96906)	EA	3										H3
X2-D	53104-09-4058	A5		WASHER, FLAT: MS27183-10 (96906)	EA	3										H3
X2-D	5310-582-5965	A6		WASHER, DOCK: MS35338-44 (96906)	EA	3										H3
M-D		A7		BRACKET, BOARD SUPPORT: 8186 (18038)	ER	1										MP2
X2-D	5305-984-6191	A8		SCREW, MACHINE: MS35206-243 (96906)	EA	1										H1
X2-D	5310-045-3299	A9		WASHER, LOCK: MS35338-42 (96906)	EA	1										H1
X2-D	5310-803-8544	A10		WASHER, FLAT: MS27183-7 (96906)	EA	1										H1
P-P	5910-822-5683	A10A		CAPACITOR, FIXED: CK63AW103M (81349)	EA	4	*	*	*	*	*	*	*	*	5-1	C10
P-F	5910-822-5683	A10B		CAPACITOR, FIXED: SAME AS A10A	EA	REF	REF	REF	REF	REF	REF	REF	REF	REF	5-1	C11
P-F	5910-822-5683	A10C		CAPACITOR, FIXED: SAME AS A10A	EA	REF	RE F	REF	REF	REF	REF	REF	REF	REF	5-1	C12
P-F	5910-822-5683	A10E		CAPACITOR, FIXED: SAME AS A10A	EA	REF	REF	REF	REF	REF	REF	REF	REF	REF	5-1	C13
P-F		A11		CAP, RECEPTACLE: 10-101960-14-3 (07601)	EA	1	*	*	*	*	*	*	4	5		MP3
X2-D	5305-984-4988	A12		SCREW, MACHINE: MS35206-228 (96906)	EA	1										H1

SECTION IV. REPAIR PARTS FOR DIRECT SUPPORT, GENERAL SUPPORT, AND DEPOT MAINTENANCE

(1) SMR CODE	(2) FEDERAL STOCK NUMBER	(3) DESCRIPTION REFERENCE NUMBER & MFR CODE		USABLE ON CODE	(4) UNIT OF MEAS	(5) QTY INC IN UNIT	(6) 30-DAY DS MAINT ALLOWANCE (a) 1-20	(b) 21-50	(c) 51-100	(7) 30-DAY GS MAINT ALLOWANCE (a) 1-20	(b) 21-50	(c) 51-100	(8) 1 YR. ALW PER EQUIP CNTGCY	(9) DEPT MAIN ALW PER 100 EQUIP	(10) ILLUSTRATIONS (a) FIG. NO.	(b) ITEM NO. OR REFERENCE DESIGNATION
X2-D	5310-045-4007	A13	WASHER, LOCK: MS35338-41 (96906)		EA	1										H1
A-H		A14	CAPACITOR ASSEMBLY: C8108 11803B)		EA	1										A7
X2-D		A15	SCREW, MACHINE; MS3212-25 (96906)		EA	2										H2
X2-D	5310-596-7693	A16	WASHER, LOCK: MS35335-31 (96906)		EA	2										H2
X2-D	5310-934-9757	A17	NUT, PLAINS HEXAGON: MS35649-282 (96906)		EA	2										H2
M-D		A18	BRACKET, MOUNTING: C8169 (18038)		EA	1										A7MP1
P-F		A19	CAPACITOR, FIXED, PAPER: CP13A3KB105K1 (81349)		EA	2	*	1	1	*	1	1	16	10	5-1	A7C1
X2-D	5310-687-6398	A20	NUT, PLAIN. HEXAGON: MS25082-5 (96906)		EA	1										A7H1
X2-D	5310-167-0721	A21	WASHER, LOCK: M535333-41 (96906)		EA	1										A7H1
P-F		A22	CAPACITOR, FIXED, PAPER: SAME AS A19		EA	REF	REF	REF	REF	REF	REF	REF	REF	REF	5-1	A7C2
X2-D	5310-687-6398	A23	NUT, PLAIN, HEXAGON: SAME A5 A20		EA	1										A7H1
X2-D	5310-167-0721	A24	WASHER, LOCK: SAME AS A21		EA	1										A7H1

SECTION IV. REPAIR PARTS FOR DIRECT SUPPORT, GENERAL SUPPORT, AND DEPOT MAINTENANCE

(1) SMR CODE	(2) FEDERAL STOCK NUMBER	(3) DESCRIPTION REFERENCE NUMBER & MFR CODE		USABLE ON CODE	(4) UNIT OF MEAS	(5) QTY INC IN UNIT	(6) 30-DAY DS MAINT ALLOWANCE (a) 1-20	(b) 21-50	(c) 51-100	(7) 30-DAY GS MAINT ALLOWANCE (a) 1-20	(b) 21-50	(c) 51-100	(8) 1 YR. ALW PER EQUIP CNTGCY	(9) DEPT MAIN ALW PER 100 EQUIP	(10) ILLUSTRATIONS (a) FIG. NO.	(b) ITEM NO. OR REFERENCE DESIGNATION
P-F		A-25	TERMINAL, STANDOFF: 4079-1-05-19 (71279)		EA	2	*	*	2	*	*	2	10	8		A7E1
P-F		A-26	TERMINAL, STANDOFF: SAME AS A25		EA	REF	REF	REF	REF	REF	REF	REF	REF	REF		A7E2
A-H		A-27	CAPACITOR ASSEMBLY: D8117 (18038)		EA	1										A8
X2-D	5305-94-6193	A28	SCREW, MACHINE: MS35206245 (96906)		EA	8										H8
X2-D	5310-045-3299	A29	WASHER, LOCK: SAME AS A9		EA	8										H8
M-D		A30	BUSS BAR: B8152 (18038)		EA	4										A8MP1
X2-D	5305-989-6265	A31	SCREW, MACHINE: MS35207-262 (96906)		EA	4										A8H4
X2-D	5310-045-3296	A32	WASHER, LOCK: MS535338-43 (96906)		EA	4										A8H4
P-F		A33	CAPACITOR, FIXED: CH08A1NC126J (81349)		EA	1	*	*	*	*	*	*	5	10	5-1	A8C1
P-F		A34	CAPACITOR, FIXED, ELECTROLYTIC: 20000-50-8AMPS (99392)1		EA	5	2	2	3	2	2	3	40	25	5-1	A8C2
X2-D	5305-889-3000	A35	SCREW, MACHINE: MS35206-230 (96906)		EA	1										A8H1
X2-D	5310-209-0788	A36	WASHER, LOCK: MS35335-30 (96906)		EA	1										A8H1

SECTION IV. REPAIR PARTS FOR DIRECT SUPPORT, GENERAL SUPPORT, AND DEPOT MAINTENANCE

(1) SMR CODE	(2) FEDERAL STOCK NUMBER	(3) DESCRIPTION REFERENCE NUMBER & MFR CODE	USABLE ON CODE	(4) UNIT OF MEAS	(5) QTY INC IN UNIT	(6) 30-DAY DS MAINT ALLOWANCE (a) 1-20	(b) 21-50	(c) 51-100	(7) 30-DAY GS MAINT ALLOWANCE (a) 1-20	(b) 21-50	(c) 51-100	(8) 1 YR. ALW PER EQUIP CNTGCY	(9) DEPT MAIN ALW PER 100 EQUIP	(10) ILLUSTRATIONS (a) FIG. NO.	(b) ITEM NO. OR REFERENCE DESIGNATION
X2-D	5310-934-9747	A37 NUT, PLAIN, HEXAGON: MS35649-262 (96906)		EA	1										A8H1
P-F		A38 CAPACITOR, FIXED, ELECTROLYTIC: SAME AS A34		EA	REF	REF	REF	REF	REF	REF	REF	REF	REF	5-1	A8C3
X2-D	5305-889-3000	A39 SCREW, MACHINE: SAME AS A35		EA	1										A8H1
X2-D	5310-209-0788	A40 WASHER, LOCK: SAME AS A36		EA	1										A8H1
X2-D	5310-934-9747	A41 NUT, PLAIN, HEXAGON: SAME AS A37		EA	1										A8H1
P-F		A42 CAPACITOR, FIXED, ELECTROLYTIC; SAME AS A34		EA	REF	REF	REF	REF	REF	REF	REF	REF	REF	5-1	A8C4
X2-D	5305-889-3000	A43 SCREW, MACHINE: SAME AS A35		EA	1										A8H1
X2-D	5310-209-0788	A44 WASHER, LOCK: SAME AS A36		EA	1										A8H1
X2-D	5310-934-9747	A45 NUT, PLAIN, HEXAGON: SAME AS A37		EA	1										A8H1
P-F		A46 CAPACITOR, FIXED, ELECTROLYTIC: SAME AS A34		EA	REF	REF	REF	REF	REF	REF	REP	REF	REF	5-1	A8C5
X2-D	5305-889-3000	A47 SCREW, MACHINE: SAME AS A35		EA	1										A8H1
X2-D	5310-209-0788	A48 WASHER, LOCK: SAME AS A36		EA	1										A8H1

SECTION IV. REPAIR PARTS FOR DIRECT SUPPORT, GENERAL SUPPORT, AND DEPOT MAINTENANCE

(1) SMR CODE	(2) FEDERAL STOCK NUMBER	(3) DESCRIPTION REFERENCE NUMBER & MFR CODE		USABLE ON CODE	(4) UNIT OF MEAS	(5) QTY INC IN UNIT	(6) 30-DAY DS MAINT ALLOWANCE (a) 1-20	(b) 21-50	(c) 51-100	(7) 30-DAY GS MAINT ALLOWANCE (a) 1-20	(b) 21-50	(c) 51-100	(8) 1 YR. ALW PER EQUIP CNTGCY	(9) DEPT MAIN ALW PER 100 EQUIP	(10) ILLUSTRATIONS (a) FIG. NO.	(b) ITEM NO. OR REFERENCE DESIGNATION
X2-D	5310-934-9747	A49	NUT, PLAIN, HEXAGON: SAME AS A37		EA	1										A8H1
P-F		A50	CAPACITOR, FIXED, ELECTROLYTIC: SAME AS A34		EA	REF	REF	REF	REF	REF	REF	REF	REF	REF	5-1	A8C6
X2-D	5305-889-3000	A51	SCREW, MACHINE: SAME AS A35		EA	1										A8H1
X2-D	5310-209-0788	A52	WASHER, LOCK: SAME AS A36		EA	1										A8H1
X2-D	5310-934-9747	A53	NUT, PLAIN, HEXAGON: SAME AS A37		EA	1										A8H1
M-D		A54	CAPACITOR MTG BRACKET ASSEMBLY: D8162 (18038)		EA	1										A8H1
M-D	5340-951-1532	A57	CLIP, COMPONENT: M517160-36 (96906)		EA	1										A8A1A1MP2
X2-D	5320-117-6815	A58	RIVET: MS20470AD3-4 (96906)		EA	2										A8A1A1H2
P-D		A59	FASTENER: SMB169134 (80063)		EA	19									95	A8A1AMP3
P-D		A60	FASTENER: SAME AS A59		EA	REF									REF	A8A1A1MP4
P-D		A61	FASTENER: SAME AS A59		EA	REF									REF	A8A1A1MP5
P-D		A62	FASTENER: SAME AS A59		EA	REF									REF	APA1A1MP6

SECTION IV. REPAIR PARTS FOR DIRECT SUPPORT, GENERAL SUPPORT, AND DEPOT MAINTENANCE

(1) SMR CODE	(2) FEDERAL STOCK NUMBER	(3) DESCRIPTION REFERENCE NUMBER & MFR CODE	USABLE ON CODE	(4) UNIT OF MEAS	(5) QTY INC IN UNIT	(6) 30-DAY DS MAINT ALLOWANCE (a) 1-20	(b) 21-50	(c) 51-100	(7) 30-DAY GS MAINT ALLOWANCE (a) 1-20	(b) 21-50	(c) 51-100	(8) 1 YR. ALW PER EQUIP CNTGCY	(9) DEPT MAIN ALW PER 100 EQUIP	(10) ILLUSTRATIONS (a) FIG. NO.	(b) ITEM NO. OR REFERENCE DESIGNATION
P-D		A63 FASTENER: SAME AS A59		EA	REF									REF	A8A1A 1MP7
P-D		A64 FASTENER: SAME AS A59		EA	REF									REF	A8A1A1MP8
P-D		A65 FASTENER: SAME AS A59		EA	REF									REF	A8A1A1MP9
P-D		A66 FASTENER: SAME AS A59		EA	REF									REF	A8A1A1MP10
P-D		A67 FASTENER: SAME AS A59		EA	REF									REF	A8A1A1MP11
P-D		A68 FASTENER: SAME AS A59		EA	REP									REF	A8A1A1MP12
P-D		A69 FASTENER: SAME AS A59		EA	REF									REF	A8A1A1MP13
P-D		A76 FASTENER: SAME AS A59		EA	REF									REF	A8A1A1MP14
P-D		A71 FASTENER: SAME AS A59		EA	REF									REF	A8A1A1MP15
P-D		A72 FASTENER: SAME AS A59		EA	REF									REF	A8A1A1MP16
P-D		A73 FASTENER: SAME AS A59		EA	REF									REF	A8A1A1MP17
P-D		A74 FASTENER: SAME AS A59		EA	REF									REF	A8A1A1MP18

SECTION IV. REPAIR PARTS FOR DIRECT SUPPORT, GENERAL SUPPORT, AND DEPOT MAINTENANCE

(1) SMR CODE	(2) FEDERAL STOCK NUMBER	(3) DESCRIPTION REFERENCE NUMBER & MFR CODE	USABLE ON CODE	(4) UNIT OF MEAS	(5) QTY INC IN UNIT	(6) 30-DAY DS MAINT ALLOWANCE (a) 1-20	(b) 21-50	(c) 51-100	(7) 30-DAY GS MAINT ALLOWANCE (a) 1-20	(b) 21-50	(c) 51-100	(8) 1 YR. ALW PER EQUIP CNTGCY	(9) DEPT MAIN ALW PER 100 EQUIP	(10) ILLUSTRATIONS (a) FIG. NO.	(b) ITEM NO. OR REFERENCE DESIGNATION
P-C		A15 FASTENER: SAME AS A59		EA	REF									REF	A8A1A1MP19
P-D		A76 FASTENER: SAME AS A59		EA	REF									REF	A8A1A1MP20
P-D		A77 FASTENER: SAME AS A59		EA	REF									REF	ABA1A1MP21
M-D		A78 CLAMP: SMB450392 (80063)		EA											A8MP2
X2-D	5305-889-3000	A79 SCREW, MACHINE: SAME AS A35		EA	3										A8H3
X2-D	5310-045-4007	A80 WASHER, LOCK: SAME AS A13		EA	3										A8H3
X2-D	5310-082-1404	A81 WASHER, FLAT: M527183-6 (96906)		EA	3										A8H3
M-D		A82 CLAMP: SAME AS A78		EA	REF										A8MP3
X2-D	5305-889-3000	A83 SCREW, MACHINE: SAME AS A35		EA	3										A8H3
X2-3	5310-C45-4007	A84 WASHER, LOCK: SAME AS A13		EA	3										A8H3
X2-D	5310-C82-1404	A85 WASHER, FLAT: SAME AS A81		EA	3										A8H3
M-D		A86 CLAMP: SAME AS A78		EA	REF										A8MP4

AMSEL-ME Form 1 Nov 68 **6048** (Previous edition is obsolete) PP-6224/U ESC-FM 4534-68

SECTION IV. REPAIR PARTS FOR DIRECT SUPPORT, GENERAL SUPPORT, AND DEPOT MAINTENANCE

(1) SMR CODE	(2) FEDERAL STOCK NUMBER	(3) DESCRIPTION REFERENCE NUMBER & MFR CODE	USABLE ON CODE	(4) UNIT OF MEAS	(5) QTY INC IN UNIT	(6) 30-DAY DS MAINT ALLOWANCE (a) 1-20	(b) 21-50	(c) 51-100	(7) 30-DAY GS MAINT ALLOWANCE (a) 1-20	(b) 21-50	(c) 51-100	(8) 1 YR. ALW PER EQUIP CNTGCY	(9) DEPT MAIN ALW PER 100 EQUIP	(10) ILLUSTRATIONS (a) FIG. NO.	(b) ITEM NO. OR REFERENCE DESIGNATION
X2-D	5305-889-3000	A87 SCREW, MACHINE; SAME AS A59		EA	3										A8H3
X2-D	5310-045-4007	A88 WASHER, LOCK: SAME AS A13		EA	3										A8H3
X2-D	5310-082-1404	A89 WASHER, FLAT: SAME AS A81		EA	3										A8H3
M-D		A9 CLAMP: SAME AS A78		EA	REF										A8MP5
X2-D	5305-889-3000	A91 SCREW, MACHINE; SAME AS A35		EA	3										A8H3
X2-D	5310-045-4007	A92 WASHER, LOCK: SAME AS A13		EA	3										A8H3
X2-D	5310-082-1404	A93 WASHER, FLAT: SAME AS A81		EA	3										A8H3
M-D		A94 CLAMP: SAME AS A78		EA	REF										A8MP6
X2-D	5305-889-3000	A95 SCREW, MACHINE: SAME AS A35		EA	3										A8H3
X2-D	5310-045-4007	A96 WASHER, LOCK; SAME AS A13		EA	3										A8H3
X2-D	5310-082-1404	A97 WASHER, FLAT: SAME AS A81		EA	3										A8H3
P-F		A98 TERMINAL, INSULATED; MILT55155-21-3 (81349)		EA	2	*	*	2	*	*	2	10	10		A8E1

AMSEL-ME Form 1 Nov 68 **6048** (Previous edition is obsolete) PP-6224/U ESC-FM 4534-68

SECTION IV. REPAIR PARTS FOR DIRECT SUPPORT, GENERAL SUPPORT, AND DEPOT MAINTENANCE

(1) SMR CODE	(2) FEDERAL STOCK NUMBER	(3) DESCRIPTION REFERENCE NUMBER & MFR CODE	USABLE ON CODE	(4) UNIT OF MEAS	(5) QTY INC IN UNIT	(6) 30-DAY DS MAINT ALLOWANCE (a) 1-20	(b) 21-50	(c) 51-100	(7) 30-DAY GS MAINT ALLOWANCE (a) 1-20	(b) 21-50	(c) 51-100	(8) 1 YR. ALW PER EQUIP CNTGCY	(9) DEPT MAIN ALW PER 100 EQUIP	(10) ILLUSTRATIONS (a) FIG. NO.	(b) ITEM NO. OR REFERENCE DESIGNATION
X2-D	5310-209-0788	A99 WASHER, LOCK; SAME AS A36		EA	1										A8H1
P-F		A100 TERMINAL , INSULATED: SAME AS A98		EA	REF	REF	REF	REF	REF	REF	REF	REF	REF		A8E2
X2-D	5310-209-0788	A101 WASHER, LOCK: SAME AS A36		EA	1										A8H1
P-F		A102 CAPACITOR, FIXED, ELECTROLYTIC: 3600-50-1AMP (99392)		EA	1	*	1	1	1	*	1	12	5	5-1	C8
X2-D	5305-889-3000	A103 SCREW, MACHINE; SAME AS A35		EA	1										H1
X2-D	5310-209-0788	A104 WASHER, LOCK: SAME AS A36		EA	1										H1
X2-D	5310-934-9747	A105 NUT, PLAIN, HEXAGON: SAME AS A37'		EA	1										H1
X2-D	5305-984-6209	A106 SCREW, MACHINE; M535206-262 (96906)		EA	2										H2
X2-D	5310-045-3296	A107 WASHER, LOCK; SAME AS A32		EA	2										H2
P-F		A108 CAPACITOR, FIXED, ELECTROLYTIC; 71000-6-8AMPS (99392)		EA	1	*	1	1	*	1	1	12	5	5-1	C9
X2-D	5305-984-6209	A109 SCREW, MACHINE; SAME AS A106		EA	2										H2
X2-D	5310-045-3296	A110 WASHER, LOCK: SAME AS A32		EA	2										H2

SECTION IV. REPAIR PARTS FOR DIRECT SUPPORT, GENERAL SUPPORT, AND DEPOT MAINTENANCE

(1) SMR CODE	(2) FEDERAL STOCK NUMBER	(3) DESCRIPTION REFERENCE NUMBER & MFR CODE	USABLE ON CODE	(4) UNIT OF MEAS	(5) QTY INC IN UNIT	(6) 30-DAY DS MAINT ALLOWANCE (a) 1-20	(b) 21-50	(c) 51-100	(7) 30-DAY GS MAINT ALLOWANCE (a) 1-20	(b) 21-50	(c) 51-100	(8) 1 YR. ALW PER EQUIP CNTGCY	(9) DEPT MAIN ALW PER 100 EQUIP	(10) ILLUSTRATIONS (a) FIG. NO.	(b) ITEM NO. OR REFERENCE DESIGNATION
X2-D	53C5-889-300	A111 SCREW, MACHINE: SAME AS P35		EA	1										H1
X2-D	5310-209-0788	A112 WASHER, LOCK: SAME AS A36		E	1										H1
X2-D	5310-934-9747	A113 NUT, PLAIN, HEXAGON: SAME AS A37		EA											H1
P-D		A114 CARD RACK ASSEMBLY: D8219 (18038)		EA	1								3		A11
X2-D	5305-984-4983	A115 SCREW, MACHINE MS35206-226 (96906)		EA	4										H4
X2-D	5310-045-4007	A116 WASHER, LOCK: SAME AS A13		EA	4										H4
P-H		A117 CONNECTOR, RECEPTACLE, ELEC: MILC21097-4-01 (81349)		EA	3				*	1	1	16	20		A11J1
X2-D	5305-984-4976	A118 SCREW, MACHINE; MS35206-219 (96906)		EA	2										A11H2
X2-D	5310-543-2410	A119 WASHER, LOCK: MS535338-40 (96906)		EA	2										A11H2
X2-D	5310-934-9739	A120 NUT, PLAIN, HEXAG: M535649-242 (96906)		EA	2										A11H2
P-H		A121 CONNECTOR, RECEPTACLE ELEC: SAME AS A117		EA	REF				REF	REF	REF	REF	REF		A11J2
X2-D	5305-984-4976	A122 SCREW, MACHINE		EA	2										A11H2

SECTION IV. REPAIR PARTS FOR DIRECT SUPPORT, GENERAL SUPPORT, AND DEPOT MAINTENANCE

(1) SMR CODE	(2) FEDERAL STOCK NUMBER	(3) DESCRIPTION REFERENCE NUMBER & MFR CODE	USABLE ON CODE	(4) UNIT OF MEAS	(5) QTY INC IN UNIT	(6) 30-DAY DS MAINT ALLOWANCE (a) 1-20	(b) 21-50	(c) 51-100	(7) 30-DAY GS MAINT ALLOWANCE (a) 1-20	(b) 21-50	(c) 51-100	(8) 1 YR. ALW PER EQUIP CNTGCY	(9) DEPT MAIN ALW PER 100 EQUIP	(10) ILLUSTRATIONS (a) FIG. NO.	(b) ITEM NO. OR REFERENCE DESIGNATION
X2-D	5310-543-2410	A123 WASHER, LOCK: SAME AS Al19		EA	22										A11H2
X2-D	5310-934-9739	A124 NUT, PLAIN, HEXAGON; SAME AS A120		EA	22										A11H2
P-H	5935	A125 CONNECTOR, RECEPTACLE, ELEC: SAME AS A117		EA	REF				REF	REF	REF	REF	REF		A11J5
X2-D	5305-984-4976	A126 SCREW, MACHINE: SAME AS Al18		EA	2										A11H2
X2-D	5310-543-2410	A127 WASHER, LOCK: SAME AS Al19		EA	2										A11H2
X2-D	5310-934-9739	A128 NUT, PLAIN, HEXAGON: SAME AS A120		EA	2										A11H2
P-H		A161 CHOKE: SMD667924 (18038)		EA	1				*	*	*	4	5	5-1	L1
X2-D	5305-983-6659	A162 SCREW, MACHINE: MS16998-42 (96906)		EA	4										H4
X2-D	5310-582-5965	A163 WASHER, LOCK: SAME AS A6		EA	4										H4
X2-D	5310-809-4058	A164 WASHER, FLAT: SAME AS A5		EA	4										H4
P-F		A165 CIRCUIT BREAKER: SMC667918 (18038)		EA	1	*	*	1	*	*	1	8	7	5-8	CB1
P-F		A166 CIRCUIT BREAKER: SMC667919 (18038)		EA	1	*	*	1	*	*	1	8	7	5-8	CB2

AMSEL-ME Form 1 Nov 68 **6048** (Previous edition is obsolete) PP-6224/U ESC-FM 4534-68

SECTION IV. REPAIR PARTS FOR DIRECT SUPPORT, GENERAL SUPPORT, AND DEPOT MAINTENANCE

(1) SMR CODE	(2) FEDERAL STOCK NUMBER	(3) DESCRIPTION REFERENCE NUMBER & MFR CODE	USABLE ON CODE	(4) UNIT OF MEAS	(5) QTY INC IN UNIT	(6) 30-DAY DS MAINT ALLOWANCE (a) 1-20	(b) 21-50	(c) 51-100	(7) 30-DAY GS MAINT ALLOWANCE (a) 1-20	(b) 21-50	(c) 51-100	(8) 1 YR. ALW PER EQUIP CNTGCY	(9) DEPT MAIN ALW PER 100 EQUIP	(10) ILLUSTRATIONS (a) FIG. NO.	(b) ITEM NO. OR REFERENCE DESIGNATION
M-D		A167 CLAMP, CAPACITOR: SMB450423 (80063)		EA											MP4
X2-D	5305-984-4983	A168 SCREW, MACHINE; SAME AS A115		EA	2										H2
X2-D	5310-045-4007	A169 WASHER, LOCK: SAME AS A13		EA	2										H2
X2-D	5310-983-8483	A170 WASHER. FLAT: MS27183-5 (96906)		EA	2										H2
M-D		A171 CLAMP CAPACITOR: SM8667955 (18038)		EA	1										MP5
X2-D	5305-984-4983	A172 SCREW, MACHINE: SAME AS A115		EA	3										H3
X2-D	5310-045-4007	A173 WASHER, LOCK: SAME AS A13		EA	3										H3
X2-D	5310-983-8483	A174 WASHER, FLAT: SAME AS A170		EA	3										H3
P-F		A175 CLAMP, CABLE; MS21919-4 (96906)		EA	3	*	*	1	*	*	1	8	9		MP6
X2-D	5305-984-6191	A176 SCREW, MACHINE: SAME AS A8		EA	1										H1
X2-D	5310-045-3299	A177 WASHER, LOCK: SAME AS A9		EA	1										H1
P-F		A178 CLAMP, CABLE: SAME AS A175		EA	REF	REF	REP	REF	REF	REP	REF	REF	REF		MP7

SECTION IV. REPAIR PARTS FOR DIRECT SUPPORT, GENERAL SUPPORT, AND DEPOT MAINTENANCE

(1) SMR CODE	(2) FEDERAL STOCK NUMBER	(3) DESCRIPTION REFERENCE NUMBER & MFR CODE	USABLE ON CODE	(4) UNIT OF MEAS	(5) QTY INC IN UNIT	(6) 30-DAY DS MAINT ALLOWANCE (a) 1-20	(b) 21-50	(c) 51-100	(7) 30-DAY GS MAINT ALLOWANCE (a) 1-20	(b) 21-50	(c) 51-100	(8) 1 YR. ALW PER EQUIP CNTGCY	(9) DEPT MAIN ALW PER 100 EQUIP	(10) ILLUSTRATIONS (a) FIG. NO.	(b) ITEM NO. OR REFERENCE DESIGNATION
X2-D	5305-984-6191	A179 SCREW, MACHINE SAME AS A8		EA	1										H1
X2-D	5310-045-3299	A180 WASHER, LOCK: SAME AS A9		EA	1										H1
P-F		A181 CLAMP, CABLE: SAME AS A175		EA	REF	REF	REF	REF	REF	REF	REF	REF	REF		MP8
X2-D	5305-984-6191	PA182 SCREW, MACHINE; SAME AS A8		EA	1										H1
X2-D	5310-045-3299	A183 WASHER, LOCK: SAME AS A9		EA	1										H1
P-F		A184 CLAMP, CABLE: MS21919-5 (96906)		EA	1	*	*	*	*	*	*	4	3		MP9
X2-D	5305-889-6000	A185 SCREW, MACHINE: SAME AS A35		EA	1										H1
X2-D	5310-045-4007	A186 WASHER, LOCK: SAME AS A13		EA	1										H1
X2-D	5310-983-8483	A187 WASHER, FLAT: SAME AS A170		EA	1										H1
A-H		A189 COMPONENT BOARD ASSEMBLY; SMC667850 (18038)		EA	1									5-2	A1
P-F	5910-078-8110	A190 CAPACITOR, FIXED, ELECTROLYTIC: C125BJ600TP3 (81349)		EA	1	*	1	1	*	1	1	12	10	5-2	A1C1

SECTION IV. REPAIR PARTS FOR DIRECT SUPPORT, GENERAL SUPPORT, AND DEPOT MAINTENANCE

(1) SMR CODE	(2) FEDERAL STOCK NUMBER	(3) DESCRIPTION REFERENCE NUMBER & MFR CODE	USABLE ON CODE	(4) UNIT OF MEAS	(5) QTY INC IN UNIT	(6) 30-DAY DS MAINT ALLOWANCE (a) 1-20	(b) 21-50	(c) 51-100	(7) 30-DAY GS MAINT ALLOWANCE (a) 1-20	(b) 21-50	(c) 51-100	(8) 1 YR. ALW PER EQUIP CNTGCY	(9) DEPT MAIN ALW PER 100 EQUIP	(10) ILLUSTRATIONS (a) FIG. NO.	(b) ITEM NO. OR REFERENCE DESIGNATION
P-F	5910-082-4925	A191 CAPACITOR, FIXED, ELECTROLYTIC: C513BF476K (81349)		EA	1	1	1	2	1	1	2	27	30	5-2	A1C3
P-P	5910-644-6164	A192 CAPACITOR, FIXED, PLASTIC: CP09A1KB104K1 (81349)		EA	1	*	1	1	*	1	1	12	15	5-2	A1C2
P-H	5935	A193 CONNECTOR, PLUG, ELECTRICAL: MILC21097-5-01 (81349)		EA	1				*	1	1	16	20		A1P1
X2-D		A194 SCREW, MACHINE: M535206-323 (96906)		EA	2										A1H2
X2-D	5310-543-2410	A195 WASHER, LOCK: SAME AS A119		EA	2										A1H2
X2-D	5310-934-9739	A196 NUT, PLAIN, HEXAGON: SAME AS A120		EA	2										A1H2
P-F	6625-929-3950	A197 EJECTOR, CARD: SMB667855 (18677)		EA	1	*	1	1	*	1	1	13	15		A1MP2
P-F		A199 HEAT SINK: 1115B (75247)		EA	1	*	*	*	*	*	*	5	3		A1MP12
P-F		A200 PAD, TRANSISTOR: 7717-5DAP (75247)		EA	9	1	3	5	1	3	5	53	68		A1MP3
P-F		A201 PAD, TRANSISTOR: SAME AS A200		EA	REF	REF	REF	REF	REF	REF	REF	REF	REF		A1MP4
P-F		A202 PAD, TRANSISTOR: SAME AS 4200		EA	REF	REF	REF	REF	REF	REF	REF	REF	REF		A1MP5
P-F		A203 PAD, TRANSISTOR: SAME AS A200		EA	REF	REF	REF	RED	REF	REF	REF	REF	REF		A1MP6
P-F		A204 PAD, TRANSISTOR: SAME AS A200		EA	REF	REF	REF	REP	REF	REF	REF	REF	REF		A1MP7

SECTION IV. REPAIR PARTS FOR DIRECT SUPPORT, GENERAL SUPPORT, AND DEPOT MAINTENANCE

(1) SMR CODE	(2) FEDERAL STOCK NUMBER	(3) DESCRIPTION REFERENCE NUMBER & MFR CODE	USABLE ON CODE	(4) UNIT OF MEAS	(5) QTY INC IN UNIT	(6) 30-DAY DS MAINT ALLOWANCE (a) 1-20	(b) 21-50	(c) 51-100	(7) 30-DAY GS MAINT ALLOWANCE (a) 1-20	(b) 21-50	(c) 51-100	(8) 1 YR. ALW PER EQUIP CNTGCY	(9) DEPT MAIN ALW PER 100 EQUIP	(10) ILLUSTRATIONS (a) FIG. NO.	(b) ITEM NO. OR REFERENCE DESIGNATION
P-F		A205 PAD, TRANSISTOR: SAME AS A200		EA	REF	REF	REF	REF	REF	REF	REF	REF	REF		A1MP8
P-F		A206 PAD, TRANSISTOR: SAME AS A200		EA	REF	REF	REF	REF	REF	REF	REF	REF	REF		A1MP9
P-F		A207 PAD, TRANSISTOR; SAME AS A200		EA	REF	REF	REF	REF	REF	REF	REF	REF	REF		A1MP10
P-F		A208 PAD, TRANSISTOR; SAME AS A200		EA	REF	REF	REF	REF	REF	REF	REF	REF	REF		A1MP11
P-D		A209 PRINTED CIRCUIT BOARD: SMD667852 (18038)		EA	1								4		A1MP1
P-F		A210 RELAY: MILR5757-29A008 (81349)		EA	2	*	*	*	*	*	*	10	10	5-2	A1K1
P-F		A211 RELAY: SAME AS A210		EA	REF	REF	REF	REF	REF	REF	REF	REP	REF	5-2	A1K2
P-F	5905-882-0061	A212 RESISTOR, FIXED, FILM: RL20S472J (81349)		EA	1	*	*	*	*	*	*	4	3	5-2	A1R1
P-F	5905-835-6424	A213 RESISTOR, FIXED, FILM: RN60C3831F (81349)		EA	1	*	*	*	*	*	*	4	3	5-2	A1R2
P-F	5905-833-8355	A214 RESISTOR, FIXED, FILM: RN60C5901F (81349)		EA	1	*	*	*	*	*	*	4	3	5-2	A1R3
P-F	5905-717-3342	A215 RESISTOR, FIXED, FILM: RL205182J (81349)		EA	2	*	*	1	*	*	1	8	9	5-2	A1R4
P-F	5905-717-3342	A216 RESISTOR, FIXED, FILM: SAME AS A215		EA	REF	REF	REF	REF	REF	REF	REF	REF	REF	5-2	A1R13
P-F	5905-836-2859	A217 RESISTOR, FIXED, FILM.: RN60C9761F (81349)		EA	1	*	*	*	*	*	*	4	3	5-2	A1R5
P-F	5905-810-7778	A218 RESISTOR, FIXED, FILM: RN60C1542F (81349)		EA	1	*	*	*	*	*	*	4	3	5-2	A1P6

SECTION IV. REPAIR PARTS FOR DIRECT SUPPORT, GENERAL SUPPORT, AND DEPOT MAINTENANCE

(1) SMR CODE	(2) FEDERAL STOCK NUMBER	(3) DESCRIPTION REFERENCE NUMBER & MFR CODE	USABLE ON CODE	(4) UNIT OF MEAS	(5) QTY INC IN UNIT	(6) 30-DAY DS MAINT ALLOWANCE (a) 1-20	(b) 21-50	(c) 51-100	(7) 30-DAY GS MAINT ALLOWANCE (a) 1-20	(b) 21-50	(c) 51-100	(8) 1 YR. ALW PER EQUIP CNTGCY	(9) DEPT MAIN ALW PER 100 EQUIP	(10) ILLUSTRATIONS (a) FIG. NO.	(b) ITEM NO. OR REFERENCE DESIGNATION
P-F	5905-762-3667	A219 RESISTOR, FIXED, FILM: RL20SL03J (81349)		EA	*	*	*	*	*	*	*	4	3	5-2	A1R7
P-F	5905-767-7583	A220 RESISTOR, FIXED, FILM: RL205752J (81349)		EA	1	*	*	*	*	*		7	6	5-2	A1R10
P-F	5905-771-2295	A221 RESISTOR, FIXED, FILM: RL205272G (81349)		EA	1	*	1	1	*	1	1	12	15	5-2	A1R11
P-F	5905-9Cl-4016	A222 RESISTOR, FIXED, FILM: RL20S102J (81349)		ES	1	*	*	*	*	*	*	4	3	5-2	A1R12
P-F	5905-882-0070	A223 RESISTOR, FIXED, FILM: RL205562J (81349)		EA	1	*	*	*	*	*	*	4	3	5-2	A1R14
P-F	5905-767-3230	A224 RESISTOR, FIXED, FILM: RL205393J (81349)		EA	1	*	*	*	*	*	*	4	3	5-2	A1R15
P-F	5905-767-2842	A225 RESISTOR, FIXED, FILM; RL205681J (81349)		EA	1	*	*	*	*	*	*	7	6	5-2	A1R16
P-F	5905-767-3229	A226 RESISTOR, FIXED, FILM: RL205392J (81349)		EA	2	*	1	1	*	1	1	12	15	5-2	A1R17
P-F	5905-767-3229	A227 RESISTOR, FIXED. FILM: SAME AS A226		EA	REF	REF	REF	REF	REF	REF	REF	REF	REF	5-2	A1R18
P-F	5905-717-3339	A228 RESISTOR, FIXED, FILM: RL20S510J (81349)		EA	1	*	*	*	*	*	*	4	3	5-2	A1R19
P-F	5905-768-5922	A229 RESISTOR, FIXED, FILM: RL20S152J (81349)		EA	2	*	*	*	*	*	*	7	6	5-2	A1R21

SECTION IV. REPAIR PARTS FOR DIRECT SUPPORT, GENERAL SUPPORT, AND DEPOT MAINTENANCE

(1) SMR CODE	(2) FEDERAL STOCK NUMBER	(3) DESCRIPTION REFERENCE NUMBER & MFR CODE	USABLE ON CODE	(4) UNIT OF MEAS	(5) QTY INC IN UNIT	(6) 30-DAY DS MAINT ALLOWANCE (a) 1-20	(b) 21-50	(c) 51-100	(7) 30-DAY GS MAINT ALLOWANCE (a) 1-20	(b) 21-50	(c) 51-100	(8) 1 YR. ALW PER EQUIP CNTGCY	(9) DEPT MAIN ALW PER 100 EQUIP	(10) ILLUSTRATIONS (a) FIG. NO.	(b) ITEM NO. OR REFERENCE DESIGNATION
P-F	5905-768-5922	A230 RESISTOR, FIXED, FILM: SAME AS A229		EA	REF	REF	REF	REF	REF	REF	REF	REF	REF	5-2	A1R32
P-F	5905-766-8366	A231 RESISTOR, FIXED, FILM: RL20S512J (81349)		EA	1	*	*	*	*	*	*	4	3	5-2	A1R22
P-F	5905-080-5016	A232 RESISTOR, FIXED, WIREWOUND: RW69V161 (81349)		EA	1	*	*	*	*	*	*	5	5	5-2	A1R20
P-F	5905-880-0872	A233 RESISTOR, VARIABLE: RT22C2P103 (81349)		EA	1	*	*	*	*	*	*	5	6	5-2	A1R9
P-F	5961-957-6855	A234 SEMICONDUCTOR, DEVICE, DIODE: SAME AS A234		EA	REF	REF	REF	REF	REF	REF	REF	REF	REF	5-2	A1CR2
P-F	5961-957-6855	A235 SEMICONDUCTOR, DEVICE DIODE: SAME AS 234		EA	REF	REF	REF	REF	REF	REF	REF	REF	REF	5-2	A1CR3
P-F	5961-957-6855	A236 SEMICONDUCTOR, DEVICE DIODE: SAME AS 234		EA	REF	REF	REF	REF	REF	REF	REF	REF	REF	5-2	A1CR4
P-F	5961-957-6855	A237 SEMICONDUCTOR, DEVICE DIODE: SAME AS 234		EA	REF	REF	REF	REF	REF	REF	REF	REF	REF	5-2	A1CR5
P-F		A238 SEMICONDUCTOR, DEVICE DIODE: JAN1N937B (81350)		EA	1	*	*	1	*	*	1	10	10	5-2	A1CR5
P-F	5961-087-6047	A239 SEMICONDUCTOR DEVICE, DIODE: JAN1N635(81349)		EA	8	1	3	5	1	3	5	59	76	5-2	A1CR6
P-F	5961-957-6855	A240 SEMICONDUCTOR, DEVICE, DIODE: SAME AS 239		EA	REF	REF	REF	REF	REF	REF	REF	REF	REF	5-2	A1CR7
P-F	5961-957-6855	A241 SEMICONDUCTOR, DEVICE, DIODE: SAME AS 239		EA	REF	REF	REF	REF	REF	REF	REF	REF	REF	5-2	A1CR8
P-F	5961-957-6855	A242 SEMICONDUCTOR, DEVICE, DIODE: SAME AS 239		EA	REF	REF	REF	REF	REF	REF	REF	REF	REF	5-2	A1CR9
P-F	5961-957-6855	A243 SEMICONDUCTOR, DEVICE, DIODE: SAME AS 239		EA	REF	REF	REF	REF	REF	REF	REF	REF	REF	5-2	A1CR10
P-F	5961-957-6855	A244 SEMICONDUCTOR, DEVICE, DIODE: SAME AS 239		EA	REF	REF	REF	REF	REF	REF	REF	REF	REF	5-2	A1CR11

SECTION IV. REPAIR PARTS FOR DIRECT SUPPORT, GENERAL SUPPORT, AND DEPOT MAINTENANCE

(1) SMR CODE	(2) FEDERAL STOCK NUMBER	(3) DESCRIPTION REFERENCE NUMBER & MFR CODE	USABLE ON CODE	(4) UNIT OF MEAS	(5) QTY INC IN UNIT	(6) 30-DAY DS MAINT ALLOWANCE (a) 1-20	(b) 21-50	(c) 51-100	(7) 30-DAY GS MAINT ALLOWANCE (a) 1-20	(b) 21-50	(c) 51-100	(8) 1 YR. ALW PER EQUIP CNTGCY	(9) DEPT MAIN ALW PER 100 EQUIP	(10) ILLUSTRATIONS (a) FIG. NO.	(b) ITEM NO. OR REFERENCE DESIGNATION
P-F	5961-087-6047	A245 SEMICONDUCTOR DEVICE, DIODE: SAME AS A239		EA	REF	REF	REF	REF	REF	REF	REF	REF	REF	5-2	A1CR12
P-F	i5961-087-6047	A246 SEMICONDUCTOR DEV ICE, DIODE: SAME AS A239		EA	REF	REF	REF	REF	REF	REF	REF	REF	REF	5-2	A1CR13
P2-F	5940-280-0601	A247 TERMINAL, STUD: 2027-2 (71279)		EA	2										A1TP1
X2-D	5940-280-0601	A248 TERMINAL, STUD: SAME AS A247		EA	REF										A1TP2
P-F	5961-853-2601	249 TRANSISTOR: JAN2NL893 (81350)		EA	6	1	2	3	1	2	3	40	52	5-2	A1Q1
P-F	5961-853-2601	A250 TRANSISTOR: SAME AS A249		EA	REF	REF	REF	REF	REF	REF	REF	REF	REF	5-2	A2Q2
P-F	5961-853-2601	A251 TRANSISTOR: SAME AS A249		EA	REF	REF	REF	REF	REF	REF	REF	REF	REF	5-2	A2Q9
P-F	5961-853-2601	A252 TRANSISTOR SAME AS A249		EA	REF	REF	REF	REF	REF	REF	REF	REF	REF	5-2	A2Q5
P-F	5961-853D-2601	A253 TRANSISTOR; SAME AS A249		EA	REF	REF	REF	REF	REF	REF	REF	REF	REF	5-2	A2Q6
P-F	5961-853-2601	A254 TRANSISTOR; SAME AS A249		EA	REF	REF	REF	REF	REF	REF	REF	REF	REF	5-2	A2Q7
P-F	5961-880-4779	A255 TRANSISTOR: JAN2N2905 (81350)		EA	3	*	1	1	*	1	1	16	20	5-2	A1Q3
P-F	5961-880-4779	A256 TRANSISTOR; SAME AS A255		EA	REF	REF	REF	REF	REF	REF	REF	REF	REF	5-2	A1Q4

SECTION IV. REPAIR PARTS FOR DIRECT SUPPORT, GENERAL SUPPORT, AND DEPOT MAINTENANCE (CONTINUED)

	(2) FEDERAL STOCK NUMBER	(3) DESCRIPTION REFERENCE NUMBER & MFR/ CODE	USABLE ON CODE		(4) UNIT OF MEAS	(5) QTY INC IN UNIT	(6) 30-DAY DS MAINT ALLOWANCE			(7) 30-DAY GS MAINT ALLOWANCE			(8) 1-YR ALW PER EQUIP CNTGCY	(9) DEPOT MAINT ALW PER 100 EQUIP	(10) ILLUSTRATIONS	
							(a) 1-20	(b) 21-50	(c) 51-100	(a) 1-20	(b) 21-50	(c) 51-100			(a) FIG. NO.	(b) ITEM NO. OR REFERENCE DESIGNATION
P-F	5961-880-4779	A257		TRANSISTOR: SAME AS A255	EA	REF	REF	REF	REF	REF	REF	REF	REF	REF	5-2	A1Q8
A-H		A258		COMPONENT BOARD ASSEMBLY: SMC667858 (18038)	EA	1									5-3	A2
P-F	5910-109-1987	A258A		CAPACITOR, FIXED: CK63AY103M (81349)	EA	6	*	*	*	*	*	*	*	*	5-3	A2C8
P-F	5910-109-1987	A258B		CAPACITOR, FIXED: SAME AA A258A	EA	REF	REF	REF	REF	REF	REF	REF	REF	REF	5-3	A2C9
P-F	5910-109-1987	A258C		CAPACITOR, FIXED: SAME AS A258A	EA	REF	REF	REF	REF	REF	REF	REF	REF	REF	5-3	A2C10
P-F	5910-109-1987	A258E		CAPACITOR, FIXED: SAME AS A258A	EA	REF	REF	REF	REF	REF	REF	REF	REF	REF	5-3	A2C11
P-F	5910-109-1987	A258F		CAPACITOR, FIXED: SAME AS A258A	EA	REF	REF	REF	REF	REF	REF	REF	REF	REF	5-3	A2C12
P-F	5910-109-1987	A258G		CAPACITOR, FIXED: SAME AS A258A	EA	REF	REF	REF	REF	REF	REF	REF	REF	REF	5-3	A2C13
P-F	5910-881-8945	A259		CAPACITOR, FIXED, CERAMIC: CK06BX222K (81349)	EA	1	*	*	*	*	*	*	4	5	5-3	A2C1
P-F	5910-988-4415	A260		CAPACITOR, FIXED, CERAMIC: CK05BX470K (81349)	EA	1	*	*	*	*	*	*	4	5	5-3	A2C3
P-F	5910-644-6164	A261		CAPACITOR, FIXED, PAPER: SAME AS A192	EA	3	REF	REF	REF	REF	REF	REF	REF	REF	5-3	A2C2
P-F	5910-644-6164	A262		CAPACITOR, FIXED, PAPER: SAME AS A192	EA	REF	REF	REF	REF	REF	REF	REF	REF	REF	5-3	A2C4
P-F	5910-644-6164	A263		CAPACITOR , FIXED, PAPER: SAME AS A192	EA	REF	REF	REF	REF	REF	REF	REF	REF	REF	5-3	A2C5
P-F	5910-642-6275	A264		CAPACITOR, FIXED, PAPER: CP09A1KC223K1 (81349)	EA	1	*	*	*	*	*	*	4	5	5-3	A2C7
P-F	5905-059-3903	A264A		COIL, RF: MS75008-22 (96906)	EA	6	*	*	*	*	*	*	*	*	5-3	A2L1
P-F	5905-059-3903	A264B		COIL, RF: SAME AS A264A	EA	REF	REF	REF	REF	REF	REF	REF	REF	REF	5-3	A2L2
P-F	5905-059-3903	A264C		COIL, RF: SAME AS A264A	EA	REF	REF	REF	REF	REF	REF	REF	REF	REF	5-3	A2L3
P-F	5905-059-3903	.A264E		COIL, RF: SAME AS A264A	EA	REF	REF	REF	REF	REF	REF	REF	REF	REF	5-3	A2L4
P-F	5905-059-3903	A264F		COIL, RF: SAME AS A264A	EA	REF	REF	REF	REF	REF	REF	REF	REF	REF	5-3	A2L5
P-F	5905-059-3903	A264G		COIL, RF: SAME AS A264A	EA	REF	REF	REF	REF	REF	REF	REF	REF	REF	5-3	A2L6
P-F		A265		CONNECTOR, PLUG: SAME AS A193	EA	1	REF	REF	REF	REF	REF	REF	REF	REF		A2P1
X2-D		A266		SCREW, MACHINE: SAME AS A194	EA	2										A2H2
X2-D	5310-543-2410	A267		WASHER, LOCK: SAME AS A119	EA	2										A2H2
X2-D	5310-934-9739	A268		NUT, PLAIN, HEXAGON: SAME AS A120	EA	2										A2H2

SECTION IV. REPAIR PARTS FOR DIRECT SUPPORT, GENERAL SUPPORT, AND DEPOT MAINTENANCE

(1) SMR CODE	(2) FEDERAL STOCK NUMBER	(3) DESCRIPTION REFERENCE NUMBER & MFR CODE	USABLE ON CODE	(4) UNIT OF MEAS	(5) QTY INC IN UNIT	(6) 30-DAY DS MAINT ALLOWANCE (a) 1-20	(b) 21-50	(c) 51-100	(7) 30-DAY GS MAINT ALLOWANCE (a) 1-20	(b) 21-50	(c) 51-100	(8) 1 YR. ALW PER EQUIP CNTGCY	(9) DEPT MAIN ALW PER 100 EQUIP	(10) ILLUSTRATIONS (a) FIG. NO.	(b) ITEM NO. OR REFERENCE DESIGNATION
P-F	6625-929-3950	A269 EJECTOR, CARD: SAME AS A197		EA	1	REF	REF	REF	REF	REF	REF	REF	REF		A2MP2
P-F		A271 INTEGRATED CIRCUIT; AMPLIFIER: SMD667862 (18038)		EA	1	*	*	1	*	*	1	10	7		A2A1
P-F		A272 PAD, TRANSISTOR: SAME AS A200		EA	2	REF	REF	REF	REF	REF	REF	REF	REF		A2MP3
P-F		A273 PAD, TRANSISTOR: SAME AS A200		EA	REF	REF	REF	REF	REF	REF	REF	REF	REF		A2MP4
P-D		A274 PRINTED CIRCUIT BOARD: SMD667860 (18038)		EA	1								3		A2MP1
P-F		A275 RESISTOR, FIXED, FILM: RL20S223J (81349)		EA	1	*	*	*	*	*	*	4	5	5-3	A2R1
P-F		A276 RESISTOR, FIXED, FILM: RL20S122J (81349)		EA	1	*	*	*	*	*	*	4	5	5-3	A2R2
P-F	5905-765-5628	A277 RESISTOR, FIXED, FILM: RL20S752G (81349)		EA	1	*	*	*	*	*	*	7	6	5-3	A2R3
P-F	5905-900-2089	A278 RESISTOR, FIXED, FILM: RL20S101J (81349)		EA	2	*	1	1	*	1	1	16	16	5-3	A2R4
P-F	5905-900-2089	A279 RESISTOR, FIXED, FILM; SAME AS A278		EA	REF	REF	REF	REF	REF	REF	REF	REF	REF	5-3	A2R5
P-F	5905-767-3229	A280 RESISTOR, FIXED, FILM: SAME AS A226		EA	1	REF	REF	REF	REF	REF	REF	REF	REF	5-3	A2R6
P-F	5905-771-2295	A281 RESISTOR, FIXED, FILM: SAME AS A221		EA	3	REF	REF	REF	REF	REF	REF	REF	REF	5-3	A2R7

SECTION IV. REPAIR PARTS FOR DIRECT SUPPORT, GENERAL SUPPORT, AND DEPOT MAINTENANCE

(1) SMR CODE	(2) FEDERAL STOCK NUMBER	(3) DESCRIPTION REFERENCE NUMBER & MFR CODE	USABLE ON CODE	(4) UNIT OF MEAS	(5) QTY INC IN UNIT	(6) 30-DAY DS MAINT ALLOWANCE (a) 1-20	(b) 21-50	(c) 51-100	(7) 30-DAY GS MAINT ALLOWANCE (a) 1-20	(b) 21-50	(c) 51-100	(8) 1 YR. ALW PER EQUIP CNTGCY	(9) DEPT MAIN ALW PER 100 EQUIP	(10) ILLUSTRATIONS (a) FIG. NO.	(b) ITEM NO. OR REFERENCE DESIGNATION
P-F	5905-771-2295	A282 RESISTOR, FIXED, FILM: SAME AS A221		EA	REF	REF	REF	REF	REF	REF	REF	REF	REF	5-3	A2R9
P-F	5905-771-2295	A283 RESISTOR, FIXED, FILM: SAME AS A221		EA	REF	REF	REF	REF	REF	REF	REF	REF	REF	5-3	A2R18
P-F	5905-901-4016	A284 RESISTOR, FIXED, FILM: SAME AS A222		EA	3	REF	REF	REF	REF	REF	REF	REF	REF	5-3	A2R8
P-F	5905-901-4016	A285 RESISTOR, FIXED, FILM: SAME AS A222		EA	REF	REF	REF	REF	REF	REF	REF	REF	REF	5-3	A2R19
P-F	5905-901-4016	A286 RESISTOR, FIXED, FILM: SAME AS A222		EA	REF	REF	REF	REF	REF	REF	REF	REF	REF	5-3	A2R20
P-F	5905-834-0387	A287 RESISTOR, FIXED, FILM: RN65C3651F (81349)		EA	1	*	*	*	*	*	*	4	5	5-3	A2R11
P-F	5905-985-6056	A288 RESISTOR, FIXED, FILM: RL205100J (81349)		EA	1	*	*	*	*	*	*	4	5	5-3	A2R12
P-F	5905-755-8132	A289 RESISTOR, FIXED, FILM: RN60C1003F (81349)		EA	1	*	*	*	*	*	*	4	5	5-3	A2R13
P-F	5905-844-1423	A290 RESISTOR, FIXED, FILM: RN60C7500F (81349)		EA	1	*	*	*	*	*	*	4	5	5-3	A2R14
P-F	5905-819-6925	A291 RESISTOR, FIXED, FILM: RN65C2211F (81349)		EA	1	*	*	*	*	*	*	4	5	5-3	A2R16
P-F	5905-686-3379	A292 RESISTOR, FIXED, FILM: RN60C1002F (81349)		EA	1	*	*	*	*	*	*	4	5	5-3	A2R21
P-F	5905-752-3597	A293 RESISTOR, FIXED, FILM: RN60C1001F (81349)		EA	1	*	*	*	*	*	*	4	5	5-3	A2R22

SECTION IV. REPAIR PARTS FOR DIRECT SUPPORT, GENERAL SUPPORT, AND DEPOT MAINTENANCE

(1) SMR CODE	(2) FEDERAL STOCK NUMBER	(3) DESCRIPTION REFERENCE NUMBER & MFR CODE	USABLE ON CODE	(4) UNIT OF MEAS	(5) QTY INC IN UNIT	(6) 30-DAY DS MAINT ALLOWANCE (a) 1-20	(b) 21-50	(c) 51-100	(7) 30-DAY GS MAINT ALLOWANCE (a) 1-20	(b) 21-50	(c) 51-100	(8) 1 YR. ALW PER EQUIP CNTGCY	(9) DEPT MAIN ALW PER 100 EQUIP	(10) ILLUSTRATIONS (a) FIG. NO.	(b) ITEM NO. OR REFERENCE DESIGNATION
P-F	5905-061-2089	A294 RESISTOR, FIXED, WIREWOUND: RW69V510 (81349)		EA	1	*	*	1	*	*	1	10	10	5-3	A2R17
P-F	5905-067-9079	A295 RESISTOR, VARIABLE: RT22C2P102 (81349)		EA	2	*	1	1	*	1	1	13	15	5-3	A2R10
P-F	5905-067-9079	A296 RESISTOR, VARIABLE: SAME AS A295		EA	REF	REF	REF	REF	REF	REF	REF	REF	REF	5-3	A2R15
P-F		A299 SEMICONDUCTOR DEVICE, DIODE: SAME AS A238		EA	1	REF	REF	REF	REF	REF	REF	REF	REF	5-3	A2CR1
P-F	5961-087-6047	A300 SEMICONDUCTOR, DEVICE, DIODE: SAME AS A239		EA	4	REF	REF	REF	REF	REF	REF	REF	REF	5-3	A2CR2
P-F	5961-087-6047	A301 SEMICONDUCTOR DEVICE, DIODE: SAME AS A239		EA	REF	REF	REF	REF	REF	REF	REF	REF	REF	5-3	A2CR3
P-F	5961-087-6047	A302 SEMICONDUCTOR DEVICE, DIODE: SAME AS A239		EA	REF	REF	REF	REF	REF	REF	REF	REF	REF	5-3	A2CR4
P-F	5961-087-6047	A303 SEMICONDUCTOR DEVICE, DIODE: SAME AS A239		EA	REF	REF	REF	REF	REF	REF	REF	REF	REF	5-3	A2CR7
P-F	5961-957-6855	A304 SEMICONDUCTOR, DEVICE, DIODE: SAME AS A234		EA	1	REF	REF	REF	REF	REF	REF	REF	REF	5-3	A2CR6
P-F	5940-280-0601	A305 TERMINAL, STUD: SAME AS A247		EA	1	REF	REF	REF	REF	REF	REF	REF	REF		A2TP1
P-F	5961-853-2601	A306 TRANSISTOR: SAME AS A249		EA	2	REF	REF	REF	REF	REF	REF	REF	REF	5-3	A2Q1
P-F	5961-853-2601	A307 TRANSISTOR: SAME AS A249		EA	REF	REF	REF	REF	REF	REF	REF	REF	REF	5-3	A2Q4

SECTION IV. REPAIR PARTS FOR DIRECT SUPPORT, GENERAL SUPPORT, AND DEPOT MAINTENANCE

(1) SMR CODE	(2) FEDERAL STOCK NUMBER	(3) DESCRIPTION REFERENCE NUMBER & MFR CODE	USABLE ON CODE	(4) UNIT OF MEAS	(5) QTY INC IN UNIT	(6) 30-DAY DS MAINT ALLOWANCE (a) 1-20	(b) 21-50	(c) 51-100	(7) 30-DAY GS MAINT ALLOWANCE (a) 1-20	(b) 21-50	(c) 51-100	(8) 1 YR. ALW PER EQUIP CNTGCY	(9) DEPT MAIN ALW PER 100 EQUIP	(10) ILLUSTRATIONS (a) FIG. NO.	(b) ITEM NO. OR REFERENCE DESIGNATION
P-F	5961-880-4779	A308 TRANSISTOR: SAME AS A255		EA	1	REF	REF	REF	REF	REF	REF	REF	REF	5-3	A2Q2
P-F	5961-104-8378	A309 TRANSISTOR: 2N2920 (81349)		EA	1	*	*	*	*	*	*	10	10	5-3	A2Q3
A-H		A310 COMPONENT BOARD ASSEMBLY: SMC667863 (18038)		EA	1									5-6	A5
P-F	5910-644-6164	A311 CAPACITOR, FIXED, PAPER: SAME AS A192		EA	1	REF	REF	REF	REF	REF	REF	REF	REF	5-6	A5C2
P-F		A312 CAPACITOR, FIXED, PLASTIC: CH08A1RA475M (81349)		EA	1	*	*	*	*	*	*	5	5	5-6	A5C1
P-H		A313 CONNECTOR, RECEPTACLE, ELEC; SAME AS A193		EA	1				REF	REF	REF	REF	REF		A5J1
X2-D		A314 SCREW, MACHINE, SAME AS A194		EA	2										A5H2
X2-D	5310-543-2410	A315 WASHER, LOCK; SAME AS A119		EA	2										A5H2
X2-D	5310-934-9739	A316 NUT, PLAIN, HEXAGON: SAME AS A120		EA	2										A5H3
P-H	6225-929-3950	A317 EJECTOR, CARD: SAME AS A197		EA	1				REF	REF	REF	REF	REF		A5MP2
P-F		A319 PAD, TRANSISTOR: SAME AS A200		EA	4	REF	REF	REF	REF	REF	REF	REF	REF		A5MP3
P-F		A320 PAD, TRANSISTOR: SAME AS A200		EA	REF	REF	REF	REF	REF	REF	REF	REF	REF		A5MP4

SECTION IV. REPAIR PARTS FOR DIRECT SUPPORT, GENERAL SUPPORT, AND DEPOT MAINTENANCE

(1) SMR CODE	(2) FEDERAL STOCK NUMBER	(3) DESCRIPTION REFERENCE NUMBER & MFR CODE	USABLE ON CODE	(4) UNIT OF MEAS	(5) QTY INC IN UNIT	(6) 30-DAY DS MAINT ALLOWANCE (a) 1-20	(b) 21-50	(c) 51-100	(7) 30-DAY GS MAINT ALLOWANCE (a) 1-20	(b) 21-50	(c) 51-100	(8) 1 YR. ALW PER EQUIP CNTGCY	(9) DEPT MAIN ALW PER 100 EQUIP	(10) ILLUSTRATIONS (a) FIG. NO.	(b) ITEM NO. OR REFERENCE DESIGNATION
P-F		A321 PAD, TRANSISTOR: SAME AS A200		EA	REF	REF	REF	REF	REF	REF	REF	REF	REF		A5MP5
P-F		A322 PAD, TRANSISTOR: SAME AS A200		EA	REF	REF	REF	REF	REF	REF	REF	REF	REF		A5MP6
P-F		A323 PRINTED CIRCUIT BOARD: SMD667865 (18038)		EA	1								3		A5MP1
P-F	5905-767-3230	A324 RESISTOR, FIXED, FILM: SAME AS A222		EA	2	REF	REF	REF	REF	REF	REF	REF	REF	5-6	A5R1
P-F	5905-767-3230	A325 RESISTOR, FIXED, FILM: SAME AS A222		EA	REF	REF	REF	REF	REF	REF	REF	REF	REF	5-6	A5R12
P-F	5905-771-2295	A326 RESISTOR, FIXED, FILM: SAME AS A221		EA	1	REF	REF	REF	REF	REF	REF	REF	REF	5-6	A5R2
P-F	5905-767-3229	A327 RESISTOR, FIXED, FILM: SAME AS A226		EA	2	REF	REF	REF	REF	REF	REF	REF	REF	5-6	A5R3
P-F	5905-767-2842	A328 RESISTOR, FIXED, FILM: SAME AS A225		EA	1	REF	REF	REF	REF	REF	REF	REF	REF	5-6	A5R5
P-F	5905-767-2444	A329 RESISTOR, FIXED, FILM: RL20S162J (81349)		EA	1	*	*	*	*	*	*	4	5	5-6	A5R6
P-F	5905-717-3342	A330 RESISTOR, FIXED, FILM: SAME AS A215		EA	1	REF	REF	REF	REF	REF	REF	REF	REF	5-6	A5R7
P-F	5905-775-0633	A331 RESISTOR, FIXED, FILM: RL20S561J (81349)		EA	2	*	*	*	*	*	*	5	6	5-6	A5R8
P-F	5905-775-0633	A332 RESISTOR, FIXED, FILM: SAME AS A331		EA	REF	REF	REF	REF	REF	REF	REF	REF	REF	5-6	A5R13

SECTION IV. REPAIR PARTS FOR DIRECT SUPPORT, GENERAL SUPPORT, AND DEPOT MAINTENANCE

(1) SMR CODE	(2) FEDERAL STOCK NUMBER	(3) DESCRIPTION REFERENCE NUMBER & MFR CODE	USABLE ON CODE	(4) UNIT OF MEAS	(5) QTY INC IN UNIT	(6) 30-DAY DS MAINT ALLOWANCE (a) 1-20	(b) 21-50	(c) 51-100	(7) 30-DAY GS MAINT ALLOWANCE (a) 1-20	(b) 21-50	(c) 51-100	(8) 1 YR. ALW PER EQUIP CNTGCY	(9) DEPT MAIN ALW PER 100 EQUIP	(10) ILLUSTRATIONS (a) FIG. NO.	(b) ITEM NO. OR REFERENCE DESIGNATION
P-F	5905-767-3229	A333 RESISTOR, FIXED, FILM: SAME AS A226		EA	REF	REF	REF	REF	REF	REF	REF	REF	REF	5-6	A5R10
P-F	5905-067-9079	A334 RESISTOR, VARIABLE: SAME AS A295		EA	1	REF	REF	REF	REF	REF	REF	REF	REF	5-6	A5R9
P-F	5961-087-6047	A335 SEMICONDUCTOR DEVICE, DIODE: SAME AS A239		EA	3	REF	REF	REF	REF	REF	REF	REF	REF	5-6	A5CR1
P-F	5961-087-6047	A336 SEMICONDUCTOR DEVICE, DIODE: SAME AS A239		EA	REF	REF	REF	REF	REF	REF	REF	REF	REF	5-6	A5CR2
P-F	5961-087-6047	A337 SEMICONDUCTOR DEVICE, DIODE: SAME AS A239		EA	REF	REF	REF	REF	REF	REF	REF	REF	REF	5-6	A5CR4
P-F	5961-836-0382	A338 SEMICONDUCTOR DEVICE, DIODE: JAN1N3022B (81350)		EA	1	*	*	*	*	*	*	5	5	5-6	A5CR3
X2-D	5940-280-0601	A339 TERMINAL, STUD: SAME AS A247		EA	1										A5TP1
P-F	5961-853-2601	A340 TRANSISTOR: SAME AS A249		EA	3	REF	REF	REF	REF	REF	REF	REF	REF	5-6	A5Q1
P-F	5961-853-2601	A341 TRANSISTOR: SAME AS A249		EA	REF	REF	REF	REF	REF	REF	REF	REF	REF	5-6	A5Q2
P-F	5961-853-2601	A342 TRANSISTOR: SAME AS A249		EA	REF	REF	REF	REF	REF	REF	REF	REF	REF	5-6	A5Q3
A-H		A343 COVER ASSEMBLY: SMD667930 (18038)		EA	1										A9
P-D		A344 COVER: SMD667931 (18038)		EA	1								2		A9MP1

SECTION IV. REPAIR PARTS FOR DIRECT SUPPORT, GENERAL SUPPORT, AND DEPOT MAINTENANCE

(1) SMR CODE	(2) FEDERAL STOCK NUMBER	(3) DESCRIPTION REFERENCE NUMBER & MFR CODE	USABLE ON CODE	(4) UNIT OF MEAS	(5) QTY INC IN UNIT	(6) 30-DAY DS MAINT ALLOWANCE (a) 1-20	(b) 21-50	(c) 51-100	(7) 30-DAY GS MAINT ALLOWANCE (a) 1-20	(b) 21-50	(c) 51-100	(8) 1 YR. ALW PER EQUIP CNTGCY	(9) DEPT MAIN ALW PER 100 EQUIP	(10) ILLUSTRATIONS (a) FIG. NO.	(b) ITEM NO. OR REFERENCE DESIGNATION
X2-D	5305-985-3674	A345 SCREW, CAPTIVE; 6235SS0632 (06540)		EA	16										A9H16
X2-D	5310-531-9514	A346 WASHER, FLAT: AN960C6 (88044)		EA	16										A9H16
M-D		A347 GASKET, RUBBER SMD667932 (18038)		EA	1										A9MP2
M-H		A348 LABEL, IDENTIFICATION: SMD667933 (18038)		EA	1										A9MP3
M-H		A349 LABEL, IDENTIFICATION: SMD667934 (18038)		EA	1										A9MP4
M-H		A350 PAD, SHOCK: SMB667940 (18038)		EA	2										A9MP5
M-H		A351 PAD, SHOCK: SAME AS A350		EA	REF										A9MP6
X2-D		A355 CLAMP, CABLE: MS21919-WG-11 (96906)		EA	1										MP11
X2-D	5305-984-6191	A356 SCREW, MACHINE; SAME AS A8		EA	1										H1
X2-D	5310-045-3299	A357 WASHER, LOCK: SAME AS A9		EA	1										H1
P-H		A358 CONNECTOR, RECEPTACLE, ELEC: PT07C14-5P (77820)		EA	1				*	*	*	4	5		J3
		A359D													

SECTION IV. REPAIR PARTS FOR DIRECT SUPPORT, GENERAL SUPPORT, AND DEPOT MAINTENANCE (CONTINUED)

(1) SMR CODE	(2) FEDERAL STOCK NUMBER	(3) DESCRIPTION REFERENCE NUMBER & MFR/ CODE	USABLE ON CODE	(4) UNIT OF MEAS	(5) QTY INC IN UNIT	(6) 30-DAY DS MAINT ALLOWANCE (a) 1-20	(b) 21-50	(c) 51-100	(7) 30-DAY GS MAINT ALLOWANCE (a) 1-20	(b) 21-50	(c) 51-100	(8) 1-YR ALW PER EQUIP CNTGCY	(9) DEPOT MAINT ALW PER 100 EQUIP	(10) ILLUSTRATIONS (a) FIG. NO.	(b) ITEM NO. OR REFERENCE DESIGNATION
P-H	5935-071-1235	A360	CONNECTOR, RECEPTACLE, ELEC: MW20FMA00 (81349)	EA	1							4	5		J7
P-H		A361	CONNECTOR, RECEPTACLE, ELEC: MW20MMA00 (81349)	EA	1							4	5		J8
P-D		A361A	FILTER, RF: SMC667851 (18038)	EA	1								*	5-1	FL2
P-D		A362	FILTER: SMC667925 (18038)	EA	1								3		FL1
X2-D		A363	SCREW, MACHINE: SAME AS A15	EA	4										H4
X2-D	5310-209-0786	A364	WASHER, LOCK: MS35335-33 (96906)	EA	2										H2
X2-D	5310-997-1888	A365	NUT, PLAIN, HEXAGON: MS35649-2252 (96906)	EA	2										H2
M-D		A366	GUARD, SWITCH: SMB667945 (18038)	EA	1										MP12
X2-D	5305-922-6286	A367	SCREW, MACHINE: MS35275-228 (96906)	EA	2										H2
X2-D	5310-577-5506	A368	WASHER, FLAT: MS15795-306 (96906)	EA	2										H2
X2-D		A369	HOUSING, CASTING SMD667936 (18038)	EA	1										MP13
P-O	6240-155-7836	A370	LAMP, INCANDESCENT: MS25237-327 (96906)	EA	3	1	1	2	1	1	2	27	150	5-8	DS1
P-O	6240-155-7836	A371	LAMP, INCANDESCENT: SAME AS A370	EA	REF	REF	REF	REF	REF	REF	REF	REF	REF	5-8	DS2

SECTION IV. REPAIR PARTS FOR DIRECT SUPPORT, GENERAL SUPPORT, AND DEPOT MAINTENANCE

(1) SMR CODE	(2) FEDERAL STOCK NUMBER	(3) DESCRIPTION REFERENCE NUMBER & MFR CODE	USABLE ON CODE	(4) UNIT OF MEAS	(5) QTY INC IN UNIT	(6) 30-DAY DS MAINT ALLOWANCE (a) 1-20	(b) 21-50	(c) 51-100	(7) 30-DAY GS MAINT ALLOWANCE (a) 1-20	(b) 21-50	(c) 51-100	(8) 1 YR. ALW PER EQUIP CNTGCY	(9) DEPT MAIN ALW PER 100 EQUIP	(10) ILLUSTRATIONS (a) FIG. NO.	(b) ITEM NO. OR REFERENCE DESIGNATION
P-O	6240-155-7836	A372 LAMP, INCANDESCENT: SAME AS A370		EA	REF	REF	REF	REF	REF	REF	REF	REF	REF	5-8	DS3
P-F	6210-176-4928	A373 LAMPHOLDER: LH89-1 (81349)		EA	3	*	*	1	*	*	1	8	15		XDS1
P-F	6210-176-4928	A374 LAMPHOLDER: SAME AS A373		EA	REF	REF	REF	REF	REF	REF	REF	REF	REF		XDS2
P-F	6210-176-4928	A375 LAMPHOLDER: SAME AS A373		EA	REF	REF	REF	REF	REF	REF	REF	REF	REF		XDS3
P-O	6210-151-5246	A376 LENS: LC36GD2 (81349)		EA	1	*	*	*	*	*	*	4	5		MP14
P-O		A377 LENS: LC36YD2 (81349)		EA	1	*	*	*	*	*	*	4	5		MP15
P-O		A378 LENS: LC36RD2 (81349)		EA	1	*	*	*	*	*	*	4	5		MP16
P-F		A379 LOCK ASSEMBLY: SMB667949 (18038)		EA	1	*	*	*	*	*	*	4	3		A10
P-F		A383 METER: SMC667920 (18038)		EA	1	*	*	*	*	*	*	4	6	5-8	M1
X2-D	5305-054-6656	A386 SCREW, MACHINE: MS51957-32 (96906)		EA	3										H3
X2-D	5310-929-6395	A387 WASHER, LOCK: MS35338-136 (96906)		EA	3										H3
X2-D	5310-934-9751	A388 NUT, PLAIN, HEXAGON: MS35650-302 (96906)		EA	6										H6

SECTION IV. REPAIR PARTS FOR DIRECT SUPPORT, GENERAL SUPPORT, AND DEPOT MAINTENANCE

(1) SMR CODE	(2) FEDERAL STOCK NUMBER	(3) DESCRIPTION REFERENCE NUMBER & MFR CODE	USABLE ON CODE	(4) UNIT OF MEAS	(5) QTY INC IN UNIT	(6) 30-DAY DS MAINT ALLOWANCE (a) 1-20	(b) 21-50	(c) 51-100	(7) 30-DAY GS MAINT ALLOWANCE (a) 1-20	(b) 21-50	(c) 51-100	(8) 1 YR. ALW PER EQUIP CNTGCY	(9) DEPT MAIN ALW PER 100 EQUIP	(10) ILLUSTRATIONS (a) FIG. NO.	(b) ITEM NO. OR REFERENCE DESIGNATION
X2-D		A389 PAD, RUBBER: SMB667942-1 (18038)		EA	1										MP17
X2-D		A390 PAD, RUBBER: SMB667942-2 (18038)		EA	1										MP18
X2-D		A391 PAD, RUBBER: SMC667946 (18038)		EA	1										MP19
M-F		A392 PLATE, IDENTIFICATION: SMC667922 (18038)		EA	1										MP20
X2-D	5305-052-8874	A393 SCREW, SELF-TAPPING: MS24630-1 (96906)		EA	4										H4
M-F		A394 PLATE, IDENTIFICATION: SMB667947 (18038)		EA	1										MP21
M-F		A395 PLATE, IDENTIFICATION: SMB667948 (18038)		EA	1										MP22
M-D		A396 PLATE, SUPPORT: SMB667928 (18038)		EA	1										MP23
X-D	5305-993-9269	A397 SCREW, MACHINE: MS3212-28 (96906)		EA	2										H2
X2-D	5310-045-3299	A398 WASHER, LOCK: SAME AS A9		EA	2										H2
X2-D	5310-809-8544	A399 WASHER, FLAT: SAME AS A10		EA	2										H2
X2-D	5310-934-9757	A400 NUT, PLAIN, HEXAGON: SAME AS A17		EA	2										H2

SECTION IV. REPAIR PARTS FOR DIRECT SUPPORT, GENERAL SUPPORT, AND DEPOT MAINTENANCE

(1) SMR CODE	(2) FEDERAL STOCK NUMBER	(3) DESCRIPTION REFERENCE NUMBER & MFR CODE	USABLE ON CODE	(4) UNIT OF MEAS	(5) QTY INC IN UNIT	(6) 30-DAY DS MAINT ALLOWANCE (a) 1-20	(b) 21-50	(c) 51-100	(7) 30-DAY GS MAINT ALLOWANCE (a) 1-20	(b) 21-50	(c) 51-100	(8) 1 YR. ALW PER EQUIP CNTGCY	(9) DEPT MAIN ALW PER 100 EQUIP	(10) ILLUSTRATIONS (a) FIG. NO.	(b) ITEM NO. OR REFERENCE DESIGNATION
P-F		A401 PLUG, PROTECTIVE: 1-8 NPTF (70318)		EA	1	*	*	*	*	*	*	4	5		MP26
P-O		A402 POWER CORD, AC: CX-11979/U (81349)		EA	1	*	1	1	*	1	1	12	15		W1
P-O	5995-466-0217	A403 POWER CORD, DC: CX-12342/U (81349)		EA	1	*	1	1	*	1	1	12	15		W2
A-H		A404 POWER TRANSFER ASSEMBLY: SMD667894 (18038)		EA	1									5-7	A6
X2-D	5305-984-6209	A405 SCREW, MACHINE: SAME AS A106		EA	4										H4
X2-D	5305-984-6210	A406 SCREW, MACHINE: MS35206-263 (96906)		EA	3										H3
X2-D	5310-045-3296	A407 WASHER, LOCK: SAME AS A32		EA	7										H7
A-H		A408 COMPONENT BOARD ASSEMBLY: SMD667899 (18038)		EA	1									5-7	A6A1
P-F	5910-082-4767	A409 CAPACITOR, FIXED, ELECT: CL23CD100UN3 (81349)		EA	1	*	*	*	*	*	*	4	5	5-7	A6A1C1
X2-D		A410 PLATE, CONTACT: SMB667902 (18038)		EA	1										A6A1E6
X2-D		A411 SCREW, MACHINE: AN508-6-4 (88044)		EA	2										A6A1H2
P-D		A412 PRINTED CIRCUIT BOARD: SMD667900 (18038)		EA	1								3		A6A1MP1

SECTION IV. REPAIR PARTS FOR DIRECT SUPPORT, GENERAL SUPPORT, AND DEPOT MAINTENANCE

(1) SMR CODE	(2) FEDERAL STOCK NUMBER	(3) DESCRIPTION REFERENCE NUMBER & MFR CODE	USABLE ON CODE	(4) UNIT OF MEAS	(5) QTY INC IN UNIT	(6) 30-DAY DS MAINT ALLOWANCE (a) 1-20	(b) 21-50	(c) 51-100	(7) 30-DAY GS MAINT ALLOWANCE (a) 1-20	(b) 21-50	(c) 51-100	(8) 1 YR. ALW PER EQUIP CNTGCY	(9) DEPT MAIN ALW PER 100 EQUIP	(10) ILLUSTRATIONS (a) FIG. NO.	(b) ITEM NO. OR REFERENCE DESIGNATION
P-F	5905-230-7713	A413 RESISTOR, FIXED, FILM: RN70C3972B (81349)		EA	1	*	*	*	*	*	*	4	3	5-7	A6A1R2
P-F	5905-061-5355	A414 RESISTOR, FIXED, FILM: RN65C9091F (81349)		EA	1	*	*	*	*	*	*	4	3	5-7	A6A1R3
P-F	5905-087-0545	A415 RESISTOR, FIXED, WIREWOUND: RW69V102 (81349)		EA	1	*	*	*	*	*	*	7	6	5-7	A6A1R5
P-F	5905-061-2089	A416 RESISTOR, FIXED, WIREWOUND: SAME AS A294		EA	1	REF	REF	REF	REF	REF	REF	REF	REF	5-7	A6A1R4
X2-D	5940-280-0601	A417 TERMINAL, STUD: SAME AS A247		EA	6										A6A1E1
X2-D	5940-280-0601	A418 TERMINAL, STUD; SAME AS A247		EA	REF										A6A1E2
X2-D	5940-280-0601	A419 TERMINAL, STUD: SAME AS A247		EA	REF										A6A1E4
X2-D	5940-280-0601	A420 TERMINAL, STUD: SAME AS A247		EA	REF										A6A1E5
X2-D	5940-280-0601	A421 TERMINAL, STUD: SAME AS A247		EA	REF										A6A1E11
X2-D	5940-280-0601	A422 TERMINAL, STUD: SAME AS A247		EA	REF										A6A1E12
X2-D		A423 TERMINAL, STANDOFF: 9573BB1032-14 (06540)		EA	4										A6A1E7
X2-D		A424 TERMINAL, STANDOFF: SAME AS A423		EA	REF										A6A1E8

SECTION IV. REPAIR PARTS FOR DIRECT SUPPORT, GENERAL SUPPORT, AND DEPOT MAINTENANCE

(1) SMR CODE	(2) FEDERAL STOCK NUMBER	(3) DESCRIPTION REFERENCE NUMBER & MFR CODE	USABLE ON CODE	(4) UNIT OF MEAS	(5) QTY INC IN UNIT	(6) 30-DAY DS MAINT ALLOWANCE (a) 1-20	(b) 21-50	(c) 51-100	(7) 30-DAY GS MAINT ALLOWANCE (a) 1-20	(b) 21-50	(c) 51-100	(8) 1 YR. ALW PER EQUIP CNTGCY	(9) DEPT MAIN ALW PER 100 EQUIP	(10) ILLUSTRATIONS (a) FIG. NO.	(b) ITEM NO. OR REFERENCE DESIGNATION
X2-D		A425 TERMINAL, STANDOFF: SAME AS A423		EA	REF										A6A1E9
X2-D		A426 TERMINAL, STANDOFF: SAME AS A423		EA	REF										A6A1E10
M-D		A427 PLATE, SUPPORT: C8157 (18038)		EA	1										A6MP1
P-F		A428 RELAY: SMB667898 (18038)		EA	1	*	*	*	*	*	*	5	7	5-7	A6K1
X2-D	5310-934-9747	A429 NUT, PLAIN, HEXAGON: SAME AS A37		EA	4										A6H4
X2-D	5310-209-0788	A430 WASHER, LOCK: SAME AS A36		EA	4										A6H4
P-F		A431 RESISTOR, SHUNT: SMC667897 (18038)		EA	1	*	*	*	*	*	*	2	3	5-7	A6R1
X2-D	5305-637-1124	A432 SCREW, MACHINE: MS35229-43 (96906)		EA	2										A6H2
X2-D	5310-576-0546	A433 WASHER, LOCK: MS35338-99 (96906)		EA	2										A6H2
X2-D	5310-209-0786	A434 WASHER, LOCK: SAME AS A364		EA	2										A6H2
X2-D		A435 WASHER, FLAT: MS15795-607 (96906)		EA	2										A6H2
X2-D		A436 NUT, PLAIN, HEXAGON: MS35691-431 (96906)		EA	4										A6H4

SECTION IV. REPAIR PARTS FOR DIRECT SUPPORT, GENERAL SUPPORT, AND DEPOT MAINTENANCE

(1) SMR CODE	(2) FEDERAL STOCK NUMBER	(3) DESCRIPTION REFERENCE NUMBER & MFR CODE	USABLE ON CODE	(4) UNIT OF MEAS	(5) QTY INC IN UNIT	(6) 30-DAY DS MAINT ALLOWANCE (a) 1-20	(b) 21-50	(c) 51-100	(7) 30-DAY GS MAINT ALLOWANCE (a) 1-20	(b) 21-50	(c) 51-100	(8) 1 YR. ALW PER EQUIP CNTGCY	(9) DEPT MAIN ALW PER 100 EQUIP	(10) ILLUSTRATIONS (a) FIG. NO.	(b) ITEM NO. OR REFERENCE DESIGNATION
A-H		A437 PRE-REGULATOR ASSEMBLY: SMD667881 (18038)		EA	1									5-5	A4
X2-D	5305-984-6193	A438 SCREW, MACHINE: SAME AS A28		EA	4										H4
X2-D	5310-045-3299	A439 WASHER, LOCK: SAME AS A9		EA	4										H4
M-D		A440 BRACKET, MOUNTING: SMB667887 (18038)		EA	2										A4MP1
M-D		A441 BRACKET, MOUNTING: SAME AS A440		EA	REF										A4MP2
A2-D	5305-993-2738	A451 SCREW, MACHINE: MS35207-280 (96906)		EA	1										A4H1
X2-D	5310-209-0786	A452 WASHER, LOCK: SAME AS A364		EA	1										A4H1
X2-D	5310-043-0520	A453 NUT, PLAIN, HEXAGON: MS35650-3252 (96906)		EA	1										A4H1
A-H		A457 COMPONENT BOARD ASSY, GATE: C8107 (18038)		EA	1									5-5	A4H2
X2-D	5305-984-4988	A458 SCREW, MACHINE: SAME AS A12		EA	2										A4H2
X2-D	5310-045-4007	A459 WASHER, LOCK: SAME AS A13		EA	2										A4H2
X2-D	5310-983-8483	A460 WASHER, FLAT: SAME AS A170		EA	2										A4H2
P-F	5910-904-3983	A461 CAPACITOR, FXD, ELECTROLYTIC: CS13BF226M (81349)		EA	2	*	1	2	*	1	2	19	20	5-5	A4A2C1

SECTION IV. REPAIR PARTS FOR DIRECT SUPPORT, GENERAL SUPPORT, AND DEPOT MAINTENANCE

(1) SMR CODE	(2) FEDERAL STOCK NUMBER	(3) DESCRIPTION REFERENCE NUMBER & MFR CODE	USABLE ON CODE	(4) UNIT OF MEAS	(5) QTY INC IN UNIT	(6) 30-DAY DS MAINT ALLOWANCE (a) 1-20	(b) 21-50	(c) 51-100	(7) 30-DAY GS MAINT ALLOWANCE (a) 1-20	(b) 21-50	(c) 51-100	(8) 1 YR. ALW PER EQUIP CNTGCY	(9) DEPT MAIN ALW PER 100 EQUIP	(10) ILLUSTRATIONS (a) FIG. NO.	(b) ITEM NO. OR REFERENCE DESIGNATION
P-F	5910-904-3983	A462 CAPACITOR, FXD, ELECTROLYTIC: SAME AS A461		EA	REF	REF	REF	REF	REF	REF	REF	REF	REF	5-5	A4A2C2
P-F	5910-082-4925	A463 CAPACITOR, FIXED, ELECTROLYTIC: SAME AS A191		EA	2	REF	REF	REF	REF	REF	REF	REF	REF	5-5	A4A2C3
P-F	5910-082-4925	A464 CAPACITOR, FIXED, ELECTROLYTIC: SAME AS A191		EA	REF	REF	REF	REF	REF	REF	REF	REF	REF	5-5	A4A2C4
P-D		A465 CONNECTOR, PLUG, ELECTRICAL: SAME AS A193		EA	1								REF		A4A2P1
X2-D		A466 SCREW, MACHINE: SAME AS A194		EA	2										A4A2H2
X2-D	5310-543-2410	A467 WASHER, LOCK: SAME AS A119		EA	2										A4A2H2
X2-D	5310-934-9739	A468 NUT, PLAIN, HEXAGON: SAME AS A120		EA	2										A4A2H2
P-F		A469 PAD, TRANSISTOR: SAME AS A200		EA	2	REF	REF	REF	REF	REF	REF	REF	REF		A4A2MP1
P-F		A470 PAD, TRANSISTOR: SAME AS A200		EA	REF	REF	REF	REF	REF	REF	REF	REF	REF		A4A2MP2
P-D		A471 PRINTED CIRCUIT BOARD: SMD667891 (18038)		EA	1								3		A4A2MP3
P-F	5905-900-2089	A472 RESISTOR, FIXED, FILM: RL205101J (81349)		EA	4	*	*	1	*	*	1	13	18	5-5	A4A2R1
P-F	5905-900-2089	A473 RESISTOR, FIXED, FILM: SAME AS A472		EA	REF	REF	REF	REF	REF	REF	REF	REF	REF	5-5	A4A2R2

SECTION IV. REPAIR PARTS FOR DIRECT SUPPORT, GENERAL SUPPORT, AND DEPOT MAINTENANCE

(1) SMR CODE	(2) FEDERAL STOCK NUMBER	(3) DESCRIPTION REFERENCE NUMBER & MFR CODE	USABLE ON CODE	(4) UNIT OF MEAS	(5) QTY INC IN UNIT	(6) 30-DAY DS MAINT ALLOWANCE (a) 1-20	(b) 21-50	(c) 51-100	(7) 30-DAY GS MAINT ALLOWANCE (a) 1-20	(b) 21-50	(c) 51-100	(8) 1 YR. ALW PER EQUIP CNTGCY	(9) DEPT MAIN ALW PER 100 EQUIP	(10) ILLUSTRATIONS (a) FIG. NO.	(b) ITEM NO. OR REFERENCE DESIGNATION
P-F	5905-900-2089	A474 RESISTOR, FIXED, FILM: SAME AS A472		EA	REF	REF	REF	REF	REF	REF	REF	REF	REF	5-5	A4A2R7
P-F	5905-900-2089	A475 RESISTOR, FIXED, FILM: SAME AS A472		EA	REF	REF	REF	REF	REF	REF	REF	REF	REF	5-5	A4A2R8
P-F	5905-766-8216	A476 RESISTOR, FIXED, FILM: RL20S151J (81349)		EA	2	*	*	*	*	*	*	5	6	5-5	A4A2R5
P-F	5905-766-8216	A477 RESISTOR, FIXED, FILM: SAME AS A476		EA	REF	REF	REF	REF	REF	REF	REF	REF	REF	5-5	A4A2R6
P-F	5905-901-4016	A478 RESISTOR, FIXED, FILM: SAME AS A222		EA	2	REF	REF	REF	REF	REF	REF	REF	REF	5-5	A4A2R3
P-F	5905-901-4016	A479 RESISTOR, FIXED, FILM: SAME AS A222		EA	REF	REF	REF	REF	REF	REF	REF	REF	REF	5-5	A4A2R4
P-F	5905-975-1135	A480 RESISTOR, FIXED, WIREWOUND: RW69V821 (81349)		EA	2	*	*	*	*	*	*	10	12	5-5	A4A2R9
P-F	5905-975-1135	A481 RESISTOR, FIXED, WIREWOUND: SAME AS A480		EA	REF	REF	REF	REF	REF	REF	REF	REF	REF	5-5	A4A2R10
P-F	5961-087-6047	A482 SEMICONDUCTOR DEVICE, DIODE: SAME AS A239		EA	4	REF	REF	REF	REF	REF	REF	REF	REF	5-5	A4A2CR1
P-F	5961-087-6047	A483 SEMICONDUCTOR DEVICE, DIODE: SAME AS A239		EA	REF	REF	REF	REF	REF	REF	REF	REF	REF	5-5	A4A2CR2
P-F	5961-087-6047	A484 SEMICONDUCTOR DEVICE, DIODE: SAME AS A239		EA	REF	REF	REF	REF	REF	REF	REF	REF	REF	5-5	A4A2CR3
P-F	5961-087-6047	A485 SEMICONDUCTOR DEVICE, DIODE: SAME AS A239		EA	REF	REF	REF	REF	REF	REF	REF	REF	REF	5-5	A4A2CR4
X2-D		A486 TERMINAL, STANDOFF: 9531BB063-14 (06540)		EA	2										A4A2E1

SECTION IV. REPAIR PARTS FOR DIRECT SUPPORT, GENERAL SUPPORT, AND DEPOT MAINTENANCE

(1) SMR CODE	(2) FEDERAL STOCK NUMBER	(3) DESCRIPTION REFERENCE NUMBER & MFR CODE	USABLE ON CODE	(4) UNIT OF MEAS	(5) QTY INC IN UNIT	(6) 30-DAY DS MAINT ALLOWANCE (a) 1-20	(b) 21-50	(c) 51-100	(7) 30-DAY GS MAINT ALLOWANCE (a) 1-20	(b) 21-50	(c) 51-100	(8) 1 YR. ALW PER EQUIP CNTGCY	(9) DEPT MAIN ALW PER 100 EQUIP	(10) ILLUSTRATIONS (a) FIG. NO.	(b) ITEM NO. OR REFERENCE DESIGNATION
X2-D		A487 TERMINAL, STANDOFF: SAME AS A486		EA	REF										A4A2E2
P-F	5961-853-2601	A488 TRANSISTOR: SAME AS A249		EA	2	REF	REF	REF	REF	REF	REF	REF	REF	5-5	A4A2Q1
P-F	5961-853-2601	A489 TRANSISTOR: SAME AS A249		EA	REF	REF	REF	REF	REF	REF	REF	REF	REF	5-5	A4A2Q2
P-D		A490 CONNECTOR, RECEPTACLE, ELEC: SAME AS A117		EA	1								REF		A4J1
X2-D	5305-983-6730	A491 SCREW, MACHINE; MS35206-218 (96906)		EA	2										A4H2
X2-D	5310-543-2410	A492 WASHER, LOCK; SAME AS A119		EA	2										A4H2
X2-D	5310-934-9739	A493 NUT, PLAIN, HEXAGON; SAME AS A120		EA	2										A4H2
M-D		A494 INSEPARABLE ASSY BOARD SUPPORT: C8150 (18038)		EA	1										A4A3
X2-D	5310-934-9747	A495 NUT, PLAIN, HEXAGON: SAME AS A37		EA	4										A4H4
X2-D	5310-045-4007	A496 WASHER, LOCK: SAME AS A13		EA	4										A4H4
P-H		A499 MAGNETIC AMPLIFIER ASSEMBLY: SMD667883 (18038)		EA	1				*	*	*	4	5		A4A1

AMSEL-ME Form 1 Nov 68 6048 (Previous edition is obsolete) PP-6624/U ESC-FM 4534-68

SECTION IV. REPAIR PARTS FOR DIRECT SUPPORT, GENERAL SUPPORT, AND DEPOT MAINTENANCE

(1) SMR CODE	(2) FEDERAL STOCK NUMBER	(3) DESCRIPTION REFERENCE NUMBER & MFR CODE	USABLE ON CODE	(4) UNIT OF MEAS	(5) QTY INC IN UNIT	(6) 30-DAY DS MAINT ALLOWANCE (a) 1-20	(b) 21-50	(c) 51-100	(7) 30-DAY GS MAINT ALLOWANCE (a) 1-20	(b) 21-50	(c) 51-100	(8) 1 YR. ALW PER EQUIP CNTGCY	(9) DEPT MAIN ALW PER 100 EQUIP	(10) ILLUSTRATIONS (a) FIG. NO.	(b) ITEM NO. OR REFERENCE DESIGNATION
M-D		A500 PLATE, MOUNTING: SMB667884 (18038)		EA	1										A4MP3
X2-D	5310-934-9747	A501 NUT, PLAIN, HEXAGON: SAME AS A37		EA	2										A4H2
X2-D	5310-045-4007	A502 WASHER, LOCK: SAME AS A13		EA	2										A4H2
P-H	5961-060-5778	A503 SEMICONDUCTOR DEVICE, DIODE: JAN2N1913 (81350)		EA	2				*	*	1	10	10		A4Q1
X2-D	5310-113-3757	A504 NUT, PLAIN, HEXAGON: MS35650-3392 (96906)		EA	1										A4H1
X2-D	5310-194-1483	A505 WASHER, LOCK; MS35333-44 (96906)		EA	1										A4H1
X2-D	5310-809-5998	A506 WASHER, FLAT: MS27183-18 (96906)		EA	1										A4H1
P-H		A507 WASHER, INSULATING: MW1375-526 (08289)		EA	2				*	1	1	16	16		A4H1
P-H		A508 BUSHING, INSULATING: TW510-570 (08289)		EA	1				*	*	*	5	6		A4H1
X2-D	5305-984-4988	A509 SCREW, MACHINE: SAME AS A12		EA	1										A4H1
X2-D	5310-934-9747	A510 WASHER, LOCK: SAME AS A36		EA	1										A4H1
P-H	5961-060-5778	A511 SEMICONDUCTOR DEVICE, DIODE: SAME AS A503		EA	REF				REF	REF	REF	REF	REF	5-5	A4Q2

SECTION IV. REPAIR PARTS FOR DIRECT SUPPORT, GENERAL SUPPORT, AND DEPOT MAINTENANCE

(1) SMR CODE	(2) FEDERAL STOCK NUMBER	(3) DESCRIPTION REFERENCE NUMBER & MFR CODE	USABLE ON CODE	(4) UNIT OF MEAS	(5) QTY INC IN UNIT	(6) 30-DAY DS MAINT ALLOWANCE (a) 1-20	(b) 21-50	(c) 51-100	(7) 30-DAY GS MAINT ALLOWANCE (a) 1-20	(b) 21-50	(c) 51-100	(8) 1 YR. ALW PER EQUIP CNTGCY	(9) DEPT MAIN ALW PER 100 EQUIP	(10) ILLUSTRATIONS (a) FIG. NO.	(b) ITEM NO. OR REFERENCE DESIGNATION
X2-D	5310-113-3757	A512 NUT, PLAIN, HEXAGON: SAME AS A504		EA	1										A4H1
X2-D	5310-194-1483	A513 WASHER, LOCK: SAME AS A505		EA	1										A4H1
X2-D	5310-809-5998	A514 WASHER, FLAT: SAME AS A506		EA	1										A4H1
P-H		A515 WASHER, INSULATING: SAME AS A507		EA	2				REF	REF	REF	REF	REF		A4H2
P-H		A516 BUSHING, INSULATING: SAME AS A508		EA	1				REF	REF	REF	REF	REF		A4H1
X2-D	5305-984-4988	A517 SCREW, MACHINE; SAME AS A12		EA	1										A4H1
X2-D	5310-209-0788	A518 WASHER, LOCK: SAME AS A36		EA	1										A4H1
P-H	5940-681-9772	A519 TERMINAL BOARD: 25TB9 (81349)		EA	1				*	*	*	5	4		A4MP4
X2-D	5310-934-9747	A520 NUT, PLAIN, HEXAGON: SAME AS A37		EA	2										A4H2
X2-D	5310-045-4007	A521 WASHER, LOCK; SAME AS A13		EA	2										A4H2
X2-D	5310-983-8483	A522 WASHER, FLAT: SAME AS A170		EA	2										A4H2
P-F	5905-807-0832	A523 RESISTOR, VARIABLE: RA20SASD252A (81349)		EA	1	*	*	*	*	*	*	6	5	5-8	R3

SECTION IV. REPAIR PARTS FOR DIRECT SUPPORT, GENERAL SUPPORT, AND DEPOT MAINTENANCE

(1) SMR CODE	(2) FEDERAL STOCK NUMBER	(3) DESCRIPTION REFERENCE NUMBER & MFR CODE	USABLE ON CODE	(4) UNIT OF MEAS	(5) QTY INC IN UNIT	(6) 30-DAY DS MAINT ALLOWANCE (a) 1-20	(b) 21-50	(c) 51-100	(7) 30-DAY GS MAINT ALLOWANCE (a) 1-20	(b) 21-50	(c) 51-100	(8) 1 YR. ALW PER EQUIP CNTGCY	(9) DEPT MAIN ALW PER 100 EQUIP	(10) ILLUSTRATIONS (a) FIG. NO.	(b) ITEM NO. OR REFERENCE DESIGNATION
X2-D	5310-595-7237	A524 WASHER, LOCK: MS35333-42 (96906)		EA	1										H1
P-F		A525 LOCK, SHAFT: 12Z72015 (18038)		EA	1	*	*	*	*	*	*	4	5		MP26
X2-D	5305-984-6191	A526 SCREW, MACHINE; SAME AS A8		EA	2										H2
X2-D	5305-984-6209	A527 SCREW, MACHINE: SAME AS A106		EA	6										H6
P-F	5930-660-3954	A528 SWITCH, TOGGLE: MS24525-23 (96906)		EA	1	*	*	*	*	*	*	5	6	5-8	S1
X2-D	5310-616-2973	A529 NUT, PLAIN, HEXAGON: MS25082-8 (96906)		EA	1										H1
X2-D	5310-905-5454	A530 WASHER, LOCK MS35333-121 (96906)		EA	2										H2
X2-D	5310-924-5968	A531 WASHER LOCK: MS25081-4 (96906)		EA	1										H1
P-F	5330-574-6704	A532 BUSHING, SEAL: 32-341 (15605)		EA	1	*	*	1	*	*	1	13	15		H1
P-F	5930-655-4245	A533 SWITCH, TOGGLE: MS24524-26 (96906)		EA	1	*	*	*	*	*	*	5	6	5-8	S2
X2-D	5310-616-2973	A534 NUT, PLAIN, HEXAGON: SAME AS A529		EA	1										H1
X2-D	5310-905-5454	A535 WASHER, LOCK: SAME AS A530		EA	2	*	*	*		*					H2

SECTION IV. REPAIR PARTS FOR DIRECT SUPPORT, GENERAL SUPPORT, AND DEPOT MAINTENANCE

(1) SMR CODE	(2) FEDERAL STOCK NUMBER	(3) DESCRIPTION REFERENCE NUMBER & MFR CODE	USABLE ON CODE	(4) UNIT OF MEAS	(5) QTY INC IN UNIT	(6) 30-DAY DS MAINT ALLOWANCE (a) 1-20	(b) 21-50	(c) 51-100	(7) 30-DAY GS MAINT ALLOWANCE (a) 1-20	(b) 21-50	(c) 51-100	(8) 1 YR. ALW PER EQUIP CNTGCY	(9) DEPT MAIN ALW PER 100 EQUIP	(10) ILLUSTRATIONS (a) FIG. NO.	(b) ITEM NO. OR REFERENCE DESIGNATION
X2-D	5310-924-5968	A536 WASHER, KEY: SAME AS A531		EA	1										H1
P-F	5330-574-6704	A537 BUSHING ,SEAL: SAME AS A532		EA	1	REF	REF	REF	REF	REF	REF	REF	REF		H1
P-F	5930-683-1629	A538 SWITCH, TOGGLE: MS24523-23 (96906)		EA	1	*	*	*	*	*	*	5	6	5-8	S1
X2-D	5310-616-2973	A539 NUT, PLAIN, HEXAGON SAME AS A529		EA	1										H1
X2-D	5310-905-5454	A540 WASHER, LOCK: SAME AS A530		EA	2										H2
X2-D	5310-924-5968	A541 WASHER, KEY: SAME AS A531		EA	1										H1
P-F	5330-574-6704	A542 BUSHING, SEAL: SAME AS A532		EA	1	REF	REF	REF	REF	REF	REF	REF	REF		H1
P-H		A543 TRANSFORMER, POWER; SMD667923 (18038)		EA	1				*	*	*	4	5	5-1	T1
X2-D		A544 SCREW, MACHINE; MS3212-52 (96906)		EA	3										H3
A-H		A545 TRANSISTOR ASSEMBLY: SMD667867 (18038)		EA	1									5-1	A3
X2-D	5305-984-6193	A546 SCREW, MACHINE; SAME AS A28		EA	2										H2
X2-D	5310-045-3299	A547 WASHER, LOCK: SAME AS A9		EA	2										H2

SECTION IV. REPAIR PARTS FOR DIRECT SUPPORT, GENERAL SUPPORT, AND DEPOT MAINTENANCE

(1) SMR CODE	(2) FEDERAL STOCK NUMBER	(3) DESCRIPTION REFERENCE NUMBER & MFR CODE	USABLE ON CODE	(4) UNIT OF MEAS	(5) QTY INC IN UNIT	(6) 30-DAY DS MAINT ALLOWANCE (a) 1-20	(b) 21-50	(c) 51-100	(7) 30-DAY GS MAINT ALLOWANCE (a) 1-20	(b) 21-50	(c) 51-100	(8) 1 YR. ALW PER EQUIP CNTGCY	(9) DEPT MAIN ALW PER 100 EQUIP	(10) ILLUSTRATIONS (a) FIG. NO.	(b) ITEM NO. OR REFERENCE DESIGNATION
X2-D	5305-984-6210	A548 SCREW, MACHINE: SAME AS A406		EA	4										H4
X2-D	5310-045-3296	A549 WASHER, LOCK: SAME AS A32		EA	4										H4
M-D		A550 BRACKET, HEAT SINK: SMC667868 (18038)		EA	1										A3MP1
M-D		A551 BRACKET, MOUNTING: SMC667874 (18038)		EA	2										A3MP2
X2-D	5305-889-3000	A552 SCREW, MACHINE: SAME AS A35		EA	2										A3H2
X2-D	5310-045-4007	A553 WASHER, LOCK: SAME AS A13		EA	2										A3H2
M-D		A554 BRACKET, MOUNTING: SAME AS A551		EA	REF										A3MP3
X2-D	5305-889-3000	A555 SCREW, MACHINE; SAME AS A35		EA	2										A3H2
X2-D	5310-045-4007	A556 WASHER, LOCK: SAME AS A13		EA	2										A3H2
A-H		A557 COMPONENT ASSEMBLY: SMD667876 (18038)		EA	1										A3A1
X2-D	5305-984-4988	A558 SCREW, MACHINE: SAME AS A12		EA	1										A3H1
X2-D	5310-045-4007	A559 WASHER, LOCK: SAME AS A13		EA	1										A3H1

SECTION IV. REPAIR PARTS FOR DIRECT SUPPORT, GENERAL SUPPORT, AND DEPOT MAINTENANCE

(1) SMR CODE	(2) FEDERAL STOCK NUMBER	(3) DESCRIPTION REFERENCE NUMBER & MFR CODE	USABLE ON CODE	(4) UNIT OF MEAS	(5) QTY INC IN UNIT	(6) 30-DAY DS MAINT ALLOWANCE (a) 1-20	(b) 21-50	(c) 51-100	(7) 30-DAY GS MAINT ALLOWANCE (a) 1-20	(b) 21-50	(c) 51-100	(8) 1 YR. ALW PER EQUIP CNTGCY	(9) DEPT MAIN ALW PER 100 EQUIP	(10) ILLUSTRATIONS (a) FIG. NO.	(b) ITEM NO. OR REFERENCE DESIGNATION
X2-D	5310-209-0788	A560 NUT, PLAIN, HEXAGON: SAME AS A37		EA	1	*									A3H1
P-D		A561 PRINTED CIRCUIT, BOARD: SMC667877 (18038)		EA	1								3	5-4	A3A1MP1
P-F	5905-900-2089	A562 RESISTOR, FIXED, FILM: SAME AS A472		EA	2	REF	REF	REF	REF	REF	REF	REF	REF	5-4	A3A1R1
P-F	5905-900-2089	A563 RESISTOR FIXED, FILM: SAME AS A472		EA	REF	REF	REF	REF	REF	REF	REF	REF	REF	5-4	A3A1R5
P-F		A564 RESISTOR, FIXED, WIREWOUND: RW69VR50 (81349)		EA	4	*	1	1	*	1	1	16	20	5-4	A3A1R2
P-F		A565 RESISTOR, FIXED, WIREWOUND: SAME AS A564		EA	REF	REF	REF	REF	REF	REF	REF	REF	REF	5-4	A3A1R3
P-F		A566 RESISTOR, FIXED, WIREWOUND: SAME AS A564		EA	REF	REF	REF	REF	REF	REF	REF	REF	REF	5-4	A3A1R6
P-F		A567 RESISTOR, FIXED, WIREWOUND: SAME AS A564		EA	REF	REF	REF	REF	REF	REF	REF	REF	REF	5-4	A3A1R7
P-F	5905-994-7230	A568 RESISTOR, FIXED, WIREWOUND: RW69V8R2 (81349)		EA	1	*	*	*	*	*	*	4	10	5-4	A3A1R4
X2-D		A569 TERMINAL, STANDOFF: 9574BB1032-14 (06540)		EA	1										A3A1E7
X2-D	5940-280-0601	A570 TERMINAL, STANDOFF: SAME AS A247		EA	5										A3A1E1

SECTION IV. REPAIR PARTS FOR DIRECT SUPPORT, GENERAL SUPPORT, AND DEPOT MAINTENANCE

(1) SMR CODE	(2) FEDERAL STOCK NUMBER	(3) DESCRIPTION REFERENCE NUMBER & MFR CODE	USABLE ON CODE	(4) UNIT OF MEAS	(5) QTY INC IN UNIT	(6) 30-DAY DS MAINT ALLOWANCE (a) 1-20	(b) 21-50	(c) 51-100	(7) 30-DAY GS MAINT ALLOWANCE (a) 1-20	(b) 21-50	(c) 51-100	(8) 1 YR. ALW PER EQUIP CNTGCY	(9) DEPT MAIN ALW PER 100 EQUIP	(10) ILLUSTRATIONS (a) FIG. NO.	(b) ITEM NO. OR REFERENCE DESIGNATION
X2-D	5940-280-0601	A571 TERMINAL, STANDOFF: SAME AS A247		EA	REF										A3A1E2
X2-D	5940-280-0601	A572 TERMINAL, STANDOFF: SAME AS A247		EA	REF										A3A1E4
X2-D	5940-280-0601	A573 TERMINAL, STANDOFF: SAME AS A247		EA	REF										A3A1E6
X2-D	5940-280-0601	A574 TERMINAL, STANDOFF: SAME AS A247		EA	REF										A3A1E8
X2-D		A575 TERMINAL, STANDOFF: 1798-2 (71279)		EA	2										A3A1E3
X2-D		A576 TERMINAL, STANDOFF: SAME AS A575		EA	REF										A3A1E5
P-F		A577 RESISTOR, FIXED, WIREWOUND: RW21V1R0 (81349)		EA	1	*	*	*	*	*	*	4	10	5-4	A3R8
P-F	5905-978-9326	A578 RESISTOR, FIXED, WIREWOUND: RW21V101 (81349)		EA	1	*	*	*	*	*	*	4	10	5-4	A3R9
X2-D	5305-984-6198	A579 SCREW, MACHINE MS35206-250 (96906)		EA	2										A3H2
X2-D	5310-045-3299	A580 WASHER, LOCK: SAME AS A9		EA	2										A3H2
X2-D	5310-809-8544	A581 WASHER, FLAT: SAME AS A10		EA	2										A3H2
X2-D	5310-934-9757	A582 NUT, PLAIN, HEXAGON: SAME AS A17		EA	2										A3H2

SECTION IV. REPAIR PARTS FOR DIRECT SUPPORT, GENERAL SUPPORT, AND DEPOT MAINTENANCE

(1) SMR CODE	(2) FEDERAL STOCK NUMBER	(3) DESCRIPTION REFERENCE NUMBER & MFR CODE	USABLE ON CODE	(4) UNIT OF MEAS	(5) QTY INC IN UNIT	(6) 30-DAY DS MAINT ALLOWANCE (a) 1-20	(b) 21-50	(c) 51-100	(7) 30-DAY GS MAINT ALLOWANCE (a) 1-20	(b) 21-50	(c) 51-100	(8) 1 YR. ALW PER EQUIP CNTGCY	(9) DEPT MAIN ALW PER 100 EQUIP	(10) ILLUSTRATIONS (a) FIG. NO.	(b) ITEM NO. OR REFERENCE DESIGNATION
P-F	5961-811-5799	A583 SEMICONDUCTOR, DEVICE, DIODE: JAN1N1202 (81350)		EA	3	*	1	1	*	1	1	13	15	5-4	A3CR1
X2-D	5310-934-9751	A584 NUT, PLAIN, HEXAGON: SAME AS A388		EA	1										A3H1
X2-D	5310-576-5752	A585 WASHER, LOCK; MS35333-39 (96906)		EA	1										A3H1
P-F		A586 WASHER, INSULATING: MW562-203 (08289)		EA	1	*	1	2	*	1	2	16	20		A3H1
P-F	5310-062-0906	A587 BUSHING, INSULATING: TW516-10 (08289)		EA	1	*	*	1	*	*	1	10	16		A3H1
P-F	5961-811-5799	A588 SEMICONDUCTOR, DEVICE, DIODE: SAME AS A583		EA	REF	REF	REF	REF	REF	REF	REF	REF	REF	5-4	A3CR2
X2-D	5310-934-9751	A589 NUT, PLAIN, HEXAGON: SAME AS A388		EA	1										A3H1
X2-D	5310-576-5752	A590 WASHER, LOCK: SAME AS A585		EA	1										A3H1
P-F		A591 WASHER, INSULATING: SAME AS A586		EA	1	REF	REF	REF	REF	REF	REF	REF	REF		A3H1
P-F	5310-062-0906	A592 BUSHING, INSULATING: SAME AS A587		EA	1	REF	REF	REF	REF	REF	REF	REF	REF		A3H1
P-F	5961-811-5799	A593 SEMICONDUCTOR, DEVICE, DIODE: SAME AS A583		EA	REF	REF	REF	REF	REF	REF	REF	REF	REF	5-4	A3CR3
X2-D	5310-934-9751	A594 NUT, PLAIN, HEXAGON: SAME AS A388		EA	1										A3H1

SECTION IV. REPAIR PARTS FOR DIRECT SUPPORT, GENERAL SUPPORT, AND DEPOT MAINTENANCE

(1) SMR CODE	(2) FEDERAL STOCK NUMBER	(3) DESCRIPTION REFERENCE NUMBER & MFR CODE	USABLE ON CODE	(4) UNIT OF MEAS	(5) QTY INC IN UNIT	(6) 30-DAY DS MAINT ALLOWANCE (a) 1-20	(b) 21-50	(c) 51-100	(7) 30-DAY GS MAINT ALLOWANCE (a) 1-20	(b) 21-50	(c) 51-100	(8) 1 YR. ALW PER EQUIP CNTGCY	(9) DEPT MAIN ALW PER 100 EQUIP	(10) ILLUSTRATIONS (a) FIG. NO.	(b) ITEM NO. OR REFERENCE DESIGNATION
X2-D	5310-576-5752	A595 WASHER, LOCK: SAME AS A585		EA	1										A3H1
X2-D	5310-014-5850	A596 WASHER, FLAT: MS27183-42 (96906)		EA	1										A3H1
P-F		A597 WASHER, INSULATING; SAME AS A586		EA	1	REF	REF	REF	REF	REF	REF	REF	REF		A3H1
P-F	5310-062-0906	A598 BUSHING, INSULATING: SAME A5 A587		EA	1	REF	REF	REF	REF	REF	REF	REF	REF		A3H1
P-F	5961-833-3042	A599 SEMICONDUCTOR, DEVICE, DIODE: JAN1N1186 (81350)		EA	2	*	*	1	*	*	1	10	10	5-4	A3CR4
X2-D	5310-685-2631	A600 NUT, PLAIN, HEXAGON: MS25082-4 (96906)		EA	1										A3H1
X2-D	5310-209-0786	A601 WASHER, LOCK: SAME AS A364		EA	1										A3H1
P-F		A602 WASHER, INSULATING: MW855-260 (08289)		EA	1	*	*	1	*	*	1	10	10		A3H1
P-F	5970-977-2714	A603 BUSHING, INSULATING: TW516-25 (08289)		EA	1	*	*	*	*	*	*	5	6		A3H1
P-F	5961-833-3042	A604 SEMICONDUCTOR, DEVICE, DIODE: SAME AS A599		EA	REF	REF	REF	REF	REF	REF	REF	REF	REF	5-4	A3CR5
X2-D	5310-685-2631	A605 NUT, PLAIN, HEXAGON; SAME AS A600		EA	1										A3H1
X2-H	5310-209-0786	A606 WASHER, LOCK: SAME AS A364		EA	1										A3H1

SECTION IV. REPAIR PARTS FOR DIRECT SUPPORT, GENERAL SUPPORT, AND DEPOT MAINTENANCE

(1) SMR CODE	(2) FEDERAL STOCK NUMBER	(3) DESCRIPTION REFERENCE NUMBER & MFR CODE	USABLE ON CODE	(4) UNIT OF MEAS	(5) QTY INC IN UNIT	(6) 30-DAY DS MAINT ALLOWANCE (a) 1-20	(b) 21-50	(c) 51-100	(7) 30-DAY GS MAINT ALLOWANCE (a) 1-20	(b) 21-50	(c) 51-100	(8) 1 YR. ALW PER EQUIP CNTGCY	(9) DEPT MAIN ALW PER 100 EQUIP	(10) ILLUSTRATIONS (a) FIG. NO.	(b) ITEM NO. OR REFERENCE DESIGNATION
P-F		A607 WASHER, INSULATING: SAME AS A602		EA	1	REF	REF	REF	REF	REF	REF	REF	REF		A3H1
P-F	5970-977-2714	A608 BUSHING, INSULATING: SAME AS A603		EA	1	REF	REF	REF	REF	REF	REF	REF	REF		A3H1
P-F	5961-950-4399	A609 SEMICONDUCTOR, DEVICE DIODE: JAN1N2991RB (81350)		EA	1	*	*	*	*	*	*	5	5	5-4	A3CR6
X2-D	5310-934-9751	A610 NUT, PLAIN, HEXAGON: SAME AS A388		EA	1										H6
X2-D	5310-576-5752	A611 WASHER, LOCK: SAME AS A585		EA	1										A3H1
P-F		A612 WASHER, INSULATING: SAME AS A586		EA	1	REF	REF	REF	REF	REF	REF	REF	REF		A3H1
P-F	5310-062-0906	A613 BUSHING, INSULATING: SAME AS A587		EA	1	REF	REF	REF	REF	REF	REF	REF	REF		A3H1
X2-D	5940-283-5280	A614 TERMINAL, LUG: MS25036-106 (96906)		EA	3										A3MP5
X2-D	5940-283-5280	A615 TERMINAL, LUG: SAME AS A614		EA	REF										A3MP6
X2-D	5940-283-5280	A616 TERMINAL, LUG: SAME AS A614		EA	REF										A3MP7
X2-D	5940-230-0515	A617 TERMINAL, LUG: MS25036-154 (96906)		EA	1										A3MP8
X2-D	5940-143-4794	A618 TERMINAL, LUG: MS25036-112 (96906)		EA	1										A3MP9

SECTION IV. REPAIR PARTS FOR DIRECT SUPPORT, GENERAL SUPPORT, AND DEPOT MAINTENANCE

(1) SMR CODE	(2) FEDERAL STOCK NUMBER	(3) DESCRIPTION REFERENCE NUMBER & MFR CODE	USABLE ON CODE	(4) UNIT OF MEAS	(5) QTY INC IN UNIT	(6) 30-DAY DS MAINT ALLOWANCE (a) 1-20	(b) 21-50	(c) 51-100	(7) 30-DAY GS MAINT ALLOWANCE (a) 1-20	(b) 21-50	(c) 51-100	(8) 1 YR. ALW PER EQUIP CNTGCY	(9) DEPT MAIN ALW PER 100 EQUIP	(10) ILLUSTRATIONS (a) FIG. NO.	(b) ITEM NO. OR REFERENCE DESIGNATION
P-F		A619 TERMINAL, LUG: SMB667875 (79963)		EA	1	*	*	*	*	*	*	4	5		A3MP10
P-F		A620 THERMOSTAT: SMB667873 (18038)		EA	1	*	*	*	*	*	*	4	5	5-4	A3S1
X2-D	5310-209-0788	A621 NUT, PLAIN, HEXAGON: SAME AS A37		EA	1										A3H1
X2-D	5310-045-4007	A622 WASHER, LOCK: SAME AS A13		EA	1										A3H1
P-F	5961-052-4115	A623 TRANSISTOR: JAN2N1490 (81350)		EA	2	*	*	1	*	*	1	10	10	5-4	A3Q1
X2-D	5305-054-6654	A624 SCREW, MACHINE; MS51957-30 (96906)		EA	2										A3H2
X2-D	S310-579-0079	A625 WASHER, LOCK: MS35333-37 (96906)		EA	2										A3H2
P-F		A626 INSULATOR: SMB350054 (80063)		EA	1	1	1	2	1	1	2	19	18		A3H1
P-F		A627 BUSHING, INSULATING: TW145-180 (08289)		EA	2	*	1	1	*	1	1	16	16		A3H2
X2-D	5310-209-0788	A628 NUT, PLAIN, HEXAGON: SAME AS A37		EA	2										A3H2
P-F	5961-052-4115	A629 TRANSISTOR: SAME AS A623		EA	REF	REF	REF	REF	REF	REF	REF	REF	REF	5-4	A3Q4
X2-D	5305-054-6654	A630 SCREW, MACHINE: SAME AS A624		EA	2										A3H2

SECTION IV. REPAIR PARTS FOR DIRECT SUPPORT, GENERAL SUPPORT, AND DEPOT MAINTENANCE

(1) SMR CODE	(2) FEDERAL STOCK NUMBER	(3) DESCRIPTION REFERENCE NUMBER & MFR CODE	USABLE ON CODE	(4) UNIT OF MEAS	(5) QTY INC IN UNIT	(6) 30-DAY DS MAINT ALLOWANCE (a) 1-20	(b) 21-50	(c) 51-100	(7) 30-DAY GS MAINT ALLOWANCE (a) 1-20	(b) 21-50	(c) 51-100	(8) 1 YR. ALW PER EQUIP CNTGCY	(9) DEPT MAIN ALW PER 100 EQUIP	(10) ILLUSTRATIONS (a) FIG. NO.	(b) ITEM NO. OR REFERENCE DESIGNATION
X2-D	5310-579-0079	A631 WASHER, LOCK: SAME AS A625		EA	2										A3H2
P-F		A632 INSULATOR: SAME AS A626		EA	1	REF	REF	REF	REF	REF	REF	REF	REF		A3H1
P-F		A633 BUSHING, INSULATING: SAME AS A627		EA	2	REF	REF	REF	REF	REF	REF	REF	REF		A3H2
X2-D	5310-934-9747	A634 NUT, PLAIN, HEXAGON: SAME AS A37		EA	2										A3H2
P-F	5961-230-7705	A635 TRANSISTOR: SMA667870 (18036)		EA	2	*	1	2	*	1	2	16	20	5-4	A3Q5
X2-D	5305-889-3000	A636 SCREW, MACHINE: SAME AS A35		EA	2										A3H2
X2-D	5310-579-0079	A637 WASHER, LOCK: SAME AS A625:		EA	2										A3H2
P-F		A638 INSULATOR: SAME AS A626		EA	1	REF	REF	REF	REF	REF	REF	REF	REF		A3H1
P-F		A639 BUSHING, INSULATING: SAME AS A627		EA	2	REF	REF	REF	REF	REF	REF	REF	REF		A3H2
X2-D	5310-934-9747	A640 NUT, PLAIN, HEXAGON: SAME AS A37		EA	2										A3H2
P-F	5961-230-7705	A641 TRANSISTOR: SAME AS A635		EA	REF	REF	REF	REF	REF	REF	REF	REF	REF	5-4	A3Q6
X2-D	5305-889-3000	A642 SCREW, MACHINE: SAME AS A35		EA	2										A3H2

SECTION IV. REPAIR PARTS FOR DIRECT SUPPORT, GENERAL SUPPORT, AND DEPOT MAINTENANCE

(1) SMR CODE	(2) FEDERAL STOCK NUMBER	(3) DESCRIPTION REFERENCE NUMBER & MFR CODE	USABLE ON CODE	(4) UNIT OF MEAS	(5) QTY INC IN UNIT	(6) 30-DAY DS MAINT ALLOWANCE (a) 1-20	(b) 21-50	(c) 51-100	(7) 30-DAY GS MAINT ALLOWANCE (a) 1-20	(b) 21-50	(c) 51-100	(8) 1 YR. ALW PER EQUIP CNTGCY	(9) DEPT MAIN ALW PER 100 EQUIP	(10) ILLUSTRATIONS (a) FIG. NO.	(b) ITEM NO. OR REFERENCE DESIGNATION
X2-D	5310-579-0079	A643 WASHER, LOCK: SAME AS A625		EA	2										A3H2
P-F		A644 INSULATOR; SAME AS A626		EA	1	REF	REF	REF	REF	REF	REF	REF	REF		A3H1
P-F		A645 BUSHING, INSULATING: SAME AS A627		EA	2	REF	REF	REF	REF	REF	REF	REF	REF		A3H2
X2-D	5310-934-9747	A646 NUT, PLAIN, HEXAGON: SAME AS A37		EA	2										A3H2
P-F		A647 TRANSISTOR: SAME AS A635		EA	2	REF	REF	REF	REF	REF	REF	REF	REF	5-4	A302
X2-D	5305-889-3001	A648 SCREW, MACHINE: M535206-231 (96906)		EA	2										A3H2
X2-D	5310-579-0079	A649 WASHER, LOCK: SAME AS A625		EA	2										A3H2
P-F		A650 INSULATOR: SAME AS A626		EA	1	REF	REF	REF	REF	REF	REF	REF	REF		A3H1
M-D		A651 BUSHING, SHOULDER: SMB350043 (80063)		EA	2										A3H2
X2-D	5310-934-9747	A652 NUT, PLAIN, HEXAGON: SAME AS A37		EA	2										A3H2
P-F	5961-230-7705	A653 TRANSISTOR: SAME AS A635		EA	REF	REF	REF	REF	REF	REF	REF	REF	REF	5-4	A303
X2-D	5305-889-3001	A654 SCREW, MACHINE: SAME AS A648		EA	2										A3H2

SECTION IV. REPAIR PARTS FOR DIRECT SUPPORT, GENERAL SUPPORT, AND DEPOT MAINTENANCE

(1) SMR CODE	(2) FEDERAL STOCK NUMBER	(3) DESCRIPTION REFERENCE NUMBER & MFR CODE	USABLE ON CODE	(4) UNIT OF MEAS	(5) QTY INC IN UNIT	(6) 30-DAY DS MAINT ALLOWANCE (a) 1-20	(b) 21-50	(c) 51-100	(7) 30-DAY GS MAINT ALLOWANCE (a) 1-20	(b) 21-50	(c) 51-100	(8) 1 YR. ALW PER EQUIP CNTGCY	(9) DEPT MAIN ALW PER 100 EQUIP	(10) ILLUSTRATIONS (a) FIG. NO.	(b) ITEM NO. OR REFERENCE DESIGNATION
X2-D	5310-579-0079	A655 WASHER, LOCK: SAME AS A625		EA	2										A3H2
P-F		A656 INSULATOR: SAME AS A626		EA	1	REF	REF	REF	REF	REF	REF	REF	REF		A3H1
P-F		A657 BUSHING, SHOULDER: SAME AS A651		EA	2	REF	REF	REF	REF	REF	REF	REF	REF		A3H2
X2-D	5310-93-9-977	A658 NUT, PLAIN, HEXAGON: SAME AS A37		EA	2										A3H2
X2-D	5310-809-8544	A659 WASHER, FLAT; SAME AS A10		EA	2										H2
X2-D	5310-905-5454	A660 WASHER, LOCK: SAME AS A530		EA	1										H1
X2-D	5310-045-3299	A661 WASHER, LOCK: SAME AS A9		EA	2										H2
X2-D	5310-045-3296	A662 WASHER, LOCK; SAME AS A32		EA	6										H6

SECTION IV. SPECIAL TOOLS, TEST & SUPPORT EQUIPMENT FOR DIRECT SUPPORT, GENERAL SUPPORT & DEPOT MAINTENANCE

(1) SMR CODE	(2) FEDERAL STOCK NUMBER	(3) DESCRIPTION REFERENCE NUMBER & MFR/ CODE USABLE ON CODE	(4) UNIT OF MEAS	(5) QTY INC IN UNIT	(6) 30-DAY DS MAINT ALLOWANCE			(7) 30-DAY GS MAINT ALLOWANCE			(8) 1-YR ALW PER EQUIP CNTGCY	(9) DEPOT MAINT ALW PER 100 EQUIP	(10) ILLUSTRATIONS	
					(a) 1-20	(b) 21-50	(c) 51-100	(a) 1-20	(b) 21-50	(c) 51-100			(a) FIG. NO.	(b) ITEM NO. OR REFERENCE DESIGNATION
P-F	51205293101	A663 Screwdriver, Cross Tip Size 1, Blade Length 8". (81348)	EA	1	*	*	*	*	*	*	*	*		
P-F	51205454268	A664 Retrieving Tool Magnetic Type II, Class I. (81348)	EA	1	*	*	*	*	*	*	*	*		
P-F	51208326221	A665 Screw Starter, Hand P/N 5N9. (36540)	EA	1	*	*	*	*	*	*	*	*		
P-F	59359213398	A666 Connector, Plug, Electrical Type No. MW10MA17 (81349)	EA	2	*	*	*	*	*	*	*	*	6-2	

☆U.S. GOVERNMENT PRINTING OFFICE: 1973-769615/410

SECTION V.1. INDEX-FEDERAL STOCK NUMBER CROSS REFERENCE TO FIGURE AND ITEM NUMBER OR REFERENCE DESIGNATION

FEDERAL STOCK NUMBER	FIGURE NUMBER	ITEM NUMBER OR REF. DESIGNATION
5305-052-8874		H4
5305-054-6654		A3H2
5305-054-6656		H3
5305-637-1124		A6H2
5305-889-3000		H1
5305-889-3000		A3H2
5305-889-3000		A8H1
5305-889-3000		A8H3
5305-889-3001		A3H2
5305-922-6286		H2
5305-983-6659		H4
5305-983-6730		A4H2
5305-984-4976		A11H2
5305-984-4983		H2
5305-984-4983		H3
5305-984-4983		H4
5305-984-4988		H1
5305-984-4988		A3H1
5305-984-4698		A4H1
5305-984-4988		A4H2
5305-984-6191		H1
5305-984-6191		H2
5305-984-6193		H2
5305-984-6193		H4
5305-984-6193		H8
5305-984-6198		A3H2
5305-984-6209		H2
5305-984-6209		H4
5305-984-6209		H6
5305-984-6210		H3
5305-984-6210		H4
5305-985-3674		A9H16
5305-989-6265		A8H4
5305-993-2738		A4H1
5305-993-9269		H2
5310-014-5850		A3H1
5310-043-0520		A4H1
5310-045-3296		H2
5310-045-3296		H4
5310-045-3296		H6
5310-045-3296		H7
5310-045-3296		A8H4
5310-045-3299		H1
5310-045-3299		H2
5310-045-3299		H4
5310-045-3299		H8
5310-045-3299		A3H2
5310-045-4007		H1
5310-045-4007		H2
5310-045-4007		H3
5310-045-4007		H4

FEDERAL STOCK NUMBER	FIGURE NUMBER	ITEM NUMBER OR REF. DESIGNATION
5310-045-4007		A3H1
5310-045-4007		A3H2
5310-045-4007		A4H2
5310-045-4007		A4H4
5310-045-4007		A8H3
5310-062-0906		A3H1
5310-082-1404		A8H3
5310-113-3757		A4H1
5310-167-0721		A7H1
5310-194-1483		A4H1
5310-209-0786		A3H1
5310-209-0786		A4H1
5310-209-0786		A6H2
5310-209-0788		H1
5310-209-0788		A3H1
5310-209-0788		A3H2
5310-209-0788		A4H1
5310-209-0788		A8H1
5310-531-9514		A9H16
5310-543-2410		A1H2
5310-543-2410		A2HA
5310-543-2410		A4H2
5310-543-2410		A4A2H2
5310-543-2410		A5H2
5310-543-2410		A11H2
5310-576-0546		A6H2
5310-576-5752		A3H1
5310-577-5506		H2
5310-579-0079		A3H2
5310-582-5965		H3
5310-582-5965		H4
5310-595-7237		H1
5310-596-7693		H2
5310-616-2973		H1
5310-685-2631		A3H1
5310-687-6398		A7H1
5310-809-4058		H3
5310-809-4058		H4
5310-809-5998		A4H1
5310-809-8544		H1
5310-809-8544		H2
5310-809-8544		A3H2
5310-905-5454		H1
5310-905-5454		H2
5310-904-5968		H1
5310-09-6395		H3
5310-934-9739		A1H2
5310-934-9739		A2H2
5310-934-9739		A4H2
5310-934-9739		A4A2H2
5310-934-9739		A5H3

SECTION V.1. INDEX-FEDERAL STOCK NUMBER CROSS REFERENCE TO FIGURE AND ITEM NUMBER OR REFERENCE DESIGNATION

FEDERAL STOCK NUMBER	FIGURE NUMBER	ITEM NUMBER OR REF. DESIGNATION
5310-934-9739		A11H2
5310-934-9747		H1
5310-934-9747		A3H2
5310-934-9747		A4H1
5310-934-9747		A4H2
5310-934-9747		A4H4
5310-934-9747		A6H4
5310-934-9747		A8H1
5310-934-9751		H6
5310-934-9751		A3H1
5310-934-9757		H2
5310-934-9757		A3H2
5310-983-8483		H1
5310-983-8483		H2
5310-983-8483		H3
5310-983-6483		A4H2
5310-997-1888		H2
5320-117-6815		A8A1A1H2
5330-574-6704		H1
5340-951-1532		A8A1A1MP2
5905-061-2089	5-3	A2R17
5905-061-2089	5-7	A6A1R4
5905-061-5355	5-7	A6A1R3
5905-067-9079	5-3	A2R10
5905-067-9079	5-3	A2R15
5905-067-9079	5-6	A5R9
5905-080-5016	5-2	A1R20
5905-087-0545	5-7	A6A1R5
5905-230-7713	5-7	A6A1R2
5905-686-3379	5-3	A2R21
5905-717-3339	5-2	A1R19
5950-717-3342	5-2	A1R4
5905-717-3342	5-2	A1R4
5905-717-3342	5-2	A1R13
5905-717-3342	5-6	A5R7
5905-752-3597	5-3	A2R22
5905-755-8132	5-3	A2R13
5905-762-3667	5-2	A1R7
5905-765-5628	5-3	A2R3
5905-766-8216	5-5	A4A2R5
5905-766-8216	5-5	A4A2R6
5905-766-8366	5-2	A1R22
5905-767-2444	5-6	A5R6
5905-767-2842	5-2	A1R16
5905-767-2842	5-6	A5R5
5905-767-3229	5-2	A1R17
5905-767-3229	5-2	A1R18
5905-767-3229	5-3	A2R6
5905-767-3229	5-6	A5R3
5905-767-3229	5-6	A5R10
5905-767-3230	5-2	A1R15
5905-767-3230	5-6	A5R1
5905-767-3230	5-6	A5R12
5905-767-7583	5-2	A1R10

FEDERAL STOCK NUMBER	FIGURE NUMBER	ITEM NUMBER OR REF. DESIGNATION
5905-768-5922	5-2	A1R21
5905-768-5922	5-2	A1R23
5905-771-2295	5-2	A1R11
5905-771-2295	5-3	A2R7
5905-771-2295	5-3	A2R9
5905-771-2295	5-3	A2R18
5905-771-2295	5-6	A5R2
5905-775-0633	5-6	A5R8
5905-775-0633	5-6	A5R13
5905-807-0832	5-8	R3
5905-810-7778	5-2	A1R6
5905-819-6925	5-3	A2R16
5995-833-8355	5-2	A1R3
5905-834-0387	5-3	A2R11
5905-835-6424	5-2	A1R2
5905-836-2859	5-2	A1R5
5905-844-1423	5-3	A2R14
5905-880-0872	5-2	A1R9
5905-882-0061	5-2	A1R1
5905-882-0070	5-2	A1R14
5905-900-2089	5-3	A2R4
5905-900-2089	5-3	A2R5
5905-900-2089	5-4	A3A1R1
5905-900-2089	5-4	A3A1R5
5905-900-2089	5-5	A4A2R1
5905-900-2089	5-5	A4A2R2
5905-900-2089	5-5	A4A2R7
5905-900-2089	5-5	A4A2R8
5905-901-4016	5-2	A1R12
5905-901-4016	5-3	A2R8
5905-901-4016	5-3	A2R19
5905-901-4016	5-3	A2R20
5905-901-4016	5-5	A4A2R3
5905-901-4016	5-5	A4A2R4
5905-975-1135	5-5	A4A2R9
5905-975-1135	5-5	A4A2R10
5905-978-9326	5-4	A3R9
5905-985-6056	5-3	A2R12
5905-994-7230	5-4	A3A1R4
5910-078-8110	5-2	A1C1
5910-082-4767	5-7	A6A1C1
5910-082-4925	5-2	A1C3
5910-082-4925	5-5	A4A2C3
5910-082-4925	5-5	A4A2C4
5910-642-6275	5-3	A2C7
5910-644-6164	5-2	AA1C2
5910-644-6164	5-3	A2C2
5910-644-6164	5-3	A2C4
5910-644-6164	5-3	A2C5
5910-644-6164	5-6	A5C2
5910-881-8945	5-3	A2C1
5910-904-3983	5-5	A4A2C1
5910-904-3983	5-5	A4A2C2
5910-988-4415	5-3	A2C3
5930-655-4245	5-8	S2

SECTION V.1. INDEX-FEDERAL STOCK NUMBER CROSS REFERENCE TO FIGURE AND ITEM NUMBER OR REFERENCE DESIGNATION

FEDERAL STOCK NUMBER	FIGURE NUMBER	ITEM NUMBER OR REF. DESIGNATION
5930-660-3954	5-8	S1
5930-683-1629	5-8	S1
5935-071-1235		J7
5940-143-4794		A3MP9
5940-230-0515		A3MP8
5940-280-0601		A1TP1
5940-280-0601		A1TP2
5940-280-0601		A2TP1
5940-280-0601		A3A1E1
5940-280-0601		A3A1E2
5940-280-0601		A3A1E4
5940-280-0601		A3A1E6
5940-280-0601		A3A1E8
5940-280-0601		A5TP1
5940-280-0601		A6A1E1
5940-280-0601		A6A1E2
5940-280-0601		A6A1E4
5940-280-0601		A6A1E5
5940-280-0601		A6A1E11
5940-280-0601		A6A1E12
5940-283-5280		A3MP5
5940-283-5280		A3MP6
5940-283-5280		A3MP7
5940-681-9772		A4MP4
5961-052-4115	5-4	A3Q1
5961-052-4115	5-4	A3Q4
5961-060-5778		A4Q1
5961-060-5778	5-5	A4Q2
5961-087-6047	5-2	A1CR6
5961-087-6047	5-2	A1CR7
5961-087-6047	5-2	A1CR8
5961-087-6047	5-2	A1CR9
5961-087-6047	5-2	A1CR10
5961-087-6047	5-2	A1CR11
5961-087-6047	5-2	A1CR12
5961-087-6047	5-2	A2CR13
5961-087-6047	5-3	A2CR2
5961-087-6047	5-3	A2CR3
5961-087-6047	5-3	A2CR4
5961-087-6047	5-3	A2CR7
5961-087-6047	5-5	A4A2CR1
5961-087-6047	5-5	A4A2CR2
5961-087-6047	5-5	A4A2CR3
5961-087-6047	5-5	A4A2CR4
5961-087-6047	5-6	A5CR1
5961-087-6047	5-6	A5CR2
5961-087-6047	5-6	A5CR4
5961-104-8378	5-3	A2Q3
5961-230-7705	5-4	A3Q2
5961-230-7705	5-4	A3Q3
5961-230-7705	5-4	A3Q5
5961-230-7705	5-4	A3Q6
5961-811-5799	5-4	A3CR1
5961-811-5799	5-4	A3CR2

FEDERAL STOCK NUMBER	FIGURE NUMBER	ITEM NUMBER OR REF. DESIGNATION
5961-811-5799	5-4	A3CR3
5961-833-3042	5-4	A3CR4
5961-833-3042	5-4	A3CR5
5961-836-0382	5-6	A5CR3
5961-853-2601	5-2	A1Q1
5961-853-2601	5-2	A1Q2
5961-853-2601	5-2	A1Q5
5961-853-2601	5-2	A1Q6
5961-853-2601	5-2	A1Q7
5961-853-2601	5-2	A1Q9
5961-853-2601	5-3	A2Q1
5961-853-2601	5-3	A2Q4
5961-853-2601	5-5	A4A2Q1
5961-853-2601	5-5	A4A2Q2
5961-853-2601	5-6	A5Q1
5961-853-2601	5-6	A5Q2
5961-853-2601	5-6	A5Q3
5961-880-4779	5-2	A1Q3
5961-880-4779	5-2	A1Q4
5961-880-4779	5-2	A1Q8
5961-880-4779	5-3	A2Q2
5961-950-4399	5-4	A3CR6
5961-957-6855	5-2	A1CR1
5961-957-6855	5-2	A1CR2
5961-957-6855	5-2	A1CR3
5961-957-6855	5-2	A1CR4
5961-957-6855	5-3	A2CR6
5970-977-2714		A3H1
5995-466-0217		W2
6210-151-5246		MP15
6210-176-4928		XDS1
6210-176-4928		XDS2
6210-176-4928		XDS3
6225-929-3950		A5MP2
6240-155-7836	5-8	DS1
6240-155-7836	5-8	DS2
6240-155-7836	5-8	DS3
6625-929-3950		A1MP2
6625-929-3950		A2MP2

SECTION V.2 INDEX-REFERENCE NUMBER CROSS REFERENCE TO FIGURE NUMBER AND REFERENCE DESIGNATION OR ITEM NUMBER

REFERENCE NO.	MFGRS. CODE	FIG. NO.	REF DESIGNATION OR ITEM NO
AN508-6-4	88044		A6A1H2
B8152	18038		A8MP1
CH08A1NC126J	81349	5-1	A8C1
CH08A1RA475M	81349	5-6	A5C1
CP13A3KB105K1	81349	5-1	A7C1
CX-11979/U	81349		W1
C8107	18038	5-5	A4A2
C8108	18038		A7
C8150	18038		A4A3
C8157	18038		A6MP1
C8169	18038		A7MP1
C8263	18038		MP1
D8117	18038		A8
D8162	18038	5-1	A8A1
D8219	18038		A11
JAN1N9378	81350	5-2	A1CR5
LC36RD2	81349		MP16
LC36YD2	81349		MP15
MILC1097-4-01	81349		A11J1
MILC21097-5-01	81349		A1P1
MILR5757-29A008	81349	5-2	A1K1
MILT55155-21-3	81349		A8E1
M515795-607	96906		A6H2
MS21919-WG-11	96906		MP11
MS21919-4	96906		MP6
MS21919-5	96906		MP9
MS3212-25	96906		H2
MS3212-52	96906		H3
MS3212-53	96906		H3
MS35206-323	96906		A1H2
MS35303-7	96906		H3
MS35691-431	96906		A6H4
MW1375-526	08289		A4H1
MW20MMA00	81349		J8
MW562-203	08289		A3H1
MW855-260	08289		A3H1
PT07C14-16S	77820		J6
PT07C14-5P	77820		J3
RL20S122J	81349	5-3	A2R2
RL20S223J	81349	5-3	A2R1
RW21V1R0	81349	5-4	A3R8
RW69VR50	81349	5-4	A3A1R2
SMB169134	80063		A8A1A1MP3
SMB350043	80063		A3H2
SMB350054	80063		A3H1
SMB450392	80063		A8MP2
SMB450423	80063		MP4
SMB667875	79963		A3MP10
SMB667875	79963		A3MP10
SMB667884	18038		A4MP3

REFERENCE NO.	MFGRS CODE	FIG. NO.	REF. DESIGNATION OR ITEM NO.
SMB667887	18038		A4MP1
SMB667898	18038	5-7	A6K1
SMB667902	18038		A6A1E6
SMB667928	18038		MP23
SMB667940	18038		A9MP5
SMB667942-1	18038		MP17
SMB667942-2	18038		MP18
SMB667945	18038		MP12
SMB667947	18038		MP21
SMB667948	18038		MP22
SMB667949	18038		A10
SMB667955	18038		MP5
SMC667850	18038	5-2	A1
SMC667858	18038	5-3	A2
SMC667863	18038	5-6	A5
SMC667868	18038		A3MP1
SMC667874	18038		A3MP2
SMC667877	18038	5-4	A3AMP1
SMC667897	18038	5-7	A6R1
SMC667918	18038	5-8	CB1
SMC667919	18038	5-8	CB2
SMC667920	18038	5-8	M1
SMC667922	18038		MP20
SMC667925	18038		FL1
SMC667946	18038		MP19
SMD667852	18038		A1MP1
SMD667860	18038		A2MP1
SMD667862	18038		A2A1
SMD667865	18038		A5MP1
SMD667867	18038	5-1	A3
SMD667876	18038		A3A1
SMD667881	18038	5-5	A4
SMD667883	18038		A4A1
SMD667891	18038		A4A2MP3
SMD667894	18038	5-7	A6
SMD667899	18038	5-7	A6A1
SMD667900	18038		A6A1MP1
SMD667923	18038	5-1	T1
SMD667924	18038	5-1	L1
SMD667930	18038		A9
SMD667931	18038		A9MP1
SMD667932	18038		A9MP2
SMD667933	18038		A9MP3
SMD667934	18038		A9MP4
SMD667936	18038		MP13
TW145-180	08289		A3H2
TW510-570	08289		A4H1
1-8 NPTF	70318		MP26
10-101960-14-3	07601		MP3
1115B	75247		A1MP12
12Z72015	18038		MP26

SECTION V.2 INDEX-REFERENCE NUMBER CROSS REFERENCE TO FIGURE NUMBER AND REFERENCE DESIGNATION OR ITEM NUMBER

REFERENCE NO.	MFGRS. CODE	FIG. NO.	REF. DESIGNATION OR ITEM NO.
1798-2	71279		A3A1E3
20000-50-8AMPS	99392	5-1	A8C2
3600-50-1AMP	99392	5-1	C8
4079-105-19	71279		A7E1
71000-6-8AMPS	99392	5-1	C9
7717-5DAP	75247		A1MP3
8186	18038		MP2
9531BB0632-12	06540		A4A2E1
9573BB1032-14	06540		A6A1E7
9574BB1032-14	06540		A3A1E7

REFERENCE NO.	MFGRS. CODE	FIG. NO.	REF. DESIGNATION OR ITEM NO.

SECTION VI INDEX-REFERENCE DESIGNATION PP-622/U
CROSS REFERENCE TO PAGE NUMBER

0080

REFERENCE DESIGNATION	PAGE NUMBER	REFERENCE DESIGNATION	PAGE NUMBER	REFERENCE DESIGNATION	PAGE NUMBER
C8	C-15	H2	C-45	M1	C-34
C9	C-15	H2	C-46	MP1	C-7
CB1	C-17	H2	C-56	MP2	C-7
CB2	C-17	H3	C-7	MP3	C-7
DS1	C-6	H3	C-18	MP4	C-18
DS1	C-33	H3	C-34	MP5	C-18
DS2	C-6	H3	C-36	MP6	C-18
DS2	C-33	H3	C-46	MP7	C-18
DS3	C-6	H4	C-16	MP8	C-19
DS3	C-34	H4	C-17	MP9	C-19
FL1	C-33	H4	C-33	MP11	C-32
H1	C-7	H4	C-35	MP12	C-33
H1	C-8	H4	C-36	MP13	C-33
H1	C-15	H4	C-39	MP14	C-6
H1	C-16	H4	C-47	MP14	C-34
H1	C-18	H6	C-34	MP15	C-6
H1	C-19	H6	C-45	MP15	C-34
H1	C-32	H6	C-52	MP16	C-6
H1	C-45	H6	C-56	MP16	C-34
H1	C-46	H7	C-36	MP17	C-35
H1	C-56	H8	C-9	MP18	C-35
H2	C-8	J3	C-32	MP19	C-35
H2	C-15	J6	C-32	MP20	C-35
H2	C-18	J7	C-33	MP21	C-35
H2	C-33	J8	C-33	MP22	C-35
H2	C-35	L1	C-17	MP23	C-35

SECTION VI INDEX-REFERENCE DESIGNATION PP-622/U 0080
CROSS REFERENCE TO PAGE NUMBER

REFERENCE DESIGNATION	PAGE NUMBER	REFERENCE DESIGNATION	PAGE NUMBER	REFERENCE DESIGNATION	PAGE NUMBER
MP26	C-36	A1CR10	C-23	A1Q9	C-24
MP26	C-45	A1CR11	C-23	A1R1	C-21
R3	C-44	A1H2	C-20	A1R3	C-21
S1	C-45	A1K1	C-21	A1R4	C-21
				A1R5	C-21
S1	C-46	A1K2	C-21	A1R6	C-21
S2	C-45	A1MP1	C-21	A1R7	C-22
T1	C-46	A1P2	C-20	A1R9	C-23
W1	C-6	A1MP3	C-20	A1R10	C-22
W1	C-36	A1MP4	C-20	A1R11	C-22
W2	C-6	A1MP5	C-20	A1R12	C-22
W2	C-36	A1MP6	C-20	A1R13	C-21
XDS1	C-34	A1MP7	C-20	A1R14	C-22
XDS2	C-34	A1MP8	C-21	A1R15	C-22
XDS3	C-34	A1MP9	C-21	A1R16	C-22
A1	C-19	A1MP10	C-21	A1R17	C-22
A1C1	C-19	A1MP11	C-21	A1R18	C-22
A1C2	C-20			A1R19	C-22
A1C3	C-20	A1MP12	C-20	A1R21	C-22
A1CR1	C-23	A1P1	C-20	A1R22	C-23
A1CR11	C-24	A1Q1	C-24	A1R23	C-23
A1CR10	C-24	A1Q2	C-24	A1TP1	C-24
A1CR2	C-23	A1Q3	C-24	A1TP2	C-24
A1CR3	C-23	A1Q4	C-24	A2	C-25
A1CR4	C-23	A1Q5	C-24	A2C1	C-25
A1CR5	C-23	A1Q6	C-24	A2C2	C-25
A1CR7	C-23	A1Q7	C-24	A2C3	C-25
A1CR8	C-23				
A1CR9	C-23	A1Q8	C-25	A2C4	C-25

SECTION VI INDEX-REFERENCE DESIGNATION PP-622/U 0080
CROSS REFERENCE TO PAGE NUMBER

REFERENCE DESIGNATION	PAGE NUMBER	REFERENCE DESIGNATION	PAGE NUMBER	REFERENCE DESIGNATION	PAGE NUMBER
A2C5	C-25	A2R9	C-27	A3H1	C-51
A2C7	C-25	A2R10	C-28	A3H1	C-52
A2CR1	C-28	A2R11	C-27	A3H1	C-53
A2CR2	C-28	A2R12	C-27	A3H1	C-54
A2CR3	C-28	A2R13	C-27	A3H1	C-55
A2CR4	C-28	A2R14	C-27	A3H1	C-56
A2CR6	C-28	A2R15	C-28	A3H2	C-47
A2CR7	C-28	A2R16	C-27	A3H2	C-49
A2H2	C-25	A2R17	C-28	A3H2	C-53
A2MP1	C-26	A2R18	C-27	A3H2	C-54
A2MP2	C-26	A2R19	C-27	A3H2	C-55
A2MP3	C-26	A2R20	C-27	A3H2	C-56
A2MP4	C-26	A2R21	C-27	A3MP1	C-47
A2P1	C-25	A2R22	C-27	A3MP2	C-47
A2Q1	C-28	A2TP1	C-28	A3MP3	C-47
A2Q2	C-29	A2A1	C-26	A3MP5	C-52
A2Q3	C-29	A3	C-46	A3MP6	C-52
A2Q4	C-28	A3CR1	C-50	A3MP7	C-52
A2R1	C-26	A3CR2	C-50	A3MP8	C-52
A2R2	C-26	A3CR3	C-50	A3MP9	C-52
A2R3	C-26	A3CR4	C-51	A3MP10	C-53
A2R4	C-26	A3CR5	C-51	A3Q1	C-53
A2R5	C-26	A3CR6	C-52	A3Q2	C-55
A2R6	C-26	A3H1	C-47	A3Q3	C-55
A2R7	C-26	A3H1	C-48	A3Q4	C-53
A2R8	C-27	A3H1	C-50	A3Q5	C-54

SECTION VI INDEX-REFERENCE DESIGNATION PP-622/U 0080
CROSS REFERENCE TO PAGE NUMBER

SECTION VI INDEX-REFERENCE DESIGNATION PP-622/U 0080
CROSS REFERENCE TO PAGE NUMBER

REFERENCE DESIGNATION	PAGE NUMBER	REFERENCE DESIGNATION	PAGE NUMBER	REFERENCE DESIGNATION	PAGE NUMBER
A5MP3	C-29	A6A1C1	C-36	A8C1	C-9
A5MP4	C-29	A6A1E1	C-37	A8C2	C-9
A5MP1	C-30	A6A1E2	C-37	A8C3	C-10
A5MP6	C-30	A6A1E4	C-37	A8C4	C-10
A5Q1	C-31	A6A1E5	C-37	A8C5	C-10
A5Q2	C-31	A6A1E6	C-36	A8C6	C-11
A5Q3	C-31	A6A1E7	C-37	A8E1	C-14
A5R1	C-30	A6A1E8	C-37	A8E2	C-15
A5R2	C-30	A6A1E9	C-38	A8H1	C-9
A5R3	C-30	A6A1E10	C-38	A8H1	C-10
A5R5	C-30	A6A1E11	C-37	A8H1	C-11
A5R6	C-30	A6A1E12	C-37	A8H1	C-15
A5R7	C-30	A6A1H2	C-36	A8H3	C-13
A5R8	C-30	A6A1MP1	C-36	A8H3	C-14
A5R9	C-31	A6A1R2	C-37	A8H4	C-9
A5R10	C-31	A6A1R3	C-37	A8MP1	C-9
A5R12	C-30	A6A1R4	C-37	A8MP2	C-13
A5R13	C-30	A6A1R5	C-37	A8MP3	C-13
A5TP1	C-31	A7	C-8	A8MP4	C-13
A6	C-36	A7C1	C-8	A8MP5	C-14
A6H2	C-38	A7C2	C-8	A8MP6	C-14
A6H4	C-38	A7E1	C-9	A8A1	C-11
A6K1	C-38	A7E2	C-9	A8A1A1H2	C-11
A6MP1	C-38	A7H1	C-8	$A8A1A1MP_2$	C-11
A6R1	C-38	A7MP1	C-8	$A8A1A1MP_3$	C-11
A6A1	C-36	A8	C-9	$A8A1A1MP_4$	C-11

SECTION VI INDEX-REFERENCE DESIGNATION PP-622/U
CROSS REFERENCE TO PAGE NUMBER

REFERENCE DESIGNATION	PAGE NUMBER	REFERENCE DESIGNATION	PAGE NUMBER	REFERENCE DESIGNATION	PAGE NUMBER
A8A1A1MP5	C-11	A11	C-16		
A8A1A1MP6	C-11	A11H2	C-16		
A8A1A1MP7	C-12				
A8A1A1MP8	C-12	A11J1	C-16		
A8A1A1lMP9	C-12	A11J2	C-16		
A8A1A1MP10	C-12	A11J5	C-17		
A8A1A1MP11	C-12				
A8A1A1MP12	C-12				
A8A1A1MP13	C-12				
A8A1A1MP14	C-12				
A8A1A1MP15	C-12				
A8A1A1MP16	C-12				
A8A1A1MP17	C-12				
A8A1A1MP18	C-12				
A8A1A1MP19	C-13				
A8A1A1MP20	C-13				
A8A1A1MP21	C-13				
A9	C-31				
A9H16	C-32				
A9MP1	C-31				
A9MP2	C-32				
A9MP3	C-32				
A9MP4	C-32				
A9MP5	C-32				
A9MP6	C-32				
A10	C-34				

COLOR CODE MARKING FOR MILITARY STANDARD RESISTORS

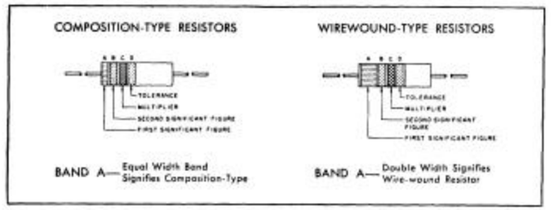

COLOR CODE TABLE

BAND A		BAND B		BAND C		BAND D*	
COLOR	FIRST SIGNIFICANT FIGURE	COLOR	SECOND SIGNIFICANT FIGURE	COLOR	MULTIPLIER	COLOR	RESISTANCE TOLERANCE (PERCENT)
BLACK	0	BLACK	0	BLACK	1		
BROWN	1	BROWN	1	BROWN	10		
RED	2	RED	2	RED	100		
ORANGE	3	ORANGE	3	ORANGE	1,000		
YELLOW	4	YELLOW	4	YELLOW	10,000	SILVER	± 10
GREEN	5	GREEN	5	GREEN	100,000	GOLD	± 5
BLUE	6	BLUE	6	BLUE	1,000,000		
PURPLE (VIOLET)	7	PURPLE (VIOLET)	7				
GRAY	8	GRAY	8	SILVER	0.01		
WHITE	9	WHITE	9	GOLD	0.1		

EXAMPLES OF COLOR CODING

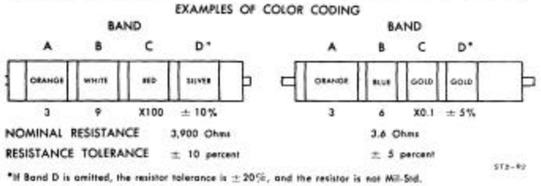

*If Band D is omitted, the resistor tolerance is ±20%, and the resistor is not Mil-Std.

COLOR CODE MARKING FOR MILITARY STANDARD CAPACITORS

GROUP I Capacitors, Fixed, Various-Dielectrics, Styles CM, CN, CY, and CB

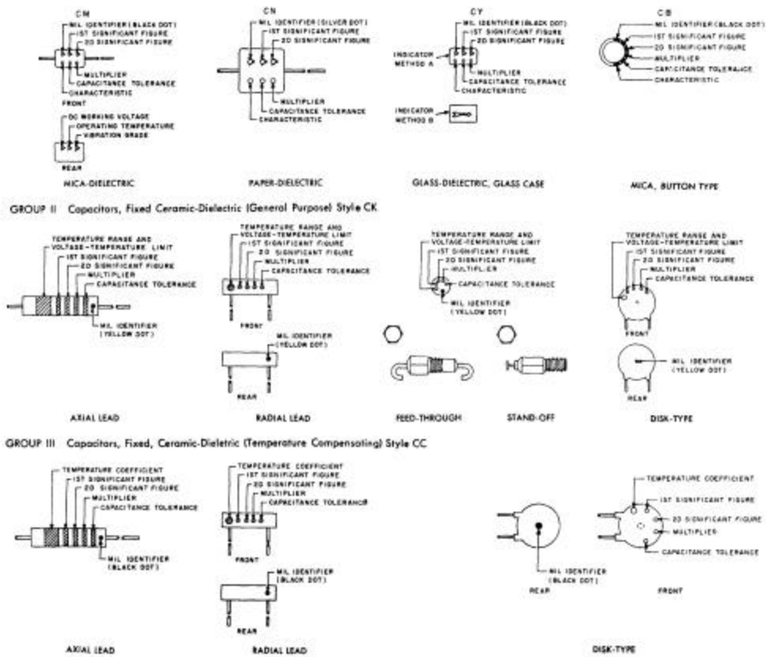

COLOR CODE TABLES

TABLE I – For use with Group I, Styles CM, CN, CY and CB

COLOR	MIL ID	1st SIG FIG	2nd SIG FIG	MULTIPLIER[1]	CAPACITANCE TOLERANCE				CHARACTERISTIC[2]				DC WORKING VOLTAGE	OPERATING TEMP. RANGE	VIBRATION GRADE
					CM	CN	CY	CB	CM	CN	CY	CB	CM	CM	CM
BLACK	CM, CY CB	0	0	1			± 20%	± 20%		A				−55° to +70°C	10–55 cps
BROWN		1	1	10					B	B		B			
RED		2	2	100	± 2%		± 2%	± 2%	C		C			−55° to +85°C	
ORANGE		3	3	1,000		± 30%			D			D	300		
YELLOW		4	4	10,000					E					−55° to +125°C	10–2,000 cps
GREEN		5	5		± 5%				F				500		
BLUE		6	6											−55° to +150°C	
PURPLE (VIOLET)		7	7												
GREY		8	8												
WHITE		9	9												
GOLD				0.1			± 5%	± 5%							
SILVER	CN				± 10%	± 10%	± 10%	± 10%							

TABLE II – For use with Group II, General Purpose, Style CK

COLOR	TEMP. RANGE AND VOLTAGE – TEMP. LIMITS[3]	1st SIG FIG	2nd SIG FIG	MULTIPLIER[1]	CAPACITANCE TOLERANCE	MIL ID
BLACK		0	0	1	± 20%	
BROWN	AW	1	1	10	± 10%	
RED	AX	2	2	100		
ORANGE	BE	3	3	1,000		
YELLOW	AY	4	4	10,000		CK
GREEN	CZ	5	5			
BLUE	BY	6	6			
PURPLE (VIOLET)		7	7			
GREY		8	8			
WHITE		9	9			
GOLD						
SILVER						

TABLE III – For use with Group III, Temperature Compensating, Style CC

COLOR	TEMPERATURE COEFFICIENT[4]	1st SIG FIG	2nd SIG FIG	MULTIPLIER[1]	CAPACITANCE TOLERANCE		MIL ID
					Capacitances over 10uuf	Capacitances 10uuf or less	
BLACK	0	0	0	1		± 2.0uuf	CC
BROWN	−30	1	1	10	± 1%		
RED	−80	2	2	100	± 2%	± 0.25uuf	
ORANGE	−150	3	3	1,000			
YELLOW	−220	4	4				
GREEN	−330	5	5		± 5%	± 0.5uuf	
BLUE	−470	6	6				
PURPLE (VIOLET)	−750	7	7				
GREY		8	8	0.01			
WHITE		9	9	0.1	± 10%		
GOLD	+100					± 1.0uuf	
SILVER							

1. The multiplier is the number by which the two significant (SIG) figures are multiplied to obtain the capacitance in uuf.
2. Letters indicate the Characteristics designated in applicable specifications: MIL-C-5, MIL-C-91, MIL-C-11272, and MIL-C-10950 respectively.
3. Letters indicate the temperature range and voltage-temperature limits designated in MIL-C-11015.
4. Temperature coefficient in parts per million per degree centigrade.

Figure 8-1. Color code marking for resistors and capacitors.

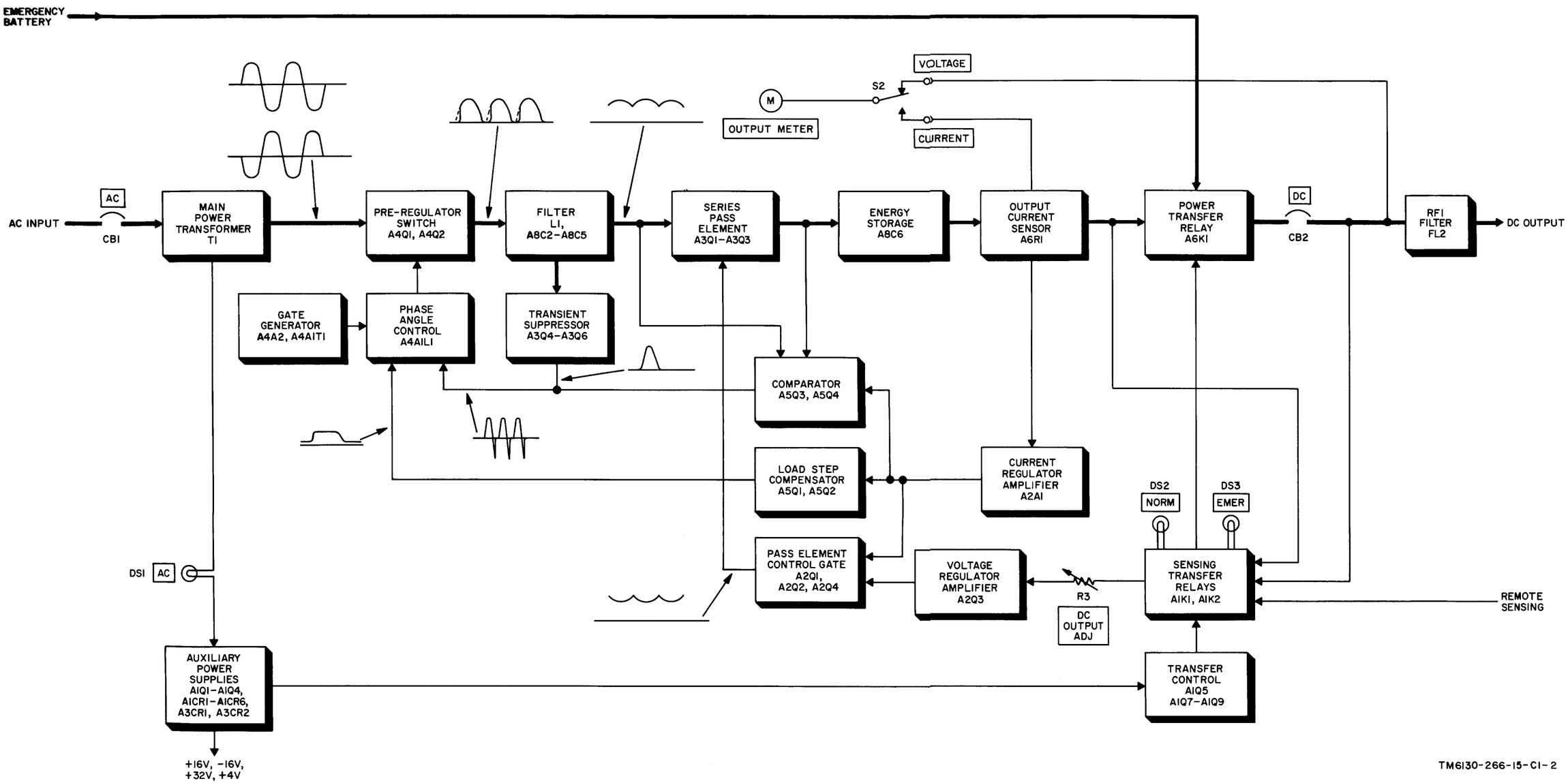

Figure 8-2. Power Supply PP-6224/U, block diagram.

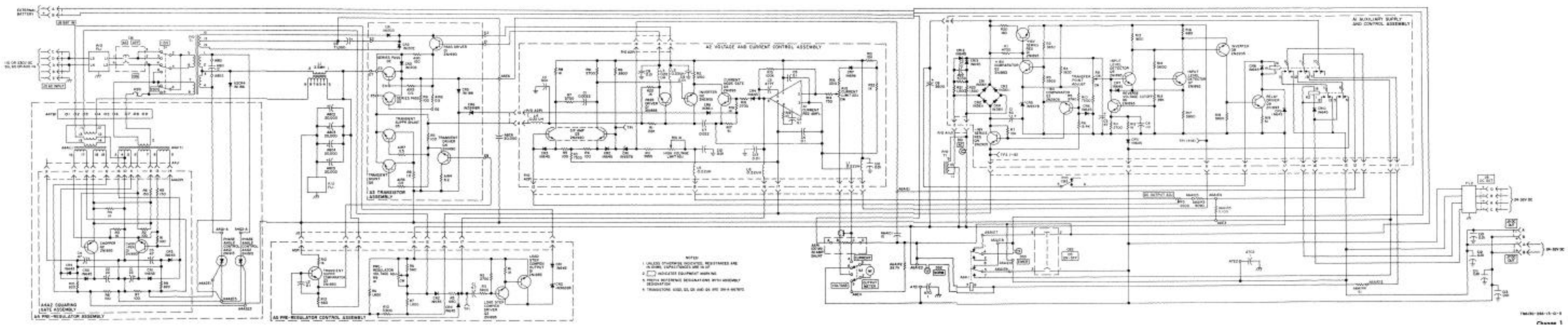

Figure 8-3. Power Supply PP-6224/U, Schematic diagram.

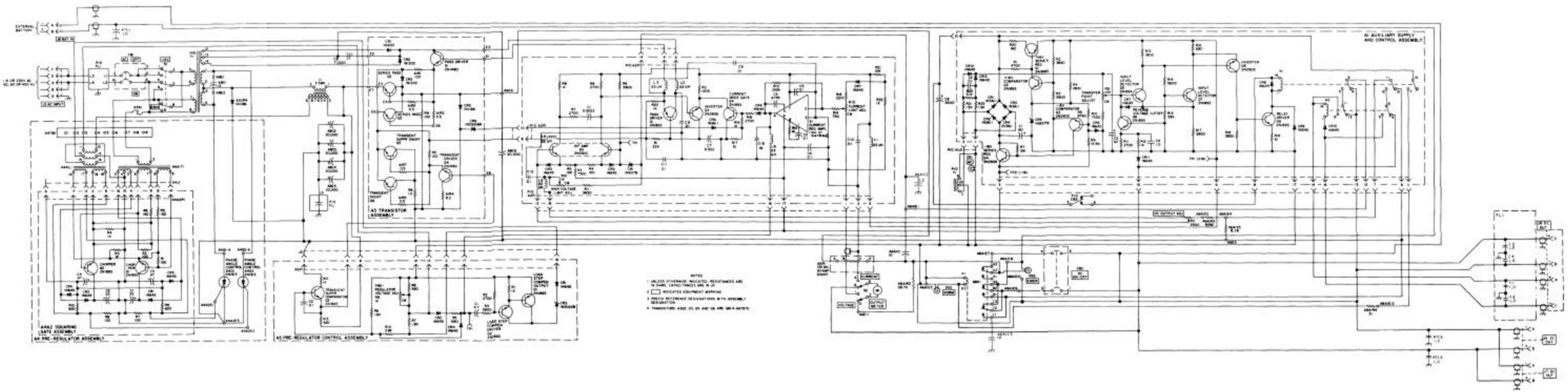

Figure 8-4. Power Supply PP-6224A/U, Schematic diagram

By Order of the Secretary of the Army:

W. C. WESTMORELAND,
General, United States Army,
Chief of Staff.

Official:

VERNE L. BOWERS,
Major General, United States Army,
The Adjutant General

Distribution:
To be distributed in accordance with DA Form 12-51, operator maintenance requirements for the RT- 246/VRC and RT-524/VRC equipments.

☆U.S. GOVERNMENT PRINTING OFFICE: 1971-714-207/5038

RECOMMENDED CHANGES TO EQUIPMENT TECHNICAL PUBLICATIONS

SOMETHING WRONG WITH PUBLICATION

FROM: (PRINT YOUR UNIT'S COMPLETE ADDRESS)

DATE SENT

PUBLICATION NUMBER	PUBLICATION DATE	PUBLICATION TITLE

BE EXACT PIN-POINT WHERE IT IS

PAGE NO.	PARA-GRAPH	FIGURE NO.	TABLE NO.

IN THIS SPACE, TELL WHAT IS WRONG AND WHAT SHOULD BE DONE ABOUT IT.

PRINTED NAME, GRADE OR TITLE AND TELEPHONE NUMBER	SIGN HERE

TEAR ALONG PERFORATED LINE

DA FORM 1 JUL 79 2028-2

PREVIOUS EDITIONS ARE OBSOLETE.

P.S.--IF YOUR OUTFIT WANTS TO KNOW ABOUT YOUR RECOMMENDATION MAKE A CARBON COPY OF THIS AND GIVE IT TO YOUR HEADQUARTERS.

REVERSE OF DA FORM 2028-2

TEAR ALON

FILL IN YOUR
UNIT'S ADDRESS

FOLD BACK

DEPARTMENT OF THE ARMY

OFFICIAL BUSINESS

PLEASE
AFFIX
STAMP
POSTAGE
REQUIRED

Commander
U.S. Army Communications-Electronics Command
and Fort Monmouth
ATTN: AMSEL-LC-LEO-D-CS-CFO
Fort Monmouth, New Jersey 07703-5000

THE METRIC SYSTEM AND EQUIVALENTS

'NEAR MEASURE

. Centimeter = 10 Millimeters = 0.01 Meters = 0.3937 Inches
1 Meter = 100 Centimeters = 1000 Millimeters = 39.37 Inches
1 Kilometer = 1000 Meters = 0.621 Miles

'VEIGHTS

Gram = 0.001 Kilograms = 1000 Milligrams = 0.035 Ounces
1 Kilogram = 1000 Grams = 2.2 lb.
1 Metric Ton = 1000 Kilograms = 1 Megagram = 1.1 Short Tons

LIQUID MEASURE

1 Milliliter = 0.001 Liters = 0.0338 Fluid Ounces
1 Liter = 1000 Milliliters = 33.82 Fluid Ounces

SQUARE MEASURE

1 Sq. Centimeter = 100 Sq. Millimeters = 0.155 Sq. Inches
1 Sq. Meter = 10,000 Sq. Centimeters = 10.76 Sq. Feet
1 Sq. Kilometer = 1,000,000 Sq. Meters = 0.386 Sq. Miles

CUBIC MEASURE

1 Cu. Centimeter = 1000 Cu. Millimeters = 0.06 Cu. Inches
1 Cu. Meter = 1,000,000 Cu. Centimeters = 35.31 Cu. Feet

TEMPERATURE

5/9(°F - 32) = °C
212° Fahrenheit is evuivalent to 100° Celsius
90° Fahrenheit is equivalent to 32.2° Celsius
32° Fahrenheit is equivalent to 0° Celsius
9/5C° + 32 =°F

APPROXIMATE CONVERSION FACTORS

TO CHANGE	TO	MULTIPLY BY
Inches	Centimeters	2.540
Feet	Meters	0.305
Yards	Meters	0.914
Miles	Kilometers	1.609
Square Inches	Square Centimeters	6.451
Square Feet	Square Meters	0.093
Square Yards	Square Meters	0.836
Square Miles	Square Kilometers	2.590
Acres	Square Hectometers	0.405
Cubic Feet	Cubic Meters	0.028
Cubic Yards	Cubic Meters	0.765
Fluid Ounces	Milliliters	29.573
ıts	Liters	0.473
arts	Liters	0.946
allons	Liters	3.785
Ounces	Grams	28.349
Pounds	Kilograms	0.454
Short Tons	Metric Tons	0.907
Pound-Feet	Newton-Meters	1.356
Pounds per Square Inch	Kilopascals	6.895
Miles per Gallon	Kilometers per Liter	0.425
Miles per Hour	Kilometers per Hour	1.609

TO CHANGE	TO	MULTIPLY BY
Centimeters	Inches	0.394
Meters	Feet	3.280
Meters	Yards	1.094
Kilometers	Miles	0.621
Square Centimeters	Square Inches	0.155
Square Meters	Square Feet	10.764
Square Meters	Square Yards	1.196
Square Kilometers	Square Miles	0.386
Square Hectometers	Acres	2.471
Cubic Meters	Cubic Feet	35.315
Cubic Meters	Cubic Yards	1.308
Milliliters	Fluid Ounces	0.034
Liters	Pints	2.113
Liters	Quarts	1.057
'ers	Gallons	0.264
.ms	Ounces	0.035
.ograms	Pounds	2.205
Metric Tons	Short Tons	1.102
Newton-Meters	Pounds-Feet	0.738
Kilopascals	Pounds per Square Inch	0.145
'lometers per Liter	Miles per Gallon	2.354
›meters per Hour	Miles per Hour	0.621

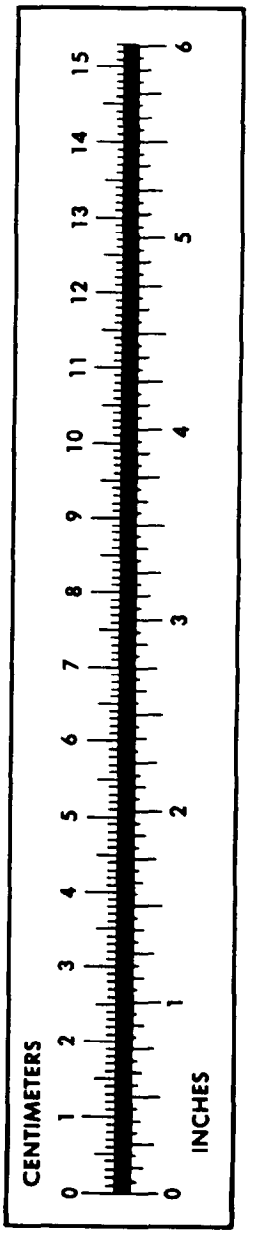

PIN: 020697-004

This fine document...

Was brought to you by me:

Liberated Manuals -- free army and government manuals

Why do I do it? I am tired of sleazy CD-ROM sellers, who take publicly available information, slap “watermarks” and other junk on it, and sell it. Those masters of search engine manipulation make sure that their sites that sell free information, come up first in search engines. They did not create it... They did not even scan it... Why should they get your money? Why are not letting you give those free manuals to your friends?

I am setting this document FREE. This document was made by the US Government and is NOT protected by Copyright. Feel free to share, republish, sell and so on.

I am not asking you for donations, fees or handouts. If you can, please provide a link to liberatedmanuals.com, so that free manuals come up first in search engines:

<A HREF=http://www.liberatedmanuals.com/>Free Military and Government Manuals</A>

- Sincerely
  Igor Chudov
  http://igor.chudov.com/
- Chicago Machinery Movers